Process – Mechanical Operation & Maintenance Manual

for the Iqaluit Wastewater Treatment Plant

Iqaluit, Nunavut

Expected Year of Completion: 2020

Original Scope: Design and upgrade existing Wastewater Treatment Plant to meet current and future demands.

This manual has been updated to include:

Date	Description of Change
2018-Dec-20	First Draft – Primary Treatment
2019-Dec-6	Second Draft – Primary Treatment, Secondary Treatment and Solids Handling.
2020-Apr-24	Final Compiled Manual

CHAPTER 1

TABLE OF CONTENTS

1. INTRODUCTION 1.1
1.1 USE OF THE MANUAL 1.1
1.2 PROJECT TEAM 1.2

CHAPTER 2 ..... 1.1

2. INDEX 2.1

CHAPTER 3 2-1

3. BACKGROUND AND DESIGN DATA 3-1
3.1 BACKGROUND 3-1
3.1.1 Prior Facilities 3-1
3.1.2 Process Description 3-2
3.2 DESIGN DATA 3-2
3.2.1 Design Capacity 3-2
3.2.2 Septage Receiving 3-3
3.2.3 Raw Wastewater Pumping 3-4
3.2.4 Fine Screens 3-4
3.2.5 Primary Filters 3-5
3.2.6 Moving Bed Biofilm Reactors (MBBR) 3-5
3.2.7 Dissolved Air Flotation (DAF) Clarification 3-6
3.2.8 Solids Dewatering (Belt Filter Press) 3-6
3.2.9 Effluent 3-7
3.2.10 Sludge 3-7
3.3 PROCESS COMMODITIES 3-7

CHAPTER 4 ..... 3.1

4. SCHEMATICS AND FUNCTIONAL DATA 4.1
4.1 GENERAL 4.1
4.2 RAW WASTEWATER FLOW 4.1
4.3 FINE SCREENS 4.3
4.4 PRIMARY FILTRATION 4.4
4.5 SECONDARY TREATMENT 4.8
4.5.1 Aeration Blowers 4.8
4.5.2 Moving Bed Bioreactors (MBBR) 4.12
4.5.3 Dissolved Air Flotation (DAF) Clarification #1 ..... 4.13
4.5.4 Dissolved Air Flotation (DAF) Clarification #2 ..... 4.19
4.5.5 DAF Polymer Feed System 4.25
4.6 SLUDGE PROCESSING 4.29
4.6.1 TWAS Storage Tank 4.29

4.6.2 Belt Filter Press Sludge Dewatering 4.32
4.6.3 Belt Filter Press Polymer Feed System 4.34

CHAPTER 5 ..... 4.1

5. COMPONENT DETAILS 5.1
5.1 GENERAL OVERVIEW 5.1
5.2 RAW WASTEWATER FLOW 5.1
5.3 FINE SCREENS 5.2
5.4 PRIMARY FILTRATION 5.4
5.5 SECONDARY TREATMENT 5.7
5.5.1 Aeration Blowers 5.7
5.5.2 Moving Bed Bioreactors (MBBR) 5.11
5.5.3 Dissolved Air Flotation (DAF) Clarification #1 ..... 5.13
5.5.4 Dissolved Air Flotation (DAF) Clarification #2 ..... 5.22
5.5.5 Dissolved Air Flotation (DAF) Polymer Makeup System 5.31
5.6 SLUDGE PROCESSING 5.37
5.6.1 TWAS Storage Tank 5.37
5.6.2 Belt Filter Press Dewatering 5.41
5.6.3 Belt Filter Press Polymer Makeup System 5.43

CHAPTER 6 ..... 5.1

6. OPERATING PROCEDURES 6.1
6.1 GENERAL 6.1
6.2 WASTEWATER TREATMENT PROCESS CONTROL SYSTEM 6.1
6.2.1 Hand-Off-Auto (HOA) and Emergency Shut Down (ESD) Switches 6.1
6.3 RAW WASTEWATER PUMPING 6.2
6.3.1 Reference Information 6.2
6.3.2 Operators Interface 6.2
6.3.3 Normal Operation 6.2
6.3.4 Controls 6.3
6.3.5 Normal Equipment Status 6.3
6.3.6 Manual Operation 6.3
6.3.7 Automatic Operation 6.4
6.3.8 Abnormal Operation 6.4
6.3.9 HMI Screens and Alarm Indication 6.5
6.4 FINE SCREENS 6.5
6.4.1 Reference Information 6.6
6.4.2 Normal Operation 6.6
6.4.3 Controls 6.6
6.4.4 Normal Valve and Switch Positions 6.6
6.4.5 Manual Operation 6.7
6.4.6 Automatic Operation 6.8

6.4.7 Abnormal Operation 6.9
6.4.8 Fine Screen Alarm Indication 6.9
6.5 PRIMARY FILTERS 6.9
6.5.1 Reference Information 6.9
6.5.2 Normal Operation 6.10
6.5.3 Controls 6.10
6.5.4 Normal Valve and Switch Positions 6.11
6.5.5 Manual Operation 6.12
6.5.6 Automatic Operation 6.14
6.5.7 Abnormal Operation 6.15
6.5.8 HMI Screens and Alarm Indication 6.16
6.6 SECONDARY TREATMENT 6.17
6.6.1 Reference Information 6.17
6.6.2 Normal Operation 6.18
6.6.3 Controls 6.20
6.6.4 Normal Valve and Switch Positions 6.20
6.6.5 Manual Operation 6.24
6.6.6 Automatic Operation 6.24
6.6.7 Abnormal Operation 6.27
6.7 SOLIDS HANDLING 6.28
6.7.1 Reference Information 6.28
6.7.2 Normal Operation 6.28
6.7.3 Controls 6.30
6.7.4 Normal Valve and Switch Positions 6.30
6.7.5 Manual Operation 6.32
6.7.6 Automatic Operation 6.32
6.7.7 Abnormal Operation 6.33

CHAPTER 7 ..... 6.1

7. MAINTENANCE PROCEDURES AND SERVICE INFORMATION 7.1
7.1 GENERAL 7.1
7.1.1 Keep It Clean 7.1
7.1.2 Keep It Tight 7.1
7.1.3 Renewal Parts 7.1
7.1.4 Parts and Equipment Ordering Procedure 7.2
7.1.5 Scheduled Preventive Maintenance Program 7.2
7.1.6 Maintenance Legend 7.3
7.2 GENERAL MAINTENANCE 7.4
7.3 MAINTENANCE SCHEDULE 7.4
7.4 MAINTENANCE MANUALS 7.4
7.5 SPARE PARTS LIST 7.5

CHAPTER 8 ..... 7.1

8. TESTING AND CERTIFICATION 8.1

CHAPTER 9 ..... 8.1

9. CONTACT SERVICE INFORMATION 9.1

CHAPTER 1

1. INTRODUCTION

1.1 USE OF THE MANUAL

This manual has been prepared to provide operation and maintenance personnel with a clear and concise understanding of how the Wastewater Treatment Facility operates and the steps which must be followed to keep the facility running safely and efficiently.

The primary goal of this manual and of all personnel operating in and around the Wastewater Treatment Plant is the prevention of personnel injury, fire losses and property damage. To meet this goal, the operation and maintenance program includes:

- Emergency procedures to be followed in the event of spills or accidents.
- Specific operating instructions to be learned and followed at all times to promote safe and efficient operation.
- Routine maintenance of all the facility's systems and structures.
- Detailed inspections of all equipment, facilities, system and structures as well as reporting and correcting any deficiencies.
- Proper record keeping.
- Maintaining a supply of parts, material and equipment necessary to keep the facility running safely and efficiently.

This manual has been divided into 9 chapters.

CHAPTER 1 includes a brief description of the contents of the manual, and a discussion of its proper use.

CHAPTER 2 contains an index of the complete contents of the manual.

CHAPTER 3 provides the background and design data of the facility.

CHAPTER 4 provides functional data and schematic information on the systems for the Facility and Treatment System.

CHAPTER 5 compiles component details

CHAPTER 6 describes procedures to be completed during the operation of the facility.

CHAPTER 7 contains a detailed maintenance manual for the products supplied and installed at the facility.

CHAPTER 8 contains a compilation of all inspection and testing certificates for all products supplied and installed at the facility.

CHAPTER 9 contains contact information for service.

APPENDICES contain construction documents (record drawings, specifications, shop drawings, warranties, equipment operation and maintenance manuals).

Personnel must review and be familiar with all chapters of the manual to ensure that they have a thorough working knowledge of the Wastewater Treatment Plant. This will enable them to turn directly to the correct chapter should a reference be required.

1.2 PROJECT TEAM

Project Owner:	**City of Iqaluit** Building 901, PO Box 460, Iqaluit, NU X0A 0H0 Matthew Hamp Project Manager
Project Management:	**Colliers Project Leaders** Suite 700, 150 Isabella Street Ottawa, ON K1S 1V7 Charles Kretch Project Manager
Consultant:	**Nunami Stantec Limited** 1880C Nobel House Iqaluit, NU X0A 0H0 Glenn Prosko Project Manager
Contractor:	**Kudik Construction Ltd** 1519 Federal Rd. Iqaluit, NU X0A 0H0 Sandra Rousseau Project Manager

CHAPTER 2

TABLE OF CONTENTS

2. INDEX

1. INTRODUCTION 1.1
1.1 USE OF THE MANUAL 1.1
1.2 PROJECT TEAM 1.2

CHAPTER 2 ..... 1.1

2. INDEX 2.1

CHAPTER 3 2-1

3. BACKGROUND AND DESIGN DATA 3-1
3.1 BACKGROUND 3-1
3.1.1 Prior Facilities 3-1
3.1.2 Process Description 3-2
3.2 DESIGN DATA 3-2
3.2.1 Design Capacity 3-2
3.2.2 Septage Receiving 3-3
3.2.3 Raw Wastewater Pumping 3-4
3.2.4 Fine Screens 3-4
3.2.5 Primary Filters 3-5
3.2.6 Moving Bed Biofilm Reactors (MBBR) 3-5
3.2.7 Dissolved Air Flotation (DAF) Clarification 3-6
3.2.8 Solids Dewatering (Belt Filter Press) 3-6
3.2.9 Effluent 3-7
3.2.10 Sludge 3-7
3.3 PROCESS COMMODITIES 3-7

4. SCHEMATICS AND FUNCTIONAL DATA 4.1
4.1 GENERAL 4.1
4.2 RAW WASTEWATER FLOW 4.1
4.3 FINE SCREENS 4.3
4.4 PRIMARY FILTRATION 4.4
4.5 SECONDARY TREATMENT 4.8
4.5.1 Aeration Blowers 4.8
4.5.2 Moving Bed Bioreactors (MBBR) 4.12
4.5.3 Dissolved Air Flotation (DAF) Clarification #1 ..... 4.13
4.5.4 Dissolved Air Flotation (DAF) Clarification #2 ..... 4.19
4.5.5 DAF Polymer Feed System 4.25
4.6 SLUDGE PROCESSING 4.29

4.6.1 TWAS Storage Tank....4.29
4.6.2 Belt Filter Press Sludge Dewatering....4.32
4.6.3 Belt Filter Press Polymer Feed System....4.34

5. COMPONENT DETAILS....5.1
5.1 GENERAL OVERVIEW....5.1
5.2 RAW WASTEWATER FLOW....5.1
5.3 FINE SCREENS....5.2
5.4 PRIMARY FILTRATION....5.4
5.5 SECONDARY TREATMENT....5.7
5.5.1 Aeration Blowers....5.7
5.5.2 Moving Bed Bioreactors (MBBR)....5.11
5.5.3 Dissolved Air Flotation (DAF) Clarification #1....5.13
5.5.4 Dissolved Air Flotation (DAF) Clarification #2....5.22
5.5.5 Dissolved Air Flotation (DAF) Polymer Makeup System....5.31
5.6 SLUDGE PROCESSING....5.37
5.6.1 TWAS Storage Tank....5.37
5.6.2 Belt Filter Press Dewatering....5.41
5.6.3 Belt Filter Press Polymer Makeup System....5.43

6. OPERATING PROCEDURES....6.1
6.1 GENERAL....6.1
6.2 WASTEWATER TREATMENT PROCESS CONTROL SYSTEM....6.1
6.2.1 Hand-Off-Auto (HOA) and Emergency Shut Down (ESD) Switches....6.1
6.3 RAW WASTEWATER PUMPING....6.2
6.3.1 Reference Information....6.2
6.3.2 Operators Interface....6.2
6.3.3 Normal Operation....6.2
6.3.4 Controls....6.3
6.3.5 Normal Equipment Status....6.3
6.3.6 Manual Operation....6.3
6.3.7 Automatic Operation....6.4
6.3.7.1 Sequence Normal Operation....6.4
6.3.8 Abnormal Operation....6.4
6.3.8.1 Abnormal Operation Alarms....6.5
6.3.9 HMI Screens and Alarm Indication....6.5
6.4 FINE SCREENS....6.5
6.4.1 Reference Information....6.6
6.4.2 Normal Operation....6.6
6.4.3 Controls....6.6
6.4.4 Normal Valve and Switch Positions....6.6
6.4.5 Manual Operation....6.7
6.4.5.1 Spiral Screen:....6.7
6.4.5.2 Compaction Zone Spray:....6.7

6.4.5.3 Basket Spray:.....6.7
6.4.6 Automatic Operation.....6.8
6.4.6.1 Spiral Screen:.....6.8
6.4.6.2 Compaction Zone Spray:.....6.8
6.4.6.3 Basket Spray:.....6.8
6.4.7 Abnormal Operation.....6.9
6.4.8 Fine Screen Alarm Indication.....6.9
6.4.8.1 Spiral Screen Faults/Resets:.....6.9
6.5 PRIMARY FILTERS.....6.9
6.5.1 Reference Information.....6.9
6.5.2 Normal Operation.....6.10
6.5.2.1 Primary Filters.....6.10
6.5.2.2 Primary Filter Blowers.....6.10
6.5.3 Controls.....6.10
6.5.4 Normal Valve and Switch Positions.....6.11
6.5.5 Manual Operation.....6.12
6.5.5.1 Filter Belt.....6.12
6.5.5.2 Blower.....6.12
6.5.5.3 Sludge Screw.....6.13
6.5.5.4 Hot Water Valve.....6.13
6.5.5.5 Cold Water Valve.....6.14
6.5.6 Automatic Operation.....6.14
6.5.6.1 Filter Belt Drive.....6.14
6.5.6.2 Blower.....6.15
6.5.6.3 Sludge Screw.....6.15
6.5.6.4 Level Transmitter.....6.15
6.5.6.5 Blower Pressure Transmitter.....6.15
6.5.6.6 Hot Water Valve.....6.15
6.5.6.7 Cold Water Valve.....6.15
6.5.7 Abnormal Operation.....6.15
6.5.8 HMI Screens and Alarm Indication.....6.16
6.6 SECONDARY TREATMENT.....6.17
6.6.1 Reference Information.....6.17
6.6.2 Normal Operation.....6.18
6.6.2.1 Moving Bed Biofilm Reactors (MBBR).....6.18
6.6.2.2 MBBR Blowers.....6.18
6.6.2.3 Aeration System.....6.18
6.6.2.4 Dissolved Air Floatation Clarifiers.....6.18
6.6.2.5 DAF Polymer Preparation / Dilution System.....6.19
6.6.2.6 Effluent Flow Metering Chamber.....6.20
6.6.3 Controls.....6.20
6.6.4 Normal Valve and Switch Positions.....6.20
6.6.4.1 MBBR Blowers Normal Valve and Switch Positions.....6.20
6.6.4.2 MBBR Tanks Normal Valve and Switch Positions.....6.21
6.6.4.3 DAF 1 Normal Valve and Switch Positions.....6.21

6.6.4.4 DAF 2 Normal Valve and Switch Positions 6.23
6.6.5 Manual Operation 6.24
6.6.6 Automatic Operation 6.24
6.6.6.1 Moving Bed Biofilm Reactors (MBBR) 6.24
6.6.6.2 Dissolved Air Floatation Clarifiers 6.25
6.6.7 Abnormal Operation 6.27
6.7 SOLIDS HANDLING 6.28
6.7.1 Reference Information 6.28
6.7.2 Normal Operation 6.28
6.7.2.1 TWAS Pumps 6.28
6.7.2.2 TWAS Storage Tanks 6.29
6.7.2.3 Belt Filter Press Feed Pumps 6.29
6.7.2.4 Belt Filter Press 6.29
6.7.2.5 Belt Filter Press Polymer Preparation / Dilution System 6.29
6.7.3 Controls 6.30
6.7.4 Normal Valve and Switch Positions 6.30
6.7.4.1 TWAS Pumps and Storage Tanks Normal Valve and Switch Positions 6.30
6.7.4.2 Belt Filter Press and Pumps Normal Valve and Switch Positions 6.31
6.7.5 Manual Operation 6.32
6.7.6 Automatic Operation 6.32
6.7.7 Abnormal Operation 6.33

7. MAINTENANCE PROCEDURES AND SERVICE INFORMATION 7.1
7.1 GENERAL 7.1
7.1.1 Keep It Clean 7.1
7.1.2 Keep It Tight 7.1
7.1.3 Renewal Parts 7.1
7.1.4 Parts and Equipment Ordering Procedure 7.2
7.1.5 Scheduled Preventive Maintenance Program 7.2
7.1.6 Maintenance Legend 7.3
7.2 GENERAL MAINTENANCE 7.4
7.3 MAINTENANCE SCHEDULE 7.4
7.4 MAINTENANCE MANUALS 7.4
7.5 SPARE PARTS LIST 7.5

8. TESTING AND CERTIFICATION 8.1

9. CONTACT SERVICE INFORMATION 9.1

LIST OF APPENDICES

APPENDIX A – AS-BUILT DRAWINGS

APPENDIX B – APPROVED SHOP DRAWINGS

APPENDIX C – MAINTENANCE SCHEDULE

APPENDIX D – MAINTENANCE MANUALS – PROCESS EQUIPMENT

APPENDIX E – SPARE PART LIST

APPENDIX F – CONTACT SERVICE INFORMATION

APPENDIX E – WARRANTIES

CHAPTER 3

3. BACKGROUND AND DESIGN DATA

3.1 BACKGROUND

3.1.1 Prior Facilities

Wastewater management in Iqaluit dates back to 1964 when a sanitary sewer outfall, made of five pipes, discharged raw sewage directly onto the beaches of the community of Frobisher Bay, as it was called back then. Shoreline discharge of raw sewage lasted for 12 years when the construction of several lift stations provided the means to pump sewage to a macerator system at the head of Koojesse Inlet. At the same time, a holding pond was built on the tidal plain at the head of the inlet. This facility operated successfully for several decades. However, several overflow and breaching events demanded improvements in the earth structures, and the perimeter drainage of the facility.

The lagoon performed well with improvements in the earth structures, and the perimeter drainage of the facility. The lagoon performed well as a primary treatment facility, with a continuous discharge. Effluent quality from the lagoon systems varied significantly over the course of the year because the only process at work in the winter months was sedimentation.

In the early 90's, regulatory expectations prompted the City to complete an engineering feasibility study on improving the treatment system. The first attempt to implement a secondary treatment for Iqaluit was a design-build contract that was awarded in 1998 to a contractor that selected a membrane bioreactor (MBR) process. Unfortunately, the inexperience of the design builder in northern wastewater treatment became evident by mid-1999.

An evaluation of the incomplete sewage treatment plant was performed in 2002 towards conducting remedial work. Phase 1 of the remedial work involved building the primary treatment system in an addition to the original building, and this work was completed in 2006. This process work consisted of an auger screen, and a primary screen (Salsnes Filter or Leap Primary). Phase 2 of the project was to include design and construction of a secondary clarifier to match the hydraulic capacity of the aeration basins. Unfortunately, funding for the project was only sufficient for Phase 1.

The scope of the latest plant project was to upgrade the wastewater treatment plant to meet effluent discharge limits as set out by the Canadian Council of Ministers of the Environment (CCME) Wastewater Systems Effluent Regulation (WSER) regulated federally under the Fisheries Act. The key limits to be met are an effluent concentration of cBOD less than or equal to 20 mg/L and TSS less than or equal to 20 mg/L.

3.1.2 Process Description

The City of Iqaluit's Wastewater Treatment Plant (WWTP) was upgraded to increase treatment capacity and capability to meet more stringent regulatory requirements and service a growing population. The upgraded facility includes preliminary, primary, secondary treatment, as well as a secondary solids dewatering system as indicated in the process flow diagram presented below and on drawing P002 included in Appendix A. The following process units comprise the treatment system:

- Septage Receiving
- Raw Wastewater Storage and Pumping
- Fine Screening and Compaction
- Primary Filtration
- Biological Treatment with Moving Bed Biofilm Reactors (MBBR)
- Mixed Liquor Clarification with Dissolved Air Floatation Units
- Polymer Addition to Mixed Liquor at Inlet of DAF Units
- Thickened Waste Activated Sludge Storage
- Thickened Waste Activated Sludge Dewatering with Belt Filter Press
- Polymer Addition to TWAS at inlet of Belt Filter Press

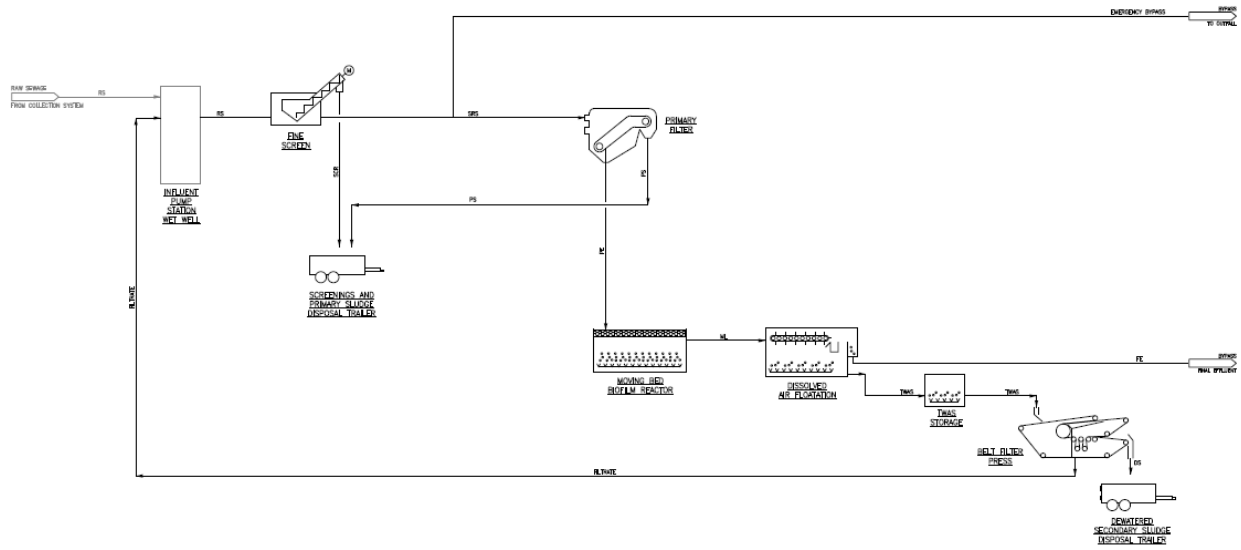

Process Flow Diagram

3.2 DESIGN DATA

3.2.1 Design Capacity

The City's Planning and Development Department indicated that they expect the population will grow at a slower rate than listed in the 2010 General Plan. Based on this direction, an average annual population growth rate of 1.15% per year was chosen. It is estimated that the Community's population is projected to grow from the estimated 8,315 in 2017 to approximately 10,870 residents by 2041. Based on this consideration, the following table shows the raw wastewater characteristics considered for design:

Design Year		2017 Current	2041Future
Population			
Population	PE	8,315	10,870
Flows			
Average per Capita Flow	m^3/cap/d	0.4	0.4
Average Annual Flow	m^3/d	3,326	4,348
Maximum Month Flow (PF=1.2)	m^3/d	3,991	5,218
Maximum Day Flow (PF=2.0)	m^3/d	6,652	8,696
Peak Hour Flow (PF=3.0)	m^3/d	9,978	13,044
Peak Hour Flow (PF=3.0)	L/s	115	151
Biological Oxygen Demand (BOD)			
Average Day Per Capita Load	kg/cap/d	0.08	0.08
Average Annual Load	kg/d	665	870
Average Annual Concentration	mg/L	200	200
Maximum Month Load (PF=1.2)	kg/d	798	1,044
Chemical Oxygen Demand (COD)			
Average Day Per Capita Load	kg/cap/d	0.16	0.16
Average Annual Load	kg/d	1,315	1,739
Average Annual Concentration	mg/L	400	400
Maximum Month Load (PF=1.2)	kg/d	1,578	2,087
Total Suspended Solids (TSS)			
Average Day Per Capita Load	kg/cap/d	0.08	0.08
Average Annual Load	kg/d	658	870
Average Annual Concentration	mg/L	200	200
Maximum Month Load (PF=1.2)	kg/d	789	1,044
Total Kjeldahl Nitrogen (TKN)			
Average Day Per Capita Load	kg/cap/d	0.017	0.017
Average Annual Load	kg/d	140	185
Average Annual Concentration	mg/L	43	43
Maximum Month Load (PF=1.2)	kg/d	168	222
Total Phosphorus (TP)			
Average Day Per Capita Load	kg/cap/d	0.0025	0.0025
Average Annual Load	kg/d	21	27
Average Annual Concentration	mg/L	6	6
Maximum Month Load (PF=1.2)	kg/d	25	33

3.2.2 Septage Receiving

The City provides wastewater holding tank hauling services to residences which are not connected to the piped wastewater collection system. Holding tanks are pumped out regularly

and the wastewater is currently transported to a rudimentary dump station located upstream of the WWTP, where the wastewater flows by gravity into the WWTP wet well.

3.2.3 Raw Wastewater Pumping

The wet well is located deep below grade and receives flow from two lift stations in the City, which have macerators, and a gravity line which services downtown. From the wet well, raw wastewater is pumped to the screening system by three submersible solids-handling chopper pumps. The following criteria was considered for design:

Parameter	Design Value
Number of Units, Total/Duty	3/2
Type	Submersible Solids Handling Chopper Pump
Design Flow, each, L/s	75.5
Peak Capacity, (two pumps operating) L/s	151
Power, each, kW	19

3.2.4 Fine Screens

Raw wastewater pumped from the wet well is screened through 6 mm-diameter opening fine screens. A hot water spray system is included with the screens to allow for the better management of fats, oils and grease that are present in the collection system. Screenings removed from the screens are washed and compacted and then transferred to the hopper and deposited in the screenings and primary sludge trailer located on the lower level of the Headworks Building for disposal off site. Table 4 provides a summary of the design criteria for the fine screens. Screening equipment functions to remove coarse solids and other large materials in wastewater to enhance downstream treatment and protect equipment. The following criteria was considered for design:

Parameter	Design Value
Number of Units, Total/Duty	2/1
Type	Shaftless Spiral
Design Flow, Annual Average, L/s	50.3
Peak Capacity, each, L/s	151
Opening size, mm	6
Power, kW	1.5

3.2.5 Primary Filters

Screened wastewater coming from the fine screens is directed to the primary filters where wastewater is filtered through fine belts (350 µm opening mesh). The belts are mounted in cartridges inside the filters. The belts rotate continuously on the cartridges during the filtration operation capturing solids out of the incoming wastewater by avoiding the big solids pass through. The filters are also provided with air knifes that clean the solids from the belts. The knifes use compressed air to clean. The air stream is gentle to avoid the solid particles break into smaller pieces. Air cleaning also keeps solids drier for effective dewatering. Air is provided by two positive displacement blowers, one for each primary filter. The filter belt is backwashed with hot water to remove any oil and grease buildup. Solids are dewatered on an integral screw press/compaction zone in the filter and discharged through a chute to the disposal screenings and primary sludge trailer located on the lower level of the Headworks Building for disposal off site. The following criteria was considered for the primary filter design:

Parameter	Design Value
Number of Units, Total/Assist (2041 peak hour flow)	2/1
Design Flow, Average Annual, L/s	50.3
Peak Capacity, each L/s	121
Opening size, microns	350
Auger Power, each kW	0.75
Blower Power each, kW	7.5

3.2.6 Moving Bed Biofilm Reactors (MBBR)

Effluent form the primary filters is conveyed by gravity to the MBBR trains for secondary treatment. MBBR is a submerged attached growth process which uses a conventional bioreactor filled with carrier media suspended in the tank. The carrier media provides a surface for attached growth to take place, while the media is kept suspended and in continuous movement with aeration. Sieves are used to retain the carrier media in the bioreactor tanks, while allowing the treated effluent to flow downstream for further processing. The MBBR system is a single pass system that does not require return activated sludge (RAS) from the solids separation process. Each train is designed to treat 75% of the maximum month ultimate design flow or 45.3 L/s per train. Both MBBR trains operate continuously at the same time. Aeration to the MBBRs is provided by three positive displacement aeration blowers (2 duty/1 stand by) located in the secondary treatment area of the building. The following criteria was considered for design:

Parameter	Design Value
Number of Units	2 MBBR trains (2 aeration cells per train)
Reactor Volume, two trains, m^3	392

Parameter	Design Value
Design Flow, Average Annual, L/s	50.3
Peak Capacity, two trains, L/s	90.6
Air Requirement per MBBR Train, Nm3/hr.	600

3.2.7 Dissolved Air Flotation (DAF) Clarification

The effluent from MBBR trains is clarified by DAF units. Dissolved air is added to the mixed liquor and suspended particles are removed from the liquid stream by bringing the particles to the surface, from where they are skimmed off to a collection tank located inside each DAF unit. The DAF thickens MBBR sludge up to approximately 3 to 4 percent dry solids content in a compact foot print. A dry polymer make-up system is used as aid in the water clarification process. The thickened sludge also called thickened waste activated sludge (TWAS) is pumped from the DAF by the TWAS pumps and stored in the TWAS storage tanks. The DAF units operate continuously in parallel receiving mixed liquor from the MBBR trains. The following criteria was considered for design:

Parameter	Design Value
Number of Units, Duty/Assist	2/1
Design Flow, Annual Average, L/s	50.3
Design Flow Each DAF Unit, (two DAF units operating), L/s	75.5
Hydraulic Capacity Each DAF Unit, (with deterioration of the final effluent quality when only one DAF unit is operational), L/s	151

3.2.8 Solids Dewatering (Belt Filter Press)

The thickened waste activated sludge (TWAS) collected in the TWAS storage tanks is aerated by coarse bubble aeration to keep the solids in suspension and prevent it from turning anaerobic while being stored. Duty/standby solids handling pumps transfer TWAS from the storage tank to the filter press skid for dewatering. A belt filter press uses a perforated belt and mechanical compression to filter and separate the liquid fraction in the sludge from the solids fraction. To accomplish the filtering action under compression, a fabric belt is wound through a series of rollers, in which sludge is fed at the beginning of the belt and "squeezed" by the successive rollers. Once the dewatered cake is scraped from the end of the press, the belt is washed with water to remove residual solids before the belt is returned to the first roller. Flush water is boosted by a booster pump located within the belt filter press skid. Liquid waste from the belt filter press is returned to the influent wet well of the process for treatment. The press belt tracking and tensioning systems are pneumatic. Air is provided by a compressor installed in the skid. A dry

polymer make-up system is used as aid in the TWAS dewatering process. The following criteria was considered for design:

Parameter	Design Value
Number of Units, Duty/Total	1/1
Feed Solids Concentration, %TS	3 - 4
Discharge Solids Concentration, %TS	15 – 19 (estimated)
Design Dry Solids Loading, kg/h	218
Design Flow, m^3/h	7.3
Polymer Dosage, kg/tonne dry solids	3 to 10
Gear Drive Belt Motor, kW	0.75
Compressor Motor, kW	1.5
Booster Pump Motor, kW	5.5

3.2.9 Effluent

Secondary effluent from the DAF units is conducted by an underground pipeline to the final destination. The secondary effluent flows through the retention channel, under an underflow weir (to contain any floatable flammables), then over an overflow weir and finally out through the outfall piping located just above the high-water mark of Frobisher Bay.

3.2.10 Sludge

The screenings from the fine screens and primary sludge from the primary filters discharge into the screenings and primary sludge trailer which for disposal off site.

Dewatered sludge from the belt filter press is discharged in the secondary sludge disposal trailer for disposal off site.

3.3 PROCESS COMMODITIES

The following table identifies the process streams and abbreviations used in the contract documents.

Commodities	Abbreviation
Raw sewage	RS
Screened raw sewage	SRS
Primary effluent	PE
Mixed liquor	ML

Commodities	Abbreviation
DAF subnatant	DSUB
Secondary effluent	SE
Final effluent	FE
Filtrate	FIL
Screenings	SCR
Dewatered primary Sludge	DPS
Waste activated sludge	WAS
Thickened waste activated sludge	TWAS
Dewatered secondary sludge	DWS

END OF CHAPTER 3

CHAPTER 4

4. SCHEMATICS AND FUNCTIONAL DATA

4.1 GENERAL

The following tables describe the location of components of the various systems and the function that each performs. Drawings are referenced for each portion of the wastewater treatment plant.

4.2 RAW WASTEWATER FLOW

(Refer to Drawing P-604 in Appendix A)

The following table identifies the components related to the flow of wastewater from the influent pump station wet well to the fine screens.

No.	Component	Location	Function Performed	Remarks
1	Influent Pump Station Wet Well (T-01-001)	Headworks	Raw influent storage	
2	Raw Wastewater Pump (P-01-110)	Headworks – Influent Pump Station Wet Well	Raw wastewater pumping to the fine screens (On a VFD)	Plant Control System Controlled
3	Raw Wastewater Pump (P-01-120)	Headworks – Influent Pump Station Wet Well	Raw wastewater pumping to the fine screens (On a VFD)	Plant Control System Controlled
4	Raw Wastewater Pump (P-01-130)	Headworks – Influent Pump Station Wet Well	Raw wastewater pumping to the fine screens (On a VFD)	Plant Control System Controlled
5	Check Valve (CV-01-111)	On 200 mm Dia. Raw Sewage Pipeline from the Influent Pump Station Wet Well	Stops back flow of Raw Sewage into the Influent Pump Station Wet Well	
6	Check Valve (CV-01-112)	On 200 mm Dia. Raw Sewage Pipeline from the Influent Pump Station Wet Well	Stops back flow of Raw Sewage into the Influent Pump Station Wet Well	
7	Check Valve (CV-01-113)	On 200 mm Dia. Raw Sewage Pipeline from the Influent Pump Station Wet Well	Stops back flow of Raw Sewage into the Influent Pump Station Wet Well	

No.	Component	Location	Function Performed	Remarks
8	Plug Valve (PLV-01-111)	On 200 mm Dia. Raw Sewage Pipeline from the Influent Pump Station Wet Well	Isolates discharge of Raw Wastewater Pump P-01-110	Normally open
9	Plug Valve (PLV-01-112)	On 200 mm Dia. Raw Sewage Pipeline from the Influent Pump Station Wet Well	Isolates discharge of Raw Wastewater Pump P-01-120	Normally open
10	Plug Valve (PLV-01-113)	On 200 mm Dia. Raw Sewage Pipeline from the Influent Pump Station Wet Well	Isolates discharge of Raw Wastewater Pump P-01-130	Normally open
11	Air/Vacuum Release Valve (ARV-01-100)	On 250 mm Dia. Raw Sewage Pipeline from the Influent Pump Station Wet Well	Release air/vacuum in the influent Raw Sewage pipeline	Normally closed.
12	Flow Meter (FQIT-150, FM-01-150)	On 200 mm Dia. Raw Sewage Pipeline from the Influent Pump Station Wet Well	Measures influent Raw Sewage Flow to the Plant	Signal to Plant Control System
13	Level Indicating Transmitter (LIT-100)	On Influent Pump Station Wet Well	Indicates the Raw Sewage level in the Pump Station Wet Well	Signal to Plant Control System
14	Level Switch (LSLL-111)	On Influent Pump Station Wet Well	Indicates the low low raw sewage level in the Pump Station Wet Well	Signal to Plant Control System
15	Level Switch (LSL-112)	On Influent Pump Station Wet Well	Indicates the low raw sewage level in the Pump Station Wet Well	Signal to Plant Control System
16	Level Switch (LSH-113)	On Influent Pump Station Wet Well	Indicates the high raw sewage level in the Pump Station Wet Well	Signal to Plant Control System
17	Level Switch (LSHH-114)	On Influent Pump Station Wet Well	Indicates the high high raw sewage level in the Pump Station Wet Well	Signal to Plant Control System

4.3 FINE SCREENS

(Refer to Drawing P-605 in Appendix A)

The following table identifies the components related to the flow of wastewater through the fine screens.

No.	Component	Location	Function Performed	Remarks
1	Motorized Knife Gate Valve (KV-01-211)	Headworks Upper Floor	Isolates Fine Screen SCRN-01-210 upstream	Normally Open if screen operating
2	Knife Gate Valve (KV-01-212)	Headworks Upper Floor	Isolates Fine Screen SCRN-01-210 downstream	Normally Open if screen operating
3	Fine Screen (SCRN-01-210)	Headworks Upper Floor	Spiral fine screening of the raw sewage	Plant Control System Controlled
4	Level Indicating Transmitter (LIT-211)	Mounted on Fine Screen SCRN-01-210 tankage	Indicates the raw sewage level in Fine Screen SCRN-01-210	Plant Control System Controlled
5	Pressure Regulating Valve (PRV-01-110)	Headworks Upper Floor	Regulates pressure of screen's wash water	Normally open
6	Ball Valve (BV-01-112)	Mounted on Fine Screen SCRN-01-210 tankage	Isolates the flow of wash water to Fine Screen SCRN-01-210 tank	Normally Open
7	Ball Valve (BV-01-123)	Mounted on Fine Screen SCRN-01-210 tankage	Isolates the flow of wash water to Fine Screen SCRN-01-210 compactor	Normally Open
8	Solenoid Valve (SV-01-120)	Mounted on Fine Screen SCRN-01-210 tankage	Controls the flow of wash water to Fine Screen SCRN-01-210 tank	Plant Control System Controlled
9	Solenoid Valve (SV-01-122)	Mounted on Fine Screen SCRN-01-210 tankage	Controls the flow of wash water to Fine Screen SCRN-01-210 compactor	Plant Control System Controlled
10	Motorized Knife Gate Valve (KV-01-221)	Headworks Upper Floor	Isolates Fine Screen SCRN01-220 upstream	Normally Open if screen operating
11	Knife Gate Valve (KV-01-222)	Headworks Upper Floor	Isolates Fine Screen SCRN01-220 downstream	Normally Open if screen operating
12	Fine Screen (SCRN-01-220)	Headworks Upper Floor	Spiral Fine screening of the raw sewage	Plant Control System Controlled
13	Level Indicating Transmitter (LIT-221)	Mounted on Fine Screen SCRN-01-220 tankage	Indicates the raw sewage level in Fine Screen SCRN-01-220	Signal to Plant Control System

No.	Component	Location	Function Performed	Remarks
14	Ball Valve (BV-01-114)	Mounted on Fine Screen SCRN-01-220 tankage	Isolates the flow of wash water to Fine Screen SCRN-01-220	Normally Open
15	Ball Valve (BV-01-127)	Mounted on Fine Screen SCRN-01-220 tankage	Isolates the flow of wash water to Fine Screen SCRN-01-220 compactor	Normally Open
16	Solenoid Valve (SV-01-124)	Mounted on Fine Screen SCRN-01-220 tankage	Controls the flow of wash water to Fine Screen SCRN-01-220 tank	Plant Control System Controlled
17	Solenoid Valve (SV-01-126)	Mounted on Fine Screen SCRN-01-220 tankage	Controls the flow of wash water to Fine Screen SCRN-01-220 compactor	Plant Control System Controlled
18	Motorized Knife Gate Valve (KV-01-112)	Headworks Lower Floor	Controls screening discharge to the Screenings and Primary Sludge Trailer	Normally Closed. Operated by Operator as required.
19	Motorized Knife Gate Valve (KV-01-112A)	Headworks Lower Floor	Controls primary dewatered solids discharge to the Screenings and Primary Sludge Trailer	Normally Closed. Operated by Operator as required.
20	Knife Gate Valve (KV-01-232)	Headworks Upper Floor	Cross connection of Screened Sewage at Fine Screens effluent	Normally Closed

4.4 PRIMARY FILTRATION

(Refer to Drawing P-606, P-607, and P-608 in Appendix A)

The following table identifies the components related to the flow of wastewater through the primary filters.

No.	Component	Location	Function Performed	Remarks
1	Motorized Knife Gate Valve (KV-01-111, FV-111)	Headworks Upper Floor	Controls screened sewage flow to Primary Filter PF-01-310	Plant Control System Controlled
2	Primary Filter Belt PF-01-310	Headworks Upper Floor	Retains suspended solids from screened sewage	Plant Control System Controlled
3	Primary Filter Screw Press SP-01-330	Headworks Upper Floor	Compresses and dewaters primary sludge	Plant Control System Controlled
4	Ball Valve Influent Sampling Port	Headworks Upper Floor	Primary Filter PF-01-310 influent sampling port	Normally Closed

No.	Component	Location	Function Performed	Remarks
5	Ball Valve Effluent Sampling Port	Headworks Upper Floor	Primary Filter PF-01-310 effluent sampling port	Normally Closed
6	Solenoid Valve (PLV-01-113)	Headworks Upper Floor	Allows flow of Primary Filter PF-01-310 drain to Influent Pumps Station Wet Well	Plant Control System Controlled
7	Ball Valve (BV-01-310)	Headworks Upper Floor	Isolates hot non-potable wash water to Primary Filter PF-01-310/320	Normally Open
8	Pressure Regulating Valve (PRV-01-311)	Headworks Upper Floor	Regulates pressure of hot non-potable wash water line to Primary Filter PF-01-310/320	Normally Open
9	Ball Valve (BV-01-314)	Headworks Upper Floor	Isolates hot non-potable wash water to Primary Filter PF-01-310	Normally Open
10	Solenoid Valve (SV-01-312)	Headworks Upper Floor	Controls flow of hot non-potable wash water to Primary Filter PF-01-310 & screw press SP-01-330	Plant Control System Controlled
11	Ball Valve (BV-01-320)	Headworks Upper Floor	Isolates cold non-potable wash water to Primary Filters PF-01-310/320	Normally Open
12	Pressure Regulating Valve (PRV-01-321)	Headworks Upper Floor	Regulates pressure of cold non-potable wash water to Primary Filters PF-01-310/320	Normally Open
13	Ball Valve (BV-01-324)	Headworks Upper Floor	Isolates flow of cold non-potable wash water to Primary Filter PF-01-310	Normally Open
14	Solenoid Valve (SV-01-322)	Headworks Upper Floor	Controls flow of cold non-potable wash water to Primary Filter PF-01-310	Plant Control System Controlled
15	Motorized Knife Gate Valve (KV-01-121, FV-121)	Headworks Upper Floor	Controls screened sewage flow to Primary Filter PF-01-320	Plant Control System Controlled
16	Primary Filter Belt PF-01-320	Headworks Upper Floor	Retains suspended solids from screened sewage	Plant Control System Controlled
17	Primary Filter Screw Press SP-01-340	Headworks Upper Floor	Compresses and dewaters primary sludge	Plant Control System Controlled
18	Ball Valve Influent Sampling Port	Headworks Upper Floor	Primary Filter PF-01-320 influent sampling port	Normally Closed
19	Ball Valve Effluent Sampling Port	Headworks Upper Floor	Primary Filter PF-01-320 effluent sampling port	Normally Closed

No.	Component	Location	Function Performed	Remarks
20	Solenoid Valve (PLV-01-123)	Headworks Upper Floor	Allows flow of Primary Filter PF-01-320 drain to Influent Pumps Station Wet Well	Plant Control System Controlled
21	Ball Valve (BV-01-315)	Headworks Upper Floor	Isolates hot non-potable wash water to Primary Filter PF-01-320	Normally Open
22	Solenoid Valve (SV-01-313)	Headworks Upper Floor	Controls flow of hot non-potable wash water to Primary Filter PF-01-320 & Screw Press SP-01-340	Plant Control System Controlled
23	Ball Valve (BV-01-325)	Headworks Upper Floor	Isolates flow of cold non-potable wash water to Primary Filter PF-01-320	Normally Open
24	Solenoid Valve (SV-01-323)	Headworks Upper Floor	Controls flow of cold non-potable wash water to Primary Filter PF-01-320	Plant Control System Controlled
25	Motorized Knife Gate Valve (KV-01-001, FV-001)	Headworks Upper Floor	Diverts primary effluent to outfall	Plant Control System Controlled
26	Headworks Bridge Crane Hoist	Headworks Upper Floor	Lifts Primary Filter cartridges for maintenance	Manually Operated
27	Primary Filter Blower (B-02-210)	Secondary Treatment – Above MBBR trains	Supplies air to Primary Filter PF-01-310 air knife valve	Plant Control System Controlled
28	Primary Filter Blower Fan (F-02-215)	Inside Primary Filter Blower PF-01-210 enclosure	Supplies air to Primary Filter Blower PF-01-210 enclosure	Plant Control System Controlled
29	Air Filter (AF-02-212)	Inside Primary Filter Blower PF-01-210 enclosure	Filtrates air at suction of Primary Filter Blower PF-01-210	
30	Silencer (SLR-02-213)	Inside Primary Filter Blower PF-01-210 enclosure	Reduces noise at suction of Primary Filter Blower PF-01-210	
31	Silencer (SLR-02-214)	Inside Primary Filter Blower PF-01-210 enclosure	Reduces noise at discharge of Primary Filter Blower PF-01-210	
32	Pressure Indicator (PI-02-217)	Inside Primary Filter Blower PF-01-210 enclosure	Indicates pressure at discharge of Primary Filter Blower PF-01-210	
33	Check Valve (CV-02-215)	Inside Primary Filter Blower PF-01-210 enclosure	Prevents air back flow to Primary Filter Blower PF-01-210	

No.	Component	Location	Function Performed	Remarks
34	Ball Valve (BV-02-219)	Inside Primary Filter Blower PF-01-210 enclosure	Isolates instrument PI-02-217	Normally Open
35	Pressure Safety Valve (PSV-02-218)	Inside Primary Filter Blower PF-01-210 enclosure	Release excessive air pressure at discharge of Primary Filter Blower PF-01-210	
36	Primary Filter Blower (B-02-220)	Secondary Treatment – Above MBBR trains	Supplies air to Primary Filter PF-01-312 air knife valve	Plant Control System Controlled
37	Primary Filter Blower Fan (F-02-225)	Inside primary Filter Blower PF-01-220 enclosure	Supplies air to primary filter blower PF-01-220 enclosure	Plant Control System Controlled
38	Air Filter (AF-02-222)	Inside primary Filter Blower PF-01-220 enclosure	Filtrates air at suction of Primary Filter Blower PF-01-220	
39	Silencer (SLR-02-223)	Inside primary Filter Blower PF-01-220 enclosure	Reduces noise at suction of Primary Filter Blower PF-01-220 enclosure	
40	Silencer (SLR-02-224)	Inside primary Filter Blower PF-01-220 enclosure	Reduces noise at discharge of Primary Filter Blower PF-01-220 enclosure	
41	Pressure Indicator (PI-02-227)	Inside primary Filter Blower PF-01-220 enclosure	Indicates pressure at discharge of Primary Filter Blower PF-01-220	
42	Butterfly Valve (BFV-02-216)	Secondary Treatment – Above MBBR trains	Isolates process air discharge from Primary Filter Blower B-02-210	Normally Open
43	Butterfly Valve (BFV-02-226)	Secondary Treatment – Above MBBR trains	Isolates process air discharge from Primary Filter Blower B-02-220	Normally Open
44	Check Valve (CV-02-225)	Inside primary Filter Blower PF-01-220 enclosure	Prevents air back flow to Primary Filter Blower PF-01-220	
45	Ball Valve (BV-02-229)	Inside primary Filter Blower PF-01-220 enclosure	Isolates instrument PI-02-217	Normally Open
46	Pressure Safety Valve (PSV-02-228)	Inside primary Filter Blower PF-01-220 enclosure	Release excessive air pressure at discharge of Primary Filter Blower PF-01-220	

4.5 SECONDARY TREATMENT

4.5.1 Aeration Blowers

(Refer to Drawing P-609 in Appendix A)

The following table identifies the components related to the aeration blower system that provides air to the secondary system.

No.	Component	Location	Function Performed	Remarks
1	Air Filter (AF-02-112)	Inside Process Aeration Blower B-02-110 enclosure	Filters suction air to Process Aeration Blower B-02-110	
2	Silencer (SLR-02-113)	Inside Process Aeration Blower B-02-110 enclosure	Reduces noise at suction of Process Aeration Blower B-02-110	
3	Pressure Indicator (PI-107)	Inside Process Aeration Blower B-02-110 enclosure	Indicates air pressure at suction of Process Aeration Blower B-02-110	
4	Pressure Switch (PSL-108)	Inside Process Aeration Blower B-02-110 enclosure	Transmits air pressure at suction of Process Aeration Blower B-02-110	Signal to Plant Control System
5	Ball Valve (BV-02-106)	Inside Process Aeration Blower B-02-110 enclosure	Isolates instrument PI-107/108	Normally Open
6	Process Aeration Blower (B-02-110)	Secondary Treatment - Upper	Supplies air to MBBR trains, TWAS Storage Tanks and DAF units	Plant Control System Controlled
7	Silencer (SLR-02-114)	Inside Process Aeration Blower B-02-110 enclosure	Reduces noise at discharge of Process Aeration Blower B-02-110	
8	Pressure Safety Valve (PSV-02-117)	Inside Process Aeration Blower B-02-110 enclosure	Release excessive air pressure at discharge of Process Aeration Blower B-02-110	
9	Ball Valve (BV-02-116)	Inside Process Aeration Blower B-02-110 enclosure	Isolates instrument PI-117/118	Normally Open
10	Pressure Indicator (PI-02-117)	Inside Process Aeration Blower B-02-110 enclosure	Indicates air pressure at discharge of Process Aeration Blower B-02-110	
11	Pressure Switch (PSL-02-118)	Inside Process Aeration Blower B-02-110 enclosure	Transmits air pressure at discharge of Process Aeration Blower B-02-110	Signal to Plant Control System
12	Temperature Indicator (TI-02-119)	Inside Process Aeration Blower B-02-110 enclosure	Indicates air temperature at discharge of Process Aeration Blower B-02-110	

No.	Component	Location	Function Performed	Remarks
13	Temperature Switch (TI-02-120)	Inside Process Aeration Blower B-02-110 enclosure	Air temperature at discharge of Process Aeration Blower B-02-110	
14	Temperature Switch (TI-02-180)	Secondary Treatment - Upper	Air temperature at Process Aeration Blower B-02-110 enclosure	Signal to Plant Control System
15	Check Valve (CV-02-115)	Inside Process Aeration Blower B-02-110 enclosure	Prevent air backflow to Process Aeration Blower B-02-110	
16	Butterfly Valve (BFV-02-116)	Secondary Treatment - Upper	Isolates Process Aeration Blower B-02-110 downstream	
17	Air Filter (AF-02-122)	Inside Process Aeration Blower B-02-120 enclosure	Filters suction air to Process Aeration Blower B-02-120	
18	Silencer (SLR-02-123)	Inside Process Aeration Blower B-02-120 enclosure	Reduces noise at suction of Process Aeration Blower B-02-120	
19	Ball Valve (BV-02-141)	Inside Process Aeration Blower B-02-120 enclosure	Isolates instrument PI-142/143	
20	Pressure Indicator (PI-02-142)	Inside Process Aeration Blower B-02-120 enclosure	Indicates air pressure at suction of Process Aeration Blower B-02-120	
21	Pressure Switch (PSL-02-143)	Inside Process Aeration Blower B-02-120 enclosure	Transmits air pressure at suction of Process Aeration Blower B-02-120	Signal to Plant Control System
22	Process Aeration Blower (B-02-120)	Secondary Treatment - Upper	Supplies air to MBBR trains, TWAS Storage Tanks and DAF units	Plant Control System Controlled
23	Silencer (SLR-02-124)	Inside Process Aeration Blower B-02-120 enclosure	Reduces noise at discharge of Process Aeration Blower B-02-120	
24	Pressure Safety Valve (PSV-02-127)	Inside Process Aeration Blower B-02-120 enclosure	Release excessive air pressure at discharge of Process Aeration Blower B-02-120	
25	Ball Valve (BV-02-126)	Inside Process Aeration Blower B-02-120 enclosure	Isolates instrument PI-127/128	
26	Pressure Indicator (PI-02-127)	Inside Process Aeration Blower B-02-120 enclosure	Indicates air pressure at discharge of Process Aeration Blower B-02-120	
27	Pressure Switch (PSL-02-128)	Inside Process Aeration Blower B-02-120 enclosure	Transmits air pressure at discharge of Process Aeration Blower B-02-120	Signal to Plant Control System

No.	Component	Location	Function Performed	Remarks
28	Temperature Indicator (TI-02-129)	Inside Process Aeration Blower B-02-120 enclosure	Indicates air temperature at discharge of Process Aeration Blower B-02-120	
29	Temperature Switch (TI-02-130)	Inside Process Aeration Blower B-02-120 enclosure	Air temperature at discharge of Process Aeration Blower B-02-120	
30	Temperature Switch (TI-02-185)	Secondary Treatment - Upper	Air temperature at Process Aeration Blower B-02-120 enclosure	Signal to Plant Control System
31	Check Valve (CV-02-125)	Inside Process Aeration Blower B-02-120 enclosure	Prevent air backflow to Process Aeration Blower B-02-120	
32	Butterfly Valve (BFV-02-126)	Secondary Treatment - Upper	Isolates Process Aeration Blower B-02-120 downstream	
33	Air Filter (AF-02-132)	Inside Process Aeration Blower B-02-130 enclosure	Filters suction air to Process Aeration Blower B-02-130	
34	Silencer (SLR-02-133)	Inside Process Aeration Blower B-02-130 enclosure	Reduces noise at suction of Process Aeration Blower B-02-130	
35	Ball Valve (BV-02-144)	Inside Process Aeration Blower B-02-130 enclosure	Isolates instrument PI-145/146	
36	Pressure Indicator (PI-02-145)	Inside Process Aeration Blower B-02-130 enclosure	Indicates air pressure at suction of Process Aeration Blower B-02-130	
37	Pressure Switch (PSL-02-146)	Inside Process Aeration Blower B-02-130 enclosure	Transmits air pressure at suction of Process Aeration Blower B-02-130	Signal to Plant Control System
38	Process Aeration Blower (B-02-130)	Secondary Treatment - Upper	Supplies air to MBBR trains, TWAS Storage Tanks and DAF units	Plant Control System Controlled
39	Silencer (SLR-02-134)	Inside Process Aeration Blower B-02-130 enclosure	Reduces noise at discharge of Process Aeration Blower B-02-130	
40	Pressure Safety Valve (PSV-02-137)	Inside Process Aeration Blower B-02-130 enclosure	Release excessive air pressure at discharge of Process Aeration Blower B-02-130	
41	Ball Valve (BV-02-136)	Inside Process Aeration Blower B-02-130 enclosure	Isolates instrument PI-137/138	
42	Pressure Indicator (PI-02-137)	Inside Process Aeration Blower B-02-130 enclosure	Indicates air pressure at discharge of Process Aeration Blower B-02-130	

No.	Component	Location	Function Performed	Remarks
43	Pressure Switch (PSL-02-138)	Inside Process Aeration Blower B-02-130 enclosure	Transmits air pressure at discharge of Process Aeration Blower B-02-130	Signal to Plant Control System
44	Temperature Indicator (TI-02-139)	Inside Process Aeration Blower B-02-130 enclosure	Indicates air temperature at discharge of Process Aeration Blower B-02-130	
45	Temperature Switch (TI-02-140)	Inside Process Aeration Blower B-02-130 enclosure	Air temperature at discharge of Process Aeration Blower B-02-130	
46	Temperature Switch (TI-02-190)	Secondary Treatment - Upper	Air temperature at Process Aeration Blower B-02-130 enclosure	Signal to Plant Control System
47	Check Valve (CV-02-135)	Inside Process Aeration Blower B-02-130 enclosure	Prevent air backflow to Process Aeration Blower B-02-130	
48	Butterfly Valve (BFV-02-136)	Secondary Treatment - Upper	Isolates Process Aeration Blower B-02-130 downstream	
49	Pressure transmitter (PIT-02-195)	Secondary Treatment - Upper	Indicates air pressure from blower discharge header	Signal to Plant Control System
50	Butterfly Valve (BFV-02-151)	Secondary Treatment - Upper	Isolates air supply to MBBR2	Normally open
51	Motorized Butterfly Valve (BFV-02-150)	Secondary Treatment - Upper	Controls air flow to MBBR2	Plant Control System Controlled
52	Flow meter (FM-02-152, FE-02-152)	Secondary Treatment - Upper	Measures air flow to MBBR2	Signal to Plant Control System
53	Butterfly Valve (BFV-02-153)	Secondary Treatment - Upper	Isolates air supply to MBBR1	Normally open
54	Motorized Butterfly Valve (BFV-02-155)	Secondary Treatment - Upper	Controls air flow to MBBR1	Plant Control System Controlled
55	Flow meter (FM-02-156, FE-02-156)	Secondary Treatment - Upper	Measures air supply to MBBR1	Signal to Plant Control System
56	Butterfly Valve (BFV-02-171)	Secondary Treatment - Upper	Isolates air supply to TWAS Tanks	Normally open
57	Motorized Butterfly Valve (BFV-02-170)	Secondary Treatment - Upper	Controls air flow to TWAS Storage Tanks	Plant Control System Controlled
58	Flow meter (FM-02-172, FE-02-172)	Secondary Treatment - Upper	Measures air flow to TWAS Storage Tanks	Signal to Plant Control System

4.5.2 Moving Bed Bioreactors (MBBR)

(Refer to Drawing P-610 in Appendix A)

The following table identifies the components related to Moving Bed Bioreactor (MBBR) trains.

No.	Component	Location	Function Performed	Remarks
1	Motorized Knife Gate Valve (KV-02-211, FV-211)	Secondary Treatment - Lower	Controls primary effluent flow to MBBR T-02-210	Plant Control System Controlled
2	MBBR 1 (T-02-210)	Secondary Treatment - Lower	Oxidases organic matter	Plant Control System Controlled
3	Dissolved Oxygen Analyzers (AIT-02-211)	Mounted in the MBBR tank T-02-210 Cell 1	Measures dissolved oxygen concentration in MBBR1 Cell 1	Signal to Plant Control System
4	Dissolved Oxygen Analyzers (AIT-02-212)	Mounted in the MBBR tank T-02-210 Cell 2	Measures dissolved oxygen concentration in MBBR1 Cell 1	Signal to Plant Control System
5	Level Switch High (LSH-02-213)	Mounted in the MBBR tank T-02-210 Cell 1	Senses high water level in MBBR1 Cell1	Signal to Plant Control System
6	Level Switch High (LSH-02-214)	Mounted in the MBBR tank T-02-210 Cell 2	Senses high water level in MBBR1 Cell2	Signal to Plant Control System
7	Butterfly Valve (BFV-02-181)	Secondary Treatment - Lower	Isolates airflow to MBBR tank T-02-210	Manually Operated
8	Butterfly Valve (BFV-02-182)	Secondary Treatment - Lower	Isolates airflow to MBBR tank T-02-210	Manually Operated
9	Butterfly Valve (BFV-02-183)	Secondary Treatment - Lower	Isolates airflow to MBBR tank T-02-210	Manually Operated
10	Butterfly Valve (BFV-02-184)	Secondary Treatment - Lower	Isolates airflow to MBBR tank T-02-210	Manually Operated
11	Motorized Knife Gate Valve (KV-02-221, FV-221)	Secondary Treatment - Lower	Controls primary effluent flow to MBBR T-02-220	Plant Control System Controlled
12	MBBR 2 (T-02-220)	Secondary Treatment - Lower	oxidases organic matter	Plant Control System Controlled
13	Dissolved Oxygen Analyzers (AIT-02-221)	Mounted in the MBBR tank T-02-220	Measures dissolved oxygen concentration in MBBR2	Signal to Plant Control System
14	Dissolved Oxygen Analyzers (AIT-02-222)	Mounted in the MBBR tank T-02-220	Measures dissolved oxygen concentration in MBBR2	Signal to Plant Control System
15	Level Switch High (LSH-02-223)	Mounted in the MBBR tank T-02-220 Cell 1	Senses high water level in MBBR2 Cell1	Signal to Plant Control System
16	Level Switch High (LSH-02-224)	Mounted in the MBBR tank T-02-220 Cell 2	Senses high water level in MBBR2 Cell 2	Signal to Plant Control System
17	Butterfly Valve (BFV-02-191)	Secondary Treatment - Lower	Isolates airflow to MBBR tank T-02-220	Manually Operated

No.	Component	Location	Function Performed	Remarks
18	Butterfly Valve (BFV-02-192)	Secondary Treatment - Lower	Isolates airflow to MBBR tank T-02-220	Manually Operated
19	Butterfly Valve (BFV-02-193)	Secondary Treatment - Lower	Isolates airflow to MBBR tank T-02-220	Manually Operated
20	Butterfly Valve (BFV-02-194)	Secondary Treatment - Lower	Isolates airflow to MBBR tank T-02-220	Manually Operated
21	Knife Gate Valve (KV-02-230, FV-230)	Secondary Treatment - Lower	Directs mixed liquor from MBBR trains to any of the DAF units	Manually Operated, Normally Closed

4.5.3 Dissolved Air Flotation (DAF) Clarification #1

(Refer to Drawing P-611 and P-612 in Appendix A)

The following table identifies the components related to Dissolved Air Flotation Clarification system #1.

No.	Component	Location	Function performed	Remarks
1	Motorized Valve (BFV-02-312, FV-312)	Secondary Treatment - Lower	Controls mixed liquor flow to DAF unit T02-310	Plant Control System Controlled
2	Ball Valve (BV-02-313)	Secondary Treatment - Lower	Isolates DAF subnatant recirculation to the entry zone	
3	Motorized Butterfly Valve (BFV-02-625, FV-625)	Secondary Treatment - Lower	Isolates DAF subnatant recirculation to the white-water injection zone	
4	DAF Tank 1 (T-02-310)	Secondary Treatment - Lower	Mixed liquor clarification and secondary sludge thickening	Plant Control System Controlled
5	DAF 1 Sludge Scraper (DDR-02-311)	Secondary Treatment - Lower	Removes thickened sludge from the flotation zone to the sludge collection zone	Plant Control System Controlled
6	Level Transmitter (LIT-02-331)	Mounted inside the DAF Tank	Senses mixed liquor level in the flotation zone	Signal to Plant Control System
7	Level Switch (LSH-02-332)	Mounted inside the DAF Tank	Senses sludge high level in the sludge collection zone	Signal to Plant Control System
8	Level Switch (LSL-02-333)	Mounted inside the DAF Tank	Senses sludge low level in the sludge collection zone	Signal to Plant Control System
9	TSS Analyzer (AIT-02-334)	Mounted inside the DAF Tank	Senses TSS in the clarified water evacuation zone	Signal to Plant Control System

No.	Component	Location	Function performed	Remarks
10	Butterfly Valve (BFV-02-165)	Secondary Treatment - Lower	Isolates air flow to DAF unit T-02-310 for solids mixing	Manual Operation. Normally closed
11	Butterfly Valve (BFV-02-166)	Secondary Treatment - Lower	Isolates air flow to DAF Unit T-02-310 for solids mixing	Manual Operation Normally closed
12	Butterfly Valve (BFV-02-170)	Secondary Treatment - Lower	Isolates air flow to DAF Unit T-02-310 for solids mixing	Manual Operation Normally closed
13	Butterfly Valve (BFV-02-171)	Secondary Treatment - Lower	Isolates air flow to DAF Unit T-02-310 for solids mixing	Manual Operation Normally closed
14	Butterfly Valve (BFV-02-172)	Secondary Treatment - Lower	Isolates air flow to DAF Unit T-02-310 for solids mixing	Manual Operation Normally closed
15	Plug Valve (PLV-02-301)	Secondary Treatment - Lower	Isolates sludge drainage from DAF Unit T-02-310	Manual Operation Normally closed
16	Plug Valve (PLV-02-302)	Secondary Treatment - Lower	Isolates sludge drainage from DAF Unit T-02-310	Manual Operation Normally closed
17	Plug Valve (PLV-02-303)	Secondary Treatment - Lower	Isolates sludge drainage from DAF Unit T-02-310	Manual Operation Normally closed
18	Plug Valve (PLV-02-304)	Secondary Treatment - Lower	Isolates sludge drainage from DAF Unit T-02-310	Manual Operation Normally closed
19	Plug Valve (PLV-02-305)	Secondary Treatment - Lower	Isolates sludge drainage from DAF Unit T-02-310	Manual Operation Normally closed
20	Pneumatic Actuated Butterfly Valve (BFV-02-309)	Secondary Treatment - Lower	Controls internal DAF subnatant recirculation	Pneumatic Operation. Plant Control System Controlled
21	Pneumatic Actuated Butterfly Valve (BFV-02-310)	Secondary Treatment - Lower	Controls internal DAF subnatant recirculation	Pneumatic Operation. Plant Control System Controlled
22	Plug valve (PLV-02-306)	Secondary Treatment - Lower	Isolates TWAS discharge from DAF Unit T-02-310	Manually Operated
23	Plug valve (PLV-02-307)	Secondary Treatment - Lower	Isolates TWAS drains from DAF Unit T-02-310 to TWAS Pumps	Manually Operated

No.	Component	Location	Function performed	Remarks
24	Plug valve (PLV-02-308)	Secondary Treatment - Lower	Isolates TWAS drains DAF Unit T-02-310 to floor sump	Manually Operated
25	Backpressure valve (BPV-02-1100)	Secondary Treatment - Lower	Isolates mixed liquor back flow to polymer dosing pump	Manually Operated
26	Butterfly valve (BFV-02-317A)	Secondary Treatment - Lower	Isolates DAF subnatant flow from DAF Unit (T-02-310) to White Water Skid	Manually Operated
27	Flow meter (FE-02-317)	Secondary Treatment - Lower	Measures subnatant suction flow from DAF Unit T-02-310 to DAF White Water Pumps	Signal to Plant Control System
28	Butterfly Valve (BFV-02-400)	Secondary Treatment - Lower	Isolates subnatant from DAF Unit T-02-310 to White Water Pump P-02-410	
29	Globe Valve (BV-02-401)	Secondary Treatment - Lower	Isolates subnatant from DAF Unit T-02-310 to White Water Pump P-02-410	
30	Ball Valve (BV-02-410)	Secondary Treatment - Lower	Isolates air flow to White Water Pump P-02-410	
31	Needle Valve (NV-02-411)	Secondary Treatment - Lower	Adjust air flow to White Water Pump P-02-410	
32	Flow indicator (FI-02-412)	Secondary Treatment - Lower	Indicates air flow to White Water Pump P-02-410	
33	Ball Valve (BV-02-402)	Secondary Treatment - Lower	Isolates pressure indicator PI-404	
34	Ball Valve (BV-02-403)	Secondary Treatment - Lower	Drains subnatant line to pressure indicator PI-404	
35	Pressure Indicator (PI-02-404)	Secondary Treatment - Lower	Indicates pressure at suction of White Water Pump P-02-410	
36	Check Valve (CV-02-404)	Secondary Treatment - Lower	Avoids air backflow to flow indicator FI-412	
37	DAF White Water Pump (P-02-410)	Secondary Treatment - Lower	Recirculates subnatant to DAF Unit T-02-310	Plant Control System Controlled
38	Ball Valve (BV-02-407)	Secondary Treatment - Lower	Isolates pressure indicator PI-409	
39	Ball Valve (BV-02-408)	Secondary Treatment - Lower	Drains subnatant line to pressure indicator PI-409	
40	Pressure Indicator (PI-02-409)	Secondary Treatment - Lower	Indicates pressure at discharge of White Water Pump P-02-410	

No.	Component	Location	Function performed	Remarks
41	Check Valve (CV-02-405)	Secondary Treatment - Lower	Avoids subnatant backflow to White Water Pump P-02-410	
42	Butterfly Valve (BFV-02-406)	Secondary Treatment - Lower	Isolates subnatant recirculation at discharge of White Water Pump P-02-410	
43	Butterfly Valve (BFV-02-415)	Secondary Treatment - Lower	Isolates subnatant from DAF Unit T-02-310 to White Water Pump P-02-420	
44	Globe Valve (GLV-02-416)	Secondary Treatment - Lower	Isolates subnatant from DAF Unit T-02-310 to White Water Pump P-02-420	
45	Ball Valve (BV-02-425)	Secondary Treatment - Lower	Isolates air flow to White Water Pump P-02-420	
46	Needle Valve (NV-02-426)	Secondary Treatment - Lower	Adjust air flow to White Water Pump P-02-420	
47	Flow indicator (FI-02-427)	Secondary Treatment - Lower	Indicates air flow to White Water Pump P-02-420	
48	Ball Valve (BV-02-417)	Secondary Treatment - Lower	Isolates pressure indicator PI-419	
49	Ball Valve (BV-02-418)	Secondary Treatment - Lower	Drains subnatant line to pressure indicator PI-419	
50	Pressure Indicator (PI-02-419)	Secondary Treatment - Lower	Indicates pressure at suction of White Water Pump P-02-420	
51	Check Valve (CV-02-428)	Secondary Treatment - Lower	Avoids air backflow to flow indicator FI-427	
52	DAF White Water Pump (P-02-420)	Secondary Treatment - Lower	Recirculates subnatant to DAF Unit T-02-310	Plant Control System Controlled
53	Ball Valve (BV-02-422)	Secondary Treatment - Lower	Isolates pressure indicator PI-424	
54	Ball Valve (BV-02-423)	Secondary Treatment - Lower	Drains subnatant line to pressure indicator PI-424	
55	Pressure Indicator (PI-02-424)	Secondary Treatment - Lower	Indicates pressure at discharge of White Water Pump P-02-420	
56	Check Valve (CV-02-420)	Secondary Treatment - Lower	Avoids subnatant backflow to White Water Pump P-02-420	
57	Butterfly Valve (BFV-02-421)	Secondary Treatment - Lower	Isolates subnatant recirculation at	

No.	Component	Location	Function performed	Remarks
			discharge of White Water Pump P-02-420	
58	Butterfly Valve (BFV-02-430)	Secondary Treatment - Lower	Isolates subnatant from DAF Unit T-02-310 to White Water Pump P-02-430	
59	Globe Valve (GLV-02-431)	Secondary Treatment - Lower	Isolates subnatant from DAF Unit T-02-310 to White Water Pump P-02-430	
60	Ball Valve (BV-02-440)	Secondary Treatment - Lower	Isolates air flow to White Water Pump P-02-430	
61	Needle Valve (NV-02-441)	Secondary Treatment - Lower	Adjust air flow to White Water Pump P-02-430	
62	Flow Indicator (FI-02-442)	Secondary Treatment - Lower	Indicates air flow to White Water Pump P-02-430	
63	Ball Valve (BV-02-432)	Secondary Treatment - Lower	Isolates pressure indicator PI-434	
64	Ball Valve (BV-02-433)	Secondary Treatment - Lower	Drains subnatant line to pressure indicator PI-434	
65	Pressure Indicator (PI-02-434)	Secondary Treatment - Lower	Indicates pressure at suction of White Water Pump P-02-430	
66	Check Valve (CV-02-443)	Secondary Treatment - Lower	Avoids air backflow to flow indicator FI-442	
67	DAF 1 White Water Pump (P-02-430)	Secondary Treatment - Lower	Recirculates subnatant to DAF Unit T-02-310	Plant Control System Controlled
68	Ball Valve (BV-02-437)	Secondary Treatment - Lower	Isolates pressure indicator PI-439	
69	Ball Valve (BV-02-438)	Secondary Treatment - Lower	Drains subnatant line to pressure indicator PI-439	
70	Pressure Indicator (PI-02-439)	Secondary Treatment - Lower	Indicates pressure at discharge of White Water Pump P-02-430	
71	Check Valve (CV-02-435)	Secondary Treatment - Lower	Avoids subnatant backflow to White Water Pump P-02-430	
72	Butterfly Valve (BFV-02-436)	Secondary Treatment - Lower	Isolates subnatant recirculation at discharge of White Water Pump P-02-430	
73	Pressure Indication (PI-02-520)	Secondary Treatment - Lower	Senses pressure of DAF White Water Skid Header	
74	Ball valve (BV-02-523)	Secondary Treatment - Lower	Drains subnatant line to pressure indicator PI-520	

No.	Component	Location	Function performed	Remarks
75	Ball valve (BV-02-527)	Secondary Treatment - Lower	Isolates subnatant flow to PI-520	
76	Motorized Butterfly Valve (BFV-02-511)	Secondary Treatment - Lower	Controls subnatant flow to White Water Strainer STR-02-510	Plant Control System Controlled
77	White Water Strainer 1 (STR-02-510)	Secondary Treatment - Lower	Retains subnatant solids	
78	Pressure Release Valve (PRV-02-527)	Secondary Treatment - Lower	Releases air from the White Water Strainer STR-02-510	
79	Motorized Ball Valve (BV-02-512)	Secondary Treatment - Lower	Controls White Water Strainer STR-02-510 drain to floor sump	Plant Control System Controlled
80	Butterfly Valve (BFV-02-513)	Secondary Treatment - Lower	Isolates subnatant recirculation to DAF Unit T-02-310	Manually Operated
81	Pressure Indicator (PI-02-510)	Secondary Treatment - Lower	Senses pressure at discharge of White Water Strainer STR-02-510	
82	Ball Valve (BV-02-510)	Secondary Treatment - Lower	Drains subnatant line to PI-510	
83	Ball Valve (BV-02-511)	Secondary Treatment - Lower	Isolates subnatant flow to PI-510	
84	Globe Valve (GLV-02-510)	Secondary Treatment - Lower	Isolates strainer STR-02-510 drain to floor sump	Manually Operated
85	Motorized Butterfly Valve (BFV-02-521)	Secondary Treatment - Lower	Controls subnatant flow to White Water Strainer STR-02-520	Plant Control System Controlled
86	White Water Strainer 1 (STR-02-520)	Secondary Treatment - Lower	Retains subnatant solids	
87	Pressure Release Valve (PRV-02-528)	Secondary Treatment - Lower	Releases air from the White Water Strainer STR-02-520	
88	Motorized Ball Valve (BV-02-522)	Secondary Treatment - Lower	Controls the flow of subnatant solids to floor sump	Plant Control System Controlled
89	Butterfly Valve (BFV-02-523)	Secondary Treatment - Lower	Isolates subnatant recirculation to DAF Unit T-02-310	Manually Operated
90	Pressure Indicator (PI-02-525)	Secondary Treatment - Lower	Senses pressure at discharge of White Water Strainer STR-02-520	
91	Ball Valve (BV-02-520)	Secondary Treatment - Lower	Drains subnatant line to PI-520	

No.	Component	Location	Function performed	Remarks
92	Ball Valve (BV-02-521)	Secondary Treatment - Lower	Isolates subnatant flow to PI-520	
93	Globe Valve (GLV-02-520)	Secondary Treatment - Lower	Isolates drain from White water Strainer STR-02-520 to floor sump	Manually Operated
94	Ball Valve (BV-02-525)	Secondary Treatment - Lower	Isolates pressure transmitter PT-527	
95	Ball Valve (BV-02-526)	Secondary Treatment - Lower	Drains line to pressure transmitter PT-527	
96	Pressure Transmitter (PT-02-527)	Secondary Treatment - Lower	Transmits subnatant pressure at discharge of White Water Strainers STR-02-510/520	

4.5.4 Dissolved Air Flotation (DAF) Clarification #2

(Refer to Drawing P-613 and P-614 in Appendix A)

The following table identifies the components related to Dissolved Air Flotation Clarification system #2.

No.	Component	Location	Function performed	Remarks
1	Motorized Valve (BFV-02-332, FV-332)	Secondary Treatment - Lower	Controls mixed liquor flow to DAF unit T02-320	Plant Control System Controlled
2	Ball Valve (BV-02-333)	Secondary Treatment - Lower	Isolates DAF subnatant recirculation to the entry zone	
3	Motorized Butterfly Valve (BFV-02-645, FV-645)	Secondary Treatment - Lower	Isolates DAF subnatant recirculation to the white-water injection zone	
4	DAF Tank (T-02-320)	Secondary Treatment - Lower	Mixed liquor clarification and secondary sludge thickening	Plant Control System Controlled
5	DAF 1 Sludge Scraper (DDR-02-321)	Secondary Treatment - Lower	Removes thickened sludge from the flotation zone to the sludge collection zone	Plant Control System Controlled
6	Level Transmitter (LIT-02-341)	Mounted inside the DAF Tank	Senses mixed liquor level in the flotation zone	Signal to Plant Control System
7	Level Switch (LSH-02-342)	Mounted inside the DAF Tank	Senses sludge high level in the sludge collection zone	Signal to Plant Control System

No.	Component	Location	Function performed	Remarks
8	Level Switch (LSL-02-343)	Mounted inside the DAF Tank	Senses sludge low level in the sludge collection zone	Signal to Plant Control System
9	TSS Analyzer (AIT-02-344)	Mounted inside the DAF Tank	Senses TSS in the clarified water evacuation zone	Signal to Plant Control System
10	Butterfly Valve (BFV-02-365)	Secondary Treatment - Lower	Isolates air flow to DAF unit T-02-320 for solids mixing	Manual Operation. Normally closed
11	Butterfly Valve (BFV-02-366)	Secondary Treatment - Lower	Isolates air flow to DAF Unit T-02-320 for solids mixing	Manual Operation Normally closed
12	Butterfly Valve (BFV-02-370)	Secondary Treatment - Lower	Isolates air flow to DAF Unit T-02-320 for solids mixing	Manual Operation Normally closed
13	Butterfly Valve (BFV-02-371)	Secondary Treatment - Lower	Isolates air flow to DAF Unit T-02-320 for solids mixing	Manual Operation Normally closed
14	Butterfly Valve (BFV-02-372)	Secondary Treatment - Lower	Isolates air flow to DAF Unit T-02-320 for solids mixing	Manual Operation Normally closed
15	Plug Valve (PLV-02-371)	Secondary Treatment - Lower	Isolates sludge drainage from DAF Unit T-02-320	Manual Operation Normally closed
16	Plug Valve (PLV-02-372)	Secondary Treatment - Lower	Isolates sludge drainage from DAF Unit T-02-320	Manual Operation Normally closed
17	Plug Valve (PLV-02-373)	Secondary Treatment - Lower	Isolates sludge drainage from DAF Unit T-02-320	Manual Operation Normally closed
18	Plug Valve (PLV-02-374)	Secondary Treatment - Lower	Isolates sludge drainage from DAF Unit T-02-320	Manual Operation Normally closed
19	Plug Valve (PLV-02-375)	Secondary Treatment - Lower	Isolates sludge drainage from DAF Unit T-02-320	Manual Operation Normally closed
20	Pneumatic Actuated Butterfly Valve (BFV-02-329)	Secondary Treatment - Lower	Controls internal DAF subnatant recirculation	Pneumatic Operation. Plant Control System Controlled
21	Pneumatic Actuated Butterfly Valve (BFV-02-330)	Secondary Treatment - Lower	Controls internal DAF subnatant recirculation	Pneumatic Operation. Plant Control System Controlled
22	Plug valve (PLV-02-326)	Secondary Treatment - Lower	Isolates TWAS discharge from DAF Unit T-02-320	Manually Operated

No.	Component	Location	Function performed	Remarks
23	Plug valve (PLV-02-327)	Secondary Treatment - Lower	Isolates TWAS drains from DAF Unit T-02-320 to TWAS Pumps	Manually Operated
24	Plug valve (PLV-02-328)	Secondary Treatment - Lower	Isolates TWAS drains DAF Unit T-02-320 to floor sump	Manually Operated
25	Backpressure valve (BPV-02-1100)	Secondary Treatment - Lower	Isolates mixed liquor back flow to polymer dosing pump	Manually Operated
26	Butterfly valve (BFV-02-327A)	Secondary Treatment - Lower	Isolates DAF subnatant flow from DAF Unit (T-02-320) to White Water Skid	Manually Operated
27	Flow meter (FE-02-327)	Secondary Treatment - Lower	Measures subnatant suction flow from DAF Unit T-02-320 to DAF White Water Pumps	Signal to Plant Control System
28	Butterfly Valve (BFV-02-450)	Secondary Treatment - Lower	Isolates subnatant from DAF Unit T-02-320 to White Water Pump P-02-440	
29	Globe Valve (BV-02-451)	Secondary Treatment - Lower	Isolates subnatant from DAF Unit T-02-320 to White Water Pump P-02-440	
30	Ball Valve (BV-02-460)	Secondary Treatment - Lower	Isolates air flow to White Water Pump P-02-440	
31	Needle Valve (NV-02-461)	Secondary Treatment - Lower	Adjust air flow to White Water Pump P-02-440	
32	Flow indicator (FI-02-462)	Secondary Treatment - Lower	Indicates air flow to White Water Pump P-02-440	
33	Ball Valve (BV-02-452)	Secondary Treatment - Lower	Isolates pressure indicator PI-454	
34	Ball Valve (BV-02-453)	Secondary Treatment - Lower	Drains subnatant line to pressure indicator PI-454	
35	Pressure Indicator (PI-02-454)	Secondary Treatment - Lower	Indicates pressure at suction of White Water Pump P-02-440	
36	Check Valve (CV-02-463)	Secondary Treatment - Lower	Avoids air backflow to flow indicator FI-462	
37	DAF White Water Pump (P-02-440)	Secondary Treatment - Lower	Recirculates subnatant to DAF Unit T-02-320	Plant Control System Controlled
38	Ball Valve (BV-02-457)	Secondary Treatment - Lower	Isolates pressure indicator PI-459	
39	Ball Valve (BV-02-458)	Secondary Treatment - Lower	Drains subnatant line to pressure indicator PI-459	

No.	Component	Location	Function performed	Remarks
40	Pressure Indicator (PI-02-459)	Secondary Treatment - Lower	Indicates pressure at discharge of White Water Pump P-02-440	
41	Check Valve (CV-02-455)	Secondary Treatment - Lower	Avoids subnatant backflow to White Water Pump P-02-440	
42	Butterfly Valve (BFV-02-456)	Secondary Treatment - Lower	Isolates subnatant recirculation at discharge of White Water Pump P-02-440	
43	Butterfly Valve (BFV-02-465)	Secondary Treatment - Lower	Isolates subnatant from DAF Unit T-02-320 to White Water Pump P-02-450	
44	Globe Valve (GLV-02-466)	Secondary Treatment - Lower	Isolates subnatant from DAF Unit T-02-320 to White Water Pump P-02-450	
45	Ball Valve (BV-02-475)	Secondary Treatment - Lower	Isolates air flow to White Water Pump P-02-450	
46	Needle Valve (NV-02-476)	Secondary Treatment - Lower	Adjust air flow to White Water Pump P-02-420	
47	Flow indicator (FI-02-477)	Secondary Treatment - Lower	Indicates air flow to White Water Pump P-02-450	
48	Ball Valve (BV-02-467)	Secondary Treatment - Lower	Isolates pressure indicator PI-469	
49	Ball Valve (BV-02-468)	Secondary Treatment - Lower	Drains subnatant line to pressure indicator PI-469	
50	Pressure Indicator (PI-02-469)	Secondary Treatment - Lower	Indicates pressure at suction of White Water Pump P-02-450	
51	Check Valve (CV-02-478)	Secondary Treatment - Lower	Avoids air backflow to flow indicator FI-477	
52	DAF White Water Pump (P-02-450)	Secondary Treatment - Lower	Recirculates subnatant to DAF Unit T-02-320	Plant Control System Controlled
53	Ball Valve (BV-02-472)	Secondary Treatment - Lower	Isolates pressure indicator PI-474	
54	Ball Valve (BV-02-473)	Secondary Treatment - Lower	Drains subnatant line to pressure indicator PI-474	
55	Pressure Indicator (PI-02-474)	Secondary Treatment - Lower	Indicates pressure at discharge of White Water Pump P-02-450	
56	Check Valve (CV-02-470)	Secondary Treatment - Lower	Avoids subnatant backflow to White Water Pump P-02-450	

No.	Component	Location	Function performed	Remarks
57	Butterfly Valve (BFV-02-471)	Secondary Treatment - Lower	Isolates subnatant recirculation at discharge of White Water Pump P-02-450	
58	Butterfly Valve (BFV-02-480)	Secondary Treatment - Lower	Isolates subnatant from DAF Unit T-02-320 to White Water Pump P-02-460	
59	Globe Valve (GLV-02-481)	Secondary Treatment - Lower	Isolates subnatant from DAF Unit T-02-310 to White Water Pump P-02-460	
60	Ball Valve (BV-02-490)	Secondary Treatment - Lower	Isolates air flow to White Water Pump P-02-460	
61	Needle Valve (NV-02-491)	Secondary Treatment - Lower	Adjust air flow to White Water Pump P-02-460	
62	Flow Indicator (FI-02-492)	Secondary Treatment - Lower	Indicates air flow to White Water Pump P-02-460	
63	Ball Valve (BV-02-482)	Secondary Treatment - Lower	Isolates pressure indicator PI-484	
64	Ball Valve (BV-02-483)	Secondary Treatment - Lower	Drains subnatant line to pressure indicator PI-484	
65	Pressure Indicator (PI-02-484)	Secondary Treatment - Lower	Indicates pressure at suction of White Water Pump P-02-460	
66	Check Valve (CV-02-493)	Secondary Treatment - Lower	Avoids air backflow to flow indicator FI-492	
67	DAF White Water Pump (P-02-460)	Secondary Treatment - Lower	Recirculates subnatant to DAF Unit T-02-320	Plant Control System Controlled
68	Ball Valve (BV-02-487)	Secondary Treatment - Lower	Isolates pressure indicator PI-489	
69	Ball Valve (BV-02-488)	Secondary Treatment - Lower	Drains subnatant line to pressure indicator PI-489	
70	Pressure Indicator (PI-02-489)	Secondary Treatment - Lower	Indicates pressure at discharge of White Water Pump P-02-460	
71	Check Valve (CV-02-485)	Secondary Treatment - Lower	Avoids subnatant backflow to White Water Pump P-02-460	
72	Butterfly Valve (BFV-02-486)	Secondary Treatment - Lower	Isolates subnatant recirculation at discharge of White Water Pump P-02-460	
73	Pressure Indication (PI-02-540)	Secondary Treatment - Lower	Senses pressure of DAF White Water Skid Header	

No.	Component	Location	Function performed	Remarks
74	Ball valve (BV-02-543)	Secondary Treatment - Lower	Drains subnatant line to pressure indicator PI-540	
75	Bal valve (BV-02-547)	Secondary Treatment - Lower	Isolates subnatant flow to PI-540	
76	Motorized Butterfly Valve (BFV-02-531)	Secondary Treatment - Lower	Controls subnatant flow to White Water Strainer STR-02-530	Plant Control System Controlled
77	White Water Strainer 1 (STR-02-530)	Secondary Treatment - Lower	Retains subnatant solids	
78	Pressure Release Valve (PRV-02-547)	Secondary Treatment - Lower	Releases air from the White Water Strainer STR-02-530	
79	Motorized Ball Valve (BV-02-532)	Secondary Treatment - Lower	Controls White Water Strainer STR-02-530 drain to floor sump	Plant Control System Controlled
80	Butterfly Valve (BFV-02-533)	Secondary Treatment - Lower	Isolates subnatant recirculation to DAF Unit T-02-320	Manually Operated
81	Pressure Indicator (PI-02-530)	Secondary Treatment - Lower	Senses pressure at discharge of White Water Strainer STR-02-530	
82	Ball Valve (BV-02-530)	Secondary Treatment - Lower	Drains subnatant line to PI-530	
83	Ball Valve (BV-02-531)	Secondary Treatment - Lower	Isolates subnatant flow to PI-530	
84	Globe Valve (GLV-02-530)	Secondary Treatment - Lower	Isolates strainer STR-02-530 drain to floor sump	Manually Operated
85	Motorized Butterfly Valve (BFV-02-541)	Secondary Treatment - Lower	Controls subnatant flow to White Water Strainer STR-02-540	Plant Control System Controlled
86	White Water Strainer (STR-02-540)	Secondary Treatment - Lower	Retains subnatant solids	
87	Pressure Release Valve (PRV-02-548)	Secondary Treatment - Lower	Releases air from the White Water Strainer STR-02-540	
88	Motorized Ball Valve (BV-02-542)	Secondary Treatment - Lower	Controls the flow of subnatant solids to floor sump	Plant Control System Controlled
89	Butterfly Valve (BFV-02-543)	Secondary Treatment - Lower	Isolates subnatant recirculation to DAF Unit T-02-320	Manually Operated
90	Pressure Indicator (PI-02-540)	Secondary Treatment - Lower	Senses pressure at discharge of White Water Strainer STR-02-540	

No.	Component	Location	Function performed	Remarks
91	Ball Valve (BV-02-540)	Secondary Treatment - Lower	Drains subnatant line to PI-540	
92	Ball Valve (BV-02-541)	Secondary Treatment - Lower	Isolates subnatant flow to PI-540	
93	Globe Valve (GLV-02-540)	Secondary Treatment - Lower	Isolates drain from White Water Strainer STR-02-540 to floor sump	Manually Operated
94	Ball Valve (BV-02-545)	Secondary Treatment - Lower	Isolates pressure transmitter PT-547	
95	Ball Valve (BV-02-546)	Secondary Treatment - Lower	Drains line to pressure transmitter PT-547	
96	Pressure Transmitter (PT-02-547)	Secondary Treatment - Lower	Transmits subnatant pressure at discharge of White Water Strainers STR-02-530/540	
97	Flow meter (FE-02-328)	Secondary Treatment - Lower	Measures treated water effluent flow from DAF Units T-02-310/320 to outfall	Signal to Plant Control System

4.5.5 DAF Polymer Feed System

(Refer to Drawing P-615 and P-616 in Appendix A)

The following table identifies the components related to Dissolved Air Flotation Polymer Feed system.

No.	Component	Location	Function performed	Remarks
1	DAF Polymer Vacuum Conveyor (VAC-04-710)	Chemical Dosing Upper	Conveys dry polymer to the polymer feeder	Plant Control System Controlled
2	Level Sensor Low (LSL-04-710)	Chemical Dosing Upper	Senses low level in DAF Polymer Vacuum Conveyor	Plant Control System Controlled
3	DAF Feeder Hopper Polymer Agitator (PAG-04-720)	Chemical Dosing Upper	Solid polymer agitation	Plant Control System Controlled
4	DAF Polymer Screw Feeder (PSF-04-730)	Chemical Dosing Upper	Solids polymer feeding	Plant Control System Controlled
5	Ball Valve (BV-04-710)	Chemical Dosing Upper	Potable water isolation	
6	Pressure Switch (PSL-04-711)	Chemical Dosing Upper	Potable water line low pressure signal	
7	Pressure Indicator (PI-04-712)	Chemical Dosing Upper	Potable water line pressure indication	Signal to Plant Control System

No.	Component	Location	Function performed	Remarks
8	Solenoid Valve (SV-04-713)	Chemical Dosing Upper		
9	Solenoid Valve (SV-04-714)	Chemical Dosing Upper	Controls Potable water flow	
10	Ball Check Valve (BV-04-716)	Chemical Dosing Upper	Prevents potable water backflow from wetting cone to water line	
11	Ball Check Valve (BV-04-717)	Chemical Dosing Upper	Prevents potable water backflow from wetting cone to water line	
12	Injector (IJ-04-715)	Chemical Dosing Upper	Mixes solid polymer with potable water	
13	Check Valve (CV-04-718)	Chemical Dosing Upper	Avoids polymer solution backflow to injector Ij-04-715	
14	Mixer (SM-04-719)	Chemical Dosing Upper	Mixes polymer solution in line to Mixing Tank	
15	DAF Polymer Mixing Tank (T-04-740)	Chemical Dosing Upper	Polymer mixing / preparation	Plant Control System Controlled
16	DAF Polymer Mixer (MXR-04-760)	Chemical Dosing Upper	Mixes polymer in polymer mixing tank	Plant Control System Controlled
17	Polymer Analyzer (AIT-04-741)	Chemical Dosing Upper	Measures conductivity in polymer mixing tank	Signal to Plant Control System
18	Level Transmitter (LIT-04-742)	Chemical Dosing Upper	Indicates/transmits level in polymer mixing tank	
19	Electrically Operated Butterfly Valve (BV-04-743)	Chemical Dosing Upper	Controls flow of polymer solution from polymer mixing tank to polymer aging tank	
20	Ball Valve (BV-04-744)	Chemical Dosing Upper	Isolates drain from polymer mixing tank	Normally Closed
21	DAF Polymer Aging Tank (T-04-750)	Chemical Dosing Upper	Stores polymer solution for dosing to the DAF	Plant Control System Controlled
22	Level Transmitter (LIT-04-746)	Chemical Dosing Upper	Indicates/transmits level in polymer aging tank	Signal to Plant Control System
23	Polymer Analyzer (AE-04-745)	Chemical Dosing Upper	Measures conductivity in polymer aging tank	Signal to Plant Control System
24	Ball Valve (BV-04-747)	Chemical Dosing Upper	Isolates polymer suction from Aging Tank to polymer dosing pumps	
25	Ball Valve (BV-04-750)	Chemical Dosing Upper	Isolates drain from polymer suction line	Normally Closed

No.	Component	Location	Function performed	Remarks
26	Ball Valve (BV-04-760)	Chemical Dosing Upper	Isolates polymer suction to DAF Polymer Dosing Pump P-04-770	
27	Ball Valve (BV-04-763)	Chemical Dosing Upper	Isolates polymer solution to calibration column CC-04-790	
28	Calibration Colum (CC-04-790)	Chemical Dosing Upper	Used to confirm polymer solution flow	
29	Polymer Dosing Pump (P-04-770)	Chemical Dosing Upper	Polymer dosing to DAF Units	Plant Control System Controlled
30	Temperature Element (TE-04-769)	Chemical Dosing Upper	Protects Polymer Dosing Pump P-04-770 against over heating	Signal to Plant Control System
31	Ball Valve (BV-04-785)	Chemical Dosing Upper	Isolates PSH-787	
32	Pressure Switch (PSH-04-787)	Chemical Dosing Upper	High pressure signal for protection of Polymer Dosing Pump P-04-770	Signal to Plant Control System
33	Ball Valve (BV-04-766)	Chemical Dosing Upper	Isolates polymer solution drain	
34	Ball Valve (BV-04-775)	Chemical Dosing Upper	Isolates polymer solution at discharge of Polymer Dosing Pump P-04-770	
35	Pressure Release Valve (BPV-04-772)	Chemical Dosing Upper	Releases pressure at discharge of Polymer Dosing Pump P-04-770	
36	Ball Valve (BV-04-761)	Chemical Dosing Upper	Isolates polymer suction to DAF Polymer Dosing Pump P-04-780	
37	Ball Valve (BV-04-764)	Chemical Dosing Upper	Isolates polymer solution to calibration column CC-04-790	
38	Polymer Dosing Pump (P-04-780)	Chemical Dosing Upper	Polymer dosing to DAF	Plant Control System Controlled
39	Temperature Element (TE-04-770)	Chemical Dosing Upper	Protects Polymer Dosing Pump P-04-780 against over heating	
40	Ball Valve (BV-04-791)	Chemical Dosing Upper	Isolates PI-792/PSH-793	
41	Pressure Switch (PSH-04-792)	Chemical Dosing Upper	High pressure signal for protection of Polymer Dosing Pump P-04-780	
42	Ball Valve (BV-04-767)	Chemical Dosing Upper	Isolates polymer solution drain	

No.	Component	Location	Function performed	Remarks
43	Ball Valve (BV-04-776)	Chemical Dosing Upper	Isolates polymer solution at discharge of Polymer Dosing Pump P-04-780	
44	Pressure Release Valve (PRV-04-773)	Chemical Dosing Upper	Releases pressure at discharge of Polymer Dosing Pump P-04-780	
45	Ball Valve (BV-04-762)	Chemical Dosing Upper	Isolates polymer suction to DAF Polymer Dosing Pump P-04-790	
46	Ball Valve (BV-04-765)	Chemical Dosing Upper	Isolates polymer solution to calibration column CC-04-790	
47	Polymer Dosing Pump (P-04-790)	Chemical Dosing Upper	Polymer dosing to DAF	Plant Control System Controlled
48	Temperature Element (TE-04-771)	Chemical Dosing Upper	Protects Polymer Dosing Pump P-04-790 against over heating	
49	Ball Valve (BV-04-788)	Chemical Dosing Upper	Isolates PSH-790	
50	Pressure Switch (PSH-04-790)	Chemical Dosing Upper	High pressure signal for protection of Polymer Dosing Pump P-04-790	
51	Ball Valve (BV-04-768)	Chemical Dosing Upper	Isolates polymer solution drain	
52	Ball Valve (BV-04-777)	Chemical Dosing Upper	Isolates polymer solution at discharge of Polymer Dosing Pump P-04-790	
53	Pressure Release Valve (BPV-04-774)	Chemical Dosing Upper	Releases pressure at discharge of Polymer Dosing Pump P-04-790	
54	Ball Valve (BV-04-778)	Chemical Dosing Upper	Isolates Polymer Dosing Pumps P-04-780/790	
55	Ball Valve (BV-04-779)	Chemical Dosing Upper	Isolates Polymer Dosing Pumps P-04-770/790	
56	Backpressure Valve (BPV-04-790)	Chemical Dosing Upper	Avoids polymer solution backflow to Polymer Dosing Pump P-04-770/790	
57	Backpressure Valve (BPV-04-791)	Chemical Dosing Upper	Avoids polymer solution backflow to Polymer Dosing Pump P-04-780/790	
58	Pressure Regulating Valve (PRV-04-780)	Chemical Dosing Upper	Regulates potable water dilution line pressure to DAF Polymer Dosing skid	

No.	Component	Location	Function performed	Remarks
59	Ball Valve (BV-04-781)	Chemical Dosing Upper	Isolates potable water dilution line pressure to DAF Polymer Dosing skid	
60	Ball Valve (BV-04-782)	Chemical Dosing Upper	Isolates potable water dilution line pressure to DAF Polymer Dosing skid	
61	Solenoid Valve (SV-04-783)	Chemical Dosing Upper	Controls potable water dilution flow to DAF Polymer Dosing skid	
62	Solenoid Valve (SV-04-784)	Chemical Dosing Upper	Controls potable water dilution flow to DAF Polymer Dosing skid	
63	Flow Indicator (FI-04-785)	Chemical Dosing Upper	Indicates potable water dilution flow to DAF Polymer Dosing skid	
64	Flow Indicator (FI-04-786)	Chemical Dosing Upper	Indicates potable water dilution flow to DAF Polymer Dosing skid	
65	Needle Valve (NV-04-787)	Chemical Dosing Upper	Adjust potable water dilution flow to DAF Polymer Dosing skid	
66	Needle Valve (NV-04-788)	Chemical Dosing Upper	Adjust potable water dilution flow to DAF Polymer Dosing skid	
67	Flow Transmitter (FIT-04-798)	Chemical Dosing Upper	Measures polymer solution flow to DAF Unit T-02-310	
68	Flow Transmitter (FIT-04-799)	Chemical Dosing Upper	Measures polymer solution flow to DAF Unit T-02-320	

4.6 SLUDGE PROCESSING

4.6.1 TWAS Storage Tank

(Refer to Drawing P-617 in Appendix A)

The following table identifies the components related to Thickened Waste Activated Sludge (TWAS) pumping and storage.

No.	Component	Location	Function performed	Remarks
1	Ball Valve (BV-02-612)	Secondary Treatment Lower	Isolates PI-615	
2	Ball Valve (BV-02-613)	Secondary Treatment Lower	Drains line to PI-615	

No.	Component	Location	Function performed	Remarks
3	Pressure Indicator (PI-02-615)	Secondary Treatment Lower	Indicates pressure at suction side of TWAS Pump P-02-610	
4	TWAS Pump (P-02-610)	Secondary Treatment Lower	Pumps TWAS from DAF Unit T-02-310 to TWAS storage tanks (On a VFD)	Plant Control System Controlled
5	Ball Valve (BV-02-616)	Secondary Treatment Lower	Drains line to PI-618 / PSH-619	
6	Ball Valve (BV-02-617)	Secondary Treatment Lower	Isolates line to PI-618 / PSH-619	
7	Pressure Indicator (PI-02-618)	Secondary Treatment Lower	Indicates pressure at discharge of TWAS Pump P-02-610	
8	Pressure Switch (PSH-619)	Secondary Treatment Lower	Transmits pressure at discharge of pump P-02-610 for protection	Signal to Plant Control System
9	Check valve (CV-02-620)	Secondary Treatment Lower	Prevents backflow to TWAS pump P-02-610	
10	Plug valve (PLV-02-620A)	Secondary Treatment Lower	Isolates TWAS flow from pump P-02-610	Normally Open
11	Plug valve (PLV-02-647)	Secondary Treatment Lower	Isolates TWAS pump P-02-610 drain line to floor sump	Normally Closed
12	Ball Valve (BV-02-632)	Secondary Treatment Lower	Isolates line to PI-635	
13	Ball Valve (BV-02-633)	Secondary Treatment Lower	Drains line to PI-635	
14	Pressure Indicator (PI-02-635)	Secondary Treatment Lower	Indicates pressure at suction of TWAS Pump P-02-620	
15	TWAS Pump (P-02-620)	Secondary Treatment Lower	Pumps TWAS from DAF Unit T-02-330 to TWAS storage tanks (On a VFD)	Signal to Plant Control Controlled
16	Ball Valve (BV-02-636)	Secondary Treatment Lower	Isolates PI-638/PSH-639	
17	Ball Valve (BV-02-637)	Secondary Treatment Lower	Isolates line to PI-638/PSH-639	
18	Pressure Indicator (PI-02-638)	Secondary Treatment Lower	Indicates pressure at discharge of TWAS Pump P-02-620	
19	Pressure Switch (PSH-02-639)	Secondary Treatment Lower	Transmits pressure at discharge of pump P-02-620 for protection	Signal to Plant Control System
20	Check valve (CV-02-640)	Secondary Treatment Lower	Prevents backflow to TWAS pump P-02-620	
21	Plug valve (PLV-02-640A)	Solids Handling Lower	Isolates TWAS flow from pump P-02-620	Normally Closed

No.	Component	Location	Function performed	Remarks
22	Plug valve (PLV-02-648)	Solids Handling Lower	Isolates TWAS pump P-02-620 drain line to floor sump	Normally Closed
23	Plug Valve (PLV-02-621)	Solids Handling Lower	Isolates TWAS pump P-02-610 discharge	Normally Open
24	Plug Valve (PLV-02-641)	Solids Handling Lower	Isolates TWAS pump P-02-620 discharge	Normally Open
25	Plug Valve (PLV-02-645)	Solids Handling Lower	Allows DAF Unit T-02-310 to discharge MBBR Train T-02-210	Normally Closed
26	Plug Valve (PLV-02-646)	Solids Handling Lower	Allows DAF Unit T-02-320 to discharge MBBR Train T-02-220	Normally Closed
27	Plug Valve (PLV-02-643)	Solids Handling Lower	Isolates TWAS Tank 1 T-03-630	Normally Open
28	Plug Valve (PLV-02-644)	Solids Handling Lower	Isolates TWAS Tank 1 T-03-640	Normally Open
29	TWAS Aerated Storage Tank (T-03-630)	Solids Handling Lower	TWAS storage	
30	TWAS Aerated Storage Tank (T-03-640)	Solids Handling Lower	TWAS storage	
31	Level Element (LE-03-111)	Solids Handling Lower	Senses TWAS level in TWAS Aerated Storage Tank T-03-630	
32	Level Switch (LSHH-112)	Solids Handling Lower	Indicates the high-high TWAS level in TWAS Tank T-03-630	Signal to PLANT CONTROL SYSTEM
33	Level Switch (LSLL-113)	Solids Handling Lower	Indicates the low-low TWAS level in TWAS Tank T-03-630	
34	Level Element (LE-03-121)	Solids Handling Lower	Senses TWAS level in TWAS Aerated Storage Tank T-03-640	
35	Level Switch (LSHH-122)	Solids Handling Lower	Indicates the high-high TWAS level in TWAS Tank T-03-640	Signal to PLANT CONTROL SYSTEM
36	Level Switch (LSLL-123)	Solids Handling Lower	Indicates the low-low TWAS level in TWAS Tank T-03-640	
37	Plug Valve (PLV-02-675)	Solids Handling Lower	Isolates TWAS camlock connection from TWAS Storage Tank T-03-630	
38	Plug Valve (PLV-02-676)	Solids Handling Lower	Isolates TWAS camlock connection from TWAS Storage Tank T-03-640	

No.	Component	Location	Function performed	Remarks
39	Plug Valve (PLV-03-650)	Solids Handling Lower	Isolates TWAS feed to belt filter press pump P-03-630	Normally Open
40	Plug Valve (PLV-03-651)	Solids Handling Lower	Isolates TWAS feed to belt filter press pump P-03-640	Normally Open
41	Butterfly Valve (BFV-02-175)	Solids Handling Lower	Isolates process air flow to TWAS Aerated Storage Tank T-03-630	Manually Operated
42	Butterfly Valve (BFV-02-176)	Solids Handling Lower	Isolates process air flow to TWAS Aerated Storage Tank T-03-640	Manually Operated
43	Blat Gate (BG-03-652)	Solids Handling Lower	Isolates foul air from TWAS Aerated Storage Tank T-03-630 to atmosphere	Manually Operated
44	Blat Gate (BG-03-653)	Solids Handling Lower	Isolates foul air from TWAS Aerated Storage Tank T-03-640 to atmosphere	Manually Operated

4.6.2 Belt Filter Press Sludge Dewatering

(Refer to Drawing P-618 in Appendix A)

The following table identifies the components related to Belt Filter Press Sludge Dewatering System.

No.	Component	Location	Function performed	Remarks
1	Plug Valve (PLV-03-660)	Solids Handling Lower	Cross connection between TWAS storage tanks discharge	
2	Plug Valve (PLV-03-661)	Solids Handling Lower	Isolates TWAS suction to BFP feed pump P-03-630	
3	Ball Valve (BV-03-662)	Solids Handling Lower	Isolates PI-664	
4	Ball Valve (BV-03-663)	Solids Handling Lower	Drains line to PI-664	
5	Pressure Indicator (PI-03-664)	Solids Handling Lower	Indicates pressure at suction of BFP Feed Pump P-03-630	
6	Belt Filter Press Feed Pump (P-03-630)	Solids Handling Lower	Pumps TWAS to Belt Filter Press BFP-03-650	Plant Control System Controlled

No.	Component	Location	Function performed	Remarks
7	Ball Valve (BV-03-666)	Solids Handling Lower	Isolates PI-668/PSH-669	
8	Ball Valve (BV-03-667)	Solids Handling Lower	Drains line to PI-668/PSH-669	
9	Pressure Indicator (PI-03-668)	Solids Handling Lower	Indicates pressure at discharge of BFP feed pump P-03-630	
10	Pressure Switch (PSH-669)	Solids Handling Lower	Transmits pressure at discharge of BFP Feed Pump P-03-630	Signal to Plant Control System
11	Check Valve (CV-03-670)	Solids Handling Lower	Prevents TWAS backflow to BFP Feed Pump P-03-630	
12	Plug Valve (PLV-03-672)	Solids Handling Lower	BFP Feed Pump P-03-630 discharge	
13	Plug Valve (PLV-03-681)	Solids Handling Lower	Isolates suction of BFP Feed Pump P-03-640	
14	Ball Valve (BV-03-682)	Solids Handling Lower	Isolates PI-684	
15	Ball Valve (BV-03-683)	Solids Handling Lower	Drains line to PI-684	
16	Pressure Indicator (PI-03-684)	Solids Handling Lower	Indicates pressure at suction of BFP Feed Pump P-03-640	
17	Belt Filter Press Feed Pump (P-03-640)	Solids Handling Lower	Pumps TWAS to Belt Filter Press BFP-03-650	Plant Control System Controlled
18	Ball Valve (BV-03-686)	Solids Handling Lower	Isolates PI-688 / PSH-689	
19	Ball Valve (BV-03-687)	Solids Handling Lower	Drains line to PI-688 / PSH-689	
20	Pressure Indicator (PI-03-688)	Solids Handling Lower	Indicates pressure at discharge of BFP Feed Pump P-03-640	
21	Pressure Switch (PSH-689)	Solids Handling Lower	Transmits pressure at discharge of BFP Feed Pump P-03-640	Signal to Plant Control System
22	Check Valve (CV-03-690)	Solids Handling Lower	Prevents backflow to BFP Pump P-03-640	
23	Plug Valve (PLV-03-692)	Solids Handling Lower	Isolates BFP Pump P-03-640 discharge	Manually Operated
24	Flow Meter (FE-695, FM-03-695)	Solids Handling Lower	Measures TWAS flow to belt filter press BFP-03-650	Plant Control System Controlled
25	Plug Valve (PLV-03-693)	Solids Handling Lower	Isolates suction of flow meter FM-03-695 upstream	

No.	Component	Location	Function performed	Remarks
26	Plug Valve (PLV-03-696)	Solids Handling Lower	Isolates discharge of flow meter FM-03-695 downstream	
27	Mixer (MXR-03-698)	Solids Handling Upper	Mixes TWAS with polymer	
28	Belt Filter Press (BFP-03-650)	Solids Handling Upper	Dewaters TWAS	Plant Control System Controlled
29	Butterfly valve (BFV-03-699)	Solids Handling Upper	Isolates filtrate flow from Belt Filter Press BFP-03-650 to Influent Pumps Station Wet Well	Manually Operated
30	Booster Pump (P-03-670)	Solids Handling Upper	Boosts non-potable water pressure to feed Belt Filter Press BFP-03-650	BFP System Controlled
31	Pressure Indicating Transmitter (PIT-606)	Solids Handling Upper	Indicates booster pump discharge pressure	
32	Ball Valve (BV-03-603)	Solids Handling Upper	Isolates non-potable water flow to Booster Pump (P-03-670)	Manually Operated
33	Check Valve (CV-03-601)	Solids Handling Upper	Avoids polymer solution backflow to BFP Polymer Dosing Pumps	
34	Ball Valve (BV-03-602)	Solids Handling Upper	Isolates polymer solution flow to Belt Filter Press BFP-03-650	Manually Operated
35	Ball Valve (BV-03-1500)	Solids Handling Upper	Isolates non-potable water flow to BFP-03-650 at discharge of Booster Pump (P-03-670)	Manually Operated
36	Compressor (C-03-651)	Solids Handling Upper	Controlled by Belt Filter Press Control System	Supplier: Phoenix Process Equipment Co.

4.6.3 Belt Filter Press Polymer Feed System

(Refer to Drawing P-619 and P-620 in Appendix A)

The following table identifies the components related to Belt Filter Press Polymer Feed System.

No.	Component	Location	Function performed	Remarks
1	BFP Polymer Vacuum Conveyor (VAC-04-910)	Chemical Dosing Upper	Conveys dry polymer to the polymer feeder	

No.	Component	Location	Function performed	Remarks
2	Level Sensor Low (LSL-04-910)	Chemical Dosing Upper	Senses low level in DAF Polymer Vacuum Conveyor	Plant Control System Controlled
3	BFP Feeder Hopper Polymer Agitator (PAG-04-920)	Chemical Dosing Upper	Agitates solids polymer	
4	BFP Polymer Screw Feeder (PSF-04-930)	Chemical Dosing Upper	Conveys solid polymer to the wetting cone	
5	Ball Valve (BV-04-910)	Chemical Dosing Upper	Potable water isolation	
6	Pressure Switch Low (PSL-04-911)	Chemical Dosing Upper	Potable water line low pressure signal	
7	Pressure Indicator (PI-04-912)	Chemical Dosing Upper	Potable water line pressure indication	
8	Solenoid Valve (SV-04-913)	Chemical Dosing Upper		
9	Solenoid Valve (SV-04-914)	Chemical Dosing Upper	Controls Potable water flow	
10	Ball Check Valve (BV-04-916)	Chemical Dosing Upper	Isolate potable water flow to wetting cone	
11	Ball Check Valve (BV-04-917)	Chemical Dosing Upper	Isolate potable water flow to wetting cone	
12	Injector (IJ-04-915)	Chemical Dosing Upper	Mixes solid polymer with potable water	
13	Check Valve (CV-04-918)	Chemical Dosing Upper	Avoids polymer solution backflow to injector IJ-04-915	
14	On-line Mixer (SM-04-919)	Chemical Dosing Upper	Mixes polymer solution	
15	BFP Polymer Mixer (MXR-04-960)	Chemical Dosing Upper	Polymer mixing	
16	BFP Polymer Mixing Tank (T-04-940)	Chemical Dosing Upper	Mixes polymer in polymer mixing tank	
17	Electrically Operated Butterfly Valve (BV-04-943)	Chemical Dosing Upper	Controls flow of polymer solution from polymer mixing tank to polymer aging tank	Plant Control System Controlled
18	Ball Valve (BV-04-944)	Chemical Dosing Upper	Isolates drain from polymer mixing tank	
19	Polymer Analyzer (AIT-04-941)	Chemical Dosing Upper	Measures conductivity in polymer mixing tank	
20	Level Transmitter (LIT-04-942)	Chemical Dosing Upper	Indicates/transmits level in polymer mixing tank	

No.	Component	Location	Function performed	Remarks
21	Ball Valve (BV-04-944)	Chemical Dosing Upper	Isolates drain from polymer mixing tank	
22	BFP Polymer Aging Tank (T-04-950)	Chemical Dosing Upper	Stores polymer solution for dosing	
23	Polymer Analyzer (AE-04-945)	Chemical Dosing Upper	Measures conductivity in polymer aging tank	
24	Level Transmitter (LIT-04-946)	Chemical Dosing Upper	Indicates/transmits level in polymer aging tank	
25	Ball Valve (BV-04-947)	Chemical Dosing Upper	Isolates polymer solution suction to BFP Polymer Dosing Pumps	
26	Ball Valve (BV-04-950)	Chemical Dosing Upper	Isolates drain from polymer aging tank	
27	Ball Valve (BV-04-960)	Chemical Dosing Upper	Isolates suction flow to Polymer Dosing Pump P-04-970	
28	Ball Valve (BV-04-962)	Chemical Dosing Upper	Isolates flow to Calibration Column CC-04-990	
29	Calibration Colum (CC-04-990)	Chemical Dosing Upper	Used to confirm polymer flow from Polymer Dosing Pumps	
30	BFP Polymer Dosing Pump (P-04-970)	Chemical Dosing Upper	Polymer dosing to BFP-03-650	
31	Temperature Element (TE-04-966)	Chemical Dosing Upper	Senses temperature in stator of Polymer Dosing Pump P-04-970 for over-heating protection	Signal to Plant Control System
32	Ball Valve (BV-04-985)	Chemical Dosing Upper	Isolates PSH-987	
33	Pressure Switch (PSH-04-987)	Chemical Dosing Upper	Senses high pressure in polymer pump discharge of Polymer Dosing Pump P-04-970	Signal to Plant Control System
34	Ball Valve (BV-04-964)	Chemical Dosing Upper	Isolates polymer solution to drain	
35	Ball Valve (BV-04-970)	Chemical Dosing Upper	Isolates discharge of Polymer Dosing Pump P-04-970 to BFP-03-650	
36	Ball Valve (BV-04-972)	Chemical Dosing Upper	Isolates discharge of P-04-970/980	
37	Pressure Release Valve (PRV-04-968)	Chemical Dosing Upper	Releases pressure at discharge of Polymer Dosing Pump P-04-970	

No.	Component	Location	Function performed	Remarks
38	Ball Valve (BV-04-961)	Chemical Dosing Upper	Isolates suction flow to Polymer Dosing Pump P-04-980	
39	Ball Valve (BV-04-963)	Chemical Dosing Upper	Isolates flow to Calibration Column CC-04-990	
40	BFP Polymer Dosing Pump (P-04-980)	Chemical Dosing Upper	Polymer dosing to BFP-03-650	
41	Temperature Element (TE-04-967)	Chemical Dosing Upper	Senses temperature in stator of Polymer Dosing Pump P-04-980 for over-heating protection	Signal to Plant Control System
42	Ball Valve (BV-04-988)	Chemical Dosing Upper	Isolates PSH-990	
43	Pressure Switch (PSH-04-990)	Chemical Dosing Upper	Senses high pressure in polymer pump discharge of Polymer Dosing Pump P-04-970	Signal to Plant Control System
44	Ball Valve (BV-04-965)	Chemical Dosing Upper	Isolates polymer solution to drain	
45	Ball Valve (BV-04-971)	Chemical Dosing Upper	Isolates discharge of Polymer Dosing Pump P-04-980 to BFP-03-650	
46	Ball Valve (BV-04-973)	Chemical Dosing Upper	Isolates polymer line at discharge of Pump P-04-980	Supplier: Veolia Water Technologies Canada
47	Ball Valve (BV-04-974)	Chemical Dosing Upper	Isolates polymer line at discharge of Pump P-04-970	Supplier: Veolia Water Technologies Canada
48	Pressure Release Valve (PSV-04-969)	Chemical Dosing Upper	Releases pressure at discharge of Polymer Dosing Pump P-04-980	
49	Flow Meter (FIT-04-999, FM-04-999)	Chemical Dosing Upper	Measures polymer solution flow to BFP-03-650	Signal to Plant Control System
50	Backpressure Valve (BPV-04-990)	Chemical Dosing Upper	Avoids polymer solution backflow to Polymer Dosing Pump P-04-970	
51	Backpressure Valve (BPV-04-991)	Chemical Dosing Upper	Avoids polymer solution backflow to Polymer Dosing Pump P-04-980	
52	Pressure Regulating Valve (PRV-04-980)	Chemical Dosing Upper	Regulates potable water line pressure to BFP Polymer Dosing skid	

No.	Component	Location	Function performed	Remarks
53	Ball Valve (BV-04-981)	Chemical Dosing Upper	Isolates potable water flow to BFP Polymer Dosing skid	
54	Solenoid Valve (SV-04-982)	Chemical Dosing Upper	Controls potable water flow to BFP Polymer Dosing skid	
55	Flow Indicator (FI-04-963)	Chemical Dosing Upper	Indicates potable water flow to BFP Polymer Dosing skid	
56	Needle Valve (NV-04-984)	Chemical Dosing Upper	Used to adjust potable water flow to BFP Polymer Dosing skid	

END OF CHAPTER

CHAPTER 5

5. COMPONENT DETAILS

5.1 GENERAL OVERVIEW

The following tables describe the components of the various systems and provide some basic details and settings. For each table, there are drawings that can be referenced to better understand in what part of the Water Treatment Plant the components are located.

5.2 RAW WASTEWATER FLOW

(Refer to Drawing P-604 in Appendix A)

The following table identifies the components related to wastewater flow from the influent pump well to the coarse screens.

No.	Component	Details	Settings	Remarks
1	Influent Pump Station Wet Well (T-01-001)	2.6 m L x 2.6 m W x 7.2 m Depth	Water column inside wet well is 3.325 m max.	
2	Raw Wastewater Pump (P-01-110)	Flygt FP 3171 MT3-436 Submersible Chopper Pump	VFD, Max flow 150 L/s	Supplier: Xylem
3	Raw Wastewater Pump (P-01-120)	Flygt FP 3171 MT3-436 Submersible Chopper Pump	VFD, Max flow 150 L/s	Supplier: Xylem
4	Raw Wastewater Pump (P-01-130)	Flygt FP 3171 MT3-436 Submersible Chopper Pump	VFD, Max flow 150 L/s	Supplier: Xylem
5	Check Valve (CV-01-111)	Valmatic Swing Check Valve Series 7800LW, 200 mm	Normally Open	Supplier: Controles Laurentide
6	Check Valve (CV-01-112)	Valmatic Swing Check Valve Series 7800LW, 200 mm	Normally Open	Supplier: Controles Laurentide
7	Check Valve (CV-01-113)	Valmatic Swing Check Valve Series 7800LW, 200 mm	Normally Open	Supplier: Controles Laurentide
8	Plug Valve (PLV-01-111)	Valmatic Cam-Centric Series 5800R/5900R	Normally Open	Supplier: Controles Laurentide
9	Plug Valve (PLV-01-112)	Valmatic Cam-Centric Series 5800R/5900R	Normally Open	Supplier: Controles Laurentide
10	Plug Valve (PLV-01-113)	Valmatic Cam-Centric Series 5800R/5900R	Normally Open	Supplier: Controles Laurentide

No.	Component	Details	Settings	Remarks
11	Air/Vacuum Release Valve (ARV-01-100)	DeZurik Apco/Hilton SU,3,SCAV,F1,S2,R516-NBR-S2-S2-S2*VTO	Normally Closed. Opens when air in the pipeline	Supplier: Les Controles Provan Assovies (Dezurik)
12	Flow Meter (FQIT-150, FM-01-150)	Endress + Hauser, Promag W400-5W4C2HCKL7/0, 200 mm	Plant flow range 0 – 151 L/s	Supplier: Endress + Hauser Canada
13	Level Indicating Transmitter (LIT-100)	SITRANS LUT-420	Water colum height range inside wet well 0 – 3.3 m	Supplier: Vision Solutions de Procedes
14	Level Switch (LSLL-111)	Xylem ENM-10 Level regulator		Supplier: Xylem
15	Level Switch (LSL-112)	Xylem ENM-10 Level regulator		Supplier: Xylem
16	Level Switch (LSH-113)	Xylem ENM-10 Level regulator		Supplier: Xylem
17	Level Switch (LSHH-114)	Xylem ENM-10 Level regulator		Supplier: Xylem

5.3 FINE SCREENS

(Refer to Drawing P-605 in Appendix A)

The following table identifies the components related to the flow of wastewater through the fine screens.

No.	Component	Details	Settings	Remarks
1	Motorized Knife Gate Valve (KV-01-211)	Orbinox EX Series 10, 250 mm	Normally open when Shaftless Spiral Screen SCRN-01-210 is operating	Supplier: Controles Laurentide
2	Knife Gate Valve (KV-01-212)	Orbinox EX Series 10, 250 mm	Manual Operation. Normally open	Supplier: Controles Laurentide
3	Fine Screen (SCRN-01-210)	SPECO Wastewater Tank mounted Screw Screen GCPC600, Perforated plate 6 mm opening	151 L/s max. capacity	Supplier: Enviro-Care
4	Level Indicating Transmitter (LIT-211)	Ultrasonic level sensor CID1, Echomax ST-H, Siemens Hydroranger	Height range: 0 – 1.4 m (approx.	Supplier: Enviro-Care

No.	Component	Details	Settings	Remarks
		200 level control (Vendor Package)	screen tank depth)	
5	Pressure Reducing Valve (PRV-01-110)	Fisher MR95H-51, 25 mm	274 – 414 kPa	Supplier: Controles Laurentide
6	Ball Valve (BV-01-112)	SPECO Wastewater Tank mounted Screw Screen GCPC600 (Vendor package)	Normally Open	Supplier: Enviro-Care
7	Ball Valve (BV-01-123)	SPECO Wastewater Tank mounted Screw Screen GCPC600 (Vendor package)	Normally Open	Supplier: Enviro-Care
8	Solenoid Valve (SV-01-120)	ASCO, 13 mm (Vendor package)	Controlled by Screen control system	Supplier: Enviro-Care
9	Solenoid Valve (SV-01-122)	ASCO, 25 mm (Vendor package)	Controlled by Screen control system	Supplier: Enviro-Care
10	Motorized Knife Gate Valve (KV-01-221)	Orbinox EX Series 10, 250 mm	Normally open when Shaftless Spiral Screen SCRN-01-220 is operating	Supplier: Controles Laurentide
11	Knife Gate Valve (KV-01-222)	Orbinox EX Series 10, 250 mm	Manual Operation. Normally open	Supplier: Controles Laurentide
12	Fine Screen (SCRN-01-220)	SPECO Wastewater Tank mounted Screw Screen GCPC600, Perforated plate 6 mm opening	151 L/s max. capacity	Supplier: Enviro-Care
13	Level Indicating Transmitter (LIT-221)	Ultrasonic level sensor CID1, Echomax ST-H, Siemens Hydroranger 200 level control (Vendor Package)	Height range: 0 – 1.4 m (approx. screen tank depth)	Supplier: Enviro-Care
14	Ball Valve (BV-01-114)	SPECO Wastewater Tank mounted Screw Screen GCPC600 (Vendor package)	274 – 414 kPa	Supplier: Enviro-Care
15	Ball Valve (BV-01-127)	SPECO Wastewater Tank mounted Screw Screen GCPC600 (Vendor package)	Normally Open	Supplier: Enviro-Care

No.	Component	Details	Settings	Remarks
16	Solenoid Valve (SV-01-124)	ASCO, 13 mm (Vendor package)	Normally Open	Supplier: Enviro-Care
17	Solenoid Valve (SV-01-126)	ASCO, 25 mm (Vendor package)	Controlled by Screen control system	Supplier: Enviro-Care
18	Motorized Knife Gate Valve (KV-01-112)	Orbinox EX Series, 400 mm	Normally Closed. Operated by Operator as Required	Supplier: Controles Laurentide
19	Motorized Knife Gate Valve (KV-01-112A)	Orbinox EX Series, 200 mm	Normally Closed. Operated by Operator as Required	Supplier: Controles Laurentide
20	Knife Gate Valve (KV-01-232)	Orbinox EX Series, 350 mm	Manually Operated. Normally Closed.	Supplier: Controles Laurentide

5.4 PRIMARY FILTRATION

(Refer to Drawing P-606, P-607, and P-608 in Appendix A)

The following table identifies the components related to the flow of wastewater through the primary filters.

No.	Component	Details	Settings	Remarks
1	Motorized Knife Gate Valve (KV-01-111, FV-111)	Orbinox EX Series, 350 mm	Normally Open when Filter Operating	Supplier: Controles Laurentide
2	Primary Filter Belt PF-01-310	Salness filter Model SF6000	121 L/s Max capacity	Supplier: Trojan Technologies
3	Primary Filter Screw Press SP-01-330	Salness filter Model SF6000 (Vendor Package)	Controlled by Filter Control System	Supplier: Trojan Technologies
4	Ball Valve Influent Sampling Port	2 PC Full Port 1000 WOG	Manually Operated	Supplier: Trojan Technologies
5	Ball Valve Effluent Sampling Port	2 PC Full Port 1000 WOG	Manually Operated	Supplier: Trojan Technologies

No.	Component	Details	Settings	Remarks
6	Solenoid Valve (PLV-01-113)	Asco, as part of Salness filter Model SF6000 (Vendor Package)	Controlled by filter control system	Supplier: Trojan Technologies
7	Ball Valve (BV-01-310)	Jenkins 600 CWP/150 SWP 201 J, 25 mm	Manually Operated	Supplier: Jenkins
8	Pressure Regulating Valve (PRV-01-311)	Fisher MR95H-51, 25 mm	600 kPa	Supplier: Controles Laurentide
9	Ball Valve (BV-01-314)	Jenkins 600 CWP/150 SWP 201 J, 12 mm	Manually Operated	Supplier: Jenkins
10	Solenoid Valve (SV-01-312)	Asco, as part of Salness filter Model SF6000 (Vendor Package)	Controlled by Filter Control System	Supplier: Trojan Technologies
11	Ball Valve (BV-01-320)	Jenkins 600 CWP/150 SWP 201 J, 25 mm	Manually Operated	Supplier: Jenkins
12	Pressure Regulating Valve (PRV-01-321)	Fisher MR95H-51, 25 mm	400-600 kPa	Supplier: Controles Laurentide
13	Ball Valve (BV-01-324)	Jenkins 600 CWP/150 SWP 201 J, 12 mm	Manually Operated	Supplier: Jenkins
14	Solenoid Valve (SV-01-322)	Asco, part of Salness filter Model SF6000 (Vendor Package)	Controlled by Filter Control System	Supplier: Trojan Technologies
15	Motorized Knife Gate Valve (KV-01-121, FV-121)	Orbinox EX Series, 350 mm	Normally Open when Filter Operating	Supplier: Controles Laurentide
16	Primary Filter Belt PF-01-320	Salness filter Model SF6000 (Vendor Package)	121 L/s Max capacity	Supplier: Trojan Technologies
17	Primary Filter Screw Press SP-01-340	Salness filter Model SF6000 (Vendor Package)	Controlled by Filter Control System	Supplier: Trojan Technologies
18	Ball Valve Influent Sampling Port	2 PC Full Port 1000 WOG	Manually Operated	Supplier: Trojan Technologies
19	Ball Valve Effluent Sampling Port	2 PC Full Port 1000 WOG	Manually Operated	Supplier: Trojan Technologies
20	Solenoid Valve (SV-01-123)	Asco, part of Salness filter Model SF6000 (Vendor Package)	Controlled by Filter Control System	Supplier: Trojan Technologies
21	Ball Valve (BV-01-315)	Jenkins 600 CWP/150 SWP 201 J, 12 mm	Manually Operated	Supplier: Jenkins
22	Solenoid Valve (SV-01-313)	Asco, as part of Salness filter Model SF6000 (Vendor Package)	Controlled by Filter Control System	Supplier: Trojan Technologies
23	Ball Valve (BV-01-325)	Jenkins 600 CWP/150 SWP 201 J, 12 mm	Manually Operated	Supplier: Jenkins

No.	Component	Details	Settings	Remarks
24	Solenoid Valve (SV-01-323)	Asco, as part of Salness filter Model SF6000 (Vendor Package)	Controlled by Filter Control System	Supplier: Trojan Technologies
25	Motorized Knife Gate Valve (KV-01-001, FV-001)	Orbinox EX Series, 250 mm	Normally Closed. Open by Operator only in Required Extreme Case of Water Bypass	Supplier: Controles Laurentide
26	Headworks Bridge Crane Hoist	Pro-Tech Pont Rulant, Columbus 5626 A	Manual Operated for Filter cartridge Removal during Maintenance	Supplier: Pro-Tech-Pont Roulant
27	Primary Filter Blower (B-02-210)	Kasser BB69C 10 HP (Vendor Package)	Controlled by Filter Control System	Supplier: Trojan Technologies
28	Primary Filter Blower Fan (F-02-215)	Part of Kasser BB69C 10 HP (Vendor Package)	Controlled by Filter Control System	Supplier: Trojan Technologies
29	Air Filter (AF-02-212)	Part of Kasser BB69C 10 HP (Vendor Package)	Manual Operation	Supplier: Trojan Technologies
30	Silencer (SLR-02-213)	Part of Kasser BB69C 10 HP (Vendor Package)	Manual Operation	Supplier: Trojan Technologies
31	Silencer (SLR-02-214)	Part of Kasser BB69C 10 HP (Vendor Package)	Manual Operation	Supplier: Trojan Technologies
32	Pressure Indicator (PI-02-217)	Part of Kasser BB69C 10 HP (Vendor Package)	0-100 kPa	Supplier: Trojan Technologies
33	Check Valve (CV-02-215)	Part of Kasser BB69C 10 HP (Vendor Package)	Manual Operation	Supplier: Trojan Technologies
34	Ball Valve (BV-02-219)	Part of Kasser BB69C 10 HP (Vendor Package)	Manual Operation	Supplier: Trojan Technologies
35	Pressure Safety Valve (PSV-02-218)	Part of Kasser BB69C 10 HP (Vendor Package)	Manual Operation	Supplier: Trojan Technologies
36	Primary Filter Blower (B-02-220)	Kasser BB69C 10 HP (Vendor Package)	Controlled by Filter Control System	Supplier: Trojan Technologies
37	Primary Filter Blower Fan (F-02-225)	Part of Kasser BB69C 10 HP (Vendor Package)	Controlled by Filter Control System	Supplier: Trojan Technologies
38	Air Filter (AF-02-222)	Part of Kasser BB69C 10 HP (Vendor Package)	Manual Operation	Supplier: Trojan Technologies

No.	Component	Details	Settings	Remarks
39	Silencer (SLR-02-223)	Part of Kasser BB69C 10 HP (Vendor Package)	Manual Operation	Supplier: Trojan Technologies
40	Silencer (SLR-02-224)	Part of Kasser BB69C 10 HP (Vendor Package)	Manual Operation	Supplier: Trojan Technologies
41	Pressure Indicator (PI-02-227)	Part of Kasser BB69C 10 HP (Vendor Package)	0-100 kPa	Supplier: Trojan Technologies
42	Butterfly Valve (BFV-02-216)	Part of Kasser BB69C 10 HP (Vendor Package)	Manual Operation	Supplier: Controles Laurentide
43	Butterfly Valve (BFV-02-226)	Part of Kasser BB69C 10 HP (Vendor Package)	Manual Operation	Supplier: Controles Laurentide
44	Check Valve (CV-02-215)	Kasser BB69C 10 HP (Vendor Package)	Manual Operation	Supplier: Trojan Technologies
45	Ball Valve (BV-02-229)	Kasser BB69C 10 HP (Vendor Package)	Manual Operation	Supplier: Trojan Technologies
46	Pressure Safety Valve (PSV-02-228)	Kasser BB69C 10 HP (Vendor Package)	Manual Operation	Supplier: Trojan Technologies

5.5 SECONDARY TREATMENT

5.5.1 Aeration Blowers

(Refer to Drawing P-609 in Appendix A)

The following table identifies the components related to aeration blower to the secondary system.

No.	Component	Details	Settings	Remarks
1	Air Filter (AF-02-112)	Parto f Aerzen GM-15L, 25HP (vendor package)	1.62 – 13.1 m^3/min	Supplier: Veolia Water Technologies Canada
2	Silencer (SLR-02-113)	Part of Aerzen GM-15L, 25HP (vendor package)	Manual Operation	Supplier: Veolia Water Technologies Canada
3	Pressure Indicator (PI-107)	Wika, Part of Aerzen GM-15L, 25HP (vendor package)		Supplier: Veolia Water Technologies Canada
4	Pressure Switch (PSL-108)	Part of Aerzen GM-15L, 25HP (vendor package)		Supplier: Veolia Water Technologies Canada
5	Ball Valve (BV-02-106)	Part of Aerzen GM-15L, 25HP (vendor package)	Manual Operation	Supplier:
6	Process Aeration Blower (B-02-110)	Aerzen GM-15L, 25HP (vendor package)	Controlled by Plant Control System	Supplier: Veolia Water Technologies Canada

No.	Component	Details	Settings	Remarks
7	Silencer (SLR-02-114)	Parto f Aerzen GM-15L, 25HP (vendor package)	Manual Operation	Supplier: Veolia Water Technologies Canada
8	Pressure Safety Valve (PSV-02-117)	Part of Aerzen GM-15L, 25HP (vendor package)		Supplier: Veolia Water Technologies Canada
9	Ball Valve (BV-02-116)	Parto f Aerzen GM-15L, 25HP (vendor package)	Manual Operation	Supplier: Veolia Water Technologies Canada
10	Pressure Indicator (PI-02-117)	Wika, Part of Aerzen GM-15L, 25HP (vendor package)		Supplier: Veolia Water Technologies Canada
11	Pressure Switch (PSL-02-118)	Part of Aerzen GM-15L, 25HP (vendor package)		Supplier: Veolia Water Technologies Canada
12	Temperature Indicator (TI-02-119)	Part of Aerzen GM-15L, 25HP (vendor package)		Supplier: Veolia Water Technologies Canada
13	Temperature Switch (TI-02-120)	Part of Aerzen GM-15L, 25HP (vendor package)		Supplier: Veolia Water Technologies Canada
14	Temperature Switch (TI-02-180)	Part of Aerzen GM-15L, 25HP (vendor package)		Supplier: Veolia Water Technologies Canada
15	Check Valve (CV-02-115)	Parto f Aerzen GM-15L, 25HP (vendor package)		Supplier: Veolia Water Technologies Canada
16	Butterfly Valve (BFV-02-116)	Emerson Keystone K-LOK Series 36, 150 mm	Normally Open. Manual Operation	Supplier: Controles Laurentide
17	Air Filter (AF-02-122)	Parto f Aerzen GM-15L, 25HP (vendor package)	1.62 – 13.1 m^3/min	Supplier: Veolia Water Technologies Canada
18	Silencer (SLR-02-123)	Part of Aerzen GM-15L, 25HP (vendor package)	Manual Operation	Supplier: Veolia Water Technologies Canada
19	Ball Valve (BV-02-141)	Part of Aerzen GM-15L, 25HP (vendor package)	Manual Operation	Supplier: Veolia Water Technologies Canada
20	Pressure Indicator (PI-02-142)	Wika, Part of Aerzen GM-15L, 25HP (vendor package)		Supplier: Veolia Water Technologies Canada
21	Pressure Switch (PSL-02-143)	Part of Aerzen GM-15L, 25HP (vendor package)		Supplier: Veolia Water Technologies Canada

No.	Component	Details	Settings	Remarks
22	Process Aeration Blower (B-02-120)	Aerzen GM-15L, 25HP (vendor package)	Controlled by Plant Control System	Supplier:
23	Silencer (SLR-02-124)	Parto of Aerzen GM-15L, 25HP (vendor package)	Manual Operation	Supplier: Veolia Water Technologies Canada
24	Pressure Safety Valve (PSV-02-127)	Part of Aerzen GM-15L, 25HP (vendor package)		Supplier: Veolia Water Technologies Canada
25	Ball Valve (BV-02-126)	Part of Aerzen GM-15L, 25HP (vendor package)	Manual Operation	Supplier: Veolia Water Technologies Canada
26	Pressure Indicator (PI-02-127)	Wika, Part of Aerzen GM-15L, 25HP (vendor package)		Supplier: Veolia Water Technologies Canada
27	Pressure Switch (PSL-02-128)	Part of Aerzen GM-15L, 25HP (vendor package)		Supplier: Veolia Water Technologies Canada
28	Temperature Indicator (TI-02-129)	Part of Aerzen GM-15L, 25HP (vendor package)		Supplier: Veolia Water Technologies Canada
29	Temperature Switch (TI-02-130)	Part of Aerzen GM-15L, 25HP (vendor package)		Supplier: Veolia Water Technologies Canada
30	Temperature Switch (TI-02-185)	Part of Aerzen GM-15L, 25HP (vendor package)		Supplier: Veolia Water Technologies Canada
31	Check Valve (CV-02-125)	Part of Aerzen GM-15L, 25HP (vendor package)		Supplier: Veolia Water Technologies Canada
32	Butterfly Valve (BFV-02-126)	Emerson Keystone K-LOK Series 36, 150 mm	Normally Open. Manual Operation	Supplier: Controles Laurentide
33	Air Filter (AF-02-132)	Part of Aerzen GM-15L, 25HP (vendor package)		Supplier: Veolia Water Technologies Canada
34	Silencer (SLR-02-133)	Part of Aerzen GM-15L, 25HP (vendor package)	Manual Operation	Supplier: Veolia Water Technologies Canada
35	Ball Valve (BV-02-144)	Part of Aerzen GM-15L, 25HP (vendor package)	Manual Operation	Supplier: Veolia Water Technologies Canada
36	Pressure Indicator (PI-02-145)	Part of Aerzen GM-15L, 25HP (vendor package)		Supplier: Veolia Water Technologies Canada

No.	Component	Details	Settings	Remarks
37	Pressure Switch (PSL-02-146)	Part of Aerzen GM-15L, 25HP (vendor package)		Supplier: Veolia Water Technologies Canada
38	Process Aeration Blower (B-02-130)	Aerzen GM-15L, 25HP (vendor package)		Supplier:
39	Silencer (SLR-02-134)	Part of Aerzen GM-15L, 25HP (vendor package)	Manual Operation	Supplier: Veolia Water Technologies Canada
40	Pressure Safety Valve (PSV-02-137)	Part of Aerzen GM-15L, 25HP (vendor package)		Supplier: Veolia Water Technologies Canada
41	Ball Valve (BV-02-136)	Part of Aerzen GM-15L, 25HP (vendor package)	Manual Operation	Supplier: Veolia Water Technologies Canada
42	Pressure Indicator (PI-02-137)	Part of Aerzen GM-15L, 25HP (vendor package)		Supplier: Veolia Water Technologies Canada
43	Pressure Switch (PSL-02-138)	Part of Aerzen GM-15L, 25HP (vendor package)		Supplier: Veolia Water Technologies Canada
44	Temperature Indicator (TI-02-139)	Part of Aerzen GM-15L, 25HP (vendor package)		Supplier: Veolia Water Technologies Canada
45	Temperature Switch (TI-02-140)	Part of Aerzen GM-15L, 25HP (vendor package)		Supplier: Veolia Water Technologies Canada
46	Temperature Switch (TI-02-190)	Part of Aerzen GM-15L, 25HP (vendor package)		Supplier: Veolia Water Technologies Canada
47	Check Valve (CV-02-135)	Part of Aerzen GM-15L, 25HP (vendor package)		Supplier: Veolia Water Technologies Canada
48	Butterfly Valve (BFV-02-136)	Emerson Keystone K-LOK Series 36, 150 mm	Manually Operated. Normally Open	Supplier: Controles Laurentide
49	Pressure transmitter (PIT-02-195)		Signal to Plant Control System	Supplier:
50	Butterfly Valve (BFV-02-151)	Emerson Keystone K-LOK Series 36, 150 mm	Normally Open. Manual Operation	Supplier: Controles Laurentide
51	Motorized Butterfly Valve (BFV-02-150)	Emerson Keystone K-LOK Series 36, 150 mm	Modulating Controlled by Plant	Supplier: Controles Laurentide

No.	Component	Details	Settings	Remarks
			Control System	
52	Flow meter (FM-02-152, FE-02-152)	Endress & Hauser, t-mass 651, 651-20AA0AD5RABABA	Min Flow: 1.6 m^3/min Nominal Flow: 13.1 m^3/min Max Flow: 50 m^3/min	Supplier: Endress & Hauser
53	Butterfly Valve (BFV-02-153)	Emerson Keystone K-LOK Series 36, 150 mm	Normally Open. Manual Operation	Supplier: Controles Laurentide
54	Motorized Butterfly Valve (BFV-02-155)	Emerson Keystone K-LOK Series 36, 150 mm		Supplier: Controles Laurentide
55	Flow meter (FM-02-156, FE-02-156)	Endress & Hauser, t-mass 651, 651-20AA0AD5RABABA	Min Flow: 1.6 m^3/min Nominal Flow: 13.1 m^3/min Max Flow: 50 m^3/min	Supplier: Endress & Hauser
56	Butterfly Valve (BFV-02-171)	Emerson Keystone K-LOK Series 36, 150 mm	Normally Open. Manual Operation	Supplier: Controles Laurentide
57	Motorized Butterfly Valve (BFV-02-170)	Emerson Keystone K-LOK Series 36, 150 mm		Supplier: Controles Laurentide
58	Flow meter (FM-02-172, FE-02-172)	Endress & Hauser, t-mass 651, 651-20AA0AD5RABABA	Min Flow: 1.6 m^3/min Nominal Flow: 13.1 m^3/min Max Flow: 50 m^3/min	Supplier: Endress & Hauser

5.5.2 Moving Bed Bioreactors (MBBR)

(Refer to Drawing P-610 in Appendix A)

The following table identifies the components related to Moving Bed Bioreactors.

No.	Component	Details	Settings	Remarks
1	Motorized Knife Gate Valve (KV-02-211, FV-211)	Orbinox EX Series, 350 mm	ON/Off Operation.	Supplier: Controles Laurentide

No.	Component	Details	Settings	Remarks
			Controlled by Plant Control System. Normally Open when MBBR Train 1 Operating	
2	MBBR 1 (T-02-210)	Veolia MBBR - K5 AnoxKaldnes media (Vendor Package)	196 m^3 MBBR Capacity. 4.1 m Water Depth. 86 m^3 media.	Supplier: Veolia Water Technologies Canada
3	Dissolved Oxygen Analyzers (AIT-02-211)	Hach 9020000/LXV404.9900552 (Vendor Package)	Range: 0- 20 mg/L	Supplier: Veolia Water Technologies Canada
4	Dissolved Oxygen Analyzers (AIT-02-212)	Hach 9020000/LXV404.9900552 (Vendor Package)	Range: 0- 20 mg/L	Supplier: Veolia Water Technologies Canada
5	Level Switch High (LSH-02-213)	Flygt ENM-10		Supplier: Veolia Water Technologies Canada
6	Level Switch High (LSH-02-214)	Flygt ENM-10		Supplier: Veolia Water Technologies Canada
7	Butterfly Valve (BFV-02-181)	Emerson Keystone K-LOK Series 36, 100 mm	Manual Operation. Normally Open	Supplier: Controles Laurentide
8	Butterfly Valve (BFV-02-182)	Emerson Keystone K-LOK Series 36, 100 mm	Manual Operation. Normally Open	Supplier: Controles Laurentide
9	Butterfly Valve (BFV-02-183)	Emerson Keystone K-LOK Series 36, 100 mm	Manual Operation. Normally Open	Supplier: Controles Laurentide
10	Butterfly Valve (BFV-02-184)	Emerson Keystone K-LOK Series 36, 100 mm	Manual Operation. Normally Open	Supplier: Controles Laurentide
11	Motorized Knife Gate Valve (KV-02-221, FV-221)	Orbinox EX Series, 350 mm	ON/Off Operation. Controlled by Plant Control System.	Supplier: Controles Laurentide

No.	Component	Details	Settings	Remarks
			Normally Open when MBBR Train 2 Operating	
12	MBBR 2 (T-02-220)	Veolia MBBR - K5 AnoxKaldnes media (Vendor Package)	196 m^3 MBBR Capacity. 4.1 m Water Depth. 86 m^3 media.	Supplier: Veolia Water Technologies Canada
13	Dissolved Oxygen Analyzers (AIT-02-221)	Hach 9020000/LXV404.9900552 (Vendor Package)	Range: 0- 20 mg/L	Supplier: Veolia Water Technologies Canada
14	Dissolved Oxygen Analyzers (AIT-02-222)	Hach 9020000/LXV404.9900552 (Vendor Package)	Range: 0- 20 mg/L	Supplier: Veolia Water Technologies Canada
15	Level Switch High (LSH-02-223)	Flygt ENM-10		Supplier: Veolia Water Technologies Canada
16	Level Switch High (LSH-02-224)	Flygt ENM-10		Supplier: Veolia Water Technologies Canada
17	Butterfly Valve (BFV-02-191)	Emerson Keystone K-LOK Series 36, 100 mm	Manual Operation. Normally Open	Supplier: Controles Laurentide
18	Butterfly Valve (BFV-02-192)	Emerson Keystone K-LOK Series 36, 100 mm	Manual Operation. Normally Open	Supplier: Controles Laurentide
19	Butterfly Valve (BFV-02-193)	Emerson Keystone K-LOK Series 36, 100 mm	Manual Operation. Normally Open	Supplier: Controles Laurentide
20	Butterfly Valve (BFV-02-194)	Emerson Keystone K-LOK Series 36, 100 mm	Manual Operation. Normally Open	Supplier: Controles Laurentide
21	Knife Gate Valve (KV-02-230, FV-230)	Orbinox EX Series, 350 mm	Manual Operation. Normally Closed.	Supplier: Controles Laurentide

5.5.3 Dissolved Air Flotation (DAF) Clarification #1

(Refer to Drawing P-611 and P-612 in Appendix A)

The following table identifies the components related to Dissolved Air Flotation Clarification system #1.

No.	Component	Details	Settings	Remarks
1	Motorized Valve (BFV-02-312, FV-312)	Keystone, Series GR Resilient Seated Butterfly Valve, 350 mm	ON/OFF Operation. Controlled by Plant Control System. Normally Open when DAF Train 1 Operating	Supplier: Controle Laurentides
2	Globe Valve (GLV-02-313)	AKUJM07, Globe 200 WOG Stainless Steel, 19 mm	Air Purge Valve. Manual Operation.	Supplier: Veolia Water Technologies Canada
3	Motorized Butterfly Valve (BFV-02-625, FV-625)	Bray Series 31 (Vendor Package), 80 mm	ON/OFF Operation, Controlled by DAF Control System	Supplier: Veolia Water Technologies Canada
4	DAF Tank 1 (T-02-310)	Veolia Spidflow SFP-650 (Vendor Package)	60.4 L/s Capacity	Supplier: Veolia Water Technologies Canada
5	DAF 1 Sludge Scraper (DDR-02-311)	Veolia Chain Surface Surface Scraper System 5000218036-SA301-22, with 90 Series SK9033.1 Right Angle Helical-Bevel NORD drive and 0.18 kW NORD High Performance Motor, (Vendor Package)	Scrapper mechanism set for the DAF tank dimension by Veolia	Supplier: Veolia Water Technologies Canada
6	Level Transmitter (LIT-02-331)	Endress &Hauser PMP51-CA21JD1FGDR1JA1+AAZ1 (Vendor Package)	Measurement Range: 40 kPa. Overpressure: 600 kPa.	Supplier: Veolia Water Technologies Canada
7	Level Switch (LSH-02-332)	Xylem ENM-10 (Vendor Package)		Supplier: Veolia Water Technologies Canada
8	Level Switch (LSL-02-333)	Xylem ENM-10 (Vendor Package)		Supplier: Veolia Water Technologies Canada
9	TSS Analyzer (AIT-02-334)	Hach Solitax LXV328.99.10002 (Vendor Package)	Measuring Range TSS: 0.001 – 500 G/L. Measuring Range Turbidit	Supplier: Veolia Water Technologies Canada

No.	Component	Details	Settings	Remarks
			y: 0.001 – 4000 FNU	
10	Butterfly Valve (BFV-02-165)	Bray Series 31 (Vendor Package), 50 mm	Manual Operation. Normally Closed	Supplier: Veolia Water Technologies Canada
11	Butterfly Valve (BFV-02-166)	Bray Series 31 (Vendor Package), 50 mm	Manual Operation. Normally Closed	Supplier: Veolia Water Technologies Canada
12	Butterfly Valve (BFV-02-170)	Bray Series 31 (Vendor Package), 50 mm	Manual Operation. Normally Closed	Supplier: Veolia Water Technologies Canada
13	Butterfly Valve (BFV-02-171)	Bray Series 31 (Vendor Package), 50 mm	Manual Operation. Normally Closed	Supplier: Veolia Water Technologies Canada
14	Butterfly Valve (BFV-02-172)	Bray Series 31 (Vendor Package), 50 mm	Manual Operation. Normally Closed	Supplier: Veolia Water Technologies Canada
15	Plug Valve (PLV-02-301)	Pratt Plug Valve #611A-E1-L-2" (Vendor Package), 50 mm	Manual Operation. Normally Closed	Supplier: Veolia Water Technologies Canada
16	Plug Valve (PLV-02-302)	Vendor Package, 50 mm	Manual Operation. Normally Closed	Supplier: Veolia Water Technologies Canada
17	Plug Valve (PLV-02-303)	Vendor Package, 50 mm	Manual Operation. Normally Closed	Supplier: Veolia Water Technologies Canada
18	Plug Valve (PLV-02-304)	Vendor Package, 50 mm	Manual Operation. Normally Closed	Supplier: Veolia Water Technologies Canada
19	Plug Valve (PLV-02-305)	Vendor Package, 50 mm	Manual Operation. Normally Closed	Supplier: Veolia Water Technologies Canada
20	Pneumatic Actuated Butterfly Valve (BFV-02-309)	311200-11011390 Bray Series 31 (Vendor Package), 300 mm	Modulating Operation. Controlled by DAF Control System	Supplier: Veolia Water Technologies Canada

No.	Component	Details	Settings	Remarks
21	Pneumatic Actuated Butterfly Valve (BFV-02-310)	311200-11011390 Bray Series 31 (Vendor Package), 300 mm	Modulating Operation. Controlled by DAF Control System	Supplier: Veolia Water Technologies Canada
22	Plug valve (PLV-02-306)	ValMatic Cam-Centric Plug Valve, 100 mm	Manual Operation. Normally Open	Supplier: Controle Laurentides
23	Plug valve (PLV-02-307)	ValMatic Cam-Centric Plug Valve, 100 mm	Manual Operation. Normally Closed	Supplier: Controle Laurentides
24	Plug valve (PLV-02-308)	ValMatic Cam-Centric Plug Valve, 100 mm	Manual Operation. Normally Closed	Supplier: Controle Laurentides
25	Backpressure Valve (BPV-02-1100)	Chemline Plastics SB12 Series Backpressure/Relief Valve, 38 mm		Supplier: Veolia Water Technologies Canada
26	Butterfly Valve (BFV-02-317A)	Bray Series 31, 100 mm	Manual Operation. Normally open	Supplier: DM Valves
27	Flow meter (FE-02-317)	Endress & Hauser Electromagnetic Flowmeter Promag 400 5W4C80-C6ALHP2DUA1K0A+AAL4Z1(Vendor Package), 80 mm	Flow Range: 1.5 – 50 L/s	Supplier: Veolia Water Technologies Canada
28	Butterfly Valve (BFV-02-400)	Bray Series 31 (Vendor Package), 80 mm	Manual Operation. Normally Open	Supplier: Veolia Water Technologies Canada
29	Globe Valve (GLV-02-401)	Sharpe #SV45114030 (Vendor Package), 80 mm	Manual Operation. Normally Open	Supplier: Veolia Water Technologies Canada
30	Ball Valve (BV-02-410)	KingTron S-212T, (Vendor Package), 13 mm	Manual Operation. Normally Open	Supplier: Veolia Water Technologies Canada
31	Needle Valve (NV-02-411)	Built-in with AALBORG Flow indicator (Vendor Package),	Manual Operation. Normally Open	Supplier: Veolia Water Technologies Canada

No.	Component	Details	Settings	Remarks
32	Flow indicator (FI-02-412)	AALBORG V Medium Range PTFE Flow indicator (Vendor package), 10 mm	Manual Operation. Normally Open	Supplier: Veolia Water Technologies Canada
33	Ball Valve (BV-02-402)	KingTron S-212T, (Vendor Package), 13 mm	Manual Operation. Normally Open	Supplier: Veolia Water Technologies Canada
34	Ball Valve (BV-02-403)	KingTron S-212T, (Vendor Package), 13 mm	Manual Operation. Normally Closed	Supplier: Veolia Water Technologies Canada
35	Pressure Indicator (PI-02-404)	Ashcroft 25-1009SW-L-02L-30IMV&60 #with 02-310SS-02T-XCK (Vendor Package), 6 mm	Vacuum 4136 kPa	Supplier: Veolia Water Technologies Canada
36	Check Valve (CV-02-404)	FCC90B05, ½ FCC 90B 200 WOG, (Vendor Package) 13 mm		Supplier: Veolia Water Technologies Canada
37	DAF White Water Pump (P-02-410)	EDUR White Water Pump LBUX 602C 160 L (Vendor Package)	5.5 L/s @ 76 m TDH	Supplier: Veolia Water Technologies Canada
38	Ball Valve (BV-02-407)	KingTron S-212T, (Vendor Package), 13 mm	Manual Operation. Normally Open	Supplier: Veolia Water Technologies Canada
39	Ball Valve (BV-02-408)	KingTron S-212T, (Vendor Package), 13 mm	Manual Operation. Normally Closed	Supplier: Veolia Water Technologies Canada
40	Pressure Indicator (PI-02-409)	Ashcroft 25-1009SW-L-02L-160# +02-310SS-02T-CG (Vendor Package), 6 mm	Range 0- 1103 kPa	Supplier: Veolia Water Technologies Canada
41	Check Valve (CV-02-405)	Bray Rite Check Valve V0415XE2205 (Vendor Package), 100 mm		Supplier: Veolia Water Technologies Canada
42	Butterfly Valve (BFV-02-406)	Bray Series 31 310400-1101030A (Vendor Package), 100 mm	Manual Operation. Normally Open	Supplier: Veolia Water Technologies Canada
43	Butterfly Valve (BFV-02-415)	Bray Series 31 (Vendor Package), 80 mm	Manual Operation. Normally Open	Supplier: Veolia Water Technologies Canada

No.	Component	Details	Settings	Remarks
44	Globe Valve (GLV-02-416)	Sharpe #SV45114030 (Vendor Package), 80 mm	Manual Operation. Normally Open	Supplier: Veolia Water Technologies Canada
45	Ball Valve (BV-02-425)	KingTron S-212T, (Vendor Package), 13 mm	Manual Operation. Normally Open	Supplier: Veolia Water Technologies Canada
46	Needle Valve (NV-02-426)	Built-in with AALBORG Flow indicator (Vendor Package),	Manual Operation. Normally Open	Supplier: Veolia Water Technologies Canada
47	Flow indicator (FI-02-427)	AALBORG V Medium Range PTFE Flow indicator (Vendor package), 10 mm	Manual Operation. Normally Open	Supplier: Veolia Water Technologies Canada
48	Ball Valve (BV-02-417)	KingTron S-212T, (Vendor Package), 13 mm	Manual Operation. Normally Open	Supplier: Veolia Water Technologies Canada
49	Ball Valve (BV-02-418)	KingTron S-212T, (Vendor Package), 13 mm	Manual Operation. Normally Closed	Supplier: Veolia Water Technologies Canada
50	Pressure Indicator (PI-02-419)	Ashcroft 25-1009SW-L-02L-30IMV&60 #with 02-310SS-02T-XCK (Vendor Package), 6 mm	Vacuum 4136 kPa	Supplier: Veolia Water Technologies Canada
51	Check Valve (CV-02-428)	FCC90B05, ½ FCC 90B 200 WOG, (Vendor Package) 13 mm		Supplier: Veolia Water Technologies Canada
52	DAF White Water Pump (P-02-420)	EDUR White Water Pump LBUX 602C 160 L (Vendor Package)	5.5 L/s @ 76 m TDH	Supplier: Veolia Water Technologies Canada
53	Ball Valve (BV-02-422)	KingTron S-212T, (Vendor Package), 13 mm	Manual Operation. Normally Open	Supplier: Veolia Water Technologies Canada
54	Ball Valve (BV-02-423)	KingTron S-212T, (Vendor Package), 13 mm	Manual Operation. Normally Closed	Supplier: Veolia Water Technologies Canada
55	Pressure Indicator (PI-02-424)	Ashcroft 25-1009SW-L-02L-160# +02-310SS-02T-CG (Vendor Package), 6 mm	Range 0- 1103 kPa	Supplier: Veolia Water Technologies Canada

No.	Component	Details	Settings	Remarks
56	Check Valve (CV-02-420)	Bray Rite Check Valve V0415XE2205 (Vendor Package), 100 mm		Supplier: Veolia Water Technologies Canada
57	Butterfly Valve (BFV-02-421)	Bray Series 31 310400-1101030A (Vendor Package), 100 mm	Manual Operation. Normally Open	Supplier: Veolia Water Technologies Canada
58	Butterfly Valve (BFV-02-430)	Bray Series 31 (Vendor Package), 80 mm	Manual Operation. Normally Open	Supplier: Veolia Water Technologies Canada
59	Globe Valve (GLV-02-431)	Sharpe #SV45114030 (Vendor Package), 80 mm	Manual Operation. Normally Open	Supplier: Veolia Water Technologies Canada
60	Ball Valve (BV-02-440)	KingTron S-212T, (Vendor Package), 13 mm	Manual Operation. Normally Open	Supplier: Veolia Water Technologies Canada
61	Needle Valve (NV-02-441)	Built-in with AALBORG Flow indicator (Vendor Package),	Manual Operation. Normally Open	Supplier: Veolia Water Technologies Canada
62	Flow Indicator (FI-02-442)	AALBORG V Medium Range PTFE Flow indicator (Vendor package), 10 mm	Manual Operation. Normally Open	Supplier: Veolia Water Technologies Canada
63	Ball Valve (BV-02-432)	KingTron S-212T, (Vendor Package), 13 mm	Manual Operation. Normally Open	Supplier: Veolia Water Technologies Canada
64	Ball Valve (BV-02-433)	KingTron S-212T, (Vendor Package), 13 mm	Manual Operation. Normally Closed	Supplier: Veolia Water Technologies Canada
65	Pressure Indicator (PI-02-434)	Ashcroft 25-1009SW-L-02L-30IMV&60 #with 02-310SS-02T-XCK (Vendor Package), 6 mm	Vacuum 4136 kPa	Supplier: Veolia Water Technologies Canada
66	Check Valve (CV-02-443)	FCC90B05, ½ FCC 90B 200 WOG, (Vendor Package) 13 mm		Supplier: Veolia Water Technologies Canada
67	DAF White Water Pump (P-02-430)	EDUR White Water Pump LBUX 602C 160 L (Vendor Package)	5.5 L/s @ 76 m TDH	Supplier: Veolia Water Technologies Canada

No.	Component	Details	Settings	Remarks
68	Ball Valve (BV-02-437)	KingTron S-212T, (Vendor Package), 13 mm	Manual Operation. Normally Open	Supplier: Veolia Water Technologies Canada
69	Ball Valve (BV-02-438)	KingTron S-212T, (Vendor Package), 13 mm	Manual Operation. Normally Closed	Supplier: Veolia Water Technologies Canada
70	Pressure Indicator (PI-02-439)	Ashcroft 25-1009SW-L-02L-160# +02-310SS-02T-CG (Vendor Package), 6 mm	Range 0- 1103 kPa	Supplier: Veolia Water Technologies Canada
71	Check Valve (CV-02-435)	Bray Rite Check Valve V0415XE2205 (Vendor Package), 100 mm		Supplier: Veolia Water Technologies Canada
72	Butterfly Valve (BFV-02-436)	Bray Series 31 310400-1101030A (Vendor Package), 100 mm	Manual Operation. Normally Open	Supplier: Veolia Water Technologies Canada
73	Pressure Indication (PI-02-520	ASHCROFT 25-1009-SW-L-02-L-160# +02-310SS-02T-CG	Range 0- 1103 kPa	Supplier: Veolia Water Technologies Canada
74	Ball Valve (BV-02-523)	KingTron S-212T, (Vendor Package), 13 mm	Manual Operation. Normally Closed	Supplier: Veolia Water Technologies Canada
75	Ball Valve (BV-02-527)	KingTron S-212T, (Vendor Package), 13 mm	Manual Operation. Normally Open	Supplier: Veolia Water Technologies Canada
76	Motorized Butterfly Valve (BFV-02-511)	Bray Series 31 (Vendor Package), 100 mm	ON/OFF Operation. Controlled by DAF Control System	Supplier: Veolia Water Technologies Canada
77	White Water Strainer 1 (STR-02-510)	IFC B150FSS4BW1-OB (Vendor Package), 100 mm inlet/outlet connections	Manual Operation	Supplier: Veolia Water Technologies Canada
78	Pressure Release Valve (PRV-02-527)	Part of the White Water Strainer (Vendor Package)		Supplier: Veolia Water Technologies Canada
79	Motorized Ball Valve (BV-02-512)	Flow-tek 7108-3R-R-L (Vendor Package), 50 mm	ON/OFF Operation.	Supplier: Veolia Water

No.	Component	Details	Settings	Remarks
			Controlled by DAF Control System	Technologies Canada
80	Butterfly Valve (BFV-02-513)	Bray Series 31 (Vendor Package), 100 mm	Manual Operation. Normally Open	Supplier: Veolia Water Technologies Canada
81	Pressure Indicator (PI-02-510)	ASHCROFT 25-1009-SW-L-02-L-160# +02-310SS-02T-CG	Range 0- 1103 kPa	Supplier: Veolia Water Technologies Canada
82	Ball Valve (BV-02-510)	KingTron S-212T, (Vendor Package), 13 mm	Manual Operation. Normally Closed	Supplier: Veolia Water Technologies Canada
83	Ball Valve (BV-02-511)	KingTron S-212T, (Vendor Package), 13 mm	Manual Operation. Normally Open	Supplier: Veolia Water Technologies Canada
84	Globe Valve (GLV-02-510)	KITZ AKUJM2 Globe 200 WOG, 50 mm	Manual Operation. Normally Closed	Supplier: Veolia Water Technologies Canada
85	Motorized Butterfly Valve (BFV-02-521)	Bray Series 31 (Vendor Package), 100 mm	ON/OFF Operation. Controlled by DAF Control System	Supplier: Veolia Water Technologies Canada
86	White Water Strainer (STR-02-520)	IFC B150FSS4BW1-OB (Vendor Package), 100 mm inlet/outlet connections	Manual Operation	Supplier: Veolia Water Technologies Canada
87	Pressure Release Valve (PRV-02-528)	Part of the White Water Strainer (Vendor Package)		Supplier: Veolia Water Technologies Canada
88	Motorized Ball Valve (BV-02-522)	Flow-tek 7108-3R-R-L (Vendor Package), 50 mm	ON/OFF Operation. Controlled by DAF Control System	Supplier: Veolia Water Technologies Canada
89	Butterfly Valve (BFV-02-523)	Bray Series 31 (Vendor Package), 100 mm	Manual Operation. Normally Open	Supplier: Veolia Water Technologies Canada
90	Pressure Indicator (PI-02-525)	ASHCROFT 25-1009-SW-L-02-L-160# +02-310SS-02T-CG	Range 0- 1103 kPa	Supplier: Veolia Water

No.	Component	Details	Settings	Remarks
				Technologies Canada
91	Ball Valve (BV-02-520)	KingTron S-212T, (Vendor Package), 13 mm	Manual Operation. Normally Closed	Supplier: Veolia Water Technologies Canada
92	Ball Valve (BV-02-521)	KingTron S-212T, (Vendor Package), 13 mm	Manual Operation. Normally Open	Supplier: Veolia Water Technologies Canada
93	Globe Valve (GLV-02-520)	KITZ AKUJM2 Globe 200 WOG, 50 mm	Manual Operation. Normally Closed	Supplier: Veolia Water Technologies Canada
94	Ball Valve (BV-02-525)	KingTron S-212T, (Vendor Package), 13 mm	Manual Operation. Normally Open	Supplier: Veolia Water Technologies Canada
95	Ball Valve (BV-02-526)	KingTron S-212T, (Vendor Package), 13 mm	Manual Operation. Normally Closed	Supplier: Veolia Water Technologies Canada
96	Pressure Transmitter (PT-02-527)	Endress & Hauser PMP51-CA21JD1PGDRKJA1+AAZ1 (Vendor Package)	Range: 1MPA	Supplier: Veolia Water Technologies Canada

5.5.4 Dissolved Air Flotation (DAF) Clarification #2

(Refer to Drawing P-613 and P-614 in Appendix A)

The following table identifies the components related to Dissolved Air Flotation Clarification system #2.

No.	Component	Details	Settings	Remarks
1	Motorized Valve (BFV-02-332, FV-332)	Keystone, Series GR Resilient Seated Butterfly Valve, 350 mm	ON/OFF Operation. Controlled by Plant Control System. Normally Open when DAF Train 1 Operating	Supplier: Controle Laurentides
2	Globe Valve (GLV-02-333)	AKUJM07, Globe 200 WOG Stainless Steel, 19 mm	Air Purge Valve.	Supplier: Veolia Water

No.	Component	Details	Settings	Remarks
			Manual Operation.	Technologies Canada
3	Motorized Butterfly Valve (BFV-02-645, FV-645)	Bray Series 31 (Vendor Package), 80 mm	ON/OFF Operation, Controlled by DAF Control System	Supplier: Veolia Water Technologies Canada
4	DAF Tank (T-02-320)	Veolia Spidflow SFP-650 (Vendor Package)	60.4 L/s Capacity	Supplier: Veolia Water Technologies Canada
5	DAF Sludge Scraper (DDR-02-321)	Veolia Chain Surface Surface Scraper System 5000218036-SA301-22, with 90 Series SK9033.1 Right Angle Helical-Bevel NORD drive and 0.18 kW NORD High Performance Motor, (Vendor Package)	Scrapper mechanism set for the DAF tank dimension by Veolia	Supplier: Veolia Water Technologies Canada
6	Level Transmitter (LIT-02-341)	Endress &Hauser PMP51-CA21JD1FGDR1JA1+AAZ1 (Vendor Package)	Measurement Range: 40 kPa. Overpressure: 600 kPa.	Supplier: Veolia Water Technologies Canada
7	Level Switch (LSH-02-342)	Xylem ENM-10 (Vendor Package)		Supplier: Veolia Water Technologies Canada
8	Level Switch (LSL-02-343)	Xylem ENM-10 (Vendor Package)		Supplier: Veolia Water Technologies Canada
9	TSS Analyzer (AIT-02-344)	Hach Solitax LXV328.99.10002 (Vendor Package)	Measuring Range TSS: 0.001 – 500 G/L. Measuring Range Turbidity : 0.001 – 4000 FNU	Supplier: Veolia Water Technologies Canada
10	Butterfly Valve (BFV-02-365)	Bray Series 31 (Vendor Package), 50 mm	Manual Operation. Normally Closed	Supplier: Veolia Water Technologies Canada
11	Butterfly Valve (BFV-02-366)	Bray Series 31 (Vendor Package), 50 mm	Manual Operation. Normally Closed	Supplier: Veolia Water Technologies Canada
12	Butterfly Valve (BFV-02-370)	Bray Series 31 (Vendor Package), 50 mm	Manual Operation.	Supplier: Veolia Water

No.	Component	Details	Settings	Remarks
			Normally Closed	Technologies Canada
13	Butterfly Valve (BFV-02-371)	Bray Series 31 (Vendor Package), 50 mm	Manual Operation. Normally Closed	Supplier: Veolia Water Technologies Canada
14	Butterfly Valve (BFV-02-372)	Bray Series 31 (Vendor Package), 50 mm	Manual Operation. Normally Closed	Supplier: Veolia Water Technologies Canada
15	Plug Valve (PLV-02-371)	Pratt Plug Valve #611A-E1-L-2" (Vendor Package), 50 mm	Manual Operation. Normally Closed	Supplier: Veolia Water Technologies Canada
16	Plug Valve (PLV-02-372)	Vendor Package, 50 mm	Manual Operation. Normally Closed	Supplier: Veolia Water Technologies Canada
17	Plug Valve (PLV-02-373)	Vendor Package, 50 mm	Manual Operation. Normally Closed	Supplier: Veolia Water Technologies Canada
18	Plug Valve (PLV-02-374)	Vendor Package, 50 mm	Manual Operation. Normally Closed	Supplier: Veolia Water Technologies Canada
19	Plug Valve (PLV-02-375)	Vendor Package, 50 mm	Manual Operation. Normally Closed	Supplier: Veolia Water Technologies Canada
20	Pneumatic Actuated Butterfly Valve (BFV-02-329)	311200-11011390 Bray Series 31 (Vendor Package), 300 mm	Modulating Operation. Controlled by DAF Control System	Supplier: Veolia Water Technologies Canada
21	Pneumatic Actuated Butterfly Valve (BFV-02-330)	311200-11011390 Bray Series 31 (Vendor Package), 300 mm	Modulating Operation. Controlled by DAF Control System	Supplier: Veolia Water Technologies Canada
22	Plug valve (PLV-02-326)	ValMatic Cam-Centric Plug Valve, 100 mm	Manual Operation. Normally Open	Supplier: Controle Laurentides
23	Plug valve (PLV-02-327)	ValMatic Cam-Centric Plug Valve, 100 mm	Manual Operation. Normally Closed	Supplier: Controle Laurentides

No.	Component	Details	Settings	Remarks
24	Plug valve (PLV-02-328)	ValMatic Cam-Centric Plug Valve, 100 mm	Manual Operation. Normally Closed	Supplier: Controle Laurentides
25	Backpressure Valve (BPV-02-1100)	Chemline Plastics SB12 Series Backpressure/Relief Valve, 38 mm		Supplier: Veolia Water Technologies Canada
26	Butterfly Valve (BFV-02-237A)	Bray Series 31, 100 mm	Manual Operation. Normally open	Supplier: DM Valves
27	Flow meter (FE-02-327)	Endress & Hauser Electromagnetic Flowmeter Promag 400 5W4C80-C6ALHP2DUA1K0A+AAL4Z1(Vendor Package), 80 mm	Flow Range: 1.5 – 50 L/s	Supplier: Veolia Water Technologies Canada
28	Butterfly Valve (BFV-02-450)	Bray Series 31 (Vendor Package), 80 mm	Manual Operation. Normally Open	Supplier: Veolia Water Technologies Canada
29	Globe Valve (GLV-02-451)	Sharpe #SV45114030 (Vendor Package), 80 mm	Manual Operation. Normally Open	Supplier: Veolia Water Technologies Canada
30	Ball Valve (BV-02-460)	KingTron S-212T, (Vendor Package), 13 mm	Manual Operation. Normally Open	Supplier: Veolia Water Technologies Canada
31	Needle Valve (NV-02-461)	Built-in with AALBORG Flow indicator (Vendor Package),	Manual Operation. Normally Open	Supplier: Veolia Water Technologies Canada
32	Flow indicator (FI-02-462)	AALBORG V Medium Range PTFE Flow indicator (Vendor package), 10 mm	Manual Operation. Normally Open	Supplier: Veolia Water Technologies Canada
33	Ball Valve (BV-02-452)	KingTron S-212T, (Vendor Package), 13 mm	Manual Operation. Normally Open	Supplier: Veolia Water Technologies Canada
34	Ball Valve (BV-02-453)	KingTron S-212T, (Vendor Package), 13 mm	Manual Operation. Normally Closed	Supplier: Veolia Water Technologies Canada
35	Pressure Indicator (PI-02-454)	Ashcroft 25-1009SW-L-02L-30IMV&60 #with 02-310SS-02T-XCK (Vendor Package), 6 mm	Vacuum 4136 kPa	Supplier: Veolia Water Technologies Canada

No.	Component	Details	Settings	Remarks
36	Check Valve (CV-02-463)	FCC90B05, ½ FCC 90B 200 WOG, (Vendor Package) 13 mm		Supplier: Veolia Water Technologies Canada
37	DAF 2 White Water Pump 1 (P-02-440)	EDUR White Water Pump LBUX 602C 160 L (Vendor Package)	5.5 L/s @ 76 m TDH	Supplier: Veolia Water Technologies Canada
38	Ball Valve (BV-02-457)	KingTron S-212T, (Vendor Package), 13 mm	Manual Operation. Normally Open	Supplier: Veolia Water Technologies Canada
39	Ball Valve (BV-02-458)	KingTron S-212T, (Vendor Package), 13 mm	Manual Operation. Normally Closed	Supplier: Veolia Water Technologies Canada
40	Pressure Indicator (PI-02-459)	Ashcroft 25-1009SW-L-02L-160# +02-310SS-02T-CG (Vendor Package), 6 mm	Range 0- 1103 kPa	Supplier: Veolia Water Technologies Canada
41	Check Valve (CV-02-455)	Bray Rite Check Valve V0415XE2205 (Vendor Package), 100 mm		Supplier: Veolia Water Technologies Canada
42	Butterfly Valve (BFV-02-456)	Bray Series 31 310400-1101030A (Vendor Package), 100 mm	Manual Operation. Normally Open	Supplier: Veolia Water Technologies Canada
43	Butterfly Valve (BFV-02-465)	Bray Series 31 (Vendor Package), 80 mm	Manual Operation. Normally Open	Supplier: Veolia Water Technologies Canada
44	Globe Valve (GLV-02-466)	Sharpe #SV45114030 (Vendor Package), 80 mm	Manual Operation. Normally Open	Supplier: Veolia Water Technologies Canada
45	Ball Valve (BV-02-475)	KingTron S-212T, (Vendor Package), 13 mm	Manual Operation. Normally Open	Supplier: Veolia Water Technologies Canada
46	Needle Valve (NV-02-476)	Built-in with AALBORG Flow indicator (Vendor Package),	Manual Operation. Normally Open	Supplier: Veolia Water Technologies Canada
47	Flow indicator (FI-02-477)	AALBORG V Medium Range PTFE Flow indicator (Vendor package), 10 mm	Manual Operation. Normally Open	Supplier: Veolia Water Technologies Canada

No.	Component	Details	Settings	Remarks
48	Ball Valve (BV-02-467)	KingTron S-212T, (Vendor Package), 13 mm	Manual Operation. Normally Open	Supplier: Veolia Water Technologies Canada
49	Ball Valve (BV-02-468)	KingTron S-212T, (Vendor Package), 13 mm	Manual Operation. Normally Closed	Supplier: Veolia Water Technologies Canada
50	Pressure Indicator (PI-02-469)	Ashcroft 25-1009SW-L-02L-30IMV&60 #with 02-310SS-02T-XCK (Vendor Package), 6 mm	Vacuum 4136 kPa	Supplier: Veolia Water Technologies Canada
51	Check Valve (CV-02-478)	FCC90B05, ½ FCC 90B 200 WOG, (Vendor Package) 13 mm		Supplier: Veolia Water Technologies Canada
52	DAF White Water Pump 2 (P-02-450)	EDUR White Water Pump LBUX 602C 160 L (Vendor Package)	5.5 L/s @ 76 m TDH	Supplier: Veolia Water Technologies Canada
53	Ball Valve (BV-02-472)	KingTron S-212T, (Vendor Package), 13 mm	Manual Operation. Normally Open	Supplier: Veolia Water Technologies Canada
54	Ball Valve (BV-02-473)	KingTron S-212T, (Vendor Package), 13 mm	Manual Operation. Normally Closed	Supplier: Veolia Water Technologies Canada
55	Pressure Indicator (PI-02-474)	Ashcroft 25-1009SW-L-02L-160# +02-310SS-02T-CG (Vendor Package), 6 mm	Range 0- 1103 kPa	Supplier: Veolia Water Technologies Canada
56	Check Valve (CV-02-470)	Bray Rite Check Valve V0415XE2205 (Vendor Package), 100 mm		Supplier: Veolia Water Technologies Canada
57	Butterfly Valve (BFV-02-471)	Bray Series 31 310400-1101030A (Vendor Package), 100 mm	Manual Operation. Normally Open	Supplier: Veolia Water Technologies Canada
58	Butterfly Valve (BFV-02-480)	Bray Series 31 (Vendor Package), 80 mm	Manual Operation. Normally Open	Supplier: Veolia Water Technologies Canada
59	Globe Valve (GLV-02-481)	Sharpe #SV45114030 (Vendor Package), 80 mm	Manual Operation. Normally Open	Supplier: Veolia Water Technologies Canada

No.	Component	Details	Settings	Remarks
60	Ball Valve (BV-02-490)	KingTron S-212T, (Vendor Package), 13 mm	Manual Operation. Normally Open	Supplier: Veolia Water Technologies Canada
61	Needle Valve (NV-02-491)	Built-in with AALBORG Flow indicator (Vendor Package),	Manual Operation. Normally Open	Supplier: Veolia Water Technologies Canada
62	Flow Indicator (FI-02-492)	AALBORG V Medium Range PTFE Flow indicator (Vendor package), 10 mm	Manual Operation. Normally Open	Supplier: Veolia Water Technologies Canada
63	Ball Valve (BV-02-482)	KingTron S-212T, (Vendor Package), 13 mm	Manual Operation. Normally Open	Supplier: Veolia Water Technologies Canada
64	Ball Valve (BV-02-483)	KingTron S-212T, (Vendor Package), 13 mm	Manual Operation. Normally Closed	Supplier: Veolia Water Technologies Canada
65	Pressure Indicator (PI-02-484)	Ashcroft 25-1009SW-L-02L-30IMV&60 #with 02-310SS-02T-XCK (Vendor Package), 6 mm	Vacuum 4136 kPa	Supplier: Veolia Water Technologies Canada
66	Check Valve (CV-02-493)	FCC90B05, ½ FCC 90B 200 WOG, (Vendor Package) 13 mm		Supplier: Veolia Water Technologies Canada
67	DAF White Water Pump (P-02-460)	EDUR White Water Pump LBUX 602C 160 L (Vendor Package)	5.5 L/s @ 76 m TDH	Supplier: Veolia Water Technologies Canada
68	Ball Valve (BV-02-487)	KingTron S-212T, (Vendor Package), 13 mm	Manual Operation. Normally Open	Supplier: Veolia Water Technologies Canada
69	Ball Valve (BV-02-488)	KingTron S-212T, (Vendor Package), 13 mm	Manual Operation. Normally Closed	Supplier: Veolia Water Technologies Canada
70	Pressure Indicator (PI-02-489)	Ashcroft 25-1009SW-L-02L-160# +02-310SS-02T-CG (Vendor Package), 6 mm	Range 0- 1103 kPa	Supplier: Veolia Water Technologies Canada
71	Check Valve (CV-02-485)	Bray Rite Check Valve V0415XE2205 (Vendor Package), 100 mm		Supplier: Veolia Water Technologies Canada

No.	Component	Details	Settings	Remarks
72	Butterfly Valve (BFV-02-486)	Bray Series 31 310400-1101030A (Vendor Package), 100 mm	Manual Operation. Normally Open	Supplier: Veolia Water Technologies Canada
73	Pressure Indication (PI-02-540)	ASHCROFT 25-1009-SW-L-02-L-160# +02-310SS-02T-CG	Range 0- 1103 kPa	Supplier: Veolia Water Technologies Canada
74	Ball Valve (BV-02-543)	KingTron S-212T, (Vendor Package), 13 mm	Manual Operation. Normally Closed	Supplier: Veolia Water Technologies Canada
75	Ball Valve (BV-02-547)	KingTron S-212T, (Vendor Package), 13 mm	Manual Operation. Normally Open	Supplier: Veolia Water Technologies Canada
76	Motorized Butterfly Valve (BFV-02-531)	Bray Series 31 (Vendor Package), 100 mm	ON/OFF Operation. Controlled by DAF Control System	Supplier: Veolia Water Technologies Canada
77	White Water Strainer 1 (STR-02-530)	IFC B150FSS4BW1-OB (Vendor Package), 100 mm inlet/outlet connections	Manual Operation	Supplier: Veolia Water Technologies Canada
78	Pressure Release Valve (PRV-02-547)	Part of the White Water Strainer (Vendor Package)		Supplier: Veolia Water Technologies Canada
79	Motorized Ball Valve (BV-02-532)	Flow-tek 7108-3R-R-L (Vendor Package), 50 mm	ON/OFF Operation. Controlled by DAF Control System	Supplier: Veolia Water Technologies Canada
80	Butterfly Valve (BFV-02-533)	Bray Series 31 (Vendor Package), 100 mm	Manual Operation. Normally Open	Supplier: Veolia Water Technologies Canada
81	Pressure Indicator (PI-02-530)	ASHCROFT 25-1009-SW-L-02-L-160# +02-310SS-02T-CG	Range 0- 1103 kPa	Supplier: Veolia Water Technologies Canada
82	Ball Valve (BV-02-530)	KingTron S-212T, (Vendor Package), 13 mm	Manual Operation. Normally Closed	Supplier: Veolia Water Technologies Canada
83	Ball Valve (BV-02-531)	KingTron S-212T, (Vendor Package), 13 mm	Manual Operation.	Supplier: Veolia Water

No.	Component	Details	Settings	Remarks
			Normally Open	Technologies Canada
84	Globe Valve (GLV-02-530)	KITZ AKUJM2 Globe 200 WOG, 50 mm	Manual Operation. Normally Closed	Supplier: Veolia Water Technologies Canada
85	Motorized Butterfly Valve (BFV-02-541)	Bray Series 31 (Vendor Package), 100 mm	ON/OFF Operation. Controlled by DAF Control System	Supplier: Veolia Water Technologies Canada
86	White Water Strainer (STR-02-540)	IFC B150FSS4BW1-OB (Vendor Package), 100 mm inlet/outlet connections	Manual Operation	Supplier: Veolia Water Technologies Canada
87	Pressure Release Valve (PRV-02-548)	Part of the White Water Strainer (Vendor Package)		Supplier: Veolia Water Technologies Canada
88	Motorized Ball Valve (BV-02-542)	Flow-tek 7108-3R-R-L (Vendor Package), 50 mm	ON/OFF Operation. Controlled by DAF Control System	Supplier: Veolia Water Technologies Canada
89	Butterfly Valve (BFV-02-543)	Bray Series 31 (Vendor Package), 100 mm	Manual Operation. Normally Open	Supplier: Veolia Water Technologies Canada
90	Pressure Indicator (PI-02-540)	ASHCROFT 25-1009-SW-L-02-L-160# +02-310SS-02T-CG	Range 0- 1103 kPa	Supplier: Veolia Water Technologies Canada
91	Ball Valve (BV-02-540)	KingTron S-212T, (Vendor Package), 13 mm	Manual Operation. Normally Closed	Supplier: Veolia Water Technologies Canada
92	Ball Valve (BV-02-541)	KingTron S-212T, (Vendor Package), 13 mm	Manual Operation. Normally Open	Supplier: Veolia Water Technologies Canada
93	Globe Valve (GLV-02-540)	KITZ AKUJM2 Globe 200 WOG, 50 mm	Manual Operation. Normally Closed	Supplier: Veolia Water Technologies Canada
94	Ball Valve (BV-02-545)	KingTron S-212T, (Vendor Package), 13 mm	Manual Operation. Normally Open	Supplier: Veolia Water Technologies Canada

No.	Component	Details	Settings	Remarks
95	Ball Valve (BV-02-546)	KingTron S-212T, (Vendor Package), 13 mm	Manual Operation. Normally Closed	Supplier: Veolia Water Technologies Canada
96	Pressure Transmitter (PT-02-547)	Endress & Hauser PMP51-CA21JD1PGDRKJA1+AAZ1 (Vendor Package)	Range: 1MPA	Supplier: Veolia Water Technologies Canada
97	Flow meter (FE-02-328)	Endress & Hauser, 5W4C3F-4497/0, 350 mm	Signal to Plant Control System	Supplier: Endress & Hauser

5.5.5 Dissolved Air Flotation (DAF) Polymer Makeup System

(Refer to Drawing P-615 and P-616 in Appendix A)

The following table identifies the components related to Dissolved Air Flotation Polymer Feed system.

No.	Component	Details	Settings	Remarks
1	DAF Polymer Vacuum Conveyor (VAC-04-710)	Tiger-Vac EC-12(G) HEP A Electrically Operated Vacuum Cleaner, Silencer #212440 (Vendor Package)	Automatic Operation. Controlled by DAF Polymer Makeup System	Supplier: Veolia Water Technologies Canada
2	Level Sensor Low LSL-04-710)	Endress & Hauser FTE31-C6DB11 Soliswitch FTE31	Operating Pressure Range: 50 – 150 kPa	Supplier: Veolia Water Technologies Canada
3	DAF Feeder Hopper Polymer Agitator (PAG-04-720)	WAM MBF/073.A/TT/UD4.SST.UO2/F.0.Q (Vendor Package)	Feeding Rate: 2.3 L/min	Supplier: Veolia Water Technologies Canada
4	DAF Polymer Screw Feeder (PSF-04-730)	WAM MBF/073.A/TT/UD4.SST.UO2/F.0.Q (Vendor Package)	Automatic Operation. Controlled by DAF Polymer Makeup System	Supplier: Veolia Water Technologies Canada
5	Ball Valve (BV-04-710)	Chemline Type 21-A-010-E-C (Vendor Package), 25 mm	Manual Operation	Supplier: Veolia Water Technologies Canada

No.	Component	Details	Settings	Remarks
6	Pressure Switch (PSL-04-711)	Allen Bradley 836T-T253J (Vendor Package)	Adjustable Range: 83 – 1034 kPa	Supplier: Veolia Water Technologies Canada
7	Pressure Indicator (PI-04-712)	ASHCROFT 25-1009SWL-02L-160 PSIG (Vendor Package)	Measuring Range: 0 – 1104 kPa	Supplier: Veolia Water Technologies Canada
8	Solenoid Valve (SV-04-713)	Tekno Valve ASCO 8345G001-120VAC (Vendor Package), 6 mm	Controlled by DAF Polymer Makeup System	Supplier: Veolia Water Technologies Canada
9	Solenoid Valve (SV-04-714)	Tekno Valve ASCO 8210G004-120VAC (Vendor Package), 25 mm	Controlled by DAF Polymer Makeup System	Supplier: Veolia Water Technologies Canada
10	Ball Check Valve (BV-04-716)	Chemline SM2-A-005-E-S (Vendor Package), 13 mm		Supplier: Veolia Water Technologies Canada
11	Ball Check Valve (BV-04-717)	Chemline SM2-A-005-E-S (Vendor Package), 13 mm		Supplier: Veolia Water Technologies Canada
12	Injector (IJ-04-715)	Schutte & Koerting 1.5 " (Vendor Package)		Supplier: Veolia Water Technologies Canada
13	Check Valve (CV-04-718)	Chemline BTA015EC (Vendor Package), 38 mm		Supplier: Veolia Water Technologies Canada
14	In-line Mixer (SM-04-719)	Koflo 1.5-40C-4-6-21-1.1/2" (Vendor Package), 38 mm	Static Mixer Manual Operation	Supplier: Veolia Water Technologies Canada
15	DAF Polymer Mixing Tank (T-04-740)	304L SS (Vendor Package)	Capacity: 250 L	Supplier: Veolia Water Technologies Canada
16	DAF Polymer Mixer (MXR-04-760)	Envirequip EVG01-0.3, 304L SS (Vendor Package)	180 RPM	Supplier: Veolia Water Technologies Canada
17	Polymer Analyzer (AIT-04-741)	Hach LXV404.99.00552 (Vendor Package)	Sensor Range: 200-2,000,000 uS/cm	Supplier: Veolia Water Technologies Canada

No.	Component	Details	Settings	Remarks
18	Level Transmitter (LIT-04-742)	Endress & Hausser PMC21-CA1V1ECVXJJ (Vendor Package)	Sensor Range: 25 KPa	Supplier: Veolia Water Technologies Canada
19	Electrically Operated Butterfly Valve (BFV-04-743)	Chemline 57A020AEL-A/ER20.12 (Vendor Package), 50 mm	Automatic Operation. Controlled by DAF Polymer Makeup System	Supplier: Veolia Water Technologies Canada
20	Ball Valve (BV-04-744)	Chemline Type 21-A-010-E-C (Vendor Package), 38 mm	Manually Operated	Supplier: Veolia Water Technologies Canada
21	DAF Polymer Aging Tank (T-04-750)	304L SS, (Vendor Package)	Capacity: 250 L	Supplier: Veolia Water Technologies Canada
22	Level Transmitter (LIT-04-746)	Endress & Hausser PMC21-CA1V1ECVXJJ (Vendor Package)	Sensor Range: 25 KPa	Supplier: Veolia Water Technologies Canada
23	Polymer Analyzer (AE-04-745)	Hach LXV404.99.00552 (Vendor Package)	Sensor Range: 200-2,000,000 uS/cm	Supplier: Veolia Water Technologies Canada
24	Ball Valve (BV-04-747)	Chemline Type 21-A-015-E-C (Vendor Package), 38 mm	Manually Operated	Supplier: Veolia Water Technologies Canada
25	Ball Valve (BV-04-750)	Chemline Type 21-A-015-E-C (Vendor Package), 38 mm	Manually Operated	Supplier: Veolia Water Technologies Canada
26	Ball Valve (BV-04-760)	Chemline Type 21-A-005-E-C (Vendor Package), 25 mm	Manual Operation. Normally Open.	Supplier: Veolia Water Technologies Canada
27	Ball Valve (BV-04-763)	Chemline Type 21-A-005-E-C (Vendor Package), 25 mm	Manual Operation. Normally Closed	Supplier: Veolia Water Technologies Canada
28	Calibration Chamber (CC-04-790)	Primary fluid PV-1000 (Vendor Package)	Capacity: 1L. 60 L/h	Supplier: Veolia Water Technologies Canada

No.	Component	Details	Settings	Remarks
29	Polymer Dosing Pump 1 (P-04-770)	Netszch NM015BY01L06B (Vendor Package)	150 - 250 LPH @ 586 kPag	Supplier: Veolia Water Technologies Canada
30	Temperature Element (TE-04-769)	As part of Polymer Dosing Pump (Vendor Package)	Controlled by Polymer Pump Control System	Supplier: Veolia Water Technologies Canada
31	Ball Valve (BV-04-785)	Chemline Type 21-A-005-E-C (Vendor Package), 13 mm	Manual Operation. Normally Open	Supplier: Veolia Water Technologies Canada
32	Pressure Switch (PSH-04-787)	As part of Polymer Dosing Pump (Vendor Package)		Supplier: Veolia Water Technologies Canada
33	Ball Valve (BV-04-766)	Chemline Type 21-A-005-E-C (Vendor Package), 13 mm	Manual Operation. Normally Closed	Supplier: Veolia Water Technologies Canada
34	Ball Valve (BV-04-775)	Chemline Type 21-A-005-E-C (Vendor Package), 13 mm	Manual Operation. Normally Open	Supplier: Veolia Water Technologies Canada
35	Pressure Release Valve (PRV-04-772)	Chemline SB12A005EU (Vendor Package), 13 mm		Supplier: Veolia Water Technologies Canada
36	Ball Valve (BV-04-761)	Chemline Type 21-A-005-E-C (Vendor Package), 25 mm	Manual Operation. Normally Open	Supplier: Veolia Water Technologies Canada
37	Ball Valve (BV-04-764)	Chemline Type 21-A-005-E-C (Vendor Package), 25 mm	Manual Operation. Normally Closed	Supplier: Veolia Water Technologies Canada
38	Polymer Dosing Pump (P-04-780)	Netszch NM015BY01L06B (Vendor Package)	150 - 250 LPH @ 586 kPag	Supplier: Veolia Water Technologies Canada
39	Temperature Element (TE-04-770)	As part of Polymer Dosing Pump (Vendor Package)	Controlled by Polymer Pump Control System	Supplier: Veolia Water Technologies Canada
40	Ball Valve (BV-04-791)	Chemline Type 21-A-005-E-C (Vendor Package), 13 mm	Manual Operation. Normally Open	Supplier: Veolia Water Technologies Canada

No.	Component	Details	Settings	Remarks
41	Pressure Switch (PSH-04-792)	As part of Polymer Dosing Pump (Vendor Package)		Supplier: Veolia Water Technologies Canada
42	Ball Valve (BV-04-767)	Chemline Type 21-A-005-E-C (Vendor Package), 25 mm	Manual Operation. Normally Closed	Supplier: Veolia Water Technologies Canada
43	Ball Valve (BV-04-776)	Chemline Type 21-A-005-E-C (Vendor Package), 13 mm	Manual Operation. Normally Open	Supplier: Veolia Water Technologies Canada
44	Pressure Release Valve (PRV-04-773)	Chemline SB12A005EU (Vendor Package), 13 mm		Supplier: Veolia Water Technologies Canada
45	Ball Valve (BV-04-762)	Chemline Type 21-A-005-E-C (Vendor Package), 25 mm	Manual Operation. Normally Closed	Supplier: Veolia Water Technologies Canada
46	Ball Valve (BV-04-765)	Chemline Type 21-A-005-E-C (Vendor Package), 25 mm	Manual Operation. Normally Closed	Supplier: Veolia Water Technologies Canada
47	Polymer Dosing Pump (P-04-790)	Netszch NM015BY01L06B (Vendor Package)	150 - 250 LPH @ 586 kPag	Supplier: Veolia Water Technologies Canada
48	Temperature Element (TE-04-771)	As part of Polymer Dosing Pump (Vendor Package)	Controlled by Polymer Pump Control System	Supplier: Veolia Water Technologies Canada
49	Ball Valve (BV-04-788)	Chemline Type 21-A-005-E-C (Vendor Package), 13 mm	Manual Operation. Normally Closed	Supplier: Veolia Water Technologies Canada
50	Pressure Switch (PSH-04-790)	As part of Polymer Dosing Pump (Vendor Package)		Supplier: Veolia Water Technologies Canada
51	Ball Valve (BV-04-768)	Chemline Type 21-A-005-E-C (Vendor Package), 25 mm	Manual Operation. Normally Closed	Supplier: Veolia Water Technologies Canada
52	Ball Valve (BV-04-777)	Chemline Type 21-A-005-E-C (Vendor Package), 13 mm	Manual Operation. Normally Closed	Supplier: Veolia Water Technologies Canada

No.	Component	Details	Settings	Remarks
53	Pressure Release Valve (PRV-04-774)	Chemline SB12A005EU (Vendor Package), 13 mm		Supplier: Veolia Water Technologies Canada
54	Ball Valve (BV-04-778)	Chemline Type 21-A-005-E-C (Vendor Package), 13 mm	Manual Operation. Normally Closed	Supplier: Veolia Water Technologies Canada
55	Ball Valve (BV-04-779)	Chemline Type 21-A-005-E-C (Vendor Package), 13 mm	Manual Operation. Normally Closed	Supplier: Veolia Water Technologies Canada
56	Backpressur e Valve (BPV-04-790)	Chemline SB12A010EU+SGA-005-002-P-G+P025-160-BM (Vendor Package)		Supplier: Veolia Water Technologies Canada
57	Backpressur e Valve (BPV-04-791)	Chemline SB12A010EU+SGA-005-002-P-G+P025-160-BM (Vendor Package)		Supplier: Veolia Water Technologies Canada
58	Pressure Regulating Valve (PRV-04-780)	Fisher MR95H-51, 25 mm		Supplier: Controles Laurentide
59	Ball Valve (BV-04-781)	Chemline Type 21-A-005-E-C (Vendor Package), 13 mm	Manual Operation. Normally Open	Supplier: Veolia Water Technologies Canada
60	Ball Valve (BV-04-782)	Chemline Type 21-A-005-E-C (Vendor Package), 13 mm	Manual Operation. Normally Open	Supplier: Veolia Water Technologies Canada
61	Solenoid Valve (SV-04-783)	Tekno Valve ASCO 8210G094 (Vendor Package), 13 mm	Controlled by Plant Control System. Normally Closed	Supplier: Veolia Water Technologies Canada
62	Solenoid Valve (SV-04-784)	Tekno Valve ASCO 8210G094 (Vendor Package), 13 mm	Controlled by Plant Control System. Normally Closed	Supplier: Veolia Water Technologies Canada
63	Flow Indicator (FI-04-785)	Chemline FCA00401 (Vendor Package), 13 mm	40 – 400 L/h. Manual Operation.	Supplier: Veolia Water Technologies Canada

No.	Component	Details	Settings	Remarks
64	Flow Indicator (FI-04-786)	Chemline FCA00401 (Vendor Package), 13 mm	40 – 400 L/h. Manual Operation.	Supplier: Veolia Water Technologies Canada
65	Needle Valve (NV-04-787)	Chemline SM2-A-005-E-S, ball type (Vendor Package), 13 mm	Manual Operation. Normally Open.	Supplier: Veolia Water Technologies Canada
66	Needle Valve (NV-04-788)	Chemline SM2-A-005-E-S, ball type (Vendor Package), 13 mm	Manual Operation. Normally Open.	Supplier: Veolia Water Technologies Canada
67	Flow Transmitter (FIT-04-798)	Endress & Hauser, Promag 50H15, DN 1/2"	Flow to Plant Control System	Supplier: Endress & Hauser
68	Flow Transmitter (FIT-04-799)	Endress & Hauser, Promag 50H15, DN 1/2"	Flow to Plant Control System	Supplier: Endress & Hauser

5.6 SLUDGE PROCESSING

5.6.1 TWAS Storage Tank

(Refer to Drawing P-617 in Appendix A)

The following table identifies the components related to Thickened Waste Activated Sludge (TWAS) Storage.

No.	Component	Details	Settings	Remarks
1	Ball Valve (BV-02-612)	ITT, Diaphragm Type DIA-Flo 1-2401-S-943-SP88CATB	Manual Operation. Normally Open	Supplier: ITT Conval Quebec MTL
2	Ball Valve (BV-02-613)	ITT, Diaphragm Type DIA-Flo 1-2401-S-943-SP88CATB	Manual Operation. Normally Closed	Supplier: ITT Conval Quebec MTL
3	Pressure Indicator (PI-02-615)	Ashcroft 251009 Series, 6 mm		Supplier: Ashfroft
4	TWAS Pump 1 (P-02-610)	Netszch NM031BY01L06B, 1 HP	Normal Capacity: 936 L/h. Max. Capacity: 1656 L/h	Supplier: Veolia Water Technologies Canada

No.	Component	Details	Settings	Remarks
5	Ball Valve (BV-02-616)	ITT, Diaphragm Type DIA-Flo 1-2401-S-943-SP88CATB	Manual Operation. Normally Closed	Supplier: ITT Conval Quebec MTL
6	Ball Valve (BV-02-617)	ITT, Diaphragm Type DIA-Flo 1-2401-S-943-SP88CATB	Manual Operation. Normally Open	Supplier: ITT Conval Quebec MTL
7	Pressure Indicator (PI-02-618)	Ashcroft 251009 Series, 6 mm	1600 kPa	Supplier: Ashcroft
8	Pressure Switch (PSH-619)	Ashcroft type 400		Supplier: Ashcroft
9	Check valve (CV-02-620)	Valmatic Swing Check Valve Series 7800LW, 40 mm		Supplier: Controles Laurentide
10	Plug valve (PLV-02-620A)	Valmatic Camcentric Plug Valve, 40 mm	Manual Operation. Normally Open	Supplier: Controles Laurentide
11	Plug valve (PLV-02-647)	Valmatic Camcentric Plug Valve, 100 mm	Manual Operation. Normally Closed	Supplier: Controles Laurentide
12	Ball Valve (BV-02-632)	ITT, Diaphragm Type DIA-Flo 1-2401-S-943-SP88CATB	Manual Operation. Normally Open	Supplier: ITT Conval Quebec MTL
13	Ball Valve (BV-02-633)	ITT, Diaphragm Type DIA-Flo 1-2401-S-943-SP88CATB	Manual Operation. Normally Closed	Supplier: ITT Conval Quebec MTL
14	Pressure Indicator (PI-02-635)	Ashcroft 251009 Series, 6 mm		Supplier: Ashcroft
15	TWAS Pump 2 (P-02-620)	Netszch NM031BY01L06B, 1 HP	Normal Capacity: 936 L/h. Max. Capacity: 1656 L/h	Supplier: Veolia Water Technologies Canada
16	Ball Valve (BV-02-636)	ITT, Diaphragm Type DIA-Flo 1-2401-S-943-SP88CATB	Manual Operation. Normally Closed	Supplier: ITT Conval Quebec MTL
17	Ball Valve (BV-02-637)	ITT, Diaphragm Type DIA-Flo 1-2401-S-943-SP88CATB	Manual Operation. Normally Open	Supplier: ITT Conval Quebec MTL

No.	Component	Details	Settings	Remarks
18	Pressure Indicator (PI-02-638)	Ashcroft 251009 Series, 6 mm	1600 kPa	Supplier: Ashcroft
19	Pressure Switch (PSH-02-639)	Ashcroft type 400		Supplier: Ashcroft
20	Check valve (CV-02-640)	Valmatic Swing Check Valve Series 7800LW, 40 mm		Supplier: Controles Laurentide
21	Plug valve (PLV-02-640A)	Valmatic Camcentric Plug Valve, 40 mm	Manual Operation. Normally Open	Supplier: Controles Laurentide
22	Plug valve (PLV-02-648)	Valmatic Camcentric Plug Valve, 100 mm	Manual Operation. Normally Closed	Supplier: Controles Laurentide
23	Plug Valve (PLV-02-621)	Valmatic Camcentric Plug Valve, 150 mm	Manual Operation. Normally Open	Supplier: Controles Laurentide
24	Plug Valve (PLV-02-641)	Valmatic Camcentric Plug Valve, 150 mm	Manual Operation. Normally Open	Supplier: Controles Laurentide
25	Plug Valve (PLV-02-645)	Valmatic Camcentric Plug Valve, 150 mm	Manual Operation. Normally Closed	Supplier: Controles Laurentide
26	Plug Valve (PLV-02-646)	Valmatic Camcentric Plug Valve, 150 mm	Manual Operation. Normally Closed	Supplier: Controles Laurentide
27	Plug Valve (PLV-02-643)	Valmatic Camcentric Plug Valve, 150 mm	Manual Operation. Normally Open if TWAS Tank T-03-630 Being Used	Supplier: Controles Laurentide
28	Plug Valve (PLV-02-644)	Valmatic Camcentric Plug Valve, 150 mm	Manual Operation. Normally Open if TWAS Tank T-03-640 Being Used	Supplier: Controles Laurentide
29	Aerated TWAS Storage Tank 1 (T-03-630)	Concrete Tank, with Xylem 9" Dual LP Aeration Diffuser System	Tank Volume: 109 m^3	Supplier: Existing Tank. Aeration Diffuser System: Xylem

No.	Component	Details	Settings	Remarks
30	Aerated TWAS Storage Tank 2 (T-03-640)	Concrete Tank, with Xylem 9" Dual LP Aeration Diffuser System	Tank Volume: 109 m^3	Supplier: Existing Tank. Aeration Diffuser System: Xylem
31	Level Element (LE-03-111)	Endress & Hauser Prosonic FDU91		Supplier: Endress & Hauser
32	Level Switch (LSHH-112)	Endress & Hauser Liquiphant M FTL51	Measuring Range: 10 m	Supplier: Endress & Hauser
33	Level Switch (LSHH-113)	Endress & Hauser Liquiphant M FTL51		Supplier: Endress & Hauser
34	Level Element (LE-03-121)	Endress & Hauser Prosonic FDU91	Measuring Range: 10 m	Supplier: Endress & Hauser
35	Level Switch (LSHH-122)	Endress & Hauser Liquiphant M FTL51		Supplier: Endress & Hauser
36	Level Switch (LSHH-123)	Endress & Hauser Liquiphant M FTL51		Supplier: Endress & Hauser
37	Plug Valve (PLV-02-675)	Valmatic Camcentric Plug Valve, 150 mm	Manual Operation. Normally Closed	Supplier: Controles Laurentide
38	Plug Valve (PLV-02-676)	Valmatic Camcentric Plug Valve, 150 mm	Manual Operation. Normally Closed	Supplier: Controles Laurentide
39	Plug Valve (PLV-03-650)	Valmatic Camcentric Plug Valve, 150 mm	Manual Operation. Normally Open	Supplier: Controle Laurentides
40	Plug Valve (PLV-03-651)	Valmatic Camcentric Plug Valve, 150 mm	Manual Operation. Normally Open	Supplier: Controles Laurentide
41	Butterfly Valve (BFV-02-175)	Keystone K-LOK Series 36, 100 mm	Manual Operation. Normally Open	Supplier: Controles Laurentide
42	Butterfly Valve (BFV-02-176)	Keystone K-LOK Series 36, 100 mm	Manual Operation. Normally Open	Supplier: Controles Laurentide
43	Blast Gate (BG-02-652)	Nordfab, SS 3240	Manual Operation. Normally Open	Supplier: Capt-Air
44	Blast Gate (BG-02-653)	Nordfab, SS 3240	Manual Operation. Normally Open	Supplier: Capt-Air

5.6.2 Belt Filter Press Dewatering

(Refer to Drawing P-618 in Appendix A)

The following table identifies the components related to Belt Filter Press Sludge Dewatering System.

No.	Component	Details	Settings	Remarks
1	Plug Valve (PLV-03-660)	Valmatic Camcentric Plug Valve, 150 mm	Manual Operation. Normally Open	Supplier: Controle Laurentides
2	Plug Valve (PLV-03-661)	Valmatic Camcentric Plug Valve, 100 mm	Manual Operation. Normally Open	Supplier: Controle Laurentides
3	Ball Valve (BV-03-662)	ITT, Diaphragm Type DIA-Flo 1-2401-S-943-SP88CATB	Manual Operation. Normally Open	Supplier: ITT Conval Quebec MTL
4	Ball Valve (BV-03-663)	ITT, Diaphragm Type DIA-Flo 1-2401-S-943-SP88CATB	Manual Operation. Normally Closed	Supplier: ITT Conval Quebec MTL
5	Pressure Indicator (PI-03-644)	Ashcroft 251009 Series, 6 mm		Supplier: Ashcroft
6	Belt Filter Press Feed Pump (P-03-630)	Netszch NM045BY01L07V	Normal Flow: 7.2 L/h Max. Flow: 10.8 L/h	Supplier: Veolia Water Technologies
7	Ball Valve (BV-03-666)	ITT, Diaphragm Type DIA-Flo 1-2401-S-943-SP88CATB	Manual Operation. Normally Open	Supplier: ITT Conval Quebec MTL
8	Ball Valve (BV-03-667)	ITT, Diaphragm Type DIA-Flo 1-2401-S-943-SP88CATB	Manual Operation. Normally Closed	Supplier: ITT Conval Quebec MTL
9	Pressure Indicator (PI-03-668)	Ashcroft 251009 Series, 6 mm	1600 kPa	Supplier: Ashcroft
10	Pressure Switch (PSH-669)	Ashcroft type 400		Supplier: Ashcroft
11	Check Valve (CV-03-670)	Valmatic Swing Check Valve Series 7800LW, 80 mm		Supplier: Controles Laurentide
12	Plug Valve (PLV-03-672)	Valmatic Camcentric Plug Valve, 80 mm	Manual Operation. Normally Open	Supplier: Controles Laurentide

No.	Component	Details	Settings	Remarks
13	Plug Valve (PLV-03-681)	Valmatic Camcentric Plug Valve, 100 mm	Manual Operation. Normally Open	Supplier: Controles Laurentide
14	Ball Valve (BV-03-682)	ITT, Diaphragm Type DIA-Flo 1-2401-S-943-SP88CATB	Manual Operation. Normally Open	Supplier: ITT Conval Quebec MTL
15	Ball Valve (BV-03-683)	ITT, Diaphragm Type DIA-Flo 1-2401-S-943-SP88CATB	Manual Operation. Normally Closed	Supplier: ITT Conval Quebec MTL
16	Pressure Indicator (PI-03-684)	Ashcroft 251009 Series, 6 mm		Supplier: Ashcroft
17	Belt Filter Press Feed Pump (P-03-640)	Netszch NM045BY01L07V	Normal Flow: 7.2 L/h Max. Flow: 10.8 L/h	Supplier: Veolia Water Technologies
18	Ball Valve (BV-03-686)	ITT, Diaphragm Type DIA-Flo 1-2401-S-943-SP88CATB	Manual Operation. Normally Open	Supplier: ITT Conval Quebec MTL
19	Ball Valve (BV-03-683)	ITT, Diaphragm Type DIA-Flo 1-2401-S-943-SP88CATB	Manual Operation. Normally Closed	Supplier: ITT Conval Quebec MTL
20	Pressure Indicator (PI-03-688)	Ashcroft 251009 Series, 6 mm	1600 kPa	Supplier: Ashcroft
21	Pressure Switch (PSH-689)	Ashcroft type 400		Supplier: Ashcroft
22	Check Valve (CV-03-690)	Valmatic Swing Check Valve Series 7800LW, 80 mm		Supplier: Controles Laurentide
23	Plug Valve (PLV-03-692)	Valmatic Camcentric Plug Valve, 80 mm	Manual Operation. Normally Open	Supplier: Controles Laurentide
24	Flow Meter (FE-695, FM-03-695)	Endress & Hauser, 5W4C80-9F267/0, 80 mm	Signal to Plant Control System	Supplier: Endress & Hauser
25	Plug Valve (PLV-03-693)	Valmatic Camcentric Plug Valve, 80 mm	Manual Operation. Normally Open	Supplier: Controles Laurentide
26	Plug Valve (PLV-03-696)	Valmatic Camcentric Plug Valve, 80 mm	Manual Operation. Normally Open	Supplier: Controles Laurentide

No.	Component	Details	Settings	Remarks
27	Mixer (MXR-03-698)	As part of Phoenix LC-1200LS (Vendor Package)	Manually Operated	Supplier: Phoenix Process Equipment Co.
28	Belt Filter Press (BFP-03-650)	Phoenix LC-1200LS (Vendor Package)		Supplier: Phoenix Process Equipment Co.
29	Ball valve (BV-03-699)	Phoenix LC-1200LS (Vendor Package)	Operation through Local Control Panel	Supplier: Phoenix Process Equipment Co.
30	Booster Pump (P-03-670)	Grundfos CR 10-5-A-GJ-A-E-HQQE, 5HP (Vendor Package)	3.5 L/s @ 206 kPa	Supplier: Phoenix Process Equipment Co.
31	Pressure Indicating Transmitter (PIT-606)	Part of Phoenix LC-1200LS (Vendor Package)		Supplier: Phoenix Process Equipment Co.
32	Ball Valve (BV-03-603)	Jenkins 600 CWP, 50 mm	Manually Operated. Normally Open when Belt Filter Press Operating	Supplier: Jenkins
33	Check Valve (CV-03-601)	Chemline BTA015EC (Vendor Package), 13 mm		Supplier: Chemline
34	Ball Valve (BV-03-602)	Chemline Type 21-A-005-E-C (Vendor Package), 13 mm	Manual Operation. Normally Open	Supplier: Chemline
35	Ball Valve (BV-03-1500)	Part of Phoenix LC-1200LS (Vendor Package)	Manually Operated. Normally Open when Belt Filter Press Operating	Supplier: Phoenix Process Equipment Co.
36	Compressor (C-03-651)	Jenny Industrial Stationary, K2A-30UMV-575/3 (Vendor Package)	Controlled by Belt Filter Press Control System	Supplier: Phoenix Process Equipment Co.

5.6.3 Belt Filter Press Polymer Makeup System

(Refer to Drawing P-619 and P-620 in Appendix A)

The following table identifies the components related to Belt Filter Press Polymer Feed System.

No.	Component	Details	Settings	Remarks
1	BFP Polymer Vacuum Conveyor (VAC-04-910)	WAM Vacuum Conveyor HP-500 (Vendor Package)	Automatic Operation. Controlled by BFP Makeup Polymer Control System	Supplier: Veolia Water Technologies Canada
2	Level Sensor Low (LSL-04-910)	Endress & Hauser FTE31-C6DB11 Soliswitch FTE31	Operating Pressure Range: 50 – 150 kPa	Supplier: Veolia Water Technologies Canada
3	BFP Feeder Hopper Polymer Agitator (PAG-04-920)	WAM MBF/073.A/TT/UD4.SST.UO2/F.0.Q (Vendor Package)	Feeding Rate: 2.3 L/min	Supplier: Veolia Water Technologies Canada
4	BFP Polymer Screw Feeder (PSF-04-930)	WAM MBF/073.A/TT/UD4.SST.UO2/F.0.Q (Vendor Package)	Automatic Operation. Controlled by DAF Polymer Makeup System	Supplier: Veolia Water Technologies Canada
5	Ball Valve (BV-04-910)	Chemline Type 21-A-010-E-C (Vendor Package), 25 mm	Manual Operation	Supplier: Veolia Water Technologies Canada
6	Pressure Switch (PSL-04-911)	Allen Bradley 836T-T253J (Vendor Package)	Adjustable Range: 83 – 1034 kPa	Supplier: Veolia Water Technologies Canada
7	Pressure Indicator (PSL-04-912)	Vendor Package	Measuring Range: 0 – 1104 kPa	Supplier: Veolia Water Technologies Canada
8	Solenoid Valve (SV-04-913)	Tekno Valve ASCO 8345G001-120VAC (Vendor Package), 6 mm	Controlled by BFP Polymer Makeup System	Supplier: Veolia Water Technologies Canada
9	Solenoid Valve (SV-04-914)	Tekno Valve ASCO 8210G004-120VAC (Vendor Package), 25 mm	Controlled by BFP Polymer Makeup System	Supplier: Veolia Water Technologies Canada
10	Ball Check Valve (BV-04-916)	Chemline SM2-A-005-E-S (Vendor Package), 13 mm		Supplier: Veolia Water Technologies Canada

No.	Component	Details	Settings	Remarks
11	Ball Check Valve (BV-04-917)	Chemline SM2-A-005-E-S (Vendor Package), 13 mm		Supplier: Veolia Water Technologies Canada
12	Injector (IJ-04-915)	Schutte & Koerting PVC Eductor (Vendor Package), 38 mm		Supplier: Veolia Water Technologies Canada
13	Check Valve (CV-04-918)	Chemline BTA015EC (Vendor Package), 38 mm		Supplier: Veolia Water Technologies Canada
14	In-line Mixer (SM-04-919)	Koflo 1.5-40C-4-6-21-1/2" (Vendor Package), 50 mm	Static Mixer Manual Operation	Supplier: Veolia Water Technologies Canada
15	BFP Polymer Mixer (MXR-04-960)	Envirequip EVG01-0.5 304L SS (Vendor Package), 13.5"	181 RPM	Supplier: Veolia Water Technologies Canada
16	BFP Polymer Mixing Tank (T-04-940)	304L SS (Vendor Package)	Capacity: 508 L	Supplier: Veolia Water Technologies Canada
17	Electrically Operated Butterfly Valve (BFV-04-943)	Chemline 57A020AEL-A/ER20.12 (Vendor Package), 50 mm	Automatic Operation. Controlled by BFP Polymer Makeup System	Supplier: Veolia Water Technologies Canada
18	Ball Valve (BV-04-944)	Chemline Type 21-A-015-E-C (Vendor Package), 38 mm	Manually Operated	Supplier: Veolia Water Technologies Canada
19	Polymer Analyzer (AIT-04-941)	Hach Sensor D3725E2T Transmitter LXV404.99.00552 (Vendor Package)	Sensor Range: 200-2,000,000 uS/cm	Supplier: Veolia Water Technologies Canada
20	Level Transmitter (LIT-04-942)	Endress & Hausser PMC21-CA1V1ECVXJJ (Vendor Package)	Sensor Range: 25 KPa	Supplier: Veolia Water Technologies Canada
21	Ball Valve (BV-04-944)	Chemline Type 21-A-010-E-C (Vendor Package), 38 mm	Manually Operated	Supplier: Veolia Water Technologies Canada

No.	Component	Details	Settings	Remarks
22	BFP Polymer Aging Tank (T-04-950)	304L SS, (Vendor Package)	Capacity: 508 L	Supplier: Veolia Water Technologies Canada
23	Polymer Analyzer (AE-04-945)	Hach Sensor D3725E2T Transmitter LXV404.99.00552 (Vendor Package)	Sensor Range: 200-2,000,000 uS/cm	Supplier: Veolia Water Technologies Canada
24	Level Transmitter (LIT-04-946)	Endress & Hausser PMC21-CA1V1ECVXJJ (Vendor Package)	Sensor Range: 25 KPa	Supplier: Veolia Water Technologies Canada
25	Ball Valve (BV-04-947)	Chemline Type 21-A-015-E-C (Vendor Package), 38 mm	Manually Operated	Supplier: Veolia Water Technologies Canada
26	Ball Valve (BV-04-950)	Chemline Type 21-A-015-E-C (Vendor Package), 38 mm	Manually Operated	Supplier: Veolia Water Technologies Canada
27	Ball Valve (BV-04-960)	Chemline Type 21-A-005-E-C (Vendor Package), 38 mm	Manual Operation. Normally Open when P-04-970 Operating	Supplier: Veolia Water Technologies Canada
28	Ball Valve (BV-04-962)	Chemline Type 21-A-005-E-C (Vendor Package), 38 mm	Manual Operation. Normally Closed	Supplier: Veolia Water Technologies Canada
29	Calibration Chamber (CC-04-990)	Primary Fluid PV2-10000 (Vendor Package)	Capacity: 10L. 605 L/h	Supplier: Veolia Water Technologies Canada
30	BFP Polymer Dosing Pump 1 (P-04-970)	Netszch NM021BY01L06B (Vendor Package)	Average Flow: 554 L/hH @ 510 kPa Max. Flow: 600 L/h @ 586 kPa	Supplier: Veolia Water Technologies Canada
31	Temperature Element (TE-04-966)	As part of Polymer Dosing Pump (Vendor Package)	Controlled by Polymer Pump Control System	Supplier: Veolia Water Technologies Canada
32	Ball Valve (BV-04-985)	Chemline Type 21-A-005-E-C (Vendor Package), 13 mm	Manual Operation. Normally Open	Supplier: Veolia Water Technologies Canada

No.	Component	Details	Settings	Remarks
33	Pressure Switch (PSH-04-987)	As part of Polymer Dosing Pump (Vendor Package)		Supplier: Veolia Water Technologies Canada
34	Ball Valve (BV-04-964)	Chemline Type 21-A-005-E-C (Vendor Package), 13 mm	Manual Operation. Normally Closed	Supplier: Veolia Water Technologies Canada
35	Ball Valve (BV-04-970)	Chemline Type 21-A-005-E-C (Vendor Package), 25 mm	Manual Operation. Normally Open when P-04-970 Operating	Supplier: Veolia Water Technologies Canada
36	Ball Valve (BV-04-972)	Chemline Type 21-A-005-E-C (Vendor Package), 25 mm	Manual Operation. Normally Closed	Supplier: Veolia Water Technologies Canada
37	Pressure Release Valve (PRV-04-968)	Chemline SB12A010EU (Vendor Package), 25 mm		Supplier: Veolia Water Technologies Canada
38	Ball Valve (BV-04-961)	Chemline Type 21-A-005-E-C (Vendor Package), 38 mm	Manual Operation. Normally Open when P-04-980 Operating	Supplier: Veolia Water Technologies Canada
39	Ball Valve (BV-04-963)	Chemline Type 21-A-005-E-C (Vendor Package), 38 mm	Manual Operation. Normally Closed	Supplier: Veolia Water Technologies Canada
40	BFP Polymer Dosing Pump 2 (P-04-980)	Netszch NM021BY01L06B (Vendor Package)	600 LPH, 85psig	Supplier: Veolia Water Technologies Canada
41	Temperature Element (TE-04-967)	As part of Polymer Dosing Pump (Vendor Package)	Controlled by Polymer Pump Control System	Supplier: Veolia Water Technologies Canada
42	Ball Valve (BV-04-988)	Chemline Type 21-A-005-E-C (Vendor Package), 13 mm	Manual Operation. Normally Open	Supplier: Veolia Water Technologies Canada
43	Pressure Switch (PSH-04-990)	As part of Polymer Dosing Pump (Vendor Package)		Supplier: Veolia Water Technologies Canada

No.	Component	Details	Settings	Remarks
44	Ball Valve (BV-04-965)	Chemline Type 21-A-005-E-C (Vendor Package), 13 mm	Manual Operation. Normally Closed	Supplier: Veolia Water Technologies Canada
45	Ball Valve (BV-04-971)	Chemline Type 21-A-005-E-C (Vendor Package), 25 mm	Manual Operation. Normally Open when P-04-980 Operating	Supplier: Veolia Water Technologies Canada
46	Ball Valve (BV-04-973)	Chemline Type 21-A-005-E-C (Vendor Package), 25 mm	Manual Operation. Normally Open when P-04-980 Operating	Supplier: Veolia Water Technologies Canada
47	Ball Valve (BV-04-974)	Chemline Type 21-A-005-E-C (Vendor Package), 25 mm	Manual Operation. Normally Open when P-04-970 Operating	Supplier: Veolia Water Technologies Canada
48	Pressure Release Valve (PRV-04-969)	Chemline SB12A010EU (Vendor Package), 25 mm		Supplier: Veolia Water Technologies Canada
49	Flow Transmitter (FIT-04-999, FM-04-999)	Endress & Hauser, Promag 50H15, DN 1/2"	Flow to Plant Control System	Supplier: Endress & Hauser
50	Backpressure Valve (BVP-BPV-04-990)	Chemline SB12A010EU+SGA-005-002-P-G+P025-160-BM		Supplier: Veolia Water Technologies Canada
51	Backpressure Valve (BVP-BPV-04-991)	Chemline SB12A010EU+SGA-005-002-P-G+P025-160-BM		Supplier: Veolia Water Technologies Canada
52	Pressure Regulating Valve (PRV-04-980)	Fisher MR95H-51, 38 mm		Supplier: Controles Laurentide
53	Ball Valve (BV-04-981)	Chemline Type 21-A-005-E-C (Vendor Package), 38 mm	Manual Operation. Normally Open	Supplier: Veolia Water Technologies Canada

No.	Component	Details	Settings	Remarks
54	Solenoid Valve (SV-04-982)	Tekno Valve ASCO 8210G056 (Vendor Package), 38 mm	Controlled by BFP Polymer Makeup Control System	Supplier: Veolia Water Technologies Canada
55	Flow Indicator (FI-04-963)	Chemline FCA02000 (Vendor Package), 38 mm	200 – 2000 L/h. Manual Operation	Supplier: Veolia Water Technologies Canada
56	Needle Valve (NV-04-984)	Chemline SM2-A-015-E-S, ball type (Vendor Package), 38 mm	Manual Operation. Normally Open.	Supplier: Veolia Water Technologies Canada

END OF CHAPTER 5

CHAPTER 6

6. OPERATING PROCEDURES

6.1 GENERAL

The operations portion of this manual should be read in conjunction with Chapter 6 of the Electrical & Instrumentation and Mechanical Operations and Maintenance Manuals. The operating procedures described in this section will relate to the WWTP Process and Mechanical systems.

6.2 WASTEWATER TREATMENT PROCESS CONTROL SYSTEM

The WWTP operates on a continuous basis and in automatic mode. When the plant is called to start, and all equipment is in automatic mode, the Main Plant Control System controls and operates the plant. Various conditions of alarms will be detected and reported to the main Plant Control System. Some will shut the plant equipment down and others will turn on back-up equipment. See the Electrical & Instrumentation Operations and Maintenance Manual for further information on the Plant Control System. The operating procedures and control philosophy outline the normal operation of the WWTP.

6.2.1 Hand-Off-Auto (HOA) and Emergency Shut Down (ESD) Switches

All motors, both VFD and FVNR driven, to have both a Hand-Off-Auto (HOA) switch and local Emergency Shut Down (ESD) switch. The HOA switch are located on the front panel of the starter location, typically at the MCC. The ESD is located on a field-mounted junction box near the motor. Unless otherwise specified, the following apply to all pumps and motors.

Local emergency stop switches for each motor shall prevent the motor from running in either auto or hand and show an alarm on the SCADA system while engaged. The Hand-Off-Auto switch at the MCC shall dictate the following behavior:

- Switch in Off: Motor does not run and cannot be overridden through the motor starter keypad.
- Switch in Hand: Motor starts / stops based on input from the MCC keypad, and in the case of VFDs, operates at the speed indicated on the keypad. Plant Control System input is ignored.
- Switch in Auto: Motor is started, stopped, and speed controlled through I/O from the Plant Control System. Keypad input is ignored.

6.3 RAW WASTEWATER PUMPING

Raw wastewater from the City's collection system enter the Pump Station Influent Wet Well. Three raw wastewater pumps operate in a lead/lag/standby mode to lift the raw wastewater to the fine screens located on the upper floor of the existing headworks building to allows gravity flow through the majority of the WWTP's downstream treatment processes. Influent flow is monitored using a magnetic flow meter on the pumps' discharge header.

Each of the WWTP's three pumps have a maximum capacity of 75.5 L/s. The pumps are equipped with variable frequency driver (VFD) that operates based on the influent flow and level of the influent chamber in a Lead/Lag/Standby operation. With two pumps operating, with a total combined capacity of approximately 151 L/s, sufficient to meet 2038's peak hour flow.

6.3.1 Reference Information

Drawing P-604, Wetwell P&ID.

6.3.2 Operators Interface

The operator interface for the raw wastewater pumps is on the Plant Control System screen. The graphic shows the pumps and their run status. It also shows the present wet well level, as well as the present pumped flow rate. Wetwell level is shown graphically.

A pump controller for each pump is shown. The controller indicates pump run status, speed set point and present value, as well as, fault status bars. "Accumulated Pump Runtime" is shown at the top of the individual controllers.

6.3.3 Normal Operation

Under normal operation, raw wastewater pumps, P-01-110, P-01-120, and P-01-130 operate in a lead/lag/standby configuration. The lead/lag pumps start and stop based on fixed level points in the influent lift station, detected by a level transmitter monitoring the RWW lift station fluid level. The raw wastewater lift station level transmitter will communicate the analog level value for wastewater in the lift station to the PLC. The PLC will start the lead pump at a set level and then vary the speed of the VFD in proportion to the level in the lift station. When the level rises to the set level for lag pump start the PLC will start the lag pump at a speed proportional to the level in the lift station.

When the level falls to the lag pump stop set level, the PLC will stop the lag pump and when the level falls to the lead pump stop set level the PLC will stop the lead pump. At this inlet flow

volume, the control system will wait for the level to rise to the lead pump start level and the above sequence will be available to repeat. After each pump cycle, the lead, lag, and standby roles are rotated.

The PLC/HMI system is configured to allow each of the raw wastewater pumps, P-01-110, P-01-120, and P-01-130 to operate as the lead, lag, or standby pumps. In the event of a pump failure the PLC will alarm the pump as failed on the HMI, and assign the standby pump to operate in the failed pump's function, provided the standby pump is available. Should the standby pump not be operable, the PLC will generate a second alarm to indicate that only one RWW pump is operational and generate an auto dialer call.

The raw wastewater supply to the plant is measured using the magnetic flow meter, FE/FIT-150, located on the discharge side of the influent pumps on the 200 mm diameter forcemain feeding the screening process.

6.3.4 Controls

The Raw Sewage Pumps are controlled by the Plant Control System. They are driven by VFDs located in the MCC.

6.3.5 Normal Equipment Status

Tag #	Description	Status
P-110	RWW Pump 1 (VFD)	In Auto
P-120	RWW Pump 2 (VFD)	In Auto
P-130	RWW Pump 3 (VFD)	In Auto
PLV-01-111	Raw Wastewater Pump P-01-110 Discharge Valve	Open
PLV-01-112	Raw Wastewater Pump P-01-120 Discharge Valve	Open
PLV-01-113	Raw Wastewater Pump P-01-130 Discharge Valve	Open

6.3.6 Manual Operation

When the HOA switch is in the HAND position, the pump will run, regardless of the level in the wetwell. Speed of the pump is set by the speed control potentiometer on the same panel. Either ESD switch will stop the pump. When the HOA switch is in OFF, the pump will not run.

6.3.7 Automatic Operation

When the HOA Switch is in AUTO and the HMI controls are in AUTO, the pumps are automatically controlled by the Plant Control System. The pumps are assigned Lead, Lag and Standby Duty by the control system. The duty of all pumps is auto-rotated after every pump cycle or if a pump becomes unavailable while running.

The pump will start when both ESD switches are inactive, the HOA Switch is in AUTO and the pump is called to run by the Plant Control System.

The pump will shut down when stopped by the Plant Control System, if either of the ESD switches is activated or if the HOA Switch is set to OFF.

When the HOA Switch is in AUTO and the HMI controls are in HAND, the pumps are controlled by the Plant Control System, but the operator selects the speed of the pump, using the pump controls on the HMI.

6.3.7.1 Sequence Normal Operation

Lift Station Level	Action
3.6 m above lift station floor	Level alarm high-high, as detected by LSHH-01-114 Start lead and lag pumps at 100% if set to manual at HMI, start Primary Filter at 100% speed Dialer alarm (refer to next table)
3.4 m above lift station floor	Lag pump start level as detected by LIT-01-100.
3.2 m above lift station floor	100% pump speed level.
1.4 m above lift station floor	Lead pump start level as detected by LIT-01-100.
0.6 m above lift station floor	Lag pump stop level as detected by LIT-01-100.
0.4 m above lift station floor	Lead pump stop level as detected by LIT-01-100 Minimum pump speed level (75% speed).
300 mm above lift station floor	Level alarm low

6.3.8 Abnormal Operation

Any abnormal condition on a running pump will cause the pump to rotate into standby duty. High and low level alarms are annunciated per the below table.

6.3.8.1 Abnormal Operation Alarms

Abnormal Condition	Action	Alarm	Annunciation
Lead or Lag pump fails	Start standby pump as duty pump to operate in the failed pump's position.	Alarms	HMI
Standby pump fails when called to operate	Standby pump fails (only 1 pump available).	Alarms	HMI and Dial Out
LAHH in Lift Station LSHH-114	See above.	LAHH Alarms	Main PLC and Dial Out

6.3.9 HMI Screens and Alarm Indication

The operator interface for these pumps is on the Plant Control System Lift Station screen.

A Pump Controller for each pump is shown. The controller indicates pump run status, speed set point and present value, as well as fault status bars. Accumulated Pump Runtime is shown for the individual controllers.

HAND and AUTO modes can be selected by clicking on the Mode button. In HAND, a speed setpoint becomes visible and active on the selected controller. The speed of the pump is selected by entering the desired speed.

There are four information boxes at the bottom of the controller. The first indicates Run Status – either Running or Stopped. The second will indicate "Pump on Local Operation or E-Stop pressed" if either condition is present. The third box indicates a motor fault at the VFD. The fourth box will indicate the presence of a leak at the pump motor.

6.4 FINE SCREENS

The fine screens are of the shaftless spiral type integrated with transport, compaction, and dewatering zones in the same unit. The fine screens operate in a duty/standby mode, with each capable of meeting the design peak hour flow. Screened raw wastewater then flows by gravity to the primary process. Screenings removed by the fine screens are washed and compacted prior to being discharged in the disposal trailer to be hauled for final disposal.

6.4.1 Reference Information

Drawing P-605, Screening P&ID.

6.4.2 Normal Operation

Flow from the raw wastewater pumps is measured with flowmeter (FM-01-150) and manually directed to either shaftelss spiral screen (SCRN-01-210) or (SCRN-01-220). The screens operate in a duty/standby configuration. Each screen has a rated capacity of 151 L/s and 6 mm opening size. One screen can handle the peak hour flow to the plant. Upon a trigger to operate, the unit will run for an adjustable time as per the settings on the off-delay timer.

Each screen is equipped with level indicator transmitters (LIT-01-211/221) to control the water level inside the unit. The influent flow from the raw wastewater pumps to the operational screen is shutdown if a high-water level condition is reached in the screen.

During the screening operation, an internal spray bar cleans the screen and the solids compaction zone of the unit utilizing non-potable water from the plant utility system. Solenoid valves (SV-01-120/122/124/126) provide for the spray system cycle per the setting on their own repeat timer whenever the motor is running.

Screenings from the fine screens flow to the screenings/primary sludge disposal trailer; the automated on/off valve (KV-01-112) allows the flow of screenings to the trailer during normal operation. The valve is closed when the fine screens are not operational, and/or the trailer is not available to receive screenings.

6.4.3 Controls

Each fine screen is composed of three control zones: screen zone, compaction zone spray and basket spray zone. Each zone can operate in Manual (HAND) position and in Automatic (AUTO) position.

6.4.4 Normal Valve and Switch Positions

Tag #	Description	Position
KV-01-211	Fine Screen SCRN-01-210 Isolation Valve	Open or Close NOTE11
KV-01-212	Fine Screen SCRN-01-210 Discharge Valve	Open or Close NOTE11
BV-01-112	Non-potable Water Supply Valve to SCRN-01-210	Open
BV-01-123	Non-potable Water Supply Valve to SCRN-01-210	Open

Tag #	Description	Position
SV-01-120	Non-potable Water Supply Solenoid Valve to SCRN-01-210	Auto
SV-01-122	Non-potable Water Supply Solenoid Valve to SCRN-01-210	Auto
KV-01-221	Fine Screen SCRN-01-220 Isolation Valve	Open or Close NOTE 1
KV-01-222	Fine Screen SCRN-01-220 Discharge Valve	Open or Close NOTE 1
BV-01-114	Non-potable Water Supply Valve to SCRN-01-220	Open
BV-01-127	Non-potable Water Supply Valve to SCRN-01-220	Open
SV-01-124	Non-potable Water Supply Solenoid Valve to SCRN-01-220	Auto
SV-01-126	Non-potable Water Supply Solenoid Valve to SCRN-01-220	Auto
KV-01-232	Cross-connection Fine Screens Discharge	Closed
KV-01-112	Screenings Discharge Valve	Auto
LIT-01-211	Level Indicator Transmitter in SCRN-01-210	Auto
LIT-01-221	Level Indicator Transmitter in SCRN-01-220	Auto

NOTE 1: Fine screens operate in a duty/standby configuration. Selection of screen to be operational is manual by operator.

6.4.5 Manual Operation

6.4.5.1 Spiral Screen:

When screen selector is in HAND position, the screen will run per the screen FOR-OFF-REV selector. In FOR position, the screen runs continuously forward. In OFF position, the screen is off. In REV position, the screen runs in reverse until operator release (spring-returns to OFF).

6.4.5.2 Compaction Zone Spray:

When the compaction zone spray selector is in the HAND position, the compaction zone spray will run continuously.

6.4.5.3 Basket Spray:

When the basket spray selector is in the HAND position, the basket spray will run continuously.

6.4.6 Automatic Operation

6.4.6.1 Spiral Screen:

When the screen selector is in the AUTO position, the screen will start forward when the liquid level in the upstream channel reaches the start level set-point (as determined by upstream ultrasonic level sensor).

After the liquid level in upstream channel falls below the start level set-point for the time set in the screen level off-delay timer, the screen will shut off.

The screen will also cycle OFF and ON/FOR (OFF first), per the settings of the screen repeat cycle timer (adjustable). The screen repeat cycle timer is provided for two possible reasons:

- To keep the screen operating periodically in low flow situations
- In case there is a failure with the upstream level sensing device.

Any run of the screen will reset the screen repeat cycle timer.

After each automatic cycle, the screen will stop, run in reverse (stop and reverse times are set per screen reverse run timer) and then return to OFF.

If the screen call-to-run signal remains active for the time set in the screen max continuous run timer, the screen will stop and run in reverse (stop and reverse times are set per screen reverse run timer). If the call-to-run persists, the screen will again start to run in the forward position.

Pressing and holding the system reset pushbutton for 3 seconds will initiate a screen run cycle if the screen selector is in the AUTO position.

Because the rotating auger is shaftless, there is no automatic jam logic.

6.4.6.2 Compaction Zone Spray:

When the compaction zone spray selector is in the AUTO position, the spray will cycle ON and OFF (ON first) per the settings of the compaction zone repeat cycle timer (adjustable). The compaction zone spray is independent of the screen operation.

6.4.6.3 Basket Spray:

When the basket spray selector is in the HAND position, the spray will run when the screen is operating in forward.

6.4.7 Abnormal Operation

If the emergency stop (E-Stop) pushbutton is pressed, the spiral screen the compaction zone spray and the basket spray will stop immediately. Screen and spray will also stop if the hatch door is opened. To re-set, pull out E-Stop pushbuttons and press the system reset pushbutton.

6.4.8 Fine Screen Alarm Indication

6.4.8.1 Spiral Screen Faults/Resets:

- A fault occurs when the screen current monitor is tripped. The screen will stop immediately, and the screen fault light will be illuminated. For reset, push the system reset button.
- A fault occurs when the screen motor starter thermal overload is tripped. The screen will stop immediately, and the screen fault light will be illuminated. For reset, push the reset pushbutton on the screen motor starter thermal overload located inside the control panel. Unless entry into the control panel is being performed by a qualified electrician, the control panel power should be shut off prior to entry.
- A fault occurs when the screen motor thermostat is tripped. The screen will stop immediately. This fault resets automatically when the screen motor returns to a safe temperature.

For a timer description and initial timer settings refer to the fine screen sequence of operation.

6.5 PRIMARY FILTERS

Primary filters are used for ultra-fine screening and solids retention to provide the same removal efficiency as conventional primary sedimentation. The primary filters (PF-01-310/320) receive raw wastewater flow by gravity from the fine screens (SCRN-01-210) or (SCRN-01-220). The primary filter unit contains a belt filter which captures influent TSS and BOD on a filter mat, increasing the removal of TSS and BOD as the thickness of the filter mat increases. Filtered primary effluent then flows by gravity to the MBBR tanks. Solids are thickened to 4% to 6% solids content on the belt and are removed as the filter mat rotates past an air knife. Primary sludge removed by the primary filters is deposited in the screenings/primary sludge disposal trailer located in the lower floor of the headworks building.

6.5.1 Reference Information

- Drawing P-606 Primary Filter 1 P&ID
- Drawing P-607 Primary Filter 2 P&ID
- Drawing P-608 Primary Filter Blowers P&ID

6.5.2 Normal Operation

6.5.2.1 Primary Filters

Each primary filter is sized for 121 L/s and will operate in a lead/lag mode of operation to meet the 2041 peak hour flow of 151 L/s. Under average flows to the plant, one filter will be operating. Each primary filter is equipped with a level indicator transmitter (LIT-01-115/125) with a level element located in the influent compartment of the unit. The primary filter belt operates based on the sensed level in that compartment. During high flow events, greater than average flows, the second primary filter is automatically engaged by opening automated knife gate valves (KV-01-111) or (KV-01-121) at the inlet of the unit.

The primary filter belt and the screw press are equipped with variable frequency drives to vary the operational speed of the units and regulate the filtration process. An air knife assembly connected to primary filter blowers (B-02-210/220) functions to continuously remove solids from the surface of the filter cartridge. A primary filter integrated sludge dewatering system, consisting of a wedge wire screen and screw press (SP-01-330/340), thickens, and dewaters the sludge. Dewatered sludge is deposited in the screening/primary sludge solids disposal trailer.

Each primary filter is equipped with a non-potable hot water connection for internal flushing to remove fats, oils and grease from the filter belt that may build up over time and impede the filter operation. The non-potable hot water flow to the units is controlled by solenoid valves (SV-01-312/113) and the frequency of the non-potable hot water flushing operation is field-adjustable through the HMI of the unit.

A non-potable cold-water connection to the primary filter and the screw press is also provided for automated internal cleaning of each unit. Like the hot water flushing, the non-potable cold-water flow to the units is controlled by solenoid valves (SV-01-322/323) and the frequency of the non-potable cold-water flushing operation is field-adjustable through the HMI of the unit.

The whole operation of the primary filters including the air knife assemblies, the screw presses, the primary filter blowers, is controlled from the HMI provided for each unit. Complete control description of the primary filters is presented on the respective shop drawing submittal.

6.5.2.2 Primary Filter Blowers

Two primary filter blowers (B-01-210/220) provide air to the primary filter air knife for removing solids from the primary filter belt. Each blower is sized to service one primary filter. The primary filter blowers operate in duty/assist like the primary filters.

6.5.3 Controls

The Salsnes Filter uses a Programable Logic Computer (PLC) based control system that provides optimized control of a mesh filter belt. Each Salsnes filter is powered by a Control Power Panel (CPP) that houses the PLC, IO and OIT which provides local control and monitoring. The PLC controls the filter belt rotational speed to obtain optimum separation of the incoming material.

The speed is varied by a filter motor to obtain a specified water level in the inlet week. The solids are deposited off of the belt into an outlet well, where optional dewatering may be performed by the sludge screw.

The Salsnes filter system control strategy employs an equipment protection interlock and monitors a number of alarm conditions that result in control actions designed to maximize efficiency. There is one critical interlock signal that is hardwired to the CPP that will disable the motors in the Salsnes filter. The critical interlock is emergency stop pushbutton, dewatering screw failure and options of air pressure not present, ventilation differential pressure alarm and external sludge bin fault.

6.5.4 Normal Valve and Switch Positions

Tag #	Description	Position
KV-01-111	Primary Filter PF-01-310 Isolation Valve	Auto (Open or Closed)
BV-01-310	Hot non-potable Water Supply to Primary Filters	Open
BV-01-320	Cold non-potable Water Supply to Primary Filters	Open
BV-01-314	Hot non-potable Water Supply to PF-01-310	Open
SV-01-312	Solenoid Valve Hot non-potable Water Supply to PF-01-310	Auto
BV-01-324	Cold non-potable Water Supply to PF-01-310	Open
SV-01-322	Solenoid Valve Cold non-potable Water Supply to PF-01-310	Open
SV-01-113	Filtrate from PF-01-310	Auto
LIT-01-115	Level Indicator Transmitter in PF-01-310	Auto
PT-01-116	Pressure Transmitter in PF-01-310 air line	Auto
KV-01-121	Primary Filter PF-01-340 Isolation Valve	Auto
BV-01-315	Hot non-potable Water Supply to PF-01-340	Open
SV-01-313	Solenoid Valve Hot non-potable Water Supply to PF-01-340	Auto
BV-01-325	Cold non-potable Water Supply to PF-01-340	Open
SV-01-323	Solenoid Valve Cold non-potable Water Supply to PF-01-340	Auto
SV-01-123	Filtrate from PF-01-320	Auto
LIT-01-125	Level Indicator Transmitter in PF-01-320	Auto
PT-01-126	Level Indicator Transmitter in PF-01-320	Auto
BFV-02-216	Air Discharge from Blower B-02-210 Isolation Valve	Open
BFV-02-226	Air Discharge from Blower B-02-220 Isolation Valve	Open

6.5.5 Manual Operation

When the filter control switch is in the OFF position, the CPP PLC will have no control of the motors or valves.

When the filter control switch is in the ON position, the CPP PLC will have no control of the motors or valves. In this mode the filters starters and drives will all be electrically activated and will operate at a fixed speed using the manual speed setpoints on the HMI.

6.5.5.1 Filter Belt

The filter belt, which contains a filter mesh mounted on a removable cartridge is used to draw waste material from the inlet to outlet sludge conveyor. Water is separated from the material as it is transported on the mesh towards the outlet well.

A filter motor, which rotates the filter belt, is driven by VFD that regulates the speed based on a PID control algorithm. The speed is continuously regulated in order to maintain an enterable inlet water level set-point. Optionally the system may be configured to operate the filter speed in a proportional mode so that the speed of the filter is proportionally increased as the filter water level increases, but a target water level is not maintained.

When the system mode selector switch is set to OFF, the filter belt motor will not start.

When the system mode selector switch is set to ON, the filter belt motor will be started by an electrical interlock that will force the motor to run at a fixed speed configured by the manual HMI set-points.

When the system mode selector switch is in the HMI position and the HMI mode is set to OFF, the CPP PLC will keep motor turned off and will not automatically start the filter motor, regardless of filter level.

When the system mode selector switch is in the HMI position, and the HMI mode is set to MANUAL, the CPP PLC will start and run filter motor according to requests by the operator from the HMI. The speed of the filter motor sill be controlled by an operator entry on the OIT.

This mode should not be used when the filter inlet valve is open unless the blower and sludge screw is also operating.

6.5.5.2 Blower

The blower is used to provide air for the air knife – mesh cleaning system which is used to blow material off of the filter mesh into the sludge conveyor.

The blower motor is driven by a soft starter and maintains a fixed speed based on the selected blower specification. The soft starter is controlled by a signal communicated from the CPP PLC. A blower cooling fan is mounted in the blower enclosure. It will run when the blower motor is on, and it will stop when the blower motor stops after a hard coded 1 minute time delay.

When the system mode selector switch is set to OFF, the blower motor and cooling motor will not start.

When the system mode selector switch is set to ON, the blower motor and cooling motors will be started by an electrical interlock.

When the system mode selector switch is in the HMI position and the HMI mode is set to OFF, the CPP PLC will keep motor turned off and will not automatically start the blower motor and blower cooling motor, regardless of filter level.

When the system mode selector switch is in the HMI position, and the HMI mode is set to MANUAL, the CPP PLC will start and run blower motor and blower cooling motor according to requests by the operator from the HMI.

6.5.5.3 Sludge Screw

The sludge screw is used to dewater and/or convey the sludge that has been transported by the filter mesh. The sludge is collected and conveyed by the screw where it is optionally pressed and dewatered before exiting the Salsnes filter system.

The sludge screw motor is driven by a VFD that maintains a fixed speed target based on a configurable setting from the CPP OIT. The sludge screw may be operated in forward or reverse direction in manual mode. The VFD is controlled by a signal communicated from the CPP PLC.

When the system mode selector switch is set to OFF, the sludge screw will not start.

When the system mode selector switch is set to ON, the sludge screw will be started by an electrical interlock.

When the system mode is in the HMI position, and the HMI mode is set to MANUAL, the CPP PLC will start and run the sludge screw according to requests by operator from the HMI. The speed of the sludge screw will be controlled by an operator entry on the OIT.

6.5.5.4 Hot Water Valve

Hot water is used for filter belt cleaning. All motors must be operating in automatic mode before a hot water flush will occur. The hot water valve is controlled by the CPP PLC via a discrete open signal, or the OIT in manual mode.

The CPP PLC will automatically perform a hot water flush based on a configurable time delay. The blower motor, blower motor cooling fan, filter motor, and sludge screw motor will start when the hot water valve is being commanded open via the in AUTO mode.

When the system mode selector switch is set to OFF, the hot water valve will not open.

When the system mode selector switch is set to ON, the hot water valve will remain closed.

When the system mode selector switch is in the HMI position, and the HMI mode is set to OFF, the CPP PLC will keep the hot water valve closed and will not automatically open the hot water valve.

When the system mode selector switch is in the HMI position, and the HMI mode is set to MANUAL, the CPP PLC will open and close the hot water valve according to requests by the operator from the HMI.

6.5.5.5 Cold Water Valve

Cold water is used for flushing of the filtered water basin. The cold water valve is controlled by the CPP PLC via a discrete open signal, or manual cold water control switch. The CPP PLC will automatically perform a cold water flush based on a configurable time delay.

When the system mode selector switch is set to OFF, the cold water valve will not open.

When the system mode selector switch is set to ON, the cold water valve will remain closed.

When the system mode is in the HMI position, and the HMI mode is set to OFF, the CPP PLC will keep the cold water valve closed and will not automatically open the cold water valve.

When the system mode is in the HMI position, and the HMI mode is set to MANUAL, the CPP PLC will open and close the cold water valve according to requests by the operator from the HMI.

6.5.6 Automatic Operation

The Salsnes Filter and its accessories are normally operated in full Automatic mode.

When the filter control mode switch is in the HMI position the CPP PLC has control of all motors in the system based on the configuration set in the CPP Operated Interface Terminal (OIT). From the OIT, the filter system HMI mode can be set to OFF, MANUAL or AUTO modes. When the filter system is set to HMI-Manual mode, each motor and valve may be individually requested to be started/opened or stopped/closed. When the filter control mode switch transitions to the HMI position, the PLC will automatically set the HMI mode to automatic and all valves and motors will be automatically controlled by the PLC. The HMI mode must be switched to OFF or Manual if direct operator control of the devices is required.

Normal operation of the Salsnes filter system is to have all motors and valves automatically controlled with the system in HMI AUTO mode. Fully automatic operation of the system is described in section 3.1 – Standard Operation of the Salsnes filter control philosophy.

6.5.6.1 Filter Belt Drive

When the system mode selector switch is in the HMI position and the HMI mode is set to “AUTO, the CPP PLC has control of the filter belt. Fully automatic operation of the system is described in section 3.1 – Standard Operation of the Salsnes filter control philosophy.

6.5.6.2 Blower

When the filter control switch is in the HMI position, and the HMI mode is set to AUTO, the CPP PLC has control of blower. Fully automatic operation of the system is described in section 3.1 – Standard Operation of the Salsnes filter control philosophy.

6.5.6.3 Sludge Screw

When the system mode selector switch is in the HMI position, and the HMI mode is set to AUTO, the CPP PLC has control of the sludge screw. Fully automatic operation of the system is described in section 3.1 – Standard Operation of the Salsnes filter control philosophy.

6.5.6.4 Level Transmitter

An inlet well water level transmitter is required in order to determine when to start and stop the Salsnes filter system. The water level is also used to control the speed of the filter belt. The value is supplied to the CPP PLC via 4-20 mA analog signal that is passed through a smoothing algorithm to reduce noise. This signal is then scaled to engineering units based on a full-scale level set-point.

6.5.6.5 Blower Pressure Transmitter

A pressure transmitter is required in order to determine if the blower is operating correctly. The value is supplied to the CPP PLC via a 4-20 mA analog signal that is passed through a smoothing algorithm to reduce noise. This signal is then scaled to engineering units based on a full-scale pressure set-point.

6.5.6.6 Hot Water Valve

When the system mode selector switch is in the HMI position, and the HMI mode is set to AUTO, the CPP PLC has control of the hot water valve. Fully automatic operation of the system is described in section 3.1 – Standard Operation of the Salsnes filter control philosophy. The hot water flush timer will count down to control the operation of the valve only in HMI-AUTO mode. In all other modes, the hot water flush timer will be reset and suspended.

6.5.6.7 Cold Water Valve

When the system mode selector switch is in the HMI position, and the HMI mode is set to AUTO, the CPP PLC has control of the cold water valve. . Fully automatic operation of the system is described in section 3.1 – Standard Operation of the Salsnes filter control philosophy. The cold water flush timer will count down to control the operation of the valve only in HMI-AUTO mode. In all other modes, the cold water flush timer will be reset and suspended.

6.5.7 Abnormal Operation

Under abnormal operation, the Salsnes filter can be shut down following this seuqnce:

- System shutdown sequence is issued due to a critical alarm;
- The blower motor turns off;
- The blower motor cooling fans turns off;
- The filter motor turns off;
- The sludge screw motor turns off;
- Inlet valve close;
- All valves and motors will shut down simultaneously;
- System will not re-start until the critical alarm has been cleared.

6.5.8 HMI Screens and Alarm Indication

The operator interface for the Primary Filter is on the Primary Filter screen on the OIT. The OIT screens use color codes to help identify types data. The filter screen displays filter status information, system fault indicators and provides the operator control access. A sample filter screen is presented below.

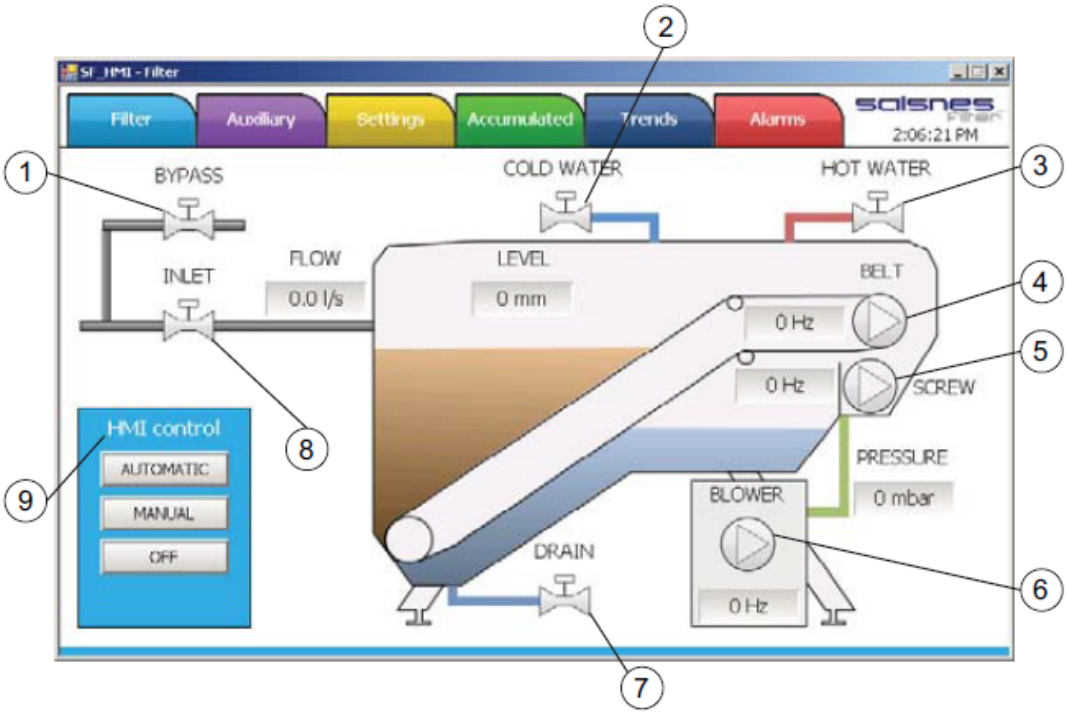

Key: 1- Bypass Button, 2- Cold Water Button, 3- Hot Water Button, 4- Belt Button, 5- Screw Button, 6- Blower Button, 7- Drain Button, 8- Inlet Button, 9- Operator Interface Control Buttons.

Not all buttons will be active, depending on the systems components.

For complete information on the filter screens, refer to the Salsnes Filter System SF Series Submittal Manual Original Instructions Edition 6.

6.6 SECONDARY TREATMENT

Secondary treatment of the primary effluent is accomplished using a moving bed biofilm reactor (MBBR) followed by dissolved air flotation (DAF) units.

Two MBBR trains (T-02-210/220) are installed. Each MBBR train consists of two cells disposed within a bioreactor tank filled with carrier media suspended in the tank. A blower aeration system (B-02-110/120/130) provides the air required for biological treatment and functions to keep the media in constant suspension while periodically sloughing off accumulated biomass.

The MBBR is followed by high rate secondary clarification using DAF units (T-02-310/320). Dissolved air and sometimes polymer are added the mixed liquor, and suspended particles are removed from the liquid stream by bringing the particles to the surface, from where they are skimmed off to a collection tank. The collected thickened waste activated sludge is pumped to TWAS Storage Tanks (T-03-630/640) prior to the solids thickening process. Final clarified effluent from the DAF is discharged to the existing WWTP outfall.

6.6.1 Reference Information

- Drawing P-609 Process Aeration Blowers P&ID
- Drawing P-610 Moving Bed Biofilm Reactors P&ID
- Drawing P-611 Dissolved Air Floatation 1 P&ID
- Drawing P-612 Dissolved Air Floatation 2 P&ID
- Drawing P-613 Primary Filter Blowers P&ID
- Drawing P-614 Dissolved Air Floatation 2 White-Water Pumping P&ID
- Drawing P-615 DAF Polymer System P&ID
- Drawing P-616 DAF Polymer Dosing Pump System P&ID

6.6.2 Normal Operation

6.6.2.1 Moving Bed Biofilm Reactors (MBBR)

The MBBR is a flow-through process; the process operates based on influent flow load. Each MBBR train is online and primary influent is continuously fed to both trains that work in parallel. Each MBBR train can treat the 75% of the 2041 maximum month flow or 45.3 L/s. Both MBBR trains operating can pass hydraulically the 2041 peak hour flow (151 L/s) to the plant.

Primary effluent flows by gravity from the primary filters (PF-01-310/320) to the MBBR reactors. The influent flow is split into two MBBR trains (T-02-210/220). Flow splitting is not entirely equal as splitting occurs through pipelines of different length to each MBBR train due to the location of the primary filters in the headworks building, the location of the MBBR units in the secondary treatment area and the configuration of the existing plant building.

6.6.2.2 MBBR Blowers

Aeration to the MBBR trains is provided by three positive displacement process aeration blowers (B-02-110/120/130) (two duty/one standby) located in the upper level of the secondary treatment area. The blowers provide 10 m^3/min at 46 kPa to each MBBR train. The MBBR blowers also provide process air to the TWAS storage tanks (T-03-630/640) (3.1 m^3/min at 46 kPa to each TWAS storage tank) to keep the TWAS solids in suspension and very sporadically to the DAF units (T-02-310/320) for bottom sludge agitation.

Each process aeration blower is provided with a variable frequency drive to vary the air flow being supplied to the MBBR system and the TWAS storage tanks as per requirements from the process.

6.6.2.3 Aeration System

A coarse bubble aeration system within the MBBR cells covers the tanks bottom surface. The aeration system provides optimum oxygen transfer to the fixed biomass and maintains homogenous MBBR media mixing over the reactor cell volume.

6.6.2.4 Dissolved Air Floatation Clarifiers

The DAF units (T-02-310/320) are used for total suspended solids (TSS) removal from the MBBR trains (T-02-210/220) effluent. Mixed liquor from the MBBR trains flows into the DAF units by gravity. Each DAF unit is comprised of a floatation tank, inlet distribution plate, air distribution nozzles, an anti-vortex floatation system, a treated water collector pipe system and a mechanical sludge scraper (DDR-02-311/321).

The DAF tanks contain various zones. Inflow occurs in the upper part of the entry zone and underflows a watertight wall to the white-water injection zone. The clarified water overflows from the white-water injection zone to the flotation zone and is discharged to the clarified water evacuation zone by a collector located at the bottom of the flotation zone. The floated sludge

(TWAS) in the flotation zone is brought to the surface and directed to the sludge collection zone by the scrapper mechanism (DDR-02-311/321). TWAS is suctioned from the sludge collection zones of the DAF units by the TWAS pumps (P-02-610/620) and sent to the TWAS storage tanks (T-03-630/640).

Each DAF unit is also equipped with a white-water flotation system which includes a white-water pumping system (P-02-410/420/430/440/450/460) followed by white-water solids removal system with strainers (STR-02-510/520/530/540). In the white-water flotation system, a portion of the water from the DAF flotation zone is pressurized and recirculated to the white-water injection zone of the DAF units to produce microbubbles used to obtain the solids flotation effect in the system.

Each DAF unit can treat the 2041 maximum month flow of 60.4 L/s and both DAF units can treat the peak hour flow of 151 L/s. The DAF units are provided with Local Control Panel (LCP) with PLANT CONTROL SYSTEM for control integration of the control operation of the MBBR trains, DAF units, white-water pumps, and strainers. The LCP is also integrated to the Control Plant System.

6.6.2.5 DAF Polymer Preparation / Dilution System

Polymer addition increases total suspended solids removal performance in the DAF units. Polymer is not required continuously. Polymer may be required for the DAF system when mixed liquor flow and/or suspended solids concentrations reach above average levels.

Dry polymer is delivered to site in 25 kg bags. A polymer preparation/dilution system (PDS-04-700) is available to automatically prepare a homogeneous polymer solution at approximately 0.3%. The system is an automatically controlled, sequentially batching unit consisting of a hopper suited with a vacuum loading station, high shear, first stage pre-wetting system, medium shear transition mixer, a mix tank with a low shear mixer and an aging tank. All the elements of the DAF polymer preparation/dilution system are controlled from the local control panel supplied with the unit. The system can be operated automatically or manually.

A polymer dosing pump skid composed of three DAF Polymer Dosing Pumps (P-04-770/780/790) is available for polymer solution pumping from the polymer preparation/dilution system to the influent water pipelines to the DAF units. Each of the two duty polymer dosing pumps pump polymer solution to each DAF unit with a common shared spare dosing pump.

The DAF units are equipped with online effluent total suspended solids (TSS) sensors/transmitters (AIT-02-334/344) to continuously measure total suspended solids in the effluent. When final effluent TSS is higher than an operator input setpoint, typically slightly lower than the 20 mg/L target for the plant, polymer dosage is activated at polymer setpoint dosage established by operator. If effluent TSS remains higher, polymer dosage is increased by the operator.

Polymer dosage can also be regulated based on flow, according to the final effluent flow measurement from the plant effluent flowmeter (FQIT-02-328).

Dilution water lines for polymer post-dilution as required are available at the discharge headers from the polymer dosing pumps conveying the polymer solution to the DAF influent pipeline.

6.6.2.6 Effluent Flow Metering Chamber

Final effluent flows by gravity from the DAF units to the outfall and it is discharged to the ocean. Effluent flow is monitored by a magnetic flowmeter (FQIT-02-328) installed on the effluent water line for such a purpose.

6.6.3 Controls

Water and air flows to the MBBR units are automatically controlled. The primary effluent water flow to the MBBR units is controlled with on/off knife gate automated control valves and the air flow from each blower to each MBBR unit is controlled with butterfly automated control valves.

Each MBBR unit is equipped with level sensor for water level control and dissolved oxygen (DO) probes for dissolved oxygen control.

Both MBBR trains are operating in a parallel configuration under normal operation conditions.

Water flow to the DAF units is automatically controlled with automated butterfly on/off valves. Water level in the flotation zone and sludge level in the sludge collection zone of the DAF units are controlled with level sensors. Total suspended solids are monitored in the clarified water zone.

6.6.4 Normal Valve and Switch Positions

6.6.4.1 MBBR Blowers Normal Valve and Switch Positions

Tag #	Description	Position
HS-02-110	Blower B-02-110 MCC Switch	Auto
HS-02-120	Blower B-02-120 MCC Switch	Auto
HS-02-130	Blower B-02-130 MCC Switch	Auto
BFV-02-116	Air Discharge from Blower B-02-110 Isolation Valve	Open
BFV-02-126	Air Discharge from Blower B-02-120 Isolation Valve	Open
BFV-02-136	Air Discharge from Blower B-02-130 Isolation Valve	Open
BFV-02-151	MBBR #2 T02-220 Air Supply Isolation Valve	Open
BFV-02-150	MBBR #2 T02-220 Air Supply Isolation Valve	Auto
BFV-02-153	MBBR #1 T02-210 Air Supply Isolation Valve	Open
BFV-02-155	MBBR #1 T02-210 Air Supply Isolation Valve	Auto

6.6.4.2 MBBR Tanks Normal Valve and Switch Positions

Tag #	Description	Position
KV-02-211	MBBR #1 T02-210 Primary Effluent Influent Isolation Valve	Auto
KV-02-221	MBBR #2 T02-220 Primary Effluent Influent Isolation Valve	Auto
AIT -02-211	Dissolved Oxygen Control MBBR #1 T02-210 Cell 1-1	Auto
AIT -02-212	Dissolved Oxygen Control MBBR #1 T02-210 Cell 1-2	Auto
LSH -02-213	Level Sensor MBBR #1 T02-210 Cell 1-1	Auto
LSH -02-214	Level Sensor MBBR #1 T02-210 Cell 1-2	Auto
AIT -02-221	Dissolved Oxygen Control MBBR #2 T02-212 Cell 1-1	Auto
AIT -02-222	Dissolved Oxygen Control MBBR #2 T02-212 Cell 1-2	Auto
LSH -02-223	Level Sensor MBBR #2 T02-210 Cell 1-1	Auto
LSH -02-224	Level Sensor MBBR #1 T02-210 Cell 1-2	Auto
BFV-02-181	Air Flow Isolation Valve to MBBR #1 T02-210 Cell 1-1	Open
BFV-02-182	Air Flow Isolation Valve to MBBR #1 T02-210 Cell 1-1	Open
BFV-02-183	Air Flow Isolation Valve to MBBR #1 T02-210 Cell 1-2	Open
BFV-02-184	Air Flow Isolation Valve to MBBR #1 T02-210 Cell 1-2	Open
BFV-02-191	Air Flow Isolation Valve to MBBR #2 T02-220 Cell 2-1	Open
BFV-02-192	Air Flow Isolation Valve to MBBR #2 T02-220 Cell 2-1	Open
BFV-02-193	Air Flow Isolation Valve to MBBR #2 T02-220 Cell 2-2	Open
BFV-02-194	Air Flow Isolation Valve to MBBR #2 T02-220 Cell 2-2	Open

6.6.4.3 DAF 1 Normal Valve and Switch Positions

Tag #	Description	Position
BFV-02-312	DAF Tank 1 T-02-310 Mixed Liquor Influent Control Valve	Auto
BV-02-313	Subnatant Supply to Entry Zone Isolation Valve	Closed
BFV-02-625	White Water Supply to Injection Zone Control Valve	Auto
BFV-02-165	Air Supply to Injection Zone Isolation Valve	Closed
BFV-02-166	Air Supply to Flotation Zone Isolation Valve	Closed
BFV-02-170	Air Supply to Flotation Zone Isolation Valve	Closed
BFV-02-171	Air Supply to Flotation Zone Isolation Valve	Closed
BFV-02-172	Air Supply to Flotation Zone Isolation Valve	Closed
PLV-02-301	DAF Tank 1 T-02-310 Drain Valve	Closed
PLV-02-302	DAF Tank 1 T-02-310 Drain Valve	Closed
PLV-02-303	DAF Tank 1 T-02-310 Drain Valve	Closed
PLV-02-304	DAF Tank 1 T-02-310 Drain Valve	Closed
PLV-02-305	DAF Tank 1 T-02-310 Drain Valve	Closed
BFV-02-309	Subnatant Discharge Flow Control Valve	Auto
BFV-02-310	Subnatant Discharge Flow Control Valve	Auto
PLV-02-306	TWAS Discharge Isolation Valve	Open
PLV-02-307	DAF Tank 1 T-02-310 Drain Valve	Closed
PLV-02-308	DAF Tank 1 T-02-310 Drain Valve	Closed
HS-311	Switch	Auto
LSH-02-330	DAF Tank 1 T-02-310 Level Switch Inlet Zone	Auto

Tag #	Description	Position
LIT-02-331	DAF Tank 1 T-02-310 Level Indicator Transmitter Clarification Zone	Auto
LSH-332	DAF Tank 1 T-02-310 Level Switch High Sludge Tank	Auto
LSL-333	DAF Tank 1 T-02-310 Level Switch Low Sludge Tank	Auto
AIT-02-334	DAF Tank 1 T-02-310 TSS Analyzer	Auto
BFV-02-317A	White Water Pump P02-410/420/430 Suction Isolation Valve	Open
BFV-02-400	White Water Pump P02-410 Suction Isolation Valve	Open
GLV-02-401	White Water Pump P02-410 Suction Isolation Valve	Open
BV-02-410	Air Supply Isolation Valve	Open
NV-02-411	Air Flow Regulating Valve	Open
BFV-02-406	White Water Pump P02-410 Discharge Isolation Valve	Open
BFV-02-415	White Water Pump P02-420 Suction Isolation Valve	Open
GLV-02-416	White Water Pump P02-420 Suction Isolation Valve	Open
BV-02-425	Air Supply Isolation Valve	Open
NV-02-426	Air Flow Regulating Valve	Open
BFV-02-421	White Water Pump P02-420 Discharge Isolation Valve	Open
BFV-02-430	White Water Pump P02-430 Suction Isolation Valve	Open
GLV-02-431	White Water Pump P02-430 Suction Isolation Valve	Open
BV-02-440	Air Supply Isolation Valve	Open
NV-02-441	Air Flow Regulating Valve	Open
BFV-02-436	White Water Pump P02-430 Discharge Isolation Valve	Open
BFV-02-511	Strainer STR-02-510 Inlet Control Valve	Auto
BV-02-512	Strainer STR-02-510 Drain Control Valve	Auto
GLV-02-510	Strainer STR-02-510 Drain Isolation Valve	Open
BFV-02-513	Strainer STR-02-510 Outlet Isolation Valve	Open
BFV-02-521	Strainer STR-02-520 Inlet Control Valve	Auto
BV-02-522	Strainer STR-02-520 Drain Control Valve	Auto
GLV-02-520	Strainer STR-02-520 Drain Isolation Valve	Open
BFV-02-523	Strainer STR-02-520 Outlet Isolation Valve	Open
PT-02-527	Pressure Transmitter	Auto
HS-410	Switch	Auto
HS-420	Switch	Auto
HS-430	Switch	Auto

6.6.4.4 DAF 2 Normal Valve and Switch Positions

Tag #	Description	Position
BFV-02-332	DAF Tank 2 T-02-320 Mixed Liquor Influent Control Valve	Auto
BV-02-333	Subnatant Supply to Entry Zone Isolation Valve	Closed
BFV-02-645	White Water Supply to Injection Zone Control Valve	Auto
BFV-02-365	Air Supply to Injection Zone Isolation Valve	Closed
BFV-02-366	Air Supply to Flotation Zone Isolation Valve	Closed
BFV-02-370	Air Supply to Flotation Zone Isolation Valve	Closed
BFV-02-371	Air Supply to Flotation Zone Isolation Valve	Closed
BFV-02-372	Air Supply to Flotation Zone Isolation Valve	Closed
PLV-02-371	DAF Tank 2 T-02-320 Drain Valve	Closed
PLV-02-372	DAF Tank 2 T-02-320 Drain Valve	Closed
PLV-02-373	DAF Tank 2 T-02-320 Drain Valve	Closed
PLV-02-374	DAF Tank 2 T-02-320 Drain Valve	Closed
PLV-02-375	DAF Tank 2 T-02-320 Drain Valve	Closed
BFV-02-329	Subnatant Discharge Flow Control Valve	Auto
BFV-02-330	Subnatant Discharge Flow Control Valve	Auto
PLV-02-326	TWAS Discharge Isolation Valve	Open
PLV-02-327	DAF Tank 2 T-02-320 Drain Valve	Closed
PLV-02-328	DAF Tank 2 T-02-320 Drain Valve	Closed
HS-311	Switch	Auto
LSH-02-340	DAF Tank 2 T-02-320 Level Switch Inlet Zone	Auto
LIT-02-341	DAF Tank 2 T-02-320 Level Indicator Transmitter Clarification Zone	Auto
LSH-342	DAF Tank 2 T-02-320 Level Switch High Sludge Tank	Auto
LSL-343	DAF Tank 2 T-02-320 Level Switch Low Sludge Tank	Auto
AIT-02-344	DAF Tank 2 T-02-320 TSS Analyzer	Auto
FIT-02-328	DAF Tank 1&2 T-02-310/320 Effluent Flow Measurement	Auto
BFV-02-327A	White Water Pump P02-440/450/460 Suction Isolation Valve	Open
BFV-02-450	White Water Pump P02-440 Suction Isolation Valve	Open
GLV-02-451	White Water Pump P02-440 Suction Isolation Valve	Open
BV-02-460	Air Supply Isolation Valve	Open
NV-02-461	Air Flow Regulating Valve	Open
BFV-02-456	White Water Pump P02-440 Discharge Isolation Valve	Open
BFV-02-465	White Water Pump P02-450 Suction Isolation Valve	Open
GLV-02-466	White Water Pump P02-450 Suction Isolation Valve	Open
BV-02-475	Air Supply Isolation Valve	Open
NV-02-476	Air Flow Regulating Valve	Open
BFV-02-471	White Water Pump P02-450 Discharge Isolation Valve	Open
BFV-02-490	White Water Pump P02-460 Suction Isolation Valve	Open
GLV-02-491	White Water Pump P02-460 Suction Isolation Valve	Open

BV-02-490	Air Supply Isolation Valve	Open
NV-02-491	Air Flow Regulating Valve	Open
BFV-02-486	White Water Pump P02-460 Discharge Isolation Valve	Open
BFV-02-531	Strainer STR-02-530 Inlet Control Valve	Auto
BV-02-532	Strainer STR-02-530 Drain Control Valve	Auto
GLV-02-530	Strainer STR-02-530 Drain Isolation Valve	Closed
BFV-02-533	Strainer STR-02-530 Outlet Isolation Valve	Open
BFV-02-541	Strainer STR-02-540 Inlet Control Valve	Auto
BV-02-542	Strainer STR-02-540 Drain Control Valve	Auto
GLV-02-540	Strainer STR-02-540 Drain Isolation Valve	Closed
BFV-02-543	Strainer STR-02-540 Outlet Isolation Valve	Open
PT-02-547	Pressure Transmitter	Auto
HS-410	Switch	Auto
HS-420	Switch	Auto
HS-430	Switch	Auto

6.6.5 Manual Operation

The MBBR trains and DAF units are not intended to be operated in manual. DAF Level control system makes it difficult to operate the DAF units in manual. Manual operation would require the operator to manually modulate the DAF effluent weir to maintain a more or less constant water level in the unit; this is possible if the influent flow rate is relatively constant. Other systems that can operate manually are the sludge scraper and the white-water pumps.

6.6.6 Automatic Operation

6.6.6.1 Moving Bed Biofilm Reactors (MBBR)

The system has the option to operate a single train during low loading conditions to save energy and avoid nitrification. The second MBBR train is put into idle mode with the aeration off most of the time and pulsed using an on/off timer to keep biomass alive. When this condition continues for longer durations, the MBBR train is alternated to keep biomass nourished. Alternation is accomplished through the actuated open/closed valves (KV-02-211/221) installed at the inlet of each MBBR train.

Each MBBR reactor train is split into two cells. Sieves are used to retain the carrier media in the MBBR cells, while allowing the treated effluent to flow downstream to the DAF units.

Each MBBR cell is equipped with dissolved oxygen (DO) sensors/transmitters (AIT-02-211/212/221/222) to monitor the oxygen level in the system. The desired DO set point is fixed by operator and a DO control loop is used to modulate the process air feed flow from the process

aeration blowers (B-02-110/120/130) to the cells through the actuation of modulating process air control valves (BFV-02-150/155).

For each MBBR train, the DO control loop will be based on the DO measurement in Cell1 of each train (AIT-02-211 for train 1 and AIT-02-221 for train 2). DO measurement in Cells 2 (AIT-02-212 and AIT-02-222) is for additional operator information for the monitoring of the MBBR efficiency.

A minimum air feed flow is set, which corresponds to the minimum flow required to keep MBBR media in suspension. This minimum air flow is referred to as the minimum mixing intensity. The DO probes are automatically cleaned using a blast of compressed air at fixed intervals set on a timer.

Walls separating the cells of each MBBR train are provided with penetrations at the bottom to be able to fill both cells at the same time avoiding rupture of such walls due to hydrostatic differences. Blockage of the penetrations is detected by a difference of more than 500 mm in the water level within the cells. Differences between water level readings of level switches installed in cell 1 and cell 2 of each MBBR train generate a high priority alarm.

The control of the MBBR units is closely integrated with the control of the DAF units. Each cell of each MBBR train is equipped with high water level switches (LSH-02-213/214/223/224). A high-level detection leads to a high priority alarm requiring operator intervention. High level within the MBBR reactors could be caused for instance by closed DAF inlet isolation valves (BFV-02-312/332). A high-level detection stops feed to the MBBR unit by closing the respective actuated open/closed valve (KV-02-211/221) installed at the inlet of the MBBR train.

If actuated open/close valves (KV-02-211/221) need to be closed at the same time, (this could happen when both MBBR trains cannot receive additional influent flow) and the fine screens (SCRN-01-210 or 220) and the primary filters (PF-01-310/320) must be kept operational due to high influent flows to the plant, the automated secondary emergency bypass valve (KV-01-001) will open during the high flow event allowing the primary effluent to flow to the outfall.

6.6.6.2 Dissolved Air Floatation Clarifiers

Under normal operating conditions the MBBR and DAF processes act as a treatment train with MBBR train 1 coupled with DAF unit 1 and MBBR train 2 coupled with DAF unit 2.

The DAF units use automatic level control. The control loop measures the DAF water level in the flotation zone using level indicator transmitters (LIT-02-331/341) and modulates flow to keep the level constant by adjusting the motorized modulating valves (BFV-02-309/310/329/330). Water level outside of a pre-set range (too low or too high) generates a level alarm. This condition can be caused due to a dysfunction of the flow control loop. For instance, a mechanical problem with the modulating valves requires operator attention since low water level will impact sludge scraping capacity; whereas, a high-water level will lead to water overflow into the float sludge zone.

The DAF units are also provided with high water level switches (LSH-02-332/342) to raise a high priority alarm when a severe problem occurs with the level control system. For instance, if the maximum design flow of the plant is sent to a single DAF unit with the effluent level control weir stuck in a high-level position, the sludge outlet valve closes to prevent flooding of the sludge holding tank and all the flow passes through the DAF unit and overflows the effluent weir. At this point the unit is out of service, the automated influent isolation valve (BFV-02-312/332) closes and the second DAF unit automatically starts if not already in operation.

Each DAF unit is equipped with three white water pumps. White-water for each DAF unit can be generated using either one or two white-water pumps. When influent flows are low, as measured by the DAF effluent flowmeter (FIT-02-317/327) installed at the discharge side of the DAF units, operating a single white-water pump can reduce operation cost. The second white-water pump starts when flows increase, at a threshold rate set by operator. Each DAF unit is provided with a third white-water pump as an installed standby. Activation of the standby pump requires operator intervention to open and close manual isolation valves upstream and downstream the white-water pumps.

When a single white-water pump is running, only half of the white-water injection nozzles located in the injection zone are in use. This is achieved by the automatic operation of the white-water injection valve (BFV-02-625/645).

The white-water system in each DAF unit includes the following control items:

- A white-water flowmeter (FIT-02-317/327) installed at the suction side of the white-water pumps monitors the white-water flow rate. to confirm it is always either 50% or 100% of a fixed value. Lower flow rates indicate clogging of the white-water circuit or lower pumping capacity, which could be caused by too much air inlet flow and is detrimental for process efficiency. A low flow system alarm is triggered while the system remains in operation, requiring operator investigation of the cause of the reduced flow.

- Each white-water pump (P-02-410/420/430/440/450/460) use manual air inlet valves on the air inlet to adjust air flow.

- Strainers (STR-02-510/520/530/540) are provided for each DAF unit white-water system to protect the injection nozzles from blockage. The operation of the strainers is controlled through automated valves (BFV-02-511/521/531/541). Automated strainer cleaning valves (BFV-02-512/522/532/542) are actuated on a periodic basis by timer to flush the strainers for a couple of seconds. Operator sets the timer sequence.

- The white-water pressure is to be quite constant at around 550 kPa in the white-water header. A deviation from this target means something is wrong with the white-water system operation. Pressure is monitored with pressure transmitters (PT-02-527/547) installed at the discharge side of the strainers. A high-pressure alarm is generated if for instance the white-water nozzles are beginning to clog, or if white-water injection valve is not

opening properly. A low-pressure alarm means clogged strainers, requiring cleaning by operator, or reduced pumping capacity.

The sludge scraper (DDR-02-311/321) of each DAF unit runs automatically when the DAF unit is in operation. The scraper motor runs on VFD; the scraper operation is either at constant speed set by operator or based on an on/off timer set also by operator.

The sludge collection zone of each DAF units is equipped with low (LSL-02-333/343) and high (LSH-02-332/342) level switches to monitor sludge level.

The number of DAF units in operation (one or two) is controlled according to DAF feed flow as measured by the flowmeter (FQIT-02-328) installed on the water effluent line to the outfall. At flows lower than an operator setpoint, a single unit is in operation. This is undertaken by closing the on/off automated inlet valve (BFV-02-312/332) to the second DAF unit.

Fully manual operation of the DAF units is difficult due to the modulating DAF level control system. Manual operation requires the operator to manually modulate the DAF effluent weir to maintain a more or less constant water level in the unit; this is possible if the influent flow rate is relatively constant. Other systems that can be operated manually are the sludge scraper and the white-water pumps.

6.6.7 Abnormal Operation

Under abnormal operating conditions, when one DAF unit is out of service, the other DAF unit has the hydraulic capacity to pass the peak hour flow coming from both MBBR trains with effluent water quality that could be degraded during this period.

6.7 SOLIDS HANDLING

Thickened waste activated (TWAS) sludge accumulated in the sludge collection zones of the DAF units is pumped by the TWAS pumps (P-02-610/620) to two TWAS storage tanks (T-03-630/640). The TWAS storage tanks are provided with coarse bubble aeration to keep the solids in constant suspension and prevent the sludge from going anaerobic while being stored prior to dewatering.

Belt filter press feed pumps (P-03-630/640) pump the TWAS from the storage tanks (T-03-630/640) to the belt filter press (BFP-03-650) for dewatering. Dewatering takes place three days a week for seven hours per day, at maximum month flow design conditions.

The belt filter press uses a perforated belt and mechanical compression zone to filter and separate the liquid fraction in the sludge from the solids fraction. Dewatered sludge discharges directly into a dewatered solids disposal trailer located on the lower floor of the secondary building. The filtrate (waste liquid from the dewatering process) is returned by gravity to the wet well pumping station (T-01-001) in the headworks building for primary treatment.

6.7.1 Reference Information

- Drawing P-617 TWAS Pumps and TWAS Aerated Storage Tanks P&ID
- Drawing P-618 BFP Pumps and Belt Filter Press P&ID
- Drawing P-619 Belt Filter Press Polymer Dosing System P&ID
- Drawing P-620 Belt Filter Press Polymer Dosing System P&ID
- Drawing P-609 Process Aeration Blowers P&ID

6.7.2 Normal Operation

6.7.2.1 TWAS Pumps

Each DAF unit is provided with a duty TWAS pump (P-02-610/620). The TWAS pumps are required to allow for transfer of TWAS from the sludge collection zones of the DAF units (T-02-310/320) to the TWAS storage tanks (T-03-630/640). The TWAS pumps are provided with VFDs for thickened sludge flow variation.

The control of the TWAS pumps is integrated with the control of the DAF units. The operation of the TWAS pumps is continuous as per the sludge production from the DAF units. The TWAS pumps are linked and protected by low- and high-level switches (LSL-02-333/343) installed in the in the sludge collection zones of the DAF units.

6.7.2.2 TWAS Storage Tanks

The two TWAS storage tanks (T-03-630/640) provide storage and coarse bubble aeration to the TWAS prior to dewatering. The two tanks are interconnected via a high-level opening between the tanks. TWAS can be stored in each storage tank for approximately 5 days. The tanks can be operated independently, one tank can be operated while the other is in standby if required.

Aeration to the TWAS storage tanks is provided by the process aeration blowers (B-02-110/120/130) at a rate of approximately 3.1 m^3/min at 46 kPa. The air flow to the TWAS storage tanks is controlled with an automated modulating air control valve (BFV-02-170) that opens or closes depending on the water level in the tanks monitored by level indicator transmitters (LIT-03-111/121).

6.7.2.3 Belt Filter Press Feed Pumps

Duty/standby belt filter press feed pumps (P-03-630/640) transfer TWAS from the TWAS storage tanks (T-03-630/640) to the belt filter press (BFP-03-650) for dewatering. The pumps are provided with VFDs with capacity to vary the TWAS feed flow to the BFP.

The belt filter press feed pumps are protected by the low-low (LSLL-03-113/123) and high-high (LSHH-03-112/122) water level switches installed in the TWAS storage tanks.

6.7.2.4 Belt Filter Press

The control of the belt filter press pumps (P-03-630/640), belt filter press (BFP-03-650) and belt filter press polymer dosing system (PDS-04-900) is integrated to the Plant Control System.

The operation of the belt filter press feed pumps and the belt filter press equipment is manually initiated by operator. The belt filter press equipment including, the belt filter press feed pumps, the air compressor, the water booster pumps and the belt filter press are controlled from the local control panel located on the belt filter press skid. Once the belt filter press operation is initiated, the polymer dosing pump system operation is also started.

6.7.2.5 Belt Filter Press Polymer Preparation / Dilution System

Polymer is required for the TWAS thickening operation. Dry polymer is delivered to site in 25 kg bags. A polymer preparation/dilution system (PDS-04-900) is available to automatically prepare a homogeneous polymer solution at approximately 0.5%. The system is an automatically controlled, sequentially batching unit consisting of a hopper suited with a vacuum loading station, high shear, first stage pre-wetting system, medium shear transition mixer, a mix tank with a low shear mixer and an aging tank. All the elements of the DAF polymer preparation/dilution system are controlled from the local control panel supplied with the unit. The system can be operated automatically or manually.

A polymer dosing pump skid composed of two pumps (P-04-970/980) (duty/standby) is available for polymer solution pumping from the polymer preparation/dilution system (PDS-04-900) to the

belt filter press (BFP-03-650). The polymer dosing pumps are equipped with variable frequency drives for the operator to manually adjust the polymer flow to the belt filter press during the dewatering operation. The control of the polymer dosing pump system is integrated with the controls of the belt filter press system.

Polymer solution flow to the BFP unit is measured with the flow indicator-transmitter (FIT-04-999). Dilution water lines for polymer post-dilution as required are available at the discharge header from the polymer dosing pumps conveying the polymer solution to the belt filter press.

6.7.3 Controls

Controls in the belt filter press are installed for the following devises:

- Air Compressor FVNR Starter
- Belt Wash Water FVNR Starter
- Belt Filter Press Variable Frequency Drive
- Sludge Feed Pump Variable Frequency Drive
- Polymer Pump SCR Controller
- Cake Conveyor FVNR Starter
- Conveyor Thumper FVNR Starter

6.7.4 Normal Valve and Switch Positions

6.7.4.1 TWAS Pumps and Storage Tanks Normal Valve and Switch Positions

Tag #	Description	Position
PLV-02-620A	TWAS Pump P-02-610 Discharge Valve	Open
PLV-02-640A	TWAS Pump P-02-620 Discharge Valve	Open
PLV-02-647	TWAS Pump P-02-610 Drain Valve	Closed
PLV-02-648	TWAS Pump P-02-620 Drain Valve	Closed
PLV-02-621	TWAS Storage Tanks Inlet Isolation Valve	Open
PLV-02-641	TWAS Storage Tanks Inlet Isolation Valve	Open
PLV-02-645	DAF 1 Drain to MBBR 1	Closed
PLV-02-646	DAF 2 Drain to MBBR 2	Closed
PLV-02-643	TWAS Storage Tank 1, T-03-630, Inlet Isolation Valve	Open
PLV-02-644	TWAS Storage Tank 2, T-03-640, Inlet Isolation Valve	Open

PLV-03-675	TWAS Storage Tanks Camlock Connection Isolation Valve	Closed
PLV-03-676	TWAS Storage Tanks Camlock Connection Isolation Valve	Closed
PLV-03-650	TWAS Storage Tank 2, T-03-640, Discharge Isolation Valve	Open
PLV-03-651	TWAS Storage Tank 1, T-03-630, Discharge Isolation Valve	Open
BFV-02-170	Air Supply to TWAS Storage Tanks Control Valve	Auto
BFV-02-175	Air Supply to Tank 1, T-03-630, Isolation Valve	Open
BFV-02-176	Air Supply to Tank 2, T-03-640, Isolation Valve	Open
HS-610	Switch	Auto
HS-610	Switch	Auto
LIT-03-111	TWAS Storage Tank 1, T-03-630 Level Transmitter	Auto
LSHH-03-112	TWAS Storage Tank 1, T-03-630 Level Switch High High	Auto
LSLL-03-113	TWAS Storage Tank 1, T-03-630 Level Switch Low Low	Auto
LIT-03-121	TWAS Storage Tank 2, T-03-640 Level Transmitter	Auto
LSHH-03-122	TWAS Storage Tank 2, T-03-640 Level Switch High High	Auto
LSLL-03-123	TWAS Storage Tank 2, T-03-640 Level Switch Low Low	Auto

6.7.4.2 Belt Filter Press and Pumps Normal Valve and Switch Positions

Tag #	Description	Position
PLV-03-660	Belt Filter Press Feed Cross-Connection Isolation Valve	Closed
PLV-03-661	BFP Feed Pump P-03-630 Suction Isolation Valve	Open or Closed NOTE 2
PLV-03-672	BFP Feed Pump P-03-630 Discharge Isolation Valve	Open or Closed NOTE 2
PLV-03-681	BFP Feed Pump P-03-640 Suction Isolation Valve	Open or Closed NOTE 2
PLV-03-692	BFP Feed Pump P-03-640 Discharge Isolation Valve	Open or Closed NOTE 2
PLV-03-693	TWAS Flowmeter Inlet Isolation Valve	Open
PLV-03-696	TWAS Flowmeter Outlet Isolation Valve	Open
FIT-03-695	BFP Influent flow meter	Auto
BV-03-699	BFP Sump Drain Valve	Open
BV-03-603	Non-potable Water Booster Pump Suction Isolation Valve	Open
BV-03-602	Polymer Supply Isolation Valve	Open
BV-03-1500	Non-potable Water Booster Pump Discharge Isolation Valve	Open
HS-630	Switch	Auto
HS-630	Switch	Auto
HS-800	Switch	Auto

Note 2: Only one BFP Feed Pump P-03-630 or P-03-640 will be operational during the sludge dewatering process.

6.7.5 Manual Operation

The Belt Filter press is not intended to operate in manual.

6.7.6 Automatic Operation

When the AUTO Start pushbutton is pressed, the system will begin a cascade start in the following order:

- The alarm horn will pulse for 10 seconds signaling an automatic startup is in progress.
- The belt wash water pump will start running after the horn stops.
- The cake conveyor will start.
- The BFP will start.
- The system will be in Prewash mode. This should be set for approximately two minutes to allow for pre-wetting of the filter belts and allow the tracking and tension systems to stabilize. The Prewash cycle – press to test pilot light will flash during this cycle and remain on when Prewash cycle is complete. The length of this cycle can be adjusted by operator.
- The sludge feed pump and polymer feed pump will start after prewash cycle is complete and sludge will be delivered to the BFP. The system will continue to dewater sludge as long as sludge is delivered to the BFP, the polymer dosage is correct and there is no faults.

When the AUTO STOP pushbutton is pressed, the system will begin a cascade stop in the following order:

- The sludge feed pump and polymer feed pump signals will stop immediately.
- The post wash cycle – press to test pilot light will flash during the post wash cycle.
- The post wash cycle should be set for 30 minutes or greater to allow the remaining sludge to be processed through the belt filter press.
- The belt wash waster pump will continue running to continue clean the filter during this cycle.
- The operator may hose down and clean up the area during this cycle. All material should be cleaned from the belt filter press.
- After the press has stopped the belt wash water pump, the cake conveyor will stop.
- Post wash cycle is now complete and the system is ready to begin a new cycle.

6.7.7 Abnormal Operation

When an alarm occurs in the system, pressing the ALARM SILENCE push button can silence it. If the alarm is not corrected, the system will sound a nuisance alarm chirp of the horn. This will chirp every 5 minutes until the alarm is cleared. Once the fault has been corrected, the operator presses the ALARM RESET pushbutton to clear the fault and then presses the AUTO START pushbutton to initiate a restart of the BFP. The system alarm horn will sound with each new system alarm. Each new alarm must be silenced, and the operator must take the necessary steps to correct the alarm.

In the event the Belt Filter Press has a belt tracking or belt tension fault, the belt press will stop, causing the Sludge Feed Pump and Polymer Feed Pump to stop. The Belt Wash Water will continue running. If the fault will be cleared quickly, the Belt Wash Pump may continue running. However, if the fault will take some time to correct, the pump should be shut down to avoid damaging the belts by continuously impinging the belt wash water at a single spot on the belt.

To correct a belt tracking fault, the operator must place the BELT PRESS MAINTENANCE CONTROL - JOG/RUN selector switch in the JOG position, then jog the belts forward and/or reverse using the BELT PRESS MAINTENANCE BELT JOG - REV/OFF/FWD selector switch until tracking is restored.

Reverse jogging of the belt must be done slowly (12 Hz recommended) and carefully since the tracking mechanism works in reverse when running backwards. The operator then places the JOG/RUN selector switch in the RUN position. The operator must press the ALARM RESET pushbutton to clear the fault and then press AUTO START. This will restart the cycle of operation and the Prewash cycle should be long enough to clean up residual sludge left on the belts when the fault occurred.

Each piece of equipment may be started by placing the HOA switch in HAND and pressing the START pushbutton. The START pushbuttons have no effect in AUTO mode. The safety interlocks will remain operational to protect the operator and/or the equipment, but the process interlocks are overridden in this mode. While the entire system can be run in HAND all devices must be in AUTO to run the system in AUTO mode. To fully run the system an operator would start the Compressor, the Belt Filter Press, and the Booster Pump. After the belts are wetted and the tracking system has stabilized the operator would start the sludge feed pump and the polymer system. The speed of the Press, the Sludge Pump, and Polymer Pump would then be adjusted to meet process requirements.

END OF CHAPER 6

CHAPTER 7

7. MAINTENANCE PROCEDURES AND SERVICE INFORMATION

7.1 GENERAL

To ensure uninterrupted use, equipment should be regularly inspected, tested, and proper repairs made and recorded. The objective is to minimize equipment operating problems and prevent failures by making minor or necessary repairs before major difficulties occur. The importance of record keeping cannot be over-emphasized. Good maintenance protects the owner's interest with manufacturer warranties, continuity, or maintenance despite staff turnovers and equipment reliability track record.

Environmental and operating conditions are key elements affecting proper and reliable operation of equipment. Costly repairs can be minimized if the following items are attended to:

KEEP IT CLEAN

KEEP IT TIGHT

7.1.1 Keep It Clean

Day-to day accumulation of normal atmospheric particles, lint, metallic particles form mechanical equipment cause problems with equipment over a long period of time. An accumulation affects equipment reliability and operating life. ALL equipment should be regularly cleaned.

7.1.2 Keep It Tight

All contactors and control devices operate with high speed movement. This motion creates vibration that can loosen hardware and other parts. External vibration from equipment may cause the loosening of hardware and connections in any equipment. All hardware and connections should be tightened regularly. This simple procedure takes only a small amount of time and can save hours of searching for intermittent problems. All rotating equipment such as motors are affected by vibrations. This can cause alignment problems, which can result in bearing failures.

7.1.3 Renewal Parts

Availability of parts can be a major problem these days as distributors are keeping very low inventories in a move to economize. This may make any part a long delivery item. For this reason local distributors should be contacted and parts availability assessed.

Any critical part affecting the reliability of the system should be ordered, recorded and stored by the maintenance department.

7.1.4 Parts and Equipment Ordering Procedure

During the first year of operation, the Contractor should be contacted for any replacement parts required. This will ensure that parts covered by warranty will be replaced under warranty. Failure to contact the Contractor may result in difficulties in obtaining warranty replacement.

Following the first year of operation, it is recommended that the Contractor also be contacted as many of the suppliers have a wholesale only policy. If it is necessary to purchase parts directly from the original supplier, the following information is required.

Make

Model No.

Year of Installation

Installing Contractor

Description of Part Required (i.e. Fan Bearing)

Part No. if Available

When quoting a part number contained in manufacturer's catalogue, always provide the date of the catalogue you are referring to, as these numbers are often subject to change. The equipment supplier will have the latest edition of the manufacturer's catalogue.

If the original supplier is no longer in business, contact the contractor who will be able to suggest an alternate source of supply.

7.1.5 Scheduled Preventive Maintenance Program

Scheduled preventive maintenance is an effective means to improve services from systems and equipment. Where failure of equipment can result in shutdown, scheduled preventive maintenance is an economical alternative.

<u>Causes of Equipment Failure</u>

An effective maintenance program will attempt to remove or reduce causes of equipment failure. Common failure initiating causes are:

- Loose and broken belts
- Misaligned pulleys
- Dirty or plugged filters
- Dirty or plugged coils

- Worn bearings
- Improper lubrication and oiling or lack of
- Persistent overloading
- Above normal temperatures
- Below normal temperatures
- Obstruction of ventilation by foreign objects or material
  (blockage of air, dirt on components etc.)
- Normal deterioration from age
- Severe weather conditions

The scheduled preventive maintenance suggestions presented will be applicable to most equipment, but all of the suggestions given in any one section may not be applicable to the particular mechanical component being maintained. Most of the work may be done by the building operator but some may have to be left to the discretion of the building operator.

When equipment repair is necessary, please refer to the Manufacturer Data section provided in this manual. The frequency, which the tasks should be done as indicated.

Most maintenance can be done by average personnel, with a minimum need for specialized service.

7.1.6 Maintenance Legend

D		Daily
W		Weekly
M		Monthly
SA		Semi-Annually
A		Annually
PMI		Per Manufacturer's Instructions
AN		As Necessary

7.2 GENERAL MAINTENANCE

Maintenance to be conducted as per recommendations of components suppliers.

Item	Maintenance Operations	Inspection Frequency	Remarks
Valves	Check for proper operation	A	
Actuated Valves	Follow maintenance schedule in the manufacturer's manual	PMI	
Screens	Maintenance as required by the list in the manufacturer's manual	PMI	
Primary Filters	Maintenance as required by the list in the manufacturer's manual	PMI	
Belt Filter Press	Maintenance as required by the list in the manufacturer's manual	PMI	
Blowers	Maintenance as required by the list in the manufacturer's manual	PMI	
Pumps	Follow maintenance schedule in the manufacturer's manual	PMI	
Chemical Feed Pumps	Follow maintenance schedule in the manufacturer's manual	PMI	
Tanks	Follow maintenance schedule in the manufacturer's manual	PMI	

7.3 MAINTENANCE SCHEDULE

Maintenance to be conducted as per recommendations of components suppliers. **Appendix C** provide a suggested maintenance schedule.

7.4 MAINTENANCE MANUALS

For all maintenance and inspection schedules, please refer to the manuals provided by component suppliers (**Appendix D**) and manufacturers and as shown in maintenance schedule (**Appendix C**), shop drawings (**Appendix B**) and contact service information (**Appendix F**). Maintenance manuals of the following major process components are provided in **Appendix D**.

- Raw Wastewater Pumps
- Shaftless Spiral Screens
- Salsness Primary Filters
- Process Blowers
- MBBR System
- DAF Systems
- TWAS and BFP Feed Pumps
- DAF Polymer Makeup system
- Phoenix Belt Filter Press
- Sludge Dewatering Polymer Makeup system

7.5 SPARE PARTS LIST

Spare part list is provided in **Appendix E**.

END OF CHAPTER 7

CHAPTER 8

8. TESTING AND CERTIFICATION

Mandatory testing as per water license requirements and recommended testing, to monitor the process operation of the main units of the Iqaluit wastewater treatment plant to ensure appropriate operation, are listed in **Appendix G.**

Testing records, certificates and equipment warranties are also provided in **Appendix G**.

CHAPTER 9

9. CONTACT SERVICE INFORMATION

Owner, consulting engineer, contractors and main suppliers contact service information is grouped in **Appendix F**.

APPENDIX

APPENDIX A

AS-BUILT DRAWINGS

PROVIDED IN A SEPARATE BINDER

APPENDIX B

APPROVED SHOP DRAWINGS

REVIEWED BY CONTRACTOR

Kudlik Construction Ltd.

NAME: Sandra Rousseau P.Eng

DATE: Jun 14, 2018

NORCLAIR
MÉCANIQUE DE PROCÉDÉ

TDS AND SHOP DRAWINGS

DA-MP-01-Air/vacuum release valve **Date :** 2018-06-14

INFORMATION	
Project : **WASTEWATER PLANT - IQALUIT**	
Client : Kudlik Construction Ltd. To Sandra Rousseau P.Eng./ Project Manager	Project number : **2018-062**
Contractor : Norclair inc.	Project number Norclair : **P1039**
Address : 1100, Montee Masson, Laval, QC, Canada H7E 4P2	
Project Manager : Steven Wieland	E-mail: swieland@norclair.ca
Phone: 450-688-4012 # 708	Cell.: 514-608-0619

Information, subcontractor or supplier	
Sub supplier : Les contrôles Provan Associés inc. (Dezurik)	
Contact : Mathieu Labranche	Phone : 514-332-3230

Information on the equipment or the proposed materials	
Speciality : Mechanical Process	
Equipment : 1 x Air/vacuum release valve	
Drawing reference :	
Specification reference : 40 05 23	Division :
Article :	Number Page : 3

CONSULTANT APPROVAL

No comment

STANTEC PROJECT #: Iqaluit Filter Media Replacement

SUBMITTAL # DA-MP-01 (2018-06-14)

This review by Stantec is for general conformance with the design concept of Stantec's design of the:

☑ Process ☐ Electrical
☐ Structural ☐ Other
☐ Mechanical

component(s) only and does not mean that Stantec has verified or approves the shop drawing(s). The Contractor remains solely responsible for the shop drawing(s) and this review by Stantec does not relieve the Contractor of the Contractor's responsibility for errors or omissions in the shop drawing(s) or for meeting all requirements of the contract documents. This review does not mean that Stantec approves the detailed design inherent in the shop drawing, responsibility for which shall remain with the Contractor submitting same, nor does this review mean that Stantec accepts any deviation of the shop drawing(s) from the contract documents. The Contractor is responsible for confirming all dimensions and correlating them at the job site, for all construction means, methods and techniques, and for coordination of construction work of all trades, including coordination of all shop drawings.

Stantec

☑ REVIEWED

☐ REVIEWED, AS NOTED

☐ REVISE AND RESUBMIT

☐ NOT REVIEWED

DATE June 27, 2018

BY Libin Ren

1100, Montée Masson
Laval, QC, Canada
H7E 4P2

Phone. : 450-688-4012
Fax : 450-661-6341
E-Mail : info@norclair.ca
www.norclair.ca

PROJET: CITY OF IQALUIT

Dossier no. : 4008917
Com. no. : P103901002
Compagnie : NORCLAIR INC

Vanne 1
Révision:
date : 14 juin 2018

VANNE APCO

#ITEM PROVAN	QTÉ.	DIAMÈTRE MM	MODÈLE ET DESCRIPTION	DESSINS OU BULLETINS	INSTRUCTIONS
1	1	75	**ASU,3,SCAV,F1,S2,R516,NBR,S2-S2-S2*** **VANNE A AIR COMBINE APCO POUR EAUX USEES** - Diamètre: 3 po. / 75 mm. - Corps & couvercle en acier inoxydable 316 - Connexions a bride classe 125 lbs - Orifice 5/16 pour pression 0 a 150 psi - Siège et aiguille en Buna-N - Pièces internes en acier inoxydable - Sortie standard Tag: ARV-01-100 **IMPORTANT: SVP INDIQUER LA PRESSION D'OPÉRATION.**	A59942	

Les Contrôles **PROVAN** Associés Inc.
2315 Halpern, St-Laurent, QC H4S 1S3 tél: (514) 332-3230 télécop: (514) 332-3552

BASIC VALVE DIMENSIONS IN / MM

VALVE SIZE	OUTLET OPTION	INLET ANSI FLANGE "D"	OUTLET SIZE "E"	"A"	"B"	"C"	"F"	"G"	"H"	"J"	"K"	"M"	"N"	CWP PSI	WEIGHT lbs/Kg
1.2 / 25mm	STANDARD	2"	1"	22.43 / 570	Ø 9.00 / 229	12.11 / 308	10.70 / 272	.75 / 19	4	4.75 / 121	6	3.63 / 92	.75 / 19	150	46.5 / 21
	VTO			20.92 / 531		NA									48.5 / 22
	MRC			21.37 / 543		NA									47.5 / 21.5
2 / 50mm	STANDARD	2"	2"	22.43 / 570	Ø 9.00 / 229	12.11 / 308	10.70 / 272	.75 / 19	4	4.75 / 121	6	3.63 / 92	.75 / 19	150	47 / 21.5
	VTO			20.92 / 531		NA									48 / 22
	MRC			21.37 / 543		NA									47.5 / 21.5
3 / 80mm	STANDARD	3"	3"	25.19 / 640	Ø 9.69 / 246	10.60 / 269	11.46 / 291	.75 / 19	4	6 / 152	7.5	5.0 / 127	.94 / 24	150	57.5 / 26
	VTO			22.55 / 573		NA									61 / 27.5
	MRC			22.69 / 576		NA									58 / 26.5
4 / 100mm	STANDARD	4"	4"	25.08 / 637	Ø 9.69 / 246	10.60 / 269	11.46 / 291	.75 / 19	8	7.5 / 191	9	6.19 / 157	.94 / 24	150	61.5 / 28
	VTO			22.44 / 570		NA									63 / 28.5
	MRC			22.47 / 571		NA									62 / 28
6 / 150mm	MRC	6"	6"	27.00 / 686	Ø 13.5 / 243	NA	15.3 / 389	.88 / 22	8	9.5 / 241	11	8.5 / 216	.94 / 24	150	95 / 43

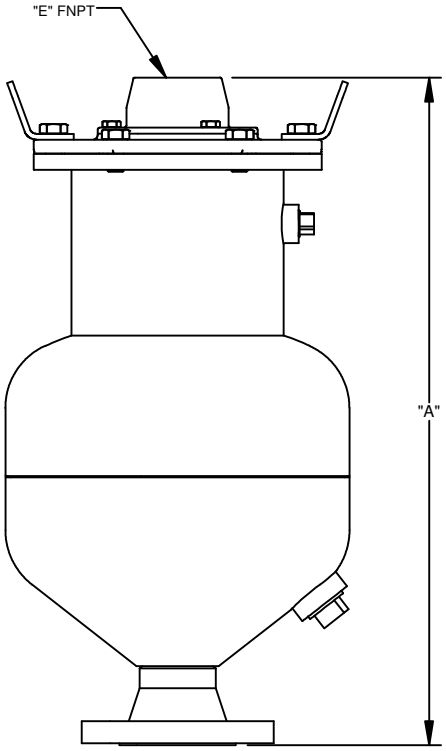

VERTICAL OUTLET
(VTO) OPTION

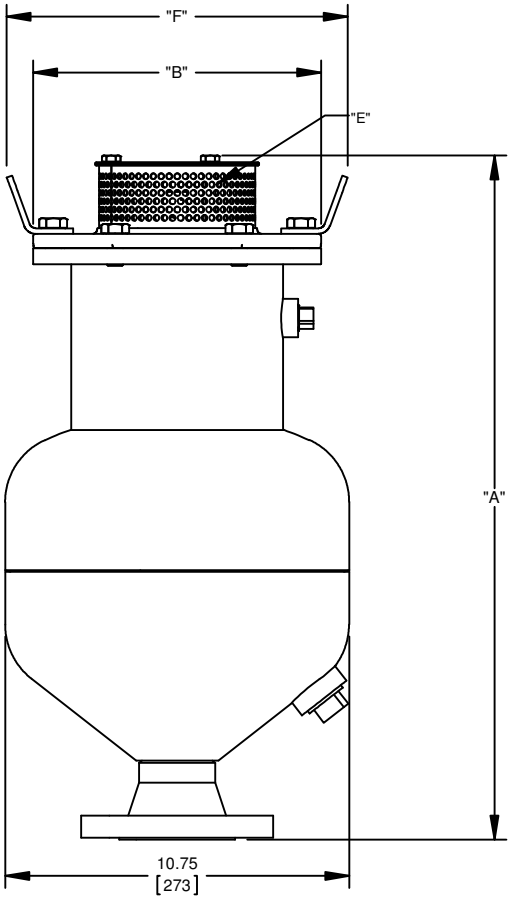

MUSHROOM CAP OUTLET
(MRC) OPTION

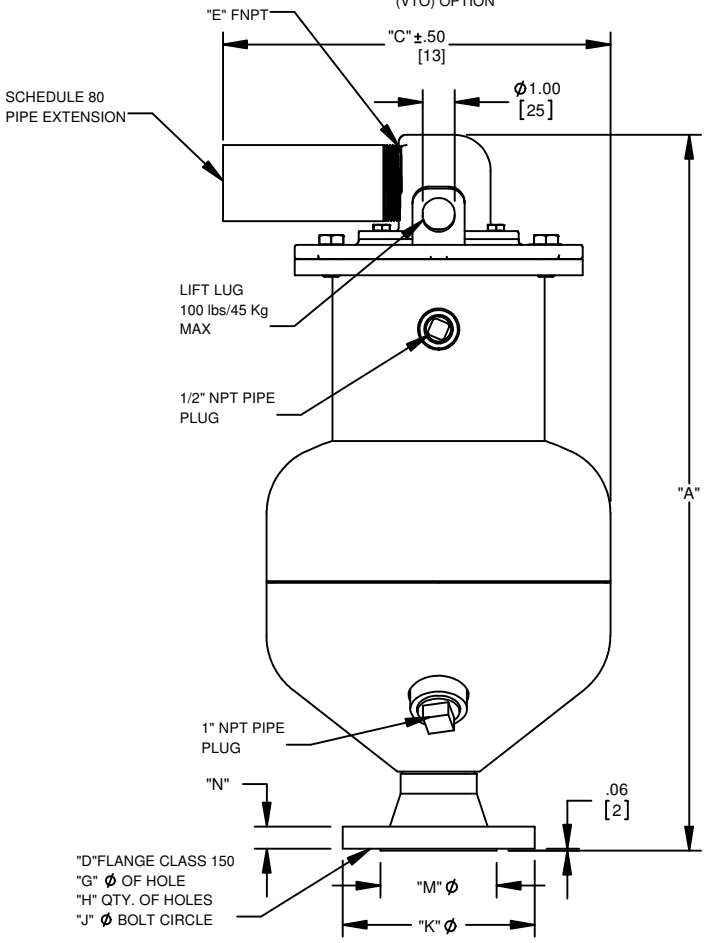

STANDARD OUTLET

G							
F							
E							
D							
C	63108	12/17/15					
B	63024	8/11/15					
A	63005	7/1/15					

DeZURIK
Sartell, MN USA 56377
www.dezurik.com

APCO ASU COMBINATION AIR VALVE- ANSI FLANGE INLET

DOCT. CODE	DRAWN	APPROVED	
C1	FHH	AK	A59942
	CHECKED AK	DATE 3/26/12	

REVIEWED BY CONTRACTOR

Kudlik Construction Ltd.

NAME: Sandra Rousseau P.Eng

DATE: Jun 19, 2018

NORCLAIR
MÉCANIQUE DE PROCÉDÉ

TDS AND SHOP DRAWINGS

DA-MP-02-Check-valve CV02 **Date :** 2018-06-19

INFORMATION	
Project : **WASTEWATER PLANT - IQALUIT**	
Client : Kudlik Construction Ltd. To Sandra Rousseau P.Eng./ Project Manager	Project number : **2018-062**
Contractor : Norclair inc.	Project number Norclair : **P1039**
Address : 1100, Montee Masson, Laval, QC, Canada H7E 4P2	
Project Manager : Steven Wieland	E-mail: swieland@norclair.ca
Phone: 450-688-4012 # 708	Cell.: 514-608-0619

Information, subcontractor or supplier	
Sub supplier : Contrôles Laurentide	
Contact : Fabrice Durocher	Phone : 514-697-9225 ext. 214

Information on the equipment or the proposed materials	
Speciality : Mechanical Process	
Equipment : Check-valve CV02 – 75, 100 and 200mm (Val-Matic)	
Drawing reference :	
Specification reference : 40 05 23	Division :
Article :	Number Page : 15

CONSULTANT APPROVAL

Valve seat to be Bronze

STANTEC PROJECT #: Iqaluit WWTP

SUBMITTAL # DA-MP-02

This review by Stantec is for general conformance with the design concept of Stantec's design of the:

☑ Process ☐ Electrical
☐ Structural ☐ Other
☐ Mechanical

Stantec

component(s) only and does not mean that Stantec has verified or approves the shop drawing(s). The Contractor remains solely responsible for the shop drawing(s) and this review by Stantec does not relieve the Contractor of the Contractor's responsibility for errors or omissions in the shop drawing(s) or for meeting all requirements of the contract documents. This review does not mean that Stantec approves the detailed design inherent in the shop drawing, responsibility for which shall remain with the Contractor submitting same, nor does this review mean that Stantec accepts any deviation of the shop drawing(s) from the contract documents. The Contractor is responsible for confirming all dimensions and correlating them at the job site, for all construction means, methods and techniques, and for coordination of construction work of all trades, including coordination of all shop drawings.

☑ REVIEWED
☐ REVIEWED, AS NOTED
☐ REVISE AND RESUBMIT
☐ NOT REVIEWED

DATE June 28, 2018

BY Libin Ren

1100, Montée Masson
Laval, QC, Canada
H7E 4P2

Phone. : 450-688-4012
Fax : 450-661-6341
E-Mail : info@norclair.ca
www.norclair.ca

Check valve CV02- 75, 100 and 200mm

Valmatic Swing Check Valve, Ductile iron body, Ductile iron disc, Fusion bonded epoxy coating, ANSI Class 150 flanges, Lever and weight configuration, 250 psi CWP rating, NSF/ANSI 372 certified lead free

VAL-MATIC®

AWWA SWING CHECK VALVE

AWWA Swing Check Valve







Oil Controlled Closure

Air Cushion

Lever & Weight

Lever & Spring



www.valmatic.com

NSF/ANSI 61 Certified for Drinking Water
NSF/ANSI 372 Certified Lead-Free

Feature Highlights

Series 7800

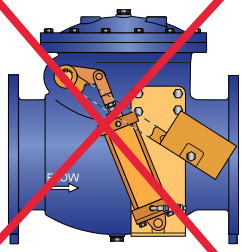

Air Cushion

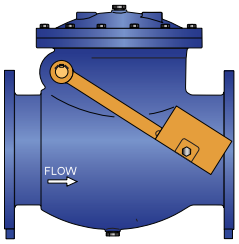

Lever & Weight

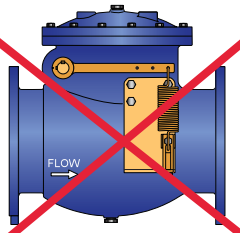

Lever & Spring

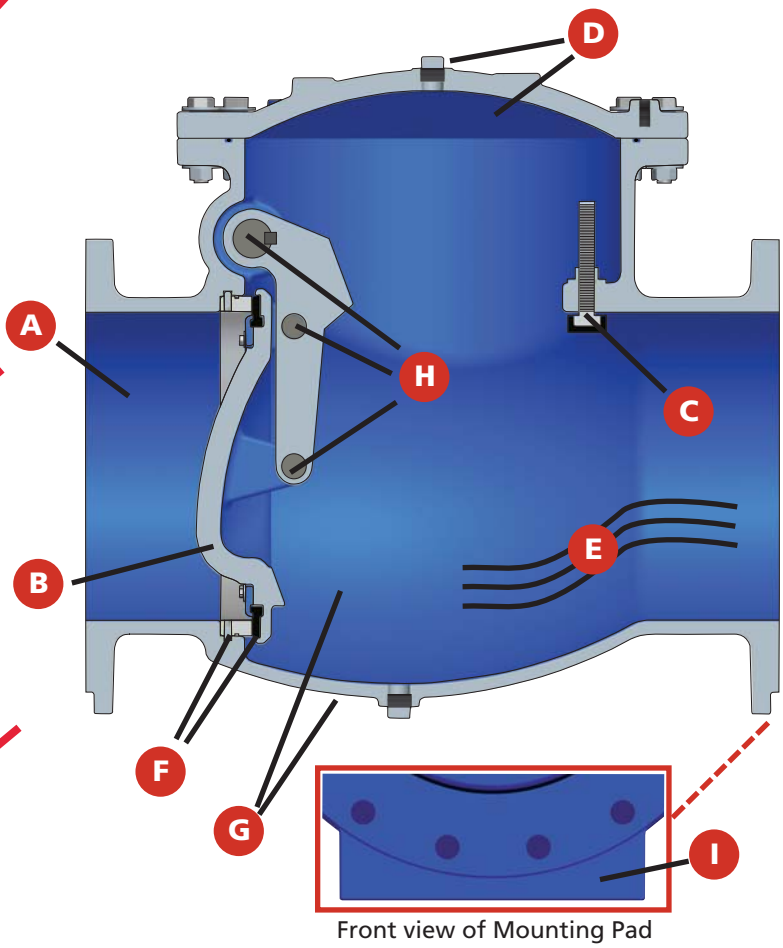

Front view of Mounting Pad

Series 7900

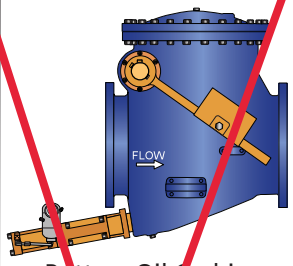

Bottom Oil Cushion

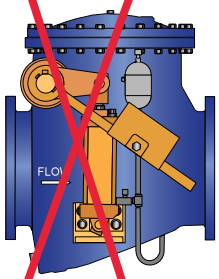

2-Stage
Side Oil Cushion

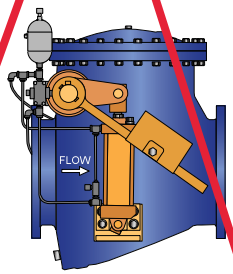

3-Stage
Side Oil Cushion

A. 100% Flow Area

Energy savings provided with 100% unrestricted flow area.

B. Disc Stabilization

The fluid dynamic convex disc provides for lift, stabilization and strength.

C. Adjustable Stop

Adjustable resilient open stop to prevent disc flutter for applications outside the typical flow ranges.

D. Full Domed Access Cover with Vent Port

Full domed access cover allows for ease of maintenance without removing the valve from the line. The vent port allows the addition of an air release valve or pressure gauge.

E. Non-Clog Design

The unrestricted full flow area combined with smooth streamline contouring allows for passage of large solids to prevent potential clogging.

F. Seating Options

The field replaceable synthetic seat, with integral O-ring, assures positive seating at high and low pressures. Body seats are stainless steel to extend the life of the valve and are also field replaceable.

When operating conditions require a metal-to-metal seat, the disc is fitted with a precision machined aluminum bronze seating surface. The disc seat seals against the field replaceable aluminum bronze body seat for reliable operation under harsh conditions.

G. Fusion Bonded Epoxy

Fusion Bonded Epoxy (FBE) is provided standard on the interior and exterior of the valve. The FBE is NSF/ANSI 61 certified and complies with AWWA C550.

H. Heavy Duty Disc Connections

Heavy duty shaft and disc retaining pins constructed of high tensile stainless steel for superior strength, wear resistance and extended life.

I. Mounting Pads

Integral mounting pads provide vertical support for ease of installation. The pads are integral to both flanges and are standard on Series 7800 valves. When necessary for installation, mounting pads can be provided on Series 7900 valves.

J. Closure Versatility

The Series 7800 AWWA Swing Check Valve is available with multiple field adjustable closure options: Air Cushion, Lever & Weight and Lever & Spring. The Series 7900 is available with either bottom or side oil cushions.

The Val-Matic Swing Check Valve incorporates many design features and characteristics that will provide energy savings, ease of maintenance and extended valve life. The valve is designed for municipal and industrial water and wastewater applications and fully complies with ANSI/AWWA C508 and MSS SP-71/MSS SP-136.

Closure Versatility

7800 Air Cushion, Lever & Weight, Lever & Spring

The Series 7800 Swing Check Valves can be supplied with Air Cushion, Lever & Weight or Lever & Spring for control of the disc closure. The Lever & Weight or Lever & Spring designs are suitable for installation in horizontal or vertical pipelines and are easily adjustable in the field. When rapid flow reversal occurs, the Swing Check Valves can be supplied with dual lever arms, weights and springs. A fully enclosed and adjustable Air Cushion can be added to the standard Lever & Weight to control valve operation and reduce water hammer.

7900 Oil Cushion

The Series 7900 Swing Check Valves include single or dual lever arms with weights and are equipped with either side or bottom oil cushions. The bottom oil cushion provides adjustable control of the final 10% of disc closure. The side oil cushion allows for independent adjustment of closure speeds in either 2- or 3- stages.

Ductile Iron Construction

Val-Matic provides standard Swing Check Valves with ductile iron construction rated to 250 psig Cold Working Pressure (CWP). Ductile iron provides greater strength and toughness than conventional gray iron materials. With ductile iron construction, the body, disc, and disc arm can safely withstand high stresses and shock loads.

Seating System

Val-Matic Swing Check Valves are offered with either drop-tight resilient seating or aluminum bronze metal seating.

Resilient Seating System

For resilient seated valves, the body is fitted with a 300 series stainless steel seat that is raised from the body to assure sealing in applications with high solids. A molded resilient seat mounted on the disc has integral O-ring sealing surfaces for drop tight sealing at high and low pressures. Both seats are secured with stainless steel fasteners and are field replaceable without removing the valve from the line. (See Figure 1)

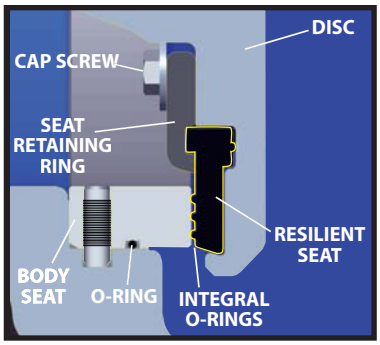

Figure 1 - Resilient Seating System

Metal Seating System

For metal seated valves, the body is fitted with an aluminum bronze seat secured to the body. The body seat mates with a second aluminum bronze seat integral with the disc. (See Figure 2)

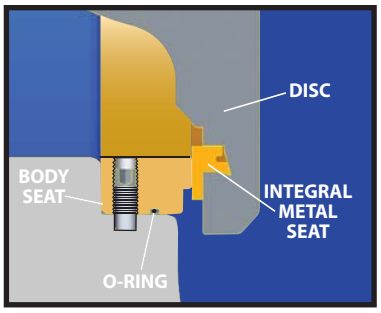

Figure 2 - Metal Seating System

Shaft Seal System

V-Type Packing

The Series 7800 Swing Check Valves are designed with an enhanced V-Type packing system to prevent overload of the packing, the most common reason for packing leakage and failure. To prevent the packing from being over tightened, the shaft seal incorporates POP™ (Packing Overload Protection) Shims with pull tabs. Adjustment is easily accomplished by removing shims as necessary utilizing the pull tab feature. (See Figure 3)

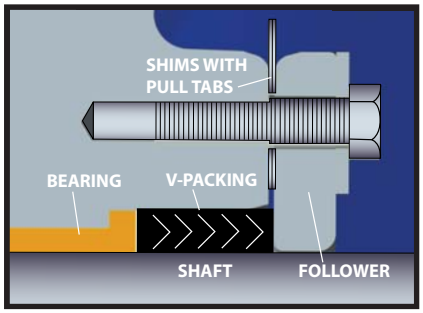

Figure 3 - Series 7800 Shaft Seal System V-Packing

O-ring Cartridge

The Series 7900 Swing Check Valves are designed with dual O-ring seals contained in a corrosion resistant cartridge to provide low torque during operation. (See Figure 4)

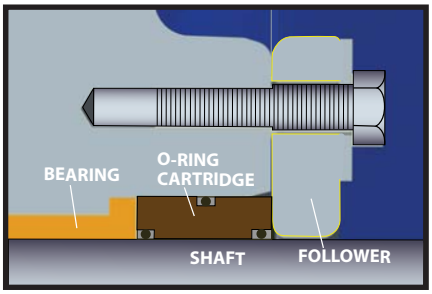

Figure 4 - Series 7900 Shaft Seal System O-ring Cartridge

Corrosion Resistance

The body and disc are fully encapsulated with NSF/ANSI 61 certified fusion bonded epoxy per AWWA C550 to prevent corrosion and provide extended service life. The shaft, disc pins, and seat hardware are constructed of stainless steel for maximum corrosion resistance even in severe service. Lead-Free Bronze bushings are provided in the body to provide smooth and reliable disc closure.

Installation Dimensions

Series 7800AC Air Cushion

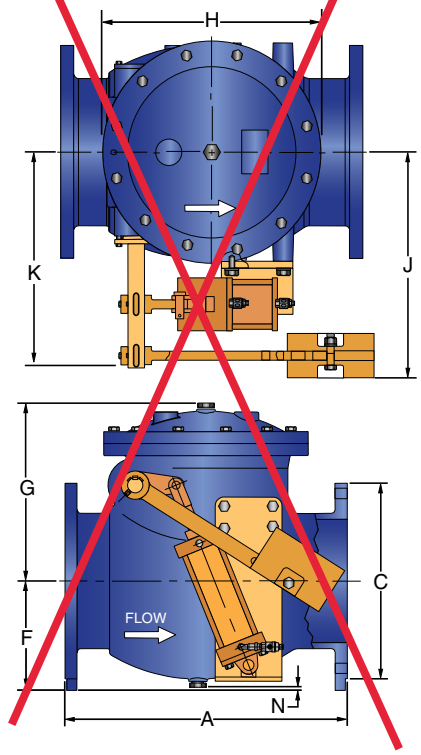

Series 7800LW Lever & Weight

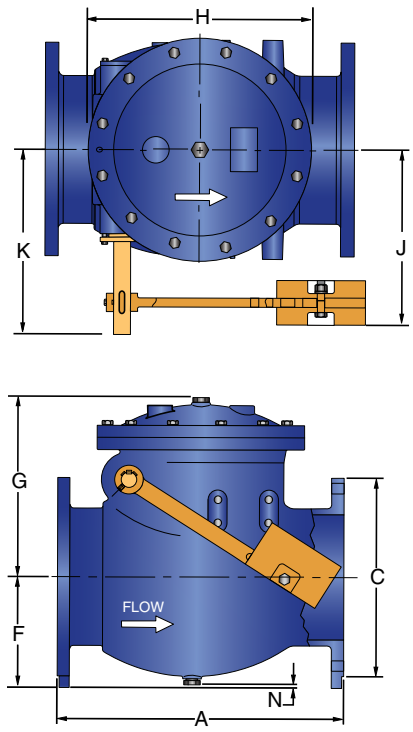

Series 7800LS Lever & Spring

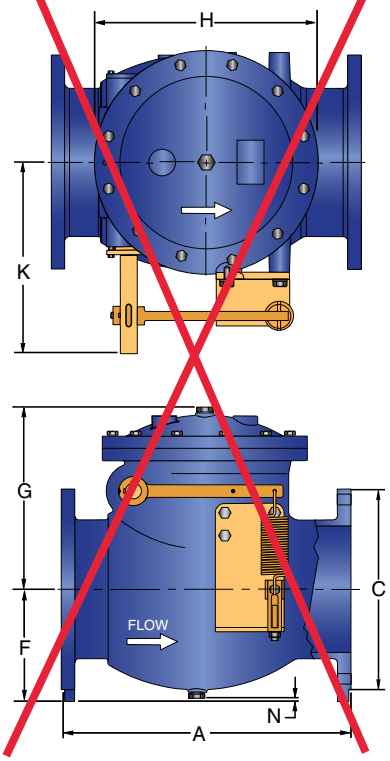

Flanges drilled to ASME B16.1 Class 125 and B16.42 Class 150

Dimensions in Inches												
Valve Size	CWP (psig)	A	C	F	G	H	J	K	N*	AC Valve Weights (lbs)	LW Valve Weights (lbs)	LS Valve Weights (lbs)
2	250	8.00	6.00	3.00	4.34	5.39	4.38	4.21	0.27	-	104	102
2 1/2	250	8.50	7.00	3.50	4.34	5.78	7.00	6.77	0.62	-	115	112
3	250	9.50	7.50	3.75	6.69	7.01	7.38	6.97	0.46	133	123	119
4	250	11.50	9.00	4.50	7.60	7.87	8.63	8.23	0.43	180	165	154
6	250	14.00	11.00	6.69	10.53	12.60	12.50	12.22	0.59	276	256	240
8	250	19.50	13.50	8.46	12.80	15.75	15.75	15.16	0.97	400	375	335
10	250	24.50	16.00	8.66	14.33	17.52	17.38	16.61	-0.13	570	535	491
12	250	27.50	19.00	10.63	17.32	19.88	17.88	17.32	0.30	850	810	756
14	250	31.00	21.00	12.50	19.96	23.88	23.13	22.63	-0.04	1114	1064	1011
16	250	36.00	23.50	13.75	21.22	26.50	25.00	24.25	-0.29	1303	1253	1177
18	250	40.00	25.00	15.00	23.22	27.88	26.38	25.63	-0.16	1571	1521	1431
20	250	40.00	27.50	16.00	24.94	30.44	28.25	27.50	-0.66	1940	1890	1764
24	250	48.00	32.00	18.50	30.34	36.63	32.75	32.13	0.90	3112	3052	2837
30	150 250	56.00	38.75	22.00	38.47	43.81	40.75	39.81	-0.87	5574	5514	5134
36	150 250	63.00	46.00	25.50	43.22	51.41	45.06	43.81	-1.89	8211	8151	7693
42	150 250	70.00	53.00	29.25	49.80	59.88	50.00	48.50	-2.38	11460	11380	10680
48	150 250	76.00	59.50	32.75	56.38	68.38	55.13	53.00	-2.63	16780	16780	15940

*Dimension "N" with negative numbers extend past bottom of integral mounting pads (flange feet).

Installation Dimensions

Series 7900B Bottom Oil Cushion

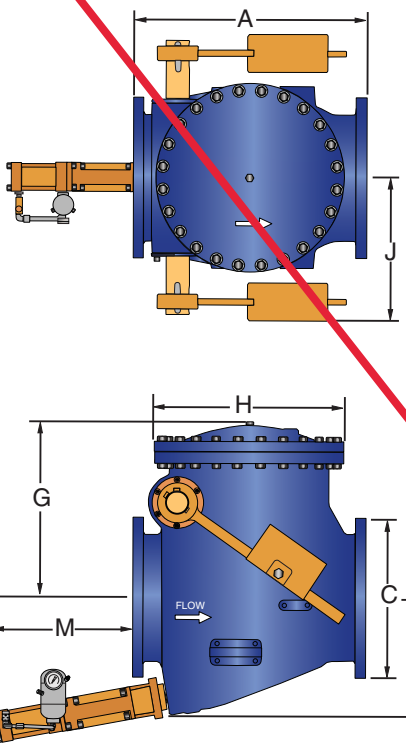

Series 7900S2 2-Stage Side Oil Cushion

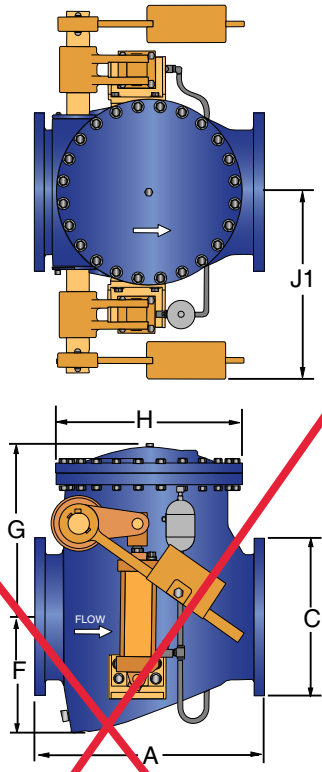

Series 7900S3 3-Stage Side Oil Cushion

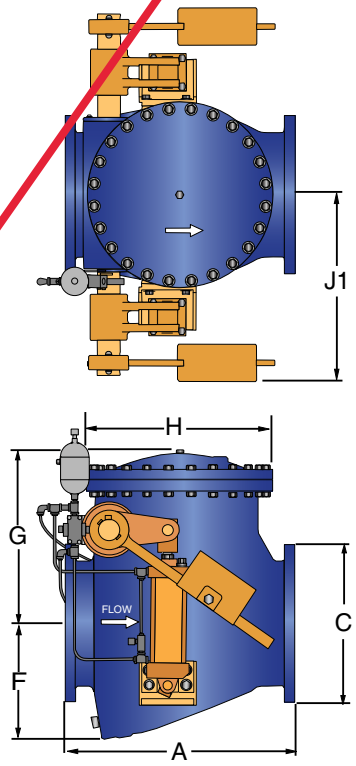

Flanges drilled to ASME B16.42 Class 150

Dimensions in Inches												
Valve Size*	CWP (psig)	A	C	F	F1	G	H	J Typ.	J1 Typ.	M	Bottom Valve Weights (lbs)	Side Valve Weights (lbs)
8	200	19.50	13.50	11.25	12.75	15.50	16.50	13.25	18.00	13.50	450	650
10	200	24.50	16.00	13.38	15.13	17.75	19.75	14.25	20.00	15.00	675	980
12	200	27.50	19.00	14.56	16.44	20.16	22.63	16.13	22.00	14.13	960	1400
14	150	31.00	21.00	17.06	19.75	22.25	25.38	18.00	26.56	18.50	1345	1780
16	150	36.00	23.50	18.50	21.25	26.50	28.25	21.63	28.75	17.00	1840	2450
18	150	40.00	25.00	19.25	23.00	28.00	30.88	23.13	31.13	21.00	2360	3130
20	150	40.00	27.50	20.50	24.25	30.25	32.50	24.63	32.63	21.50	2990	3625
24	150	48.00	32.00	24.88	28.50	36.25	38.75	29.50	39.50	24.38	4885	6100
30	150	56.00	38.75	29.50	34.06	38.50	43.81	32.00	-	26.56	6735	-
36	150	63.00	46.00	34.56	39.63	45.00	50.50	36.00	-	32.00	10300	-
42	150	70.00	53.00	40.00	44.13	51.50	56.75	40.00	-	37.50	14800	-
48	150	76.00	59.50	45.13	48.00	57.63	62.50	43.25	-	42.50	20000	-

*Valve Sizes 8”-12” only have a single lever and weight.

Principle of Operation

Oil Cushion Valves

The Series 7900 Oil Cushion Swing Check Valves are ideal in any number of installation configurations including single or multiple pump systems to reduce slamming and reduce system pressure surges. The Series 7900 Check Valve is offered with optional bottom or side oil cushions to aid in disc closure in pump systems even after a power failure. The oil cushions include high pressure hydraulic oil cylinders, flow control valves, and full-rated disc connections. With oil cushions, the movement of the disc is precisely controlled. An adjustable flow control valve regulates the flow of hydraulic oil out of the cylinder, which in-turn controls movement of the disc closure.

Series 7900B Bottom Oil Cushion

In high pressure applications where rapid flow reversals are expected, the last 10% of closure can be controlled to prevent slamming by using a Bottom Oil Cushion consisting of a hydraulic cylinder and snubber rod that contacts the valve disc near the end of travel. When there is flow through the valve, the valve disc lifts off of the snubber rod and opens normally as the flow rate increases. When the valve is open, the air pressure in the accumulator extends the cylinder which pushes the snubber rod into the valve body. When flow stops, the disc closes rapidly through 90% of its travel and then strikes the snubber rod. The last 10% of closure is then controlled in 1-3 seconds by the hydraulic cylinder as the oil flow is metered through the adjustable flow control valve.

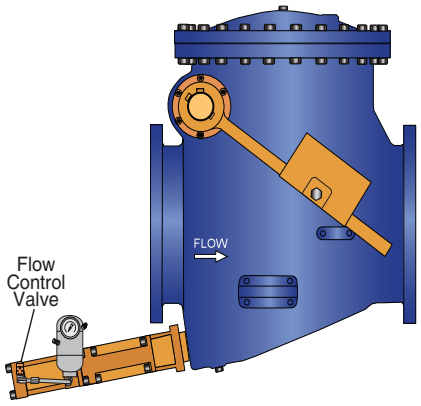

Series 7900S2 2-Stage Side Oil Cushion

When control of the full valve closure is desired to reduce system surges, a 2-Stage Oil Cushion can be used consisting of a high pressure hydraulic cylinder and lever that is directly attached to the shaft. When there is flow through the valve, the valve opens normally while the shaft lever extends the cylinder. When flow stops, the lever contracts the cylinder and the speed of closure is controlled in 5-30 seconds by the oil flow through the adjustable flow control valve for Stage 1. During the last 10% of travel, the closure is controlled in 1-3 seconds using the internal cylinder cushion adjustment for Stage 2.

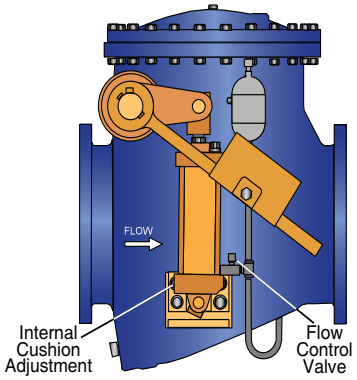

Series 7900S3 3-Stage Side Oil Cushion

For long pipelines, when control of full valve travel is desired in multiple stages, a 3-Stage Oil Cushion can be used to control the closing speed of the Check Valve at three rates. The 3-Stage Oil Cushion consists of a high pressure hydraulic cylinder, a lever that is directly attached to the shaft, and a cam-operated 2-way directional valve that is used to direct flow to a flow control valve. When there is a flow through the Check Valve, the valve opens normally while the hinge pin lever extends the cylinder. When flow stops, the Check Valve closes rapidly while the lever contracts the cylinder for Stage 1. When the valve travels to the 50% position (adjustable), the 2-way valve closes, and the oil flow from the cylinder is directed through the adjustable flow control valve in 5-30 seconds for Stage 2. During the last 10% of travel, the closure is controlled in 1-3 seconds using the internal cylinder cushion adjustment for Stage 3.

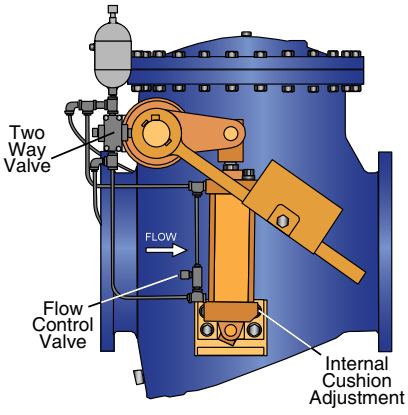

Application Chart

A variety of closure mechanisms allows selection of the correct Swing Check Valve for every application. This application chart illustrates the range of use for the various Swing Check configurations.

Pumping systems with low static head and gradual pipeline flow deceleration may be best served by a conventional lever & weight or air cushion Swing Check. Higher static head applications benefit from a rapid spring assisted closure. When severe deceleration is present in a pumping system, oil cushioned closure provides an economical and reliable means of preventing surges associated with transients while greatly minimizing the potential for check valve slam. The adjustability of closure times on oil cushion Swing Check Valves allows operation to be tailored for each application.

RECOMMENDED VALVE SELECTION

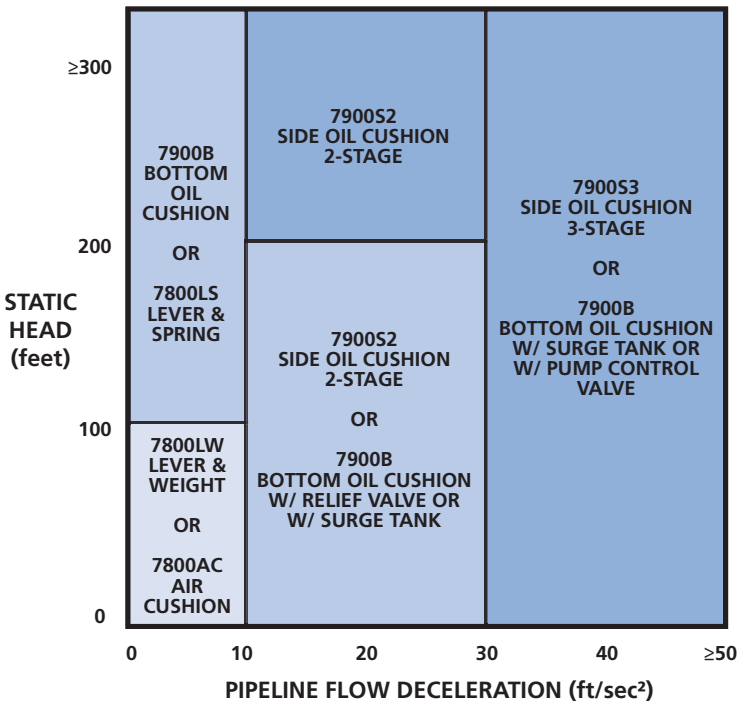

Headloss Chart

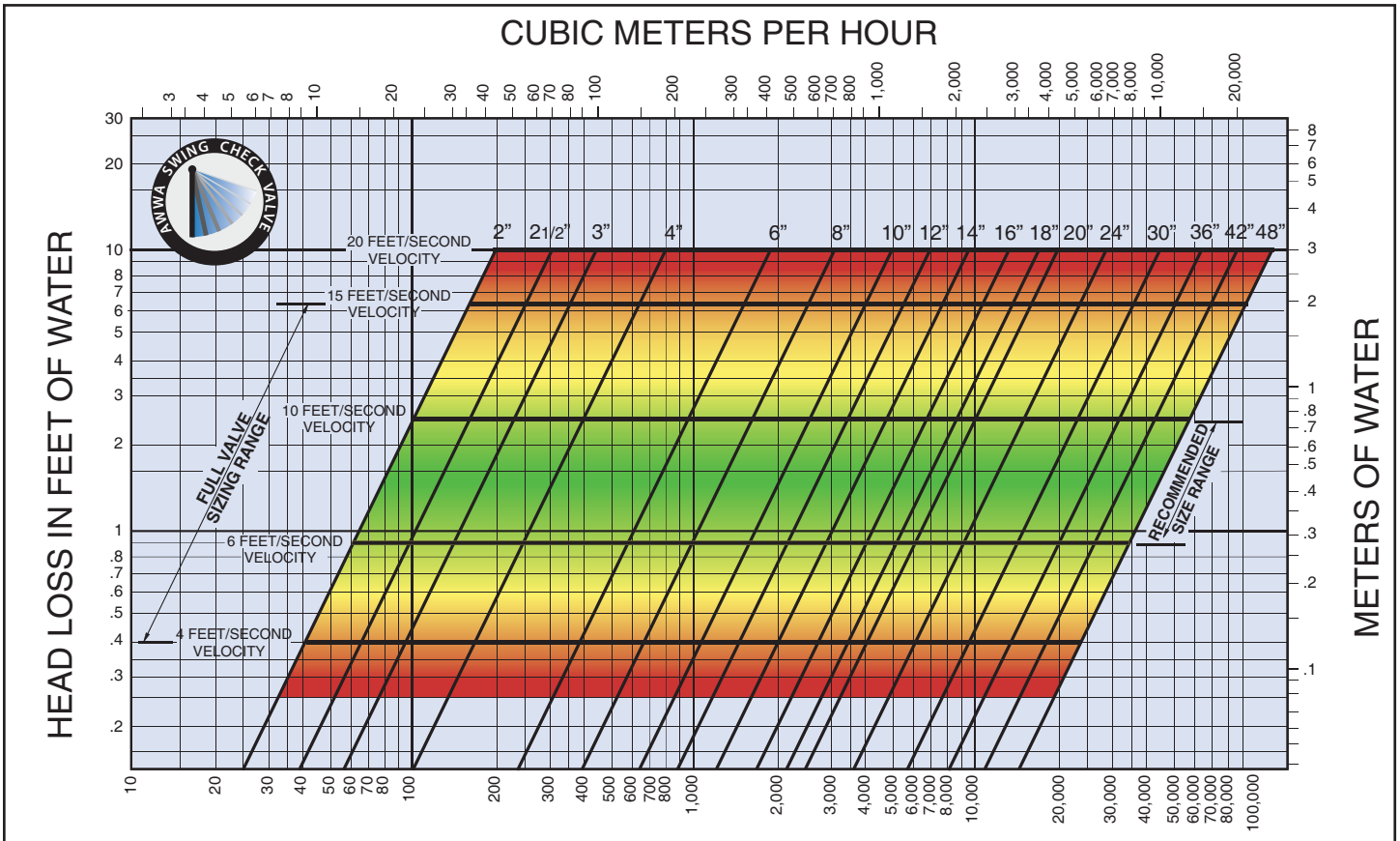

Flow Coefficients

Size	2	2 1/2	3	4	6	8	10	12	14	16	18	20	24	30	36	42	48
Cv	95	150	210	380	850	1515	2370	3410	4640	6060	7670	9470	13,600	21,300	30,700	41,750	54,550

Pressure Ratings

MAXIMUM PRESSURE RATINGS				
SERIES	DESCRIPTION	SIZE RANGE	FLANGE CONNECTION	CWP (psig)
7700AC	Air Cushion	30" - 48"	Class 125 Gray Iron	150
7700LW	Lever & Weight	30" - 48"		
7700LS	Lever & Spring	30" - 48"		
7800AC	Air Cushion	3" - 48"	Class 150 Ductile Iron	250
7800LW	Lever & Weight	2" - 48"		
7800LS	Lever & Spring	2" - 48"		

MAXIMUM PRESSURE RATINGS				
SERIES	DESCRIPTION	SIZE RANGE	FLANGE CONNECTION	CWP (psig)
7900B	Lever & Weight Bottom Oil Cushion	8" - 12"	Class 150 Ductile Iron	200
		14" - 48"		150
7900S	Lever & Weight Side Oil Cushion	8" - 12"	Class 150 Ductile Iron	200
		14" - 24"		150

Materials of Construction

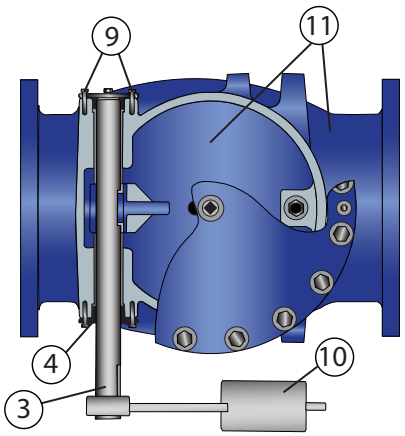

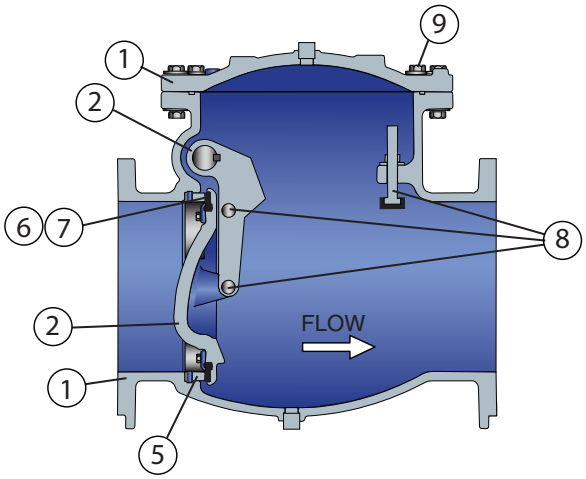

Assy No.	Component	Standard	Optional
1	7700 Body and Cover 30"- 48"	Gray Iron ASTM A126 Class B	N/A
	7800 Body and Cover 2" - 48"	Ductile Iron ASTM A536 Gr 65-45-12	N/A
	7900 Body and Cover 8" - 48"	Ductile Iron ASTM A536 Gr 65-45-12	N/A
2	Disc and Arm	Ductile Iron ASTM A536 Grade 65-45-12	N/A
3	7800 Shaft	T304 Stainless Steel	N/A
	7900 Shaft	T630 Stainless Steel	N/A
4	7800 Shaft Seal	V-Packing Buna-N	N/A
	7900 Shaft Seal	O-ring Buna-N	N/A
5	Removable Body Seat	Stainless Steel ASTM A276 Type 304 or Aluminum Bronze C95400	N/A

Assy No.	Component	Standard	Optional
6	Molded Resilient Seat	Buna-N	EPDM
7	Metal Integral Seat	Aluminun Bronze C95400	N/A
8	7800 Internal Hardware	T304 Stainless Steel	T316 Stainless Steel
	7900 Internal Hardware	T630 Stainless Steel	T316 Stainless Steel
9	External Hardware 2"- 12"	T304 Stainless Steel	T316 Stainless Steel
	External Hardware 14"- 48"	Alloy Steel, Plated	T316 Stainless Steel
10	External Lever(s)	Ductile Iron ASTM A536 Gr 65-45-12	N/A
11	Internal/External Coating System	Fusion Bonded Epoxy NSF/ANSI 61	N/A

Accessories/Options

Limit Switch

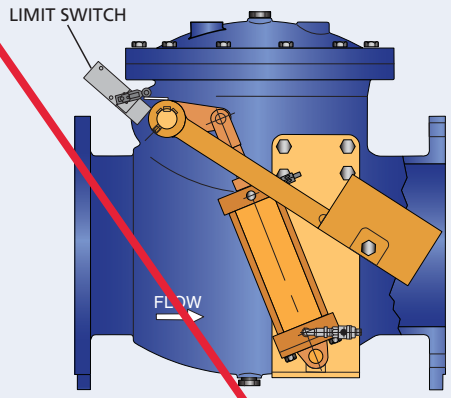

Limit Switch available to indicate open and/or closed valve position for offsite monitoring.

Air Valve Vent & Drain Valve

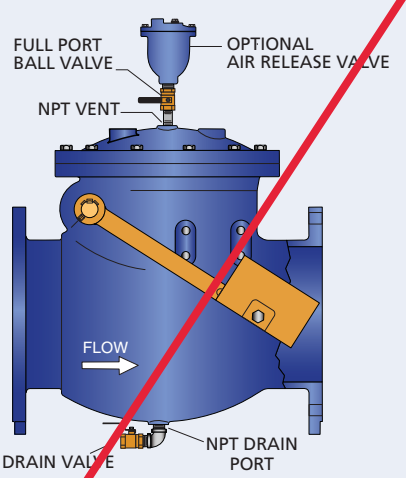

An air release valve prevents the collection of air in the valve and downstream piping to prevent water hammer and system flow restrictions. The drain facilitates maintenance and the removal of silt.

Reverse Mount

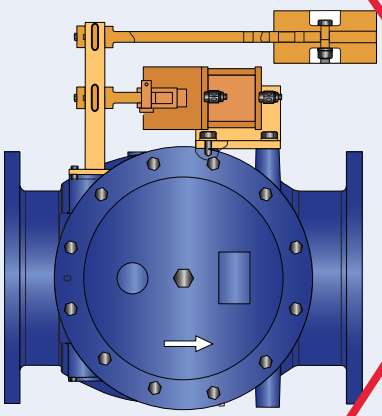

Reverse mount is used to accommodate specific field conditions.

Vertical Installation

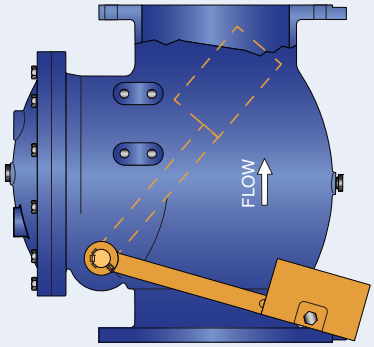

Vertical installation can accommodate specific field conditions and flow up applications.

Safety Guard

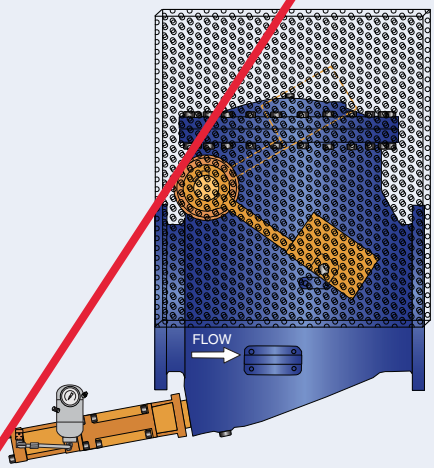

The Safety Guard meets OSHA requirements and can be supplied for all lever weight and cushion assemblies.

Dual Weights

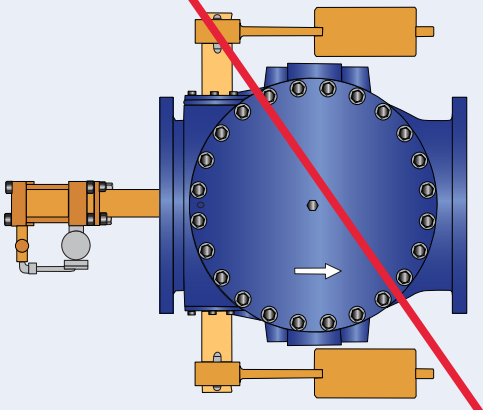

Dual weights are availabe to provide rapid closure.

Series 7800 Specifications

SCOPE

1.1 This specification covers the design, manufacture, and testing of 2 in. (50 mm) through 48 in. (1200 mm) Swing Check Valves suitable for cold working pressures of 250 psig.
1.2 The check valve shall be of the full flow body type, with a domed access cover and vent port.
1.3 The check valve shall be capable of accepting air cushion, lever and weight or lever and spring.

STANDARDS AND APPROVALS

2.1 The valves shall be designed, manufactured and tested in accordance with American Water Works Association Standard ANSI/AWWA C508 and in accordance with Manufacturers Standardization Society Standard Practice MSS SP-71 or MSS SP-136.
2.2 The valves used in potable water service shall be certified to NSF/ANSI 61, Drinking Water System Components – Health Effects, and certified to be Lead-Free in accordance with NSF/ANSI 372.
2.3 Manufacturer shall have a quality management system that is certified to ISO 9001 by an accredited, certifying body.

CONNECTIONS

3.1 The Valves shall be provided with flanges drilled in accordance with ASME B16.1, Class 125 iron flanges or ASME B16.42, Class 150 for ductile iron flanges.

DESIGN

4.1 The valve body shall be full flow equal to nominal pipe diameter at all points through the valve and shall be equipped with a threaded adjustable open stop. The body seat shall be O-ring sealed and field replaceable without removing the valve from the line. The end flanges shall contain integrally cast mounting pads.
4.2 The top access port shall be full size, allowing removal of the disc without removing the valve from the line. The access cover shall be domed in shape to provide flushing action over the disc for operating in lines containing high solids content.
4.3 The disc shall be of one-piece construction and connected to the shaft with a disc arm and two pivot pins to provide pivot action to allow self-adjusting seating at all pressures. 14" and larger discs shall be convex shape for lift, stabilization and strength.
4.4 When specified, the disc seat shall be resilient with integral O-ring type sealing surface for drop tight shut-off at high and low pressures and for easy replacement in the field without removing the valve from the line.
4.5 When specified, metal seated valves shall have aluminum bronze seats.
4.6 The shaft seals shall consist of V-type packing in a fixed gland with an adjustable follower designed to prevent over compression of the packing and to meet design parameters of the packing manufacturer. Removable, slotted shims shall be provided under the follower flanges to provide for adjustment and prevent over loading of the packing.
4.7 When specified, the valve shall be factory equipped with a lever and weight assembly. The lever shall be equipped with three holes for adjusting the bolted weight assembly. When the valve is closed, the lever and weight shall be located 30 degrees below horizontal.
4.8 When specified, the valve shall be factory equipped with a lever and air cushion assembly mounted between the weight assembly and the valve body. The air cushion assembly shall consist of a clevis mounted tie-rod type closed cylinder with speed control valves.
4.9 When specified, the valve shall be factory equipped with a lever and spring assembly. The spring shall be mounted to a bracket on the side of the valve body with a bolt assembly to adjust the spring tension.

MATERIALS

5.1 The valve body, cover and disc shall be constructed of ASTM A536 Grade 65-45-12 ductile iron for sizes 2 in. (50 mm) through 24 in. (600 mm) and ASTM A126 class B, gray iron for sizes 30 in. (800mm) through 48 in. (1200mm), with optional body material ASTM A536 Grade 65-45-12 ductile iron.
5.2 The exterior and interior of the valve shall be coated with an NSF/ANSI 61 approved fusion bonded epoxy coating.
5.3 The removable body seat shall be constructed of ASTM A276, Type 304 stainless steel.
5.4 The removable resilient seat shall be precision molded Buna-N (NBR), ASTM D2000-BG. When specified, optional seat material includes EPDM.
5.5 The disc, arm, and external levers shall be ductile iron.

OPTIONS

6.1 A pre-wired limit switch shall be provided (when specified) to indicate open/closed position to a remote location. The mechanical type limit switch shall be activated by the external arm and rated for NEMA 4, 6, or 6P and shall have U.L. rated 5 amp, 125 or 250 VAC contacts.
6.2 When specified, the lever and weight assembly shall be enclosed within a removable safety guard constructed of perforated metal for visibility.

MANUFACTURE

7.1 Manufacturer shall demonstrate a minimum of five (5) years' experience in the manufacture of swing check valves.
7.2 All valves shall be hydrostatically and seat tested per AWWA C508 to demonstrate leakage criteria and structural integrity. When requested, the manufacturer shall provide test certificates, dimensional drawings, parts list drawings, and operation and maintenance manuals.
7.3 Swing Check Valves shall be Series 7800 (resilient seated) or 7800M (metal seated) and equipped with AC (air cushion), LW (lever and weight), or LS (lever and spring) as manufactured by Val-Matic® Valve & Mfg. Corporation, Elmhurst, IL USA or approved equal.

Series 7900 Specifications

SCOPE

1.1 This specification covers the design, manufacture, and testing of 8 in. (200 mm) through 48 in. (1200 mm) Swing Check Valves suitable for water and wastewater service.

1.2 The Cold Working Pressure rating of the valves shall be 200 psig for 8 in. (200 mm) to 12 in. (300 mm) sizes and 150 psig for 14 in. (350 mm) and larger.

1.3 The Swing Check Valve shall be of the full waterway body type, with a drain port and domed access cover with vent port.

1.4 A Bottom Oil Cushion with Lever and Weight shall be provided on sizes 8 in. (200 mm) to 48 in. (1200 mm) when specified.

1.5 A 2-Stage or 3-Stage Side Oil Cushion and Lever and Weight shall be provided on sizes 8 in. (200 mm) to 24 in. (600 mm) when specified.

STANDARDS AND APPROVALS

2.1 The valves shall be designed, manufactured and tested in accordance with American Water Works Association Standard ANSI/AWWA C508 and in accordance with Manufacturers Standardization Society Standard Practice MSS SP-136.

2.2 The valves used in potable water service shall be certified to NSF/ANSI 61, Drinking Water System Components - Health Effects, and certified to be Lead-Free in accordance with NSF/ANSI 372.

2.3 Manufacturer shall have a quality management system that is certified to ISO 9001 by an accredited, certifying body.

CONNECTIONS

3.1 The Valves shall be provided with flanges drilled in accordance with ASME B16.42, Class 150 for ductile iron flanges.

DESIGN

4.1 The valve body shall be full flow equal to nominal pipe diameter area at all points through the valve and shall be equipped with a threaded adjustable open stop. The body seat shall be O-ring sealed and field replaceable without removing the valve from the line.

4.2 The top access port shall be full size, allowing removal of the disc without removing the valve from the line. The access cover shall be domed in shape to provide flushing action over the disc for operating in lines containing high solids content.

4.3 The disc shall be of one-piece construction and connected to the shaft with a disc arm and two pivot pins to provide pivot action to allow self-adjusting seating at all pressures. Discs shall be convex shape for lift, stabilization and strength.

4.4 When side oil cushions are specified, the shaft and keys shall be sized to withstand the full differential pressure torque.

4.5 When specified, metal seated valves shall have aluminum bronze seats.

4.6 When specified, resilient seated valves shall have a disc seat of a resilient material with integral O-ring type sealing surface for drop tight shut-off at high and low pressures and for easy replacement in the field without removing the valve from the line.

4.7 The shaft seals shall be a replaceable lead free bronze O-ring cartridge type.

4.8 Valves shall be factory equipped with a lever and weight assembly. The lever shall be equipped with three holes for adjusting the bolted weight assembly. The 8 in. oil cushion valves shall have one weight and lever assembly; 14 in. and larger valves shall be factory equipped with two lever and weight assemblies. When the valve is closed, the lever and weight shall be located 30 degrees below horizontal.

4.9 A bottom oil cushion shall be factory installed to provide hydraulic control of the final 10% of valve closure and reduce water hammer normally associated with rapid flow reversal conditions on pump shut down. The cushion shall consist of a high pressure hydraulic cylinder, adjustable external flow control valve, pressurized oil reservoir and piping designed to control the closing speed of the last 10% of travel in 1-5 seconds. A cushion spacer which connects the cylinder to the valve shall have an air gap to prevent hydraulic fluid from entering the valve and contaminating the water system. A snubber rod fitted with O-ring seals and rod wiper scrapers shall make contact with the lower portion of the disc during closure.

4.10 When specified, on side oil cushion valves as 2-stage oil cushion, the control function is as follows: During closure, the oil cylinder controls the speed of closure. As the check valve closes, oil from the bottom port of the cylinder is controlled by the Flow Control valve, typically 5-30 seconds. During the last 10% of travel, the closure is controlled using the internal cushion adjustment, typically 1-3 seconds.

4.11 When specified on side oil cushion valves as 3-stage oil cushion, the control function is as follows: During closure, the oil cylinder controls the speed of closure in three stages. As the check valve closes, oil from the bottom port of the cylinder flows freely through the 2-way valve allowing the valve to close rapidly, typically 1 to 2 seconds. When the valve travels to the 50% closed position (adjustable), the 2-way valve closes. The oil now is controlled by the Flow Control Valve, typically 5-30 seconds. During the last 10% of travel, the closure is controlled using the internal cushion adjustment, typically 1-3 seconds.

MATERIALS

5.1 The valve body, cover and disc shall be constructed of ASTM A536 Grade 65-45-12 ductile iron.

5.2 The shaft shall be ASTM A276, T304 stainless steel for bottom oil cushion valves and ASTM A564 T630 H900 alloy stainless steel for side oil cushion valves.

5.3 The exterior and interior of the valve shall be coated with an NSF/ANSI 61 approved fusion bonded epoxy coating.

5.4 The removable body seat and integral metal disc seat shall be constructed of aluminum bronze C95400.

5.5 The optional resilient seated disc seat shall be precision molded Buna-N (NBR), ASTM D2000-BG. When specified, optional seat material includes EPDM.

5.6 The disc arm and external levers shall be ASTM A536 Grade 65-45-12 ductile iron.

MANUFACTURE

6.1 Manufacturer shall demonstrate a minimum of five (5) years' experience in the manufacture of swing check valves.

6.2 All valves shall be hydrostatically and seat tested per AWWA C508 to demonstrate zero leakage and structural integrity. When requested, the manufacturer shall provide test certificates, dimensional drawings, parts list drawings, and operation and maintenance manuals.

6.3 Swing Check Valves shall be Series 7900B and 7900S as manufactured by Val-Matic® Valve & Mfg. Corporation, Elmhurst, IL USA or approved equal.

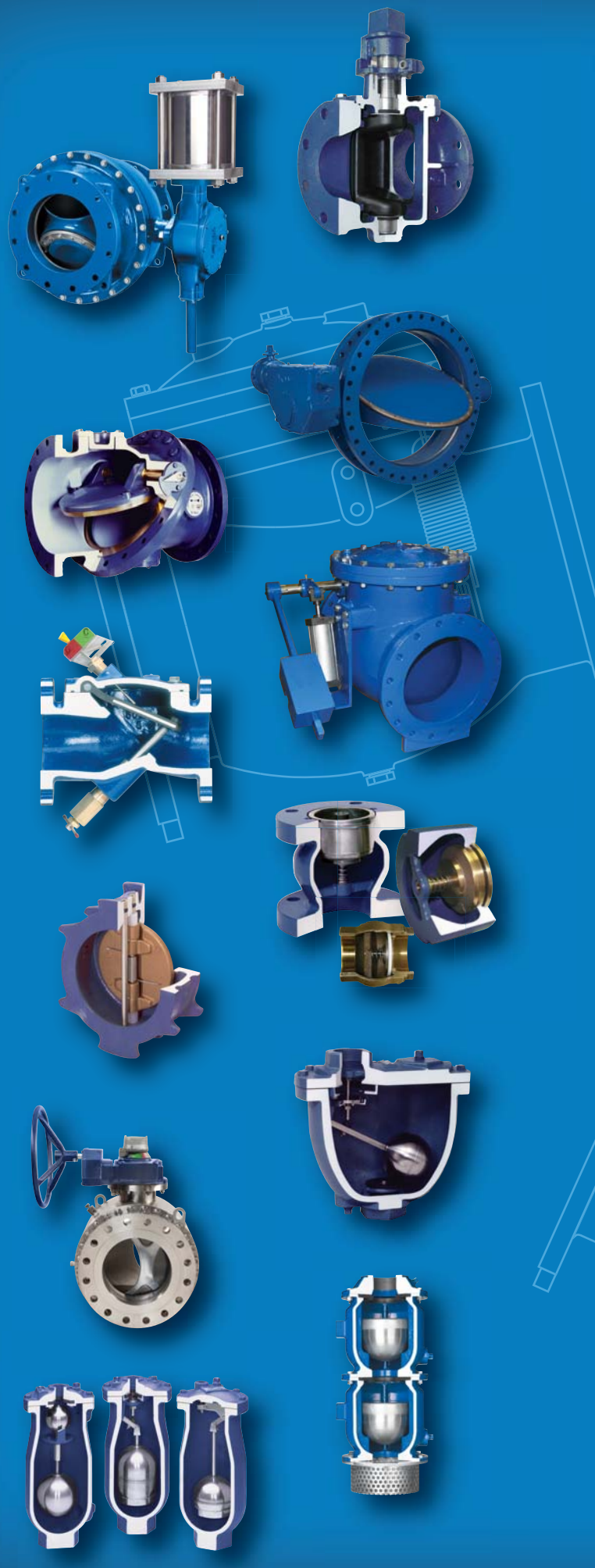

VAL-MATIC®

Val-Matic's quality of design and meticulous workmanship has set the standards by which all others are measured. Quality design features such as the **Ener•G® Ball Valve** with its energy efficient design, fusion bonded epoxy and adjustable resilient seating....**Cam-Centric® Plug Valves** have more requested features than any other eccentric plug valve....**American-BFV® Butterfly Valves** include a field replaceable seat without the need for special tools....**Tilted Disc® Check Valves** with high strength and wear resistant aluminum bronze trim as standard....**Silent Check Valves** featuring combined resilient/metal-to-metal seating....**Sure Seal Foot Valves** provided with a heavy duty stainless steel screened inlet....**Swing-Flex® and Surgebuster® Check Valves** designed with an unrestricted full flow area....**Dual Disc® Check Valves** utilizing stabilized components to provide extended life....**Air Release, Air/Vacuum and Combination Air Valves** provided standard with Type 316 stainless steel trim....**VaultSafe®** family of products includes the **FloodSafe® Inflow Preventer**, **FrostSafe®** two-way damper and the **VentSafe®** vent pipe security cage. The **QuadroSphere® Trunnion Ball Valve** features a unique ball design with recessed surfaces creating additional flow paths to provide a self-cleaning action and reduced wear and torque.

Val-Matic is totally committed to providing the highest quality valves and outstanding service to our customers. Complete customer satisfaction is our goal.

Make the Change to Quality!

Specify VAL-MATIC®

Val-Matic Valve and Manufacturing Corp.
905 Riverside Drive, Elmhurst, IL 60126
Phone: 630-941-7600 Fax: 630-941-8042
www.valmatic.com
valves@valmatic.com

Copyright © 2015 Val-Matic Valve & Mfg. Corp.
ISO 9001:2008 certified company

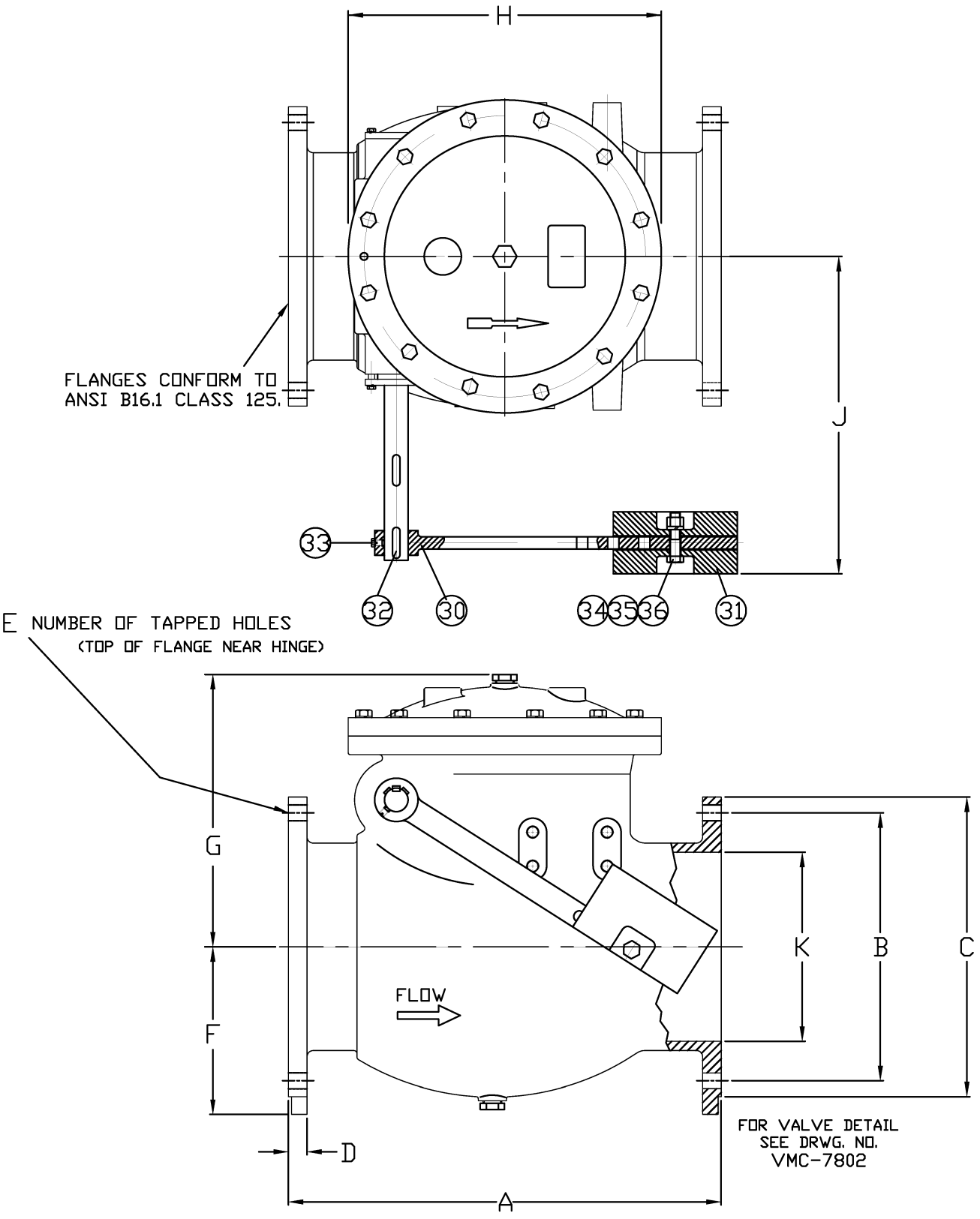

DRAWING DEPICTS 12" VALVE SIZE TO SCALE.
SEE DRAWING NO. VM-7802LW-M FOR STANDARD MATERIALS OF CONSTRUCTION.

SWING CHECK VALVE WITH LEVER AND WEIGHT	DATE 10-13-11
VALMATIC VALVE AND MANUFACTURING CORP.	DRWG. NO. VMC-7802LW SHEET 1 OF 2

TABLE OF DIMENSIONS

FLANGE DIMENSIONS, INCHES

VALVE SIZE	MODEL NO.	CWP (PSI)	A	B	C	D	E	F	G	H	J	K	SHPG. WT.
2	7802LW	250	8.00	4.75	6.00	0.63	0	—	4.34	5.39	4.38	2.00	104
2 1/2	7825LW	250	8.50	5.50	7.00	0.68	0	—	4.34	5.78	7.00	2.50	115
3	7803LW	250	9.50	6.00	7.50	0.75	0	—	6.69	7.01	7.38	3.00	123
4	7804LW	250	11.50	7.50	9.00	0.75	0	—	7.60	7.87	8.63	4.00	165
6	7806LW	250	14.00	9.50	11.00	0.75	0	6.69	10.53	12.60	12.50	6.00	256
8	7808LW	250	19.50	11.75	13.50	0.88	0	8.46	12.80	15.75	15.75	8.00	375
10	7810LW	250	24.50	14.25	16.00	1.18	0	8.66	14.33	17.52	17.38	10.00	535
12	7812LW	250	27.50	17.00	19.00	1.25	0	10.63	17.32	19.88	17.88	12.00	810
14	7814LW	250	31.00	18.75	21.00	1.38	0	12.50	19.96	23.88	23.13	14.00	1064
16	7816LW	250	36.00	21.25	23.50	1.43	0	13.75	21.22	26.50	25.00	16.00	1253
18	7818LW	250	40.00	22.75	25.00	1.56	0	15.00	23.22	27.88	26.38	18.00	1521
20	7820LW	250	40.00	25.00	27.50	1.68	0	16.00	24.94	30.44	28.25	20.00	1890
24	7824LW	250	48.00	29.50	32.00	1.88	0	18.50	30.34	36.63	32.75	24.00	3052
30	7730LW	150	56.00	36.00	38.75	2.12	0	22.00	38.47	43.81	40.75	30.00	5514
30	7830LW	250	56.00	36.00	38.75	2.12	0	22.00	38.47	43.81	40.75	30.00	5514
36	7736LW	150	63.00	42.75	46.00	2.38	0	25.50	43.22	51.41	45.06	36.00	8151
36	7836LW	250	63.00	42.75	46.00	2.38	0	25.50	43.22	51.41	45.06	36.00	8151
42	7742LW	150	70.00	49.50	53.00	2.63	0	29.25	49.80	59.88	50.00	42.00	11380
42	7842LW	250	70.00	49.50	53.00	2.63	0	29.25	49.80	59.88	50.00	42.00	11380
48	7748LW	150	76.00	56.00	59.50	2.75	8	32.75	56.38	68.38	55.13	48.00	16780
48	7848LW	250	76.00	56.00	59.50	2.75	8	32.75	56.38	68.38	55.13	48.00	16780

SWING CHECK VALVE WITH LEVER AND WEIGHT

DATE 10-13-11

VAL-MATIC VALVE AND MANUFACTURING CORP.

DRWG. NO. VMC-7802LW

SHEET 2 OF 2

REVIEWED BY CONTRACTOR

Kudlik Construction Ltd.

NAME: Sandra Rousseau P.Eng

DATE: Jun 19, 2018

NORCLAIR
MÉCANIQUE DE PROCÉDÉ

TDS AND SHOP DRAWINGS

DA-MP-03-Plug valve PLV04

REV01_Flanged ends
HC, 2018-07-10

Date : 2018-06-19

INFORMATION

Project : **WASTEWATER PLANT - IQALUIT**	
Client : Kudlik Construction Ltd. To Sandra Rousseau P.Eng./ Project Manager	Project number : **2018-062**
Contractor : Norclair inc.	Project number Norclair : **P1039**
Address : 1100, Montee Masson, Laval, QC, Canada H7E 4P2	
Project Manager : Steven Wieland	E-mail: swieland@norclair.ca
Phone: 450-688-4012 # 708	Cell.: 514-608-0619

Information, subcontractor or supplier

Sub supplier : Contrôles Laurentide	
Contact : Fabrice Durocher	Phone : 514-697-9225 ext. 214

Information on the equipment or the proposed materials

Speciality : Mechanical Process	
Equipment : Plug valve PLV04 – 200mm (Val-Matic)	
Drawing reference :	
Specification reference : 40 05 23	Division :
Article :	Number Page : 15

CONSULTANT APPROVAL

No Comment

STANTEC PROJECT #: Iqaluit WWTP

SUBMITTAL # DA-MP-03

This review by Stantec is for general conformance with the design concept of Stantec's design of the:

☑ Process ☐ Structural ☐ Mechanical ☐ Electrical ☐ Other

component(s) only and does not mean that Stantec has verified or approves the shop drawing(s). The Contractor remains solely responsible for the shop drawing(s) and this review by Stantec does not relieve the Contractor of the Contractor's responsibility for errors or omissions in the shop drawing(s) or for meeting all requirements of the contract documents. This review does not mean that Stantec approves the detailed design inherent in the shop drawing, responsibility for which shall remain with the Contractor submitting same, nor does this review mean that Stantec accepts any deviation of the shop drawing(s) from the contract documents. The Contractor is responsible for confirming all dimensions and correlating them at the job site, for all construction means, methods and techniques, and for coordination of construction work of all trades, including coordination of all shop drawings.

Stantec

☑ REVIEWED

☐ REVIEWED, AS NOTED

☐ REVISE AND RESUBMIT

☐ NOT REVIEWED

DATE June 28, 2018

BY Libin Ren

1100, Montée Masson
Laval, QC, Canada
H7E 4P2

Phone. : 450-688-4012
Fax : 450-661-6341
E-Mail : info@norclair.ca
www.norclair.ca

Plug valve PLV04 - 200mm

Bulletin 5000R

Valmatic Cam-Centric plug valve,
Cast iron body, Nickel seat,
Buna-N plug,
Stainless steel bearings,
~~Mechanical joint ends,~~ Direct nut
actuated with an AWWA
2" nut

Flanged ends
HC, 2018-07-10

VAL-MATIC®

CAM-CENTRIC® The Eccentric Plug Valve

Cam-Centric® Standard Port Plug Valves



www.valmatic.com

Meets AWWA C517
NSF/ANSI 372 Certified

Feature Highlights

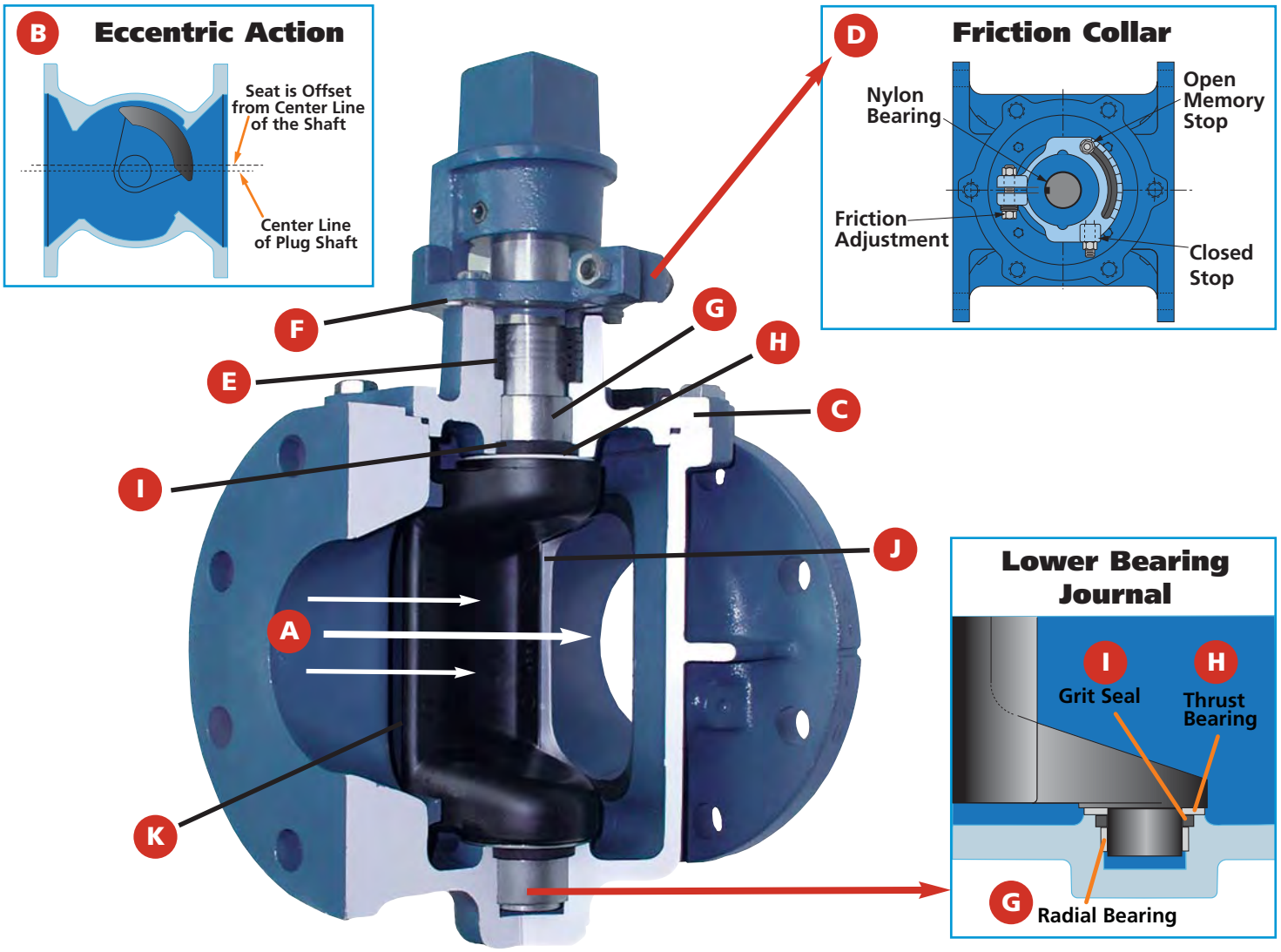

A. Non-Clog Design

The flow area and smooth streamline contouring allows passage of large solids to prevent potential clogging and provide low headloss.

B. Eccentric Action

Provides positive shut off in both directions with wear resistant action and low torque.

C. Full Top Access Cover

Provides accessibility for inspection without removal of the valve from the line.

D. Friction Collar with Memory Stop

Secures valve plug in any position and includes a nylon bearing for ease of operation.

E. V-Type Packing

Field adjustable and replaceable without removal of worm gear or motor actuators.

F. Removable POP™ Shims

Packing Overload Protection Shims protect packing by preventing overload during field adjustment.

G. Radial Bearings

Heavy Duty, T316 Stainless Steel, Permanently Lubricated.

H. Thrust Bearing

Upper: PTFE - Provides ease of actuation during operating conditions.
Lower: Stainless Steel - Prevents wear to plug and Grit-Guard.

I. Grit-Guard™ Shaft Seal

The *Val-Matic Exclusive* Grit-Guard™ shaft seal extends packing and bearing life by reducing wear and infultration of grit.

J. Seat

The robotic pulsed-arc welded 95% nickel raised seat is corrosion and wear resistant.

K. Plug

Fully rubber encapsulated molded plug eliminates exposed surfaces for maximum resistance to corrosion and wear.

Proven Design

With installations worldwide, the Val-Matic Cam-Centric® Plug Valve has proven itself as the preferred valve for wastewater, industrial waste and process applications. The Cam-Centric® Plug Valve is a ¼ turn eccentric plug valve allowing cost effective, low torque actuation for pump control, shut-off and throttling service. The valve's eccentric action rotates the plug in and out of the seated position with minimal contact, thereby preventing high torque and wear to the valve seat and plug. The combination of the eccentric action, stainless steel bearings, Grit-Guard™ seals and heavy duty nickel seat assures long life with minimal maintenance.

Preferred Features

The Cam-Centric® Plug Valve features a shaft sealing system that utilizes V-Type packing, a packing follower and a Grit-Guard™ seal for ease of maintenance and to reduce wear. The Grit-Guard™ seals reduce wear by preventing grit and media from reaching the bearings and packing to prevent plug lock up. The seals are standard in both the upper and lower journals (Figures 1 & 2). To prevent the packing from being over tightened, the shaft seal incorporates POP™ (Packing Overload Protection) Shims. The packing is easily adjusted by removing the POP™ shims as necessary utilizing the pull tab feature (Figure 1). Adjustment or replacement of the V-Type packing can be done without removal of the gear, motor or cylinder actuator.

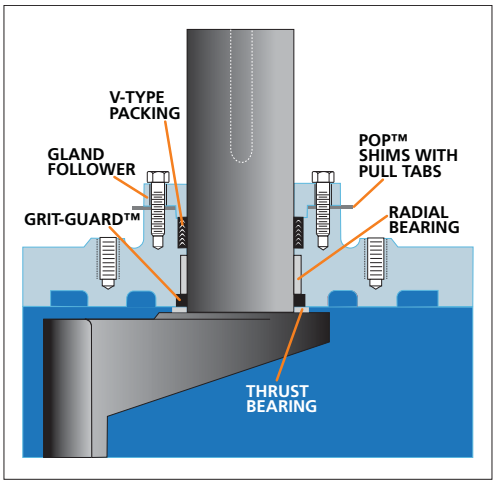

Figure 1. Upper Bearing Journal

The Cam-Centric® bearing package consists of permanently lubricated, T316 stainless steel radial bearings in both the upper and lower journals. The upper thrust bearing is made of PTFE and the lower thrust bearing is T316 stainless steel.

The Cam-Centric® Plug Valve utilizes a contoured and totally encapsulated molded plug to reduce corrosion and wear in severe abrasive applications. Its ductile iron construction provides strength and rigidity to withstand dynamic forces from flow and pressure.

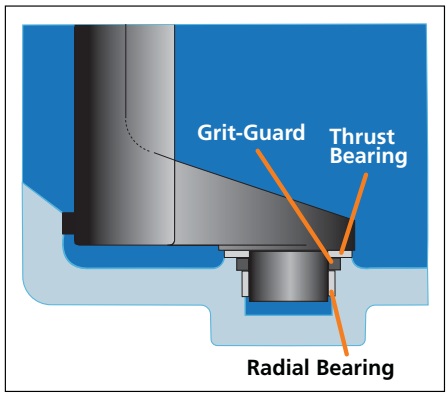

Figure 2. Lower Bearing Journal

The valve seat is a welded overlay of 95% pure nickel applied directly to the body on a machined surface using a state-of-the-art robotic welding system for a consistent, high quality weld (Figure 3).



Figure 3. Robotic welding of nickel seat

Advanced Technology

Incorporating the latest in valve technology assures a high-quality valve that will provide long service. The design process utilized solid Modeling and Finite Element Analysis (FEA) of the key structural components. Flow and torque data was derived from flow tests, mathematical models and Computational Fluid Dynamics (CFD). Manufacturing technology uses automated process control in the foundry and ISO 9001 controlled manufacturing processes. Every valve is tested in accordance with AWWA C517 and MSS SP-108 on automated hydraulic test rigs with gauges calibrated per ISO standards.

Actuation

The Cam-Centric® Plug Valve is available with a wide range of actuation options, from simple lever operation to advanced pump control systems. Options include 2" operator nuts, worm gears, chainwheels, electric motor and cylinder actuation. A wide variety of accessories such as floor stands and extended bonnets are also available (see accessories on page 7). Val-Matic Engineering personnel work closely with cylinder and electric actuation manufacturers to assure actuator/valve compatibility. This ensures the actuator you specify will deliver the performance you expect when utilized with a Cam-Centric® Plug Valve.



Direct Nut operated valve with memory stop:

- Adjustable open memory stop for system balancing
- Adjustable close stop
- Adjustable friction collar
- For use with lever accessories



Val-Matic Worm Gears:

- Heavy Duty, totally enclosed and sealed
- For above ground and buried service applications
- Bronze radial bearings and roller thrust bearings provide smooth operations and extended life

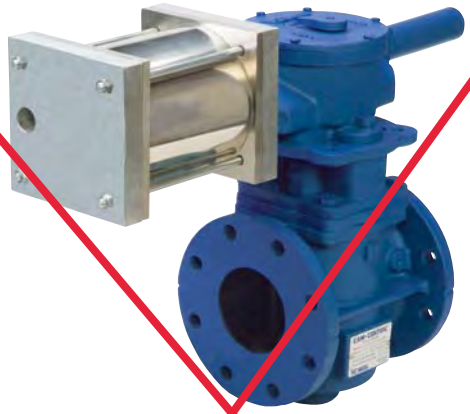

Val-Matic Cylinder Actuation:

- Compliance with AWWA C541 for Power Actuation
- Pneumatic/Hydraulic
- Single Acting or Double Acting
- Fail Open/Closed for power failure
- Modulating Service
- Throttling Service
- Limit Switches, Solenoid Valves, Positioners
- Manual Overrides
- Pump Control

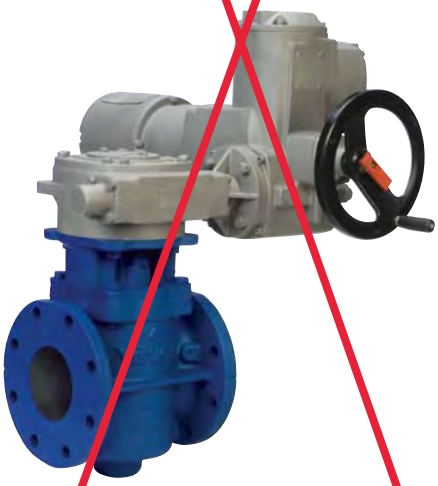

Electric Actuation:

- 110 Single Phase, 230/460 Three Phase
- Compliance with AWWA C542 for Power Actuation
- Modulating Service
- Throttling Service
- Remote push button control and indication
- Torque Switches, Limit Switches
- De-clutchable handwheels
- Available from a wide variety of manufacturers

Worm Gear Features

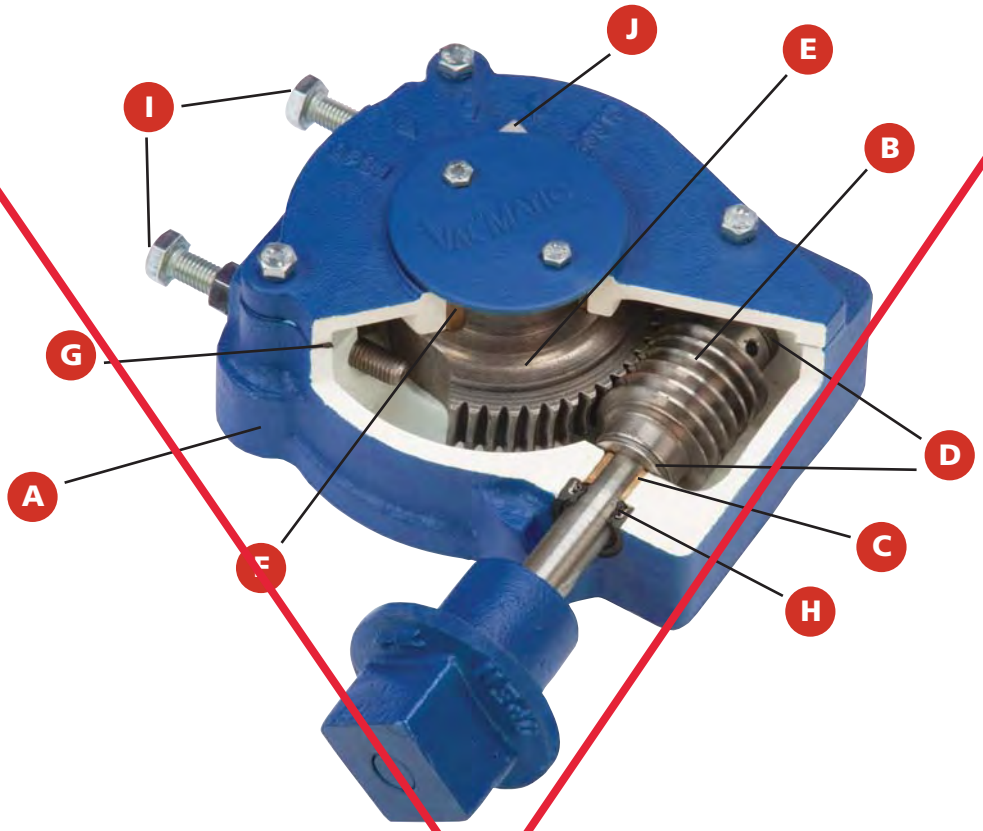

Val-Matic Worm Gear

A valve actuator must perform to the same level as the valve. The Val-Matic worm gear is designed and built to provide the same long term service as our Cam-Centric® Plug Valve. The exclusive bearing package in the worm gear includes four bronze sleeve bearings and two roller thrust bearings. This exclusive package assures smooth operation and long life regardless of the valve's orientation or application. The ductile iron segment gear coupled with the upper and lower bronze radial bearings exceed the requirements of AWWA C517 for strength and durability. All worm gears are designed to exceed, a rim pull of 200 pounds on handwheels and input torques of 300 foot pounds for operator nuts without damage. Buried service worm gears are grease packed, sealed and include stainless steel shafts. Worm gears can be provided with handwheels, chainwheels or 2" operator nuts.

A. Housing

Heavy duty, totally enclosed and sealed.

B. Worm

Hardened steel for durability and long life.

C. Radial Shaft Bearings

Bronze shaft bearings extend life and provide ease of operation (rear shaft bearing not visible).

D. Roller Thrust Bearings

Provides smooth operation and extends life.

E. Segment Gear

Heavy duty ductile iron for high strength. Provided with precision bore and keyway for connection to the valve shaft in multiple positions.

F. Segment Gear Radial Bearings

Upper and lower bronze bearings provide ease of operation and extend life (lower bearing not visible).

G. Cover Gasket

Seals housing and prevents foreign material or moisture from entering actuator and prevents loss of grease.

H. Shaft Seal

Prevents foreign material from entering the actuator.

I. External Stops

Both open and closed stops are external and easily adjustable.

J. Position Indicator

Displays precise plug position on above ground service.

Headloss Charts

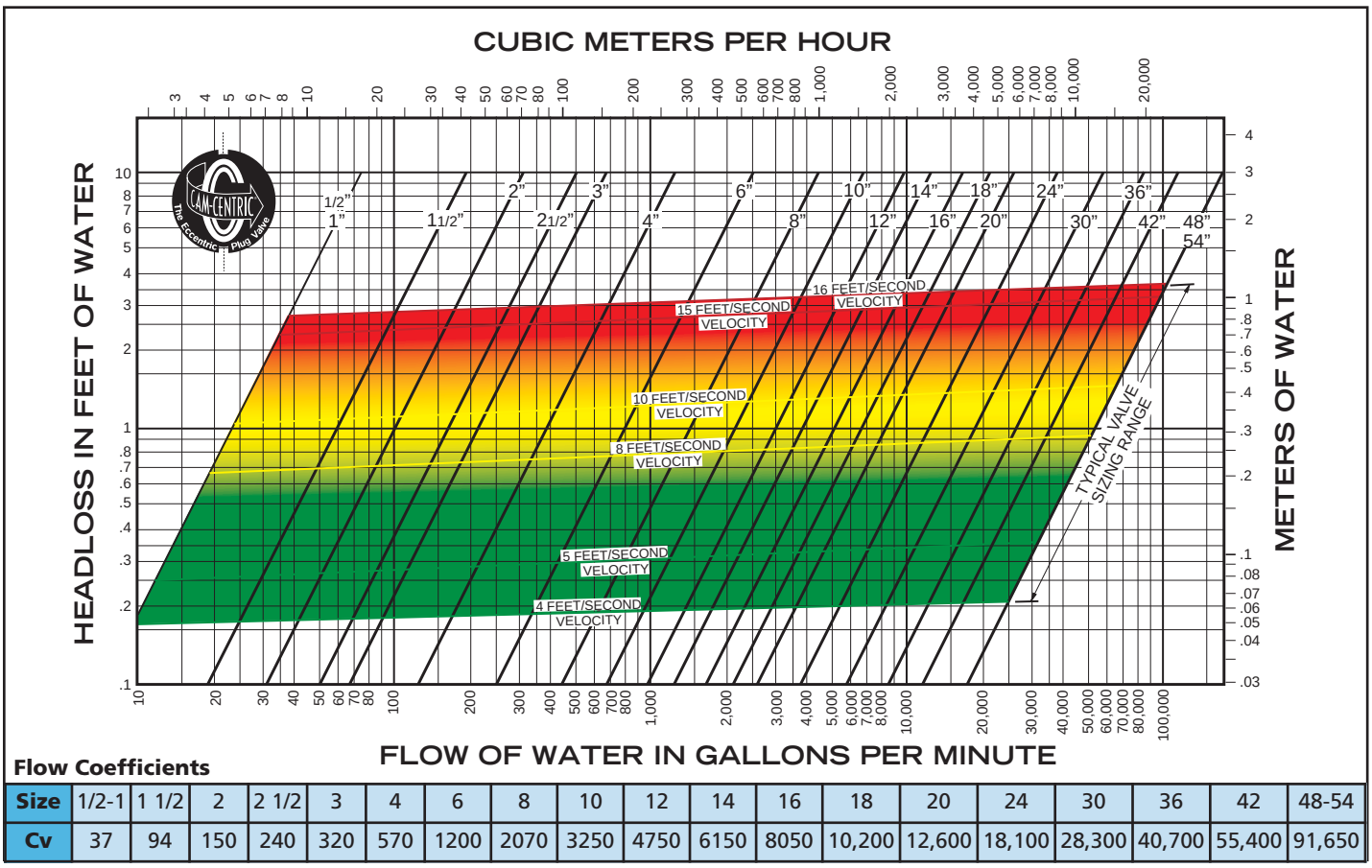

Flow Coefficients

Size	1/2-1	1 1/2	2	2 1/2	3	4	6	8	10	12	14	16	18	20	24	30	36	42	48-54
Cv	37	94	150	240	320	570	1200	2070	3250	4750	6150	8050	10,200	12,600	18,100	28,300	40,700	55,400	91,650

Installation Instructions

The installation of the valve is important for its proper operation. The valve is capable of flow in either direction but the maximum operating pressure can vary with the location of the seat end (Figure 5). The words "SEAT END" are marked on the valve flange.

SUSPENDED SOLIDS SERVICE: For fluids containing suspended solids, special orientations are needed to prevent debris from collecting in the valve. For horizontal installations (Figure 6), the valve should be installed with the flow entering the seat end of the valve and the shaft in a horizontal position with the plug up when open. For vertical installations (Figure 7), the valve must be installed with the seat end up regardless of flow direction.

CLEAN SERVICE: For both horizontal and vertical installations, install in the direct pressure orientation (pressure opposite the seat end).

AIR AND GAS SERVICE: Install valve in the direct pressure orientation (pressure opposite the seat end). Lubricate plug face with FDA approved silicone grease such as Dow Corning #7 before installation. Gear actuators are required for gas service applications.

PUMP DISCHARGE SERVICE: On all horizontal pump discharge applications, the seat end should be towards the pump.

BURIED SERVICE: Gear actuators are recommended for buried valves to hold the valve in position and provide multi-turn closure to prevent water hammer. The valve should be installed with the shaft horizontal and the actuator nut directed upwards. The valve box or extension pipe should be installed so that the actuator nut and extension stem turn freely.

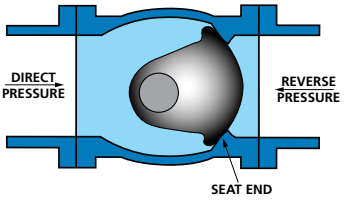

Figure 5. Installation Orientation

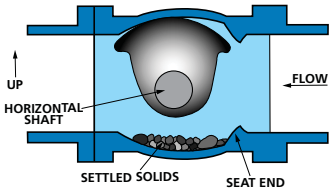

Figure 6. Horizontal Pipe w/ Solids

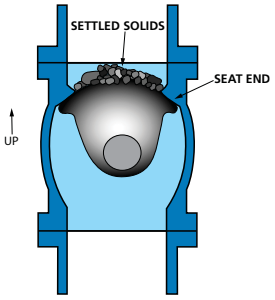

Figure 7. Vertical Pipe with Solids

Ratings/Construction

PRESSURE RATINGS

MAXIMUM PRESSURE RATINGS			
SERIES	**CONNECTION**	**SIZE RANGE**	**CWP (psig)**
5800RTL	ASME NPT Threaded	1/2"- 2"	175
5800R	ANSI Class 125 Flanged	2"- 12"	175
		14"- 54"	150
5800HP	ANSI Class 125 Flanged High Pressure	3"- 24"	250
5900R	AWWA C111 Mechanical Joint	3"- 12"	175
		14"- 48"	150
5900HP	AWWA C111 Mechanical Joint High Pressure	3"- 48"	250

MATERIALS OF CONSTRUCTION

COMPONENT	STANDARD
Body (5800R, 5900R)	Cast Iron ASTM A126, Class B
Body (5800HP, 5900HP)	Ductile Iron ASTM A536, Grade 65-45-12
Plug (5800R, 5900R)	Cast Iron ASTM A126, Class B, Buna-N Encapsulated, ASTM D2000
Plug (5800HP, 5900HP)	Ductile Iron ASTM A536, Grade 65-45-12, Buna-N Encapsulated, ASTM D2000
Radial Shaft Bearings	T316 Stainless Steel
Top Thrust Bearing	PTFE
Bottom Thrust Bearing	T316 Stainless Steel
Available Coatings	Two-Part Epoxy, Fusion Bonded Epoxy, Glass Lining, Rubber Lining

Accessories

Space limitations and application specifics often require special accessories. In addition to those shown below, Val-Matic offers a wide range of accessories to meet your application requirements.

Floor Stand with Extension Stem

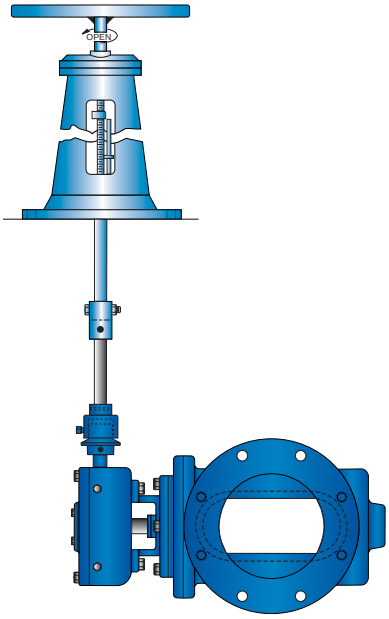

Ground Level Position Indicator

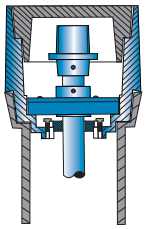

Chainlever



"T" Wrench

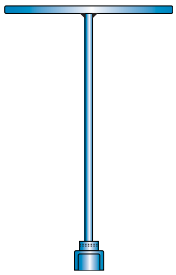

Extended Bonnet

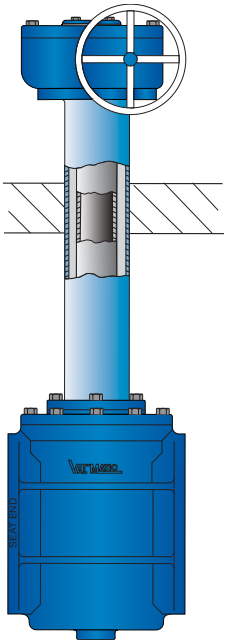

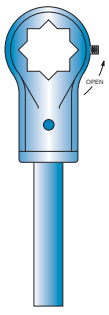

Lever

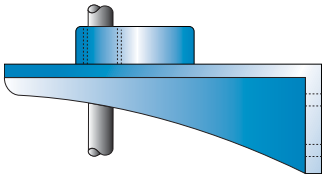

Stem Guide

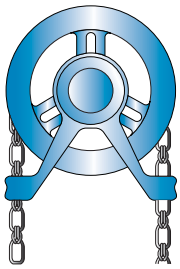

Chainwheel

Installation Dimensions

Direct Nut Operated

Flanged, Mechanical Joint, Threaded End Connections

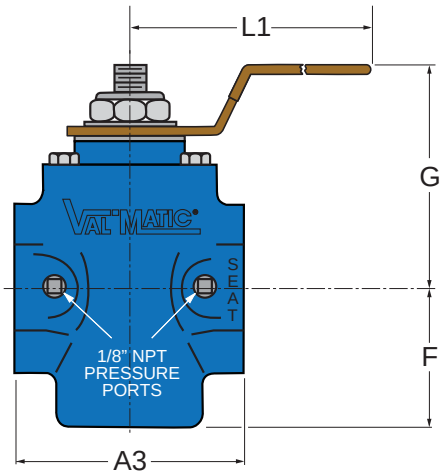

Sizes 1/2"- 2"

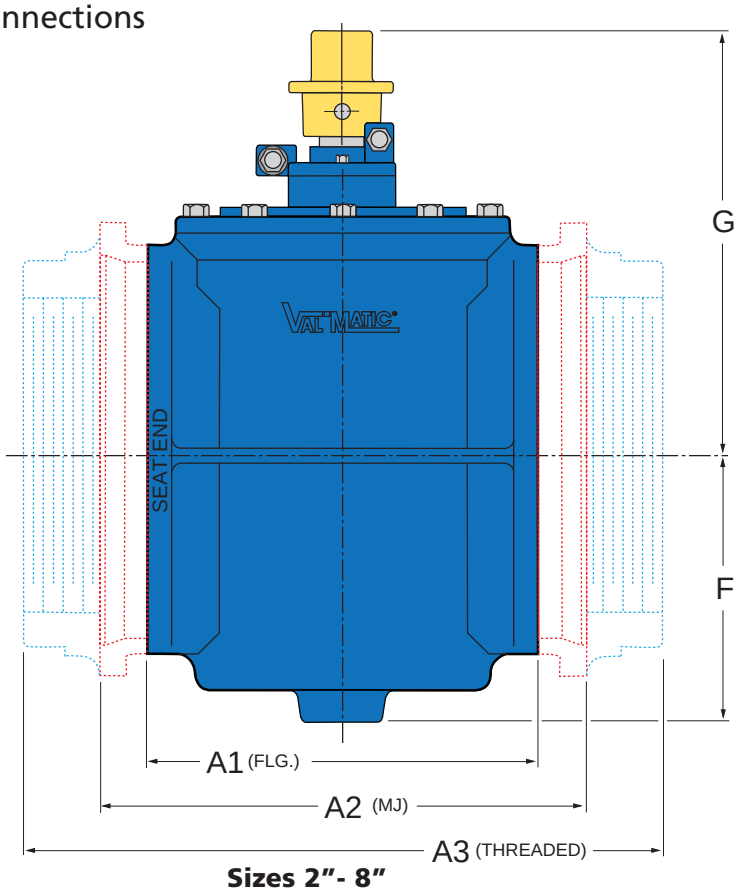

Sizes 2"- 8"

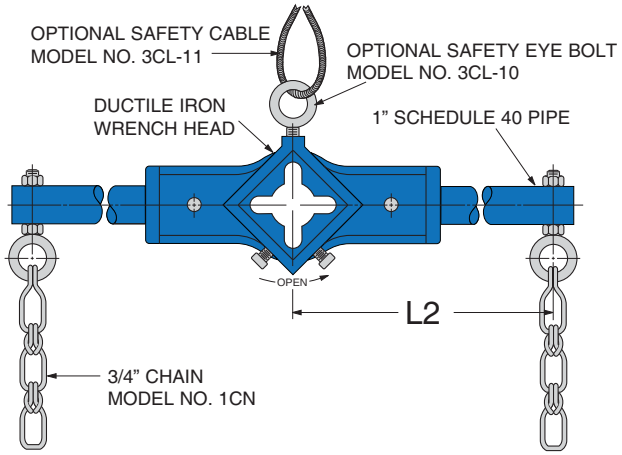

Chainlever

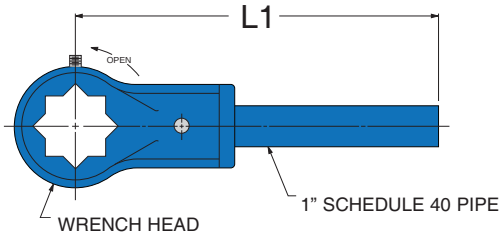

Handlever

Dimensions in Inches

Valve Size	Flanged Model No.	MJ Model No.	Threaded Model No.	Handlever Model No.	Chainlever Model No.	Reverse	Direct	A1	A2	A3	F	G	L1	L2
1/2	-	-	5800.5RTL	Std	-	175	175			4.13*	1.88	3.19	4.25	-
3/4	-	-	5800.75RTL	Std	-	175	175			4.13*	1.88	3.19	4.25	-
1	-	-	5801RTL	Std	-	175	175	-	-	3.13	1.88	3.19	4.25	-
1 1/4	-	-	5801.25RTL	Std	-	175	175			6.75*	2.88	4.25	6.50	-
1 1/2	-	-	5801.5RTL	Std	-	175	175			6.75*	2.88	4.25	6.50	-
2	5802RN	-	5802RTL	Std	-	175	175	7.50	-	5.25	2.88	4.25	6.50	-
2 1/2	5825RN	-	5825RTN	4L	3CL	175	175	7.50	-	8.75	4.63	10.00	22.00	16.00
3	5803RN	5903RN	5803RTN	4L	3CL	175	175	8.00	11.50	8.75	4.63	10.00	22.00	16.00
4	5804RN	5904RN	-	4L	4CL	175	175	9.00	14.25	-	5.56	10.93	22.00	22.00
6	5806RN	5906RN	-	8L	6CL	50	100	10.50	15.75	-	7.06	12.31	44.00	32.00
8	5808RN	5908RN	-	8L	8CL	50	100	11.50	17.25	-	8.75	13.88	44.00	44.00

*Asterisk indicates length includes reducing bushing.

Notes: 1. Flange drilling conforms to ANSI B16.1, Class 125.
2. Mechanical Joint (MJ) Ends conform to ANSI/AWWA C110/A21.10.
3. Threaded Ends conform to ANSI/ASME B1.20.1.
4. Handlevers (i.e. 4L) Chainlevers (i.e. 3CL) and Chain (1CN) are ordered separately.

Installation Dimensions

Series 5800R & 5800HP Flanged

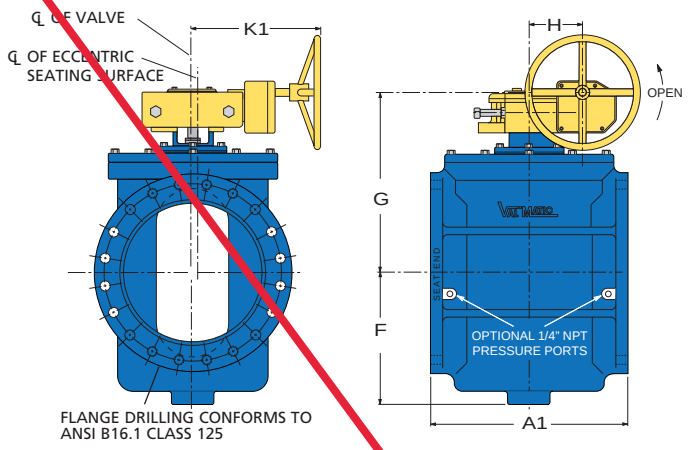

Series 5900R & 5900HP Mechanical Joint

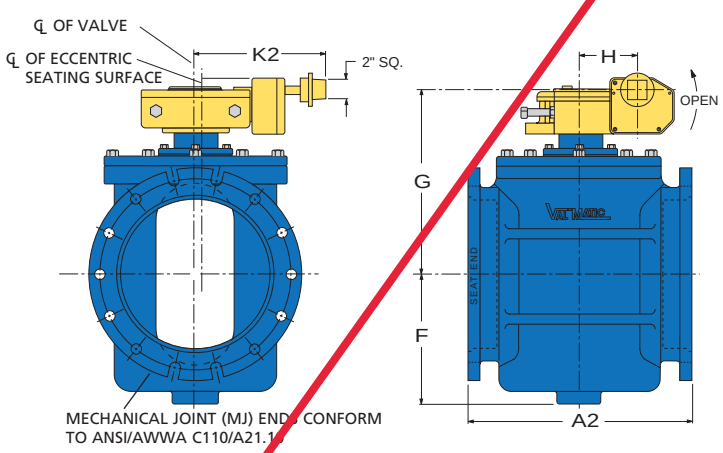

Dimensions in Inches

Valve Size	Flanged Model No.	MJ Model No.	Reverse	Direct	A1	A2	F	G	H	K1	K2
2 1/2	5825R/7A08*	-	175	175	7.50	-	4.50	7.50	3.06	9.50	-
3	5803R/7A08*	5903R/8A02A*	175	175	8.00	11.50	4.50	7.50	3.06	9.50	9.00
	5803HP/7A08*	5903HP/8A02A*	250	250							
4	5804R/7A08*	5904R/8A02*	175	175	9.00	14.25	5.56	9.31	3.06	9.50	9.00
	5804HP/7A08*	5904HP/8A02*	250	250						11.63	
6	5806R/7A08*	5906R/8A02*	175	175	10.50	15.75	7.06	11.06	3.06	9.50	9.00
	5806HP/7A12*	5906HP/8A02*	250	250						13.63	
8	5808R/7A12*	-	100	175	11.50	17.25	8.75	12.62	3.06	11.50	9.00
	5808R/7B16*	5908R/8A02*	175	175						9.38	
	5808HP/7B18*	5908HP/8A02*	250	250							
10	5810R/7C12*	5910R/8C02*	100	175	13.00	18.75	10.44	16.25	4.75	13.13	7.88
	5810R/7D16*	5910R/8D02*	175	175						11.00	
	5810HP/7D16*	5910HP/8D02*	250	250							
12	5812R/7C16*	5912R/8C02*	100	175	14.00	19.75	12.50	17.69	4.75	11.00	7.88
	5812R/7D24*	5912R/8D02*	175	175						16.75	
	5812HP/7D24*	5912HP/8D02*	250	250							
14	5814R/7E18*	-	50	100	17.00	24.50	13.00	19.31	5.62	15.25	13.00
	5814R/7G12	5914R/8F02*	150	150				21.25	9.69	14.00	
	5814HP/7G12	5914HP/8F02*	250	250							
16	5816R/7E24*	-	50	100	17.75	24.75	14.50	20.62	5.62	17.12	13.00
	5816R/7G14	5916R/8F02*	150	150				22.56	9.69	14.62	
	5816HP/7G18	5916HP/8F02*	250	250						15.62	
18	5818R/7J30*	-	50	100	21.50	28.50	16.25	22.25	5.62	18.62	14.50
	5818R/7L24	5918R/8K02	150	150				25.12	7.38	19.25	
	5818HP/7L24	5918HP/8K02	250	250							
20	5820R/7M18	-	50	100	23.50	30.50	17.50	26.25	7.38	19.00	14.50
	5820R/7P30	5920R/8K02.5	150	150						21.88	
	5820HP/7P30	5920HP/8K02.5	250	250							
24	5824R/7M24	-	50	100	30.00	37.00	20.25	29.00	7.38	19.25	14.50
	5824R/7Q36	5924R/8K02.5	150	150					11.50	23.25	
	5824HP/7Q36	5924HP/8K02.5	250	250							
30	5830R/7R24	-	50	100	37.50	45.50	24.00	31.00	4.06	16.12	14.44
	5830R/7T30	5930R/8S02	150	150							
36	5836R/7S30	-	50	100	52.00	60.00	29.00	31.00	4.06	16.12	14.44
	5836R/7W36	5936R/8T02	150	150				32.25	10.50	23.50	21.75
42	5842R/7X30	-	50	100	62.00	70.00	36.50	44.00	14.00	25.25	27.60
	5842R/7Z36	5942R/8Z02	150	150							
48	5848R/7X30	-	50	100	84.00	84.00	38.50	48.46	10.90	27.60	27.60
	5848R/7Z36	5948R/8Z02	150	150							
54	5854R/7X30	-	50	100	96.00	-	38.50	48.46	10.90	27.60	-
	5854R/7Z36	-	150	150							

*Asterisk indicates valve model numbers without spur gear

Notes:
1. Replace Handwheel (HW) diameter in the model number (i.e. /7A08) with 02 for 2" square operating nut (i.e./7A02).
2. Add a C suffix to model number to include Chainwheel Kit (i.e. 5804R/7A08C).
3. Available with ISO/PN drilling.
4. Consult factory for larger sizes.

Flow Characteristics

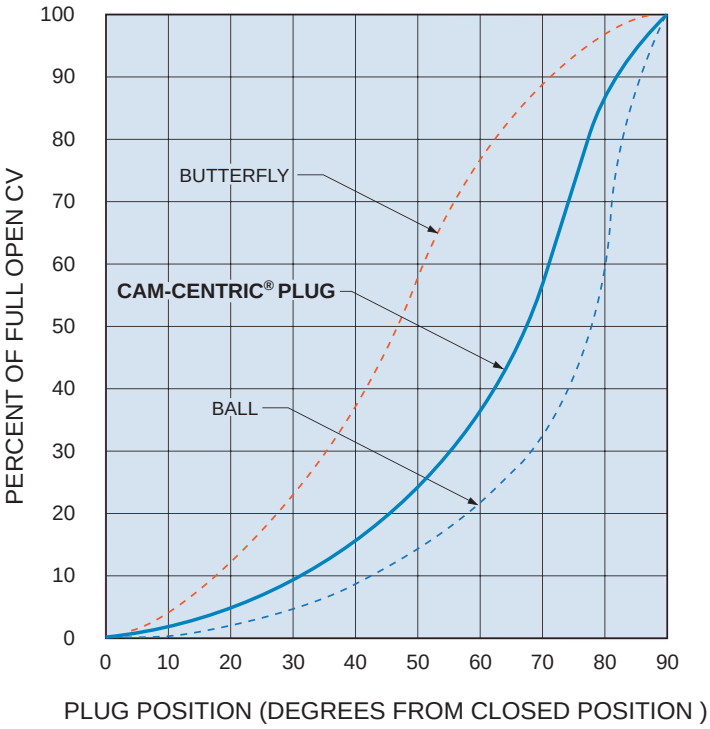

INHERENT PUMP CONTROL FLOW CHARACTERISTICS

To control pressure surges and provide good-controllability, the flow characteristics of valves should be considered.

The graph at left shows the inherent flow characteristics at a constant ΔP for various valves.

The Plug Valve has an inherent flow characteristic similar to a ball valve. When installed in a pipeline, the plug valve will approximate a linear flow characteristic because the piping system pressure losses will shift the flow curve to the left. A linear installed flow characteristic will help control surges and provide a wide range of controllability.

Installations



Cam-Centric® Plug Valve with worm gear actuator and chainwheel



Cam-Centric® Plug Valve with Val-Matic Swing-Flex®



Cam-Centric® Plug Valve with Val-Matic dual body combination AIr Valve



Cam-Centric® Plug Valve with motor actuator



Cam-Centric® Plug Valve with worm gear actuator



Cam-Centric® Plug Valve with worm gear actuator and extension stem

2-Way Specification

SCOPE

1.1 This specification covers the design, manufacture, and testing of 1/2 in. (15 mm) through 3 in. (80 mm) Threaded Eccentric Plug Valve, 2 ½ in. (60 mm) through 54 in. (1350 mm) Eccentric Plug Valve suitable for water or wastewater service with pressures up to 250 psig (1725 kPa).
1.2 Plug Valves shall be quarter-turn, non-lubricated with resilient encapsulated plug.

STANDARDS AND APPROVALS

2.1 2 ½ in. (60 mm) through 54 in. (1350 mm) plug valves shall be designed, manufactured and tested in accordance with American Water Works Association Standard ANSI/AWWA C517.
2.2 All Plug Valves shall be certified Lead-Free in accordance with NSF/ANSI 372.
2.3 Manufacturer shall have a quality management system that is certified to ISO 9001 by an accredited, certifying body.

CONNECTIONS

3.1 Threaded valves shall have threaded NPT full size inlets. The connection shall be hexagonal for a wrench connection.
3.2 Flanged valves shall have flanges with drilling to ANSIB16.1, Class 125.
3.3 Mechanical Joint valves shall fully comply with ANSI/AWWA C111/A21.11.

DESIGN

4.1 Threaded and all other valves under 4" (100mm) shall have port areas of not less than 100% of pipe area. Port areas on other sizes are 85% on 16" (400 mm) and smaller, 80% on 18"-24" (150 mm- 600 mm), and 75% on 30" (800 mm) and larger.
4.2 Threaded valve seat shall be a machined seating surface.
4.3 2 ½ in. (60 mm) through 54 in. (1350 mm) plug valves shall have a valve seat that is a welded overlay of 95% pure nickel applied directly to the body on a pre-machined, cast seating surface and machined to a smooth finish.
4.4 Threaded valves shall have shaft seals which consist of V-type lip seal in a fixed gland with a resilient O-ring spring.
4.5 2 ½ in. (60 mm) through 54 in. (1350 mm) plug valves shall have shaft seals which consist of V-type packing in a fixed gland with an adjustable follower designed to prevent over compression of the packing and to meet design parameter of the packing manufacturer. Removable POP™ shims shall be provided under the follower flanges to provide for adjustment and prevent over tightening.
4.6 Permanently lubricated, radial shaft bearings shall be supplied in the upper and lower bearing journals. Thrust bearings shall be provided in the upper and lower journal areas, except for threaded type which only have upper thrust bearings.
4.7 Both the packing and bearings in the upper and lower journals shall be protected by a Grit-Guard™ "drip tight" Buna-N shaft seal located on the valve shaft to minimize the entrance of grit into the bearing journal and shaft seal areas.
4.8 The threaded valve body shall have 1/8" NPT upstream and downsteam pressure ports.

MATERIALS

5.1 Valve bodies and covers shall be constructed of ASTM A126 Class B cast iron for working pressures up to 175 psig (1200 kPa) and ASTM A536 Grade 65-45-12 for working pressures up to 250 psig (1725 kPa). The words "SEAT END" shall be cast on the exterior of the body seat end.
5.2 Threaded valve plugs in sizes 1/2 in. (15 mm) through 3 in. (80 mm) shall be of one-piece construction and made of ASTM A126 Class B cast iron fully encapsulated with a resilient facing per ASTM D2000-BG and ANSI/AWWA C517 requirements.
5.3 2 ½ in. (60 mm) through 54 in. (1350 mm) plugs shall be of one-piece construction and made of ASTM A126 Class B cast iron or ASTM A536 Grade 65-45-12 ductile iron and fully encapsulated with resilient facing per ASTM D2000-BG and ANSI/AWWA C517 requirements.
5.4 Threaded valves shall have radial shaft bearings constructed of self-lubricating Type 316 stainless steel. The top thrust bearing shall be PTFE.
5.5 2 ½ in. (60 mm) through 54 in. (1350 mm) plug valves shall have radial shaft bearings constructed of self-lubricating Type 316 stainless steel. The top thrust bearing shall be PTFE. The bottom thrust bearing shall be self-lubricating Type 316 stainless steel. Cover bolts shall be corrosion resistant with zinc plating.

ACTUATION

6.1 Threaded valves shall be equipped with a hand lever with a dial indicator and open memory stop.
6.2 Valves 2 ½ in. (60 mm) to 8 in. (200 mm) and 4 in. (100mm) to 6 in. (150 mm) 100% ported shall be equipped with a 2 inch square nut for direct quarter turn operation. The packing gland shall include a friction collar and an open position memory stop. The friction collar shall include a nylon sleeve to provide friction without exerting pressure on the valve packing.
6.3 When specified valves 4 in. (100 mm) and larger shall include a totally enclosed and sealed worm gear actuator with position indicator (above ground service only) and externally adjustable open and closed stops. The worm segment gear shall be ASTM A536 Grade 65-45-12 ductile iron with a precision bore and keyway for connection to the valve shaft. Bronze radial bearings shall be provided for the segment gear and worm shaft. Alloy steel roller thrust bearings shall be provided for the hardened worm.
6.4 All gear actuators shall be designed to withstand, without damage, a rim pull of 200 lb. on the hand wheel and an input torque or 300 ft-lbs. for nuts.
6.5 Buried service actuators shall be packed with grease and sealed for temporary submergence to 20 feet of water. Exposed worm shafts shall be stainless steel.

OPTIONS

7.1 When specified, the valve port area shall have not less than 100% of pipe area.
7.2 The interior and exterior of the valve shall be coated with an NSF/ANSI 61 approved fusion bonded epoxy.
7.3 The interior of the valve shall be coated with 8 mils SG-14 glass lining or 1/8" soft rubber lining.

MANUFACTURE

8.1 Manufacturer shall demonstrate a minimum of ten (10) years' experience in the manufacture of plug valves. When requested, the manufacturer shall provide test certificates, dimensional drawings, parts list drawings and operation and maintenance manuals.
8.2 The exterior of the valve for above ground service shall be coated with a universal alkyd primer. Valve exterior for buried service shall be coated with an epoxy coating.
8.3 Valve shall be marked with the Serial Number, Manufacturer, Size, Cold Working Pressure (CWP) and the Direct and Reverse Actuator Pressure Ratings on a corrosion resistant nameplate.
8.4 Plug Valves shall be Series # 5800RTL (Threaded), 5800R (Flanged), 5800HP (Flanged), 5900R (Mechanical Joint) or 5900HP (Mechanical Joint) as manufactured by Val-Matic Valve and Mfg. Corporation, Elmhurst, IL. USA or approved equal.



Val-Matic's quality of design and meticulous workmanship has set the standards by which all others are measured. Quality design features such as the AWWA **Ener•G® Ball Valve** with its energy efficient design, fusion bonded epoxy and adjustable resilient seating....**Cam-Centric® Plug Valves** have more requested features than any other eccentric plug valve....**American-BFV® Butterfly Valves** include a field replaceable seat without the need for special tools....**Tilted Disc® Check Valves** with high strength and wear resistant aluminum bronze trim as standard....**Silent Check Valves** featuring combined resilient/metal-to-metal seating and are **NSF/ANSI 61 & 372 Certified**....**Sure Seal Foot Valves** provided with a heavy duty stainless steel screened inlet....**Swing-Flex® and Surgebuster® Check Valves** designed with an unrestricted full flow area....**Swing Check Valves** with field adjustable closure versatility....**Dual Disc® Check Valves** utilizing stabilized components to provide extended life....**Air Release, Air/Vacuum and Combination Air Valves** provided standard with Type 316 stainless steel trim....**VaultSafe®** family of products includes the **FloodSafe® Inflow Preventer**, **FrostSafe®** two-way damper and the **VentSafe®** vent pipe security cage. The **QuadroSphere® Trunnion Ball Valve** features a unique ball design with recessed surfaces creating additional flow paths to provide a self-cleaning action and reduced wear and torque.

Val-Matic is totally committed to providing the highest quality valves and outstanding service to our customers. Complete customer satisfaction is our goal. **Make the change to quality, specify Val-Matic!**

VAL-MATIC®

Val-Matic Valve and Manufacturing Corp.
905 Riverside Drive, Elmhurst, IL 60126
Phone: 630-941-7600 • Fax: 630-941-8042
www.valmatic.com • valves@valmatic.com

Copyright © 2017 Val-Matic Valve & Mfg. Corp.
ISO 9001:2008 certified company

10/17

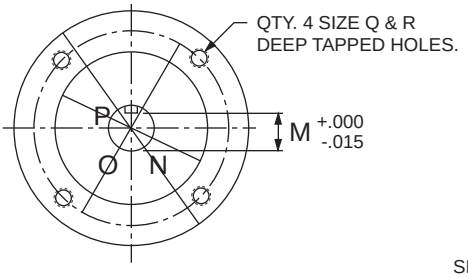

ACTUATOR MOUNTING DIMENSIONS

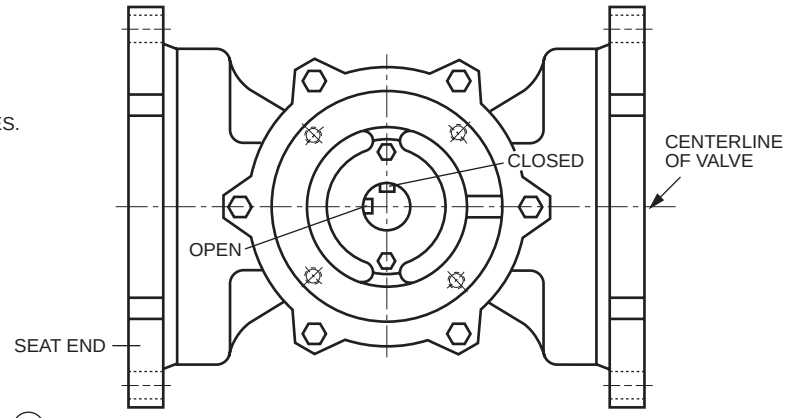

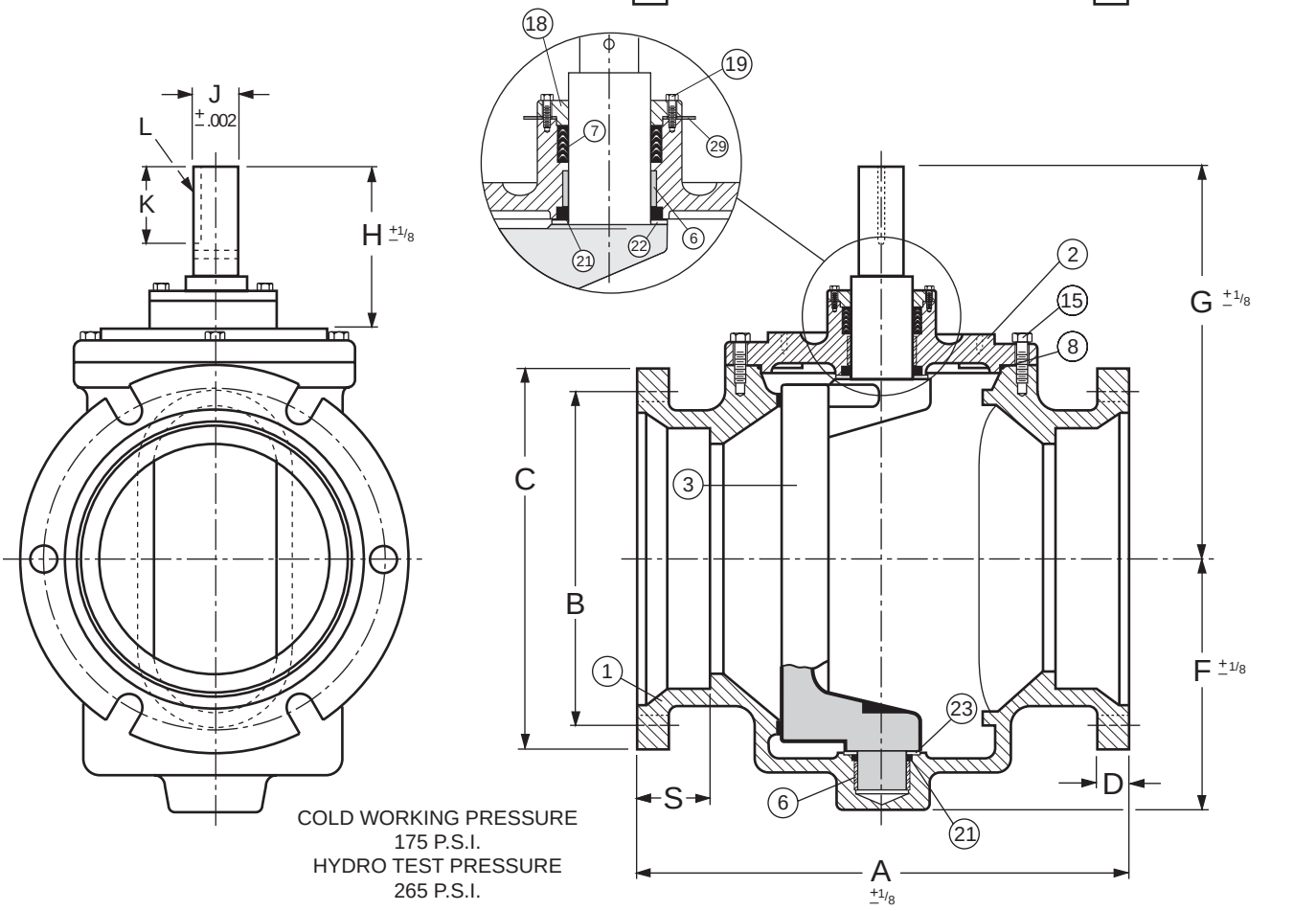

COLD WORKING PRESSURE
175 P.S.I.
HYDRO TEST PRESSURE
265 P.S.I.

SEE DRAWING NO. VM-5804RN-M FOR STANDARD MATERIAL OF CONSTRUCTION.

MECHANICAL JOINT ANSI 21.11/AWWA C111

VALVE SIZE	A	B	C	D	F	G	H	J	K	L	M	N	O	P	Q	R	S	BOLT SIZE	NO.OF BOLTS
3	11 1/2	6 3/16	7 11/16	15/16	4 1/2	9 5/8	4 5/8	1.246	2 5/16	1/4 SQ	1.112	7 3/8	6 3/16	4	1/2 - 13	5/8	2 1/2	5/8	4
4	14 1/4	7 1/2	9 1/8	1	5 9/16	10 15/16	6 1/4	1.496	2 5/16	3/8 SQ	1.289	6 1/2	6 1/2	5 1/16	1/2 - 13	5/8	2 1/2	3/4	4
6	15 3/4	9 1/2	11 1/8	1 1/16	7 1/16	12 5/16	5 7/8	1.496	2 5/16	3/8 SQ	1.289	7 5/8	6 1/2	5 1/8	1/2 - 13	5/8	2 1/2	3/4	6
8	17 1/4	11 3/4	13 1/8	1 1/8	8 3/4	13 7/8	5 7/8	1.496	2 5/16	3/8 SQ	1.289	7 3/4	6 1/2	5 1/8	1/2 - 13	5/8	2 1/2	3/4	6
10	18 3/4	14	15 11/16	1 3/16	10 7/16	17 1/16	7 1/16	2.120	2 1/2	1/2 SQ	1.845	9 3/8	8	6 3/8	1/2 - 13	13/16	2 1/2	3/4	8
12	19 3/4	16 1/4	17 15/16	1 1/4	12 1/4	18 5/8	7 1/16	2.120	2 1/2	1/2 SQ	1.845	9 3/8	8	6 3/4	1/2 - 13	13/16	2 1/2	3/4	8

MECHANICAL JOINT CAM-CENTRIC® PLUG VALVE BARE STEM

DATE Revised 5-24-99
2-21-96

VAL-MATIC® VALVE AND MANUFACTURING CORP.

DRWG. NO.
VM-5904R

CAM-CENTRIC® RECTANGULAR PORT PLUG VALVE

SERIES NO. 5800RN

STANDARD MATERIALS OF CONSTRUCTION

PART NO.	PART NAME	MATERIAL
1	BODY	CAST IRON ASTM A126, CLASS B WITH OVERLAY WELDED NICKEL SEAT
2	COVER	CAST IRON ASTM A126, CLASS B
3	PLUG	CAST IRON ASTM A126, CLASS B WITH RESILIENT FACING, ASTM D2000
6	BEARINGS	PERMANENTLY LUBRICATED STAINLESS STEEL T316
7	VEE TYPE PACKING	BUNA-N
8	COVER SEAL	BUNA-N
9 *	FRICTION COLLAR	DUCTILE IRON ASTM A536, GRADE 65-45-12
11 *	BOLT	CARBON STEEL SAE, GRADE 5 (ZINC PLATED)
12 *	HEX NUT	STEEL (ZINC PLATED)
13 *	STOP ADJUSTMENT SCREW	STEEL
14 *	LOCK NUT	STEEL (ZINC PLATED)
15	COVER BOLT	CARBON STEEL SAE, GRADE 5 (ZINC PLATED)
16 *	OPERATING NUT	CAST IRON ASTM A126, CLASS B
17 *	SPRING PIN	CARBON STEEL (ZINC PLATED)
18	PACKING GLAND FOLLOWER	CAST IRON A126, CLASS B
19	PACKING GLAND FOLLOWER BOLT	CARBON STEEL SAE, GRADE 5 (ZINC PLATED)
21	GRIT-GUARD®	BUNA-N
22	THRUST BEARING	TEFLON
23	THRUST BEARING	STAINLESS STEEL T316, ASTM A276
25 *	MEMORY STOP BOLT	STEEL
27 *	MEMORY STOP WASHER	STEEL
28 *	MEMORY STOP LOCKNUT	STEEL
29	SHIMS	STAINLESS STEEL T304, ASTM A276
30 *	FRICTION SLEEVE	NYLON W/ MOLY-DISULPHIDE
31 *	BELLEVILLE SPRING WASHER	STAINLESS STEEL

NOTE: ALL SPECIFICATIONS AS LAST REVISED.

* OPERATING NUT AND FRICTION COLLAR NOT FURNISHED ON 10" AND LARGER VALVES OR WHEN WORM GEAR OR OTHER ACTUATORS ARE SUPPLIED.

Revised 4-6-99

MATERIALS OF CONSTRUCTION

DATE 3/15/96

VAL-MATIC® VALVE AND MANUFACTURING CORP.

DRWG. NO. VM-5804RN-M

REVIEWED BY CONTRACTOR

Kudlik Construction Ltd.

NAME: Sandra Rousseau P.Eng

DATE: Jun 19, 2018

NORCLAIR
MÉCANIQUE DE PROCÉDÉ

TDS AND SHOP DRAWINGS

DA-MP-04-Knife gate valve

Date : 2018-06-19

INFORMATION	
Project : **WASTEWATER PLANT - IQALUIT**	
Client : Kudlik Construction Ltd. To Sandra Rousseau P.Eng./ Project Manager	Project number : **2018-062**
Contractor : Norclair inc.	Project number Norclair : **P1039**
Address : 1100, Montee Masson, Laval, QC, Canada H7E 4P2	
Project Manager : Steven Wieland	E-mail: swieland@norclair.ca
Phone: 450-688-4012 # 708	Cell.: 514-608-0619

Information, subcontractor or supplier	
Sub supplier : Contrôles Laurentide	
Contact : Fabrice Durocher	Phone : 514-697-9225 ext. 214

Information on the equipment or the proposed materials	
Speciality : Mechanical Process	
Equipment : 250 Knife gate valve KV01 2560, 350 and 400mm (Orbinox)	
Drawing reference :	
Specification reference : 40 05 23	Division :
Article :	Number Page : 17

CONSULTANT APPROVAL

STANTEC PROJECT #: Iqaluit WWTP

SUBMITTAL # DA-MP-04

This review by Stantec is for general conformance with the design concept of Stantec's design of the:

☑ Process ☐ Electrical
☐ Structural ☐ Other
☐ Mechanical

component(s) only and does not mean that Stantec has verified or approves the shop drawing(s). The Contractor remains solely responsible for the shop drawing(s) and this review by Stantec does not relieve the Contractor of the Contractor's responsibility for errors or omissions in the shop drawing(s) or for meeting all requirements of the contract documents. This review does not mean that Stantec approves the detailed design inherent in the shop drawing, responsibility for which shall remain with the Contractor submitting same, nor does this review mean that Stantec accepts any deviation of the shop drawing(s) from the contract documents. The Contractor is responsible for confirming all dimensions and correlating them at the job site, for all construction means, methods and techniques, and for coordination of construction work of all trades, including coordination of all shop drawings.

Stantec

☑ REVIEWED
☐ REVIEWED, AS NOTED
☐ REVISE AND RESUBMIT
☐ NOT REVIEWED

DATE June 21, 2018

BY Zach Paquin

1100, Montée Masson
Laval, QC, Canada
H7E 4P2

Phone. : 450-688-4012
Fax : 450-661-6341
E-Mail : info@norclair.ca
www.norclair.ca

Knife gate valve KV01 250, 350 and 400mm

Orbinox EX series 14" Knife Gate valve, Cast iron body, 304 AISI SS gate, Nitrile seat, ST packing, ANSI 150 flanged ends, Unidierecitonal design, c/w rising stem handwheel

MODEL EX SERIES 10

ORBINOX
VALVE SOLUTIONS IN MORE THAN 70 COUNTRIES

WAFER STYLE KNIFE GATE VALVE

The EX(SER.10) model knife gate is an uni-directional wafer valve designed for general industrial service applications. The design of the body and seat assures non-clogging shut off on suspended solids in industries such as:

- Pulp and Paper
- Wastewater treatment plants
- Food and Beverage
- Mining
- Power plants
- Chemical plants
- Bulk handling
- Etc.



Sizes: DN 2"/50mm to DN 48"/1200mm (larger diameters on request)

Working pressure:

DN 2"/ 50mm to DN 10"/ 250mm	150 psi/ 10 bar
DN 12"/300mm to DN 16"/ 400mm	90 psi/ 6 bar
DN 18"/450mm	75 psi/ 5 bar
DN 20"/500mm to DN 24"/ 600mm	60 psi/ 4 bar
DN 28"/700mm to DN 48"/1200mm	30 psi/ 2 bar

Standard flange connection:

DIN PN 10 and ANSI B16.5 (class 150)

Other flange connections available on request

DIN PN 6 DIN PN 16 DIN PN 25
BS "D" and "E" ANSI 125

Directives: 2006/42/CE (MACHINES)
2014/68/EU (PED) Fluid: Group 1(b), 2 (Cat. I. mod. A)
2014/34/EU (ATEX)

All valves are tested prior to shipping in accordance with the standard developed by the Quality Control Department at ORBINOX.

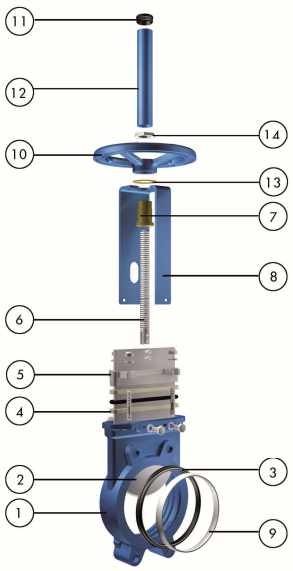

STANDARD PARTS LIST

Part:	Cast Iron:	Stainless Steel:
1.- Body	GJL250(GG25)	CF8M
2.- Gate	AISI 304	AISI 316
3.- Seat	Metal/Metal or EPDM	
4.- Packing	PTFE Impreg. Synth. Fibre (With a EPDM O-Ring)	
5.- Gland Follower	Alum. (DN2"/50mm to DN12"/300mm) or Ductile Iron (DN14"/350mm a DN48"/1200mm)	CF8M
6.- Stem	AISI 430	
7.- Stem nut	Brass	
8.- Yoke	EPOXY-coated Carbon Steel	
9.- "A" ring	AISI 304	AISI 316
10.- Handwheel	GJS400 (GGG40)	
11.- Cap	Plastic	
12.- Stem Protector	EPOXY-coated Carbon Steel	
13.- Friction Washer	Brass	
14.- Nut	Zinc Plated Carbon Steel	

MODEL EX SERIES 10

ORBINOX
VALVE SOLUTIONS IN MORE THAN 70 COUNTRIES

DESIGN FEATURES

BODY:
Wafer style cast monoblock with raised faces and reinforcing ribs in large diameters for extra body strength. Internal cast-in gate wedges and guides allow for a tighter shut-off between gate and seat. Full port design for greater flow capacity and minimal pressure drop. The internal body design avoids any accumulation of solids that would prevent the valve from closing.

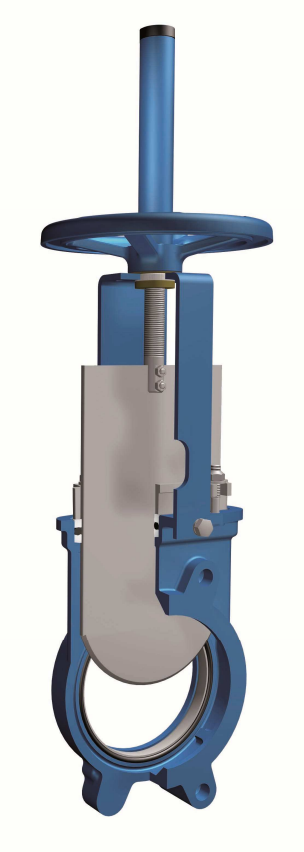

GATE:
Stainless steel gate. Gate is polished on both sides to avoid jamming and seat damage. Bottom of the gate edge is machined to a bevel to cut through solids for a tighter seal in the closed position. The thickness and/or material of the gate can be changed on request for higher pressure requirements.

SEAT: (resilient)
Unique design that mechanically locks the seal in the internal of the valve body with a stainless steel retainer ring. Standard EPDM also available in different materials such as Viton, PTFE, etc.

PACKING:
Long-life packing with several layers of braided fibre plus an EPDM o-ring, with an easy access packing gland ensuring a tight seal. Long-life braided packing is available in a wide range of materials.

STEM:
The standard stainless steel stem offers a long corrosion resistant life. For rising stem handwheel actuators only, a stem protector is provided for additional protection against dust while the valve is in the open position.

ACTUATORS:
All actuators supplied by ORBINOX are interchangeable, and supplied with a standard mounting kit for installation purposes on site.

YOKE or ACTUATOR SUPPORT:
Made of EPOXY coated steel (stainless steel available on request). Compact design makes it extremely robust even under the most severe conditions.

EPOXY COATING:
The epoxy coating on all ORBINOX cast iron and carbon steel valve bodies and components is applied by means of an electrostatic process, making the valves corrosion-resistant with a high quality finished surface.The ORBINOX standard colour is RAL-5015 blue.

GATE SAFETY PROTECTION:
ORBINOX automated valves are provided with gate guards in accordance with EU Safety Standards.The design feature prevents any objects from being caught accidentally while the gate is moving.
* IN EUROPE ONLY

ORBINOX
VALVE SOLUTIONS IN MORE THAN 70 COUNTRIES

OTHER OPTIONS

Bonnet (Fig.1):
Assures tight seal to atmosphere.
Reduces packing maintenance.

V-port:
60 degree and pentagonal port design. Selection depends on the desired fluid control type.

Flush ports (Fig.2):
Allow for cleaning of solids trapped within the body cavities that can obstruct the flow or prevent the valve from closing. Depending on the process, purging can be made with air, steam, liquids, etc.

Other materials of construction:
Ductile iron, carbon steel, stainless steels (AISI 317, ...), special alloys (254SMO, Hastelloys, ...), etc.

Fabricated valves :
ORBINOX designs, produces and delivers special fabricated valves for special process conditions (big sizes and/or high pressures).

EXT (full lug design):
Modified version of the EX model with full lug design for end of line applications. Standard flange connection from DIN PN 10, ANSI 150, to AS "D". Sizes available up to DN 24"/600mm.

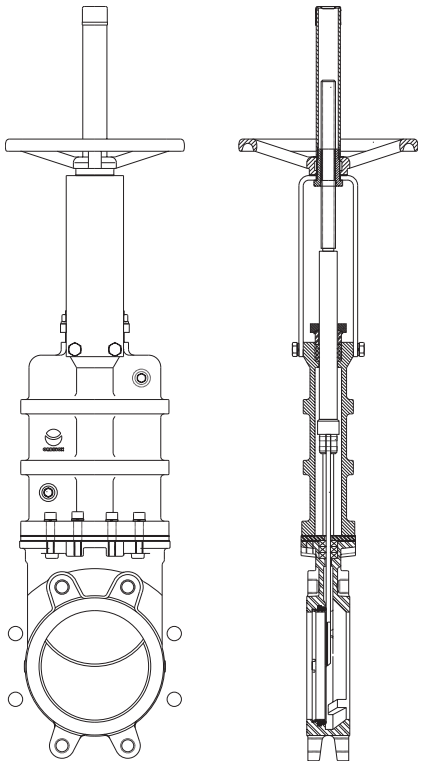

Fig.1

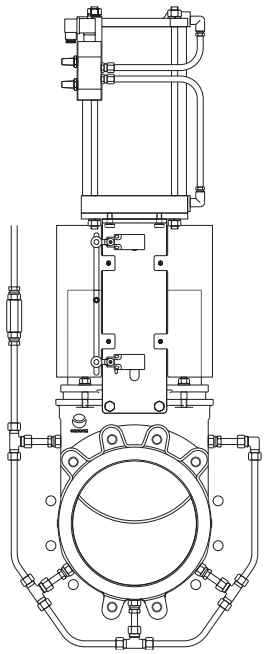

Fig.2

SURFACE TREATMENTS

Valve components can be protected or coated for a longer life expectancy, depending on the application of the valves and the valve service conditions. At ORBINOX we can offer alternative treatments and coatings for the different valve components to improve their properties against abrasion (Stellite, Polyurethane...), against corrosion (Halar, Rilsan, Galvanised...) and against adherence (Polishing, PTFE...).

ATEX

Please contact our ORBINOX representative for information and availability.
Some considerations:

- Hand operated EX(SER.10) valves have been subject to an ignition risk assessment according to the DIN EN 13463: 1-5 standard and they are out the scope of application of ATEX Directive. Therefore hand operated valves are suitable for ALL ATEX zones.
- Electrical, pneumatical and hydraulically operated valves must be subject to a conformity assessment of their own and also of the whole unit valve actuator to get EC Type Approval to Directive 2014/34.

We recommend consultation with our technical department.

MODEL EX SERIES 10

ORBINOX
VALVE SOLUTIONS IN MORE THAN 70 COUNTRIES

ACTUATOR TYPES

MANUAL:
Handwheel (rising stem)
Handwheel (non-rising stem)
Chainwheel
Lever
Bevel Gear
Other (square nut)

AUTOMATIC:
Electric (rising & non-rising stem)
Pneumatic (single & double-acting)
Hydraulic

All actuators supplied by ORBINOX are interchangeable

ACCESSORIES:
Mechanical Stops
Actuator manual override
Positioners
Proximity Switches
Stem Extensions

Locking device
Solenoid valves
Limit Switches
Floor stands

Wide range of valve extensions available

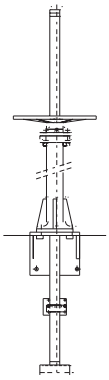

Please contact our Technical Department



Standard Handwheel (Rising Stem)

Handwheel (Non Rising Stem)

Pneumatic Cylinder

Electric

Lever

MODEL EX SERIES 10

ORBINOX
VALVE SOLUTIONS IN MORE THAN 70 COUNTRIES

TEMPERATURE CHART

SEAT / SEALS

Material	Max.T (Fº)	(ºC)	Applications
Metal/Metal	>482	>250	High temp./Low tightness
EPDM (E)	248	120	Acids and non mineral oils
Nitril (N)	248	120	Resistance to petroleum products
Viton (V)	392	200	Chemical service /High temp.
Silicon (S)	482	250	Food service / High temp.
PTFE (T)	482	250	Corrosion resistance

More details and other materials under request

PACKING

Material	Max.T (Fº)	(ºC)	pH
Dry cotton (AS)	122	50	6-8
PTFE impregn. synth. fibre (ST)	464	240	2-13
Braided PTFE (TH)	500	260	0-14
Graphited (GR)	1112	600	0-14
Ceramic fibre (FC)	2192	1200	--

NOTE: all types include an elastomere O-ring (same material as seal), excluding TH, GR and FC.

SEAT TYPES

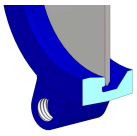

METAL/METAL
For applications with:
- High temperature
- High density media application
- In those cases when full tightness is not required

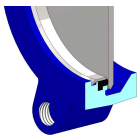

RESILIENT TYPE "A"
- Standard resilient seat.
- Temperature limitations according to the selectred seat material. Review the above chart or contact our Technical Department for more information.
- Seat with replaceable retainer ring

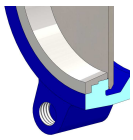

TYPE "B" SEAT (metal/metal)
For applications with:
- High temperature
- High density media application
- In those cases when full tightness is not required
- Replaceable design without dismantling the valve

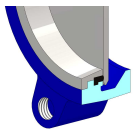

TYPE "B" SEAT (resilient)
- Temperature limitations according to the selected seat material. Review the above chart or contact our Technical Department for more information.
- Replaceable and reinforced seat ring available in different materials such as: stainless steel, CA1 5, Ni Hard,...

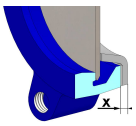

DEFLECTION CONE "C"
- Deflects the media away from any valve internal exposed parts (gate guides, seat,...)
- Material: AISI 316, CA15, Ni-Hard, etc.
- Face-to-face dimension increases:

DN 2"/50mm to DN 10"/250mm X = 0.35"/9mm
DN 12"/300mm to DN 24"/600mm X = 0.47"/12mm
Larger diameters on request

MODEL **EX** **SERIES 10**

ORBINOX
VALVE SOLUTIONS IN MORE THAN 70 COUNTRIES

VALVE EXTENSIONS

The extension on a valve allows the operator to open or close the valve from a distance. Different types of extensions can be used depending on the application and the distance from the gate to the actuator.

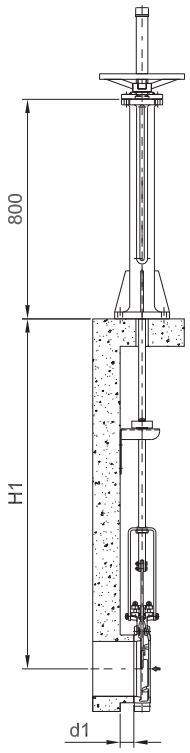

Fig.1

1 - Floor stand

- A pipe of the required length is added to the valve stem.
- Stem and yoke assembly remain in the original position.
- A floor stand is normally used at the top of the extension for actuator installation purposes.
- Required dimensions:
  H1: distance from centre line of the pipe to the base of the floor.
  d1: (wall bracket) distance from the wall to the face of the connecting flange.

Notes:

a- Any type of actuator can be mounted on the floor stand such as Handwheel, Gear, Electric, etc.
b- A wall bracket (Fig. A) is recommended at every 59"/1.5m. This prevents any deviation or buckling of the extension rod.
c- Standard construction of the floor stand is fabricated carbon steel. Other materials are available on request. (Fig. 1)
d- A position indicator (optional) can be installed for easy visibility of the percentage of opening of the valve.
e- Availability of supports for actuator floor stands (Fig. 2) upon request.

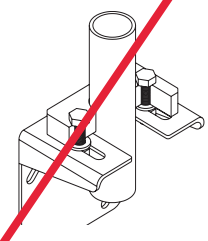
Fig. A

STANDARD PARTS LIST	
Parts:	**Material:**
Spindle	AISI 303
Stem	AISI 304
Wall bracket	Carbon Steel- Epoxy coated
Slider	Nylon
Floor stand	Cast Iron- Epoxy coated

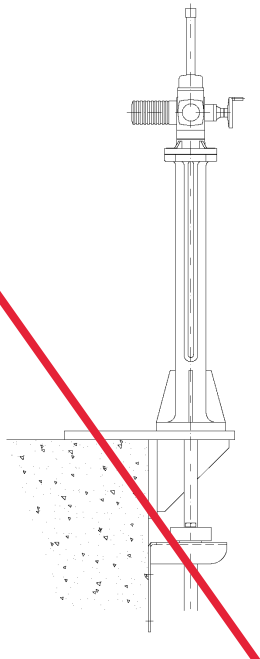
Fig.2

ORBINOX
VALVE SOLUTIONS IN MORE THAN 70 COUNTRIES

2.- Tube

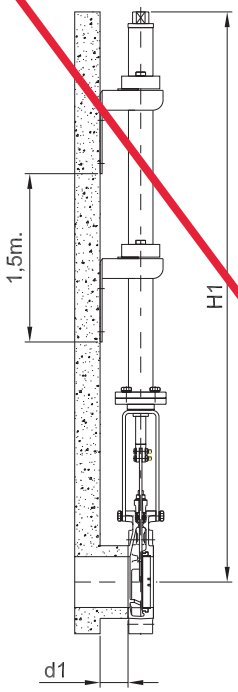

- Stem and yoke assembly remains in its original position.
- Handwheel is replaced by a tube, which rotates at the time of operating the valve.
- Stem rises and lowers within the tube.
- Ideal for surface box operation, valve can be operated with a T-bar and a square nut.
- Required dimensions:
  H1: distance from centre line of the pipe to the base of the floor.
  d1: (wall bracket) distance from the wall to the face of the connecting flange.

Notes:

1. Handwheel or square nut operated only.
2. A wall bracket (Fig. A) is recommended at every 59"/1.5m. This prevents any deviation or buckling of the extension rod.
3. Standard construction of the extension is carbon steel epoxy coated. Other materials are available on request.

3 - Universal joint

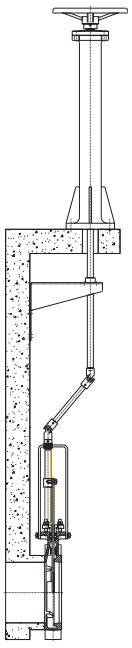

- Universal joints are used in those cases where the alignment of the extension between valve and actuator is not feasible.
- Please contact our technical department for more information.

4 - Extended support plates

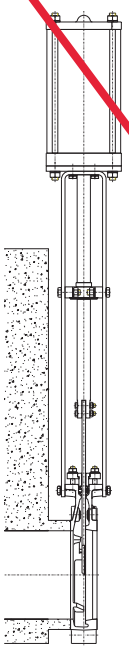

- Ideal where long extensions are not required.
- Guide bearing is installed at the mid point to prevent any deflection of the rod.

MODEL EX SERIES 10

ORBINOX
VALVE SOLUTIONS IN MORE THAN 70 COUNTRIES

HANDWHEEL (rising stem)

- Standard handwheel actuator
- Consists of:
  - Handwheel: Epoxy coated Cast Iron
  - Stem
  - Stem nut
  - Stem protector
- Available from DN 2"/50mm to DN 40"/1000mm
- Options:
  - Locking Device
  - Extensions

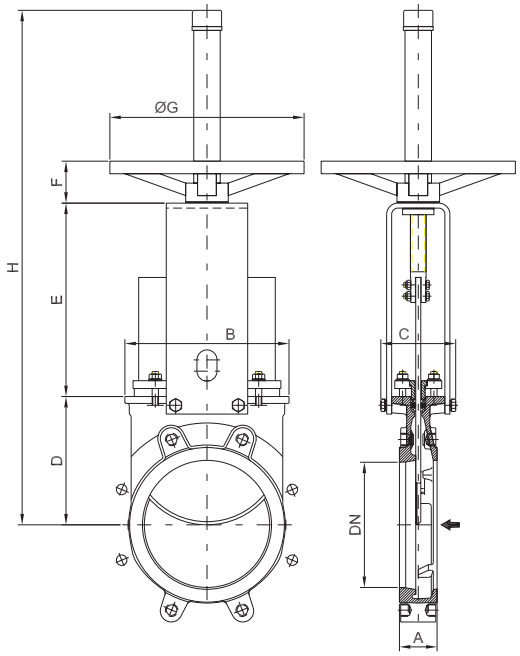

DN("/mm)	A	B	C	D	E	F	ØG	H	Weight (lbs./kg.)
2"/50	1,57/40	4,68/119	4/100	4,13/105	5,07/129	1,85/47	8,86/225	16,53/420	15/7
2,5"/65	1,57/40	5,27/134	4/100	4,53/115	5,79/146	1,85/47	8,86/225	17,71/450	18/8
3"/80	2/50	5,87/149	4/100	4,88/124	6,37/162	1,85/47	8,86/225	18,70/475	20/9
4"/100	2/50	6,65/169	4/100	5,52/140	7,36/187	1,85/47	8,86/225	20,47/520	24/11
5"/125	2/50	7,08/180	4/100	6/150	8,30/211	1,85/47	8,86/225	23,62/600	33/15
6"/150	2,36/60	8,26/210	4/100	6,89/175	9,33/237	1,85/47	8,86/225	25,67/652	40/18
8"/200	2,36/60	10,31/262	4,68/119	8,07/205	12,16/309	2,64/67	12,20/310	32,36/822	66/30
10"/250	2,75/70	12,52/318	4,80/122	10/250	14,33/364	2,64/67	12,20/310	40,23/1022	97/44
12"/300	2,75/70	14,64/372	4,80/122	12/300	16,30/414	2,64/67	12,20/310	44,17/1122	128/58
14"/350	3,78/96	16,97/431	7,75/197	13,30/338	19,13/486	2,60/66	16,14/410	52,08/1323	217/96
16"/400	3,93/100	19,13/486	7,75/197	15,43/392	21,10/536	2,60/66	16,14/410	56,18/1427	274/124
18"/450	4,17/106	21,26/540	7,91/201	17,00/432	23,15/588	2,60/66	21,65/550	62,75/1594	370/168
20"/500	4,33/110	23,70/602	7,91/201	19,09/485	25,51/648	2,60/66	21,65/550	67,20/1707	424/192
24"/600	4,33/110	27,87/708	7,91/201	23,23/590	29,44/748	2,60/66	21,65/550	79,60/2022	540/245
28"/700	4,33/110	32,83/834	14,96/380	27/686	35,04/890	2,92/74	31,50/800	109,37/2778	893/405
30"/750	4,33/110	34,80/884	14,96/380	29,90/760	37,20/945	2,92/74	31,50/800	114,17/2900	1003/455
32"/800	4,33/110	39,96/1015	12,60/320	31,14/791	38,94/989	2,92/74	31,50/800	117,32/2980	1129/512
36"/900	4,33/110	40,94/1040	12,60/320	35,23/895	45,01/1118	2,92/74	31,50/800	126,57/3215	1499/680
40"/1000	4,33/110	45,12/1146	12,60/320	38,28/975	48,03/1220	2,92/74	31,50/800	133,86/3400	1907/865

MODEL EX SERIES 10

ORBINOX
VALVE SOLUTIONS IN MORE THAN 70 COUNTRIES

HANDWHEEL (non-rising stem)

- Recommended for installation where space is limited
- Consists of:
  - Handwheel: Epoxy coated Cast Iron
  - Stem
  - Yoke bushing
  - Stem nut fixed to the gate
- Available from DN 2"/50mm to DN 40"/1000mm
- Options:
  - Locking Device
  - Extension
  - Square Nut Drive

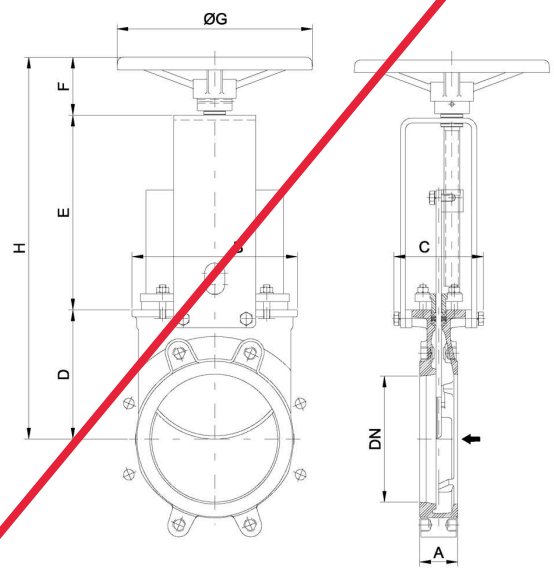

DN("/mm)	A	B	C	D	E	F	ØG	H
2"/50	1,57/40	4,68/119	5/125	4,13/105	5,67/144	2,48/63	8,86/225	12,28/312
2,5"/65	1,57/40	5,27/134	5/125	4,53/115	6,34/161	2,48/63	8,86/225	13,34/339
3"/80	2/50	5,87/149	5/125	4,88/124	6,97/177	2,48/63	8,86/225	14,33/364
4"/100	2/50	6,65/169	5/125	5,52/140	7,95/202	2,48/63	8,86/225	15,94/405
5"/125	2/50	7,08/180	5/125	6/150	8,90/226	2,48/63	8,86/225	17,28/439
6"/150	2,36/60	8,26/210	5/125	6,89/175	9,92/252	2,48/63	8,86/225	19,29/490
8"/200	2,36/60	10,31/262	5,60/142	8,07/205	12,48/317	2,87/73	12,20/310	23,42/595
10"/250	2,75/70	12,52/318	4,60/142	10/250	14,64/372	2,87/73	12,20/310	27,36/695
12"/300	2,75/70	14,64/372	4,60/142	12/300	16,61/422	2,87/73	12,20/310	31,30/795
14"/350	3,78/96	16,97/431	7,75/197	13,30/338	20,03/509	3,86/98	16,14/410	37,20/945
16"/400	3,93/100	19,13/486	7,75/197	15,43/392	22,00/559	3,86/98	16,14/410	41,30/1049
18"/450	4,17/106	21,26/540	7,91/201	17,00/432	24,05/611	3,86/98	21,65/550	44,92/1141
20"/500	4,33/110	23,70/602	7,91/201	19,09/485	26,42/671	3,86/98	21,65/550	49,37/1254
24"/600	4,33/110	27,87/708	7,91/201	23,23/590	30,35/771	3,86/98	21,65/550	57,44/1459
28"/700	4,33/110	32,83/834	14,96/380	27/686	35,43/900	5,94/151	31,50/800	68,38/1737
30"/750	4,33/110	34,80/884	14,96/380	29,90/760	37,20/945	5,94/151	31,50/800	73,07/1856
32"/800	4,33/110	39,96/1015	12,60/320	31,14/791	39,25/997	5,94/151	31,50/800	76,34/1939
36"/900	4,33/110	40,94/1040	12,60/320	35,23/895	44,40/1128	5,94/151	31,50/800	85,59/2174
40"/1000	4,33/110	45,27/1150	12,60/320	38,28/975	49,40/1255	5,94/151	31,50/800	93,74/2381

MODEL **EX** **SERIES 10**

ORBINOX
VALVE SOLUTIONS IN MORE THAN 70 COUNTRIES

CHAINWHEEL

- Recommended for elevated installations
- Consists of:
  - Chainwheel: Epoxy coated Cast Iron
  - Stem
  - Stem nut
  - Stem protector
- Available from DN 2"/50mm to DN 24"/600mm
- Options:
  - Locking Device
  - Extension
  - Rising Stem and Non-rising Stem

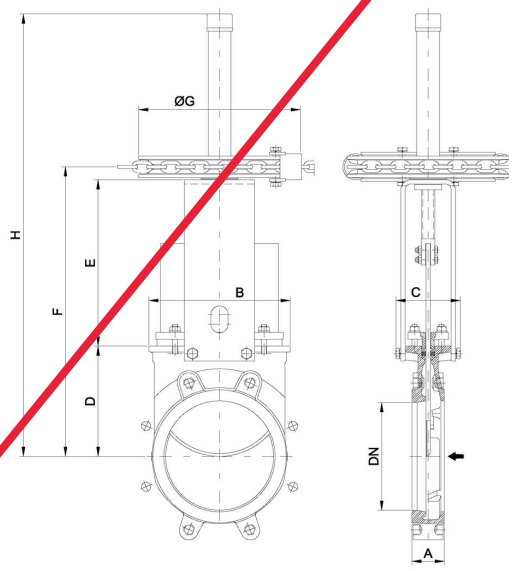

DN("/mm)	A	B	C	D	E	F	ØG	H
2"/50	1,57/40	4,68/119	4/100	4,13/105	5,07/129	9,96/253	8,86/225	16,53/420
2,5"/65	1,57/40	5,27/134	4/100	4,53/115	5,79/146	11,02/280	8,86/225	17,71/450
3"/80	2/50	5,87/149	4/100	4,88/124	6,37/162	12,00/305	8,86/225	18,70/475
4"/100	2/50	6,65/169	4/100	5,52/140	7,36/187	13,66/347	8,86/225	20,47/520
5"/125	2/50	7,08/180	4/100	6/150	8,30/211	14,96/380	8,86/225	23,62/600
6"/150	2,36/60	8,26/210	4/100	6,89/175	9,33/237	16,97/431	8,86/225	25,67/652
8"/200	2,36/60	10,31/262	4,68/119	8,07/205	12,16/309	21,18/538	11,81/300	32,36/822
10"/250	2,75/70	12,52/318	4,80/122	10/250	14,33/364	25,11/638	11,81/300	40,23/1022
12"/300	2,75/70	14,64/372	4,80/122	12/300	16,30/414	29,05/738	11,81/300	44,17/1122
14"/350	3,78/96	16,97/431	7,75/197	13,30/338	19,13/486	33,70/856	17,87/454	52,08/1323
16"/400	3,93/100	19,13/486	7,75/197	15,43/392	21,10/536	37,79/960	17,87/454	56,18/1427
18"/450	4,17/106	21,26/540	7,91/201	17,00/432	23,15/588	41,41/1052	17,87/454	62,75/1594
20"/500	4,33/110	23,70/602	7,91/201	19,09/485	25,51/648	45,87/1165	17,87/454	67,20/1707
24"/600	4,33/110	27,87/708	7,91/201	23,23/590	29,44/748	53,93/1370	17,87/454	79,60/2022

MODEL EX SERIES 10

ORBINOX
VALVE SOLUTIONS IN MORE THAN 70 COUNTRIES

LEVER

- Recommended for quick opening and closing
- Consists of:
  - Lever
  - Stem
  - Yoke sleeve
  - Lever lock
- Available from DN 2"/50mm to DN 12"/300mm

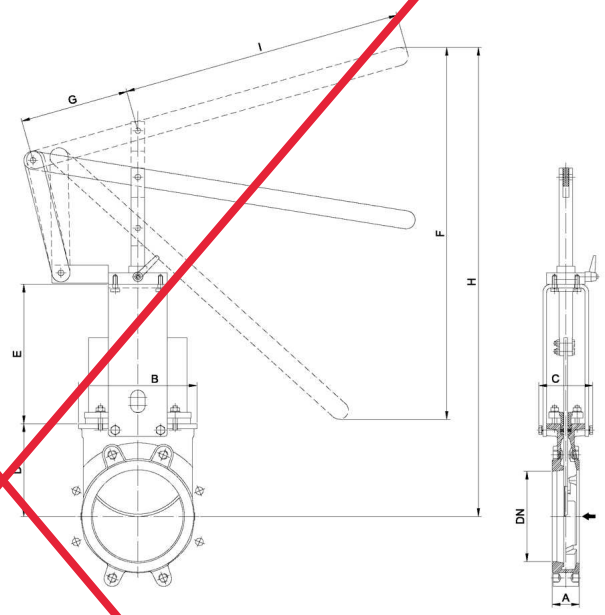

DN(“/mm)	A	B	C	D	E	F	G	H	I
2”/50	1,57/40	4,68/119	4/100	4,13/105	5,07/129	10,08/256	5,90/150	16,06/408	12,40/315
2,5”/65	1,57/40	5,27/134	4/100	4,53/115	5,79/146	10,20/259	5,90/150	17,12/435	12,40/315
3”/80	2/50	5,87/149	4/100	4,88/124	6,37/162	12,08/307	5,90/150	20,03/509	12,40/315
4”/100	2/50	6,65/169	4/100	5,52/140	7,36/187	17,28/439	5,90/150	25,08/637	16,33/415
5”/125	2/50	7,08/180	4/100	6/150	8,30/211	20,83/529	5,90/150	29,72/755	16,33/415
6”/150	2,36/60	8,26/210	4/100	6,89/175	9,33/237	24,40/620	5,90/150	35,23/895	16,33/415
8”/200	2,36/60	10,31/262	4,68/119	8,07/205	12,16/309	32,36/822	9,25/235	40,80/1038	24,40/620
10”/250	2,75/70	12,52/318	4,80/122	10/250	14,33/364	39,17/995	9,25/235	51,45/1307	24,40/620
12”/300	2,75/70	14,64/372	4,80/122	12/300	16,30/414	45,90/1166	9,25/235	62,12/1578	24,40/620

MODEL EX SERIES 10

ORBINOX
VALVE SOLUTIONS IN MORE THAN 70 COUNTRIES

GEAR

- Recommended for valves larger than DN 14"/350mm and working pressures greater than 50psi (3.5 bar)

- Consists of:
  - Stem
  - Yoke
  - Bevel Gear Actuator with Handwheel

- Available from DN 8"/200mm to DN 50"/1200mm

- Options:
  - Locking device
  - Extension
  - Chainwheel
  - Rising stem and non-rising stem

- Standard reduction ratio of 4:1

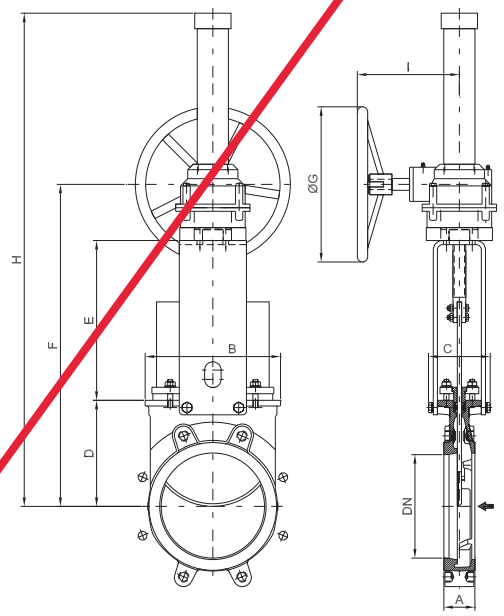

DN("/mm)	A	B	C	D	E	F	ØG	H	I
8"/200	2,36/60	10,31/262	4,68/119	8,07/205	12,16/309	23,00/584	12/300	39,13/994	7,87/200
10"/250	2,75/70	12,52/318	4,80/122	10/250	14,33/364	26,93/684	12/300	43,07/1094	7,87/200
12"/300	2,75/70	14,64/372	4,80/122	12/300	16,30/414	30,86/784	12/300	47/1194	7,87/200
14"/350	3,78/96	16,97/431	7,75/197	13,30/338	18,58/472	33,74/857	18/450	65,24/1657	10,31/262
16"/400	3,93/100	19,13/486	7,75/197	15,43/392	20,55/522	37,83/961	18/450	69,33/1761	10,31/262
18"/450	4,17/106	21,26/540	7,91/201	17,00/432	22,60/574	41,46/1053	18/450	72,95/1853	10,31/262
20"/500	4,33/110	23,70/602	7,91/201	19,09/485	24,96/634	45,90/1166	18/450	77,40/1966	10,31/262
24"/600	4,33/110	27,87/708	7,91/201	23,23/590	28,89/734	53,97/1371	18/450	85,47/2171	10,31/262
28"/700	4,33/110	32,83/834	14,96/380	27/686	35,04/890	63,90/1623	18/450	95,39/2423	10,31/262
30"/750	4,33/110	34,80/884	14,96/380	29,90/760	37,20/945	69,09/1755	18/450	100,59/2555	10,31/262
32"/800	4,33/110	39,76/1015	12,60/320	31,14/791	39,09/993	74,25/1886	18/450	115,19/2926	10,24/260
36"/900	4,33/110	40,94/1040	12,60/320	35,23/895	44,21/1123	83,46/2120	26/650	124,41/3160	11,34/288
40"/1000	4,33/110	45,12/1146	12,60/320	38,28/975	48,03/1220	90,62/2302	26/650	131,57/3342	11,34/288
48"/1200	6/150	54,72/1390	17,71/450	40,82/1037	59,92/1522	106,10/2695	33/850	154,92/3935	14,37/365

MODEL EX SERIES 10

ORBINOX
VALVE SOLUTIONS IN MORE THAN 70 COUNTRIES

PNEUMATIC CYLINDER

- The standard pneumatic actuator (double acting on-off cylinder) consists of:
  - DN ≤ 10"/250mm: Aluminum barrels
  - DN ≥ 12"/300mm: Composite barrels
  - Aluminum end covers
  - Stainless steel (AISI 304) piston rod
  - Nitrile coated steel piston
- Available from DN 2"/50mm to DN40"/ 1000mm
- Supply Pressure: min. 50psi (3.5 bar)- max. 150psi (10 bar). Actuator designed with 85psi (6 bar)air supply.
- For valves installed in a horizontal position, we recommend U-type support plates and/or actuator support.
- Options:
  - Hard anodized barrel and cover
  - Stainless steel barrel and covers
  - Over/Undersized cylinder
  - Manual override
  - Fail safe system (Page EX-14)
  - Limit switches
- Instrumentation (on request):
  - Positioners
  - Solenoid valves
  - Flow regulators
  - Air preparation units

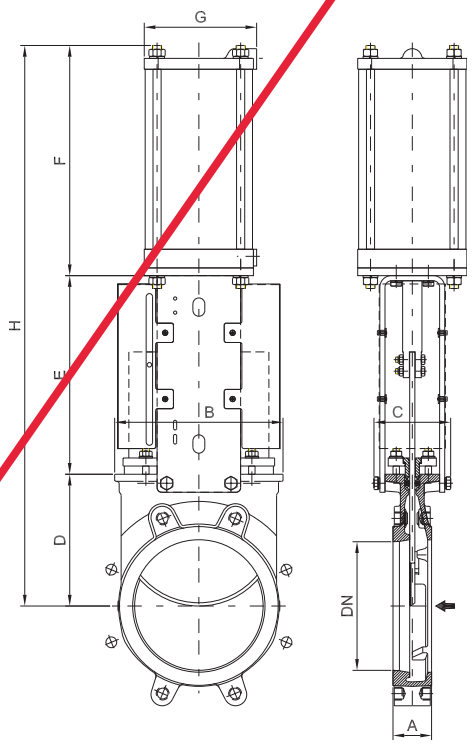

DN("/mm)	A	B	C	D	E	F	G	H	Weight (lbs./kg.)	Standard Cyl.	Connect.
2"/50	1,57/40	4,68/119	4/100	4,13/105	5,07/129	7,00/178	4,53/115	16,22/412	20/9	C4"-2.44"/(100-62)	¼" G
2,5"/65	1,57/40	5,27/134	4/100	4,53/115	5,79/147	7,60/193	4,53/115	17,87/454	22/10	C4"-3.03"/(100-77)	¼" G
3"/80	2/50	5,87/149	4/100	4,88/124	6,37/162	8,31/211	4,53/115	19,56/497	24/11	C4"-3.74"/(100-95)	¼" G
4"/100	2/50	6,65/169	4/100	5,52/140	7,36/187	9,09/231	4,53/115	21,96/558	30/14	C4"-4.52"/(100-115)	¼" G
5"/125	2/50	7,08/180	4/100	6/150	8,30/211	10,67/271	5,51/140	24,88/632	44/20	C5"-5.52"/(125-143)	¼" G
6"/150	2,36/60	8,26/210	4/100	6,89/175	9,33/237	11,65/296	5,51/140	27,87/708	55/25	C5"-6.61"/(125-168)	¼" G
8"/200	2,36/60	10,31/262	4,68/119	8,07/205	12,16/309	14,09/358	6,89/175	34,33/872	97/44	C6.30"-8.66"/(160-220)	¼" G
10"/250	2,75/70	12,52/318	4,80/122	10/250	14,33/364	16,85/428	8,66/220	41,02/1042	148/67	C8"-10.62"/(200-270)	3/8" G
12"/300	2,75/70	14,64/372	4,80/122	12/300	16,29/414	18,82/478	8,66/220	46,93/1192	181/82	C8"-12.60"/(200-320)	3/8" G
14"/350	3,78/96	16,97/431	7,75/197	13,30/338	19,68/500	21,61/549	10,90/277	54,60/1387	298/135	C10"-14.76"/(250-375)	3/8" G
16"/400	3,93/100	19,13/486	7,75/197	15,43/392	21,65/550	23,58/599	10,90/277	60,67/1541	364/165	C10"-16.73"/(250-425)	3/8" G
18"/450	4,17/106	21,26/540	10,63/270	17,00/432	23,94/598	26,77/680	15,03/382	67,32/1710	485/220	C12"-18.70"/(300-475)	½" G
20"/500	4,33/110	23,70/602	10,63/270	19,09/485	25,90/658	28,74/730	15,03/382	73,74/1873	617/280	C12"-20.67"/(300-525)	½" G
24"/600	4,33/110	27,83/708	10,63/270	23,23/590	29,84/758	32,68/830	15,03/382	85,71/2178	727/330	C12"-24.60"/(300-625)	½" G
28"/700	4,33/110	32,83/834	14,96/380	27/686	34,45/875	38,77/985	17,48/444	100,24/2546	1146/520	C14"-28.74"/(350-730)	¾" G
30"/750	4,33/110	34,80/884	14,96/380	29,90/760	36,61/930	40,75/1035	17,48/444	107,28/2725	1290/585	C14"-30.70"/(350-780)	¾" G
32"/800	4,33/110	39,96/1015	12,60/320	31,14/791	38,34/974	42,77/1085	17,48/444	112,20/2850	1433/650	C14"-32.68"/(350-830)	¾" G
36"/900	4,33/110	40,94/1040	12,60/320	35,23/895	43,50/1105	47,32/1202	20,27/515	126,06/3202	1874/850	C16"-36.61"/(400-930)	¾" G
40"/1000	4,33/110	45,12/1146	12,60/320	38,28/975	47,91/1217	47,91/1296	20,27/515	137,32/3488	2334/1060	C16"-40.55"/(400-1030)	¾" G

Reserves the right to change specifications without notice

ORBINOX CANADA, ORBINOX USA, ORBINOX BRAZIL, ORBINOX CHILE, ORBINOX SPAIN, ORBINOX UK, ORBINOX FRANCE, ORBINOX GERMANY, ORBINOX INDIA, ORBINOX CHINA, ORBINOX S.E.A.
www.orbinox.com

MODEL **EX** SERIES 10

ORBINOX
VALVE SOLUTIONS IN MORE THAN 70 COUNTRIES

FAIL SALE SYSTEM

SINGLE ACTING (SPRING RETURN)

- This actuator (single acting cylinder) consists of:
  - Aluminum barrel and covers
  - Steel spring
  - Stainless Steel (AISI 304) piston rod
  - Nitrile coated steel piston
- Available from DN 2"/50mm to DN 12"/300mm
- Supply pressure:
  min. 75 psi / (5 bar) - max. 150 psi / (10 bar)
- Options:
  - Fail open
  - Fail close

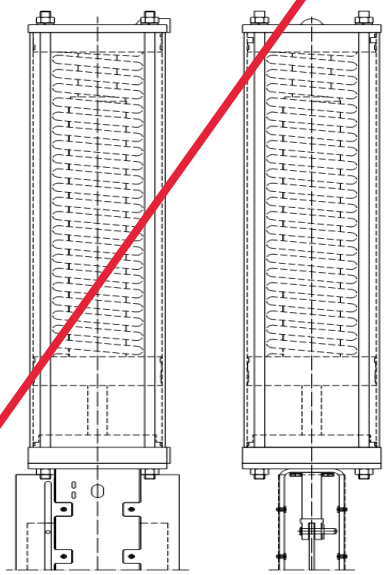

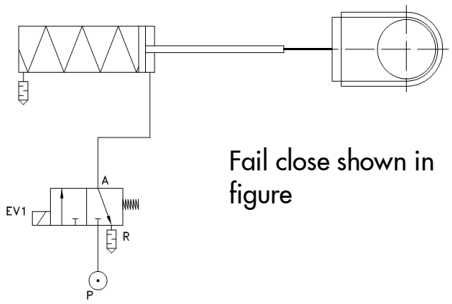

Fail close shown in figure

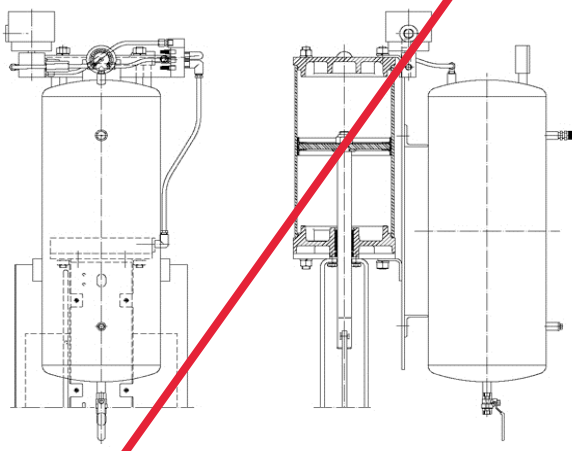

DOUBLE ACTING WITH AIR TANK

- Fail safe systems consists of: double acting pneumatic cylinder, air tank and all the neccessary elements according to the available options (solenoid valve, spool valve,...)
- Different solution available (pressure switches,...)
- Available for all diameters
- Supply Pressure:
  min. 50 psi / (3.5 bar) - max. 150 psi / (10 bar)

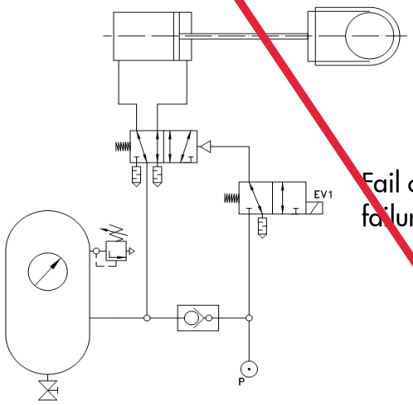

Fail close in power failure shown in figure

MODEL EX SERIES 10

ORBINOX
VALVE SOLUTIONS IN MORE THAN 70 COUNTRIES

ELECTRIC ACTUATOR

- Consists of:
  - Electric actuator
  - Rising stem
  - Motor support yoke flange acc. to ISO 5210 / DIN 3338
- The standard electric motor is equiped with:
  - Manual emergency operation
  - Limit switches (open/closed)
  - Torque switches
- Available from DN 2"/50mm to DN 48"/1200mm
- Wide range of types and marks available to meet customer's needs
- Option:
  - Non rising stem

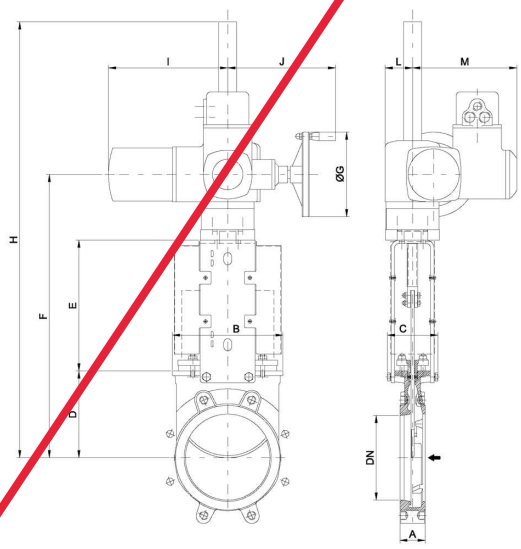

DN(“/mm)	A	B	C	D	E	F	ØG	H	I	J	L	M	Stem Ø x pich	Torque (ft.LBS/Nm)
2”/50	1,57/40	4,68/119	4/100	4,13/105	5,07/129	14,84/377	6,30/160	21,53/547	10,43/265	9,80/249	2,44/62	9,37/238	0.79 x 0.16/20 x 4	7.4/10
2,5”/65	1,57/40	5,27/134	4/100	4,53/115	5,79/146	15,90/404	6,30/160	22,60/574	10,43/265	9,80/249	2,44/62	9,37/238	0.79 x 0.16/20 x 4	7.4/10
3”/80	2/50	5,87/149	4/100	4,88/124	6,37/162	16,88/429	6,30/160	23,58/599	10,43/265	9,80/249	2,44/62	9,37/238	0.79 x 0.16/20 x 4	7.4/10
4”/100	2/50	6,65/169	4/100	5,52/140	7,36/187	18,50/470	6,30/160	25,19/640	10,43/265	9,80/249	2,44/62	9,37/238	0.79 x 0.16/20 x 4	7.4/10
5”/125	2/50	7,08/180	4/100	6/150	8,30/211	19,84/504	6,30/160	26,53/674	10,43/265	9,80/249	2,44/62	9,37/238	0.79 x 0.16/20 x 4	11.1/15
6”/150	2,36/60	8,26/210	4/100	6,89/175	9,33/237	21,81/555	6,30/160	41,55/1055	10,43/265	9,80/249	2,44/62	9,37/238	0.79 x 0.16/20 x 4	14.8/20
8”/200	2,36/60	10,31/262	4,80/122	8,07/205	12,16/309	26,33/669	6,30/160	46,02/1169	10,43/265	9,80/249	2,44/62	9,37/238	0.94 x 0.2/24 x 5	22.2/30
10”/250	2,75/70	12,52/318	4,80/122	10/250	14,33/364	30,27/769	6,30/160	49,96/1269	10,43/265	9,80/249	2,44/62	9,37/238	0.94 x 0.2/24 x 5	33.3/45
12”/300	2,75/70	14,64/372	4,80/122	12/300	16,30/414	34,21/869	6,30/160	53,89/1369	10,43/265	9,80/249	2,44/62	9,37/238	0.94 x 0.2/24 x 5	29.50/40
14”/350	3,78/96	16,97/431	7,75/197	13,30/338	18,13/472	37,00/940	7,87/200	56,69/1440	11,14/283	10/254	2,55/65	9,76/248	1.42 x 0.24/36 x 6	51.8/70
16”/400	3,93/100	19,13/486	7,75/197	15,43/392	21,73/552	41,10/1044	7,87/200	60,78/1544	11,14/283	10/254	2,55/65	9,76/248	1.42 x 0.24/36 x 6	66.38/90
18”/450	4,17/106	21,26/540	10,63/270	17,00/432	24,01/610	46,14/1172	7,87/200	65,82/1672	11,14/283	10/254	2,55/65	9,76/248	1.42 x 0.24/36 x 6	81.4/110
20”/500	4,33/110	23,70/602	10,63/270	19,09/485	26,37/670	50,39/1280	7,87/200	70,07/1780	11,14/283	10/254	3,58/91	9,76/248	1.42 x 0.24/36 x 6	70.06/95
24”/600	4,33/110	27,87/708	10,63/270	23,23/590	31,49/800	61,61/1565	12,40/315	81,29/2065	15,31/389	13,22/336	3,58/91	11,25/286	1.42 x 0.24/36 x 6	103.26/140
28”/700	4,33/110	32,83/834	14,96/380	27/686	35,43/900	69,40/1763	12,40/315	112,04/2846	15,31/389	13,22/336	3,58/91	11,25/286	1.57 x 0.27/40 x 7	88.50/120
30”/750	4,33/110	34,80/884	14,96/380	29,90/760	37,20/945	74,09/1882	12,40/315	116,73/2965	15,31/389	13,22/336	3,58/91	11,25/286	1.57 x 0.27/40 x 7	103.26/140
32”/800	4,33/110	39,96/1015	12,60/320	31,14/791	38,58/980	76,69/1948	12,40/315	110,33/3031	15,31/389	13,22/336	3,58/91	11,25/286	1.97 x 0.31/50 x 8	132.76/180
36”/900	4,33/110	40,94/1040	12,60/320	35,23/895	42,79/1087	84,92/2157	15,74/400	127,55/3240	15,31/389	13,34/339	3,58/91	11,25/286	1.97 x 0.31/50 x 8	163.74/220
40”/1000	4,33/110	45,12/1146	12,60/320	38,28/975	47,24/1200	92,51/2350	15,74/400	135,07/3431	15,31/389	13,34/339	3,58/91	11,25/286	1.97 x 0.31/50 x 8	221.27/300
48”/1200	5,90/150	45,71/1390	17,71/450	40,82/1037	58,46/1485	107,55/2732	20/500	162,87/4137	16,93/430	14,37/365	4,61/117	11,93/303	2.36 x 0.35/60 x 9	354.03/480

MODEL EX SERIES 10

ORBINOX
VALVE SOLUTIONS IN MORE THAN 70 COUNTRIES

FLANGE AND BOLTING DETAILS

ANSI B16.5 , class 150 (*)

DN	K	nº	M	T	⌖ ⌖ ⌖
2″	4 ¾″	4	5/8″ - 11 UNC	3/8″	4 - 0 - 0
2 ½″	5 ½″	4	5/8″ - 11 UNC	3/8″	4 - 0 - 0
3″	6″	4	5/8″ - 11 UNC	3/8″	4 - 0 - 0
4″	7 ½″	8	5/8″ - 11 UNC	3/8″	4 - 0 - 4
5″	8 ½″	8	3/4″ - 10 UNC	3/8″	4 - 0 - 4
6″	9 ½″	8	3/4″ - 10 UNC	1/2″	4 - 0 - 4
8″	11 ¾″	8	3/4″ - 10 UNC	1/2″	4 - 0 - 4
10″	14 ¼″	12	7/8″ - 9 UNC	3/4″	6 - 0 - 6
12″	17″	12	7/8″ - 9 UNC	3/4″	6 - 0 - 6
14″	18 ¾″	12	1″ - 8 UNC	7/8″	4 - 4 - 4
16″	21 ¼″	16	1″ - 8 UNC	1″	6 - 4 - 6
18″	22 ¾″	16	1 1/8″ - 7 UNC	1″	6 - 4 - 6
20″	25″	20	1 1/8″ - 7 UNC	1″	8 - 6 - 6
24″	29 ½″	20	1 1/4″ - 4 UNC	1″	8 - 6 - 6
28″	34″	28	1 1/4″ - 4 UNC	3/4″	12 - 6 - 10
30″	36″	28	1 1/4″ - 4 UNC	3/4″	12 - 8 - 8
32″	38 ½″	28	1 1/2″ - 6 UNC	3/4″	12 - 8 - 8
36″	42 ¾″	32	1 1/2″ - 6 UNC	3/4″	14 - 8 - 10
40″	47 ¼″	36	1 1/2″ - 6 UNC	3/4″	14 - 12 - 10
42″	49 ½″	36	1 1/2″ - 6 UNC	3/4″	14 - 12 - 10
48″	56″	44	1 1/2″ - 6 UNC	13/16″	26 - 10 - 8

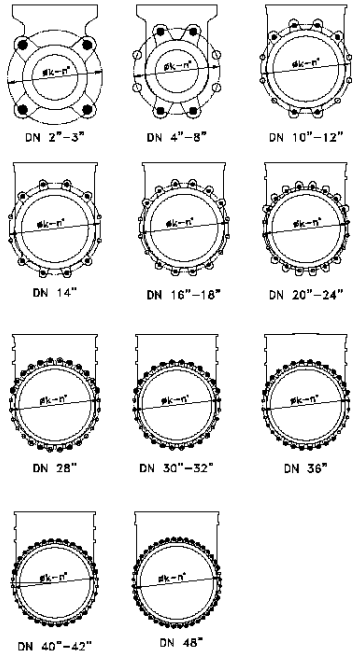

(*) From DN 24″, acc. To MSS SP 44 (class 150)

EN 1092-2 PN10

DN	K	nº	M	T	⌖ ⌖ ⌖
50	125	4	M-16	11	4 - 0 - 0
65	145	4	M-16	11	4 - 0 - 0
80	160	8	M-16	11	4 - 0 - 4
100	180	8	M-16	11	4 - 0 - 4
125	210	8	M-16	11	4 - 0 - 4
150	240	8	M-20	14	4 - 0 - 4
200	295	8	M-20	14	4 - 0 - 4
250	350	12	M-20	18	6 - 0 - 6
300	400	12	M-20	18	6 - 0 - 6
350	460	16	M-20	22	6 - 4 - 6
400	515	16	M-24	24	6 - 4 - 6
450	565	20	M-24	24	8 - 6 - 6
500	620	20	M-24	24	8 - 6 - 6
600	725	20	M-27	24	8 - 6 - 6
700	840	24	M-27	20	10 - 6 - 8
800	950	24	M-30	20	10 - 6 - 8
900	1050	28	M-30	20	12 - 8 - 8
1000	1160	28	M-33	20	12 - 8 - 8
1200	1380	32	M-36	30	22 - 6 - 4

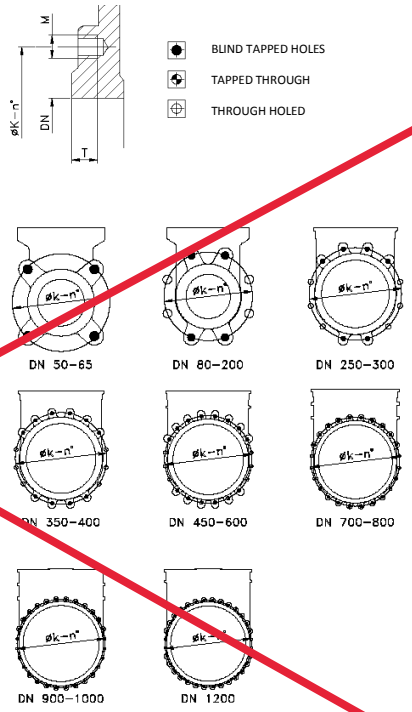

REVIEWED BY CONTRACTOR

Kudlik Construction Ltd.

NAME: Sandra Rousseau P.Eng

DATE: Jun 19, 2018

NORCLAIR
MÉCANIQUE DE PROCÉDÉ

TDS AND SHOP DRAWINGS

DA-MP-05-Actuator for KV01 250mm

Date : 2018-06-19

INFORMATION	
Project : **WASTEWATER PLANT - IQALUIT**	
Client : Kudlik Construction Ltd. To Sandra Rousseau P.Eng./ Project Manager	Project number : **2018-062**
Contractor : Norclair inc.	Project number Norclair : **P1039**
Address : 1100, Montee Masson, Laval, QC, Canada H7E 4P2	
Project Manager : Steven Wieland	E-mail: swieland@norclair.ca
Phone: 450-688-4012 # 708	Cell.: 514-608-0619

Information, subcontractor or supplier	
Sub supplier : Contrôles Laurentide	
Contact : Fabrice Durocher	Phone : 514-697-9225 ext. 214

Information on the equipment or the proposed materials	
Speciality : Mechanical Process	
Equipment : Actuator for KV01 250mm (Emerson)	
Drawing reference :	
Specification reference : 40 05 23	Division :
Article :	Number Page : 4

CONSULTANT APPROVAL

STANTEC PROJECT #: Iqaluit WWTP

SUBMITTAL # DA-MP-05

This review by Stantec is for general conformance with the design concept of Stantec's design of the:

☑ Process ☐ Structural ☐ Mechanical ☐ Electrical ☐ Other

Stantec

☑ REVIEWED

☐ REVIEWED, AS NOTED

☐ REVISE AND RESUBMIT

☐ NOT REVIEWED

component(s) only and does not mean that Stantec has verified or approves the shop drawing(s). The Contractor remains solely responsible for the shop drawing(s) and this review by Stantec does not relieve the Contractor of the Contractor's responsibility for errors or omissions in the shop drawing(s) or for meeting all requirements of the contract documents. This review does not mean that Stantec approves the detailed design inherent in the shop drawing, responsibility for which shall remain with the Contractor submitting same, nor does this review mean that Stantec accepts any deviation of the shop drawing(s) from the contract documents. The Contractor is responsible for confirming all dimensions and correlating them at the job site, for all construction means, methods and techniques, and for coordination of construction work of all trades, including coordination of all shop drawings.

DATE June 22, 2018

BY Libin Ren

1100, Montée Masson
Laval, QC, Canada
H7E 4P2

Phone. : 450-688-4012
Fax : 450-661-6341
E-Mail : info@norclair.ca
www.norclair.ca

Actuator for KV01 250mm

EIM SPEC SHEET

EIM electric multi turn actuator, M2CP series, CSA (Class I, II, III Div 1, Groups D, E, F, G, T4A) rated enclosure, 30 RPM, Open/Close functionnality, 16 contact position switches, Reversing contactor, Solid state starter, 115 VAC / 1 Ph / 60 Hz power supply, Momentary push buttons controls, Space heater and thermostat, c/w declutchable handwheel

Project Na
Customer:
Line No:

Quote No: 2354589

Date: 15-JUN-2018

Valve Data

Manufacturer:	Orbinox
Size:	10
Type:	Knife
Rating:	150
Torque (ft-lb):	33

Valve Stem Data

(Dimensions – Inches)

Diameter (in):	0.94
Pitch (in):	0.2
Lead (in):	0.2
Hand:	Left
Valve Opens:	Up
Turns-Full Stroke:	50
Stroke (in):	10
Stroke Time (sec):	63
Output Rotation:	CW to Close

Actuator Data

Quantity:	1
EIM Model No:	1CRA-6
Outline Dwg:	1-0005/10G
Assembly Dwg:	83640D_1 83640D_2
Instructions:	Manual E796
Enclosure:	[CSA] Class I, II, III; Div 1; Groups D, E, F, G; T4A (120C)
RPM Out:	51
Torque Spring:	VA83439-1 (Purple)
Motor Gears:	VAP3337-R (1.40:1)
H/W Gears:	VAP3460-1 (0.50:1)
Drv Sleeve/Worm:	VA35519-2R (48:2R)
Lubrication:	#197 Moly Synthetic Grease
Nameplate:	VA36303-1-T4A
Handwheel:	VA84449-8 (8" Paddle)
Paint/Coating:	Standard Powder Coat

Electrical Data

Control Type:	M2CP
Power Voltage:	1 Phase/60 Hz/115 VAC
N Number:	67
M2CP Frame:	VA84108-2A (4T-3G/10T)
Motor Protection:	Std Motor Thermals
Contactor:	VA84147 (1ph)
Transformer:	VA84143-6 (115/115,12 and 18V)
Control Functions:	Position Seat, Momentary P.B.
LSM:	VA84112-01A (LSM01 3B, 3L, SS)
Position Switches:	LSC,LSO,LSA,LSB (16Contacts)
Cover Assembly:	VA84350-01S (3B, 2L, SS)
Pushbuttons:	Open-Stop-Close
Std Lamp Color:	Open-Red, Close-Green
Selector Switch:	Local-Off-Remote or Hand-Off-Auto
ISM:	VA84078-5 (ISM01, LSA/LSB)
TBM:	VA83943 (TBM01)
Thermostat:	Space Heater and Thermostat
T/S Shaft Rotates:	CCW To Close

Motor Data

Horsepower:	1/4
RPM:	1725
Voltage:	115 VAC
Frequency:	60 Hz
Phase:	1 Ph
Run Amps (15m):	13
Stall Amps:	45
Motor Part No:	VA9H1/21FC-C
Motor Heater:	In Motor

Additional Accessories, Services & Notes

Torque Switches

Dial Setting:	2	3	4	5	6	7	8	9
Ft-lb Output:	20	27	34	41	48	52	59	65

Approximate only. Actual torque requires test by dynamometer.

Stem Nut Tapping: By Others. Ship blank with Actuator.

Special Notes:
Model String : 1CRA-6
Stem Nut/Bushing Item : VA35849-1

****

1. 1.50-11.5 NPT (2 Plcs) is preferred wire entry. CAUTION Conduit must enter at lowest point to prevent water from entering electrical enclosure due to condensation. If hazardous (classified) or NEMA 6 location, conduit seal required at electrical enclosure entrances.
2. Lubrication 0.50-14 NP plugs.
3. To move actuator to another valve, bronze stem nut P/N 35849 may be threaded up to 1.38" Acme stem max.

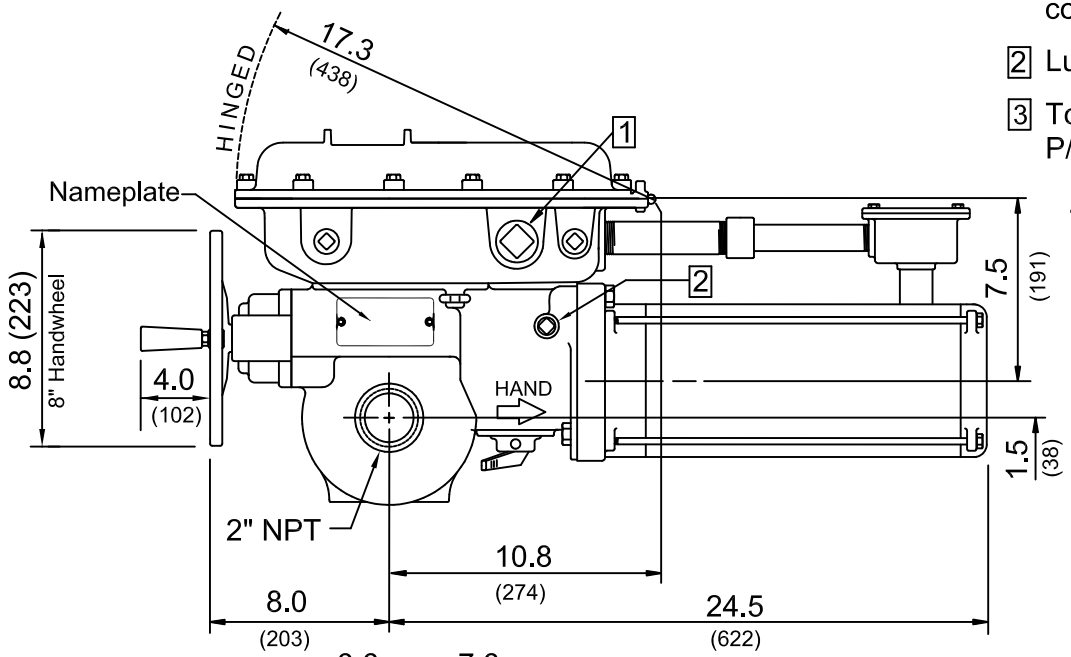

4) For electrical control pilot device elements mounted on actuator control cover, see EIM job spec sheet & wiring diagram furnished for each specific job no.

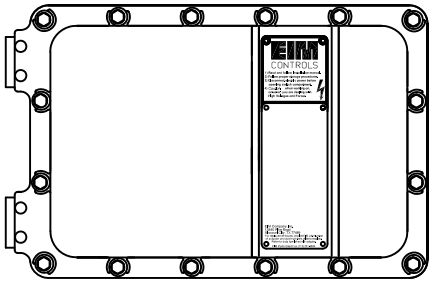

5) WARNING - The installation and servicing instructions are for use by qualified personnel only. To avoid injury and electric shock, do not perform any service on EIM equipment unless qualified.

6) Installation shall be in accordance with current edition of National Electrical Code

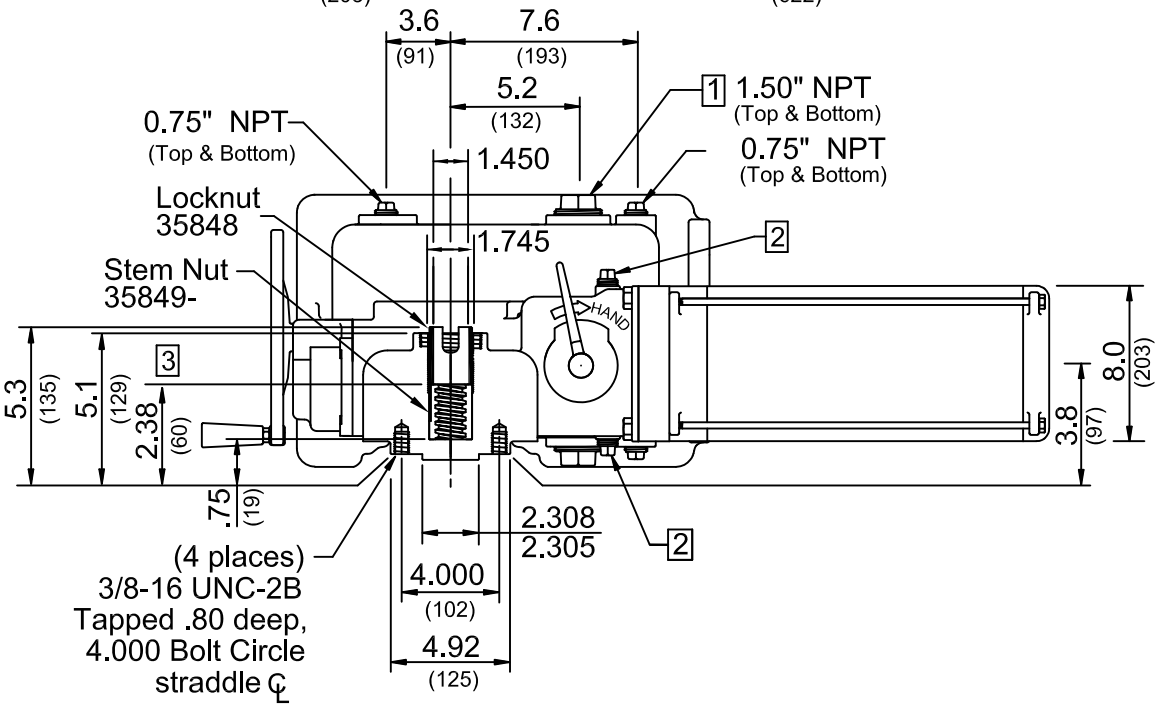

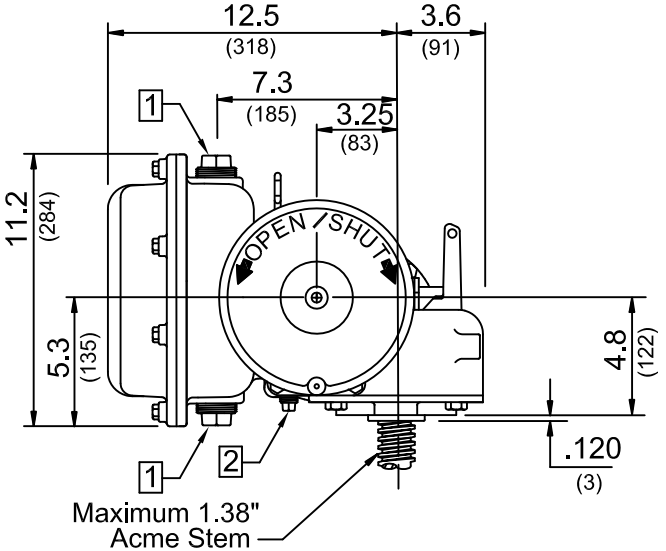

INCHES .XXX ± .005"
(MILLIMETERS) .XX ± .020"
.X APPROX.

EIM COMPANY, INC.
13840 PIKE ROAD
CONTROLS MISSOURI CITY, TX 77489

TITLE 1000 M/T 4.00

REV	DATE	ERO	BY
A	10/16/00	13329	/CML

OUTLINE NO. 1-0005/10G REV A

FORM 99954-C

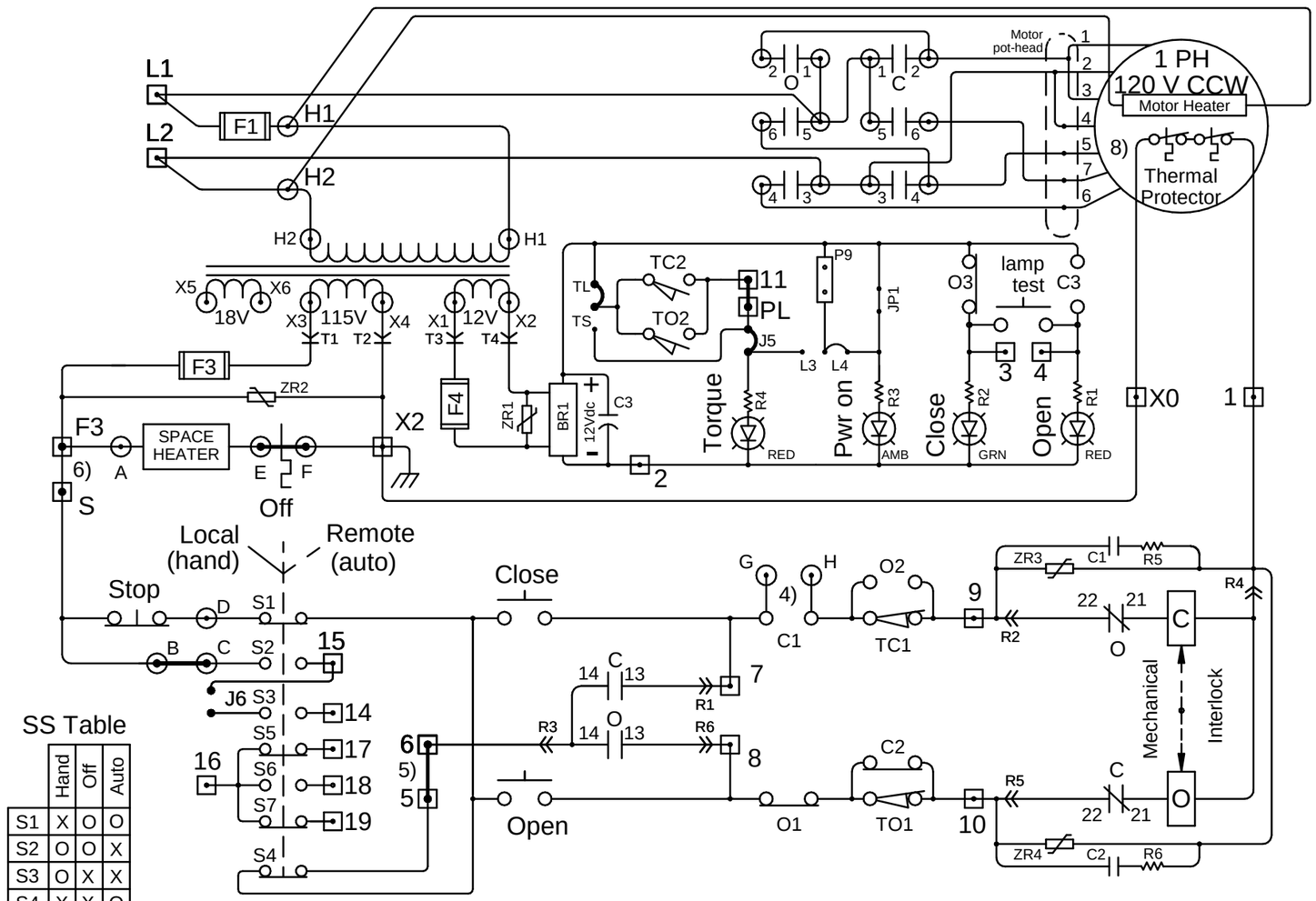

S	Hand	Off	Auto
S1	X	O	O
S2	O	O	X
S3	O	X	X
S4	X	X	O
S5	X	O	O
S6	O	O	X
S7	X	X	O

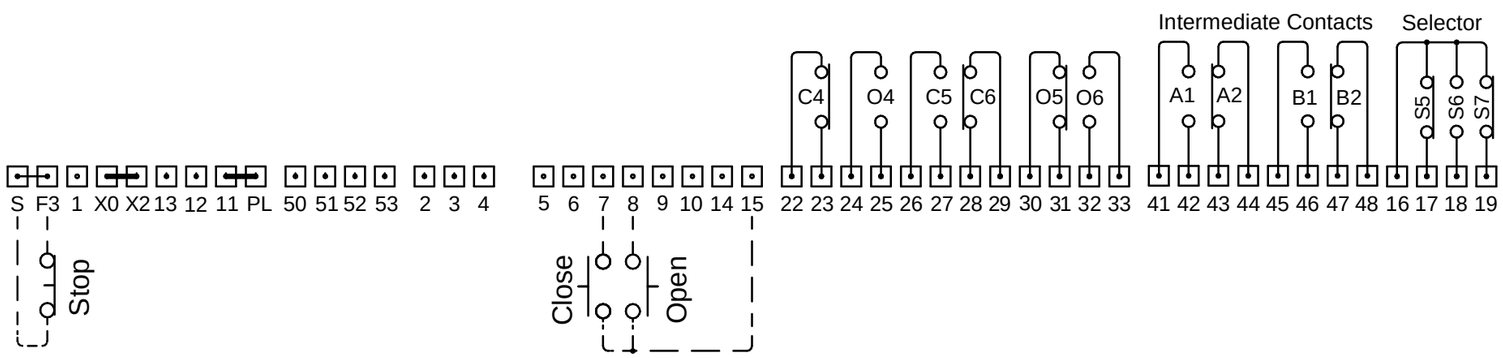

REV	Drawn by	DATE
1	GCS	15/JUN/2018

1) Contacts shown: Valve Closed, Voltage: Off, S/S: Hand

2) Customer wires to terminals on PWR and TBM modules. M2CP Internal terminal interconnet wiring ports

3) Torque Switch TC1 & TO1 NC Contacts open and TC2 & TO2 contacts make on field adjustable mechancial overload in (C) Close, or (O) in Open direction.

4) For Torque seated valve: Install G to H strap on LSM

5) For maintained PB control: remove 5 to 6 strap on TBM

6) For remote stop PB or relay: remove F3 to S strap on TBM

7) O & C (22-21) Reversing contactor: NC interlock contacts. O & C (14-13) Momentary pushbutton NO seal-in contacts.

8) Motor thermal contacts open with excessive temperature

9) Position Indicator Pilot Lights: LED solid-state Open indicates: Full Open (RED) Close indicates: Full Closed (Green) Mid Position: Both OPEN and CLOSE illuminated

14) Use 90c minimum related conductors for customer field wiring to valve actuator

16) Pwr ON and Torque Indicators are only visible with cover open for convenience during maintenance procedures.

		Valve Position			Contact Function
		Close	MID	Open	
CLOSE rotor	C1	O	X	X	Close coil
	C2	X	O	O	Bypass TO1
	C3	O	X	X	Open lamp
	C4	X	O	O	
	C5	O	X	X	
	C6	X	O	O	
OPEN rotor	O1	X	X	O	Open coil
	O2	O	O	X	Bypass TC1
	O3	X	X	O	Close lamp
	O4	O	O	X	
	O5	X	X	O	
	O6	O	O	X	
A	A1	O	X		Spare
	A2	X	O		Spare
B	B1	O	X		Spare
	B2	X	O		Spare

LSM	TBM	RCT	MTR	ISM					
01	01	02	09	01					

TITLE:
Wiring Diagram

EMERSON

Emerson Ref No. 2354589

Customer: LAURENTIDE CONTROLS LTD

DRAWING No: 2354589_1

Project Name:
IQALUIT Q18-114-01-02

SCALE: NTS | DWG SIZE: A3 | 1

SHEET 1 OF 1 SHEETS | REV

D C A

8 7 6 5 4 3 2 1

REVIEWED BY CONTRACTOR

Kudlik Construction Ltd.

NAME: Sandra Rousseau P.Eng

DATE: Jun 19, 2018

NORCLAIR
MÉCANIQUE DE PROCÉDÉ

TDS AND SHOP DRAWINGS

DA-MP-06-Actuators (350 and 400mm) **Date :** 2018-06-19

INFORMATION	
Project : **WASTEWATER PLANT - IQALUIT**	
Client : Kudlik Construction Ltd. To Sandra Rousseau P.Eng./ Project Manager	Project number : **2018-062**
Contractor : Norclair inc.	Project number Norclair : **P1039**
Address : 1100, Montee Masson, Laval, QC, Canada H7E 4P2	
Project Manager : Steven Wieland	E-mail: swieland@norclair.ca
Phone: 450-688-4012 # 708	Cell.: 514-608-0619

Information, subcontractor or supplier	
Sub supplier : Contrôles Laurentide	
Contact : Fabrice Durocher	Phone : 514-697-9225 ext. 214

Information on the equipment or the proposed materials	
Speciality : Mechanical Process	
Equipment : Actuator for KV01 350 and 400mm (Emerson)	
Drawing reference :	
Specification reference : 40 05 23	Division :
Article :	Number Page : 5

CONSULTANT APPROVAL

STANTEC PROJECT #: Iqaluit WWTP

SUBMITTAL # DA-MP-06

This review by Stantec is for general conformance with the design concept of Stantec's design of the:

☑ Process ☐ Electrical
☐ Structural ☐ Other
☐ Mechanical

component(s) only and does not mean that Stantec has verified or approves the shop drawing(s). The Contractor remains solely responsible for the shop drawing(s) and this review by Stantec does not relieve the Contractor of the Contractor's responsibility for errors or omissions in the shop drawing(s) or for meeting all requirements of the contract documents. This review does not mean that Stantec approves the detailed design inherent in the shop drawing, responsibility for which shall remain with the Contractor submitting same, nor does this review mean that Stantec accepts any deviation of the shop drawing(s) from the contract documents. The Contractor is responsible for confirming all dimensions and correlating them at the job site, for all construction means, methods and techniques, and for coordination of construction work of all trades, including coordination of all shop drawings.

Stantec

☑ REVIEWED

☐ REVIEWED, AS NOTED

☐ REVISE AND RESUBMIT

☐ NOT REVIEWED

DATE June 22, 2018

BY Libin Ren

1100, Montée Masson
Laval, QC, Canada
H7E 4P2

Phone. : 450-688-4012
Fax : 450-661-6341
E-Mail : info@norclair.ca
www.norclair.ca

Actuators for KV01 350 and 400mm

EIM SPEC SHEET

EIM electric multi turn actuator, M2CP series, CSA (Class I, II, III Div 1, Groups D, E, F, G, T4A) rated enclosure, 30 RPM, Open/Close functionnality, 16 contact position switches, Reversing contactor, Solid state starter, 115 VAC / 1 Ph / 60 Hz power supply, Momentary push buttons controls, Space heater and thermostat, c/w declutchable handwheel

Project Nan
Customer:
Line No:

Quote No: 2354589

Date: 15-JUN-2018

Valve Data

Manufacturer:	Orbinox
Size:	14
Type:	Knife
Rating:	150
Torque (ft-lb):	52

Valve Stem Data

(Dimensions – Inches)

Diameter (in):	1.42
Pitch (in):	0.24
Lead (in):	0.24
Hand:	Left
Valve Opens:	Up
Turns-Full Stroke:	58
Stroke (in):	14
Stroke Time (sec):	73
Output Rotation:	CW to Close

Actuator Data

Quantity:	4
EIM Model No:	2ERG-6
Outline Dwg:	2-0005/14G
Assembly Dwg:	83853D_2
Instructions:	83853D_1 Manual E796
Enclosure:	[CSA] Class I, II, III; Div 1; Groups D, E, F, G; T4A (120C)
RPM Out:	51
Torque Spring:	VA83439-1 (Purple)
Motor Gears:	VAP3337-R (1.40:1)
H/W Gears:	VAP3460-1 (0.50:1)
Drv Sleeve/Worm:	VA35597-2R (48:2R)
Lubrication:	#197 Moly Synthetic Grease
Nameplate:	VA36303-1-T4A
Handwheel:	VA84449-8 (8" Paddle)
Paint/Coating:	Standard Powder Coat

Electrical Data

Control Type:	M2CP
Power Voltage:	1 Phase/60 Hz/115 VAC
N Number:	77
M2CP Frame:	VA84108-2A (4T-3G/10T)
Motor Protection:	Std Motor Thermals
Contactor:	VA84147 (1ph)
Transformer:	VA84143-6 (115/115,12 and 18V)
Control Functions:	Position Seat, Momentary P.B.
LSM:	VA84112-01A (LSM01 3B, 3L, SS)
Position Switches:	LSC,LSO,LSA,LSB (16Contacts)
Cover Assembly:	VA84350-01S (3B, 2L, SS)
Pushbuttons:	Open-Stop-Close
Std Lamp Color:	Open-Red, Close-Green
Selector Switch:	Local-Off-Remote or Hand-Off-Auto
ISM:	VA84078-5 (ISM01, LSA/LSB)
TBM:	VA83943 (TBM01)
Thermostat:	Space Heater and Thermostat
T/S Shaft Rotates:	CCW To Close

Motor Data

Horsepower:	3/4
RPM:	1725
Voltage:	115 VAC
Frequency:	60 Hz
Phase:	1 Ph
Run Amps (15m):	22
Stall Amps:	78
Motor Part No:	VA9H1/21FC-E
Motor Heater:	In Motor

Additional Accessories, Services & Notes

Torque Switches

Dial Setting:	2	3	4	5	6	7	8	9
Ft-lb Output:	20	27	34	41	48	52	59	65

Approximate only. Actual torque requires test by dynamometer.

Stem Nut Tapping: By Others. Ship blank with Actuator.

Special Notes:
Model String : 2ERG-6
Stem Nut/Bushing Item : VA35851-SK

****

EIM SPEC SHEET

Project Name:
Customer: LAURENTIDE CONTROLS LTD
Line No: 3

Quote No: 2354589
Date: 15-JUN-2018

Valve Data

Manufacturer:	Orbinox
Size:	16
Type:	Knife
Rating:	150
Torque (ft-lb):	66

Valve Stem Data

(Dimensions – Inches)

Diameter (in):	1.42
Pitch (in):	0.24
Lead (in):	0.24
Hand:	Left
Valve Opens:	Up
Turns-Full Stroke:	67
Stroke (in):	16
Stroke Time (sec):	84
Output Rotation:	CW to Close

Actuator Data

Quantity:	1
EIM Model No:	2ERG-6
Outline Dwg:	2-0005/14G
Assembly Dwg:	83853D_1
	83853D_2
Instructions:	Manual E796
Enclosure:	[CSA] Class I, II, III; Div 1; Groups D, E, F, G; T4A (120C)
RPM Out:	51
Torque Spring:	VA83439-2 (Yellow)
Motor Gears:	VAP3337-R (1.40:1)
H/W Gears:	VAP3460-1 (0.50:1)
Drv Sleeve/Worm:	VA35597-2R (48:2R)
Lubrication:	#197 Moly Synthetic Grease
Nameplate:	VA36303-1-T4A
Handwheel:	VA84449-8 (8" Paddle)
Paint/Coating:	Standard Powder Coat

Electrical Data

Control Type:	M2CP
Power Voltage:	1 Phase/60 Hz/115 VAC
N Number:	89
M2CP Frame:	VA84108-2A (4T-3G/10T)
Motor Protection:	Std Motor Thermals
Contactor:	VA84147 (1ph)
Transformer:	VA84143-6 (115/115,12 and 18V)
Control Functions:	Position Seat, Momentary P.B.
LSM:	VA84112-01A (LSM01 3B, 3L, SS)
Position Switches:	LSC,LSO,LSA,LSB (16Contacts)
Cover Assembly:	VA84350-01S (3B, 2L, SS)
Pushbuttons:	Open-Stop-Close
Std Lamp Color:	Open-Red, Close-Green
Selector Switch:	Local-Off-Remote or Hand-Off-Auto
ISM:	VA84078-5 (ISM01, LSA/LSB)
TBM:	VA83943 (TBM01)
Thermostat:	Space Heater and Thermostat
T/S Shaft Rotates:	CCW To Close

Motor Data

Horsepower:	3/4
RPM:	1725
Voltage:	115 VAC
Frequency:	60 Hz
Phase:	1 Ph
Run Amps (15m):	22
Stall Amps:	78
Motor Part No:	VA9H1/21FC-E
Motor Heater:	In Motor

Additional Accessories, Services & Notes

Torque Switches

Dial Setting:	2	3	4	5	6	7	8	9
Ft-lb Output:	38	47	54	60	68	75	81	86

Approximate only. Actual torque requires test by dynamometer.

Stem Nut Tapping: By Others. Ship blank with Actuator.
Special Notes: Model String : 2ERG-6
Stem Nut/Bushing Item : VA35851-SK

****

Notes: [1] 1.50-11.5 NPT (2 Plcs) is preferred wire entry. CAUTION Conduit must enter at lowest point to prevent water from entering electrical enclosure due to condensation. If hazardous (classified) or Nema 6 location, conduit seals are required at electrical enclosure entrances.

[2] Lubrication 0.50-14 NPT plugs.

[3] To move actuator to another valve, bronze stem nut P/N 35851 may be threaded up to 2.25" Acme stem max.

4) For electrical control pilot device elements mounted on actuator control cover, see EIM job spec sheet & wiring diagram furnished for each specific job no.

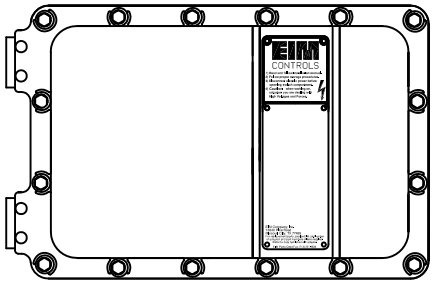

5) WARNING-The installation and servicing instructions are for used by qualified personnel only. To avoid injury and electric shock, do not perform any service on EIM equipment unless qualified.

6) Installation shall be in accordance with current edition of National Electrical Code.

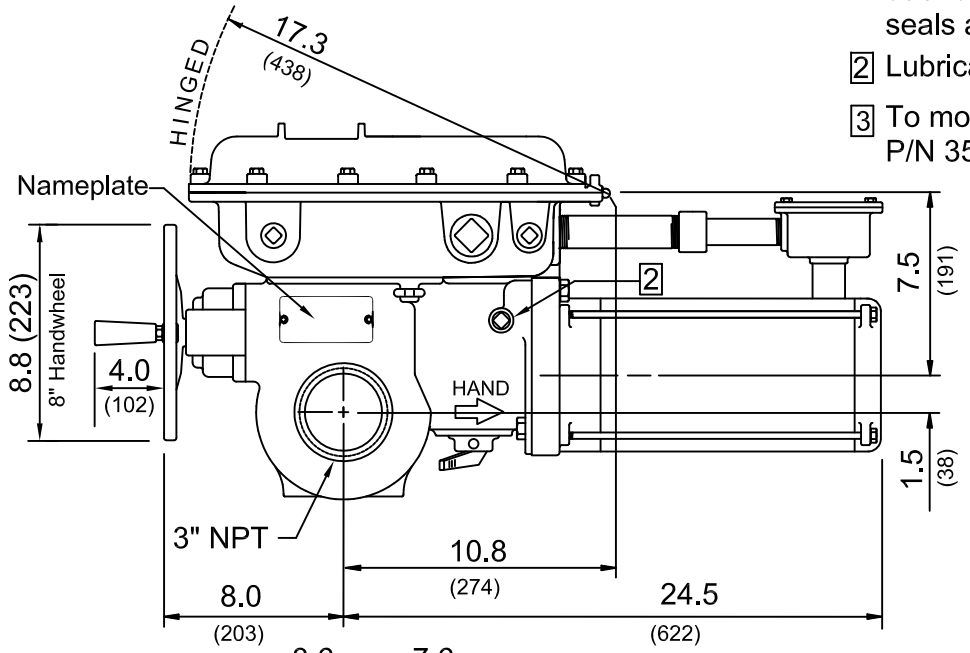

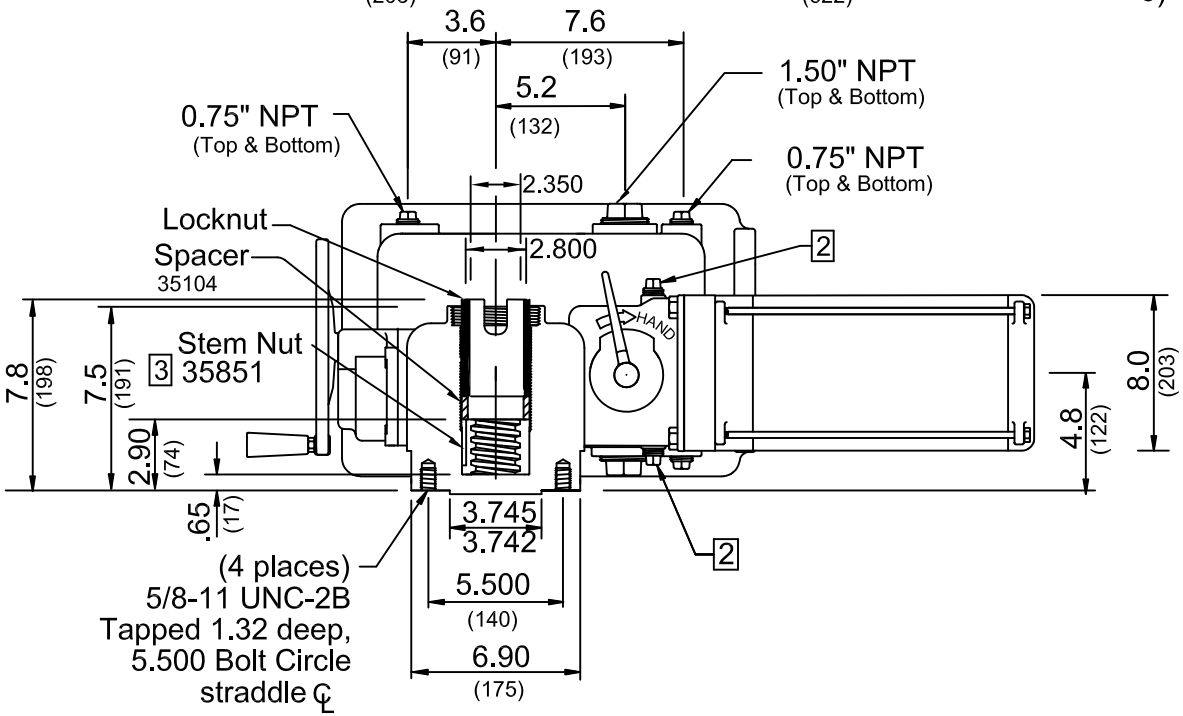

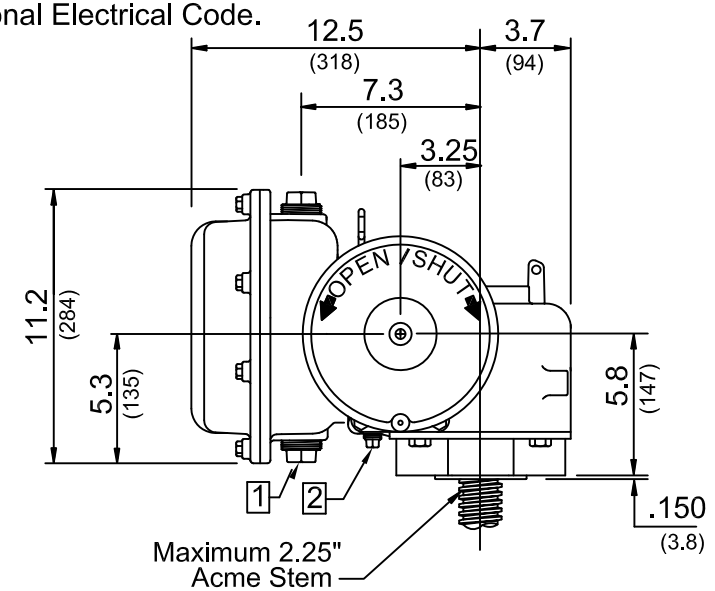

INCHES (MILLIMETERS) .XXX ± .005" .XX ± .020" .X APPROX.

EIM COMPANY, INC.
13840 PIKE ROAD
CONTROLS MISSOURI CITY, TX 77489

TITLE 2000 M/T 5.50

REV	DATE	ERO	BY
A	10/16/00	13329	/CML

OUTLINE NO. 2-0005/14G REV A

FORM 9905AC

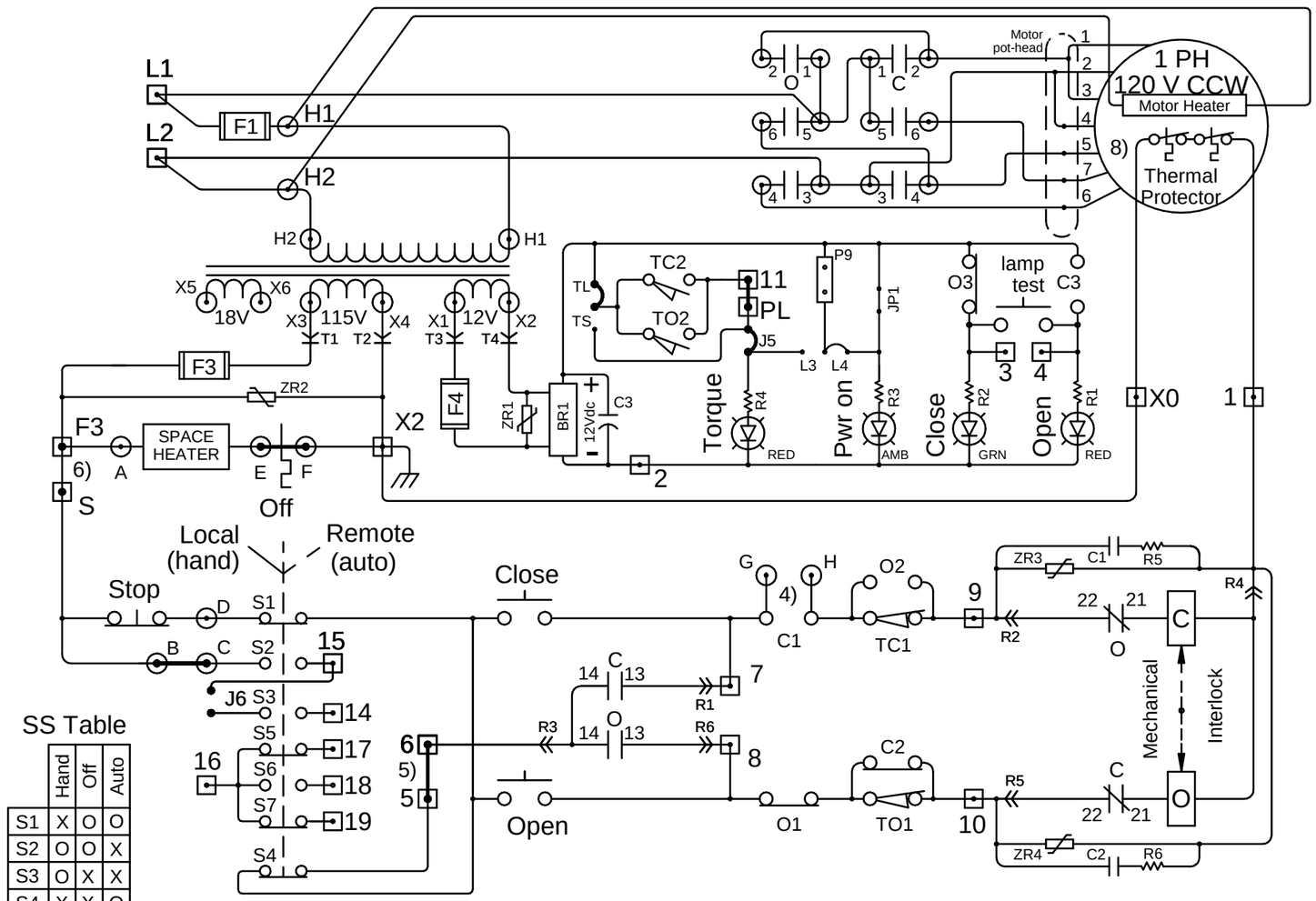

S	Hand	Off	Auto
S1	X	O	O
S2	O	O	X
S3	O	X	X
S4	X	X	O
S5	X	O	O
S6	O	O	X
S7	X	X	O

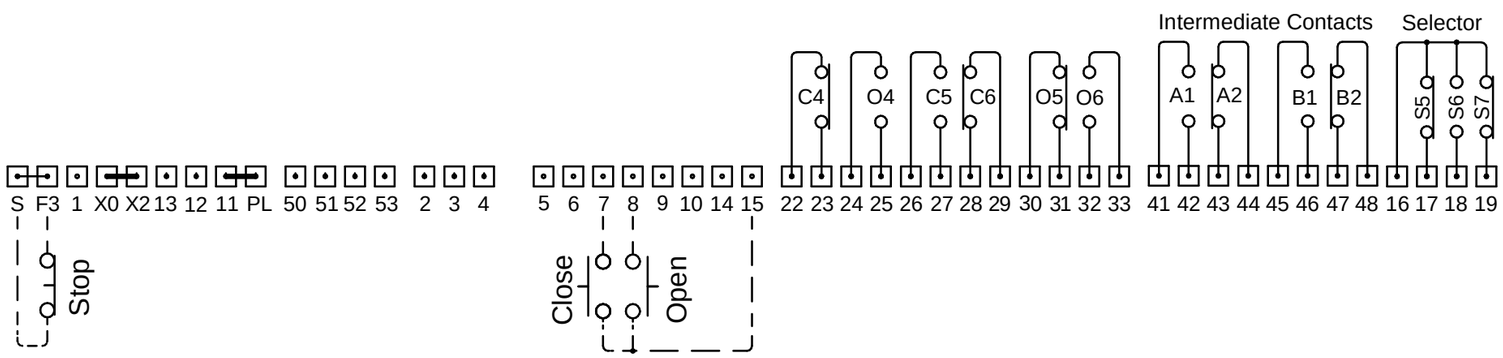

REV	Drawn by	DATE
1	GCS	15/JUN/2018

1) Contacts shown: Valve Closed, Voltage: Off, S/S: Hand

2) Customer wires to terminals on PWR and TBM modules. M2CP Internal terminal interconnet wiring ports

3) Torque Switch TC1 & TO1 NC Contacts open and TC2 & TO2 contacts make on field adjustable mechancial overload in (C) Close, or (O) in Open direction.

4) For Torque seated valve: Install G to H strap on LSM

5) For maintained PB control: remove 5 to 6 strap on TBM

6) For remote stop PB or relay: remove F3 to S strap on TBM

7) O & C (22-21) Reversing contactor: NC interlock contacts. O & C (14-13) Momentary pushbutton NO seal-in contacts.

8) Motor thermal contacts open with excessive temperature

9) Position Indicator Pilot Lights: LED solid-state Open indicates: Full Open (RED) Close indicates: Full Closed (Green) Mid Position: Both OPEN and CLOSE illuminated

14) Use 90c minimum related conductors for customer field wiring to valve actuator

16) Pwr ON and Torque Indicators are only visible with cover open for convenience during maintenance procedures.

		Valve Position			Contact Function
		Close	MID	Open	
CLOSE rotor	C1	O	X	X	Close coil
	C2	X	O	O	Bypass TO1
	C3	O	X	X	Open lamp
	C4	X	O	O	
	C5	O	X	X	
	C6	X	O	O	
OPEN rotor	O1	X	X	O	Open coil
	O2	O	O	X	Bypass TC1
	O3	X	X	O	Close lamp
	O4	O	O	X	
	O5	X	X	O	
	O6	O	O	X	
A	A1	O	X		Spare
	A2	X	O		Spare
B	B1	O	X		Spare
	B2	X	O		Spare

LSM	TBM	RCT	MTR	ISM					
01	01	02	09	01					

TITLE:
Wiring Diagram

EMERSON

Emerson Ref No. 2354589

Customer: LAURENTIDE CONTROLS LTD

DRAWING No: 2354589_1

Project Name:
IQALUIT Q18-114-01-02

SCALE: NTS | DWG SIZE: A3 | 1

SHEET 1 OF 1 SHEETS | REV

D C A

8 7 6 5 4 3 2 1

REVIEWED BY CONTRACTOR

Kudlik Construction Ltd.

NAME: Sandra Rousseau P.Eng

DATE: Jun 19, 2018

NORCLAIR
MÉCANIQUE DE PROCÉDÉ

TDS AND SHOP DRAWINGS

DA-MP-07-Pressure regulator

Date : 2018-06-19

INFORMATION	
Project : **WASTEWATER PLANT - IQALUIT**	
Client : Kudlik Construction Ltd. To Sandra Rousseau P.Eng./ Project Manager	Project number : **2018-062**
Contractor : Norclair inc.	Project number Norclair : **P1039**
Address : 1100, Montee Masson, Laval, QC, Canada H7E 4P2	
Project Manager : Steven Wieland	E-mail: swieland@norclair.ca
Phone: 450-688-4012 # 708	Cell.: 514-608-0619

Information, subcontractor or supplier	
Sub supplier : Contrôles Laurentide	
Contact : Fabrice Durocher	Phone : 514-697-9225 ext. 214

Information on the equipment or the proposed materials	
Speciality : Mechanical Process	
Equipment : Pressure regulator PRV01 – 25mm (MR95 series)	
Drawing reference :	
Specification reference : 40 05 23	Division :
Article :	Number Page : 41

CONSULTANT APPROVAL

STANTEC PROJECT #: Iqaluit WWTP

SUBMITTAL # DA-MP-07

This review by Stantec is for general conformance with the design concept of Stantec's design of the:

☑ Process ☐ Electrical
☐ Structural ☐ Other
☐ Mechanical

component(s) only and does not mean that Stantec has verified or approves the shop drawing(s). The Contractor remains solely responsible for the shop drawing(s) and this review by Stantec does not relieve the Contractor of the Contractor's responsibility for errors or omissions in the shop drawing(s) or for meeting all requirements of the contract documents. This review does not mean that Stantec approves the detailed design inherent in the shop drawing, responsibility for which shall remain with the Contractor submitting same, nor does this review mean that Stantec accepts any deviation of the shop drawing(s) from the contract documents. The Contractor is responsible for confirming all dimensions and correlating them at the job site, for all construction means, methods and techniques, and for coordination of construction work of all trades, including coordination of all shop drawings.

Stantec

☑ REVIEWED
☐ REVIEWED, AS NOTED
☐ REVISE AND RESUBMIT
☐ NOT REVIEWED

DATE June 20, 2018

BY Zach Paquin

1100, Montée Masson
Laval, QC, Canada
H7E 4P2

Phone. : 450-688-4012
Fax : 450-661-6341
E-Mail : info@norclair.ca
www.norclair.ca

Pressure regulator PRV01 - 25mm

Bulletin 71.1
D103742X012

MR95 Series

January 2017

MR95 Series Industrial Pressure Regulators

Fisher MR95H-51; MR95H 1", REGULATOR CI/NPT/S302, 15-30PSIG SPRING RANGE, SST DIAPHRAGM AND VALVE SEAT, TRIM 1

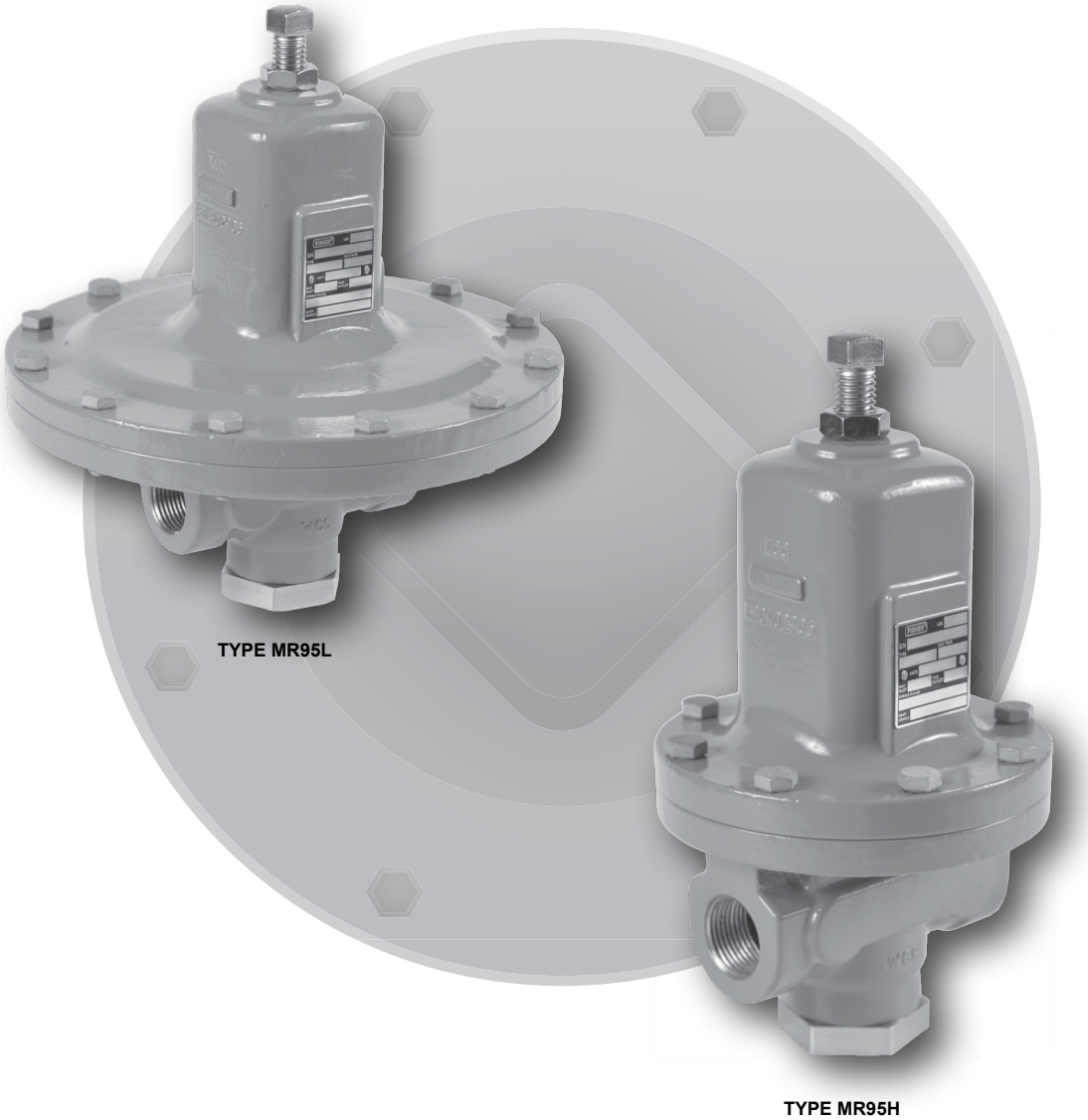

Figure 1. *Typical MR95 Series Industrial Pressure Regulators*

FISHER

EMERSON

Specifications

This section lists the specifications for the MR95 Series regulators. Factory specification such as type, maximum inlet pressure, maximum temperature, maximum outlet pressure, spring range, orifice size and seat material are stamped on the nameplate fastened on the regulator at the factory.

Available Constructions

Type MR95L: Pressure reducing regulator for outlet pressures from 2 to 30 psig / 0.14 to 2.1 bar. 1/4 in. to 1 in. body sizes only.

Type MR95H: Pressure reducing regulator for outlet pressures from 5 to 150 psig / 0.34 to 10.3 bar.

Type MR95HP: Pressure reducing regulator for outlet pressures from 15 to 400 psig / 1.0 to 27.6 bar (soft-seated).

Type MR95HT: High temperature pressure reducing regulator for outlet pressures from 15 to 300 psig / 1.0 to 20.7 bar (metal seat) and up to 650°F / 343°C.

Type MR95LD: Pressure reducing differential regulator for differential set pressures from 2 to 30 psi / 0.14 to 2.1 bar with maximum inlet pressure up to 300 psi / 20.7 bar and maximum outlet pressure up to 125 psi / 8.6 bar. 1/4 in. to 1 in. body sizes only.

Type MR95HD: Pressure reducing differential regulator for differential set pressures from 5 to 150 psi / 0.34 to 10.3 bar with maximum inlet/outlet pressures up to 300 psig / 20.7 bar.

Type MR95HDP: Pressure reducing differential regulator for differential set pressures from 5 to 150 psi / 0.34 to 10.3 bar with maximum inlet/outlet pressures up to 600 psi / 41.4 bar.

Body and Orifice Sizes

1/4 NPT body:
0.284 in. / 7.22 mm orifice

1/2 in. / DN 15 body:
0.416 in. / 10.56 mm orifice

3/4 and 1 in. / DN 20 and 25 bodies:
0.631 in. / 16.02 mm orifice

1-1/2 and 2 in. / DN 40 and 50 bodies (not available for Types MR95L and MR95LD):
1.142 in. / 29 mm orifice

End Connection Styles

See Tables 1 and 2

Outlet or Differential Pressure Ranges[1]

See Table 3

Maximum Cold Working Pressures of Body Size and Material[1]

See Table 4

Maximum Temperature Ranges of Diaphragm and Seat Materials[1][2]

See Table 5

Maximum Temperature Ranges of Body Materials[1][2]

See Table 5

Spring Case Construction

Drilled Untapped Hole:
Standard for Types MR95L, MR95H, MR95HP and MR95HT

1/4 NPT Vent:
Standard for Types MR95LD, MR95HD and MR95HDP
Optional for Types MR95L, MR95H, MR95HP and MR95HT

Pressure Setting Adjustment

Adjusting screw:
Standard for Types MR95L, MR95H, MR95HP and MR95HT only

Handwheel:
Standard for Types MR95LD, MR95HD and MR95HDP
Optional for 1/2 in. / DN 15 body size of Types MR95L, MR95H, MR95HP and MR95HT

Tee handle:
Optional for other body sizes (except 1/2 in. / DN 15) of Types MR95L, MR95H, MR95HP and MR95HT

Pressure Registration

Internal or External

Shutoff Classification Per ANSI/FCI 70-3-2004

Metal Seats: Class IV
Elastomer Seats: Class VI or better
PTFE: Class IV

Flow and Sizing Coefficients

See Table 6

1. The pressure/temperature limits in this Bulletin and any applicable standard or code limitation for this regulator should not be exceeded.
2. Pressures and/or the body end connection may decrease these maximum temperatures.

- continued -

Monel® is a mark owned by Special Metals Corporation.
Hastelloy® C is a mark owned by Haynes International, Inc.

Specifications (continued)

Relief Sizing Coefficients for MR95 Series Regulators with Reduced Flow Orifices
See Table 7

Trim Materials
See Table 8

Main Valve Construction Materials
See Table 9

Product Dimension
See Figure 3

Common Services and Material Compatibility
See Table 10

Typical Regulating Capacities
Air: See Tables 11, 12, 13, 14 and 15
Steam: See Tables 16, 17, 18, 19 and 20
Water: See Tables 21, 22, 23, 24 and 25

Regulating C_v Values
See Tables 26, 27, 28, 29 and 30

Approximate Weights
MR95H Series
1/4 NPT body: 5 lbs / 2.3 kg
1/2 in. / DN 15 body: 10 lbs / 4.5 kg
3/4 and 1 in. / DN 20 and 25 bodies: 22 lbs / 10 kg
1-1/2 and 2 in. / DN 40 and 50 bodies: 55 lbs / 25 kg
MR95L Series
1/4 NPT body: 7 lbs / 3.2 kg
1/2 in. / DN 15 body: 15 lbs / 6.8 kg
3/4 and 1 in. / DN 20 and 25 bodies: 35 lbs / 16 kg

Introduction

The MR95 Series regulators are compact, large-capacity, direct-operated pressure regulators (see Figure 1). The units are available in 1/4 NPT through 2 in. / DN 50 sizes and are offered in several different end connection configurations. They are designed to handle pressures up to 1000 psig / 68.9 bar and temperatures up to 650°F / 343°C.

These products can help solve the toughest pressure control applications. Typical applications include superheated steam, steam injection, steam tracing, nitrogen purging, boiler feed water, process chemicals, cooling water, test fixtures, wash tanks, sterilizers/autoclaves, fuel lines, pneumatic supply and many others.

Features

- **Handwheels/Tee Handles—**Allow easy pressure setting changes and are standard on Types MR95LD, MR95HD and MR95HDP and optional on the Types MR95L, MR95H, MR95HP and MR95HT regulators.
- **Versatile—**Can be used with all process media including air, steam, gas, water, liquids (oils and process chemicals) and oxygen.
- **Tight Shutoff With Elastomer Seats—**Metal seats available for high temperatures.
- **Direct-Operated—**Design maximizes speed of response.
- **Robust—**Up to 1000 psig / 68.9 bar inlet pressure.
- **P_1 = P_2—**Inlet equals outlet rating in Types MR95H, MR95HD and MR95HDP up to 300 psig / 20.7 bar.
- **Rugged Construction—**Available in a variety of body and spring case materials to address the toughest service conditions. Severe service elastomers and corrosion resistant trims are also available and provide excellent fluid compatibility.
- **Differential Pressure Capability—**Spring-loaded Polytetrafluoroethylene (PTFE) packing and tapped connections permit pressure loading of the Types MR95LD, MR95HD and MR95HDP spring cases.
- **Special Service Capabilities—**Optional materials are available for applications handling sour gases, cryogenics and superheated steam.
- **Large Turndown Ratio—**No need for low C_v trims at low flows.
- **Graphite Gaskets—**For high temperature applications up to 650°F / 343°C (optional).
- **Set Pressures up to 400 psig / 27.6 bar**
- **Multiple End Connection Options—**To match your application.
- **Easy Maintenance—**Seating parts are easily accessible by removing the plug on the bottom of the regulator.
- **API 614 Compliant—** Steel or Stainless steel constructions with Stainless steel trim meet API 614 requirements.

Table 1. *Types MR95L and MR95LD Regulators Body Constructions*

BODY SIZE	BODY CONSTRUCTION	END CONNECTION	BODY MATERIAL				
			Gray Cast Iron	LCC or WCC Steel	CF8M Stainless Steel(1)	CF3M Stainless Steel(1)	Monel® or Hastelloy® C(1)
1/4 NPT	Without Control Line and Gauge Port	NPT	■	■	■	■	
1/2 in. / DN 15	Without Control Line and Gauge Port	NPT	■	■	■	■	■
		SWE		■	■	■	
		Welded CL150 RF		■	■	■	
		Welded CL300 RF		■	■	■	
		Welded PN 16/25/40 RF		■		■	
	With Control Line but Without Gauge Port	NPT		■	■	■	
		Welded CL150 RF		■	■	■	
		Welded CL300 RF		■	■	■	
		Welded PN 16/25/40 RF		■		■	
3/4 in. / DN 20	Without Control Line and Gauge Port	NPT	■	■	■	■	■
		SWE		■	■	■	
		Welded CL150 RF		■	■	■	
		Welded CL300 RF		■	■	■	
		Welded PN 16/25/40 RF		■		■	
	With Control Line but Without Gauge Port	NPT		■	■	■	
		Welded CL150 RF		■	■	■	
		Welded CL300 RF		■	■	■	
		Welded PN 16/25/40 RF		■		■	
	With Gauge Port but Without Control Line	NPT	■	■	■	■	
		Welded CL150 RF		■	■	■	
		Welded CL300 RF		■	■	■	
		Welded PN 16/25/40 RF		■		■	
1 in. / DN 25	Without Control Line and Gauge Port	NPT	■	■	■	■	■
		SWE		■	■	■	
		Welded CL150 RF		■	■	■	
		Welded CL300 RF		■	■	■	
		Welded PN 16/25/40 RF		■		■	
	With Control Line but Without Gauge Port	NPT		■	■	■	
		Welded CL150 RF		■	■	■	
		Welded CL300 RF		■	■	■	
		Welded PN 16/25/40 RF		■		■	
	With Gauge Port but Without Control Line	NPT	■	■	■	■	
		Welded CL150 RF		■	■	■	
		Welded CL300 RF		■	■	■	
		Welded PN 16/25/40 RF		■		■	

■ - Shaded areas indicate that the construction is available.
□ - Blank areas indicate that you need to contact your local Sales Office for the availability of the constructions.
1. Meets the chemical and physical requirements of NACE MR0175-2002 and NACE MR0103.

Monel® is a mark owned by Special Metals Corporation.
Hastelloy® C is a mark owned by Haynes International, Inc.

Table 2. *Types MR95H, MR95HD, MR95HDP, MR95HT and MR95HP Regulators Body Constructions*

BODY SIZE	BODY CONSTRUCTION	END CONNECTION	BODY MATERIAL					
			Gray Cast Iron[1]	LCC or WCC Steel	CF8M Stainless Steel[2]	CF3M Stainless Steel[2]	Monel® or Hastelloy® C[2]	Aluminum-Bronze
1/4 NPT	Without Gauge Port and Control Line	NPT	■	■	■	■		
1/2 in. / DN 15	Without Control Line and Gauge Port	NPT	■	■	■	■	■	
		SWE		■	■	■		
		Welded CL150 RF		■	■	■		
		Welded CL300 RF		■	■	■		
		Welded CL600 RF		■	■	■		
		Welded PN 16/25/40 RF		■		■		
		Integral CL150 RF				■	■	■
		Integral CL300 RF				■	■	■
		Integral CL600 RF				■	■	■
		Integral PN 16/25/40 RF				■	■	■
	With Control Line but Without Gauge Port	NPT		■	■	■		
		Welded CL150 RF		■	■	■		
		Welded CL300 RF		■	■	■		
		Welded CL600 RF		■	■	■		
		Welded PN 16/25/60 RF		■		■		
3/4 in. / DN 20	Without Gauge Port and Control Line	NPT	■	■	■	■	■	
		SWE		■	■	■		
		Welded CL150 RF		■	■	■		
		Welded CL300 RF		■	■	■		
		Welded CL600 RF		■	■	■		
		Welded PN 16/25/40 RF		■		■		
	With Control Line but Without Gauge Port	NPT		■	■	■		
		Welded CL150 RF		■	■	■		
		Welded CL300 RF		■	■	■		
		Welded PN 16/25/60 RF		■		■		
	With Gauge Port but Without Control Line	NPT	■	■	■	■		
		Welded CL150 RF		■	■	■		
		Welded CL300 RF		■	■	■		
		Welded PN 16/25/60 RF		■		■		
1 in. / DN 25	Without Gauge Port and Control Line	NPT	■	■	■	■	■	
		SWE		■	■	■		
		Welded CL150 RF		■	■	■		
		Welded CL300 RF		■	■	■		
		Welded CL600 RF		■	■	■		
		Welded PN 16/25/40 RF		■		■		
		Integral CL150 RF				■	■	■
		Integral CL300 RF				■	■	■
		Integral CL600 RF				■	■	■
		Integral PN 16/25/40 RF				■	■	■

■ - Shaded areas indicate that the construction is available.
□ - Blank areas indicate that you need to contact your local Sales Office for the availability of the constructions.
1. Gray cast iron body material is available for Types MR95H and MR95HD only.
2. Meets the chemical and physical requirements of NACE MR0175-2002 and NACE MR0103.

- continued -

Monel® is a mark owned by Special Metals Corporation.
Hastelloy® C is a mark owned by Haynes International, Inc.

Table 2. *Types MR95H, MR95HD, MR95HDP, MR95HT and MR95HP Regulators Body Constructions (continued)*

BODY SIZE	BODY CONSTRUCTION	END CONNECTION	BODY MATERIAL					
			Gray Cast Iron[1]	LCC or WCC Steel	CF8M Stainless Steel[2]	CF3M Stainless Steel[2]	Monel® or Hastelloy® C[2]	Aluminum-Bronze
1 in. / DN 25	With Control Line but Without Gauge Port	NPT		■	■	■		
		Welded CL150 RF		■	■	■		
		Welded CL300 RF		■	■	■		
		Welded PN 16/25/40 RF		■		■		
	With Gauge Port but Without Control Line	NPT	■	■	■	■		
		Welded CL150 RF		■	■	■		
		Welded CL300 RF		■	■	■		
		Welded PN 16/25/40 RF		■		■		
1-1/2 in. / DN 40	Without Gauge Port and Control Line	NPT	■	■	■	■	■	
		SWE		■	■	■		
		Welded CL150 RF		■	■	■		
		Welded CL300 RF		■	■	■		
		Welded CL600 RF		■	■	■		
		Welded PN 16/25/40 RF		■		■		
	With Control line but Without Gauge Port	NPT		■	■	■		
		Welded CL150 RF		■	■	■		
		Welded CL300 RF		■	■	■		
		Welded PN 16/25/40 RF		■		■		
	With Gauge Port but Without Control Line	NPT	■	■	■	■		
		Welded CL150 RF		■	■	■		
		Welded CL300 RF		■	■	■		
		Welded PN 16/25/40 RF		■		■		
2 in. / DN 50	Without Gauge Port and Control Line	NPT	■	■	■	■	■	
		SWE		■	■	■		
		Welded CL150 RF		■	■	■		
		Welded CL300 RF		■	■	■		
		Welded CL600 RF		■	■	■		
		Welded PN 16/25/40 RF		■		■		
		Integral CL150 RF				■	■	■
		Integral CL300 RF				■	■	■
		Integral CL600 RF				■	■	■
		Integral PN 16/25/40 RF				■	■	■
	With Control Line but Without Gauge Port	NPT		■	■	■		
		Welded CL150 RF		■	■	■		
		Welded CL300 RF		■	■	■		
		Welded PN 16/25/40 RF		■		■		
	With Gauge Port but Without Control Line	NPT	■	■	■	■		
		Welded CL150 RF		■	■	■		
		Welded CL300 RF		■	■	■		
		Welded PN 16/25/40 RF		■		■		

■ - Shaded areas indicate that the construction is available.
□ - Blank areas indicate that you need to contact your local Sales Office for the availability of the constructions.
1. Gray cast iron body material is available for Types MR95H and MR95HD only.
2. Meets the chemical and physical requirements of NACE MR0175-2002 and NACE MR0103.

Monel® is a mark owned by Special Metals Corporation.
Hastelloy® C is a mark owned by Haynes International, Inc.

Table 3. *Body Sizes, Pressure Ranges and Spring Information*

TYPE	BODY SIZE		OUTLET OR DIFFERENTIAL PRESSURE RANGE[1]		SPRING WIRE DIAMETER		SPRING FREE LENGTH		SPRING MATERIAL[2]	SPRING PART NUMBER	SPRING COLOR
	In.	DN	psi/psig	bar	In.	mm	In.	mm			
MR95L and MR95LD	1/4	- - - -	2 to 6	0.14 to 0.41	0.148	3.76	2.00	50.8	Zinc-plated steel	1E392527022	Yellow
			5 to 15	0.34 to 1.0	0.170	4.32	2.00	50.8	Zinc-plated steel	ERAA01888A0	Green
			13 to 30	0.90 to 2.1	0.207	5.26	1.94	49.2	Powder-coated steel	ERAA01889A0	Red
	1/2	15	2 to 6	0.14 to 0.41	0.207	5.26	2.50	63.5	Powder-coated steel[3]	ERCA04288A0	Yellow
			5 to 15	0.34 to 1.0	0.234	5.94	2.60	65.9	Powder-coated steel[3]	ERAA01910A0	Green
			13 to 30	0.90 to 2.1	0.283	7.19	2.44	62.0	Powder-coated steel[3]	ERAA01911A0	Red
	3/4 and 1	20 and 25	2 to 6	0.14 to 0.41	0.306	7.77	4.00	102	Powder-coated steel[3]	1E398927022	Yellow
			5 to 15	0.34 to 1.0	0.343	8.71	4.00	102	Powder-coated steel[3]	1E399027142	Green
			13 to 30	0.90 to 2.1	0.406	10.31	4.00	102	Powder-coated steel[3]	1E399127162	Red
			2 to 6	0.14 to 0.41	0.306	7.77	4.00	102	Powder-coated Stainless steel	1E3989X0052	Yellow
			5 to 15	0.34 to 1.0	0.375	9.53	3.88	98.6	Stainless steel	1K762537022	Unpainted
			13 to 30	0.90 to 2.1	0.437	11.1	4.00	102	Stainless steel	11A8269X012	Unpainted
MR95H, MR95HD and MP95HDP	1/4	- - - -	15 to 30	1.0 to 2.1	0.148	3.76	2.00	50.8	Zinc-plated steel	1E392527022	Yellow
			25 to 75	1.7 to 5.2	0.170	4.32	2.00	50.8	Zinc-plated steel	ERAA01888A0	Green
			70 to 150	4.8 to 10.3	0.207	5.26	1.94	49.2	Powder-coated steel[3]	ERAA01889A0	Red
	1/2	15	15 to 30	1.0 to 2.1	0.207	5.26	2.50	63.5	Powder-coated steel[3]	ERCA04288A0	Yellow
			25 to 75	1.7 to 5.2	0.234	5.94	2.60	65.9	Powder-coated steel[3]	ERAA01910A0	Green
			70 to 150	4.8 to 10.3	0.283	7.19	2.44	62.0	Powder-coated steel[3]	ERAA01911A0	Red
	3/4 and 1	20 and 25	15 to 30	1.0 to 2.1	0.306	7.77	4.00	102	Powder-coated steel[3]	1E398927022	Yellow
			25 to 75	1.7 to 5.2	0.343	8.71	4.00	102	Powder-coated steel[3]	1E399027142	Green
			70 to 150	4.8 to 10.3	0.406	10.31	4.00	102	Powder-coated steel[3]	1E399127162	Red
			15 to 30	1.0 to 2.1	0.306	7.77	4.00	102	Powder-coated Stainless steel	1E3989X0052	Yellow
			25 to 75	1.7 to 5.2	0.375	9.53	3.88	98.6	Stainless steel	1K762537022	Unpainted
			70 to 150	4.8 to 10.3	0.437	11.1	4.00	102	Stainless steel	11A8269X012	Unpainted
	1-1/2 and 2	40 and 50	5 to 80	0.34 to 5.5	0.500	12.7	6.50	165	Powder-coated steel	ERCA04290A0	Black with Light Blue Stripe
			60 to 120	4.1 to 8.3	0.562	14.3	6.56	167	Powder-coated steel	ERAA01893A0	Light Gray
			100 to 140	6.9 to 9.7	0.594	15.1	6.56	167	Enamel-coated steel	ERAA01894A0	Yellow
			120 to 150	8.3 to 10.3	0.625	15.9	6.57	167	Powder-coated steel	1P7888X0022	Black
			5 to 60	0.34 to 4.1	0.5	12.7	6.5	165	Inconel®	ERAA09035A0	Unpainted
			50 to 120	3.4 to 8.3	0.625	15.9	6.5	165	Inconel®	ERAA08881A0	Unpainted
MR95HT	1/4	- - - -	15 to 100	1.0 to 6.9	0.192	4.88	2.00	50.8	Inconel®	ERCA04292A0	Unpainted
			80 to 300	5.5 to 20.7	0.281	7.14	2.00	50.8	Inconel®	ERCA04291A0	Unpainted
	1/2	15	15 to 100	1.0 to 6.9	0.281	7.14	2.50	63.5	Inconel®	ERCA04294A0	Unpainted
			80 to 300	5.5 to 20.7	0.375	9.53	2.60	66.0	Inconel®	ERCA04293A0	Unpainted
	3/4 and 1	20 and 25	15 to 100	1.0 to 6.9	0.437	11.1	4.08	104	17-4 PH Stainless steel	ERCA04295A0	Unpainted
			80 to 300	5.5 to 20.7	0.562	14.3	4.08	104	17-4 PH Stainless steel	ERCA04296A0	Unpainted
	1-1/2 and 2	40 and 50	15 to 100	1.0 to 6.9	0.625	15.9	6.70	170	17-4 PH Stainless steel	ERCA04297A0	Unpainted
			60 to 260	4.1 to 17.9	0.812	20.6	6.70	170	17-4 PH Stainless steel	ERCA04298A0	Unpainted
MR95HP	1/4	- - - -	15 to 100	1.0 to 6.9	0.192	4.88	2.00	50.8	Inconel®	ERCA04292A0	Unpainted
			80 to 400	5.5 to 27.6	0.281	7.14	2.00	50.8	Inconel®	ERCA04291A0	Unpainted
	1/2	15	15 to 100	1.0 to 6.9	0.281	7.14	2.50	63.5	Inconel®	ERCA04294A0	Unpainted
			80 to 400	5.5 to 27.6	0.375	9.53	2.60	66.0	Inconel®	ERCA04293A0	Unpainted
	3/4 and 1	20 and 25	15 to 100	1.0 to 6.9	0.437	11.1	4.08	104	17-4 PH Stainless steel	ERCA04295A0	Unpainted
			80 to 400	5.5 to 27.6	0.562	14.3	4.08	104	17-4 PH Stainless steel	ERCA04296A0	Unpainted
	1-1/2 and 2	40 and 50	15 to 100	1.0 to 6.9	0.625	15.9	6.70	170	17-4 PH Stainless steel	ERCA04297A0	Unpainted
			60 to 300	4.1 to 20.7	0.812	20.6	6.70	170	17-4 PH Stainless steel	ERCA04298A0	Unpainted

1. For Types MR95LD, MR95HD and MR95HDP regulators, the pressure ranges indicate the differential pressure that can be obtained with the indicated spring. The differential pressure (spring setting) is added to the spring case loading pressure to determine the actual outlet pressure.
2. Springs meet NACE MR0175-2002 and NACE MR0103 requirements only for applications in which the spring is not exposed to the sour gas.
3. Available in Inconel®.

Inconel® is a mark owned by Special Metals Corporation.

Table 4. *Maximum Cold Working Pressures of Body Size and Material*[1][2]

TYPE	BODY SIZE	SPRING CASE MATERIAL	MAXIMUM INLET PRESSURE		MAXIMUM OUTLET PRESSURE		MAXIMUM SPRING CASE PRESSURE	
			psig	bar	psig	bar	psig	bar
MR95L and MR95LD	All available sizes[3]	Gray Cast Iron	250	17.2	50	3.4	50	3.4
		WCC Steel	300	20.7	125	8.6	125	8.6
		LCC Steel	300	20.7	125	8.6	125	8.6
		CF8M Stainless steel	300	20.7	125	8.6	125	8.6
		CF3M Stainless steel	300	20.7	125	8.6	125	8.6
		Monel®[4]	300	20.7	125	8.6	125	8.6
		Hastelloy® C[4]	300	20.7	125	8.6	125	8.6
MR95H and MR95HD	All available sizes[3]	Gray Cast Iron	250	17.2	250	17.2	250	17.2
		WCC Steel	300	20.7	300	20.7	300	20.7
		LCC Steel	300	20.7	300	20.7	300	20.7
		CF8M Stainless steel	300	20.7	300	20.7	300	20.7
		CF3M Stainless steel	300	20.7	300	20.7	300	20.7
		Monel®[4]	300	20.7	300	20.7	300	20.7
		Hastelloy® C[4]	300	20.7	300	20.7	300	20.7
		Aluminum-Bronze[4]	300	20.7	300	20.7	300	20.7
MR95HDP	All available sizes	WCC Steel	600	41.4	600	41.4	600	41.4
		LCC Steel	600	41.4	600	41.4	600	41.4
		CF8M Stainless steel	600	41.4	550	37.9	550	37.9
		CF3M Stainless steel	600	41.4	550	37.9	550	37.9
		Monel®[4]	600	41.4	550	37.9	550	37.9
		Hastelloy® C[4]	600	41.4	550	37.9	550	37.9
		Aluminum-Bronze[4]	600	41.4	550	37.9	550	37.9
MR95HP	All available sizes[3]	WCC Steel	1000	68.9	600	41.4	600	41.4
		LCC Steel	1000	68.9	600	41.4	600	41.4
		CF8M Stainless steel	1000	68.9	550	37.9	550	37.9
		CF3M Stainless steel	1000	68.9	550	37.9	550	37.9
		Monel®[4]	1000	68.9	550	37.9	550	37.9
		Hastelloy® C[4]	1000	68.9	550	37.9	550	37.9
		Aluminum-Bronze[4]	1000	68.9	550	37.9	550	37.9
MR95HT	1/4 NPT and 1/2 to 1 in. / DN 15 to 25	WCC Steel	600	41.4	600	41.4	600	41.4
		LCC Steel	600	41.4	600	41.4	600	41.4
		CF8M Stainless steel	600	41.4	550	37.9	550	37.9
		CF3M Stainless steel	600	41.4	550	37.9	550	37.9
		Monel®[4]	600	41.4	550	37.9	550	37.9
		Hastelloy® C[4]	600	41.4	550	37.9	550	37.9
		Aluminum-Bronze[4]	600	41.4	550	37.9	550	37.9
	1-1/2 and 2 in. / DN 40 and 50	WCC Steel	600	41.4	450	31.0	450	31.0
		LCC Steel	600	41.4	450	31.0	450	31.0
		CF8M Stainless steel	600	41.4	450	31.0	450	31.0
		CF3M Stainless steel	600	41.4	450	31.0	450	31.0
		Monel®	600	41.4	450	31.0	450	31.0
		Hastelloy® C	600	41.4	450	31.0	450	31.0
		Aluminum-Bronze	600	41.4	450	31.0	450	31.0

1. The pressure/temperature limits in this Bulletin and any applicable standard or code limitation should not be exceeded.
2. The pressure limits given are based on the body size and body materials only. Actual pressure limits of the assembled regulator may decrease and vary depending on the temperature, body end connection, diaphragm, seat and/or trim material of the regulator.
3. See Tables 1 and 2 for all available body sizes.
4. Not available for 1/4 NPT body size.

Monel® is a mark owned by Special Metals Corporation.
Hastelloy® C is a mark owned by Haynes International, Inc.

Table 5. *MR95 Series Temperature Capabilities*[1][2]

TRIM MATERIAL	SEAT	DIAPHRAGM	O-RING	DIAPHRAGM PROTECTOR	GASKET	TEMPERATURE	
						°F	°C
Nitrile (NBR)	✓		✓			-40 to 180	-40 to 82
Neoprene (CR)		✓				-40 to 180	-40 to 82
Fluorocarbon (FKM)[3]	✓	✓	✓			0 to 300, Limited to 200°F for hot water	-18 to 149, Limited to 93°C for hot water
Ethylenepropylene (EPDM)	✓	✓	✓			20 to 275	-7 to 135
Perfluoroelastomer (FFKM)	✓		✓			0 to 425	-18 to 218
PTFE	✓			✓		-40 to 400	-40 to 204
Metal	✓	✓				-40 to 650	-40 to 343
Composition					✓	-40 to 400, Limited to 300°F for steam	-40 to 204, Limited to 149°C for steam
Graphite					✓	-40 to 650	-40 to 343

BODY MATERIAL	TEMPERATURE	
	°F	°C
Gray cast iron	-20 to 406	-29 to 208
WCC Steel[4]	-20 to 650	-29 to 343
LCC Steel[4]	-40 to 650	-40 to 343
Stainless[4], Monel® or Hastelloy® C	-40 to 550	-40 to 288
Aluminum-Bronze	-40 to 500	-40 to 260

1. The pressure/temperature limits in this Bulletin and any applicable standard limitation should not be exceeded.
2. The temperature limits given are based on the body size and body materials only. Actual temperature limits of the assembled regulator may decrease and vary depending on the body end connection, diaphragm, seat and/or trim material of the regulator.
3. Not for use on steam service.
4. Meets API 614 requirements (with Stainless steel trim).

Table 6. *Flow and Sizing Coefficients for all MR95 Series Regulators*

BODY SIZE		WIDE-OPEN COEFFICIENTS (FOR RELIEF SIZING)			C_1	K_m	IEC SIZING COEFFICIENTS		
In.	DN	C_v	C_g	C_s			X_T	F_D	F_L
1/4	- - - -	1.1	37	1.85	33.6	0.74	0.715	0.62	0.86
1/2	15	2.9	103	5.15	35.5	0.79	0.797	0.70	0.89
3/4 and 1	20 and 25	6.0	221	11.05	36.8	0.88	0.857	0.68	0.94
1-1/2 and 2	40 and 50	18.1	700	35.00	38.7	0.88	0.945	0.65	0.94

$K_m = F_L^2$

Table 7. *Relief Sizing Coefficients for MR95 Series Regulators with Reduced Flow Orifices*[1]

BODY SIZE		WIDE-OPEN COEFFICIENTS FOR MR95 SERIES REDUCED FLOW OPTION	WIDE-OPEN COEFFICIENTS FOR LEGACY 95 SERIES
In.	DN	C_g	C_g
1/4	- - - -	28	28
1/2	15	70	67
3/4 and 1	20 and 25	156	156
1-1/2 and 2	40 and 50	482	475

1. The reduced flow orifice option offers similar flow capacity as the equivalent 95 Series configuration.

Monel® is a mark owned by Special Metals Corporation.
Hastelloy® C is a mark owned by Haynes International, Inc.

Table 8. *MR95 Series Trim Materials*

TYPE	TRIM NUMBER	SEAT	ORIFICE / VALVE PLUG	VALVE PLUG GUIDE	STEM / STEM GUIDE	VALVE SPRING
MR95L, MR95LD, MR95H, MR95HD and MR95HDP	1	416 Stainless steel	416 Stainless steel	316 Stainless steel	416 Stainless steel	302 Stainless steel
	2	416 Stainless steel	416 Stainless steel	316 Stainless steel	416 Stainless steel	302 Stainless steel
	3	316 Stainless steel	316 Stainless steel	316 Stainless steel	316 Stainless steel	302 Stainless steel
	4	Alloy 6(1)	Alloy 6(1)	316 Stainless steel	316 Stainless steel	302 Stainless steel
	5	Hastelloy® C	Hastelloy® C	Hastelloy® C	Hastelloy® C	Inconel®
	6	Monel®	Monel®	Monel®	Monel®	Inconel®
	7	Nitrile (NBR)	Brass(2)	316 Stainless steel	416 Stainless steel	302 Stainless steel
	8	Nitrile (NBR)	Brass(2)	316 Stainless steel	416 Stainless steel	302 Stainless steel
	9	Nitrile (NBR)	316 Stainless steel	316 Stainless steel	316 Stainless steel	302 Stainless steel
	10	Nitrile (NBR)	416 Stainless steel	316 Stainless steel	416 Stainless steel	302 Stainless steel
	11	Nitrile (NBR)	416 Stainless steel	316 Stainless steel	416 Stainless steel	302 Stainless steel
	12	Fluorocarbon (FKM)	Brass(2)	316 Stainless steel	416 Stainless steel	302 Stainless steel
	13	Fluorocarbon (FKM)	316 Stainless steel	316 Stainless steel	316 Stainless steel	302 Stainless steel
	14	Fluorocarbon (FKM)	416 Stainless steel	316 Stainless steel	416 Stainless steel	302 Stainless steel
	15	Fluorocarbon (FKM)	Monel®	Monel®	Monel®	Inconel®
	16	Perfluoroelastomer (FFKM)	316 Stainless steel	316 Stainless steel	316 Stainless steel	302 Stainless steel
	17	Polytetrafluoroethylene (PTFE)	Brass(2)	316 Stainless steel	416 Stainless steel	302 Stainless steel
	18	Polytetrafluoroethylene (PTFE)	316 Stainless steel	316 Stainless steel	316 Stainless steel	302 Stainless steel
	19	Polytetrafluoroethylene (PTFE)	416 Stainless steel	316 Stainless steel	416 Stainless steel	302 Stainless steel
	20	Ethylenepropylene (EPDM)	416 Stainless steel	316 Stainless steel	416 Stainless steel	302 Stainless steel
MR95HT	22	416 Stainless steel	416 Stainless steel	316 Stainless steel	416 Stainless steel	Inconel®
	23	316 Stainless steel	316 Stainless steel	316 Stainless steel	316 Stainless steel	Inconel®
	24	Alloy 6(1)	Alloy 6(1)	316 Stainless steel	316 Stainless steel	Inconel®
MR95HP	10	Nitrile (NBR)	416 Stainless steel	316 Stainless steel	416 Stainless steel	302 Stainless steel
	14	Fluorocarbon (FKM)	416 Stainless steel	316 Stainless steel	416 Stainless steel	302 Stainless steel

1. Alloy 6 is not available for 1/4 NPT body.
2. 1/4 NPT has brass orifice and 316 Stainless steel valve plug.

Table 9. *MR95 Series Construction Materials*

MAIN VALVE MATERIAL		
Body	**Spring Case**	**Regulator Spring**
Gray Cast Iron LCC/WCC Steel CF8M/CF3M Stainless steel Hastelloy® C Monel® Aluminum-Bronze	Gray Cast Iron(1) LCC/WCC Steel CF8M Stainless steel Hastelloy® C Monel®	Steel **(standard)** Inconel® 302 Stainless steel 17-4 PH Stainless steel

1. Gray cast iron spring case is not available for Types MR95LD, MR95HD and MR95HDP.

TRIM MATERIAL		
Elastomer Seat		
Part Name	**Standard**	**Optional**
Diaphragm	Neoprene (CR)	302 Stainless steel(1), Fluorocarbon (FKM)(2), Ethylenepropylene (EPDM)(2), Monel®(1), Hastelloy® C(1) or PTFE protector available with Neoprene (CR) and Fluorocarbon (FKM)(2) diaphragm
Disk	Nitrile (NBR)	Fluorocarbon (FKM), Polytetrafluoroethylene (PTFE), Ethylenepropylene (EPDM) or Perfluoroelastomer (FFKM)
Disk Holder	Brass or 416 Stainless steel	316 Stainless steel, Monel® or Hastelloy® C
Valve Plug Guide	316 Stainless steel	Monel® or Hastelloy® C
Orifice	Brass or 416 Stainless steel	316 Stainless steel, Monel® or Hastelloy® C
Stem Assembly	416 Stainless steel	316 Stainless steel, Monel® or Hastelloy® C
Metal Seat		
Diaphragm	302 Stainless steel(1)	Monel®(1), Hastelloy® C(1), Fluorocarbon (FKM)(2), Ethylenepropylene (EPDM)(2) or PTFE protector available with Neoprene (CR) and Fluorocarbon (FKM)(2) diaphragm
Valve Plug	416 Stainless steel	316 Stainless steel, Monel®, Hastelloy® C or Alloy 6
Valve Plug Guide	316 Stainless steel	Monel® or Hastelloy® C
Orifice	416 Stainless steel	316 Stainless steel, Monel®, Hastelloy® C or Alloy 6
Stem Assembly	416 Stainless steel	316 Stainless steel, Monel® or Hastelloy® C
Gasket	Composition	Graphite

1. Two Diaphragms are used for metal diaphragm except Types MR95L and MR95LD 1/4 NPT Body, range 2 to 6 psig / 0.14 to 0.41 bar.
2. Two Diaphragms are used.

Inconel® is a mark owned by Special Metals Corporation.
Monel® is a mark owned by Special Metals Corporation.
Hastelloy® C is a mark owned by Haynes International, Inc.

Table 10. *Chemical Compatibility*

CORROSION INFORMATION

Fluid	Material							Fluid	Material						
	Carbon Steel	Gray Cast Iron	302 or 304 Stainless Steel	316 Stainless Steel	416 Stainless Steel	Monel®	Hastelloy® C		Carbon Steel	Gray Cast Iron	302 or 304 Stainless Steel	316 Stainless Steel	416 Stainless Steel	Monel®	Hastelloy® C
Acetic Acid, Air Free	C	C	B	B	C	B	A	Hydrochloric Acid (Air free)	C	C	C	C	C	C	B
Acetic Acid Vapors	C	C	A	A	C	B	A	Hydrogen	A	A	A	A	A	A	A
Acetone	A	A	A	A	A	A	A	Hydrogen Peroxide	I.L.	A	A	A	B	A	B
Acetylene	A	A	A	A	A	A	A	Hydrogen Sulfide, Liquid	C	C	A	A	C	C	A
Alcohols	A	A	A	A	A	A	A	Magnesium Hydroxide	A	A	A	A	A	A	A
Aluminum Sulfate	C	C	A	A	C	B	A	Methanol	A	A	A	A	A	A	A
Ammonia	A	A	A	A	A	A	A	Methyl Ethyl Ketone	A	A	A	A	A	A	A
Ammonium Chloride	C	C	B	B	C	B	A	Natural Gas	A	A	A	A	A	A	A
Ammonium Nitrate	A	C	A	A	C	C	A	Nitric Acid	C	C	A	B	C	C	B
Ammonium Sulfate	C	C	B	A	C	A	A	Petroleum Oils, Refined	A	A	A	A	A	A	A
Ammonium Sulfite	C	C	A	A	B	C	A	Phosphoric Acid (Air Free)	C	C	A	A	C	B	A
Beer	B	B	A	A	B	A	A	Phosphoric Acid Vapors	C	C	B	B	C	C	I.L.
Benzene (Benzol)	A	A	A	A	A	A	A	Potassium Chloride	B	B	A	A	C	B	A
Benzoic Acid	C	C	A	A	A	A	A	Potassium Hydroxide	B	B	A	A	B	A	A
Boric Acid	C	C	A	A	B	A	A	Propane	A	A	A	A	A	A	A
Butane	A	A	A	A	A	A	A	Silver Nitrate	C	C	A	A	B	C	A
Calcium Chloride (Alkaline)	B	B	C	B	C	A	A	Sodium Acetate	A	A	B	A	A	A	A
Carbon Dioxide, Dry	A	A	A	A	A	A	A	Sodium Carbonate	A	A	A	A	B	A	A
Carbon Dioxide, Wet	C	C	A	A	A	A	A	Sodium Chloride	C	C	B	B	B	A	A
Carbon Disulfide	A	A	A	A	B	B	A	Sodium Chromate	A	A	A	A	A	A	A
Carbon Tetrachloride	B	B	B	B	C	A	A	Sodium Hydroxide	A	A	A	A	B	A	A
Carbonic Acid	C	C	B	B	A	A	A	Stearic Acid	A	C	A	A	B	B	A
Chlorine Gas, Dry	A	A	B	B	C	A	A	Sulfur	A	A	A	A	A	A	A
Chlorine Gas, Wet	C	C	C	C	C	C	B	Sulfur Dioxide, Dry	A	A	A	A	B	A	A
Chlorine, Liquid	C	C	C	C	C	C	A	Sulfur Trioxide, Dry	A	A	A	A	B	A	A
Chromic Acid	C	C	C	B	C	A	A	Sulfuric Acid (Aerated)	C	C	C	C	C	C	A
Citric Acid	I.L.	C	B	A	B	B	A	Sulfuric Acid (Air Free)	C	C	C	C	C	B	A
Coke Oven Gas	A	A	A	A	A	B	A	Sulfurous Acid	C	C	B	B	C	C	A
Copper Sulfate	C	C	B	B	A	C	A	Trichloroethylene	B	B	B	A	B	A	A
Ether	B	B	A	A	A	A	A	Water, Boiler Feed	B	C	A	A	B	A	A
Ethyl Chloride	C	C	A	A	B	A	A	Water, Distilled	A	A	A	A	B	A	A
Ethylene	A	A	A	A	A	A	A	Water, Sea	B	B	B	B	C	A	A
Ethylene Glycol	A	A	A	A	A	A	I.L.	Zinc Chloride	C	C	C	C	C	C	A
Formaldehyde	B	B	A	A	A	A	A	Zinc Sulfate	C	C	A	A	B	A	A
Formic Acid	I.L.	C	B	B	C	A	A								
Freon, Wet	B	B	B	A	I.L.	A	A								
Freon, Dry	B	B	A	A	I.L.	A	A								
Gasoline, Refined	A	A	A	A	A	A	A	----	----	----	----	----	----	----	----
Glucose	A	A	A	A	A	A	A								
Hydrochloric Acid (Aerated)	C	C	C	C	C	C	B								

FLUID INFORMATION

Fluid	Neoprene (CR)	Nitrile (NBR)	Fluorocarbon (FKM)	EPDM	Fluid	Neoprene (CR)	Nitrile (NBR)	Fluorocarbon (FKM)	EPDM
Acetic Acid (30%)	C	B	B	A	Freon 22	A+	C	C	A
Acetone	B	C	C	A	Freon 114	A	A	B	A
Alcohol, Ethyl	A	A	B	A	Gasoline	B	A+	A	C
Alcohol, Methyl	A+	A	C	A	Hydrogen Gas	A	A	A	A
Ammonia, Anhydrous	A	C	C	A	Hydrogen Sulfide (Dry)	A	C	C	A
Ammonia, Gas, (Hot)	B	C	C	B	Hydrogen Sulfide (Wet)	B	C	C	A
Benzene	C	C	A	C	Jet Fuel (JP-4)	C	A	A	I.L.
Brine (Calcium Chloride)	A	A	B	A	Natural Gas	A	A+	A	C
Butadiene Gas	B	C	B	C	Natural Gas + H_2S (Sour Gas)	A	B	C	C
Butane, Gas	A	A+	A	C	Nitric Acid (10%)	B	C	A	C
Butane, Liquid	B	A	A	C	Nitric Acid (50 to 100%)	C	C	A	C
Carbon Tetrachloride	C	C	A	C	Nitrogen	A	A	A	A
Chlorine, Dry	C	C	A	C	Oil (Fuel)	B	A+	A	C
Chlorine, Wet	C	C	A	C	Propane	A	A	A	C
Coke Oven Gas	C	B	A+	C	Sea Water	B	A	A	A
Ethyl Acetate	C	C	C	B	Sulfur Dioxide	A	C	A	A
Ethylene Glycol	A	A	A	A	Sulfuric Acid (to 50%)	B	C	A	B
Freon 11	B	A	A+	C	Sulfuric Acid (50 to 100%)	C	C	A	B
Freon 12	A+	A	B	B	Water (Ambient)	A	A	A	A
					Water at 200°F / 93°C	C	B	B	A

A+—Best possible selection
A—Recommended
B—Minor to moderate effect. Proceed with caution.
C—Unsatisfactory
I.L.—Information lacking

Monel® is a mark owned by Special Metals Corporation.
Hastelloy® C is a mark owned by Haynes International, Inc.

Table 11. *Air Capacities[1][2] in SCFH / Nm³/h for 1/4 NPT and 1/2 through 1 in. / DN 15 through 25 Types MR95L and MR95LD Regulators with Elastomer Diaphragm*

RECOMMENDED OUTLET/ DIFFERENTIAL PRESSURE RANGE, psig/psi / bar	PRESSURE				REGULATOR BODY SIZE, IN. / DN															
	Outlet/ Differential Setting		Inlet		1/4 NPT				1/2 /15				3/4 / 20				1 / 25			
					Droop				Droop				Droop				Droop			
					10%		20%		10%		20%		10%		20%		10%		20%	
	psig	bar	psig	bar	SCFH	Nm³/h	SCFH	Nm³/h	SCFH	Nm³/h	SCFH	Nm³/h	SCFH	Nm³/h	SCFH	Nm³/h	SCFH	Nm³/h	SCFH	Nm³/h
2 to 6 / 0.14 to 0.41	5	0.34	20	1.4	740	19.8	910	24.5	1000	27.2	1500	41.2	1200	32.8	2200	59.5	2800	74.7	4600	124
			30	2.1	950	25.4	1100	30.2	1100	28.9	1600	42.7	1400	37.8	2500	67.9	3300	87.5	5200	139
			50	3.4	1400	36.5	1500	41.5	1200	32.4	1700	45.5	1800	47.7	3200	84.7	4200	113	6300	169
			75	5.2	1600	43.3	1700	46.9	1300	34.1	1800	47.5	2300	60.5	3500	94.7	4400	118	6700	180
			100	6.9	1800	48.3	1900	52.2	1300	35.9	1800	49.5	2700	73.3	3900	105	4600	123	7100	191
			150	10.3	1800	48.3	2000	53.6	1500	39	2000	52.6	2400	65	4000	106	4600	123	7400	197
			200	13.8	1800	48.3	2000	53.6	1600	42.1	2100	55.6	2100	56.7	4000	107	4600	122	7600	203
			250	17.2	1800	48.3	2000	53.6	1500	41	2100	56.4	2000	52.8	3800	102	4900	131	7900	212
5 to 15 / 0.34 to 1.0	10	0.69	20	1.4	670	18.1	930	24.9	1200	31.8	1900	50.6	1700	45.2	2700	72.7	3000	80.1	4700	127
			30	2.1	950	25.5	1200	31.6	1300	36	2000	54.9	1900	52.1	3100	82.8	3600	97.1	5800	156
			50	3.4	1500	40.4	1700	44.9	1700	44.3	2400	63.5	2500	66.1	3800	103	4900	131	8000	215
			75	5.2	1800	48.5	2000	53.3	1700	46.7	2500	67.7	2800	76	4300	115	5700	153	8700	234
			100	6.9	2100	56.6	2300	61.7	1800	49.1	2700	71.8	3200	85.9	4700	127	6500	175	9400	252
			150	10.3	2200	60.3	2300	62.9	2000	52.4	2900	76.5	3500	92.6	5200	139	6600	178	9800	264
			200	13.8	2400	64	2400	64	2100	55.7	3000	81.1	3700	99.2	5700	152	6700	180	10,000	275
			250	17.2	2400	64	2400	64	2300	61.2	3200	84.9	4300	116	6100	164	6900	184	11,000	292
	15	1.0	20	1.4	600	16.1	830	22.3	1500	41.3	2200	59.5	1600	42.8	2500	66.3	3200	85	4700	126
			30	2.1	930	25	1200	32	1800	47.9	2500	66.7	1900	51.4	3000	81.7	4300	115	6600	176
			50	3.4	1600	42.8	1900	51.4	2300	61.1	3000	81.2	2600	68.7	4200	112	6500	174	10,000	276
			75	5.2	2000	54.9	2300	62	2400	63.8	3300	87.1	3000	80.7	4800	127	7600	204	12,000	310
			100	6.9	2500	67	2700	72.7	2500	66.5	3500	93.1	3500	92.8	5300	142	8700	233	13,000	344
			150	10.3	2600	70.6	2800	74.1	2700	71.6	3800	101	3900	104	5900	159	8800	237	13,000	359
			200	13.8	2800	74.2	2800	75.6	2900	76.6	4100	109	4300	115	6600	177	9000	240	14,000	373
			250	17.2	2800	76	2800	76	2900	78.3	4100	110	4700	126	7200	193	9200	247	14,000	380
13 to 30 / 0.90 to 2.1	20	1.4	30	2.1	710	19	1100	29.1	1800	49	2900	77.2	2000	54.3	3400	90.8	4400	117	7000	188
			40	2.8	970	25.9	1400	37.5	2100	56.1	3200	86.9	2200	57.7	3600	97.8	5500	146	8800	237
			50	3.4	1200	32.9	1700	45.9	2400	63.2	3600	96.6	2300	61.2	3900	105	6500	176	11,000	286
			75	5.2	1700	44.6	2200	59	2600	68.6	3800	103	2900	77	4900	130	8000	215	13,000	338
			100	6.9	2100	56.3	2700	72	2800	74	4000	108	3500	92.8	5800	156	9500	254	15,000	391
			150	10.3	2500	66.5	2900	77.5	3000	80.1	4400	117	4000	107	6300	170	11,000	282	16,000	418
			200	13.8	2900	76.7	3100	83.1	3200	86.3	4700	125	4500	122	6800	184	12,000	309	17,000	446
			250	17.2	3000	80.5	3100	82.6	3500	93.1	4800	129	5000	134	7900	212	12,000	315	17,000	458
	30	2.1	40	2.8	880	23.6	1400	38.6	2700	71	4200	113	2400	63	3500	93.8	6500	174	9000	241
			50	3.4	1300	35.3	1800	48.7	2900	77.7	4500	121	2700	73.2	4100	110	7900	212	11,000	302
			75	5.2	1900	51.8	2500	67.2	3300	89.5	5000	134	3400	90.2	5200	141	10,000	272	15,000	415
			100	6.9	2500	68.2	3200	85.6	3800	101	5500	147	4000	107	6400	171	12,000	333	20,000	527
			150	10.3	3100	83.2	3600	96.2	4100	109	5900	159	4900	132	7700	205	14,000	376	21,000	565
			200	13.8	3700	98.1	4000	107	4400	117	6300	170	5900	157	8900	240	16,000	420	23,000	604
			250	17.2	3900	104	4000	108	4700	125	6600	176	6600	178	10,000	271	16,000	429	23,000	623

1. To obtain capacities for regulators using metal diaphragms, multiply the table values by 0.8.
2. To obtain capacities for regulators with reduced flow orifices, multiply the table values by 0.7.

Table 12. *Air Capacities[1][2] in SCFH / Nm³/h for 1/4 NPT and 1/2 through 1 in. / DN 15 through 25 Types MR95H, MR95HD and MR95HDP Regulators with Elastomer Diaphragm*

RECOMMENDED OUTLET/ DIFFERENTIAL PRESSURE RANGE, psig/psi / bar	PRESSURE				REGULATOR BODY SIZE, IN. / DN															
	Outlet/ Differential Setting		Inlet		1/4 NPT				1/2 / 15				3/4 / 20				1 / 25			
					Droop				Droop				Droop				Droop			
					10%		20%		10%		20%		10%		20%		10%		20%	
	psig	bar	psig	bar	SCFH	Nm³/h	SCFH	Nm³/h	SCFH	Nm³/h	SCFH	Nm³/h	SCFH	Nm³/h	SCFH	Nm³/h	SCFH	Nm³/h	SCFH	Nm³/h
15 to 30 / 1.0 to 2.1	15	1.0	30	2.1	430	11.5	780	20.9	1000	27.2	1700	44.5	2100	56	3300	88.3	2300	62.8	4100	110
			40	2.8	530	14.2	940	25.3	1200	32.6	1900	51.4	2500	65.9	3900	104	3100	82.3	5300	143
			50	3.4	640	17	1100	29.7	1400	38	2200	58.4	2800	75.8	4500	120	3800	102	6600	176
			75	5.2	850	22.9	1500	40.1	1600	43.7	2400	64.8	3700	99.4	5500	147	5200	138	8300	223
			100	6.9	1100	28.8	1900	50.6	1800	49.3	2700	71.2	4600	123	6500	174	6500	174	10,000	269
			150	10.3	1600	44.1	2200	59.2	2500	68	3300	88.2	5700	154	7300	196	8400	226	12,000	327
			200	13.8	2200	59.4	2500	67.8	3200	86.6	3900	105	6900	185	8200	219	10,000	277	14,000	385
			250	17.2	2300	61.4	2600	70.8	3700	99.1	4300	115	7200	192	8600	231	12,000	315	16,000	428
			300	20.7	2400	63.3	2800	73.8	4200	112	4700	126	7400	198	9100	244	13,000	354	18,000	472
	30	2.1	40	2.8	750	20.1	1400	36.2	1700	45.8	3000	81.5	3500	93.8	6000	161	4000	107	8000	214
			50	3.4	1000	27.4	1600	42.4	2000	53.7	3400	90.3	4100	110	7100	189	5600	149	10,000	269
			75	5.2	1400	36.9	2200	58.3	2500	66.9	3900	104	5400	144	8500	227	7600	203	13,000	350
			100	6.9	1700	46.5	2800	74.2	3000	80.1	4400	117	6700	179	9900	264	9600	258	16,000	431
			150	10.3	2000	54.8	3200	85.4	3500	94.1	5100	137	6600	176	10,000	273	12,000	329	19,000	496
			200	13.8	2400	63.1	3600	96.5	4000	108	5800	157	6400	173	10,000	281	15,000	401	21,000	561
			250	17.2	2900	76.9	3900	104	4800	129	6400	172	6400	172	11,000	284	15,000	401	21,000	568
			300	20.7	3400	90.7	4100	111	5600	150	7000	186	6400	172	11,000	288	15,000	400	21,000	576
25 to 75 / 1.7 to 5.2	50	3.4	60	4.1	1000	26.8	2000	53.6	2500	66.2	4500	121	5900	158	9500	255	5500	147	12,000	327
			75	5.2	1400	38.5	2500	68.1	3100	83.6	5200	140	6500	175	11,000	287	8500	228	14,000	385
			100	6.9	1800	48.8	3200	86.2	3800	101	6200	165	8100	218	13,000	340	10,000	272	18,000	488
			150	10.3	2500	66.7	4100	110	4800	128	7300	196	9500	255	15,000	394	14,000	382	22,000	595
			200	13.8	3200	84.6	5000	134	5800	156	8500	227	11,000	292	17,000	447	18,000	493	26,000	702
			250	17.2	3800	102	5300	142	6500	173	8900	238	12,000	310	17,000	465	18,000	471	28,000	740
			300	20.7	4400	119	5600	149	7100	191	9300	250	12,000	329	18,000	482	17,000	448	29,000	777
	75	5.2	100	6.9	2400	65.4	3900	105	3000	80.6	6700	179	10,000	278	17,000	445	12,000	316	19,000	519
			125	8.6	3000	79.8	4700	127	4100	109	7700	205	12,000	313	18,000	491	15,000	393	24,000	636
			150	10.3	3500	94.2	5500	149	5200	138	8600	231	13,000	349	20,000	537	18,000	470	28,000	752
			200	13.8	4600	123	7200	192	7300	196	11,000	283	16,000	420	24,000	630	23,000	624	37,000	985
			250	17.2	5300	141	7600	205	8300	222	12,000	313	16,000	438	25,000	657	24,000	650	38,000	1030
			300	20.7	5900	159	8100	217	9300	249	13,000	344	17,000	456	26,000	684	25,000	677	40,000	1070
70 to 150 / 4.8 to 10.3	100	6.9	125	8.6	2200	58.7	3600	96.6	5400	144	8900	239	12,000	323	20,000	525	13,000	343	21,000	573
			150	10.3	2700	73.1	4500	122	6400	172	10,000	277	14,000	381	23,000	610	17,000	459	27,000	736
			175	12.1	3100	83.6	5200	139	7100	191	11,000	298	16,000	438	25,000	684	19,000	512	31,000	838
			200	13.8	3500	94.2	5800	157	7900	211	12,000	320	18,000	495	28,000	758	21,000	564	35,000	939
			250	17.2	4200	112	6700	179	8900	240	13,000	360	20,000	540	30,000	808	25,000	668	40,000	1080
			300	20.7	4800	129	7500	202	10,000	269	15,000	399	22,000	586	32,000	858	29,000	771	45,000	1210
	150	10.3	175	12.1	3400	91	5400	144	8900	238	14,000	371	13,000	357	26,000	709	18,000	481	30,000	793
			200	13.8	4200	114	6500	174	10,000	272	16,000	429	16,000	425	31,000	835	25,000	665	36,000	961
			225	15.5	4900	132	7400	198	11,000	290	17,000	443	18,000	473	33,000	894	28,000	747	41,000	1110
			250	17.2	5600	151	8200	221	12,000	309	17,000	457	19,000	521	36,000	954	31,000	829	47,000	1260
			300	20.7	7000	188	10,000	267	13,000	346	18,000	485	23,000	616	40,000	1070	37,000	994	58,000	1560

1. To obtain capacities for Type MR95HT (metal diaphragm), multiply the table values by 0.6.
2. To obtain capacities for regulators with reduced flow orifices, multiply the table values by 0.7.

Table 13. *Air Capacities[1] in SCFH / Nm³/h for 1-1/2 through 2 in. / DN 40 through 50 Types MR95H, MR95HD and MR95HDP Regulators with Elastomer or Stainless Steel Diaphragm*

RECOMMENDED OUTLET/ DIFFERENTIAL PRESSURE RANGE, psig/psi / bar	PRESSURE				REGULATOR BODY SIZE, IN. / DN											
	Outlet/ Differential Setting		Inlet		1-1/2 / 40						2 / 50					
					Droop						Droop					
					10%		20%		40%		10%		20%		40%	
	psig	bar	psig	bar	SCFH	Nm³/h	SCFH	Nm³/h	SCFH	Nm³/h	SCFH	Nm³/h	SCFH	Nm³/h	SCFH	Nm³/h
5 to 80 / 0.34 to 5.5	5	0.34	10	0.69	1000	27.5	1500	40.7	2500	68.2	1000	26.9	1400	38.6	2600	70.8
			20	1.4	1600	41.7	2200	58.4	3700	99.8	1600	42.6	2300	61.7	4000	107
			30	2.1	2100	56	2800	76.2	4900	131	2200	58.3	3200	84.9	5400	144
			50	3.4	3200	84.5	4200	112	7300	195	3300	89.7	4900	131	8100	216
			75	5.2	4100	109	5700	153	9800	264	5000	134	7200	193	15,000	392
			100	6.9	5000	134	7200	194	12,000	333	6600	177	9500	256	21,000	568
			150	10.3	5500	146	7900	213	13,000	347	10,000	270	26,000	695	36,000	959
			200	13.8	5900	159	8600	231	13,000	360	14,000	363	42,000	1130	50,000	1350
			250	17.2	7500	200	10,000	273	15,000	415	21,000	569	47,000	1250	51,000	1350
			300	20.7	9000	241	12,000	315	18,000	471	29,000	775	51,000	1360	51,000	1360
	30	2.1	40	2.8	7900	212	13,000	340	21,000	551	10,000	275	18,000	471	30,000	814
			50	3.4	8100	216	14,000	362	23,000	629	13,000	346	22,000	590	38,000	1010
			75	5.2	14,000	372	22,000	585	37,000	987	19,000	516	43,000	1150	58,000	1560
			100	6.9	20,000	527	30,000	807	50,000	1340	26,000	687	64,000	1710	79,000	2110
			150	10.3	21,000	568	33,000	872	52,000	1380	57,000	1540	86,000	2300	93,000	2500
			200	13.8	23,000	610	35,000	937	53,000	1420	89,000	2390	110,000	2890	110,000	2890
			250	17.2	29,000	772	41,000	1100	57,000	1530	100,000	2700	110,000	2980	110,000	2980
			300	20.7	35,000	934	47,000	1260	61,000	1640	110,000	3010	110,000	3060	110,000	3060
	50	3.4	60	4.1	13,000	349	27,000	724	48,000	1290	14,000	383	32,000	869	50,000	1340
			75	5.2	19,000	516	33,000	873	52,000	1400	21,000	570	42,000	1120	55,000	1490
			100	6.9	26,000	697	41,000	1100	65,000	1750	34,000	925	67,000	1810	76,000	2030
			150	10.3	29,000	779	47,000	1250	72,000	1920	77,000	2050	110,000	2820	110,000	2960
			200	13.8	32,000	860	53,000	1410	78,000	2090	120,000	3180	140,000	3840	150,000	3900
			250	17.2	42,000	1110	60,000	1620	87,000	2330	140,000	3700	150,000	4100	150,000	4120
			300	20.7	51,000	1370	68,000	1820	96,000	2570	160,000	4220	160,000	4350	160,000	4350
	75	5.2	100	6.9	28,000	753	48,000	1280	68,000	1830	33,000	875	62,000	1650	71,000	1910
			125	8.6	35,000	939	59,000	1590	82,000	2190	55,000	1480	82,000	2190	90,000	2410
			150	10.3	42,000	1120	71,000	1900	95,000	2560	78,000	2090	100,000	2730	110,000	2920
			200	13.8	56,000	1490	94,000	2530	120,000	3290	120,000	3300	140,000	3800	150,000	3930
			250	17.2	62,000	1660	97,000	2600	130,000	3560	170,000	4440	180,000	4750	180,000	4810
			300	20.7	68,000	1830	100,000	2670	140,000	3840	210,000	5580	210,000	5690	210,000	5690
60 to 120 / 4.1 to 8.3	100	6.9	125	8.6	33,000	881	60,000	1600	81,000	2160	38,000	1020	70,000	1880	86,000	2310
			150	10.3	37,000	987	65,000	1740	94,000	2520	60,000	1620	90,000	2420	110,000	2830
			175	12.1	41,000	1090	70,000	1880	110,000	2890	83,000	2230	110,000	2960	120,000	3340
			225	15.5	49,000	1300	81,000	2170	130,000	3610	130,000	3440	150,000	4050	160,000	4360
			250	17.2	48,000	1290	84,000	2260	140,000	3730	150,000	3920	170,000	4580	180,000	4820
			300	20.7	47,000	1270	91,000	2440	150,000	3980	180,000	4900	210,000	5650	210,000	5750
100 to 140 / 6.9 to 97	125	8.6	150	10.3	40,000	1070	69,000	1840	94,000	2520	38,000	1020	76,000	2030	100,000	2710
			175	12.1	46,000	1240	83,000	2220	110,000	3020	44,000	1190	100,000	2670	120,000	3260
			200	13.8	53,000	1410	97,000	2600	130,000	3520	50,000	1350	120,000	3310	140,000	3800
			225	15.5	63,000	1700	110,000	2960	150,000	3910	81,000	2170	140,000	3870	160,000	4310
			250	17.2	74,000	1990	120,000	3310	160,000	4310	110,000	2990	160,000	4420	180,000	4830
			300	20.7	96,000	2560	150,000	4020	190,000	5110	170,000	4640	210,000	5530	220,000	5860
120 to 150 / 8.3 to 10.3	150	10.3	175	12.1	38,000	1030	70,000	1870	110,000	2980	38,000	1020	76,000	2040	110,000	3080
			200	13.8	46,000	1240	80,000	2150	130,000	3450	47,000	1270	93,000	2490	140,000	3650
			225	15.5	51,000	1360	87,000	2330	140,000	3770	54,000	1450	120,000	3160	160,000	4190
			250	17.2	55,000	1480	94,000	2520	150,000	4080	61,000	1630	140,000	3840	180,000	4730
			300	20.7	64,000	1710	110,000	2890	180,000	4710	74,000	1990	190,000	5190	220,000	5810

1. To obtain capacities for regulators with reduced flow orifices, multiply the table values by 0.7.

Table 14. *Air Capacities[1][2] in SCFH / Nm³/h for 1/4 NPT and 1/2 through 1 in. / DN 15 through 25 Type MR95HP (Elastomer Diaphragm) Regulator*

RECOMMENDED OUTLET/ DIFFERENTIAL PRESSURE RANGE, psig/psi / bar	PRESSURE				REGULATOR BODY SIZE, IN. / DN															
	Outlet/ Differential Setting		Inlet		1/4 NPT				1/2 / 15				3/4 / 20				1 / 25			
					Droop				Droop				Droop				Droop			
					10%		20%		10%		20%		10%		20%		10%		20%	
	psig	bar	psig	bar	SCFH	Nm³/h	SCFH	Nm³/h	SCFH	Nm³/h	SCFH	Nm³/h	SCFH	Nm³/h	SCFH	Nm³/h	SCFH	Nm³/h	SCFH	Nm³/h
15 to 100 / 1.0 to 6.9	15	1.0	30	2.1	200	5.36	300	8.04	350	9.47	410	10.9	1100	29.6	2500	67.3	2000	54.1	3600	96.5
			40	2.8	210	5.63	330	8.71	610	16.4	790	21.1	1500	39.3	2900	78	2200	59	3900	104
			50	3.4	220	5.9	350	9.38	810	21.8	1100	29.1	1700	46.9	3200	86.3	2400	64	4100	111
			75	5.2	230	6.17	400	10.7	1200	31.5	1600	43.6	2300	60.5	3800	101	2900	76.4	4800	129
			100	6.9	250	6.62	450	11.9	1200	32	1900	50.5	2800	74.4	4300	115	3300	88.9	5500	147
			150	10.3	370	10	610	16.2	1800	47.9	2600	69.3	3000	81	4700	125	4200	114	6900	184
			200	13.8	500	13.5	770	20.5	2400	63.9	3300	88.2	3300	87.6	5000	135	5200	139	8200	220
			250	17.2	510	13.7	830	22.3	2400	64.3	3300	87.8	3700	100	5400	146	5500	148	9100	245
			300	20.7	520	13.9	900	24.1	2400	64.6	3300	87.5	4200	113	5800	156	5900	157	10,000	269
			400	27.6	640	17.2	950	25.5	2700	71.1	3600	96.8	4400	117	6100	164	6700	179	11,000	298
			500	34.5	780	20.8	1000	27.8	2800	75.1	4100	110	4600	124	6400	172	7200	194	12,000	323
			600	41.4	910	24.4	1100	30.1	2900	79	4600	123	4900	131	6700	179	7700	205	13,000	343
			1000	69.0	910	24.4	1100	30.1	3500	93.3	5000	135	5500	148	7400	198	8900	239	15,000	400
	50	3.4	60	4.1	880	23.6	1500	40.4	3000	80.4	5100	137	6500	174	10,000	268	6000	161	11,000	295
			75	5.2	920	24.7	1600	41.8	3200	85.5	5300	143	6800	182	10,000	276	6700	180	12,000	317
			100	6.9	1000	26.9	1600	42.5	3500	94	5700	154	7300	195	11,000	290	7900	211	13,000	354
			150	10.3	1100	30.5	1800	48.8	4300	115	6600	178	8200	221	12,000	328	10,000	277	17,000	450
			200	13.8	1300	34	2100	55	5100	136	7500	201	9200	246	14,000	367	13,000	343	20,000	547
			250	17.2	1400	38.2	2200	57.7	5700	152	8200	221	10,000	268	15,000	391	15,000	393	23,000	607
			300	20.7	1600	42.4	2300	60.3	6200	167	9000	241	11,000	289	16,000	416	17,000	444	25,000	667
			400	27.6	1700	46.3	2400	64.7	7000	188	9300	250	9300	248	14,000	379	19,000	510	29,000	778
			500	34.5	1700	46.8	2500	65.7	7200	193	9500	254	10,000	272	15,000	405	21,000	564	31,000	835
			600	41.4	1800	47.4	2500	66.7	7400	199	9600	258	11,000	296	16,000	430	23,000	617	33,000	893
			1000	69.0	1800	48.3	2500	67	7300	195	10,000	273	13,000	353	18,000	478	28,000	741	38,000	1030
	100	6.9	125	8.6	2000	54.4	3100	84.2	6600	176	10,000	277	12,000	314	19,000	499	13,000	361	22,000	583
			150	10.3	2100	57.3	3300	89.1	7200	192	11,000	303	13,000	357	21,000	556	16,000	430	26,000	708
			175	12.1	2200	60.3	3500	94	7800	208	12,000	328	15,000	399	23,000	613	19,000	499	31,000	834
			200	13.8	2400	63.2	3700	99	8400	224	13,000	354	16,000	442	25,000	671	21,000	569	36,000	959
			250	17.2	2600	69.1	3900	105	9800	262	15,000	396	19,000	497	27,000	724	25,000	670	40,000	1090
			300	20.7	2800	75.1	4100	111	11,000	300	16,000	438	21,000	553	29,000	776	29,000	771	45,000	1210
			400	27.6	3100	81.8	4300	116	12,000	312	18,000	480	16,000	439	25,000	673	33,000	896	50,000	1350
			500	34.5	3100	83.6	4400	119	12,000	323	17,000	468	18,000	479	27,000	716	36,000	970	54,000	1450
			600	41.4	3200	85.5	4500	122	12,000	333	17,000	456	19,000	518	28,000	759	39,000	1040	57,000	1540
			1000	69.0	3200	85.8	4500	121	14,000	381	19,000	514	21,000	557	31,000	820	46,000	1230	66,000	1770
80 to 300 / 5.5 to 20.7	125	8.6	150	10.3	1400	37.1	2300	60.6	4500	119	7600	205	9600	257	16,000	424	9700	261	17,000	447
			175	12.1	1500	39.9	2400	64.9	5100	136	8400	226	11,000	287	17,000	468	11,000	305	19,000	507
			200	13.8	1600	42.7	2600	69.3	5700	153	9200	247	12,000	317	19,000	513	13,000	348	21,000	568
			225	15.5	1700	45.2	2700	73.3	6000	162	9800	263	13,000	340	20,000	550	14,000	380	23,000	624
			250	17.2	1800	47.7	2900	77.3	6400	171	10,000	279	14,000	363	22,000	587	15,000	411	25,000	679
			300	20.7	2000	52.8	3200	85.4	7100	190	12,000	311	15,000	410	25,000	661	18,000	474	29,000	791
			400	27.6	2200	60	3500	93.1	8900	240	14,000	387	17,000	454	27,000	713	22,000	592	36,000	966
			500	34.5	2500	65.8	3900	104	10,000	270	16,000	427	19,000	499	29,000	765	26,000	700	41,000	1110
			600	41.4	2700	71.5	4300	114	11,000	301	17,000	467	20,000	543	30,000	817	30,000	807	46,000	1240
			1000	69.0	2000	53	4000	108	15,000	395	21,000	553	27,000	722	38,000	1020	40,000	1070	65,000	1750
	200	13.8	225	15.5	2300	62.3	4000	107	8000	216	14,000	362	16,000	435	27,000	714	18,000	479	31,000	830
			250	17.2	2600	68.4	4200	113	9000	242	15,000	396	18,000	474	30,000	796	20,000	528	34,000	912
			300	20.7	3000	80.6	4700	127	11,000	293	17,000	463	21,000	553	36,000	958	23,000	628	40,000	1080
			350	24.1	3200	85.1	5100	136	12,000	330	20,000	523	24,000	637	42,000	1120	27,000	723	47,000	1250
			400	27.6	3300	89.5	5400	144	14,000	368	22,000	583	27,000	721	48,000	1280	31,000	818	53,000	1430
			450	31.0	3500	93.9	5600	150	15,000	391	23,000	619	27,000	736	47,000	1260	34,000	909	57,000	1540
			500	34.5	3700	98.3	5800	156	15,000	414	24,000	655	28,000	752	46,000	1240	37,000	1000	61,000	1640
			600	41.4	4000	107	6200	167	17,000	461	27,000	727	29,000	782	45,000	1210	44,000	1180	69,000	1860
			1000	69.0	4500	120	6900	186	22,000	585	31,000	834	41,000	1090	59,000	1590	56,000	1510	87,000	2340
	300	20.7	350	24.1	4000	106	6800	181	14,000	386	24,000	646	25,000	677	40,000	1080	32,000	850	56,000	1500
			400	27.6	4400	118	7200	194	17,000	444	28,000	761	26,000	704	41,000	1100	37,000	987	65,000	1740
			450	31.0	4700	126	7600	205	18,000	484	30,000	814	31,000	826	48,000	1290	42,000	1130	73,000	1950
			500	34.5	5000	135	8000	215	20,000	524	32,000	866	35,000	949	55,000	1480	47,000	1270	81,000	2160
			550	37.9	5300	143	8400	225	21,000	564	34,000	919	40,000	1070	62,000	1680	53,000	1410	89,000	2380
			600	41.4	5600	151	8800	236	23,000	604	36,000	971	44,000	1190	70,000	1870	58,000	1560	96,000	2590
			1000	69.0	6300	169	10,000	268	30,000	812	46,000	1230	57,000	1530	85,000	2290	80,000	2160	100,000	2750
80 to 400 / 5.5 to 27.6 Type MR95HP Only	400	27.6	500	34.5	5700	152	9800	263	21,000	559	35,000	944	38,000	1010	64,000	1710	49,000	1320	86,000	2310
			600	41.4	6500	174	11,000	292	26,000	693	42,000	1130	45,000	1210	79,000	2120	59,000	1590	110,000	2860
			1000	69.0	9000	241	13,000	355	35,000	934	54,000	1450	61,000	1640	100,000	2700	80,000	2150	140,000	3650

1. To obtain capacities for Type MR95HT (metal diaphragm), multiply the table values by 0.6. Capacity data for 1000 psig / 69.0 bar inlet is not applicable for Type MR95HT (Type MR95HT max. inlet = 600 psig / 41.4 bar).
2. To obtain capacities for regulators with reduced flow orifices, multiply the table values by 0.7.

Table 15. *Air Capacities[1] in SCFH / Nm³/h for 1-1/2 through 2 in. / DN 40 through 50 Type MR95HP (Elastomer Diaphragm) Regulator*

RECOMMENDED OUTLET/ DIFFERENTIAL PRESSURE RANGE, psig/psi / bar	PRESSURE				REGULATOR BODY SIZE, IN. / DN											
	Outlet/ Differential Setting		Inlet		1-1/2 / 40						2 / 50					
					Droop						Droop					
					10%		20%		40%		10%		20%		40%	
	psig	bar	psig	bar	SCFH	Nm³/h	SCFH	Nm³/h	SCFH	Nm³/h	SCFH	Nm³/h	SCFH	Nm³/h	SCFH	Nm³/h
15 to 100 / 1.0 to 6.9	15	1.0	30	2.1	4000	108	6000	160	11,000	286	4000	107	6700	179	13,000	338
			40	2.8	5000	134	7600	205	13,000	346	5700	152	9300	250	18,000	484
			50	3.4	6000	161	9300	249	15,000	405	7400	198	12,000	322	23,000	629
			75	5.2	8400	226	13,000	343	21,000	566	11,000	301	26,000	709	38,000	1020
			100	6.9	11,000	292	16,000	437	27,000	727	15,000	404	41,000	1100	53,000	1420
			150	10.3	12,000	321	20,000	524	31,000	820	43,000	1150	60,000	1620	66,000	1780
			200	13.8	13,000	351	23,000	611	34,000	913	71,000	1890	80,000	2150	80,000	2150
			250	17.2	14,000	379	22,000	596	34,000	924	45,000	1210	81,000	2180	81,000	2180
			300	20.7	15,000	407	22,000	582	35,000	934	35,000	937	82,000	2210	82,000	2210
			400	27.6	11,000	306	17,000	454	35,000	936	35,000	937	82,000	2210	82,000	2210
			500	34.5	7700	205	12,000	327	35,000	938	35,000	937	82,000	2210	82,000	2210
			600	41.4	11,000	282	14,000	363	35,000	938	35,000	937	82,000	2210	82,000	2210
			1000	69.0	12,000	313	17,000	461	35,000	938	35,000	937	82,000	2210	82,000	2210
	50	3.4	60	4.1	11,000	306	21,000	553	38,000	1020	13,000	361	24,000	642	44,000	1170
			75	5.2	14,000	387	27,000	712	48,000	1280	19,000	496	39,000	1050	57,000	1540
			100	6.9	19,000	521	36,000	978	63,000	1700	27,000	722	64,000	1720	80,000	2140
			150	10.3	27,000	712	51,000	1370	80,000	2140	78,000	2100	100,000	2800	110,000	3080
			200	13.8	34,000	902	66,000	1770	97,000	2590	130,000	3480	140,000	3880	150,000	4020
			250	17.2	42,000	1120	70,000	1890	97,000	2600	92,000	2450	160,000	4340	160,000	4410
			300	20.7	50,000	1340	75,000	2010	97,000	2600	92,000	2450	180,000	4800	180,000	4800
			400	27.6	46,000	1240	70,000	1890	97,000	2600	92,000	2450	180,000	4800	180,000	4800
			500	34.5	42,000	1140	66,000	1770	97,000	2600	92,000	2450	180,000	4800	180,000	4800
			600	41.4	27,000	730	54,000	1450	98,000	2630	92,000	2450	180,000	4800	180,000	4800
			1000	69.0	28,000	762	73,000	1960	100,000	2690	92,000	2450	180,000	4800	180,000	4800
	100	6.9	125	8.6	29,000	791	56,000	1510	86,000	2290	40,000	1080	75,000	2010	89,000	2390
			150	10.3	38,000	1010	75,000	2000	100,000	2760	72,000	1930	98,000	2640	110,000	2950
			200	13.8	54,000	1440	110,000	2990	140,000	3700	140,000	3620	150,000	3890	150,000	4080
			250	17.2	59,000	1580	110,000	3010	150,000	4100	180,000	4760	180,000	4950	190,000	5080
			300	20.7	65,000	1730	110,000	3030	170,000	4500	220,000	5910	220,000	6020	230,000	6080
			400	27.6	68,000	1810	120,000	3190	170,000	4610	230,000	6030	230,000	6170	240,000	6430
			500	34.5	71,000	1890	120,000	3350	180,000	4720	230,000	6030	230,000	6170	240,000	6430
			600	41.4	81,000	2160	130,000	3580	180,000	4710	230,000	6030	230,000	6170	240,000	6430
			1000	69.0	100,000	2680	140,000	3840	180,000	4780	230,000	6030	230,000	6170	250,000	6700
60 to 260 / 4.1 to 17.9	125	8.6	150	10.3	23,000	616	37,000	1000	71,000	1900	26,000	697	46,000	1240	91,000	2440
			175	12.1	27,000	724	44,000	1190	83,000	2220	30,000	817	57,000	1520	110,000	2970
			200	13.8	31,000	831	51,000	1380	95,000	2550	35,000	938	67,000	1800	130,000	3510
			225	15.5	34,000	920	56,000	1490	100,000	2750	41,000	1110	87,000	2340	150,000	4020
			250	17.2	38,000	1010	60,000	1600	110,000	2960	48,000	1290	110,000	2890	170,000	4540
			300	20.7	44,000	1190	68,000	1830	130,000	3360	61,000	1640	150,000	3980	210,000	5570
			400	27.6	54,000	1440	89,000	2370	140,000	3870	73,000	1940	180,000	4830	230,000	6190
			500	34.5	63,000	1680	110,000	2920	160,000	4380	84,000	2250	210,000	5710	260,000	7010
			600	41.4	75,000	2010	120,000	3290	180,000	4750	93,000	2490	240,000	6430	280,000	7600
			1000	69.0	77,000	2060	120,000	3290	190,000	5100	94,000	2520	240,000	6430	300,000	8040
	200	13.8	225	15.5	39,000	1040	68,000	1810	130,000	3380	43,000	1150	85,000	2270	150,000	4010
			250	17.2	45,000	1200	76,000	2050	140,000	3770	49,000	1320	100,000	2810	170,000	4600
			300	20.7	57,000	1520	94,000	2520	170,000	4570	62,000	1650	150,000	3900	220,000	5770
			350	24.1	64,000	1710	110,000	2830	190,000	5100	72,000	1920	180,000	4770	250,000	6630
			400	27.6	71,000	1910	120,000	3140	210,000	5630	80,000	2150	210,000	5530	270,000	7320
			450	31.0	79,000	2110	130,000	3450	230,000	6160	88,000	2360	230,000	6200	300,000	8010
			500	34.5	86,000	2300	140,000	3770	250,000	6690	95,000	2540	250,000	6800	320,000	8690
			600	41.4	100,000	2710	170,000	4480	280,000	7390	110,000	2860	290,000	7850	360,000	9610
			1000	69.0	130,000	3450	230,000	6090	290,000	7690	140,000	3760	350,000	9380	370,000	10,000
	250	17.2	275	19.0	53,000	1430	94,000	2520	160,000	4400	51,000	1370	110,000	2820	180,000	4870
			300	20.7	63,000	1680	110,000	2840	190,000	5000	63,000	1700	130,000	3550	200,000	5490
			350	24.1	73,000	1960	120,000	3280	210,000	5670	81,000	2160	130,000	3610	230,000	6240
			400	27.6	84,000	2250	140,000	3720	240,000	6340	92,000	2470	150,000	4100	260,000	6970
			450	31.0	95,000	2540	160,000	4160	260,000	7000	100,000	2790	170,000	4580	290,000	7700
			500	34.5	110,000	2820	170,000	4600	290,000	7670	120,000	3100	190,000	5060	310,000	8440
			550	37.9	110,000	2950	180,000	4870	310,000	8200	120,000	3240	200,000	5360	340,000	9030
			600	41.4	110,000	3070	190,000	5150	330,000	8740	130,000	3380	210,000	5660	360,000	9610
			1000	69.0	160,000	4400	240,000	6320	390,000	10,500	180,000	4840	260,000	6950	430,000	11,500
60 to 300 / 4.1 to 20.7 Type MR95HP Only	300	20.7	350	24.1	75,000	2010	140,000	3750	230,000	6030	80,000	2140	200,000	5360	250,000	6640
			400	27.6	89,000	2380	150,000	4040	260,000	6860	98,000	2620	170,000	4450	280,000	7540
			450	31.0	100,000	2690	170,000	4680	280,000	7640	110,000	2960	190,000	5150	310,000	8400
			500	34.5	110,000	2990	200,000	5320	310,000	8420	120,000	3290	220,000	5850	350,000	9260
			550	37.9	120,000	3180	210,000	5510	330,000	8840	130,000	3490	230,000	6060	360,000	9730
			600	41.4	130,000	3360	210,000	5690	350,000	9260	140,000	3700	230,000	6260	380,000	10,200
			1000	69.0	190,000	5090	330,000	8770	460,000	12,400	210,000	5600	360,000	9650	510,000	13,600

▭ - Denotes capacities limited by boost.

1. To obtain capacities for regulators with reduced flow orifices, multiply the table values by 0.7.

Table 16. *Steam Capacities[(1)(2)] for 1/4 NPT and 1/2 through 1 in. / DN 15 through 25 Types MR95L and MR95LD Regulators with Metal Diaphragm*

RECOMMENDED OUTLET/ DIFFERENTIAL PRESSURE RANGE, psig/psi / bar	PRESSURE				REGULATOR BODY SIZE, IN. / DN															
	Outlet/ Differential Setting		Inlet		1/4 NPT				1/2 / 15				3/4 / 20				1 / 25			
					Droop				Droop				Droop				Droop			
					10%		20%		10%		20%		10%		20%		10%		20%	
	psig	bar	psig	bar	lb/h	kg/h	lb/h	kg/h	lb/h	kg/h	lb/h	kg/h	lb/h	kg/h	lb/h	kg/h	lb/h	kg/h	lb/h	kg/h
2 to 6 / 0.14 to 0.41	5	0.34	20	1.4	26	11.8	32	14.5	35	16.1	53	24.1	43	19.3	78	35.4	99	45.1	160	74.1
			30	2.1	33	15	38	17.4	39	17.5	56	25.4	49	22.4	88	39.9	120	52.7	180	83
			50	3.4	48	21.9	52	23.5	41	18.9	59	26.7	63	28.4	110	50.5	150	66.3	220	99.4
			75	5.2	55	25	58	26.6	45	20.3	62	28.2	79	36.1	120	54.9	150	69	230	105
			100	6.9	62	28.1	65	29.7	45	20.3	62	28.2	93	42.3	130	61	160	72	240	111
			150	10.3	62	28.2	69	31.3	52	23.5	69	31.3	83	37.5	140	62.6	160	72	250	116
			200	13.8	62	28.2	69	31.3	55	25	72	32.8	72	32.9	140	62.6	160	72	260	119
			250	17.2	62	28.2	69	31.3	52	23.5	72	32.9	69	31.3	130	59.5	170	76.7	270	124
5 to 15 / 0.34 to 1.0	10	0.69	20	1.4	24	10.8	33	15	43	19.5	68	30.8	61	27.6	96	43.8	110	48.8	170	76.3
			30	2.1	33	15.2	42	19.1	46	20.9	71	32	67	30.6	110	49.8	130	57.9	210	93.2
			50	3.4	52	23.6	59	26.7	59	26.9	83	37.9	87	39.7	130	60.3	170	77.9	280	127
			75	5.2	62	28.1	69	31.3	59	26.7	86	39.2	97	44.1	150	67.7	200	89.8	300	137
			100	6.9	72	32.8	79	36	62	28.2	93	42.2	110	50.2	160	73.7	220	102	320	147
			150	10.3	76	34.4	79	36	69	31.3	100	45.4	120	54.8	180	81.3	230	103	340	153
			200	13.8	83	37.5	83	37.5	72	32.8	100	46.9	130	57.9	200	89.2	230	105	340	156
			250	17.2	83	37.5	83	37.5	79	36	110	50.1	150	67.3	210	95.4	240	108	380	172
	15	1.0	20	1.4	22	9.81	30	13.5	54	24.6	79	35.9	58	26.2	90	40.9	120	52.4	170	76.8
			30	2.1	33	15	42	19.3	64	29.1	89	40.3	68	30.8	110	48.5	150	69.7	230	107
			50	3.4	56	25.3	66	30	81	36.6	100	47.7	91	41.6	150	67	230	104	350	160
			75	5.2	69	31.3	79	36	83	37.8	110	51.9	100	47.5	170	75.8	260	120	420	190
			100	6.9	86	39.1	93	42.2	86	39.2	120	54.8	120	55	180	83.3	300	137	450	204
			150	10.3	89	40.7	96	43.8	93	42.2	130	59.4	130	61.1	200	92.4	300	138	450	203
			200	13.8	96	43.8	96	43.8	100	45.4	140	64.1	150	67.3	230	103	310	141	480	219
			250	17.2	96	43.8	96	43.8	100	45.4	140	64.1	160	73.5	250	113	320	144	480	219
13 to 30 / 0.90 to 2.1	20	1.4	30	2.1	25	11.5	39	17.8	65	29.3	100	47.1	72	32.6	120	55.3	160	71.8	250	114
			40	2.8	34	15.6	49	22.4	75	33.9	110	51.5	78	35.6	130	58.1	200	89	310	142
			50	3.4	42	19.1	59	27	85	38.5	130	57.5	81	37	140	62.5	230	104	390	176
			75	5.2	59	26.7	76	34.5	91	41.2	130	60	100	46.1	170	77.7	280	127	450	206
			100	6.9	72	32.8	93	42.2	97	44	140	62.7	120	55.2	200	91.4	330	150	520	236
			150	10.3	86	39.1	100	45.4	100	46.9	150	68.8	140	62.7	220	98.7	380	172	550	251
			200	13.8	100	45.4	110	48.5	110	50.1	160	73.5	150	70.4	230	106	410	188	590	266
			250	17.2	100	46.9	110	48.5	120	54.8	170	75.1	170	78.2	270	124	410	188	590	266
	30	2.1	40	2.76	32	14.3	50	22.7	97	44.1	150	68.3	86	39.2	130	57	230	106	320	147
			50	3.4	46	21	64	29	100	47	160	72.6	96	43.8	150	66.3	280	128	390	178
			75	5.2	66	30.2	87	39.6	120	52.7	180	79.6	120	54.5	180	83.1	350	160	530	240
			100	6.9	86	39.3	110	50.2	130	60.1	190	86.8	140	63.6	220	102	420	191	700	317
			150	10.3	110	48.5	120	56.3	140	64.3	200	92.4	170	77.1	270	121	480	220	730	330
			200	13.8	130	57.9	140	62.6	150	68.8	220	98.5	200	92.5	310	139	550	251	790	360
			250	17.2	130	61	140	62.6	160	73.5	230	103	230	103	340	157	550	250	790	360

1. Capacities are based in lbs/h / kg/h of saturated steam.
2. To obtain capacities for regulators with reduce flow orifices, multiply the table values by 0.7.

Table 17. *Steam Capacities[1][2] for 1/4 NPT and 1/2 through 1 in. / DN 15 through 25 Types MR95H, MR95HD and MR95HDP Regulators with Metal Diaphragm*

RECOMMENDED OUTLET/ DIFFERENTIAL PRESSURE RANGE, psig/psi / bar	PRESSURE				REGULATOR BODY SIZE, IN. / DN															
	Outlet/ Differential Setting		Inlet		1/4 NPT				1/2 / 15				3/4 / 20				1 / 25			
					Droop				Droop				Droop				Droop			
					10%		20%		10%		20%		10%		20%		10%		20%	
	psig	bar	psig	bar	lb/h	kg/h	lb/h	kg/h	lb/h	kg/h	lb/h	kg/h	lb/h	kg/h	lb/h	kg/h	lb/h	kg/h	lb/h	kg/h
15 to 30 / 1.0 to 2.1	15	1.0	30	2.1	11	5.2	21	9.41	27	12.1	45	20.6	56	25.5	88	40	62	28	110	49.7
			40	2.8	14	6.34	25	11.2	32	14.4	50	22.8	66	30.2	100	46.9	82	37.4	140	63.8
			50	3.4	17	7.6	29	13	37	16.7	58	26.2	74	33.6	120	53.9	100	45.6	170	79
			75	5.2	22	9.98	39	17.6	42	18.9	62	28.3	97	43.9	140	65.2	140	61.7	220	98.4
			100	6.9	28	12.9	49	22.3	47	21.1	70	31.7	120	54.3	170	76.6	170	76.7	260	118
			150	10.3	41	18.8	57	25.8	65	29.3	85	38.7	150	66.9	190	85.7	220	98.6	310	141
			200	13.8	57	25.8	65	29.3	83	37.5	100	45.8	180	81	210	96.2	260	117	360	164
			250	17.2	59	27	67	30.5	96	43.4	110	50.5	190	84.5	220	101	310	141	410	188
			300	20.7	62	28.2	72	32.8	110	49.3	120	55.1	190	86.8	230	107	340	153	460	211
	30	2.1	40	2.8	20	9.17	37	17	46	20.8	81	36.6	94	42.9	160	73.3	110	49	220	97.7
			50	3.4	27	12.1	42	19.3	53	24.3	91	41.2	110	49.9	190	86.2	150	68.2	270	121
			75	5.2	37	16.7	57	26.1	66	30	100	46.6	140	64.9	220	102	200	91.4	340	156
			100	6.9	44	20	72	32.9	78	35.6	110	52.1	180	79.9	260	118	250	114	420	190
			150	10.3	52	23.5	83	37.5	91	41.1	130	59.9	170	77.9	260	118	310	142	490	224
			200	13.8	62	28.2	93	42.2	100	46.9	150	68	170	75.2	260	117	390	176	540	247
			250	17.2	75	34	100	45.8	120	56.3	170	75.1	170	75.1	280	129	390	176	540	247
			300	20.7	88	39.9	110	48.1	140	65.7	180	82.1	170	75.1	280	129	390	176	540	246
25 to 75 / 1.7 to 5.2	50	3.4	60	4.1	27	12.3	54	24.4	68	30.7	120	55	160	72.5	260	116	150	67.6	320	147
			75	5.2	37	17	66	30.2	83	37.7	140	63	170	79.2	290	134	230	104	370	170
			100	6.9	47	21.6	84	38.2	100	45.7	160	74.4	220	97.8	340	156	270	121	480	217
			150	10.3	65	29.5	110	48.2	130	57	190	86.4	250	113	390	178	370	167	580	262
			200	13.8	83	37.5	130	58.7	150	68.3	220	99.9	290	130	440	201	470	213	680	307
			250	17.2	98	44.6	140	62.2	170	76.3	230	104	310	141	440	200	470	212	720	329
			300	20.7	110	51.6	140	65.7	180	83.3	240	109	310	141	470	211	440	200	750	341
	75	5.2	100	6.9	64	29.2	99	45	81	36.6	180	81.5	270	122	460	207	320	147	510	231
			125	8.6	80	36.2	120	56.4	110	49.6	200	92.8	320	146	480	218	400	182	640	290
			150	10.3	92	41.9	140	65.5	140	62.5	230	103	340	157	530	240	480	217	740	336
			200	13.8	120	54.3	190	84.8	190	86.8	290	130	420	191	630	286	600	275	970	441
			250	17.2	140	62.2	200	89.2	220	98	310	141	420	190	650	296	630	285	990	450
			300	20.7	150	69.2	210	95	240	109	340	153	440	201	670	307	650	295	1000	472
70 to 150 / 4.8 to 10.3	100	6.9	125	8.6	59	26.9	96	43.7	150	66.1	240	108	320	147	540	244	350	159	560	256
			150	10.3	72	32.7	120	54.2	170	77.7	270	121	370	170	610	279	460	207	720	327
			175	12.1	82	37.3	140	62.2	190	85.7	290	132	430	194	660	301	510	230	820	374
			200	13.8	92	41.8	150	69	210	94.9	320	144	480	217	740	336	560	253	920	420
			250	17.2	110	49.7	170	79	230	106	340	154	530	239	790	358	660	299	1000	477
			300	20.7	120	56.4	190	88	260	118	390	177	580	262	840	380	760	345	1200	534
	150	10.3	175	12.1	92	41.7	140	65.8	240	109	380	171	350	160	700	318	490	221	810	367
			200	13.8	110	51.1	170	78.7	270	122	430	194	430	195	830	377	670	305	960	438
			225	15.5	130	59.3	200	89	290	134	450	205	480	219	880	400	750	341	1100	497
			250	17.2	150	67.4	220	98.2	320	145	450	205	510	230	960	434	830	376	1200	567
			300	20.7	180	83.5	260	119	340	156	470	215	610	277	1100	480	980	445	1500	695

1. Capacities are based in lbs/h / kg/h of saturated steam.
2. To obtain capacities for regulators with reduce flow orifices, multiply the table values by 0.7.

Table 18. *Steam Capacities[1][2] for 1-1/2 through 2 in. / DN 40 through 50 Types MR95H, MR95HD and MR95HDP Regulators with Metal Diaphragm*

RECOMMENDED OUTLET/ DIFFERENTIAL PRESSURE RANGE, psig/psi / bar	PRESSURE				REGULATOR BODY SIZE, IN. / DN											
	Outlet/ Differential Setting		Inlet		1-1/2 / 40						2 / 50					
					Droop						Droop					
					10%		20%		40%		10%		20%		40%	
	psig	bar	psig	bar	lb/h	kg/h	lb/h	kg/h	lb/h	kg/h	lb/h	kg/h	lb/h	kg/h	lb/h	kg/h
5 to 80 / 0.34 to 5.5	5	0.34	10	0.69	45	20.4	67	30.6	110	50.9	45	20.4	63	28.6	120	52.9
			20	1.4	71	32.2	97	44.3	160	74.3	71	32.2	100	46.3	180	80.3
			30	2.1	92	41.9	120	55.8	210	97.6	97	43.9	140	63.8	240	108
			50	3.4	140	63.2	180	82.9	320	144	140	65.2	210	96.7	350	160
			75	5.2	180	80.4	250	112	420	192	220	98	310	141	650	294
			100	6.9	210	97.6	310	140	510	234	280	129	410	185	900	410
			150	10.3	240	107	340	154	560	253	430	194	1100	505	1500	700
			200	13.8	250	115	370	167	560	252	600	272	1800	816	2100	971
			250	17.2	320	146	430	194	640	291	900	408	2000	912	2200	990
			300	20.7	380	175	510	233	770	349	1200	563	2200	990	2200	990
	30	2.1	40	2.8	350	161	580	265	930	424	450	204	810	366	1300	606
			50	3.4	360	164	620	283	1000	462	580	264	980	445	1700	763
			75	5.2	620	280	970	440	1600	735	840	381	1900	859	2500	1150
			100	6.9	870	397	1300	595	2200	987	1100	517	2800	1270	3400	1550
			150	10.3	910	413	1400	648	2200	1020	2500	1120	3700	1690	4000	1820
			200	13.8	990	450	1500	684	2300	1030	3800	1740	4700	2150	4700	2150
			250	17.2	1200	566	1800	799	2400	1110	4300	1950	4700	2140	4700	2140
			300	20.7	1500	682	2000	915	2600	1190	4700	2140	4700	2140	4700	2140
	50	3.4	60	4.1	590	266	1200	551	2000	887	630	287	1400	653	2000	887
			75	5.2	850	386	1500	668	2300	1040	940	427	1900	850	2400	1100
			100	6.9	1200	523	1800	822	2800	1290	1500	684	3000	1340	3300	1510
			150	10.3	1300	576	2000	932	3100	1420	3400	1530	4800	2180	4800	2170
			200	13.8	1400	631	2300	1040	3400	1530	5200	2370	6100	2760	6400	2930
			250	17.2	1800	825	2600	1180	3700	1700	6000	2750	6500	2940	6400	2930
			300	20.7	2200	998	2900	1330	4100	1870	6900	3130	6900	3130	6900	3120
	75	5.2	100	6.9	1300	571	2100	974	3000	1370	1500	672	2800	1260	3100	1430
			125	8.6	1600	707	2600	1190	3600	1640	2400	1110	3600	1650	4000	1800
			150	10.3	1900	844	3100	1420	4200	1890	3400	1570	4400	2000	4800	2190
			200	13.8	2500	1110	4100	1870	5200	2370	5300	2390	6100	2780	6400	2910
			250	17.2	2700	1230	4200	1910	5600	2550	7400	3360	7800	3550	7800	3530
			300	20.7	2900	1340	4300	1970	6000	2740	9100	4140	9100	4130	9000	4110
60 to 120 / 4.1 to 8.3	100	6.9	125	8.6	1500	674	2700	1220	3600	1630	1700	776	3100	1420	3800	1730
			150	10.3	1700	750	2900	1310	4100	1880	2700	1220	4000	1820	4700	2130
			175	12.1	1800	827	3100	1410	4800	2190	3700	1670	4900	2210	5300	2390
			225	15.5	2200	980	3600	1610	5700	2570	5700	2600	6600	2990	7000	3170
			250	17.2	2100	957	3700	1670	6100	2760	6600	2990	7400	3380	7800	3550
			300	20.7	2100	932	4000	1800	6500	2950	7900	3570	9100	4150	9100	4130
100 to 140 / 6.9 to 9.7	125	8.6	150	10.3	1800	818	3100	1400	4200	1890	1700	777	3400	1550	4400	2020
			175	12.1	2100	935	3700	1680	4900	2210	2000	894	4500	2020	5300	2410
			200	13.8	2400	1070	4300	1950	5700	2600	2200	1010	5300	2420	6100	2800
			225	15.5	2800	1270	4900	2210	6600	2980	3600	1630	6200	2810	7000	3180
			250	17.2	3300	1480	5300	2400	7000	3170	4900	2210	7000	3200	7800	3550
			300	20.7	4200	1910	6600	2980	8300	3750	7500	3390	9200	4180	9400	4260
120 to 150 / 8.3 to 10.3	150	10.3	175	12.1	1700	778	3100	1430	4900	2220	1700	778	3400	1550	4900	2220
			200	13.8	2100	936	3600	1620	5700	2610	2100	957	4100	1880	6000	2740
			225	15.5	2300	1030	3900	1760	6200	2800	2400	1090	5300	2420	6900	3120
			250	17.2	2400	1110	4200	1890	6600	2990	2700	1230	6200	2810	7700	3500
			300	20.7	2800	1280	4800	2200	7900	3570	3300	1480	8400	3800	9300	4230

1. Capacities are based in lbs/h / kg/h of saturated steam.
2. To obtain capacities for regulators with reduce flow orifices, multiply the table values by 0.7.

Table 19. *Steam Capacities[1][2] for 1/4 NPT and 1/2 through 1 in. / DN 15 through 25 Type MR95HT Regulators with Metal Diaphragm*

RECOMMENDED OUTLET/ DIFFERENTIAL PRESSURE RANGE, psig/psi / bar	PRESSURE				REGULATOR BODY SIZE, IN. / DN															
	Outlet/ Differential Setting		Inlet		1/4 NPT				1/2 / 15				3/4 / 20				1 / 25			
					Droop				Droop				Droop				Droop			
					10%		20%		10%		20%		10%		20%		10%		20%	
	psig	bar	psig	bar	lb/h	kg/h	lb/h	kg/h	lb/h	kg/h	lb/h	kg/h	lb/h	kg/h	lb/h	kg/h	lb/h	kg/h	lb/h	kg/h
15 to 100 / 1.0 to 6.9	15	1.0	30	2.1	4.8	2.19	7.2	3.28	8.5	3.85	9.9	4.49	27	12.1	60	27.5	48	22	87	39.5
			40	2.8	5	2.28	7.8	3.57	15	6.64	19	8.58	36	16.4	70	31.6	53	24	94	42.5
			50	3.4	5.2	2.37	8.3	3.75	19	8.76	26	11.9	41	18.5	76	34.7	57	26.1	98	44.4
			75	5.2	5.4	2.44	9.3	4.25	28	12.8	38	17.1	54	24.7	90	40.8	69	31.2	110	51.5
			100	6.9	5.8	2.65	11	4.78	28	12.8	44	20.2	66	29.9	100	45.9	78	35.2	130	58.7
			150	10.3	8.6	3.93	14	6.48	42	19.1	61	27.6	70	31.9	110	50	98	44.7	160	73.3
			200	13.8	12	5.31	18	8.18	56	25.5	77	35.1	77	35.1	120	53.1	120	55.2	190	87.1
			250	17.2	12	5.42	19	8.82	56	25.5	77	35.1	86	39.3	130	57.4	130	58.4	210	96.7
			300	20.7	12	5.52	21	9.56	56	25.5	77	35.1	98	44.6	140	61.6	140	62.7	230	106
			400	27.6	15	6.8	22	10.1	63	28.7	84	38.2	100	46.8	140	64.8	160	71.2	260	117
			500	34.5	18	8.29	23	10.6	65	29.7	96	43.6	110	48.9	150	68	170	76.5	280	128
			600	41.4	21	9.67	26	11.7	68	30.8	110	48.9	110	52.1	160	71.2	180	81.8	300	138
	50	3.4	60	4.1	21	9.77	36	16.6	73	33.3	120	56.4	160	72.3	240	111	150	66.7	270	122
			75	5.2	22	10.1	38	17.5	78	35.3	130	58.2	170	75.1	240	110	160	74	290	132
			100	6.9	24	10.8	38	17.3	84	38.2	140	61.9	180	79.8	260	120	190	86.4	310	142
			150	10.3	26	11.7	42	19.2	100	46.2	160	70.7	190	88.5	280	129	240	108	400	183
			200	13.8	30	13.8	49	22.3	120	54.4	180	79.8	220	98.6	330	150	310	139	470	214
			250	17.2	33	14.9	51	23.4	130	60.6	190	87.2	230	107	350	160	350	160	540	245
			300	20.7	37	17	54	24.4	140	65.9	210	95.6	260	117	370	170	400	181	580	266
			400	27.6	40	18.1	56	25.5	160	74.4	220	98.8	220	98.8	330	149	440	202	680	308
			500	34.5	40	18.1	58	26.6	170	76.5	220	101	230	106	350	159	490	223	720	329
			600	41.4	42	19.1	58	26.6	170	78.6	220	102	260	117	370	170	540	244	770	351
	100	6.9	125	8.6	49	22.1	75	34.1	160	73.1	240	110	290	133	460	210	320	144	530	243
			150	10.3	51	23	79	36	170	79.2	260	120	320	143	510	230	390	176	630	285
			175	12.1	53	23.9	83	37.9	190	85.3	290	131	360	164	550	251	460	208	740	338
			200	13.8	57	26	88	39.8	200	91.3	310	141	380	175	600	272	500	229	860	391
			250	17.2	61	27.8	92	41.6	230	106	350	161	450	206	640	291	600	271	950	432
			300	20.7	66	29.8	96	43.6	260	118	380	171	500	226	690	311	690	312	1100	483
			400	27.6	72	32.9	100	45.7	280	128	420	191	380	171	590	267	780	353	1200	534
			500	34.5	72	32.9	100	46.7	280	127	400	181	420	192	630	287	840	383	1300	575
			600	41.4	75	34	110	47.8	280	127	400	181	440	202	650	298	910	415	1300	606
80 to 300 / 5.5 to 20.7	125	8.6	150	10.3	34	15.5	56	25.3	110	49.9	180	83.9	230	107	390	177	240	108	410	188
			175	12.1	36	16.5	58	26.2	120	56.2	200	92.2	270	121	410	187	270	121	460	209
			200	13.8	38	17.5	62	28.3	140	62.5	220	100	290	132	460	208	310	143	510	230
			225	15.5	41	18.5	64	29.2	140	65.5	230	106	310	142	480	218	340	153	550	251
			250	17.2	43	19.5	69	31.2	150	69.6	240	108	340	153	530	239	360	164	600	272
			300	20.7	47	21.4	75	34.2	170	76.6	280	129	360	163	590	270	430	195	690	313
			400	27.6	51	23.4	82	37.2	210	95.2	330	149	400	183	640	289	520	236	850	386
			500	34.5	58	26.6	91	41.4	230	106	370	170	450	203	680	309	610	278	960	437
			600	41.4	63	28.7	100	45.7	260	117	400	181	470	213	700	319	700	320	1100	489
	200	13.8	225	15.5	56	25.6	97	44.2	200	89	340	155	390	178	660	299	440	200	760	344
			250	17.2	63	28.7	100	46.1	220	99.7	360	165	440	200	730	331	490	222	830	375
			300	20.7	72	32.9	110	51.2	270	121	410	186	510	231	870	395	560	253	960	438
			350	24.1	77	34.8	120	55.1	290	131	480	217	580	263	1000	458	650	296	1100	512
			400	27.6	78	35.6	130	58	330	152	520	238	650	294	1100	521	740	338	1300	575
			450	31.0	83	37.6	130	59.9	360	162	540	248	640	293	1100	508	810	369	1400	616
			500	34.5	87	39.6	140	61.8	360	162	570	257	670	303	1100	496	880	400	1400	657
			600	41.4	94	42.5	140	65.9	400	182	630	288	690	312	1100	483	1000	473	1600	740
	300	20.7	350	24.1	98	44.4	160	74.9	340	155	580	265	610	278	970	443	780	356	1400	620
			400	27.6	110	48.5	170	78.8	410	188	680	308	630	287	990	451	900	409	1600	715
			450	31.0	110	51.4	180	82.7	430	198	720	328	750	341	1200	526	1000	462	1800	800
			500	34.5	120	54.4	190	86.6	480	219	770	348	840	384	1300	600	1100	515	1900	884
			550	37.9	130	57.4	200	90.5	500	229	810	369	960	437	1500	674	1300	579	2100	968
			600	41.4	130	60.4	210	94.5	550	250	860	389	1100	479	1700	759	1400	632	2300	1040

1. Capacities are based in lbs/h / kg/h of saturated steam.
2. To obtain capacities for regulators with reduce flow orifices, multiply the table values by 0.7.

Table 20. *Steam Capacities[1][2] for 1-1/2 through 2 in. / DN 40 through 50 Type MR95HT Regulators with Metal Diaphragm*

RECOMMENDED OUTLET/ DIFFERENTIAL PRESSURE RANGE, psig/psi / bar	PRESSURE				REGULATOR BODY SIZE, IN. / DN											
	Outlet/ Differential Setting		Inlet		1-1/2 / 40						2 / 50					
					Droop						Droop					
					10%		20%		40%		10%		20%		40%	
	psig	bar	psig	bar	lb/h	kg/h	lb/h	kg/h	lb/h	kg/h	lb/h	kg/h	lb/h	kg/h	lb/h	kg/h
15 to 100 / 1.0 to 6.9	15	1.0	30	2.1	160	73.4	240	110	440	200	160	73.4	270	123	520	237
			40	2.8	200	91	300	138	520	235	230	104	370	169	720	326
			50	3.4	240	109	370	168	590	270	290	134	480	217	910	414
			75	5.2	330	150	510	233	820	375	430	197	1000	465	1500	678
			100	6.9	430	196	630	285	1100	479	590	267	1600	729	2100	940
			150	10.3	470	212	780	353	1200	547	1700	760	2300	1060	2600	1160
			200	13.8	500	229	890	405	1300	598	2800	1250	3100	1410	3100	1410
			250	17.2	540	246	850	387	1300	598	1700	792	3100	1430	3100	1420
			300	20.7	580	264	850	387	1400	615	1400	615	3200	1440	3200	1440
			400	27.6	430	193	660	299	1400	615	1400	615	3200	1440	3200	1440
			500	34.5	300	135	460	211	1400	615	1400	615	3200	1440	3200	1440
			600	41.4	430	193	540	246	1400	615	1400	615	3200	1440	3200	1440
	50	3.4	60	4.1	450	204	850	388	1500	696	530	241	970	443	1800	803
			75	5.2	570	257	1100	495	1900	873	770	349	1600	715	2300	1030
			100	6.9	760	346	1400	654	2500	1140	1100	492	2600	1160	3000	1370
			150	10.3	1100	486	2000	915	3100	1430	3100	1400	3900	1790	4300	1960
			200	13.8	1300	607	2600	1180	3800	1720	5100	2320	5500	2500	5800	2650
			250	17.2	1600	747	2700	1240	3800	1720	3600	1640	6200	2840	6200	2830
			300	20.7	1900	886	2900	1330	3800	1710	3600	1630	7000	3180	7000	3180
			400	27.6	1800	812	2700	1230	3800	1710	3600	1620	7000	3170	7000	3170
			500	34.5	1600	740	2600	1160	3800	1710	3600	1620	7000	3170	7000	3170
			600	41.4	1000	475	2100	950	3800	1720	3600	1620	7000	3170	7000	3160
	100	6.9	125	8.6	1200	536	2300	1030	3400	1570	1600	739	3000	1380	3500	1570
			150	10.3	1500	698	3000	1370	4000	1810	2900	1320	3900	1790	4200	1930
			200	13.8	2200	981	4400	1990	5500	2520	5400	2480	5600	2530	5700	2600
			250	17.2	2300	1060	4400	1980	5900	2680	7000	3170	7000	3200	7100	3250
			300	20.7	2600	1170	4300	1970	6700	3030	8400	3830	8500	3850	8500	3880
			400	27.6	2700	1210	4700	2130	6600	3010	9000	4100	9000	4090	9300	4250
			500	34.5	2800	1260	4700	2130	7000	3180	9000	4080	9000	4070	9300	4240
			600	41.4	3200	1430	5100	2300	7000	3170	8900	4070	8900	4060	9300	4230
60 to 260 / 4.1 to 17.9	125	8.6	150	10.3	940	426	1500	682	2900	1300	1100	481	1900	848	3700	1660
			175	12.1	1100	497	1800	806	3300	1510	1200	552	2300	1040	4400	2000
			200	13.8	1200	568	2000	930	3800	1720	1400	641	2700	1220	5200	2350
			225	15.5	1400	620	2200	1020	4000	1800	1600	747	3500	1580	5900	2700
			250	17.2	1500	690	2400	1090	4300	1980	1900	872	4400	1990	6700	3050
			300	20.7	1700	795	2700	1220	5100	2320	2400	1100	5900	2700	8300	3750
			400	27.6	2100	967	3500	1590	5500	2490	2900	1310	7100	3220	9000	4090
			500	34.5	2500	1120	4300	1960	6200	2830	3300	1500	8200	3730	10,000	4600
			600	41.4	2900	1330	4700	2130	7000	3180	3600	1650	9400	4250	11,000	4940
	200	13.8	225	15.5	1600	724	2800	1260	5200	2380	1800	798	3500	1570	5800	2650
			250	17.2	1800	831	3100	1400	5600	2550	2000	905	4000	1840	6600	3020
			300	20.7	2300	1050	3800	1720	6800	3080	2500	1140	6000	2740	8200	3720
			350	24.1	2600	1170	4400	2000	7500	3420	2900	1310	7200	3270	9700	4400
			400	27.6	2800	1290	4800	2170	8300	3770	3200	1450	8400	3800	11,000	4840
			450	31.0	3100	1430	5200	2340	9100	4110	3500	1590	9100	4140	12,000	5370
			500	34.5	3400	1550	5500	2520	9800	4460	3800	1710	9900	4490	13,000	5710
			600	41.4	3900	1790	6700	3040	11,000	4980	4300	1970	11,000	5180	14,000	6400
	250	17.2	275	19.0	2200	984	3800	1740	6400	2920	2100	947	4500	2030	7000	3190
			300	20.7	2600	1170	4500	2030	7600	3460	2600	1170	5300	2390	7800	3570
			350	24.1	3000	1340	4800	2200	8400	3810	3300	1490	7200	3290	9200	4170
			400	27.6	3400	1540	5600	2550	9500	4330	3700	1680	8400	3830	10,000	4690
			450	31.0	3800	1730	6400	2900	10,000	4680	4000	1820	9200	4170	11,000	5220
			500	34.5	4400	2000	6800	3070	11,000	5200	4800	2180	10,000	4700	12,000	5560
			550	37.9	4400	1990	7100	3240	12,000	5550	4800	2170	11,000	4870	13,000	6080
			600	41.4	4400	1980	7500	3420	13,000	5890	5200	2350	11,000	5210	14,000	6430

▭ - Denotes capacities limited by boost.

1. Capacities are based in lbs/h / kg/h of saturated steam.
2. To obtain capacities for regulators with reduce flow orifices, multiply the table values by 0.7.

Table 21. *Water Capacities[1][2] in GPM / L/min for 1/4 NPT and 1/2 through 1 in. / DN 15 through 25 Types MR95L and MR95LD Regulators with Elastomer Diaphragm*

RECOMMENDED OUTLET/ DIFFERENTIAL PRESSURE RANGE, psig/psi / bar	PRESSURE				REGULATOR BODY SIZE, IN. / DN															
	Outlet/ Differential Setting		Inlet		1/4 NPT				1/2 / 15				3/4 / 20				1 / 25			
					Droop				Droop				Droop				Droop			
					10%		20%		10%		20%		10%		20%		10%		20%	
	psig	bar	psig	bar	GPM	l/min	GPM	l/min	GPM	l/min	GPM	l/min	GPM	l/min	GPM	l/min	GPM	l/min	GPM	l/min
2 to 6 / 0.14 to 0.41	5	0.34	10	0.69	3.8	14.4	4.0	15.1	3.0	11.3	6.0	22.7	4.5	17.0	10.0	37.8	6.0	22.7	11.0	41.6
			20	1.4	5.0	18.9	5.0	18.9	4.0	15.1	7.0	26.5	8.0	30.3	14.0	53.0	10.0	37.8	15.2	57.5
			30	2.1	6.0	22.7	6.7	25.2	4.7	17.7	7.3	27.7	9.7	36.6	15.3	58.0	10.9	41.2	17.2	64.9
			50	3.4	8.0	30.3	10.0	37.8	6.0	22.7	8.0	30.3	13.0	49.2	18.0	68.1	12.7	48.0	21.1	79.8
			75	5.2	8.0	30.3	10.0	37.8	6.0	22.7	8.5	32.2	15.2	57.4	20.7	78.5	16.9	63.7	23.1	87.2
			100	6.9	4.0	15.1	5.0	18.9	6.0	22.7	9.0	34.0	18.9	71.5	22.5	85.1	21.0	79.4	25.0	94.6
			150	10.3									19.8	74.9	23.9	90.2	22.0	83.2	26.5	100
			200	13.8									20.7	78.3	25.2	95.3	23.0	87.0	28.0	106
			250	17.2									22.5	85.1	25.2	95.3	25.0	94.6	28.0	106
5 to 15 / 0.34 to 1.0	10	0.69	20	1.4	2.0	7.6	4.0	15.1	5.0	18.9	8.0	30.3	10.0	37.8	16.0	60.5	10.0	37.8	16.0	60.5
			30	2.1	3.3	12.6	5.7	21.4	5.7	21.4	9.0	34.0	11.7	44.1	18.0	68.1	12.3	46.7	19.3	73.1
			50	3.4	6.0	22.7	9.0	34.0	7.0	26.5	11.0	41.6	15.0	56.7	22.0	83.2	17.0	64.3	26.0	98.4
			75	5.2	6.0	22.7	9.0	34.0	7.5	28.4	11.5	43.5	18.5	69.8	26.1	98.7	20.5	77.6	29.0	110
			100	6.9	6.0	22.7	9.0	34.0	8.0	30.3	12.0	45.4	21.6	81.7	28.8	109	24.0	90.8	32.0	121
			150	10.3					8.5	32.2	12.0	45.4	23.4	88.5	30.2	114	26.0	98.4	33.5	127
			200	13.8									25.2	95.3	31.5	119	28.0	106	35.0	132
			250	17.2									28.8	109	34.2	129	32.0	121	38.0	144
	15	1.0	20	1.4	2.0	7.6	4.0	15.1	5.0	18.9	8.0	30.3	10.0	37.8	15.0	56.7	10.0	37.8	15.0	56.7
			30	2.1	3.7	13.9	6.0	22.7	6.0	22.7	9.7	36.6	12.7	47.9	19.0	71.9	13.3	50.4	20.0	75.7
			50	3.4	7.0	26.5	10.0	37.8	8.0	30.3	13.0	49.2	18.0	68.1	27.0	102	20.0	75.7	30.0	113
			75	5.2	10.5	39.7	12.5	47.3	8.5	32.2	14.0	53.0	20.7	78.3	30.6	116	23.0	87.0	34.0	129
			100	6.9	14.0	53.0	15.0	56.7	9.0	34.0	15.0	56.7	23.4	88.5	34.2	129	26.0	98.4	38.0	144
			150	10.3	14.0	53.0	15.0	56.7	10.0	37.8	15.0	56.7	25.2	95.3	36.9	140	28.0	106	41.0	155
			200	13.8					11.0	41.6	15.0	56.7	27.0	102	39.6	150	30.0	113	44.0	166
			250	17.2									30.6	116	40.5	153	34.0	129	45.0	170
13 to 30 / 0.90 to 2.1	20	1.4	30	2.1	2.9	10.8	4.8	18.0	6.0	22.7	10.0	37.8	12.0	45.4	19.0	71.9	12.0	45.4	19.0	71.9
			40	2.8	4.3	16.2	6.7	25.2	7.0	26.5	11.5	43.5	13.5	51.1	21.2	80.0	15.0	56.7	23.5	88.9
			50	3.4	5.7	21.6	8.6	32.3	8.0	30.3	13.0	49.2	17.0	64.3	26.0	98.4	18.0	68.1	28.0	106
			75	5.2	8.6	32.3	11.4	43.1	9.5	35.9	14.5	54.9	18.5	69.8	29.3	111	20.5	77.6	32.5	123
			100	6.9	11.4	43.1	14.3	53.9	11.0	41.6	16.0	60.5	21.0	79.4	32.0	121	23.0	87.0	37.0	140
			150	10.3	11.4	43.1	14.3	53.9	11.5	43.5	16.5	62.4	25.2	95.3	37.8	143	28.0	106	42.0	159
			200	13.8	11.4	43.1	14.3	53.9	12.0	45.4	17.0	64.3	29.7	112	42.3	160	33.0	125	47.0	178
			250	17.2					12.0	45.4	18.0	68.1	30.6	116	45.0	170	34.0	129	50.0	189
	30	2.1	40	2.8	4.4	16.5	6.6	25.1	7.5	28.4	12.0	45.4	16.0	60.5	26.0	98.4	17.0	64.3	27.0	102
			50	3.4	5.7	21.6	7.6	28.8	9.0	34.0	14.0	53.0	18.0	68.1	29.0	110	19.0	71.9	29.0	110
			75	5.2	8.6	32.3	10.5	39.5	10.5	39.7	16.0	60.5	22.0	83.2	34.0	129	23.5	88.9	36.5	138
			100	6.9	11.4	43.1	13.3	50.3	12.0	45.4	18.0	68.1	26.0	98.4	39.0	148	28.0	106	44.0	166
			150	10.3	13.3	50.3	14.7	55.7	13.0	49.2	19.5	73.8	31.5	119	44.6	169	35.0	132	49.5	187
			200	13.8	15.2	57.5	16.2	61.1	14.0	53.0	21.0	79.4	37.8	143	49.5	187	42.0	159	55.0	208
			250	17.2	17.1	64.7	18.1	68.3	14.0	53.0	22.0	83.2	37.8	143	52.2	197	42.0	159	58.0	219

▭ - Capacities not tested due to cavitation regime.
1. To obtain capacities for regulators with metal diaphragms, multiply the table values by 0.8.
2. To obtain capacities for regulators with reduced flow orifices, multiply the table values by 0.7.

Table 22. *Water Capacities[1][2] in GPM / L/min for 1/4 NPT and 1/2 through 1 in. / DN 15 through 25 Types MR95H, MR95HD and MR95HDP Regulators with Elastomer Diaphragm*

RECOMMENDED OUTLET/ DIFFERENTIAL PRESSURE RANGE, psig/psi / bar	PRESSURE				REGULATOR BODY SIZE, IN. / DN															
	Outlet/ Differential Setting		Inlet		1/4 NPT				1/2 / 15				3/4 / 20				1 / 25			
					Droop				Droop				Droop				Droop			
					10%		20%		10%		20%		10%		20%		10%		20%	
	psig	bar	psig	bar	GPM	l/min	GPM	l/min	GPM	l/min	GPM	l/min	GPM	l/min	GPM	l/min	GPM	l/min	GPM	l/min
15 to 30 / 1.0 to 2.1	15	1.0	30	2.1	1.0	3.8	3.0	11.3	4.0	15.1	7.0	26.5	7.0	26.5	12.0	45.4	8.0	30.3	15.0	56.7
			40	2.8	1.5	5.7	3.5	13.2	4.5	17.0	8.0	30.3	8.5	32.2	13.5	51.1	10.0	37.8	19.0	71.9
			50	3.4	2.0	7.6	4.0	15.1	5.0	18.9	9.0	34.0	10.0	37.8	15.0	56.7	12.0	45.4	23.0	87.0
			75	5.2	3.0	11.3	6.0	22.7	6.0	22.7	10.0	37.8	11.5	43.5	17.0	64.3	12.0	45.4	24.0	90.8
			100	6.9	4.0	15.1	8.0	30.3	7.0	26.5	11.0	41.6	13.0	49.2	19.0	71.9	12.0	45.4	25.0	94.6
			150	10.3	4.0	15.1	8.0	30.3	9.0	34.0	13.0	49.2	14.5	54.9	20.0	75.7	17.0	64.3	30.5	115
			200	13.8					11.0	41.6	15.0	56.7	16.0	60.5	21.0	79.4	22.0	83.2	36.0	136
			250	17.2					12.0	45.4	16.0	60.5	17.0	64.3	22.0	83.2	23.0	87.0	37.0	140
			300	20.7					13.0	49.2	17.0	64.3								
	30	2.1	40	2.8	2.0	7.5	4.3	16.2	6.0	22.7	10.0	37.8	10.0	37.8	18.0	68.1	12.0	45.4	23.0	87.0
			50	3.4	3.0	11.3	6.0	22.7	7.0	26.5	12.0	45.4	12.0	45.4	20.0	75.7	15.0	56.7	26.0	98.4
			75	5.2	4.5	17.0	8.5	32.2	8.5	32.2	14.5	54.9	14.5	54.9	23.5	88.9	21.0	79.4	36.0	136
			100	6.9	6.0	22.7	11.0	41.6	10.0	37.8	17.0	64.3	17.0	64.3	27.0	102	27.0	102	46.0	174
			150	10.3	7.6	28.9	13.7	51.9	11.0	41.6	18.0	68.1	18.5	70.0	29.0	110	29.0	110	48.0	182
			200	13.8	8.9	33.6	15.8	59.7	12.0	45.4	19.0	71.9	20.0	75.7	31.0	117	31.0	117	50.0	189
			250	17.2	9.8	37.2	17.4	65.8	13.5	51.1	19.5	73.8	20.5	77.6	32.0	121	38.0	144	57.5	218
			300	20.7	10.6	40.1	18.7	70.7	15.0	56.7	20.0	75.7	21.0	79.4	33.0	125	45.0	170	65.0	246
25 to 75 / 1.7 to 5.2	50	3.4	60	4.1	3.0	11.4	4.5	17.1	6.8	25.7	13.1	49.5	13.3	50.3	22.8	86.4	17.0	64.3	30.0	113
			75	5.2	4.0	15.1	6.0	22.7	8.0	30.3	14.0	53.0	14.0	53.0	24.0	90.8	18.0	68.1	31.0	117
			100	6.9	5.0	18.9	9.0	34.0	9.0	34.0	17.0	64.3	18.0	68.1	29.0	110	25.0	94.6	41.0	155
			150	10.3	6.5	24.6	11.5	43.5	10.0	37.8	18.0	68.1	21.0	79.4	34.0	129	27.0	102	48.0	182
			200	13.8	8.0	30.3	14.0	53.0	11.0	41.6	19.0	71.9	24.0	90.8	39.0	148	29.0	110	55.0	208
			250	17.2	8.8	33.1	15.7	59.5	12.5	47.3	21.0	79.4	24.5	92.7	39.0	148	36.0	136	61.0	231
			300	20.7	9.5	35.9	17.2	65.0	14.0	53.0	23.0	87.0	25.0	94.6	39.0	148	43.0	163	67.0	253
	75	5.2	100	6.9	5.0	18.9	8.0	30.3	10.0	37.8	18.0	68.1	18.0	68.1	30.0	113	22.0	83.2	38.0	144
			125	8.6	6.0	22.7	9.5	35.9	11.3	42.6	19.5	73.8	20.5	77.6	33.3	126	27.5	104	46.3	175
			150	10.3	7.0	26.5	11.0	41.6	12.5	47.3	21.0	79.4	23.0	87.0	36.5	138	33.0	125	54.5	206
			200	13.8	9.0	34.0	14.0	53.0	15.0	56.7	24.0	90.8	28.0	106	43.0	163	44.0	166	71.0	269
			250	17.2	10.1	38.4	15.7	59.4	15.5	58.6	25.0	94.6	30.0	113	46.5	176	46.5	176	74.0	280
			300	20.7	11.2	42.4	17.3	65.4	16.0	60.5	26.0	98.4	32.0	121	50.0	189	49.0	185	77.0	291
70 to 150 / 4.8 to 10.3	100	6.9	125	8.6	4.0	15.1	7.0	26.5	8.3	31.2	14.3	53.9	19.0	71.9	31.0	117	22.0	83.2	37.0	140
			150	10.3	5.0	18.9	9.0	34.0	10.5	39.7	18.0	68.1	23.0	87.0	37.0	140	28.0	106	46.0	174
			175	12.1	6.0	22.7	11.0	41.6	11.6	44.0	20.3	76.6	26.0	98.4	40.5	153	33.0	125	54.0	204
			200	13.8	7.0	26.5	13.0	49.2	12.8	48.2	22.5	85.1	29.0	110	44.0	166	38.0	144	62.0	235
			250	17.2	8.3	31.5	15.7	59.3	13.5	51.1	22.5	85.1	31.0	117	47.5	180	43.0	163	73.0	276
			300	20.7	9.5	35.9	18.0	68.1	14.3	53.9	22.5	85.1	33.0	125	51.0	193	48.0	182	84.0	318
	150	10.3	175	12.1	5.0	18.9	9.0	34.0	9.0	34.0	16.5	62.4	23.0	87.0	39.0	148	30.0	113	44.0	166
			200	13.8	7.0	26.5	12.0	45.4	12.8	48.2	20.3	76.6	28.0	106	45.0	170	36.0	136	52.0	197
			225	15.5	8.0	30.3	13.5	51.1	13.9	52.5	22.1	83.7	30.5	115	48.3	183	41.3	156	59.5	225
			250	17.2	9.0	34.0	15.0	56.7	15.0	56.7	24.0	90.8	33.0	125	51.5	195	46.5	176	67.0	253
			300	20.7	11.0	41.6	18.0	68.1	17.3	65.3	27.8	105	38.0	144	58.0	219	57.0	216	82.0	310

▭ - Capacities not tested due to cavitation regime.

1. To obtain capacities for regulators with metal diaphragms, multiply the table values by 0.6.
2. To obtain capacities for regulators with reduced flow orifices, multiply the table values by 0.7.

Table 23. *Water Capacities[1] in GPM / L/min for 1-1/2 through 2 in. / DN 40 through 50 Types MR95H, MR95HD and MR95HDP Regulators with Elastomer Diaphragm*

RECOMMENDED OUTLET/ DIFFERENTIAL PRESSURE RANGE, psig/psi / bar	PRESSURE				REGULATOR BODY SIZE, IN. / DN											
	Outlet/ Differential Setting		Inlet		1-1/2 / 40						2 / 50					
					Droop						Droop					
					10%		20%		40%		10%		20%		40%	
	psig	bar	psig	bar	GPM	l/min	GPM	l/min	GPM	l/min	GPM	l/min	GPM	l/min	GPM	l/min
5 to 80 / 0.34 to 5.5	5	0.34	10	0.69	6.0	22.7	8.0	30.3	14.0	53.0	6.0	22.7	8.0	30.3	14.0	53.0
			20	1.4	8.5	32.2	11.3	42.6	19.8	74.7	8.3	31.2	10.5	39.7	17.5	66.2
			30	2.1	11.0	41.6	14.5	54.9	25.5	96.5	10.5	39.7	13.0	49.2	21.0	79.4
			50	3.4	16.0	60.5	21.0	79.4	37.0	140	15.0	56.7	18.0	68.1	28.0	106
			75	5.2	27.5	104	38.0	144	52.5	199	19.0	71.9	25.0	94.6	37.0	140
			100	6.9	39.0	148	55.0	208	68.0	257	23.0	87.0	92.0	348	114	431
			150	10.3	47.0	178	98.5	373	119	448	40.5	153	79.0	299	99.5	376
			200	13.8	55.0	208	142	537	169	639	58.0	219	66.0	250	85.0	322
			250	17.2	72.5	274	159	600	174	658	52.5	199	59.5	225	75.0	284
			300	20.7	90.0	340	175	662	179	677	47.0	178	53.0	200	65.0	246
	15	1.0	30	2.1	14.0	53.0	27.0	102	47.0	178	14.0	53.0	22.0	83.2	42.0	159
			40	2.8	19.5	73.8	33.0	125	53.5	202	18.0	68.1	28.5	108	52.0	197
			50	3.4	25.0	94.6	39.0	148	60.0	227	22.0	83.2	35.0	132	62.0	235
			75	5.2	31.5	119	49.5	187	74.0	280	25.0	94.6	40.0	151	118	445
			100	6.9	38.0	144	60.0	227	88.0	333	75.0	284	132	499	173	654
			150	10.3	67.5	255	84.5	320	148	560	77.0	291	124	469	153	579
			200	13.8	97.0	367	109	412	208	787	91.0	344	116	439	133	503
			250	17.2	115	433	184	694	235	889	82.0	310	107	403	132	497
			300	20.7	132	499	258	976	262	991	73.0	276	97.0	367	130	492
	50	3.4	60	4.1	27.9	106	63.7	241	95.0	359	25.5	96.7	50.7	192	100	378
			75	5.2	34.0	129	66.0	250	111	420	37.0	140	68.0	257	127	480
			100	6.9	51.0	193	95.0	359	138	522	47.0	178	82.0	310	157	594
			150	10.3	62.0	235	103	390	169	639	64.0	242	108	407	198	747
			200	13.8	73.0	276	111	420	200	757	81.0	306	133	503	238	900
			250	17.2	99.5	376	179	677	236	891	85.0	322	140	530	267	1010
			300	20.7	126	477	247	934	271	1030	154	583	178	673	295	1120
	75	5.2	100	6.9	47.0	178	84.0	318	129	488	45.0	170	82.0	310	138	522
			125	8.6	55.3	209	94.8	358	150	567	54.3	205	97.8	370	161	608
			150	10.3	63.5	240	106	399	171	647	63.5	240	114	429	184	694
			200	13.8	80.0	303	127	480	213	806	82.0	310	145	549	229	866
			250	17.2	87.0	329	189	713	241	912	85.0	322	150	567	260	982
			300	20.7	94.0	356	250	946	269	1020	191	723	276	1040	290	1100
60 to 120 / 4.1 to 8.3	100	6.9	125	8.6	47.0	178	92.0	348	135	511	46.0	174	90.0	340	147	556
			150	10.3	55.8	211	107	404	155	587	54.8	207	106	401	170	643
			175	12.1	64.5	244	122	460	176	664	63.5	240	122	462	193	730
			225	15.5	82.0	310	151	571	216	817	81.0	306	154	583	239	904
			250	17.2	88.3	334	154	581	229	868	85.3	323	163	617	255	965
			300	20.7	101	382	159	601	256	968	94.0	356	181	685	287	1090
100 to 140 / 6.9 to 9.7	125	8.6	150	10.3	43.7	165	86.4	327	148	560	47.0	178	91.0	344	158	598
			175	12.1	55.4	209	105	398	168	636	58.5	221	110	414	183	690
			200	13.8	67.0	253	124	469	188	711	70.0	265	128	484	207	783
			225	15.5	74.5	282	139	526	204	773	78.3	296	142	535	224	847
			250	17.2	82.0	310	154	583	221	834	86.5	327	155	586	241	912
			300	20.7	97.0	367	184	696	253	957	103	390	182	689	275	1040
120 to 150 / 8.3 to 10.3	150	10.3	175	12.1	40.0	151	79.0	299	145	549	42.0	159	90.0	340	169	639
			200	13.8	52.0	197	98.0	371	169	639	56.0	212	108	409	198	749
			225	15.5	59.5	225	108	409	188	709	63.8	241	121	459	215	812
			250	17.2	67.0	253	118	446	206	779	71.5	270	135	509	232	876
			300	20.7	82.0	310	138	522	243	919	87.0	329	161	609	265	1000

▭ - Denotes capacities limited by boost.

1. To obtain capacities for regulators with reduced flow orifices, multiply the table values by 0.7.

Table 24. *Water Capacities[1][2] in GPM / L/min for 1/4 NPT and 1/2 through 1 in. / DN 15 through 25 Type MR95HP (Elastomer Diaphragm) Regulator*

RECOMMENDED OUTLET/ DIFFERENTIAL PRESSURE RANGE, psig/psi / bar	PRESSURE				REGULATOR BODY SIZE, IN. / DN															
	Outlet/ Differential Setting		Inlet		1/4 NPT				1/2 / 15				3/4 / 20				1 / 25			
					Droop				Droop				Droop				Droop			
					10%		20%		10%		20%		10%		20%		10%		20%	
	psig	bar	psig	bar	GPM	l/min	GPM	l/min	GPM	l/min	GPM	l/min	GPM	l/min	GPM	l/min	GPM	l/min	GPM	l/min
15 to 100 / 1.0 to 6.9	15	1.0	30	2.1	0.8	3.0	1.3	4.9	2.4	9.1	3.7	14.0	6.0	22.7	8.0	30.3	6.0	22.7	10.0	37.8
			40	2.8	1.3	4.9	1.9	7.2	2.9	11.0	4.3	16.3	6.5	24.6	8.5	32.2	7.0	26.5	11.0	41.6
			50	3.4	1.8	6.8	2.5	9.5	3.4	12.9	4.9	18.5	7.0	26.5	9.0	34.0	8.0	30.3	12.0	45.4
			75	5.2	2.2	8.1	3.3	12.5	4.3	16.1	6.1	22.9	8.5	32.2	11.5	43.5	9.5	35.9	13.5	51.1
			100	6.9	2.5	9.5	4.1	15.5	5.1	19.3	7.2	27.2	10.0	37.8	14.0	53.0	11.0	41.6	15.0	56.7
			150	10.3	2.9	11.0	4.6	17.2	5.8	21.9	8.1	30.6	11.5	43.5	15.5	58.6	13.5	51.1	20.0	75.7
			200	13.8	3.3	12.5	5.0	18.9	6.5	24.6	9.0	34.0	13.0	49.2	17.0	64.3	16.0	60.5	25.0	94.6
			250	17.2	3.6	13.6	5.3	20.0	7.6	28.8	10.2	38.4	14.0	53.0	18.0	68.1	18.5	70.0	30.7	116
			300	20.7	3.9	14.8	5.6	21.2	8.7	32.9	11.3	42.7	15.0	56.7	19.0	71.9	21.0	79.4	36.4	138
			400	27.6									16.8	63.6	19.0	71.9	24.0	90.8	37.0	140
			500	34.5																
			600	41.4																
			1000	69.0																
	75	5.2	100	6.9	4.2	15.9	7.0	26.5	8.0	30.3	14.0	53.0	16.0	60.5	25.0	94.6	18.0	68.1	31.0	117
			125	8.6	5.5	20.6	8.5	32.1	9.0	34.0	15.5	58.6	18.0	68.1	28.8	109	21.5	81.3	37.3	141
			150	10.3	6.7	25.3	10.0	37.6	10.0	37.8	17.0	64.3	20.0	75.7	32.5	123	25.0	94.6	43.5	165
			200	13.8	9.2	34.8	12.9	48.8	12.0	45.4	20.0	75.7	24.0	90.8	40.0	151	32.0	121	56.0	212
			250	17.2	10.2	38.4	14.7	55.4	13.0	49.2	21.5	81.3	26.5	100	43.0	163	35.5	134	62.5	236
			300	20.7	11.1	42.0	16.4	62.0	14.0	53.0	23.0	87.0	29.0	110	46.0	174	39.0	148	69.0	261
			400	27.6	12.5	47.3	17.0	64.3	14.5	54.9	23.0	87.0	30.3	115	53.0	200	41.0	155	80.0	303
			500	34.5	13.0	49.2	18.0	68.1	15.0	56.7	23.0	87.0	30.3	115	53.0	200	41.0	155	80.0	303
			600	41.4	14.0	53.0	18.0	68.1	15.0	56.7	23.0	87.0	30.3	115	53.0	200	41.0	155	80.0	303
			1000	69.0																
	100	6.9	125	8.6	4.9	18.5	7.0	26.5	9.0	34.0	16.0	60.5	19.0	71.9	32.0	121	21.0	79.4	36.0	136
			150	10.3	6.17	23.3	8.9	33.8	10.7	40.4	18.0	68.1	22.7	85.7	36.7	139	26.7	101	44.0	166
			175	12.1	7.43	28.1	10.9	41.1	12.3	46.7	20.0	75.7	26.3	99.6	41.3	156	32.3	122	52.0	197
			200	13.8	8.7	32.9	12.8	48.4	14.0	53.0	22.0	83.2	30.0	113	46.0	174	38.0	144	60.0	227
			250	17.2	10.3	39.0	14.9	56.4	15.0	56.7	23.5	88.9	31.0	117	50.0	189	42.0	159	68.5	259
			300	20.7	11.9	45.0	17.0	64.3	16.0	60.5	25.0	94.6	32.0	121	54.0	204	46.0	174	77.0	291
			400	27.6	14.2	53.6	20.4	77.2	16.0	60.5	26.0	98.4	33.5	127	56.7	214	51.5	195	81.0	306
			500	34.5	16	60.4	23.0	86.9	16.0	60.5	27.0	102	37.1	140	59.5	225	57.0	216	85.0	322
			600	41.4	17.4	65.9	25.1	94.9	18.0	68.1	28.0	106	37.1	140	59.5	225	57.0	216	85.0	322
			1000	69.0					18.0	68.1	28.0	106	37.1	140	59.5	225	57.0	216	85.0	322
80 to 300 / 5.5 to 20.7	125	8.6	150	10.3	1.9	7.2	3.5	13.2	6.0	22.7	10.0	37.8	10.0	37.8	19.0	71.9	12.0	45.4	25.0	94.6
			175	12.1	2.4	9.1	4.1	15.5	7.0	26.5	12.0	45.4	13.5	51.1	24.0	90.8	16.0	60.5	30.0	113
			200	13.8	2.9	11.0	4.7	17.8	8.0	30.3	14.0	53.0	17.0	64.3	29.0	110	20.0	75.7	35.0	132
			225	15.5	3.2	12.1	5.2	19.5	8.8	33.1	15.0	56.7	18.5	70.0	31.0	117	22.0	83.2	38.0	144
			250	17.2	3.5	13.2	5.6	21.2	9.5	35.9	16.0	60.5	20.0	75.7	33.0	125	24.0	90.8	41.0	155
			300	20.7	4.1	15.5	6.5	24.6	11.0	41.6	18.0	68.1	23.0	87.0	37.0	140	28.0	106	47.0	178
			400	27.6	5.0	18.9	7.7	29.0	11.5	43.5	19.0	71.9	26.0	98.4	39.5	149	36.0	136	57.5	218
			500	34.5	5.7	21.6	8.6	32.6	12.0	45.4	20.0	75.7	29.0	110	42.0	159	44.0	166	68.0	257
			600	41.4	6.3	23.8	9.4	35.6	14.0	53.0	22.0	83.2	29.3	111	43.2	163	45.0	170	72.0	272
			1000	69.0					14.0	53.0	22.0	83.2	32.5	123	51.0	193	50.0	189	85.0	322
	200	13.8	225	15.5	2.6	9.8	5.0	18.9	8.0	30.3	15.0	56.7	16.0	60.5	30.0	113	19.0	71.9	37.0	140
			250	17.2	3.1	11.6	5.7	21.4	9.3	35.3	17.0	64.3	19.0	71.9	34.7	131	23.0	87.0	42.3	160
			300	20.7	4.0	15.1	7.0	26.5	12.0	45.4	21.0	79.4	25.0	94.6	44.0	166	31.0	117	53.0	200
			400	27.6	5.4	20.4	9.0	34.0	15.0	56.7	25.0	94.6	29.5	112	49.0	185	37.5	142	65.0	246
			500	34.5	6.5	24.6	10.6	39.9	18.0	68.1	29.0	110	34.0	129	54.0	204	44.0	166	77.0	291
			600	41.4	7.4	27.9	11.8	44.8	19.0	71.9	31.0	117	37.0	140	57.0	216	45.0	170	82.0	310
			1000	69.0	9.9	37.4	15.4	58.3	20.0	75.7	32.0	121	40.0	151	60.0	227	75.0	284	125	473
	300	20.7	350	24.1	4.6	17.2	8.1	30.5	13.0	49.2	23.0	87.0	24.0	90.8	44.0	166	27.0	102	53.0	200
			400	27.6	5.3	19.9	9.1	34.4	15.0	56.7	26.0	98.4	28.0	106	49.0	185	33.0	125	63.3	240
			500	34.5	6.7	25.2	11.2	42.4	19.0	71.9	32.0	121	36.0	136	59.0	223	45.0	170	84.0	318
			600	41.4	7.4	27.8	12.3	46.3	21.0	79.4	35.0	132	42.0	159	65.0	246	59.0	223	98.0	371
			1000	69.0	9.1	34.4	15.8	59.6	26.0	98.4	45.0	170	50.0	189	77.0	291	70.0	265	127	480
80 to 400 / 5.5 to 27.6 Type MR95HP Only	400	27.6	500	34.5	6.7	25.2	11.2	42.4	19.0	71.9	32.0	121	32.0	121	55.0	208	43.0	163	73.0	276
			600	41.4	7.7	29.1	13.0	49.0	22.0	83.2	37.0	140	40.0	151	65.0	246	52.0	197	92.0	348
			1000	69.0	10.6	40.3	17.9	67.5	30.4	115	51.0	193	53.0	200	84.0	318	84.0	318	135	511

- Capacities not tested due to cavitation regime.

1. To obtain capacities for regulators with metal diaphragms or for Type MR95HT, multiply the table values by 0.6. Capacity data for 1000 psig / 69.0 bar inlet is not applicable for Type MR95HT (Type MR95HT max. inlet = 600 psig / 41.4 bar).
2. To obtain capacities for regulators with reduced flow orifices, multiply the table values by 0.7.

Table 25. *Water Capacities[1][2] in GPM / L/min for 1-1/2 through 2 in. / DN 40 through 50 Type MR95HP (Elastomer Diaphragm) Regulator*

RECOMMENDED OUTLET/ DIFFERENTIAL PRESSURE RANGE, psig/psi / bar	PRESSURE				REGULATOR BODY SIZE, IN. / DN											
	Outlet/ Differential Setting		Inlet		1-1/2 / 40						2 / 50					
					Droop						Droop					
					10%		20%		40%		10%		20%		40%	
	psig	bar	psig	bar	GPM	l/min	GPM	l/min	GPM	l/min	GPM	l/min	GPM	l/min	GPM	l/min
15 to 100 / 1.0 to 6.9	15	1.0	30	2.1	12.0	45.4	20.0	75.7	36.0	136	11.0	41.6	18.0	68.1	33.0	125
			40	2.8	15.5	58.6	25.0	94.6	41.5	157	15.5	58.6	23.0	87.0	40.5	153
			50	3.4	19.0	71.9	30.0	113	47.0	178	20.0	75.7	28.0	106	48.0	182
			75	5.2	23.0	87.0	36.5	138	59.5	225	22.5	85.1	32.0	121	59.0	223
			100	6.9	27.0	102	43.0	163	72.0	272	25.0	94.6	36.0	136	70.0	265
			150	10.3	41.0	155	62.0	235	134	505	35.0	132	139	526	158	596
			200	13.8	55.0	208	81.0	306	195	738	45.0	170	242	915	245	927
			250	17.2	76.5	289	148	560	217	819	98.0	371	115	435	132	499
			300	20.7	98.0	371	215	813	238	900	98.0	371	115	435	132	499
			400	27.6												
			500	34.5												
			600	41.4												
			1000	69.0												
	50	3.4	60	4.1	19.0	71.9	39.0	148	81.0	306	20.0	75.7	41.0	155	91.0	344
			75	5.2	26.9	102	49.9	189	101	382	27.1	103	54.5	206	112	424
			100	6.9	40.0	151	68.0	257	134	507	39.0	148	77.0	291	147	556
			150	10.3	53.0	200	85.5	323	172	651	56.0	212	144	545	192	724
			200	13.8	66.0	250	103	390	210	794	73.0	276	211	798	236	893
			250	17.2	86.5	327	147	554	240	908	137	516	231	872	265	1000
			300	20.7	107.0	405	190	719	270	1020	200	757	250	946	294	1110
			400	27.6	107.0	405	190	719	270	1020	200	757	250	946	294	1110
			500	34.5	107.0	405	190	719	270	1020	200	757	250	946	294	1110
			600	41.4	107.0	405	190	719	270	1020	200	757	250	946	294	1110
			1000	69.0												
	100	6.9	125	8.6	41.0	155	78.0	295	138	522	42.0	159	91.0	344	146	552
			150	10.3	52.3	198	95.7	362	159	603	57.3	217	117	444	169	639
			175	12.1	63.7	241	113	429	181	683	72.7	275	144	543	192	726
			200	13.8	75.0	284	131	496	202	764	88.0	333	170	643	215	813
			250	17.2	83.5	316	145	547	234	883	136	513	219	827	247	934
			300	20.7	92.0	348	158	598	265	1000	183	692	267	1010	279	1060
			400	27.6	111	422	180	681	265	1000	183	692	267	1010	279	1060
			500	34.5	125	471	200	757	265	1000	183	692	267	1010	279	1060
			600	41.4	135	512	200	757	265	1000	183	692	267	1010	279	1060
			1000	69.0	166	626	200	757	265	1000	183	692	267	1010	279	1060
60 to 260 / 4.1 to 17.9	125	8.6	150	10.3	28.0	106	55.0	208	111	420	31.0	117	56.0	212	119	450
			175	12.1	36.5	138	66.5	252	131	496	38.0	144	70.0	265	144	545
			200	13.8	45.0	170	78.0	295	151	571	45.0	170	84.0	318	169	639
			225	15.5	51.0	193	85.5	323	168	636	50.8	192	93.3	353	188	711
			250	17.2	57.0	216	93.0	352	186	702	56.5	214	103	388	207	783
			300	20.7	69.0	261	108	409	220	832	68.0	257	121	458	245	927
			400	27.6	75.0	284	125	473	250	946	78.8	298	138	520	275	1040
			500	34.5	90.0	340	140	530	266	1010	94.5	357	154	583	293	1110
			600	41.4	100	378	145	549	276	1040	105	397	160	603	303	1150
			1000	69.0	105	397	150	567	285	1080	110	417	165	624	314	1190
	200	13.8	225	15.5	38.0	144	76.0	288	160	605	31.0	117	69.0	261	154	583
			250	17.2	47.7	180	90.0	340	179	677	42.0	159	86.0	325	178	673
			300	20.7	67.0	253	118	446	217	821	64.0	242	120	454	226	855
			350	24.1	70.3	266	121	458	220	833	73.8	279	133	504	242	916
			400	27.6	73.5	278	124	469	226	854	77.2	292	136	516	248	939
			450	31.0	76.8	290	127	480	231	874	80.6	305	140	528	254	962
			500	34.5	80.0	303	130	492	237	895	84.0	318	143	541	260	985
			600	41.4	85.0	322	135	511	246	929	89.3	338	149	562	270	1020
			1000	69.0	105	397	150	567	273	1030	110	417	165	624	300	1140
	250	17.2	275	19.0	43.0	163	91.0	344	185	700	45.0	170	95.0	359	194	734
			300	20.7	50.0	189	101	382	203	768	56.0	212	110	416	219	828
			350	24.1	55.8	211	108	407	204	773	58.6	222	118	447	225	850
			400	27.6	61.7	233	114	431	217	819	64.8	245	125	474	238	901
			450	31.0	67.5	255	121	456	229	866	70.9	268	133	501	252	953
			500	34.5	73.3	277	127	480	241	913	77.0	291	140	528	265	1000
			550	37.9	79.2	299	134	505	254	960	83.1	314	147	556	279	1060
			600	41.4	85.0	322	140	530	266	1010	89.3	338	154	583	293	1110
			1000	69.0	95.0	359	155	586	295	1110	99.8	377	171	645	324	1230
60 to 300 / 4.1 to 20.7 Type MR95HP Only	300	20.7	350	24.1	55.0	208	110	416	209	791	57.8	218	121	458	230	870
			400	27.6	68.0	257	125	473	238	898	71.4	270	138	520	261	988
			450	31.0	79.0	299	135	511	257	970	83.0	314	149	562	282	1070
			500	34.5	90.0	340	145	549	276	1040	94.5	357	160	603	303	1150
			550	37.9	92.5	350	148	558	280	1060	97.1	367	162	614	308	1170
			600	41.4	95.0	359	150	567	285	1080	99.8	377	165	624	314	1190
			1000	69.0	125	473	190	719	361	1370	131	497	209	791	397	1500

- Denotes capacities limited by boost.
- Capacities not tested due to cavitation regime.

1. To obtain capacities for Type MR95HT (metal diaphragm), multiply the table values by 0.6. Capacity data for 1000 psig / 69.0 bar inlet is not applicable for Type MR95HT (Type MR95HT max. inlet = 600 psig / 41.4 bar).
2. To obtain capacities for regulators with reduced flow orifices, multiply the table values by 0.7.

Table 26. *Water Capacities[1][2] in C_v for 1/4 NPT and 1/2 through 1 in. / DN 15 through 25 Types MR95L and MR95LD Regulators with Elastomer Diaphragm*

RECOMMENDED OUTLET/DIFFERENTIAL PRESSURE RANGE, psig/psi / bar	PRESSURE				REGULATOR BODY SIZE, IN. / DN							
	Outlet/Differential Setting		Inlet		1/4 NPT		1/2 / 15		3/4 / 20		1 / 25	
					Droop		Droop		Droop		Droop	
					10%	20%	10%	20%	10%	20%	10%	20%
	psig	bar	psig	bar	C_v							
2 to 6 / 0.14 to 0.41	5	0.34	10	0.69	1.10	1.10	1.28	2.45	1.92	4.08	2.56	4.49
			20	1.4	1.10	1.10	1.02	1.75	2.03	3.50	2.54	3.80
			30	2.1	1.10	1.10	0.92	1.44	1.91	3.00	2.16	3.37
			50	3.4	1.10	1.10	0.89	1.18	1.93	2.65	1.88	3.11
			75	5.2	0.98	1.10	0.71	1.01	1.81	2.46	2.01	2.74
			100	6.9	0.44	0.54	0.63	0.95	1.93	2.30	2.15	2.55
			150	10.3					1.64	1.98	1.83	2.20
			200	13.8					1.50	1.83	1.67	2.04
			250	17.2					1.47	1.65	1.64	1.83
5 to 15 / 0.34 to 1.0	10	0.69	20	1.4	0.60	1.10	1.51	2.31	3.02	4.62	3.02	4.62
			30	2.1	0.73	1.10	1.24	1.92	2.55	3.84	2.68	4.11
			50	3.4	0.94	1.10	1.09	1.70	2.34	3.39	2.65	4.01
			75	5.2	0.74	1.10	0.92	1.40	2.28	3.19	2.52	3.54
			100	6.9	0.65	0.98	0.84	1.26	2.26	3.00	2.52	3.34
			150	10.3			0.75	1.05	1.97	2.53	2.19	2.81
			200	13.8					1.83	2.29	2.04	2.54
			250	17.2					1.88	2.24	2.09	2.49
	15	1.0	20	1.4	0.78	1.10	1.96	2.83	3.92	5.30	3.92	5.30
			30	2.1	0.90	1.10	1.48	2.28	3.13	4.48	3.27	4.71
			50	3.4	1.10	1.10	1.32	2.11	2.98	4.38	3.31	4.87
			75	5.2	1.10	1.10	1.08	1.76	2.64	3.86	2.93	4.28
			100	6.9	1.10	1.10	0.97	1.60	2.52	3.65	2.80	4.05
			150	10.3	1.10	1.10	0.88	1.32	2.16	3.14	2.40	3.49
			200	13.8			0.84	1.15	1.98	2.89	2.20	3.21
			250	17.2					2.00	2.65	2.23	2.95
13 to 30 / 0.90 to 2.1	20	1.4	30	2.1	0.87	1.10	1.73	2.67	3.46	5.08	3.46	5.08
			40	2.8	0.96	1.10	1.49	2.35	2.88	4.33	3.20	4.80
			50	3.4	1.06	1.10	1.41	2.23	3.01	4.46	3.18	4.80
			75	5.2	1.10	1.10	1.26	1.89	2.45	3.81	2.72	4.23
			100	6.9	1.10	1.10	1.21	1.75	2.32	3.49	2.54	4.04
			150	10.3	1.09	1.10	1.01	1.45	2.19	3.27	2.44	3.63
			200	13.8	0.95	1.10	0.92	1.31	2.20	3.12	2.45	3.46
			250	17.2			0.83	1.24	2.01	2.95	2.23	3.27
	30	2.1	40	2.8	1.10	1.10	2.08	2.90	4.44	6.00	4.71	6.00
			50	3.4	1.10	1.10	1.88	2.75	3.75	5.69	3.96	5.69
			75	5.2	1.10	1.10	1.52	2.24	3.18	4.76	3.39	5.11
			100	6.9	1.10	1.10	1.40	2.06	3.04	4.47	3.28	5.05
			150	10.3	1.10	1.10	1.17	1.74	2.84	3.97	3.16	4.41
			200	13.8	1.10	1.10	1.07	1.61	2.87	3.73	3.19	4.15
			250	17.2	1.10	1.10	0.97	1.52	2.53	3.47	2.81	3.86

▭ - Capacities not tested due to cavitation regime.

1. To obtain capacities for regulators with metal diaphragms, multiply the table values by 0.8.
2. To obtain capacities for regulators with reduced flow orifices, multiply the table values by 0.7.

Table 27. *Water Capacities[1][2] in C_v for 1/4 NPT and 1/2 through 1 in. / DN 15 through 25 Types MR95H, MR95HD and MR95HDP Regulators with Elastomer Diaphragm*

RECOMMENDED OUTLET/DIFFERENTIAL PRESSURE RANGE, psig/psi / bar	PRESSURE				REGULATOR BODY SIZE, IN. / DN							
	Outlet/Differential Setting		Inlet		1/4 NPT		1/2 / 15		3/4 / 20		1 / 25	
					Droop		Droop		Droop		Droop	
					10%	20%	10%	20%	10%	20%	10%	20%
	psig	bar	psig	bar	C_v							
15 to 30 / 1.0 to 2.1	15	1.0	30	2.1	0.25	0.71	0.98	1.65	1.72	2.83	1.97	3.54
			40	2.8	0.29	0.66	0.87	1.51	1.65	2.55	1.94	3.59
			50	3.4	0.33	0.65	0.83	1.46	1.66	2.43	1.99	3.73
			75	5.2	0.38	0.76	0.77	1.26	1.47	2.14	1.53	3.02
			100	6.9	0.44	0.87	0.75	1.17	1.40	2.03	1.29	2.67
			150	10.3	0.36	0.73	0.79	1.14	1.24	1.70	1.46	2.60
			200	13.8			0.84	1.15	1.17	1.53	1.61	2.63
			250	17.2			0.83	1.11	1.11	1.44	1.51	2.42
			300	20.7			0.82	1.08				
	30	2.1	40	2.8	0.55	1.07	1.66	2.50	2.77	4.50	3.33	5.75
			50	3.4	0.63	1.10	1.46	2.35	2.50	3.92	3.13	5.10
			75	5.2	0.65	1.10	1.23	2.03	2.09	3.29	3.03	5.04
			100	6.9	0.70	1.10	1.17	1.95	1.99	3.10	3.16	5.28
			150	10.3	0.69	1.10	0.99	1.60	1.67	2.58	2.61	4.28
			200	13.8	0.70	1.10	0.92	1.46	1.52	2.34	2.36	3.77
			250	17.2	0.70	1.10	0.93	1.35	1.37	2.13	2.54	3.82
			300	20.7	0.70	1.10	0.95	1.27	1.27	1.99	2.72	3.91
25 to 75 / 1.7 to 5.2	50	3.4	60	4.1	0.77	1.01	1.75	2.90	3.43	5.10	4.39	6.00
			75	5.2	0.73	1.01	1.46	2.37	2.56	4.06	3.29	5.24
			100	6.9	0.67	1.10	1.21	2.19	2.43	3.74	3.37	5.29
			150	10.3	0.63	1.10	0.98	1.72	2.05	3.24	2.63	4.58
			200	13.8	0.64	1.10	0.88	1.50	1.93	3.08	2.33	4.35
			250	17.2	0.63	1.10	0.87	1.45	1.71	2.69	2.51	4.21
			300	20.7	0.62	1.10	0.89	1.46	1.57	2.42	2.69	4.16
	75	5.2	100	6.9	0.88	1.10	1.75	2.85	3.16	4.74	3.86	6.00
			125	8.6	0.79	1.10	1.49	2.42	2.70	4.13	3.63	5.74
			150	10.3	0.77	1.10	1.38	2.21	2.53	3.85	3.63	5.74
			200	13.8	0.78	1.10	1.30	2.03	2.43	3.63	3.82	6.00
			250	17.2	0.75	1.10	1.15	1.81	2.22	3.37	3.44	5.37
			300	20.7	0.73	1.10	1.05	1.68	2.10	3.23	3.21	4.97
70 to 150 / 4.8 to 10.3	100	6.9	125	8.6	0.68	1.04	1.39	2.13	3.21	4.62	3.72	5.52
			150	10.3	0.65	1.08	1.36	2.15	2.97	4.42	3.61	5.50
			175	12.1	0.65	1.10	1.26	2.08	2.82	4.16	3.58	5.54
			200	13.8	0.67	1.10	1.22	2.05	2.77	4.02	3.62	5.66
			250	17.2	0.66	1.10	1.07	1.73	2.45	3.64	3.40	5.60
			300	20.7	0.66	1.10	0.99	1.52	2.28	3.44	3.31	5.66
	150	10.3	175	12.1	0.79	1.10	1.42	2.22	3.64	5.26	4.74	5.93
			200	13.8	0.87	1.10	1.59	2.27	3.47	5.03	4.47	5.81
			225	15.5	0.84	1.10	1.47	2.16	3.21	4.71	4.35	5.81
			250	17.2	0.84	1.10	1.40	2.10	3.08	4.52	4.34	5.88
			300	20.7	0.86	1.10	1.35	2.07	2.96	4.32	4.44	6.00

▭ - Capacities not tested due to cavitation regime.

1. To obtain capacities for regulators with metal diaphragms, multiply the table values by 0.6.
2. To obtain capacities for regulators with reduced flow orifices, multiply the table values by 0.7.

Table 28. *Water Capacities[1] in C_v for 1-1/2 through 2 in. / DN 40 through 50 Types MR95H, MR95HD and MR95HDP Regulators with Elastomer Diaphragm*

RECOMMENDED OUTLET/DIFFERENTIAL PRESSURE RANGE, psig/psi / bar	PRESSURE				REGULATOR BODY SIZE, IN. / DN					
	Outlet/Differential Setting		Inlet		1-1/2 / 40			2 / 50		
					Droop			Droop		
					10%	20%	40%	10%	20%	40%
	psig	bar	psig	bar	C_v					
5 to 80 / 0.34 to 5.5	5	0.34	10	0.69	2.56	3.27	5.29	2.56	3.27	5.29
			20	1.4	2.16	2.83	4.80	2.10	2.63	4.24
			30	2.1	2.18	2.84	4.91	2.08	2.55	4.04
			50	3.4	2.37	3.10	5.40	2.22	2.65	4.08
			75	5.2	3.28	4.51	6.19	2.26	2.97	4.36
			100	6.9	3.99	5.61	6.90	2.35	9.39	11.57
			150	10.3	3.90	8.18	9.81	3.36	6.56	8.21
			200	13.8	4.00	10.32	12.04	4.22	4.80	6.06
			250	17.2	4.74	10.41	11.07	3.44	3.89	4.77
			300	20.7	5.40	10.50	10.39	2.82	3.18	3.77
	15	1.0	30	2.1	3.45	6.36	10.26	3.45	5.19	9.17
			40	2.8	3.79	6.24	9.61	3.50	5.39	9.34
			50	3.4	4.14	6.33	9.37	3.64	5.68	9.68
			75	5.2	4.02	6.24	9.11	3.19	5.04	14.52
			100	6.9	4.09	6.40	9.22	8.06	14.07	18.10
			150	10.3	5.78	7.19	12.46	6.59	10.56	12.88
			200	13.8	7.10	7.95	15.05	6.66	8.46	9.62
			250	17.2	7.53	12.04	15.14	5.37	7.00	8.50
			300	20.7	7.92	15.48	15.36	4.38	5.82	7.62
	50	3.4	60	4.1	7.20	14.24	17.34	6.58	11.34	18.10
			75	5.2	6.21	11.16	16.55	6.76	11.49	18.10
			100	6.9	6.88	12.26	16.49	6.34	10.59	18.10
			150	10.3	6.05	9.82	15.43	6.25	10.30	18.07
			200	13.8	5.86	8.78	15.34	6.51	10.51	18.10
			250	17.2	6.95	12.35	15.91	5.94	9.66	18.00
			300	20.7	7.89	15.32	16.49	9.64	11.04	17.95
	75	5.2	100	6.9	8.24	13.28	17.39	7.89	12.97	18.10
			125	8.6	7.29	11.76	16.77	7.16	12.13	18.00
			150	10.3	6.99	11.17	16.69	6.99	12.02	17.96
			200	13.8	6.95	10.73	17.11	7.12	12.25	18.10
			250	17.2	6.44	13.71	16.83	6.29	10.88	18.10
			300	20.7	6.16	16.14	16.85	12.53	17.82	18.10
60 to 120 / 4.1 to 8.3	100	6.9	125	8.6	7.94	13.71	16.74	7.78	13.42	18.10
			150	10.3	7.20	12.79	16.34	7.07	12.67	17.92
			175	12.1	7.00	12.52	16.41	6.89	12.52	18.00
			225	15.5	7.06	12.54	16.82	6.97	12.79	18.10
			250	17.2	6.98	11.81	16.61	6.74	12.50	18.10
			300	20.7	6.97	10.72	16.52	6.49	12.20	18.10
100 to 140 / 6.9 to 9.7	125	8.6	150	10.3	7.14	12.22	17.09	7.68	12.87	18.10
			175	12.1	7.01	12.12	16.80	7.40	12.70	18.10
			200	13.8	7.16	12.40	16.82	7.48	12.80	18.10
			225	15.5	7.02	12.43	16.66	7.38	12.70	18.10
			250	17.2	6.99	12.57	16.71	7.38	12.66	18.10
			300	20.7	7.08	13.01	16.87	7.52	12.87	18.10
120 to 150 / 8.3 to 10.3	150	10.3	175	12.1	6.32	10.65	15.73	6.64	12.14	18.10
			200	13.8	6.45	10.96	16.11	6.95	12.07	18.10
			225	15.5	6.27	10.54	16.18	6.73	11.81	18.10
			250	17.2	6.25	10.35	16.29	6.67	11.84	18.10
			300	20.7	6.38	10.29	16.77	6.77	12.00	18.10

▭ - Denotes capacities limited by boost.

1. To obtain capacities for regulators with reduced flow orifices, multiply the table values by 0.7.

Table 29. *Water Capacities[1][2] in C_v for 1/4 NPT and 1/2 through 1 in. / DN 15 through 25 Type MR95HP Regulator with Elastomer Diaphragm*

RECOMMENDED OUTLET/DIFFERENTIAL PRESSURE RANGE, psig/psi / bar	PRESSURE				REGULATOR BODY SIZE, IN. / DN							
	Outlet/Differential Setting		Inlet		1/4 NPT		1/2 / 15		3/4 / 20		1 / 25	
					Droop		Droop		Droop		Droop	
					10%	20%	10%	20%	10%	20%	10%	20%
	psig	bar	psig	bar	C_v							
15 to 100 / 1.0 to 6.9	15	1.0	30	2.1	0.20	0.31	0.59	0.87	1.48	1.89	1.48	2.36
			40	2.8	0.25	0.36	0.56	0.81	1.26	1.61	1.36	2.08
			50	3.4	0.30	0.41	0.56	0.79	1.16	1.46	1.32	1.95
			75	5.2	0.27	0.42	0.54	0.76	1.08	1.45	1.21	1.70
			100	6.9	0.27	0.45	0.55	0.77	1.08	1.49	1.18	1.60
			150	10.3	0.26	0.41	0.51	0.71	0.98	1.32	1.16	1.70
			200	13.8	0.26	0.40	0.50	0.69	0.95	1.24	1.17	1.82
			250	17.2	0.26	0.38	0.53	0.71	0.92	1.18	1.21	2.01
			300	20.7	0.26	0.37	0.55	0.72	0.90	1.14	1.26	2.18
			400	27.6					0.88	0.99	1.25	1.93
			500	34.5								
			600	41.4								
			1000	69.0								
	75	5.2	100	6.9	0.74	1.10	1.40	2.21	2.81	3.95	3.16	4.90
			125	8.6	0.72	1.05	1.19	1.92	2.37	3.57	2.84	4.63
			150	10.3	0.74	1.05	1.10	1.79	2.20	3.43	2.75	4.59
			200	13.8	0.80	1.09	1.04	1.69	2.08	3.38	2.78	4.73
			250	17.2	0.76	1.07	0.96	1.56	1.96	3.12	2.63	4.53
			300	20.7	0.73	1.08	0.92	1.48	1.90	2.97	2.56	4.45
			400	27.6	0.71	0.97	0.80	1.27	1.66	2.87	2.25	4.34
			500	34.5	0.67	0.92	0.74	1.14	1.46	2.53	1.97	3.81
			600	41.4	0.66	0.84	0.68	1.04	1.31	2.28	1.78	3.44
			1000	69.0								
	100	6.9	125	8.6	0.83	1.04	1.52	2.39	3.21	4.77	3.55	5.37
			150	10.3	0.80	1.07	1.38	2.15	2.93	4.39	3.45	5.26
			175	12.1	0.81	1.10	1.33	2.05	2.85	4.24	3.50	5.34
			200	13.8	0.83	1.10	1.33	2.01	2.86	4.20	3.62	5.48
			250	17.2	0.81	1.10	1.19	1.80	2.45	3.83	3.32	5.25
			300	20.7	0.82	1.10	1.10	1.69	2.21	3.64	3.17	5.19
			400	27.6	0.81	1.10	0.91	1.45	1.90	3.17	2.93	4.53
			500	34.5	0.82	1.10	0.79	1.34	1.83	2.90	2.82	4.15
			600	41.4	0.82	1.10	0.82	1.27	1.64	2.61	2.52	3.73
			1000	69.0			0.64	0.99	1.24	1.99	1.90	2.84
80 to 300 / 5.5 to 20.7	125	8.6	150	10.3	0.31	0.49	0.98	1.41	1.63	2.69	1.96	3.54
			175	12.1	0.30	0.47	0.89	1.39	1.71	2.77	2.02	3.46
			200	13.8	0.31	0.47	0.86	1.40	1.82	2.90	2.14	3.50
			225	15.5	0.30	0.46	0.82	1.34	1.74	2.77	2.07	3.40
			250	17.2	0.30	0.46	0.81	1.31	1.71	2.69	2.05	3.35
			300	20.7	0.30	0.46	0.80	1.27	1.68	2.62	2.04	3.32
			400	27.6	0.30	0.44	0.68	1.10	1.53	2.28	2.12	3.32
			500	34.5	0.29	0.44	0.61	1.00	1.47	2.10	2.24	3.40
			600	41.4	0.29	0.44	0.63	1.00	1.33	1.93	2.04	3.22
			1000	69.0			0.49	0.78	1.09	1.70	1.68	2.84
	200	13.8	225	15.5	0.39	0.62	1.19	1.86	2.39	3.72	2.83	4.59
			250	17.2	0.37	0.60	1.12	1.79	2.27	3.66	2.75	4.46
			300	20.7	0.37	0.59	1.10	1.77	2.28	3.72	2.83	4.48
			400	27.6	0.36	0.58	1.01	1.61	1.99	3.16	2.53	4.20
			500	34.5	0.36	0.57	1.01	1.57	1.90	2.93	2.46	4.18
			600	41.4	0.36	0.56	0.93	1.48	1.81	2.72	2.20	3.91
			1000	69.0	0.36	0.56	0.71	1.13	1.40	2.07	2.62	4.31
	300	20.7	350	24.1	0.51	0.77	1.45	2.19	2.68	4.20	3.02	5.05
			400	27.6	0.46	0.72	1.32	2.06	2.46	3.87	2.89	5.00
			500	34.5	0.44	0.69	1.25	1.98	2.37	3.66	2.97	5.21
			600	41.4	0.40	0.65	1.16	1.84	2.31	3.43	3.25	5.17
			1000	69.0	0.34	0.58	0.96	1.63	1.85	2.79	2.59	4.61
80 to 400 / 5.5 to 27.6 Type MR95HP Only	400	27.6	500	34.5	0.56	0.83	1.61	2.39	2.70	4.10	3.63	5.44
			600	41.4	0.50	0.78	1.42	2.21	2.58	3.88	3.36	5.50
			1000	69.0	0.42	0.69	1.20	1.96	2.10	3.22	3.32	5.18

- Capacities not tested due to cavitation regime.

1. To obtain capacities for regulators with metal diaphragms or for Type MR95HT, multiply the table values by 0.6. Capacity data for 1000 psig / 69.0 bar inlet is not applicable for Type MR95HT (Type MR95HT max. inlet = 600 psig / 41.4 bar).
2. To obtain capacities for regulators with reduced flow orifices, multiply the table values by 0.7.

Table 30. *Water Capacities[1][2] in C_v for 1-1/2 through 2 in. / DN 40 through 50 Type MR95HP Regulator with Elastomer Diaphragm*

RECOMMENDED OUTLET/DIFFERENTIAL PRESSURE RANGE, psig/psi / bar	PRESSURE				REGULATOR BODY SIZE, IN. / DN					
	Outlet/Differential Setting		Inlet		1-1/2 / 40			2 / 50		
					Droop			Droop		
					10%	20%	40%	10%	20%	40%
	psig	bar	psig	bar	C_v					
15 to 100 / 1.0 to 6.9	15	1.0	30	2.1	2.95	4.71	7.86	2.71	4.24	7.20
			40	2.8	3.01	4.72	7.45	3.01	4.35	7.27
			50	3.4	3.14	4.87	7.34	3.31	4.54	7.50
			75	5.2	2.93	4.60	7.32	2.87	4.03	7.26
			100	6.9	2.90	4.58	7.55	2.69	3.84	7.34
			150	10.3	3.51	5.28	11.28	3.00	11.83	13.31
			200	13.8	4.03	5.91	14.17	3.30	17.65	17.81
			250	17.2	5.01	9.69	14.20	6.41	7.53	8.64
			300	20.7	5.88	12.90	14.28	5.88	6.90	7.92
			400	27.6						
			500	34.5						
			600	41.4						
			1000	69.0						
	50	3.4	60	4.1	4.91	8.72	14.79	5.16	9.17	16.61
			75	5.2	4.91	8.43	15.06	4.95	9.21	16.70
			100	6.9	5.39	8.78	16.02	5.26	9.94	17.57
			150	10.3	5.17	8.15	15.70	5.47	13.73	17.53
			200	13.8	5.30	8.14	16.11	5.86	16.68	18.10
			250	17.2	6.04	10.14	16.18	9.57	15.94	17.87
			300	20.7	6.70	11.78	16.43	12.52	15.50	17.89
			400	27.6	5.68	10.01	14.11	10.61	13.18	15.37
			500	34.5	5.02	8.91	12.67	9.38	11.73	13.79
			600	41.4	4.59	8.16	11.59	8.59	10.73	12.62
			1000	69.0						
	100	6.9	125	8.6	6.93	11.63	17.12	7.10	13.57	18.10
			150	10.3	6.75	11.44	16.76	7.40	13.98	17.81
			175	12.1	6.91	11.59	16.88	7.89	14.77	17.90
			200	13.8	7.15	11.96	17.07	8.39	15.52	18.10
			250	17.2	6.60	11.12	16.98	10.75	16.80	17.92
			300	20.7	6.35	10.65	17.11	12.63	18.00	18.01
			400	27.6	6.30	10.06	14.37	10.39	14.93	15.13
			500	34.5	6.17	9.76	12.63	9.04	13.03	13.30
			600	41.4	5.98	8.77	11.40	8.10	11.71	12.01
			1000	69.0	5.55	6.68	8.85	6.11	8.92	9.32
60 to 260 / 4.1 to 17.9	125	8.6	150	10.3	4.57	7.78	12.82	5.06	7.92	13.74
			175	12.1	4.62	7.68	13.10	4.81	8.08	14.40
			200	13.8	4.81	7.80	13.51	4.81	8.40	15.12
			225	15.5	4.81	7.65	13.72	4.79	8.35	15.35
			250	17.2	4.86	7.59	14.06	4.82	8.41	15.65
			300	20.7	5.04	7.64	14.67	4.97	8.56	16.33
			400	27.6	4.42	7.22	13.87	4.65	7.97	15.25
			500	34.5	4.57	7.00	12.90	4.80	7.70	14.21
			600	41.4	4.53	6.48	12.05	4.76	7.16	13.22
			1000	69.0	3.52	5.01	9.52	3.69	5.51	10.49
	200	13.8	225	15.5	5.66	9.43	15.61	4.62	8.56	15.03
			250	17.2	5.70	9.49	15.70	5.02	9.07	15.61
			300	20.7	6.12	9.97	16.17	5.84	10.14	16.85
			350	24.1	5.39	8.78	14.51	5.66	9.65	15.96
			400	27.6	4.96	8.00	13.51	5.20	8.78	14.82
			450	31.0	4.67	7.46	12.72	4.91	8.22	13.98
			500	34.5	4.47	7.05	12.16	4.70	7.76	13.34
			600	41.4	4.15	6.44	11.23	4.36	7.10	12.32
			1000	69.0	3.67	5.18	9.20	3.84	5.69	10.11
	250	17.2	275	19.0	6.08	10.51	16.55	6.36	10.97	17.35
			300	20.7	5.77	10.10	16.57	6.47	11.00	17.88
			350	24.1	4.99	8.82	14.42	5.24	9.63	15.91
			400	27.6	4.66	8.06	13.72	4.90	8.84	15.05
			450	31.0	4.50	7.65	13.22	4.73	8.41	14.55
			500	34.5	4.42	7.33	12.88	4.64	8.08	14.16
			550	37.9	4.39	7.16	12.70	4.61	7.86	13.95
			600	41.4	4.39	7.00	12.54	4.61	7.70	13.81
			1000	69.0	3.41	5.48	10.12	3.58	6.05	11.11
60 to 300 / 4.1 to 20.7 Type MR95HP Only	300	20.7	350	24.1	6.15	10.49	16.03	6.46	11.54	17.64
			400	27.6	5.96	9.88	16.05	6.26	10.91	17.60
			450	31.0	5.89	9.32	15.64	6.19	10.28	17.16
			500	34.5	5.93	8.99	15.43	6.23	9.92	16.94
			550	37.9	5.53	8.41	14.56	5.80	9.20	16.01
			600	41.4	5.23	7.91	13.91	5.49	8.70	15.32
			1000	69.0	4.63	6.89	12.61	4.85	7.58	13.86

- Denotes capacities limited by boost.
- Capacities not tested due to cavitation regime.

1. To obtain capacities for Type MR95HT (metal diaphragm), multiply the table values by 0.6. Capacity data for 1000 psig / 69.0 bar inlet is not applicable for Type MR95HT (Type MR95HT max. inlet = 600 psig / 41.4 bar).
2. To obtain capacities for regulators with reduced flow orifices, multiply the table values by 0.7.

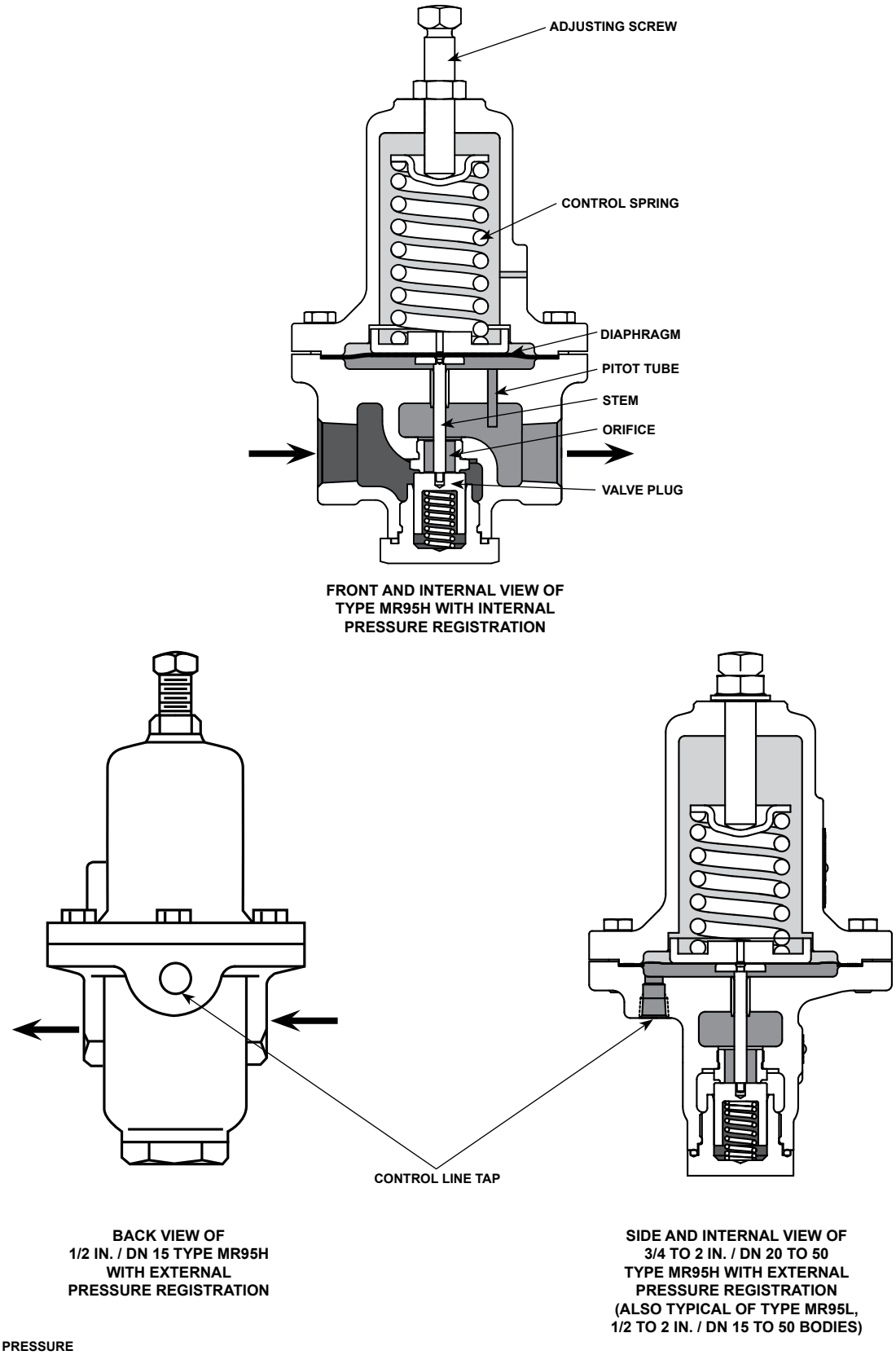

Figure 2. *MR95 Series Operational Schematics*

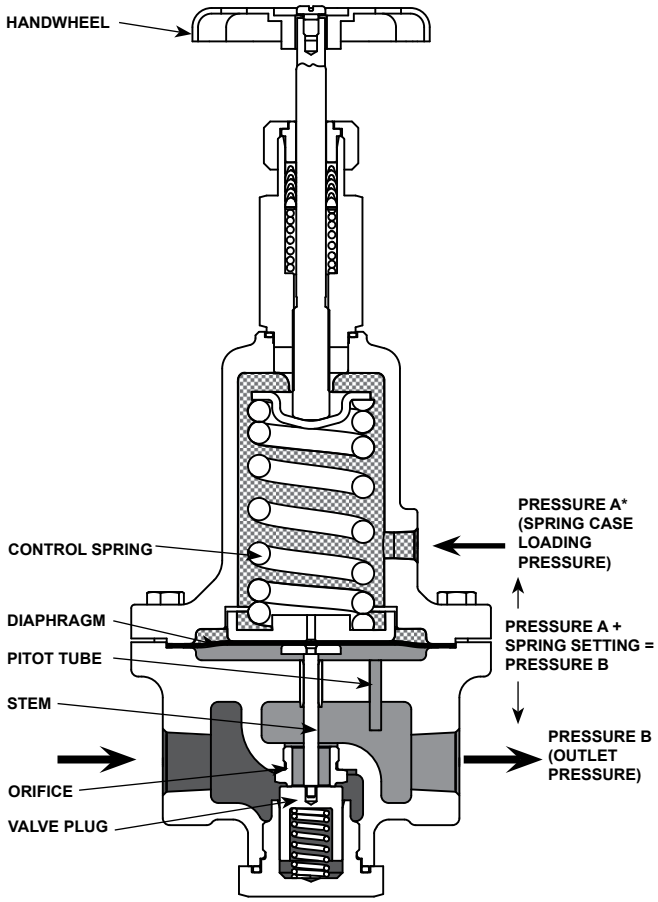

FRONT AND INTERNAL VIEW OF TYPES MR95HD AND MR95HDP WITH INTERNAL PRESSURE REGISTRATION

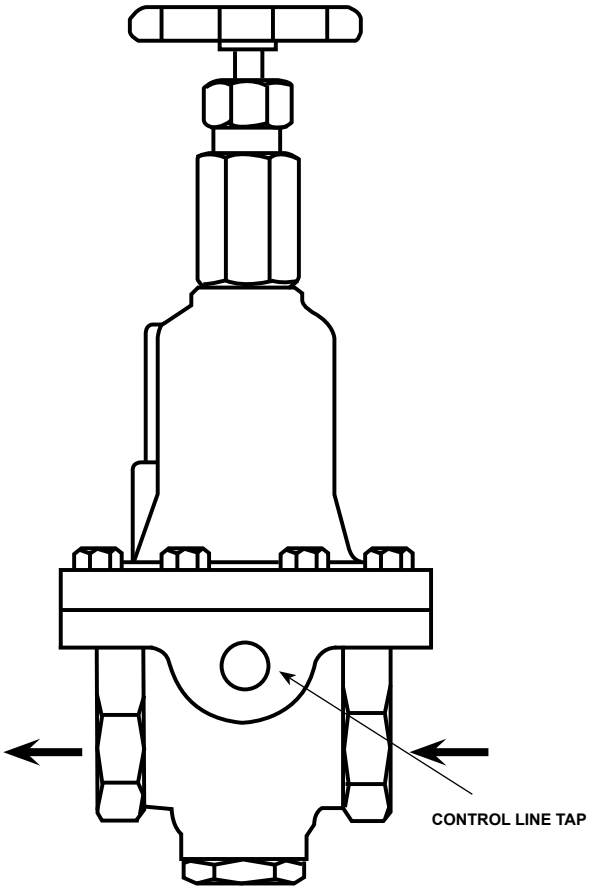

BACK VIEW OF TYPES MR95HD AND MR95HDP WITH EXTERNAL PRESSURE REGISTRATION

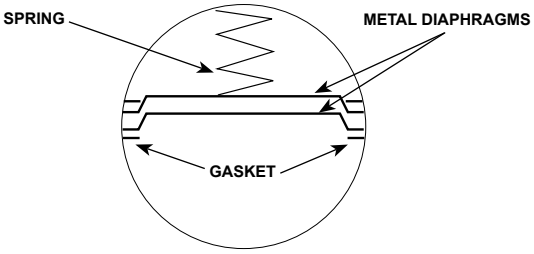

TYPE MR95H WITH 2 METAL DIAPHRAGMS (ALSO TYPICAL OF TYPES MR95HT AND MR95L EXCEPT FOR TYPE MR95L WITH 1/4 NPT BODY SIZE, 2 to 6 psi / 0.14 to 0.41 bar RANGE)

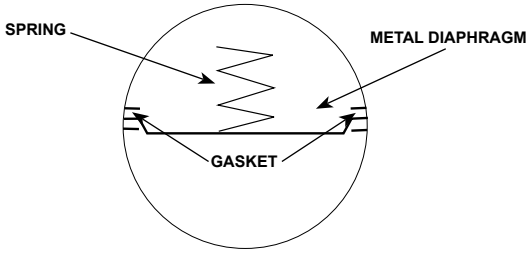

TYPE MR95L (1/4 NPT, 2 to 6 psi / 0.14 to 0.41 bar RANGE) WITH METAL DIAPHRAGM

INLET PRESSURE
OUTLET PRESSURE
LOADING PRESSURE

*PRESSURE A MAY BE SUPPLIED BY ANOTHER PRESSURE SYSTEM OR A MANUAL LOADING REGULATOR.

Figure 2. *MR95 Series Operational Schematics (continued)*

Principle of Operation

The MR95 Series (refer to Figure 2) is a direct-operated regulator. Downstream pressure is registered internally or externally through a control line to the under side of the diaphragm. When the downstream pressure is at or above the set pressure, the disk is held against the orifice, restricting fluid flow through the regulator. When demand increases, downstream pressure drops slightly allowing the spring to extend, moving the stem down and the disk away from the orifice. This allows fluid flow through the body to the downstream system. Types MR95H, MR95L, MR95HP and MR95HT use spring force to regulate outlet pressure. Types MR95HD, MR95HDP and MR95LD use spring force to maintain a differential pressure between spring case loading pressure and outlet pressure.

Installation

The MR95 Series regulators may be installed in any position, as long as flow will be in the same direction as that indicated by the body arrow. The Types MR95H, MR95L, MR95HT and MR95HP regulators should be installed so that their spring case vents are protected from anything that might clog them.

Emerson Process Management Regulator Technologies, Inc. (Emerson) provides an instruction manual with every regulator shipped. Refer to this for complete installation, operation and maintenance instructions. Included is a complete list of individual parts and recommended spare parts.

NACE Compliance

Optional materials are available for applications handling sour gases. These constructions comply with the recommendations of NACE International sour service standards.

The manufacturing processes and materials used by Emerson assure that all products specified for sour gas service comply with the chemical, physical and metallurgical requirements of NACE MR0175 ISO-2002 and/or NACE MR0103. Optional materials are available to meet ANSI/NACE MR0175/ ISO 15156, please contact your local Sales Office for special ordering instructions. Customers have the responsibility to specify correct materials. Environmental limitations may apply and shall be determined by the user.

Capacity Data

The capacity information on the following pages is based on three droop factors, 10%, 20% and 40%. Droop is deviation from the setpoint of the regulator and is usually stated in percentage of setpoint value.

For highest capacity and the most accurate control within a particular type of the MR95 Series regulators, use the lowest range spring that can be adjusted to the desired setpoint (see Table 3 for part numbers of appropriate springs for each body size).

If closer control is necessary, a regulator of larger capacity or different design should be selected, so that the necessary flow can be obtained with a smaller droop factor.

Sometimes it may be necessary to interpolate the capacity table data to determine capacity for outlet settings not given. To maintain accuracy, it is important when interpolating to stay within a spring range if possible. The following is a procedure for interpolating the data to calculate flow:

1. Determine which spring is to be used.
2. Find the two outlet settings (P_2a and P_2b) that bracket the actual outlet pressure P_2.
3. For a given body size and inlet pressure, find the capacity Qa for P_2a and Qb for P_2b.
4. Use the following formula to determine the interpolated capacity (Q):

$$\frac{Qb - Qa}{P_2b - P_2a} = \frac{Qb - Q}{P_2b - P_2}$$

Example:
P_1 = 100 psig / 6.9 bar
1/4 NPT Type MR95H with 15 to 30 psig / 1.0 to 2.1 bar spring range

P_2 = 20 psig / 1.4 bar
Determine air capacity, Q

Solution:

Qa = 1100 SCFH / 28.8 Nm^3/h
P_2a = 15 psig / 1.0 bar
Qb = 1700 SCFH / 46.5 Nm^3/h
P_2b = 30 psig / 2.1 bar

$$\frac{1700 - 1100}{30 - 15} = \frac{1700 - Q}{30 - 20}$$

Q = 1300 SCFH

$$\frac{46.5 - 28.8}{2.1 - 1.0} = \frac{46.5 - Q}{2.1 - 1.4}$$

Q = 35 Nm^3/h

Note

The same interpolation procedure can be used for different inlet pressures.

Contact your local Sales Office if you should have any questions about selecting the proper regulator.

Air Capacities

Regulating capacities at selected pressures and outlet pressure flows are given in SCFH (60°F and 14.7 psia) of air. To determine the equivalent capacities for other gases, multiply the table capacities by the following appropriate conversion factors: 1.29 for 0.6 specific gravity natural gas, 0.808 for propane, 0.707 for butane or 1.018 for nitrogen. For gases of other specific gravities, divide by the square root of the appropriate specific gravity.

Then, if capacity is desired in Nm^3/h at 0°C and 1.01325 bar, multiply SCFH by 0.0268.

Capacities in Tables 11, 12, 13, 14 and 15 are for regulators using elastomer diaphragms. Depending on regulator construction, a multiplier must be used to convert to capacities for regulators using metal diaphragms.

To determine wide-open flow capacity for relief valve sizing of air at a temperature of 60°F, use the equation for critical pressure drops (absolute outlet pressure equal to one-half or less than one-half the absolute inlet pressure).

$$Q = P_{1(abs)}C_g$$

where,

Q = Gas flow, SCFH (60°F and 14.7 psia)

$P_{1(abs)}$ = Absolute inlet pressure, psia (add 14.7 psi to gauge inlet pressure to obtain absolute inlet pressure)

C_g = Wide-open gas sizing coefficient from Table 6

For pressure drops lower than critical (absolute outlet pressure greater than one-half the absolute inlet pressure), use the sizing nomographs in Fisher™ Catalog 10 or the Fisher Sizing Program.

To obtain capacities in Nm^3/h at 0°C and 1.01325 bar, multiply the capacity determined in SCFH by 0.0268.

Steam Capacities

Capacities in Tables 16, 17, 18, 19 and 20 are in lbs/h of saturated steam. To obtain capacities in kg/h, multiply the capacities given in the table by 0.4535. Capacities have been calculated for stainless steel diaphragms only since steam service exceeds the elastomer diaphragm temperature limits.

To determine wide-open flow capacity for relief valve sizing of steam, use the equation for critical pressure drops (absolute outlet pressure equal to one-half or less than one-half absolute inlet pressure).

$$Q = P_{1(abs)}C_s$$

where,

Q = Steam flow, lbs/h

$P_{1(abs)}$ = Absolute inlet pressure, psia (add 14.7 psi to gauge inlet pressure to obtain absolute inlet pressure)

C_s = Wide-open steam sizing coefficient from Table 6

For pressure drops lower than critical (absolute outlet pressure greater than one-half absolute inlet pressure), use the sizing nomographs in the Fisher Sizing Program.

Water Capacities

All water capacities in Tables 21, 22, 23, 24 and 25 are in gallons per minute (GPM). Capacities in Tables 21, 22 and 24 are for regulators using only elastomer diaphragms. Depending on regulator size, a multiplier, given in these tables, must be used to convert to capacities for regulators using metal diaphragms.

To determine flow capacity for liquid relief valve sizing, refer to the Fisher Sizing Program using the C_v coefficients given in Table 6. The K_m values listed in Table 6 can be used to predict choked flow on liquid service.

To convert capacities to m^3/h, multiply GPM by 0.2271.

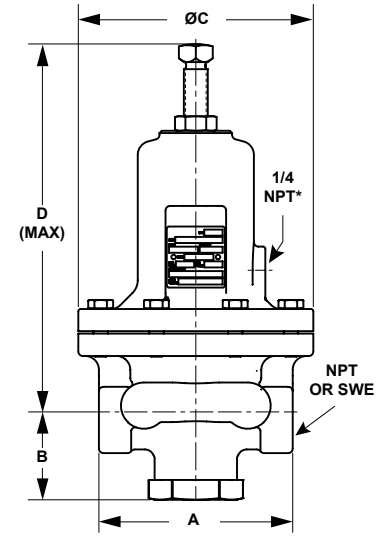

TYPE MR95H (DIMENSION ALSO APPLY) TO TYPES MR95L, MR95HT AND MR95HP

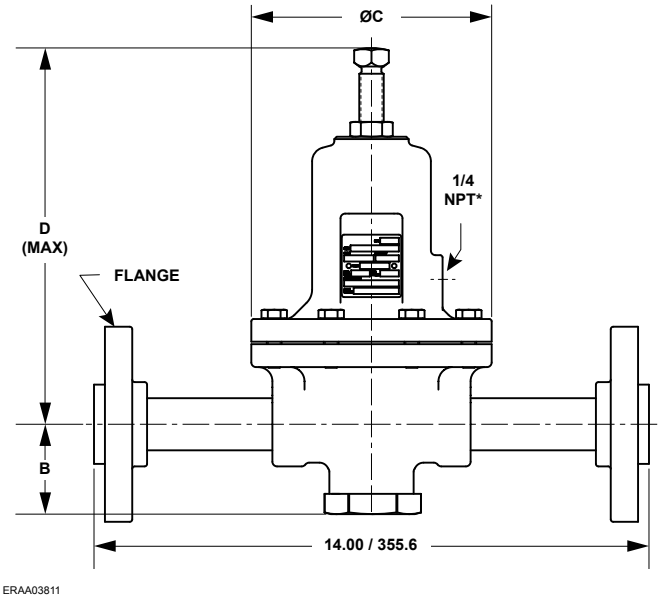

TYPE MR95H FLANGED BODIES AVAILABLE IN 1/2 TO 2 IN. / DN 15 TO 50 BODY SIZES (DIMENSIONS ALSO APPLY TO TYPES MR95L, MR95HT AND MR95HP)

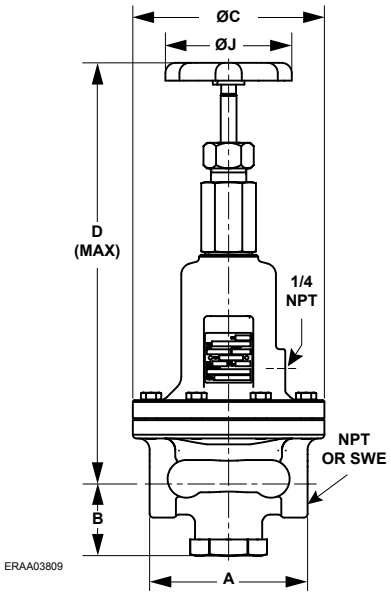

TYPES MR95HD AND MR95HDP (DIMENSIONS ALSO APPLY TO TYPE MR95LD)

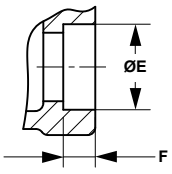

SWE DETAIL

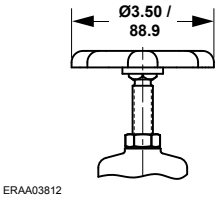

HANDLE DETAIL FOR SIZE 1/2 IN. / DN 15 ONLY

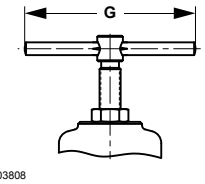

TEE HANDLE DETAIL FOR ALL SIZES EXCEPT 1/2 IN. / DN 15

In. / mm

*Only when specified

Figure 3. *Dimensions Drawing*

Table 31. *Dimensions*

TYPE MR95L																
BODY SIZE, IN. / DN	A				B		C		D (Max)		SWE				Tee Handle	
	Gray Cast Iron		Steel/SST								E		F		G	
	In.	mm	In.	mm	In.	mm	In.	mm	In.	mm	In.	mm	In.	mm	In.	mm
1/4 NPT	2.75	69.9	2.75	69.9	2.04	51.9	5.06	128.5	6.17	156.7	- - - -	- - - -	- - - -	- - - -	3.00	76.2
1/2 / 15	3.88	98.6	4.00	101.6	1.85	47.1	7.00	177.8	7.84	199.2	0.86	21.8	0.38	9.7	- - - -	- - - -
3/4 / 20	4.88	124.0	5.00	127.0	2.27	57.6	10.19	258.8	9.86	250.4	1.07	27.2	0.50	12.7	5.00	127.0
1 / 25	4.88	124.0	5.00	127.0	2.27	57.6	10.19	258.8	9.86	250.4	1.34	34.0	0.50	12.7	5.00	127.0
TYPES MR95H, MR95HT AND MR95HP																
1/4 NPT	2.75	69.9	2.75	69.9	2.04	51.9	3.19	81.0	6.36	161.5	- - - -	- - - -	- - - -	- - - -	3.00	76.2
1/2 / 15	3.88	98.6	4.00	101.6	1.85	47.1	4.25	108.0	8.29	210.6	0.86	21.8	0.38	9.7	- - - -	- - - -
3/4 / 20	4.88	124.0	5.00	127	2.27	57.6	6.06	154.0	10.21	259.4	1.07	27.2	0.50	12.7	5.00	127.0
1 / 25	4.88	124.0	5.00	127	2.27	57.6	6.06	154.0	10.21	259.4	1.34	34.0	0.50	12.7	5.00	127.0
1-1/2 / 40	7.25	184.2	7.38	187.4	3.06	77.7	8.19	208.0	14.78	375.4	1.92	48.8	0.50	12.7	5.00	127.0
2 / 50	7.25	184.2	7.38	187.4	3.06	77.7	8.19	208.0	14.78	375.4	2.07	52.6	0.62	15.8	5.00	127.0
TYPE MR95LD																
BODY SIZE, IN. / DN	A				B		C		D (Max)		SWE				J	
	Gray Cast Iron		Steel/SST								E		F			
	In.	mm	In.	mm	In.	mm	In.	mm	In.	mm	In.	mm	In.	mm	In.	mm
1/4 NPT	2.75	69.9	2.75	69.9	2.04	51.9	5.06	128.5	10.46	265.6	- - - -	- - - -	- - - -	- - - -	4.00	101.6
1/2 / 15	3.88	98.6	4.00	101.6	1.85	47.1	7.00	177.8	11.62	295.2	0.86	21.8	0.38	9.7	4.00	101.6
3/4 / 20	4.88	124.0	5.00	127.0	2.27	57.6	10.19	258.8	13.89	352.8	1.07	27.2	0.50	12.7	4.00	101.6
1 / 25	4.88	124.0	5.00	127.0	2.27	57.6	10.19	258.8	13.89	352.8	1.34	34.0	0.50	12.7	4.00	101.6
TYPES MR95HD AND MR95HDP																
1/4 NPT	2.75	69.9	2.75	69.9	2.04	51.9	3.19	81.0	10.38	263.7	- - - -	- - - -	- - - -	- - - -	4.00	101.6
1/2 / 15	3.88	98.6	4.00	101.6	1.85	47.1	4.25	108.0	11.52	292.5	0.86	21.8	0.38	9.7	4.00	101.6
3/4 / 20	4.88	124	5.00	127.0	2.27	57.6	6.06	154.0	13.76	349.4	1.07	27.2	0.50	12.7	4.00	101.6
1 / 25	4.88	124	5.00	127.0	2.27	57.6	6.06	154.0	13.76	349.4	1.34	34.0	0.50	12.7	4.00	101.6
1-1/2 / 40	7.25	184.2	7.38	187.4	3.06	77.7	8.19	208.0	18.62	472.9	1.92	48.8	0.50	12.7	8.00	203.2
2 / 50	7.25	184.2	7.38	187.4	3.06	77.7	8.19	208.0	18.62	472.9	2.07	52.6	0.62	15.8	8.00	203.2

Ordering Information

When ordering, complete the ordering guide on this page. Refer to the Specifications section on pages 2 and 3. Review the description to the right of each specification and the information in each referenced table or figure. Specify your choice whenever a selection is offered.

Ordering Guide

Type (Select One)
- ☐ MR95L (Low pressure)
- ☐ MR95LD (Low pressure differential)
- ☐ MR95H (High pressure)
- ☐ MR95HD (High pressure differential, must be Steel or Stainless steel construction)
- ☐ MR95HDP (High pressure differential, must be Steel or Stainless steel construction)
- ☐ MR95HP (High pressure, soft-seated)
- ☐ MR95HT (High pressure/temperature, must be Steel or Stainless steel construction)

Body Size (Select One)
- ☐ 1/4 NPT(1)
- ☐ 1/2 in. / DN 15
- ☐ 3/4 in. / DN 20
- ☐ 1 in. / DN 25
- ☐ 1-1/2 in. / DN 40 (not available for MR95L Series)
- ☐ 2 in. / DN 50 (not available for MR95L Series)

Body Material and End Connection Style(2)
(See Tables 1 and 2, Select One)

Gray Cast Iron
- ☐ NPT***

WCC Steel
- ☐ NPT***
- ☐ SWE**
- ☐ Welded CL150 RF***
- ☐ Welded CL300 RF***
- ☐ Welded CL600 RF***
- ☐ Welded PN 16/25/40 RF***

LCC Steel
- ☐ NPT***
- ☐ SWE**
- ☐ Welded CL150 RF***
- ☐ Welded CL300 RF***
- ☐ Welded CL600 RF***
- ☐ Welded PN 16/25/40 RF***

CF8M Stainless steel
- ☐ NPT***
- ☐ SWE**
- ☐ Welded CL150 RF***
- ☐ Welded CL300 RF***
- ☐ Welded CL600 RF***

Body Material and End Connection Style(2)
(See Tables 1 and 2, Select One) (continued)

CF3M Stainless steel
- ☐ NPT***
- ☐ SWE***
- ☐ Welded CL150 RF***
- ☐ Welded CL300 RF***
- ☐ Welded CL600 RF***
- ☐ Welded PN 16/25/40 RF***
- ☐ Integral CL150 RF*
- ☐ Integral CL300 RF*
- ☐ Integral CL600 RF*
- ☐ Integral PN 16/25/40 RF*

Hastelloy® C
- ☐ NPT*
- ☐ Integral CL150 RF*
- ☐ Integral CL300 RF*
- ☐ Integral CL600 RF*
- ☐ Integral PN 16/25/40 RF*

Monel®
- ☐ NPT*
- ☐ Integral CL150 RF*
- ☐ Integral CL300 RF*
- ☐ Integral CL600 RF*
- ☐ Integral PN 16/25/40 RF*

Aluminum-Bronze
- ☐ Integral CL150 RF*
- ☐ Integral CL300 RF*
- ☐ Integral CL600 RF*
- ☐ Integral PN 16/25/40 RF*

Spring Case Material (Select One)
- ☐ Gray cast iron (**standard** for Gray cast iron bodies)(3)***
- ☐ WCC Steel (**standard** for steel or Stainless steel bodies)***
- ☐ LCC Steel***
- ☐ CF8M Stainless steel (optional for Stainless steel bodies)**
- ☐ Hastelloy® C
- ☐ Monel®

Trim Material (See Table 8, Select One)

Metal Seat

416 Stainless steel
- ☐ Trim 1
- ☐ Trim 2
- ☐ Trim 22

Monel® is a mark owned by Special Metals Corporation.
Hastelloy® C is a mark owned by Haynes International, Inc.
1. Available in threaded (NPT) end connection only.
2. Integral flanges are available for MR95H Series only.
3. Gray cast iron spring case not available for Types MR95LD, MR95HD and MR95HDP.

- continued -

Ordering Guide (continued)

Trim Material (See Table 8, Select One) (continued)
Metal Seat (continued)
316 Stainless steel
☐ Trim 3
☐ Trim 23
Hastelloy® C
☐ Trim 5
Monel®
☐ Trim 6
Alloy 6(1)
☐ Trim 4
☐ Trim 24
Elastomer Seat
Nitrile (NBR)
☐ Trim 7
☐ Trim 8
☐ Trim 9
☐ Trim 10
☐ Trim 11
Fluorocarbon (FKM)
☐ Trim 12
☐ Trim 13
☐ Trim 14
☐ Trim 15
Perfluoroelastomer (FFKM)
☐ Trim 16
Polytetrafluoroethylene (PTFE)
☐ Trim 17
☐ Trim 18
☐ Trim 19
Ethylenepropylene (EPDM)
☐ Trim 20

Diaphragm (Select One)
☐ Neoprene (CR)
☐ Fluorocarbon (FKM)
☐ Ethylenepropylene (EPDM)
☐ Monel®
☐ Hastelloy® C
☐ 302 Stainless steel
☐ 302 Stainless steel (Steam Service)(2)

Outlet or Differential Pressure Range (Select One)
Type MR95L or MR95LD
Steel Spring
☐ 2 to 6 psig/psi / 0.14 to 0.41 bar, Yellow***
☐ 5 to 15 psig/psi / 0.34 to 1.0 bar, Green***
☐ 13 to 30 psig/psi / 0.90 to 2.1 bar, Red***
302 Stainless steel Spring
☐ 2 to 6 psig/psi / 0.14 to 0.41 bar, Yellow***
☐ 5 to 15 psig/psi / 0.34 to 1.0 bar, Unpainted***
☐ 13 to 30 psig/psi / 0.90 to 2.1 bar, Unpainted***

Outlet or Differential Pressure Range
(Select One) (continued)
Type MR95H, MR95HD or MR95HDP
1/4 NPT and 1/2 to 1 in. / DN 15 to 25 body sizes
Steel Spring
☐ 15 to 30 psig/psi / 1.0 to 2.1 bar, Yellow***
☐ 25 to 75 psig/psi / 1.7 to 5.2 bar, Green***
☐ 70 to 150 psig/psi / 4.8 to 10.3 bar, Red***
302 Stainless steel Spring(3)
☐ 15 to 30 psig/psi / 1.0 to 2.1 bar, Yellow***
☐ 25 to 75 psig/psi / 1.7 to 5.2 bar, Unpainted***
☐ 70 to 150 psig/psi / 4.8 to 10.3 bar, Unpainted***
1-1/2 and 2 in. / DN 40 and 50 body sizes
Steel Spring
☐ 5 to 80 psig/psi / 0.34 to 5.5 bar, Black with light blue stripe***
☐ 60 to 120 psig/psi / 4.1 to 8.3 bar, Light Gray***
☐ 100 to 140 psig/psi / 6.9 to 9.7 bar, Yellow***
☐ 120 to 150 psig/psi / 8.3 to 10.3 bar, Black***
Type MR95HT
1/4 NPT and 1/2 in. / DN 15 body size
Inconel® Spring
☐ 15 to 100 psig / 1.0 to 6.9 bar, Unpainted***
☐ 80 to 300 psig / 5.5 to 20.7 bar, Unpainted***
3/4 and 1 in. and DN 20 and 25 body sizes
17-4 PH Stainless steel Spring
☐ 15 to 100 psig / 1.0 to 6.9 bar, Unpainted***
☐ 80 to 300 psig / 5.5 to 20.7 bar, Unpainted***
1-1/2 and 2 in. and DN 40 and 50 body sizes
17-4 PH Stainless steel Spring
☐ 15 to 100 psig / 1.0 to 6.9 bar, Unpainted***
☐ 60 to 260 psig / 4.1 to 17.9 bar, Unpainted***
Type MR95HP
1/4 NPT and 1/2 in. / DN 15 body size
Inconel® Spring
☐ 15 to 100 psig / 1.0 to 6.9 bar, Unpainted***
☐ 80 to 400 psig / 5.5 to 27.6 bar, Unpainted***
3/4 and 1 in. / DN 20 and 25 body sizes
17-4 PH Stainless steel Spring
☐ 15 to 100 psig / 1.0 to 6.9 bar, Unpainted***
☐ 80 to 400 psig / 5.5 to 27.6 bar, Unpainted***
1-1/2 and 2 in. / DN 40 and 50 body sizes
17-4 PH Stainless steel Spring
☐ 15 to 100 psig / 1.0 to 6.9 bar, Unpainted***
☐ 60 to 300 psig / 4.1 to 20.7 bar, Unpainted***

Replacement Parts Kit (Optional)
☐ Yes, send one replacement parts kit to match this order.

Monel® and Inconel® are marks owned by Special Metals Corporation.
Hastelloy® C is a mark owned by Haynes International, Inc.
1. Alloy 6 is not available for 1/4 in. size.
2. Only available with Stainless steel seat, orifice/valve plug, valve plug guide and stem/stem guide.
3. Available for 3/4 and 1 in. / DN 20 and 25 body sizes only.

- continued -

Ordering Guide (continued)

Regulators Quick Order Guide	
* * *	Readily Available for Shipment
* *	Allow Additional Time for Shipment
*	Special Order, Constructed from Non-Stocked Parts. Consult your local Sales Office for Availability.
Availability of the product being ordered is determined by the component with the longest shipping time for the requested construction.	

Specification Worksheet

Application:

Specific Use_____

Line Size _____

Fluid Type and Specific Gravity_____

Fluid Temperature _____

Does the Application Require Overpressure Protection?

☐ Yes ☐ No If yes, which is preferred:

☐ Relief Valve ☐ Monitor Regulator ☐ Shutoff Device

Is overpressure protection equipment selection assistance desired?

Pressure:

Maximum Inlet Pressure (P_{1max})_____

Minimum Inlet Pressure (P_{1min}) _____

Downstream Pressure Setting(s) (P_2) _____

Maximum Flow (Q_{max}) _____

Performance Required:

Accuracy Requirements? _____

Need for Extremely Fast Response?_____

Other Requirements:_____

_____

Webadmin.Regulators@emerson.com
Fisher.com
Facebook.com/EmersonProcessManagement
LinkedIn.com/company/emerson-automation-solutions
Twitter.com/emersonprocess

Emerson Automation Solutions
Regulator Technologies

Americas
McKinney, Texas 75070 USA
T +1 800 558 5853
+1 972 548 3574

Asia Pacific
Singapore 128461, Singapore
T +65 6770 8337

Europe
Bologna 40013, Italy
T +39 051 419 0611

Middle East and Africa
Dubai, United Arab Emirates
T +971 4 811 8100

D103742X012 © 2013, 2017 Emerson Process Management Regulator Technologies, Inc. All rights reserved. 01/17.
The Emerson logo is a trademark and service mark of Emerson Electric Co. All other marks are the property of their prospective owners. Fisher™ is a mark owned by Fisher Controls International LLC, a business of Emerson Process Management.

The contents of this publication are presented for information purposes only, and while effort has been made to ensure their accuracy, they are not to be construed as warranties or guarantees, express or implied, regarding the products or services described herein or their use or applicability. All sales are governed by our terms and conditions, which are available on request. We reserve the right to modify or improve the designs or specifications of our products at any time without notice.

Emerson Process Management Regulator Technologies, Inc does not assume responsibility for the selection, use or maintenance of any product. Responsibility for proper selection, use and maintenance of any Emerson Process Management Regulator Technologies, Inc. product remains solely with the purchaser.



The distinctive diamond shape cast into every spring case uniquely identifies the regulator as part of the Fisher™ brand and assures you of the highest-quality engineering, durability, performance, and support.

EMERSON™

REVIEWED BY CONTRACTOR

Kudlik Construction Ltd.

NAME: Sandra Rousseau P.Eng

DATE: Jan 07, 2019

NORCLAIR
MÉCANIQUE DE PROCÉDÉ

TDS AND SHOP DRAWINGS

DA-MP-08R1-Butterfly valve

Date : 2018-12-17

INFORMATION	
Project : **WASTEWATER PLANT - IQALUIT**	
Client : Kudlik Construction Ltd. To Sandra Rousseau P.Eng./ Project Manager	Project number : **2018-062**
Contractor : Norclair inc.	Project number Norclair : **P1039**
Address : 1100, Montee Masson, Laval, QC, Canada H7E 4P2	
Project Manager : Hugo Chartier	E-mail: hchartier@norclair.ca
Phone: 450-688-4012 # 706	Cell.: 514-703-0263

Information, subcontractor or supplier	
Sub supplier : Contrôles Laurentide	
Contact : Fabrice Durocher	Phone : 514-697-9225 ext. 214

Information on the equipment or the proposed materials

Speciality : Mechanical Process

Equipment :

Butterfly valve BFV07 – 75, 100 and 150

Drawing reference :

Specification reference : 40 05 23

Article :

STANTEC PROJECT #: 110126045

SUBMITTAL # DA-MP-08R1 (2018-12-17)

This review by Stantec is for general conformance with the design concept of Stantec's design of the:

☐ Architectural ☐ Electrical
☐ Structural ☑ Other Instrumentation
☐ Mechanical

component(s) only and does not mean that Stantec has verified or approves the shop drawing(s). The Contractor remains solely responsible for the shop drawing(s) and this review by Stantec does not relieve the Contractor of the Contractor's responsibility for errors or omissions in the shop drawing(s) or for meeting all requirements of the contract documents. This review does not mean that Stantec approves the detailed design inherent in the shop drawing, responsibility for which shall remain with the Contractor submitting same, nor does this review mean that Stantec accepts any deviation of the shop drawing(s) from the contract documents. The Contractor is responsible for confirming all dimensions and correlating them at the job site, for all construction means, methods and techniques, and for coordination of construction work of all trades, including coordination of all shop drawings.

Stantec

☐ REVIEWED
☑ REVIEWED, AS NOTED
☐ REVISE AND RESUBMIT
☐ NOT REVIEWED

DATE 2018-JAN-28

BY David Hutchison, P.Eng.

CONSULTANT APPROVAL

PROCESS:
Ensure seat material selection is reinforced PTFE.
Provide details on Keystone Actuator.

Revision 01

STANTEC PROJECT #: 110126045

SUBMITTAL # DA-MP-08R1-Butterfly Valve.

This review by Stantec is for general conformance with the design concept of Stantec's design of the:

☑ Process ☐ Electrical
☐ Structural ☐ Other
☐ Mechanical

component(s) only and does not mean that Stantec has verified or approves the shop drawing(s). The Contractor remains solely responsible for the shop drawing(s) and this review by Stantec does not relieve the Contractor of the Contractor's responsibility for errors or omissions in the shop drawing(s) or for meeting all requirements of the contract documents. This review does not mean that Stantec approves the detailed design inherent in the shop drawing, responsibility for which shall remain with the Contractor submitting same, nor does this review mean that Stantec accepts any deviation of the shop drawing(s) from the contract documents. The Contractor is responsible for confirming all dimensions and correlating them at the job site, for all construction means, methods and techniques, and for coordination of construction work of all trades, including coordination of all shop drawings.

Stantec

☑ REVIEWED
☐ REVIEWED, AS NOTED
☐ REVISE AND RESUBMIT
☐ NOT REVIEWED

DATE Jan 8, 2018

BY Alejandro Rojas, P.Eng

1100, Montée Masson
Laval, QC, Canada
H7E 4P2

Phone. : 450-688-4012
Fax : 450-661-6341
E-Mail : info@norclair.ca
www.norclair.ca

Butterfly valve BFV07 - 75, 100 and 150

Keystone K-LOK Series 36 - 150 ASME
Style: Wafer,
SIZE: All
Body: Stainless Steel
Disc: 316 Stainless Steel
Stem: 17-4 PHSS
Seat/Back
Ring: RTFE/SS
Packing: Teflon
Bearings: SS, Body
Gaskets: Graphite
Flange Drilling: ASME 125/150
Mounting: Keystone Actuator mount
Actuation: Gear - Blue

EMERSON

KEYSTONE SERIES 36 AND 37 K-LOK HIGH PERFORMA

K-LOK Series 36 - ASME 150
K-LOK Series 37 - ASME 300





GENERAL APPLICATIONS

- Modulating service
- Airport refueling
- Hydrocarbon processing
- Chemical/petrochemical processing
- Purified gas
- Steam and vacuum services
- Power and utilities
- Refrigeration
- HVAC
- Alumina refining

TECHNICAL DATA

Size range:	DN 50 - 600 (NPS 2 - 24) See note below for DN 750 - 900 (NPS 30-36)
Vacuum rating:	1.016×10^{-3} mm (4×10^{-5} in) Hg
Body style:	Wafer, lug and double flanged
Pressure rating:	Series 36 - ASME 150 Series 37 - ASME 300
Temperature rating:	-40°C to 538°C (-40°F to 1000°F)

Metal seated, fire-safe and DN 750-900 (NPS 30-36) valves are available. For more information on these items see Figures 360/362 data sheet (VCTDS-00032).

Lug and double flange bodies are full rated for bidirectional dead end service.

FEATURES AND BENEFITS

- K-LOK polymer and elastomer seats provide bi-directional, drop-tight shut-off in vacuum as well as at full rated differential pressure. Its unique design does not rely on pressure to assist sealing therefore seals at high and low pressures, as well as dirty services. A variety of materials allows optimum seat life in all applications.
- Blow-out resistant shaft is standard on all valves for increased safety.
- Unique packing design allows for use in pressure as well as vacuum without modification or special assembly.
- Disc taper pins are tangentially positioned half in disc and half in shaft, placing them in compression rather than shear, which eliminates potential for failure.
- Rocker-shaped gland bridge compensates for uneven adjustment of gland nuts reducing packing leaks.
- Integrally cast disc position stop perfectly locates the disc in seat, achieving maximum seat and seal life.
- Extended neck allows for 50 mm (2") of pipeline insulation.
- Integrally cast mounting pad provides direct mounting of actuators eliminating the need for costly brackets and couplings.
- Flattened body bore at shaft journal ports positions shaft bearings near disc, providing maximum shaft support resulting in reduced wear and longer life.

© 2017 Emerson. All rights reserved.

PRINCIPLES OF OPERATION

Double offset disc/shaft

K-LOK's unique two-piece shaft and double-offset disc/shaft design allows for high cycling and creates a lower disc profile with increased capacity and a rangeability of 33:1.

In addition to increasing the flow area across the disc, this design minimizes wear points between seat and disc.

The first offset is achieved by locating the shafts downstream of the center-line of the seat. This allows for a totally unobstructed 360° sealing surface.

The second offset locates the shafts off-center of the vertical axis of the seat.

The combination of these two offsets creates a camming effect as the disc swings into and out of the seat. The disc lifts quickly out of the seat in the first few degrees of travel and does not contact the seat again until it is nearly closed. There are no wear points between the seat and disc, while operating torques are reduced and seat life is extended.

Adjustable shaft packaging (polymer seated valves)

The K-LOK's unique shaft packing is composed of 3 rings of braided PTFE rope between one PTFE V-ring at the top and bottom. The packing operates on an interference fit with the body and therefore will seal in pressure and vacuum. Many other manufacturers' designs will require special packing for vacuum services.

This packing is easily field adjustable without the need to remove actuation due to its unique inverted packing adjustment bolts. Another important feature is the use of a rocker shaped packing gland bridge that compensates for uneven tightening of the packing gland bolts eliminating packing leaks due to uneven packing compression.

Blow-out resistant shaft (BOR)

The Keystone K-LOK high performance butterfly valve contains a blow-out resistant shaft as a standard. This is achieved by machining a groove in the shaft that allows a snap ring to lock into the shaft groove.

The packing gland follower is provided with an undercut on its lower surface which encapsulates the locked in snap ring. This design provides positive retention of the shaft in the unlikely event of a shaft breakage.

DOUBLE OFFSET

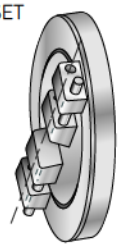

FIRST OFFSET



SECOND OFFSET



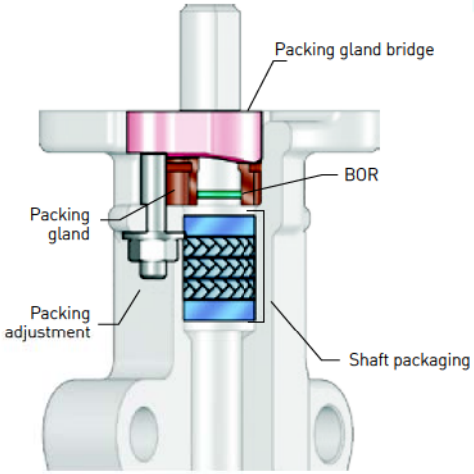

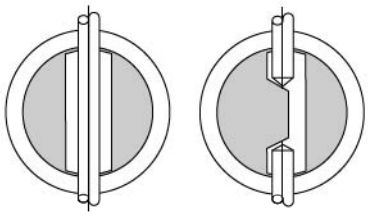

Aspect ratio = open area ÷ disc area

Two-piece shaft vs. one-piece shaft

K-LOK's disc geometry maximizes flow capacity by increasing the available flow area through the valve. This increase in disc efficiency results in a higher valve C_v.

Standards and specifications applicable for K-LOK®		
ASME	B16.34	Steel valves
	B31.3	Chemical plant and petroleum refinery piping
	B16.5	Steel pipe flanges and flange fittings
MSS	SP-6	Standard finishes for pipe flanges
	SP-25	Standard marking systems for valves
	SP-55	Quality standard for steel casting
	SP-61	Pressure testing of steel valves
	SP-68	High pressure offset disc butterfly valves
API	609	Butterfly valves (most models)
	607	Fire-test for soft seated quarter-turn valves
	598	Valve inspection and test, upon request
NSF/ANSI Standard 61		Potable water, upon request
PED/CE		European directive, upon request

SEAT DESIGN

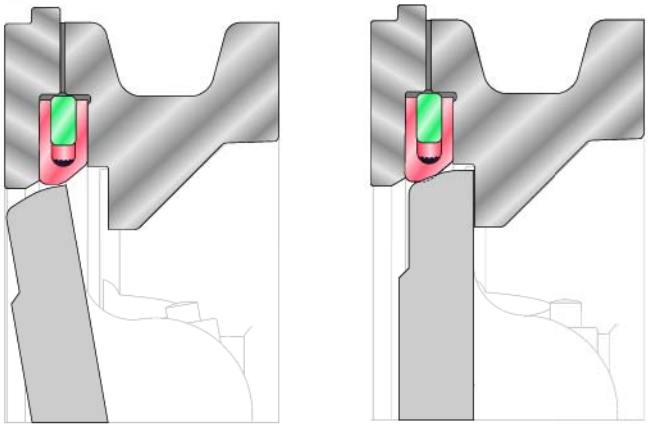

SEAT REPLACEMENT

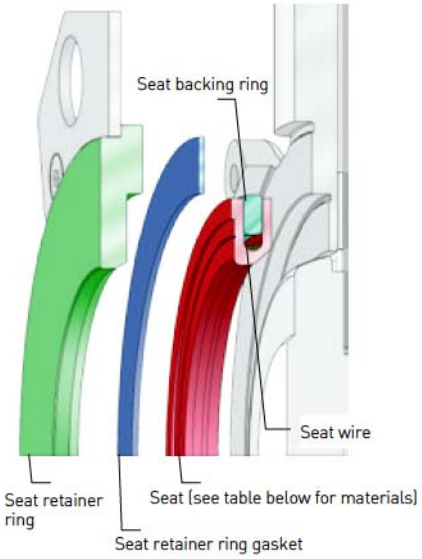

SEAT DESIGN

The K-LOK seat is a true interference seat design and unlike most other manufactures does not rely on line pressure to assist in sealing. All seats seal drop-tight bi-directionally at low and high pressure as well as vacuum. Given the interference seat design the K-LOK will also operate in dirty services where most pressure assist valves fail.
Polymer (PTFE, RTFE and UHMWPE) seats incorporate a unique design consisting of a stainless steel braided wire winding, enclosed in a U-shape envelope to provide seating energy and memory. This wire winding allows axial flexibility in both directions of flow. The winding also allows radial flexibility when the disc is not fully closed, reducing seat/disc interference, seat wear and shaft torque. When the disc closes, it provides circumferential stiffness and assures the required disc/seat seals tight in both vacuum and pressure.
Elastomer seats are molded around a stack of V-shaped steel rings that provide the same stability, support and flexure as the wire windings in polymer seats.

SEAT REPLACEMENT

All seats for the Keystone K-LOK are easily field replaceable. Simply remove seat retainer ring, rotate disc to fully closed position and replace seat assembly and gasket. Dis-assembly of the disc and shaft is not required. Seat retaining ring gaskets are not used with elastomer seats.

SEAT MATERIALS

Seat	Material	Typical applications
1. RTFE	Reinforced polytetrafluoroethylene	HVAC, steam, chlorine, ammonia, nitrogen, water, gasoline, vacuum
2. PTFE	Polytetrafluoroethylene	Pharmaceuticals, air, potable water, dyes, white mediums
3. UHMWPE	Ultra high molecular weight polyethylene	Abrasives, suspended solids, scaling mediums
For seats 1 thru 3		
Wire wrap	Stainless steel braided wire	
Seat backing ring	Polyester or phenolic Stainless steel	General purpose services up to 93°C (200°F) Steam, ammonia, elevated temperature services

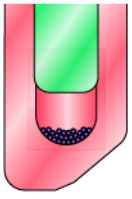

Seat	Material	Typical applications
4. EPDM	-	Water based mediums, slurry applications, abrasives
5. NBR	-	Oil based mediums, slurry applications, abrasives
6. Fluoroelastomer (FKM)	-	Elevated temperatures, slurry applications, abrasives
For seats 4 thru 6		
Metal insert	Carbon steel	

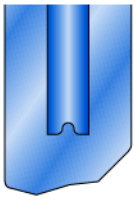

SEAT TIGHTNESS

All polymer seated valves are factory tested for bi-directional drop tight shut-off at 10% above the rated pressure. This exceeds the ANSI FCI 70-2 standard which establishes a service of six leakage classes for control valves as per below:

ANSI/FCI 70-2 CONTROL VALVE SEAT LEAKAGE, TOLERANCES, AND TEST SPECIFICATIONS

ANSI B16.104-1976	Maximum leakage			Test medium	Pressure and temperature
Class VI	Nominal port diameter DN (NPS)	Bubbles per minute[3]	ml. per minute	Air or nitrogen	Service ΔP or 3.4 bar differential, whichever is lower, at 10°C - 52°C (50°F - 125°F)
	50 (2)	3	0.45		
	65 (2½)	4	0.60		
	80 (3)	6	0.90		
	100 (4)	11	1.70		
	150 (6)	27	4.00		
	200 (8)	45	6.75		
Class V	5×10^{-12} m³/sec/bar differential/mm port dia.			Water	Service ΔP at 10°C - 52°C (50°F - 125°F)
Class IV	0.01% valve capacity at full travel			Air or water	Service ΔP or 3.4 bar differential, whichever is lower, at 10°C - 52°C (50°F - 125°F)

NOTES

1. K-LOK polymer and elastomer seats meet or exceeds ANSI Class VI shut-off.
2. K-LOK metal seats and fire-safe seats (post fire exposure) meet or exceeds ANSI Class IV shut-off.
3. Using the ANSI/FCI specified calibrated measuring device.

Reference ANSI/FCI 70-2 for further information.

ABRASION RESISTANT TRIMS (UP TO 93°C/200°F)

Body	Disc	Shaft	Seat/backing ring	Gasket	Packing
Carbon steel	316 SS/ENP	17-4PH SS	UHMWPE/polyester	Non asbestos fiber	PTFE
316 SS	316 SS/ENP	17-4PH SS	UHMWPE/polyester	Non asbestos fiber	PTFE

GENERAL PURPOSE TRIMS (UP TO 260°C/500°F)

Body	Disc	Shaft	Seat/backing ring	Gasket	Packing
Carbon steel	316 SS	17-4PH SS	RTFE/SS	Graphite	PTFE
316 SS	316 SS	17-4PH SS	RTFE/SS	Graphite	PTFE

STEAM TRIMS

Body	Disc	Shaft	Seat/backing ring	Gasket	Packing
Carbon steel	316 SS/ENP	17-4PH SS	RTFE/SS	Graphite	PTFE
316 SS	316 SS/ENP	17-4PH SS	RTFE/SS	Graphite	PTFE

CORROSION RESISTANT TRIMS

Body	Disc	Shaft	Seat/backing ring	Gasket	Packing
316 SS	316 SS	316 SS Cond. B	RTFE/SS	Graphite	PTFE
316 SS	316 SS	NITRONIC 50®	RTFE/SS	Graphite	PTFE
2205 Duplex	2205 Duplex	2205 Duplex	RTFE/SS	Graphite	PTFE
2507 Super Duplex	2507 Super Duplex	2507 Super Duplex	RTFE/SS	Graphite	PTFE

NOTE

other trims are available, please contact your sales representative

SPECIAL SERVICE VALVES AVAILABLE

- Oxygen cleaned valves
- NSF-61 certified valves
- Chlorine cleaned valves
- Seawater valves
- Alloy trimmed valves
- PED/CE certified valves

Please contact your local sales representative for other requests.

MATERIALS OF CONSTRUCTION

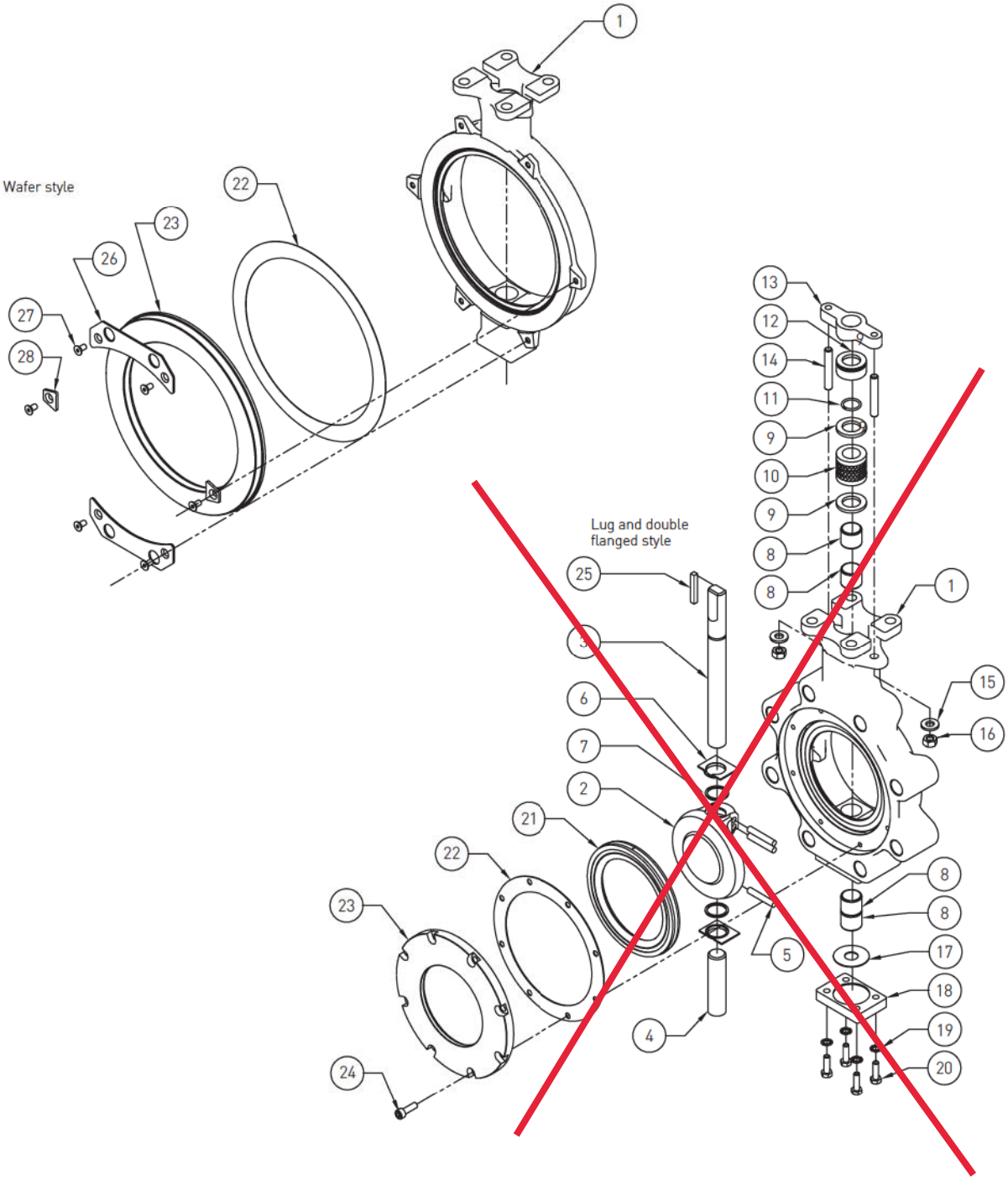

STANDARD MATERIALS OF CONSTRUCTION

Pos	Description	Material	Material standard
1	Body	Carbon steel Stainless steel	ASTM A216-WCB ASTM A351-CF8M
2	Disc	316 SS 316 SS/ENP	ASTM A351-CF8M ASTM A351-CF8M / Electroless nickel plated
3	Upper shaft	316B SS 17-4PH SS Nitronic 50	ASTM A276-316 Condition B ASTM A564- Condition H1075 or H1100 ASTM A276-XM19
4	Lower shaft	316B SS 17-4PH SS Nitronic 50	ASTM A276-316 Condition B ASTM A564- Condition H1075 or H1100 ASTM A276-XM19
5	Taper pin	316B SS 17-4PH SS Nitronic 50	ASTM A276-316 Condition B ASTM A564- Condition H1075 or H1100 ASTM A276-XM19
6	Spacer	316 SS	
7	Thrust washer	316 SS / BRZ / PTFE	
8	Bushing	316 SS / BRZ / PTFE RTFE / Composite 316SS / Nitrited	
9	Anti-extrusion ring	316 SS	
10	Stem packing	PTFE , Graphite	
11	Ring, stem retention	316 SS	
12	Gland	316 SS	
13	Gland bridge	17-4PH SS	
14	Stud	Stainless steel 18.8	
15	Washer, split lock	Stainless steel 18.8	
16	Hex nut	Stainless steel 18.8	
17	Bottom cover gasket	Graphite Non-asbestos fiber	
18	Bottom cover	Carbon steel Stainless steel	ASTM A216-WCB ASTM A351-CF8M
19	Washer, ext. Tooth lock	Stainless steel 18.8	
20	Screw, hex hd cap	Stainless steel 18.8	
21	Seat assembly		
21.1	Seat	Polymer Elastomer	PTFE , RTFE, UHMWPE NBR, EPDM, FKM
21.2	Wire structure	Stainless steel	
21.3	Seat backing ring	316 SS	
22	Gasket seat retaining ring	Graphite Non-asbestos fiber	Not used with Elastomer seats
23	Seat retaining ring	Carbon steel Stainless steel	ASTM A216-WCB ASTM A351-CF8M
24	Screw, socket hd cap	Stainless steel	
25	Key	Carbon steel	
26	Retainer plate	Stainless steel Carbon steel / zinc plated	
27	Retainer plate/clip screw	Stainless steel 18.8	
28	Clip	Stainless steel Carbon steel / zinc plated	

All fasteners are 18-8 SS

DIMENSIONS - WAFER STYLE

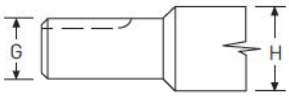

Upper shaft/keyway
DN 200 to DN 600

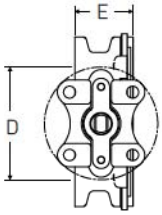

Top plate view

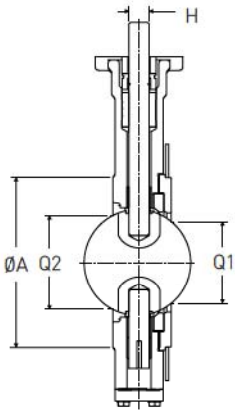

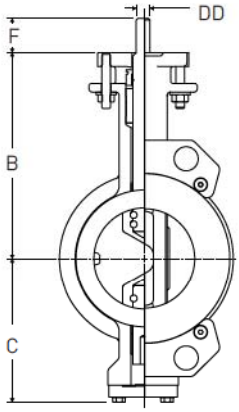

SERIES 36, ASME CLASS 150, WAFER STYLE, DIMENSIONS (mm)

Size											Top plate drilling					Weight	Mounting
											DD or keyway						
DN	A	B	C	D	E	F	G	H	Q1	Q2	(mm)	(inch)	PCD	No. holes	Hole dia.	(kg)	code
50	110	152	102	105	60	32	N/A	14.29	35	48	9.53	⅜	83	4	11	5	BAB
65	105	152	114	105	48	32	N/A	14.29	56	57	9.53	⅜	83	4	11	4	BAB
80	127	168	126	105	48	32	N/A	15.88	54	67	11.11	7/16	83	4	11	5	BAC
100	157	191	133	105	54	32	N/A	19.05	81	92	12.70	½	83	4	11	8	BAD
125	186	192	146	105	57	32	N/A	19.05	111	121	12.70	½	83	4	11	10	BAD
150	216	222	179	154	57	32	19.05	22.23	133	141	12.70	½	127	4	14	14	CAD
150*	216	222	179	154	57	32	N/A	22.23	133	141	15.88	⅝	127	4	14	14	CAE
200	270	257	211	154	64	51	N/A	28.58	178	187	6.35 x 6.35 x 41	¼ x ¼ x 1⅝	127	4	14	21	CAF
250	324	289	244	154	73	51	28.58	34.93	232	237	6.35 x 6.35 x 41	¼ x ¼ x 1⅝	127	4	14	34	CAF
250*	324	289	244	154	73	76	N/A	34.93	232	237	7.94 x 7.94 x 67	5/16 x 5/16 x 2⅝	127	4	14	34	CAG
300	381	330	287	208	81	76	34.93	38.10	278	284	7.94 x 7.94 x 67	5/16 x 5/16 x 2⅝	165	4	21	53	DAG
350	413	337	326	208	92	76	N/A	41.28	298	311	9.53 x 9.53 x 67	⅜ x ⅜ x 2⅝	165	4	21	60	DAH
400	470	368	323	208	102	76	41.28	44.45	340	359	9.53 x 9.53 x 67	⅜ x ⅜ x 2⅝	165	4	21	84	DAH
450	533	406	349	208	114	103	N/A	47.63	395	405	12.70 x 9.53 x 105	½ x ⅜ x 4⅛	165	4	21	131	DAJ
500	584	443	386	209	127	110	N/A	57.15	440	449	12.70 x 9.53 x 102	½ x ⅜ x 4	165	4	21	171	DAK
600	692	500	446	209	154	108	57.15	63.50	524	535	12.70 x 9.53 x 102	½ x ⅜ x 4	165	4	21	269	DAK

* E.N.P. discs require larger upper shaft connection diameters on DN 150 and DN 250 valve sizes for UHMWPE seat trims.
N/A = not applicable

SERIES 37, ASME CLASS 300, WAFER STYLE, DIMENSIONS (mm)

Size											Top plate drilling					Tapped lug data			Weight	Mount-ing
											DD or keyway			No.	Holes	No.				
DN	A	B	C	D	E	F	G	H	Q1	Q2	(mm)	(inch)	PCD	holes	dia.	holes	PCD	Tap	(kg)	code
50	110	152	102	105	60	32	N/A	14.29	35	48	9.53	⅜	83	4	11	-	-		5	BAB
65	105	152	114	105	48	32	N/A	14.29	56	57	9.53	⅜	83	4	11	-		-	4	BAB
80	127	168	124	105	48	32	N/A	15.88	52	67	11.11	7/16	83	4	11	-	-	-	5	BAC
100	157	191	133	105	54	32	N/A	19.05	81	92	12.70	½	83	4	11	-	-	-	8	BAD
125	186	192	146	105	59	32	N/A	19.05	110	121	12.70	½	83	4	11	-	-	-	10	BAD
150	216	222	179	154	59	51	N/A	22.23	133	141	15.88	⅝	127	4	14	-	-	-	14	CAE
200	270	257	211	154	73	51	N/A	28.58	171	187	6.35 x 6.35 x 41	¼ x ¼ x 1⅝	127	4	14	-	-	-	25	CAF
250	324	289	244	154	83	76	N/A	34.93	224	237	7.94 x 7.94 x 67	5/16 x 5/16 x 2⅝	127	4	14	4	387	1-8UNC	42	CAG
300	381	330	287	208	92	76	34.9	38.10	270	284	7.94 x 7.94 x 67	5/16 x 5/16 x 2⅝	165	4	21	-	-	-	58	DAG
350	413	365	321	208	117	108	N/A	47.63	300	302	12.70 x 9.53 x 105	½ x ⅜ x 4⅛	165	4	21	4	514	1⅛-8UN	92	DAJ
400	470	408	352	208	133	105	N/A	57.15	344	348	12.70 x 9.53 x 102	½ x ⅜ x 4	165	4	21	4	572	1¼-8UN	122	DAK
450	533	432	382	208	149	107	N/A	63.50	392	394	15.88 x 15.88 x 102	⅝ x ⅝ x 4	165	4	21	4	628	1¼-8UN	169	DBA
500	584	513	415	191	159	135	N/A	69.85	438	441	15.88 x 15.88 x 162	⅝ x ⅝ x 6⅜	203	4	21	4	686	1¼-8UN	219	LAX
600	692	594	485	244	181	173	N/A	88.90	525	529	22.23 x 22.23 x 144	⅞ x ⅞ x 5 11/16	248	4	27	4	813	1½-8UN	343	MAY

N/A = not applicable

KEYSTONE SERIES 36 AND 37 K-LOK HIGH PERFORMANCE BUTTERFLY VALVES

METRIC DATA

DIMENSIONS - LUG STYLE

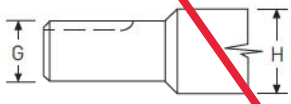

Upper shaft/keyway
DN 200 to DN 600

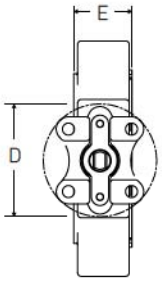

Top plate view

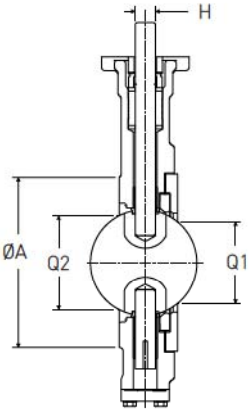

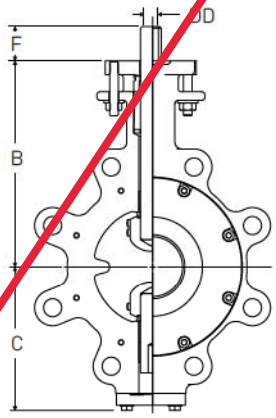

SERIES 36, ASME CLASS 150, LUG STYLE, DIMENSIONS (mm)

Size											Top plate drilling					Tapped lug data				Mounting
											DD or keyway			No.	Holes	No.			Weight	
DN	A	B	C	D	E	F	G	H	Q1	Q2	(mm)	(inch)	PCD	holes	dia.	holes	PCD	Tap	(kg)	code
50	113	152	102	10	60	32	N/A	14.29	35	48	9.53	⅜	83	4	11	4	121	⅝-11UNC	5	BAB
65	121	152	110	10	48	32	N/A	14.29	56	57	9.53	⅜	83	4	11	4	140	⅝-11UNC	5	BAB
80	134	168	126	10	48	32	N/A	15.88	54	67	11.11	7/16	83	4	11	4	152	⅝-11UNC	7	BAC
100	164	191	133	10	54	32	N/A	19.05	81	92	12.70	½	83	4	11	8	191	⅝-11UNC	10	BAD
125	193	192	146	10	57	32	N/A	19.05	111	121	12.70	½	83	4	11	8	216	¾-10UNC	14	BAD
150	225	222	149	154	57	32	19.05	22.23	133	141	12.70	½	127	4	14	8	241	¾-10UNC	18	CAD
150*	225	222	149	154	57	32	N/A	22.23	133	141	15.87	⅝	127	4	14	8	241	¾-10UNC	18	CAE
200	270	257	211	154	64	51	N/A	28.58	178	187	6.35 x 6.35 x 41	¼ x ¼ x 1⅝	127	4	14	8	298	¾-10UNC	27	CAF
250	324	289	244	154	71	51	28.58	34.93	232	237	6.35 x 6.35 x 41	¼ x ¼ x 1⅝	127	4	14	12	362	⅞-9UNC	40	CAF
250*	324	289	244	154	71	76	N/A	34.93	232	237	7.94 x 7.94 x 67	5/16 x 5/16 x 2⅝	127	4	14	12	362	⅞-9UNC	40	CAG
300	381	330	269	208	81	76	34.93	38.10	278	284	7.94 x 7.94 x 67	5/16 x 5/16 x 2⅝	165	4	21	12	432	⅞-9UNC	67	DAG
350	413	337	301	208	92	76	N/A	41.28	298	311	9.53 x 9.53 x 67	⅜ x ⅜ x 2⅝	165	4	21	12	476	1-8UNC	83	DAH
400	470	368	330	208	102	76	41.28	44.45	340	359	9.53 x 9.53 x 67	⅜ x ⅜ x 2⅝	165	4	21	16	540	1-8UNC	97	DAH
450	533	406	349	208	114	103	N/A	47.63	395	405	12.70 x 9.53 x 105	½ x ⅜ x 4⅛	165	4	21	16	578	1⅛-8UN	159	DAJ
500	584	443	386	209	127	110	N/A	57.15	440	449	12.70 x 9.53 x 102	½ x ⅜ x 4	165	4	21	20	635	1⅛-8UN	208	DAK
600	692	500	446	209	154	108	57.15	63.50	524	535	12.70 x 9.53 x 102	½ x ⅜ x 4	165	4	21	20	749	1¼-8UN	319	DAK

* E.N.P. discs require larger upper shaft connection diameters on DN 150 and DN 250 valve sizes for UHMWPE seat trims.
N/A = not applicable

SERIES 37, ASME CLASS 300, LUG STYLE, DIMENSIONS (mm)

Size											Top plate drilling					Tapped lug data				Mounting
											DD or keyway			No.	Holes	No.			Weight	
DN	A	B	C	D	E	F	G	H	Q1	Q2	(mm)	(inch)	PCD	holes	dia.	holes	PCD	Tap	(kg)	code
50	113	152	101	105	60	32	N/A	14.29	35	48	9.53	⅜	83	4	11	8	127	⅝-11UNC	6	BAB
65	122	152	110	105	48	32	N/A	14.29	56	57	9.53	⅜	83	4	11	8	149	¾-10UNC	7	BAB
80	135	168	118	105	48	32	N/A	15.88	52	67	11.11	7/16	83	4	11	8	168	¾-10UNC	8	BAC
100	165	191	133	105	54	32	N/A	19.05	81	92	12.70	½	83	4	11	8	200	¾-10UNC	11	BAD
125	194	192	146	105	59	32	N/A	19.05	110	121	12.70	½	83	4	11	8	235	¾-10UNC	15	BAD
150	216	222	174	154	59	51	N/A	22.23	133	141	15.88	⅝	127	4	14	12	270	¾-10UNC	20	CAE
200	270	257	211	154	73	51	N/A	28.58	171	187	6.35 x 6.35 x 41	¼ x ¼ x 1⅝	127	4	14	12	330	⅞-9UNC	36	CAF
250	324	289	244	154	83	76	N/A	34.93	224	237	7.94 x 7.94 x 67	5/16 x 5/16 x 2⅝	127	4	14	16	387	1-8UNC	54	CAG
300	381	330	282	208	92	76	34.93	38.10	270	284	7.94 x 7.94 x 67	5/16 x 5/16 x 2⅝	165	4	21	16	451	1⅛-8UN	81	DAG
350	413	365	321	208	117	108	N/A	47.63	300	303	12.70 x 9.53 x 105	½ x ⅜ x 4⅛	165	4	21	20	514	1⅛-8UN	133	DAJ
400	470	403	352	208	133	105	N/A	57.15	344	348	12.70 x 9.53 x 102	½ x ⅜ x 4	165	4	21	20	572	1¼-8UN	177	DAK
450	533	432	382	208	149	107	N/A	63.50	392	394	15.88 x 15.88 x 102	⅝ x ⅝ x 4	165	4	21	24	629	1¼-8UN	238	DBA
500	584	513	415	191	159	165	N/A	69.85	438	441	15.88 x 15.88 x 162	⅝ x ⅝ x 6⅜	203	4	21	24	686	1¼-8UN	298	LAX
600	692	594	485	241	181	173	N/A	88.90	525	529	22.23 x 22.23 x 144	⅞ x ⅞ x 5 11/16	248	4	27	24	813	1½-8UN	428	MAY

N/A = not applicable

DIMENSIONS - DOUBLE FLANGE STYLE

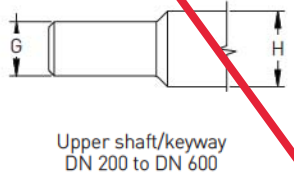

Upper shaft/keyway
DN 200 to DN 600

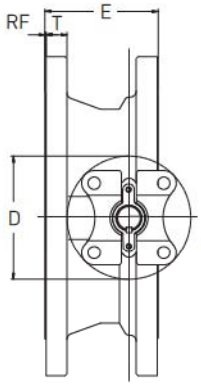

Top plate view

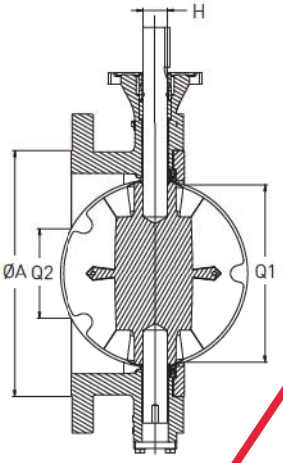

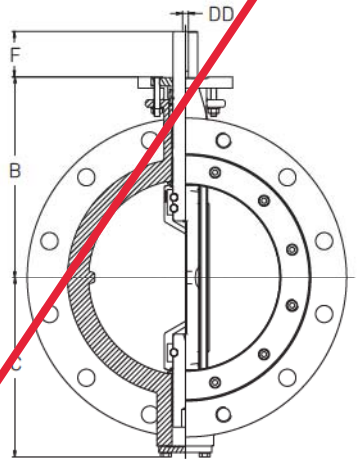

SERIES 36F, ASME CLASS 150, DOUBLE FLANGED STYLE, DIMENSIONS (mm)

Size DN	A	B	C	D	E	F	G	H	Q1	Q2	T	RF
80	127	168	126	105	114	32	N/A	15.88	54	N/A	19.1	2
100	157	191	133	105	127	32	N/A	19.05	82	N/A	24.0	2
150	216	222	161	154	140	32	19.05	22.23	133	N/A	25.5	2
150*	216	222	161	154	140	32	N/A	22.23	133	N/A	25.5	2
200	270	257	211	154	152	51	N/A	28.58	179	N/A	28.5	2
250	324	289	244	154	165	51	28.58	34.93	232	79	30.0	2
250*	324	289	244	154	165	76	N/A	34.93	232	79	30.0	2
300	381	330	269	208	178	76	34.93	38.10	277	123	31.5	2
350	413	337	301	208	190	76	N/A	41.28	303	152	35.0	2
400	470	368	330	208	216	76	41.28	44.45	348	159	36.5	2
450	533	406	349	208	222	103	N/A	47.63	394	271	39.5	2
500	584	443	386	209	229	110	N/A	57.15	440	333	43.0	2
600	692	500	446	209	267	108	57.15	63.50	528	399	47.5	2

SERIES 36F, ASME, CLASS 150, DOUBLE FLANGED STYLE, DIMENSIONS (mm [CONTINUED])

Size	Top plate drilling					Flange drilling data				
	DD or Keyway			No.	Holes	Number	Diameter of bolt	Diameter of bolt	Diameter of bolts	Mounting
DN	(mm)	(inch)	PCD	holes	dia.	of bolts	holes	circle	(imperial)	code
80	11.11	7/16	83	4	11	4	19.1	152	5/8-11UNC	BAC
100	12.70	1/2	83	4	11	8	19.1	191	5/8-11UNC	BAD
150	12.70	1/2	127	4	14	8	22.2	241	3/4-10UNC	CAD
150*	15.88	5/8	127	4	14	8	22.2	241	3/4-10UNC	CAE
200	6.35 x 6.35 x 41	1/4 x 1/4 x 1 5/8	127	4	14	8	22.2	298	3/4-10UNC	CAF
250	6.35 x 6.35 x 41	1/4 x 1/4 x 1 5/8	127	4	14	12	25.4	362	7/8-9UNC	CAF
250*	7.94 x 7.94 x 67	5/16 x 5/16 x 2 5/8	127	4	14	12	25.4	362	7/8-9UNC	CAG
300	7.94 x 7.94 x 67	5/16 x 5/16 x 2 5/8	165	4	21	12	25.4	432	7/8-9UNC	DAG
350	9.53 x 9.53 x 67	3/8 x 3/8 x 2 5/8	165	4	21	12	28.6	476	1-8UNC	DAH
400	9.53 x 9.53 x 67	3/8 x 3/8 x 2 5/8	165	4	21	16	28.6	540	1-8UNC	DAH
450	12.70 x 9.53 x 105	1/2 x 3/8 x 4 1/8	165	4	21	16	31.8	578	1 1/8-8UN	DAJ
500	12.70 x 9.53 x 102	1/2 x 3/8 x 4	165	4	21	20	31.8	635	1 1/8-8UN	DAK
600	12.70 x 9.53 x 102	1/2 x 3/8 x 4	165	4	21	20	34.9	749	1 1/4-8UN	DAK

* E.N.P. discs require larger upper shaft connection diameters on DN 150 and DN 250 valve sizes for UHMWPE seat trims.
N/A = not applicable

DIMENSIONS - DOUBLE FLANGE STYLE

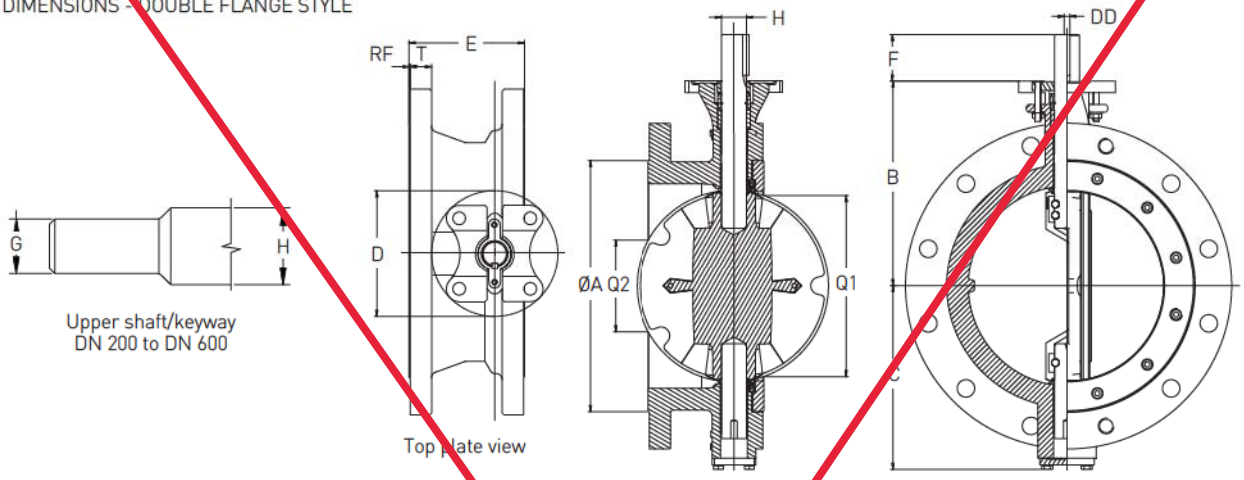

SERIES 37F, ASME, CLASS 300, DOUBLE FLANGED STYLE, DIMENSIONS (mm)

Size DN	A	B	C	D	E	F	G	H	Q1	Q2	T	RF
80	127	168	118	105	114	32	N/A	15.88	54	N/A	28.4	2
100	157	191	148	105	127	32	N/A	19.05	80	N/A	31.5	2
150	216	222	181	154	140	32	N/A	22.23	132	N/A	36.5	2
200	270	257	211	154	152	51	N/A	28.58	170	N/A	41.0	2
250	324	289	244	154	165	76	N/A	34.93	223	79	47.5	2
300	381	330	282	208	178	78	34.93	38.10	269	162	51.0	2
350	413	365	321	208	190	108	N/A	47.63	300	184	54.0	2
400	470	408	352	208	216	105	N/A	57.15	345	211	57.0	2
450	533	432	382	208	222	107	N/A	63.50	392	292	60.5	2
500	584	513	415	191	229	165	N/A	69.85	437	352	63.5	2
600	692	594	485	241	241	173	N/A	88.90	525	422	70.0	2

SERIES 37F, ASME, CLASS 300, DOUBLE FLANGED STYLE, DIMENSIONS (mm [Continued])

	Top plate drilling					Flange drilling data				
Size DN	DD or Keyway (mm)	(inch)	PCD	No. holes	Holes dia.	Number of bolts	Diameter of bolt holes	Diameter of bolt circle	Diameter of bolts (imperial)	Mounting code
80	11.11	7/16	83	4	11	8	22.2	168	¾-10UNC	BAC
100	12.70	½	83	4	11	8	22.2	200	¾-10UNC	BAD
150	15.88	⅝	127	4	14	12	22.2	270	¾-10UNC	CAE
200	6.35 x 6.35 x 41	¼ x ¼ x 1⅝	127	4	14	12	25.4	330	⅞-9UNC	CAF
250	7.94 x 7.94 x 67	5/16 x 5/16 x 2⅝	127	4	14	16	28.6	387	1-8UNC	CAG
300	7.94 x 7.94 x 67	5/16 x 5/16 x 2⅝	165	4	21	16	31.8	451	1⅛-8UN	DAG
350	12.70 x 9.53 x 105	½ x ⅜ x 4⅛	165	4	21	20	31.8	514	1⅛-8UN	DAJ
400	12.70 x 9.53 x 102	½ x ⅜ x 4	165	4	21	20	34.9	572	1¼-8UN	DAK
450	15.88 x 15.88 x 102	⅝ x ⅝ x 4	165	4	21	24	34.9	629	1¼-8UN	DBA
500	15.88 x 15.88 x 162	⅝ x ⅝ x 6⅜	203	4	21	24	34.9	686	1¼-8UN	LAX
600	22.23 x 22.23 x 144	⅞ x ⅞ x 5 11/16	248	4	27	24	41.3	813	1½-8UN	MAY

N/A = not applicable

DIMENSIONS - WAFER STYLE

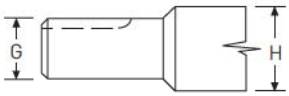

Upper shaft/keyway
NPS 8 to NPS 24

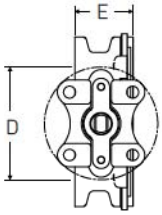

Top plate view

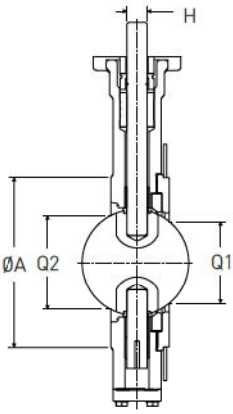

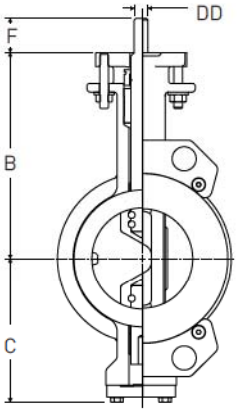

SERIES 36, ASME CLASS 150, WAFER STYLE, DIMENSIONS (inches)

Size											Top plate drilling					Weight	Mounting
											DD or keyway						
NPS	A	B	C	D	E	F	G	H	Q1	Q2	(inch)	(mm)	PCD	No. holes	Hole dia.	lbs.	code
2	4 5/16	6	4	4 5/32	2 3/8	1 1/4	N/A	9/16	1 3/8	1 7/8	3/8	9.53	3 1/4	4	7/16	10	BAB
2 1/2	4 1/8	6	4 1/2	4 5/32	1 7/8	1 1/4	N/A	9/16	2 3/16	2 1/4	3/8	9.53	3 1/4	4	7/16	8	BAB
3	5	6 5/8	4 7/8	4 5/32	1 7/8	1 1/4	N/A	5/8	2 1/8	2 5/8	7/16	11.11	3 1/4	4	7/16	11	BAC
4	6 3/16	7 1/2	5 1/4	4 5/32	2 1/8	1 1/4	N/A	3/4	3 3/16	3 5/8	1/2	12.70	3 1/4	4	7/16	18	BAD
5	7 5/16	7 9/16	5 3/4	4 5/32	2 1/4	1 1/4	N/A	3/4	4 3/8	4 3/4	1/2	12.70	3 1/4	4	7/16	23	BAD
6	8 1/2	8 3/4	7 1/16	6 1/16	2 1/4	1 1/4	3/4	7/8	5 1/4	5 9/16	1/2	12.70	5	4	9/16	30	CAD
6*	8 1/2	8 3/4	7 1/16	6 1/16	2 1/4	1 1/4	N/A	7/8	5 1/4	5 9/16	5/8	15.88	5	4	9/16	31	CAE
8	10 5/8	10 1/8	8 5/16	6 1/16	2 1/2	2	N/A	1 1/8	7	7 3/8	1/4 x 1/4 x 1 5/8	6.35 x 6.35 x 41	5	4	9/16	46	CAF
10	12 3/4	11 3/8	9 5/8	6 1/16	2 13/16	2	1 1/8	1 3/8	9 1/8	9 5/16	1/4 x 1/4 x 1 5/8	6.35 x 6.35 x 41	5	4	9/16	74	CAF
10*	12 3/4	11 3/8	9 5/8	6 1/16	2 13/16	3	N/A	1 3/8	9 1/8	9 5/16	5/16 x 5/16 x 2 5/8	7.94 x 7.94 x 67	5	4	9/16	75	CAG
12	15	13	11 5/16	8 5/32	3 3/16	3	1 3/8	1 1/2	10 15/16	11 3/16	5/16 x 5/16 x 2 5/8	7.94 x 7.94 x 67	6 1/2	4	13/16	116	DAG
14	16 1/4	13 1/4	12 7/8	8 5/32	3 5/8	3	N/A	1 5/8	11 3/4	12 1/4	3/8 x 3/8 x 2 5/8	9.53 x 9.53 x 67	6 1/2	4	13/16	133	DAH
16	18 1/2	14 1/2	12 3/4	8 5/32	4	3	1 5/8	1 3/4	13 3/8	13 1/8	3/8 x 3/8 x 2 5/8	9.53 x 9.53 x 67	6 1/2	4	13/16	185	DAH
18	21	16	13 3/4	8 5/32	4 1/2	4 1/16	N/A	1 7/8	15 7/16	15 15/16	1/2 x 3/8 x 4 1/8	12.70 x 9.53 x 105	6 1/2	4	13/16	288	DAJ
20	23	17 7/16	15 3/16	8 7/32	5	4 5/16	N/A	2 1/4	17 5/16	17 11/16	1/2 x 3/8 x 4	12.70 x 9.53 x 102	6 1/2	4	13/16	376	DAK
24	27 1/4	19 11/16	17 9/16	8 7/32	6 1/16	4 1/4	2 1/4	2 1/2	20 5/8	21 1/16	1/2 x 3/8 x 4	12.70 x 9.53 x 102	6 1/2	4	13/16	592	DAK

* E.N.P. discs require larger upper shaft connection diameters on NPS 6 and NPS 10 valve sizes for UHMWPE seat trims.
N/A = not applicable

SERIES 37, ASME CLASS 300, WAFER STYLE, DIMENSIONS (inches)

Size											Top plate drilling					Tapped lug data			Weight	Mount-
											DD or keyway		No.	Holes		No.				
NPS	A	B	C	D	E	F	G	H	Q1	Q2	(inch)	(mm)	PCD	holes	dia.	holes	PCD	Tap	lbs.	ing code
2	4 5/16	6	4	4 5/32	2 3/8	1 1/4	N/A	9/16	1 3/8	1 7/8	3/8	9.53	3 1/4	4	7/16	-	-	-	10	BAB
2 1/2	4 1/8	6	4 1/2	4 5/32	1 7/8	1 1/4	N/A	9/16	2 3/16	2 1/4	3/8	9.53	3 1/4	4	7/16	-	-	-	9	BAB
3	5	6 5/8	4 7/8	4 5/32	1 7/8	1 1/4	N/A	5/8	1 7/8	2 5/8	7/16	11.11	3 1/4	4	7/16	-	-	-	11	BAC
4	6 3/16	7 1/2	5 7/32	4 5/32	2 1/8	1 1/4	N/A	3/4	3 3/16	3 5/8	1/2	12.70	3 1/4	4	7/16	-	-	-	18	BAD
5	7 5/16	7 9/16	5 3/4	4 5/32	2 5/16	1 1/4	N/A	3/4	4 5/16	4 3/4	1/2	12.70	3 1/4	4	7/16	-	-	-	23	BAD
6	8 1/2	8 3/4	7 1/16	6 1/16	2 5/16	1 1/4	N/A	7/8	5 1/4	5 9/16	5/8	15.88	5	4	9/16	-	-	-	30	CAE
8	10 5/8	10 1/8	8 3/8	6 1/16	2 7/8	2	N/A	1 1/8	6 3/4	7 3/8	1/4 x 1/4 x 1 5/8	6.35 x 6.35 x 41	5	4	9/16	-	-	-	55	CAF
10	12 3/4	11 3/8	9 5/8	6 1/16	3 1/4	3	N/A	1 3/8	8 13/16	9 5/16	5/16 x 5/16 x 2 5/8	7.94 x 7.94 x 67	5	4	9/16	4	15 1/4	1-8UNC	93	CAG
12	15	13	11 5/16	8 5/32	3 5/8	3	1 3/8	1 1/2	10 5/8	11 3/16	5/16 x 5/16 x 2 5/8	7.94 x 7.94 x 67	6 1/2	4	13/16	-	-	-	127	DAG
14	16 1/4	14 3/8	12 11/16	8 5/32	4 5/8	4 1/4	N/A	1 7/8	11 13/16	11 15/16	1/2 x 3/8 x 4 1/8	12.70 x 9.53 x 105	6 1/2	4	13/16	4	20 1/4	1 1/8-8UN	202	DAJ
16	18 1/2	16 1/16	13 7/8	8 5/32	5 1/4	4 1/8	N/A	2 1/4	13 7/8	13 11/16	1/2 x 3/8 x 4	12.70 x 9.53 x 102	6 1/2	4	13/16	4	22 1/2	1 1/4-8UN	270	DAK
18	21	17	15 1/16	8 5/32	5 7/8	4 7/32	N/A	2 1/2	15 7/8	15 1/2	5/8 x 5/8 x 4	15.88 x 15.88 x 102	6 1/2	4	13/16	4	24 3/4	1 1/4-8UN	373	DBA
20	23	20 3/16	16 3/8	7 1/2	6 1/4	6 1/2	N/A	2 3/4	17 1/4	17 3/8	5/8 x 5/8 x 6 3/8	15.88 x 15.88 x 162	8	4	13/16	4	27	1 1/4-8UN	482	LAX
24	27 1/4	23 3/8	19 1/8	9 1/2	7 1/8	6 13/16	N/A	3 1/2	20 11/16	20 13/16	7/8 x 7/8 x 5 11/16	22.23 x 22.23 x 144	9 3/4	4	1 1/16	4	32	1 1/2-8UN	800	MAY

N/A = not applicable

IMPERIAL DATA

DIMENSIONS - LUG STYLE

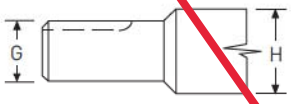

Upper shaft/keyway
NPS 8 to NPS 24

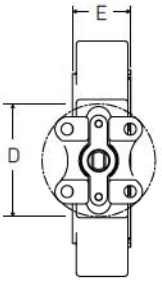

Top plate view

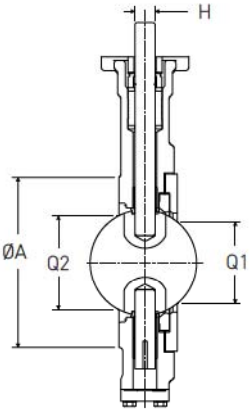

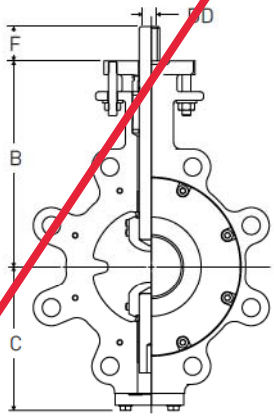

SERIES 36, ASME CLASS 150, LUG STYLE, DIMENSIONS (inches)

Size											Top plate drilling					Tapped lug data			Weight	Mounting
											DD or keyway			No.	Holes	No.				
NPS	A	B	C	D	E	F	G	H	Q1	Q2	(inch)	(mm)	PCD	holes	dia.	holes	PCD	Tap	lbs.	code
2	4 15/32	6	4	4 5/32	2 3/8	1 1/4	N/A	9/16	1 3/8	1 7/8	3/8	9.53	3 1/4	4	7/16	4	4 3/4	5/8-11UNC	12	BAB
2 1/2	4 3/4	6	4 11/32	4 5/32	1 7/8	1 1/4	N/A	9/16	2 3/16	2 1/4	3/8	9.53	3 1/4	4	7/16	4	5 1/2	5/8-11UNC	12	BAB
3	5 9/32	6 5/8	4 31/32	4 5/32	1 7/8	1 1/4	N/A	5/8	2 1/8	2 5/8	7/16	11.11	3 1/4	4	7/16	4	6	5/8-11UNC	15	BAC
4	6 15/32	7 1/2	5 1/4	4 5/32	2 1/8	1 1/4	N/A	3/4	3 3/16	3 5/8	1/2	12.70	3 1/4	4	7/16	8	7 1/2	5/8-11UNC	23	BAD
5	7 19/32	7 9/16	5 3/4	4 5/32	2 1/4	1 1/4	N/A	3/4	4 3/8	4 3/4	1/2	12.70	3 1/4	4	7/16	8	8 1/2	3/4-10UNC	30	BAD
6	8 7/8	8 3/4	5 7/8	6 1/16	2 1/4	1 1/4	3/4	7/8	5 1/4	5 9/16	1/2	12.70	5	4	9/16	8	9 1/2	3/4-10UNC	40	CAD
6*	8 7/8	8 3/4	5 7/8	6 1/16	2 1/4	1 1/4	N/A	7/8	5 1/4	5 9/16	5/8	15.88	5	4	9/16	8	9 1/2	3/4-10UNC	40	CAE
8	10 5/8	10 1/8	8 5/16	6 1/16	2 1/2	2	N/A	1 1/8	7	7 3/8	1/4 x 1/4 x 1 5/8	6.35 x 6.35 x 41	5	4	9/16	8	11 3/4	3/4-10UNC	60	CAF
10	12 3/4	11 3/8	9 5/8	6 1/16	2 13/16	2	1 1/8	1 3/8	9 1/8	9 5/16	1/4 x 1/4 x 1 5/8	6.35 x 6.35 x 41	5	4	9/16	12	14 1/4	7/8-9UNC	89	CAF
10*	12 3/4	11 3/8	9 5/8	6 1/16	2 13/16	3	N/A	1 3/8	9 1/8	9 5/16	5/16 x 5/16 x 2 5/8	7.94 x 7.94 x 67	5	4	9/16	12	14 1/4	7/8-9UNC	90	CAG
12	15	13	10 19/32	8 5/32	3 3/16	3	1 3/8	1 1/2	10 15/16	11 3/16	5/16 x 5/16 x 2 5/8	7.94 x 7.94 x 67	6 1/2	4	13/16	12	17	7/8-9UNC	147	DAG
14	16 1/4	13 1/4	11 27/32	8 5/32	3 5/8	3	N/A	1 5/8	11 3/4	12 1/4	3/8 x 3/8 x 2 5/8	9.53 x 9.53 x 67	6 1/2	4	13/16	12	18 3/4	1-8UNC	162	DAH
16	18 1/2	14 1/2	12 31/32	8 5/32	4	3	1 5/8	1 3/4	13 3/8	14 1/8	3/8 x 3/8 x 2 5/8	9.53 x 9.53 x 67	6 1/2	4	13/16	16	21 1/4	1-8UNC	213	DAH
18	21	16	13 3/4	8 5/32	4 1/2	4 1/16	N/A	1 7/8	15 7/16	15 15/16	1/2 x 3/8 x 4 1/8	12.70 x 9.53 x 105	6 1/2	4	13/16	16	22 3/4	1 1/8-8UN	350	DAJ
20	23	17 7/16	15 3/16	8 7/32	5	4 5/16	N/A	2 1/4	17 5/16	17 11/16	1/2 x 3/8 x 4	12.70 x 9.53 x 102	6 1/2	4	13/16	20	25	1 1/8-8UN	458	DAK
24	27 1/4	19 11/16	17 9/16	8 7/32	6 1/16	4 1/4	2 1/4	2 1/2	20 5/8	21 1/16	1/2 x 3/8 x 4	12.70 x 9.53 x 102	6 1/2	4	13/16	20	29 1/2	1 1/4-8UN	704	DAK

* E.N.P. discs require larger upper shaft connection diameters on NPS 6 and NPS 10 valve sizes for UHMWPE seat trims.
N/A = not applicable

SERIES 37, ASME CLASS 300, LUG STYLE, DIMENSIONS (inches)

Size											Top plate drilling					Tapped lug data			Weight	Mounting
											DD or keyway			No.	Holes	No.				
NPS	A	B	C	D	E	F	G	H	Q1	Q2	(inch)	(mm)	PCD	holes	dia.	holes	PCD	Tap	lbs.	code
2	4 15/32	6	3 31/32	4 5/32	2 3/8	1 1/4	N/A	9/16	1 3/8	1 7/8	3/8	9.53	3 1/4	4	7/16	8	5	5/8-11UNC	13	BAB
2 1/2	4 13/16	6	4 11/32	4 5/32	1 7/8	1 1/4	N/A	9/16	2 3/16	2 1/4	3/8	9.53	3 1/4	4	7/16	8	5 7/8	3/4-10UNC	16	BAB
3	5 5/16	6 5/8	4 21/32	4 5/32	1 7/8	1 1/4	N/A	5/8	2 1/16	2 5/8	7/16	11.11	3 1/4	4	7/16	8	6 5/8	3/4-10UNC	18	BAC
4	6 15/32	7 1/2	5 1/4	4 5/32	2 1/8	1 1/4	N/A	3/4	3 3/16	3 5/8	1/2	12.70	3 1/4	4	7/16	8	7 1/8	3/4-10UNC	25	BAD
5	7 3/8	7 9/16	5 3/4	4 5/32	2 5/16	1 1/4	N/A	3/4	4 5/16	4 3/4	1/2	12.70	3 1/4	4	7/16	8	9 1/4	3/4-10UNC	34	BAD
6	8 7/8	8 3/4	6 7/8	6 1/16	2 5/16	1 1/4	N/A	7/8	5 1/4	5 9/16	5/8	15.88	5	4	9/16	12	10 5/8	3/4-10UNC	45	CAE
8	11 5/32	10 1/8	8 5/16	6 1/16	2 7/8	2	N/A	1 1/8	6 3/4	7 3/8	1/4 x 1/4 x 1 5/8	6.35 x 6.35 x 41	5	4	9/16	12	13	7/8-9UNC	80	CAF
10	12 3/4	11 3/8	9 5/8	6 1/16	3 1/4	3	N/A	1 3/8	8 13/16	9 5/16	5/16 x 5/16 x 2 5/8	7.94 x 7.94 x 67	5	4	9/16	16	15 1/4	1-8UNC	120	CAG
12	15	13	11 3/32	8 5/32	3 5/8	3	1 3/8	1 1/2	10 5/8	11 3/16	5/16 x 5/16 x 2 5/8	7.94 x 7.94 x 67	6 1/2	4	13/16	16	17 3/4	1 1/8-8UN	179	DAG
14	16 1/4	14 3/8	12 21/32	8 5/32	4 5/8	4 1/4	N/A	1 7/8	11 13/16	11 15/16	1/2 x 3/8 x 4 1/8	12.70 x 9.53 x 105	6 1/2	4	13/16	20	20 1/4	1 1/8-8UN	293	DAJ
16	18 1/2	16 5/16	13 27/32	8 5/32	5 1/4	4 1/8	N/A	2 1/4	13 9/16	13 11/16	1/2 x 3/8 x 4	12.70 x 9.53 x 102	6 1/2	4	13/16	20	22 1/2	1 1/4-8UN	390	DAK
18	21	17	15 1/32	8 5/32	5 7/8	4 7/32	N/A	2 1/2	15 7/16	15 1/2	5/8 x 5/8 x 4	15.88 x 15.88 x 102	6 1/2	4	13/16	24	24 3/4	1 1/4-8UN	524	DBA
20	23	20 3/16	16 11/32	7 1/2	6 1/4	6 1/2	N/A	2 3/4	17 1/4	17 3/8	5/8 x 5/8 x 6 3/8	15.88 x 15.88 x 162	8	4	13/16	24	27	1 1/4-8UN	657	LAX
24	27 1/4	23 3/8	19 3/32	9 1/2	7 1/8	6 13/16	N/A	3 1/2	20 11/16	20 13/16	7/8 x 7/8 x 5 11/16	22.23 x 22.23 x 144	9 3/4	4	1 1/16	24	32	1 1/2-8UN	1076	MAY

N/A = not applicable

DIMENSIONS - DOUBLE FLANGE STYLE

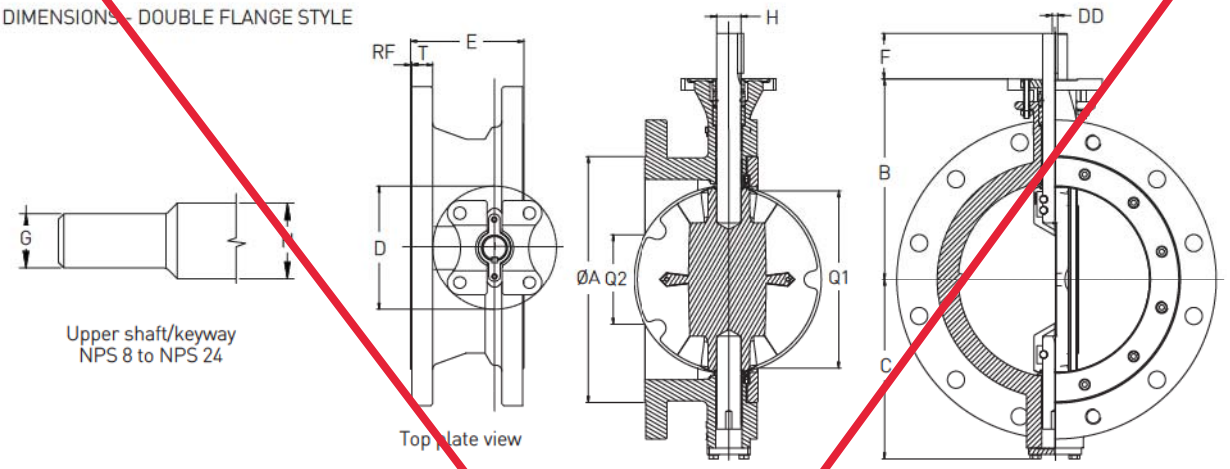

SERIES 36F, ASME CLASS 150, DOUBLE FLANGED STYLE, DIMENSIONS (inches)

Size NPS	A	B	C	D	E	F	G	H	Q1	Q2	T	RF
3	5.00	6⅝	5³¹/₃₂	4.15	4.50	1¼	N/A	⅝	2.13	N/A	0.75	0.06
4	6.19	7½	5¼	4.15	5.00	1¼	N/A	¾	3.23	N/A	0.94	0.06
6	8.50	8¾	6⁵/₁₆	6.07	5.50	1¼	¾	⅞	5.24	N/A	1.00	0.06
6*	8.50	8¾	6⁵/₁₆	6.07	5.50	1¼	N/A	⅞	5.24	N/A	1.00	0.06
8	10.62	10⅛	8⁵/₁₆	6.07	6.00	2	N/A	1⅛	7.06	N/A	1.12	0.06
10	12.75	11⅜	9⅝	6.07	6.50	2	1⅛	1⅜	9.13	79.00	1.18	0.06
10*	12.75	11⅜	9⅝	6.07	6.50	3	N/A	1⅜	9.13	79.00	1.18	0.06
12	15.00	13	10¹⁹/₃₂	8.17	7.00	3	1⅜	1½	10.91	4.84	1.24	0.06
14	16.25	13¼	11²⁷/₃₂	8.17	7.50	3	N/A	1⅝	11.93	5.98	1.38	0.06
16	18.50	14½	12³¹/₃₂	8.17	8.50	3	1⅝	1¾	13.70	6.25	1.44	0.06
18	21.00	16	13¾	8.17	8.75	4 1/16	N/A	1⅞	15.51	10.67	1.56	0.06
20	23.00	17 7/16	15 5/16	8.22	9.00	4 5/16	N/A	2¼	17.32	13.12	1.69	0.06
24	27.25	19 11/16	17 9/16	8.22	10.50	4¼	2¼	2½	20.79	15.71	1.87	0.06

SERIES 36F, ASME, CLASS 150, DOUBLE FLANGED STYLE, DIMENSIONS (inches [CONTINUED])

Size NPS	Top plate drilling: DD or Keyway (mm)	DD or Keyway (inch)	PCD	No. holes	Holes dia.	Flange drilling data: Number of bolts	Diameter of bolt holes	Diameter of bolt circle	Diameter of bolts (imperial)	Mounting code
3	7/16	11.11	3¼	4	7/16	4	¾	6.00	⅝ - 11UNC	BAC
4	½	12.70	3¼	4	7/16	8	¾	7.50	⅝ - 11UNC	BAD
6	½	12.70	5	4	9/16	8	⅞	9.50	¾ - 10UNC	CAD
6*	⅝	15.88	5	4	9/16	8	⅞	9.50	¾ - 10UNC	CAE
8	¼ x ¼ x 1⅝	6.35 x 6.35 x 41	5	4	9/16	8	⅞	11.75	¾ - 10UNC	CAF
10	¼ x ¼ x 1⅝	6.35 x 6.35 x 41	5	4	9/16	12	1	14.25	⅞ - 9UNC	CAF
10*	5/16 x 5/16 x 2⅝	7.94 x 7.94 x 67	5	4	9/16	12	1	14.25	⅞ - 9UNC	CAG
12	5/16 x 5/16 x 2⅝	7.94 x 7.94 x 67	6½	4	13/16	12	1	17.00	⅞ - 9UNC	DAG
14	⅜ x ⅜ x 2⅝	9.53 x 9.53 x 67	6½	4	13/16	12	1⅛	18.75	1 - 8UNC	DAH
16	⅜ x ⅜ x 2⅝	9.53 x 9.53 x 67	6½	4	13/16	16	1⅛	21.25	1 - 8UNC	DAH
18	½ x ⅜ x 4⅛	12.70 x 9.53 x 105	6½	4	13/16	16	1¼	22.75	1⅛ - 8UN	DAJ
20	½ x ⅜ x 4	12.70 x 9.53 x 102	6½	4	13/16	20	1¼	25.00	1⅛ - 8UN	DAK
24	½ x ⅜ x 4	12.70 x 9.53 x 102	6½	4	13/16	20	1⅜	29.50	1¼ - 8UN	DAK

* E.N.P. discs require larger upper shaft connection diameters on NPS 6 and NPS 10 valve sizes for UHMWPE seat trims.
N/A = not applicable

DIMENSIONS - DOUBLE FLANGE STYLE

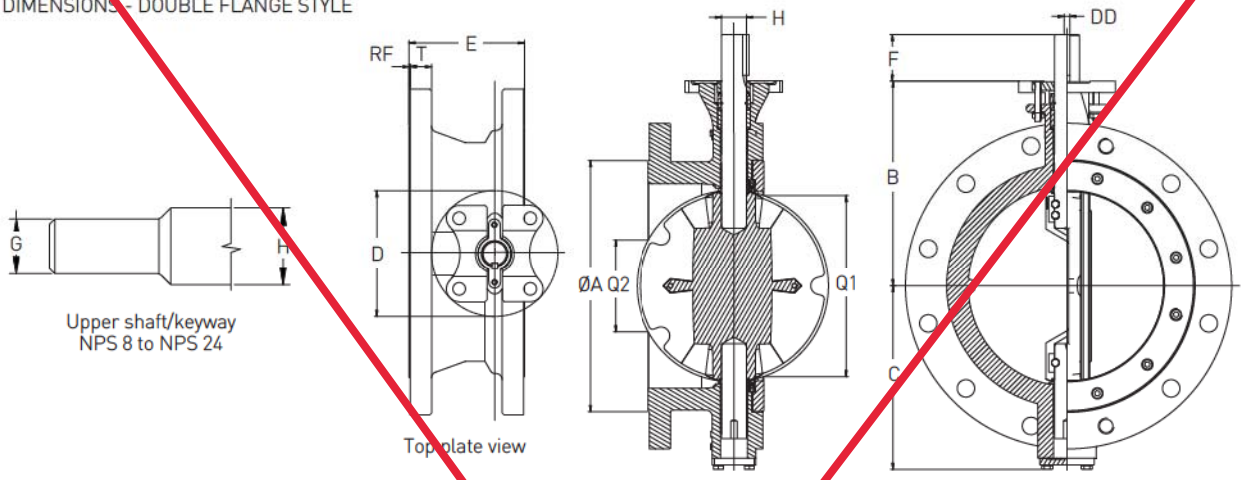

SERIES 37F, ASME, CLASS 300, DOUBLE FLANGED STYLE, DIMENSIONS (inches)

Size NPS	A	B	C	D	E	F	G	H	Q1	Q2	T	RF
3	5.00	6 5/8	4 21/32	4.15	4.50	1 1/4	N/A	5/8	2.13	N/A	1.12	0.06
4	6.19	7 1/2	5 1/4	4.15	5.00	1 1/4	N/A	3/4	3.15	N/A	1.24	0.06
6	8.50	8 3/4	6 7/8	6.07	5.50	1 1/4	N/A	7/8	5.20	N/A	1.44	0.06
8	10.62	10 1/8	8 5/16	6.07	6.00	2	N/A	1 1/8	6.69	N/A	1.61	0.06
10	12.75	11 3/8	9 5/8	6.07	6.50	2	N/A	1 3/8	8.78	3.11	1.87	0.06
12	15.00	13	11 3/32	8.17	7.00	3	1 3/8	1 1/2	10.59	6.36	2.01	0.06
14	16.25	14 3/8	12 21/32	8.17	7.50	4 1/4	N/A	1 7/8	11.81	7.24	2.13	0.06
16	18.50	16 1/16	13 27/32	8.17	8.50	4 1/8	N/A	2 1/4	13.58	8.29	2.24	0.06
18	21.00	17	15 1/32	8.17	8.75	4 7/32	N/A	2 1/2	15.43	11.50	2.38	0.06
20	23.00	20 3/16	16 11/32	7.50	9.00	6 1/2	N/A	2 3/4	17.20	13.85	2.50	0.06
24	27.25	23 3/8	19 3/32	9.50	10.50	6 13/16	N/A	3 1/2	20.67	16.62	2.76	0.06

SERIES 37F, ASME, CLASS 300, DOUBLE FLANGED STYLE, DIMENSIONS (inches [Continued])

	Top plate drilling					Flange drilling data				
Size NPS	DD or Keyway (inch)	DD or Keyway (mm)	PCD	No. holes	Holes dia.	Number of bolts	Diameter of bolt holes	Diameter of bolt circle	Diameter of bolts (imperial)	Mounting code
3	7/16	11.11	3 1/4	4	7/16	8	7/8	6.63	3/4 - 10UNC	BAC
4	1/2	12.70	3 1/4	4	7/16	8	7/8	7.88	3/4 - 10UNC	BAD
6	5/8	15.88	5	4	9/16	12	7/8	10.63	3/4 - 10UNC	CAE
8	1/4 x 1/4 x 1 5/8	6.35 x 6.35 x 41	5	4	9/16	12	1	13.00	7/8 - 9UNC	CAF
10	5/16 x 5/16 x 2 5/8	7.94 x 7.94 x 67	5	4	9/16	16	1 1/8	15.25	1 - 8UNC	CAG
12	5/16 x 5/16 x 2 5/8	7.94 x 7.94 x 67	6 1/2	4	13/16	16	1 1/4	17.75	1 1/8 - 8UN	DAG
14	1/2 x 3/8 x 4 1/8	12.70 x 9.53 x 105	6 1/2	4	13/16	20	1 1/4	20.25	1 1/8 - 8UN	DAJ
16	1/2 x 3/8 x 4	12.70 x 9.53 x 102	6 1/2	4	13/16	20	1 3/8	22.50	1 1/4 - 8UN	DAK
18	5/8 x 5/8 x 4	15.88 x 15.88 x 102	6 1/2	4	13/16	24	1 3/8	24.75	1 1/4 - 8UN	DBA
20	5/8 x 5/8 x 6 3/8	15.88 x 15.88 x 162	8	4	13/16	24	1 3/8	27.00	1 1/4 - 8UN	LAX
24	7/8 x 7/8 x 5 7/16	22.23 x 22.23 x 144	9 3/4	4	1 1/16	24	1 5/8	32.00	1 1/2 - 8UN	MAY

N/A = not applicable

RECOMMENDED FLANGE BOLT LENGTHS

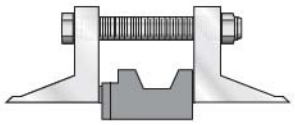

Type 1

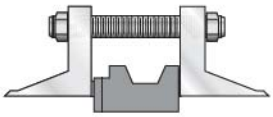

Type 2

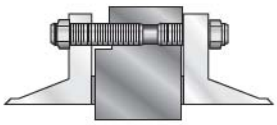

Type 3

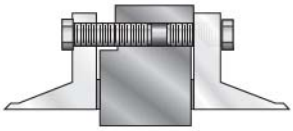

Type 4

SERIES 36 ASME CLASS 150

WAFER STYLE

Size		Type 1 (flange bolt)		Type 2 (threaded rod)
DN	Qty	(HEX head)	Qty	(all thread)
50	4	⅝ - 11UNC x 127	4	⅝ - 11UNC x 146
65	4	⅝ - 11UNC x 117	4	⅝ - 11UNC x 143
80	4	⅝ - 11UNC x 127	4	⅝ - 11UNC x 143
100	8	⅝ - 11UNC x 127	8	⅝ - 11UNC x 149
125	8	¾ - 10UNC x 133	8	¾ - 10UNC x 159
150	8	¾ - 10UNC x 137	8	¾ - 10UNC x 162
200	8	¾ - 10UNC x 149	8	¾ - 10UNC x 175
250	12	⅞ - 9UNC x 165	12	⅞ - 9UNC x 194
300	12	⅞ - 9UNC x 178	12	⅞ - 9UNC x 203
350	12	1 - 8UNC x 197	12	1 - 8UNC x 229
400	16	1 - 8UNC x 216	16	1 - 8UNC x 244
450	16	1⅛ - 8UN x 241	16	1⅛ - 8UN x 270
500	16	1⅛ - 8UN x 254	16	1⅛ - 8UN x 289
	4	1⅛ - 8UN x 89	8	1⅛ - 8UN x 124
	4	1⅛ - 8UN x 83		
600	16	1¼ - 8UN x 292	16	1¼ - 8UN x 330
	8	1¼ - 8UN x 121	8	1¼ - 8UN x 162

LUG STYLE

Size		Type 3 (threaded studs)		Type 4 (flange bolt)
DN	Qty	(full thread)	Qty	(HEX head)
50	8	⅝ - 11UNC x 73	8	⅝ - 11UNC x 51
65	8	⅝ - 11UNC x 67	8	⅝ - 11UNC x 44
80	8	⅝ - 11UNC x 67	8	⅝ -11UNC x 44
100	16	⅝ - 11UNC x 70	16	⅝ - 11UNC x 51
125	16	¾ - 10UNC x 76	16	¾ - 10UNC x 51
150	8	¾ - 10UNC x 76	8	¾ - 10UNC x 51
	8	¾ - 10UNC x 83	8	¾ - 10UNC x 57
200	16	¾ - 10UNC x 83	16	¾ - 10UNC x 57
250	24	⅞ - 9UNC x 92	24	⅞ - 9UNC x 64
300	24	⅞ - 9UNC x 98	24	⅞ - 9UNC x 70
350	24	1 - 8UNC x 114	24	1 - 8UNC x 83
400	32	1 - 8UNC x 121	32	1 - 8UNC x 89
450	32	1⅛ - 8UN x 133	32	1⅛ - 8UN x 95
500	32	1⅛ - 8UN x 140	4	1⅛ - 8UN x 89 (FF)
	8	1⅛ - 8UN x 124	4	1⅛ - 8UN x 83 (BF)
			32	1⅛ - 8UN x 102
600	40	1¼ - 8UN x 162	40	1¼ - 8UN x 121

SERIES 37 ASME CLASS 300

WAFER STYLE

Size		Type 1 (flange bolt)		Type 2 (threaded rod)
DN	Qty	(HEX head)	Qty	(all thread)
50	8	⅝ - UNC x 133	8	⅝ - 11UNC x 159
65	8	¾ - 10UNC x 127	8	¾ - 10UNC x 152
80	8	¾ - 10UNC x 133	8	¾ - 10UNC x 159
100	8	¾ - 11UNC x 146	8	¾ - 11UNC x 171
125	8	¾ - 11UNC x 159	8	¾ - 11UNC x 184
150	12	¾ - 11UNC x 162	12	¾ - 11UNC x 187
200	12	⅞ - 10UNC x 191	12	⅞ - 10UNC x 216
250	12	1 - 8UNC x 216	12	1 - 8UNC x 241
	8	1 - 8UNC x 76	8	1 - 8UNC x 121
300	16	1⅛ - 8UN x 235	16	1⅛ - 8UN x 267
350	16	1⅛ - 8UN x 267	16	1⅛ - 8UN x 298
	8	1⅛ - 8UN x 83	8	1⅛ - 8UN x 117
400	16	1¼ - 8UN x 292	16	1¼ - 8UN x 321
	8	1¼ - 8UN x 89	8	1¼ - 8UN x 127
450	20	1¼ - 8UN x 311	20	1¼ - 8UN x 349
	8	1¼ - 8UN x 95	8	1¼ - 8UN x 133
500	20	1¼ - 8UN x 327	20	1¼ - 8UN x 364
	8	1¼ - 8UN x 102	8	1¼ - 8UN x 140
600	20	1½ - 8UN x 368	20	1½ - 8UN x 413
	8	1½ - 8UN x 114	8	1½ - 8UN x 159

LUG STYLE

Size		Type 3 (threaded studs)		Type 4 (flange bolt)
DN	Qty	(all thread)	Qty	(HEX head)
50	16	⅝ - 11UNC x 73	16	⅝ - 11UNC x 51
65	16	¾ - 10UNC x 76	16	¾ - 10UNC x 51
80	16	¾ - 10UNC x 76	16	¾ - 10UNC x 51
100	16	¾ - 10UNC x 83	16	¾ - 10UNC x 57
125	16	¾ - 10UNC x 89	16	¾ - 10UNC x 64
150	24	¾ - 10UNC x 92	24	¾ - 10UNC x 64
200	24	⅞ - 9UNC x 105	24	⅞ - 9UNC x 76
250	32	1 - 8UNC x 121	32	1 - 8UNC x 89
300	32	1⅛ - 8UN x 130	32	1⅛ - 8UN x 95
350	32	1⅛ - 8UN x 146	32	1⅛ - 8UN x 108
	8	1⅛ - 8UN x 117	8	1⅛ - 8UN x 83
400	32	1¼ - 8UN x 159	32	1¼ - 8UN x 111
	8	1¼ - 8UN x 127	8	1¼ - 8UN x 89
450	40	1¼ - 8UN x 171	40	1¼ - 8UN x 133
	8	1¼ - 8UN x 133	8	1¼ - 8UN x 95
500	40	1¼ - 8UN x 181	40	1¼ - 8UN x 140
	8	1¼ - 8UN x 140	8	1¼ - 8UN x 102
600	40	1½ - 8UN x 203	40	1½ - 8UN x 159
	8	1½ - 8UN x 159	8	1½ - 8UN x 114

RECOMMENDED FLANGE BOLT LENGTHS

Type 5 drilled holes

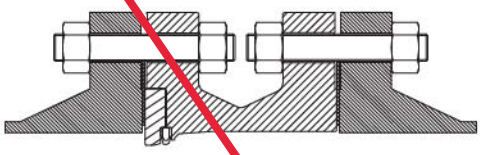

Type 6 drilled holes

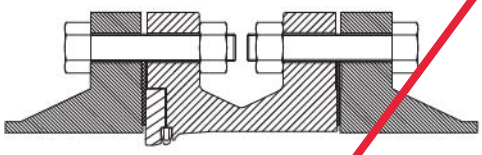

Type 5 tapped holes

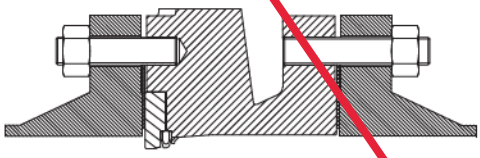

Type 6 tapped holes

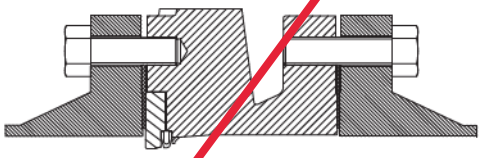

SERIES 36 ASME CLASS 150

DOUBLE FLANGED STYLE

	Type 5 (full threaded rod)			
Size	Drilled holes	Tapped holes		
NPS	Qty	Stud sizes	Qty	Stud sizes
3	4	⅝ - 11UNC - 3½	4	⅝ - 11UNC - 2¾
4	8	⅝ - 11UNC - 3¾	8	⅝ - 11UNC - 3
6	8	¾ - 10UNC - 4⅛	8	¾ - 10UNC - 3¼
8	12	¾ - 10UNC - 4⅜	4	¾ - 10UNC - 3½
10	20	⅞ - 9UNC - 4¾	4	⅞ - 9UNC - 3¾
12	20	⅞ - 9UNC - 4⅞	4	⅞ - 9UNC - 3½
14	20	1 - 8UNC - 5½	4	1 - 8UNC - 3⅞
16	28	1 - 8UNC - 5⅝	4	1 - 8UNC - 4⅛
18	28	1⅛ - 8UN - 6⅛	4	1⅛ - 8UN - 4¾
20	36	1⅛ - 8UN - 6⅜	4	1⅛ - 8UN - 4½
24	36	1¼ - 8UN - 7	4	1¼ - 8UN - 4⅞

DOUBLE FLANGED STYLE

	Type 6 (hex head)			
Size	Drilled holes	Tapped holes		
NPS	Qty	Bolt sizes	Qty	Bolt sizes
3	4	⅝ - 11UNC - 2¾	4	⅝ - 11UNC - 1⅞
4	8	⅝ - 11UNC - 3	8	⅝ - 11UNC - 2⅛
6	8	¾ - 10UNC - 3¼	8	¾ - 10UNC - 2¼
8	12	¾ - 10UNC - 3½	4	¾ - 10UNC - 2½
10	20	⅞ - 9UNC - 3¾	4	⅞ - 9UNC - 2⅝
12	20	⅞ - 9UNC - 3⅞	4	⅞ - 9UNC - 2⅝
14	20	1 - 8UNC - 4¼	4	1 - 8UNC - 2⅝
16	28	1 - 8UNC - 4⅜	4	1 - 8UNC - 2⅞
18	28	1⅛ - 8UN - 4¾	4	1⅛ - 8UN - 3⅜
20	36	1⅛ - 8UN - 5	4	1⅛ - 8UN - 3⅛
24	36	1¼ - 8UN - 5½	4	1¼ - 8UN - 3⅜

SERIES 37 ASME CLASS 300

DOUBLE FLANGED STYLE

	Type 5 (full threaded rod)			
Size	Drilled holes	Tapped holes		
NPS	Qty	Bolt sizes	Qty	Bolt sizes
3	8	¾ - 10UNC - 4⅜	8	¾ - 10UNC - 3½
4	8	¾ - 10UNC - 4⅝	8	¾ - 10UNC - 3¾
6	20	¾ - 10UNC - 5	4	¾ - 10UNC - 4⅛
8	20	⅞ - 9UNC - 5⅝	4	⅞ - 9UNC - 4½
10	24	1 - 8UNC - 6⅜	8	1 - 8UNC - 4⅜
12	24	1⅛ - 8UN - 6⅞	8	1⅛ - 8UN - 4¾
14	32	1⅛ - 8UN - 7¼	8	1⅛ - 8UN - 5
16	32	1¼ - 8UN - 7¾	8	1¼ - 8UN - 5⅜
18	40	1¼- 8UN - 8	8	1¼- 8UN - 5½
20	40	1¼ - 8UN - 8¼	8	1¼ - 8UN - 5½
24	40	1½ - 8UN - 9¼	8	1½ - 8UN - 6¼

DOUBLE FLANGED STYLE

	Type 6 (hex head)			
Size	Drilled holes	Tapped holes		
NPS	Qty	Bolt sizes	Qty	Bolt sizes
3	8	¾ - 10UNC - 3⅜	8	¾ - 10UNC - 2½
4	8	¾ - 10UNC - 3⅝	8	¾ - 10UNC - 2¾
6	20	¾ - 10UNC - 4	4	¾ - 10UNC - 3⅛
8	20	⅞ - 9UNC - 4½	4	⅞ - 9UNC - 3⅜
10	24	1 - 8UNC - 5⅛	8	1 - 8UNC - 3⅛
12	24	1⅛ - 8UN - 5½	8	1⅛ - 8UN - 3⅜
14	32	1⅛ - 8UN - 5⅞	8	1⅛ - 8UN - 3½
16	32	1¼ - 8UN - 6¼	8	1¼ - 8UN - 3⅞
18	40	1¼- 8UN - 6½	8	1¼- 8UN - 4
20	40	1¼ - 8UN - 6¾	8	1¼ - 8UN - 4
24	40	1½ - 8UN - 7½	8	1½ - 8UN - 4½

EXTENSION BRACKETS FOR VARIOUS TEMPERATURES

	Required extension lengths mm				
Pipeline fluid temperature	**Handle**	**Gear**	**Std. F89**	**High temp. F89**	**Standard F777**
-73°C - 190°C	-	-	-	-	-
191°C - 238°C	100	-	-	-	100
239°C - 293°C	150	100	100	-	100
293°C - 343°C	150	100	100	-	100
343°C - 385°C	150	150	150	100	150
386°C - 440°C	200	200	200	150	200
441°C - 496°C	250	203	203	150	200
496°C - 538°C	250	250	250	200	250

NOTES

1. Surrounding air temperature is assumed to be 21°C. For every degree over 38°C of the surrounding air, deduct 2 degrees from the maximum temperature ranges shown under the Pipeline fluid temperature column. (Example: 52°C) external temperature reduces maximum temperature values under the Pipeline fluid temperature column to 163, 210, 265, 315, etc.)
2. Valves may be insulated or uninsulated.
3. Brackets may be open rectangular tubes or the standard closed Keystone tubular shaft extension.
4. All actuators have a maximum service temperature (outside atmosphere). These temperature limitations apply regardless of K-LOK extension lengths.

VACUUM RATING

The combination of interference fit seats and bi-directional packing makes the K-LOK especially well suited for vacuum service.
Standard K-LOK high performance valves are rated to an absolute pressure of 1.316×10^{-3} mm Hg.
Higher vacuum applications are available.

K_v VALUES VS. TRAVEL POSITION

	Angle of opening									
Size									**ASME 150**	**ASME 300**
DN	**10°**	**20°**	**30°**	**40°**	**50°**	**60°**	**70°**	**80°**	**90°**	**90°**
50	5	9	14	29	44	67	91	116	141	138
65	5	9	16	29	46	69	96	128	151	147
80	7	10	21	37	58	86	120	160	190	185
100	14	20	38	69	112	167	232	310	366	356
125	26	38	72	128	209	315	434	580	685	677
150	43	60	112	198	319	474	655	871	1030	983
200	72	101	216	377	599	907	1290	1725	2103	1983
250	124	174	391	650	1021	1570	2251	3052	3913	3735
300	179	262	584	906	1401	2384	3308	4590	5961	5689
350	222	310	644	1022	1646	2690	3807	5366	7155	6827
400	265	372	692	1226	1973	3115	4526	6491	8654	8258
450	322	472	966	1611	2577	4082	5800	8486	10741	10249
500	399	586	1198	1996	3457	5323	7581	10909	13361	12689
600	560	854	1790	3278	5224	7836	11465	15918	18671	17813

NOTES

K_v is the volume of water in m³/h that will pass through a valve with a pressure drop of 1 bar at 20°C.

EXTENSION BRACKETS FOR VARIOUS TEMPERATURES

	Required extension lengths inches				
Pipeline fluid temperature	**Handle**	**Gear**	**Std. F89**	**High temp. F89**	**Standard F777**
-100°F - 375°F	-	-	-	-	-
376°F - 460°F	4	-	-	-	4
461°F - 560°F	6	4	4	-	4
561°F - 650°F	6	4	4	-	4
651°F - 725°F	6	6	6	4	6
726°F - 825°F	8	8	8	6	8
826°F - 925°F	10	8	8	6	8
926°F - 1000°F	10	10	10	8	10

NOTES

1. Surrounding air temperature is assumed to be 70°F. For every degree over 100°F of the surrounding air, deduct 2 degrees from the maximum temperature ranges shown under the Pipeline fluid temperature column. (Example: 125°F) external temperature reduces maximum temperature values under the Pipeline fluid temperature column to 163, 210, 265, 315, etc.)
2. Valves may be insulated or uninsulated.
3. Brackets may be open rectangular tubes or the standard closed Keystone tubular shaft extensions.
4. All actuators have a maximum service temperature (outside atmosphere). These temperature limitations apply regardless of K-LOK extension lengths.

VACUUM RATING

The combination of interference fit seats and bi-directional packing makes the K-LOK especially well suited for vacuum service.
Standard K-LOK high performance valves are rated to an absolute pressure of 1.016×10^{-3} mm Hg. Higher vacuum applications are available.

C_V VALUES VS. TRAVEL POSITION

	Angle of opening									
Size									**ASME 150**	**ASME 300**
NPS	**10°**	**20°**	**30°**	**40°**	**50°**	**60°**	**70°**	**80°**	**90°**	**90°**
2	6	10	19	34	51	78	105	134	163	160
2½	6	10	19	34	53	80	111	148	175	170
3	8	12	24	43	67	100	139	186	220	215
4	16	13	44	80	130	194	269	360	425	413
5	30	44	83	149	242	366	504	673	795	785
6	50	70	130	230	370	550	760	1010	1195	1140
8	83	117	251	437	695	1052	1496	2001	2440	2300
10	144	202	454	754	1185	1821	2611	3541	4540	4333
12	208	304	678	1051	1625	2766	3838	5325	6915	6600
14	257	360	747	1186	1909	3121	4416	6225	8300	7920
16	308	432	803	1422	2289	3614	5251	7530	10040	9580
18	373	548	1121	1869	2990	4735	6728	9845	12460	11890
20	463	680	1390	2315	4010	6175	8795	12655	15430	14720
24	650	991	2076	3803	6060	9091	13301	18466	21660	20665

NOTES

C_V is the volume of water in US GPM that will pass through a valve with a pressure drop of 1 psi at 60° F.

SEATING AND UN-SEATING TORQUE

Seating and un-seating torques are a function of the size of the valve and the shutoff pressure of the system.
Specific torque ratings can be found in the seating/un-seating chart at the intersection of the 'size' row and the 'shutoff pressure' column.
Torques listed are for PTFE and RTFE seated valves. For different seat materials, specific multipliers are to be used as stated.
All torques listed are for normal service conditions (i.e. operating frequency is a minimum of once per month; disc corrosion is expected to be mild or minor, the media is a clean gas, liquid or steam, and is non-abrasive) and chemical effects upon the seat are minor.

PTFE AND RTFE BI-DIRECTIONAL SEATING AND UN-SEATING TORQUE VALUES (METRIC)

Size	Mounting code		Seating and un-seating torque (Nm) System shutoff pressure (bar)					
DN	ASME 150	ASME 300	10	14	20	28	35	50
50	BAB	BAB	25	32	43	52	59	66
65	BAB	BAB	25	32	43	52	59	66
80	BAC	BAC	28	36	49	59	67	73
100	BAD	BAD	54	68	93	112	127	140
125	BAD	BAD	105	127	153	177	198	215
150	CAD/CAE*	CAE	155	181	209	243	270	328
200	CAF	CAF	233	263	362	454	550	759
250	CAF/CAG*	CAG	377	412	531	706	842	1113
300	DAG	DAG	519	593	723	922	1095	1462
350	DAH	DAJ	763	854	1034	1294	1503	1944
400	DAH	DAK	1057	1181	1424	1695	1978	2509
450	DAJ	DBA	1345	1503	1785	2204	2475	3221
500	DAK	LAX	1763	1978	2373	2848	3243	4084
600	DAK	MAY	2452	2863	3458	4170	4757	6102

PTFE AND RTFE BI-DIRECTIONAL SEATING AND UN-SEATING TORQUE VALUES (IMPERIAL)

Size	Mounting code		Seating and un-seating torque (lbs in) System shutoff pressure (psig)					
NPS	ASME 150	ASME 300	150	200	285	400	500	740
2	BAB	BAB	220	280	380	460	520	580
2½	BAB	BAB	220	280	380	460	520	580
3	BAC	BAC	250	320	430	520	590	650
4	BAD	BAD	475	600	820	995	1120	1235
5	BAD	BAD	925	1125	1350	1570	1750	1900
6	CAD/CAE*	CAE	1370	1600	1850	2150	2390	2900
8	CAF	CAF	2060	2330	3200	4020	4870	6720
10	CAF/CAG*	CAG	3340	3650	4700	6250	7450	9850
12	DAG	DAG	4590	5250	6400	8160	9690	12940
14	DAH	DAJ	6750	7560	9150	11450	13300	17200
16	DAH	DAK	9350	10450	12600	15000	17500	22200
18	DAJ	DBA	11900	13300	15800	19500	21900	28500
20	DAK	LAX	15600	17500	21000	25200	28700	36140
24	DAK	MAY	21700	25340	30600	36900	42100	54000

* CAE and CAG mounting codes apply for shaft mounting of UHMWPE seats.

NOTES

1. Torques are applicable only to PTFE and RTFE seats in noncorrosive or non-abrasive services such as water.
2. For other seat materials, select the torque applicable for the maximum differential pressure and multiply by the following factor:
   EPDM/NBR/Fluoroelastomer (FKM): x 1.4
   UHMWPE (clean service): x 1.3
3. For corrosive, abrasive or other services than water, multiply by the following factor:
   High solids slurry: x 1.5
   Dry gas: x 2.0
   Dry powders: x 2.7
   Liquids other than water: x 1.2
   Lubricating fluids: x 0.8
   For services that combine unfriendly conditions such as extreme temperatures and high solids, or corrosive with high temperatures, contact your sales representative.

PRESSURE/TEMPERATURE RATINGS FOR BODIES, DISCS AND SEATS

	Temperature (°C)															
Pressure (bar)	**-40**	**-29**	**-18**	**38**	**82**	**93**	**121**	**149**	**204**	**232**	**260**	**316**	**371**	**427**	**482**	**538**
ASME Class 150 body (Series 36)																
Carbon steel	-	19.7	19.7	19.7	18.6	17.9	16.9	15.9	13.8	12.8	11.7	9.7	7.6	5.5	-	-
Stainless steel	19.0	19.0	19.0	19.0	17.2	16.5	15.7	14.8	13.4	12.5	11.7	9.7	7.6	5.5	3.4	1.4
Nickel aluminum bronze	17.2	17.2	17.2	17.2	16.5	16.2	15.3	14.5	12.4	11.7	11.0	10.3	-	-	-	-
Ductile iron	-	17.2	17.2	17.2	16.5	16.2	15.5	14.8	13.8	12.8	11.7	9.7	-	-	-	-
ASME Class 300 body (Series 37)																
Carbon steel	-	51.0	51.0	51.0	48.3	46.5	45.9	45.2	43.8	42.5	41.4	37.9	36.9	28.3	-	-
Stainless steel	49.6	49.6	49.6	49.6	44.5	42.7	40.7	38.6	35.5	34.3	33.1	31.0	29.6	28.6	27.2	25.2
Nickel aluminum bronze	48.3	48.3	48.3	48.3	43.1	41.4	46.5	37.9	34.5	32.8	31.0	27.6	-	-	-	-
Ductile iron	-	44.1	44.1	44.1	42.1	41.4	40.2	39.0	36.2	35.2	34.1	32.1	-	-	-	-
ASME Class 150 disc																
Stainless steel	19.0	19.7	19.7	19.7	18.6	17.9	16.9	15.9	13.8	12.8	11.7	9.7	7.6	5.5	3.4	1.4
Nickel aluminum bronze	17.2	17.2	17.2	17.2	16.5	16.2	15.3	14.5	12.4	11.7	11.0	10.3	-	-	-	-
Monel	15.9	15.9	15.9	15.9	14.5	13.8	13.4	13.1	12.8	12.5	11.7	9.7	7.6	5.5	-	-
Ductile iron	-	17.2	17.2	17.2	16.5	16.2	15.5	14.8	13.8	12.8	11.7	9.7	-	-	-	-
ASME Class 300 disc																
Stainless steel	49.6	51.0	51.0	51.0	48.3	46.5	45.9	45.2	43.8	42.5	41.4	37.9	36.9	28.3	27.2	25.2
Nickel aluminum bronze	48.3	48.3	48.3	48.3	43.1	41.4	39.6	34.5	34.5	32.8	31.0	27.6	-	-	-	-
Monel	41.4	41.4	41.4	41.4	40.0	36.5	35.9	34.1	33.1	32.8	32.8	32.8	32.8	31.7	-	-
Ductile iron	-	44.1	44.1	44.1	42.1	41.4	40.2	39.0	36.2	35.2	34.1	32.1	-	-	-	-
K-LOK seats																
PTFE (TFE)	51.0	51.0	51.0	51.0	41.4	39.0	31.0	22.4	-	-	-	-	-	-	-	-
Reinforced TFE (RTFE)	51.0	51.0	51.0	51.0	48.3	46.9	37.9	31.0	15.5	6.9	-	-	-	-	-	-
UHMWPE	51.0	51.0	51.0	51.0	39.6	38.3	-	-	-	-	-	-	-	-	-	-
NBR	-	-	51.0	51.0	51.0	43.1	-	-	-	-	-	-	-	-	-	-
EPDM	51.0	51.0	51.0	51.0	51.0	46.5	37.9	-	-	-	-	-	-	-	-	-

PRESSURE/TEMPERATURE RATINGS FOR SEAT MATERIALS

ELASTOMER SEATS

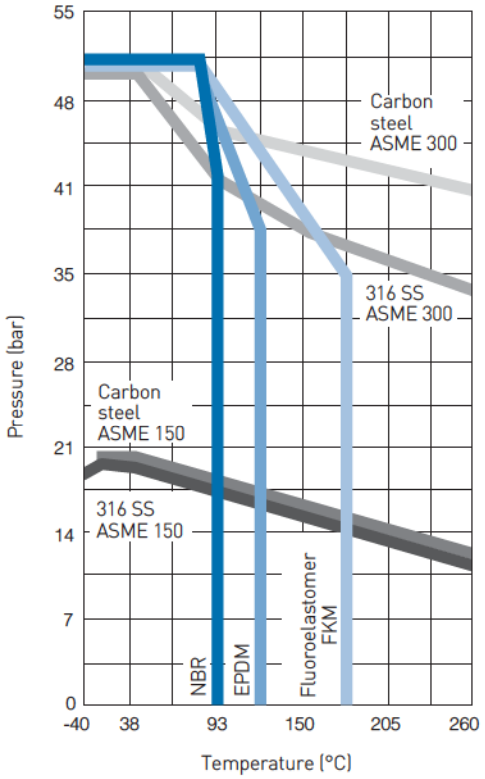

POLYMER SEATS

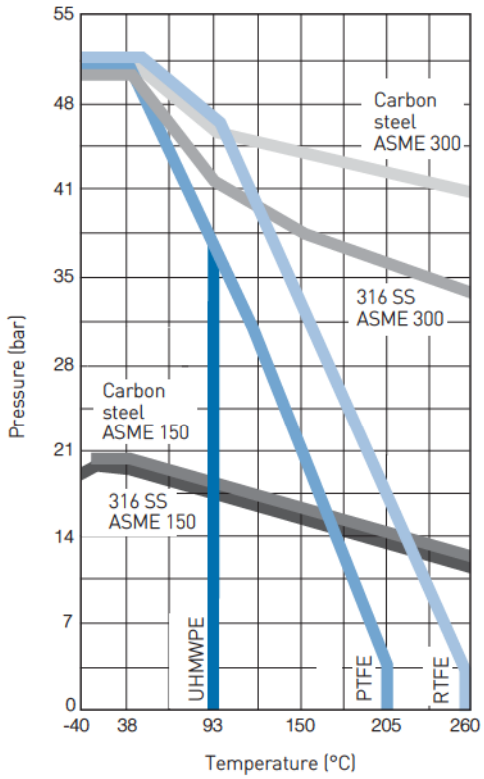

PRESSURE/TEMPERATURE RATINGS FOR BODIES, DISCS AND SEATS

	Temperature (°F)															
Pressure (psi)	**-40**	**-20**	**0**	**100**	**180**	**200**	**250**	**300**	**400**	**450**	**500**	**600**	**700**	**800**	**900**	**1000**
ASME Class 150 body (Series 36)																
Carbon steel	-	285	285	285	270	260	245	230	200	185	170	140	110	80	-	-
Stainless steel	275	275	275	275	250	240	227	215	195	182	170	140	110	80	50	20
Nickel aluminum bronze	250	250	250	250	240	235	222	210	180	170	160	150	-	-	-	-
Ductile iron	-	250	250	250	240	235	225	215	200	185	170	140	-	-	-	-
ASME Class 300 body (Series 37)																
Carbon steel	-	740	740	740	700	675	665	655	635	617	600	550	535	410	-	-
Stainless steel	720	720	720	720	645	620	590	560	515	497	480	450	430	415	395	365
Nickel aluminum bronze	700	700	700	700	625	600	675	550	500	475	450	400	-	-	-	-
Ductile iron	-	640	640	640	610	600	583	565	525	510	495	465	-	-	-	-
ASME Class 150 disc																
Stainless steel	275	285	285	285	270	260	245	230	200	185	170	140	110	80	50	20
Nickel aluminum bronze	250	250	250	250	240	235	222	210	180	170	160	150	-	-	-	-
Monel	230	230	230	230	210	200	195	190	185	182	170	140	110	80	-	-
Ductile iron	-	250	250	250	240	235	225	215	200	185	170	140	-	-	-	-
ASME Class 300 disc																
Stainless steel	720	740	740	740	700	675	665	655	635	617	600	550	535	410	395	365
Nickel aluminum bronze	700	700	700	700	625	600	575	500	500	475	450	400	-	-	-	-
Monel	600	600	600	600	580	530	520	495	480	475	475	475	475	460	-	-
Ductile iron	-	640	640	640	610	600	583	565	525	510	495	465	-	-	-	-
K-LOK seats																
PTFE (TFE)	740	740	740	740	600	565	450	325	-	-	-	-	-	-	-	-
Reinforced TFE (RTFE)	740	740	740	740	700	680	550	450	225	100	-	-	-	-	-	-
UHMWPE	740	740	740	740	575	555	-	-	-	-	-	-	-	-	-	-
NBR	-	-	740	740	740	625	-	-	-	-	-	-	-	-	-	-
EPDM	740	740	740	740	740	675	550	-	-	-	-	-	-	-	-	-

PRESSURE/TEMPERATURE RATINGS FOR SEAT MATERIALS

ELASTOMER SEATS

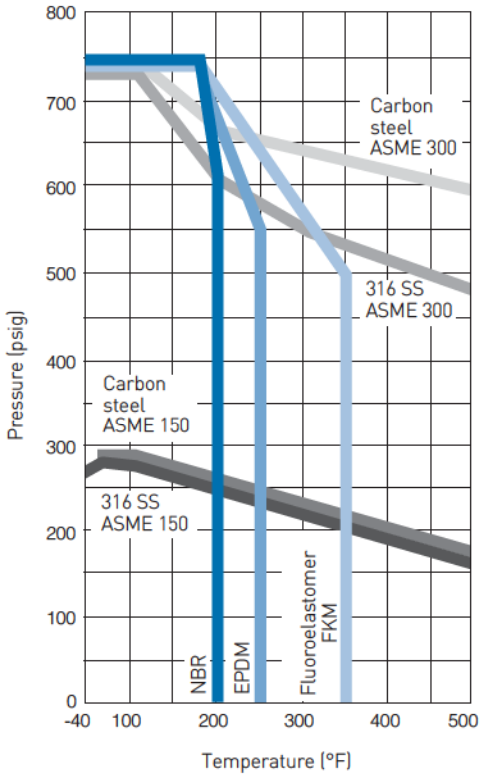

POLYMER SEATS

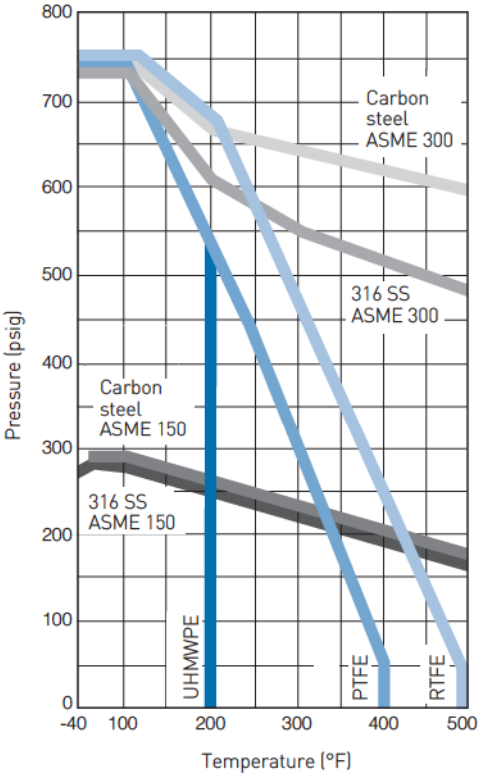

SELECTION GUIDE

| **Example:** | | |

© 2017 Emerson. All rights reserved.

Rev 01

BFV-02-150, BFV-02-155, BFV-02-170

[Nunami-DH]
- Required signals to PLC:
4-20mA position control (OK)
4-20mA position feedback (OK)
dry contact auto/manual operation (contractor to confirm or provide alternate)
dry contact overload/torque alarm (contractor to confirm or provide alternate)
- Manual operation must be capable of overriding 4-20mA signal.

MODEL EM-800

gearing system and a handwheel manual override to produce maximum torques in a compact package.

BETTIS on/off electric actuator,
Ductile iron body,
Nema 4X and CSA certified,
Size 810,
2x SPDT switches,
Heater,
Thermostat,
Internal brake,
Female output drive,
100% duty cycle,
115 VAC / 1 Ph, / 60 Hz,
30 second operation,
Modulating



STANDARD FEATURES

- Two year warranty
- Heater and thermostat installed in all actuators
- Case hardened steel spur gear train is permanently lubricated
- Operating temperatures:
  -40° F with standard heater activated, to +140° F
- Single phase capacitor run motor with thermal overload protection
- Enclosure certified to weatherproof C.S.A. specifications that conform to NEMA type 1, 2, 3,3R, 4 and 12
- Handwheel manual operation
- Mechanical position indicator
- Captive hex bolts on enclosure
- Dual 3/4-inch NPT machined conduit entrances
- Two single pole double throw travel-stop limit switches with adjustable cams and 2 aux S.P.D.T.
- Female drive
- Weight: 65-70 lbs (type 4), 150-160 lbs (explosion-proof)
- Two mechanical torque limit switches

OPTIONAL FEATURES

- Dual purpose weatherproof and explosion-proof enclosures are certified by Canadian Standards Association for services: Class I Groups C,D, Division I; Class II Groups E,F,G Division I that conform to NEMA type 7 and 9
- Standard 1K potentiometer, other ranges provided upon request
- Electronic proportional positioner for 4-20 mA, 1-5 vDC, or 0-10 vDC control input and 4-20mA output signal
- Optional voltages
  220 VAC 50/60 Hz single phase
  220 VAC 50/60 Hz 3 phase
- Relay control
- Maximum of four additional single pole double throw auxiliary limit switches with adjustable cams
- Electromechanical brake
- Canadian Standards Association general purpose for electrical certification available under file #LR90062

BETTIS®

EMERSON™
Process Management

MODEL EM-800

Torque 2,000 IN/LB – 20,000 IN/LB

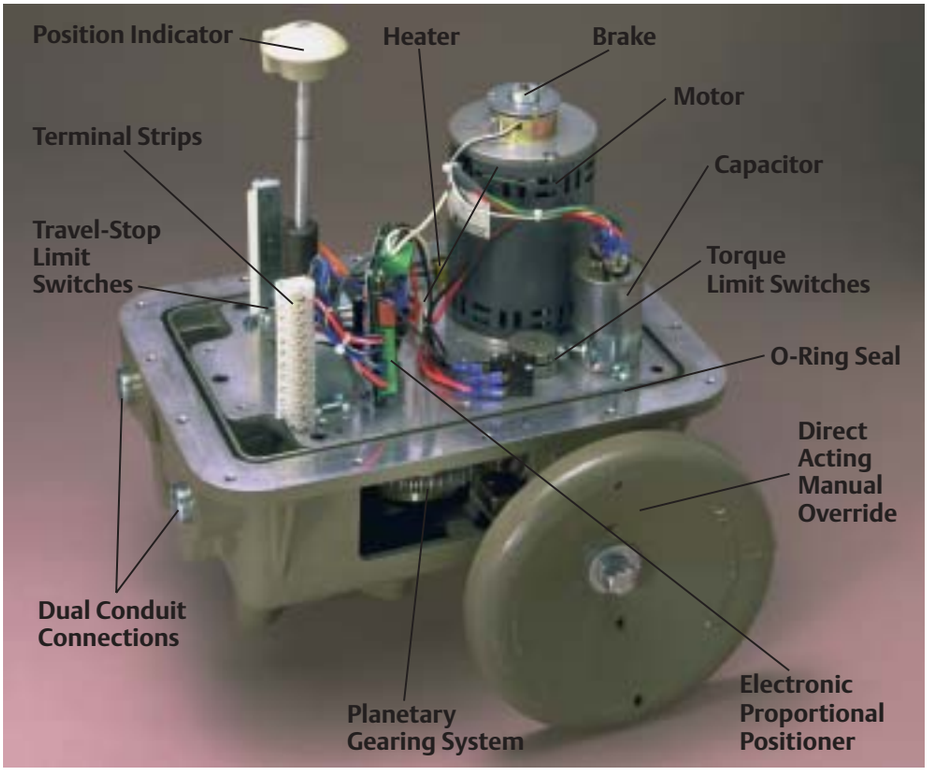

MODEL EM-800 SERIES						
TORQUE		SPEED	MODEL	LOCKED ROTOR AMP		MOTOR DUTY
IN/IB	NM	90°		115VAC	230VAC	CYCLE @ 75°F
2000	226	12 SEC	810-12	3.15	1.3	100%
2500	282	18 SEC	810-18	3.15	1.3	100%
3500	395	30 SEC	810-30	3.15	1.3	100%
4000	452	60 SEC	810-60	3.15	1.3	100%
3000	338	12 SEC	820-12	3.15	1.3	100%
4000	452	18 SEC	820-18	3.15	1.3	100%
6000	678	30 SEC	820-30	3.15	1.3	100%
7000	791	60 SEC	820-60	3.15	1.3	100%
5000	565	12 SEC	830-12	5.97	2.81	100%
7000	791	18 SEC	830-18	5.97	2.81	100%
10000	1130	30 SEC	830-30	5.97	2.81	100%
10000	1130	60 SEC	830-60	5.97	2.81	100%
15000	1695	48 SEC	840-48	5.97	2.81	100%
20000	2260	72 SEC	840-72	5.97	2.81	100%

Bettis Electric Mansfield, OH U.S.A. T 419-529-4296 Website: www.EmersonProcess.com/Bettis

© 2002 Emerson. All rights reserved. 5M/01-02

MODEL EM-810
~~EM-820~~
~~EM-830~~

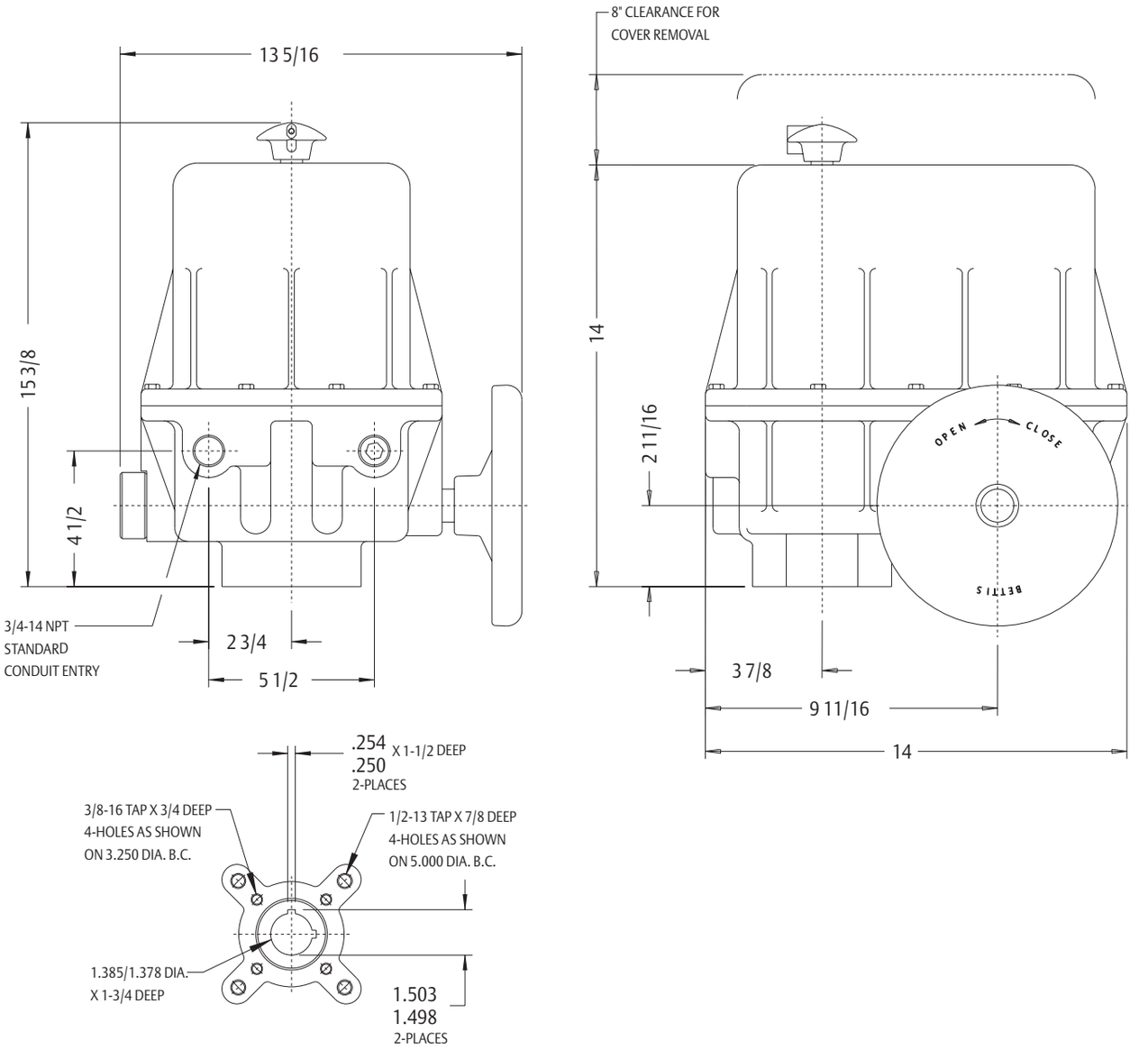

Bettis Electric
2500 Park Avenue West, Mansfield, OH 44906 U.S.A. T 419-529-4296 F 419-529-4484
Website: www.EmersonProcess.com/Bettis E-Mail: Info.Bettis.Electric@EmersonProcess.com

© 2002 Emerson. All rights reserved. 5M/01-02

Assembly Layout Drawings

MODEL EM-840

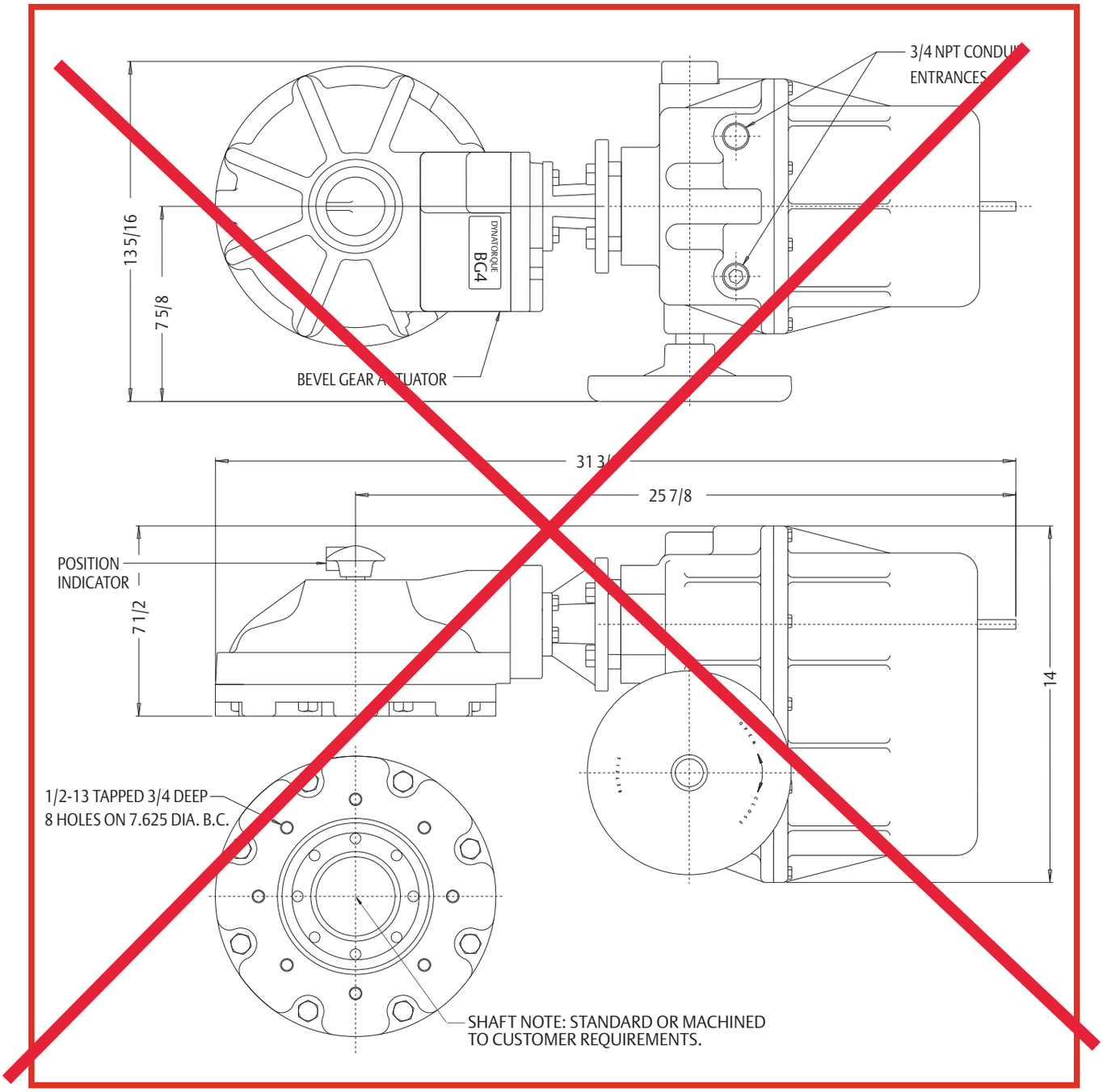

BETTIS®

EMERSON™
Process Management

REVIEWED BY CONTRACTOR

Kudlik Construction Ltd.

NAME: Sandra Rousseau P.Eng

DATE: Jan 30, 2019

NORCLAIR MÉCANIQUE DE PROCÉDÉ

SHOP DRAWINGS

DA-MP-09R3-Victaulic coupling (SS pipe)

Date : 2019-01-29

Information general	
Project : **WWTP UPGRADE - IQALUIT**	
Client : Kudlik Construction Ltd. To : Sandra Rousseau P.Eng., Project Manager	Project number : **2018-062** E-mail : srousseau@kudlik.biz
Contractor : **Norclair inc.**	Project number Norclair : **P1039**
Address : 1100, Montée Masson, Laval, QC, Canada H7E 4P2	
Project Manager : Hugo Chartier, Project Manager E-mail: hchartier@norclair.ca	
Phone : 450-688-4012 # 703	Cell. : 514-703-0263

Information, subcontractor or supplier	
Sub/supplier : Victaulic	
Contact : Matt Berardino	Phone : (514) 292-3722

Information on the equipment	
Speciality : **Process**	
Equipment : Victaulic coupling	
Drawing reference :	
Specification reference : **40 05 14** (Page xx / xx)	Division :
Article :	Number of pages : 8

AR;
2018-08-23

ULTANT APPROVAL

Environment inside a WWTP is considered wet. In order to accept dissimilar metals (ductile iron Victaulic joints on stainless steel pipelines, contractor to provide vapour barrier wraps on the joints to protect them from moisture and so avoid potential corrosion issues. Re-submit shop drawing confirming that vapour barrier wraps will be provided per joint.

STANTEC PROJECT #: 110126045

SUBMITTAL # DA-MP-09R3- VIctaulic coupling (SS pipe)

This review by Stantec is for general conformance with the design concept of Stantec's design of the:

- ☑ Process
- ☐ Structural
- ☐ Mechanical
- ☐ Electrical
- ☐ Other

component(s) only and does not mean that Stantec has verified or approves the shop drawing(s). The Contractor remains solely responsible for the shop drawing(s) and this review by Stantec does not relieve the Contractor of the Contractor's responsibility for errors or omissions in the shop drawing(s) or for meeting all requirements of the contract documents. This review does not mean that Stantec approves the detailed design inherent in the shop drawing, responsibility for which shall remain with the Contractor submitting same, nor does this review mean that Stantec accepts any deviation of the shop drawing(s) from the contract documents. The Contractor is responsible for confirming all dimensions and correlating them at the job site, for all construction means, methods and techniques, and for coordination of construction work of all trades, including coordination of all shop drawings.

Stantec

- ☑ REVIEWED
- ☐ REVIEWED, AS NOTED
- ☐ REVISE AND RESUBMIT
- ☐ NOT REVIEWED

DATE January 30, 2019

BY Alejandro Rojas, P.Eng

Victaulic® AGS Flexible Coupling
Style W77

20.03



14 – 24"/DN350 – DN600 sizes
Patented



26 – 60"/DN650 – DN1500 sizes
Patented



62 – 78"/DN1550 – DN1950 sizes
Patented

AGS™

AGS rolled groove

1.0 PRODUCT DESCRIPTION

Available Sizes

- 14 – 78"/DN350 - DN1950

Maximum Working Pressure

- 14 – 24"/DN350 – DN600: 350 psi/2413 kPa
- 26 – 42"/DN650 – DN950: 300 psi/2068 kPa
- 44 – 50"/DN1100 – DN1250: 232 psi/1599 kPa
- 54 – 62"/DN1350 – DN1550: 175 psi/1206 kPa
- 72"/DN1800 – 125 psi/861 kPa
- 78"/DN1950 – 100 psi/689 kPa

Function

- Unique wedge-shaped key profile increases allowable pipe end separation, resulting in easier assembly
- Style W77 AGS coupling in 26 – 78"/DN650 – DN1950 sizes, features lifting lugs integrated into the housings to help ease handling during installation.
- Provide limited linear and angular pipe movement at the pipe joint that can be used to compensate for thermal growth of piping systems, vibration attenuation, seismic, differential settlement and other applications requiring flexibility.

NOTES

- Style W77 AGS couplings are provided with FlushSeal™ gaskets for a variety of services. Please specify gasket grade when ordering. Please refer to publication 05.01 for gasket service ratings.
- Style W77 AGS flexible couplings can also be used on abrasive/slurry services in combination with an AGS *Vic-Ring*. See publication 16.12.

2.0 CERTIFICATION/LISTINGS

FM c UL us LISTED

NOTES

- Sizes 377mm, 426mm and 480mm are not UL, NSF and FM approved.
- See publication 02.06: Victaulic Potable Water Approvals ANSI/NSF for potable water approvals if applicable.
- Download publication 10.01 for Fire Protection Certifications/Listings Reference Guide.

ALWAYS REFER TO ANY NOTIFICATIONS AT THE END OF THIS DOCUMENT REGARDING PRODUCT INSTALLATION, MAINTENANCE OR SUPPORT.

System No.		Location	
Submitted By		Date	

Spec Section		Paragraph	
Approved		Date	

© 2018 Victaulic Company. All rights reserved.

3.0 SPECIFICATIONS – MATERIAL

Housing: Ductile iron conforming to ASTM A536, Grade 65-45-12. Ductile iron conforming to ASTM A395, Grade 65-45-15 available upon special request.

Housing Coating: (specify choice)

☐ Standard: Orange enamel.

☑ Optional: Hot dipped galvanized and others.

☐ Optional: Fusion Bonded Epoxy.

NOTE

- For additional coating options contact Victaulic.

Coupling Gasket: (specify choice[1])

☑ **Victaulic Grade "E" FlushSeal™ EPDM**
EPDM (Green stripe color code). Temperature range –30°F to +230°F/–34°C to +110°C. May be specified for hot water service within the specified temperature range plus a variety of dilute acids, oil-free air and many chemical services. UL Classified in accordance with ANSI/NSF 61 for cold +73°F/+23°C and hot +180°F/+82°C potable water service and ANSI/NSF 372. **NOT COMPATIBLE FOR USE WITH PETROLEUM SERVICES OR STEAM SERVICES.**

☐ **Victaulic Grade "T" Nitrile**
Nitrile (Orange color code). Temperature range –20°F to +180°F/–29°C to +82°C. May be specified for oil related services, including air with oil vapor, this gasket may be specified for temperatures rated up to +180°F/+82°C. For water related services, this gasket may be specified for temperatures rated up to +150°F/+66°C. For oil free, dry air services, this gasket may be specified for temperatures rated up to +140°F/+60°C. **NOT COMPATIBLE FOR USE WITH HOT WATER SERVICES OR STEAM SERVICES.**

☐ **Victaulic Grade "L" Silicone**
Silicone (Red color code). Temperature range –30°F to +350°F/–34° C to +177° C. May be specified for dry heat, air without hydrocarbons to +350°F/+177°C and certain chemical services.

☐ **Others**
For alternate gasket selection, reference publication 05.01: Victaulic Seal Selection Guide - Elastomeric Seal Construction.

[1] Services listed are General Service Guidelines only. It should be noted that there are services for which these gaskets are not compatible. Reference should always be made to the latest Victaulic Seal Selection Guide for specific gasket service guidelines and for a listing of services which are not compatible.

Bolts/Nuts: (specify choice[2])

☑ Standard: Carbon steel oval neck track bolts meeting the mechanical property requirements of ASTM A449. Carbon steel heavy hex nuts meeting the mechanical property requirements of ASTM A563 Grade B. Track bolts and heavy hex nuts are zinc electroplated per ASTM B633 ZN/FE5, finish Type III (imperial) or Type II (metric).

☐ Optional: Stainless steel oval neck track bolts meeting the mechanical property requirements of ASTM A193 Grade B8M, Class 2 (316 stainless steel). Stainless steel heavy hex nuts meeting the mechanical property requirements of A194 Grade 8M (316 stainless steel), condition CW, with galling reducing coating.

For 26 – 78"/DN650 – DN1950 sizes:

☐ Washers: Plated carbon steel, flat. SAE high strength conforming to ASTM F436 or high strength stainless steel.

[2] Optional bolts/nuts are available in imperial and metric sizes.

 © 2018 Victaulic Company. All rights reserved.

4.0 DIMENSIONS

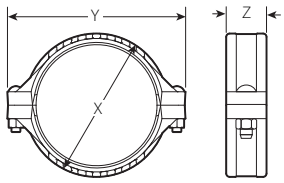

Typical 14 – 24"/
DN350 – DN600

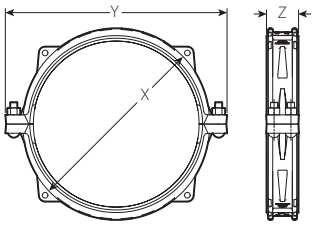

Typical 26 – 60"/
DN650 – DN1500

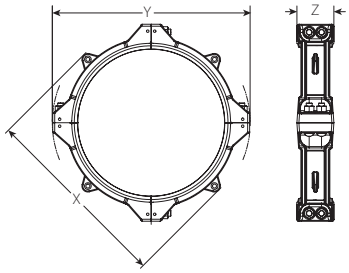

Typical 62 – 78"/
DN1550 – DN1950



Exaggerated for clarity

Size		Pipe End Separation	Deflect. From CL		Bolt/Nut		Dimensions			Weight
Nominal inches DN	**Actual Outside Diameter** inches mm	**Allowable** inches mm	**Per** Cplg. Deg.	in/ft mm/m	**Qty.**	**Size** inches	**X** inches mm	**Y** inches mm	**Z** inches mm	**Approximate (Each)** lb kg
14 DN350	14.000 355.6	0.13 – 0.31 3.3 – 7.9	0.73	0.15 13	2	1 x 5 ½	16.00 406	20.63 524	4.50 114	48.0 21.8
	14.843 377.0	0.13 – 0.31 3.3 – 7.9	0.69	0.14 12	2	1 x 5 ½	16.84 428	21.44 545	4.54 115	52.6 23.9
16 DN400	16.000 406.4	0.13 – 0.31 3.3 – 7.9	0.63	0.13 11	2	1 x 5 ½	18.25 464	22.00 559	4.50 114	58.0 26.3
	16.772 426.0	0.13 – 0.31 3.3 – 7.9	0.61	0.13 11	2	1 x 5 ½	18.95 481	23.47 596	4.55 116	63.1 28.6
18 DN450	18.000 457.0	0.13 – 0.31 3.3 – 7.9	0.57	0.12 10	2	1 x 5 ½	20.38 518	25.50 648	4.50 114	65.0 29.5
	18.898 480.0	0.13 – 0.31 3.3 – 7.9	0.54	0.11 9	2	1 x 5 ½	25.72 653	21.26 540	4.55 116	75.7 34.3
20 DN500	20.000 508.0	0.13 – 0.31 3.3 – 7.9	0.50	0.10 9	2	1 1/8 x 5 ½	22.63 575	27.13 689	4.50 114	82.0 37.2
22 DN550	22.000 559.0	0.13 – 0.31 3.3 – 7.9	0.50	0.10 9	2	1 1/8 x 6	24.75 629	29.25 743	4.50 114	99.0 44.9
24 DN600	24.000 610.0	0.13 – 0.31 3.3 – 7.9	0.42	0.09 8	2	1 1/8 x 5 ½	26.88 683	31.25 794	4.50 114	107.0 48.5
26 DN650	26.000 660.4	0.15 – 0.53 3.8 – 13.5	0.83	0.18 15	4	1 1/8 x 6	30.13 765	35.25 895	5.75 146	205.0 93.0
28 DN700	28.000 711.2	0.15 – 0.53 3.8 – 13.5	0.78	0.16 14	4	1 1/8 x 6	32.25 819	37.25 946	5.75 146	220.0 99.8
30 DN750	30.000 762.0	0.15 – 0.53 3.8 – 13.5	0.73	0.16 13	4	1 ¼ x 7	33.88 863	39.63 1007	5.75 146	227.0 103.0
32 DN800	32.000 812.8	0.15 – 0.53 3.8 – 13.5	0.68	0.14 11	4	1 ¼ x 7	36.13 918	41.75 1060	5.75 146	242.0 109.8
34 DN850	34.000 865.0	0.15 – 0.53 3.8 – 13.5	0.69	0.13 11	4	1 ¼ x 7	38.25 972	43.75 1111	5.75 146	255.0 115.7
36 DN900	36.000 914.4	0.15 – 0.53 3.8 – 13.5	0.60	0.13 11	4	1 ¼ x 7	40.25 1022	45.75 1161	5.75 146	268.0 121.6

NOTES

- WARNING: FOR ONE TIME FIELD TEST ONLY, the Maximum Joint Working Pressure may be increased to 1 ½ times the figures shown.
- Metric thread size bolts are available (color coded gold) for all coupling sizes upon request. Contact Victaulic for details.
- The outside diameter, ovality, and surface finish including flat spots and imperfections shall not vary more than the limits of API 5L end tolerance.
- See publication 25.09: Advanced Groove System (AGS) Roll Groove Specifications for proper groove specifications.
- Additional wall thicknesses available. For performance on additional pipe wall thicknesses contact Victaulic.
- For additional pipe sizes, please contact Victaulic.

 © 2018 Victaulic Company. All rights reserved.

5.0 PERFORMANCE

Style W77

Size		Maximum Working Pressure			Max. End Load[5]
Nominal inches DN	Actual Outside Diameter inches mm	Light Wall[4] psi kPa	Std. Wall psi kPa	Extra Heavy ½ – ¾" 13–19mm psi kPa	lb N
14 DN350	14.000 355.6	350 2413	350 2413	350 2413	55800 248310
	14.843 377.0	350 2413	350 2413	350 2413	60562 27470
16 DN400	16.000 406.4	350 2413	350 2413	350 2413	72885 324209
	16.772 426.0	350 2413	350 2413	350 2413	77326 35074
18 DN450	18.000 457.0	350 2413	350 2413	350 2413	92245 410326
	18.898 480.0	350 2413	350 2413	350 2413	98172 44530
20 DN500	20.000 508.0	350 2413	350 2413	350 2413	113880 506563
22 DN550	22.000 559.0	350 2413	350 2413	350 2413	133046 591818
24 DN600	24.000 610.0	225 1551	350 1551	350 1551	163990[6] 729464[6]
26 DN650	26.000 660.4	300 2068	300 2068	300 2068	159279 708508
28 DN700	28.000 711.2	300 2068	300 2068	300 2068	184726 821702
30 DN750	30.000 762.0	300 2068	300 2068	300 2068	212058 943281
32 DN800	32.000 812.8	300 2068	300 2068	300 2068	241274 1073240
34 DN850	34.000 865.0	300 2068	300 2068	300 2068	272375 1211584
36 DN900	36.000 914.4	300 2068	300 2068	300 2068	305363 1358322

4 Light Wall for 14"/DN350 = 0.22"/5.6 mm; 16 – 24"/DN400 – DN600 = 0.25"/6.4 mm, 26 – 50"/DN650 – DN1250 = 0.312"/7.9 mm
Light Wall for 377 mm = 0.217"/5.5 mm; 426 mm = 0.256"/6.5 mm; 480 mm = 0.256"/6.5 mm

5 End loads are total from all internal and external loads, based on carbon steel pipe, rolled with Victaulic AGS rolls in accordance with Victaulic AGS roll groove specifications. Contact Victaulic for performance on other pipe.

6 The end load for 24"/DN600 installed on light wall pipe is 101790 lbs/456426 N.

NOTES

- WARNING: FOR ONE TIME FIELD TEST ONLY, the Maximum Joint Working Pressure may be increased to 1 ½ times the figures shown.
- Metric thread size bolts are available (color coded gold) for all coupling sizes upon request. Contact Victaulic for details.
- The outside diameter, ovality, and surface finish including flat spots and imperfections shall not vary more than the limits of API 5L end tolerance.
- See publication 25.09: Advanced Groove System (AGS) Roll Groove Specifications for proper groove specifications.
- Additional wall thicknesses available. For performance on additional pipe wall thicknesses contact Victaulic.
- For additional pipe sizes, please contact Victaulic.

 © 2018 Victaulic Company. All rights reserved.

5.1 PERFORMANCE

Torque Requirements

Nominal Pipe Size inches DN	Required Torque ft. lbs. N•m
14, 16, 18 350, 400, 450	250 340
377, 426, 480mm	250 340
20, 22, 24, 26, 28 500, 550, 600, 650, 700	375 500
30, 32, 34, 36, 38 750, 800, 850, 900, 950	500 680
40, 42, 44, 46, 48, 50, 54, 56,58, 60, 62, 64, 72, 78 1000, 1050, 1100, 1150, 1200, 1250, 1350, 1450, 1500, 1550, 1600, 1800, 1950	600 813

6.0 NOTIFICATIONS

⚠ WARNING

- **When grooving pipe for use with AGS products, Victaulic roll grooving tools must be quipped with AGS roll sets (RW for steel or RWX for stainless steel).**
- **RWX grooving rolls are identified by a silver color and the designation "RWX" on the front of the roll sets.**
- **Victaulic AGS products MUST NOT be installed on pipe that is prepared with original-type grooving roll sets.**
- **To ensure proper pipe end preparation refer to publication 25.09 for AGS (Advanced Groove System) roll groove pipe specifications.**

Failure to follow these instructions will cause grooves that are not within Victaulic AGS specifications, resulting in joint failure, serious personal injury, and property damage.

7.0 REFERENCE MATERIALS

02.06: Victaulic® Potable Water Approvals ANSI/NSF
05.01: Victaulic® Seal Selection Guide
16.12: Victaulic® AGS *Vic-Ring* Systems
20.05: Victaulic® AGS Grooved End Fittings
24.01: Victaulic® Pipe Preparation Tool Specifications
25.09: Victaulic® AGS Roll Groove Data
26.01: Victaulic® Design Data
29.01: Victaulic® Terms and Conditions/Warranty
I-100: Victaulic® Field Installation Handbook

User Responsibility for Product Selection and Suitability
Each user bears final responsibility for making a determination as to the suitability of Victaulic products for a particular end-use application, in accordance with industry standards and project specifications, and the applicable building codes and related regulations as well as Victaulic performance, maintenance, safety, and warning instructions. Nothing in this or any other document, nor any verbal recommendation, advice, or opinion from any Victaulic employee, shall be deemed to alter, vary, supersede, or waive any provision of Victaulic Company's standard conditions of sale, installation guide, or this disclaimer.

Intellectual Property Rights
No statement contained herein concerning a possible or suggested use of any material, product, service, or design is intended, or should be constructed, to grant any license under any patent or other intellectual property right of Victaulic or any of its subsidiaries or affiliates covering such use or design, or as a recommendation for the use of such material, product, service, or design in the infringement of any patent or other intellectual property right. The terms "Patented" or "Patent Pending" refer to design or utility patents or patent applications for articles and/or methods of use in the United States and/or other countries.

Note
This product shall be manufactured by Victaulic or to Victaulic specifications. All products to be installed in accordance with current Victaulic installation/assembly instructions. Victaulic reserves the right to change product specifications, designs and standard equipment without notice and without incurring obligations.

Installation
Reference should always be made to the Victaulic installation handbook or installation instructions of the product you are installing. Handbooks are included with each shipment of Victaulic products, providing complete installation and assembly data, and are available in PDF format on our website at www.victaulic.com.

Warranty
Refer to the Warranty section of the current Price List or contact Victaulic for details.

Trademarks
Victaulic and all other Victaulic marks are the trademarks or registered trademarks of Victaulic Company, and/or its affiliated entities, in the U.S. and/or other countries.

 © 2018 Victaulic Company. All rights reserved.

COUVERTURE ISOLANTE
INSULATING BLANKET

ISOTEX-AW1700

Depuis 1989, la compagnie I.P.I. Inc. confectionne des couvertures isolantes pour hautes et basses températures. La couverture isolante ISOTEX est utilisée pour remplacer l'isolation conventionnelle qui est installée sur la tuyauterie, les instruments industriels et autres. Elle est munie d'attaches Velcro, de corde, de crochet et autres lui permettant ainsi d'être réutilisable. Son installation est simple et rapide étant donné que les tissus et les isolants utilisés pour sa confection sont souples et flexibles. La coupe et l'assemblage des matériaux se fait en usine permettant ainsi de simplifier le travail sur le chantier. /

Since 1989, the company I.P.I. Inc. makes insulating coverage for high and low temperatures. The insulating coverage ISOTEX is used to replace the conventional insulation usually put over piping in industrial fields and others. They are made of supple and flexible material with high insulating quality. The use of Velcro, ropes, chains and hooks permit the cover to be easily adjusted. The blanket is removable and reusable.

Températures d'utilisation recommandées / *recommended temperatures*
entre –22°F et 350°F / *Between –30°C and 177°C*

Lieux d'installation / *recommended utilities*
Pour l'extérieur et autres/ For outdoors and others

Les matériaux de fabrication pour la conception de la couverture ISOTEX-AW1720 / *The materials used in the conception of the blanket ISOTEX-AW1720*	
Le tissu extérieur / *External surface:*	Tissu de fibre de verre de 17oz imprégné de silicone / *Fibre glass fabric 17oz impregnated of silicone.*
Le tissu intérieur / *Internal surface:*	Tissu de fibre de verre de 17oz imprégné de silicone / *Fibre glass fabric 17oz impregnated of silicone*
La matière isolante / *Insulation material:*	~~2 couches de 2" d'épaisseur de fibre de verre à basse densité / 2 layers of 2" of thickness of fiberglass low density.~~ 1in thick insulation
Les accessoires / *Accessories:*	Attaches velcro, fils d'acier inoxydable à 10 brins, pine et crochet d'acier inoxydable (jauge 14), cordon de fibre de verre imprégné de silicone / *Velcro, sewing thread with ten strands, pins and lacing anchors in stainless steel, fibre glass rope impregnated of silicone.*

Les avantages d'utilisation	***Advantages***
Diminution des coûts de main d'œuvre reliée à l'installation ;	*Diminishes labour costs;*
Diminution des coûts reliés au remplacement des matériaux isolants lors de la réparation des équipements ;	*Diminishes the costs of replacing material when repairs are necessary;*
Installation simple et rapide ;	*Simple and fast installation;*
Une protection imperméable ;	*Impermeable;*
Un recouvrement esthétique ;	*Aesthetically pleasing;*
Une protection thermique réutilisable ;	*Reusable protection against the heat and the cold;*
Une protection contre la corrosion.	*Corrosion resistant.*

IPI isolation thermique

I.P.I. Inc.
460 rue Perreault, Saint-Romuald
Québec Canada G6W 7V6
info@ipiinter.com
www.ipiinter.com

T 418.839.6776

F 418.839.7945

BULLETIN TECHNIQUE / *TECHNICAL DATA*

Tissu de fibre de verre 17 oz imprégné de silicone / *Fibre glass fabric 17 oz impregnated of silicone*

Poids / *Weight:*	0.403 kg/m^2 ± 10%	(17 oz/v^2 ± 10%) *(17 oz/y^2 ± 10%)*
Épaisseur / *Thickness:*	0.406 mm ± 10%	(0.016" ± 10%)
Couleur / *Color:*	Gris / *grey*	

La température de service / *Service temperature:*

500°F	(260°C)
Tissu / *Fabric:*	1000°F (538°C)
Silicone / *Silicone:*	500°F (260°C)

Méthode / *Tests*	Description / *Description*	Valeur / *Value*
FTMS 191A/M5136	Résistance à la tension *Tensile strength*	4.52 kg/mm (250 lbs/pouce) *(250 pds/in)*
FTMS 191A/M5136	Résistance aux déchirures *Tear strength*	23 kg (50 lbs) *(50 pds)*
FTMS 191A/M5122 (Mullen)	Résistance à l'éclatement *Burst strength*	0.15 kg/mm^2 (200 lbs/pouce^2) *(200 pds/in^2)*
FTMS 191A/M5512	Résistance hydrostatique *Hydrostatic resistance*	0.15 kg/mm^2 (200 lbs/pouce^2) *(200 pds/in^2)*

Rencontre les normes militaires : MIL-C-20079F

Isolation de fibre de verre à basse densité / *Low density fibre glass insulation*

Densité / *density:*	17.6 kg/m^3	(1.1 lbs/pi^3) *(1.1 pds/ft^3)*
Épaisseur / *Thickness:*	50 mm	(2")
Température de service / *Service temperature:*	950°F	(510 °C)
Norme / Norm	**CAN/ULC S102-M88**	

Fils d'acier inoxydable */ Sewing thread*

10 brins de fils métallique de 0.0432 mm (0.0017") de diamètre recouverts d'un fils de polyester à retardement des flammes. / *Ten strands of 0.0017" (0.0432 mm) wire covered with a flame retardant polyester thread coated with silicone lubricant.*

Température de service / *Service temperature:*	1000°F	(538°C)
Résistance à la rupture / *Break strength:*	3.63 kg	(8 lbs) *(8 pounds)*
Élongation / *Elongation:*	30%	



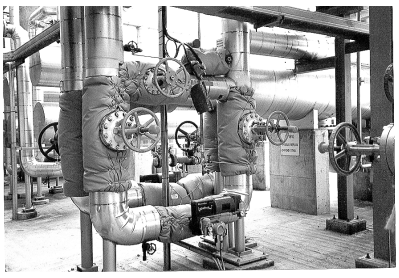



I.P.I. Inc.
460 rue Perreault, Saint-Romuald
Québec Canada G6W 7V6
info@ipiinter.com
www.ipiinter.com

T 418.839.6776

F 418.839.7945

REVIEWED BY CONTRACTOR

Kudlik Construction Ltd.

NAME: Sandra Rousseau P.Eng

DATE: Oct 18, 2018

NORCLAIR
MÉCANIQUE DE PROCÉDÉ

SHOP DRAWINGS

DA-MP-10R2 – (Flanged equipment connections) **Date :** 2018-10-18

Information general	
Project : **WWTP UPGRADE - IQALUIT**	
Client : Kudlik Construction Ltd. To : Sandra Rousseau P.Eng., Project Manager	Project number : **2018-062** E-mail : srousseau@kudlik.biz
Contractor : **Norclair inc.**	Project number Norclair : **P1039**
Address : 1100, Mountain Masson, Laval, QC, Canada H7E 4P2	
Project Manager : Dominic Papineau, Project Manager	E-mail: dpapineau@norclair.ca
Phone : 450-688-4012 # 720	Cell. : 514-409-1832

Information, subcontractor or supplier	
Sub/supplier : Pinacle	
Contact : Olivier Lauzon	Phone :

Information on the equipment	
Speciality : **Process**	
Equipment : Flanged equipment connections	
Drawing reference :	
Specification reference : **40 05 13.01** (Page xx / xx)	Division :
Article :	Number of pages :

Flange connections for <65mm removed from this shop drawing as per RFI-059.
HC, 2018-10-18

CONSULTANT APPROVAL

STANTEC PROJECT #: 110126045

SUBMITTAL # DA-MP-10R2

This review by Stantec is for general conformance with the design concept of Stantec's design of the:

☑ Process ☐ Electrical
☐ Structural ☐ Other
☐ Mechanical

component(s) only and does not mean that Stantec has verified or approves the shop drawing(s). The Contractor remains solely responsible for the shop drawing(s) and this review by Stantec does not relieve the Contractor of the Contractor's responsibility for errors or omissions in the shop drawing(s) or for meeting all requirements of the contract documents. This review does not mean that Stantec approves the detailed design inherent in the shop drawing, responsibility for which shall remain with the Contractor submitting same, nor does this review mean that Stantec accepts any deviation of the shop drawing(s) from the contract documents. The Contractor is responsible for confirming all dimensions and correlating them at the job site, for all construction means, methods and techniques, and for coordination of construction work of all trades, including coordination of all shop drawings.

Stantec

☐ REVIEWED
☑ REVIEWED, AS NOTED
☐ REVISE AND RESUBMIT
☐ NOT REVIEWED

DATE October 19, 2018

BY Zach Paquin

1100, montée Masson
Laval, QC, Canada
H7E 4P2

Phone. : 450-688-4012
Fax : 450-661-6341
E-Mail : info@norclair.ca
www.norclair.ca

NPS Angle Collars ASTM A774

Equipment connections for SS piping > 65mm
Backing flange to be SS304 for all submerged application.

NPS Nominal Pipe Size		O.D Outsude Diameter		A		Angle Dimensions B-C-T		Weight	
In	mm	In	mm	In	mm	In	mm.	lb	kg
3	76	3.500	89	3.563	90	3/4 x 3/4 x 1/8	19 x 19 x 3.2	0.5	0.2
4	102	4.500	114	4.563	116	1 x 1 x 1/8	25 x 25 x 3.2	0.9	0.4
5	127	5.563	141	5.625	143	1 x 1 x 1/8	25 x 25 x 3.2	1.2	0.5
6	152	6.625	168	6.688	170	1 x 1 x 1/8 1 x 1 x 3/16	25 x 25 x 3.2 25 x 25 x 4.8	1.4 2.0	0.6 0.9
8	203	8.625	219	8.750	222	1 1/4 x 1 1/4 x 1/8 1 1/4 x 1 1/4 x 3/16	32 x 32 x 3.2 32 x 32 x 4.8	2.3 3.4	1.0 1.5
10	254	10.750	273	10.875	276	1 1/4 x 1 1/4 x 1/8 1 1/4 x 1 1/4 x 3/16	32 x 32 x 3.2 32 x 32 x 4.8	2.8 4.2	1.3 1.9
12	305	12.750	324	12.875	327	1 1/2 x 1 1/2 x 1/8 1 1/2 x 1 1/2 x 3/16	38 x 38 x 3.2 38 x 38 x 4.8	4.1 6.0	1.9 2.7
14	356	14.000	356	14.094	358	1 1/2 x 1 1/2 x 1/8 1 1/2 x 1 1/2 x 3/16	38 x 38 x 3.2 38 x 38 x 4.8	4.5 6.6	2.0 3.0
16	406	16.000	406	16.125	410	1 1/2 x 1 1/2 x 3/16 1 1/2 x 1 1/2 x 1/4	38 x 38 x 4.8 38 x 38 x 6.3	7.5 9.7	3.4 4.4
18	457	18.000	457	18.125	460	1 1/2 x 1 1/2 x 3/16 1 1/2 x 1 1/2 x 1/4	38 x 38 x 4.8 38 x 38 x 6.3	8.5 11.0	3.8 5.0
20	508	20.000	508	20.125	511	1 1/2 x 1 1/2 x 3/16 1 1/2 x 1 1/2 x 1/4	38 x 38 x 4.8 38 x 38 x 6.3	9.4 12.2	4.3 5.5
24	610	24.000	610	24.125	613	2 x 2 x 3/16 2 x 2 x 1/4	51 x 51 x 4.8 51 x 51 x 6.3	15.3 19.9	6.9 9.0
30	762	30.000	762	30.125	765	2 x 2 x 1/4 2 x 2 x 3/8	51 x 51 x 6.3 51 x 51 x 9.5	24.9 36.6	11.3 16.6
36	914	36.000	914	36.125	918	2 x 2 x 1/4 2 x 2 x 3/8	51 x 51 x 6.3 51 x 51 x 9.5	38.5 64.6	17.5 29.3
42	1067	42.000	1067	42.125	1070	2 1/2 x 2 1/2 x 1/4 2 1/2 x 2 1/2 x 3/8	64 x 64 x 6.3 64 x 64 x 9.5	44.9 75.4	20.4 34.2
48	1219	48.000	1219	48.125	1222	2 1/2 x 2 1/2 x 1/4 2 1/2 x 2 1/2 x 3/8	64 x 64 x 6.3 64 x 64 x 9.5	51.4 86.3	23.3 39.1

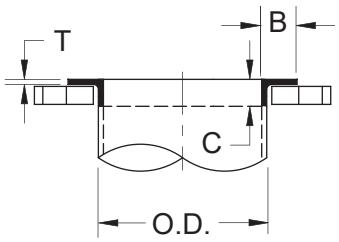

Butt Weld Angle Collars
(Use with Backing Flanges)
P. 3-14

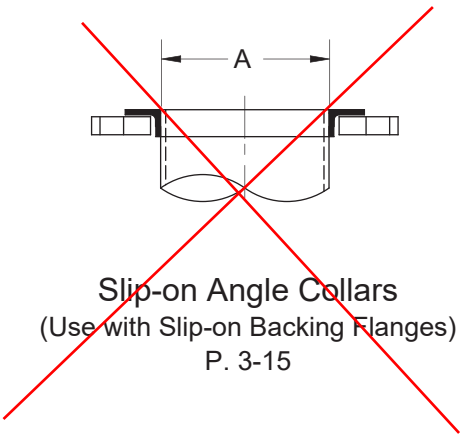

Slip-on Angle Collars
(Use with Slip-on Backing Flanges)
P. 3-15



General Notes:

a. Material: Stainless Steel 304L, 316L, 317L, Other alloys available upon request.
b. Suggested Maximum Working Pressure : See technical section.
c. Fabrication Tolerance: See technical section.
d. Other diameter and thickness available upon request.

NPS Backing Flanges

Equipment connections for SS piping > 65mm
Backing flange to be SS304 for all submerged application.



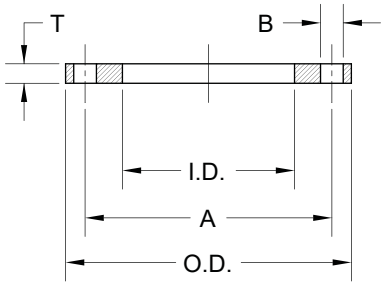

NPS Nominal Pipe Size In *mm*	O.D In *mm*	I.D. In *mm*	A In *mm*	# of holes	B In *mm*	T In *mm*	Weight lb *kg*
1 1/2 *38*	5.00 *127*	2.150 *55*	3.875 *98*	4	0.625 *16*	0.750 *19*	3.6 *1.6*
2 *51*	6.000 *152*	2.625 *67*	4.750 *121*	4	0.750 *19*	0.750 *19*	4.7 *2.1*
2 1/2 *64*	7.000 *178*	3.125 *79*	5.500 *140*	4	0.750 *19*	0.750 *19*	6.2 *2.8*
3 *76*	7.500 *191*	3.875 *98*	6.000 *152*	4	0.750 *19*	0.750 *19*	7.1 *3.2*
4 *102*	9.000 *229*	4.875 *124*	7.500 *191*	8	0.750 *19*	0.750 *19*	9.5 *4.3*
5 *127*	10.000 *254*	5.938 *151*	8.500 *216*	8	0.875 *22*	0.750 *19*	10.7 *4.9*
6 *152*	11.000 *279*	7.000 *178*	9.500 *241*	8	0.875 *22*	0.750 *19*	12.3 *5.6*
8 *203*	13.500 *343*	9.000 *229*	11.750 *298*	8	0.875 *22*	0.750 *19*	17.7 *8.0*
10 *254*	16.000 *406*	11.250 *286*	14.250 *362*	12	1.000 *25*	1.000 *25*	30.2 *13.7*
12 *305*	19.000 *483*	13.250 *337*	17.000 *432*	12	1.000 *25*	1.000 *25*	43.5 *19.7*
14 *356*	21.000 *533*	14.500 *368*	18.750 *476*	12	1.125 *29*	1.125 *29*	55.0 *24.9*
16 *406*	23.500 *597*	16.500 *419*	21.250 *540*	16	1.125 *29*	1.125 *29*	66.0 *29.9*
18 *457*	25.000 *635*	18.500 *470*	22.750 *578*	16	1.250 *32*	1.250 *32*	81.4 *36.9*
20 *508*	27.500 *699*	20.500 *521*	25.000 *635*	20	1.250 *32*	1.250 *32*	86.3 *39.1*
24 *610*	32.000 *813*	24.500 *622*	29.500 *749*	20	1.375 *35*	1.375 *35*	121.0 *54.9*
30 *762*	38.750 *984*	30.625 *778*	36.000 *914*	28	1.375 *35*	1.625 *41*	176.0 *79.8*
36 *914*	46.000 *1168*	36.625 *930*	42.750 *1086*	32	1.625 *41*	1.625 *41*	237.0 *107.5*
42 *1067*	53.000 *1346*	42.625 *1083*	49.500 *1257*	36	1.625 *41*	1.750 *44*	337.0 *152.9*
48 *1219*	59.500 *1511*	48.625 *1235*	56.000 *1422*	44	1.625 *41*	2.000 *51*	455.0 *206.4*

General Notes:

a. Material: Carbon Steel with chemical composition and mechanical strength equivalent to ASTM A 105.
b. Finish: Galvanized to ASTM A 123
c. Drilling: 1 1/2" to 24" ASME B16.5 Class150, 30" to 48" ASME B16.47 Class150 serie "A"
d. Suggested Maximum Working Pressure : See technical section.
e. Other diameter and thickness available upon request.

REVIEWED BY CONTRACTOR

Kudlik Construction Ltd.

NAME: Sandra Rousseau P.Eng

DATE: Jun 27, 2018

NORCLAIR
MÉCANIQUE DE PROCÉDÉ

TDS AND SHOP DRAWINGS

DA-MP-11-Submersible chopper pumps **Date :** 2018-06-27

INFORMATION	
Project : **WASTEWATER PLANT - IQALUIT**	
Client : Kudlik Construction Ltd. To Sandra Rousseau P.Eng./ Project Manager	Project number : **2018-062**
Contractor : Norclair inc.	Project number Norclair : **P1039**
Address : 1100, Montee Masson, Laval, QC, Canada H7E 4P2	
Project Manager : Steven Wieland	E-mail: swieland@norclair.ca
Phone: 450-688-4012 # 708	Cell.: 514-608-0619

Information, subcontractor or supplier	
Sub supplier : Xylem	
Contact : Hugo Chartier	Phone : 450-688-4012 ext.706

Information on the equipment or the proposed materials	
Speciality : Mechanical Process	
Equipment : Submersible chopper pumps (3x) no.**FP 3171 MT 3-436**	
Drawing reference :	
Specification reference : 40 05 23	Division :
Article :	Number Page : 41

CONSULTANT APPROVAL

No comments

STANTEC PROJECT #: Iqaluit WWTP

SUBMITTAL # DA-MP-11

This review by Stantec is for general conformance with the design concept of Stantec's design of the:

☑ Process ☐ Structural ☐ Mechanical ☐ Electrical ☐ Other

component(s) only and does not mean that Stantec has verified or approves the shop drawing(s). The Contractor remains solely responsible for the shop drawing(s) and this review by Stantec does not relieve the Contractor of the Contractor's responsibility for errors or omissions in the shop drawing(s) or for meeting all requirements of the contract documents. This review does not mean that Stantec approves the detailed design inherent in the shop drawing, responsibility for which shall remain with the Contractor submitting same, nor does this review mean that Stantec accepts any deviation of the shop drawing(s) from the contract documents. The Contractor is responsible for confirming all dimensions and correlating them at the job site, for all construction means, methods and techniques, and for coordination of construction work of all trades, including coordination of all shop drawings.

Stantec

☑ REVIEWED

☐ REVIEWED, AS NOTED

☐ REVISE AND RESUBMIT

☐ NOT REVIEWED

DATE June 28, 2018

BY Libin Ren

1100, Montée Masson
Laval, QC, Canada
H7E 4P2

Phone. : 450-688-4012
Fax : 450-661-6341
E-Mail : info@norclair.ca
www.norclair.ca

Submersible chopper pumps (3x)

Project:Iqaluit WWTP Upgrade
Our ref: 18-25-0213

FP 3171 MT 3~ 436

Technical specification

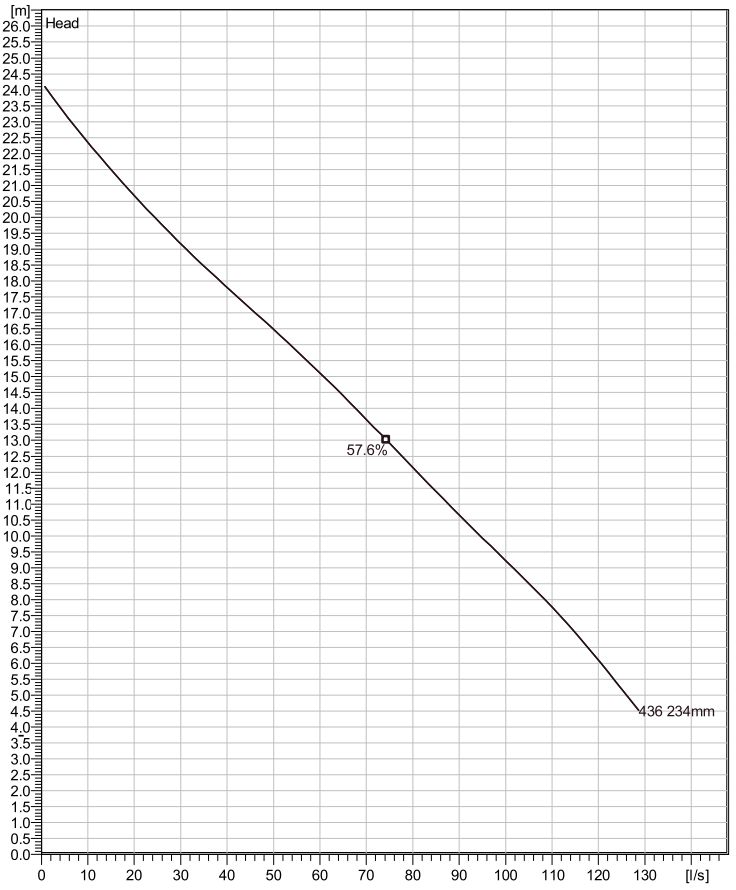

Water, pure *Curve ISO*



Note: Picture might not correspond to the current configuration.

General

Open screw type cutting impellers and single volute casing for liquids containing long fibres and large solids. F3153 and F3171 are new designs with high efficiency combined with excellent cutting performance.

Impeller

Impeller material	Hard-Iron
Discharge Flange Diameter	5 7/8 inch
Suction Flange Diameter	5 7/8 inch
Impeller diameter	234 mm
Number of blades	2

Motor

Motor #	F3171.350 25-14-4AA-W 25hp Standard
Stator variant	6
Frequency	60 Hz
Rated voltage	600 V
Number of poles	4
Phases	3~
Rated power	25 hp
Rated current	24 A
Starting current	154 A
Rated speed	1760 rpm
Power factor	
1/1 Load	0.84
3/4 Load	0.79
1/2 Load	0.68
Motor efficiency	
1/1 Load	87.5 %
3/4 Load	88.5 %
1/2 Load	88.5 %

Configuration

XP cl1 div 1

Installation: P - Semi permanent, Wet

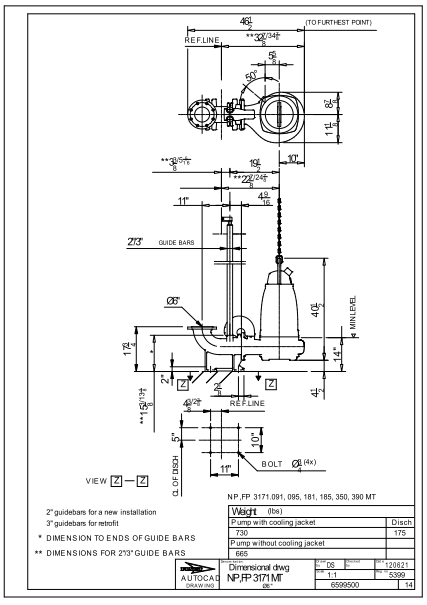

Project	Project ID	Created by	Created on	Last update
			6/26/2018	

Project:Iqaluit WWTP Upgrade
Our ref: 18-25-0213

FP 3171 MT 3~ 436

Performance curve

Pump

Discharge Flange Diameter	5 7/8 inch
Suction Flange Diameter	150 mm
Impeller diameter	$9^{3}/_{16}$"
Number of blades	2

Motor

Motor #	F3171.350 25-14-4AA-W 25hp
Stator variant	6
Frequency	60 Hz
Rated voltage	600 V
Number of poles	4
Phases	3~
Rated power	25 hp
Rated current	24 A
Starting current	154 A
Rated speed	1760 rpm

Power factor	
1/1 Load	0.84
3/4 Load	0.79
1/2 Load	0.68

Motor efficiency	
1/1 Load	87.5 %
3/4 Load	88.5 %
1/2 Load	88.5 %

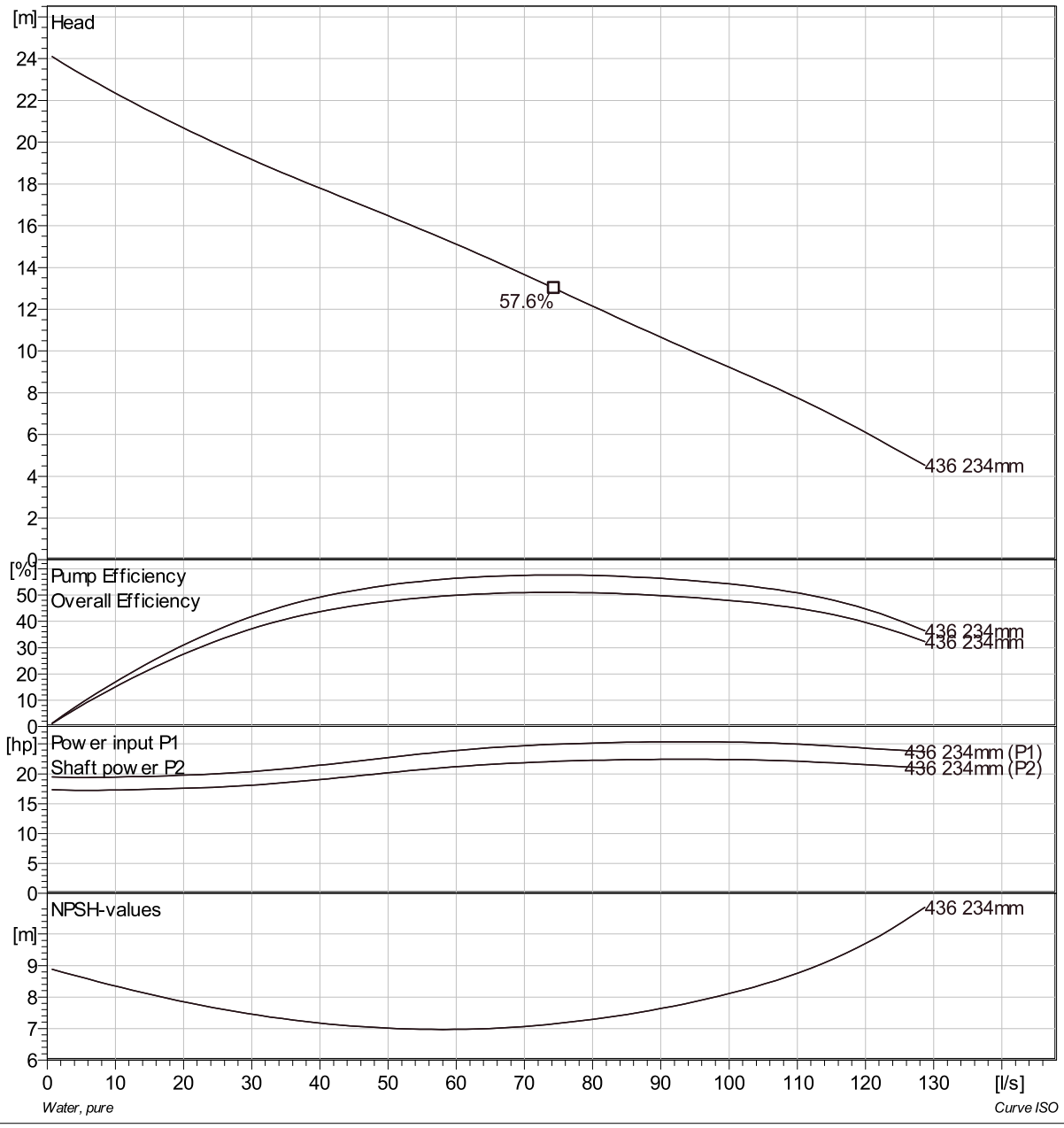

Project	Project ID	Created by	Created on	Last update
			6/26/2018	

Project:Iqaluit WWTP Upgrade
Our ref: 18-25-0213

FP 3171 MT 3~ 436

Duty Analysis

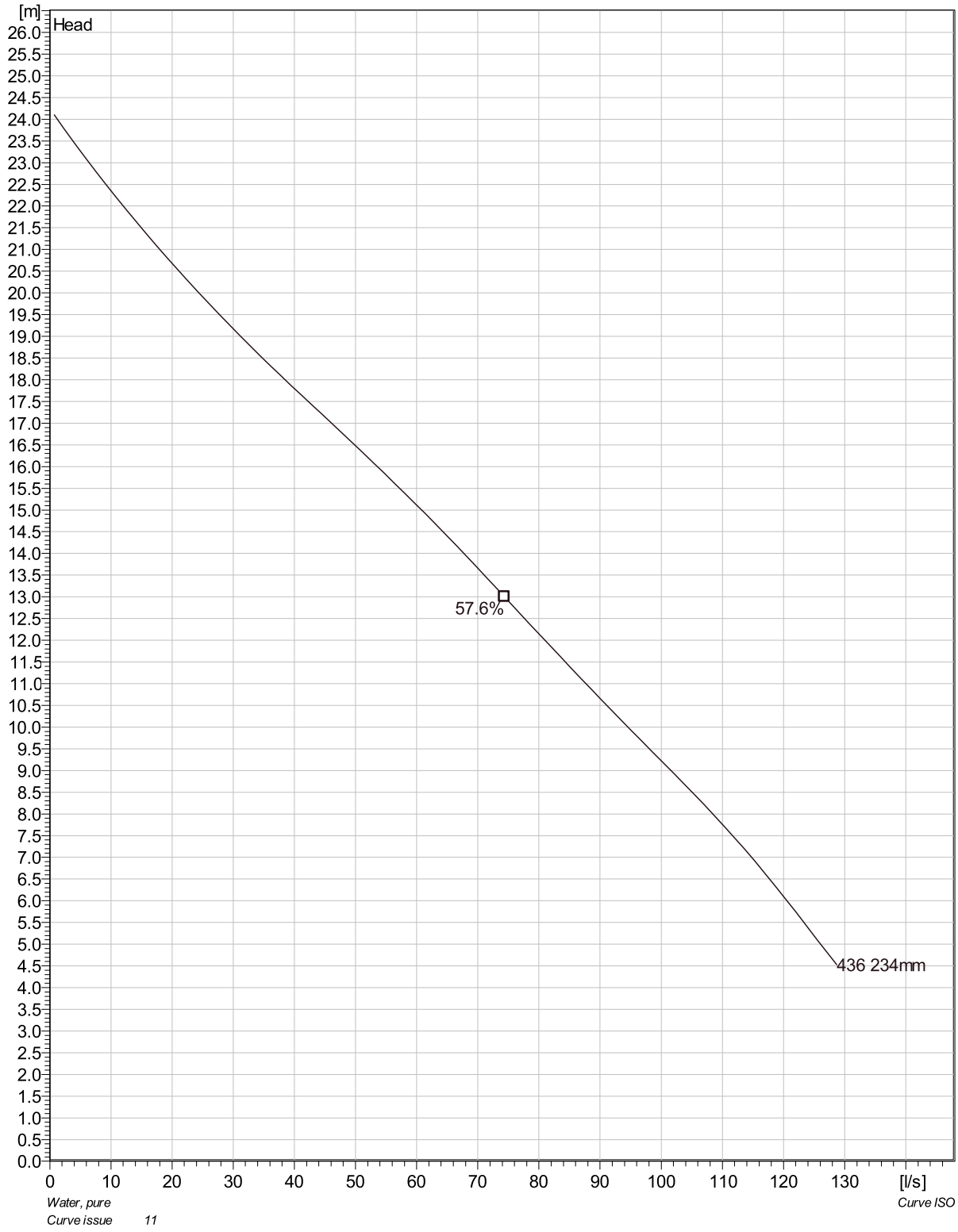

Project	Project ID	Created by	Created on	Last update
			6/26/2018	

Project:Iqaluit WWTP Upgrade
Our ref: 18-25-0213

FP 3171 MT 3~ 436

VFD Curve

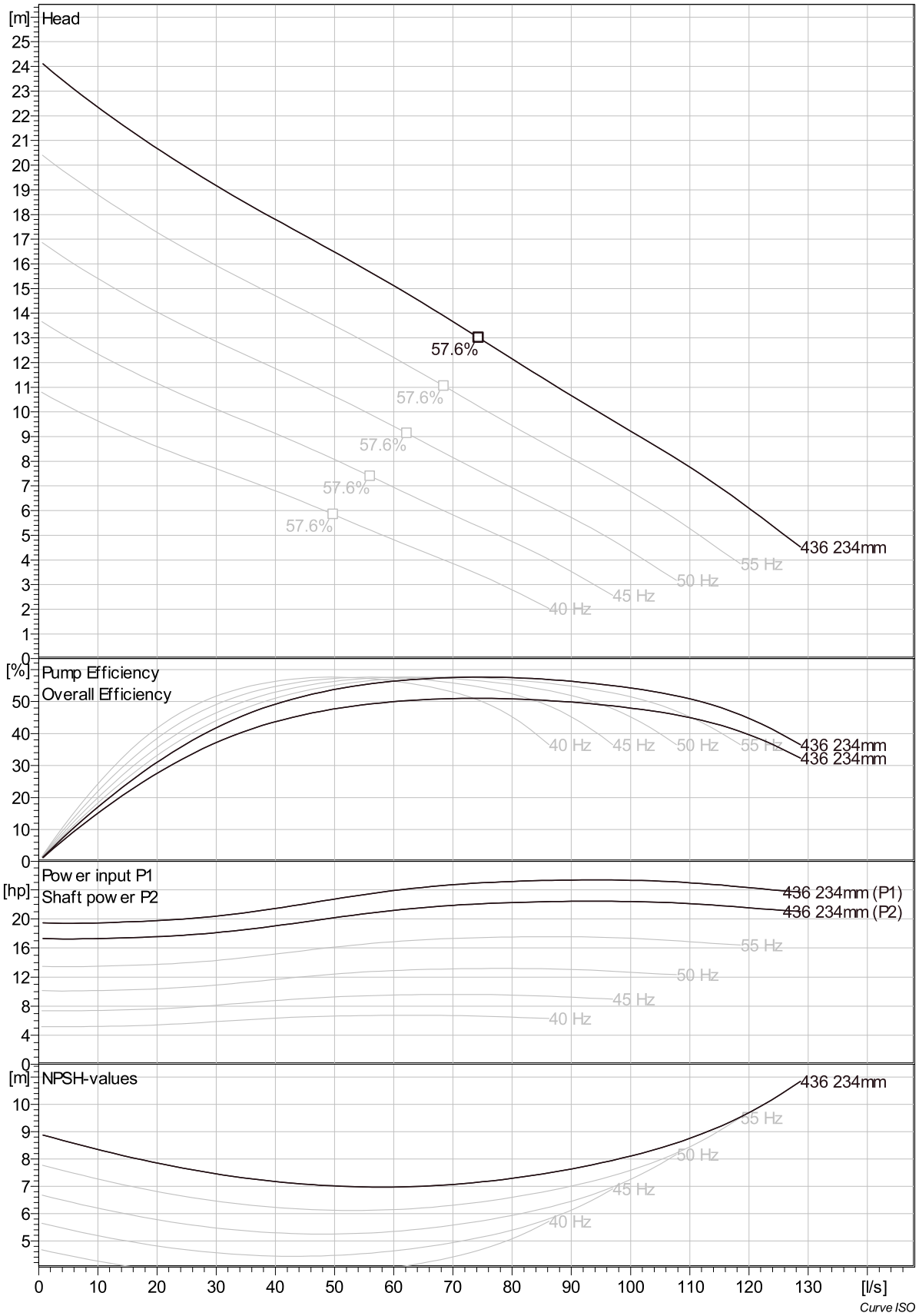

Project	Project ID	Created by	Created on	Last update
			6/26/2018	

Project:Iqaluit WWTP Upgrade
Our ref: 18-25-0213

FP 3171 MT 3~ 436

VFD Analysis

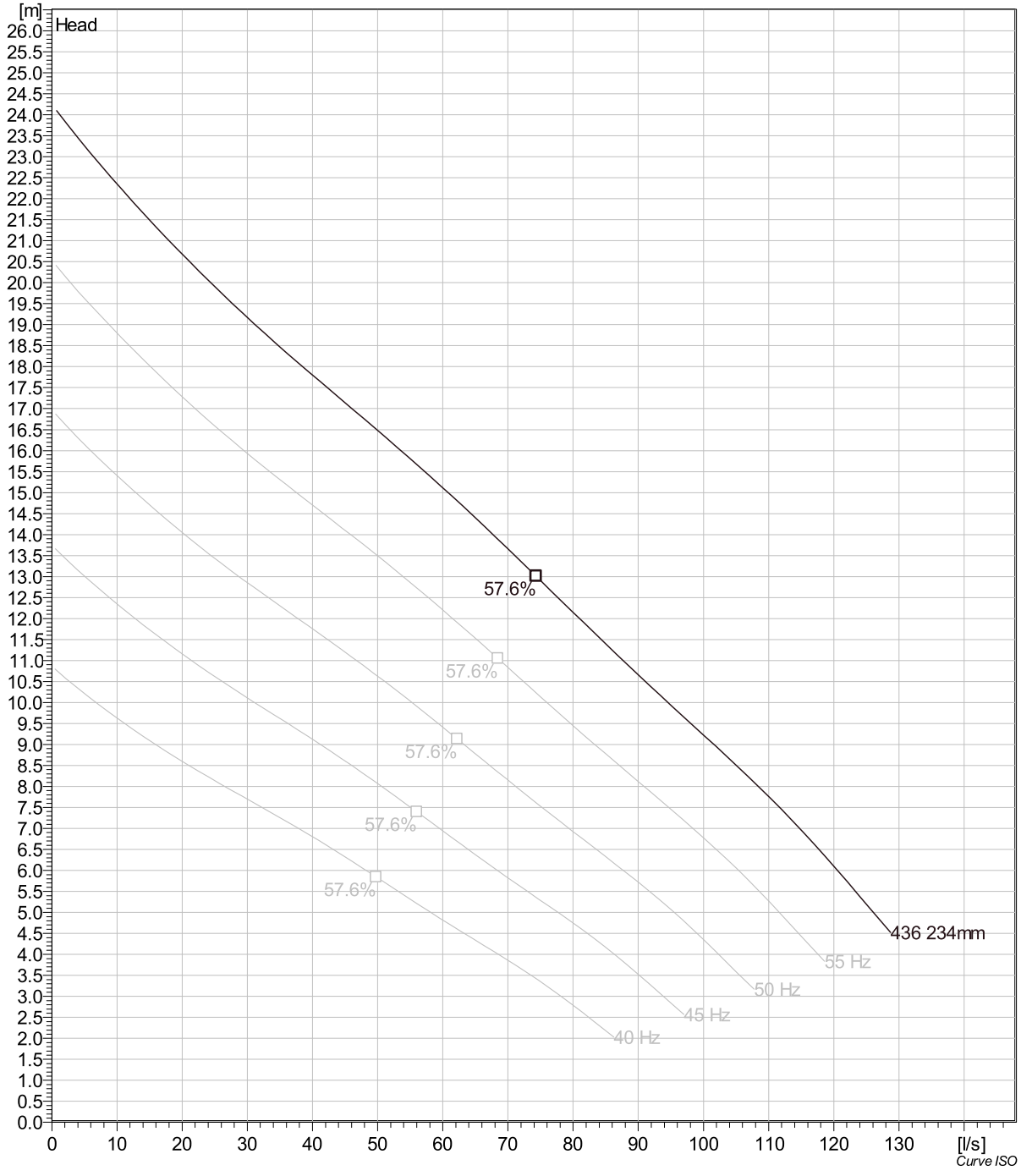

Project	Project ID	Created by	Created on	Last update
			6/26/2018	

Project:Iqaluit WWTP Upgrade
Our ref: 18-25-0213

FP 3171 MT 3~ 436

Dimensional drawing

Qty: (3) Pumps FP-3171 MT vol.6"
(~~16M~~ 30m) of cable per pump.

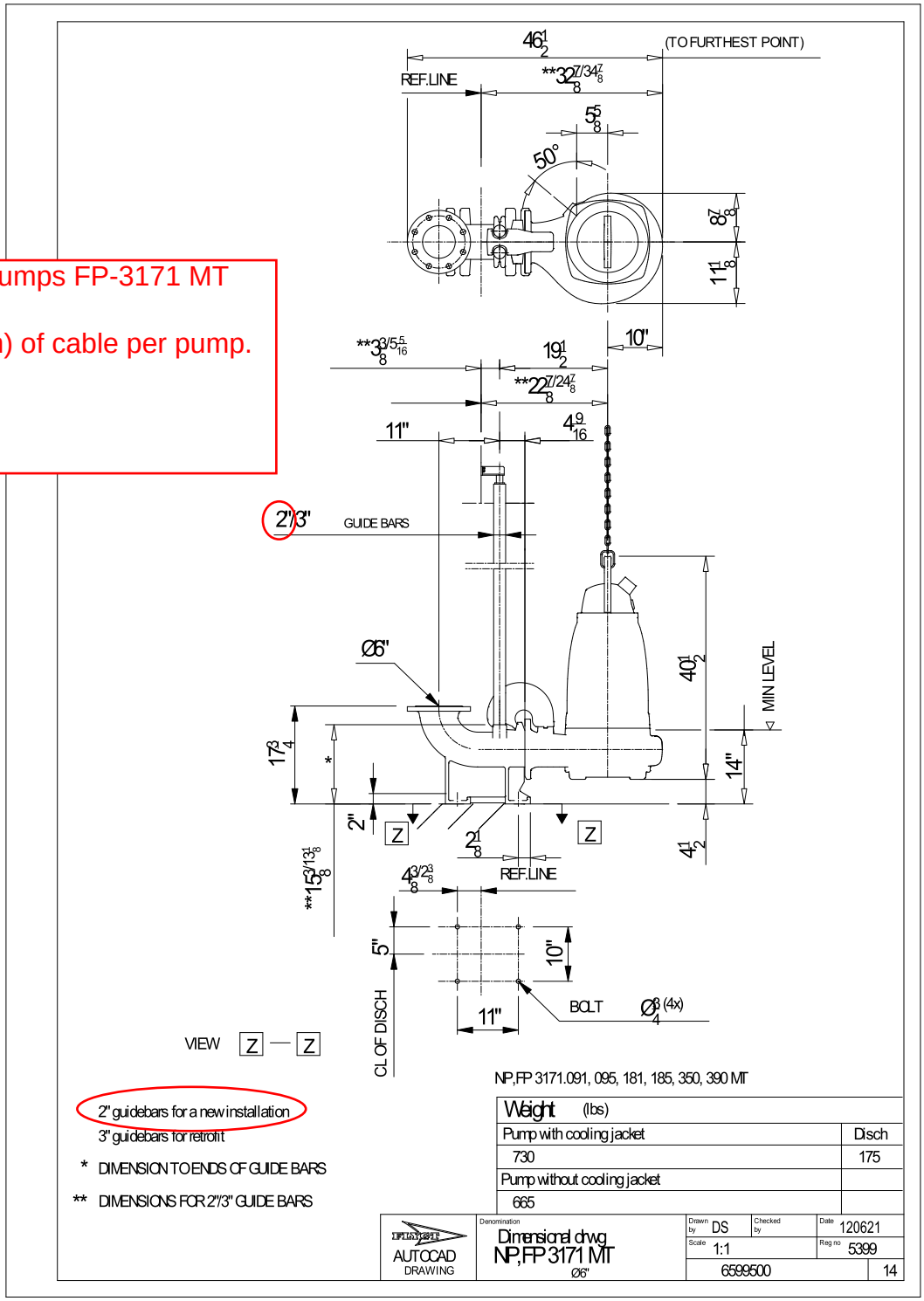

Project	Project ID	Created by	Created on	Last update
			6/26/2018	

FP 3171 MT 3~ 436

Life cycle costs (LCC)

Total lifetime	15	Inflation rate (rate of price increases)	2 %
Annual operating time	5600	Interest rate (for investment)	3 %
Energy cost per kWh	0.00 CAD		
Power input P1			

Total costs

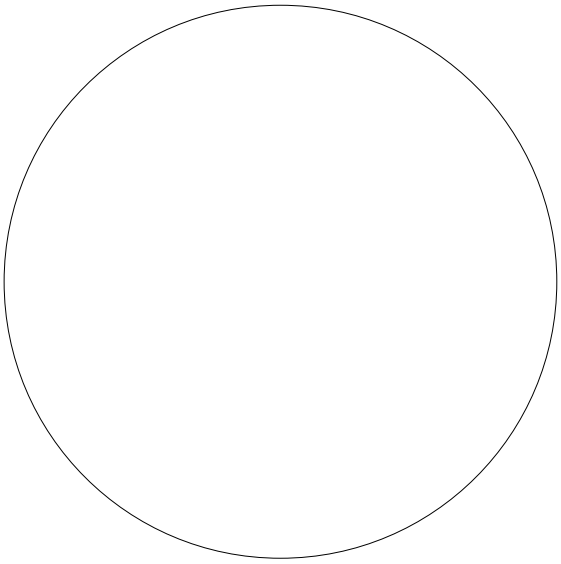

0%	**0.00 CAD**	Energy
0%	**0.00 CAD**	Investment costs
0%	**0.00 CAD**	Installation & commissioning
0%	**0.00 CAD**	Operating cost
0%	**0.00 CAD**	Maintenance & repair
0%	**0.00 CAD**	Downtime
0%	**0.00 CAD**	Environmental
0%	**0.00 CAD**	Decommissioning

CAD

First year costs

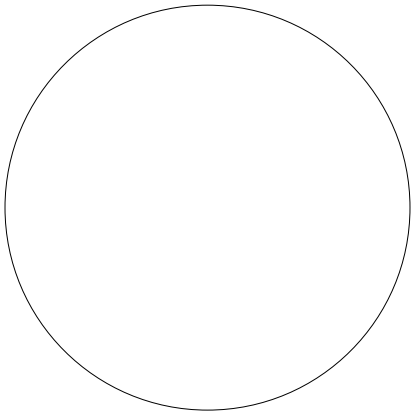

0%	**0.00 CAD**	Energy (1st year)
0%	**0.00 CAD**	Investment costs (1st year)
0%	**0.00 CAD**	Installation & commissioning (1st year)
0%	**0.00 CAD**	Operating cost (1st year)
0%	**0.00 CAD**	Maintenance & repair (1st year)
0%	**0.00 CAD**	Downtime (1st year)
0%	**0.00 CAD**	Environmental (1st year)
0%	**0.00 CAD**	Decommissioning (1st year)

CAD

Disclaimer: The calculations and the results are based on user input values and general assumptions and provide only estimated costs for the input data. Xyleminc can therefore not guarantee that the estimated savings will actually occur.

FLYGT
a xylem brand

Issued: 2/12 Supersedes: 12/11

Standard CP/NP Discharge Connections (Cast Iron)

All dimensions (inches)

Pump Model	Part Number	Disch. Inlet	Disch. Outlet	A	B	C	D	E	F	G	H	I	J	K
2" - 3045, 3057, CP/FP-3068.	486 55 01	2"	2"-11 1/2 NPT	3 13/16	4	4 1/2	5 1/2	7 1/4	6 3/4	3 15/16	7/8	---	---	---
2 1/2" - DP/FP-3068.	493 17 06	2 1/2"	2 1/2"	11 5/8	7 7/8	4 3/4	7 7/8	11 7/16	9 7/8	6 1/2	4 9/16	45°	90° x 4	5 5/8
3" - 3045, 3057, CP-3068.	555 48 01	2"	3-8 NPT	6 3/4	5 1/2	4 1/8	5 1/2	10 3/4	6 3/4	3 15/16	7/8	---	---	---
3" - DP-3068, 3080, 3085, 3102, 3127, 3153.	444 68 05	3"	3"	14	9 7/8	8	10 5/8	15 3/8	15 3/4	7 7/8	4 9/16	45°	90° x 4	6
4" - 3080, 3085, 3102, 3127, 3153, 3171, 3202.	540 13 05	4"	4"	14 3/8	9 7/8	8	10 5/8	15 3/8	15 3/4	7 7/8	4 9/16	22.5°	45° x 8	7 1/2
6" - 3102, 3127(MT), 3153, 3171.	444 70 06	5 1/2"	6"	15 9/16	11	10	12 3/16	15 3/8	17 3/4	9 7/8	4 9/16	22.5°	45° x 8	9 1/2
6" - 3153, 3171, 3202.	602 33 06	5 1/2"	6"	15 9/16	11	10	12 3/16	15 15/16	17 3/4	9 7/8	4 9/16	22.5°	45° x 8	9 7/16
6" - R3231	388 25 06	6"	6"	20 11/16	19 3/4	15 3/4	19 3/4	23 5/8	15 3/4	7 7/8	6 7/8	22.5°	45° x 8	9 7/16
6" - 3127(LT), 3301, 3315.	604 56 06	6"	6"	15 9/16	11 1/8	10	12 3/16	15 15/16	18	10 1/8	4 9/16	22.5°	45° x 8	9 7/16

Note: Alternative discharge connections may be available, contact Flygt Application Engineering.

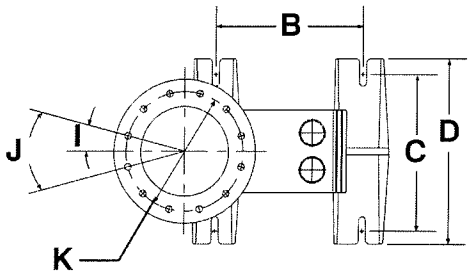

Caution:
Contact Flygt applications engineering department when making a pump/ discharge connection combination other than those paired in the chart above.

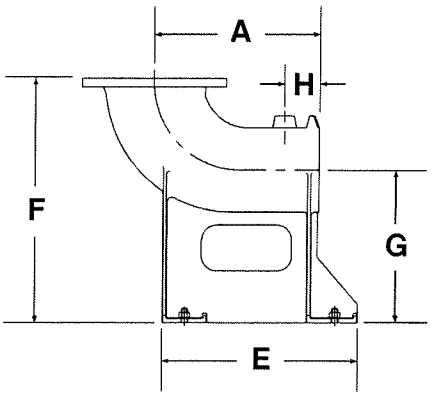

Note:
The discharge connection shown here is typical in appearence for most pumps.

xylem

Station Equipment

Anchor Bolt
Small & Medium Pumps on Discharge Connection

DOCUMENT NO.	
ES 2.2.1	
SUPERSEDES	ISSUED
11/2010	11/2012

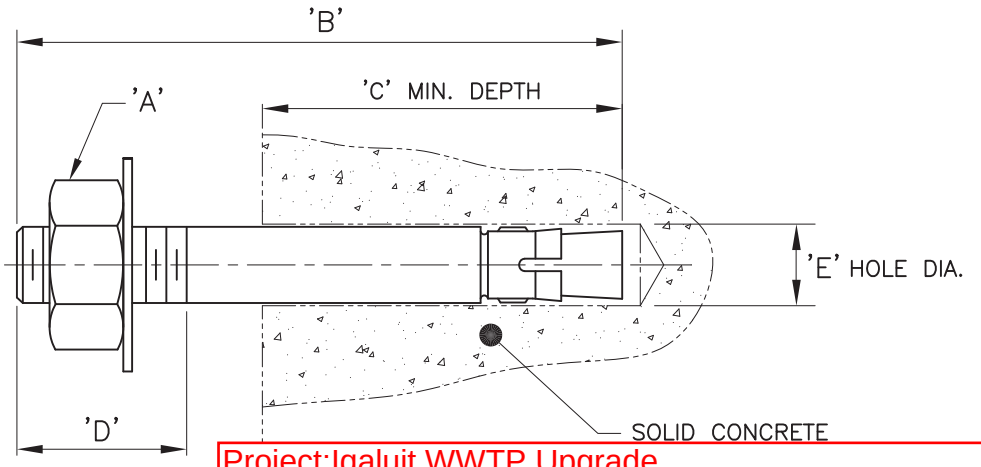

Project:Iqaluit WWTP Upgrade
Our ref: 18-25-0213

"A"	"B"	"C"	"D"	"E"	STEEL ZINC PLATED	S/S 316
3/8"–16 UNC	57	41	27	3/8"	13–52 05 54	N/A
	76		29		13–44 00 03	N/A
	95		29		N/A	13–44 00 12
1/2"–13 UNC	95	57	32	1/2"	✻✻13–52 05 53	N/A
	140				N/A	13–52 01 04
5/8"–11 UNC	121	70	38	5/8"	N/A	13–52 03 23
					13–52 03 25	N/A
3/4"–10 UNC	140	83	38	3/4"	✻ 13–52 01 67	13–52 03 24
			85		✻ 13–44 00 70	N/A

✻ USED ON DISCHARGE CONNECTIONS : 374 76 06
444 68 05
444 70 06
444 71 06
444 73 05
481 76 05
493 17 06
540 13 05
602 33 06
604 56 06
13–51 01 03
14–58 21 00
14–58 21 01
14–58 21 02

Qty: (12)

✻✻ USED ON DISCHARGE CONNECTION : 486 55 01
555 48 00
555 48 01

✻ / ✻✻ (4) FOUR COMPLETE ASSEMBLIES REQUIRED FOR EACH DISCHARGE CONNECTION.

OTHER ANCHOR BOLTS ARE USED FOR VARIOUS ACCESSORIES SUCH AS CHAIN HOOKS, GUIDE RAILS, GUIDE BAR HOLDERS ETC.

DIMENSIONS ARE IN mm

N.T.S.

xylem	Station Equipment	DOCUMENT NO. ES 1.2.1	
	Upper Guide Bar Holder for 2" Guide Bar	SUPERSEDES 11/2012	ISSUED 05/2013

Project:Iqaluit WWTP Upgrade
Our ref: 18-25-0213

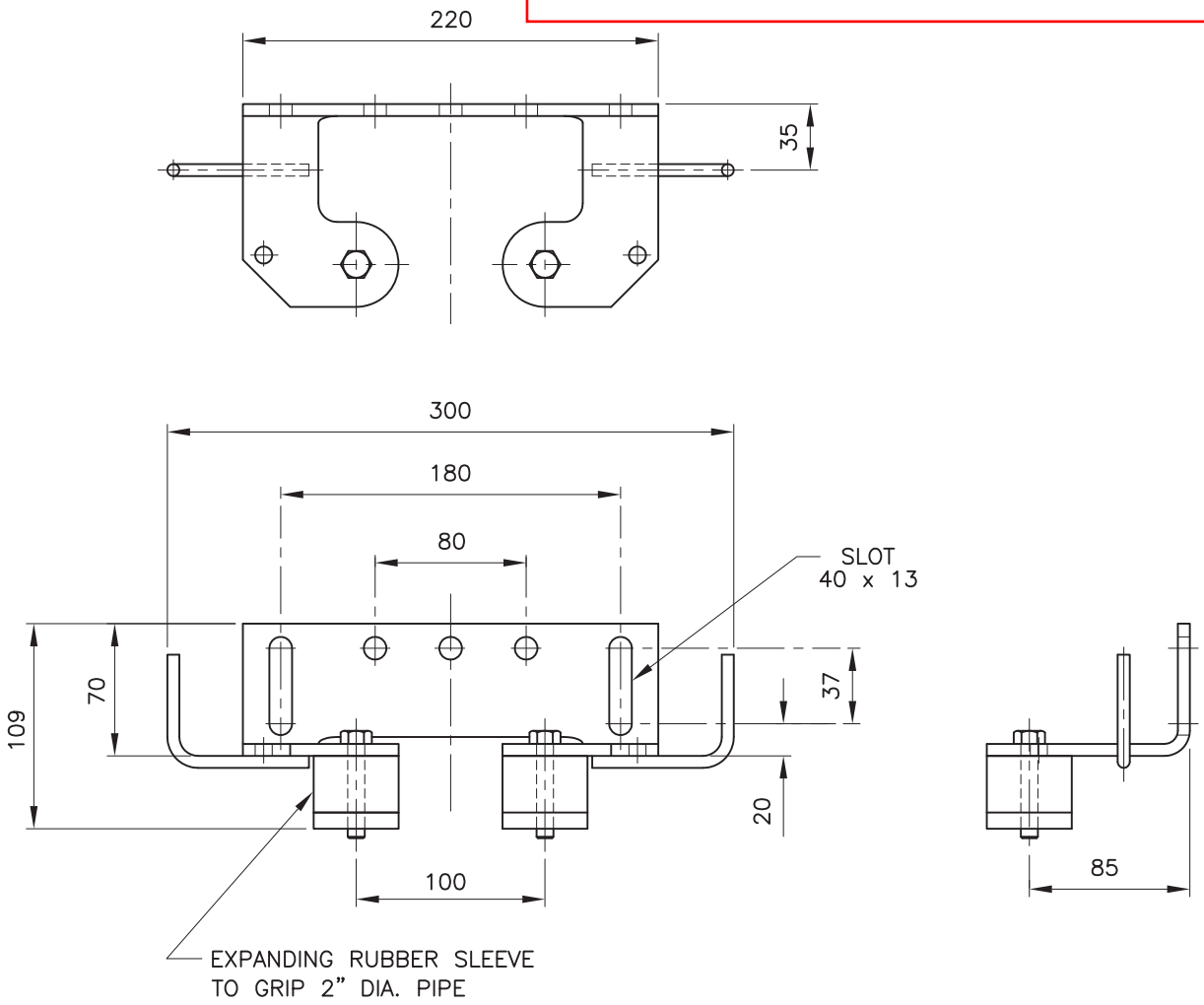

Qty: (3)

PART NO. 613 68 00
(GALVANIZED STEEL)

PART NO. 613 68 04
(STAINLESS STEEL 316)

USED FOR PUMPS:

DP 3067	CP/NP 3127
DP 3068 HT/MT	CP/NP 3140
CP/NP 3085	CP/NP 3152
CP/NP 3102	NP 3153
	NP 3171 (new installation)

RECOMMENDED BOLTING MATERIAL : 2 BOLTS 7/16"–14 UNC
C/W NUTS & WASHERS (NOT SUPPLIED BY XYLEM)

DIMENSIONS ARE IN mm

N.T.S.

xylem	Station Equipment	DOCUMENT NO.	
		ES 1.5.2	
	Intermediate Guide Bar Holder for 2" Guide Bar	SUPERSEDES	ISSUED
		-	05/2013

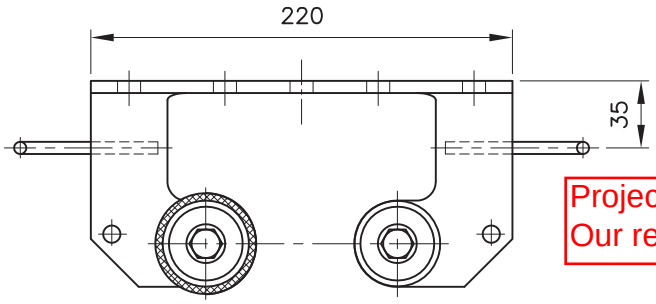

Project:Iqaluit WWTP Upgrade
Our ref: 18-25-0213

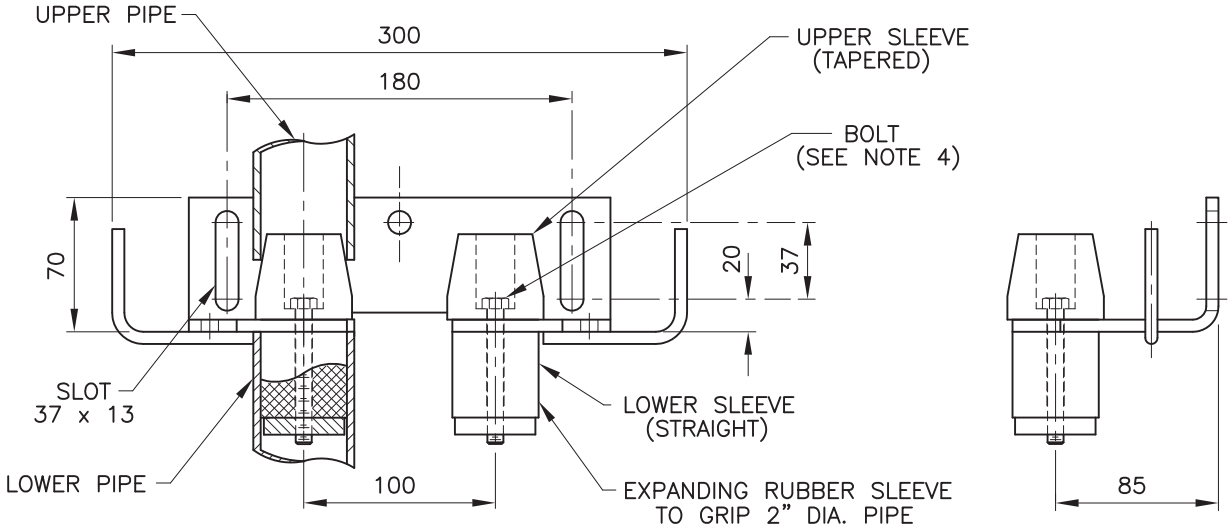

PART NO. 613 68 06
(GALVANIZED STEEL)

Qty: (3)

PART NO. 613 68 07
(STAINLESS STEEL 316)

USED FOR PUMPS:

DP 3067	CP/NP 3127
DP 3068	CP/NP 3140
CP/NP 3085	CP/NP 3152
CP/NP 3102	NP 3153
	NP 3171 (new installation)

INSTALLATION PROCEDURE

1 – SIT THE LOWER PIPES ON THE BOSS ON THE DISCHARGE ELBOW.
2 – INSERT THE LOWER SLEEVES OF THE INTERMEDIATE HOLDER IN THE PIPES.
3 – BOLT DOWN THE INTERMEDIATE GUIDE BAR HOLDER ON THE ANCHOR POINT.
4 – TORQUE THE BOLTS UNTIL THE EXPANSION SLEEVES GRIP THE PIPES.
5 – SIT THE UPPER PIPES ON THE UPPER SLEEVES AND PUSH DOWN TO SECURE.
6 – INSERT THE SLEEVES OF THE UPPER GUIDE BAR HOLDER IN THE PIPE AND TORQUE THE BOLTS UNTIL THEY GRIP THE PIPES.
7 – BOLT DOWN THE UPPER GUIDE BAR HOLDER TO THE ANCHOR POINT.

RECOMMENDED BOLTING MATERIAL : 2 BOLTS 7/16"–14 UNC
C/W NUTS & WASHERS (NOT SUPPLIED BY XYLEM)

DIMENSIONS ARE IN mm

N.T.S.

xylem

Station Equipment

Galvanized Lifting Chain Arrangement

DOCUMENT NO.	
ES 4.32.1.1	
SUPERSEDES	ISSUED
08/2009	11/2012

Project:Iqaluit WWTP Upgrade
Our ref: 18-25-0213

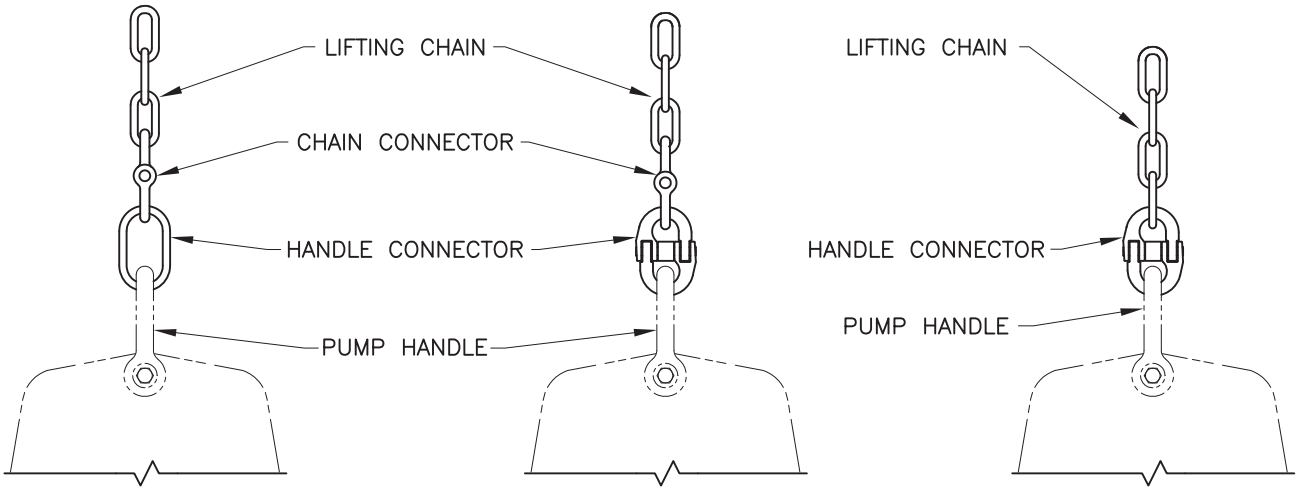

TYPE 1 TYPE 2 TYPE 3

Qty: (3)

ALL ACCESSORIES ARE SUPPLIED LOOSE.
INSTALLATION ON PUMP BY CUSTOMER.

LIFTING ARRANGEMENT		CHAIN		CHAIN CONNECTOR		HANDLE CONNECTOR		SYSTEM CAPACITY kg.(lbs.)
TYPE	CATEGORY	SIZE	P/N	SIZE	P/N	SIZE	P/N	
1	A	9/32"	13-52 01 91	9/32"	13-52 01 93	1/2"	13-44 00 30	624 (1375)
	B	3/8"	13-52 02 07	3/8"	13-52 02 09	3/4"	13-44 00 75	1247 (2749)
	C	5/8"	13-45 00 12	5/8"	13-44 00 26	3/4"	13-44 00 75	2175 (4795)
2	A	3/8"	13-52 02 07	3/8"	13-52 02 09	5/8"	13-44 00 26	1247 (2749)
	B	5/8"	13-45 00 12	5/8"	13-44 00 26	1"	13-44 00 29	3220 (7098)
	C	3/4"	13-45 00 13	3/4"	13-44 00 27	1"	13-44 00 29	5035 (1110)
	D	7/8"	13-45 00 14	7/8"	13-44 00 28	1"	13-44 00 29	6100 (13448)
3	A	5/8"	13-45 00 12	N/R	N/R	5/8"	13-44 00 26	3220 (7098)
	B	1"	13-45 00 51	N/R	N/R	1"	13-44 00 29	8505 (18750)
	C	1 1/4"	13-45 00 52	N/R	N/R	1 1/4"	13-44 00 74	12927 (28500)

NOTES :

1 – CHAINS ARE :
- SUITABLE FOR OVERHEAD LIFTING PER N.A.C.M. AND ASTM A391
- MADE OF ALLOY STEEL, GRADE 80, HOT DIP GALVANIZED.
- QUANTITY = BY METER

2 – CHAIN CONNECTORS ARE :
- SUITABLE FOR OVERHEAD LIFTING PER N.A.C.M. AND ASTM A952
- MADE OF ALLOY STEEL, GRADE 80, PLATED
- QUANTITY = BY PIECE

3 – HANDLE CONNECTORS ARE :
- SUITABLE FOR OVERHEAD LIFTING PER N.A.C.M. AND ASTM A952
- MADE OF ALLOY STEEL, GRADE 80, PLATED (TYPES 2 & 3) OR HOT DIP GALVANIZED (TYPE 1).
- QUANTITY = BY PIECE

4 – SEE DOCUMENT NO. ES 4.40.1.1/ES 4.40.2.1/ES 4.40.2.2 FOR PROPER SELECTION.

Qty: (13M) of chain per pump.

N/R: NOT REQUIRED

xylem	Station Equipment	DOCUMENT NO.	
	Galvanized Chain Hook P/N 13-52 03 51	ES 4.32.1.3	
		SUPERSEDES	ISSUED
		08/2009	11/2012

Qty: (3)

Project:Iqaluit WWTP Upgrade
Our ref: 18-25-0213

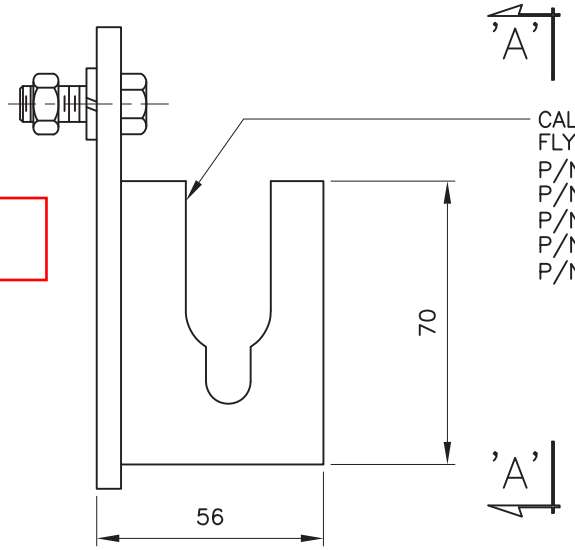

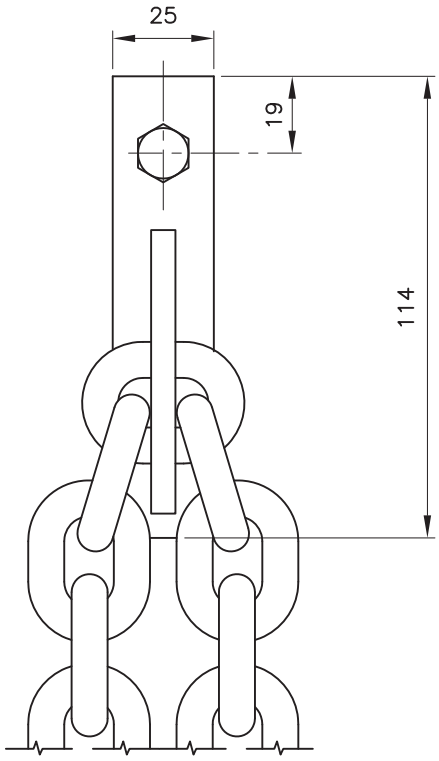

VIEW 'A'–'A'

(NOT TO BE USED TO HANG PUMP)

SUPPLIED COMPLETE WITH A ZINC PLATED BOLT 3/8"–16 UNC X 1" LG., NUT AND LOCKWASHER

DIMENSIONS ARE IN mm

N.T.S.

xylem	Station Equipment	DOCUMENT NO.	
		ES 6.4.2	
	Horizontal Level Regulator Hanger	SUPERSEDES	ISSUED
		11/2010	02/2013

Project:Iqaluit WWTP Upgrade
Our ref: 18-25-0213

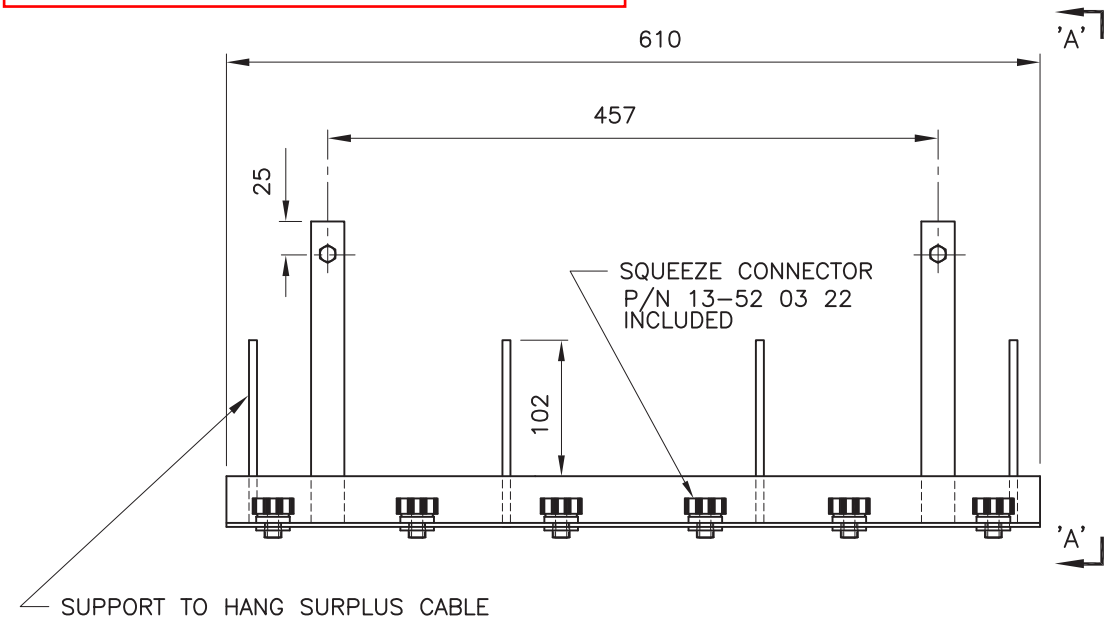

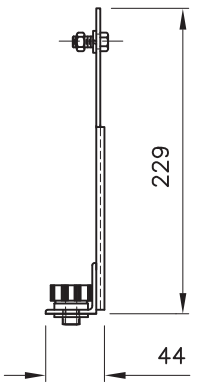

VIEW 'A'–'A'

Qty: (2)
- 1x for lift station
- 1x for building sump

GALVANIZED STEEL	P/N 13–52 00 06
STAINLESS STEEL 304	P/N 13–52 01 08
ALUMINUM	P/N 13–52 00 55

USED WITH ENM–10
SEE DOC. ES 6.1.1

SUPPLIED WITH SQUEEZE CONNECTORS, NUTS & BOLTS 3/8"–16 UNC X 1" LG.

DIMENSIONS ARE IN mm

N.T.S.

xylem

Station Equipment

Sway Control Ring
P/N 13-50 70 06

DOCUMENT NO.	
ES 6.4.1	
SUPERSEDES	ISSUED
11/2010	02/2013

Project:Iqaluit WWTP Upgrade
Our ref: 18-25-0213

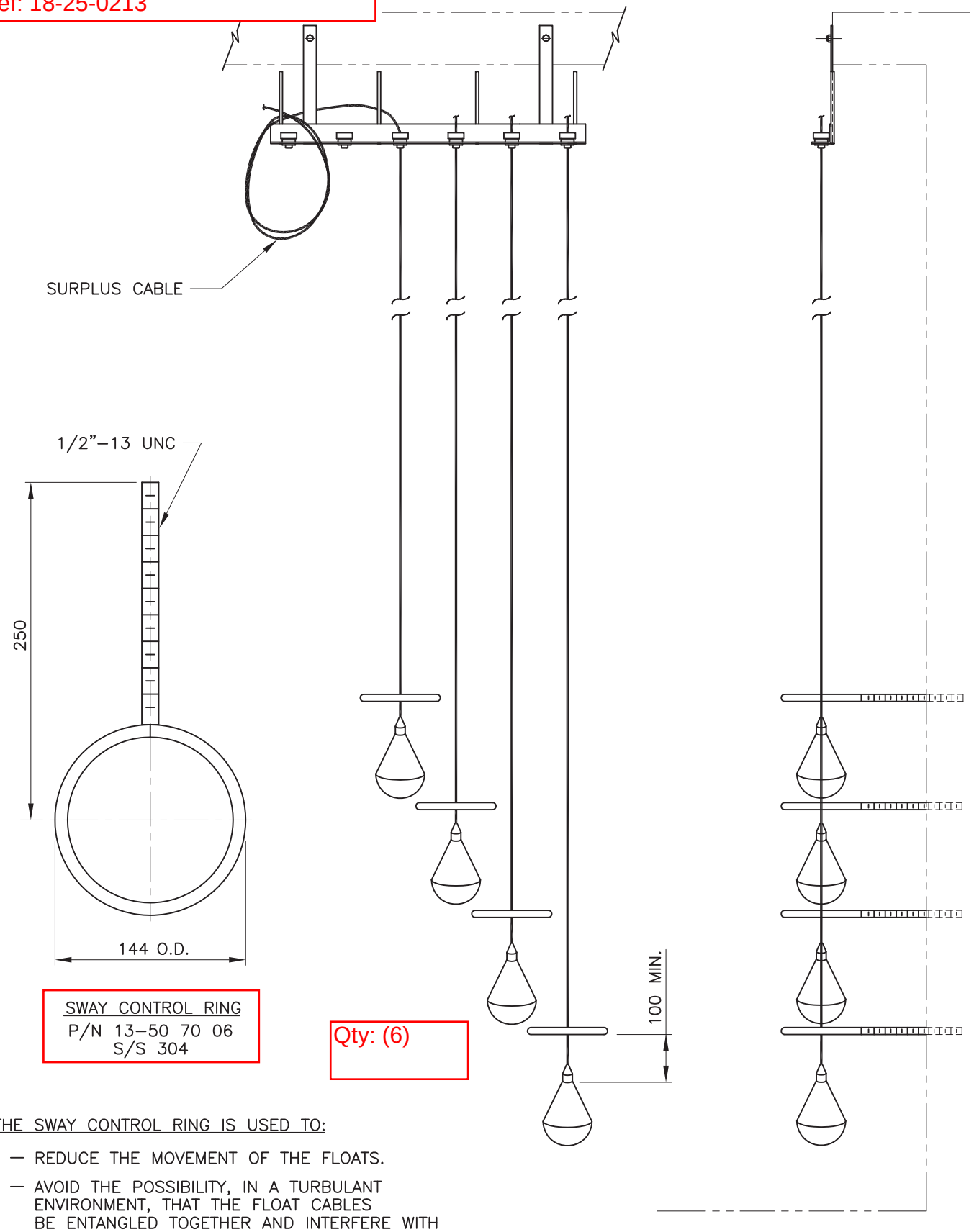

SWAY CONTROL RING
P/N 13–50 70 06
S/S 304

Qty: (6)

THE SWAY CONTROL RING IS USED TO:

- REDUCE THE MOVEMENT OF THE FLOATS.
- AVOID THE POSSIBILITY, IN A TURBULANT ENVIRONMENT, THAT THE FLOAT CABLES BE ENTANGLED TOGETHER AND INTERFERE WITH EACH OTHER FOR PROPER FUNCTIONING.

DIMENSIONS ARE IN mm

N.T.S.

xylem	Station Equipment	DOCUMENT NO.	
		ES 6.4.2	
	Horizontal Level Regulator Hanger	SUPERSEDES	ISSUED
		11/2010	02/2013

Project:Iqaluit WWTP Upgrade
Our ref: 18-25-0213

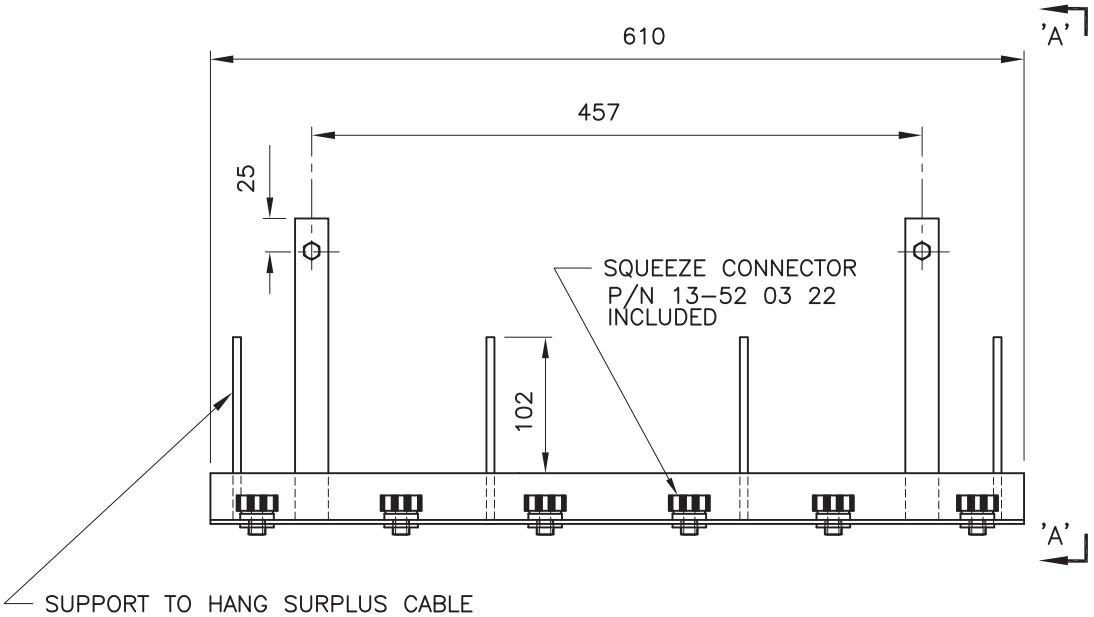

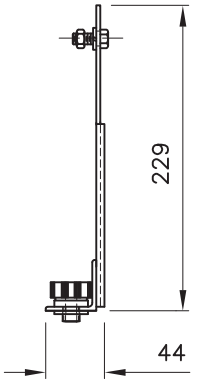

VIEW 'A'–'A'

GALVANIZED STEEL	P/N 13–52 00 06
STAINLESS STEEL 304	P/N 13–52 01 08
ALUMINUM	P/N 13–52 00 55

USED WITH ENM–10
SEE DOC. ES 6.1.1

SUPPLIED WITH SQUEEZE CONNECTORS, NUTS & BOLTS 3/8"–16 UNC X 1" LG.

DIMENSIONS ARE IN mm

N.T.S.

Project:Iqaluit WWTP Upgrade
Our ref: 18-25-0213

Installation, Operation, and Maintenance Manual

892472_14.0



MiniCAS II

FLYGT
a xylem brand

Table of Contents

1 Introduction and Safety....2
1.1 Introduction....2
1.2 Safety terminology and symbols....2
1.3 User safety....3
1.4 Product warranty....3
1.4.1 Support....4

2 Transportation and Storage....5
2.1 Inspect the delivery....5

3 Product Description....6
3.1 Product design....6
3.2 Parts....6
3.3 Approvals....6

4 Installation....7
4.1 Do not install in an explosive zone....7
4.2 Connect the MiniCAS II....8
4.3 Prevent interference from a variable frequency drive....9
4.4 Check the sensor output current....9

5 Operation....11
5.1 The current levels for alarm lights....11
5.2 LED indications....11
5.3 Reset the alarms after a fault indication....11

6 Troubleshooting....12
6.1 Check for an earth fault in the sensor circuit....12
6.2 Check which sensor tripped the leakage alarm....12
6.3 Test the function of the relay....13

7 Technical Reference....15
7.1 Dimensions....15
7.2 Environmental requirements....15
7.3 Electrical data....15
7.4 Terminals....15
7.5 Circuit functions....16
7.6 Sensor combinations....16
7.7 Filter connection diagrams....17
7.8 Filter kits....18

1 Introduction and Safety

1.1 Introduction



CAUTION:

- Read this manual carefully before installing and using the product. Improper use of the product can cause personal injury and damage to property, and may void the warranty.
- In addition to these instructions, also pay attention to universal safety and accident prevention regulations.
- Save this manual for future reference, and keep it readily available at the location of the system controller.

Purpose of this manual

The purpose of this manual is to provide the necessary information for:

- Installation
- Operation
- Maintenance

1.2 Safety terminology and symbols

About safety messages

It is extremely important that you read, understand, and follow the safety messages and regulations carefully before handling the product. They are published to help prevent these hazards:

- Personal accidents and health problems
- Damage to the product
- Product malfunction

Hazard levels

Hazard level	Indication
 DANGER:	A hazardous situation which, if not avoided, will result in death or serious injury
 WARNING:	A hazardous situation which, if not avoided, could result in death or serious injury
 CAUTION:	A hazardous situation which, if not avoided, could result in minor or moderate injury
NOTICE:	• A potential situation which, if not avoided, could result in undesirable conditions • A practice not related to personal injury

Electrical hazards

Electrical hazards are indicated by the following specific symbol. This symbol warns for presence of a dangerous voltage.



Electrical Hazard:

1.3 User safety

Introduction

All government regulations, local health and safety directives must be observed.

Prevent danger due to electricity

All danger due to electricity must be avoided. Electrical connections must always be carried out in compliance with the following:

- The standard connections shown in the product documentation that is delivered together with the product
- All international, national, state, and local regulations. (For details, consult the regulations of your local electricity supplier.)

For more information about requirements, see sections dealing specifically with electrical connections.

1.4 Product warranty

Coverage

Xylem undertakes to remedy faults in products from Xylem under these conditions:

- The fault is due to defects in design, materials, or workmanship.
- The fault is reported to a Xylem representative within the warranty period.
- The product is used only under the conditions described in this manual.
- All service and repair work is done by qualified and authorized personnel. All modifications must be done by qualified technicians.
- Genuine Xylem parts are used.

Limitations

The warranty does not cover faults caused by these situations:

- Deficient maintenance
- Improper installation
- Modifications or changes to the product and installation made without consulting Xylem
- Incorrectly executed repair work
- Normal wear and tear

Xylem assumes no liability for these situations:

- Bodily injury
- Material damage
- Economic loss

Warranty claim

Xylem products are high quality products with expected reliable operation and long life. However, should the need arise for a warranty claim, then contact your Xylem representative.

Qualification of personnel



WARNING: Electrical Hazard

Risk of electrical shock or burn. A certified electrician must supervise all electrical work. Comply with all local codes and regulations.

All work on the product must be carried out by certified electricians or Xylem authorized mechanics.

Xylem disclaims all responsibility for work done by untrained, unauthorized personnel.

1.4.1 Support

Xylem only supports products that have been tested and approved. Xylem does not support unapproved equipment.

2 Transportation and Storage

2.1 Inspect the delivery

Inspect the package

1. Inspect the package for damaged or missing items upon delivery.
2. Note any damaged or missing items on the receipt and freight bill.
3. File a claim with the shipping company if anything is out of order.

   If the product has been picked up at a distributor, make a claim directly to the distributor.

Inspect the product

1. Remove packing materials from the product.

   Dispose of all packing materials in accordance with local regulations.
2. Inspect the product to determine if any parts are damaged or missing.
3. If applicable, unfasten the product by removing any screws, bolts, or straps.

   For your personal safety, be careful when you handle nails and straps.
4. Contact your sales representative if anything is out of order.

3 Product Description

3.1 Product design

The MiniCAS II overall purpose is to protect pumps and mixers. It is a monitoring relay for temperature and leakage sensors and is made to plug into a standard 11-pin socket.

The relay monitors the following sensors:

Type	Description
Thermal contact	Temperature sensor for detection of high temperature in the stator winding
FLS	Float switch for leakage detection in pumps and mixers
FLS10	Float switch for leakage detection in the inspection chamber
CLS	Water-in-oil sensor for detection of excessive water in the oil chamber

3.2 Parts

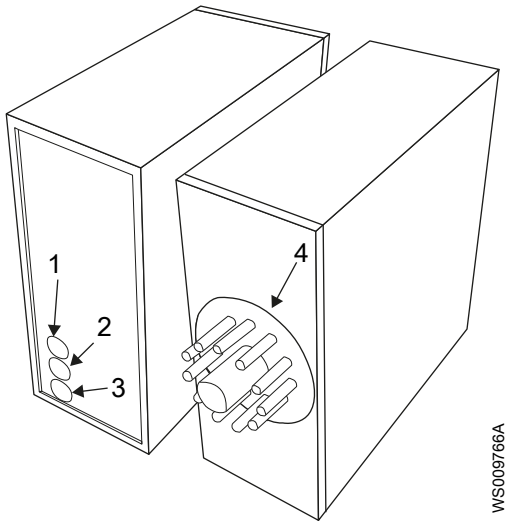

1. **LEAKAGE** LED
2. **TEMPERATURE** LED
3. **SUPPLY** LED
4. 11-pin contact

3.3 Approvals

MiniCAS II Version	Part No.	Approval
24 V AC/DC	83 58 57	CE, UR, CSA
120 V AC	40–50 10 98	CE, UR, CSA
230 V AC	40–50 15 60	CE

4 Installation

Precautions

Before starting work, make sure that the safety instructions in the chapter *Introduction and Safety* on page 2 have been read and understood.

DANGER: Electrical Hazard

Before starting work on the unit, make sure that the unit and the control panel are isolated from the power supply and cannot be energized. This applies to the control circuit as well.

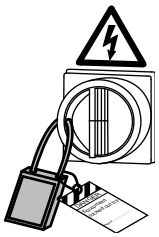

DANGER: Electrical Hazard

All electrical equipment must be grounded (earthed). Test the ground (earth) lead to verify that it is connected correctly and that the path to ground is continuous.

WARNING: Electrical Hazard

Risk of electrical shock or burn. A certified electrician must supervise all electrical work. Comply with all local codes and regulations.

WARNING: Electrical Hazard

There is a risk of electrical shock or explosion if the electrical connections are not correctly carried out, or if there is fault or damage on the product. Visually inspect equipment for damaged cables, cracked casings or other signs of damage. Make sure that electrical connections have been correctly made.

CAUTION: Electrical Hazard

Prevent cables from becoming sharply bent or damaged.

External switch

This product cannot be used as an emergency stop device.

An external switch or circuit breaker must be provided near the installation to enable the pump to be isolated from the power supply.

4.1 Do not install in an explosive zone

NOTICE:

Do not use this unit in environments that may contain flammable/explosive or chemically aggressive gases or powders.

4.2 Connect the MiniCAS II

An 11-pin socket must be installed in the pump control panel.

The MiniCAS II is used in one of two ways:

- Both overtemperature and leakage alarms stop the pump
- Overtemperature alarm stops the pump and leakage alarm is only indicated.

1. Connect the wires to the 11-pin socket terminals according to the applicable diagram. See *Terminals* on page 15.
   - Overtemperature and leakage stop the pump

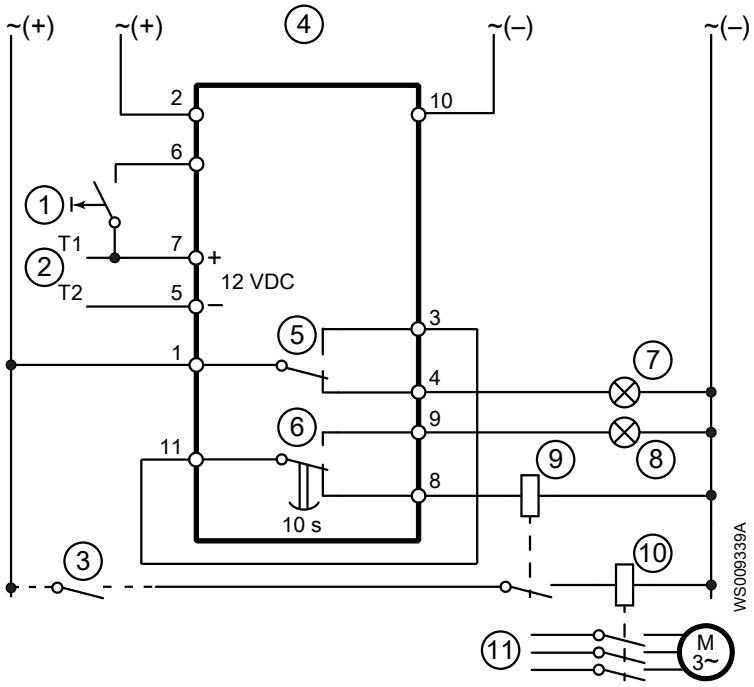

   - Overtemperature stops the pump and leakage is only indicated

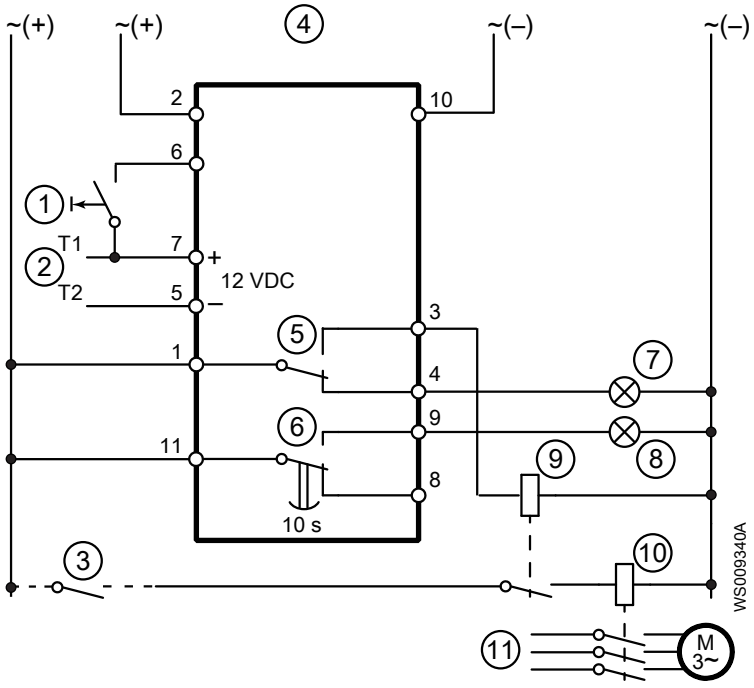

Position	Description
1	Alarm reset

Position	Description
2	Sensor circuit
3	Start and stop by a pump controller
4	Power supply
5	High temperature relay
6	Leakage detection relay
7	High stator temperature alarm lamp
8	Leakage alarm lamp
9	Auxiliary relay
10	Pump contactor
11	Pump main supply

2. Insert the MiniCAS II into the 11-pin socket.

4.3 Prevent interference from a variable frequency drive

Interference from a variable frequency drive (VFD) can cause nuisance tripping of the CLS sensor.

1. Connect a filter between the sensor and the terminal block in the junction box, see *Filter kits* on page 18 and *Filter connection diagrams* on page 17.

   Usually with VFD and CLS, this filter is preinstalled.

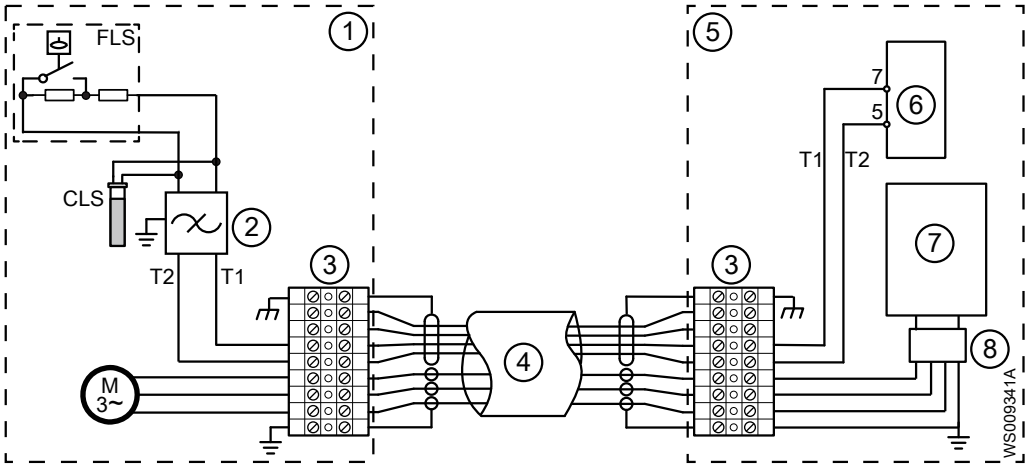

1. Pump with junction box
2. Filter
3. Terminal block
4. Screened SUBCAB® cable
5. Control panel
6. MiniCAS II
7. VFD
8. EMC filter

2. Connect the cable to the control panel.

   Do not exceed 40 m (130 ft) due to the occurrence of harmonic distortion.

3. Connect an EMC filter between the VFD output and the control panel.

4.4 Check the sensor output current

1. Connect a multimeter in series with the sensor circuit.

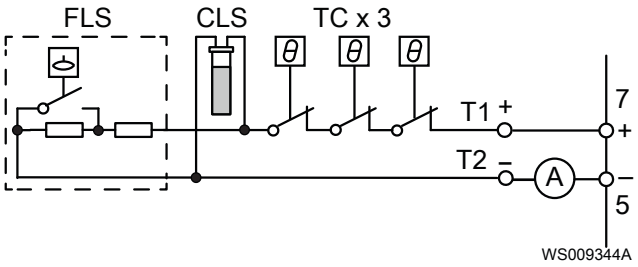

2. Make sure that the measured values correspond to the applicable sensor combination values.
3. See *Sensor combinations* on page 16 for the no fault values.

5 Operation

5.1 The current levels for alarm lights

When the current level is between 3–22 mA, it is only the **SUPPLY** LED that is light.

Current level (mA)	Type of alarm
> 22	Leakage alarm
< 3	Overtemperature alarm

5.2 LED indications

Symptom	Cause	Remedy
The leakage indicator LED is lit.	There is a leakage in the pump.	Service the pump. For information, see *Check which sensor tripped the leakage alarm* on page 12.
	There is an earth fault in the sensor circuit wiring.	See *Check for an earth fault in the sensor circuit* on page 12 .
The temperature indicator LED is lit.	A thermal contact is open.	Service the pump.
	The CLS is connected with the wrong polarity in series with the temperature switches.	Change polarity on the sensor output of the relay.
The sensor output voltage is low.	There is an earth fault in the sensor circuit wiring.	See *Check for an earth fault in the sensor circuit* on page 12.
	The relay has a fault.	Replace the relay.
The leakage indicator is nuisance tripping.	The drive unit has CLS and VFD, and is not protected by a filter.	Install a filter in the drive units junction box, see *Filter kits* on page 18
	The drive unit has a CLS and no VFD, but the fault is due to interference from other drive units.	Install a filter on the sensor output of the relay.

5.3 Reset the alarms after a fault indication

After a leakage fault, the relay resets automatically.

After an overtemperature fault, the relay requires a manual reset.

Select one of the following steps to reset the relay:

- Push the external push-button that is connected to pin 6 and pin 7.
  When using the 24 V relay, pin 6 and pin 2 also resets.
- Interrupt the power supply for a short while.

6 Troubleshooting

Precautions

Before starting work, make sure that the safety instructions in the chapter *Introduction and Safety* on page 2 have been read and understood.

DANGER: Electrical Hazard

Troubleshooting a live control panel exposes personnel to hazardous voltages. Electrical troubleshooting must be done by a qualified electrician.

DANGER: Electrical Hazard

Before starting work on the unit, make sure that the unit and the control panel are isolated from the power supply and cannot be energized. This applies to the control circuit as well.



6.1 Check for an earth fault in the sensor circuit

1. Measure between the T1 wire and ground (earth).

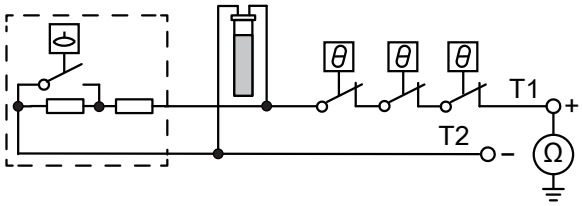

2. Measure between the T2 wire and ground (earth).

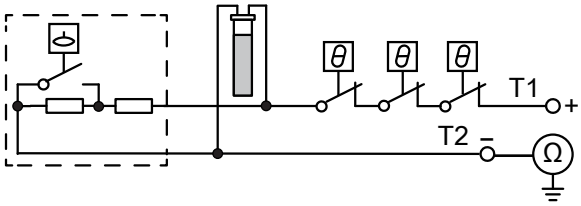

3. When the value is lower than one megaohm, inspect the circuit wiring in the pump.
   A lower value indicates an earth fault.

6.2 Check which sensor tripped the leakage alarm

The sensor circuit has a CLS and FLS connected.

1. Select one of the following steps to disconnect the power to the relay:

Condition	Action
No pump runs.	Switch off the power to the control panel and switch it back on.

Condition	Action
The second pump in a dual pumping station runs.	Pull out the relay from the socket and insert it back.

2. Measure the time for the leakage alarm to trip from the moment the relay is powered.

Delay time	Sensor tripping the alarm
10 s	FLS
15 s	CLS

6.3 Test the function of the relay

1. Simulate a normal condition.
   a) Connect a 1 kilohm resistor in series with an ammeter to the sensor output.
   b) Connect terminal 6 and 7 to reset the relay.

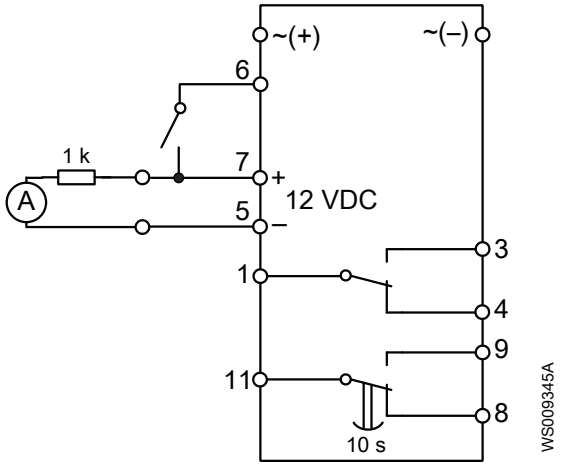

   Only the supply LED lights up and the meter shows 12 mA if the condition is normal.
2. Simulate the temperature alarm.
   a) Disconnect the resistor.
      The temperature LED is lit.
   b) Reconnect the resistor.
      The temperature LED is still lit.
   c) Connect terminal 6 and 7 for a short while to reset the relay.
      The temperature LED is turned off.
3. Simulate the leakage alarm.
   a) Connect a lead between terminal 5 and 7.

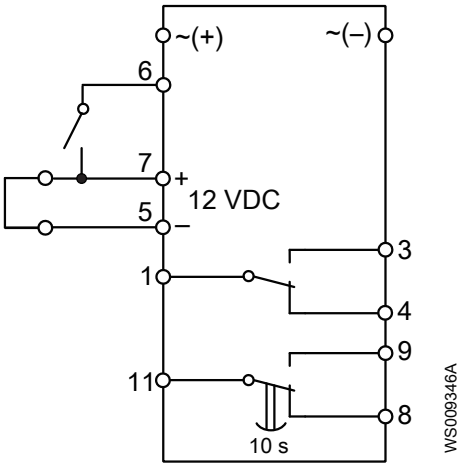

This short circuit does not damage the unit.

b) Keep the short circuit closed for 10 s.
   The leakage LED is lit.
c) Remove the lead between terminal 5 and 7.
   The leakage LED is turned of.

7 Technical Reference

7.1 Dimensions

Parameter	Value mm (in)
(W×H×D)	33×79×75 (1.29×3.11×2.95)

7.2 Environmental requirements

Parameter	Value
Temperature	-25° C – +60° C
Operating humidity	Relative humidity, non-condensing: 90%

7.3 Electrical data

Version	24 VDC	24 VAC	120 VAC	230 VAC
Supply voltage	24	24	120	230
Supply voltage tolerance	-2%–25%	-17%–25%,	±15%	
Frequency	-	50–60 Hz		
Relay resistive contact rating	24 VDC, 250 VAC, 5 A			
Relay inductive contact rating	24 VDC, 250 VAC, 2 A			
Sensor output voltage	12 VDC, ±5%			
Required power supply	5 W			

7.4 Terminals

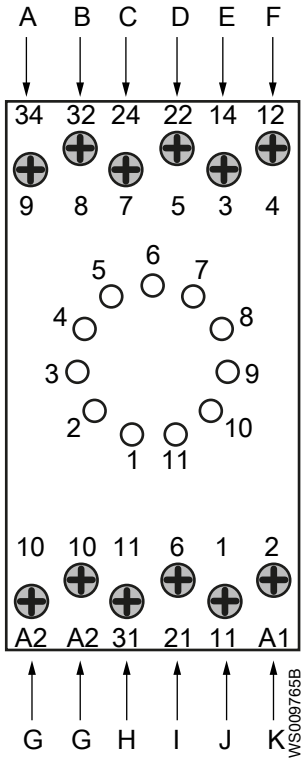

A	Leakage relay, normal output
B	Leakage relay, alarm output
C	Sensor input, T2
D	Sensor input, T1
E	Temperature relay, normal output
F	Temperature relay, alarm output
G	Power supply, -
H	Leakage relay, input
I	Reset, input
J	Temperature relay, input
K	Power supply, +

7.5 Circuit functions

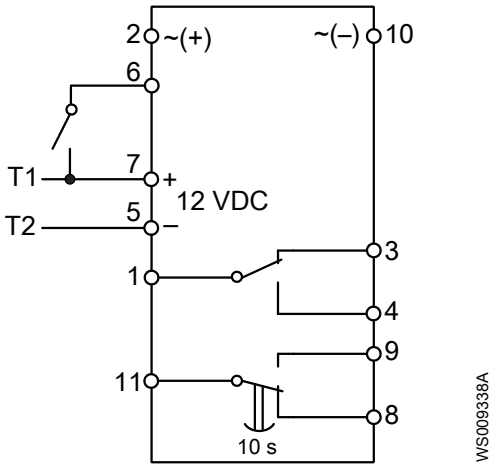

Relay connections	Description
1–3	Normal temperature
1–4	Overtemperature
2–10	Power supply: 24 V AC/DC, 120 VAC, or 230 VAC
5–7	Sensor input from drive unit sensors: 12 V
6–7	Alarm reset
11–8	No leakage
11–9	Leakage

7.6 Sensor combinations

The T1 and T2 wires are connected to the sensor input of the relay. Overtemperature always results in 0 mA sensor output current. The value of the current can vary within 10%.

Combination	Configuration	No fault (mA)	Leakage (mA)
FLS Thermal contacts	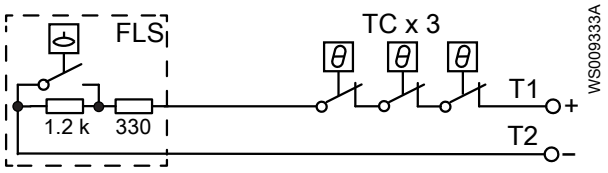	7.8	36
FLS10 Thermal contacts	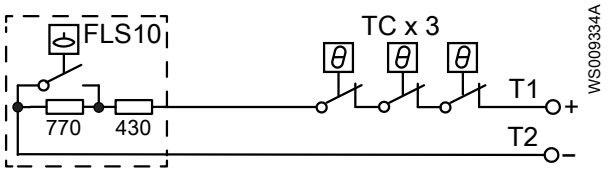	10	28
CLS Thermal contacts	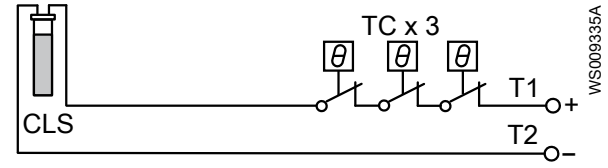 CLS must be connected with the correct polarity: brown = + and black = –.	5.5	29

Combination	Configuration	No fault (mA)	Leakage (mA)
FLS CLS Thermal contacts	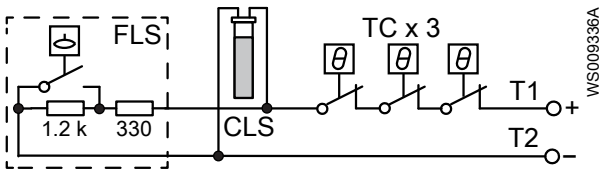 CLS must be connected with the correct polarity: brown = + and black = –.	13.3	36–42
Thermal contacts 1 kilohm resistor	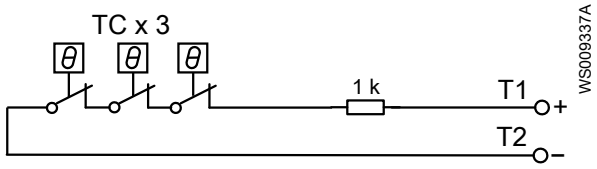	12	-

7.7 Filter connection diagrams

1. Junction box
2. Filter
3. MiniCAS II
4. Sensor circuit
5. Connection terminals to be removed when using a filter

Filter part number	Connection diagram
604 68 00	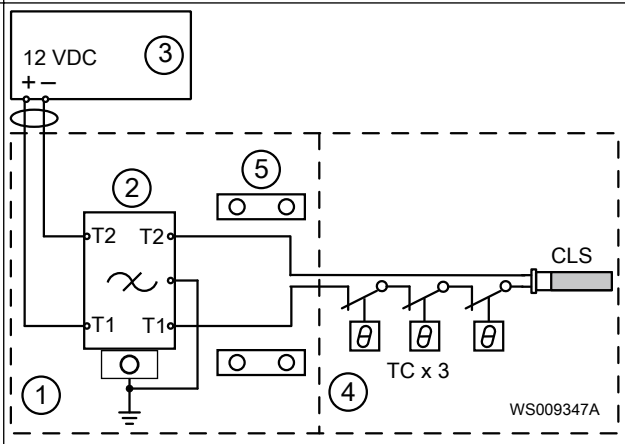
604 68 01	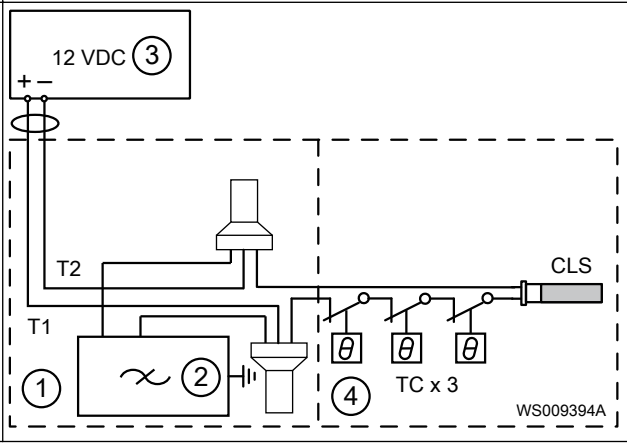

Filter part number	Connection diagram
604 68 02 604 68 04 661 60 00 661 60 01	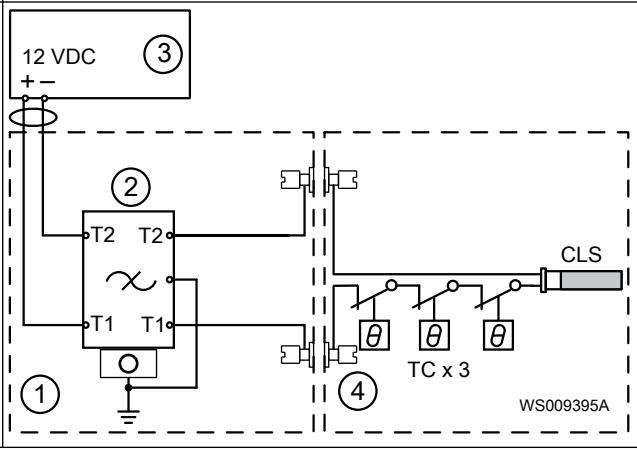

7.8 Filter kits

Drive unit	Part.no
3102, 3127, 4430	6046800
3085, 4410	6046801
3140, 3152, 3170, 3201, 3300	6046802
3231, 3306, 3312, 3351, 3356, 3400, 3501, 3602, 3800, 7045, 7061, 7081, 7101, 7115, 7121, 7125	6046804
4630, 4640, 4650, 4660	6616000
4670, 4680	6616001

Xylem |'zīləm|

1) The tissue in plants that brings water upward from the roots;
2) a leading global water technology company.

We're a global team unified in a common purpose: creating advanced technology solutions to the world's water challenges. Developing new technologies that will improve the way water is used, conserved, and re-used in the future is central to our work. Our products and services move, treat, analyze, monitor and return water to the environment, in public utility, industrial, residential and commercial building services, and agricultural settings. With its October 2016 acquisition of Sensus, Xylem added smart metering, network technologies and advanced data analytics for water, gas and electric utilities to its portfolio of solutions. In more than 150 countries, we have strong, long-standing relationships with customers who know us for our powerful combination of leading product brands and applications expertise with a strong focus on developing comprehensive, sustainable solutions.

For more information on how Xylem can help you, go to www.xylem.com

xylem
Let's Solve Water

Xylem Water Solutions Global Services AB
361 80 Emmaboda
Sweden
Tel: +46-471-24 70 00
Fax: +46-471-24 74 01
http://tpi.xyleminc.com
www.xylemwatersolutions.com/contacts/

Visit our Web site for the latest version of this document and more information

The original instruction is in English. All non-English instructions are translations of the original instruction.

© 2013 Xylem Inc

892472_14.0_en-US_2017-09_IOM.MiniCASII

REVIEWED BY CONTRACTOR

Kudlik Construction Ltd.

NAME: Sandra Rousseau P.Eng

DATE: Jul 03, 2018

NORCLAIR
MÉCANIQUE DE PROCÉDÉ

TDS AND SHOP DRAWINGS

DA-MP-12R1 - SOLID WASTE TRANSFER TRAILERS **Date :** 2018-07-03

INFORMATION	
Project : **WASTEWATER PLANT - IQALUIT**	
Client : Kudlik Construction Ltd. To Sandra Rousseau P.Eng./ Project Manager	Project number : **2018-062**
Contractor : Norclair inc.	Project number Norclair : **P1039**
Address : 1100, Montee Masson, Laval, QC, Canada H7E 4P2	
Project Manager : Steven Wieland	E-mail: swieland@norclair.ca
Phone: 450-688-4012 # 708	Cell.: 514-608-0619

Information, subcontractor or supplier	
Remorques N & N Inc. Address: 154 street Sylvestre, Saint-Germain-de-Grantham, QC J0C 1K0	
Contact :	Phone : (819) 395-1155

Information on the equipment or the proposed materials	
Speciality : Mechanical Process	
Equipment : SOLID WASTE TRANSFER TRAILERS	
Drawing reference :	
Specification reference : 40 05 23 Actually Spec 44 51 23	Division :
Article :	Number Page : 2

CONSULTANT APPROVAL

- Contractor must provide retrofitted rubber gasketing at dump tailgate to reduce seepage (Section 2.2.5) and provide a poly coating to the metal box to prevent erosion (Section 2.2.6).
- Dump trailer must also come with Remote Control, and other features specified in Section 2.2.4

STANTEC PROJECT #: 110126045

This review by Stantec is for general conformance with the design concept of Stantec's design of the:

☑ Process ☐ Structural ☐ Mechanical ☐ Electrical ☐ Other

component(s) only and does not mean that Stantec has verified or approves the shop drawing(s). The Contractor remains solely responsible for the shop drawing(s) and this review by Stantec does not relieve the Contractor of the Contractor's responsibility for errors or omissions in the shop drawing(s) or for meeting all requirements of the contract documents. This review does not mean that Stantec approves the detailed design inherent in the shop drawing, responsibility for which shall remain with the Contractor submitting same, nor does this review mean that Stantec accepts any deviation of the shop drawing(s) from the contract documents. The Contractor is responsible for confirming all dimensions and correlating them at the job site, for all construction means, methods and techniques, and for coordination of construction work of all trades, including coordination of all shop drawings.

SUBMITTAL # DA-MP-12R1

Stantec

☐ REVIEWED
☑ REVIEWED, AS NOTED
☐ REVISE AND RESUBMIT
☐ NOT REVIEWED

DATE July 3, 2018

BY Zach Paquin

1100, Montée Masson
Laval, QC, Canada
H7E 4P2

Phone. : 450-688-4012
Fax : 450-661-6341
E-Mail : info@norclair.ca
www.norclair.ca

N&N TRAILERS REMORQUES

HD SERIES
SOLID. POWERFUL. DURABLE.

MODEL **RD-82X192, 21K**



The rugged and powerful HD tipping trailer is designed for heavy-duty work. Tough and reliable, the HD is the ideal trailer for transporting oversized loads and moving heavy machinery.

THE N&N ADVANTAGE

N&N tipping trailers offer the benefit of galvanized metal construction and a telescopic cylinder at the front of the dump box. They can be custom fit to perfectly meet your needs with.

STANDARD FEATURES

- Galvanized axles
- Heat shrink connectors
- Aluminum toolbox
- HMV bumper puck between
- bed and frame
- Smart battery charger (1.5 A)
- Cold weather harness
- 12 tons telescopic cylinder 3 stages
- Aluminum tarp protector
- 72'' Galvanized ramps undermount
- Double acting door
- Adjustable coupler 5 positions
- Slipper spring suspension
- Rectangular 2X6X¼ tubing frame
- Reinforced spring hangers
- Stabilizer legs
- Plank holders
- Led lights
- Radial tires on galvanized rims
- Checker plate fenders
- Cross members on 16'' C/C
- 12 000LBS drop leg jack
- 4X Welded D-rings
- Tarp and roller
- 23'' high side inside box

SPECIFICATIONS

USABLE WIDTH	82 in
USABLE LENGTH	192 in
AXELS	3 x 7,000 lbs
BRAKES	Electric
TIRES	ST-235/80R16 10 ply
WEIGHT WHEN EMPTY	4,600 lbs
LOAD CAPACITY	18,150 lbs
TRAILER LENGTH	252 in
TRAILER WIDTH	102 in
DECKING	Steel 11 GA
RAMPS CAPACITY	10,000 Lbs
FINISH	Hot dipped galvanized





154, RUE SYLVESTRE, SAINT-GERMAIN-DE-GRANTHAM (QUÉBEC) J0C 1K0 | +1 819 395-1155 | INFO@NNREMORQUES.CA | NNREMORQUES.CA

REVIEWED BY CONTRACTOR

Kudlik Construction Ltd.

NAME: Sandra Rousseau P.Eng

DATE: Jul 17, 2018

NORCLAIR
MÉCANIQUE DE PROCÉDÉ

SHOP DRAWINGS

DA-MP-13R1 (Bride crane) **Date :** 2018-07-16

Information general	
Project : **WWTP UPGRADE - IQALUIT**	
Client : Kudlik Construction Ltd. To : Sandra Rousseau P.Eng., Project Manager	Project number : **2018-062** E-mail : srousseau@kudlik.biz
Contractor : **Norclair inc.**	Project number Norclair : **P1039**
Address : 1100, Mountain Masson, Laval, QC, Canada H7E 4P2	
Project Manager : Dominic Papineau, Project Manager	E-mail: dpapineau@norclair.ca
Phone : 450-688-4012 # 720	Cell. : 514-409-1832

Information, subcontractor or supplier	
Sub/supplier : Pro-Tech – Pont Roulant	
Contact : Nancy St-Louis	Phone : 450-560-9193 ext.225

Information on the equipment	
Speciality : **Process**	
Equipment : Bridge crane	
Drawing reference : P512	
Specification reference : **41 22 43**	Division :
Article :	Number of pages : 5

CONSULTANT APPROVAL

STANTEC PROJECT #: 110126045

SUBMITTAL # DA-MP-13R1 Bridge Crane.

This review by Stantec is for general conformance with the design concept of Stantec's design of the:

☑ Process ☐ Electrical
☐ Structural ☐ Other
☐ Mechanical

component(s) only and does not mean that Stantec has verified or approves the shop drawing(s). The Contractor remains solely responsible for the shop drawing(s) and this review by Stantec does not relieve the Contractor of the Contractor's responsibility for errors or omissions in the shop drawing(s) or for meeting all requirements of the contract documents. This review does not mean that Stantec approves the detailed design inherent in the shop drawing, responsibility for which shall remain with the Contractor submitting same, nor does this review mean that Stantec accepts any deviation of the shop drawing(s) from the contract documents. The Contractor is responsible for confirming all dimensions and correlating them at the job site, for all construction means, methods and techniques, and for coordination of construction work of all trades, including coordination of all shop drawings.

Stantec

☑ REVIEWED

☐ REVIEWED, AS NOTED

☐ REVISE AND RESUBMIT

☐ NOT REVIEWED

DATE July 17, 2018

BY Alejandro Rojas, P.Eng

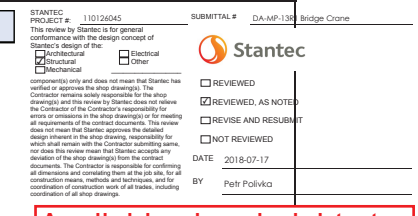

Available clear height at the crane location has to be checked prior the bridge purchase. Coordinate it with detail 17/S503.

1100, montée Masson
Laval, QC, Canada
H7E 4P2

E-Mail : info@norclair.ca
www.norclair.ca

SPECIFICATIONS & DIMENSIONS

Product Code	Capacity Ton (kg)	Lift ft.	Lift m	Weight lbs. (kg)	Reeving	Hand Chain Pull to Lift Rated Load lbs. (kg)	Hand Chain Overhauled to Lift Load One Foot ft. (m)	Dimensions in inches (mm) A	B	C	D	E	F	G	H	I	K	L	M	N
5623A	**1/2** (500)	10	3	21 (9)	1	44 (20)	30 (9.1)	11.811 (300)	0.669 (17)	0.945 (24)	5.236 (133)	5.827 (148)	5.827 (148)	5.472 (139)	8.110 (206)	0.945 (24)	2.402 (61)	3.425 (87)	4.331 (110)	0.551 (14)
5624A		15	4.5	23 (10)																
5625A		20	6	25 (11)																
5651A		30	9	29 (13)																
5632A		Less Chain		17 (8)																
5626A		10	3	28 (13)																
5627A	**1** (1,000)	15	4.5	31 (14)	1	54 (24)	49 (14.9)	13.189 (335)	0.866 (22)	1.142 (29)	6.142 (156)	6.890 (175)	6.575 (167)	6.457 (164)	9.528 (242)	0.945 (24)	2.756 (70)	3.819 (97)	4.921 (125)	0.748 (19)
5628A		20	6	34 (15)																
5653A		30	9	40 (18)																
5633A		Less Chain		23 (10)																
5629A	**2** (2000)	10	3	47 (21)	1	74 (34)	71 (21.6)	15.551 (395)	1.181 (30)	1.378 (35)	7.165 (182)	7.992 (203)	7.638 (194)	7.559 (192)	11.142 (283)	1.220 (31)	3.268 (83)	4.370 (111)	6.142 (156)	0.866 (22)
5630A		15	4.5	52 (24)																
5631A		20	6	57 (26)																
5634A		Less Chain		36 (16)																
5635A	**3** (3,000)	10	3	75 (34)	1	92 (42)	87 (26)	20.472 (520)	1.496 (38)	1.575 (40)	8.661 (220)	9.843 (250)	8.622 (219)	8.858 (225)	13.189 (335)	1.339 (34)	3.740 (95)	4.882 (124)	7.008 (178)	1.181 (30)
5636A		15	4.5	82 (37)																
5637A		20	6	89 (40)																
5638A		Less Chain		52 (24)																
5639A	**5** (5,000)	10	3	106 (48)	2	76 (34)	174 (53)	25.748 (654)	1.772 (45)	1.850 (47)	8.661 (220)	9.843 (250)	8.622 (219)	9.528 (242)	13.858 (352)	0.827 (21)	3.740 (95)	4.882 (124)	11.220 (285)	1.457 (37)
5640A		15	4.5	121 (55)																
5641A		20	6	136 (62)																
5642A		Less Chain		74 (34)																
5643A	**10** (10,000)	10	3	217 (98)	3	102 (46)	261 (79.3)	32.480 (825)	2.677 (68)	2.677 (68)	8.661 (220)	15.079 (383)	8.622 (219)	12.835 (326)	17.165 (436)	5.354 (136)	3.740 (95)	4.882 (124)	15.787 (401)	1.969 (50)
5644A		15	4.5	240 (109)																
5645A		20	6	261 (118)																
5646A		Less Chain		168 (76)																
HU15000H10	**15** (15,000)	10	3	455 (206)	6	2 x 76 (2 x 34)	522 (2 x 261) (159.1 (2 x 79.3))	43.543 (1106)	3.386 (86)	3.150 (80)	8.661 (220)	23.071 (586)	9.843 (250)	16.181 (411)	20.512 (521)	–	4.921 (125)	4.921 (125)	23.740 (603)	2.480 (63)
HU15000H15		15	4.5	508 (230)																
HU15000H20		20	6	554 (251)																
HU15000H30		30	9	653 (296)																
HU20000H10	**20** (20,000)	10	3	455 (206)	6	2 x 102 (2 x 46)	522 (2 x 261) (159.1 (2 x 79.3))	43.543 (1106)	3.386 (86)	3.150 (80)	8.661 (220)	23.071 (586)	9.843 (250)	16.181 (411)	20.512 (521)	–	4.921 (125)	4.921 (125)	23.740 (603)	2.480 (63)
HU20000H15		15	4.5	508 (230)																
HU20000H20		20	6	554 (251)																
HU20000H30		30	9	653 (296)																

Other lifts available. Contact factory.
Standard Hand Chain drop 2 ft. less than Lift.

DEMAND GENUINE PARTS

When you choose Parts Star™ by Columbus McKinnon, you'll be purchasing genuine Columbus McKinnon parts designed to fit the Hurricane 360° hoist's exact specifications, maintaining warranty requirements and the integrity of the unit's superior design and safety features.

Get everything you need for a complete and professional repair with Parts Star Total Repair Kits. Popular Hurricane 360° repair parts are also available in easy-to-order bulk packaging so the parts you need are always on hand.

CM PARTS STAR BY COLUMBUS MCKINNON

PROTECT AGAINST UNSAFE LIFTING CONDITIONS

All CM Hurricane 360° units feature the Tri-Point Hook Inspection™ system to help protect the operator against unsafe lifting conditions. Hurricane 360° load hooks come with 3 distinct raised points the operator can use to measure the hook to detect any indication of overload or deformation.

TRI-POINT HOOK INSPECTION



Technical data
Capacity; 2000 LBS/BR
Bridge over all length; 5550 mm
Bridge series; 2000
Runway over all length; 6475 mm
Runway series; 2000

Bridge trolley travel is 4420 mm
Endtruck travel is 5650 mm
Anchor bolt load; 5226 LBS

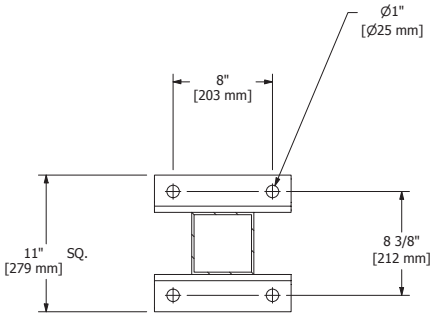

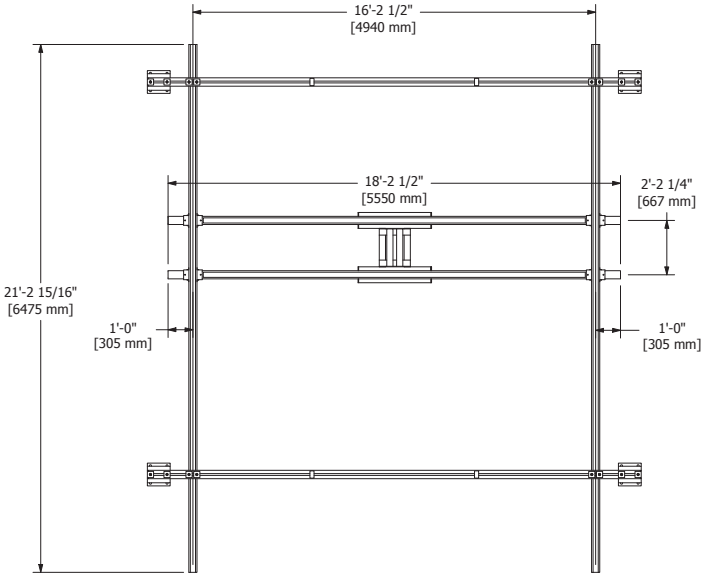

SECTION A-A

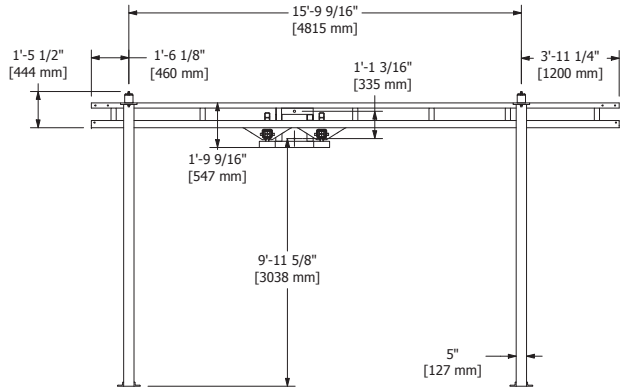

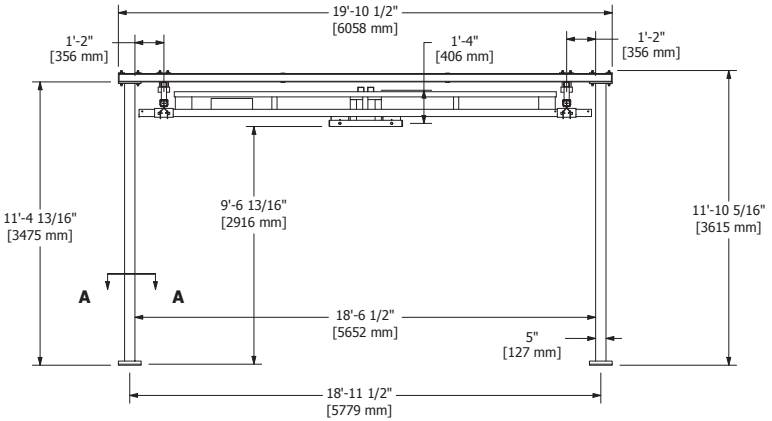

NOTES

Hangers are on 6096 mm centers maximum with a 1220 mm cantilever on each end standard.
Hangers position tolerance = +/- 63.5 mm
Hangers must be within 1220 mm of splice joint
Do not scale from drawing
Dimensions are steel to steel and may vary

Vérificateur	Initiale
Marc-Antoine Bezeau	
Mathieu Charbonneau	
Samuel Gaudreault	

Tolérances
x.xxx = (+/-) 0.010
x.xx = (+/-) 0.01
x.x = (+/-) 0.1
x/x = (+/-) 1/16
Angle = (+/-) 0.5°

Sceau D'ingénieur

Dessinateur: mgariepy

PONT ROULANT PROTECH
ÉQUIPEZ-VOUS EN PRO

Titre: GENERAL ARRANGEMENT

16/07/2018

SIZE	Projet:	REV
B	CITY OF IQUALUIT F-11698	O

WWW.PONTROULANTPROTECH.COM

No. Dessin F-11698-1

Columbus McKinnon
Industrial Products GmbH
Wuppertal / Germany

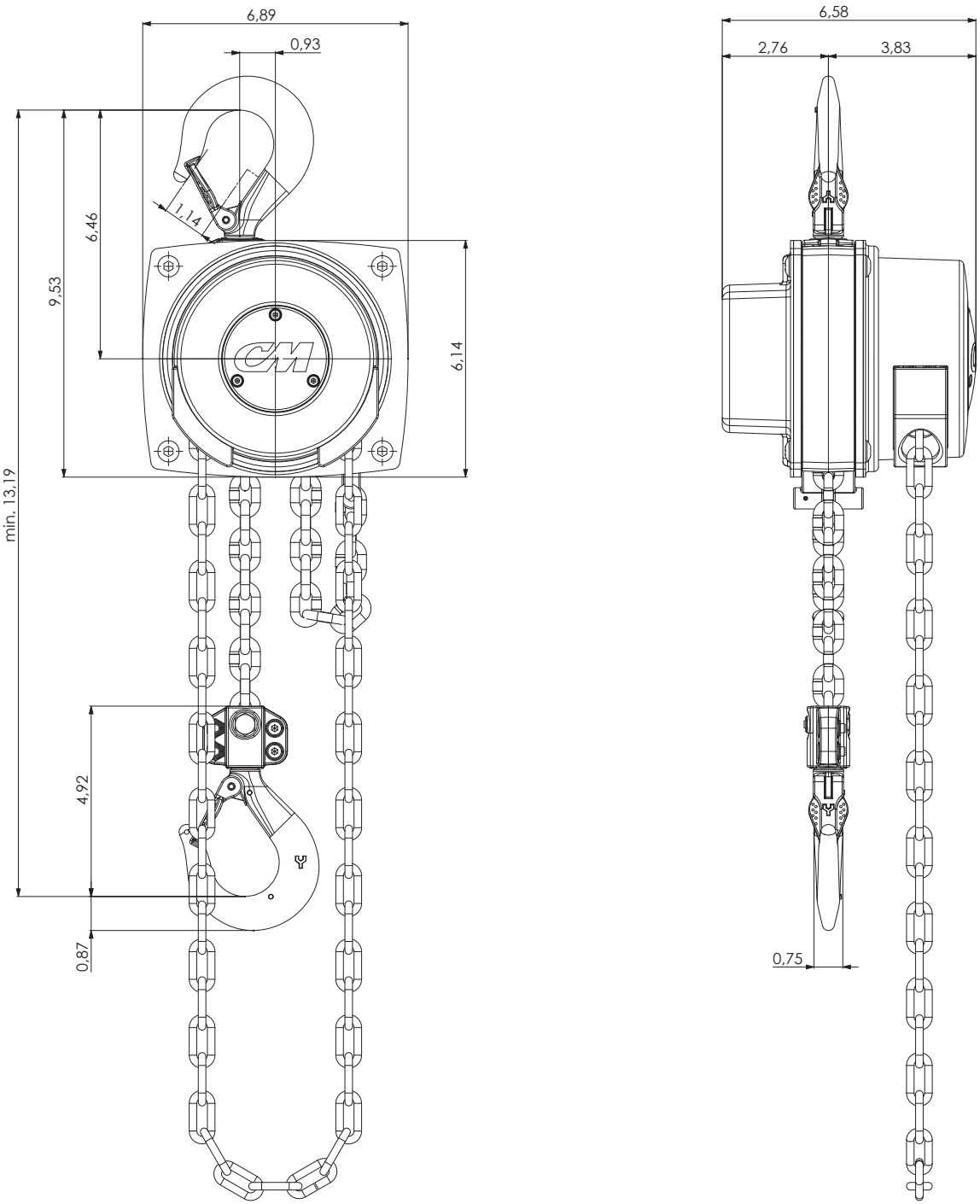

General Tolerances ISO 2768-mK		Drawing Format DIN EN ISO 5457			
Specified Tolerances ISO 8015					
Figures According to DIN 6784					
Material:					
Standard:					
Stainless Steel:					
Modelled:	04/08/2008	Name:			
Drawn:	04/08/2008	Name:			
Approved:	04/14/2010	Name:			
Design Authority:	Velbert				
Original project:					
Original scale:	1:1				

Columbus McKinnon
Industrial Products GmbH
Tele Allee 30
42329 Wuppertal / Germany

Description:
CM Hurricane 360 Hook Mount
1,0 tonne / 1000 kg
Hurricane III 1,0/1

ECN	Rev.	Description of change	Date	By

Format: **A0** | Number: **84700017** | Sheet: 1 / 1

NOTICE TO PERSON RECEIVING THIS DRAWING AND/OR TECHNICAL INFORMATION
Copyright by Columbus McKinnon Industrial Products GmbH, Tele Allee 30, 42329 Wuppertal, Germany
This drawing and/or technical information is the property of Columbus McKinnon Industrial Products GmbH and is to be treated as confidential. It may not be copied or otherwise reproduced in whole or in part without the express written consent of Columbus McKinnon Industrial Products GmbH. It may not be used for any purpose other than that for which it is furnished. It may not be disclosed to any person other than those to whom it is originally furnished. It must be returned to Columbus McKinnon Industrial Products GmbH at any time upon its request.
This drawing and/or technical information is excepted from ITAR.

REVIEWED BY CONTRACTOR

Kudlik Construction Ltd.

NAME: Sandra Rousseau P.Eng

DATE: Jul 13, 2018

NORCLAIR
MÉCANIQUE DE PROCÉDÉ

SHOP DRAWINGS

DA-MP-16R3- Puddle flanges detail

Date : 2018-07-13

INFORMATION	
Project : **WASTEWATER PLANT - IQALUIT**	
Client : Kudlik Construction Ltd. To Sandra Rousseau P.Eng./ Project Manager	Project number : **2018-062** E-mail : srousseau@kudlik.biz
Contractor : Norclair inc.	Project number Norclair : **P1039**
Address : 1100, Mountain Masson, Laval, QC, Canada H7E 4P2	
Project Manager : Dominic Papineau, Project Manager	E-mail: dpapineau@norclair.ca
Phone: 450-688-4012 # 720	Cell.: 514-409-1832

Information, subcontractor or supplier	
Sub/supplier :	
Contact :	Phone :

Information on the equipment	
Speciality : **Process**	
Equipment : Puddle flanges detail **(required for 2018 installation)**	
Drawing reference : P003 and P504 (attached)	
Specification reference : : **N/A** (Page xx / xx)	Division :
Article :	Number Page : 4

CONSULTANT APPROVAL

STANTEC PROJECT #: 110126045

SUBMITTAL # DA-MP-16R3 Puddle Flanges Detail.

This review by Stantec is for general conformance with the design concept of Stantec's design of the:

☑ Process ☐ Electrical
☐ Structural ☐ Other
☐ Mechanical

component(s) only and does not mean that Stantec has verified or approves the shop drawing(s). The Contractor remains solely responsible for the shop drawing(s) and this review by Stantec does not relieve the Contractor of the Contractor's responsibility for errors or omissions in the shop drawing(s) or for meeting all requirements of the contract documents. This review does not mean that Stantec approves the detailed design inherent in the shop drawing, responsibility for which shall remain with the Contractor submitting same, nor does this review mean that Stantec accepts any deviation of the shop drawing(s) from the contract documents. The Contractor is responsible for confirming all dimensions and correlating them at the job site, for all construction means, methods and techniques, and for coordination of construction work of all trades, including coordination of all shop drawings.

Stantec

☑ REVIEWED
☐ REVIEWED, AS NOTED
☐ REVISE AND RESUBMIT
☐ NOT REVIEWED

DATE July 16, 2018

BY Alejandro Rojas, P.Eng

1100, Montée Masson
Laval, QC, Canada
H7E 4P2

Phone. : 450-688-4012
Fax : 450-661-6341
E-Mail : info@norclair.ca
www.norclair.ca

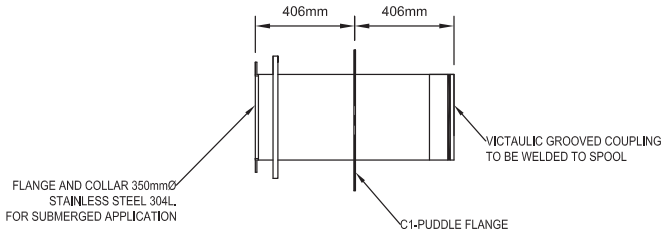

M1- MBBR TO DAF (ML)
REQUIRED 2x

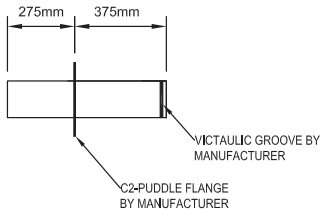

M2- DAF DRAIN TO MBBR (TWAS)
REQUIRED 2x

# PIECE	DESCRIPTION	QTE.
M1	- PIPE 350mmØ SS 304L. SCH. 10S	2 x
	- PUDDLE FLANGE 350MMØ SS 304L. ¾"	2 x
	- FLANGE 350mmØ SS 304L.	2 x
	- COLLAR 350mmØ SS 304L.	2 x
	- VICT GROOVED COUPLING 350mmØ SS 304L. , SCH. 40	2 x

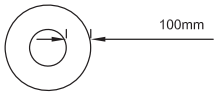

C1-PUDDLE FLANGE DETAIL

*TO BE INSTALLED AT INVERT 10.065

# PIECE	DESCRIPTION	QTE.
M2	- PIPE 150mmØ DUCTILE IRON CI53, W/ GLASS LINING	2 x
	- PUDDLE FLANGE ¾"	2 x

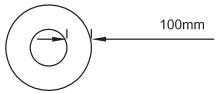

C2- PUDDLE FLANGE DETAIL
(CUSTOM 100mm)

*TO BE INSTALLED AT INVERT 9.625

NOTES:

- PLEASE REFER TO DRAWINGS P201 DETAIL 1 AND P504 ATTACHED.

REVISION:	
FOR FABRICATION_V02	2018-07-13

NORCLAIR
MÉCANIQUE DE PROCÉDÉ

CUSTOMER:

CITY OF IQALUIT

PROJECT:

IQALUIT WASTEWATER TREATMENT PLANT UPGRADE.

PUDDLE FLANGE DETAILS

DATE: JULY 2018	SCALE: 1:20
DRAWN BY: A.P.O	PROJECT NORCLAIR: P-1039
CHECKED BY: D.P.	DRAWING: PF-01

ORIGINAL SHEET - ISO A1

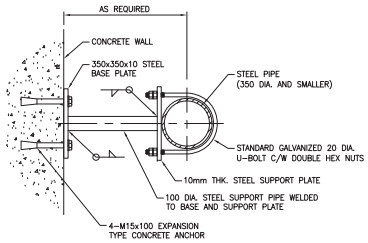

FOR PIPES 350 DIA. AND SMALLER

NOTES:
1. PIPE SUPPORTS TO BE LOCATED AT MAXIMUM 2.0m O/C

VERTICAL RISER PIPE SUPPORT – TYPE 1

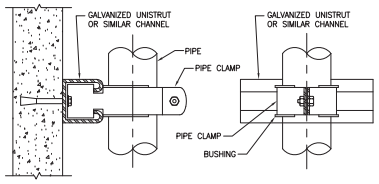

SIDE ELEVATION FRONT ELEVATION

NOTES:
1. SUPPORT SHALL BE SIZED ADEQUATELY TO SUPPORT CARRIER PIPE.

WALL MOUNTED PIPE SUPPORT – TYPE 2

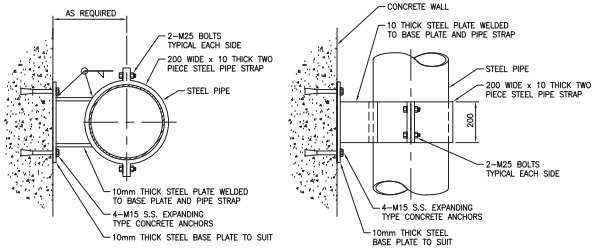

TOP VIEW FRONT ELEVATION

PIPE SUPPORT – TYPE 3

DIMENSIONS (mm)	
PIPE SIZE	ROD DIA.
25	10
30	10
40	10
50	10
65	12
80	12
100	12
150	20
200	20
250	22
300	22
350	25
400	25
450	28
500	32
600	38

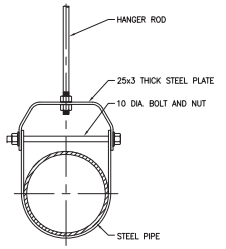

NOTES:
1. HANGER SHALL BE SIZED ADEQUATELY TO SUPPORT CARRIER PIPE.

PIPE HANGER – TYPE 4

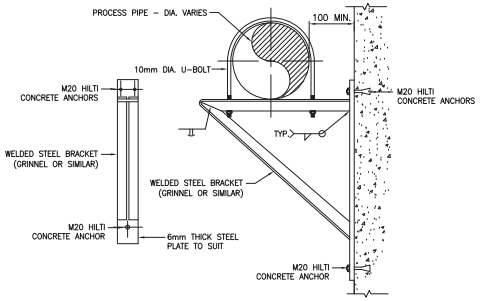

NOTES:
1. BRACKET DIMENSIONS SHALL BE SIZED ADEQUATELY TO SUPPORT CARRIER PIPE
2. PIPE SUPPORTS TO BE LOCATED AT MAXIMUM 2.0m O/C

PIPE SUPPORT – TYPE 5

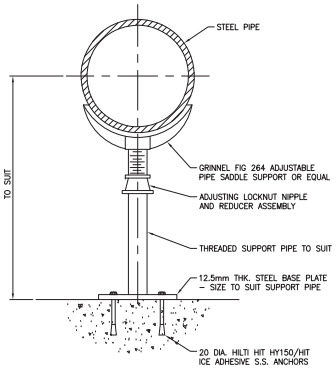

ADJUSTABLE PIPE SUPPORT – TYPE 6

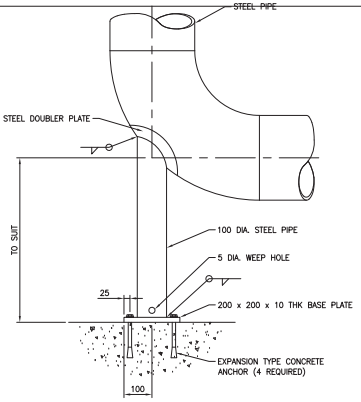

PIPE SUPPORT – TYPE 6

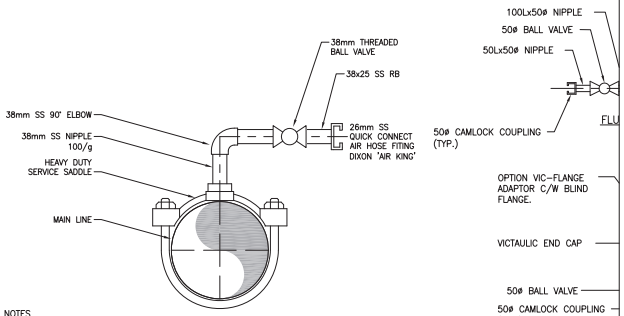

NOTES
1. USE SERVICE SADDLE FOR DUCTILE IRON PIPE, AND THREADOLET FOR STEEL PIPE

36 STD

FLUSHING CONNECTION

NO SCALE

37 STD

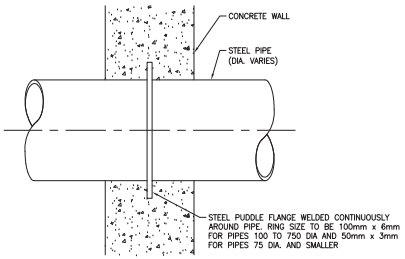

NOTES:
PUDDLE FLANGES TO BE USED FOR ALL WALL PENETRATIONS UNLESS OTHERWISE APPROVED.

STEEL PUDDLE FLANGE DETAIL

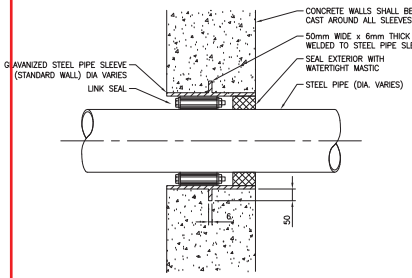

LINK SEAL WALL PENETRATION DETAIL

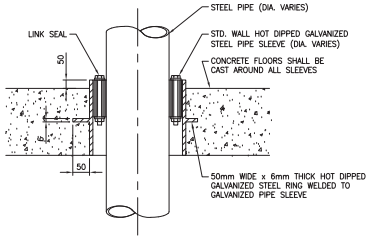

LINK SEAL FLOOR PENETRATION DETAIL

NOTE:
ALL PIPE SUPPORT MATERIALS TO BE HOT DIPPED GALVANIZED STEEL UNLESS OTHERWISE NOTED

Revision	By	Appd.	YY.MM.DD
1 ISSUED FOR CONSTRUCTION	TR	AR	18.05.23
0 ISSUED FOR BID	TR	AR	18.04.09
Issued	By	Appd.	YY.MM.DD

Consultants

Permit-Seal

PERMIT TO PRACTICE
NUNAMI STANTEC LTD.
Signature
Date
PERMIT NUMBER: P 1117
NT/NU Association of Professional Engineers and Geoscientists

REGISTERED PROFESSIONAL ENGINEER
A. ROJAS
LICENSEE
NT / NU

NUNAMI
STANTEC LIMITED
1088C Noble House
Iqaluit NU
www.stantec.com

The Contractor shall verify and be responsible for all dimensions. DO NOT scale the drawing - any errors or omissions shall be reported to Stantec without delay.
The Copyrights to all designs and drawings are the property of Stantec. Reproduction or use for any purpose other than that authorized by Stantec is forbidden.

Client/Project
Iqaluit
ᐃᖃᓗᐃᑦ
IQALUIT WASTEWATER TREATMENT PLANT UPGRADE
City of Iqaluit, Nunavut

File Name: P003 | TRonl | Dwn. | — | Chkd. | — | Dsgn. | 2017.10.03 YY.MM.DD

Title
PROCESS MISCELLANEOUS DETAILS

Project No.	Scale
110126045	N.T.S.
Drawing No.	Sheet / Revision
P003	of 0

\\Y:\1107\active\110126045\drawings\04-process\current\P003.dwg
2019/05/22 8:35 AM By: Rolo, Thomas
ORIGINAL SHEET - ISO A1

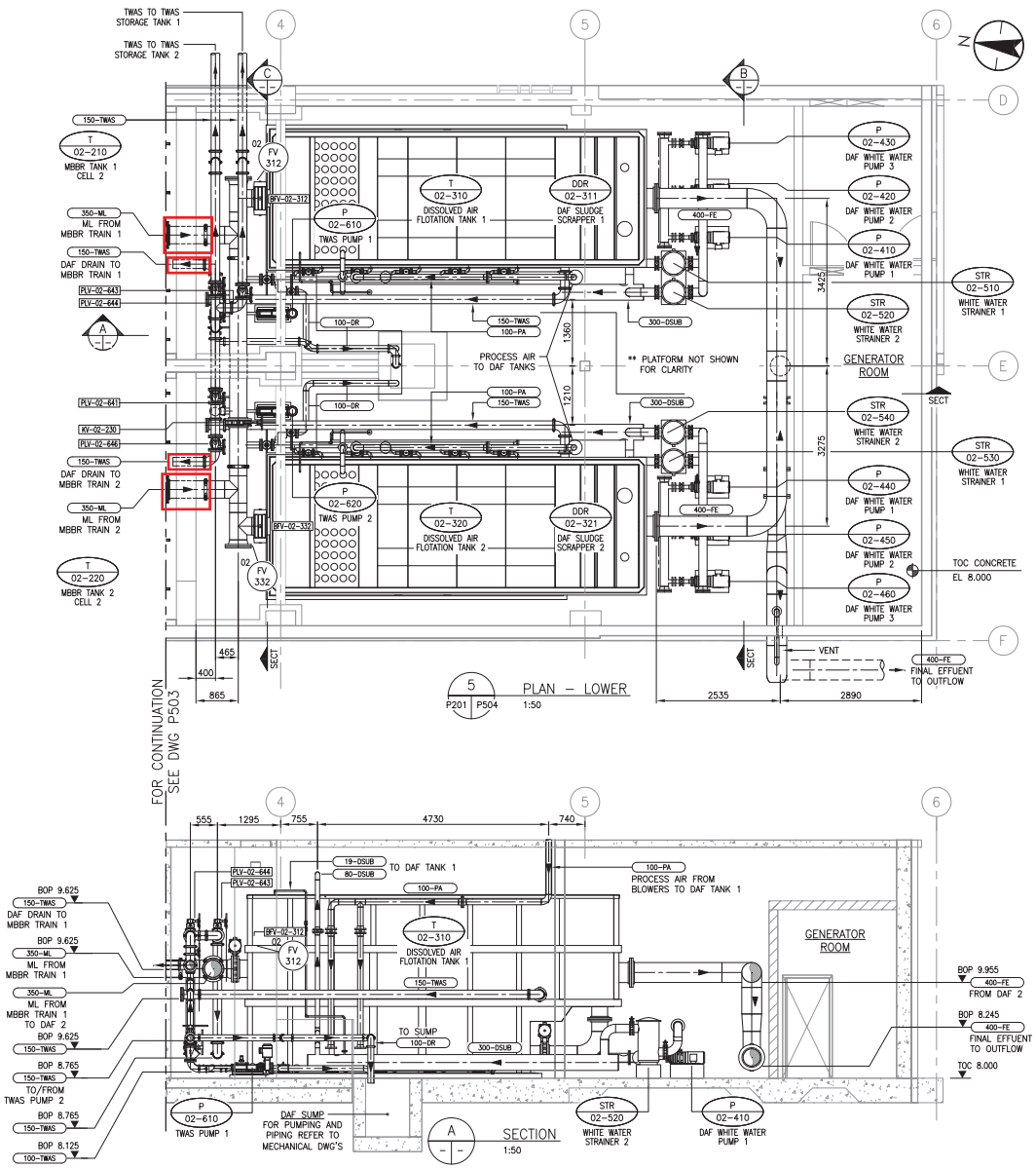

5 PLAN – LOWER
P201 P504 1:50

A SECTION
1:50

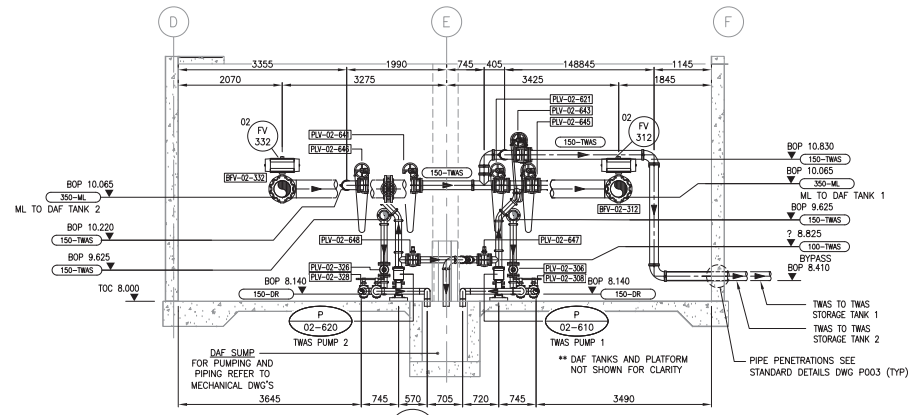

C SECTION
1:50

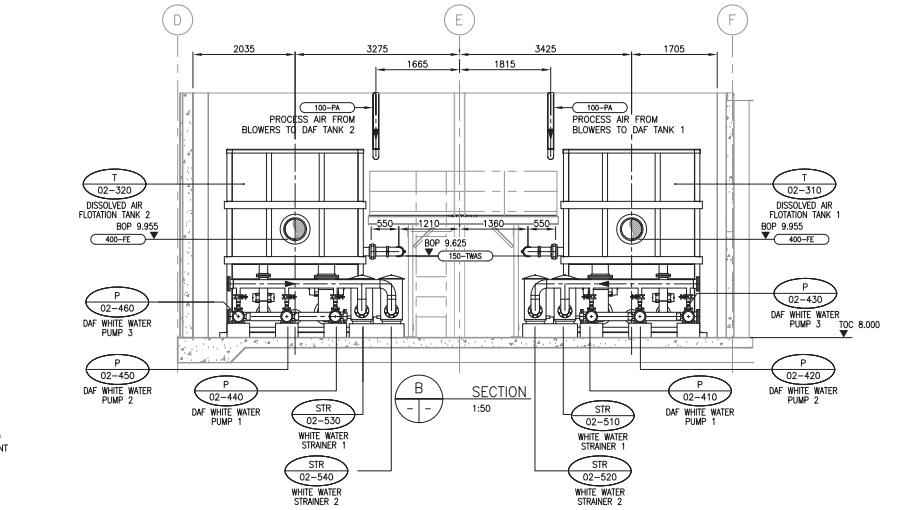

B SECTION
1:50

NOTE

1. FOR CONCRETE PAD ELEVATIONS REFER TO DRAWING P509

Revision	By	Appd.	YY.MM.DD
1 ISSUED FOR CONSTRUCTION	TR	AR	18.05.23
0 ISSUED FOR BID	TR	AR	18.04.09
Issued	By	Appd.	YY.MM.DD

Consultants

Permit-Seal

PERMIT TO PRACTICE
NUNAMI STANTEC LTD.
Signature
Date 9 April 2018
PERMIT NUMBER: P 1117
NT/NU Association of Professional Engineers and Geoscientists
110126045

REGISTERED PROFESSIONAL ENGINEER
A. ROJAS
LICENSEE
NT / NU

NUNAMI
STANTEC LIMITED

1088C Noble House
Iqaluit NU
www.stantec.com

The Contractor shall verify and be responsible for all dimensions. DO NOT scale the drawing - any errors or omissions shall be reported to Stantec without delay.
The Copyrights to all designs and drawings are the property of Stantec. Reproduction or use for any purpose other than that authorized by Stantec is forbidden.

Client/Project

Iqaluit

IQALUIT WASTEWATER TREATMENT PLANT UPGRADE

City of Iqaluit, Nunavut

File Name: P504 | Rtn/Dwn. | Chkd. | Dsgn. | 2017.10.03 YY.MM.DD

Title

PROCESS
LOWER - DAF UNITS 1 AND 2
DETAILS

Project No. 110126045

Scale 1:50 0 500 1500 2500mm

Drawing No. P504 | Sheet of | Revision 0

ORIGINAL SHEET - ISO A1

V:\1107\active\110126045\drawings\04-process\current\P504.dwg
2018/05/22 8:36 AM By: Rohl, Thomas

REVIEWED BY CONTRACTOR

Kudlik Construction Ltd.

NAME: Sandra Rousseau P.Eng

DATE: Jul 10, 2018

NORCLAIR
MÉCANIQUE DE PROCÉDÉ

SHOP DRAWINGS

DA-MP-17-Flange gasket for SS2 piping

Date : 2018-07-10

INFORMATION	
Project : **WWTP UPGRADE - IQALUIT**	
Client : Kudlik Construction Ltd. To Sandra Rousseau P.Eng./ Project Manager	Project number : **2018-062**
Contractor : Norclair inc.	Project number Norclair : **P1039**
Address : 1100, Montee Masson, Laval, QC, Canada H7E 4P2	
Project Manager : Dominic Papineau	E-mail: dpapineau@norclair.ca
Phone: 450-688-4012 # 720	Cell.: 514-409-1832

Information, subcontractor or supplier	
Sub supplier : Willsup Gaskets Inc.	
Contact : info@willsupgaskets.co	Phone : 514-694-6000

Information on the equipment or the proposed materials	
Speciality : Process	
Equipment : Flange gasket for SS2 piping	
Drawing reference :	
Specification reference : **40 05 13.01** (Page 15/17)	Division :
Article :	Number Page : 4

CONSULTANT APPROVAL

STANTEC PROJECT #: 110126045

SUBMITTAL # DA-MP-17 Flange Gasket for SS2

This review by Stantec is for general conformance with the design concept of Stantec's design of the:

☑ Process ☐ Electrical
☐ Structural ☐ Other
☐ Mechanical

Stantec

☑ REVIEWED

☐ REVIEWED, AS NOTED

☐ REVISE AND RESUBMIT

☐ NOT REVIEWED

component(s) only and does not mean that Stantec has verified or approves the shop drawing(s). The Contractor remains solely responsible for the shop drawing(s) and this review by Stantec does not relieve the Contractor of the Contractor's responsibility for errors or omissions in the shop drawing(s) or for meeting all requirements of the contract documents. This review does not mean that Stantec approves the detailed design inherent in the shop drawing, responsibility for which shall remain with the Contractor submitting same, nor does this review mean that Stantec accepts any deviation of the shop drawing(s) from the contract documents. The Contractor is responsible for confirming all dimensions and correlating them at the job site, for all construction means, methods and techniques, and for coordination of construction work of all trades, including coordination of all shop drawings.

DATE July 10, 2018

BY Alejandro Rojas, P.Eng

1100, Montée Masson
Laval, QC, Canada
H7E 4P2

450-688-4012
450-661-6341
E-Mail : info@norclair.ca
www.norclair.ca

Durlon 8500 Gaskets

8500 Aramid-Inorganic/NBR Rubber Binder

COMPRESSED SHEET GASKET MATERIAL § ASTM F104: F712120-A9B3E12K5L151M6

application:

Our workhorse material, DURLON® 8500 is excellent in steam, natural gas, soybean processing and with new generation refrigerants. A high quality general service gasket material for use in a wide range of services in pulp and paper, food, beverage, pharmaceutical, chemical, refinery, gas pipeline and general industry.DURLON® 8500 exhibits good compressibility and recovery, excellent sealability, flexibility and cutting characteristics.

composition:

DURLON® 8500 contains high-strength aramid and inorganic fibers bonded with high-grade Nitrile (NBR) rubber.

fire testing:

DURLON® 8500 has successfully passed a modified version of the API 607 fire test. The duration of the direct flame portion of the test is 30 minutes and the flange temperature must reach 1200°F in the first 15 minutes. The internal pressure is held at a constant 30 psig. After the flame is shut off, the fixture is immediately water quenched with an overhead water blast. Leakage must not exceed 100 ml/min after a 6 minute cool down to successfully pass the test. Subsequent leakage testing is also performed.

anti-stick properties:

Much effort has gone into improving the anti-stick release agents of all compressed DURLON® products. All DURLON® compressed gasket materials have passed the MIL-G-24696B Navy Adhesion Test (366°F/48 hrs).

typical properties:

Color:	Green, branded
Fiber:	Aramid/Inorganic
Binder:	Nitrile (NBR)
Fluid Services:	Saturated Steam, Oils, Fuels, Dilute Acids & Alkalis, Solvents, Refrigerants
Density:	1.7 g/cm^3 (106 lbs./ft^3)
Tensile Strength, ASTM F152:	2,000 psi (13.8 MPa)
Compressibility, ASTM F36:	8 to 16%
Recovery ASTM F36:	50%
Temperature	
Range:	-100 to 700°F (-73 to 371°C)
Continuous, max:	548°F (287°C)
Pressure, max:	1500 psig (103 bar)
Fluid Resistance - ASTM F146	
IRM 903 oil, 5 h/300°F (149°C)	
Thickness Increase:	0 to 15%
Weight Increase:	15%
ASTM Fuel B 5 h/70°F (21°C)	
Thickness Increase:	0 to 10%
Weight Increase:	10%
Sealability	
ASTM F37 (Fuel A):	0.01 mL/hr
ASTM F37 (Nitrogen):	0.4 mL/hr
Volume Resistivity, ASTM D257:	4.2 x 10^{13} ohm-cm
Dielectric Breakdown, ASTM D149:	11.7 kV/mm (297 V/mil)
DIN 3535 Gas Permeability:	0.03 cc/min
Creep Relaxation ASTM F38:	20%
Flexibility, ASTM F147:	10x
ASTM F104 Line Call-Out:	F712120-A9B3E12K5L151M6

Note: ASTM properties based on 1/16" sheet thickness except ASTM F38, which is based on 1/32" sheet thickness. This is a general guide only and should not be the sole means of accepting or rejecting this material. The data listed here falls within the normal range of product properties but should not be used to establish specification limits nor used alone as the basis of design.

*For applications above Class 300, consult your representative.

L441

Compressed Sheet Gasket Material

Description:

L441 is a general service sheet gasket material with a wide range of application potential. Manufactured with a formulation of high quality fillers, premium aramid / inorganic fibers and a nitrile rubber binder,

Applications and Characteristics:

- Excellent sealing ability
- Good chemical resistance
- Creep relaxation minimization
- Great Recovery

sheet gasket materials are supplied with anti-stick coating as standard.
Can be manufactured with wire insert.

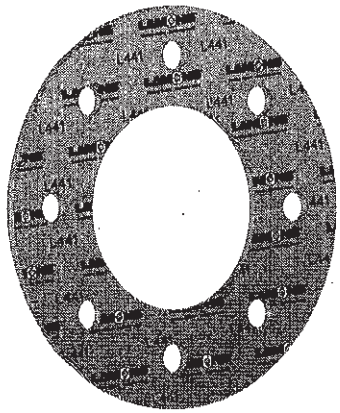

Creep Relaxation	ASTM F-38B (1/32")	20%
Residual Stress	DIN 52913 (50 MPa @ 175°C)	28 MPa
	BS7531 (40 MPa @ 300°C)	20 MPa
Sealability	ASTM F-37A (1/32")	0.25 ml/hr
Gas Leakage	DIN 3535/6	< 1.0 ml/min
Compressibility	ASTM F-36 J	7 - 17%
Recovery	ASTM F-36 J	50% min
Tensile Strength	ASTM F-152	2000 psi (14 MPa)
Weight Increase	ASTM F-146 after immersion in Fuel B for 5 Hrs @ 73°F (23°C)	25% max
Thickness Increase	ASTM F-146	
	ASTM Oil 1, 5 hrs / 300°F (149°C)	0 - 5%
	ASTM Oil 3, 5 hrs / 300°F (149°C)	0 - 5%
	ASTM Fuel A, 5 Hrs / 73°F (23°C)	0 - 5%
	ASTM Fuel B, 5 Hrs / 73°F (23°C)	0 - 7%
Standard Line Callout	ASTM F-104	F712121B3E22M5
m & y values	1/16" thickness	1/8" thickness
m	2.5	3.2
y	3800	4100
Dielectric Strength	ASTM D149-95a	15 kV/mm
Leachable Chlorides	FSA Method (Typical)	100 ppm
Density		112 lbs/ft³ (1.8 g/cc)
Color	Blue	
Thickness Range	1/64" (0.4 mm) to 1/8" (3.2 mm)	
Sheet Size Availability	Max: 120" x 60" (3 m x 1.5 m)	

L441 PRESSURE / TEMPERATURE GRAPH

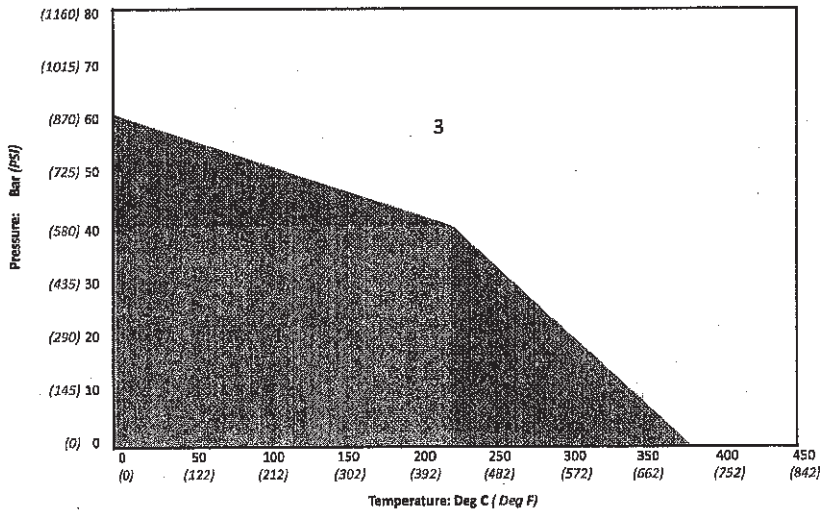

All Pressure / Temperature values are based on 1/16" (1.5 mm) gasket thickness.

1. Suitable (Chemical Compatibility has to be considered).
2. Please contact Lamons Engineering department for clarification. engineering@lamons.com
3. Not Suitable.

PIPE SPECIFICATION DATASHEET – SS2

FITTINGS AND APPURTENANCES

ITEM	SIZE (mm)	MATERIAL	RATING	SPECIFICATION	REMARKS
Van Stone Flanges, Rolled Angle FF or RF	75 – 1200	304L St. Steel 304L SS Steel Backing Flange	Cl 125	Flanges: ASTM A774 Pattern: ANSI B16.1	Note 1
Ell – Short Radius Ell – Long Radius Tees, Reducers Reducing Outlets, Y	75 – 1200	304L Stainless Steel, Single Longitudinal Weld Seam	Same as Pipe	General: MSS SP43 Material: ASTM A774 Dimensions: ANSI B16.1	Note 2
3-Piece Ell	350 – 550	304L Stainless Steel, Single Longitudinal Weld Seam	Same as Pipe	Material: ASTM A778 Dimensions: ANSI B16.1	
5-Piece Ell	600 – 1200	304L Stainless Steel	Same as Pipe	Material: ASTM A778 Dimensions: ANSI B16.1	
Cap	75 – 1200	304L Stainless Steel	Same as Pipe	Material: ASTM A778 Dimensions: ANSI B16.1	
Expansion Couplings	75 – 1200	Synthetic Rubber Galvanized Steel Flange	Same As Pipe		
Bolts		Stainless Steel	Hex. Head	ASTM A193 Gr. B8, Cl 1	
Nuts	≥ 25 mm >25 mm	Stainless Steel	Hex. Heavy Hex.	ASTM A194 Gr. 8	
Flange Gaskets	75 – 250	Reinforced Synthetic Fibre-Nitrile Binder	1.6 mm thick		
Flange Gaskets	>300	Reinforced Synthetic Fibre-Nitrile Binder	3.2 mm thick		

INSPECTION AND TESTING

Pneumatic at 150 kPag for 24 hour period.
Visual and random nondestructive testing for welds.

CLEANING AND CONDITIONING

1. Remove debris.
2. Passivate all piping after completion of welding.

NOTES

1. Flanges shall be Van Stone type, with galvanized mild steel backing rings, drilled and faced to Class 150 in accordance with ANSI B16.5. In submerged and exterior locations use stainless steel back-up rings.
2. Provide beveled edges for all welded fittings and connections.
3. The drawings may indicate coupling, flanges, or other joints that may be disassembled at a minimum number of locations. In addition, provide joints noted in these specification sheets at the specified maximum spacing to allow for pipe disassembly through the remainder of the pipe runs. Contractor is to locate.
4. For PA piping, insulation shall be a minimum 50 mm thickness and as required for personnel protection at the design temperature of the pipe ensuring the surface temperature is below 40 deg C.
5. Pipe spools to be shop fabricated. Field welds require approval by Engineer.

REVIEWED BY CONTRACTOR

Kudlik Construction Ltd.

NAME: Sandra Rousseau P.Eng

DATE: Aoû 09, 2018

NORCLAIR
MÉCANIQUE DE PROCÉDÉ

SHOP DRAWINGS

DA-MP-18R1- Flange gasket for MS-3, DI2, FRP1, SS1 and MS1 piping **Date :** 2018-08-09

Information general	
Project : **WWTP UPGRADE - IQALUIT**	
Client : Kudlik Construction Ltd. To : Sandra Rousseau P.Eng., Project Manager	Project number : **2018-062** E-mail : srousseau@kudlik.biz
Contractor : **Norclair inc.**	Project number Norclair : **P1039**
Address : 1100, Montée Masson, Laval, QC, Canada H7E 4P2	
Project Manager : Dominic Papineau, Project Manager	E-mail: dpapineau@norclair.ca
Phone : 450-688-4012 # 720	Cell. : 514-409-1832

Information, subcontractor or supplier	
Sub/supplier : Willsup Gaskets Inc.	
Contact : info@willsupgaskets.com	Phone : 514-694-6000

Information on the equipment	
Speciality : **Process**	
Equipment : Flange gasket for MS-3, DI2, FRP1 and MS1 piping	
Drawing reference :	
Specification reference : **40 05 13.01** (Page XX / 17)	Division :
Article :	Number of pages : 7

CONSULTANT APPROVAL

PROVIDE GASKET THICKNESS ACCORDING TO FLANGE DIAMETER AS SPECIFIED IN THE TECHNICAL SPECIFICATIONS OF THE CONTRACT.

STANTEC PROJECT #: 110126045 SUBMITTAL # DA-MP-18R1.

This review by Stantec is for general conformance with the design concept of Stantec's design of the:

☑ Process ☐ Electrical
☐ Structural ☐ Other
☐ Mechanical

component(s) only and does not mean that Stantec has verified or approves the shop drawing(s). The Contractor remains solely responsible for the shop drawing(s) and this review by Stantec does not relieve the Contractor of the Contractor's responsibility for errors or omissions in the shop drawing(s) or for meeting all requirements of the contract documents. This review does not mean that Stantec approves the detailed design inherent in the shop drawing, responsibility for which shall remain with the Contractor submitting same, nor does this review mean that Stantec accepts any deviation of the shop drawing(s) from the contract documents. The Contractor is responsible for confirming all dimensions and correlating them at the job site, for all construction means, methods and techniques, and for coordination of construction work of all trades, including coordination of all shop drawings.

Stantec

☑ REVIEWED
☐ REVIEWED, AS NOTED
☐ REVISE AND RESUBMIT
☐ NOT REVIEWED

DATE August 9, 2018

BY Alejandro Rojas, P.Eng

1100, montée Masson
Laval, QC, Canada
H7E 4P2

Phone. : 450-688-4012
Fax : 450-661-6341
E-Mail : info@norclair.ca
www.norclair.ca

Joints Etanches
WILLSUP
Gaskets Inc.
581 rue Delmar, Pointe Claire, Qué. H9R 4A9 • Tél. : (514) 694-6000 • Fax: (514) 694-4472• info@willsupgaskets.co

TECHNICAL SPECIFICATIONS

➢ *NEOPRENE SHEET 60 DURO*

ASTM D2000-M2-BC607-A14-B14-F17

TESTING METHOD	ASTM SPECS	HWASEUNG EXWILL SPECS
BC 607 (HARDNESS, T/S)	60 DURO, MIN. 1015 PSI	60 +/- 5 DURO, MIN. 1000 PSI
A 14 : HEAT RESISTANCE D 573 : 70 HRS AT 100°C	CHANGE IN HARDNESS : +15 CHANGE IN T/S (%) : -15 CHANGE IN E/L (%) : -40	CHANGE IN HARDNESS : +6 CHANGE IN T/S (%) : -13.5 CHANGE IN E/L (%) : -15.8
B 14 : COMPRESSION SET D 395 : 22 HRS AT 100°C	MAX (%) : 35	MAX (%) : 28
F 17 : LOW TEMPERATURE 3 MIN. AT -40°C	PASS	PASS
ELONGATION	MIN. 300%	MIN. 350%
SPECIFIC GRAVITY		1.42

PIPE SPECIFICATION DATASHEET – DI2

FITTINGS AND APPURTENANCES

ITEM	SIZE (mm)	MATERIAL	RATING	SPECIFICATION	REMARKS
Ell – Short Radius Ell – Long Radius Tees, Reducers Reducing Outlets, Y	75 – 750	Ductile Iron	Class 125	ASTM A606	ANSI B16.3
Plug	75 – 750	Ductile Iron	Class 125		
Flange Adaptors	75 – 750	Mild Steel	Class 125	ASTM A53 ANSI B16.1 ASTM A181/A181M	
Bolts			Hex. Head	ASTM A307 Gr. A	
Nuts			Hex. Head	ASTM A563M Gr. A	
Flange Gaskets	75 – 750	BI Neoprene	1.6mm thick		
Groove Joint Gaskets	75 – 750			AWWA C606	Note 3

INSPECTION AND TESTING

Hydrostatic test with clean water.

CLEANING AND CONDITIONING

Remove debris and flush with water at minimum velocity of 1.0 m/s.

NOTES

1. Where noted on the drawings use high strength pipe (DI3)
2. Finish fittings in the same manner as the pipe.
3. Comply with manufacturer's recommendations for grooved joint gaskets.
4. Provide joints at noted spacing for pipe disassembly or as per lengths provided, nominal 6m spacing.

FITTINGS AND APPURTENANCES					
ITEM	**SIZE (mm)**	**MATERIAL**	**RATING**	**SPECIFICATION**	**REMARKS**
90º Elbow, 45º Elbow Tee, Cap, Coupling, conc. Reducer, ecc. Reducer, Lateral	>75	FRP Epoxy, Female Ends			1
Flanges, FF	>80	FRP Epoxy, male	Class 150	ANSI B16.5	
	>80	FRP Epoxy, female	Class 150	ANSI B16.5	
	>80	FRP Epoxy, blind	Class 150		
Gaskets	>80	FF, Neoprene, shore A60	3.2 mm thick		Garlock 7986
	>80	Ring, Neoprene, shore A60	3.2 mm thick		
Bolts		Stud/bolt nuts w/carbon steel washers	Hex. Head	ASTM A307 Gr. B	
Cement	Epoxy adhesive for FRP				
Strainer, RF, FF	>80	Startup Strainer, 316 SS	Class 150		
INSPECTION AND TESTING					
CLEANING AND CONDITIONING					
NOTES 1. Pipe and fittings to have 0.5mm resin-rich reinforced liner. 2. Elbows shall be long-radius type unless shown otherwise. 3. Use ring gasket only when connecting to raised face flanges. 4. Use Bondstrand RP-34 epoxy adhesive or similar. **5.** Refer to 40 05 19 for insulation and jacketing.					

PIPE SPECIFICATION DATASHEET – MS1

FITTINGS AND APPURTENANCES

ITEM	SIZE (mm)	MATERIAL	RATING	SPECIFICATION	REMARKS
Flanges, FF or RF	75 – 600	Mild Steel	Class 150	Material: ASTM A234/A234M, WPB Dimensions: ANSI B16.5	
Ell – Short Radius Ell – Long Radius	60 – 75	Malleable Iron, Banded	Class 150	Material: ASTM A197/A197M Dimensions: ANSI B16.3	Note 6
Tees, Reducers, Reducing Outlets, Laterals and Caps	75 – 600	Mild Steel, Seamless	Same as Pipe	Material: ASTM A234/A234M, WPB Dimensions: ANSI B16.5, ANSI B16.9	
3-Piece Ell	350 – 600	Mild Steel, ERW or Seamless	Same as Pipe	Material: Same as Pipe Dimensions: AWWA C208	
Plug	>60	Mild Steel	Class 150, Blind Flange	Material: ASTM A181/A181M Dimensions: ANSI B16.5	
Nuts, Submerged or Below Ground	>60		Heavy Hex.	ASTM A194/A194M Gr. 8	
Bolts, Submerged or Below Ground			Hex. Head	ASTM A193/A193M, Gr. B8, Cl.1	
Flanged Adaptors	75 – 600	~~Same as Pipe~~	Same as Pipe	Flange: ANSI B16.5	Note 10
Flanged Gaskets	150 – 250	Neoprene	1.6 mm thick		Note 4, 11
Flanged Gaskets	>300	Neoprene	3.2 mm thick		Note 4, 11
Vic. Gaskets	150 – 600			AWWA C606	Note 5, 10
Grooved Pipe Couplings	75 - 600	Ductile iron		AWWA C606, Victaulic style 107 rigid coupling or style 177 flexible coupling	Note 14
Grooved end fittings	75 - 600	Ductile iron	Same as pipe and couplings	ASTM A536, Victaulic	Note 12

INSPECTION AND TESTING

Refer to Section ~~15050 Piping Systems~~ 40 05 13 "Process Piping" for other requirements.
ASME B31.3 for steam piping.
Visual and random nondestructive testing for welds.

CLEANING AND CONDITIONING

Remove debris and flush with water at a minimum velocity of 1.0 m/s.

NOTES

1. See Section ~~15261~~40 05 19 "Thermal Insulation" for Pipes and Equipment.
2. Tape wrap butt welded joints after welding. Plain end or grooved joints and valves shall be protected with a polyethylene sheath or a shrink sleeve attached to the pipe with tape wrap.
3. Finish fittings, etc. in same manner as pipe.
4. Provide full faced gaskets for flat face flanges and ring gaskets for raised face flanges.
5. Comply with manufacturer's recommendations for grooved joint gaskets. Use end seal type gaskets on epoxy lined pipe. NSF 61 approval required for potable water service.
6. Provide beveled edges for all welded fittings.
7. Underground joints at 6.0 m on center or as shown on the drawings shall be groove jointed or flex coupled.
8. Field touch up linings and coatings after welding.
9. Epoxy lining not required for the following services: HWS, HWR, GLSS, GLSR.
10. Not applicable to engine exhaust service (EEX).
11. For engine exhaust, use high temperature non-asbestos fibre gaskets, 500 deg C minimum.
12. Linings for potable water service shall meet the requirements of NSF 61.
13. Use rigid couplings except where flexible coupling is specifically indicated.
14. The drawings indicate coupling, flanges, or other joints that may be disassembled at a minimum number of locations. In addition, provide joints noted in these specification sheets at the specified maximum spacing to allow for pipe disassembly through the remainder of the pipe runs. Contractor is to locate.

PIPE SPECIFICATION DATASHEET – MS3

FITTINGS AND APPURTENANCES

ITEM	SIZE (mm)	MATERIAL	RATING	SPECIFICATION	REMARKS
Steel Flange	60 – 1050	Steel Flange	Cl 150, FF	ANSI B16.5	
Steel, Plain End	60 – 1050	Flexible Joint	Cl 150	ANSI B16.5	
Flanges, FF or RF	60 – 1050	Mild Steel	Class 150	ASTM A234/A234M, WPB ANSI B16.5	Note 4
Ell – Short Radius Ell – Long Radius Tees, Reducers, Reducing Outlets, Y	60 – 1050	Mild Steel, Seamless	Same as Pipe	Material: ASTM A234/A234M, WPB Dimensions: ANSI B16.5	Note 4
Plug	60 – 1050	Mild Steel Blind Flange	Class 150	Material: ASTM A181/A181M, Gr. 1 Dimensions: ANSI B16.5	
Flanged Adapters Grooved Joint to Flange	60 – 1050	Same as Pipe	Same as Pipe	Flange – ANSI B16.5	
Bolts, Submerged or Below Ground			Hex. Head	ASTM A193/A193M, Gr. B8, Cl 1	
Nuts, Submerged or Below Ground	<25 mm >25 mm		Hex. Heavy Hex.	ASTM A194/A194M, Gr. 8	
Flange Gaskets	60 – 300	Bl. Neoprene	1.6 mm thick		Note 2
Flange Gaskets	>300	Bl. Neoprene	3.2 mm thick		Note 2
Grooved Joint Gaskets	60 – 1050			AWWA C606	Note 3

INSPECTION AND TESTING

Test sample lines at 1000 kPa (operating pressure of 400-600 kPa)

CLEANING AND CONDITIONING

Remove debris and flush with water at minimum velocity of 1.0 m/s.

NOTES

1. Finish valves, fittings, etc., in same manner as pipe.
2. Provide full-faced gaskets for flat face flanges and ring gaskets for raised face flanges.
3. Comply with manufacturer's recommendations for grooved joint gaskets.
4. Provide beveled edges for all welded fittings and connections.
5. Field touch-up linings and coatings after welding. Do not weld piping where access for touch-ups is restricted.
6. Slip-on flanges shall be provided except where noted otherwise herein or in the drawings. Provide weldneck flanges (mild steel pipe) on each side of fittings and wafer body valves.
7. Brush clean steel pipe to SSPC-P3 standard prior to painting.
8. The drawings indicate coupling, flanges, or other joints that may be disassembled at a minimum number of locations. In addition, provide joints noted in these specification sheets at the specified maximum spacing to allow for pipe disassembly through the remainder of the pipe runs. Contractor is to locate.

PIPE SPECIFICATION DATASHEET – SS1

Flanges	20 – 65	316L Stainless Steel, Socket Weld	CL 150	Socket Weld Forged: ASTM A182/A182M ANSI B16.5	
Flange Gaskets	20 – 65	Compressed inorganic fibre with Nitrile binder, 1.6mm thick			
Weldolets		316L Stainless Steel			
Expansion Couplings Flange	>65	316L Stainless Steel 316L Stainless Steel	Same as Pipe		
Bolts			Hex. Head	ASTM A193 Gr. B Cl. 1	
Nuts	≤ 25 mm >25 mm		Hex. Heavy Hex.	ASTM A194 Gr. B	
Flange Gaskets	65– 250 >300	Kevlar w/ Neoprene Kevlar w/ Neoprene	1.6 mm thick 3.2 mm thick		Note 3 Note 3

Norclair suggests black neoprene for the discharge chute lflange gaskets as temperature and pressure are not an issue.

INSPECTION AND TESTING

As per CGA B105

Visual and Random non destructive testing for welds.

CLEANING AND CONDITIONING

Remove debris and flush with water at minimum velocity of 1.0 m/s.

NOTES

1. Joints at specific spacings for pipe disassembly.
2. Provide beveled edges for all welded fittings and connections.
3. Provide full-faced gaskets for flat face flanges and ring gaskets for raised face flanges.
4. Passivate all welds after completion.
5. Provide purge connection in each pipe run as per CGA B105.
6. Purge system with nitrogen before being placed into service.
7. Do not use graphite based products to avoid carbon contamination of stainless steel pipe.
8. For pipe sizes less than 65mm, use 316L stainless steel pipe, schedule 40, ASTM A312 and fittings to ASTM A182, socketweld type.

REVIEWED BY CONTRACTOR

Kudlik Construction Ltd.

NAME: Sandra Rousseau P.Eng

DATE: Jul 12, 2018

NORCLAIR
MÉCANIQUE DE PROCÉDÉ

SHOP DRAWINGS

DA-MP-19R1 - Primary sludge discharge chute (SS1)

Date : 2018-07-11

Information general	
Project : **WWTP UPGRADE - IQALUIT**	
Client : Kudlik Construction Ltd. To : Sandra Rousseau P.Eng., Project Manager	Project number : **2018-062** E-mail : srousseau@kudlik.biz
Contractor : **Norclair inc.**	Project number Norclair : **P1039**
Address : 1100, Montee Masson, Laval, QC, Canada H7E 4P2	
Project Manager : Dominic Papineau, Project Manager	E-mail: dpapineau@norclair.ca
Phone: 450-688-4012 # 720	Cell.: 514-409-1832

Information, subcontractor or supplier	
Name : Groupe Support Plus – Labmétal (2017) inc.	
Contact :	Phone :

Information on the equipment	
Speciality : **Process**	
Equipment : Primary sludge discharge chute (SS1) ***Width adjusted to 320mm (interior) to fit Trojan sludge box width. Please confirm.**	
Drawing reference : P513, detail 16	
Specification reference : **40 05 13.01** (Page 11 / 17)	Division :
Article :	Number of pages : 3

CONSULTANT APPROVAL

STANTEC PROJECT #: 110126045

SUBMITTAL # DA-MP-19R1 PRIMARY SLUDGE DISCHARGE CHUTE (SS1)

This review by Stantec is for general conformance with the design concept of Stantec's design of the:

- ☑ Process
- ☐ Structural
- ☐ Mechanical
- ☐ Electrical
- ☐ Other

Stantec

☑ REVIEWED

☐ REVIEWED, AS NOTED

☐ REVISE AND RESUBMIT

☐ NOT REVIEWED

component(s) only and does not mean that Stantec has verified or approves the shop drawing(s). The Contractor remains solely responsible for the shop drawing(s) and this review by Stantec does not relieve the Contractor of the Contractor's responsibility for errors or omissions in the shop drawing(s) or for meeting all requirements of the contract documents. This review does not mean that Stantec approves the detailed design inherent in the shop drawing, responsibility for which shall remain with the Contractor submitting same, nor does this review mean that Stantec accepts any deviation of the shop drawing(s) from the contract documents. The Contractor is responsible for confirming all dimensions and correlating them at the job site, for all construction means, methods and techniques, and for coordination of construction work of all trades, including coordination of all shop drawings.

DATE July 12, 2018

BY Alejandro Rojas, P.Eng

1100, montée Masson
Laval, QC, Canada
H7E 4P2

Phone. : 450-688-4012
Fax : 450-661-6341
E-Mail : info@norclair.ca
www.norclair.ca

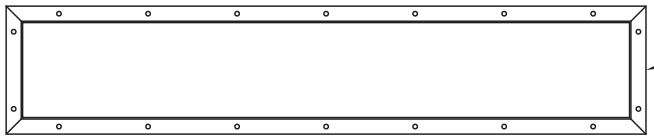

ANGLES 2" x 2" x $\frac{3}{16}$"
HOLES 5/8" 300mm c/c APPROX
W/ NEOPRENE GASKET

TOP VIEW

NOTES:
PLATES TO BE STAINLESS STEEL 316 $\frac{3}{16}$"
ANGLES TO BE STAINLESS STEEL 316 (DIMENSIONS AS INDICATED)

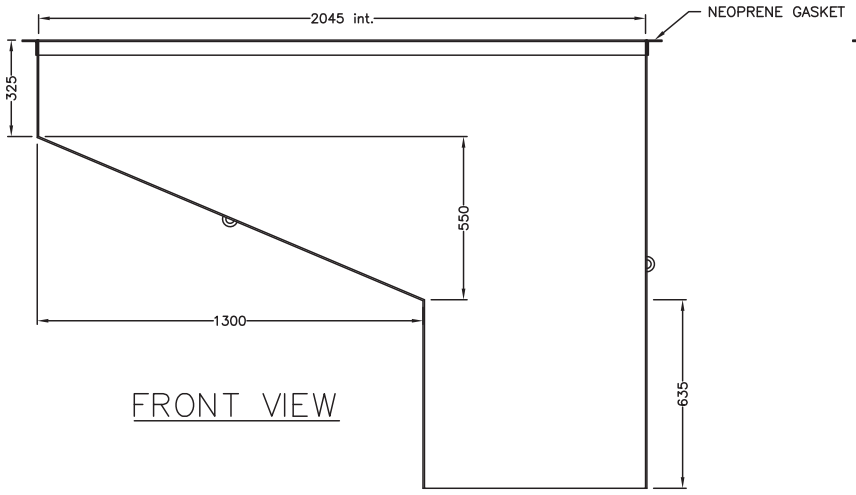

FRONT VIEW

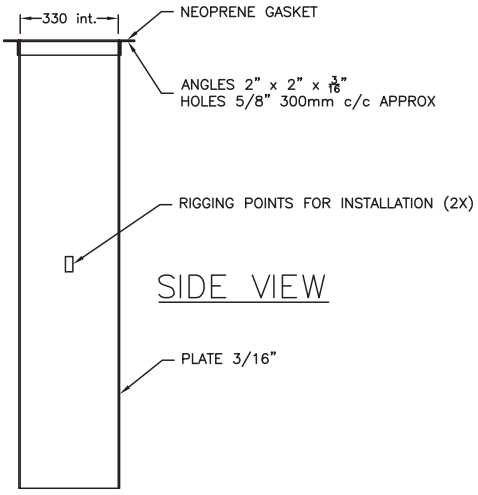

SIDE VIEW

REVISION:	
FOR FABRICATION_v03	07/2018

NOTES:

CLIENT:

CITY OF IQALUIT

NORCLAIR
MÉCANIQUE DE PROCÉDÉ

IQALUIT WWTP
Chute detail 16 - Lower

DATE: July 2018	SCALE: 1:500
CONÇU PAR: H.C..	NORCLAIR: P-1039
DESSINÉ PAR: H.C.	FIG:

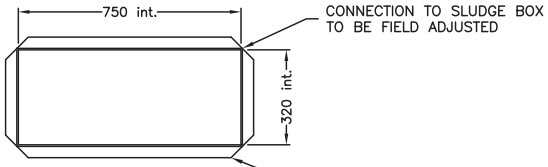

TOP VIEW

NOTES:

PLATES TO BE STAINLESS STEEL 316 3/16"
ANGLES TO BE STAINLESS STEEL 316 (DIMENSIONS AS INDICATED)

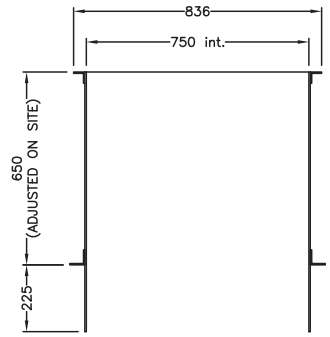

FRONT VIEW

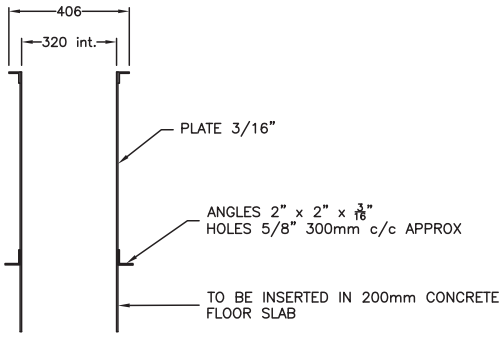

SIDE VIEW

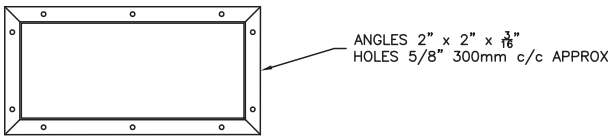

BOTTOM VIEW

REVISION:	
FOR FABRICATION_v03	07/2018

NOTES:

CLIENT:

CITY OF IQALUIT

NORCLAIR
MÉCANIQUE DE PROCÉDÉ

IQALUIT WWTP
Chute detail 16 - Upper

DATE: July 2018	SCALE: 1:500
CONÇU PAR: H.C..	NORCLAIR: P-1039
DESSINÉ PAR: H.C.	FIG:

REVIEWED BY CONTRACTOR

Kudlik Construction Ltd.

NAME: Sandra Rousseau P.Eng

DATE: Jul 18, 2018

NORCLAIR
MÉCANIQUE DE PROCÉDÉ

SHOP DRAWINGS

DA-MP-21 - Insulation for outside vent.

Date : 2018-07-13

Information general	
Project : **WWTP UPGRADE - IQALUIT**	
Client : Kudlik Construction Ltd. To : Sandra Rousseau P.Eng., Project Manager	Project number : **2018-062** E-mail : srousseau@kudlik.biz
Contractor : **Norclair inc.**	Project number Norclair : **P1039**
Address : 1100, Montee Masson, Laval, QC, Canada H7E 4P2	
Project Manager : Dominic Papineau, Project Manager	E-mail: dpapineau@norclair.ca
Phone: 450-688-4012 # 720	Cell.: 514-409-1832

Information, subcontractor or supplier	
Name : ROXUL	
Contact :	Phone :

Information on the equipment	
Speciality : **Process**	
Equipment : Insulation for outside vent.	
Drawing reference :	
Specification reference :	Division :
Article :	Number of pages : 10
See Request for information no. RFI-31	

CONSULTANT APPROVAL

STANTEC PROJECT #: 110126045

SUBMITTAL # DA-MP-21

This review by Stantec is for general conformance with the design concept of Stantec's design of the:

☐ Architectural ☐ Electrical
☐ Structural ☑ Other for Process
☑ Mechanical

component(s) only and does not mean that Stantec has verified or approves the shop drawing(s). The Contractor remains solely responsible for the shop drawing(s) and this review by Stantec does not relieve the Contractor of the Contractor's responsibility for errors or omissions in the shop drawing(s) or for meeting all requirements of the contract documents. This review does not mean that Stantec approves the detailed design inherent in the shop drawing, responsibility for which shall remain with the Contractor submitting same, nor does this review mean that Stantec accepts any deviation of the shop drawing(s) from the contract documents. The Contractor is responsible for confirming all dimensions and correlating them at the job site, for all construction means, methods and techniques, and for coordination of construction work of all trades, including coordination of all shop drawings.

Stantec

☑ REVIEWED

☐ REVIEWED, AS NOTED

☐ REVISE AND RESUBMIT

☐ NOT REVIEWED

DATE 2018-07-25

BY Brendan Zrum, P.Eng

1100, montée Masson
Laval, QC, Canada
H7E 4P2

Phone. : 450-688-4012
Fax : 450-661-6341
E-Mail : info@norclair.ca
www.norclair.ca

ROXUL®
The Better Insulation™

Technical Product Information

ROXUL Enerwrap 80

BLANKET INSULATION 15080*
PROCESS PIPING & EQUIPMENT
INSULATION 40 42 00**

General Product Information:

ROXUL® products are mineral wool fibre insulations made from basalt rock and slag. This combination results in a non-combustible product with a melting point of approximately 2150°F (1177°C), which gives it excellent fire resistance properties. ROXUL mineral wool is a water repellent yet vapour permeable material.

Description & Common Applications:

The ENERWRAP® 80 product is a flexible faced industrial blanket mineral wool insulation that is lightweight, water repellent, fire resistant and sound absorbent. ENERWRAP 80 is used to insulate surfaces such as pipes, vessels, boilers, furnaces, structural members and irregularly shaped mechanical equipment.

Compliance and Performance:

ASTM C 553	Mineral Fiber Blanket Thermal Insulation	Type VII, Complies
City Of Los Angeles Approval		RR 25444

Fire Performance:

ASTM E 136	Behaviour of Materials at 750°C (1382°F)	Non-Combustible
CAN4 S114	Test for Non-Combustibility	Non-Combustible
ASTM E 84(UL 723)	Surface Burning Characteristics	Flame Spread - Passed Smoke Developed - Passed
CAN/ULC S102	Surface Burning Characteristics	Flame Spread - Passed Smoke Developed - Passed

Maximum Service Temperature:

ASTM C 411	Hot Surface Performance	In Compliance with ASTM C612 @ 1200°F(650°C)

Dimensional Stability:

ASTM C 356	Linear Shrinkage	1.49% @ 1200°F (650°C)

Moisture Resistance:

ASTM C 1104	Moisture Sorption	0.01%

Thermal Resistance:

ASTM C 518 (C 177)	R-value/inch @ 75°F	4.2 hr.ft².F/Btu***
	RSI value/25.4 mm @ 24°C	0.74 m²K/W

Corrosive Resistance:

ASTM C 665	Corrosiveness to Steel	Pass
ASTM C 795 ****	Stainless Steel Stress Corrosion Specification as per Test Methods C871 and C692: U.S. Nuclear Regulatory Commission, Reg. Guide #1.36: U.S. Military Specifications MIL-I-24244 (all versions including B and C)	Conforms

Acoustical Performance

ASTM C 423
CO-EFFICIENTS AT FREQUENCIES

Thickness	125 Hz	250 Hz	500 Hz	1000 Hz	2000 Hz	4000 Hz	NRC
1.5”	0.17	0.58	1.06	1.07	1.00	0.99	0.95
2.0”	0.39	0.84	1.08	1.01	1.02	1.01	1.00
3.0”	0.68	0.92	1.08	1.03	1.03	1.03	1.00
4.0”	1.00	0.95	1.06	1.04	1.06	1.08	1.05

*MASTER FORMAT 1995 EDITION **MASTER FORMAT 2004 EDITION
*** at the time of manufacturing

ROXUL Enerwrap 80

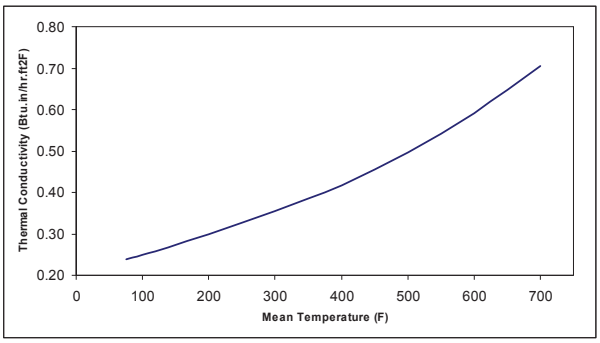

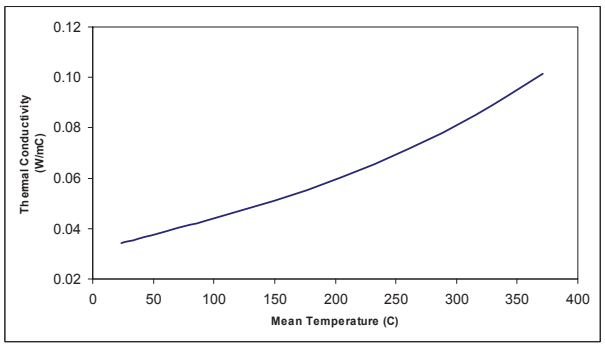

Density:

ASTM C 553-92 – Nominal	8.0 lb/ft^3	128 kg/m^3
ASTM C 553-08 – Actual		
≥ 2" thickness	5.68 lb/ft^3	91 kg/m^3

Available Facing:

- Black fibrous glass scrim for single and multi-layer applications
- Reinforced foil facing for single layer applications as special order only (minimum order quantities required).

Key Application Qualifiers:

- Flexibility
- Non-combustibility
- Low moisture sorption
- Fire resistant
- Excellent thermal resistance
- Does not rot or sustain vermin
- Does not promote growth of fungi or mildew
- CFC and HCFC free product and process
- Made from natural and recycled materials

Other ROXUL Products:

Please consult ROXUL for all your insulation needs. We have an extensive range of products for all applications from pipe insulation to commercial products to residential batts. ROXUL invites all inquiries and will act promptly to service all of your requirements.

**** "Provisions for lot testing may be required, consult manufacturer."

Note:

As ROXUL Inc. has no control over installation design and workmanship, accessory materials or application conditions, ROXUL Inc. does not warranty the performance or results of any installation containing ROXUL Inc's. products. ROXUL Inc's. overall liability and the remedies available are limited by the general terms and conditions of sale. This warranty is in lieu of all other warranties and conditions expressed or implied, including the warranties of merchantability and fitness for a particular purpose.

ROXUL INC. **Milton, Ontario Tel: 905-878-8474** **Fax: 905-878-8077**
www.roxul.com **Tel: 1-800-265-6878** **Fax: 1-800-991-0110**

Revised: June 5, 2012
Supersedes: June 8, 2011

ITW Insulation Systems Canada
• CHILDERS • PERMACLAD

ALUMINUM ROLL JACKETING WITH POLYSURLYN MOISTURE RETARDER

DESCRIPTION

ITW Insulation Systems Canada's Roll Jacketing is manufactured from 3000 series alloys, conforming to ASTM B-209 designation, half-hard temper (H-14) and heavier gauges quarter-hard (H-12) lock-forming quality.

Percent of Alloying Elements – Aluminum and Normal Impurities Constitute Remainder

Alloy	Manganese	Magnesium
3105	.6	.50

Mechanical Properties (typical)

Ultimate (ksi)	Yield (ksi)	Elongation (%)
25	23	4

Shear (ksi)	Mod. Of Elasticity (ksi x 10 power 3)
15	10.0

The exterior side of this product is bare aluminum (please see note on "waterstaining" under the Technical info tab on this website). The interior of the jacketing is protected by a factory heat sealed 3 mil three layer co-extruded Polysurlyn film.

ITW's aluminum roll jacketing is available in smooth, stucco embossed or 3/16 corrugations (cross-crimped) finishes.

RECOMMENDED USES

Roll Jacketing is recommended for insulated piping, tanks and vessels less than 8 feet in diameter. Deep corrugated sheets are recommended for diameters greater than 8 feet.

Thickness (Inches) & Suggested Applications	
.016" (.4mm) & .020" (.5mm)	The standard for industrial use. Recommended over insulation lines up to 36" O.D. including insulation
.024" (.6mm)	A heavier weight jacketing used on larger diameter lines and large equipment up to 8 feet in diameter.
.032" (.8mm)	Used in special applications where extra thickness and protection is required, such as fabricated tank head covers and other special fabrications.
.040" (1.0mm)	Available in rolls and sheets, where extra heavy gauges are required because of severe mechanical abuse or special fabricating requirements, such as flat ducts or precipitators. Also recommended for areas subject to high wind conditions.

© 2005 ITW Insulation Systems Canada
Childers-Permaclad

ITW Insulation Systems Canada

CHILDERS – PERMACLAD

Aluminum Jacketing with Polysurlyn Moisture Retarder

ITW Insulation Systems Canada's most specified Jacketing Product is Aluminum with Polysurlyn Moisture Retarder. The aluminum is manufactured from a 3000 series alloy conforming to ASTM B-209 designation, half hard (H-14 Temper) in lighter gauges and quarter hard (H-12 Temper, lock forming quality) in heavier (.032 & .040) gauges. The jacketing is protected on the inside with a factory heat laminated Polysurlyn Film.

ALUMINUM SUBSTRATE - AA3105 H14

Chemical Composition (Limits)

Silicon	Iron	Copper	Mn	Mg	Cr	Nickel	Zinc	Titanium	Other	Al
0.6	0.7	0.30	0.30-0.8	0.20-0.8	0.20		0.40	0.10	.15	remainder

Mechanical Properties (typical)

Ultimate (ksi)	Yield (ksi)	Elongation (%)	Shear (ksi)	Mod. Of Elasticity (ksi x 10 power 3)
25	23	4	15	10.0

Polysurlyn Moisture Retarder

Due to its superior performance characteristics, ITW recommends polysurlyn moisture retarder as best practice replacing the old standard Polykraft Moisture Retarder. Polysurlyn consists of a 3 mil thickness three layer co-extrusion of polyethylene and Dupont's surlyn® which is heat laminated in our ISO 9001:2000 Quality System certified plants.

Physical Properties

- No paper to absorb and hold moisture
- WVTR= Water Vapor Transmission Rate (21 grams/100 square inches/day)
- Auto ignition temperature of kraft paper is approximately 450 degrees F. Polysurlyn has flash point above 650° F.
- There is no effect on the porosity of the polysurlyn film with occasional exposure to 250° F or continuous exposure to 180° F temperature. Thermogravimetric testing shows polysurlyn does not begin to decompose until 410° F.

For cold rooftop work and hot cyclical applications, ITW Insulation Systems Canada recommends Thermoclad® Plus as best practice due to it's superior corrosion resistance characteristics.

Kudlik Construction Ltd.

REQUEST FOR INFORMATION

No : RFI-31

Revision :

Date : July 3, 2018

PROJECT : **Wastewater Treatment Plant WWTP Iqaluit**

CONTRACT N° : **2018-062**

SUBJECT : Process

DETAILS : As indicated on detail plan P505 of section B and on the attached detail, we would like to know what type of insulation is required for the "vent" section located outside the building?

REFERENCE

Technical spec. - Section : _____

Drawing - N° - rev. : _____

Other : _____

PREPARED BY : *Sandra Rousseau* (*NAME*) _____ (*SIGNATURE*) July 3, 2018 (*DATE*)

Technical Answer : For the part outside the building, the insulation should be minimum 50mm mineral wool with an aluminum or stainless steel wrapped covering.

Attached Document : _____

PREPARED BY : Libin Ren (*NAME*) L.R. (*SIGNATURE*) July 5, 2018 (*DATE*)

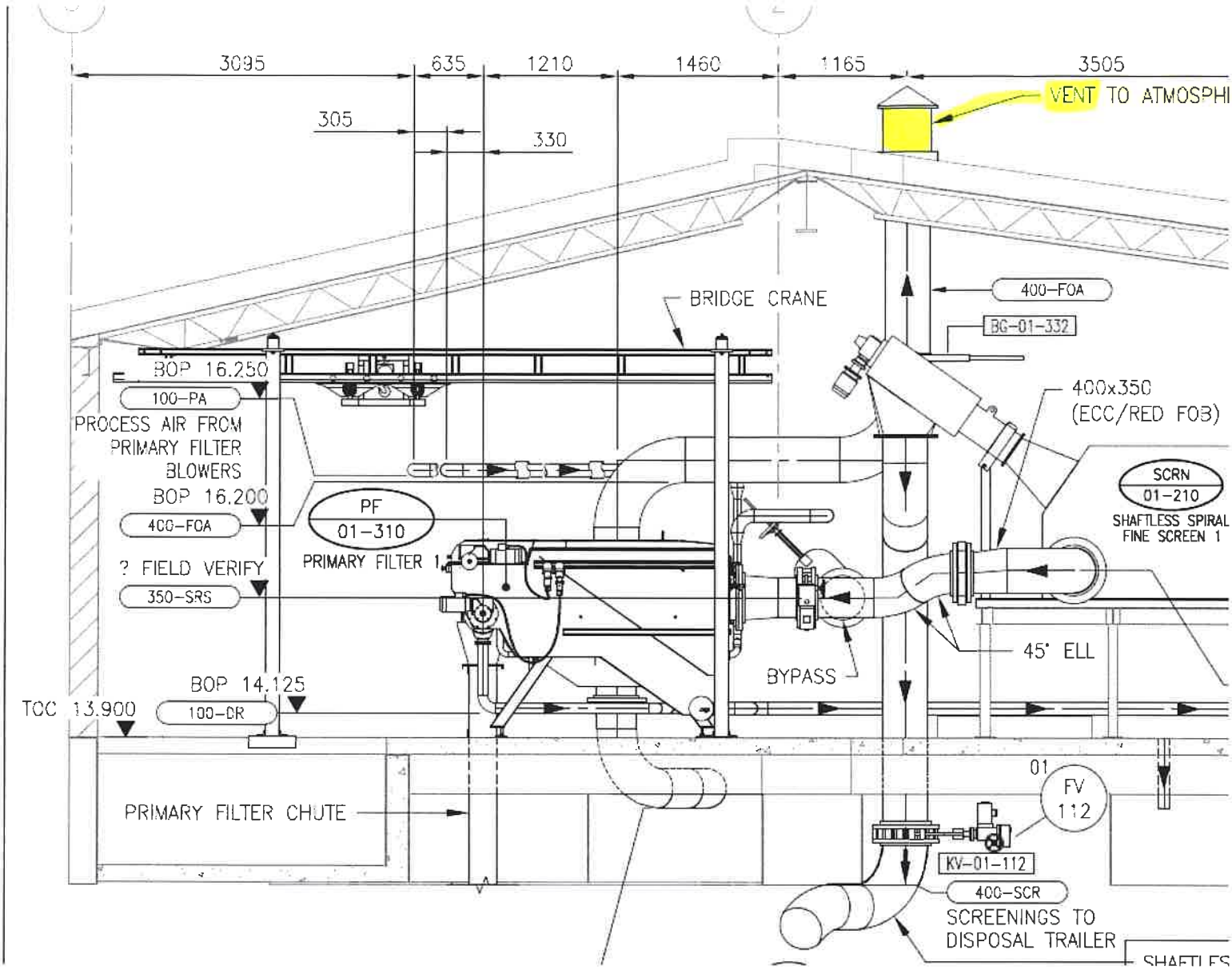
3095
635
1210
1460
1165
3505
305
330
VENT TO ATMOSPHI
BRIDGE CRANE
400-FOA
BG-01-332
400x350
(ECC/RED FOB)
BOP 16.250
100-PA
PROCESS AIR FROM
PRIMARY FILTER
BLOWERS
BOP 16.200
400-FOA
PF
01-310
PRIMARY FILTER 1
SCRN
01-210
SHAFTLESS SPIRAL
FINE SCREEN 1
? FIELD VERIFY
350-SRS
45° ELL
BYPASS
BOP 14.125
TOC 13.900
100-DR
PRIMARY FILTER CHUTE
01
FV
112
KV-01-112
400-SCR
SCREENINGS TO
DISPOSAL TRAILER

REVIEWED BY CONTRACTOR

Kudlik Construction Ltd.

NAME: Sandra Rousseau P.Eng

DATE: Jul 18, 2018

NORCLAIR
MÉCANIQUE DE PROCÉDÉ

SHOP DRAWINGS

DA-MP-22 - (Blast gates) **Date :** 2018-07-18

Information general	
Project : **WWTP UPGRADE - IQALUIT**	
Client : Kudlik Construction Ltd. To : Sandra Rousseau P.Eng., Project Manager	Project number : **2018-062** E-mail : srousseau@kudlik.biz
Contractor : **Norclair inc.**	Project number Norclair : **P1039**
Address : 1100, Mountain Masson, Laval, QC, Canada H7E 4P2	
Project Manager : Dominic Papineau, Project Manager	E-mail: dpapineau@norclair.ca
Phone : 450-688-4012 # 720	Cell. : 514-409-1832

Information, subcontractor or supplier	
Sub/supplier : Capt-Air	
Contact : David Clermont	Phone : (514) 273-4331 ext.23

Information on the equipment	
Speciality : **Process**	
Equipment : Blast gates	
Drawing reference :	
Specification reference : **40 05 25** (Page 8 / 27) and **RFI-026**	Division :
Article :	Number of pages : 3

CONSULTANT APPROVAL

STANTEC PROJECT #: 110126045

SUBMITTAL # DA-MP-22 Blast Gates.

This review by Stantec is for general conformance with the design concept of Stantec's design of the:

☑ Process ☐ Electrical
☐ Structural ☐ Other
☐ Mechanical

component(s) only and does not mean that Stantec has verified or approves the shop drawing(s). The Contractor remains solely responsible for the shop drawing(s) and this review by Stantec does not relieve the Contractor of the Contractor's responsibility for errors or omissions in the shop drawing(s) or for meeting all requirements of the contract documents. This review does not mean that Stantec approves the detailed design inherent in the shop drawing, responsibility for which shall remain with the Contractor submitting same, nor does this review mean that Stantec accepts any deviation of the shop drawing(s) from the contract documents. The Contractor is responsible for confirming all dimensions and correlating them at the job site, for all construction means, methods and techniques, and for coordination of construction work of all trades, including coordination of all shop drawings.

Stantec

☑ REVIEWED

☐ REVIEWED, AS NOTED

☐ REVISE AND RESUBMIT

☐ NOT REVIEWED

DATE July 19, 2018

BY Alejandro Rojas, P.Eng

BLAST GATES TO BE INSTALLED AVOIDING ANY CONFLICTS WITH THE OPERATION OF EQUIPMENT.

1100, montée Masson
Laval, QC, Canada
H7E 4P2

Phone. : 450-688-4012
Fax : 450-661-6341
E-Mail : info@norclair.ca
www.norclair.ca

Manual Blast Gate, Stainless Steel 3240

TECHNICAL DATA

ID In.	Ends	"A" Height Closed (in.)	"B" Height Opened (in.)	Stainless Steel "C" Width (in.)	Stainless Steel "D" Depth (in.)	Stainless Steel "E" (in.)	Stainless Steel Collars Only 22ga	20ga	18ga	
3	QF	6.50	9.13	5.00	5.38	2.75	Std		Optional	
4	QF	7.75	11.50	6.00	5.50	3.00				
5	QF	10.50	14.75	7.00	5.50	3.50				
6	QF	11.13	16.75	8.00	5.50	4.00				
7	QF	12.13	18.75	9.00	5.25	4.50				
8	QF	13.63	21.13	10.00	5.25	5.00				Optional
9	QF	15.13	24.00	11.00	5.50	5.50				
10	QF	17.13	26.75	12.00	5.25	6.00				
11	QF	19.13	28.75	13.00	5.50	6.50				
12	QF	20.38	32.13	14.00	5.00	7.00				
14	QF	23.25	36.75	16.00	5.00	8.00		Std		
16	QF	26.25	40.75	18.00	5.00	9.00				
18	QF	29.25	44.75	20.00	5.00	10.00				
20	QF	32.25	48.75	22.00	5.00	11.00				
22	QF	35.25	52.75	24.00	5.00	12.00				
24	QF	38.25	56.75	26.00	5.00	13.00				
26	AF	41.25	60.75	28.00	5.75	14.00			Std	
28	AF	44.25	64.75	30.00	5.75	15.00				
30	AF	47.25	68.75	32.00	5.75	16.00				

2x

1x

Ends: QF = Quick Fit Rolled Edges | AF =Angle Flange

Construction
- SS Collars are fully welded to SS body.
- Body and blade are 12ga.

Ends: Standard QF end can be changed to Raw ID (RAWID), Raw OD (RAWOD), No Fitting (NF), Hose Adapter (RAWFLEX), Flat Flange (FFL), Angle Flange (ANGFL), or Van Stone (VANSTONE).

ANSI 150lbs, 1/8in thick

"D" flange to flange

12in

15in

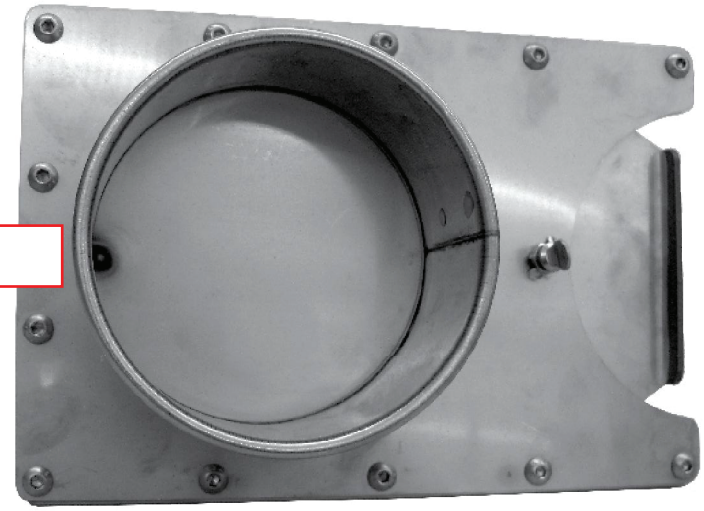

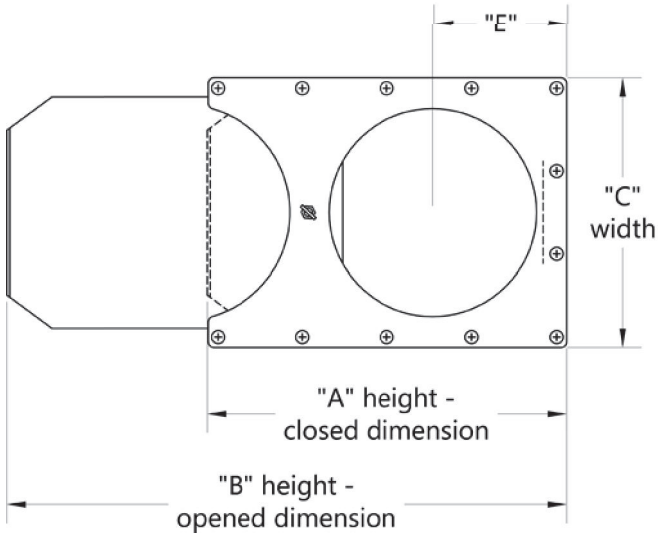

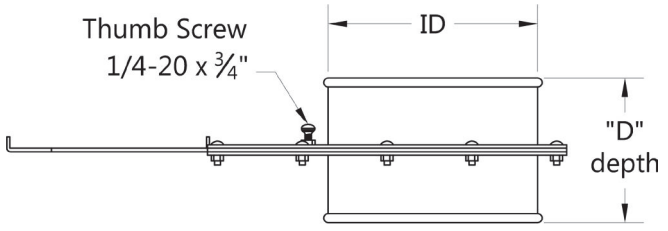

Manual Blast Gate, Stainless Steel 3240

TECHNICAL DATA

Temperature Rating of Product Components	
° F	QF Manual Blast Gate
1100°	Stainelss Steel
0°	
-40°	
-60°	

Additional Notes
304SS: • bluing may occur at 800° F and above

Compliance / Rating of Product Components		
Product	Material	Compliance / Rating
QF Manual Blast Gate	304SS	Finish meets ASTM A240
	316SS	Finish meets ASTM A240

REVIEWED BY CONTRACTOR

Kudlik Construction Ltd.

NAME: Sandra Rousseau P.Eng

DATE: Jul 25, 2018

NORCLAIR
MÉCANIQUE DE PROCÉDÉ

SHOP DRAWINGS

DA-MP-23-R1 (Purge, flush and sample point valves) **Date :** 2018-07-25

Information general	
Project : **WWTP UPGRADE - IQALUIT**	
Client : Kudlik Construction Ltd. To : Sandra Rousseau P.Eng., Project Manager	Project number : **2018-062** E-mail : srousseau@kudlik.biz
Contractor : **Norclair inc.**	Project number Norclair : **P1039**
Address : 1100, Mountain Masson, Laval, QC, Canada H7E 4P2	
Project Manager : Dominic Papineau, Project Manager	E-mail: dpapineau@norclair.ca
Phone : 450-688-4012 # 720	Cell. : 514-409-1832

Information, subcontractor or supplier	
Sub/supplier : Pinacle	
Contact : Olivier Lauzon	Phone : (514) 745-0360

Information on the equipment	
Speciality : **Process**	
Equipment : Purge, flush and sample point valves	
Drawing reference : P601 to P620 (PID)	
Specification reference : **XX XX XX** (Page XX / XX)	Division :
Article :	Number of pages : 5

CONSULTANT APPROVAL

STANTEC PROJECT #: 110126045

SUBMITTAL # DA-MP-23R1 Purge, Flush, Sample valves.

This review by Stantec is for general conformance with the design concept of Stantec's design of the:

☑ Process ☐ Electrical
☐ Structural ☐ Other
☐ Mechanical

component(s) only and does not mean that Stantec has verified or approves the shop drawing(s). The Contractor remains solely responsible for the shop drawing(s) and this review by Stantec does not relieve the Contractor of the Contractor's responsibility for errors or omissions in the shop drawing(s) or for meeting all requirements of the contract documents. This review does not mean that Stantec approves the detailed design inherent in the shop drawing, responsibility for which shall remain with the Contractor submitting same, nor does this review mean that Stantec accepts any deviation of the shop drawing(s) from the contract documents. The Contractor is responsible for confirming all dimensions and correlating them at the job site, for all construction means, methods and techniques, and for coordination of construction work of all trades, including coordination of all shop drawings.

Stantec

☑ REVIEWED

☐ REVIEWED, AS NOTED

☐ REVISE AND RESUBMIT

☐ NOT REVIEWED

DATE July 25, 2018

BY Alejandro Rojas, P.Eng

1100, montée Masson
Laval, QC, Canada
H7E 4P2

Phone. : 450-688-4012
Fax : 450-661-6341
E-Mail : info@norclair.ca
www.norclair.ca

2 PC Full Port 1000 WOG Ball Valve, Threaded



Purge, flush and sample points valves
Threadolet to be welded on site.
Stantec to indiquate on site location of drain, purge, flush, sample points,...
As per Stantec instructions:
- If the flushing connection is on top of a pipe provide 38 mm in diameter elements;
- If the flushing connection is on a blind flange or Victaulic cap, provide 50 mm in diameter elements.
- Drain connections to be the same size of flushing connections and to be located at low points of all lines.
- For sample connections provide 25 mm in diameter elements.

DESIGN FEATURES

- Blow-out-proof stem design
- Steam Rating: 125 PSI WSP
- Temperature range: -50°F to 450°F
- Locking device
- Threaded type: ANSI B1.20.1 (NPT)

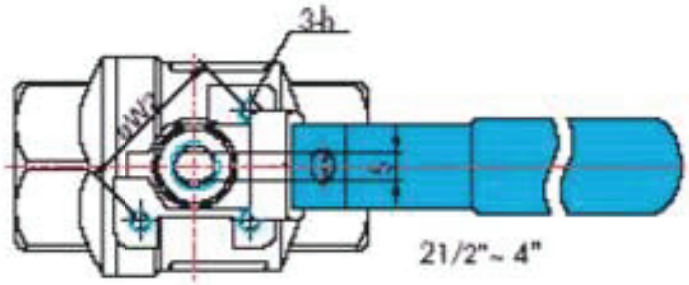

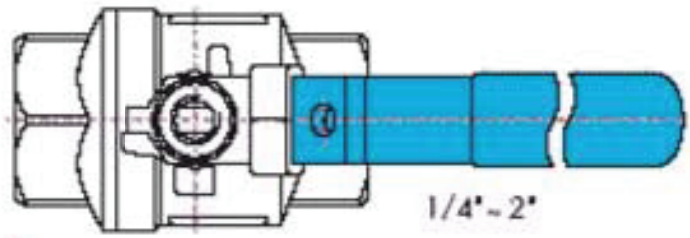

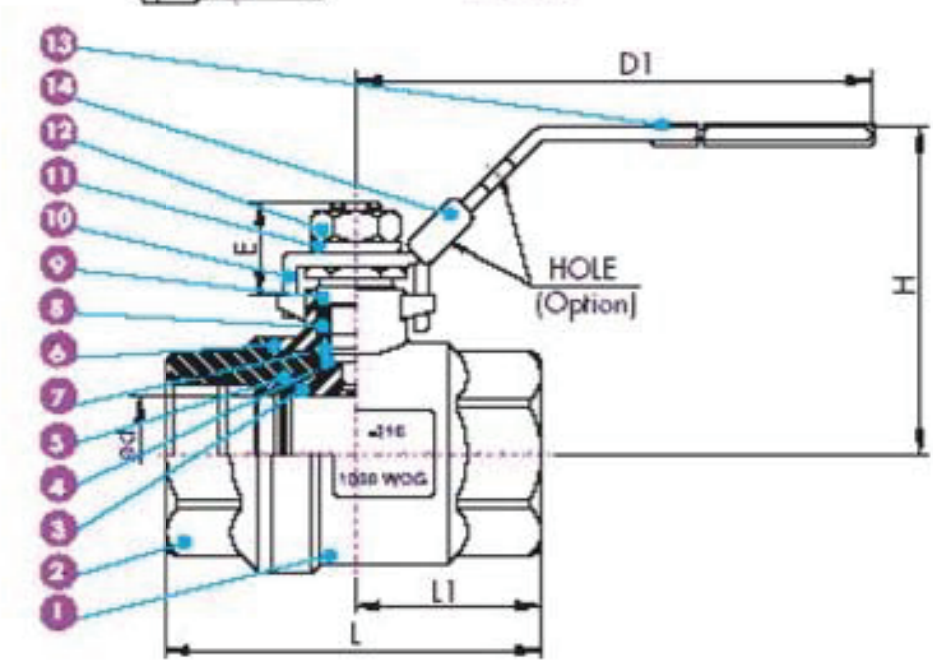

2 PC FULL PORT

1000 WOG BALL VALVE, THREADED

DIMENSIONS									
SIZE		d		E		L		L1	
inch	mm	inch	mm	inch	mm	inch	mm	inch	mm
1/4"	8.0	0.43	11.0	0.61	15.5	2.28	57.8	1.13	28.8
3/8"	10.0	0.49	12.5	0.61	15.5	2.28	57.8	1.13	28.8
1/2"	15.0	0.59	15.0	0.57	14.5	2.43	61.7	1.21	30.7
3/4"	20.0	0.79	20.0	0.83	21.0	2.76	70.1	1.38	35.0
1"	25.0	0.98	25.0	0.77	19.5	3.20	81.3	1.58	40.2
1 1/4"	32.0	1.26	32.0	1.09	27.9	3.78	96.0	1.86	47.2
1 1/2"	40.0	1.50	38.0	1.50	27.5	4.43	112.5	2.19	55.6
2"	50.0	2.00	50.8	1.08	26.7	4.96	126.0	2.46	62.4
2 1/2"	65.0	2.56	65.0	1.02	26.0	6.63	168.5	3.35	85.0
3"	80.0	3.15	80.0	1.50	38.0	7.54	191.4	3.78	95.9
4"	100.0	3.94	100.0	1.89	48.0	8.52	216.5	4.26	108.3

	DIMENSIONS								
SIZE	H		S		D1		h	Cv Factor	Weight Lb
	inch	mm	inch	mm	inch	mm	(Option)		
1/4	2.25	57.2	0.21	5.45	4.06	103.0	-	16	0.57
3/8	2.25	57.2	0.21	5.45	4.06	103.0	-	16	0.53
1/2	2.33	59.1	0.21	5.45	4.06	103.0	-	26	0.66
3/4	2.46	62.6	0.21	5.45	4.06	103.0	-	55	0.93
1	2.78	70.7	0.24	6.20	5.00	127.0	-	110	1.54
1 1/4	3.00	76.2	0.24	6.20	5.00	127.0	-	180	2.42
1 1/2	3.51	89.1	0.37	9.40	6.02	153.0	-	270	4.10
2	3.87	98.2	0.37	9.40	7.60	193.0	-	500	6.28
2 1/2	4.35	110.6	0.37	9.40	7.60	193.0	M8xP1.25	800	13.77
3	4.88	124.0	0.47	12.00	10.98	279.0	M10xP1.5	1150	22.95
4	6.63	168.5	0.47	16.00	13.19	335.0	M10xP1.5	2120	37.89

PRESSURE TEMPERATURE RATINGS (PTFE SEATS)

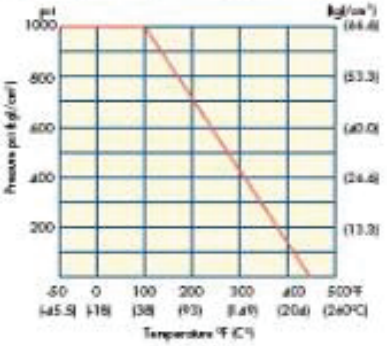

MATERIALS LIST			
NO.	PART NAME	MATERIAL	QTY
1	BODY	ASTM A351 Gr. CF8M	1
2	CAP	ASTM A351 Gr. CF8M	1
3	BALL	ASTM A351 Gr. CF8M	1
4	STEM	ASTM A276 Gr. 316	1
5	SEAT	PTFE + 15%G/F	2
6	GASKET	PTFE	1
7	THRUST WASHER	PTFE	1
8	PACKING	PTFE	1
9	GLAND	SS304	1
10	HANDLE	SS304	1
11	SPRING WASHER	SS304	1
12	HANDLE NUT	SS304	1
13	HANDLE SLEEVE	VINYL GRIP	1
14	LOCKING PLATE*	SS304	1

*OPTION

EQUIPMENT

- FILTER OR FILTER–SILENCER INLET AIR
- DIFFUSER HEADER
- MIXER HORIZONTAL SURFACE
- HOSE REEL
- CLEANING BRUSH
- MIXER, INLINE STATIC
- VFD VARIABLE FREQUENCY DRIVE
- MIXER
- MOTOR
- STOP LOG
- WEIR
- LEVEL CONTROL GATE
- COMPRESSOR, PISTON
- PROGRESSIVE CAVITY PUMP
- PUMP, CENTRIFUGAL
- PUMP, ROTARY LOBE
- PUMP, DIAPHRAGM
- PUMP, SUBMERSIBLE
- PUMP, PLUNGER
- PUMP, VERTICAL
- PUMP, GEAR
- PUMP, LINE SHAFT
- PUMP, METERING
- PUMP, METERING
- SUBMERSIBLE PROPELLER PUMP
- SLUICE GATE (NORMALLY CLOSED)
- SLUICE GATE (NORMALLY OPEN)
- WEIR GATE (NORMALLY CLOSED)
- WEIR GATE (NORMALLY OPEN)
- SLIDE GATE (NORMALLY CLOSED)
- SLIDE GATE (NORMALLY OPEN)
- GRINDER / MACERATOR
- HOIST
- SCREW PRESS
- POLYMER DOSING SYSTEM
- ROTARY DRUM THICKENER
- CONVEYOR
- BELT FILTER PRESS
- PRIMARY FILTER
- SHAFTLESS SPIRAL FINE SCREEN
- DAF

EQUIPMENT

- FLAP GATE
- RECEIVER OR PRESSURE VESSEL
- SCREEN, ROTARY OVERFLOW
- TANK, DOUBLE WALLED
- SILENCER
- TANK
- POSITIVE DISPLACEMENT BLOWER
- CONDENSATE TANK
- EJ EJ EXPANSION JOINT (BELLOWS)
- LIFTING DAVIT SOCKET

PIPE LINE DEVICES

- INJECTOR
- AIR RELEASE VALVE
- FLAME ARRESTER
- AIR VACUUM VALVE
- FLAME ARRESTER WITH THERMAL SHUTOFF VALVE
- MANUAL AIR VENT
- FLAME CHECK
- STRAINER
- TRAP
- STATIC MIXER
- SEDIMENT TRAP
- FOOT VALVE
- PRA PRESSURE REDUCING ASSEMBLY
- AIR SEPARATOR
- DT GAS DRIP TRAP
- DRAIN
- LIQUID SEPARATOR
- SPECTACLE BLIND
- BASKET STRAINER
- CALIBRATION CHAMBER
- RUPTURE DISK (VACUUM RELIEF)
- PULSATION DAMPENER
- RUPTURE DISK (PRESSURE RELIEF)
- SIGHT GLASS
- AIR VENT
- THERMOWELL
- STEAM VENT
- SUCTION GUIDE STRAINER
- QUICK CONNECTOR
- FLOW STRAIGHTENING VANES
- PLUG
- M MOTORIZED CONTROL DAMPER
- CAP
- BLIND FLANGE
- REDUCER
- RECTANGULAR BALANCING DAMPER
- FLEXIBLE CONNECTION
- AIR FILTER
- F FIRE DAMPER
- H C HEATING COIL
- B BACKDRAFT DAMPER
- C C COOLING COIL
- LOUVRE
- XX HARD PIPE UTILITY CONNECTION
- ORIFICE PLATE
- WATER SOFTENER

VALVES

- THREE WAY VALVE SOLENOID VALVE
- PUMP DISCHARGE VALVE (TRIPLE DUTY)
- GATE VALVE (NORMALLY OPEN)
- GAUGE OR ROOT VALVE
- GATE VALVE (NORMALLY CLOSED)
- KNIFE GATE VALVE
- PLUG VALVE (NORMALLY OPEN)
- BALANCING COCK
- PLUG VALVE (NORMALLY CLOSED)
- CIRCUIT BALANCING VALVE
- BALL VALVE (NORMALLY OPEN)
- THERMOSTATICALLY CONTROLLED VALVE
- BALL VALVE (NORMALLY CLOSED)
- PRESSURE AND VACUUM RELIEF VALVE
- BUTTERFLY VALVE
- VACUUM RELIEF VALVE
- CIRCULAR BALANCING DAMPER
- GLOBE VALVE
- PRESSURE SAFETY VALVE
- DIAPHRAGM VALVE
- IN–LINE, SPRING LOADED RELIEF VALVE
- ANGLE VALVE
- MUD VALVE
- FLOAT VALVE
- SPRAY NOZZLE
- PINCH VALVE
- CAMLOCK
- Y–STRAINER
- PRESSURE CONTROL VALVE (EXTERNAL SENSING)
- DOUBLE CHECK VALVE BACKFLOW PREVENTER
- PRESSURE CONTROL VALVE (INTERNAL SENSING)
- VEE BALL VALVE
- BLAST GATE
- BACK PRESSURE CONTROL VALVE
- NEEDLE VALVE
- DUCKBILL VALVE
- DOUBLE LEAF CHECK VALVE
- CHECK VALVE
- DRESSER COUPLING (FLEXIBLE CONNECTION)
- BALL CHECK VALVE
- REDUCED PRESSURE BACKFLOW PREVENTER
- flush purge purge flush FLUSHING/PURGE CONNECTION
- SPEC1 SPEC2 SPEC CHANGE

PROCESS LINES

- NEW PROCESS – PRIMARY
- NEW PROCESS – SECONDARY
- NEW PROCESS – TERTIARY
- EXISTING PROCESS
- FUTURE PROCESS
- FUTURE EQUIPMENT, ETC
- VENDOR PACKAGE BOUNDARY
- BOUNDARY MATCHLINE
- EXISTING PIPING AND EQUIPMENT TO BE REMOVED
- ENCLOSURE BOUNDARY
- INSULATION
- S OR E INSULATION WITH STEAM OR ELECTRIC HEAT TRACE
- PIPING UNDER STRUCTURE

PROCESS AND SIGNAL CROSS REFERENCE SYSTEM

1. ON DRAWING PXX XX1 CONTINUATION IS SHOWN AS: AAA P601 BBB
2. ON DRAWING PXX XX2 THIS CONTINUATION IS SHOWN AS: AAA P601 BBB

VALVE ACTUATORS

- MOTOR ACTUATOR
- S SOLENOID
- PNEUMATIC ACTUATOR
- DIAPHRAGM (PRESSURE BALANCE)
- DIAPHRAGM (SPRING OPPOSED)

MISCELLANEOUS DEVICES

- UTILITY STATION (NUMBER, IF ANY, DESIGNATES TYPE)
- SS SAMPLER
- FIRE HYDRANT & VALVE
- C CONTROL UNIT
- VAB VACUUM BREAKER (BFP TYPE)
- P PURGE OR FLUSHING CONNECTION

Revision	By	Appd.	YY.MM.DD
1 ISSUED FOR CONSTRUCTION	TR	AR	18.05.23
0 ISSUED FOR BID	TR	AR	18.04.09
Issued	By	Appd.	YY.MM.DD

Consultants

Permit-Seal

PERMIT TO PRACTICE NUNAMI STANTEC LTD. Signature Date 9 April 2018 PERMIT NUMBER: P 1117 NT/NU Association of Professional Engineers and Geoscientists 110126045

REGISTERED PROFESSIONAL ENGINEER A. ROJAS LICENSEE NT / NU

REGISTERED PROFESSIONAL ENGINEER 2018MAY23 D. HUTCHISON LICENSEE 110126045 NT/NU

NUNAMI STANTEC LIMITED
1088C Noble House
Iqaluit NU
www.stantec.com

The Contractor shall verify and be responsible for all dimensions. DO NOT scale the drawing - any errors or omissions shall be reported to Stantec without delay.
The Copyrights to all designs and drawings are the property of Stantec. Reproduction or use for any purpose other than that authorized by Stantec is forbidden.

Client/Project

Iqaluit

ᐃᖃᓗᐃᑦ

IQALUIT WASTEWATER TREATMENT PLANT UPGRADE

City of Iqaluit, Nunavut

File Name: P601 | TRant Dwn. | — Chkd. | — Dsgn. | 2017.10.03 YY.MM.DD

Title

PROCESS PIPING AND INSTRUMENTATION DIAGRAM LEGEND SHEET

Project No.	Scale	
110126045	NTS	
Drawing No.	Sheet	Revision
P601	1 of 3	0

ORIGINAL SHEET - ISO A1

ORIGINAL SHEET - ISO A1

V:\1107\active\110126045\drawings\04-process\current\P601.dwg
2018/05/22 12:50 PM By: Rojas, Thomas

Example

ORIGINAL SHEET - ISO A1

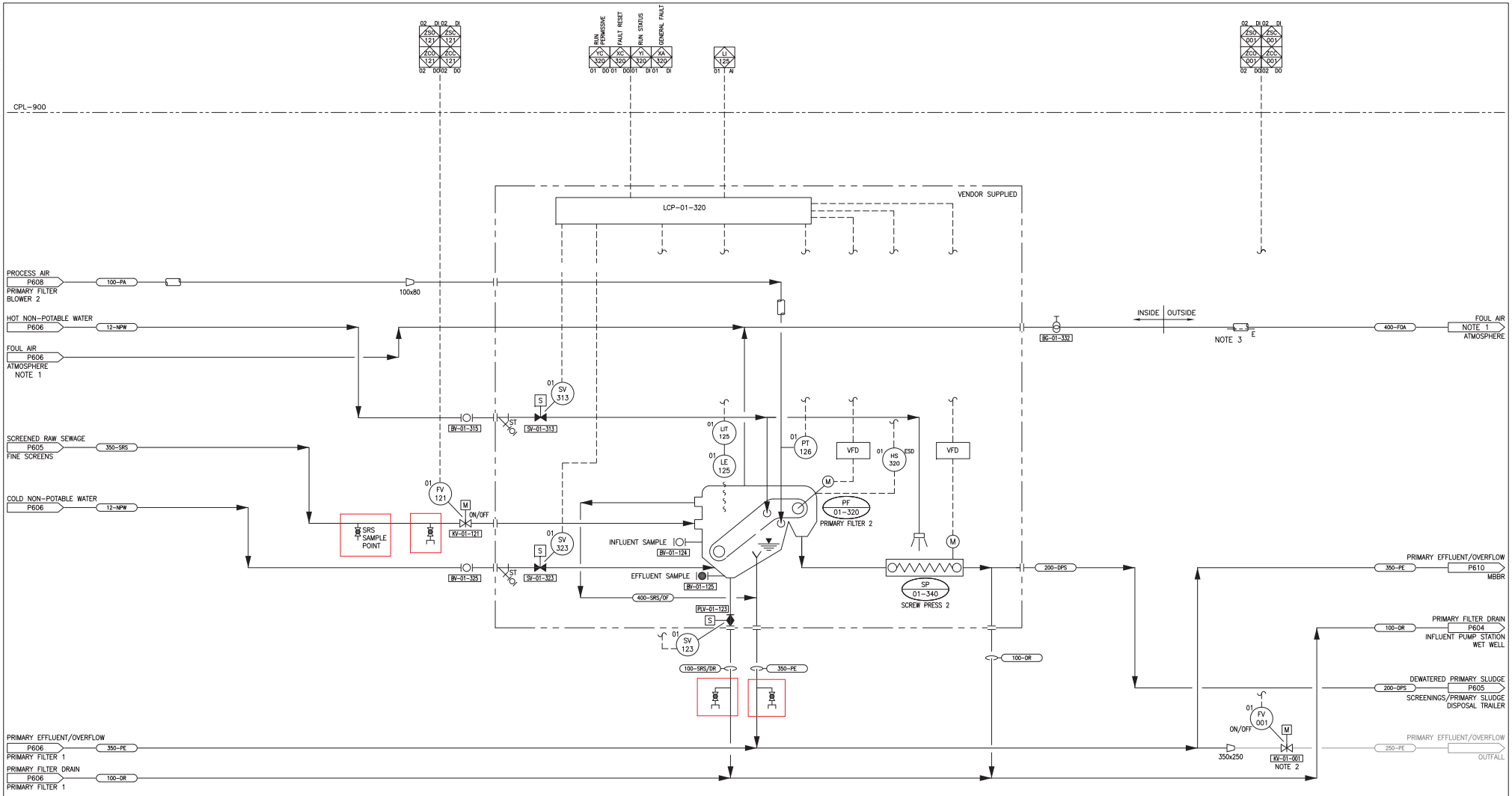

NOTES

1. THE ARRANGEMENT OF PRIMARY FILTERS 1 AND 2 SHARES A UNIQUE FOUL AIR PIPLINE TO ATMOSPHERE.
2. REPLACE EXISTING MANUAL VALVE WITH NEW ELECTRICALLY OPERATED OPEN/CLOSE VALVE.
3. INSULATE AND HEAT TRACE ALL FOUL AIR OUTSIDE PIPING.
4. CONTRACTOR TO SUPPLY AND INSTALL ANALOG SIGNAL SPLITTER INSIDE PRIMARY FILTER 2 CONTROL PANEL FOR LIT-01-125. SEE PC-10X FOR DETAILS.

PF-01-320
PRIMARY FILTER 2

TYPE:	LEAP PRIMARY
CAPACITY:	121 L/s
FAN MOTOR:	0.18 kW
FILTER BELT MOTOR:	0.75 kW

SP-01-340
SCREW PRESS 2

AUGER MOTOR:	0.37 kW

Revision	By	Appd.	YY.MM.DD
1 ISSUED FOR CONSTRUCTION	TR	AR	18.05.23
0 ISSUED FOR BID	TR	AR	18.04.09
Issued	By	Appd.	YY.MM.DD

Consultants

Permit-Seal

PERMIT TO PRACTICE
NUNAMI STANTEC LTD.
Signature
Date 9 April 2018
PERMIT NUMBER: P 1117
NT/NU Association of Professional Engineers and Geoscientists
110126045

REGISTERED PROFESSIONAL ENGINEER
A. ROJAS
LICENSEE
NT / NU

REGISTERED PROFESSIONAL ENGINEER
2018MAY23
D. HUTCHISON
LICENSEE
110126045
NT/NU

NUNAMI
STANTEC LIMITED
1088C Noble House
Iqaluit NU
www.stantec.com

The Contractor shall verify and be responsible for all dimensions. DO NOT scale the drawing - any errors or omissions shall be reported to Stantec without delay.
The Copyrights to all designs and drawings are the property of Stantec. Reproduction or use for any purpose other than that authorized by Stantec is forbidden.

Client/Project
Iqaluit
ᐃᖃᓗᐃᑦ
IQALUIT WASTEWATER TREATMENT PLANT UPGRADE
City of Iqaluit, Nunavut

File Name: P607 | TRonf Dwn. | — Chkd. | — Dsgn. | 2017.10.03 YY.MM.DD

Title
PROCESS
PIPING AND INSTRUMENTATION DIAGRAM
PRIMARY FILTER 2

Project No. 110126045
Scale NTS
Drawing No. P607
Sheet _ of _
Revision 0

V:\1107\active\110126045\drawings\04-process\current\P607.dwg
2018/05/22 12:51 PM By: Rojas, Thomas

ORIGINAL SHEET - ISO A1

BV-01:
25mm: BV-01-310, BV-01-320,
12mm: BV-01-314, BV-01-324, BV-01-315, BV-01-325

NORCLAIR
MÉCANIQUE DE PROCÉDÉ

SHOP DRAWINGS

REVIEWED BY CONTRACTOR
Kudlik Construction Ltd.
NAME: Sandra Rousseau P.Eng
DATE: Jul 25, 2018

DA-MP-24-R1 (Ball-valve BV-01) **Date :** 2018-07-25

Information general	
Project : **WWTP UPGRADE - IQALUIT**	
Client : Kudlik Construction Ltd. To : Sandra Rousseau P.Eng., Project Manager	Project number : **2018-062** E-mail : srousseau@kudlik.biz
Contractor : **Norclair inc.**	Project number Norclair : **P1039**
Address : 1100, Mountain Masson, Laval, QC, Canada H7E 4P2	
Project Manager : Dominic Papineau, Project Manager	E-mail: dpapineau@norclair.ca
Phone : 450-688-4012 # 720	Cell. : 514-409-1832

Information, subcontractor or supplier	
Sub/supplier : Jenkins	
Contact :	Phone :

Information on the equipment	
Speciality : **Process**	
Equipment : Ball valve BV-01	
Drawing reference :	
Specification reference : **40 05 25** (see attachment)	Division :
Article :	Number of pages : 3

CONSULTANT APPROVAL

STANTEC PROJECT #: 110126045 SUBMITTAL # DA-MP-24R1 Ball Valve BV-01

This review by Stantec is for general conformance with the design concept of Stantec's design of the:

☑ Process ☐ Electrical
☐ Structural ☐ Other
☐ Mechanical

component(s) only and does not mean that Stantec has verified or approves the shop drawing(s). The Contractor remains solely responsible for the shop drawing(s) and this review by Stantec does not relieve the Contractor of the Contractor's responsibility for errors or omissions in the shop drawing(s) or for meeting all requirements of the contract documents. This review does not mean that Stantec approves the detailed design inherent in the shop drawing, responsibility for which shall remain with the Contractor submitting same, nor does this review mean that Stantec accepts any deviation of the shop drawing(s) from the contract documents. The Contractor is responsible for confirming all dimensions and correlating them at the job site, for all construction means, methods and techniques, and for coordination of construction work of all trades, including coordination of all shop drawings.

Stantec

☑ REVIEWED
☐ REVIEWED, AS NOTED
☐ REVISE AND RESUBMIT
☐ NOT REVIEWED

DATE July 25, 2018

BY Alejandro Rojas, P.Eng

1100, montée Masson
Laval, QC, Canada
H7E 4P2

Phone. : 450-688-4012
Fax : 450-661-6341
E-Mail : info@norclair.ca
www.norclair.ca

201J

Forged Brass, 2-Piece Body, Meets MSS SP-110, CSA/UL/FM Approval (½ - 2" only) NSF 61.8 (¼ - 4")

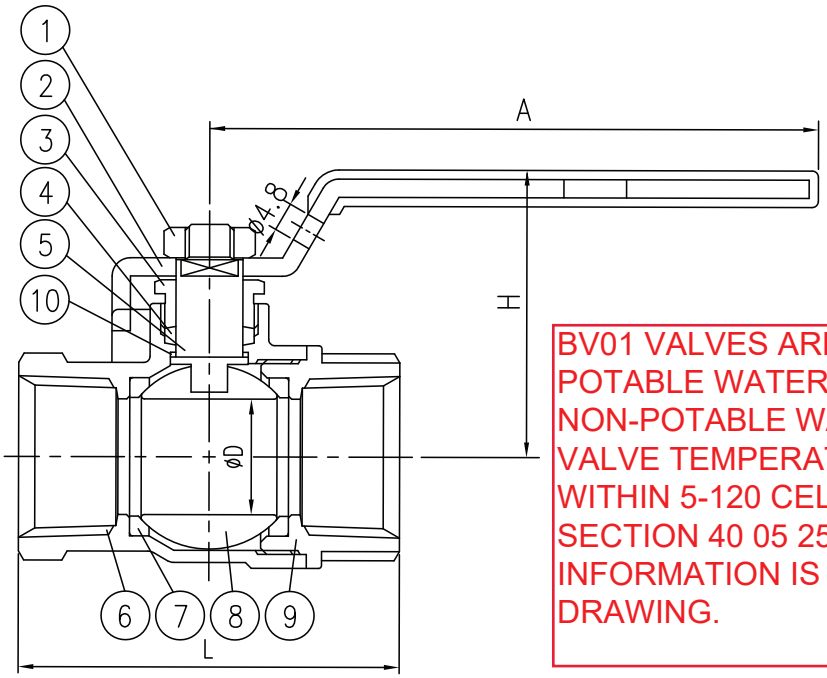

Materials of Construction

No.	Description	Material
1	Nut	AISI-1010
2	Handle	A283-D
3	Stem Gland Screw	B16-C36000
4	Stem Packing	PTFE
5	Stem	B16-C36000
6	Body	B124-C37700 B584-C85700 (2" - 4")
7	Seat	PTFE
8	Ball	B16-C36000 or B124-C37700 (1" - 4")
9	End Plug	B124-C37700
10	Thrust Washer	PTFE (2" - 4")

BV01 VALVES ARE TO BE USED SPECIFICALLY WITH POTABLE WATER, COLD NON-POTABLE WATER AND HOT NON-POTABLE WATER. PROVIDE INFORMATION ON THE VALVE TEMPERATURE OPERATING RANGE THAT MUST BE WITHIN 5-120 CELSIUS DEGREES AS PRESENTED ON SECTION 40 05 25 - BV01 (COPY INCLUDED BELOW). SUCH INFORMATION IS NOT BEING PRESENTED ON THIS SHOP DRAWING.

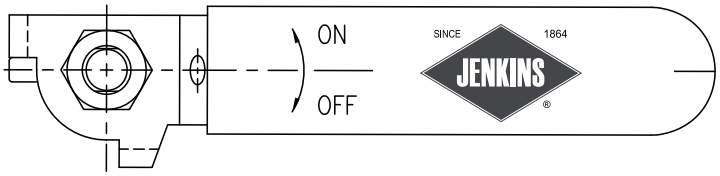

MH46785
Listed
2L73

Approvals:

UL Approved
- YSDT (LP-Gas Shut-off valves)
- YRBX (Flammable Liquid Shut-off valves)
- MHKZ (Manual valves)

CSA Approved
- CLASS 3371 94 - Manually Operated Metallic for Use in Piping Systems Certified to US Standards
- CLASS 3371 92 - Manually Operated Metallic for Use in House Piping Systems - Certified to US Standards
- CLASS 3371 88 - General Use - Certified to US Standards
- CLASS 3371 81 - Appliance Connector - Certified to US Standards
- CLASS 3371 12 - Manually Operated for Use on Piping
- CLASS 3371 10 - Lever Operated Non-Lubricated Shut-off
- CLASS 3371 08 - General Use
- CLASS 3371 01 - Appliance Connector
- CLASS 3371 10
- CLASS 3371 90

Inches (millimeters) - Pounds (kilograms)

Valve Size	Dimensions				Wt.
	A	D	H	L	
¼	1.97	0.35	1.26	1.69	0.35
	(50)	(9)	(32)	(43)	(0.16)
⅜	2.95	0.39	1.46	1.81	0.35
	(75)	(10)	(37)	(46)	(0.16)
½	2.95	0.50	1.50	2.13	0.42
	(75)	(13)	(38)	(54)	(0.19)
¾	3.94	0.75	1.85	2.48	0.84
	(100)	(19)	(47)	(63)	(0.38)
1	3.94	0.98	2.05	2.99	1.25
	(100)	(25)	(52)	(76)	(0.57)
1 ¼	4.92	1.25	2.36	3.35	1.83
	(125)	(32)	(60)	(85)	(0.83)
1 ½	4.92	1.50	2.56	3.62	2.49
	(125)	(38)	(65)	(92)	(1.13)
2	7.87	1.97	3.11	4.25	4.58
	(200)	(50)	(79)	(108)	(2.08)
2 ½	7.87	2.48	3.50	5.16	7.71
	(200)	(63)	(89)	(131)	(3.50)
3	7.87	2.95	3.86	5.91	10.64
	(200)	(75)	(98)	(150)	(4.83)
4	7.87	3.97	3.86	6.26	13.22
	(200)	(96)	(98)	(159)	(6.00)

Key Features, Options and Pressure-Temperature Ratings

Jenkins® ball valves are general purpose two-piece end entry ball valves that covers the full spectrum of industrial and commercial applications.

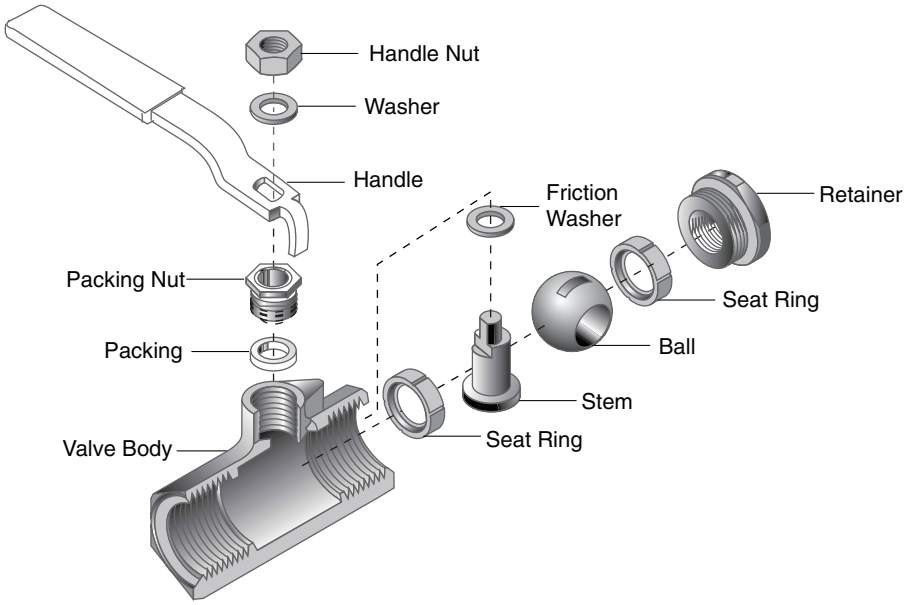

Jenkins® Ball Valve Key Features and Options:

- **Blow-Out Proof Stem**
  The internally loaded stem has an integral thrust collar which prevents stem removal while the valve is installed.

- **Adjustable Packing**
  The packing may be tightened to compensate for wear throughout the life of the valve.

- **Lever Handle**
  Heavy duty lever handles are standard for easy operation. All handles include a vinyl insulator sleeve for protection from high or low temperatures.

- **Options Include**
  Memory Stop
  Extension Stems
  Tee Handles
  Stainless Steel Lever Handles
  Locking Handles

- **CGA Approved**
  Jenkins® threaded ends ball valves are Canadian Gas Association Approved.

- **AGA Approved**
  Jenkins® threaded end ball valves are American Gas Association Approved.

- **UL/FM Approved**
  Figures 201J & 201SJ, size ¼" – 2" are Underwriter's Laboratory/Factory Mutual Approved.

Pressure-Temperature Ratings

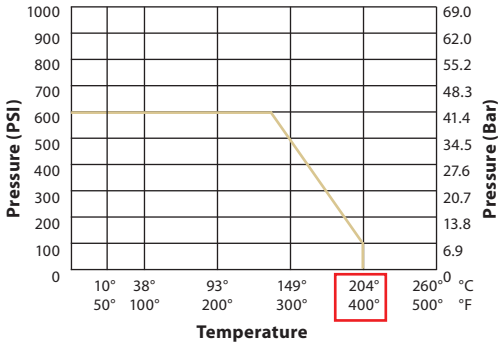

BV01

GENERAL						
TYPE OF VALVE	SYMBOL	TYPE OF COMMODITY	OPERATING LIMITS		DESIGN LIMITS	
			PRESSURE (kPag)	TEMP. (°C)	PRESSURE (kPag)	TEMP. (°C)
Ball Valve	BV01	Liquid/Air	600	5-120	850	120

TYPICAL SERVICE
PW, NPW COLD, NPW HOT.

VALVE MATERIALS		VALVE DESCRIPTION	
ITEM	MATERIAL	Reference Document	Note 2
Body	Bronze or Forged Brass	Size Range	10 mm to 65 mm
Ball	Bronze or Chrome plated brass - floating	Rating	Class 125
Seats	PTFE	Body/Valve Ends	Female Threaded (Note 3)
Shaft	Bronze or Stainless Steel (Note 1)	Pattern	Compact, Regular Port
		Operator	Lever
		Actuator	

NOTES

1. Blowout-proof stem.
2. When this valve is installed into a gas service it must comply with the applicable requirements.
3. Provide threaded end cap and chain when used for draining service.

ACCEPTABLE PRODUCTS

Toyo Fig 5044A	Crane 9302	Nibco 580	Watts B6000 / B6001
Kitz Fig 58			

REVIEWED BY CONTRACTOR

Kudlik Construction Ltd.

NAME: Sandra Rousseau P.Eng

DATE: Jul 26, 2018

NORCLAIR
MÉCANIQUE DE PROCÉDÉ

SHOP DRAWINGS

DA-MP-25R3 (FRP vent 16in) **Date :** 2018-07-26

Information general	
Project : **WWTP UPGRADE - IQALUIT**	
Client : Kudlik Construction Ltd. To : Sandra Rousseau P.Eng., Project Manager	Project number : **2018-062** E-mail : srousseau@kudlik.biz
Contractor : **Norclair inc.**	Project number Norclair : **P1039**
Address : 1100, Montée Masson, Laval, QC, Canada H7E 4P2	
Project Manager : Dominic Papineau, Project Manager	E-mail: dpapineau@norclair.ca
Phone : 450-688-4012 # 720	Cell. : 514-409-1832

Information, subcontractor or supplier	
Sub/supplier : Precisioneering DKG	
Contact : Cliff Ng	Phone : (800) 465-1800 x234

Information on the equipment	
Speciality : **Process**	
Equipment : FRP vent 16in	
Drawing reference : P505	
Specification reference : **40 05 15** (Page all / 10)	Division :
Article :	Number of pages : 3
See **RFI-019** and subsequent emails.	

CONSULTANT APPROVAL

STANTEC PROJECT #: 110126045

SUBMITTAL # DA-MP-25R3 FRP Vent 400 mm

This review by Stantec is for general conformance with the design concept of Stantec's design of the:

☑ Process ☐ Electrical
☐ Structural ☐ Other
☐ Mechanical

component(s) only and does not mean that Stantec has verified or approves the shop drawing(s). The Contractor remains solely responsible for the shop drawing(s) and this review by Stantec does not relieve the Contractor of the Contractor's responsibility for errors or omissions in the shop drawing(s) or for meeting all requirements of the contract documents. This review does not mean that Stantec approves the detailed design inherent in the shop drawing, responsibility for which shall remain with the Contractor submitting same, nor does this review mean that Stantec accepts any deviation of the shop drawing(s) from the contract documents. The Contractor is responsible for confirming all dimensions and correlating them at the job site, for all construction means, methods and techniques, and for coordination of construction work of all trades, including coordination of all shop drawings.

Stantec

☑ REVIEWED

☐ REVIEWED, AS NOTED

☐ REVISE AND RESUBMIT

☐ NOT REVIEWED

DATE July 30, 2018

BY Alejandro Rojas, P.Eng

1100, montée Masson
Laval, QC, Canada
H7E 4P2

Phone. : 450-688-4012
Fax : 450-661-6341
E-Mail : info@norclair.ca
www.norclair.ca

HC: No approval required for 8in vents at this time

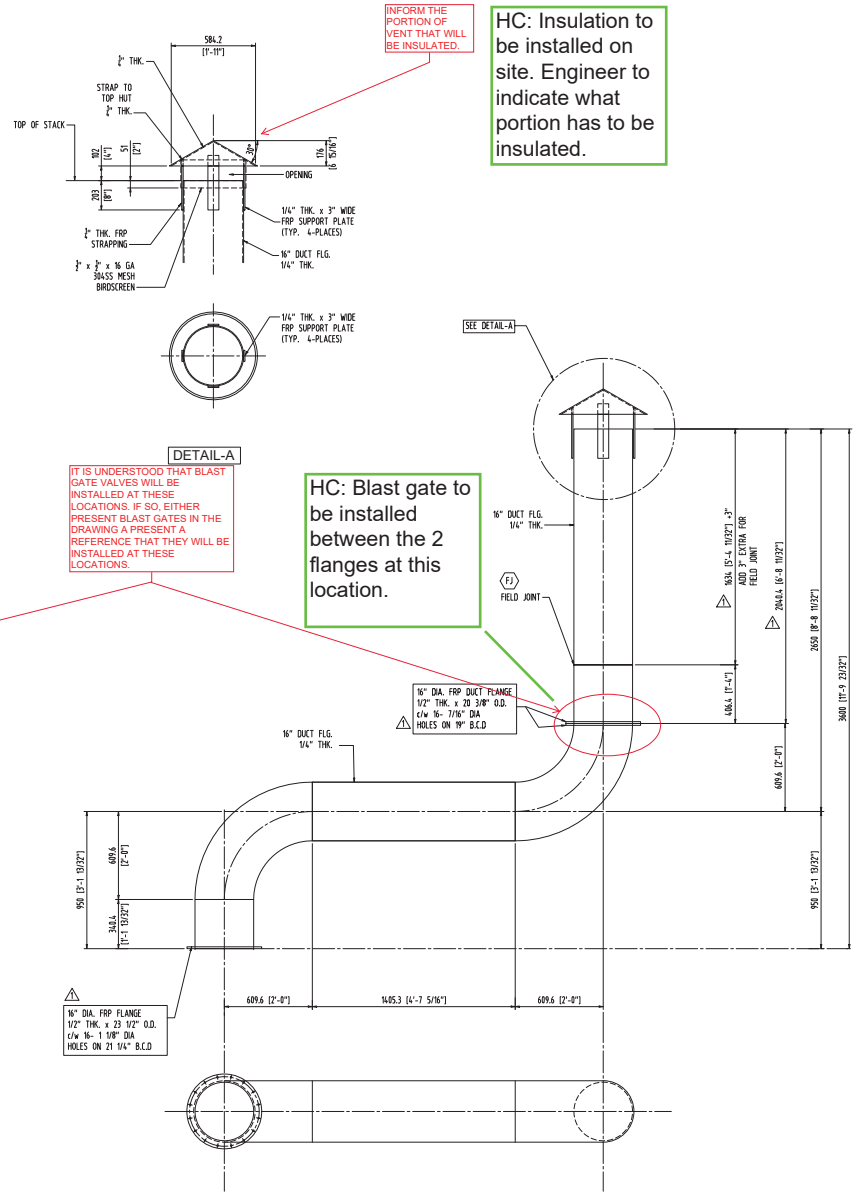

200-FOA

400-FOA
1-REQUIRED

GENERAL NOTES

SHOP ORDER NO.	DRAWING NO.	REV
TH14927-1	D-14927-1	1

SHOP ORDER NO. VE18899	CONSTRUCTION DETAILS		
CORROSION LINER REINFORCING	1-C GLASS + 2 MAT		
LINER	DERAKANE 510C	COLOR	GREY
HLU STRUCTURAL	DERAKANE 510C	COLOR	GREY
HOT COAT OUTER SKIN	HETRON 197P	COLOR	GREY
SPECIFICATION	CGSB 41-GP-22 & ASTM D4097		

QUALITY CONTROL

BARCOL HARDNESS	MINIMUM	TOP HEAD	SHELL	BOTTOM
THICKNESS	TOP HEAD	SHELL	BOTTOM	MANWAY BUILT-UP
INTERIOR CLEAN				
INSPECTED BY: DATE:		WITNESSED BY: DATE:		
GENERAL ORIENTATION		DETAILED ORIENTATION		

LAMINATE SEQUENCE

THK.	HLU LAMINATE
3/16	V - 2M. 2M. H
1/4	V - 2M. M R M M. H
5/16	V - 2M. 2(MR) M. H
3/8	V - 2M. 3(MR) M. H
7/16	V - 2M. 3(MR) MM. H
1/2	V - 2M. 3(MR) M. MRM. H

NOTE:
S = SYNTHETIC VEIL
V = C - GLASS VEIL
M = 1 1/2 oz CHOPPED STRAND MAT
R = WOVEN ROVING 24 OZ
H = HOT COAT

CERTIFIED FOR PRODUCTION
BY:
DATE:

BY	DATE	REVISION	NO
WV1	25JUL18	REVISED PER CUSTOMER COMMENTS AS NOTED WITH ⚠	⚠
WV1	.	ISSUED FOR REVIEW AND APPROVAL	⚠

DO NOT SCALE THIS DRAWING USE DIMENSIONS ONLY

THE INFORMATION AND KNOW HOW ON THIS DRAWING ARE CONFIDENTIAL AND MAY NOT BE USED OR REPRODUCED WITHOUT WRITTEN PERMISSION OF PRECISIONEERING

DRAWN	W Ibumeralle
CHECKED	
DATE	JULY 2014
SCALE	3/4" = 1'-0"

PRECISIONEERING
383 NANTUCKET BLVD. SCARBOROUGH ONTARIO CANADA M1P 3P2 Email sales@PRECISIONEERING.COM

FRP DUCTING FOR
NORCLAIR

CAD FILE NO.	SIZE
VE18899-1	D

CUSTOMER REFERENCE DWG.	PURCHASE ORDER NO.	SHOP ORDER NO.	DRAWING NO.	REV
.	P1039-08003	VE18899	D-18899-1	1

Elevation of bottom part of vent hut: 5650 (as shown below)

Elevation of flange on primary filters outlet box : 1551 (as shown on suppliers drawings)

Blast gate length: 380

Required vertical length (flange to bottom of hut) = 5650 - 1551 – 380 =**3719**

Vertical length of vent (flange to bottom of hut) as shown on drawing D-18899-1 rev 1 =

3600 + 102 = **3702**

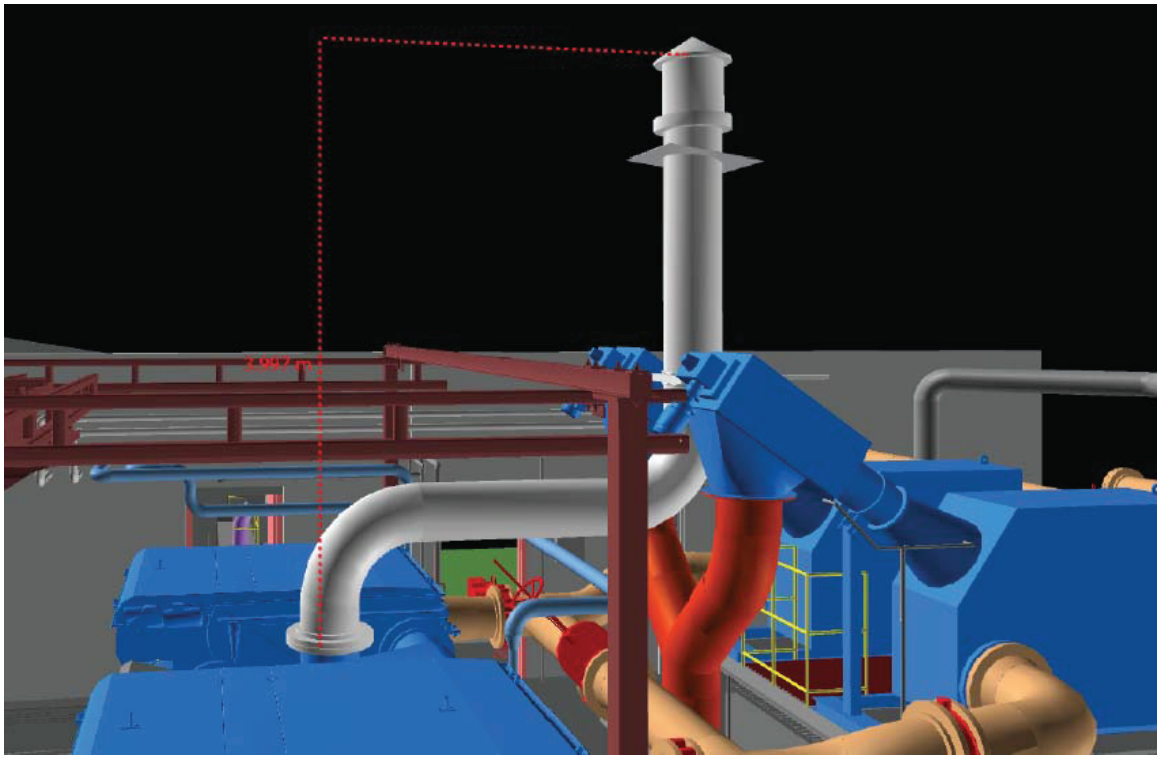

REVIEWED BY CONTRACTOR
Kudlik Construction Ltd.
NAME: Sandra Rousseau P.Eng
DATE: Aoû 07, 2018

NORCLAIR
MÉCANIQUE DE PROCÉDÉ

SHOP DRAWINGS

DA-MP-27R3 (Primary process piping **SP-01 to SP-05)** **Date :** 2018-08-07

Information general	
Project : **WWTP UPGRADE - IQALUIT**	
Client : Kudlik Construction Ltd. To : Sandra Rousseau P.Eng., Project Manager	Project number : **2018-062** E-mail : srousseau@kudlik.biz
Contractor : **Norclair inc.**	Project number Norclair : **P1039**
Address : 1100, Montée Masson, Laval, QC, Canada H7E 4P2	
Project Manager : Dominic Papineau, Project Manager	E-mail: dpapineau@norclair.ca
Phone : 450-688-4012 # 720	Cell. : 514-409-1832

Information, subcontractor or supplier	
Sub/supplier : Norclair	
Contact :	Phone :

Information on the equipment	
Speciality : **Process**	
Equipment : Primary process piping SP-01 to SP-05	
Drawing reference : P505	
Specification reference : **40 05 13** (Page xx / xx)	Division :
Article :	Number of pages : 11

CONSULTANT APPROVAL

Lengths of spools are not being revised. Contractor to review in detail and ensure all lengths meet contract requirements.

STANTEC PROJECT #: 110126045
SUBMITTAL # DA-MP-27R3 Primary Process Piping SP-01 to SP-05

This review by Stantec is for general conformance with the design concept of Stantec's design of the:
☑ Process ☐ Electrical
☐ Structural ☐ Other
☐ Mechanical

component(s) only and does not mean that Stantec has verified or approves the shop drawing(s). The Contractor remains solely responsible for the shop drawing(s) and this review by Stantec does not relieve the Contractor of the Contractor's responsibility for errors or omissions in the shop drawing(s) or for meeting all requirements of the contract documents. This review does not mean that Stantec approves the detailed design inherent in the shop drawing, responsibility for which shall remain with the Contractor submitting same, nor does this review mean that Stantec accepts any deviation of the shop drawing(s) from the contract documents. The Contractor is responsible for confirming all dimensions and correlating them at the job site, for all construction means, methods and techniques, and for coordination of construction work of all trades, including coordination of all shop drawings.

Stantec

☑ REVIEWED
☐ REVIEWED, AS NOTED
☐ REVISE AND RESUBMIT
☐ NOT REVIEWED

DATE August 7, 2018
BY Alejandro Rojas, P.Eng

1100, montée Masson
Laval, QC, Canada
H7E 4P2

Phone. : 450-688-4012
Fax : 450-661-6341
E-Mail : info@norclair.ca
www.norclair.ca

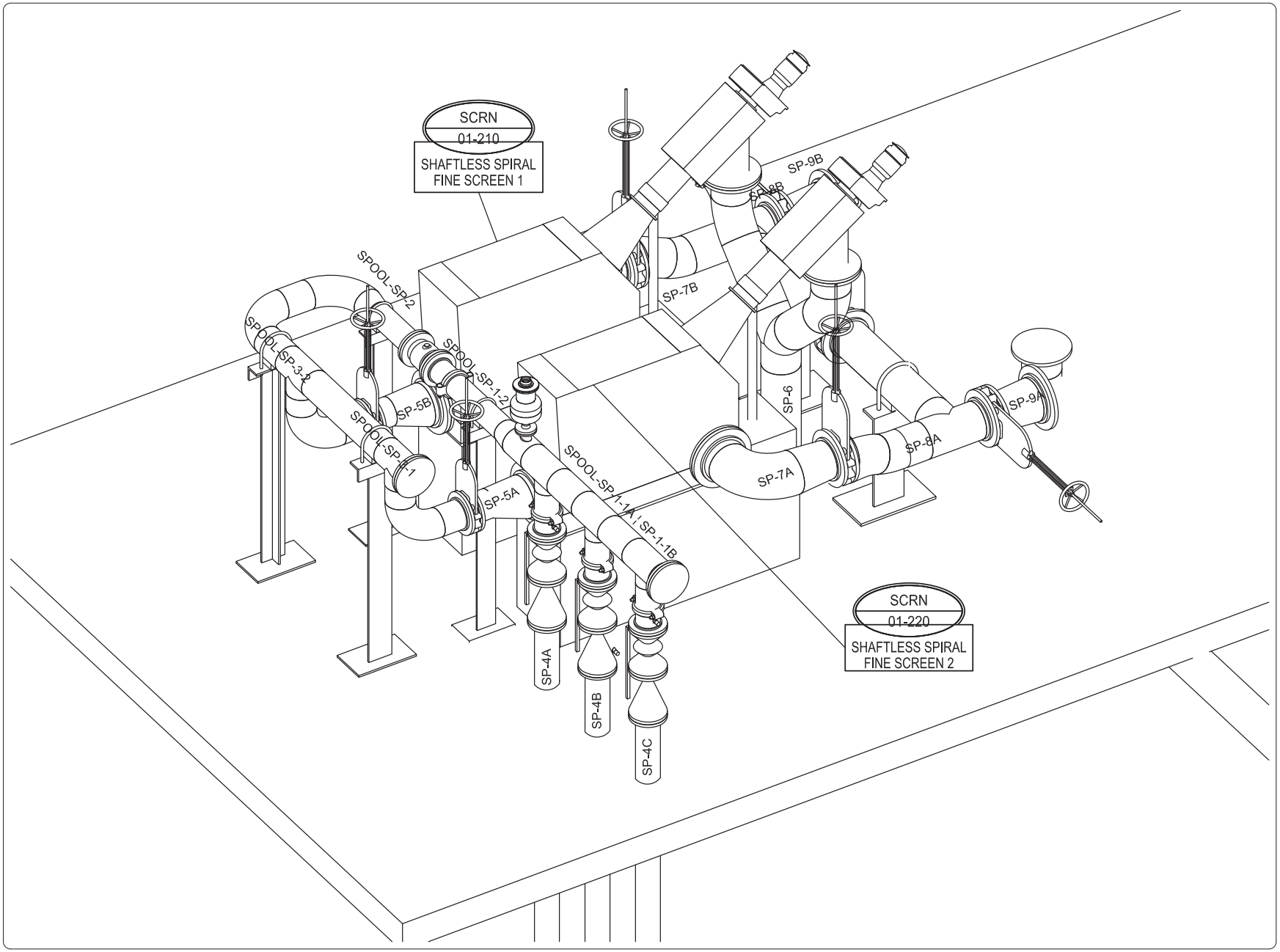

NOTES:

NOTES:

-ALL PIPING - SS-304 SCH.10S
-ALL FLANGES - GALV. STEEL

REVISION:	
ISSUED FOR APPROVAL	2018-07-15
ISSUED FOR APPROVAL	2018-08-07

NORCLAIR
MÉCANIQUE DE PROCÉDÉ

Norclair Inc.
1100, montée Masson,
Laval (Québec) H7E 4P2

Tél. : 450 688-4012
Fax. : 450 661-6341
Email : info@norclair.ca

CLIENT:

IQALUIT
WASTE WATER
TREATMENT PLANT

RAW WASTE WATER ISOMETRIC VIEW SPOOL LOCALISATION

DATE: Aug 2018	SCALE: NTS
DRAWN BY: S. L.	N. PROJET NORCLAIR: P1039
CHECK BY: H.C.	DRAWING: P-007

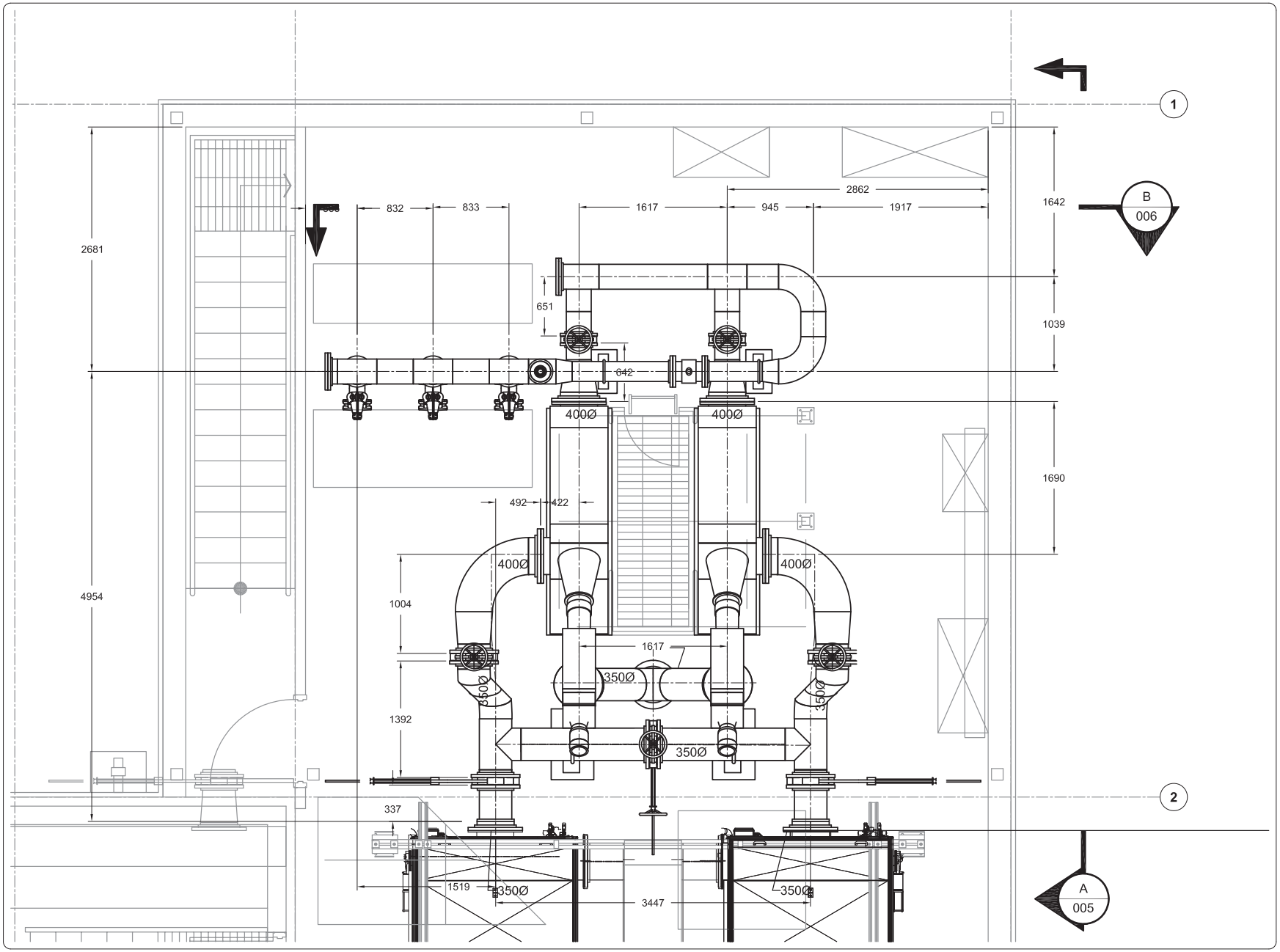

NOTES:

NOTES:

-ALL PIPING - SS-304 SCH.10S
-ALL FLANGES - GALV. STEEL

REVISION:	
ISSUED FOR APPROVAL	2018-07-15
ISSUED FOR APPROVAL	2018-08-07

NORCLAIR MÉCANIQUE DE PROCÉDÉ

Norclair Inc.
1100, montée Masson,
Laval (Québec) H7E 4P2

Tél. : 450 688-4012
Fax. : 450 661-6341
Email : info@norclair.ca

CLIENT:

IQALUIT
WASTE WATER
TREATMENT PLANT

RAW WASTE WATER PIPING - LEVEL 13.900

DATE: Aug 2018	SCALE: 1:40
DRAWN BY: S. L.	N. PROJET NORCLAIR: P1039
CHECK BY: H.C.	DRAWING: P-003

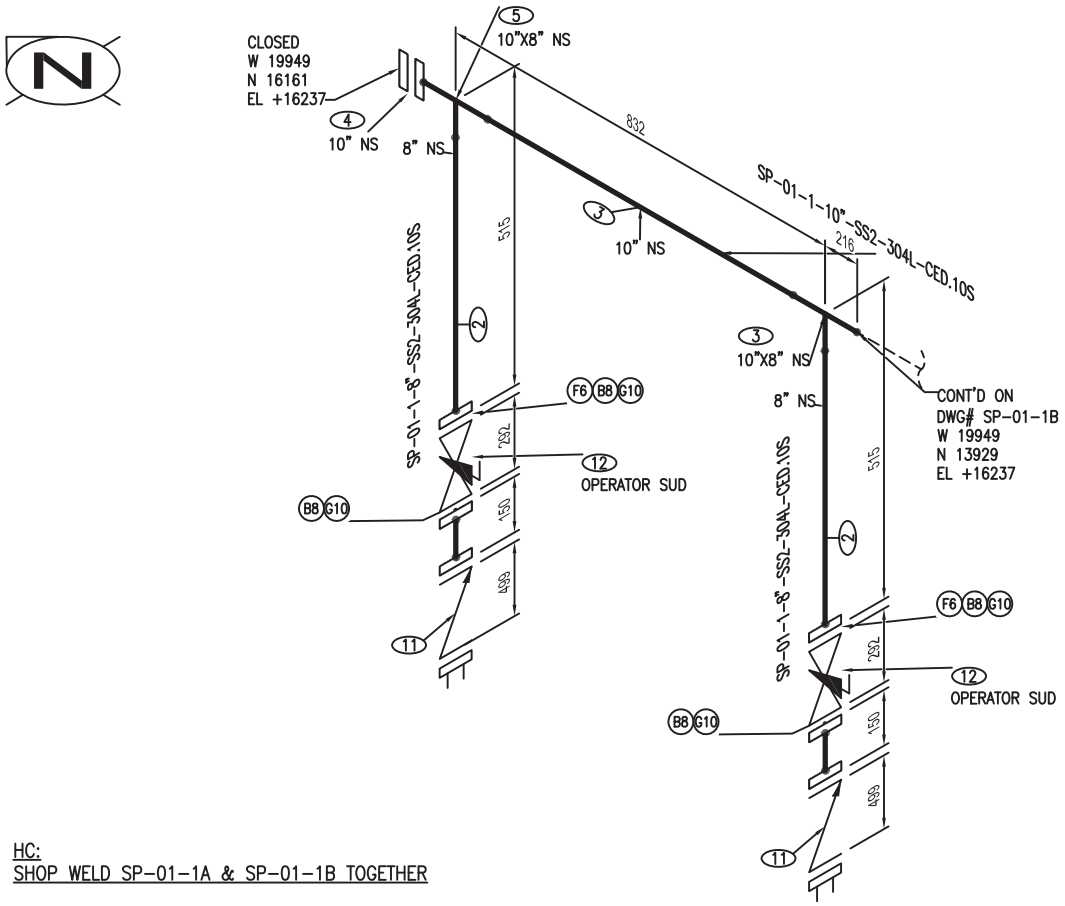

BILL OF MATERIALS

ID	QTY	ND	SCH/CLASS	DESCRIPTION
1	x.x M	10"	10S	PIPE, WELDED, 10S, PE, ASTM A312
2	x.x M	8"	10S	PIPE, WELDED, 10S, PE, ASTM A312
3	2	10"X8"		TEE (RED), BW, ASME B16.9
4				
5				
6	2	8"	150	BACKING FLANGE WITH BUTT WELD ANGLE COLLARS, 150 LB, FF, ASME B16.5 GALV, STEEL
7	24	3/4"X108	150	BOLT SET, FF, 150 LB, STUD BOLT
8	16	3/4"X115	150	BOLT SET, FF, 150 LB, STUD BOLT
9	4	10"		GASKET (FULL FACE)
10	4	8"		GASKET
11	1	8"	150	CHECK VALVE, SWING, 150 LB, FF, ASME B16.10
12	1	8"	150	PLUG VALVE, 150 LB, FF, ASME B16.10

CUT PIECE LIST

ID	LENGTH	ND	END1	END2

REV.	DESCRIPTION	DATE	DRAWN	CHKD	APPD
	rev01 hc	2018-07-27			
		07-17-18			

SERVICE	RW
PIPE SPEC	
MAX PRESSURE	
MAX TEMPERATURE	
P&ID DWG	
INSULATION SPEC	
INSULATION THK	

PROJECT NAME: IQALUIT

TITLE: WASTE WATER TREATMENT PLANT

DRAWING NUMBER: SP-01-1A

LINE NO:	AREA:	UNIT:	TYPE:
SP-01			

JOB NUMBER:	SCALE:	SHEET:	REV.
	N.T.S.	3 OF 4	0

Z:\PROJETS\P1039_Iqaluit\7_Plans & devis\FABRICATION NORCLAIR\WSP_20180720\ISOMÉTRIQUES_hc_20180723\SP-01-1Arev01_hc.dwg

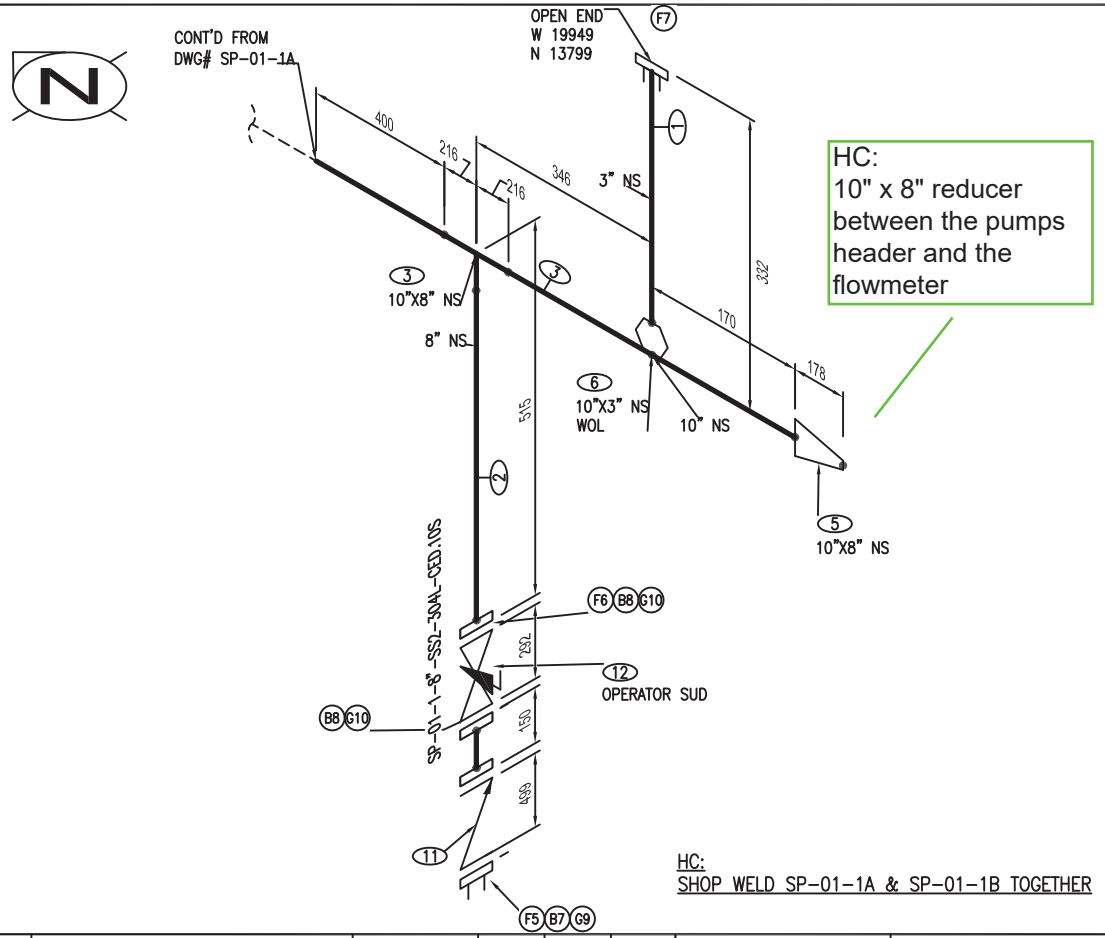

BILL OF MATERIALS

ID	QTY	ND	SCH/CLASS	DESCRIPTION
1	0.1M	3"	10S	PIPE, WELDED, 10S, PE, ASTM A312
2	1.2M	8"	10S	PIPE, WELDED, 10S, PE, ASTM A312
3	0.3M	10"	10S	PIPE, WELDED, 10S, PE, ASTM A312
4				
5	1	10"X8"		REDUCER (CONC), BW, ASME B16.9
6	1	10"X3"		WELDOLET, BW, STD, 1 3/4" LG, x FLANGE
7	1	3"	150	BACKING FLANGE WITH BUTT WELD ANGLE COLLARS, 150 LB, FF, ASME B16.5 GAL, STEEL
8	1	8"	150	BACKING FLANGE WITH BUTT WELD ANGLE COLLARS, 150 LB, FF, ASME B16.5 GAL, STEEL
9	24	3/4"X100	150	BOLT SET, RF, 150 LB, STUD BOLT
10	3	8"		GASKET

CUT PIECE LIST

ID	LENGTH	ND	END1	END2

REV.	DESCRIPTION	DATE	DRAWN	CHKD	APPD
	rev01 hc	2018-07-27			
		07-17-18			

SERVICE	RW
PIPE SPEC	
MAX PRESSURE	
MAX TEMPERATURE	
P&ID DWG	
INSULATION SPEC	
INSULATION THK	

PROJECT NAME: IQALUIT

TITLE: WASTE WATER TREATMENT PLANT

DRAWING NUMBER: SP-01-1B

LINE NO:	AREA:	UNIT:	TYPE:
SP-01			

JOB NUMBER:	SCALE:	SHEET:	REV.
	N.T.S.	4 OF 4	0

Z:\PROJETS\P1039_Iqaluit\7_Plans & devis\FABRICATION NORCLAIR\WSP_20180720\ISOMÉTRIQUES_hc_20180723\SP-01-1Brev01_hc.dwg

HC:
Closure:
300mm extra was added

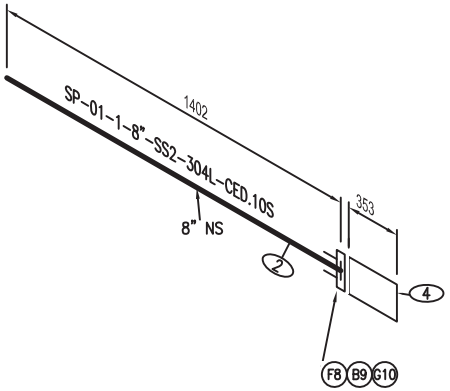

BILL OF MATERIALS

ID	QTY	ND	SCH/CLASS	DESCRIPTION
1				
2	1.5M	8"	10S	PIPE, WELDED, 10S, PE, ASTM A312
3				
4	1	8"	150	FLOW METER
5				
6				
7				
8	1	8"	150	BACKING FLANGE WITH BUTT WELD ANGLE COLLARS, 150 LB, FF, ASME B16.5 GAL, STEEL
9	8	3/4"X100	150	BOLT SET, RF, 150 LB, STUD BOLT
10	1	8"		GASKET

CUT PIECE LIST

ID	LENGTH	ND	END1	END2

REV.	DESCRIPTION	DATE	DRAWN	CHKD	APPD
	rev01 hc	2018-07-27			
		07-17-18			

SERVICE	RW
PIPE SPEC	
MAX PRESSURE	
MAX TEMPERATURE	
P&ID DWG	
INSULATION SPEC	
INSULATION THK	

PROJECT NAME: IQALUIT

TITLE: WASTE WATER TREATMENT PLANT

DRAWING NUMBER: SP-01-02

LINE NO:	AREA:	UNIT:	TYPE:
SP-01			

JOB NUMBER:	SCALE:	SHEET:	REV.
	N.T.S.	4 OF 4	0

Z:\PROJETS\P1039_ Iqaluit\7_Plans & devis\FABRICATION NORCLAIR\WSP_20180720\ISOMÉTRIQUES_hc_20180723\SP-01-2_rev01_hc.dwg

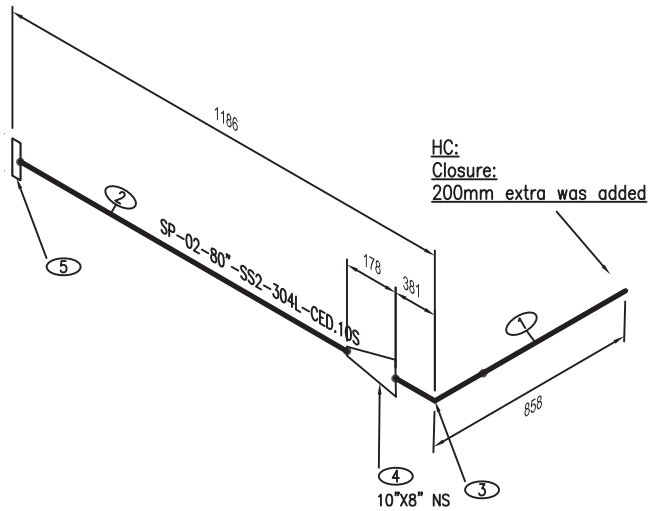

BILL OF MATERIALS

ID	QTY	ND	SCH/CLASS	DESCRIPTION
1	X.Xm	10"	10S	PIPE, WELDED, 10S, PE, ASTM A312
2	X.Xm	8"	10S	PIPE, WELDED, 10S, PE, ASTM A312
3	1	10"	STD	ELBOW 90 LR, 10S, BW, ASME B16.9
4	1	10" x 8"	STD	REDUCER (CONC), BW, ASME B16.9
5	1	8"	150	BACKING FLANGE WITH BUTT WELD ANGLE COLLARS, 150 LB, FF, ASME B16.5 GAL, STEEL
6	8	3/4" x 100	150	BOLT SET, FF, 150 LB, STUD BOLT
7	1	8"		GASKET

CUT PIECE LIST

ID	LENGTH	ND	END1	END2

REV.	DESCRIPTION	DATE	DRAWN	CHKD	APPD
	rev00 hc	2018-07-26			
		07-17-18			

SERVICE	RW
PIPE SPEC	
MAX PRESSURE	
MAX TEMPERATURE	
P&ID DWG	
INSULATION SPEC	
INSULATION THK	

PROJECT NAME: IQALUIT

TITLE: WASTE WATER TREATMENT PLANT

DRAWING NUMBER: SP-02

LINE NO:	AREA:	UNIT:	TYPE:
SP-02			

JOB NUMBER:	SCALE:	SHEET:	REV.
	N.T.S.	1 OF 1	0

Z:\PROJETS\P1039_Iqaluit\7_Plans & devis\FABRICATION NORCLAIR\WSP_20180720\ISOMÉTRIQUES_hc_20180723\SP-02_hc.dwg

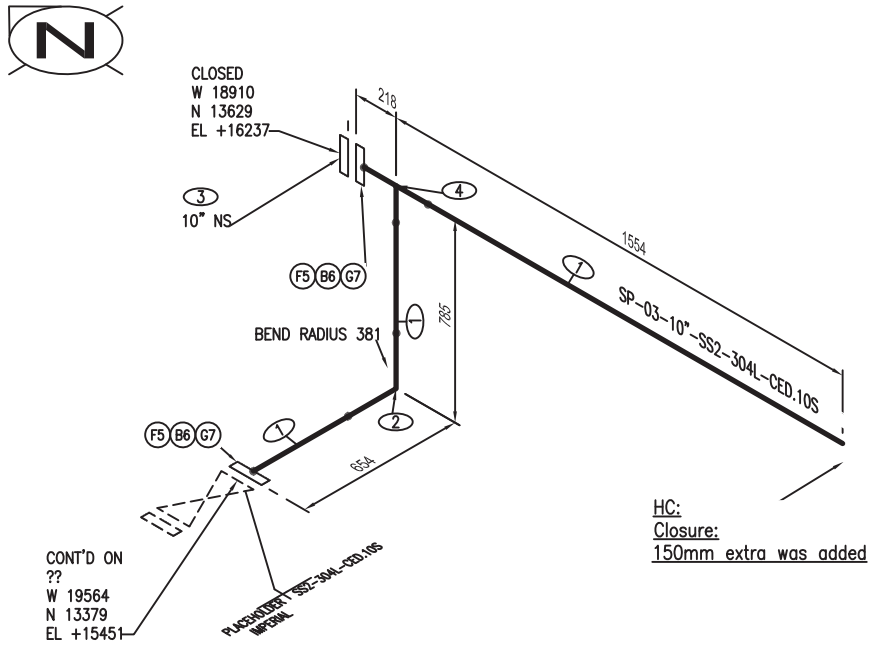

BILL OF MATERIALS

ID	QTY	ND	SCH/CLASS	DESCRIPTION
1	X.Xm	10"	10S	PIPE, WELDED, 10S, PE, ASTM A312
2	1	10"	STD	ELBOW 90 LR, 10S, BW, ASME B16.9
3	1	10"	150	FLANGE BLIND, 150 LB, FF, ASME B16.5 GALV. STEEL
4	1	10"		TEE, BW, ASME B16.9
5	2	10"	150	BACKING FLANGE WITH BUTT WELD ANGLE COLLARS, 150 LB, FF, ASME B16.5 GAL, STEEL
6	24	7/8"X115	150	BOLT SET, FF, 150 LB, STUD BOLT
7	2	10"		GASKET

CUT PIECE LIST

ID	LENGTH	ND	END1	END2

REV.	DESCRIPTION	DATE	DRAWN	CHKD	APPD
	rev00_hc	2018-07-26			
		07-17-18			

SERVICE	RW
PIPE SPEC	
MAX PRESSURE	
MAX TEMPERATURE	
P&ID DWG	
INSULATION SPEC	
INSULATION THK	

PROJECT NAME: IQALUIT

TITLE: WASTE WATER TREATMENT PLANT

DRAWING NUMBER: SP-03-1

LINE NO:	AREA:	UNIT:	TYPE:
SP-03-1			

JOB NUMBER:	SCALE:	SHEET:	REV.
	N.T.S.	1 OF 1	0

Z:\PROJETS\P1039_ Iqaluit\7_Plans & devis\FABRICATION NORCLAIR\WSP_20180720\ISOMÉTRIQUES_hc_20180723\SP-03-1_hc.dwg

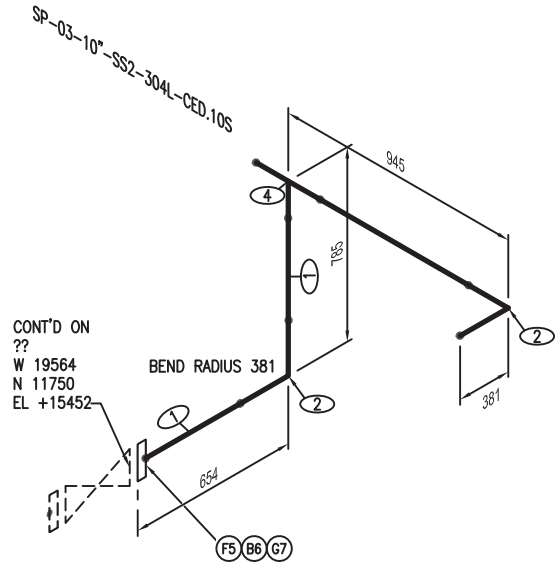

BILL OF MATERIALS

ID	QTY	ND	SCH/CLASS	DESCRIPTION
1	X.XM	10"	10S	PIPE, WELDED, 10S, PE, ASTM A312
2	2	10"	STD	ELBOW 90 LR, 10S, BW, ASME B16.9
3				
4	1	10"		TEE, BW, ASME B16.9
5	1	10"	150	BACKING FLANGE WITH BUTT WELD ANGLE COLLARS, 150 LB, FF, ASME B16.5 GAL, STEEL
6	12	7/8"X115	150	BOLT SET, FF, 150 LB, STUD BOLT
7	1	10"		GASKET

CUT PIECE LIST

ID	LENGTH	ND	END1	END2

REV.	DESCRIPTION	DATE	DRAWN	CHKD	APPD
	rev00_hc	2018-07-26			
		07-17-18			

SERVICE	RW
PIPE SPEC	
MAX PRESSURE	
MAX TEMPERATURE	
P&ID DWG	
INSULATION SPEC	
INSULATION THK	

PROJECT NAME: IQALUIT

TITLE: WASTE WATER TREATMENT PLANT

DRAWING NUMBER: SP-03-2

LINE NO:	AREA:	UNIT:	TYPE:	
SP-03-2				
JOB NUMBER:	SCALE:	SHEET:		REV.
	N.T.S.	1 OF 1		0

Z:\PROJETS\P1039_Iqaluit\7_Plans & devis\FABRICATION NORCLAIR\WSP_20180720\ISOMÉTRIQUES_hc_20180723\SP-03-2_hc.dwg

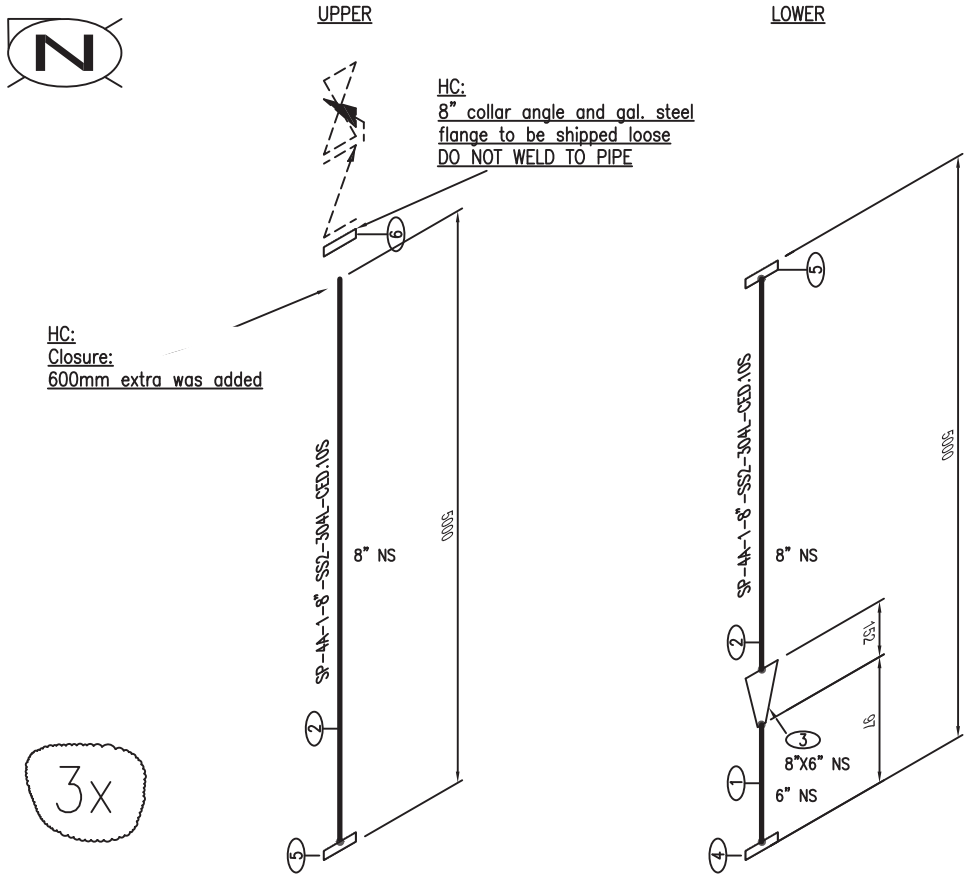

BILL OF MATERIALS

ID	QTY	ND	SCH/CLASS	DESCRIPTION
1	0.1M	6"	10S	PIPE, WELDED, 10S, PE, ASTM A312
2	8.9M	8"	10S	PIPE, WELDED, 10S, PE, ASTM A312
3	1	8"X6"		REDUCER (CONC), BW, ASME B16.9
4	1	6"	150	BACKING FLANGE WITH BUTT WELD ANGLE COLLARS, 150 LB, FF, ASME B16.5 SS 304
5	2	8"	150	BACKING FLANGE WITH BUTT WELD ANGLE COLLARS, 150 LB, FF, ASME B16.5 SS 304
6	1	8"	150	BACKING FLANGE WITH BUTT WELD ANGLE COLLARS, 150 LB, FF, ASME B16.5 GAL, STEEL
7	1	6"	150	GASKET
8	2	8"	150	GASKET
9	32	3/4"X100	150	BOLT SET, FF, 150 LB, STUD BOLT

CUT PIECE LIST

ID	LENGTH	ND	END1	END2

REV.	DESCRIPTION	DATE	DRAWN	CHKD	APPD
	rev00 hc	2018-07-26			
		07-17-18			

SERVICE	RW
PIPE SPEC	
MAX PRESSURE	
MAX TEMPERATURE	
P&ID DWG	
INSULATION SPEC	
INSULATION THK	

PROJECT NAME: IQALUIT

TITLE: WASTE WATER TREATMENT PLANT

DRAWING NUMBER: SP-4A, 4B & 4C

LINE NO:	AREA:	UNIT:	TYPE:
SP-4			

JOB NUMBER:	SCALE:	SHEET:	REV.
	N.T.S.	1 OF 1	0

Z:\PROJETS\P1039_Iqaluit\7_Plans & devis\FABRICATION NORCLAIR\WSP_20180720\ISOMÉTRIQUES_hc_20180723\SP-4ABC_hc.dwg

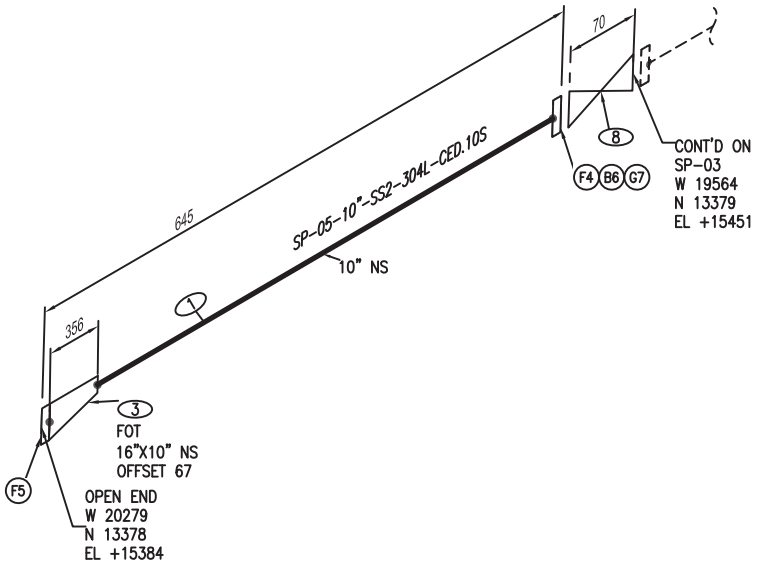

BILL OF MATERIALS

ID	QTY	ND	SCH/CLASS	DESCRIPTION
1	0.2M	10"	10S	PIPE, WELDED, 10S, PE, ASTM A312
2				
3	1	16"X10"		REDUCER (ECC), BW, ASME B16.9
4	1	10"	150	BACKING FLANGE WITH BUTT WELD ANGLE COLLARS, 150 LB, FF, ASME B16.5 GAL, STEEL
5	1	16"	150	BACKING FLANGE WITH BUTT WELD ANGLE COLLARS, 150 LB, FF, ASME B16.5 GALV, STEEL
6	12	7/8"X115	150	BOLT SET, FF, 150 LB, STUD BOLT
7	1	10"		GASKET
8	1	10"	150	KNIFE GATE VALVE, 150 LB, LUG

CUT PIECE LIST

ID	LENGTH	ND	END1	END2

REV.	DESCRIPTION	DATE	DRAWN	CHKD	APPD
	rev00 hc	2018-07-26			
		07-17-18			

SERVICE	RW
PIPE SPEC	
MAX PRESSURE	
MAX TEMPERATURE	
P&ID DWG	
INSULATION SPEC	
INSULATION THK	

PROJECT NAME: IQALUIT

TITLE: WASTE WATER TREATMENT PLANT

DRAWING NUMBER: SP-05A

LINE NO:	AREA:	UNIT:	TYPE:
SP-05A			

JOB NUMBER:	SCALE:	SHEET:	REV.
	N.T.S.	1 OF 1	0

Z:\PROJETS\P1039_ Iqaluit\7_Plans & devis\FABRICATION NORCLAIR\WSP_20180720\ISOMÉTRIQUES_hc_20180723\SP-5A_hc.dwg

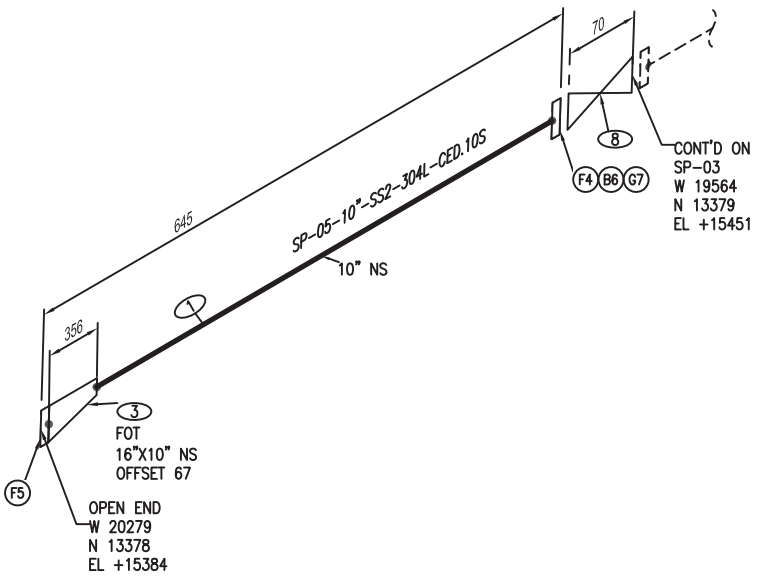

BILL OF MATERIALS

ID	QTY	ND	SCH/CLASS	DESCRIPTION
1	0.2M	10"	10S	PIPE, WELDED, 10S, PE, ASTM A312
2				
3	1	16"X10"		REDUCER (ECC), BW, ASME B16.9
4	1	10"	150	BACKING FLANGE WITH BUTT WELD ANGLE COLLARS, 150 LB, FF, ASME B16.5 GAL, STEEL
5	1	16"	150	BACKING FLANGE WITH BUTT WELD ANGLE COLLARS, 150 LB, FF, ASME B16.5 GALV, STEEL
6	12	7/8"X115	150	BOLT SET, FF, 150 LB, STUD BOLT
7	1	10"		GASKET
8	1	10"	150	KNIFE GATE VALVE, 150 LB, LUG

CUT PIECE LIST

ID	LENGTH	ND	END1	END2

REV.	DESCRIPTION	DATE	DRAWN	CHKD	APPD
	rev00 hc	2018-07-26			
		07-17-18			

SERVICE	RW
PIPE SPEC	
MAX PRESSURE	
MAX TEMPERATURE	
P&ID DWG	
INSULATION SPEC	
INSULATION THK	

PROJECT NAME: IQALUIT

TITLE: WASTE WATER TREATMENT PLANT

DRAWING NUMBER: SP-05B

LINE NO:	AREA:	UNIT:	TYPE:
SP-05B			

JOB NUMBER:	SCALE:	SHEET:	REV.
	N.T.S.	1 OF 1	0

Z:\PROJETS\P1039_ Iqaluit\7_Plans & devis\FABRICATION NORCLAIR\WSP_20180720\ISOMÉTRIQUES_hc_20180723\SP-5B_hc.dwg

REVIEWED BY CONTRACTOR
Kudlik Construction Ltd.
NAME: Sandra Rousseau P.Eng
DATE: Aoû 07, 2018

NORCLAIR
MÉCANIQUE DE PROCÉDÉ

SHOP DRAWINGS

DA-MP-28R2 (Screens discharge chute detail 15) **Date :** 2018-08-07

Information general	
Project : **WWTP UPGRADE - IQALUIT**	
Client : Kudlik Construction Ltd. To : Sandra Rousseau P.Eng., Project Manager	Project number : **2018-062** E-mail : srousseau@kudlik.biz
Contractor : **Norclair inc.**	Project number Norclair : **P1039**
Address : 1100, Montée Masson, Laval, QC, Canada H7E 4P2	
Project Manager : Dominic Papineau, Project Manager	E-mail: dpapineau@norclair.ca
Phone : 450-688-4012 # 720	Cell. : 514-409-1832

Information, subcontractor or supplier	
Sub/supplier : Norclair	
Contact :	Phone :

Information on the equipment	
Speciality : **Process**	
Equipment : Screens discharge chute detail 15	
Drawing reference : P513	
Specification reference : **40 05 13** (Page xx / xx)	Division :
Article :	Number of pages :

CONSULTANT APPROVAL

Lengths of spools are not being revised. Contractor to review in detail and ensure all lengths meet contract requirements.

STANTEC PROJECT #: 110126045

SUBMITTAL # DA-MP-28R2 Screen Discharge Chute Detail 15

This review by Stantec is for general conformance with the design concept of Stantec's design of the:

☑ Process ☐ Electrical
☐ Structural ☐ Other
☐ Mechanical

component(s) only and does not mean that Stantec has verified or approves the shop drawing(s). The Contractor remains solely responsible for the shop drawing(s) and this review by Stantec does not relieve the Contractor of the Contractor's responsibility for errors or omissions in the shop drawing(s) or for meeting all requirements of the contract documents. This review does not mean that Stantec approves the detailed design inherent in the shop drawing, responsibility for which shall remain with the Contractor submitting same, nor does this review mean that Stantec accepts any deviation of the shop drawing(s) from the contract documents. The Contractor is responsible for confirming all dimensions and correlating them at the job site, for all construction means, methods and techniques, and for coordination of construction work of all trades, including coordination of all shop drawings.

Stantec

☑ REVIEWED
☐ REVIEWED, AS NOTED
☐ REVISE AND RESUBMIT
☐ NOT REVIEWED

DATE August 7, 2018

BY Alejandro Rojas, P.Eng

1100, montée Masson
Laval, QC, Canada
H7E 4P2

Phone. : 450-688-4012
Fax : 450-661-6341
E-Mail : info@norclair.ca
www.norclair.ca

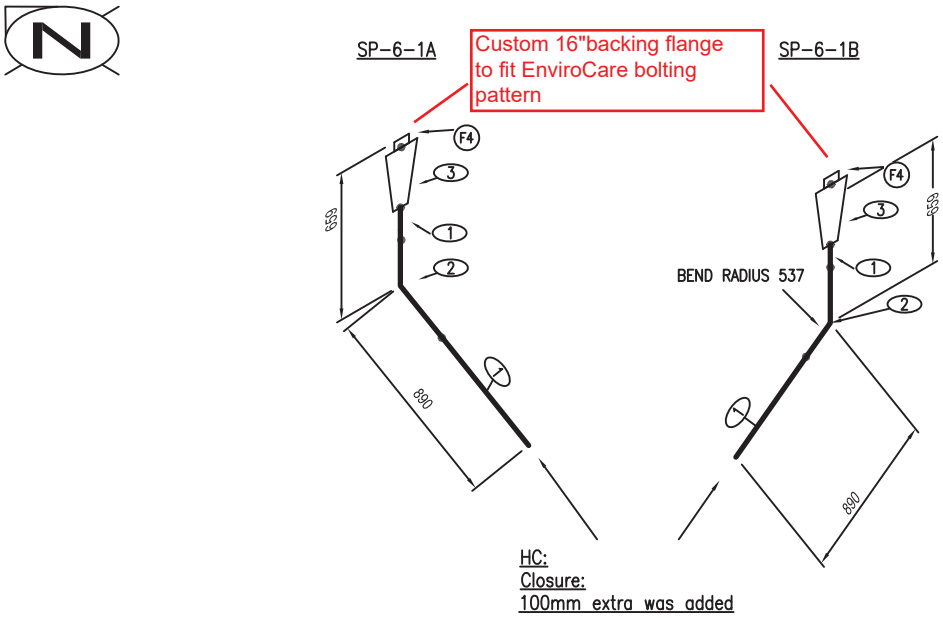

BILL OF MATERIALS

ID	QTY	ND	SCH/CLASS	DESCRIPTION
1	X.XM	14"	10S	PIPE, WELDED, 10S, PE, ASTM A312, SS316L
2	2	14"	STD	ELBOW 45 LR, SCH STD, BW, ASME B16.9, SS316L
3	2	16x14"		REDUCER (CONC), SS316L
4	2	16"	150	GALV BACKING FLANGE WITH SS316L BUTT WELD ANGLE COLLARS, 150 LB, FF, ASME B16.5 FLANGE SO, 150 LB, FF, ASME B16.5
5				

CUT PIECE LIST

ID	LENGTH	ND	END1	END2

REV.	DESCRIPTION	DATE	DRAWN	CHKD	APPD
	rev02_hc	2018-08-07			
		07-19-18			

SERVICE	RW
PIPE SPEC	
MAX PRESSURE	
MAX TEMPERATURE	
P&ID DWG	
INSULATION SPEC	
INSULATION THK	

PROJECT NAME: IQALUIT

TITLE: WASTE WATER TREATMENT PLANT

DRAWING NUMBER: SP-6-1A & B

LINE NO:	AREA:	UNIT:	TYPE:
SP-6			

JOB NUMBER:	SCALE:	SHEET:	REV.
	N.T.S.	1 OF 3	0

Z:\PROJETS\P1039_ Iqaluit\7_Plans & devis\FABRICATION NORCLAIR\WSP_20180720\ISOMÉTRIQUES_hc_20180723\SP-6-1ABrev02_hc.dwg



DETAIL 3

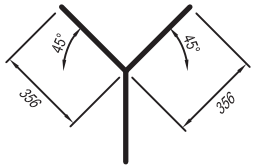

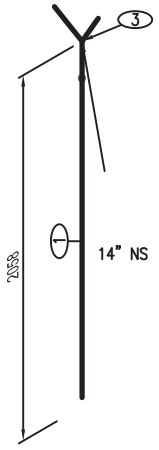

F4 OPEN END
W 22632
N 12563
EL +13182

HC: COLLAR AND FLANGE SHIPPED LOOSE AND WELDED ON SITE

BILL OF MATERIALS

ID	QTY	ND	SCH/CLASS	DESCRIPTION
1	3.7M	14"	10S	PIPE, WELDED, 10S, PE, ASTM A312, SS316L
3	1	14"		CP METRIC WYE, SS316L
4	1	14"	150	GALV BACKING FLANGE WITH SS316L BUTT WELD ANGLE COLLARS, 150 LB, FF, ASME B16.5 FLANGE SO, 150 LB, FF, ASME B16.5

CUT PIECE LIST

ID	LENGTH	ND	END1	END2

REV.	DESCRIPTION	DATE	DRAWN	CHKD	APPD
	rev02_hc	2018-08-07			
		07-19-18			

SERVICE	RW
PIPE SPEC	
MAX PRESSURE	
MAX TEMPERATURE	
P&ID DWG	
INSULATION SPEC	
INSULATION THK	

PROJECT NAME: IQALUIT

TITLE: WASTE WATER TREATMENT PLANT

DRAWING NUMBER: SP-6-2

LINE NO:	AREA:	UNIT:	TYPE:
SP-6			

JOB NUMBER:	SCALE:	SHEET:	REV.
	N.T.S.	1 OF 3	0

Z:\PROJETS\P1039_Iqaluit\7_Plans & devis\FABRICATION NORCLAIR\WSP_20180720\ISOMÉTRIQUES_hc_20180723\SP-6-2rev01_hc.dwg

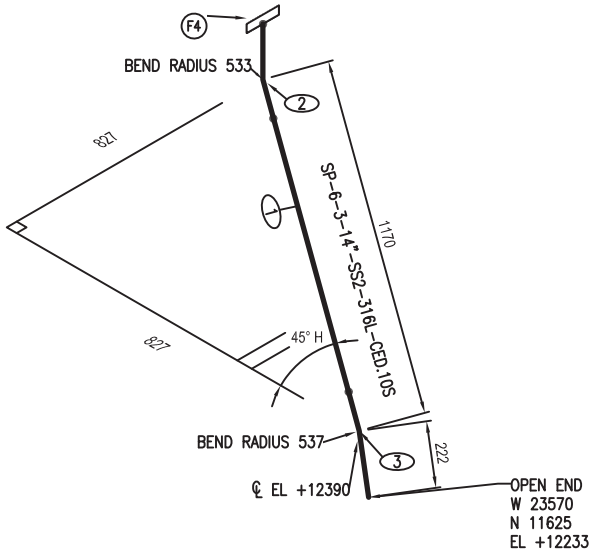

BILL OF MATERIALS

ID	QTY	ND	SCH/CLASS	DESCRIPTION
1	0.6M	14"	10S	PIPE, WELDED, 10S, PE, ASTM A312, SS316L
2	1	14"	STD	ELBOW 90 LR, SCH 10S, BW, ASME B16.9, SS316L
3	1	14"	STD	ELBOW 45 LR, SCH 10S, BW, ASME B16.9, SS316L
4	1	14"	150	BACKING FLANGE WITH SS316L BUTT WELD ANGLE COLLARS, 150 LB, FF, ASME B16.5 GALV. STEEL

CUT PIECE LIST

ID	LENGTH	ND	END1	END2

REV.	DESCRIPTION	DATE	DRAWN	CHKD	APPD
	rev02_hc	2018-08-07			
		07-19-18			

SERVICE	RW
PIPE SPEC	
MAX PRESSURE	
MAX TEMPERATURE	
P&ID DWG	
INSULATION SPEC	
INSULATION THK	

PROJECT NAME: IQALUIT

TITLE: WASTE WATER TREATMENT PLANT

DRAWING NUMBER: SP-6-3

LINE NO:	AREA:	UNIT:	TYPE:
SP-6			

JOB NUMBER:	SCALE:	SHEET:	REV.
	N.T.S.	3 OF 3	0

Z:\PROJETS\P1039_ Iqaluit\7_Plans & devis\FABRICATION NORCLAIR\WSP_20180720\ISOMÉTRIQUES_hc_20180723\SP-6-3rev01_hc.dwg

Q:\Projects-EC Active\WEC217259Z Iqaluit\7 Product Drawings\Submittal Drawings\WEC217259Z REV F DRAFT

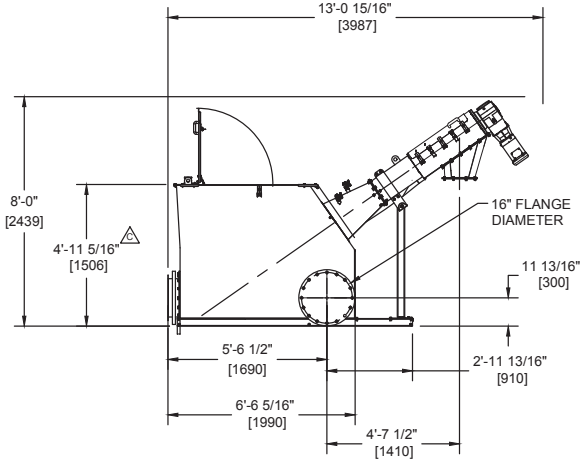

SIDE VIEW

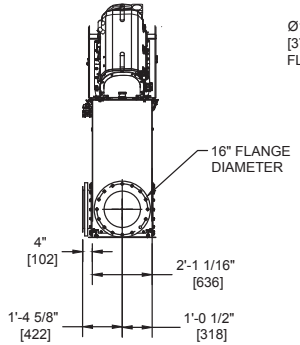

FRONT VIEW

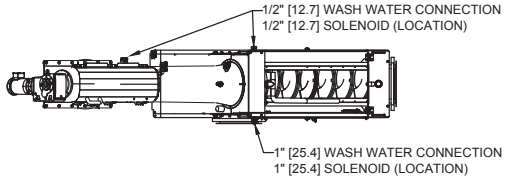

TOP VIEW

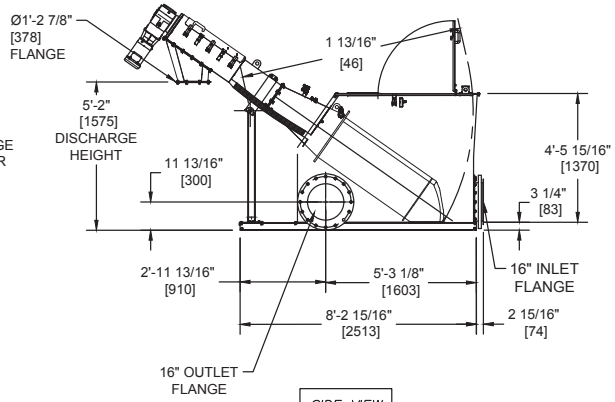

SIDE VIEW

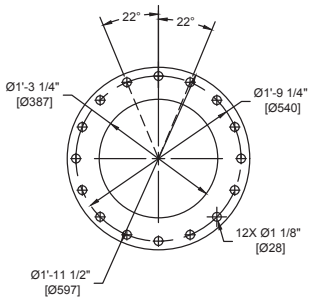

16" [406] FLANGE CONNECTION
SCALE: 3/4" = 1'-0"

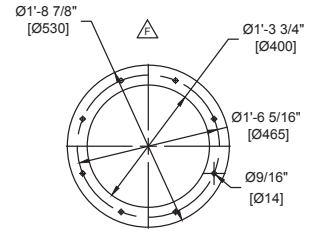

20.87" [530] DISCHARGE FLANGE
SCALE: 3/4" = 1'-0"

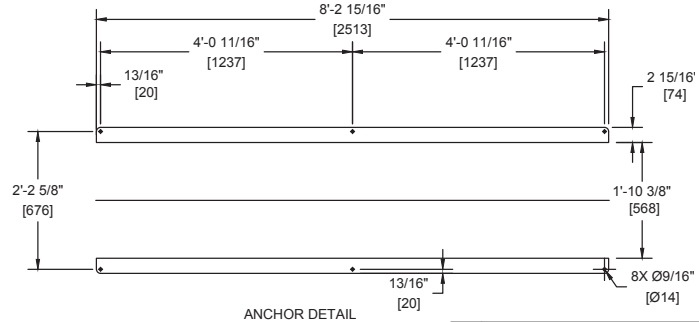

ANCHOR DETAIL
SCALE: 1/2" = 1' -0"
(BOTH SCREENS)

Rev	Revision Description	Date	Rev By	Approver
F	CORRECTED DSCHG FLNG DIMS, ADDED DIMS TO INLET/OUTLET FLANGE C/L	07/26/2018	EV29	SO12
E	REVISED DISCHARGE FLANGE DIMENSIONS	06/22/2018	EV29	SE33
D	UPDATED DRAWING TO REFLECT BOM REDUCER & MOTOR	06/18/2018	EV29	SE33
C	SHEETS 3 & 4, 1370mm WAS 1297mm PER CUSTOMER REQUEST	05/02/2018	EV29	SE33
B	ADDED DIM'S SHEETS 3 & 4, PER CUSTOMER REQUEST	04/16/2018	EV29	SE33
A	ADDED DIM'S SHTS 3 & 4 PER CUSTOMER REQUEST	04/06/2018	EV29	SE33

Enviro-Care
A WAMGROUP® Company

PROPERTY OF ENVIRO-CARE COMPANY. ALL RIGHTS RESERVED. NO PART OF THIS DRAWING MAY BE REPRODUCED IN ANY FORM WITHOUT WRITTEN PERMISSION FROM ENVIRO-CARE. ENVIRO-CARE COMPANY RESERVES THE RIGHT TO ALTER DATA OR THE DESIGN OF ITS EQUIPMENT AT ANY TIME WITHOUT PRIOR NOTICE AND WITHOUT ANY OBLIGATION WHATSOEVER.

Status: FOR APPROVAL

Title
IQALUIT WWTP
MODEL: GCPC600-LC3500 SPECO SCREW SCREEN IN A TANK

Designer	Checker	Date	Sheet
EV29	SE33	03-12-2018	3 of 5

Third Angle Projection

Drawing Number: WEC217259Z

Revision: F

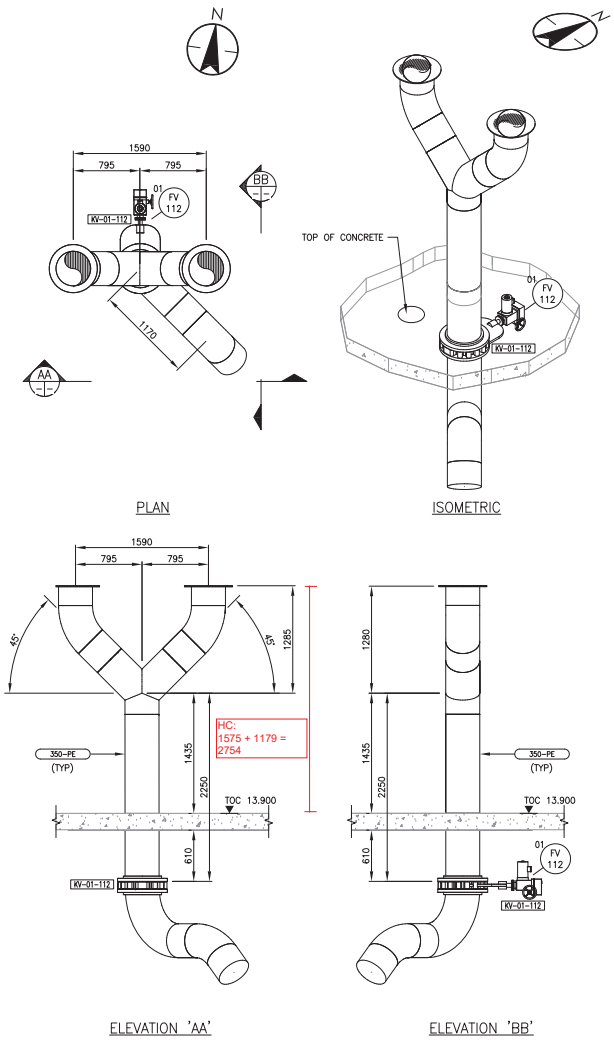

SCREENING DISCHARGE PIPE FROM FINE SCREENS

* SEE DWG P501/P502/P505

15 DETAIL
NO SCALE

** NOTE
PROVIDE PIPE MADE FROM 316L STAINLESS STEEL (SS1)
REFER TO TECHNICAL SPECIFICATIONS DIVISION #40

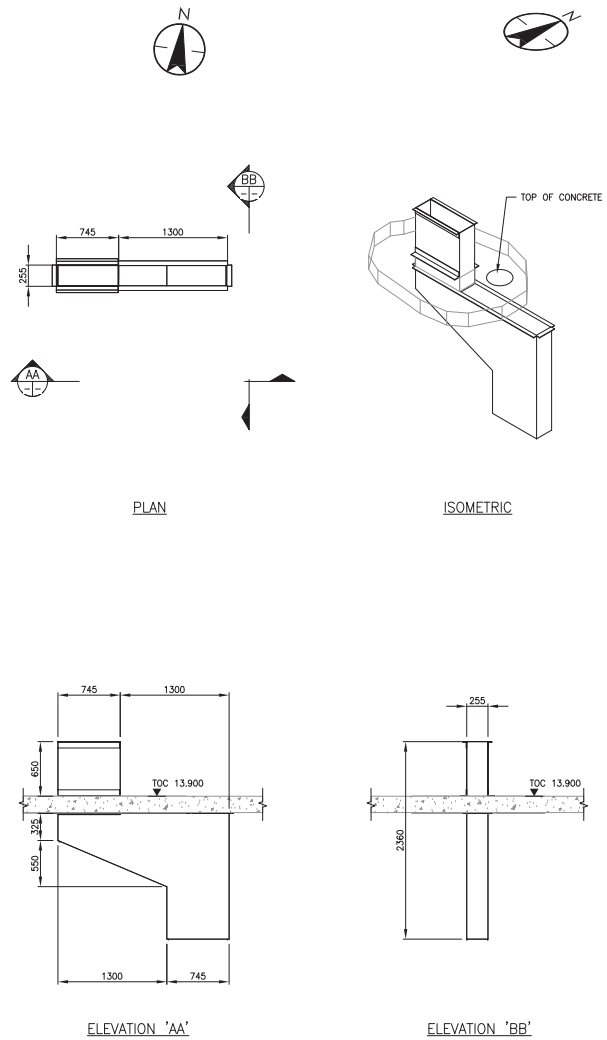

DEWATERING PRIMARY SLUDGE DISCHARGE CHUTE FROM PRIMARY FILTERS

* SEE DWG P501/P502/P505

16 DETAIL
NO SCALE

** NOTE
PROVIDE CHUTE MADE FROM 316L STAINLESS STEEL (SS1)
REFER TO TECHNICAL SPECIFICATIONS DIVISION #40

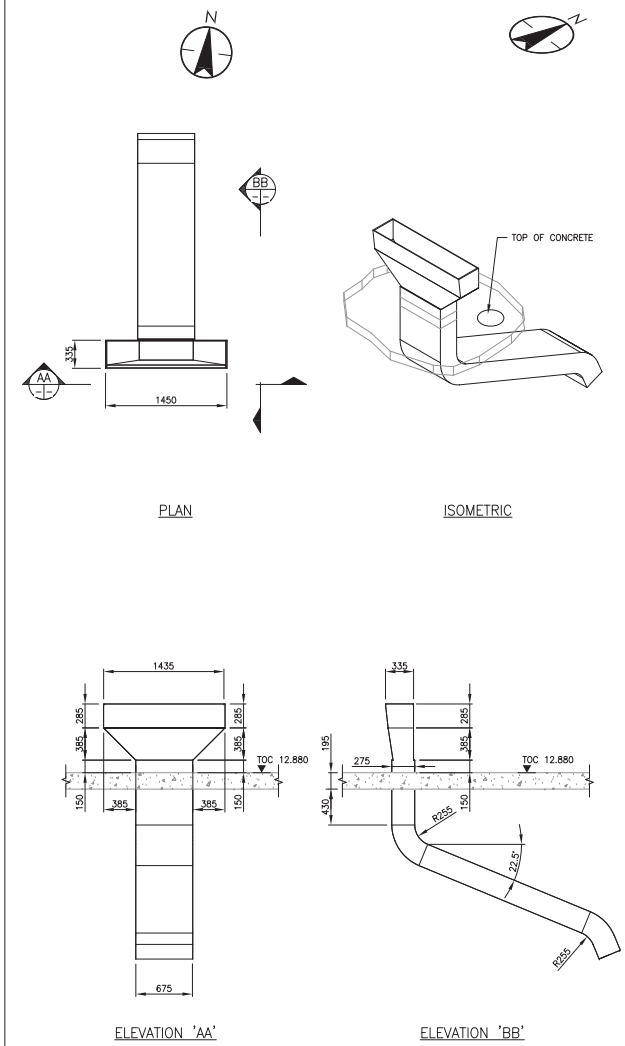

SECONDARY SLUDGE CHUTE FROM BELT FILTER PRESS

* SEE DWG P506

17 DETAIL
NO SCALE

** NOTE
PROVIDE CHUTE MADE FROM 316L STAINLESS STEEL (SS1)
REFER TO TECHNICAL SPECIFICATIONS DIVISION #40

Revision	By	Appd.	YY.MM.DD
1 ISSUED FOR CONSTRUCTION	TR	AR	18.05.23
0 ISSUED FOR BID	TR	AR	18.04.09
Issued	By	Appd.	YY.MM.DD

Consultants

Permit-Seal

PERMIT TO PRACTICE
NUNAMI STANTEC LTD.
Signature
Date 9 April 2018
PERMIT NUMBER: P 1117
NT/NU Association of Professional Engineers and Geoscientists
110126045

REGISTERED PROFESSIONAL ENGINEER
A. ROJAS
LICENSEE
NT / NU

NUNAMI
STANTEC LIMITED

1088C Noble House
Iqaluit NU
www.stantec.com

The Contractor shall verify and be responsible for all dimensions. DO NOT scale the drawing - any errors or omissions shall be reported to Stantec without delay.
The Copyrights to all designs and drawings are the property of Stantec. Reproduction or use for any purpose other than that authorized by Stantec is forbidden.

Client/Project
Iqaluit
IQALUIT WASTEWATER TREATMENT PLANT UPGRADE
City of Iqaluit, Nunavut

File Name: P513 | Ttrl | Dwn. | Chkd. | Dsgn. | 2017.10.03 YY.MM.DD

Title
PROCESS
SOLIDS DISCHARGE - PIPES AND CHUTES
DETAILS

Project No. 110126045
Scale NO SCALE
Drawing No. P513
Sheet of
Revision 0

ORIGINAL SHEET - ISO A1

V:\1107\active\110126045\drawings\04-process\current\P513.dwg
2018/05/22 8:39 AM By: RoNi, Thomas

REVIEWED BY CONTRACTOR
Kudlik Construction Ltd.
NAME: Sandra Rousseau P.Eng
DATE: Oct 18, 2018

NORCLAIR
MÉCANIQUE DE PROCÉDÉ

SHOP DRAWINGS

DA-MP-29R1 (Primary to MBBR process piping) **Date :** 2018-10-18

Information general	
Project : **WWTP UPGRADE - IQALUIT**	
Client : Kudlik Construction Ltd. To : Sandra Rousseau P.Eng., Project Manager	Project number : **2018-062** E-mail : srousseau@kudlik.biz
Contractor : **Norclair inc.**	Project number Norclair : **P1039**
Address : 1100, Montée Masson, Laval, QC, Canada H7E 4P2	
Project Manager : Dominic Papineau, Project Manager	E-mail: dpapineau@norclair.ca
Phone : 450-688-4012 # 720	Cell. : 514-409-1832

Information, subcontractor or supplier	
Sub/supplier : Norclair	
Contact :	Phone :

Information on the equipment	
Speciality : **Process**	
Equipment : Primary to MBBR process piping	
Drawing reference :	
Specification reference : **40 05 13** (Page xx / xx)	Division :
Article :	Number of pages : 6

CONSULTANT APPROVAL

LENGHTS OF SPOOLS ARE NOT BEING REVISED.
CONTRACTOR TO REVIEW IN DETAIL AND ENSURE ALL LENTGHTS MEET CONTRACT REQUIREMENTS.

STANTEC PROJECT #: 110126045

SUBMITTAL # DA-MP-29R1 PRIMARY TO MBBR PROCESS PIPING

This review by Stantec is for general conformance with the design concept of Stantec's design of the:

- [x] Process
- [ ] Structural
- [ ] Mechanical
- [ ] Electrical
- [ ] Other

component(s) only and does not mean that Stantec has verified or approves the shop drawing(s). The Contractor remains solely responsible for the shop drawing(s) and this review by Stantec does not relieve the Contractor of the Contractor's responsibility for errors or omissions in the shop drawing(s) or for meeting all requirements of the contract documents. This review does not mean that Stantec approves the detailed design inherent in the shop drawing, responsibility for which shall remain with the Contractor submitting same, nor does this review mean that Stantec accepts any deviation of the shop drawing(s) from the contract documents. The Contractor is responsible for confirming all dimensions and correlating them at the job site, for all construction means, methods and techniques, and for coordination of construction work of all trades, including coordination of all shop drawings.

Stantec

- [x] REVIEWED
- [ ] REVIEWED, AS NOTED
- [ ] REVISE AND RESUBMIT
- [ ] NOT REVIEWED

DATE Oct 25, 2018

BY Alejandro Rojas, P.Eng

1100, montée Masson
Laval, QC, Canada
H7E 4P2

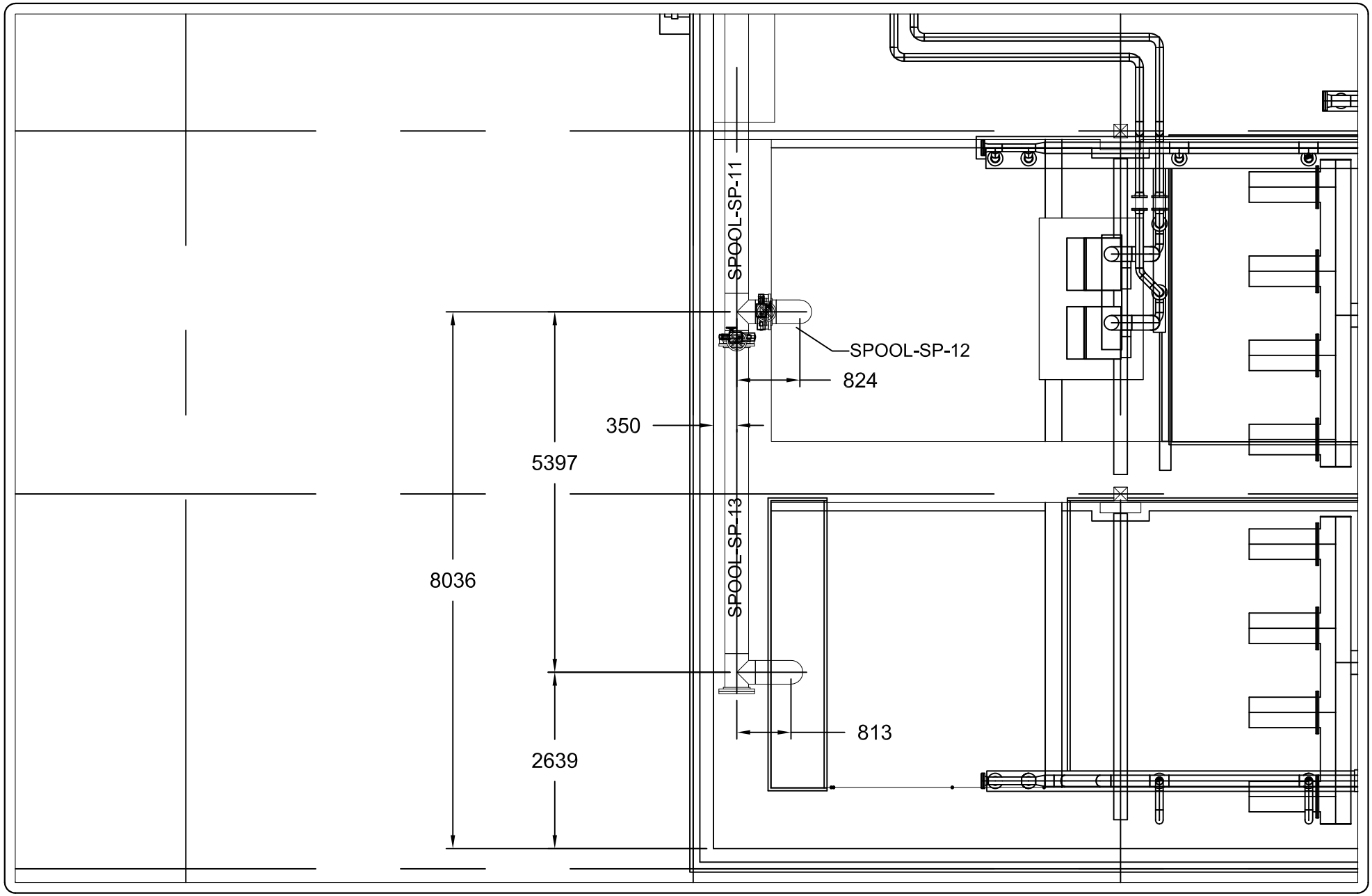

RÉVISION:		NOTES:	CLIENT:		
ISSUED FOR APPROVAL	07/2018			NORCLAIR MÉCANIQUE DE PROCÉDÉ	IQALUIT WWTP PRIMARY TO MBBR PIPING
				DATE: July 2018	SCALE: NTS
				DRAWN BY: S.L.	NORCLAIR: P-1039
				CHECKED BY: H.C.	DRAWING: P-004

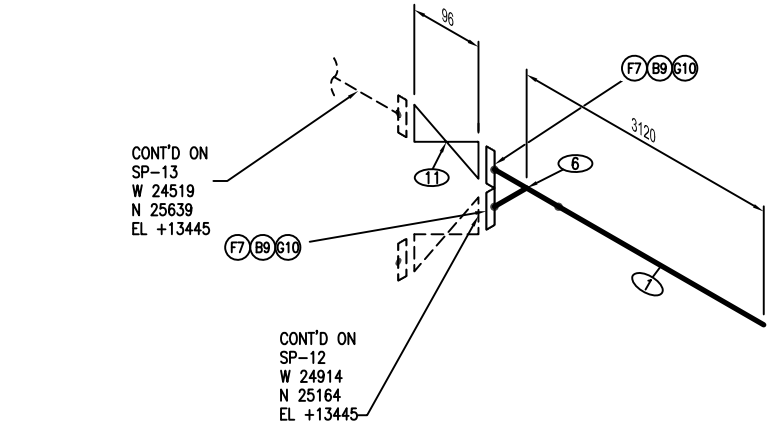

BILL OF MATERIALS

ID	QTY	ND	SCH/CLASS	DESCRIPTION
1	3.0M	14"	10S	PIPE, WELDED, 10S, PE, ASTM A312
6	1	14"		TEE, BW, ASME B16.9
7	1	14"	150	BACKING FLANGE WITH BUTT WELD ANGLE COLLARS, 150 LB, FF, ASME B16.5 GAL, STEEL
9	24	1"X134	150	BOLT SET, RF, 150 LB, STUD BOLT
10	2	14"	150	GASKET
11	1	14"	150	KNIFE GATE VALVE, 150 LB

CUT PIECE LIST

ID	LENGTH	ND	END1	END2

REV.	DESCRIPTION	DATE	DRAWN	CHKD	APPD
		07-18-18			

SERVICE	RW
PIPE SPEC	
MAX PRESSURE	
MAX TEMPERATURE	
P&ID DWG	
INSULATION SPEC	
INSULATION THK	

PROJECT NAME: IQALUIT

TITLE: WASTE WATER TREATMENT PLANT

DRAWING NUMBER: SP-11

LINE NO:	AREA:	UNIT:	TYPE:
SP-11			

JOB NUMBER:	SCALE:	SHEET:	REV.
	N.T.S.	1 OF 1	0

Z:\PROJETS\P1039_ Iqaluit\7_Plans & devis\FABRICATION NORCLAIR\WSP_20180720\ISOMÉTRIQUES_hc_20180723\SP-11_hc.dwg

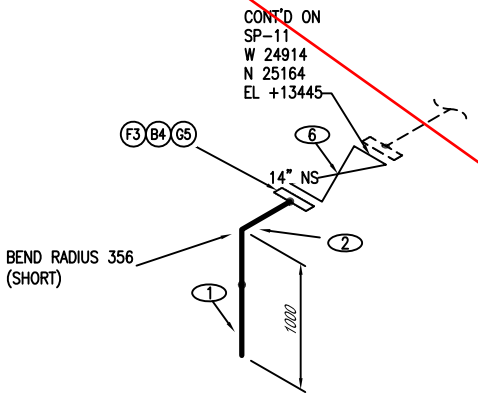

BILL OF MATERIALS

ID	QTY	ND	SCH/CLASS	DESCRIPTION
1	0.7M	14"	10S	PIPE, WELDED, 10S, PE, ASTM A312
2	1	14"	30	ELBOW 90 SR (SHORT), SCH 10, BW, ASME B16.9-T2
3	1	14"	150	BACKING FLANGE WITH BUTT WELD ANGLE COLLARS, 150 LB, FF, ASME B16.5 GAL, STEEL
4	12	1"X134	150	BOLT SET, RF, 150 LB, STUD BOLT
5	1	14"	150	GASKET
6	1	14"	150	KNIFE GATE VALVE, 150 LB

CUT PIECE LIST

ID	LENGTH	ND	END1	END2

REV.	DESCRIPTION	DATE	DRAWN	CHKD	APPD
		07-18-18			

SERVICE	RW
PIPE SPEC	
MAX PRESSURE	
MAX TEMPERATURE	
P&ID DWG	
INSULATION SPEC	
INSULATION THK	

PROJECT NAME: IQALUIT

TITLE: WASTE WATER TREATMENT PLANT

DRAWING NUMBER: SP-12

LINE NO:	AREA:	UNIT:	TYPE:
SP-12			

JOB NUMBER:	SCALE:	SHEET:	REV.
	N.T.S.	1 OF 1	0

Z:\PROJETS\P1039_Iqaluit\7_Plans & devis\FABRICATION NORCLAIR\WSP_20180720\ISOMÉTRIQUES_hc_20180723\SP-12_hc.dwg

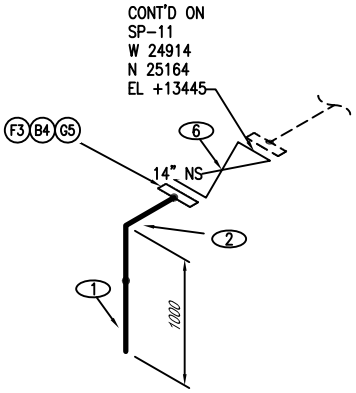

BILL OF MATERIALS

ID	QTY	ND	SCH/CLASS	DESCRIPTION
1	0.7M	14"	10S	PIPE, WELDED, 10S, PE, ASTM A312
2	1	14"	30	ELBOW 90 LR, SCH STD, BW, ASME B16.9
3	1	14"	150	BACKING FLANGE WITH BUTT WELD ANGLE COLLARS, 150 LB, FF, ASME B16.5 GAL, STEEL
4	12	1"X134	150	BOLT SET, RF, 150 LB, STUD BOLT
5	1	14"	150	GASKET
6	1	14"	150	KNIFE GATE VALVE, 150 LB

CUT PIECE LIST

ID	LENGTH	ND	END1	END2

REV.	DESCRIPTION	DATE	DRAWN	CHKD	APPD
	rev01 hc	2018-10-18			
		07-18-18			

SERVICE	RW
PIPE SPEC	
MAX PRESSURE	
MAX TEMPERATURE	
P&ID DWG	
INSULATION SPEC	
INSULATION THK	

PROJECT NAME: IQALUIT

TITLE: WASTE WATER TREATMENT PLANT

DRAWING NUMBER: SP-12

LINE NO:	AREA:	UNIT:	TYPE:
SP-12			

JOB NUMBER:	SCALE:	SHEET:	REV.
	N.T.S.	1 OF 1	0

Z:\PROJETS\P1039_ Iqaluit\19_ Chantier\FABRICATION NORCLAIR\Dessins HCI\ISOMÉTRIQUES_hc_20180723\SP-12rev01_hc.dwg

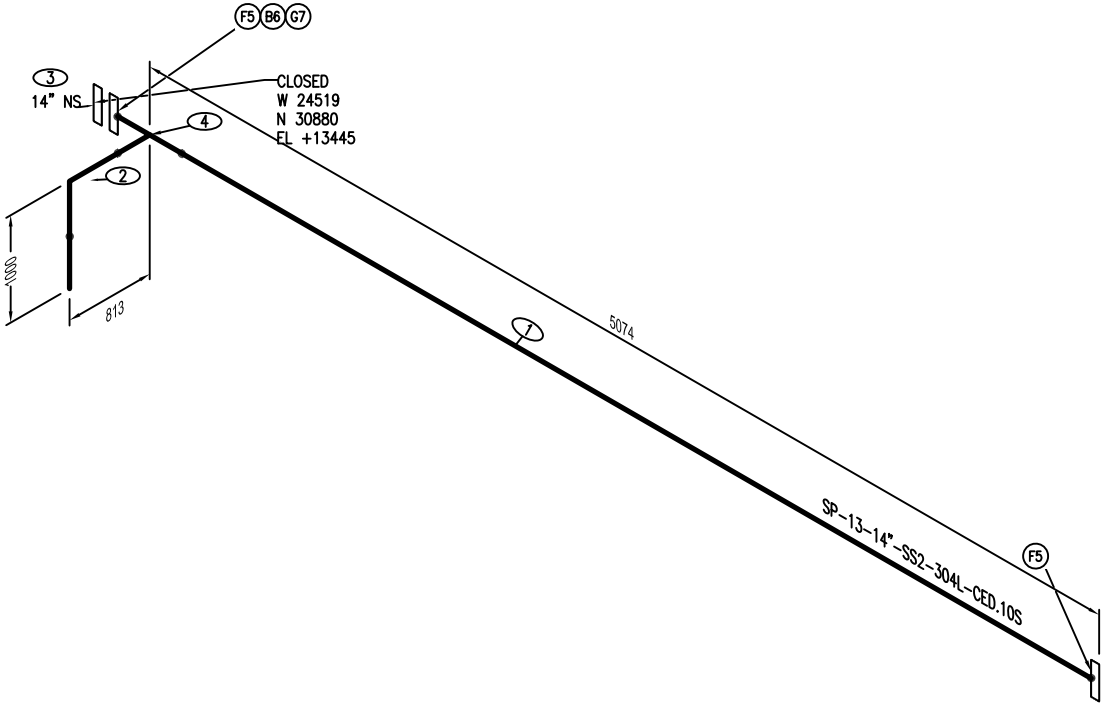

BILL OF MATERIALS

ID	QTY	ND	SCH/CLASS	DESCRIPTION
1	5.0M	14"	10S	PIPE, WELDED, 10S, PE, ASTM A312
2	1	14"	STD	ELBOW 90 LR, SCH STD, BW, ASME B16.9
3	1	14"	150	FLANGE BLIND, 150 LB, FF, ASME B16.5 GALV. STEEL
4	1	14"		TEE, BW, ASME B16.9
5	2	14"	150	BACKING FLANGE WITH BUTT WELD ANGLE COLLARS, 150 LB, FF, ASME B16.5 GALV. STEEL
6	12	1"X134	150	BOLT SET, FF, 150 LB, STUD BOLT
7	1	14"		GASKET

CUT PIECE LIST

ID	LENGTH	ND	END1	END2

REV.	DESCRIPTION	DATE	DRAWN	CHKD	APPD
		07-18-18			

SERVICE	RW
PIPE SPEC	
MAX PRESSURE	
MAX TEMPERATURE	
P&ID DWG	
INSULATION SPEC	
INSULATION THK	

PROJECT NAME: IQALUIT

TITLE: WASTE WATER TREATMENT PLANT

DRAWING NUMBER: SP-13

LINE NO:	AREA:	UNIT:	TYPE:
SP-13			

JOB NUMBER:	SCALE:	SHEET:	REV.
	N.T.S.	1 OF 1	0

Z:\PROJETS\P1039_Iqaluit\7_Plans & devis\FABRICATION NORCLAIR\WSP_20180720\ISOMÉTRIQUES_hc_20180723\SP-13_hc.dwg

REVIEWED BY CONTRACTOR

Kudlik Construction Ltd.

NAME: Sandra Rousseau P.Eng

DATE: Jul 27, 2018

NORCLAIR
MÉCANIQUE DE PROCÉDÉ

SHOP DRAWINGS

DA-MP-30 (Primary process piping SP07@09) **Date :** 2018-07-27

Information general	
Project : **WWTP UPGRADE - IQALUIT**	
Client : Kudlik Construction Ltd. To : Sandra Rousseau P.Eng., Project Manager	Project number : **2018-062** E-mail : srousseau@kudlik.biz
Contractor : **Norclair inc.**	Project number Norclair : **P1039**
Address : 1100, Montée Masson, Laval, QC, Canada H7E 4P2	
Project Manager : Dominic Papineau, Project Manager	E-mail: dpapineau@norclair.ca
Phone : 450-688-4012 # 720	Cell. : 514-409-1832

Information, subcontractor or supplier	
Sub/supplier : Norclair	
Contact :	Phone :

Information on the equipment	
Speciality : **Process**	
Equipment : Primary process piping SP07@09	
Drawing reference :	
Specification reference : **40 05 13** (Page xx / xx)	Division :
Article :	Number of pages : 5

CONSULTANT APPROVAL

Lengths of spools are not being revised. Contractor to review in detail and ensure all lengths meet contract requirements.

STANTEC PROJECT #: 110126045

SUBMITTAL # DA-MP-30 Primary Process Piping SP07/09

This review by Stantec is for general conformance with the design concept of Stantec's design of the:

☑ Process ☐ Electrical
☐ Structural ☐ Other
☐ Mechanical

component(s) only and does not mean that Stantec has verified or approves the shop drawing(s). The Contractor remains solely responsible for the shop drawing(s) and this review by Stantec does not relieve the Contractor of the Contractor's responsibility for errors or omissions in the shop drawing(s) or for meeting all requirements of the contract documents. This review does not mean that Stantec approves the detailed design inherent in the shop drawing, responsibility for which shall remain with the Contractor submitting same, nor does this review mean that Stantec accepts any deviation of the shop drawing(s) from the contract documents. The Contractor is responsible for confirming all dimensions and correlating them at the job site, for all construction means, methods and techniques, and for coordination of construction work of all trades, including coordination of all shop drawings.

Stantec

☑ REVIEWED

☐ REVIEWED, AS NOTED

☐ REVISE AND RESUBMIT

☐ NOT REVIEWED

DATE July 27, 2018

BY Alejandro Rojas, P.Eng

1100, montée Masson
Laval, QC, Canada
H7E 4P2

Phone. : 450-688-4012
Fax : 450-661-6341
E-Mail : info@norclair.ca
www.norclair.ca

PLAN VIEW

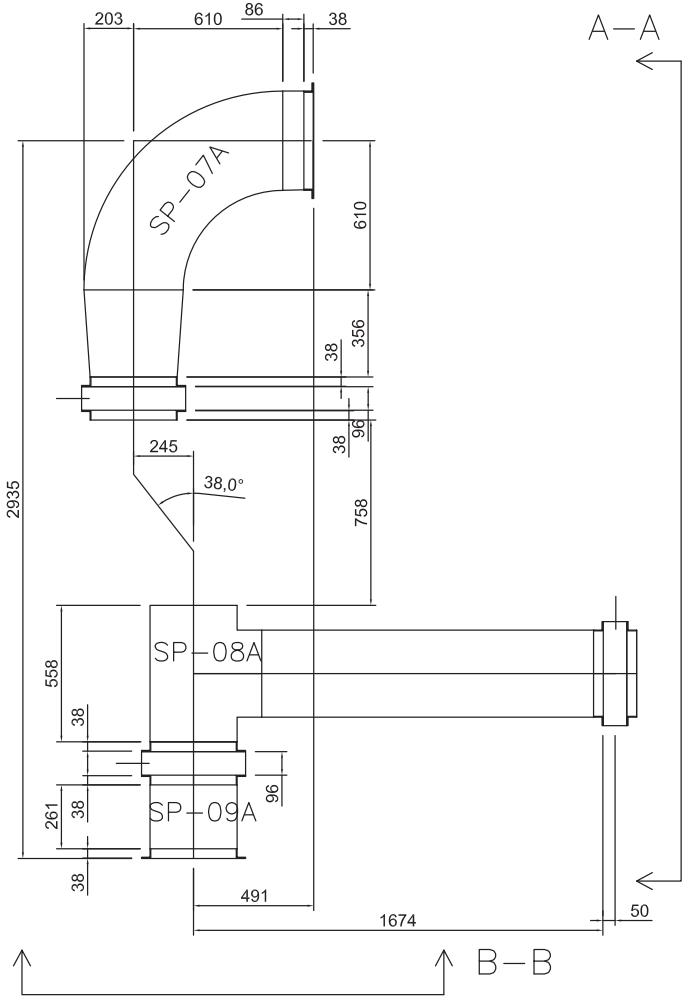

SIDE VIEW A–A

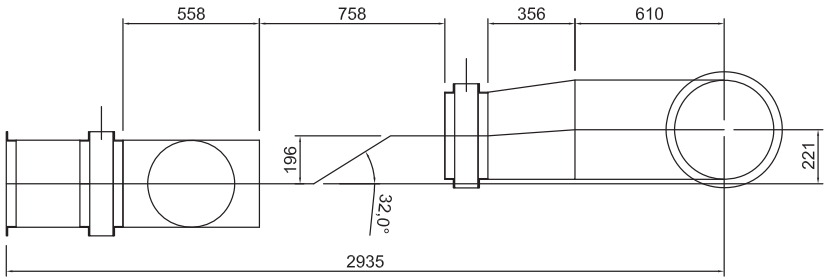

FRONT VIEW B–B

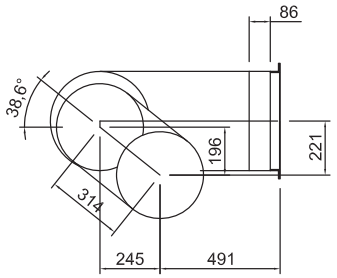

45DEG ELBOWS DETAIL

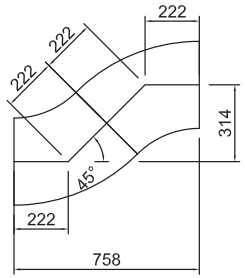

NOTES:
(2X) ELBOWS TO BE WELDED TOGETHER ALIGNED (NO ROTATION BETWEEN THE 2 ELBOWS).
THEN SPOOL TO BE WELDED AT 38.6° FROM HORIZONTAL.

NOTES:

REVISION:	
For approval_v01	2018-07-27

NORCLAIR
MÉCANIQUE DE PROCÉDÉ

CLIENT:

Iqaluit

IQALUIT WWTP
SP-07, SP-08 & SP-09 DETAILS

DATE: JULY 27 2018	SCALE: 1:20
DATA BY: H.C.	PROJECT NO: P-1039
DRAWN BY: H.C.	FIG: P-108

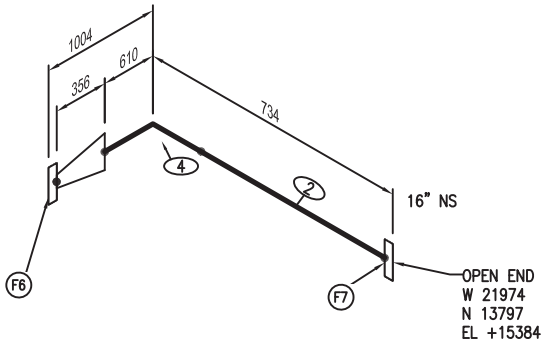

BILL OF MATERIALS

ID	QTY	ND	SCH/CLASS	DESCRIPTION
2	0.2M	16"	10S	PIPE, WELDED, 10S, PE, ASTM A312
4	1	16"	10	ELBOW 90 LR, SCH 10, BW, ASME B16.9
5	1	16"X14"		REDUCER (ECC), BW, ASME B16.9
6	1	14"	150	BACKING FLANGE WITH BUTT WELD ANGLE COLLARS, 150 LB, FF, ASME B16.5 GAL, STEEL
7	1	16"	150	BACKING FLANGE WITH BUTT WELD ANGLE COLLARS, 150 LB, FF, ASME B16.5 GAL, STEEL

CUT PIECE LIST

ID	LENGTH	ND	END1	END2

REV.	DESCRIPTION	DATE	DRAWN	CHKD	APPD
		07-18-18			

SERVICE	RW
PIPE SPEC	
MAX PRESSURE	
MAX TEMPERATURE	
P&ID DWG	
INSULATION SPEC	
INSULATION THK	

PROJECT NAME: IQALUIT

TITLE: WASTE WATER TREATMENT PLANT

DRAWING NUMBER: SP-7A

LINE NO:	AREA:	UNIT:	TYPE:
SP-7A			

JOB NUMBER:	SCALE:	SHEET:	REV.
	N.T.S.	1 OF 2	0

Z:\PROJETS\P1039_ Iqaluit\7_Plans & devis\FABRICATION NORCLAIR\WSP_20180720\ISOMÉTRIQUES_hc_20180723\SP-7A_hc.dwg

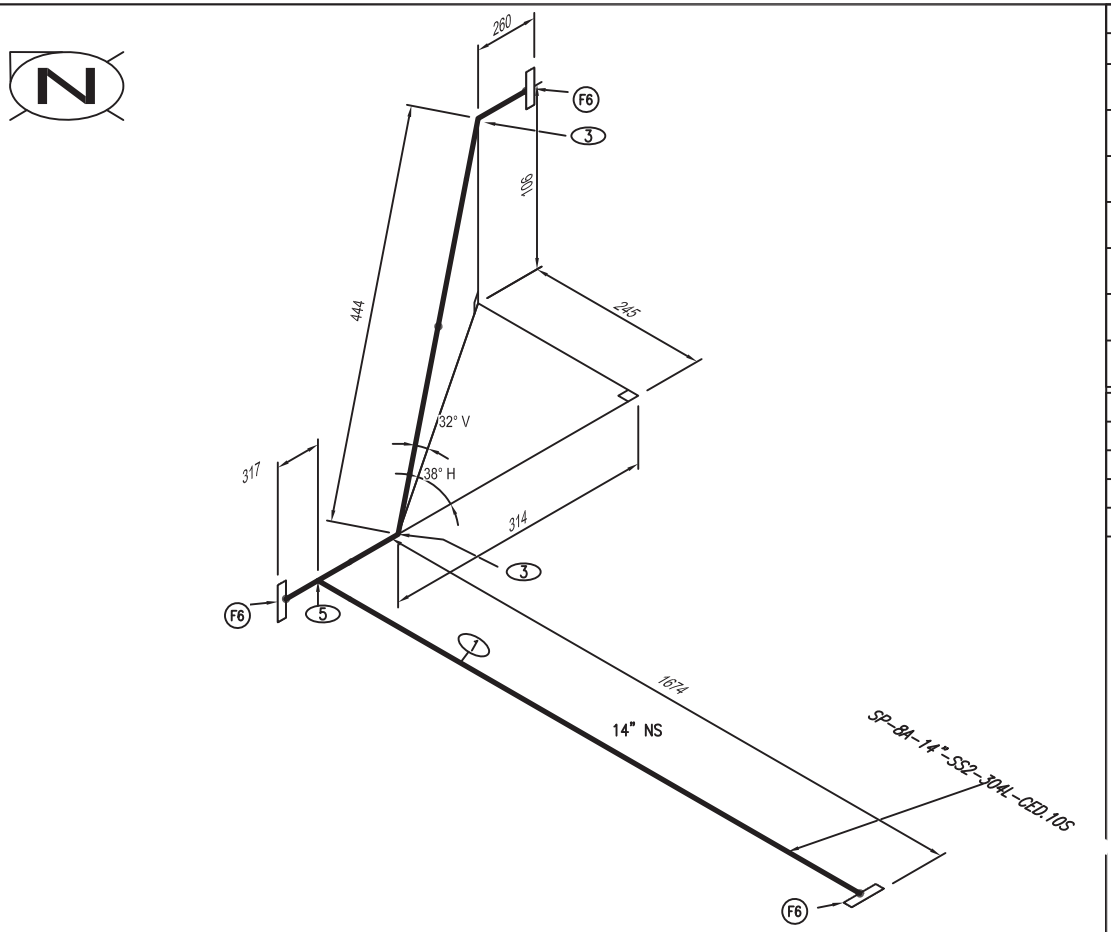

BILL OF MATERIALS

ID	QTY	ND	SCH/CLASS	DESCRIPTION
1	0.5M	14"	10S	PIPE, SEAMLESS, 10S, PE, ASTM A106
2				
3	2	14"	150	ELBOW 45 LR BW, ASME B16.9
4				
5	1	14"	10	TEE, BW, ASME B16.9
6	1	14"	150	BACKING FLANGE WITH BUTT WELD ANGLE COLLARS, 150 LB, FF, ASME B16.5 GAL, STEEL
7				

CUT PIECE LIST

ID	LENGTH	ND	END1	END2

REV.	DESCRIPTION	DATE	DRAWN	CHKD	APPD
		07-18-18			

SERVICE	RW
PIPE SPEC	
MAX PRESSURE	
MAX TEMPERATURE	
P&ID DWG	
INSULATION SPEC	
INSULATION THK	

PROJECT NAME: IQALUIT

TITLE: WASTE WATER TREATMENT PLANT

DRAWING NUMBER: SP-7A

LINE NO:	AREA:	UNIT:	TYPE:
SP-7A			

JOB NUMBER:	SCALE:	SHEET:	REV.
	N.T.S.	1 OF 2	0

Z:\PROJETS\P1039_ Iqaluit\7_Plans & devis\FABRICATION NORCLAIR\WSP_20180720\ISOMÉTRIQUES_hc_20180723\SP-8Arev02_hc.dwg

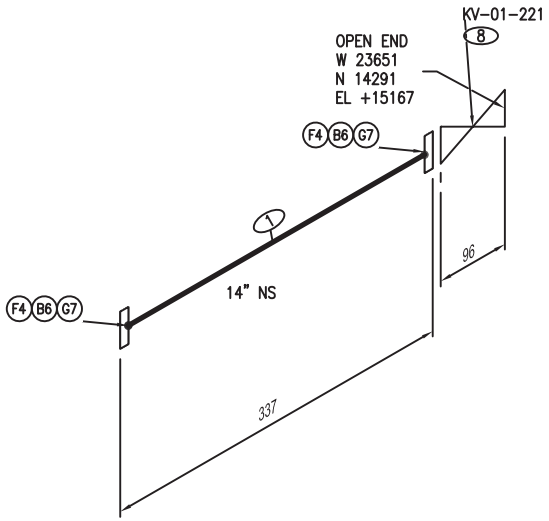

BILL OF MATERIALS

ID	QTY	ND	SCH/CLASS	DESCRIPTION
1	0.1M	14"	80	PIPE, SEAMLESS,10S, PE, ASTM A106
2				
3				
4	1	14"	150	BACKING FLANGE WITH BUTT WELD ANGLE COLLARS, 150 LB, FF, ASME B16.5 GAL. STEEL
5			150	
6	24	1"X134	150	BOLT SET, RF, 150 LB, STUD BOLT
7	1	14"	150	GASKET
8	1	14"	150	KNIFE GATE VALVE, 150 LB, LUG

CUT PIECE LIST

ID	LENGTH	ND	END1	END2

REV.	DESCRIPTION	DATE	DRAWN	CHKD	APPD
		07-18-18			

SERVICE	RW
PIPE SPEC	
MAX PRESSURE	
MAX TEMPERATURE	
P&ID DWG	
INSULATION SPEC	
INSULATION THK	

PROJECT NAME: IQALUIT

TITLE: WASTE WATER TREATMENT PLANT

DRAWING NUMBER: SP-9A

LINE NO:	AREA:	UNIT:	TYPE:
SP-9A			

JOB NUMBER:	SCALE:	SHEET:	REV.
	N.T.S.	1 OF 1	0

Z:\PROJETS\P1039_ Iqaluit\7_Plans & devis\FABRICATION NORCLAIR\WSP_20180720\ISOMÉTRIQUES_hc_20180723\SP-9Arev01_hc.dwg

REVIEWED BY CONTRACTOR

Kudlik Construction Ltd.

NAME: Sandra Rousseau P.Eng

DATE: Aoû 13, 2018

NORCLAIR
MÉCANIQUE DE PROCÉDÉ

SHOP DRAWINGS

DA-MP-31 Piping insulation (process air)

Date : 2018-08-13

Information general	
Project : **WWTP UPGRADE - IQALUIT**	
Client : Kudlik Construction Ltd. To : Sandra Rousseau P.Eng., Project Manager	Project number : **2018-062** E-mail : srousseau@kudlik.biz
Contractor : **Norclair inc.**	Project number Norclair : **P1039**
Address : 1100, Montée Masson, Laval, QC, Canada H7E 4P2	
Project Manager : Dominic Papineau, Project Manager	E-mail: dpapineau@norclair.ca
Phone : 450-688-4012 # 720	Cell. : 514-409-1832

Information, subcontractor or supplier	
Sub/supplier : Gestion HD Nunavik	
Contact : Henri Demers	Phone : 418-554-8244

Information on the equipment	
Speciality : **Process**	
Equipment : Piping insulation (process air)	
Drawing reference :	
Specification reference : **40 05 19** (Page xx / xx)	Division :
Article :	Number of pages : 5

CONSULTANT APPROVAL

STANTEC PROJECT #: 110126045

SUBMITTAL # DA-MP-31 Piping Insulation (Process Air).

This review by Stantec is for general conformance with the design concept of Stantec's design of the:

☑ Process ☐ Electrical
☐ Structural ☐ Other
☐ Mechanical

component(s) only and does not mean that Stantec has verified or approves the shop drawing(s). The Contractor remains solely responsible for the shop drawing(s) and this review by Stantec does not relieve the Contractor of the Contractor's responsibility for errors or omissions in the shop drawing(s) or for meeting all requirements of the contract documents. This review does not mean that Stantec approves the detailed design inherent in the shop drawing, responsibility for which shall remain with the Contractor submitting same, nor does this review mean that Stantec accepts any deviation of the shop drawing(s) from the contract documents. The Contractor is responsible for confirming all dimensions and correlating them at the job site, for all construction means, methods and techniques, and for coordination of construction work of all trades, including coordination of all shop drawings.

Stantec

☑ REVIEWED

☐ REVIEWED, AS NOTED

☐ REVISE AND RESUBMIT

☐ NOT REVIEWED

DATE August 13, 2018

BY Alejandro Rojas, P.Eng

1100, montée Masson
Laval, QC, Canada
H7E 4P2

Phone. : 450-688-4012
Fax : 450-661-6341
E-Mail : info@norclair.ca
www.norclair.ca

Johns Manville

Micro-Lok®

Fiber Glass Pipe Insulation

Description

Micro-Lok fiber glass pipe insulation is made from glass fibers bonded with a thermosetting resin and produced in 36" (0.92 m) lengths. Jacketed with a reinforced vapor retarder facing and a factory-applied, longitudinal acrylic adhesive closure system, Micro-Lok is designed for application temperatures from 0°F to 850°F (-18°C to 454°C). Section joints are sealed with butt strips which are supplied from the factory. **Micro-Lok AP-T Plus** may be painted with a latex paint after installation.

The factory-installed tape system permits installation at ambient temperatures down to 15°F (-9°C), and will not soften or separate when exposed to high ambient temperatures and humidity.

Uses

Micro-Lok fiber glass pipe insulation is suitable for installation over hot, cold, concealed and exposed piping systems with operating temperatures up to 850°F (454°C). Weather-protective jacketing is required for outdoor applications. Pipes operating below ambient temperatures require all joints to be sealed with the factory-applied, self-seal lap and butt strips.

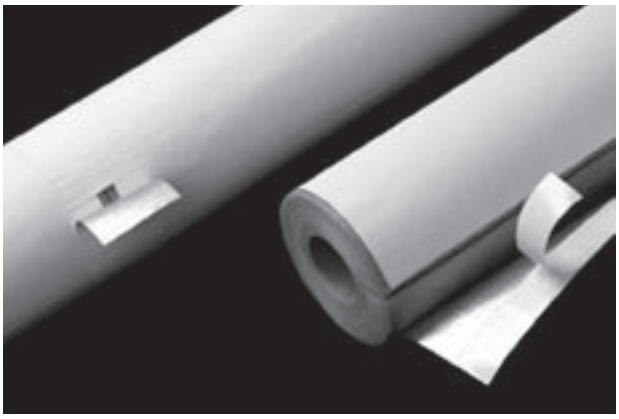

Operating Temperature Limits: 0°F to 850°F (-18°C to 454°C)

Specification Compliance

ASTM C 1136 (Jacketing) (Replaces HH-B-100B, Type I & II)
ASTM C 547 Type I (Replaces HH-I-558B, Form D, Type III, Class 12, Class 13 up to 850°F [454°C])
MIL-I-22344C
New York City MEA # 330-85-M
NFPA 90A & 90B, FHC 25/50

Physical Properties

Service Temp. Range	0°F to 850°F (-18°C to 454°C)
Moisture Sorption	<0.2% by volume
Alkalinity	<0.6% expressed as Na_2O
Corrosivity	Does not accelerate
Capillarity	Negligible (after 24 hours)
Shrinkage	None
Fungi & Bacteria Resistance	Does not breed or promote
Surface Burning Characteristics	Composite FHC 25/50 per ASTM E 84, UL 723, NFPA 255, CAN/ULC S102-M88
Limited Combustibility	NFPA 259
Jacketing	ASTM C 1136 (Type I)
Water Vapor Permeance (ASTM E 96 - Procedure A)	.02 perms max.
Beach Puncture (ASTM D 781)	50 oz. in./in. (58 SI) tear min.
Tensile Strength (ASTM D 828)	45 lbs./in. (7.9N/mm) width min. (MD) 30 lbs./in. (5.23N/mm) width min. (CD)

Thermal Conductivity ("k")

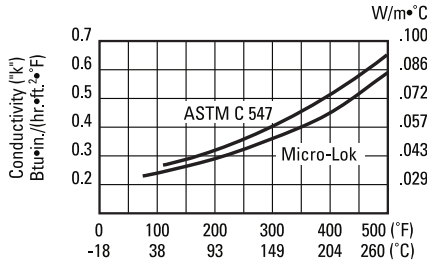

Mean Temperature	°F	75	100	200	300	400	500
	°C	24	38	93	149	204	260
Btu•in/(hr•ft²•°F)		.23	.24	.29	.36	.45	.59
W/m•°C		.033	.035	.042	.052	.065	.085

ASTM Test Methods & Guidelines

C 356.....Linear Shrinkage
C 411.....Hot Surface Performance
C 547.....Pipe Insulation
C 585.....Simplified Dimensional Standards for Nesting [Except $^3/_4$" (20 mm) IPS, 1" (25 mm) IPS, and $1^5/_8$" (41mm) CT]
C 1136.....Vapor Barrier Jacketing (Type I)

Micro-Lok®

Fiber Glass Pipe Insulation

Size Availability

Insulation Thickness		Iron Pipe Size Range		Copper Tubing Size Range	
in.	mm	in.	mm	in.	mm
1/2	13	1/2 - 18	13 - 457	5/8 -12 1/8	16 - 308
1	25	1/2 - 18	13 - 457	5/8 -12 1/8	16 - 308
1 1/2	38	1/2 - 18	13 - 457	5/8 -12 1/8	16 - 308
2	51	1/2 - 18	13 - 457	5/8 -12 1/8	16 - 308
2 1/2*	64	1/2 - 18	13 - 457	5/8 -12 1/8	16 - 308
3*	76	1/2 - 18	13 - 457	5/8 -12 1/8	16 - 308

* Contact the nearest Regional Sales Office for availability.

Qualifications for use

A sufficient thickness of insulation must be used to keep the maximum surface temperature of Micro-Lok AP-T Plus below 150°F (66°C). In addition, at operating temperatures above 500°F (260°C), Micro-Lok pipe insulation must be applied in a thickness ranging from 2" (51 mm) minimum to 6" (152 mm) maximum.

During initial heat-up to operating temperatures above 350°F (177°C), an acrid odor and some smoke may be given off as the organic binders used in the fiber glass pipe insulation begin to decompose. When this occurs, caution should be exercised to ventilate the area well. This loss of binder does not directly affect the thermal performance of the pipe insulation, but the compressive strength and resiliency of the product are reduced. For applications with excessive physical abuse or vibration at high temperatures, consult your local Performance Materials Division territory manager for alternate material recommendations.

Application Recommendations.
AP-T Plus Jacket and Butt Strips.

1. Do not apply Micro-Lok insulation with AP-T Plus jacketing if air temperature is below 15°F (-9°C) or above 130°F (54°C) due to the effect of temperature on tape performance. We recommend stapling when application falls outside this temperature range.

2. If stored below 15°F (-9°C) or above 130°F (54°C), insulation cartons should stand within the recommended temperature range for 24 hours prior to application.

3. Once release paper is removed, both adhesive and lap must be kept free of dirt and water, and the lap sealed immediately.

4. When adhered, the lap and butt strips must be pressurized by rubbing firmly with a plastic squeegee or the back of a knife blade to assure positive closure.

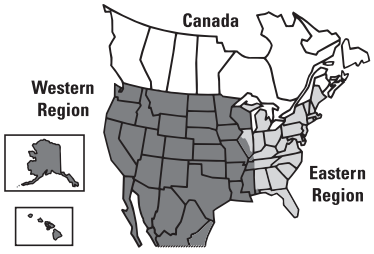

North American Sales Offices, Performance Materials Division

Eastern Region
P.O. Box 158
Defiance, OH 43512
(800) 334-2399
Fax: (419) 784-7866

Western Region and Canada
P.O. Box 5108
Denver, CO 80217
(800) 368-4431
Fax: (303) 978-4661

Outside North America
(303) 978-4655
Fax: (303) 978-2627

Johns Manville

Performance Materials Division
P.O. Box 5108
Denver, CO 80217-5108
www.jm.com

The physical and chemical properties of Micro-Lok® fiber glass pipe insulation represent typical, average values obtained in accordance with accepted test methods and are subject to normal manufacturing variations. They are supplied as a technical service and are subject to change without notice. Numerical flame spread and smoke developed ratings are not intended to reflect hazards presented by this or any other materials under actual fire conditions. Check with the Regional Sales Office nearest you to assure current information. **All Johns Manville products are sold subject to Johns Manville's Limited Warranty and Limitation of Remedy. For a copy of the Johns Manville Limited Warranty and Limitation of Remedy, call the 800 number below.** For information on other Johns Manville thermal insulations and systems and a copy of the Spec-Line® CSI formatted specification, call **1-800-654-3103**.

CI-34 1-05 (Replaces 5-04)

Copyright ©2005 Johns Manville
Printed in USA

Johns Manville

Zeston 2000® Series White PVC Insulated Fitting Covers and Jacketing

Features

- Protect insulated or bare pipes
- Meets most requirements for federal, state and local fire-safety codes
- Accepted for commercial, institutional, industrial and residential projects in all parts of the US
- System is uncomplicated and easy to install
- UV-resistant for outdoor applications
- Long-lasting protection and an attractive finished appearance
- Available with Hi-Lo Temp fiber glass inserts

Applications

- Commercial, institutional and industrial applications

Construction

- Covering and jacketing manufactured from high-impact, gloss white, UV-resistant polyvinyl chloride jacketing

Application Recommendations

- Wrap the Hi-Lo Temp fiber glass insert completely around the pipe fitting without overly compressing it or leaving any voids
- Ensure that the insulation insert covers all exposed surfaces
- Install the Zeston PVC fitting cover over the pipe fitting and fiber glass insert by securing the throat of the Zeston PVC insert using either serrated tacks, Perma-Weld adhesive or Zeston Z-Tape
- If applied in an outdoor setting or exposed to the sun, precautions should be taken to account for expansion joints



ZESTON 2000 SERIES WHITE PVC
INSULATED FITTING COVERS AND JACKETING

Johns Manville

Zeston 2000® Series White PVC Insulated Fitting Covers and Jacketing

Qualifications For Use

Hot Systems

- Use proper insulation thickness to ensure PVC covers are kept below 150°F (66°C)
- PVC covers should be kept away from contact with and/or exposure to sources of direct or radiated heat
- For fittings where operating temperatures exceed 250°F (121°C) or where pipe insulation thickness is greater than 1½" (38mm), two or more layers of Hi-Lo Temp insulation inserts are required beneath the fitting cover (refer to MECH-261 Zeston Hi-Lo Temp Inserts)

Cold Systems

- An approved vapor-barrier compatible with PVC must be applied between pipe insulation and fitting cover and on fitting cover throat overlap seal. Please refer to Insulspec MECH-261 on jm.com
- For fittings where operating temperature is below 45°F (7°C) or where the pipe insulation thickness is greater than 1½ " (38mm), two or more layers of Hi-Lo Temp insulation inserts are required beneath fitting cover (refer to MECH-261 Zeston Hi-Lo Temp Inserts)

Refrigerant Systems and Cold Systems In Severe Ambient Conditioning

- Mitered pipe insulation segments, fabricated or pre-molded insulation shapes may be used in lieu of Hi-Lo temp insulation inserts
- An intermediate vapor-barrier compatible with PVC is required to completely seaL the insulation prior to installing the Zeston 2000 PVC fitting cover
- Care should be taken to ensure the vapor barrier mastic is applied between the pipe insulation and the fitting cover and on the fitting cover throat overlap seam

Totally Sealed Systems (USDA Approval)

- 20 or 30 mil (0.5 mm or 0.8mm) Zeston PVC jacketing should be applied to pipe insulation in conjunction with Zeston PVC fitting covers
- Circumferential and longitudinal jacket and fitting cover seams should be sealed with Zeston Perma-Weld solvent welding adhesive
- Circumferential seams should be a minimum of 1" (25mm) overlap and longitudinal seams should be 1½"- 2" (38mm to 51mm) overlap
- Upon completion, all seams should visually be checked for seal and, if necessary, touched up
- Slip joints are periodically required between fixed supports and on continuous long runs of straight piping.
- To implement a slip joint, increase the circumferential overlap to 8" to 10" (203 mm to 254 mm) and apply a flexible white caulking in the overlap area to maintain a sealed system
- Refer to Zeston installation instructions CI-35 at www.jm.com

Performance Specifications

Electrical Conductance	Non-conductor
Elongation at Yield (MD), %	3.0
Flame Spread	25 or less (up to 30 mil [0.8mm])
Flexural Modulus, psi (kPa)	430,000 (2,964,750)
Flexural Strength, psi (kPa)	11,000 (75,850)
Gardner – SPI Impact, in.lb./mil by Ductile Failure	10 mil (0.3 mm)1.3 15 mil (0.4 mm) 1.4 20 mil (0.5 mm) 1.5 30 mil (0.8 mm) 1.6
Smoke Developed	50 or less (up to 30 mil [0.8 mm])
Specific Gravity	1.48
Tensile Modulus, psi (kPa)	425,000 (2,930,270)
Tensile Strength at Yield, psi (kPa)	6,000 (41,370)

Specification Compliance

ASTM	D257 (Electrical surface resistance)
	D638 (Tensile strength)
	D790 (Flexural Strength)
	D792 (Density & specific gravity)
	D1784 (Specification for rigid PVC)
	D3679 (Specification for rigid PVC)
	E84 (Surface burning characteristics)
	E136 25/50 non-combustibility (fiber glass inserts)
Agriculture Canada	Pass (Canada Department of Agriculture)
Canada	CGSB51-GP-53M
CAN/ULC	S102
L-P*: Composition	535E (Federal standard for PVC)
A, Type II, Grade GU	1035A (US Army standard PVC)
New York City MEA	#7-87 (Toxicity test)
USDA	US Department of Agriculture

Compressed Thermal Conductivity Zeston Hi-Lo Temp Insulation Inserts

Mean Temperature		"K"	
°F	°C	BTU•in/(hr•ft²•°F)	W/M•°C
75	24	0.23	0.033
150	66	0.27	0.039
300	149	0.40	0.058

FOR ADDITIONAL INFORMATION CONSULT THE FULL PRODUCT MANUAL.

The physical and chemical properties of PRODUCT listed herein represent typical, average values obtained in accordance with accepted test methods and are subject to normal manufacturing variations. They are supplied as technical service and are subject to change without notice. Numerical flame spread and smoke developed ratings are not intended to reflect hazards presented by these or any other materials under actual fire conditions. Check with the Regional Sales Office nearest you to assure current information. **All Johns Manville products are sold subject to Johns Manville's standard Terms and Conditions including Limited Warranty and Limitation of Remedy. For a copy of the Johns Manville standard Terms and Conditions, Limited warranty and Limitation of Remedy, and information on other Johns Manville thermal insulations and systems, call (800)-654-3103Limited Warranty and Limitation Remedy. For a copy of the Johns Manville standard Terms and Conditions, Limited Warranty and Limitation of Remedy, and information on other Johns Manville thermal insulations and systems, call (800) 654-3103.**

REVIEWED BY CONTRACTOR

Kudlik Construction Ltd.

NAME: Sandra Rousseau P.Eng

DATE: Fév 07, 2019

NORCLAIR
MÉCANIQUE DE PROCÉDÉ

SHOP DRAWINGS

DA-MP-32R3 Belt filter press

Date : 2019-02-07

Information general	
Project : **WWTP UPGRADE - IQALUIT**	
Client : Kudlik Construction Ltd. To : Sandra Rousseau P.Eng., Project Manager	Project number : **2018-062** E-mail : srousseau@kudlik.biz
Contractor : **Norclair inc.**	Project number Norclair : **P1039**
Address : 1100, Montée Masson, Laval, QC, Canada H7E 4P2	
Project Manager : Hugo Chartier, Project Manager	E-mail: hchartier@norclair.ca
Phone : 450-688-4012 # 706	Cell. : 514-703-0263

Information, subcontractor or supplier	
Sub/supplier : Phoenix	
Contact : Jeremy Taylor	Phone : 502-499-6198 x181

Information on the equipment	
Speciality : **Process**	
Equipment : Belt filter press	
Drawing reference :	
Specification reference : **46 76 21**	Division :
Article :	Number of pages : 27

STANTEC PROJECT #: 110126045

SUBMITTAL # DA-MP-32R3 BFP

This review by Stantec is for general conformance with the design concept of Stantec's design of the:

- ☑ Process
- ☐ Electrical
- ☐ Structural
- ☐ Other
- ☐ Mechanical

Stantec

component(s) only and does not mean that Stantec has verified or approves the shop drawing(s). The Contractor remains solely responsible for the shop drawing(s) and this review by Stantec does not relieve the Contractor of the Contractor's responsibility for errors or omissions in the shop drawing(s) or for meeting all requirements of the contract documents. This review does not mean that Stantec approves the detailed design inherent in the shop drawing, responsibility for which shall remain with the Contractor submitting same, nor does this review mean that Stantec accepts any deviation of the shop drawing(s) from the contract documents. The Contractor is responsible for confirming all dimensions and correlating them at the job site, for all construction means, methods and techniques, and for coordination of construction work of all trades, including coordination of all shop drawings.

- ☐ REVIEWED
- ☑ REVIEWED, AS NOTED
- ☐ REVISE AND RESUBMIT
- ☐ NOT REVIEWED

DATE Feb 8, 2019

BY Alejandro Rojas, P.Eng

CONSULTAN

BFP MANUFACTUER TO CONFIRM AND GUARANTEE THAT THE BOOSTER PUMP MOTOR MODIFICATION FROM 5.5 kW TO 3.7 kW WILL NOT AFFECT NEGATIVELY THE BELT CLEANING PROCESS.

Sandra Rousseau

De: Hugo Chartier <hchartier@norclair.ca>
Envoyé: 7 février 2019 16:09
À: Sandra Rousseau
Objet: Iqaluit WWTP: DA-MP-32 BFP
Pièces jointes: image003.emz; image002.emz; image008.emz; image015.emz

Sandra,
Please find new partial shop drawing for the belt filter press by following this link:
https://www.dropbox.com/sh/i4s6ret8o2ttqd1/AACZw7tBSav64-lCw29lUBy0a?dl=0

… Along with the comments below.

For approval by Stantec please.

Thanks,
Hugo

NORCLAIR
MÉCANIQUE DE PROCÉDÉ

Hugo CHARTIER, ing.
Chef d'équipe Estimation
T. 450 688-4012 poste 706
C. 514 703-0263

1100, Montée Masson Laval, QC H7E 4P2
RBQ : 8263-7265-46

norclair.ca

Norclair inc. est inscrite au registre des entreprises autorisées par l'Autorité des marchés financiers (AMF) pour contracter/ sous-contracter avec un organisme public.

De : Jeremy Taylor <jeremyt@dewat…
Envoyé : 7 février 2019 15:00
À : Hugo Chartier <hchartier@norclair.ca>
Cc : Becky Chissom <beckyc@dewater.com>
Objet : RE: Iqaluit WWTP - Shop drawing DA-MP-38

Hello Again Hugo,

As discussed last week, please find attached the partial Rev3 of the engineering submittal for Iqaluit. I don't mean to further complicate things, but since our last discussion we've been informed that the air compressor motor is only available in ODP (no longer in TEFC), and our parts department discovered some of the spare part numbers required updating. So all those changes are incorporated as follows:

Section 6 – Tab 3: Air compressor motor no longer available in TEFC housing; changed to ODP.
Section 6 – Tab 5: Pump model changed from CR 15-4 to CR 10-5; pump motor changed from 7.5 HP to 5 HP.
Section 7: Updated part numbers for belts, lever arm, lever roller, and set collars; removed obsolete valve.

We should be good to go assuming there are no issues with these changes, but please let me know if you guys or Stantec have any questions.

Thanks,

Jeremy Taylor
Project Manager
Phone: +1-502-499-6198 ext. 181

…

Much appreciated, Hugo, we are full speed ahead at this point.

I have another item to bring your attention to:

As we've begun the procurement process, we've discovered our pump supplier had quoted us the wrong water boost pump for the application. The only impacts will be that the pump model number will change, and the pump motor will go from 7.5 HP [5.5 kW] down to 5 HP [~3.7 kW]. Our electrical guys had already anticipated a 5 HP motor based on previous systems, so the panel will not be affected, nor will any of the GA drawings. Do you think I need to revise the submittal, or is this a change that can be approved in the same manner as the flange change?

Thanks,
Jeremy Taylor
Project Manager
Phone: +1-502-499-6198 ext. 181

Engineering Submittal
Partial Revision 3
(Section 6 – Tabs 3 & 5, Section 7)

February 7, 2019

PHOENIX Process Equipment Co.

BELT FILTER PRESS

MODEL LC-1200LS

Prepared For:

Iqaluit (Nunavut) WWTP
Project No. 0418377

c/o Norclair Inc.

PHOENIX Job Number: 0418377

REVIEWED: 02/07/2019
Jeremy Taylor
Project Manager

"This Submittal and all the information contained herein are considered to be proprietary and confidential and must be treated accordingly. This document is and will remain the property of PHOENIX Process Equipment Co. and must be returned to PHOENIX immediately upon request. This Submittal is loaned for the sole purpose of review and comment by the project Contractor, Engineer, and/or Owner in connection with this job and is not be used for any other purpose. Neither this document nor any portion thereof is to be copied, reproduced, or disclosed to others without the written authorization of PHOENIX Process Equipment Co."

SECTION 6



TAB 3

PHOENIX

PHOENIX PROCESS EQUIPMENT CO.

AIR COMPRESSOR

Manufacturer:	Jenny
Part Number:	K2A-30UMV-575/3
Capacity:	8 CFM @ 125 PSIG
Receiver:	30 Gal Vertical
Motor:	2HP, 575V/3 Ph/60 Hz, ODP

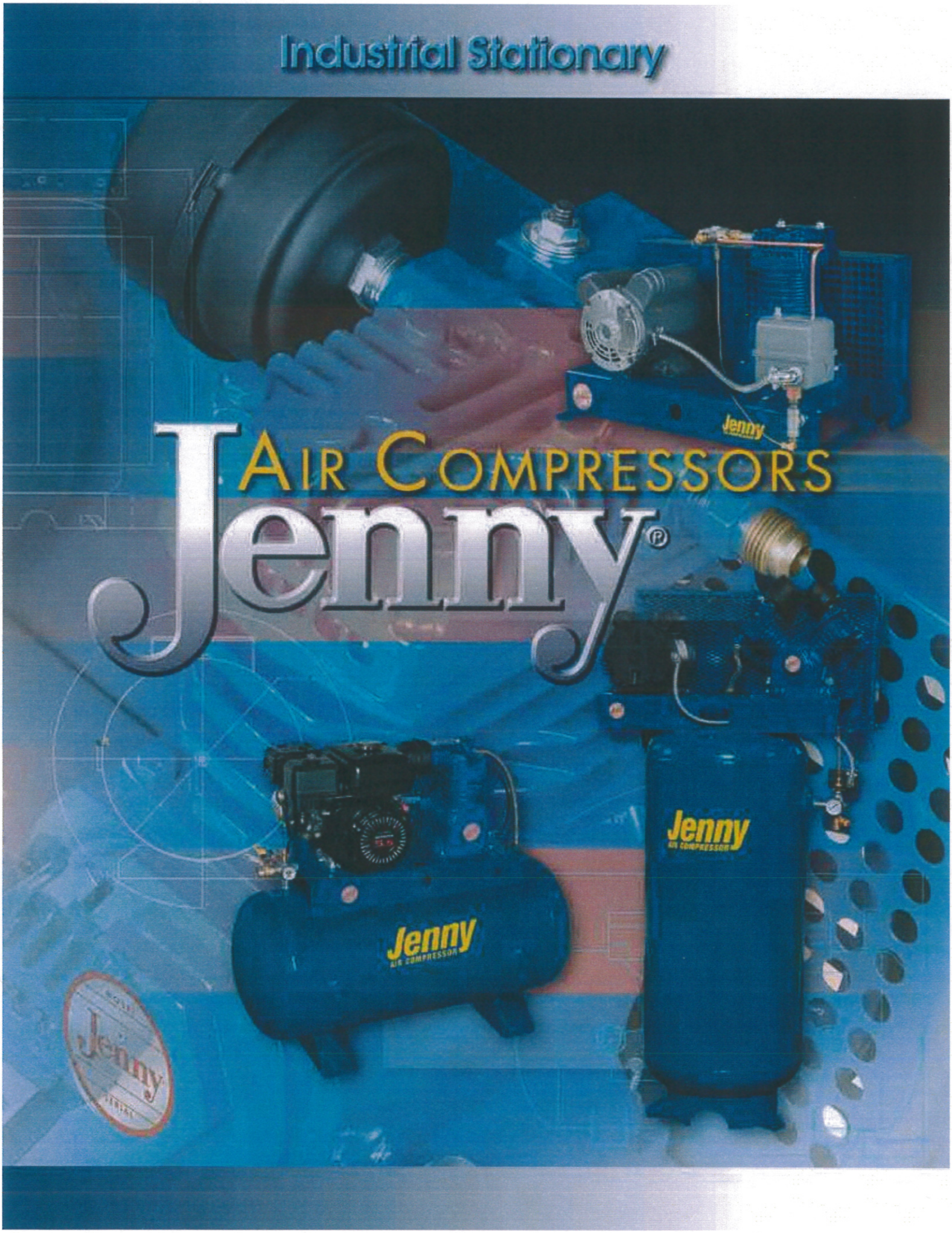
Industrial Stationary
AIR COMPRESSORS
Jenny®
Jenny
Jenny
AIR COMPRESSOR
Jenny
AIR COMPRESSOR
Jenny

Electric Stationary Compressors

Standard Features

- Heavy-duty single or two stage cast iron compressor pump Made in Somerset, PA USA
- Splash lubricated
- Oil sight glass
- Belt driven with a large flywheel for extra cooling and easier start-up
- Each unit is filled with Jenny Ultimate Blue Compressor Pump Oil
- Directional air shroud for reduced pump temperatures
- Totally enclosed heavy-duty belt guard
- Tank gauge
- Tanks are powder coated and ASME certified
- 60 gallon tanks and larger are ASME National Board certified
- Protectively mounted fittings
- Manual tank drain(s)
- Large canister intake filter with replaceable filter elements
- Special unloading valves to assist in motor starting
- Pressure relief safety valve



F13A-17



K15A-30



G3A-60V



K15A-30V

Single Stage

Model	Pump	HP	Tank Gallon	Power Supply	125 PSI Pump RPM	CFM Disp	Del'd Air
F12A-17	F	1/2	17	115 Volt (through 2 HP) or 230 Volt 1 Phase	680	3.4	2.2
F34A-17		3/4			1080	5.4	3.1
F34A-30			30				
K1A-30	K	1			560	6.4	4.0
K15A-30		1-1/2			870	9.8	6.2
K15A-60			60				
K2A-30		2	30		1140	13.1	8.0
K2A-60			60				
G2A-30	G		30	208, 230, 460 or 575 Volt 3 Phase	480	13.1	9.1
G2A-60			60				
G3A-30		3	30		770	20.8	14.0
G3A-60			60				
G5A-60		5	60		1020	27.5	17.8
G5A-80			80				
J5A-60	J		60		780	28.8	23.0
J5A-80			80				

Options

Constant run ■ Dual control ■ Low oil level switch
Automatic tank drain ■ Magnetic starter
Control circuit transformer ■ Vertical tank
Air line filter ■ Lubricator
Aftercooler ■ Dryer
Other pressures and tank sizes available upon request

Air Compressors E483335

TAB 5

PHOENIX

BOOSTER PUMP

Manufacturer:	Grundfos
Model:	CR 10-5 Vertical Multistage Centrifugal Pump
Capacity:	52 GPM @ 100 PSI output (70 psi boost)
Motor:	5 HP, 575V/3 Ph/60 Hz, TEFC

Note: 52 GPM @ 30 PSI required at water inlet from the plant. The Grundfos Pump will boost up to the required pressure of 100 PSI for belt cleaning. Plant water must contain less than 200 PPM solids. Max solids is 20 mesh. Maintain flooded suction at Pump inlet.

GRUNDFOS

Company name:
Created by:
Phone:

Date: 31/01/2019

Qty.	Description
1	**CR 10-5 A-GJ-A-E-HQQE**



Product No.: 96126734
Vertical, non-self-priming, multistage, in-line, centrifugal pump for installation in pipe systems and mounting on a foundation.

The pump has the following characteristics:
- Impellers and intermediate chambers are made of
- The shaft seal has assembly length according to EN 12756.
- Power transmission is via cast iron split coupling.

Controls:
Frequency converter: NONE

Liquid:
Pumped liquid: Water
Liquid temperature range: -4 .. 248 °F
Liquid temperature during operation: 68 °F
Density: 62.29 lb/ft³

Technical:
Pump speed on which pump data are based: 3461 rpm
Rated flow: 53.3 US GPM
Rated head: 191.3 ft
Pump orientation: Vertical
Shaft seal arrangement: Single
Code for shaft seal: HQQE
Curve tolerance: ISO9906:2012 3B

Materials:
Base: Cast iron
EN 1561 EN-GJL-200
ASTM A48-25B
Impeller: Stainless steel
EN 1.4301
AISI 304
Bearing: SIC

Installation:
Maximum operating pressure: 232 psi
Max pressure at stated temp: 232 psi / 250 °F
232 psi / -4 °F
Type of connection: ANSI / JIS
Size of inlet connection: DN 50
2 inch
Size of outlet connection: DN 50

GRUNDFOS

Company name:
Created by:
Phone:

Date: 31/01/2019

Qty.	Description	
		2 inch
	Pressure rating for pipe connection:	PN 25
	Flange rating inlet:	300 lb
	Flange size for motor:	182TC
	Electrical data:	
	Motor standard:	NEMA
	Others:	
	Net weight:	92.6 lb
	Gross weight:	108 lb
	Shipping volume:	4.94 ft³
	Country of origin:	US
	Custom tariff no.:	8413.70.2040

GRUNDFOS

Company name:
Created by:
Phone:

Date: 31/01/2019

Description	Value
General information:	
Product name:	CR 10-5 A-GJ-A-E-HQQE
Product No:	96126734
EAN number:	5700396999364
Technical:	
Pump speed on which pump data are based:	3461 rpm
Rated flow:	53.3 US GPM
Rated head:	191.3 ft
Head max:	241.8 ft
Stages:	5
Impellers:	5
Number of reduced-diameter impellers:	0
Low NPSH:	N
Pump orientation:	Vertical
Shaft seal arrangement:	Single
Code for shaft seal:	HQQE
Curve tolerance:	ISO9906:2012 3B
Pump version:	A
Model:	A
Materials:	
Base:	Cast iron
	EN 1561 EN-GJL-200
	ASTM A48-25B
Impeller:	Stainless steel
	EN 1.4301
	AISI 304
Material code:	A
Code for rubber:	E
Bearing:	SIC
Installation:	
Maximum operating pressure:	232 psi
Max pressure at stated temp:	232 psi / 250 °F
	232 psi / -4 °F
Type of connection:	ANSI / JIS
Size of inlet connection:	DN 50
	2 inch
Size of outlet connection:	DN 50
	2 inch
Pressure rating for pipe connection:	PN 25
Flange rating inlet:	300 lb
Flange size for motor:	182TC
Connect code:	GJ
Liquid:	
Pumped liquid:	Water
Liquid temperature range:	-4 .. 248 °F
Liquid temperature during operation:	68 °F
Density:	62.29 lb/ft³
Electrical data:	
Motor standard:	NEMA
Controls:	
Frequency converter:	NONE
Others:	
Net weight:	92.6 lb
Gross weight:	108 lb
Shipping volume:	4.94 ft³
Country of origin:	US
Custom tariff no.:	8413.70.2040

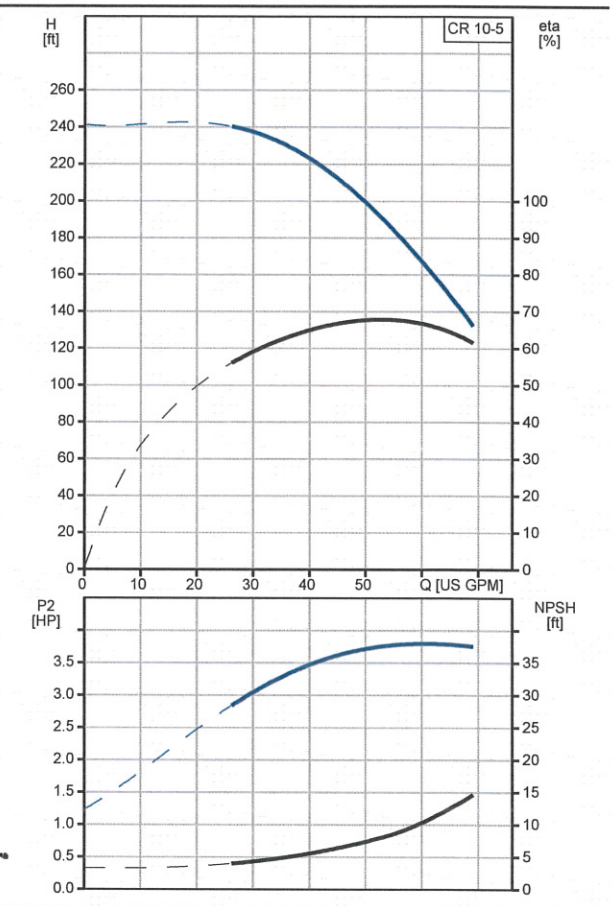

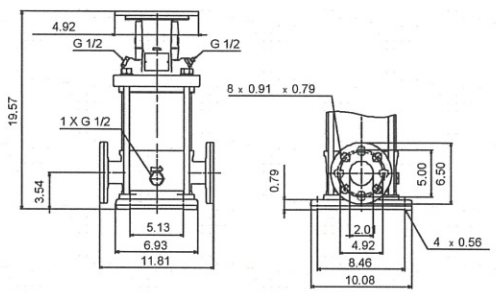

GRUNDFOS

Company name:
Created by:
Phone:

Date: 31/01/2019

96126734 CR 10-5 A-GJ-A-E-HQQE 60 Hz

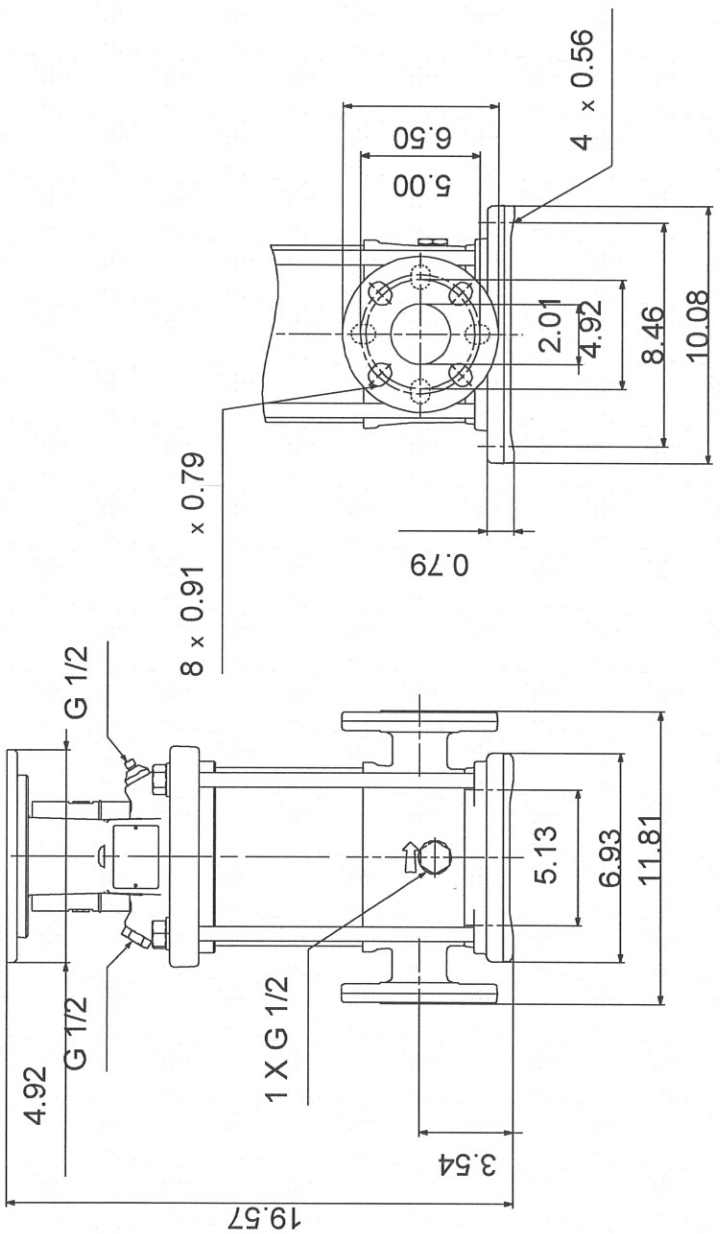

Note! All units are in [mm] unless others are stated.
Disclaimer: This simplified dimensional drawing does not show all details.

BALDOR • RELIANCE

Product Information Packet

Grundfos Pumps Mfg. Corp.

36G535X707G1

5HP,3500RPM,3PH,60HZ,184TC,3634M,TEFC,F1

Copyright © All product information within this document is subject to ABB Motors and Mechanical Inc. copyright © protection, unless otherwise noted.

Part Detail

Revision:	V	**Status:**	PRD/A	**Change #:**		**Proprietary:**	Yes
Type:	AC	**Elec. Spec:**	36WGX707	**CD Diagram:**	CD0006	**Mfg Plant:**	
Mech. Spec:	36G535	**Layout:**	36LYG535	**Poles:**	02	**Created Date:**	
Base:	N	**Eff. Date:**	10-25-2017	**Leads:**	3#16		

Specs

Enclosure:	TEFC	**Inverter Code:**	Inverter Ready
Frame:	184TC	**KVA Code:**	K
Frame Material:	Steel	**Lifting Lugs:**	No Lifting Lugs
Output @ Frequency:	5.000 HP @ 60 HZ	**Locked Bearing Indicator:**	Locked Bearing
Synchronous Speed @ Frequency:	3600 RPM @ 60 HZ	**Motor Lead Quantity/Wire Size:**	3 @ 16 AWG
Voltage @ Frequency:	575.0 V @ 60 HZ	**Motor Lead Exit:**	Ko Box
XP Class and Group:	None	**Motor Lead Termination:**	Flying Leads
XP Division:	Not Applicable	**Motor Type:**	3634M
Agency Approvals:	UR	**Mounting Arrangement:**	F1
	CSA	**Power Factor:**	93
	CSA EEV	**Product Family:**	General Purpose
Auxillary Box:	No Auxillary Box	**Pulley End Bearing Type:**	Ball
Auxillary Box Lead Termination:	None	**Pulley Face Code:**	C-Face
Base Indicator:	No Mounting	**Pulley Shaft Indicator:**	Standard
Bearing Grease Type:	Polyrex EM (-20F +300F)	**Rodent Screen:**	None
Blower:	None	**Shaft Extension Location:**	Pulley End
Current @ Voltage:	4.500 A @ 575.0 V	**Shaft Ground Indicator:**	No Shaft Grounding
Design Code:	B	**Shaft Rotation:**	Reversible

Drip Cover:	No Drip Cover
Duty Rating:	CONT
Electrically Isolated Bearing:	Not Electrically Isolated
Feedback Device:	NO FEEDBACK
Front Face Code:	Standard
Front Shaft Indicator:	None
Heater Indicator:	No Heater
Insulation Class:	F

Shaft Slinger Indicator:	No Slinger
Speed Code:	Single Speed
Motor Standards:	NEMA
Starting Method:	Direct on line
Thermal Device - Bearing:	None
Thermal Device - Winding:	None
Vibration Sensor Indicator:	No Vibration Sensor
Winding Thermal 1:	None
Winding Thermal 2:	None

Nameplate NP1259L

CAT.NO.	84Z03913								
SPEC.	36G535X707G1								
HP	5								
VOLTS	575								
AMP	4.5								
RPM	3500								
FRAME	184TC		**HZ**	60			**PH**	3	
SER.F.	1.15	**CODE**	K	**DES**	B	**CL**	F		
NEMA-NOM-EFF	89.5	**PF**	93						
RATING	40C AMB-CONT								
CC	010A			**USABLE AT 208V**					
DE	6307	**ODE**	6205						
ENCL	TEFC	**SN**							
	SFA 5.1								

Nameplate NP0090L

FRONT	6205
PULLEY	6307
LUBRICATE WITH GREASE	POLYREX EM

Parts List		
Part Number	**Description**	**Quantity**
SA106971	SA 36G535X707G1	1.000 EA
RA098624	RA 36G535X707G1	1.000 EA
36CB3000SP	CONDUIT BOX, CAST	1.000 EA
36GS1000SP	GASKET-CONDUIT BOX, .06 THICK #SV-330 LE	1.000 EA
51XB1016A07	10-16 X 7/16 HXWSSLD SERTYB	2.000 EA
11XW1032G06	10-32 X .38, TAPTITE II, HEX WSHR SLTD U	1.000 EA
HW3001B01	BRASS CUP WASHER, FOR #10 SCREW	1.000 EA
36FE3104A04	FR ENDPLATE, FOR ROUTING	1.000 EA
HW4500A01	1641B(ALEMITE)400 UNIV, GREASE FITT	1.000 EA
HW4500A17	317400 ALEMITE GREASE RELIEF	1.000 EA
HW5100A05	WVY WSHR F/205 & 304 BRGS	1.000 EA
36EP3305A03	SPL PU ENDPLATE 182-184TC-ENCL-FOR 307 B	1.000 EA
HW4500A01	1641B(ALEMITE)400 UNIV, GREASE FITT	1.000 EA
HW4500A17	317400 ALEMITE GREASE RELIEF	1.000 EA
10XN2520A32	1/4 X 2 HEX HEAD CAP SCR,GRADE 2	4.000 EA
HW1001A25	LOCKWASHER 1/4, ZINC PLT .493 OD, .255 I	4.000 EA
36FH4009A128	NOTCH @6, W/ PRIMER	1.000 EA
WD4100A10	465 NIAGARA PLUG (SO ELEC),FOR 1.093 DIA	1.000 EA
51XW1032A06	10-32 X .38, TAPTITE II, HEX WSHR SLTD S	3.000 EA
35CB4514GX	CONDUIT BOX LID KIT	1.000 EA
51XW0832A07	8-32 X .44, TAPTITE II, HEX WSHR SLTD SE	4.000 EA
HW2501E16	KEY, 1/4 SQ X 1.750	1.000 EA
HA7000A02	KEY RETAINER RING, 1 1/8 DIA, 1 3/8 DIA	1.000 EA
85XU0407S04	4X1/4 U DRIVE PIN STAINLESS	4.000 EA

Parts List (continued)		
Part Number	**Description**	**Quantity**
HW3200A01	3/8-16X3/4 I-BLT WELDED F/S	1.000 EA
MJ1000A02	GREASE, POLYREX EM EXXON (USe 4824-15A)	0.050 LB
51XB1214A16	12-14X1.00 HXWSSLD SERTYB	1.000 EA
HA3101A40	THRUBOLT 1/4-20 X 12.687	4.000 EA
MG1025L14	WILKOFAST, 776.14, GRUNDFOS BLACK	0.022 GA
36FN3000C01SP	EXFN, PLASTIC, 5.25 OD, .912 ID	1.000 EA
LB1115N	LABEL,LIFTING DEVICE (ON ROLLS)	1.000 EA
LB1119N	WARNING LABEL	1.000 EA
LC0006	CONNECTION LABEL	1.000 EA
NP1259L	ALUM SUPER-E UL CSA-EEV CC NEMA PREMIUM	1.000 EA
NP0090L	NP BRG INFO LASER ETCHED	1.000 EA
G0PA1000	PKG GRP, PRINT PK1026A06	1.000 EA
PK3082	STYROFOAM CRADLE	1.000 EA
PK3085X	FOAM SHAFT SUPPORT PRECUT 4-1/4 X 6-3/4	1.000 EA
PK5535A01	MODIFIED STD EURO PALLET 47-1/4 X 31-1/2	0.125 EA
MN416A01	TAG-INSTAL-MAINT no wire (1200/bx) 5/18	1.000 EA
LB1417	LABEL CARTON 6X4 PERFORATED BLANK ROLLS	1.000 EA

AC Induction Motor Performance Data

Record # 72645 - Typical performance - not guaranteed values

Winding: 36WGX707-R007	**Type:** 3634M	**Enclosure:** TEFC

Nameplate Data				575 V, 60 Hz: Single Voltage Motor	
Rated Output (HP)	5			Full Load Torque	7.5 LB-FT
Volts	575			Start Configuration	direct on line
Full Load Amps	4.5			Breakdown Torque	35 LB-FT
R.P.M.	3500			Pull-up Torque	24 LB-FT
Hz	60	Phase	3	Locked-rotor Torque	26 LB-FT
NEMA Design Code	B	KVA Code	K	Starting Current	36.8 A
Service Factor (S.F.)	1.15			No-load Current	1.3 A
NEMA Nom. Eff.	89.5	Power Factor	93	Line-line Res. @ 25ºC	3.88 Ω
Rating - Duty	40C AMB-CONT			Temp. Rise @ Rated Load	63°C
S.F. Amps	5.1			Temp. Rise @ S.F. Load	78°C
				Locked-rotor Power Factor	43.3
				Rotor inertia	0.153 LB-FT2

Load Characteristics 575 V, 60 Hz, 5 HP

% of Rated Load	25	50	75	100	125	150	S.F.
Power Factor	65	80	89	92	94	95	93
Efficiency	87	90.4	90.9	90.2	89.2	87.7	89.6
Speed	3569	3540	3511	3479	3448	3410	3460
Line amperes	1.7	2.6	3.5	4.5	5.5	6.6	5.1

Performance Graph at 575V, 60Hz, 5.0HP Typical performance - Not guaranteed values

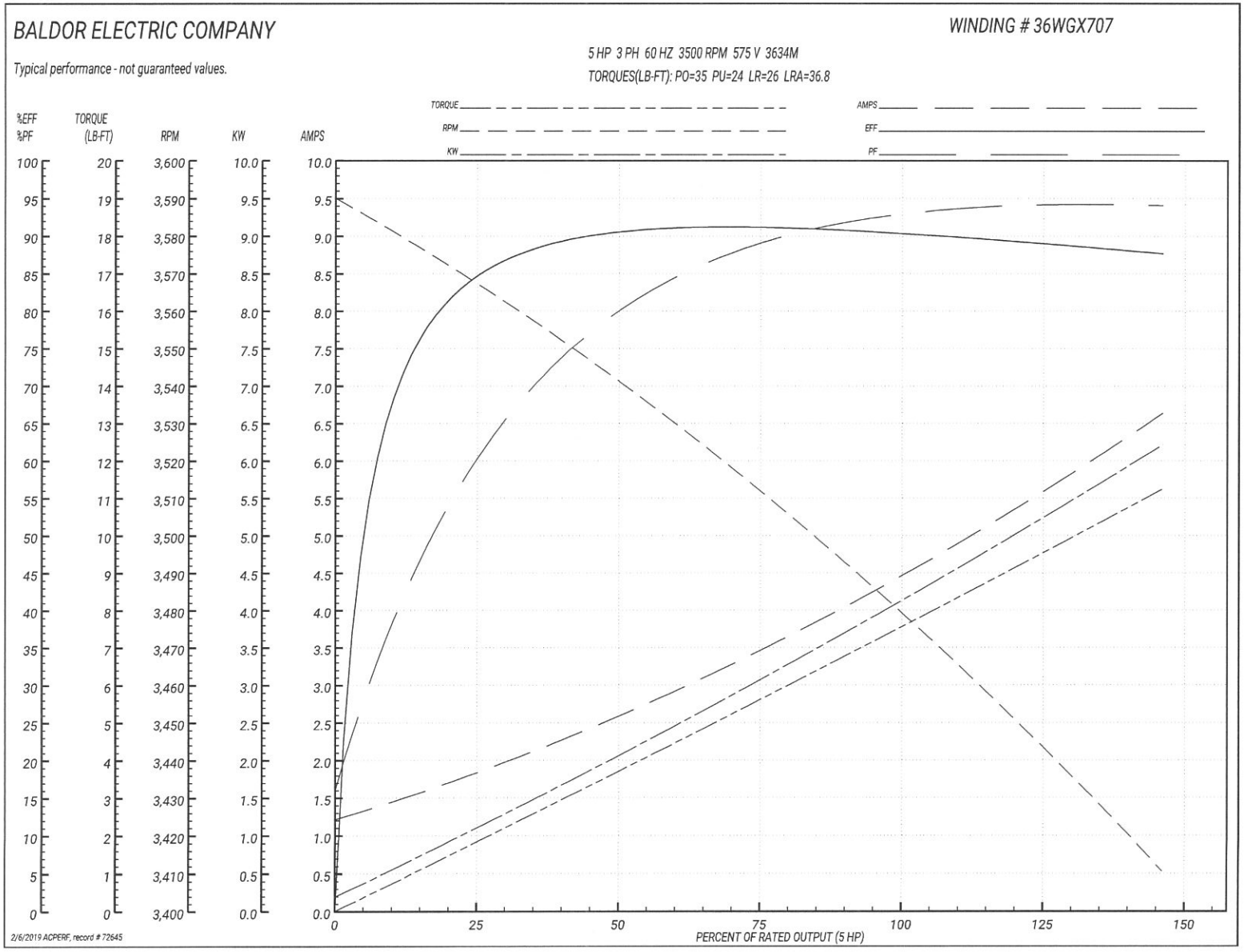

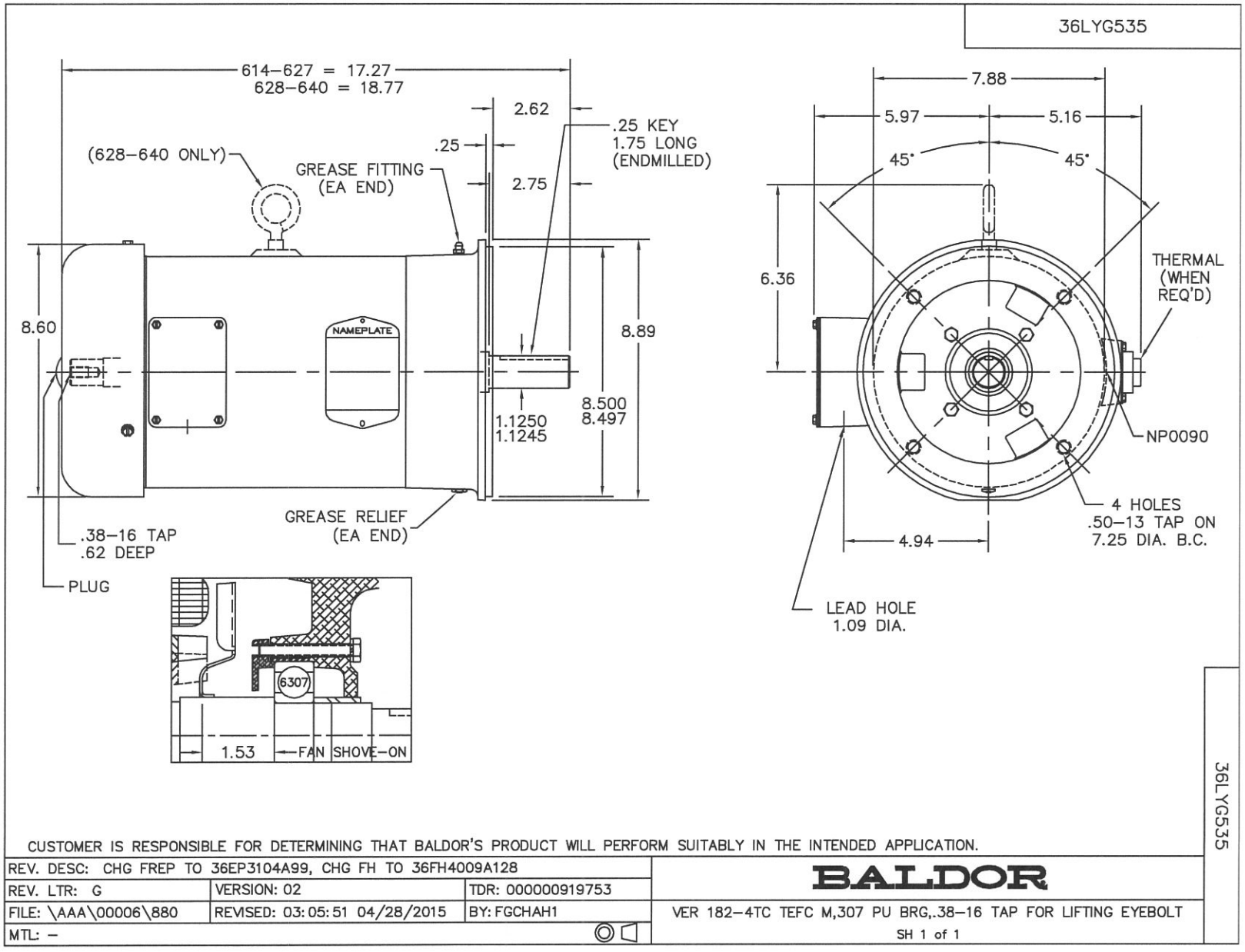
36LYG535
614–627 = 17.27
628–640 = 18.77
2.62
.25
2.75
.25 KEY
1.75 LONG
(ENDMILLED)
(628–640 ONLY)
GREASE FITTING
(EA END)
8.60
NAMEPLATE
8.89
8.500
8.497
1.1250
1.1245
.38–16 TAP
.62 DEEP
PLUG
GREASE RELIEF
(EA END)
6307
1.53
FAN SHOVE–ON
7.88
5.97
5.16
45°
45°
6.36
THERMAL
(WHEN
REQ'D)
NP0090
4 HOLES
.50–13 TAP ON
7.25 DIA. B.C.
4.94
LEAD HOLE
1.09 DIA.
36LYG535
CUSTOMER IS RESPONSIBLE FOR DETERMINING THAT BALDOR'S PRODUCT WILL PERFORM SUITABLY IN THE INTENDED APPLICATION.
REV. DESC: CHG FREP TO 36EP3104A99, CHG FH TO 36FH4009A128
REV. LTR: G
VERSION: 02
TDR: 000000919753
FILE: \AAA\00006\880
REVISED: 03:05:51 04/28/2015
BY: FGCHAH1
MTL: –
BALDOR
VER 182–4TC TEFC M,307 PU BRG,.38–16 TAP FOR LIFTING EYEBOLT
SH 1 of 1

CD0006

TYPICAL WYE–CONNECTED MOTOR

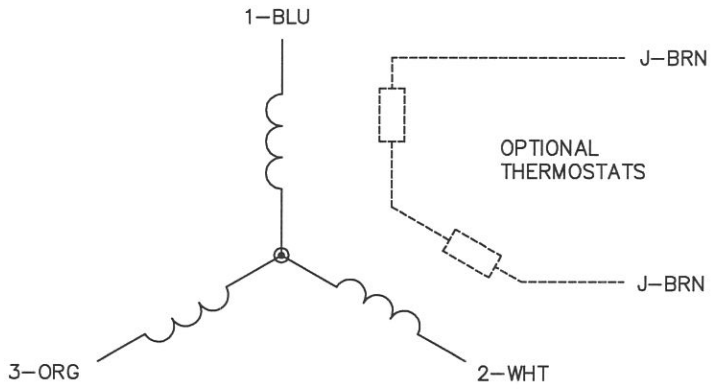

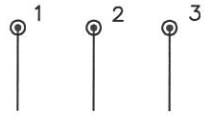

TYPICAL DELTA–CONNECTED MOTOR

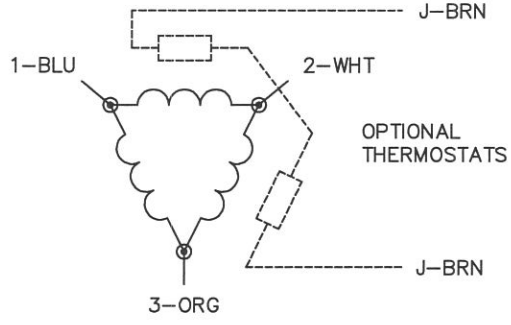

NOTES:

1. THREE LEAD MOTOR MAY BE EITHER WYE CONNECTED OR DELTA CONNECTED.
2. INTERCHANGE ANY TWO LINE LEADS TO REVERSE ROTATION.
3. OPTIONAL THERMOSTATS ARE PROVIDED WHEN SPECIFIED.
4. ACTUAL NUMBER OF INTERNAL PARALLEL CIRCUITS MAY VARY.
5. LEAD COLORS ARE OPTIONAL. LEADS MUST BE NUMBERED AS SHOWN.

REV. DESC: REVISE TO SHOW OPTIONAL COLORS			BALDOR ELECTRIC Co.
REV. LTR: D	BY: JLP	REVISED: 01/21/99 4:02	TDR: 0171435
9000CD		FILE: AAA00005141	MDL: –
		MTL: –	3PH, SV, 3 LEADS, WYE OR DELTA CONNECTED

CD0006

SECTION 7



INCLUDED SPARE PARTS

QUANTITY/UNIT	DESCRIPTION	PART NO. DWG. NO.
1	PNEUMATIC TRACKING VALVE	CH215
1	PNEUMATIC LIMIT SWITCH	CH213
1	BEARING ASSY., STANDARD & TRACKING	CH750
2	DOCTOR BLADES	CH100-LC12
1	GRAVITY ZONE SEAL KIT	KIT-435-LC12L
1	UPPER BELT, HF7040, 47.75" X 225"	BLT-225HF47.75
1	LOWER BELT, HF7040, 47.75" X 344"	BLT-344HF47.75
1	TRACKING VALVE LEVER ARM	CH820
1	TRACKING LEVER ROLLER	CH025
2	SET COLLAR	CH938
1	CYLINDER, 2" x 2", M-20-DXP-20, LC800	CH280-LC8

REVIEWED BY CONTRACTOR

Kudlik Construction Ltd.

NAME: Sandra Rousseau P.Eng

DATE: Jan 07, 2019

NORCLAIR
MÉCANIQUE DE PROCÉDÉ

SHOP DRAWINGS

DA-MP-34 Actuated butterfly valve BFV-02

Date : 2018-12-17

Information general	
Project : **WWTP UPGRADE - IQALUIT**	
Client : Kudlik Construction Ltd. To : Sandra Rousseau P.Eng., Project Manager	Project number : **2018-062** E-mail : srousseau@kudlik.biz
Contractor : **Norclair inc.**	Project number Norclair : **P1039**
Address : 1100, Montée Masson, Laval, QC, Canada H7E 4P2	
Project Manager : Dominic Papineau, Project Manager	E-mail: dpapineau@norclair.ca
Phone : 450-688-4012 # 720	Cell. : 514-409-1832

Information, subcontractor or supplier

Sub/supplier : (

Contact : Fabri

Information o

Speciality : **Pro**

Equipment : A

Drawing refere

Specification re

Article :

STANTEC PROJECT #: 110126045

SUBMITTAL # DA-MP-34 (2018-12-17)

This review by Stantec is for general conformance with the design concept of Stantec's design of the:

☐ Architectural ☐ Structural ☐ Mechanical ☑ Electrical ☑ Other Instrumentation

component(s) only and does not mean that Stantec has verified or approves the shop drawing(s). The Contractor remains solely responsible for the shop drawing(s) and this review by Stantec does not relieve the Contractor of the Contractor's responsibility for errors or omissions in the shop drawing(s) or for meeting all requirements of the contract documents. This review does not mean that Stantec approves the detailed design inherent in the shop drawing, responsibility for which shall remain with the Contractor submitting same, nor does this review mean that Stantec accepts any deviation of the shop drawing(s) from the contract documents. The Contractor is responsible for confirming all dimensions and correlating them at the job site, for all construction means, methods and techniques, and for coordination of construction work of all trades, including coordination of all shop drawings.

Stantec

☐ REVIEWED

☑ REVIEWED, AS NOTED

☐ REVISE AND RESUBMIT

☐ NOT REVIEWED

DATE 2018-JAN-28

BY David Hutchison, P.Eng.

CONSULTANT

STANTEC PROJECT #: 110126045

SUBMITTAL # DA-MP-34-BFV-02

This review by Stantec is for general conformance with the design concept of Stantec's design of the:

☑ Process ☐ Structural ☐ Mechanical ☐ Electrical ☐ Other

component(s) only and does not mean that Stantec has verified or approves the shop drawing(s). The Contractor remains solely responsible for the shop drawing(s) and this review by Stantec does not relieve the Contractor of the Contractor's responsibility for errors or omissions in the shop drawing(s) or for meeting all requirements of the contract documents. This review does not mean that Stantec approves the detailed design inherent in the shop drawing, responsibility for which shall remain with the Contractor submitting same, nor does this review mean that Stantec accepts any deviation of the shop drawing(s) from the contract documents. The Contractor is responsible for confirming all dimensions and correlating them at the job site, for all construction means, methods and techniques, and for coordination of construction work of all trades, including coordination of all shop drawings.

Stantec

☑ REVIEWED

☐ REVIEWED, AS NOTED

☐ REVISE AND RESUBMIT

☐ NOT REVIEWED

DATE Jan 9, 2019

BY Alejandro Rojas, P.Eng

1100, montée Masson
Laval, QC, Canada
H7E 4P2

Phone. : 450-688-4012
Fax : 450-661-6341
E-Mail : info@norclair.ca
www.norclair.ca

Actuated butterfly valve BFV02 - 350mm

Keystone GR,
STYLE: Lug,
SIZE: DN0350/ NPS 14'',
BODY: Ductile Iron,
DISC :Aluminium Bronze,
STEM: 431 Stainless Steel,
SEAT: NBR FG , F
LANGE DRILLING:
ASME 150,
BETTIS on/off electric actuator, Ductile iron body, Nema 4X and CSA certified, Size 820, 2x SPDT switches, Heater, Thermostat, Internal brake, Female output drive, 100% duty cycle, 115 VAC / 1 Ph, / 60 Hz, 60 second operation

EMERSON

KEYSTONE SERIES GR RESILIENT SEATED BUTT

GRW/GRL

A heavy duty industrial resilient seated butterfly valve
GRW - Wafer body design
GRL - Lugged body design



GENERAL APPLICATION

Water, air, dry bulk conveying etc. These valves are for any service where a drop-tight shut-off with maximum flow area is required.

TECHNICAL DATA

Sizes:	DN 50 - 900 (NPS 2 - 36)
Pressure:	16 bar DN 50 - 300 (230 psi NPS 2 - 12) 10 bar DN 350 - 900 (150 psi NPS 14 - 36)
Reinforced seat:	16 bar DN 350 - 600 (230 psi NPS 14 - 24)
End of line:	10 bar DN 50 - 300 (150 psi NPS 2 - 12) 6 bar DN 350 - 900 (90 psi NPS 14 - 36)
Reinforced seat:	10 bar DN 350 - 600 (150 psi NPS 14 - 24)
Vacuum service:	0.4 bar (5.8 psia)
Temperature:	-40°C to +160°C (-40 °F to +320°F)
Flange accommodation:	PN 6/10/16 ASME 125/150 JIS 10K BS Table E AS4087 PN 16 AS2129 Table E

FEATURES

- Wafer and lugged body design with face-to-face dimension, according to EN 558 Series 20 and API 609.
- Designed according to EN 593 and API 609.
- The seat is field replaceable and fully isolates the body and shaft from the flow.
- Primary shaft sealing exceeds the pressure rating of the valve and prevents leakage through shaft area to atmosphere.
- A secondary shaft sealing provides back-up safety.
- A molded-in O-ring in the seat for flange sealing eliminates the need for gaskets.
- Shaft seals prevent moisture penetrating into the shaft area.
- The two piece shaft allows for a thin disc and provides minimal obstruction to flow (up to DN 300/ NPS 12).
- Rounded polished disc edge gives full concentric sealing, lower torques, longer seat life and drop-tight shut-off.
- Body locating holes allow ease of installation and centering between the flanges.
- Extended body neck allows for pipe insulation.
- Top and bottom shaft bearings for optimized support and minimum friction and decreased torque.
- Top bushing absorbs actuator side thrust loads.
- All valves comply to Pressure Equipment Directive (2014/68/EU) Module B + D, CE Marking.
- Available approvals: NSF/ANSI 61, ACS, KIWA, WRAS, DVGW-G, ABS, CU-TR.

© 2017 Emerson. All Rights Reserved.

SERIES GRW/GRL
DN 50-300 (NPS 2-12)
(GRW SHOWN)

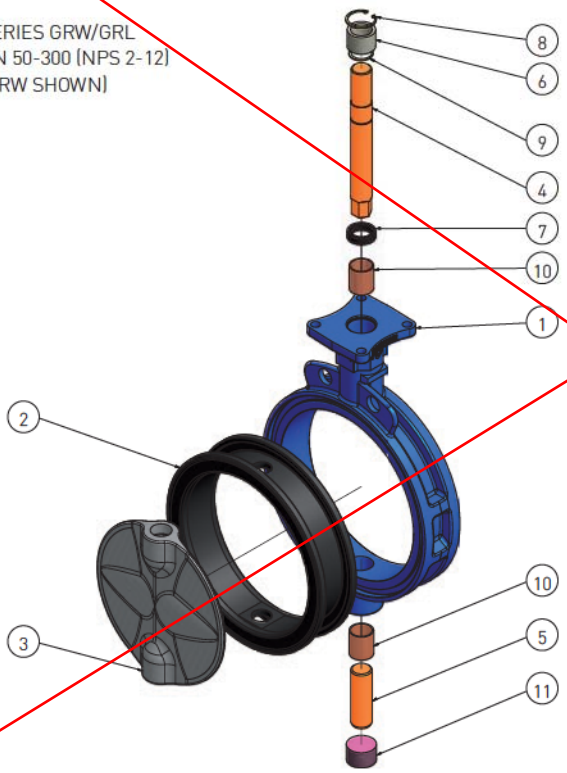

PARTS LIST

Item	Qty	Description
1	1	Body
2	1	Seat
3	1	Disc
4	1	Upper shaft
5	1	Lower shaft
6	1	Upper bushing
7	1	Packing
8	1	Body circlip
9	1	Shaft circlip
10	2	Upper and lower bearing
11	1	Plug

DN 350-900 (NPS 14-36)
(GRL SHOWN)

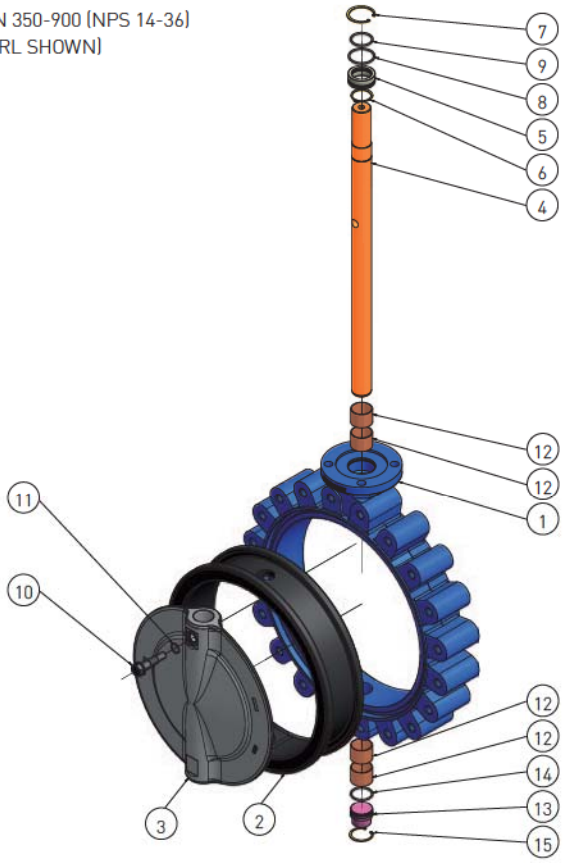

PARTS LIST

Item	Qty	Description
1	1	Body
2	1	Seat
3	1	Disc
4	1	Shaft
5	1	Bushing
6	1	Shaft circlip
7	1	Body circlip
8	1	Body O-ring
9	1	Shaft O-ring
10	1	Disc screw
11	1	Disc screw O-ring
12	4	Upper and lower bearing
13	1	Plug
14	1	Plug O-ring
15	1	Plug circlip

MATERIAL SPECIFICATION

Part name	Material	Material specification	Remark
DN 50-300 (NPS 2-12)			
Body	Ductile iron	ASTM A536 Gr 65-45-12	
		ASTM A395 Gr 60-40-18	(Optional)
Disc	Super duplex	ASTM A890 Gr 5A	
	316 stainless steel	ASTM A351 Gr CF8M	
	304 stainless steel	ASTM A351 Gr CF8	
	Aluminium bronze	ASTM B148 UNS C95200	
	Nickel aluminium bronze	ASTM B148 UNS C95800	
	Ductile iron NYL	ASTM A536 Gr 65-45-12	NYL = Nylon coating, max. temp. 60°C (140°F)
	Ductile iron CTD	ASTM A536 Gr 65-45-12	CTD = Nickel plating
Shaft	316 stainless steel	ASTM A276 Gr 316	
	431 stainless steel	ASTM A276 Gr 431	
	Super duplex	ASTM A276 UNS S32750	
	Monel® K500	ASTM B865 UNS N05500	
Seat	EPDM		Food grade, NSF/ANSI 61, ACS
	EPDM E1		KIWA, WRAS, ACS
	NBR		Food grade
	NBR N1		DVGW-G
	HNBR		
	White NBR		Food grade
	Fluoroelastomer (FKM)		
Bushing	Polyester		
Packing	NBR		
Bearing	PTFE/steel		
Circlip	Stainless steel		
Plug	Carbon steel		
DN 350-900 (NPS 14-36)			
Body	Ductile iron	ASTM A536 Gr 65-45-12	
		ASTM A395 Gr 60-40-18	(Optional)
Disc	Super duplex	ASTM A890 Gr 5A	
	Duplex	ASTM A890 Gr 4A	
	316 stainless steel	ASTM A351 Gr CF8M	
	304 stainless steel	ASTM A351 Gr CF8	
	Aluminium bronze	ASTM B148 UNS C95200	
	Nickel aluminium bronze	ASTM B148 UNS C95800	
	Ductile iron NYL	ASTM A536 Gr 65-45-12	NYL = Nylon coating, max. temp. 60°C (140°F)
	Ductile iron CTD	ASTM A536 Gr 65-45-12	CTD = Epoxy coated, max. temp. 120°C (250°F)
Shaft	431 stainless steel	ASTM A276 Gr 431 S43100	
	Duplex	ASTM A276 UNS S31803	
	Super duplex	ASTM A276 UNS S32750	
	Monel® K500	ASTM B865 UNS N05500	
Seat	EPDM		Food grade, NSF/ANSI 61, ACS
	EPDM E1		KIWA, WRAS, ACS
	NBR		Food grade
	NBR N1		DVGW-G
	HNBR		
	White NBR		Food grade
	Fluoroelastomer (FKM)		
Disc screw	Super duplex	ASTM A276 UNS S32750	
	Duplex	ASTM A276 UNS S31803	
Disc screw O-ring	EPDM		
	NBR		
	FKM		
Plug	Carbon steel		
Plug O-ring	NBR		
Plug circlip	Stainless steel		
Bushing	Polyester		
Shaft/Body O-ring	NBR		
Bearing	PTFE/steel		
Shaft/Body circlip	Stainless steel		

NOTES

Valves with super duplex disc will have super duplex disc screw. All other discs will have a duplex disc screw.

Monel® is a registered trademark of Special Metals Corporation.

MATERIAL SPECIFICATION (REINFORCED SEAT)

Part name	Material	Material specification	Remark
DN 350 - 600 (NPS 14 - 24)			
Body	Ductile iron	ASTM A536 Gr 65-45-12	
		ASTM A395 Gr 60-40-18	(Optional)
Disc	316 Stainless steel	ASTM A351 Gr CF8M	
	Nickel aluminium bronze	ASTM B148 UNS C95800	
	Ductile iron ctd	ASTM A536 Gr 65-45-12	CTD = Epoxy coated, max. temp. 120°C (250°F)
Shaft	431 Stainless steel	ASTM A276 Gr 431 S43100	
	Super duplex	ASTM A276 UNS S32750	
Seat	XEPDM		Metal reinforced EPDM, Food Grade
	XNBR		Metal reinforced NBR, Food Grade
Disc screw	Duplex	ASTM A276 UNS S31803	
Disc screw o-ring	NBR		
Plug	Carbon steel		
Plug o-ring	NBR		
Plug circlip	Stainless steel		
Bushing	Polyester		
Shaft/body o-ring	NBR		
Bearing	PTFE/steel		
Shaft/body circlip	Stainless steel		

NOTES

Valves with super duplex disc will have super duplex disc screw. All other discs will have a duplex disc screw.

SERIES GRW (WAFER)
DN 50-300

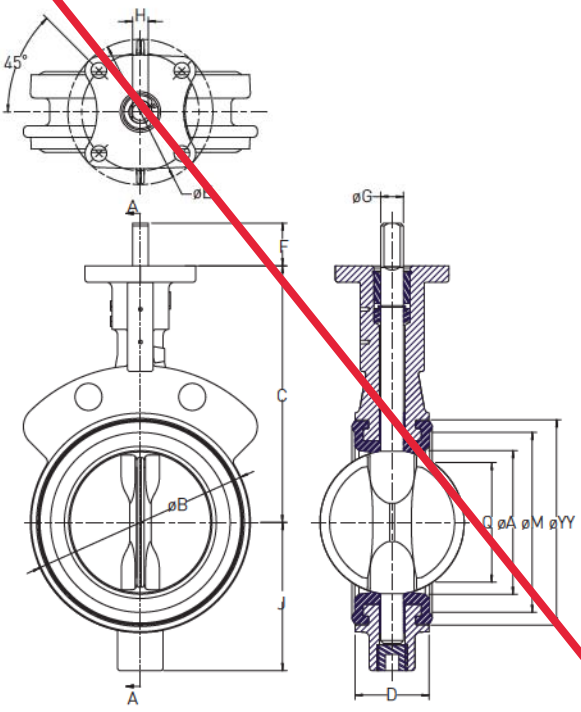

DN 350-900

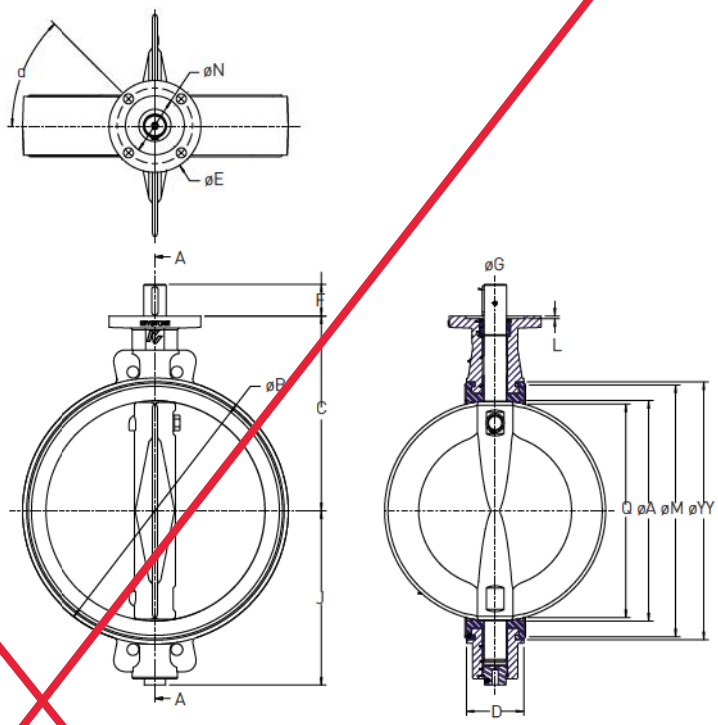

VALVE DIMENSIONS (mm)

Size (DN)	A	B	C	D	E	F	J	L	M	N	Q[1]	YY	Shaft G	Shaft H[2]	Shaft Key	Top plate drilling Bolt circle	Top plate drilling No. holes	Top plate drilling α	Top plate drilling Hole dia.	Adapt. code[4]	Weight[3] (kg)
50	50	91	135	43	100	25	60	-	66	-	28	80	15.88	11.11	-	82.5	4	45°	11.0	BAC	2.0
65	62	105	150	46	100	30	76	-	78	-	43	93	14.29	9.53	-	82.5	4	45°	11.0	BAB	2.7
80	77	123	160	46	100	30	82	-	97	-	65	112	14.29	9.53	-	82.5	4	45°	11.0	BAB	3.2
100	99	154	180	52	100	30	104	-	129	-	87	144	15.88	11.11	-	82.5	4	45°	11.0	BAC	4.3
125	124	187	195	56	100	30	120	-	160	-	113	175	19.05	12.70	-	82.5	4	45°	11.0	BAD	5.9
150	150	208	210	56	100	30	131	-	181	-	142	196	19.05	12.70	-	82.5	4	45°	11.0	BAD	6.8
200	195	265	240	60	150	32	162	-	233	-	188	248	22.23	15.88	-	127.0	4	45°	13.5	CAE	11.8
250	245	320	275	68	150	50	198	-	290	-	237	305	28.58	-	6.4 x 6.4	127.0	4	45°	13.5	CAF	19.1
300	291	372	310	78	150	50	230	-	340	-	283	355	28.58	-	6.4 x 6.4	127.0	4	45°	13.5	CAF	26.8
350	325	416	325	78	150	76	260	-	378	-	318	398	35.00	-	8 x 8	127.0	4	45°	13.5	CAG	40.0
400	380	474	360	102	150	76	298	-	435	-	368	455	35.00	-	8 x 8	127.0	4	45°	13.5	CAG	61.0
450	434	534	395	114	200	76	334	6	495	130	421	515	41.35	-	9.5 x 9.5	165.0	4	45°	22.0	DAH	86.0
500	486	589	430	127	200	108	385	6	549	130	471	569	47.60	-	12.7 x 9.5	165.0	4	45°	22.0	DAJ	106.0
600	585	691	530	154	200	108	456	6	650	130	568	670	47.60	-	12.7 x 9.5	165.0	4	45°	22.0	DAJ	158.0
700	685	800	570	165	200	108	518	6	755	130	668	775	57.20	-	12.7 x 9.5	165.0	4	45°	22.0	DAK	231.0
750	735	842	605	165	200	108	551	6	816	130	719	835	57.20	-	12.7 x 9.5	165.0	4	45°	22.0	DAK	271.0
800	785	907	640	190	300	140	583	6	860	200	765	880	73.00	-	19 x 12.7	254.0	8	22.5°	17.5	KAV	326.0
900	885	1007	715	203	300	140	659	6	960	200	864	980	73.00	-	19 x 12.7	254.0	8	22.5°	17.5	KAV	419.0

NOTES

1. 'Q' dimension is the minimum allowable pipe or flange inside diameter at the centered body face to protect the disc sealing edge against damage when opening the valve.
2. 'H' dimension refers to flat on shaft.
3. Weight may vary depending on trim materials used.
4. DN 50 - actual shaft dimension is 12 mm x 8 mm A/F and is fitted with an adaptor to produce a BAC connection.
5. øYY dimension is to the outside of the seat.
6. øM dimension is to the O-ring seal.

KEYSTONE SERIES GR RESILIENT SEATED BUTTERFLY VALVES

GRW/GRL - METRIC DATA

SERIES GRL (LUG)

DN 50-300

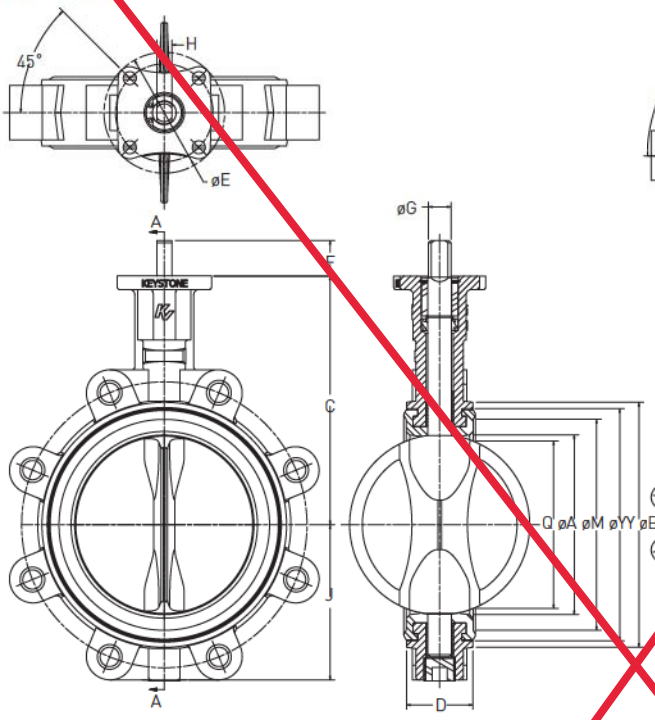

DN 350-900

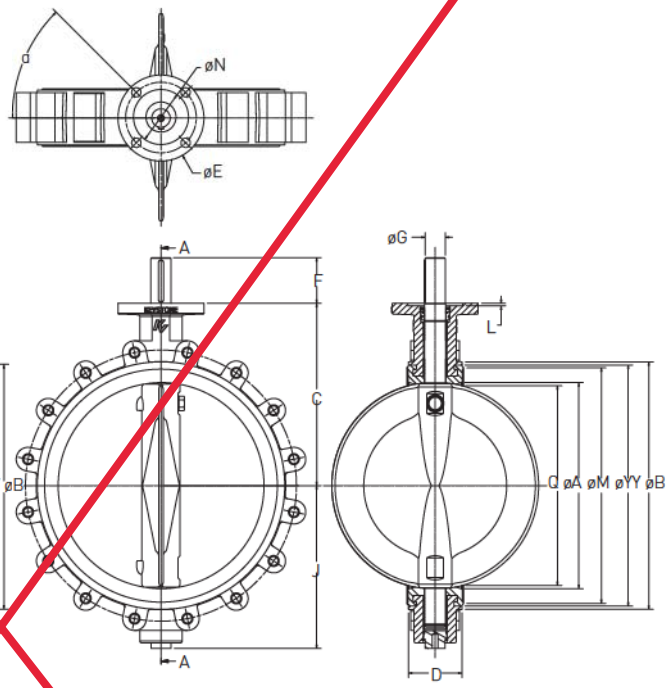

VALVE DIMENSIONS (mm)

Size (DN)	A	B	C	D	E	F	J	L	M	N	Q [1]	YY	Shaft G	Shaft H [2]	Shaft Key	Top plate drilling Bolt circle	No. holes	α	Hole dia.	Adapt. code [4]	Weight [3] (kg)
50	50	92	135	43	100	25	60	-	66	-	28	80	15.88	11.11	-	82.5	4	45°	11.0	BAC	3.0
65	62	105	150	46	100	30	76	-	78	-	43	93	14.29	9.53	-	82.5	4	45°	11.0	BAB	4.0
80	77	126	160	46	100	30	82	-	97	-	65	112	14.29	9.53	-	82.5	4	45°	11.0	BAB	4.5
100	99	156	180	52	100	30	104	-	129	-	87	144	15.88	11.11	-	82.5	4	45°	11.0	BAC	7.0
125	124	190	195	56	100	30	129	-	160	-	113	175	19.05	12.70	-	82.5	4	45°	11.0	BAD	10.0
150	150	214	210	56	100	30	131	-	181	-	142	196	19.05	12.70	-	82.5	4	45°	11.0	BAD	11.0
200	195	268	240	60	150	32	162	-	233	-	188	248	22.23	15.88	-	127.0	4	45°	13.5	CAE	17.0
250	245	321	275	68	150	50	198	-	290	-	237	305	28.58	-	6.4 x 6.4	127.0	4	45°	13.5	CAF	29.5
300	291	375	310	78	150	50	230	-	340	-	283	355	28.58	-	6.4 x 6.4	127.0	4	45°	13.5	CAF	41.0
350	325	416	325	78	150	76	260	-	378	-	318	398	35.00	-	8 x 8	127.0	4	45°	13.5	CAG	52.0
400	380	474	360	102	150	76	298	-	435	-	368	455	35.00	-	8 x 8	127.0	4	45°	13.5	CAG	88.0
450	434	534	395	114	200	76	334	6	495	130	421	515	41.35	-	9.5 x 9.5	165.0	4	45°	22.0	DAH	107.0
500	486	589	430	127	200	108	385	6	549	130	471	569	47.60	-	12.7 x 9.5	165.0	4	45°	22.0	DAJ	161.0
600	585	691	500	154	200	108	456	6	650	130	568	670	47.60	-	12.7 x 9.5	165.0	4	45°	22.0	DAJ	235.0
700	685	800	575	165	200	108	518	6	755	130	668	775	57.20	-	12.7 x 9.5	165.0	4	45°	22.0	DAK	315.0
750	735	862	605	165	200	108	551	6	816	130	719	835	57.20	-	12.7 x 9.5	165.0	4	45°	22.0	DAK	378.0
800	785	907	640	190	300	140	583	6	860	200	765	880	73.00	-	19 x 12.7	254.0	8	22.5°	17.5	KAV	438.0
900 [5]	885	1007	715	203	300	140	659	6	960	200	864	980	73.00	-	19 x 12.7	254.0	8	22.5°	17.5	KAV	559.0

NOTES

1. 'Q' dimension is the minimum allowable pipe or flange inside diameter at the centered body face to protect the disc sealing edge against damage when opening the valve.
2. 'H' dimension refers to flat on shaft.
3. Weight may vary depending on trim materials used.
4. DN 50 - actual shaft dimension is 12 mm x 8 mm A/F and is fitted with an adaptor to produce a BAC connection.
5. Valve size DN 900 is tapped flange design and has no separate lugs.
6. øYY dimension is to the outside of the seat.
7. øM dimension is to the O-ring seal.

SERIES GRW (WAFER)
NPS 2-12

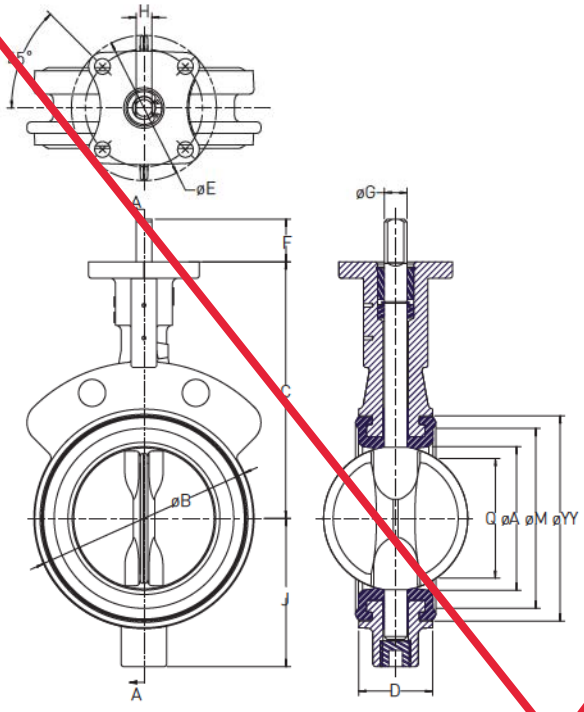

NPS 14-36

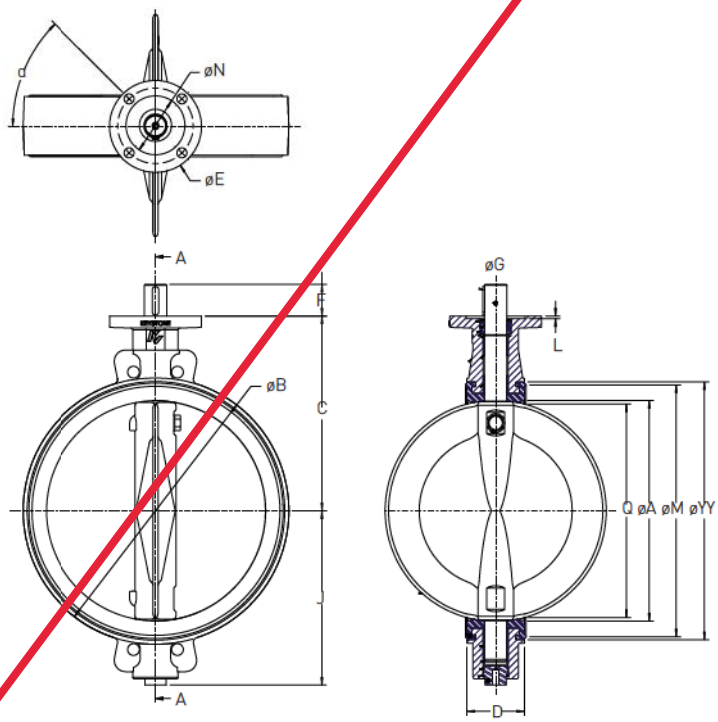

VALVE DIMENSIONS (in)

Size (NPS)	A	B	C	D	E	F	J	I	M	N	Q[1]	YY	Shaft G	Shaft H[2]	Shaft Key	Top plate drilling Bolt circle	Top plate drilling No. holes	Top plate drilling α	Top plate drilling Hole dia.	Adapt. code[4]	Weight[3] (lbs)
2	1.97	3.58	5.31	1.69	3.94	0.98	2.36	-	2.60	-	1.10	2.15	⅝	7/16	-	3¼	4	45°	0.43	BAC	4.5
2.5	2.44	4.13	5.91	1.81	3.94	1.18	2.9[illegible]	-	3.07	-	1.70	3.8[illegible]	9/16	⅜	-	3¼	4	45°	0.43	BAB	6
3	3.03	4.84	6.30	1.81	3.94	1.18	3.23	-	3.82	-	2.56	4.41	9/16	⅜	-	3¼	4	45°	0.43	BAB	7
4	3.90	6.06	7.09	2.05	3.94	1.18	4.09	-	5.08	-	3.43	5.67	⅝	7/16	-	3¼	4	45°	0.43	BAC	9.5
5	4.88	7.36	7.68	2.20	3.94	1.1[illegible]	4.72	-	6.30	-	4.45	6.89	¾	½	-	3¼	4	45°	0.43	BAD	13
6	5.91	8.19	8.27	2.20	3.94	1.[illegible]8	5.16	-	7.13	-	5.59	7.72	¾	½	-	3¼	4	45°	0.43	BAD	15
8	7.68	10.43	9.45	2.36	5.91	1.26	6.38	-	9.17	-	7.40	9.76	⅞	¾	-	5	4	45°	0.53	CAE	26
10	9.65	12.6	10.83	2.68	5.91	1.97	7.80	-	11.42	-	9.33	12.01	1⅛	-	¼ x ¼	5	4	45°	0.53	CAF	42
12	11.46	14.65	12.20	3.07	5.91	1.97	9.06	-	13.39	-	11.14	13.98	1⅛	-	¼ x ¼	5	4	45°	0.53	CAF	59
14	12.80	16.38	12.80	3.07	5.90	2.99	10.24	-	14.88	-	12.50	15.67	1⅜	-	5/16 x 5/16	5	4	45°	0.53	CAG	88
16	14.96	18.66	14.17	4.02	5.90	2.99	11.73	-	17.13	-	14.50	17.91	1⅜	-	5/16 x 5/16	5	4	45°	0.53	CAG	134
18	17.09	21.02	15.55	4.49	8.00	2.99	13.15	0.24	19.49	5.12	16.60	20.28	1⅝	-	⅜ x ⅜	6½	4	45°	0.87	DAH	190
20	19.13	23.19	16.9[illegible]	5.00	8.00	4.25	15.16	0.24	21.61	5.12	18.60	22.40	1⅞	-	½ x ⅜	6½	4	45°	0.87	DAJ	234
24	23.03	27.20	1[illegible].69	6.06	8.00	4.25	17.95	0.24	25.59	5.12	22.30	26.38	1⅞	-	½ x ⅜	6½	4	45°	0.87	DAJ	348
28	26.97	31.50	22.44	6.50	8.00	4.25	20.39	0.24	29.72	5.12	26.30	30.51	2¼	-	½ x ⅜	6½	4	45°	0.87	DAK	509
30	28.94	33.[illegible]4	23.82	6.50	8.00	4.25	21.69	0.24	32.13	5.12	28.30	32.87	2¼	-	½ x ⅜	6½	4	45°	0.87	DAK	597
32	30.91	35.71	25.20	7.48	11.81	5.51	22.95	0.24	33.86	7.87	30.10	34.65	2⅞	-	¾ x ½	10	8	22.5°	0.69	KAV	719
36	34.8[illegible]	39.65	28.15	7.99	11.81	5.51	25.94	0.24	37.80	7.87	34.00	38.58	2⅞	-	¾ x ½	10	8	22.5°	0.69	KAV	924

NOTES

1. 'Q' dimension is the minimum allowable pipe or flange inside diameter at the centered body face to protect the disc sealing edge against damage when opening the valve.
2. 'H' dimension refers to flat on shaft.
3. Weight may vary depending on trim materials used.
4. NPS 2 - actual shaft dimension is ½ in x ⅓ in A/F and is fitted with an adaptor to produce a BAC connection.
5. øYY dimension is to the outside of the seat.
6. øM dimension is to the O-ring seal.

SERIES GRL (LUG)
NPS 2-12

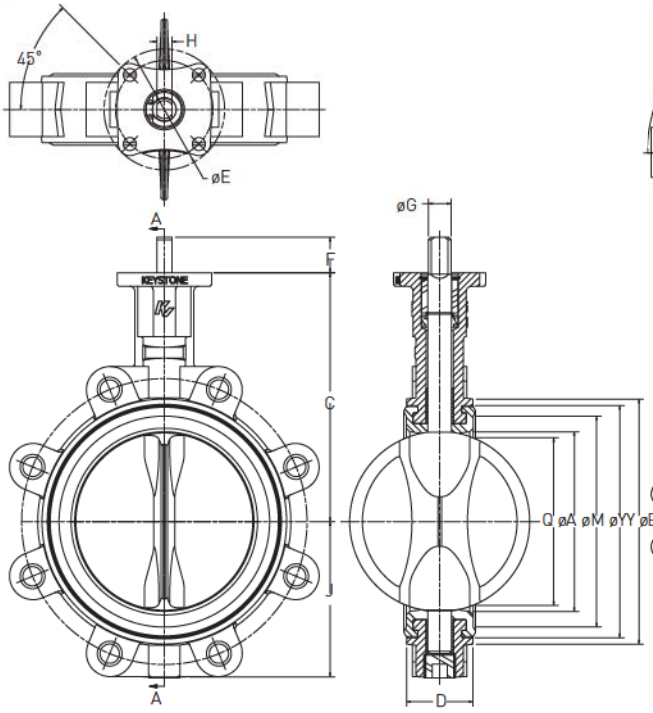

NPS 14-36

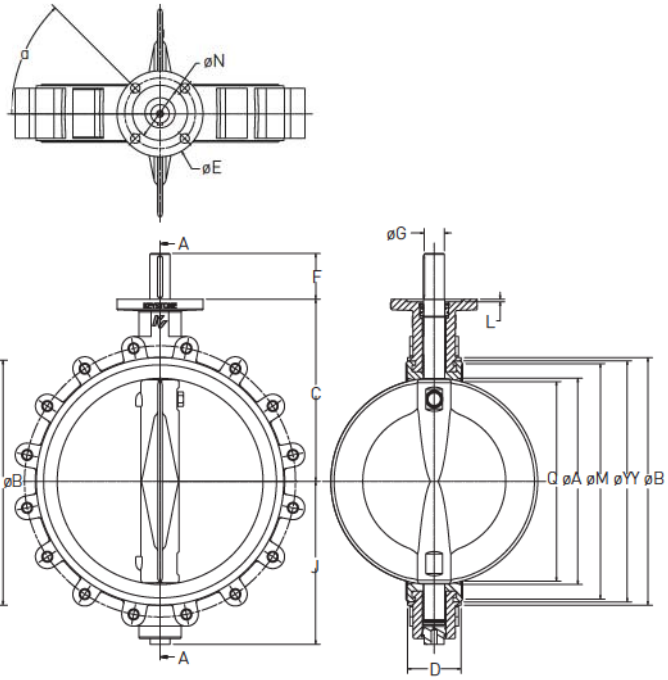

VALVE DIMENSIONS (in)

Size (NPS)	A	B	C	D	E	F	J	L	M	N	Q[1]	YY	Shaft G	Shaft H[2]	Shaft Key	Top plate drilling Bolt circle	Top plate drilling No. holes	Top plate drilling α	Top plate drilling Hole dia.	Adapt. code[4]	Weight[3] (lbs)
2	1.97	3.62	5.31	1.69	3.94	0.98	2.36	-	2.60	-	1.10	3.15	⅝	7/16	-	3¼	4	45°	0.43	BAC	7
2.5	2.44	4.13	5.91	1.81	3.94	1.18	2.99	-	3.07	-	1.70	3.66	9/16	⅜	-	3¼	4	45°	0.43	BAB	9
3	3.03	4.96	6.30	1.81	3.94	1.18	3.23	-	3.82	-	2.56	4.41	9/16	⅜	-	3¼	4	45°	0.43	BAB	10
4	3.90	6.14	7.09	2.05	3.94	1.18	4.09	-	5.08	-	3.43	5.67	⅝	7/16	-	3¼	4	45°	0.43	BAC	15
5	4.88	7.48	7.68	2.20	3.94	1.18	4.72	-	6.30	-	4.45	6.89	¾	½	-	3¼	4	45°	0.43	BAD	21.5
6	5.91	8.43	8.27	2.20	3.94	1.18	5.16	-	7.13	-	5.59	7.72	¾	½	-	3¼	4	45°	0.43	BAD	24
8	7.68	10.55	9.45	2.36	5.91	1.26	6.38	-	9.17	-	7.40	9.76	⅞	⅝	-	5	4	45°	0.53	CAE	38
10	9.65	12.60	10.83	2.68	5.91	1.97	7.80	-	11.42	-	9.33	12.01	1⅛	-	¼ x ¼	5	4	45°	0.53	CAF	65
12	11.46	14.76	12.20	3.07	5.91	1.97	9.06	-	13.39	-	11.14	13.98	1⅛	-	¼ x ¼	5	4	45°	0.53	CAF	90
14	12.80	16.38	12.80	3.07	5.90	2.99	10.24	-	14.88	-	12.51	15.67	1⅜	-	5/16 x 5/16	5	4	45°	0.53	CAG	115
16	14.96	18.66	14.17	4.02	5.90	2.99	11.73	-	17.13	-	14.50	17.91	1⅜	-	5/16 x 5/16	5	4	45°	0.53	CAG	194
18	17.09	21.02	15.55	4.49	8.00	2.99	13.15	0.24	19.49	5.12	16.58	20.28	1⅝	-	⅜ x ⅜	6½	4	45°	0.87	DAH	236
20	19.13	23.19	16.93	5.00	8.00	4.25	15.16	0.24	21.61	5.12	18.56	22.40	1⅞	-	½ x ⅜	6½	4	45°	0.87	DAJ	355
24	23.03	27.20	19.69	6.06	8.00	4.25	17.95	0.24	25.59	5.12	22.35	26.38	1⅞	-	½ x ⅜	6½	4	45°	0.87	DAJ	518
28	26.97	31.50	22.44	6.50	8.00	4.25	20.39	0.24	29.72	5.12	26.30	30.51	2¼	-	½ x ⅜	6½	4	45°	0.87	DAK	694
30	28.94	33.94	23.82	6.50	8.00	4.25	21.69	0.24	32.13	5.12	28.31	32.87	2¼	-	½ x ⅜	6½	4	45°	0.87	DAK	833
32	30.91	35.71	25.20	7.48	11.81	5.51	22.95	0.24	33.86	7.87	30.12	34.65	2⅞	-	¾ x ½	10	8	22.5°	0.69	KAV	966
36[5]	34.84	39.65	28.15	7.99	11.81	5.51	25.94	0.24	37.80	7.87	34.03	38.58	2⅞	-	¾ x ½	10	8	22.5°	0.69	KAV	1232

For ASME 125/150 - flange bolt threads for NPS 2-16 are UNC
- flange bolt threads for NPS 18-36 are 8UN

NOTES

1. 'Q' dimension is the minimum allowable pipe or flange inside diameter at the centered body face to protect the disc sealing edge against damage when opening the valve.
2. 'H' dimension refers to flat on shaft.
3. Weight may vary depending on trim materials used.
4. NPS 2 - actual shaft dimension is ½ in x ⅓ in A/F and is fitted with an adaptor to produce a BAC connection.
5. Valve size NPS 36 is tapped flange design and has no separate lugs.
6. øYY dimension is to the outside of the seat.
7. øM dimension is to the O-ring seal.

DIMENSIONS OF TAPPED FLANGE LOCATING HOLES (mm)

Size	Series GRW		Series GRL	
(DN)	U	V	U	V
700	45.5	5.5	45.5	5.5
750	52.5	12.5	45.5	5.5
800	60.0	20.0	45.5	5.5
900	54.5	6.5	54.5	6.5

Note: all holes in lugged version are through threaded, except the holes closest to top and bottom shaft.

SERIES GRW AND GRL

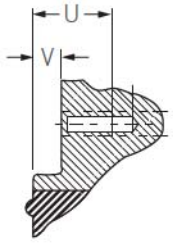

PRESSURE-TEMPERATURE DIAGRAM

Seat material*	Disc material**	Body material	Size range (DN)	Valve function Standard / End of Line	Temperature (°C) -28	-20	-15	0	50	100	120	130	150	160
EPDM	all	DI	50-300	Std / EOL	16 bar / 10 bar									
NBR and white NBR	all	DI	50-300	Std / EOL			16 bar / 10 bar							
HNBR	all	DI	50-300	Std / EOL				16 bar / 10 bar						
FKM	all	DI	50-300	Std / EOL				16 bar / 10 bar					10 bar / 6 bar	
E1 EPDM	all	DI	50-300	Std / EOL			16 bar / 10 bar							
EPDM	all	DI	350-900	Std / EOL				10 bar / 6 bar						
NBR	all	DI	350-900	Std / EOL			10 bar / 6 bar							
HNBR	all	DI	350-900	Std / EOL				10 bar / 6 bar						
FKM	all	DI	350-900	Std / EOL				10 bar / 6 bar					6 bar / 4 bar	
XEPDM	all	DI	350-600	Std / EOL			16 bar / 10 bar							
XNBR	all	DI	350-600	Std / EOL			16 bar / 10 bar							

* All seat materials drop tight

** Per material listed in the material specification tables

For non-PED requirements with EPDM seats, valves can be rated to a minimum temperature of -40°C.

Maximum temperature for ductile iron disc/epoxy ctd. (DN 350-900) is 120°C.

Maximum temperature for ductile iron disc/nylon ctd. is 60°C.

FLOW RATE CO-EFFICIENTS - K_v VALUES

Valve size (DN)	Disc opening (degrees) 10°	20°	30°	40°	50°	60°	70°	80°	90°
50	0	0.9	4.8	14	30	47	72	99	108
65	0	2.4	11.0	27	50	78	123	172	217
80	0	6.0	28.0	55	91	141	215	304	409
100	0	14.0	57.0	109	177	265	407	600	807
125	0	28.0	85.0	158	250	389	630	964	1251
150	7	55.0	130.0	226	367	578	987	1551	1946
200	22	115.0	231.0	405	646	1029	1773	2910	3516
250	34	173.0	339.0	641	980	1546	2677	4449	5806
300	49	253.0	485.0	935	1430	2255	3905	6710	8910
350	119	304.0	637.0	1142	1936	3110	5010	8969	10407
400	155	397.0	832.0	1492	2529	4062	6544	11714	13592
450	196	503.0	1053.0	1888	3200	5141	8288	14826	17203
500	242	621.0	1300.0	2331	3951	6347	10224	18303	21238
600	349	894.0	1871.0	3357	5689	9140	14723	26357	30583
700	475	1216.0	2547.0	4569	7744	12440	20040	35875	41626
750	545	1396.0	2924.0	5245	8890	14281	23005	41183	47785
800	620	1589.0	3327.0	5968	10114	16248	26174	46857	54369
900	785	2011.0	4211.0	7553	12801	20564	33127	59303	68811

Note: K_v = The volume of water in m^3/hr that will pass through a valve with a pressure drop of 1 bar at 20°C.

MAXIMUM ALLOWABLE SHAFT TORQUES (Nm)

Shaft material	Valve size (DN) 50	65	80	100	125	150	200	250	300	350	400	450	500	600	700	750	800	900
316SS	65	110	110	160	260	260	380	762	762									
431SS	90	155	155	230	365	365	650	1307	1307	1542	1824	2977	3219	5086	6312	7128	7088	14740
Duplex										1156	1368	2233	2414	3815	4734	5346	5316	11055
Super duplex	85	142	142	210	340	340	600	1200	1200	1413	1672	2729	2951	4366	5418	6118	6084	12652
Monel® K500	76	129	129	190	306	306	540	1080	1080	1284	1520	2481	2682	4239	5260	5907	5907	12283

DIMENSIONS OF TAPPED FLANGE LOCATING HOLES (in)

Size	Series GRW		Series GRL	
(NPS)	U	V	U	V
28	1.8	0.22	1.8	0.22
30	2.1	0.49	1.8	0.22
32	2.4	0.79	1.8	0.22
36	2.1	0.26	2.1	0.26

Note: all holes in lugged version are through threaded, except the holes closest to top and bottom shaft.

SERIES GRW AND GRL

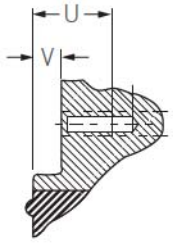

PRESSURE-TEMPERATURE DIAGRAM

Seat material*	Disc material**	Body material	Size range (NPS)	Valve function Standard / End of Line	Temperature (°F) -20	0	32	122	212	248	266	302	320
EPDM	all	DI	2-12	Std / EOL	230 psi /150 psi								
NBR and white NBR	all	DI	2-12	Std / EOL			230 psi /150 psi						
HNBR	all	DI	2-12	Std / EOL				230 psi /150 psi					
FKM	all	DI	2-12	Std / EOL				230 psi /150 psi			150 psi /90 psi		
E1 EPDM	all	DI	2-12	Std / EOL			230 psi /150 psi						
EPDM	all	DI	14-36	Std / EOL				150 psi /90 psi					
NBR	all	DI	14-36	Std / EOL			150 psi /90 psi						
HNBR	all	DI	14-36	Std / EOL				150 psi /90 psi					
FKM	all	DI	14-36	Std / EOL				150 psi /90 psi			90 psi /60 psi		
XEPDM	all	DI	14-24	Std / EOL			230 psi /150 psi						
XNBR	all	DI	14-24	Std / EOL			230 psi /150 psi						

* All seat materials drop tight

** Per material listed in the material specification tables

For non-PED requirements with EPDM seats, valves can be rated to a minimum temperature of -40°F.

Maximum temperature for ductile iron disc/epoxy ctd. (NPS 14-36) is 248°F.

Maximum temperature for ductile iron disc/nylon ctd. is 140°F.

FLOWRATE CO-EFFICIENTS - C_v VALUES

Valve size	Disc opening (degrees)								
(NPS)	10°	20°	30°	40°	50°	60°	70°	80°	90°
2	0	1.0	6	16	35	54	83	114	125
2.5	0	2.8	13	31	58	90	142	199	251
3	0	7	32	64	105	163	249	351	473
4	0	16	66	126	205	306	471	694	933
5	0	32	98	183	289	450	728	1114	1446
6	8	60	150	261	424	668	1141	1793	2250
8	25	133	267	468	747	1190	2050	3364	4065
10	39	200	392	741	1133	1787	3095	5143	6712
12	57	292	572	1081	1653	2607	4514	7757	10301
14	138	351	736	1320	2238	3595	5792	10369	12031
16	179	459	962	1725	2924	4696	7565	13542	15713
18	227	582	1217	2183	3699	5943	9582	17140	19888
20	280	718	1503	2695	4568	7338	11820	21160	24553
24	403	1034	2163	3881	6577	10566	17021	30471	35356
28	549	1406	2945	5282	8953	14382	23168	41474	48123
30	630	1614	3380	6064	10277	16510	26595	47610	55243
32	717	1837	3846	6899	11692	18784	30259	54170	62854
36	908	2325	4868	8732	14799	23773	38297	68558	79550

Note: C_v = The volume of water in U.S.gpm that will pass through a valve with a pressure drop of 1 psi at 70°F.

MAXIMUM ALLOWABLE SHAFT TORQUES (in lbs)

Shaft material	Valve size (NPS) 2	2.5	3	4	5	6	8	10	12	14	16	18	20	24	28	30	32	36
316SS	575	975	975	1415	2300	2300	3360	6740	6740									
431SS	800	1370	1370	2035	3230	3230	5750	11570	11570	13650	16140	26350	29490	45010	55860	63100	62750	130500
Duplex										10230	12110	19760	21370	33770	41900	47300	47050	97900
Super duplex	750	1260	1260	1860	3010	3010	5310	10620	10620	12510	14800	24150	26115	38640	47950	54150	53850	112000
Monel® K500	670	1140	1140	1680	2710	2710	4780	9560	9560	11360	13450	21960	23740	37520	46550	52570	52280	108700

VALVE SEATING AND UNSEATING TORQUES (Nm)

Application	Valve size (DN)																	
ΔP (bar)	**50**	**65**	**80**	**100**	**125**	**150**	**200**	**250**	**300**	**350**	**400**	**450**	**500**	**600**	**700**	**750**	**800**	**900**
I																		
3.5	13	19	26	37	58	81	148	241	345	467	639	845	1089	1700	2494	2967	3495	4422
7	13	20	27	40	63	88	164	271	387	520	719	960	1248	1979	2943	3521	4169	5275
10	14	21	30	44	70	99	188	315	451	595	832	1123	1473	2373	3575	4302	5120	6479
14	15	23	33	49	80	113	219	374	536	-	-	-	-	-	-	-	-	-
16	15	25	36	51	85	120	235	403	578	-	-	-	-	-	-	-	-	-
3.5 (U/C)	8	11	16	22	35	49	89	145	207	280	383	507	653	1020	1497	1780	2097	2653
II																		
3,5	14	21	29	42	66	93	169	274	392	528	718	945	1212	1877	2736	3245	3811	4822
7	14	22	31	45	71	100	185	303	434	580	796	1058	1369	2153	3180	3793	4479	5667
10	15	23	33	49	78	111	208	347	498	652	906	1217	1590	2542	3804	4565	5419[1]	6858
14	16	26	36	54	88	125	240	406	583	-	-	-	-	-	-	-	-	-
16	17	27	38	56	93	132	255	436	626	-	-	-	-	-	-	-	-	-
3.5 (U/C)	8	13	17	25	40	56	101	164	235	317	431	567	727	1126	1642	1947	2287	2893
III																		
3.5	15	23	32	48	74	105	190	306	439	588	797	1045	1336	2055	2978	3523	4127	5222
7	16	24	34	50	79	112	206	336	481	639	874	1156	1490	2328	3417	4065	4788	6059
10	16	26	36	54	86	122	229	380	545	709	981	1312	1707	2710	4034	4828	5719[1]	7237
14	17	28	40	59	96	136	261	439	629	-	-	-	-	-	-	-	-	-
16	18	29	41	61	101	143	276	468	672	-	-	-	-	-	-	-	-	-
3.5 (U/C)	9	14	19	29	44	63	114	184	263	353	478	627	801	1233	1787	2114	2476	3133
IV																		
3.5	17	26	37	55	86	122	221	355	509	679	915	1195	1521	2322	3341	3940	4601	5822
7	18	27	39	58	91	129	237	384	551	728	990	1303	1671	2589	3772	4473	5252	6646
10	18	29	41	62	99	140	260	428	615	795	1094	1454	1883	2963	4378	5223	6168[1]	7805
14	19	31	45	67	108	154	292	487	700	-	-	-	-	-	-	-	-	-
16	20	32	46	69	113	161	307	517	742	-	-	-	-	-	-	-	-	-
3.5 (U/C)	10	16	22	33	52	73	133	213	305	408	549	717	913	1393	2005	2364	2761	3493

NOTES

3.5 U/C refers to reduced diameter disc option.

1. Duplex shaft not suitable for these conditions, use only 431 stainless steel or super duplex.

TORQUE APPLICATION FACTOR CATEGORIES

Application I

Clean liquid lubricating media (water, clean oils, lube oil, mineral oil, etc.); and with no deposit or chemical attack, valve operated at least once a week.
Temperature range from 0°C to maximum temperature rating of the elastomer seat.

Application II

Other liquid media and lubricating gases (aqueous liquids, such as food and beverage, water, etc.); and with minor deposit or chemical attack, valve operated at least once a month.
Temperature range from 0°C to maximum temperature rating of the elastomer seat.

Application III

a. Dry non-abrasive media or gases (non-abrasive powders and dry gas); or
b. Fluids with moderate deposit or chemical attack; or
c. Valves operated less than once a month.

Temperature range from 0°C to maximum temperature rating of the elastomer seat.

Application IV

a. Dry abrasive media and degreasing applications (sand, cement, silicone free, oxygen cleaned); or
b. Liquids with severe deposit; or
c. Valves not frequently operated (once a year).

All above with temperature range from -10°C to maximum temperature rating of the elastomer seat.

NOTES

1. For applications with temperatures above or below the guidelines above, please consult factory.
2. For dry service valves it is suggested to use U/C discs (reduced diameter) when service conditions are less than 3.5 bar.

VALVE SEATING AND UNSEATING TORQUES (in lbs)

Application	Valve size (NPS)																	
ΔP (psi)	2	2.5	3	4	5	6	8	10	12	14	16	18	20	24	28	30	32	36
I																		
50	115	168	230	327	513	717	1310	2133	3054	4137	5654	7479	9635	15043	22076	26264	30933	39137
100	115	177	239	354	558	779	1452	2399	3425	4605	6363	8500	11048	17518	26045	31164	36899	46688
150	124	186	266	389	620	876	1664	2788	3992	5262	7360	9936	13038	21007	31641	38076	45315	57340
200	133	204	292	434	708	1000	1938	3310	4744	-	-	-	-	-	-	-	-	-
230	133	221	319	451	752	1062	2080	3567	5116	-	-	-	-	-	-	-	-	-
50 (U/C)	69	101	138	196	308	430	786	1280	1832	2482	3393	4487	5781	9026	13246	15758	18560	23482
II																		
50	124	186	257	372	584	823	1496	2425	3469	4673	6354	8364	10728	16617	24218	28723	33731	42679
100	124	195	274	398	628	885	1637	2682	3841	5129	7048	9366	12118	19059	28142	33572	39638	50155
150	133	204	292	434	690	982	1841	3071	4408	5770	8023	10775	14074	22498	33670	40404	47966 [1]	60695
200	142	230	319	478	779	1106	2124	3593	5160	-	-	-	-	-	-	-	-	-
230	150	239	336	496	823	1168	2257	3859	5541	-	-	-	-	-	-	-	-	-
50 (U/C)	74	112	154	223	350	494	897	1455	2082	2804	3812	5018	6437	9970	14531	17234	20239	25607
III																		
50	133	204	283	425	655	929	1682	2708	3885	5208	7053	9249	11821	18191	26361	31183	36529	46220
100	142	212	301	443	699	991	1823	2974	4257	5654	7733	10233	13188	20600	30239	35979	42378	53622
150	142	230	319	478	761	1080	2027	3363	4824	6277	8685	11614	15109	23989	35700	42734	50617 [1]	64050
200	150	248	354	522	850	1204	2310	3885	5567	-	-	-	-	-	-	-	-	-
230	159	257	363	540	894	1266	2443	4142	5948	-	-	-	-	-	-	-	-	-
50 (U/C)	80	122	170	255	393	558	1009	1625	2331	3125	4232	5550	7093	10915	15817	18710	21918	27732
IV																		
50	152	233	330	491	764	1081	1956	3141	4503	6012	8103	10577	13461	20552	29575	34872	40727	51533
100	157	242	344	513	807	1143	2095	3401	4878	6440	8760	11533	14794	22912	33385	39591	46487	58823
150	163	257	366	547	873	1237	2304	3792	5441	7038	9680	12872	16663	26226	38744	46229	54593 [1]	69083
200	171	275	394	591	959	1362	2582	4313	6191	-	-	-	-	-	-	-	-	-
230	175	285	408	613	1003	1425	2721	4574	6567	-	-	-	-	-	-	-	-	-
50 (U/C)	91	140	198	295	458	648	1174	1884	2702	3607	4862	6346	8076	12331	17745	20923	24436	30920

NOTES

50 U/C refers to reduced diameter disc option.

1. Duplex shaft not suitable for these conditions, use only 431 stainless steel or super duplex.

TORQUE APPLICATION FACTOR CATEGORIES

Application I

Clean liquid lubricating media (water, clean oils, lube oil, mineral oil, etc.); and with no deposit or chemical attack, valve operated at least once a week.
Temperature range from 32°F to maximum temperature rating of the elastomer seat.

Application II

Other liquid media and lubricating gases (aqueous liquids, such as food and beverage, water, etc.); and with minor deposit or chemical attack, valve operated at least once a month.
Temperature range from 32°F to maximum temperature rating of the elastomer seat.

Application III

a. Dry non-abrasive media or gases (non-abrasive powders and dry gas); or
b. Fluids with moderate deposit or chemical attack; or
c. Valves operated less than once a month.

Temperature range from 32°F to maximum temperature rating of the elastomer seat.

Application IV

a. Dry abrasive media and degreasing applications (sand, cement, silicone free, oxygen cleaned); or
b. Liquids with severe deposit; or
c. Valves not frequently operated (once a year).

All above with temperature range from 15°F to maximum temperature rating of the elastomer seat.

NOTES

1. For applications with temperatures above or below the guidelines above, please consult factory.
2. For dry service valves it is suggested to use U/C discs (reduced diameter) when service conditions are less than 50 psi.

VALVE SEATING AND UNSEATING TORQUES (Nm) (REINFORCED SEAT)

	Valve size (DN)				
Differential pressure (bar)	**350**	**400**	**450**	**500**	**600**
I*					
10	851	1173	1543	2026	3198
14	986	1374	1849	2419	3876
16	1053	1474	1992	2615	4216
II*					
10	947	1298	1721	2221	3879
14	1081	1499	2007	2614	4157
16	1149	1599	2150	2810	4496
III*					
10	1297	1755	2300	2936	4509
14	-	-	-	-	-
16	-	-	-	-	-

NOTES

As the reinforced seat is intended for high pressure applications the base torque commences at 1000 kPa/10 bar.
Reinforced seats are suitable for:

- Severe vacuum application (use 10 bar torque values).
- High line velocities up to 12 m/s for liquids.
- Pressure testing during erection and commissioning.

TORQUE APPLICATION FACTOR CATEGORIES

Application I
Clean liquid lubricating media (water, clean oils, lube oil, mineral oil, etc.);
and with no deposit or chemical attack, valve operated at least once a week.
Temperature range from 0°C to maximum temperature rating of the elastomer seat.

Application II
Other liquid media and lubricating gases (aqueous liquids, such as food and beverage, water, etc.);
and with minor deposit or chemical attack, valve operated at least once a month.
Temperature range from 0°C to maximum temperature rating of the elastomer seat.

Application III
a. Dry non-abrasive media or gases (non-abrasive powders and dry gas); or
b. Fluids with moderate deposit or chemical attack; or
c. Valves operated less than once a month.
Temperature range from 0°C to maximum temperature rating of the elastomer seat.

NOTES

1. For applications with temperatures above or below the guidelines above, please consult factory.

VALVE SEATING AND UNSEATING TORQUES (in lbs) (REINFORCED SEAT)

	Valve size (NPS)				
Differential pressure (psi)	**14**	**16**	**18**	**20**	**24**
I*					
150	7532	10382	13834	17932	28305
200	8727	12161	16365	21410	34306
230	9320	13046	17631	23145	37315
II*					
150	8382	11488	15232	19658	34332
200	9568	13267	17763	23136	36793
230	10170	14152	19029	24871	39793
III*					
150	11479	15533	20357	25986	39908
200	-	-	-	-	-
230	-	-	-	-	-

NOTES

As the reinforced seat is intended for high pressure applications the base torque commences at 150 psi.
Reinforced seats are suitable for:

- Severe vacuum application (use 150 psi torque values).
- High line velocities up to 34.9 f/s for liquids.
- Pressure testing during erection and commissioning.

TORQUE APPLICATION FACTOR CATEGORIES

Application I

Clean liquid lubricating media (water, clean oils, lube oil, mineral oil, etc.);
and with no deposit or chemical attack, valve operated at least once a week.
Temperature range from 32°F to maximum temperature rating of the elastomer seat.

Application II

Other liquid media and lubricating gases (aqueous liquids, such as food and beverage, water, etc.);
and with minor deposit or chemical attack, valve operated at least once a month.
Temperature range from 32°F to maximum temperature rating of the elastomer seat.

Application III

a. Dry non-abrasive media or gases (non-abrasive powders and dry gas); or
b. Fluids with moderate deposit or chemical attack; or
c. Valves operated less than once a month.

Temperature range from 32°F to maximum temperature rating of the elastomer seat.

NOTES

1. For applications with temperatures above or below the guidelines above, please consult factory.

SELECTION GUIDE - PART 1

Example	GRL	0100	-	D0	A1	S2	E0	A1	K	-	00	000	00

Series
GR

Body style

GRL	Lug
GRW	Wafer

Size

0050	DN 50/NPS 2	**0200**	DN 200/NPS 8	**0500**	DN 500/NPS 20
0065	DN 65/NPS 2½	**0250**	DN 250/NPS 10	**0600**	DN 600/NPS 24
0080	DN 80/NPS 3	**0300**	DN 300/NPS 12	**0700**	DN 700/NPS 28
0100	DN 100/NPS 4	**0350**	DN 350/NPS 14	**0750**	DN 750/NPS 30
0125	DN 125/NPS 5	**0400**	DN 400/ NPS 16	**0800**	DN 800/NPS 32
0150	DN 150/NPS 6	**0450**	DN 450/NPS 18	**0900**	DN 900/NPS 36

Body

D0	Ductile iron A536
D2	Ductile iron A395

Disc

D0	Ductile iron - ENP (DN 50-300, NPS 2-12)	**S1**	304 stainless steel
D1	Ductile iron - epoxy (DN 350-900, NPS 14-36)	**A1**	Aluminum bronze
D2	Ductile iron - nylon ctd	**N0**	Nickel aluminum bronze
D3	Ductile iron - FBE[3] ctd	**U0**	Duplex
S0	316 stainless steel	**V0**	Super duplex[2]

Shaft

S0	316 stainless steel[1]
S2	431 stainless steel
U0	Duplex
V0	Super duplex
M1	Monel® K500

Seat

E0	EPDM FG (NSF ANSI/61 & ACS)	**N8**	NBR reinforced (DN 350-600, NPS 14-24)
E6	EPDM reinforced (DN 350-600, NPS 14-24)	**N9**	White NBR
H1	HNBR	**F1**	FKM
N0	NBR FG		

Flange drilling

Single drilled lug and wafer

A1	ASME 125/150
AD	AS 4087 PN 16/AS2129 Table D
AE	AS2129 table E
J1	JIS B2210 - 10K
J5	JIS B2210 - 5K
P1	ISO 7005 PN 6
P2	ISO 7005 PN 10
P3	ISO 7005 PN 16
PA	PN 6/10/16
PB	PN 10/16

Multi drilled wafer

M1	PN 10/16, ASME 125/150, JIS 10K BS table E
M2	PN10/16, ASME 125/150, BS table E
M3	PN 6/10/16, ASME 125/150, BS table E
M6	ASME 125/150, AS2129 E, AS 4087 PN 16

Actuator mounting

K	Keystone mount

Actuation

00	None	**G1**	Gear - blue
H1	10 pos handle - blue	**G5**	Chainwheel - blue

Special

000	None	**C22**	NSF/ANSI std 61
P04	Reduced disc for 50 dpi	**009**	Silicone free

Coating

00	Standard blue	**03**	C5M blue ctd body
02	C3 blue ctd body	**04**	FBE blue ctd body

NOTES

1. The standard shaft material is 431 stainless steel. 316 SS is only available as an option on DN 50-300 (NPS 2-12).
2. All disc screws will be of duplex except for super duplex disc which will have a super duplex disc screw.
3. FBE = Fusion bond epoxy

Other options are available on request. Please consult your local sales representative.
Monel® is a registered trademark of the Special Metals Corporation.



BETTIS™

TorqPlus™

Electric Valve
Actuators
and Controls

EMERSON™
Process Management

EMERSON. CONSIDER IT SOLVED.™

THE ENGINEERED SOLUTION



Introduction

For more than 40 years, Bettis Corporation has been recognized worldwide for providing industry with high performance pneumatic and hydraulic valve actuators. The addition of the Bettis line of TorqPlus electric actuators carries on the tradition of product quality, innovation and service reliability.

Bettis TorqPlus actuators are specifically designed for quarter-turn operating applications — ball, butterfly and plug valves; dampers; vents and similar uses. TorqPlus actuators are available in a wide range of output torques and operating speeds to fit your specific requirements.

The Bettis Engineered Solution

Most electric actuators in use today are designed to meet a range of torque and speed requirements for use in industrial applications. Controls and optional accessories are often available, added at the factory while being assembled. Heretofore, not much attention has been given to field upgrades, inventory modifications or parts replacement during servicing.

The Bettis TorqPlus actuators, instead, provide its users with a unique modular approach. The actuators are manufactured with pre-tapped holes in the base plate to accommodate a myriad of control and accessory components, available in more than 200 easy-to-install kits to fit virtually every requirement imaginable. Kits are available, depending on the actuator model, to add:

- Heaters and thermostats
- Potentiometers
- Servo controls
- Motor brakes
- Positioners and transmitters
- Control stations
- Multi-turn operation
- PLC interface

All of the components can be added inside the CSA type 4/4x weatherproof housing or the CSA type 4/4x, 7 and 9 weatherproof/explosion proof housings.

Advantages

The Bettis TorqPlus, and the modular concept, offers its users significant advantages:

- **Compact Design** – The actuators provide maximum torque output relative to its small design housing.
- **Custom Control Standards** – By offering an almost endless number of control and accessory combinations, Bettis electric actuators can effectively be designed to virtually any end use.
- **Modular Construction** – The modular design allows the actuators to be easily field modified and serviced. Accessory kits can be stored for future use without consuming a large amount of storage space.
- **High Strength Gearing** – We precision-machine our gears from hardened alloy steel, and run in needle bearings. The result is efficiency, smooth energy transfer, quiet operation and, best of all, long service life.
- **Low Maintenance** – Permanent lubrication reduces the need for scheduled maintenance. The actuators are supplied with low temperature lubricant, allowing the units to perform in temperatures to -40°F (-40°C). All operational parts are fully enclosed in the housing eliminating all contact with the environment.
- **Guaranteed Torques** – As with other Bettis actuators, we guarantee our published output torque values. If any Bettis TorqPlus actuator fails to meet its specified torque output under normal use, we will replace it.
- **Duty Cycle** – All Bettis actuators are rated for a duty cycle of at least 30% (one motor-on period followed by two motor-off periods). Higher duty cycles (up to 100%), which can allow for up to 1200 starts per hour, at normal ambient temperatures are available.

TYPICAL SPECIFICATIONS

The following information may be used as a guide to compose specifications for Bettis TorqPlus Electric Actuators. Bettis supplies Electric Actuators that meet or exceed all of the specifications stated below except the Model EM-100 (which is not equipped with a manual override feature or dual conduit entrances).

1. General
The actuator shall consist of a sand cast CSA* Certified enclosure complete with an internal high-torque reversible electric motor, terminal block, heat-treated alloy steel gearing, a minimum of two (2) 1⁄2" NPT conduit connections and a two (2) year original manufacturer's warranty.

2. Actuator Sizing
All actuator torques must be published and must be guaranteed, by the original manufacturer, as minimum values.

The actuator shall be sized to produce a torque equal to or greater than the maximum valve torque, including safety factor, as stated by the valve manufacturer for the service, operating conditions and ambient temperature intended.

3. Ambient Temperature Range
The actuator shall be suitable for normal operation in ambient temperatures ranging from -40 to +140 °F (-40 to +60°C). For temperatures below 32°F (0°C), high-humidity environments or all outdoor applications the actuator shall be supplied with an electric heater and thermostat.

4. Electric Motors
The actuator motor shall be of the reversible, high-torque, open frame ventilated design with built-in automatic resetting thermal overload protection, a minimum 30% duty cycle rating and be UL* and CSA* Certified Motors of 1⁄4 hp or less with not more than 7 amps of locked rotor current draw. When single phase motors are selected, they shall be supplied as a permanent split capacitor type operating from a 1Ph/60Hz/ 115VAC or 220VAC supply.

5. Reduction Gearing
The actuator shall use exclusively cut alloy gearing. All power gearing shall be grease lubricated for long life.

6. Limit Switches
All limit switches shall be independently operated by adjustable cams in each direction of operation. Provisions shall be made for up to six (6) additional cam operated switches, each being capable of operation at any point of travel.

7. Torque Limit Switches
All actuators of 2,000 lb-in (226 Nm) output torque or greater, shall be supplied with two (2) mechanical torque limiting switches which shall be responsive to maximum torque encountered in both directions of travel.

8. Manual Override
Transfer to manual operation from motor operation shall not require the use of hand levers, solenoid shifters or handwheel depression and the transfer shall be positive and reliable.

Actuators of less than 1700 lb-in, except for the model 100, shall be supplied with a disengageable manual override mechanism. Disengagement of the motor drive shall permit the use of a wrench on the output shaft flats and shall by-pass the power gear drive and motor for manual operation.

Actuators of 2,000 lb-in (226 Nm) or greater output torque shall be supplied with a handwheel which will not rotate during motor operation, but must be operational at all times without danger of injury to operator. The handwheel shall not require more than 50 lbs. of rim force to operate under the most adverse conditions and be capable of assisting or opposing the motor without any form of declutching.

9. Enclosure
The actuator enclosure shall be a high-strength sand casting and must be certified by CSA*, or equal third party tester, as acceptable for use in the following locations:

9.1 Non-hazardous indoor or outdoor location to protect against wind-blown dust and rain, splashing water and hose-directed water (i.e. CSA Enclosure 4 – Weatherproof, conforms to IP-65).

9.2 Hazardous locations classified as Class I and II, Groups C, D, E, F and G as defined in the National Electrical Code **plus** non-hazardous locations to protect against wind-blown dust and rain, splashing water and hose-directed water (i.e. CSA Enclosure 4 and 7 – Explosion-proof and Weatherproof).

*CSA is Canadian Standards Associations, Rexdale Ontario, Canada M9W 1R3

*UL is Underwriters Laboratories, Inc., Northbrook, IL 60062

*NEMA is National Electrical Manufacturers Association, Washington, D.C. 20037

DESIGN AND CONSTRUCTION

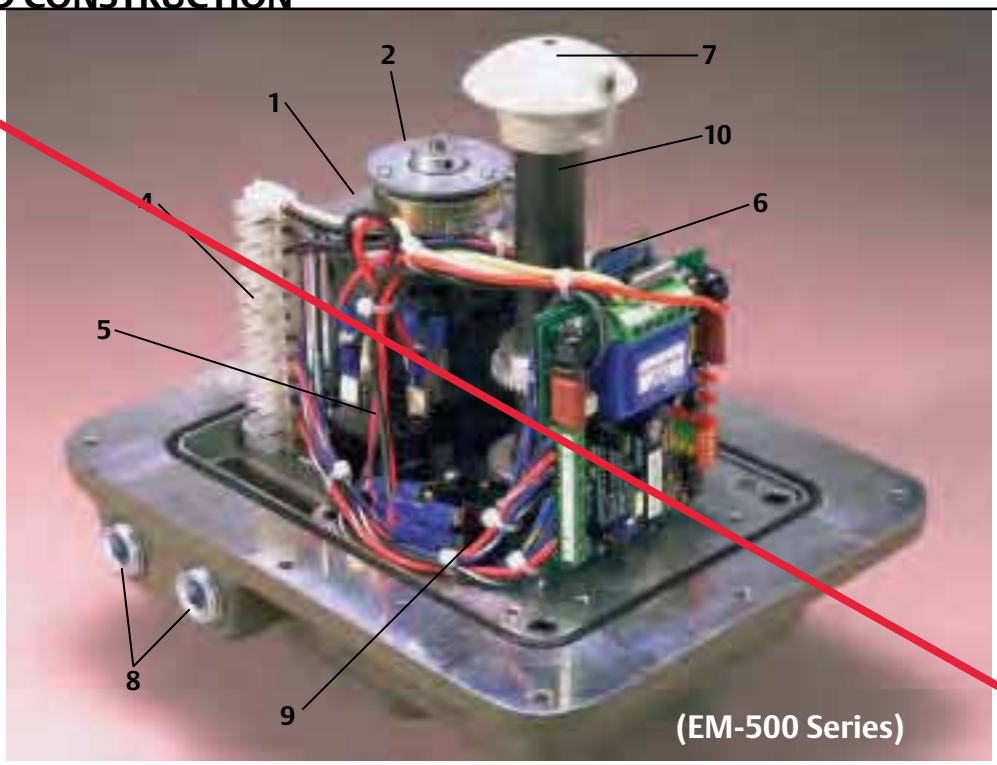

These very rugged and versatile electric actuators take full benefit of precision-machining which allows every model to provide maximum torque output relative to its compact design configuration and contains a minimum of parts to reduce vibration, lessen noise and resist harsh service. Utilizing a combination of spur, worm and planetary power gearing reduction systems, the Bettis TorqPlus actuators incorporate the most efficient, powerful and appropriate drive design for service excellence.

1. Motors. Available in Single Phase, 3 Phase and DC voltages, all motors are custom built for high-torque, low current draw and the highest duty cycle ratings offered. Single phase motors are capacitor run type and three phase are squirrel cage induction type both having integral self resetting thermal cut-outs.

2. Brakes. Offered for all AC and DC motors, they are capable of a holding force equal to the output torque ratings of each actuator model.

3. Heater and Thermostat. Securely mounted and appropriately sized to insure ample protection even in the worst environments (not visible in photo).

4. Terminal Strips. Standard in all models and allow easy plus efficient actuator installation.

5. Capacitors. Used on all single phase AC units, each capacitor is peak voltage rated and of improved design for maximum service life.

6. Potentiometers. Precision mechanically linked to actuator output drive for continuous position signaling.

7. Position Indicator. Mechanically driven and easily viewed at top of actuator to insure or confirm actual actuator and driven device position at all times (not available on compact Model EM-100).

8. Dual Conduit Connections. Standard on all models, except EM-100, allows full electrical code access of all wiring through two NPT connections.

9. Torque Limit Switches. Standard for the high-torque 800-Series of Bettis TorqPlus actuators. These mechanical switches eliminate potential driven device damage due to over torque conditions in either direction of operation.

10.Manual Override. Standard in all models except the EM-100, manual override capability is offered in two forms; Declutchable and Direct Acting.

DESIGN AND CONSTRUCTION

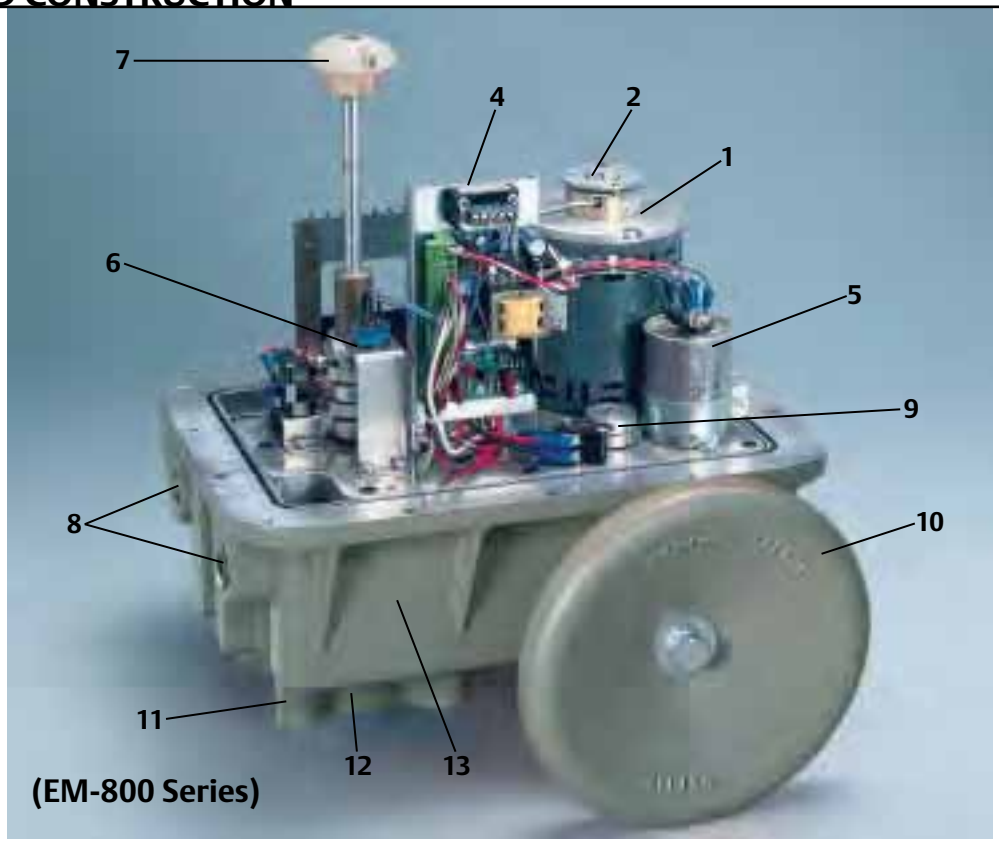

(EM-800 Series)

Model EM-300 and the complete 500-Series offer a Declutchable design which disengages the power gear drive from the output shaft. Manual operation is accomplished by rotating the exposed output shaft drive flats with an open end wrench after the position indicator knob is pulled up. Return to full automatic operation is as easy as removing the wrench and lowering the position indicator knob to allow the mechanism to re-engage upon application of power. Should power be applied during manual operation, the declutchable design will not allow the output shaft to rotate.

The 800-Series offers a Direct Acting handwheel design which allows completely safe operation at any time and with never more than 50 pounds of rim pull force. Operating independent of the motor but directly into the power gear drive, the handwheel does not rotate during automatic operation of the actuator, requires no engagement action for manual operation and may be rotated with or without power to the unit.

11. Enclosures. Made from high strength sand castings, enclosures are rated for applications in both Non-hazardous and Hazardous locations. As an option, the Bettis TorqPlus is also available with a CSA Certified combination Hazardous and Non-hazardous enclosure for indoor and outdoor protection in locations classified Class I and II, Groups C, D, E, F and G as defined in the National Electrical Code plus protects against wind-blown dust, wind-blown rain, splashing water and hose-directed water.

12. Output Drives are corrosion resistant. Female drives are available in a variety of DIN/ISO 8-point sizes. Male drives are also available on models 300 and 500. The EM-800 series is provided with bored drive sleeve with double keyways.

13. Powder Coat Finish. A polyester external coating developed to serve as both a high durability impact and chemical resistant finish. With up to 160 lb-in ASTM D2794 impact resistance, over 1000 hours ASTM B117 salt spray rating and 1000+ hours ASTM D2247 humidity resistance, this protective finish will stay in place and do the job.

TorqPlus™ Electric Actuators

MODEL EM-100

Torque 100 IN/LB – 350 IN/LB

The Engineered Solution

Bettis TorqPlus quality line of electric actuators are designed for quarter turn applications — ball, butterfly and plug valves; dampers; vents and similar uses. TorqPlus actuators are manufactured in a wide range of **guaranteed** output torques and operating speeds to fit your specific requirements.

The Model EM-100 actuators offer compactness with a rugged design to develop maximum torque in a small package.



STANDARD FEATURES

Two year warranty
Permanently lubricated gear train
Stainless steel output drive sleeve
Operating temperatures:
-40°F with heater activated, to +140° F
Unidirectional motor with thermal overload protection and mechanical brake for 100 in/lb model
Single phase capacitor run motor with thermal overload protection and internal motor brake for 250 in/lb and 350 in/lb models
Enclosure certified to weatherproof C.S.A. specifications that conform to Nema type 1, 2, 3, 3R, 4, 4X, & 12
Two single pole double throw travel-stop limit switches with adjustable cams
Female DIN/ISO output drive sleeve and DIN/ISO bolt pattern
Operational in any mounting orientation
Weight: 5 lbs
Single 1/2-inch NPT conduit entrance

OPTIONAL FEATURES

Maximum of two additional single pole double throw auxiliary limit switches
Heater and thermostat
Canadian Standards Association general purpose for electrical certification available under file #LR90062
Standard 1KΩ potentiometer. Other ranges provided upon request.
Relay control
Electronic proportional positioner for 4-20 mA, 1-5 VDC, or 0-10 VDC control input and 4-20mA output signal
Optional voltages
230 VAC 50/60 Hz single phase
12/24 VDC
24 VAC

MODEL EM-100

Torque 100 IN/LB – 350 IN/LB

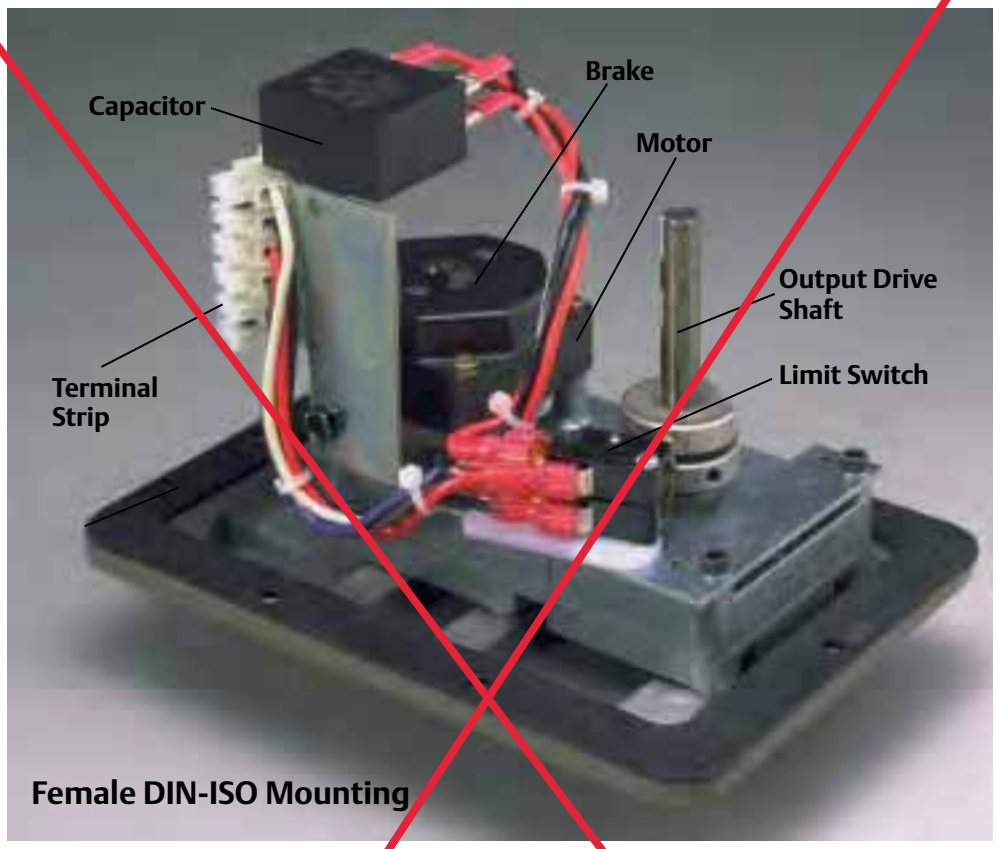

MODEL EM-100 SERIES								
TORQUE		SPEED 90°	LOCKED ROTOR AMP				MOTOR DUTY CYCLE @ 75°F	
IN/lB	NM		115VAC	220VAC	12VDC	24VDC	AC	DC
100	11	2 SEC	1.30	CF*	N/A	N/A	30%	N/A
250	28	10 SEC	0.70	CF*	.70	1.40	30%	100%
350	39	13 SEC	0.70	CF*	N/A	N/A	30%	N/A

** Consult factory for 230VAC locked rotor current.*

Model #	Mounting Bolt Circle	Drive Sleeve
133	F03	F03
144	F04	F04
155	F05	F05

Bettis Electric
2500 Park Avenue West
Mansfield, OH 44906 U.S.A.
T 419-529-4296
F 419-529-4484
Website: www.EmersonProcess.com/Bettis
E-Mail: Info.BettisElectric@EmersonProcess.com

TorqPlus™ Electric Actuators

MODEL EM-300

Torque 150 IN/LB – 600 IN/LB

The Engineered Solution

Bettis TorqPlus quality line of electric actuators are designed for quarter turn applications — ball, butterfly and plug valves; dampers; vents and similar uses. TorqPlus actuators are manufactured in a wide range of **guaranteed** output torques and operating speeds to fit your specific requirements.

The Model EM-300 actuators combine compactness with manual override capability and an extensive array of available options for a broad spectrum of applications.



STANDARD FEATURES

Two year warranty
Heater and thermostat installed in all actuators
Case hardened steel spur gear train is permanently lubricated
Hardened steel drive shaft
Female DIN/ISO F04 output drive and bolt pattern or male output drive
Operating temperatures:
-40° F with standard heater activated to +140° F
Single phase capacitor run motor with thermal overload protection
Internal motor brake on 4 and 10 second units
Enclosure certified to weatherproof C.S.A. specifications that conform to NEMA type 1, 2, 3, 3R, 4, 4X & 12
Two single pole double throw travel-stop limit switches with adjustable cams
Declutchable manual override with position indicator
Dual 1/2-inch NPT conduit entrance
Operational in any mounting orientation.
Weight: 11 to 12 lbs

OPTIONAL FEATURES

75% or 100% extended duty cycle motors
Electromechanical brake for 15 second and 30 second units
Standard 1KΩ potentiometer. Other ranges provided upon request.
Relay control
Electronic proportional positioner for 4-20 mA, 1-5 VDC, or 0-10 VDC control input and 4-20mA output signal
Optional voltages
230 VAC 50/60 Hz single phase
12/24 VDC
24 VAC
Maximum of four additional auxiliary single pole double throw auxiliary limit switches with adjustable cams.
Handwheel
Canadian Standards Association general purpose for electrical certification available under file #LR90062
Dual purpose weatherproof and explosion-proof enclosures are certified by Canadian Standards Association for services: Class I Groups C,D, Division I; Class II Groups E,F,G Division I that conform to NEMA type 7 and 9

MODEL EM-300

Torque 150 IN/LB – 600 IN/LB

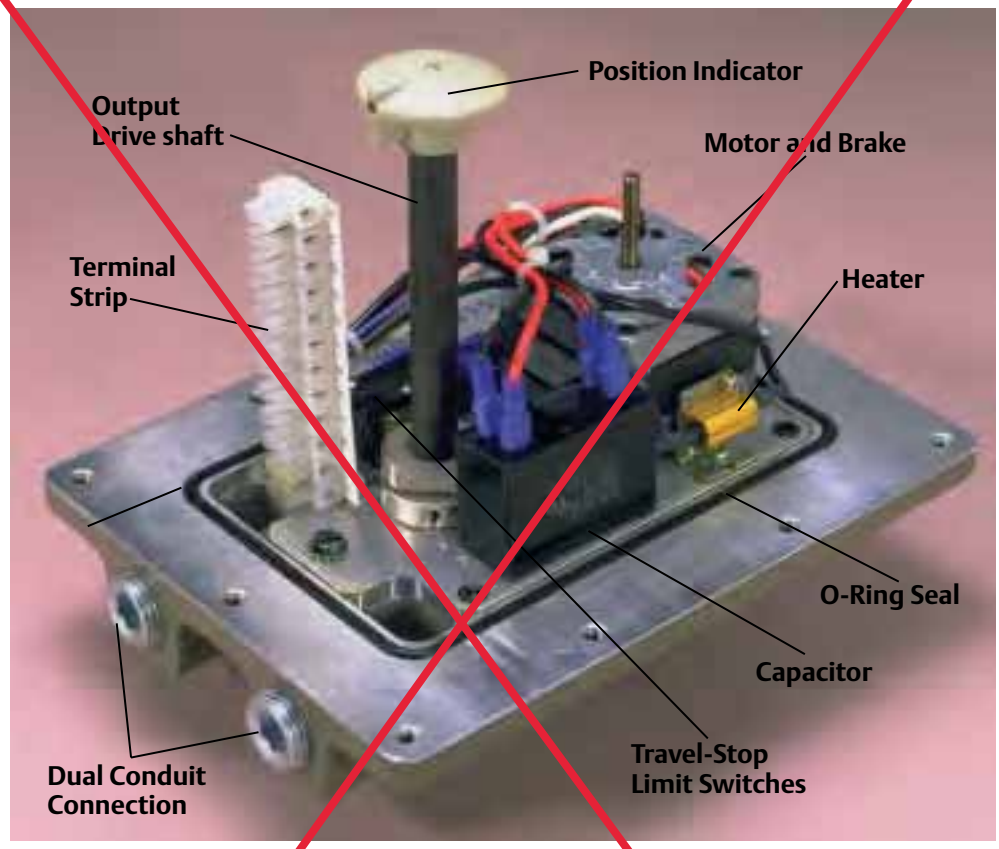

MODEL EM-300 SERIES									
TORQUE		SPEED 90°	MODEL	LOCKED ROTOR AMP				MOTOR DUTY CYCLE @ 75°F	
IN/IB	NM			115VAC	230VAC	12VDC	24VDC	AC	DC
150	17	4 SEC	300-04	0.57 *	0.29	19.2	8.8	**30%	100%
300	34	10 SEC	300-10	0.57 *	0.29	19.2	8.8	**30%	100%
400	45	15 SEC	300-15	0.56 *	0.25	19.2	8.8	**30%	100%
600	68	30 SEC	300-30	0.56 *	0.25	19.2	8.8	**30%	100%

** Locked rotor current for all 75% and 100% duty cycle motors is 0.50 amp*

**75% and 100% duty cycle motors are available for 115 VAC service*

TorqPlus™ Electric Actuators

MODEL EM-500

Torque 350 IN/LB – 1600 IN/LB

The Engineered Solution

Bettis TorqPlus quality line of electric actuators are designed for quarter turn applications — ball, butterfly and plug valves; dampers; vents and similar uses. TorqPlus actuators are manufactured in a wide range of **guaranteed** output torques and operating speeds to fit your specific requirements.

The Model EM-500 Series are designed for the entire mid-range of torques and operating speeds, with a rugged versatility that is hard to beat.



STANDARD FEATURES

Two year warranty
Heater and thermostat installed in all actuators
Hardened steel spur gear train is permanently lubricated
Hardened steel drive shaft
Female DIN/ISO F07 output drive and F07/F10 bolt pattern or male output drive
Operating temperatures:
-40° F with standard heater activated, to +140° F
Single phase capacitor run motor with thermal overload protection
Enclosure certified to weatherproof C.S.A. specifications that conform to NEMA type 1, 2, 3, 3R, 4, 4X and 12
Declutchable manual override with position indicator
Dual 1/2-inch NPT machined conduit entrances
Captive hex bolts on enclosure
Operational in any mounting orientation
Two single pole double throw end of travel stop limit switches with adjustable cams
Weight: 17 to 18 lbs

OPTIONAL FEATURES

Electromechanical brake
Standard 1KΩ potentiometer, other ranges provided upon request
Electronic proportional positioner for 4-20mA, 1-5 VDC, or 0-10 VDC control input, and 4-20mA output signal
Relay control
Optional voltages
220 VAC 50/60 Hz single phase
12/24 VDC
24 VAC
Maximum of four additional single pole double throw auxiliary limit switches with adjustable cams
Handwheel
Dual purpose weatherproof and explosion-proof enclosures are certified by Canadian Standards Association for services: Class I Groups C,D, Division I; Class II Groups E,F,G Division I that conform to NEMA type 7 and 9
Canadian Standards Association general purpose for electrical certification available under file #LR90062

MODEL EM-500

Torque 350 IN/LB – 1600 IN/LB

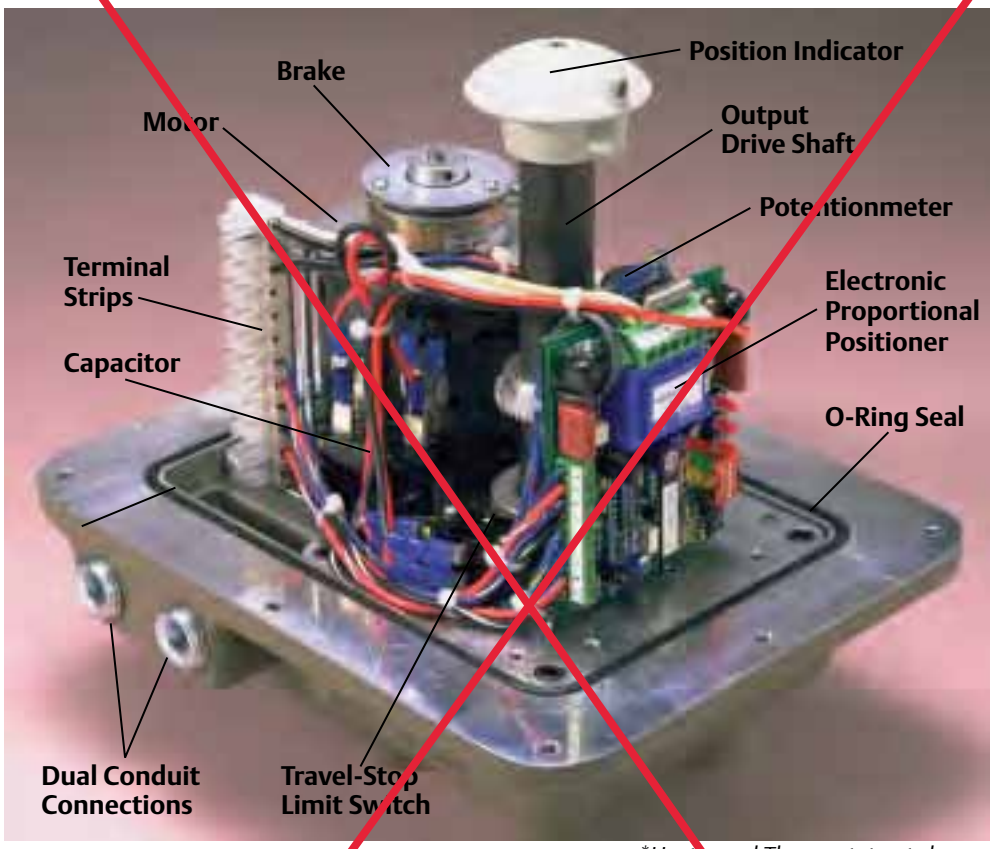

*Heater and Thermostat not shown.

MODEL EM-500 SERIES									
TORQUE		SPEED 90°	MODEL	LOCKED ROTOR AMP				MOTOR DUTY CYCLE @ 75°F	
IN/IB	NM			115VAC	230VAC	12VDC	24VDC	AC	DC
350	39	5 SEC	500-05	0.69	0.36	8.4	7.3	100%	100%
700	79	10 SEC	500-10	0.69	0.36	8.4	7.3	100%	100%
1000	113	15 SEC	500-15	0.69	0.36	8.4	7.3	100%	100%
1600	181	30 SEC	500-30	0.35	0.45	8.4	7.3	100%	100%
325	36	2 SEC	510-02	1.57	0.80	---	18.4	100%	100%
600	68	5 SEC	510-05	1.57	0.80	---	18.4	100%	100%
1000	113	7 SEC	510-07	1.57	0.80	---	18.4	100%	100%
180	20	5 SEC	520-05	0.57	0.29	19.2	8.8	30%	100%
450	51	10 SEC	520-10	0.57	0.29	19.2	8.8	30%	100%
600	68	15 SEC	520-15	0.57	0.29	19.2	8.8	30%	100%
1000	113	30 SEC	520-30	0.57	0.29	19.2	8.8	30%	100%

TorqPlus™ Electric Actuators

MODEL EM-800

Torque 2,000 IN/LB – 20,000 IN/LB

The Engineered Solution

Bettis TorqPlus quality line of electric actuators are designed for quarter-turn applications – ball, butterfly,

[Nunami-DH]
- Required signals to PLC:
4-20mA position control (OK)
4-20mA position feedback (OK)
dry contact auto/manual operation (contractor to confirm or provide alternate)
dry contact overload/torque alarm (contractor to confirm or provide alternate)
- Manual operation must be capable of overriding 4-20mA signal.



STANDARD FEATURES

Two year warranty
Heater and thermostat installed in all actuators
Case hardened steel spur gear train is permanently lubricated
Operating temperatures:
-40° F with standard heater activated, to +140° F
Single phase capacitor run motor with thermal overload protection
Enclosure certified to weatherproof C.S.A. specifications that conform to NEMA type 1, 2, 3,3R, 4 and 12
Handwheel manual operation
Mechanical position indicator
Captive hex bolts on enclosure
Dual 3/4-inch NPT machined conduit entrances
Two single pole double throw travel-stop limit switches with adjustable cams and 2 aux S.P.D.T.
Female drive
Weight: 65-70 lbs (type 4), 150-160 lbs (explosion-proof)
Two mechanical torque limit switches

IONAL FEATURES

Dual purpose weatherproof and explosion-proof enclosures are certified by Canadian Standards Association for services: Class I Groups C,D, Division I; Class II Groups E,F,G Division I that conform to NEMA type 7 and 9
Standard 1K potentiometer, other ranges provided upon request
Electronic proportional positioner for 4-20 mA, 1-5 vDC, or 0-10 vDC control input and 4-20mA output signal
Optional voltages
220 VAC 50/60 Hz single phase
220 VAC 50/60 Hz 3 phase
Relay control
Maximum of four additional single pole double throw auxiliary limit switches with adjustable cams
Electromechanical brake
Canadian Standards Association general purpose for electrical certification available under file #LR90062

MODEL EM-800

Torque 2,000 IN/LB – 20,000 IN/LB

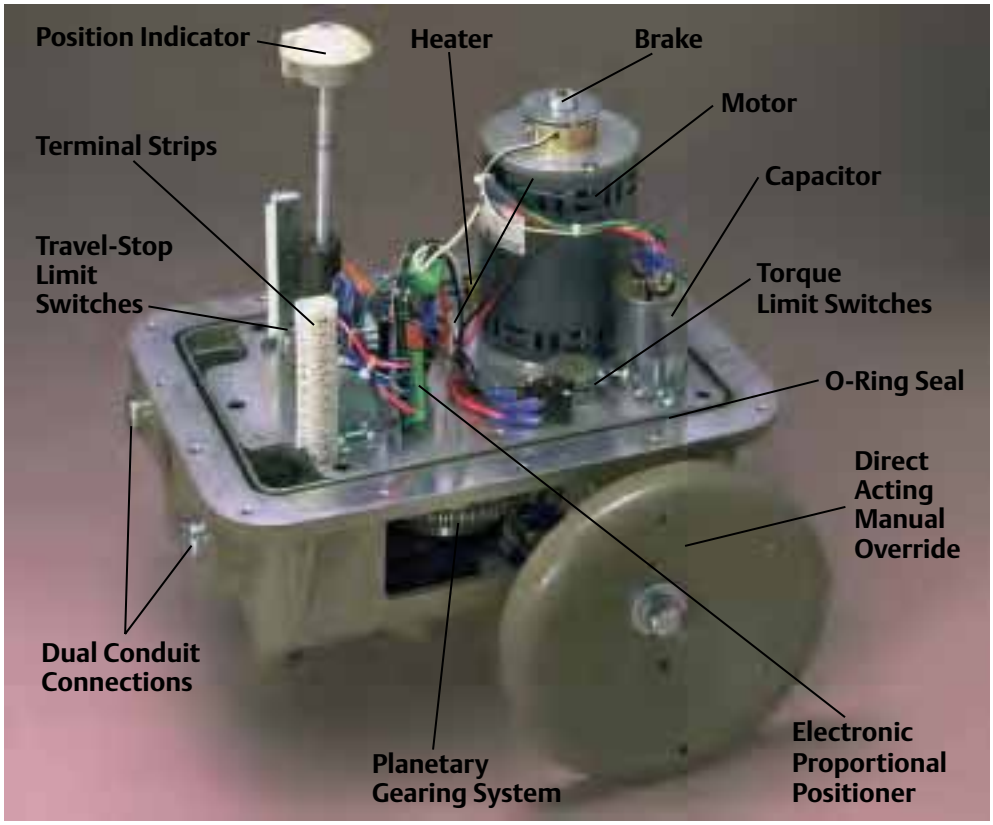

MODEL EM-800 SERIES						
TORQUE		SPEED	MODEL	LOCKED ROTOR AMP		MOTOR DUTY
IN/IB	NM	90°		115VAC	230VAC	CYCLE @ 75°F
2000	226	12 SEC	810-12	3.15	1.3	100%
2500	282	18 SEC	810-18	3.15	1.3	100%
3500	395	30 SEC	810-30	3.15	1.3	100%
4000	452	60 SEC	810-60	3.15	1.3	100%
3000	338	12 SEC	820-12	3.15	1.3	100%
4000	452	18 SEC	820-18	3.15	1.3	100%
6000	678	30 SEC	820-30	3.15	1.3	100%
7000	791	60 SEC	820-60	3.15	1.3	100%
5000	565	12 SEC	830-12	5.97	2.81	100%
7000	791	18 SEC	830-18	5.97	2.81	100%
10000	1130	30 SEC	830-30	5.97	2.81	100%
10000	1130	60 SEC	830-60	5.97	2.81	100%
15000	1695	48 SEC	840-48	5.97	2.81	100%
20000	2260	72 SEC	840-72	5.97	2.81	100%

EM820-60-C4-02-001

TorqPlus™ Electric Actuators

MODEL EM-SR5

Torque 300 IN/LB – 1,600 IN/LB

The Engineered Solution

Bettis TorqPlus has taken the lead in offering compact, cost effective Spring Return Electric Actuator Packages. Three models offer a variety of solutions when one needs to protect a system upon loss of power. These actuators have been designed for dampers, small butterfly, ball and plug valves.



The Model EM-SR5 Series is designed for use in environments where automatic closing/opening is required upon loss of power, with a rugged versatility that is hard to beat.

When power is available, the device operates like a normal quarter turn, open/close or modulating actuator. Under powered operation, the spring pack travels with the movement of the actuator. Under powered stopped conditions, the actuator and spring are held in position via the electric mechanical brake. Upon loss of power, the spring is released and drives the actuator to the predesignated failsafe position. The failsafe positioning can be provided for either the CCW limit or to the CW limit.

STANDARD FEATURES

Two year warranty
Heater and thermostat
Case hardened steel spur gear train is permanently lubricated
Operating temperatures:
-40° F, with standard heater activated, to +140° F
Thermally protected permanent split capacitor motor
Electromechanical brake
CW or CCW spring return
Dual 1/2-inch NPT conduit entrances
Captive hex bolts on enclosure
Operational in any mounting orientation
Limit switches with independent end of travel cams
Male output drive on all models or female DIN/ISO F04 or F05 output drive on 10, 15 and 30 second models
Adjustable mechanical stop at the fail safe position
Visual position indicator
Enclosure certified to weatherproof C.S.A. specifications that conform to NEMA type 1, 2, 3, 3R, 4, 4X and 12

OPTIONAL FEATURES

Modulating service (separate enclosure)
Standard 1KΩ potentiometer, other ranges provided upon request
Optional 220 VAC 50/60 Hz motor
Up to four auxiliary switches with adjustable cams
Canadian Standard Association general purpose for electrical certification available under file #LR90062
Dual purpose weatherproof and explosion-proof enclosures are certified by Canadian Standards Association for services: Class I Groups C,D, Division I; Class II Groups E,F,G Division I that conform to NEMA type 7 and 9

MODEL EM-SR5 SERIES

	Torque (against spring)		Torque (with spring)		Speed (sec/90°)		Motor Ratings			Weight
Model	in/lb	nm	in/lb	nm	Motor	Spring	LRA	FLA	Duty Cycle	(lbs)
SR5-10	300	34	350	40	10	4	0.69	0.34	100%	28-30
SR5-15	400	45	450	51	15	5	0.69	0.34	100%	28-30
SR5-30	600	68	700	79	30	6	0.35	0.30	100%	36-38
SR5-90	1600	181	1400	158	90	25	0.35	0.30	100%	138

Torque 300 IN/LB – 1,400 IN/LB

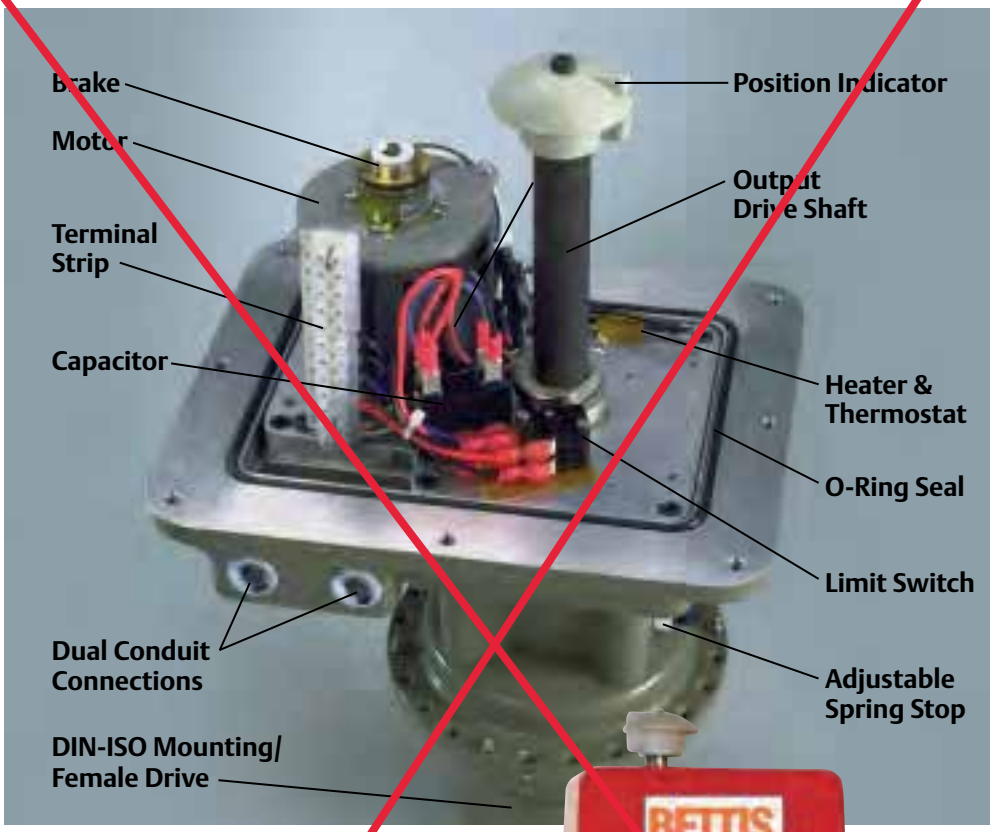



EM-SR5-90 with Gear Reduction Box

Assembly Layout Drawings

MODEL EM-050

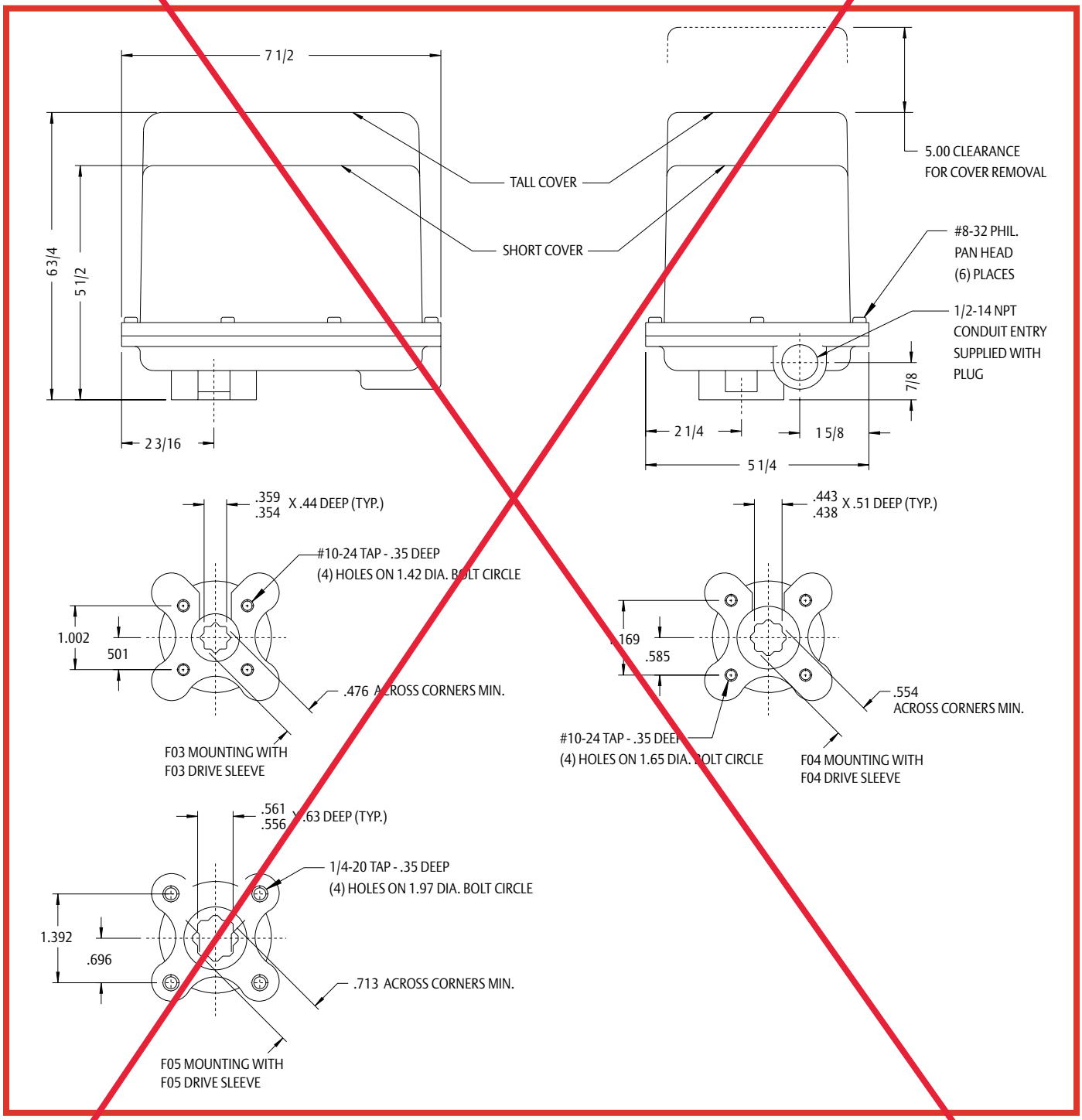

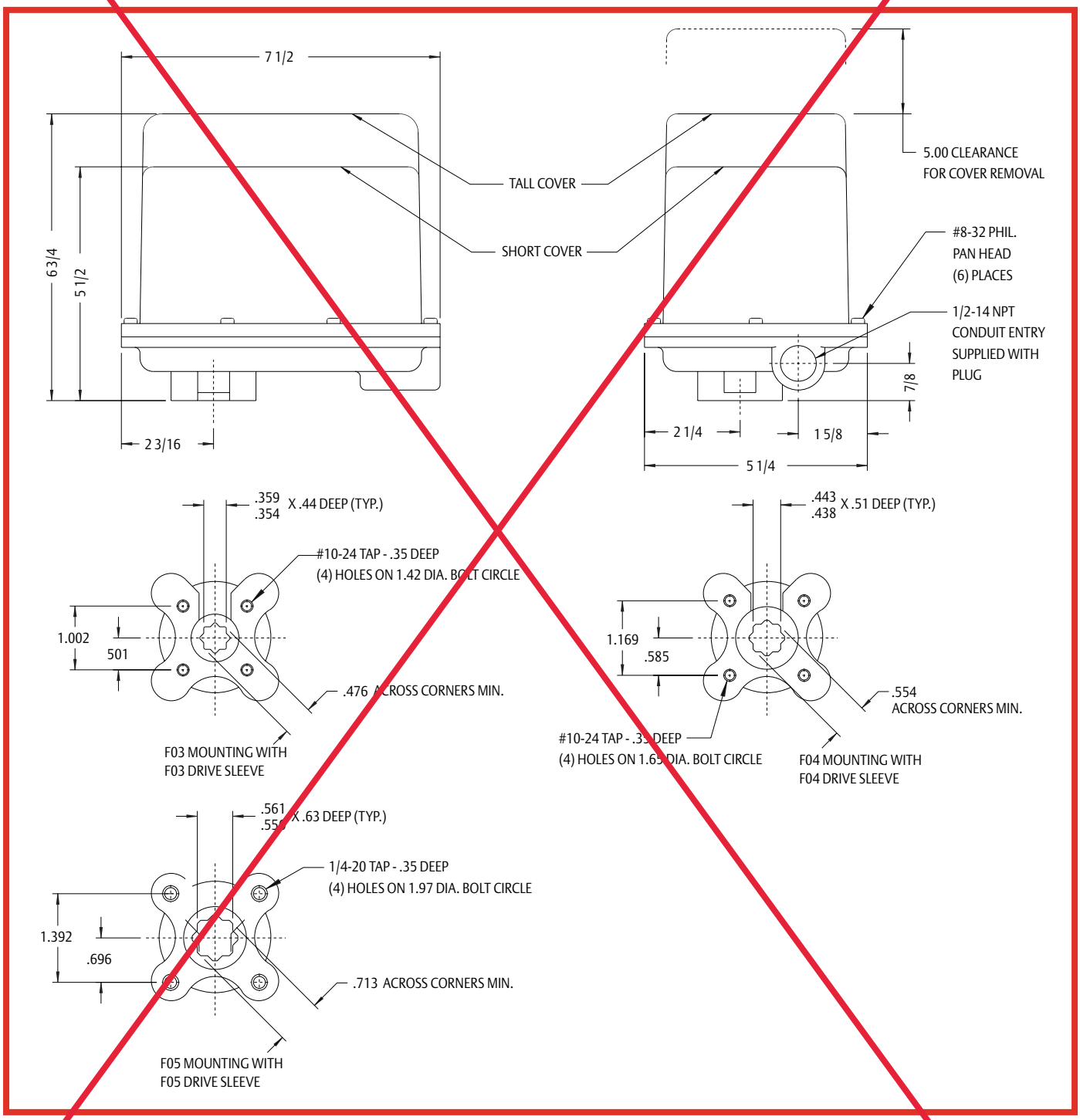
7 1/2
6 3/4
5 1/2
2 3/16
TALL COVER
SHORT COVER
5.00 CLEARANCE
FOR COVER REMOVAL
#8-32 PHIL.
PAN HEAD
(6) PLACES
1/2-14 NPT
CONDUIT ENTRY
SUPPLIED WITH
PLUG
7/8
2 1/4
1 5/8
5 1/4
.359
.354
X .44 DEEP (TYP.)
#10-24 TAP - .35 DEEP
(4) HOLES ON 1.42 DIA. BOLT CIRCLE
1.002
501
.476 ACROSS CORNERS MIN.
F03 MOUNTING WITH
F03 DRIVE SLEEVE
.443
.438
X .51 DEEP (TYP.)
1.169
.585
.554
ACROSS CORNERS MIN.
#10-24 TAP - .35 DEEP
(4) HOLES ON 1.65 DIA. BOLT CIRCLE
F04 MOUNTING WITH
F04 DRIVE SLEEVE
.561
.555
X .63 DEEP (TYP.)
1/4-20 TAP - .35 DEEP
(4) HOLES ON 1.97 DIA. BOLT CIRCLE
1.392
.696
.713 ACROSS CORNERS MIN.
F05 MOUNTING WITH
F05 DRIVE SLEEVE

MODEL EM-300
EM-310
EM-320

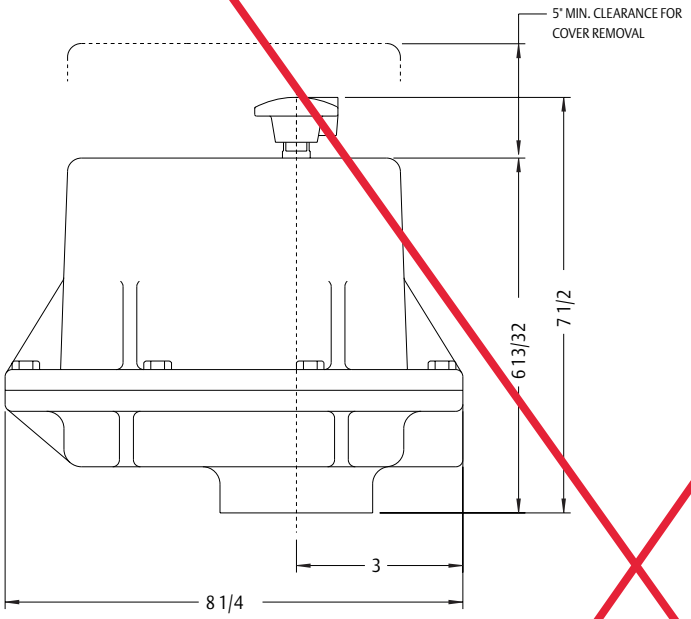

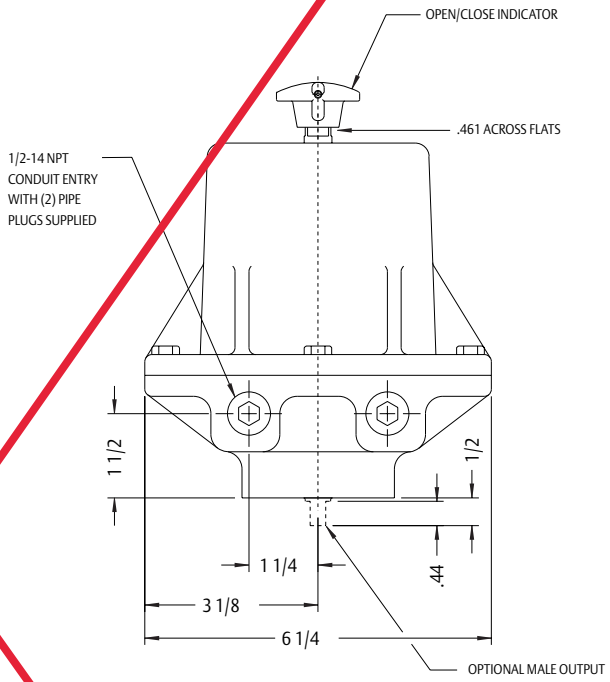

DIN/ISO F04 FLANGE
F04 DIN/ISO FEMALE DRIVE

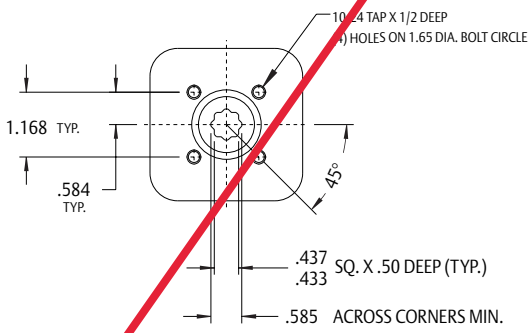

FLANGE DIMENSIONS
WITH MALE OUTPUT

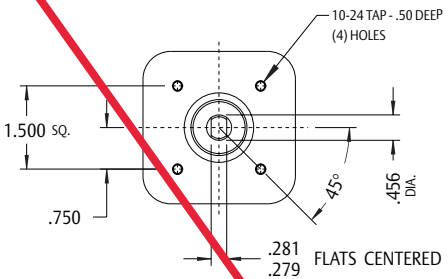

Assembly Layout Drawings

MODEL EM-500
EM-510
EM-520

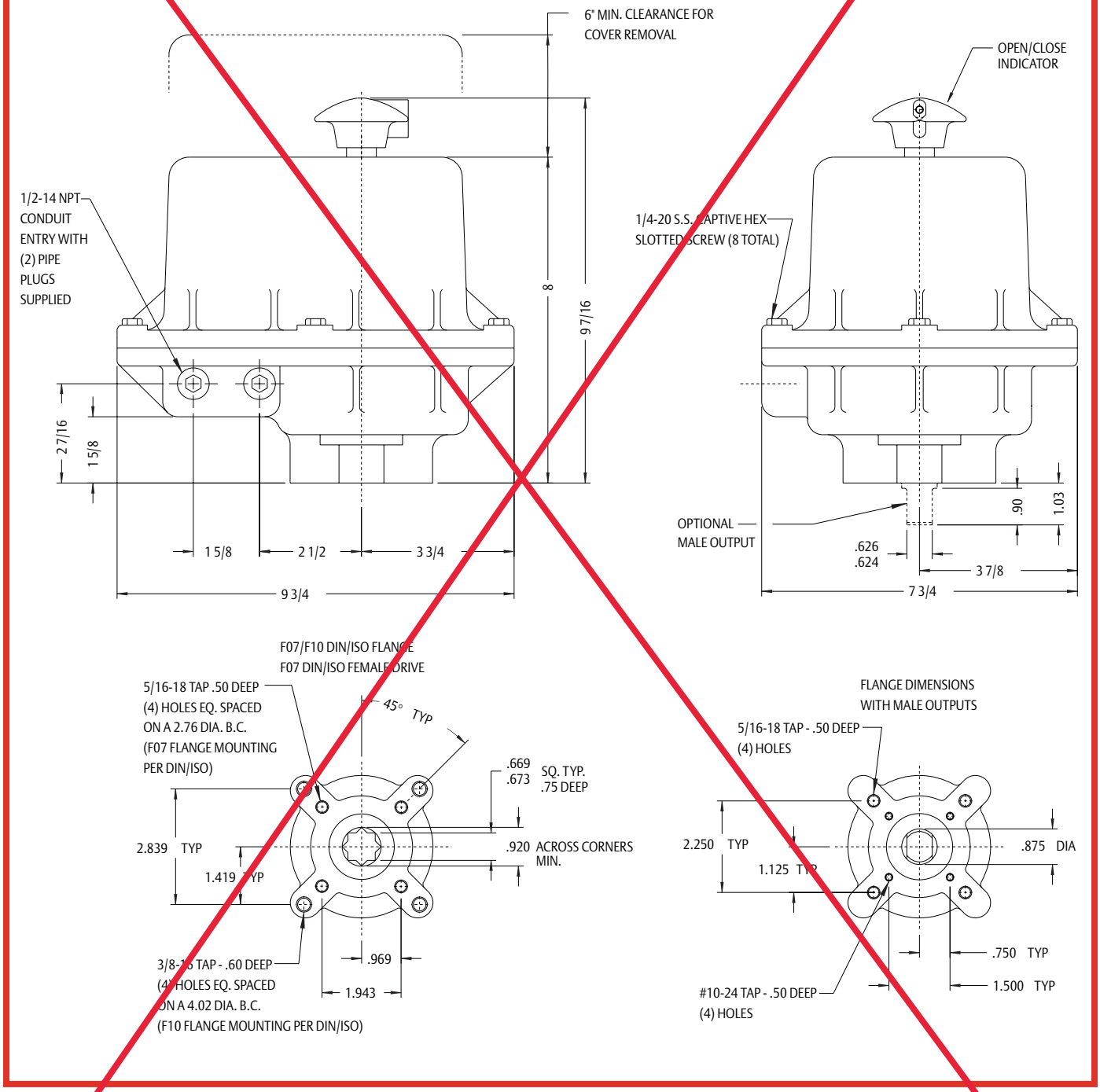

MODEL EM-810
EM-820
EM-830

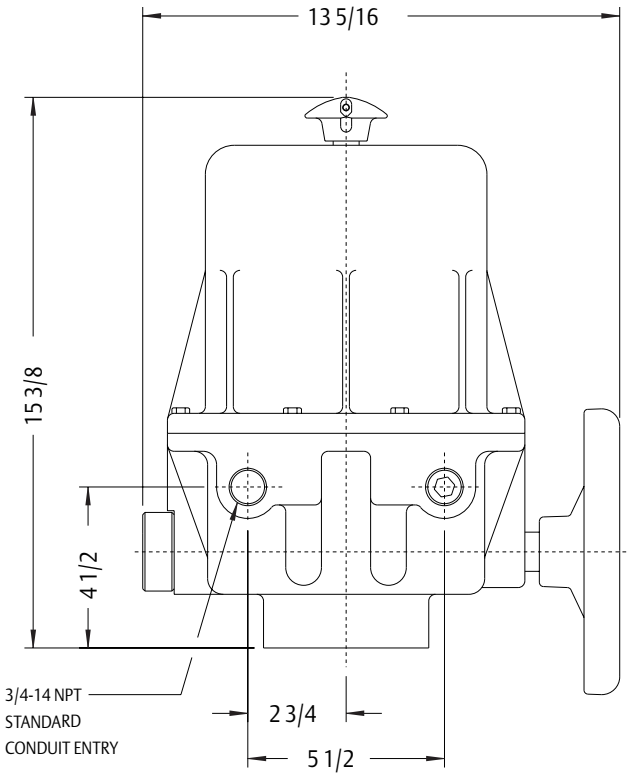

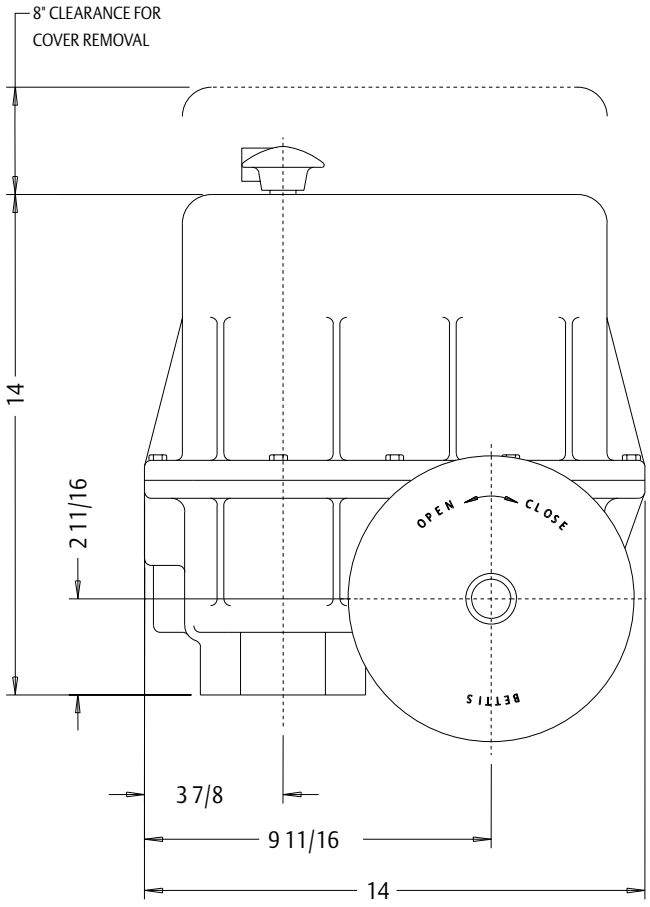

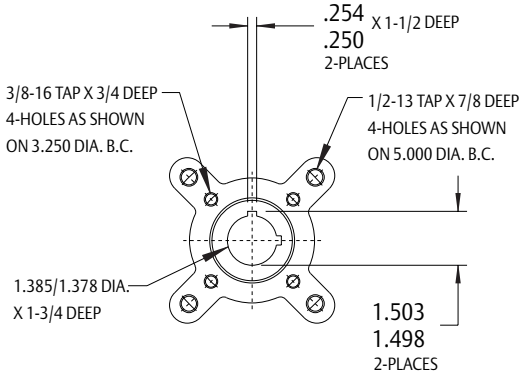

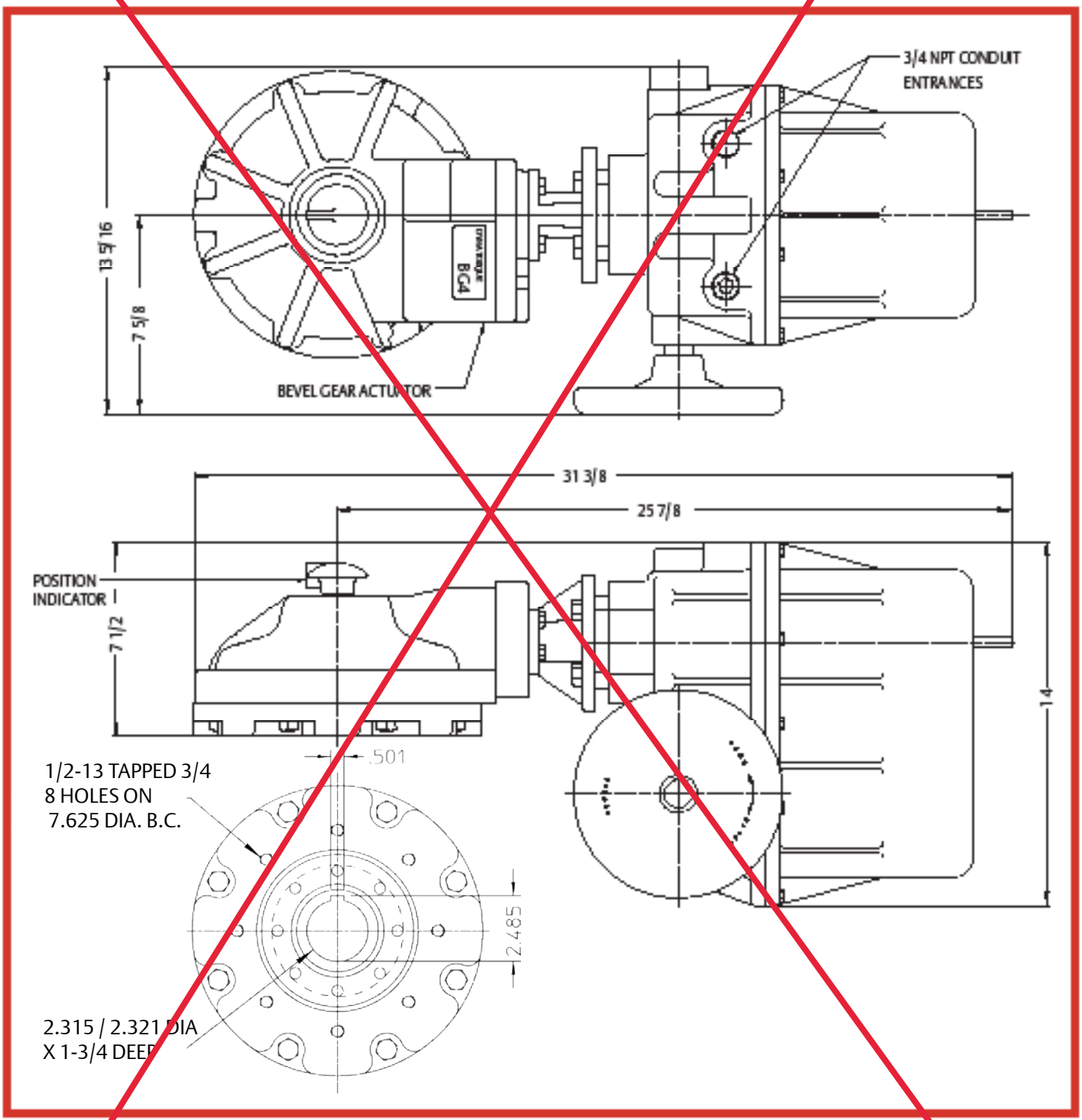
3/4 NPT CONDUIT
ENTRANCES
13 5/16
7 5/8
BEVEL GEAR ACTUATOR
31 3/8
25 7/8
POSITION
INDICATOR
7 1/2
14
.501
1/2-13 TAPPED 3/4
8 HOLES ON
7.625 DIA. B.C.
2.485
2.315 / 2.321 DIA
X 1-3/4 DEEP

MODEL EM-SR5-10
EM-SR5-15

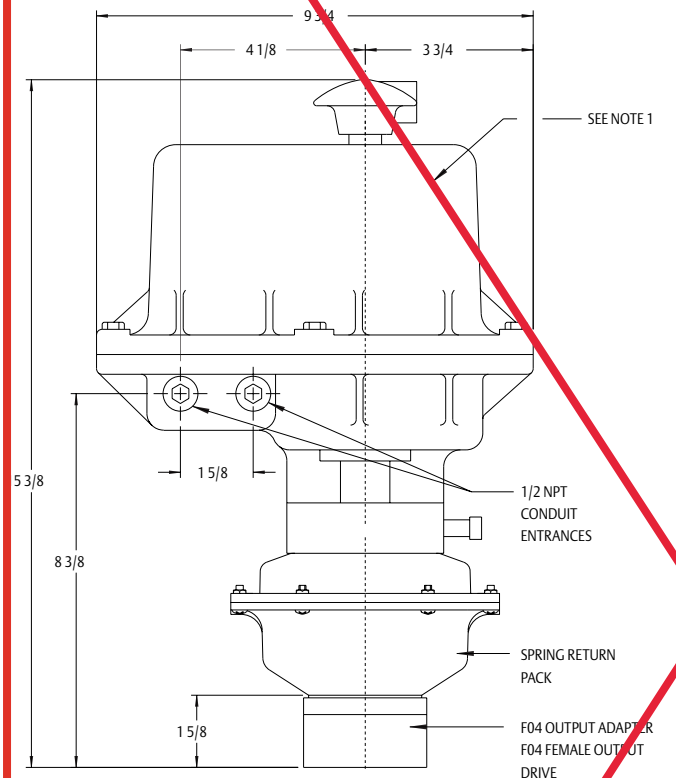

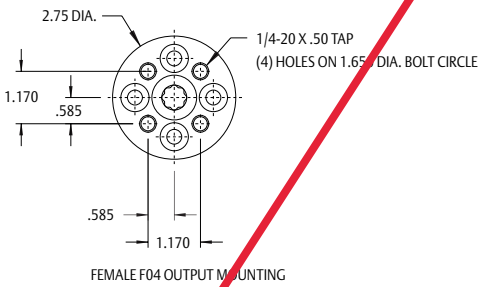

FEMALE F04 OUTPUT MOUNTING

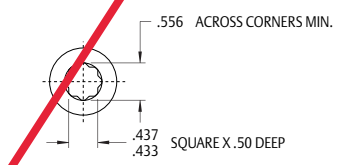

F04 OUTPUT DRIVE VIEW

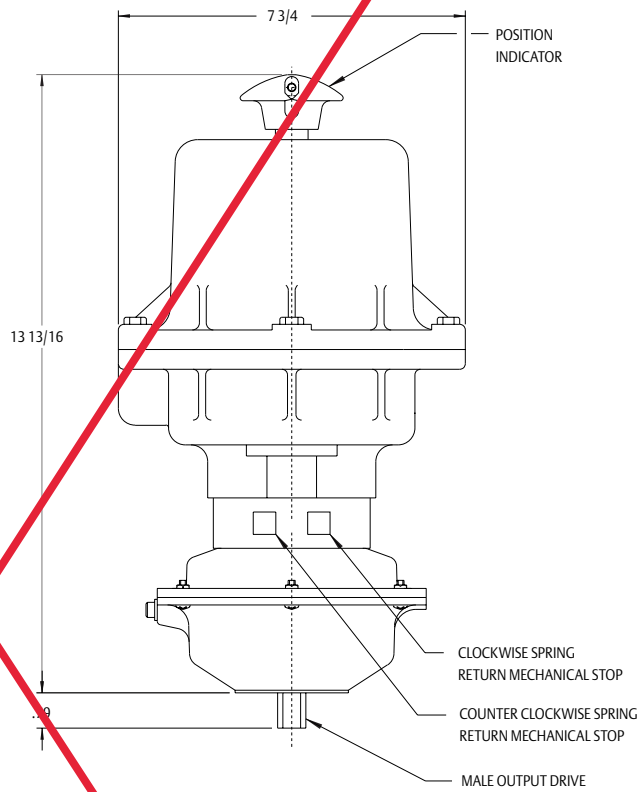

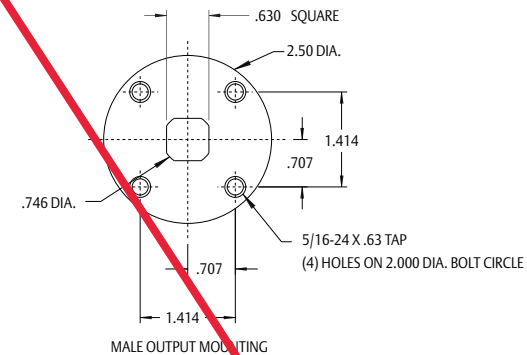

MALE OUTPUT MOUNTING

NOTE:
1) ADD 4.75 TO OVERALL DIMENSION FOR COVER REMOVAL

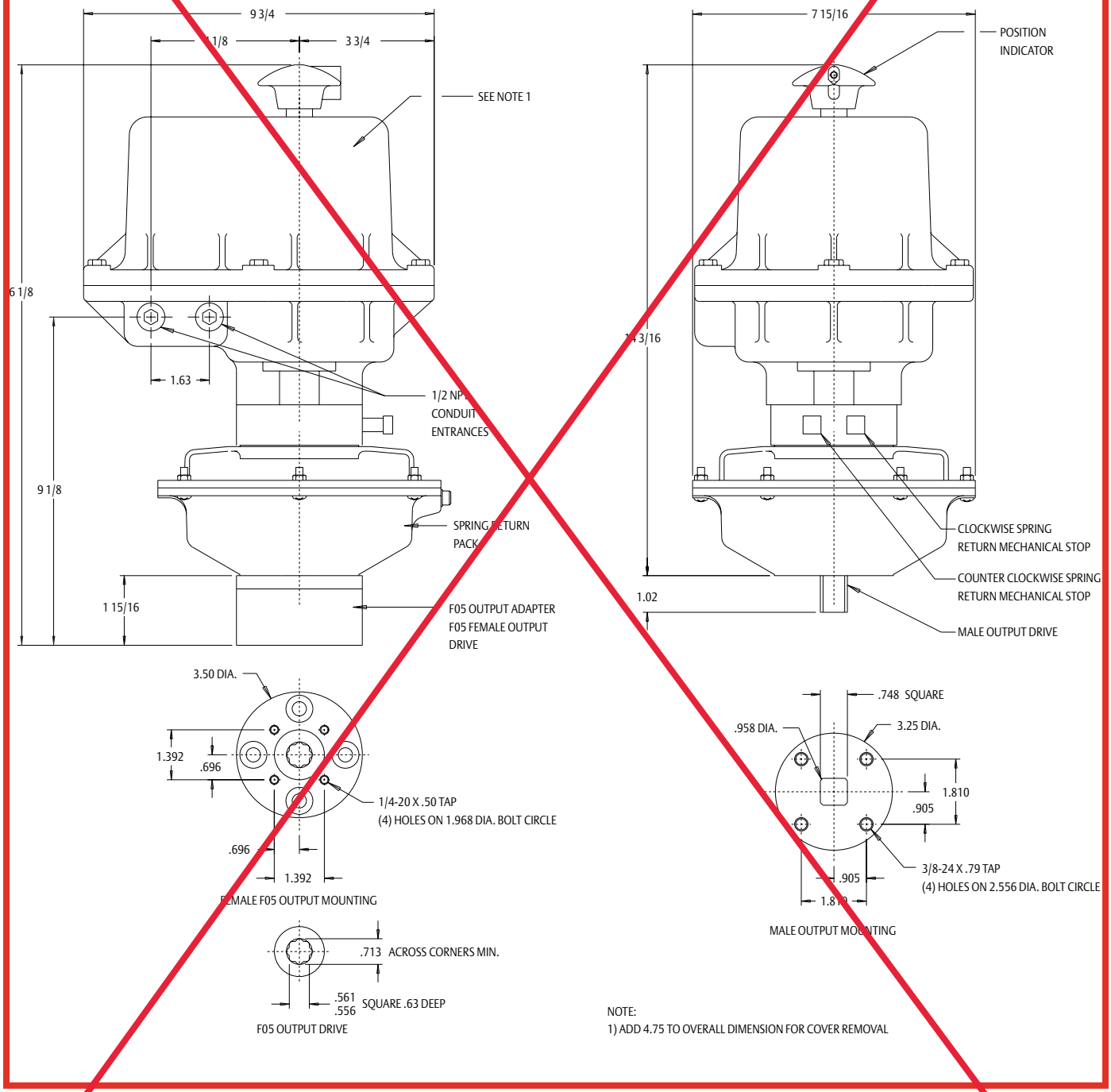
9 3/4
1 1/8
3 3/4
SEE NOTE 1
6 1/8
1.63
1/2 NPT CONDUIT ENTRANCES
9 1/8
SPRING RETURN PACK
1 15/16
F05 OUTPUT ADAPTER
F05 FEMALE OUTPUT DRIVE
7 15/16
POSITION INDICATOR
4 3/16
CLOCKWISE SPRING RETURN MECHANICAL STOP
COUNTER CLOCKWISE SPRING RETURN MECHANICAL STOP
1.02
MALE OUTPUT DRIVE
3.50 DIA.
1.392
.696
1/4-20 X .50 TAP
(4) HOLES ON 1.968 DIA. BOLT CIRCLE
.696
1.392
FEMALE F05 OUTPUT MOUNTING
.748 SQUARE
.958 DIA.
3.25 DIA.
1.810
.905
3/8-24 X .79 TAP
(4) HOLES ON 2.556 DIA. BOLT CIRCLE
.905
1.81?
MALE OUTPUT MOUNTING
.713 ACROSS CORNERS MIN.
.561
.556
SQUARE .63 DEEP
F05 OUTPUT DRIVE
NOTE:
1) ADD 4.75 TO OVERALL DIMENSION FOR COVER REMOVAL

MODEL EM-SR5-90

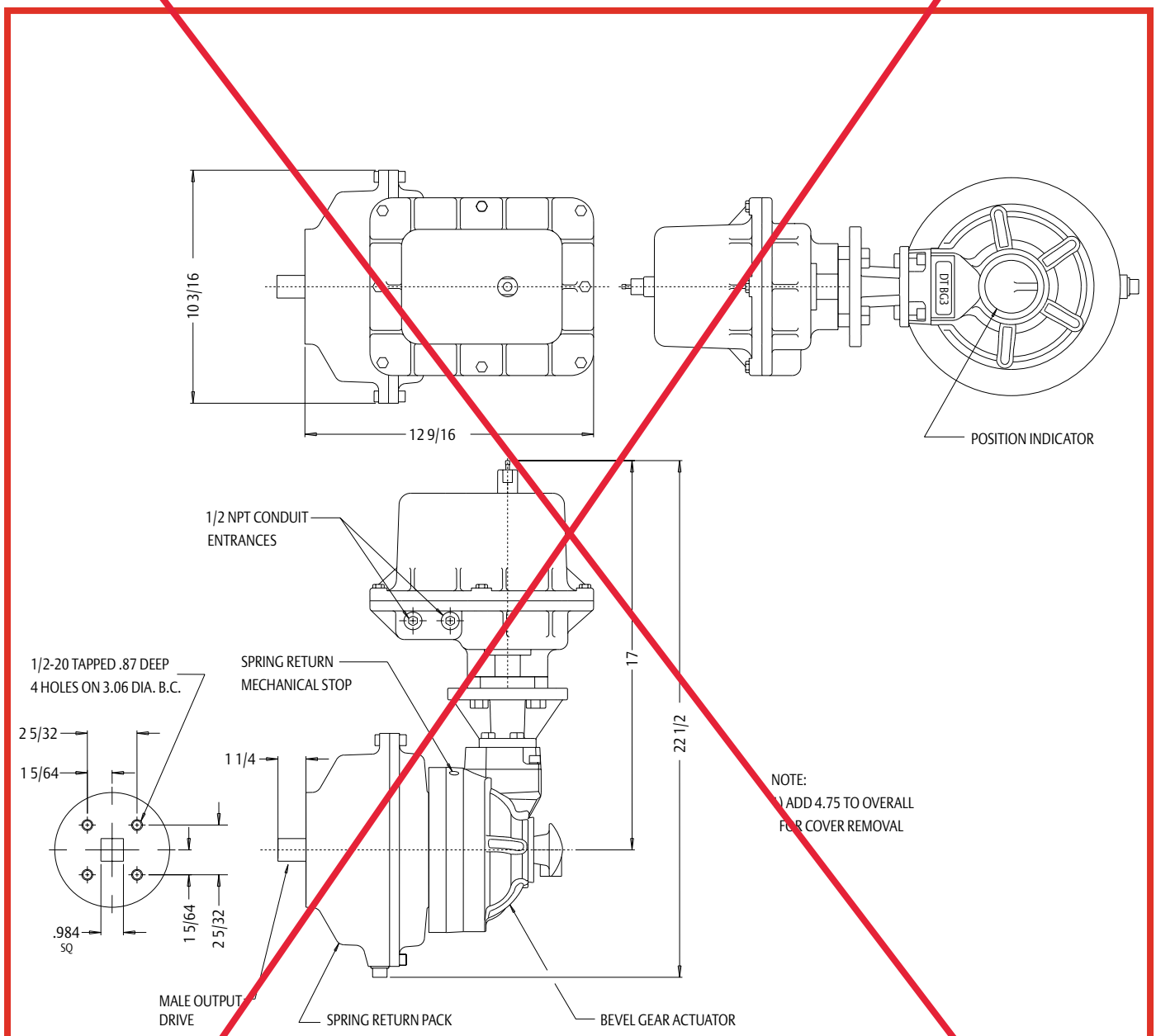

INQUIRIES

Your inquiries for Bettis electric actuators can be processed efficiently when supplied with the information requested on this page. Please use this page as a guide or submittal. If you need assistance, just ask your Bettis sales representative.

Customer

Co. _____
St. _____
City _____ State _____
Zip _____
Attn: _____

Detail

Job _____
_____
Item _____ of _____ Qty. _____
Mark / Tag _____
_____

Valve Information

Mfg.: _____ Type: _____ Size: _____ Fig No. _____
Rotation to CLOSE Position: ☐ Clockwise ☐ Counterclockwise as viewed from above (Std. is CW)
Maximum Sizing Torque, lb-in: _____ (Safety factor included)

Actuator Information

Application: ☐ Open-Close, 2 position, Service ☐ Spring Return
☐ Jogging Multi-position Service ☐ Fail CW
☐ Automatic Modulating Service ☐ Fail CCW

Ambient Temperature: From _____ °F to _____ °F (-40°F to +140°F standard)
Nominal Operating Speed: _____ seconds per 90° (min-max range)
Motor Voltage: _____ Ph/_____ Hz/_____ VAC or VDC _____
Control Voltage: 1Ph/ _____ Hz/ _____ VAC (3-phase motor only)
Motor Duty Cycle: ☐ 30% or ☐ 100%
Total Number of Limit Switches: _____

Enclosure: ☐ Type 4 CSA Certified for: non-hazardous indoor and outdoor locations to protect against wind-blown dust and rain, splashing water and hose-directed water.

☐ Type 4 and 7 CSA Certified for: hazardous and non-hazardous indoor and outdoor locations to protect against wind-blown dust and rain, splashing water and hose-directed water plus locations classified as Class I and II, Groups C, D, E, F and G as defined in the National Electrical Code.

Integral Control Items (as required)

☐ Motor Brake (standard on EM-100 in 1Ph/60Hz/115VAC and all 800-Series with torques of 6,000 lb-in or greater)
☐ Multi-Turn Control: Set for _____ output turns (maximum of 30)
☐ Heater and Thermostat: 1Ph/ _____ Hz/ _____ VAC
☐ Three Position Operation: Set for _____ °/ _____ °/ _____ ° Stops
☐ Control Relay for: ☐ normally clockwise or ☐ normally counterclockwise operation and operating on ☐ 1Ph/_____Hz/ _____ VAC or ☐ _____ VDC
☐ Single Feedback Potentiometer: _____ Ohm/4 Watt
☐ Electronic Positioner: with ☐ 4-20mA or ☐ 0-10v or ☐ 1-5v input and set for minimum output at ☐ clockwise or ☐ counterclockwise position
☐ Electronic Position Transmitter: 4-20 mA output set for minimum output at ☐ clockwise or ☐ counterclockwise position

Separate Controls (as required)

☐ Manual Operating Station: ☐ Type 4 or ☐ Type 7 enclosure suitable for ☐ wall mounting or ☐ close coupling
☐ 1Ph/ _____ Hz/ _____ VAC to include:
☐ (_____) _____ Position Selector Switch marked _____ / _____ / _____
☐ (_____) Push Buttons marked _____ / _____ / _____
☐ (_____) Lights marked and colored _____-_____ /_____-_____ / _____-_____
☐ (_____) Reversing Starter with 1 Ph/ _____ Hz/ _____ VAC control voltage
☐ Other _____
_____
_____

PRODUCT IDENTIFICATION

All Bettis TorqPlus Electric Actuators are manufactured with a product descriptive nameplate to insure its proper application and continuing identification. The following represents the typical information included on the nameplate and the meaning.



Model: Model – Operating Speed – Enclosure Type – Motor Voltage – Configuration

Torque: Rated Output Torque (lb-in)

Speed Sec 90: Seconds Per 90 Degrees Operation

Voltage: Motor Voltage (Ph/Hz/V)

LR Amps: Locked Rotor Amp Draw

Duty Cycle %: Effective Motor Run Capability

Serial: Individual Unit Serial Number

Mfg MM-YY: Month & Year of Unit Manufacturer

Enclosure: Rated Enclosure Type

DEFINITIONS

A.C. – Alternating current/voltage flowing in both directions alternately.

Amphere (Amp) – The unit of electric current, defined in terms of the force between a pair of wires.

Auxiliary Switch – A switch used to energize or de-energize other equipment (such as lights or pumps). Supplied with its own cam to synchronize other equipment at any point of travel.

Capacitor – A device having the property of storing an electrical charge.

CSA – Canadian Standards Association

D.C. – Direct current/voltage which has a constant value rated to zero. Steady current in one direction.

Duty Cycle – A mathematical calculation, expressed as a percent, to indicate available motor-on (running) time without endangering an over heating condition which would terminate actuator operation.

Using an actuator with a 10 seconds/90° operating speed and rated for a 50% duty cycle as an example, safe, non-interrupting operational periods would be: One 10 second motor-on period followed by one 10 second motor-off period. Total calculation time is 20 seconds of which 50% is motor-on time.

Proper application of the duty cycle rating allows ample time for the motor to dissipate internal heat and thereby not cause a thermal overload cutoff.

Enclosure – The housing that surrounds the actuator's operating parts. It can either be weatherproof or explosion proof. The enclosure generally protects the electrical equipment from the environment and/or prevents an explosion within the enclosure from causing an external explosion.

Hertz – Unit of frequency. Equal to one cycle per second.

NEMA – Acronym for National Electrical Manufacturers Association.

NEMA 4 – Rating designation for weatherproof enclosures. Pliable gaskets are used on all metal-mating parts to prevent moisture from entering.

NEMA 7 – Rating designation for enclosures suitable for containing internal explosion without rupturing the enclosure and without igniting surrounding gases in the atmosphere. Metal-to-metal sealing is required in these rated products.

Ohm – International unit of electrical resistance. The resistance in ohms between two points is defined by the DC voltage divided by the DC current flowing between the points.

Reversing Starter – Its purpose is to connect, disconnect and reverse electricity to the motor. Also called reversing contractor, reversing controller or integral starter.

Torque Limit Switches – Switches designed to monitor physical variables or operating states and to open circuits in the event of pre-set limits being exceeded.

Volt – Unit of potential difference or electrical potential. It represents the amount of work done per unit charge in moving a charge from one place to another.

CONTROLS AND OPTIONS



Multi-Turn Operation

Option allows for multiple revolution on non-rising stem devices.

Electrical Mechanical Motor Brake

Available for all actuator models. Brakes are employed to eliminate motor run-on and to insure that the actuator and driven device maintain their position. Recommended applications include; all resilient seated valves, valves with high flow rates, all modulating services and any time in which increased position control is needed.

Three Position Control

Typically used for multiported valves, operation can be set for 0°-45°-90° or 0°-90°-180° with a stop at mid position from one extreme or both.

Potentiometers

Mechanically linked to the actuators output to provide a resistance signal proportional to the actuator's and driven device's position. Used to give continuous feedback to control panels, modulating position control and other closed loop devices.

Torque/Current Trip Module
(for DC Motors)

Protects the valve and actuator from excessive torque conditions by comparing the motor current with a *factory adjustable* trip value.
Provides *dynamic braking,* in order to improve positioning accuracy at both mid and end of travel stop points. (**Caution:** A mechanical brake should also be used in conjunction with the dynamic brake feature, for applications that require the valve to be held in place after stopping.)

Control Latching Relay

Allows the actuator to run full travel upon receiving a ***non-maintained*** control signal, ranging from 0-240VAC or 0-110VDC.

Control Relay

Provides a means of opening and closing a valve with a variety of standard AC or DC ***maintained*** control signals, such as 120 VAC, 24 VAC, 12 or 24 VDC.
Can be used for a *fail* close (or open) application upon *loss of the control signal.* An internal coil (designed to be continuously energized) maintains the open signal to the actuator. When the signal is removed, the coil de-energizes, causing the actuator to close.

Additional Control Options

Up to 6 SPDT aux. limit switches
Electronic Transmitters (4-20mA output from a DC transmitter or 4-20mA, 0-10V output from an AC transmitter)
Dual 1k ohm potentiometers
Two speed operation (pulse timer package)
Unidirectional controls (up to 30 rotations)
Control stations including buttons, lights, selector switches
3-phase motor controls
Three position operation (such as 0-45-90 or 0-90-180 degrees)
Torque seating for multi-turn and quarter turn
Torque switch trip indication

CONTROL STATIONS



Control Stations are available in a variety of standard weatherproof wall-mounted and close-coupled configurations using the following 5-digit code system:

CS – **1st 2nd 3rd 4th 5th**

1st indicates the number of pushbuttons

2nd indicates the number of lights

3rd indicates the number of positions on the first selector switch (such as Local-Remote)

4th indicates the number of positions on a second selector switch (such as Open-Stop-Close)

5th indicates close-coupled (C) or wall-mount (W)

CS-0223C would indicate **0-buttons, 2-lights, 2-position selector switch** (usually Local-Remote), **3-position selector switch** (usually Open-Stop-Close), **Close-coupled** to the actuator.

Standard configurations include:

CS-0003* CS-0223* and CS-3220*

CS-0023* CS-0203*

(* **C** for closed-coupled or **W** for wall-mount)

Typical Options

Timer packages, control relays, special labeling, LED lights, pad lockable switches, space heaters and Canadian Underwriter Laboratory labels.

Additional options for 3-phase wall-mounted CS's include starters, control transformers, and overload relays.

Remote Signal Generator



The Remote Signal Generator (**RSG**) (supplied in a wall-mounted enclosure) produces a 4-20mA output signal, by manually rotating the dial. From a remote location, this output signal can then be used to position or throttle an actuator equipped with an integral modulating board.

The RSG can also be used in conjunction with a closed-coupled "**CS**" control station.

SERVO POSITIONING SYSTEMS



The Bettis Electric C1397 and C1415 Servo Positioners are proportional motor controllers for actuator modulating applications. The C1397 is for actuators with AC powered split phase motors. The C1415 is for use with 12 or 24VDC powered actuators. These controls are designed to proportionally position an actuator and the driven device by comparison of a varying external input command and a mechanically linked potentiometer. Input commands can be 0-10V, 1-5V, or 4-20mA. The servo also allows for three responses to command signal loss (1-5V and 4-20mA only); fail in place, fail to full clockwise (CW) position, or fail to full counterclockwise (CCW) position.

Features and Benefits

Digital micro-control allows:
- Pushbutton programming - eliminates Span and Zero pots
- 10-bit resolution
- Off-line calibration - eliminates the need for loop calibrators

Available in multiple power supply configurations:
AC 120/230V; DC 12/24V

Onboard manual jog buttons

AC controller includes speed control

DC controller includes:
- Torque trip with relay output
- Dynamic braking for accurate stopping



Signal Wiring

4-20mA TRANSMITTER

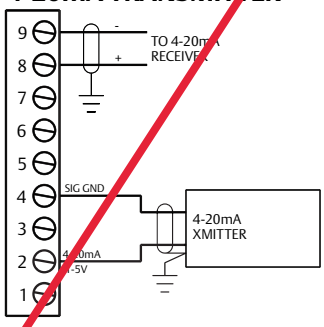

0-10V TRANSMITTER

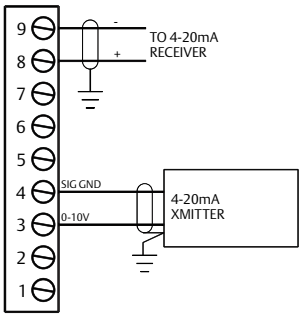

COMMAND POTENTIOMETER

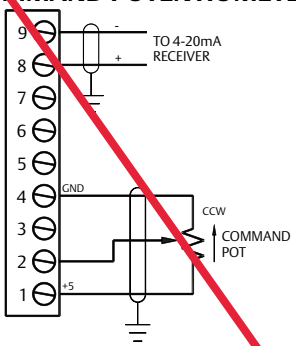

SPECIFICATIONS

Power Supply
C1397S 115VAC ± 10% 50/60Hz
C1397D 230VAC ± 10% 50/60Hz
C1415 12/24VDC Jumper configurable

Signal Inputs
All signal inputs are digitized to 10 bits of resolution.

0-10 VDC Compound Input: 200kohm input impedance.

1-5 VDC Command Input: 100kohm input impedance. Loss of signal threshold is 75% of low signal.

4-20 mA Command Input: 250ohm input impedance. Loss of signal threshold is 75% of low signal.

Feedback Input: 5 VDC excitation voltage. 1Mohm input impedance. Use with 1000ohm potentiometer.

4-20mA Output
300ohm maximum load impedance. 10-bit A/D.

Motor Outputs
C1397 When mounted in accordance with guidelines below, outputs will supply a maximum locked rotor load current (LRA) of 5A with less than 5/10mA (115/230VAC) of leakage current.
C1415 Continuous current 3A; Peak 5A.

External Fuses
C1397 Employ fusing per actuator motor LRA to a maximum of 5A.
C1415 Employ fusing per actuator motor LRA to a maximum of 5A. Consult factory for additional application details on DC powered units.

Environmental
Operating temperature: +32°F to +158°F (0°C-70°C)
Storage temperature: -40°F to +185°F (-40°C-85°C)
Relative humidity: 0 to 90% non-condensing

Function Details

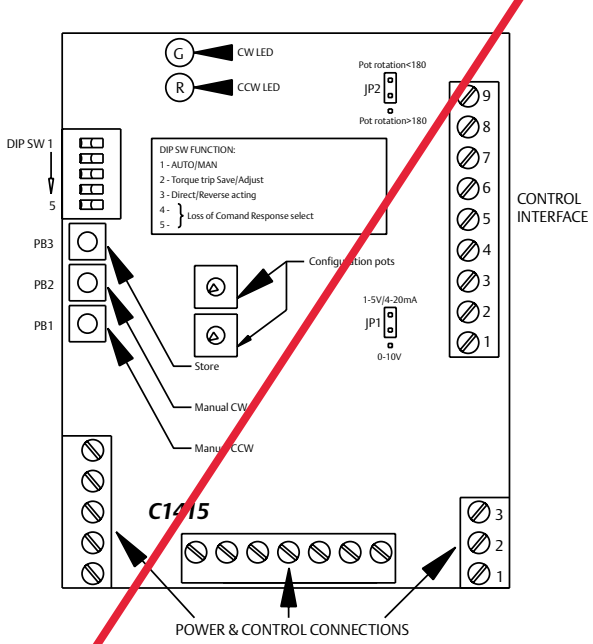

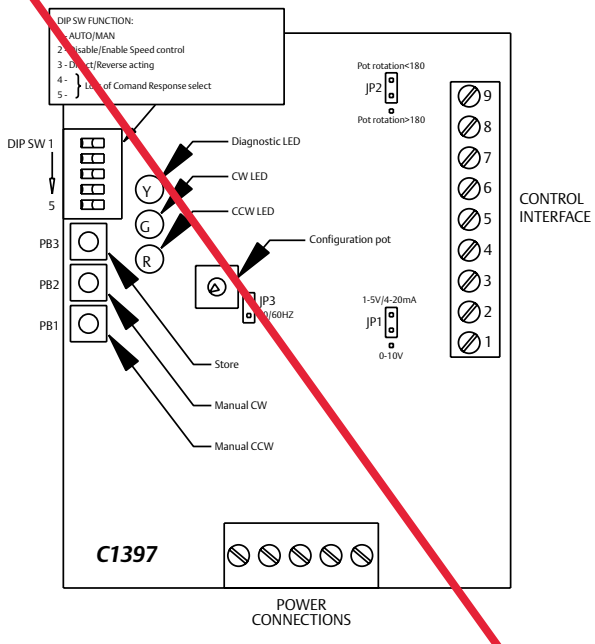

Performance Data – Open/Close and Modulating Configurations

Available Torques, Operating Speeds, Motor Duty Cycles, Motor Voltages and Locked Rotor Amp Draws
Torque Expression: Inch-Pounds (in-lb) and Newton Meters (Nm).
Speed Expression: Seconds per 90° output rotation.

Torque Output		Operating Speed		Motor Duty	Locked Rotor Amp Draw					
					1 Phase /50 - 60 Hz		3Ph/60Hz		Direct Current	
in-lb	Nm	Sec/90°	Model	Cycle	115VAC	230VAC	230VAC	460VAC	12VDC	24VDC
100	11	2 Note 4	EM-100	30%	1.30	CF	—	—	—	—
250	28	10		30%	0.70	CF	—	—	—	—
350	39	13		30%	0.70	CF	—	—	—	—
150	17	4 Note 4	EM-300	30%	0.6	0.3	—	—	19.2	8.8
300	34	10		30%	0.6	0.3	—	—	19.2	8.8
400	45	15		30%	0.6	0.3	—	—	19.2	8.8
600	68	30		30%	0.6	0.3	—	—	19.2	8.8
180	20	5 Note 4	EM-520	30%	0.6	0.3	—	—	19.2	8.8
450	51	10		30%	0.6	0.3	—	—	19.2	8.8
600	68	15		30%	0.6	0.3	—	—	19.2	8.8
1,000	113	30		30%	0.6	0.3	—	—	19.2	8.8
350	39	5 Note 4	EM-500	100%	0.7	0.4	—	—	8.4	7.3
700	79	10		100%	0.7	0.4	—	—	8.4	7.3
1,000	113	15		100%	0.7	0.4	—	—	8.4	7.3
1,600	181	30		100%	0.4	0.5	—	—	8.4	7.3
325	36	2 Note 4	EM-510	100%	1.6	0.8	—	—	---	18.4
600	68	5 Note 4		100%	1.6	0.8	—	—	---	18.4
1,000	113	7 Note 4		100%	1.6	0.8	—	—	---	18.4
2,000	226	12	EM-810	100%	3.2	1.3	CF	CF	—	—
2,500	282	18		100%	3.2	1.3	CF	CF	—	—
3,500	395	30		100%	3.2	1.3	CF	CF	—	—
4,000	452	60		100%	3.2	1.3	CF	CF	—	—
3,000	339	12	EM-820	100%	3.2	1.3	CF	CF	—	—
4,000	452	18		100%	3.2	1.3	CF	CF	—	—
6,000	678	30		100%	3.2	1.3	CF	CF	—	—
7,000	791	60		100%	3.2	1.3	CF	CF	—	—
5,000	565	12	EM-830	100%	6.0	2.8	CF	CF	—	—
7,000	791	18		100%	6.0	2.8	CF	CF	—	—
10,000	1,130	30		100%	6.0	2.8	CF	CF	—	—
10,000	1,130	60		100%	6.0	2.8	CF	CF	—	—
15,000	1,695	48	EM-840	100%	6.0	2.8	CF	CF	—	—
20,000	2,260	72		100%	6.0	2.8	CF	CF	—	—
300	34	10 Note 4	EM-SR5	100%	0.7	0.4	—	—	—	—
400	45	15		100%	0.7	0.4	—	—	—	—
600	68	30		100%	0.4	0.5	—	—	—	—
1,600	181	90		100%	0.4	0.5	—	—	—	—

Notes: 1. Operating speed is nominal at rated torques. Final operating speed may vary depending on actual service.
2. Actuators with 12VDC motors will have an operating speed of approximately 40% longer (slower) than that shown.
3. CF – Consult Factory
4. Bettis does not recommend the use of any actuator for any modulating application with an operating speed of 10 seconds or less.

Performance Data – Open/Close and Modulating Configurations

Available Torques, Operating Speeds, Motor Duty Cycles, Motor Voltages and Locked Rotor Amp Draws
Torque Expression: Inch-Pounds (in-lb) and Newton Meters (Nm).
Speed Expression: Seconds per 90° output rotation.

Torque Output		Operating Speed		Motor Duty	Locked Rotor Amp Draw					
					1 Phase /50 - 60 Hz		3Ph/60Hz		Direct Current	
in-lb	Nm	Sec/90°	Model	Cycle	115VAC	230VAC	230VAC	460VAC	12VDC	24VDC
100	11	2 Note 4	EM-100	30%	1.30	CF	—	—	—	—
250	28	10		30%	0.70	CF	—	—	—	—
350	39	13		30%	0.70	CF	—	—	—	—
150	17	4 Note 4	EM-300	30%	0.6	0.3	—	—	19.2	8.8
300	34	10		30%	0.6	0.3	—	—	19.2	8.8
400	45	15		30%	0.6	0.3	—	—	19.2	8.8
600	68	30		30%	0.6	0.3	—	—	19.2	8.8
180	20	5 Note 4	EM-520	30%	0.6	0.3	—	—	19.2	8.8
450	51	10		30%	0.6	0.3	—	—	19.2	8.8
600	68	15		30%	0.6	0.3	—	—	19.2	8.8
1,000	113	30		30%	0.6	0.3	—	—	19.2	8.8
350	39	5 Note 4	EM-500	100%	0.7	0.4	—	—	8.4	7.3
700	79	10		100%	0.7	0.4	—	—	8.4	7.3
1,000	113	15		100%	0.7	0.4	—	—	8.4	7.3
1,600	181	30		100%	0.4	0.5	—	—	8.4	7.3
325	36	2 Note 4	EM-510	100%	1.6	0.8	—	—	—	18.4
600	68	5 Note 4		100%	1.6	0.8	—	—	---	18.4
1,000	113	7 Note 4		100%	1.6	0.8	—	—	—	18.4
2,000	226	12	EM-810	100%	3.2	1.3	CF	CF	—	—
2,500	282	18		100%	3.2	1.3	CF	CF	—	—
3,500	395	30		100%	3.2	1.3	CF	CF	—	—
4,000	452	60		100%	3.2	1.3	CF	CF	—	—
3,000	339	12	EM-820	100%	3.2	1.3	CF	CF	—	—
4,000	452	18		100%	3.2	1.3	CF	CF	—	—
6,000	678	30		100%	3.2	1.3	CF	CF	—	—
7,000	791	60		100%	3.2	1.3	CF	CF	—	—
5,000	565	12	EM-830	100%	6.0	2.8	CF	CF	—	—
7,000	791	18		100%	6.0	2.8	CF	CF	—	—
10,000	1,130	30		100%	6.0	2.8	CF	CF	—	—
10,000	1,130	60		100%	6.0	2.8	CF	CF	—	—
15,000	1,695	48	EM-840	100%	6.0	2.8	CF	CF	—	—
20,000	2,260	72		100%	6.0	2.8	CF	CF	—	—
300	34	10 Note 4	EM-SR5	100%	0.7	0.4	—	—	—	—
400	45	15		100%	0.7	0.4	—	—	—	—
600	68	30		100%	0.4	0.5	—	—	—	—
1,600	181	90		100%	0.4	0.5	—	—	—	—

Notes: 1. Operating speed is nominal at rated torques. Final operating speed may vary depending on actual service.
2. Actuators with 12VDC motors will have an operating speed of approximately 40% longer (slower) than that shown.
3. CF – Consult Factory
4. Bettis does not recommend the use of any actuator for any modulating application with an operating speed of 10 seconds or less.

World Area Configuration Centers (WACC) offer sales support, service, inventory and commissioning to our global customers. Choose the WACC or sales office nearest you:

NORTH & SOUTH AMERICA

19200 Northwest Freeway
Houston TX 77065
USA
T +1 281 477 4100
F +1 281 477 2809

Av. Hollingsworth
325 Iporanga Sorocaba
SP 18087-105
Brazil
T +55 15 3238 3788
F +55 15 3228 3300

ASIA PACIFIC

No. 9 Gul Road
#01-02 Singapore 629361
T +65 6501 4600
F +65 6268 0028

No. 1 Lai Yuan Road
Wuqing Development Area
Tianjin 301700
P. R. China
T +86 22 8212 3300
F +86 22 8212 3308

MIDDLE EAST & AFRICA

P. O. Box 17033
Dubai
United Arab Emirates
T +971 4 811 8100
F +971 4 886 5465

P. O. Box 10305
Jubail 31961
Saudi Arabia
T +966 3 340 8650
F +966 3 340 8790

24 Angus Crescent
Longmeadow Business Estate East
P.O. Box 6908 Greenstone
1616 Modderfontein Extension 5
South Africa
T +27 11 451 3700
F +27 11 451 3800

EUROPE

Berenyi u. 72- 100
Videoton Industry Park
Building #230
Székesfehérvár 8000
Hungary
T +36 22 53 09 50
F +36 22 54 37 00

For complete list of sales and manufacturing sites, please visit
www.emersonprocess.com/valveautomationlocations
Or contact us at info.valveautomation@emerson.com

©2016 Emerson Process Management. All rights reserved.

The Emerson logo is a trademark and service mark of Emerson Electric Co. Bettis™ is a mark of one of the Emerson Process Management family of companies. All other marks are property of their respective owners.

BETTIS™

EMERSON™
Process Management

© 2016 Emerson. All rights reserved. 5M/01-16 Bulletin #81.30

Rev02:
See page 8 for coatings
See page 16 for operators detail
HC, 2019-01-30

REVIEWED BY CONTRACTOR
Kudlik Construction Ltd.
NAME: Sandra Rousseau P.Eng
DATE: Jan 31, 2019

NORCLAIR
MÉCANIQUE DE PROCÉDÉ

SHOP DRAWINGS

DA-MP-35R2 Plug valve PLV-01, 75, 100 and 150mm

Date : 2019-01-31

Information general	
Project : **WWTP UPGRADE - IQALUIT**	
Client : Kudlik Construction Ltd. To : Sandra Rousseau P.Eng., Project Manager	Project number : **2018-062** E-mail : srousseau@kudlik.biz
Contractor : **Norclair inc.**	Project number Norclair : **P1039**
Address : 1100, Montée Masson, Laval, QC, Canada H7E 4P2	
Project Manager : Hugo Chartier, Project Manager	E-mail: hchartier@norclair.ca
Phone : 450-688-4012 # 720	Cell. : 514-703-0263

Information, subcontractor or supplier	
Sub/supplier : Contrôle Laurentides	
Contact : Fabrice Durocher	Phone :

Information on the equipment	
Speciality : **Process**	
Equipment : Plug valve PLV-01, 75, 100 and 150mm	
Drawing reference :	
Specification reference : **40 05 25** (Page xx / xx)	Division :
Article :	Number of pages : 16

CONSULTANT

STANTEC PROJECT #: 110126045

SUBMITTAL # DA-MP-35R2 Plug Valve.

This review by Stantec is for general conformance with the design concept of Stantec's design of the:

- ☑ Process
- ☐ Structural
- ☐ Mechanical
- ☐ Electrical
- ☐ Other

Stantec

component(s) only and does not mean that Stantec has verified or approves the shop drawing(s). The Contractor remains solely responsible for the shop drawing(s) and this review by Stantec does not relieve the Contractor of the Contractor's responsibility for errors or omissions in the shop drawing(s) or for meeting all requirements of the contract documents. This review does not mean that Stantec approves the detailed design inherent in the shop drawing, responsibility for which shall remain with the Contractor submitting same, nor does this review mean that Stantec accepts any deviation of the shop drawing(s) from the contract documents. The Contractor is responsible for confirming all dimensions and correlating them at the job site, for all construction means, methods and techniques, and for coordination of construction work of all trades, including coordination of all shop drawings.

- ☐ REVIEWED
- ☑ REVIEWED, AS NOTED
- ☐ REVISE AND RESUBMIT
- ☐ NOT REVIEWED

DATE February 2, 2019

BY Alejandro Rojas, P.Eng

1100, montée Masson
Laval, QC, Canada
H7E 4P2

Phone. : 450-688-4012
Fax : 450-661-6341
E-Mail : info@norclair.ca
www.norclair.ca

Plug valve PLV01 - 75, 100 and 150mm
Operators and dimensions to confirm

See page 16
HC, 2019-01-30

Valmatic Cam-Centric plug valve,
Cast iron body,
Nickel seat,
Buna-N plug,
Stainless steel bearings,
Flanged ends,

Cam-Centric® Standard Port Plug Valves



www.valmatic.com

Meets AWWA C517
NSF/ANSI 372 Certified

Feature Highlights

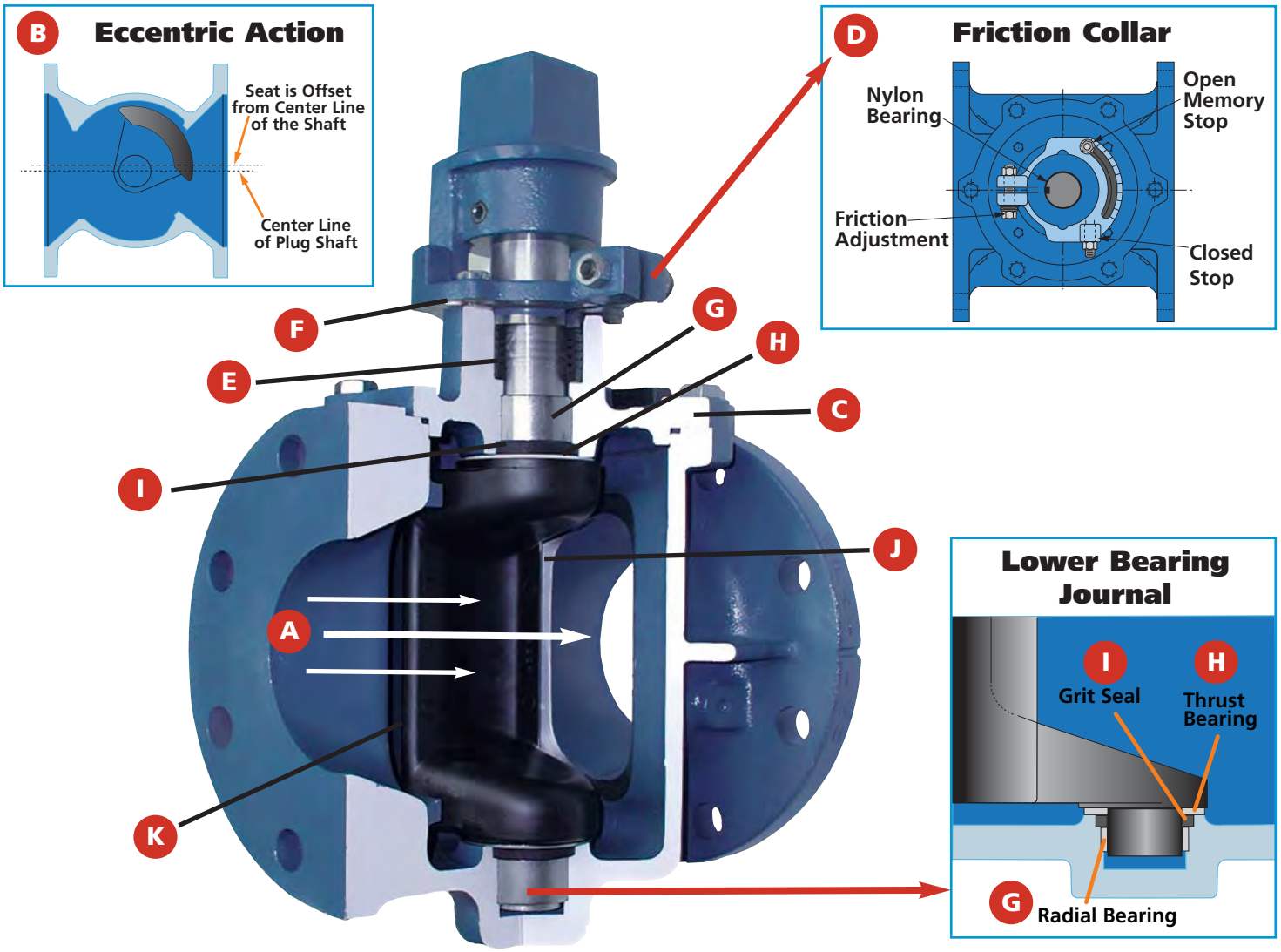

A. Non-Clog Design

The flow area and smooth streamline contouring allows passage of large solids to prevent potential clogging and provide low headloss.

B. Eccentric Action

Provides positive shut off in both directions with wear resistant action and low torque.

C. Full Top Access Cover

Provides accessibility for inspection without removal of the valve from the line.

D. Friction Collar with Memory Stop

Secures valve plug in any position and includes a nylon bearing for ease of operation.

E. V-Type Packing

Field adjustable and replaceable without removal of worm gear or motor actuators.

F. Removable POP™ Shims

Packing Overload Protection Shims protect packing by preventing overload during field adjustment.

G. Radial Bearings

Heavy Duty, T316 Stainless Steel, Permanently Lubricated.

H. Thrust Bearing

Upper: PTFE - Provides ease of actuation during operating conditions.
Lower: Stainless Steel - Prevents wear to plug and Grit-Guard.

I. Grit-Guard™ Shaft Seal

The *Val-Matic Exclusive* Grit-Guard™ shaft seal extends packing and bearing life by reducing wear and infultration of grit.

J. Seat

The robotic pulsed-arc welded 95% nickel raised seat is corrosion and wear resistant.

K. Plug

Fully rubber encapsulated molded plug eliminates exposed surfaces for maximum resistance to corrosion and wear.

Proven Design

With installations worldwide, the Val-Matic Cam-Centric® Plug Valve has proven itself as the preferred valve for wastewater, industrial waste and process applications. The Cam-Centric® Plug Valve is a ¼ turn eccentric plug valve allowing cost effective, low torque actuation for pump control, shut-off and throttling service. The valve's eccentric action rotates the plug in and out of the seated position with minimal contact, thereby preventing high torque and wear to the valve seat and plug. The combination of the eccentric action, stainless steel bearings, Grit-Guard™ seals and heavy duty nickel seat assures long life with minimal maintenance.

Preferred Features

The Cam-Centric® Plug Valve features a shaft sealing system that utilizes V-Type packing, a packing follower and a Grit-Guard™ seal for ease of maintenance and to reduce wear. The Grit-Guard™ seals reduce wear by preventing grit and media from reaching the bearings and packing to prevent plug lock up. The seals are standard in both the upper and lower journals (Figures 1 & 2). To prevent the packing from being over tightened, the shaft seal incorporates POP™ (Packing Overload Protection) Shims. The packing is easily adjusted by removing the POP™ shims as necessary utilizing the pull tab feature (Figure 1). Adjustment or replacement of the V-Type packing can be done without removal of the gear, motor or cylinder actuator.

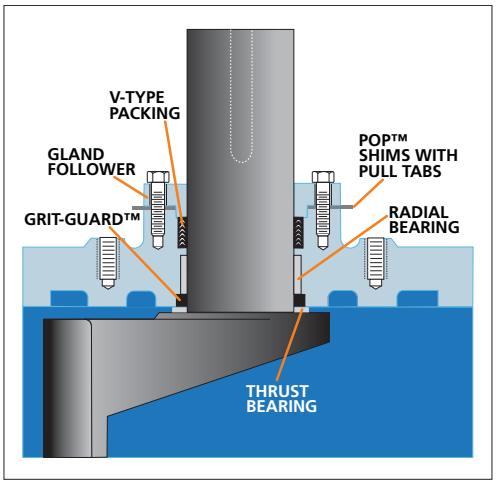

Figure 1. Upper Bearing Journal

The Cam-Centric® bearing package consists of permanently lubricated, T316 stainless steel radial bearings in both the upper and lower journals. The upper thrust bearing is made of PTFE and the lower thrust bearing is T316 stainless steel.

The Cam-Centric® Plug Valve utilizes a contoured and totally encapsulated molded plug to reduce corrosion and wear in severe abrasive applications. Its ductile iron construction provides strength and rigidity to withstand dynamic forces from flow and pressure.

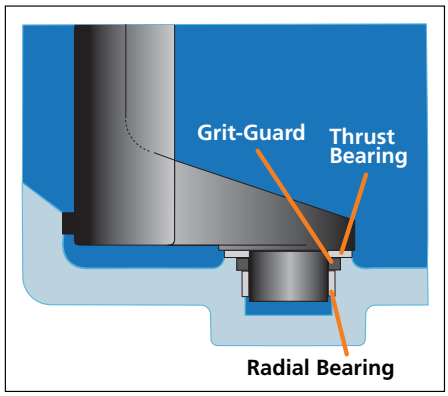

Figure 2. Lower Bearing Journal

The valve seat is a welded overlay of 95% pure nickel applied directly to the body on a machined surface using a state-of-the-art robotic welding system for a consistent, high quality weld (Figure 3).



Figure 3. Robotic welding of nickel seat

Advanced Technology

Incorporating the latest in valve technology assures a high-quality valve that will provide long service. The design process utilized solid Modeling and Finite Element Analysis (FEA) of the key structural components. Flow and torque data was derived from flow tests, mathematical models and Computational Fluid Dynamics (CFD). Manufacturing technology uses automated process control in the foundry and ISO 9001 controlled manufacturing processes. Every valve is tested in accordance with AWWA C517 and MSS SP-108 on automated hydraulic test rigs with gauges calibrated per ISO standards.

Actuation

The Cam-Centric® Plug Valve is available with a wide range of actuation options, from simple lever operation to advanced pump control systems. Options include 2" operator nuts, worm gears, chainwheels, electric motor and cylinder actuation. A wide variety of accessories such as floor stands and extended bonnets are also available (see accessories on page 7). Val-Matic Engineering personnel work closely with cylinder and electric actuation manufacturers to assure actuator/valve compatibility. This ensures the actuator you specify will deliver the performance you expect when utilized with a Cam-Centric® Plug Valve.

Lever, if installed bellow 2m



Direct Nut operated valve with memory stop:

- Adjustable open memory stop for system balancing
- Adjustable close stop
- Adjustable friction collar
- For use with lever accessories

Chainwheel (if installed above 2m) as per construction drawing

See page 16
HC, 2019-01-30



Val-Matic Worm Gears:

- Heavy Duty, totally enclosed and sealed
- For above ground and buried service applications
- Bronze radial bearings and roller thrust bearings provide smooth operations and extended life

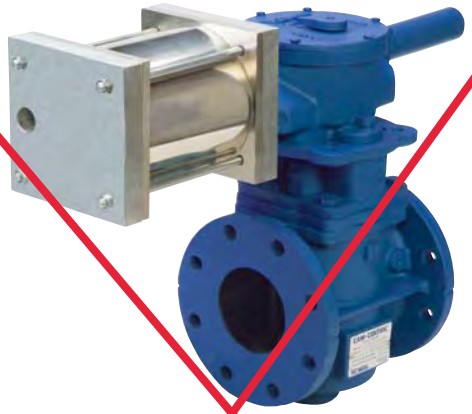

Val-Matic Cylinder Actuation:

- Compliance with AWWA C541 for Power Actuation
- Pneumatic/Hydraulic
- Single Acting or Double Acting
- Fail Open/Closed for power failure
- Modulating Service
- Throttling Service
- Limit Switches, Solenoid Valves, Positioners
- Manual Overrides
- Pump Control



Electric Actuation:

- 110 Single Phase, 230/460 Three Phase
- Compliance with AWWA C542 for Power Actuation
- Modulating Service
- Throttling Service
- Remote push button control and indication
- Torque Switches, Limit Switches
- De-clutchable handwheels
- Available from a wide variety of manufacturers

Worm Gear Features

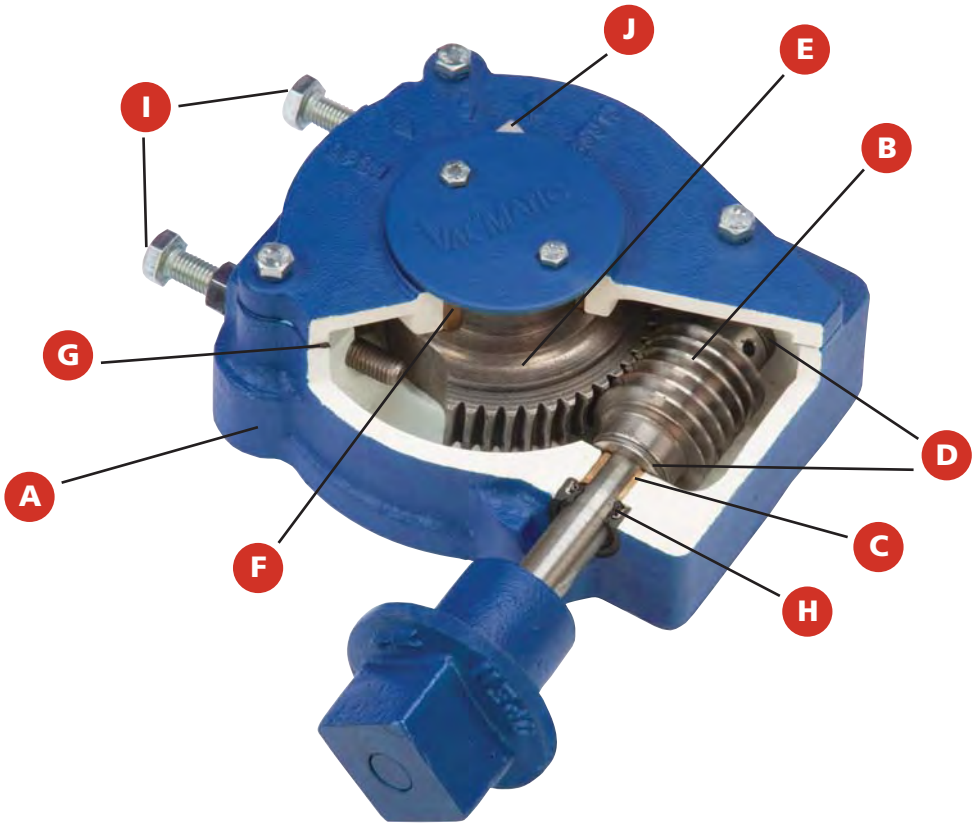

Val-Matic Worm Gear

A valve actuator must perform to the same level as the valve. The Val-Matic worm gear is designed and built to provide the same long term service as our Cam-Centric® Plug Valve. The exclusive bearing package in the worm gear includes four bronze sleeve bearings and two roller thrust bearings. This exclusive package assures smooth operation and long life regardless of the valve's orientation or application. The ductile iron segment gear coupled with the upper and lower bronze radial bearings exceed the requirements of AWWA C517 for strength and durability. All worm gears are designed to exceed, a rim pull of 200 pounds on handwheels and input torques of 300 foot pounds for operator nuts without damage. Buried service worm gears are grease packed, sealed and include stainless steel shafts. Worm gears can be provided with handwheels, chainwheels or 2" operator nuts.

A. Housing

Heavy duty, totally enclosed and sealed.

B. Worm

Hardened steel for durability and long life.

C. Radial Shaft Bearings

Bronze shaft bearings extend life and provide ease of operation (rear shaft bearing not visible).

D. Roller Thrust Bearings

Provides smooth operation and extends life.

E. Segment Gear

Heavy duty ductile iron for high strength. Provided with precision bore and keyway for connection to the valve shaft in multiple positions.

F. Segment Gear Radial Bearings

Upper and lower bronze bearings provide ease of operation and extend life (lower bearing not visible).

G. Cover Gasket

Seals housing and prevents foreign material or moisture from entering actuator and prevents loss of grease.

H. Shaft Seal

Prevents foreign material from entering the actuator.

I. External Stops

Both open and closed stops are external and easily adjustable.

J. Position Indicator

Displays precise plug position on above ground service.

Headloss Charts

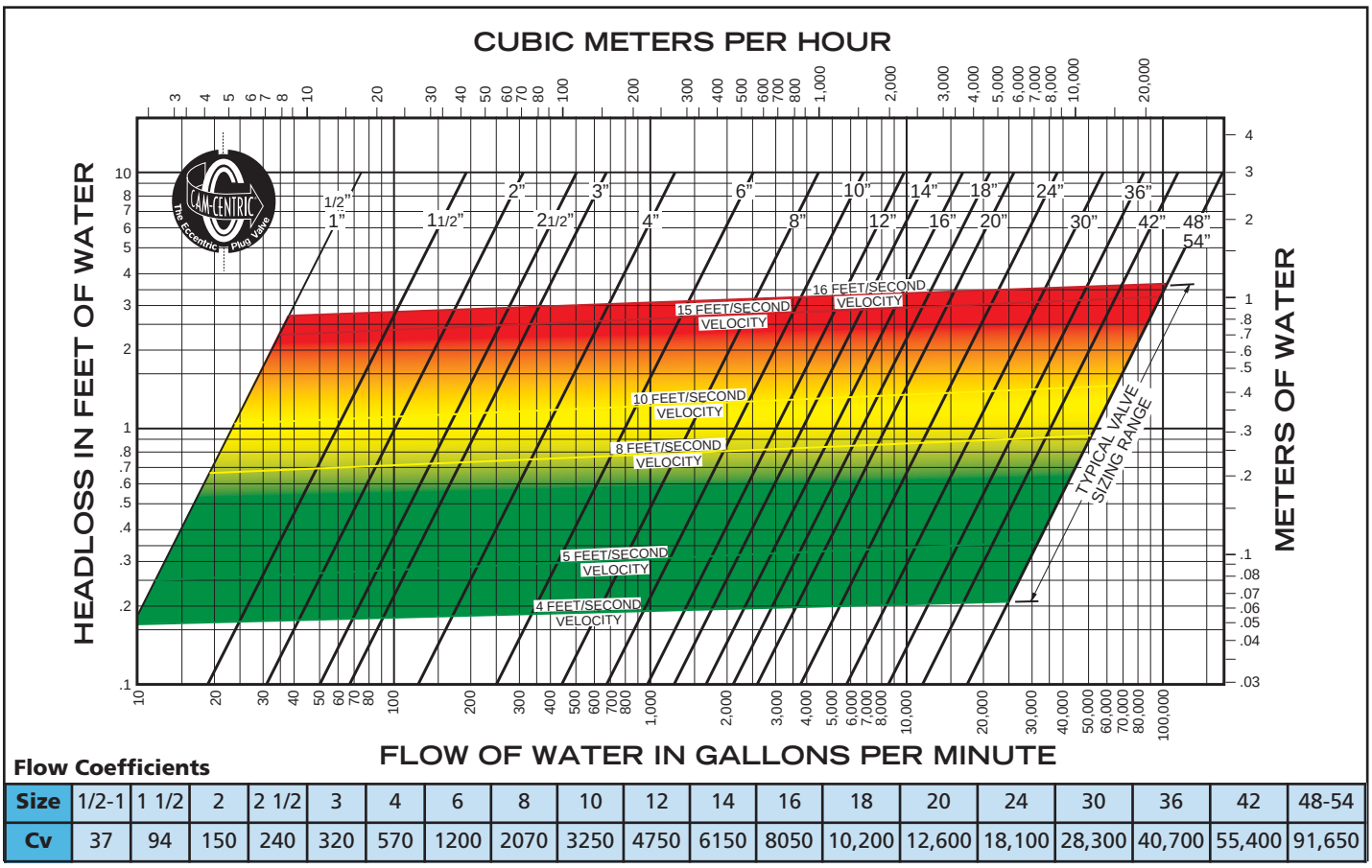

Flow Coefficients

Size	1/2-1	1 1/2	2	2 1/2	3	4	6	8	10	12	14	16	18	20	24	30	36	42	48-54
Cv	37	94	150	240	320	570	1200	2070	3250	4750	6150	8050	10,200	12,600	18,100	28,300	40,700	55,400	91,650

Installation Instructions

The installation of the valve is important for its proper operation. The valve is capable of flow in either direction but the maximum operating pressure can vary with the location of the seat end (Figure 5). The words "SEAT END" are marked on the valve flange.

SUSPENDED SOLIDS SERVICE: For fluids containing suspended solids, special orientations are needed to prevent debris from collecting in the valve. For horizontal installations (Figure 6), the valve should be installed with the flow entering the seat end of the valve and the shaft in a horizontal position with the plug up when open. For vertical installations (Figure 7), the valve must be installed with the seat end up regardless of flow direction.

CLEAN SERVICE: For both horizontal and vertical installations, install in the direct pressure orientation (pressure opposite the seat end).

AIR AND GAS SERVICE: Install valve in the direct pressure orientation (pressure opposite the seat end). Lubricate plug face with FDA approved silicone grease such as Dow Corning #7 before installation. Gear actuators are required for gas service applications.

PUMP DISCHARGE SERVICE: On all horizontal pump discharge applications, the seat end should be towards the pump.

BURIED SERVICE: Gear actuators are recommended for buried valves to hold the valve in position and provide multi-turn closure to prevent water hammer. The valve should be installed with the shaft horizontal and the actuator nut directed upwards. The valve box or extension pipe should be installed so that the actuator nut and extension stem turn freely.

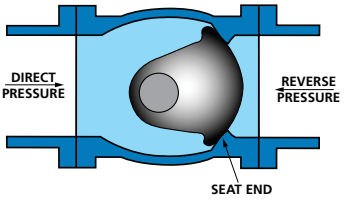

Figure 5. Installation Orientation

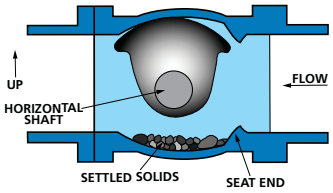

Figure 6. Horizontal Pipe w/ Solids

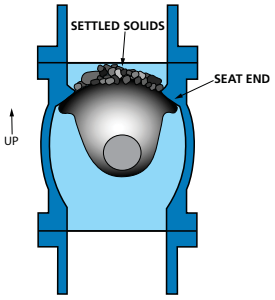

Figure 7. Vertical Pipe with Solids

Ratings/Construction

PRESSURE RATINGS

MAXIMUM PRESSURE RATINGS			
SERIES	**CONNECTION**	**SIZE RANGE**	**CWP (psig)**
5800RTL	ASME NPT Threaded	1/2"- 2"	175
5800R	ANSI Class 125 Flanged	2"- 12"	175
		14"- 54"	150
5800HP	ANSI Class 125 Flanged High Pressure	3"- 24"	250
5900R	AWWA C111 Mechanical Joint	3"- 12"	175
		14"- 48"	150
5900HP	AWWA C111 Mechanical Joint High Pressure	3"- 48"	250

MATERIALS OF CONSTRUCTION

COMPONENT	STANDARD
Body (5800R, 5900R)	Cast Iron ASTM A126, Class B
Body (5800HP, 5900HP)	Ductile Iron ASTM A536, Grade 65-45-12
Plug (5800R, 5900R)	Cast Iron ASTM A126, Class B, Buna-N Encapsulated, ASTM D2000
Plug (5800HP, 5900HP)	Ductile Iron ASTM A536, Grade 65-45-12, Buna-N Encapsulated, ASTM D2000
Radial Shaft Bearings	T316 Stainless Steel
Top Thrust Bearing	PTFE
Bottom Thrust Bearing	T316 Stainless Steel
Available Coatings	Two-Part Epoxy, ~~Fusion Bonded Epoxy, Glass Lining, Rubber Lining~~

Two-part epoxy inside and outside by manufacturer.

Accessories

Space limitations and application specifics often require special accessories. In addition to those shown below, Val-Matic offers a wide range of accessories to meet your application requirements.

Floor Stand with Extension Stem

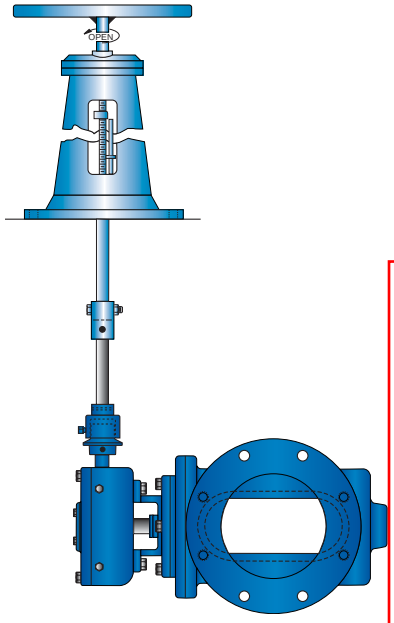

Ground Level Position Indicator

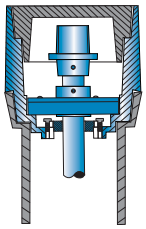

Chainlever



"T" Wrench

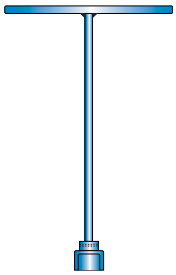

Extended Bonnet

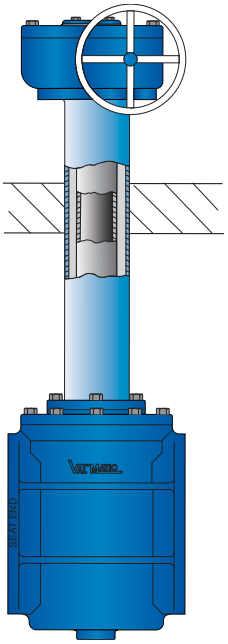

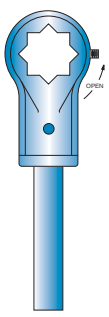

Lever

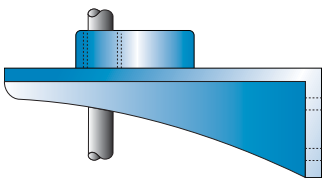

Stem Guide

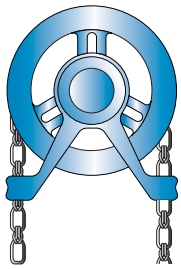

Chainwheel

Installation Dimensions

Direct Nut Operated

Flanged, Mechanical Joint, Threaded End Connections

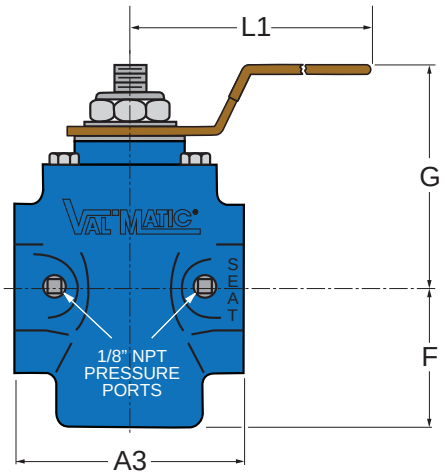

Sizes 1/2"- 2"

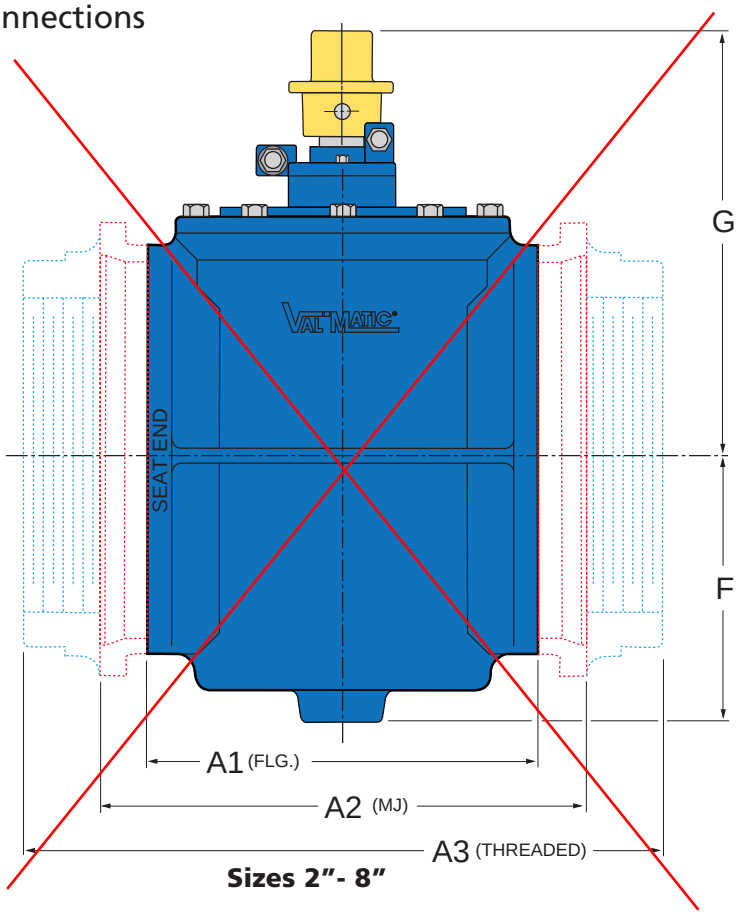

Sizes 2"- 8"

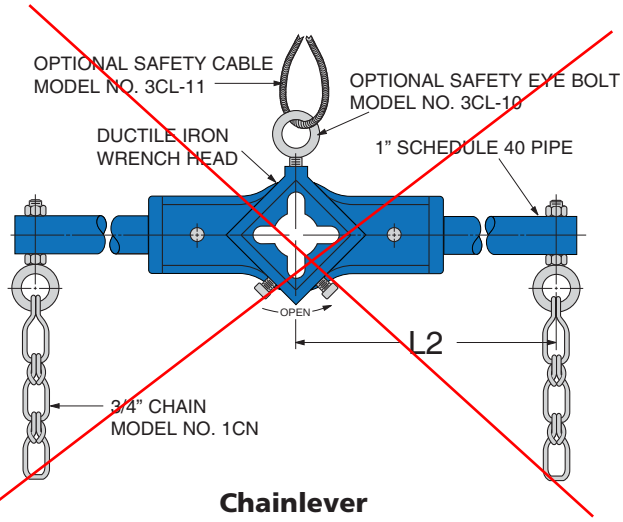

Chainlever

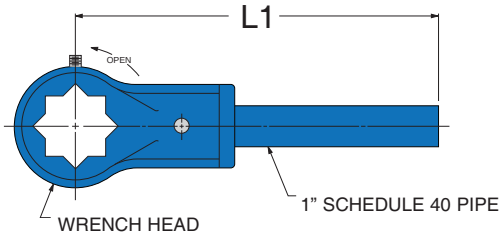

Handlever

Dimensions in Inches														
Valve Size	Flanged Model No.	MJ Model No.	Threaded Model No.	Handlever Model No.	Chainlever Model No.	Reverse	Direct	A1	A2	A3	F	G	L1	L2
1/2	-	-	5800.5RTL	Std	-	175	175			4.13*	1.88	3.19	4.25	-
3/4	-	-	5800.75RTL	Std	-	175	175			4.13*	1.88	3.19	4.25	-
1	-	-	5801RTL	Std	-	175	175	-	-	3.13	1.88	3.19	4.25	-
1 1/4	-	-	5801.25RTL	Std	-	175	175			6.75*	2.88	4.25	6.50	-
1 1/2	-	-	5801.5RTL	Std	-	175	175			6.75*	2.88	4.25	6.50	-
2	5802RN	-	5802RTL	Std	-	175	175	7.50	-	5.25	2.88	4.25	6.50	-
2 1/2	5825RN	-	5825RTN	4L	3CL	175	175	7.50	-	8.75	4.63	10.00	22.00	16.00
3	5803RN	5903RN	5803RTN	4L	3CL	175	175	8.00	11.50	8.75	4.63	10.00	22.00	16.00
4	5804RN	5904RN	-	4L	4CL	175	175	9.00	14.25	-	5.56	10.93	22.00	22.00
6	5806RN	5906RN	-	8L	6CL	50	100	10.50	15.75	-	7.06	12.31	44.00	32.00
8	5808RN	5908RN	-	8L	8CL	50	100	11.50	17.25	-	8.75	13.88	44.00	44.00

*Asterisk indicates length includes reducing bushing.

Notes: 1. Flange drilling conforms to ANSI B16.1, Class 125.
2. Mechanical Joint (MJ) Ends conform to ANSI/AWWA C110/A21.10.
3. Threaded Ends conform to ANSI/ASME B1.20.1.
4. Handlevers (i.e. 4L) Chainlevers (i.e. 3CL) and Chain (1CN) are ordered separately.

Installation Dimensions

Series 5800R & 5800HP Flanged

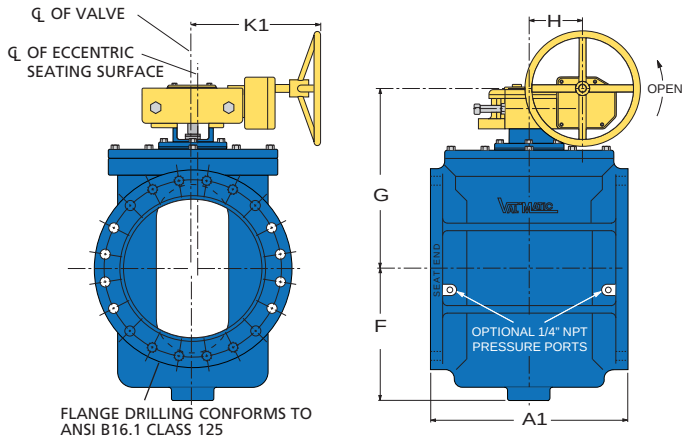

Series 5900R & 5900HP Mechanical Joint

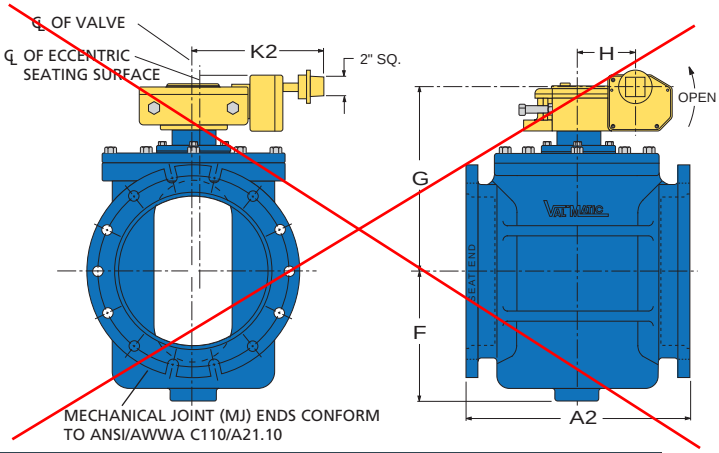

Dimensions in Inches

Valve Size	Flanged Model No.	MJ Model No.	Reverse	Direct	A1	A2	F	G	H	K1	K2
2 1/2	5825R/7A08*	-	175	175	7.50	-	4.50	7.50	3.06	9.50	-
3	5803R/7A08*	5903R/8A02A*	175	175	8.00	11.50	4.50	7.50	3.06	9.50	9.00
	5803HP/7A08*	5903HP/8A02A*	250	250							
4	5804R/7A08*	5904R/8A02*	175	175	9.00	14.25	5.56	9.31	3.06	9.50	9.00
	5804HP/7A08*	5904HP/8A02*	250	250						11.63	
6	5806R/7A08*	5906R/8A02*	175	175	10.50	15.75	7.06	11.06	3.06	9.50	9.00
	5806HP/7A12*	5906HP/8A02*	250	250						13.63	
8	5808R/7A12*	-	100	175	11.50	17.25	8.75	12.62	3.06	11.50	9.00
	5808R/7B16*	5908R/8A02*	175	175						9.38	
	5808HP/7B18*	5908HP/8A02*	250	250							
10	5810R/7C12*	5910R/8C02*	100	175	13.00	18.75	10.44	16.25	4.75	13.13	7.88
	5810R/7D16*	5910R/8D02*	175	175						11.00	
	5810HP/7D16*	5910HP/8D02*	250	250							
12	5812R/7C16*	5912R/8C02*	100	175	14.00	19.75	12.50	17.69	4.75	11.00	7.88
	5812R/7D24*	5912R/8D02*	175	175						16.75	
	5812HP/7D24*	5912HP/8D02*	250	250							
14	5814R/7E18*	-	50	100	17.00	24.50	13.00	19.31	5.62	15.25	13.00
	5814R/7G12	5914R/8F02*	150	150				21.25	9.69	14.00	
	5814HP/7G12	5914HP/8F02*	250	250							
16	5816R/7E24*	-	50	100	17.75	24.75	14.50	20.62	5.62	17.12	13.00
	5816R/7G14	5916R/8F02*	150	150				22.56	9.69	14.62	
	5816HP/7G18	5916HP/8F02*	250	250						15.62	
18	5818R/7J30*	-	50	100	21.50	28.50	16.25	22.25	5.62	18.62	14.50
	5818R/7L24	5918R/8K02	150	150				25.12	7.38	19.25	
	5818HP/7L24	5918HP/8K02	250	250							
20	5820R/7M18	-	50	100	23.50	30.50	17.50	26.25	7.38	19.00	14.50
	5820R/7P30	5920R/8K02.5	150	150						21.88	
	5820HP/7P30	5920HP/8K02.5	250	250							
24	5824R/7M24	-	50	100	30.00	37.00	20.25	29.00	7.38	19.25	14.50
	5824R/7Q36	5924R/8K02.5	150	150					11.50	23.25	
	5824HP/7Q36	5924HP/8K02.5	250	250							
30	5830R/7R24	-	50	100	37.50	45.50	24.00	31.00	4.06	16.12	14.44
	5830R/7T30	5930R/8S02	150	150							
36	5836R/7S30	-	50	100	52.00	60.00	29.00	31.00	4.06	16.12	14.44
	5836R/7W36	5936R/8T02	150	150				32.25	10.50	23.50	21.75
42	5842R/7X30	-	50	100	62.00	70.00	36.50	44.00	14.00	25.25	27.60
	5842R/7Z36	5942R/8Z02	150	150							
48	5848R/7X30	-	50	100	84.00	84.00	38.50	48.46	10.90	27.60	27.60
	5848R/7Z36	5948R/8Z02	150	150							
54	5854R/7X30	-	50	100	96.00	-	38.50	48.46	10.90	27.60	-
	5854R/7Z36	-	150	150							

*Asterisk indicates valve model numbers without spur gear

Notes:
1. Replace Handwheel (HW) diameter in the model number (i.e. /7A08) with 02 for 2" square operating nut (i.e./7A02).
2. Add a C suffix to model number to include Chainwheel Kit (i.e. 5804R/7A08C).
3. Available with ISO/PN drilling.
4. Consult factory for larger sizes.

Flow Characteristics

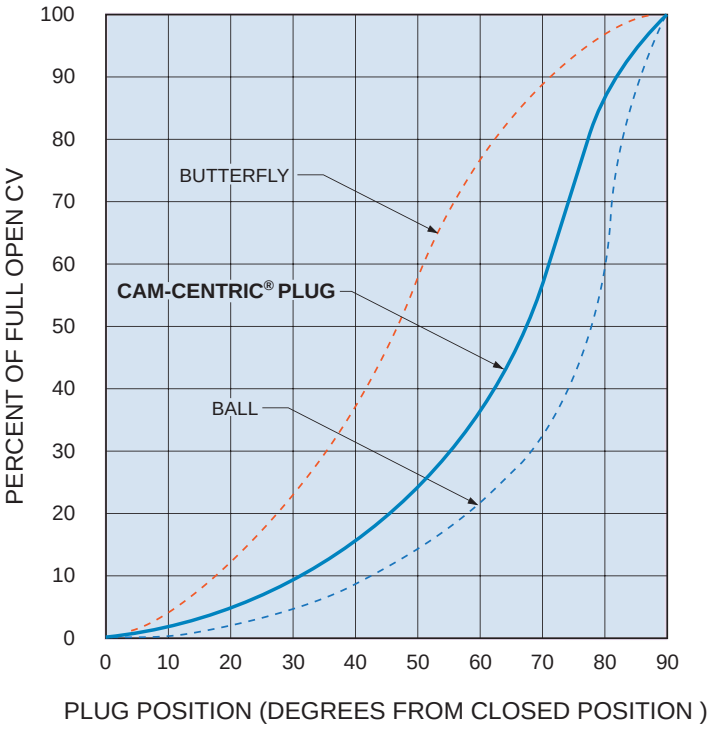

INHERENT PUMP CONTROL FLOW CHARACTERISTICS

To control pressure surges and provide good-controllability, the flow characteristics of valves should be considered.

The graph at left shows the inherent flow characteristics at a constant ΔP for various valves.

The Plug Valve has an inherent flow characteristic similar to a ball valve. When installed in a pipeline, the plug valve will approximate a linear flow characteristic because the piping system pressure losses will shift the flow curve to the left. A linear installed flow characteristic will help control surges and provide a wide range of controllability.

Installations



Cam-Centric® Plug Valve with worm gear actuator and chainwheel



Cam-Centric® Plug Valve with Val-Matic Swing-Flex®



Cam-Centric® Plug Valve with Val-Matic dual body combination AIr Valve



Cam-Centric® Plug Valve with motor actuator



Cam-Centric® Plug Valve with worm gear actuator



Cam-Centric® Plug Valve with worm gear actuator and extension stem

2-Way Specification

SCOPE

1.1 This specification covers the design, manufacture, and testing of 1/2 in. (15 mm) through 3 in. (80 mm) Threaded Eccentric Plug Valve, 2 ½ in. (60 mm) through 54 in. (1350 mm) Eccentric Plug Valve suitable for water or wastewater service with pressures up to 250 psig (1725 kPa).
1.2 Plug Valves shall be quarter-turn, non-lubricated with resilient encapsulated plug.

STANDARDS AND APPROVALS

2.1 2 ½ in. (60 mm) through 54 in. (1350 mm) plug valves shall be designed, manufactured and tested in accordance with American Water Works Association Standard ANSI/AWWA C517.
2.2 All Plug Valves shall be certified Lead-Free in accordance with NSF/ANSI 372.
2.3 Manufacturer shall have a quality management system that is certified to ISO 9001 by an accredited, certifying body.

CONNECTIONS

3.1 Threaded valves shall have threaded NPT full size inlets. The connection shall be hexagonal for a wrench connection.
3.2 Flanged valves shall have flanges with drilling to ANSIB16.1, Class 125.
3.3 Mechanical Joint valves shall fully comply with ANSI/AWWA C111/A21.11.

DESIGN

4.1 Threaded and all other valves under 4" (100mm) shall have port areas of not less than 100% of pipe area. Port areas on other sizes are 85% on 16" (400 mm) and smaller, 80% on 18"-24" (150 mm- 600 mm), and 75% on 30" (800 mm) and larger.
4.2 Threaded valve seat shall be a machined seating surface.
4.3 2 ½ in. (60 mm) through 54 in. (1350 mm) plug valves shall have a valve seat that is a welded overlay of 95% pure nickel applied directly to the body on a pre-machined, cast seating surface and machined to a smooth finish.
4.4 Threaded valves shall have shaft seals which consist of V-type lip seal in a fixed gland with a resilient O-ring spring.
4.5 2 ½ in. (60 mm) through 54 in. (1350 mm) plug valves shall have shaft seals which consist of V-type packing in a fixed gland with an adjustable follower designed to prevent over compression of the packing and to meet design parameter of the packing manufacturer. Removable POP™ shims shall be provided under the follower flanges to provide for adjustment and prevent over tightening.
4.6 Permanently lubricated, radial shaft bearings shall be supplied in the upper and lower bearing journals. Thrust bearings shall be provided in the upper and lower journal areas, except for threaded type which only have upper thrust bearings.
4.7 Both the packing and bearings in the upper and lower journals shall be protected by a Grit-Guard™ "drip tight" Buna-N shaft seal located on the valve shaft to minimize the entrance of grit into the bearing journal and shaft seal areas.
4.8 The threaded valve body shall have 1/8" NPT upstream and downsteam pressure ports.

MATERIALS

5.1 Valve bodies and covers shall be constructed of ASTM A126 Class B cast iron for working pressures up to 175 psig (1200 kPa) and ASTM A536 Grade 65-45-12 for working pressures up to 250 psig (1725 kPa). The words "SEAT END" shall be cast on the exterior of the body seat end.
5.2 Threaded valve plugs in sizes 1/2 in. (15 mm) through 3 in. (80 mm) shall be of one-piece construction and made of ASTM A126 Class B cast iron fully encapsulated with a resilient facing per ASTM D2000-BG and ANSI/AWWA C517 requirements.
5.3 2 ½ in. (60 mm) through 54 in. (1350 mm) plugs shall be of one-piece construction and made of ASTM A126 Class B cast iron or ASTM A536 Grade 65-45-12 ductile iron and fully encapsulated with resilient facing per ASTM D2000-BG and ANSI/AWWA C517 requirements.
5.4 Threaded valves shall have radial shaft bearings constructed of self-lubricating Type 316 stainless steel. The top thrust bearing shall be PTFE.
5.5 2 ½ in. (60 mm) through 54 in. (1350 mm) plug valves shall have radial shaft bearings constructed of self-lubricating Type 316 stainless steel. The top thrust bearing shall be PTFE. The bottom thrust bearing shall be self-lubricating Type 316 stainless steel. Cover bolts shall be corrosion resistant with zinc plating.

ACTUATION

6.1 Threaded valves shall be equipped with a hand lever with a dial indicator and open memory stop.
6.2 Valves 2 ½ in. (60 mm) to 8 in. (200 mm) and 4 in. (100mm) to 6 in. (150 mm) 100% ported shall be equipped with a 2 inch square nut for direct quarter turn operation. The packing gland shall include a friction collar and an open position memory stop. The friction collar shall include a nylon sleeve to provide friction without exerting pressure on the valve packing.
6.3 When specified valves 4 in. (100 mm) and larger shall include a totally enclosed and sealed worm gear actuator with position indicator (above ground service only) and externally adjustable open and closed stops. The worm segment gear shall be ASTM A536 Grade 65-45-12 ductile iron with a precision bore and keyway for connection to the valve shaft. Bronze radial bearings shall be provided for the segment gear and worm shaft. Alloy steel roller thrust bearings shall be provided for the hardened worm.
6.4 All gear actuators shall be designed to withstand, without damage, a rim pull of 200 lb. on the hand wheel and an input torque or 300 ft-lbs. for nuts.
6.5 Buried service actuators shall be packed with grease and sealed for temporary submergence to 20 feet of water. Exposed worm shafts shall be stainless steel.

OPTIONS

7.1 When specified, the valve port area shall have not less than 100% of pipe area.
7.2 The interior and exterior of the valve shall be coated with an NSF/ANSI 61 approved fusion bonded epoxy.
7.3 The interior of the valve shall be coated with 8 mils SG-14 glass lining or 1/8" soft rubber lining.

MANUFACTURE

8.1 Manufacturer shall demonstrate a minimum of ten (10) years' experience in the manufacture of plug valves. When requested, the manufacturer shall provide test certificates, dimensional drawings, parts list drawings and operation and maintenance manuals.
8.2 The exterior of the valve for above ground service shall be coated with a universal alkyd primer. Valve exterior for buried service shall be coated with an epoxy coating.
8.3 Valve shall be marked with the Serial Number, Manufacturer, Size, Cold Working Pressure (CWP) and the Direct and Reverse Actuator Pressure Ratings on a corrosion resistant nameplate.
8.4 Plug Valves shall be Series # 5800RTL (Threaded), 5800R (Flanged), 5800HP (Flanged), 5900R (Mechanical Joint) or 5900HP (Mechanical Joint) as manufactured by Val-Matic Valve and Mfg. Corporation, Elmhurst, IL. USA or approved equal.



Val-Matic's quality of design and meticulous workmanship has set the standards by which all others are measured. Quality design features such as the AWWA **Ener•G® Ball Valve** with its energy efficient design, fusion bonded epoxy and adjustable resilient seating....**Cam-Centric® Plug Valves** have more requested features than any other eccentric plug valve....**American-BFV® Butterfly Valves** include a field replaceable seat without the need for special tools....**Tilted Disc® Check Valves** with high strength and wear resistant aluminum bronze trim as standard....**Silent Check Valves** featuring combined resilient/metal-to-metal seating and are **NSF/ANSI 61 & 372 Certified**....**Sure Seal Foot Valves** provided with a heavy duty stainless steel screened inlet....**Swing-Flex® and Surgebuster® Check Valves** designed with an unrestricted full flow area....**Swing Check Valves** with field adjustable closure versatility....**Dual Disc® Check Valves** utilizing stabilized components to provide extended life....**Air Release, Air/Vacuum and Combination Air Valves** provided standard with Type 316 stainless steel trim....**VaultSafe®** family of products includes the **FloodSafe® Inflow Preventer**, **FrostSafe®** two-way damper and the **VentSafe®** vent pipe security cage. The **QuadroSphere® Trunnion Ball Valve** features a unique ball design with recessed surfaces creating additional flow paths to provide a self-cleaning action and reduced wear and torque.

Val-Matic is totally committed to providing the highest quality valves and outstanding service to our customers. Complete customer satisfaction is our goal. **Make the change to quality, specify Val-Matic!**

VAL-MATIC®

Val-Matic Valve and Manufacturing Corp.
905 Riverside Drive, Elmhurst, IL 60126
Phone: 630-941-7600 • Fax: 630-941-8042
www.valmatic.com • valves@valmatic.com

Copyright © 2017 Val-Matic Valve & Mfg. Corp.
ISO 9001:2008 certified company

10/17

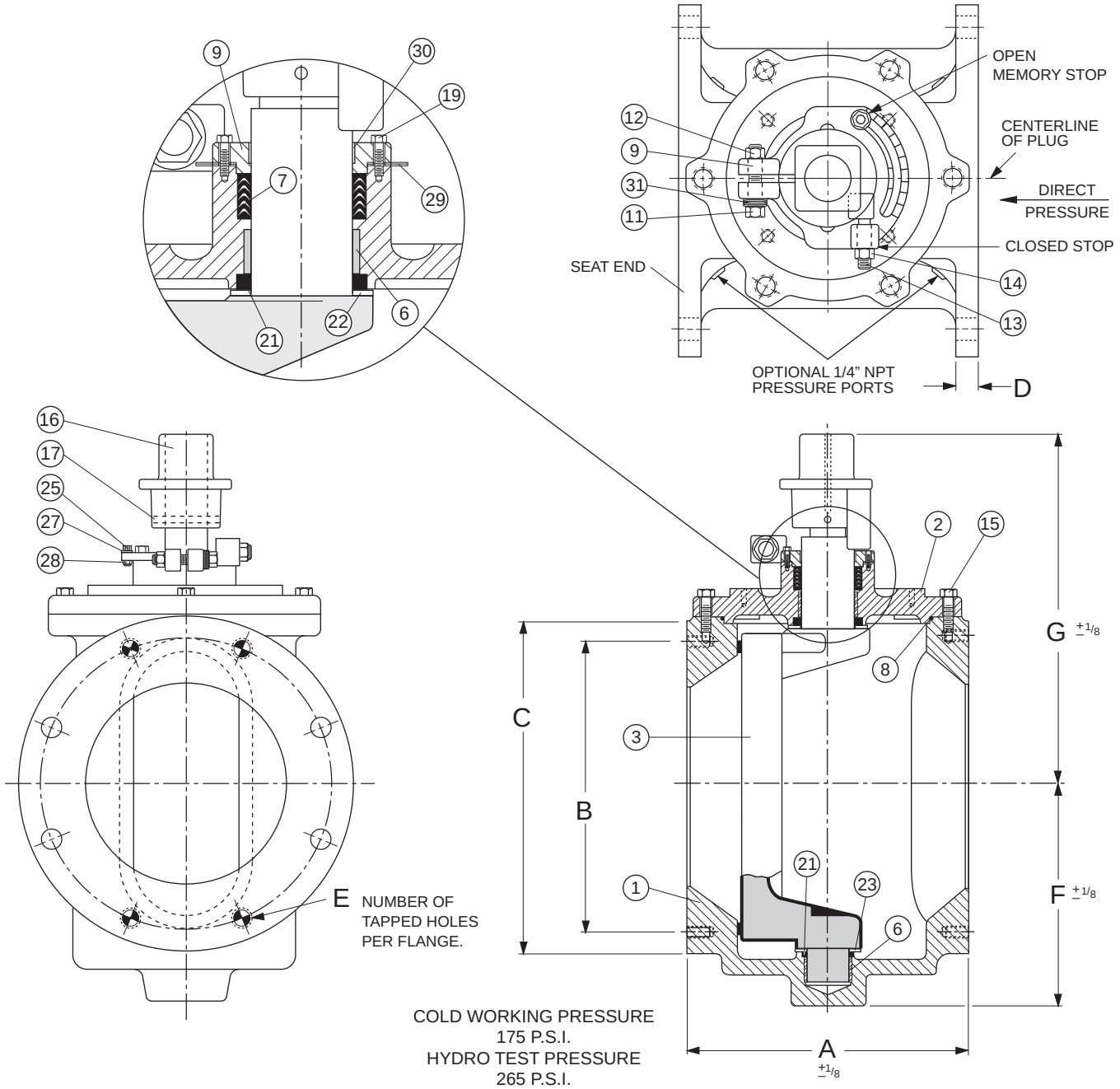

SEE DRAWING NO. VM-5804RN-M FOR STANDARD MATERIALS OF CONSTRUCTION.

VALVE SIZE	MODEL NO.	Press. Rating P.S.I.		A	B	C	D	E QTY	E TAP	E DEEP	F	G	BOLT SIZE	NO.OF BOLTS
		Reverse	Direct											
2	5802RN	175	175	7.50	4.75	6.00	0.68	4	5/8 - 11	1.00	4.50	9.62	5/8	4
2 1/2	5825RN	175	175	7.50	5.50	7.00	0.68	4	5/8 - 11	1.00	4.50	9.62	5/8	4
3	5803RN	175	175	8.00	6.00	7.50	0.75	2	5/8 - 11	1.00	4.50	9.62	5/8	4
4	5804RN	175	175	9.00	7.50	9.00	0.75	0	—	—	5.56	10.93	5/8	8
6	5806RN	50	100	10.50	9.50	11.00	0.75	4	3/4 - 10	1.25	7.06	12.31	3/4	8
8	5808RN	50	100	11.50	11.75	13.50	0.88	4	3/4 - 10	1.25	8.75	13.88	3/4	8

Revised 12-17-09

ANSI CLASS 125 FLANGED CAM-CENTRIC® RECTANGULAR PLUG VALVE WITH DIRECT NUT

DATE 3-15-96

VAL-MATIC® VALVE AND MANUFACTURING CORP.

DRWG. NO. VM-5804RN

CAM-CENTRIC® RECTANGULAR PORT PLUG VALVE

SERIES NO. 5800RN

STANDARD MATERIALS OF CONSTRUCTION

PART NO.	PART NAME	MATERIAL
1	BODY	CAST IRON ASTM A126, CLASS B WITH OVERLAY WELDED NICKEL SEAT
2	COVER	CAST IRON ASTM A126, CLASS B
3	PLUG	CAST IRON ASTM A126, CLASS B WITH RESILIENT FACING, ASTM D2000
6	BEARINGS	PERMANENTLY LUBRICATED STAINLESS STEEL T316
7	VEE TYPE PACKING	BUNA-N
8	COVER SEAL	BUNA-N
9 *	FRICTION COLLAR	DUCTILE IRON ASTM A536, GRADE 65-45-12
11 *	BOLT	CARBON STEEL SAE, GRADE 5 (ZINC PLATED)
12 *	HEX NUT	STEEL (ZINC PLATED)
13 *	STOP ADJUSTMENT SCREW	STEEL
14 *	LOCK NUT	STEEL (ZINC PLATED)
15	COVER BOLT	CARBON STEEL SAE, GRADE 5 (ZINC PLATED)
16 *	OPERATING NUT	CAST IRON ASTM A126, CLASS B
17 *	SPRING PIN	CARBON STEEL (ZINC PLATED)
18	PACKING GLAND FOLLOWER	CAST IRON A126, CLASS B
19	PACKING GLAND FOLLOWER BOLT	CARBON STEEL SAE, GRADE 5 (ZINC PLATED)
21	GRIT-GUARD®	BUNA-N
22	THRUST BEARING	TEFLON
23	THRUST BEARING	STAINLESS STEEL T316, ASTM A276
25 *	MEMORY STOP BOLT	STEEL
27 *	MEMORY STOP WASHER	STEEL
28 *	MEMORY STOP LOCKNUT	STEEL
29	SHIMS	STAINLESS STEEL T304, ASTM A276
30 *	FRICTION SLEEVE	NYLON W/ MOLY-DISULPHIDE
31 *	BELLEVILLE SPRING WASHER	STAINLESS STEEL

NOTE: ALL SPECIFICATIONS AS LAST REVISED.

* OPERATING NUT AND FRICTION COLLAR NOT FURNISHED ON 10" AND LARGER VALVES OR WHEN WORM GEAR OR OTHER ACTUATORS ARE SUPPLIED.

Revised 4-6-99

MATERIALS OF CONSTRUCTION

DATE 3/15/96

VAL-MATIC® VALVE AND MANUFACTURING CORP.

DRWG. NO. VM-5804RN-M

P1039 Iqaluit

PLV01 valve operators-rev01

							Installation height	Operator
PLV-02-306	TWAS	100	Plug Valve	PLV01	M	P-611	to confirm	
PLV-02-307	DR	100	Plug Valve	PLV01	M	P-611	to confirm	
PLV-02-308	DR	100	Plug Valve	PLV01	M	P-611	to confirm	
PLV-02-326	TWAS	100	Plug Valve	PLV01	M	P-613	to confirm	
PLV-02-327	DR	100	Plug Valve	PLV01	M	P-613	to confirm	
PLV-02-328	DR	100	Plug Valve	PLV01	M	P-613	to confirm	
PLV-02-621	TWAS	150	Plug Valve	PLV01	M	P-617	to confirm	
PLV-02-641	TWAS	150	Plug Valve	PLV01	M	P-617	to confirm	
PLV-02-643	TWAS	150	Plug Valve	PLV01	M	P-617	to confirm	
PLV-02-644	TWAS	150	Plug Valve	PLV01	M	P-617	to confirm	
PLV-02-645	DR	150	Plug Valve	PLV01	M	P-617	to confirm	
PLV-02-646	DR	150	Plug Valve	PLV01	M	P-617	to confirm	
PLV-02-647	DR	100	Plug Valve	PLV01	M	P-617	to confirm	
PLV-02-648	DR	100	Plug Valve	PLV01	M	P-617	to confirm	
PLV-03-650	TWAS	150	Plug Valve	PLV01	M	P-617	0.3m	lever
PLV-03-651	TWAS	150	Plug Valve	PLV01	M	P-617	0.3m	lever
PLV-03-675	TWAS	150	Plug Valve	PLV01	M	P-617	1.9m	lever
PLV-03-676	TWAS	150	Plug Valve	PLV01	M	P-617	1.9m	lever
PLV-03-660	TWAS	150	Plug Valve	PLV01	M	P-618	0.3m	lever
PLV-03-661	TWAS	100	Plug Valve	PLV01	M	P-618	1.3m	lever
PLV-03-672	TWAS	80 (75)	Ball Valve	PLV01	M	P-618	0.3m	lever
PLV-03-681	TWAS	100	Plug Valve	PLV01	M	P-618	0.3m	lever
PLV-03-692	TWAS	80 (75)	Ball Valve	PLV01	M	P-618	1.3m	lever
PLV-03-693	TWAS	80 (75)	Ball Valve	PLV01	M	P-618	2.2m	chainwheel
PLV-03-696	TWAS	80 (75)	Ball Valve	PLV01	M	P-618	2.2m	chainwheel

HC, 2019-01-31

REVIEWED BY CONTRACTOR

Kudlik Construction Ltd.

NAME: Sandra Rousseau P.Eng

DATE: Mar 07, 2019

NORCLAIR
MÉCANIQUE DE PROCÉDÉ

SHOP DRAWINGS

DA-MP-36R2 Coarse bubble diffusers

Date : 2019-03-07

Information general	
Project : **WWTP UPGRADE - IQALUIT**	
Client : Kudlik Construction Ltd. To : Sandra Rousseau P.Eng., Project Manager	Project number : **2018-062** E-mail : srousseau@kudlik.biz
Contractor : **Norclair inc.**	Project number Norclair : **P1039**
Address : 1100, Montée Masson, Laval, QC, Canada H7E 4P2	
Project Manager : Hugo Chartier, Project Manager	E-mail: hchartier@norclair.ca
Phone : 450-688-4012 # 706	Cell. : 514-703-0263

Information, subcontractor or supplier	
Sub/supplier : Chemaction (Xylem Sanitaire)	
Contact : Germain Guinois	Phone : 514-593-1515

Information on the equipment	
Speciality : **Process**	
Equipment : Coarse bubble diffusers	
Drawing reference :	
Specification reference : **46 51 21** (Page xx / xx)	Division :
Article :	Number of pages : 91

CONSUL

STANTEC PROJECT #: 110126045

SUBMITTAL # DA-MP-36R2.

This review by Stantec is for general conformance with the design concept of Stantec's design of the:

- ☑ Process
- ☐ Structural
- ☐ Mechanical
- ☐ Electrical
- ☐ Other

component(s) only and does not mean that Stantec has verified or approves the shop drawing(s). The Contractor remains solely responsible for the shop drawing(s) and this review by Stantec does not relieve the Contractor of the Contractor's responsibility for errors or omissions in the shop drawing(s) or for meeting all requirements of the contract documents. This review does not mean that Stantec approves the detailed design inherent in the shop drawing, responsibility for which shall remain with the Contractor submitting same, nor does this review mean that Stantec accepts any deviation of the shop drawing(s) from the contract documents. The Contractor is responsible for confirming all dimensions and correlating them at the job site, for all construction means, methods and techniques, and for coordination of construction work of all trades, including coordination of all shop drawings.

Stantec

- ☑ REVIEWED
- ☐ REVIEWED, AS NOTED
- ☐ REVISE AND RESUBMIT
- ☐ NOT REVIEWED

DATE March 9, 2019

BY Alejandro Rojas, P.Eng

1100, mont
Laval, QC,
H7E 4P2

: 450-688-4012
: 450-661-6341
E-Mail : info@norclair.ca
www.norclair.ca

EQUIPMENT SUBMITTAL
BOOKLET

FOR

IQUALUIT WWTP - CANADA

SPECIFICATION 46 51 21
COARSE BUBBLE DIFFUSERS

PURCHASER:
XYLEM WATER SOLUTION
300 LABROSSE AVE
POINT CLAIRE, QC H9R 4V5 CANADA

SUPPLIER:
XYLEM - SANITAIRE PRODUCTS
9333 N. 49TH STREET
BROWN DEER, WI 53223 USA
PH: 414-365-2200 / FX: 414-365-5784

SANITAIRE PROJECT #: 18-9418SC

DATE: FEBRUARY 20, 2019

TABLE OF CONTENTS

GENERAL INFORMATION
- DEVIATIONS SUBMITTAL R.1
- XYLEM RESPONSE TO STANTEC COMMENTS SUBMITTAL R.0
- STANTEC COMMENTS TO SUBMITTAL R.0
- DEVIATIONS SUBMITTAL R.0
- WARRANTY
- DIMENSION VERIFICATION SHEET - **RESPONSE REQUIRED**
- SITE CONTACT SHIPPING VERIFICATION SHEET – **RESPONSE REQUIRED**
- GENERAL COMMENTS

SHIPPING, HANDLING, & OPERATION INFORMATION
- INSTALLATION, OPERATION, & MAINTENANCE INFORMATION
- ASSEMBLY INFORMATION
- EQUIPMENT WEIGHTS
- MAINTENANCE REQUIREMENTS

TECHNICAL INFORMATION
- AERATION EQUIPMENT DATA SHEETS
- CONTRACT SPARES
- PERFORMANCE SIMULATION
- LP - DWP HEADLOSS CURVE
- LP - DIFFUSER MATERIAL SPECIFICATIONS

MECHANICAL DETAILS
- ADHESIVE ANCHOR SYSTEM PRODUCT DETAILS
- CLAMP COUPLING INFORMATION

DRAWINGS
- E1-E3

GENERAL INFORMATION

Xylem Inc., Sanitaire Products
9333 N. 49th St., Brown Deer, WI 53223
Tel +1.414.365.2200

March 6, 2019

RE: WWTP UPGRADE - IQALUIT
Sanitaire #: 18-9418SC

SUB: Change From Wideband Diffuser to Dual Pod Assembly

STANTEC COMMENT:

Inform if the proposed 9" Dual LP diffusers are considered coarse bubble diffusers or fine bubble.

XYLEM RESPONSE:

The 9" Dual Pod Diffusers use the LP Membrane, which is a fine bubble membrane. We use the LP membrane for a number of different applications, including aerobic digesters and aerated sludge holding tanks where the air will be periodically turned off. The Dual Pod is designed specifically to replace wideband coarse bubble diffusers for on/off applications.

Wideband diffusers cannot effectively prevent backflow using check valves. The check valves become clogged over time and fail. Sanitaire has tested this. One of our competitors used to offer this as a feature, but no longer promotes it.

STANTEC COMMENT:

Confirm that the proposed 9" Dual LP diffusers are recommended by Xylem Sanitaire for agitation and suspension of 3-4% thickened waste activated sludge without plugging.

XYLEM RESPONSE:

We use the Dual Pod diffusers for aerobic digesters. Normally, we recommend mechanical mixing or jet aeration above 4% solids. For air mixing above 3% solids, we design with a higher airflow up to 0.83 L/(m3·s) (50 SCFM/1000 ft3). In this application, maximum airflow per diffuser exceeds that requirement for mixing. The membrane is self-sealing and won't allow the sludge to flow into the header when the air is off, which is why we use it for these types of applications.

Xylem Inc., Sanitaire Products
9333 N. 49th St., Brown Deer, WI 53223
Tel +1.414.365.2200

STANTEC COMMENT:

> Xylem Sanitaire to provide recommendation on the type of diffusers that will be better for this specific 3-4% TWAS agitation/suspension (the previously proposed wide band series or the new 9" Dual LP series) and the specific reasons.

XYLEM RESPONSE:

> The Dual Pod diffusers (9" LP membranes) are better.
>
> As mentioned above, we recommend LP membranes for any sludge application where the air will operate intermittently. Some confusion occurs with the wide band diffusers being characterized as non-clog. This really only applies when in constant operation. The top of the diffuser creates an air reservoir that prevents fibers and grit from getting to the orifice at the connector. When the air is off, the sludge can flow into the header and clog the pipe resulting in the necessity to clean the header. At higher concentrations, sludge in the pipe can congeal to the point that a high airflow will not blow it out of the pipe.

John Sheridan
Territory Manager – Sanitaire Products
Xylem, Inc.
9333 N. 49th St.
Brown Deer, WI 53223
O: 414-365-2760
M: 262-278-1714
john.sheridan@xyleminc.com

REVIEWED BY CONTRACTOR

Kudlik Construction Ltd.

NAME: Sandra Rousseau P.Eng

DATE: Fév 21, 2019

NORCLAIR
MÉCANIQUE DE PROCÉDÉ

SHOP DRAWINGS

DA-MP-36R1 Coarse bubble diffusers

Date : 2019-02-21

Information general	
Project : **WWTP UPGRADE - IQALUIT**	
Client : Kudlik Construction Ltd. To : Sandra Rousseau P.Eng., Project Manager	Project number : **2018-062** E-mail : srousseau@kudlik.biz
Contractor : **Norclair inc.**	Project number Norclair : **P1039**

Address : 1100. Montée Masson. Laval. QC. Canada H7E 4P2

STANTEC PROJECT #: 110126045

SUBMITTAL # DA-MP-36R1

This review by Stantec is for general conformance with the design concept of Stantec's design of the:

- ☑ Process
- ☐ Structural
- ☐ Mechanical
- ☐ Electrical
- ☐ Other

component(s) only and does not mean that Stantec has verified or approves the shop drawing(s). The Contractor remains solely responsible for the shop drawing(s) and this review by Stantec does not relieve the Contractor of the Contractor's responsibility for errors or omissions in the shop drawing(s) or for meeting all requirements of the contract documents. This review does not mean that Stantec approves the detailed design inherent in the shop drawing, responsibility for which shall remain with the Contractor submitting same, nor does this review mean that Stantec accepts any deviation of the shop drawing(s) from the contract documents. The Contractor is responsible for confirming all dimensions and correlating them at the job site, for all construction means, methods and techniques, and for coordination of construction work of all trades, including coordination of all shop drawings.

Stantec

- ☐ REVIEWED
- ☐ REVIEWED, AS NOTED
- ☑ REVISE AND RESUBMIT
- ☐ NOT REVIEWED

DATE FEB 26, 2019

BY Alejandro Rojas, P.Eng

CONSULTANT APPROVAL

☐ Inform if the proposed 9" Dual LP diffusers are considered coarse bubble diffusers or fine bubble.

☐ Confirm that the proposed 9" Dual LP diffusers are recommended by Xylem Sanitaire for agitation and suspension of 3-4% thickened waste activated sludge without plugging.

☐ Xylem Sanitaire to provide recommendation on the type of diffusers that will be better for this specific 3-4% TWAS agitation/suspension (the previously proposed wide band series or the new 9" Dual LP series) and the specific reasons.

1100, montée Masson
Laval, QC, Canada
H7E 4P2

Phone. : 450-688-4012
Fax : 450-661-6341
E-Mail : info@norclair.ca
www.norclair.ca

PROJECT: IQUALUIT, CANADA - WWTP **SANITAIRE #: 18-9418SC**

SPECIFICATION DEVIATIONS R.1 (2/20/2019)

1.) 2.8 Diffusers
.3 Provide non-clog band type diffusers, with no flexible or moving parts.

RESPONSE: Xylem has provided flexible membrane diffuser pod assembly (DUAL POD) at the request of providing a system that prevents backflow.

XYLEM RESPONSE TO STANTEC COMMENTS R.0 (2/20/2019)

1.) Xylem does not have a P. ENG with NAPEG stamp.
2.) Xylem's experience has found coarse bubble diffusers with submerged backflow valves clog very easily. Xylem's solution to back flow prevention is to provide LP - Dual Pod assemblies in lieu of coarse bubble diffusers. The membrane diffuser prevents back flow, and is suitable for the air rates in the specification.
3.) Noted. Contractor to provide isolation valves.
4.) Noted. Manufacturer representative will witness testing.
5.) Noted. Dual Pod assembly is longer than previously submitted coarse bubble diffuser.
6.) Noted. Dual Pod assembly is longer than previously submitted coarse bubble diffuser.
7.) Noted. Contractor to provide isolation valves.
8.) Noted. Manufacturer representative will witness performance testing.
9.) Noted. Dual Pod assembly is longer than previously submitted coarse bubble diffuser.
10.) Noted. Dual Pod assembly is longer than previously submitted coarse bubble diffuser.

STANTEC / REVIEWED COMMENTS R.0 (1/9/2019)

1.) NAPEG P. ENG stamp is required.
2.) Other coarse bubble aeration system manufacturers provide back flow prevention on diffusers that avoid water back flow if the air is shut off. This provides huge savings in maintenance. What is Sanitaire's solution to this maintenance issues? Nothing developed yet?
3.) Then, contractor to supplied specified isolation valves.
4.) Process performance testing to be attended in the field by the manufacturer representative as specified.
5.) Per drawing E-1 Sheet 1/3, it seems that the diffusers are not providing full coverage of the tank floor. Longer diffusers would be required to cover the full floor area as specified.
6.) Per drawing E-1 Sheet 1/3, it seems that the diffusers are not providing full coverage of the tank floor. Longer diffusers would be required to cover the full floor area as specified.
7.) Isolation valves must be provided as specified by contractor.
8.) Manufacturer representative to attend and support contractor on equipment performance testing. (Item 5: 3 days)
9.) Diffuser length is too short. Diffusers do not cover the full bottom area of the tanks. Solids suspensions could be compromised at these areas. Provide longer diffusers that cover the full tank floor area as specified.
10.) Diffuser length is too short. Diffusers do not cover the full bottom area of the tanks. Solids suspensions could be compromised at these areas. Provide longer diffusers that cover the full tank floor area as specified.

SPECIFICATION DEVIATIONS R.0 (12-6-2018)

See organized comments returned from Stantec above.
To see comments please see submittal R.0 dated 12-6-2018

WARRANTY

IQUALUIT, CANADA - WWTP

COARSE BUBBLE AERATION DEVICES
Sanitaire contract no. 18-9418SC

Xylem Water Solutions USA, Inc. – Sanitaire Brand (Seller) warrants all equipment supplied by it per Specification Section 46 51 21 of the Contract Documents (COARSE BUBBLE DIFFUSERS) to be free from defects in material and workmanship for a period of twelve (12) months from the date of Substantial Completion. Substantial Completion shall be defined as when the Owner receives beneficial use of the warranted equipment.

If within such warranty period any such equipment is proved to Seller's satisfaction to be defective, Seller shall, at its option, repair or replace the defective equipment or part without charge. Such repair or replacement shall be Seller's sole liability, and buyer's sole remedy, for breach of warranty, and is conditioned upon:

- Seller's receipt of written notice of any alleged defect within ten (10) calendar days of its discovery.
- Receipt by Seller of full payment for goods and services provided under this contract.
- The warranted equipment has not been repaired or altered by others without Seller's written authorization.

- The warranted equipment shall be properly installed, and operated and maintained, in accordance with Seller's written instructions provided to the end user.

- Decomposition or deformation resulting from chemical action, wear caused by the presence of abrasive materials, and replaceable or consumable material reaching its useful life, shall not constitute defects under the foregoing warranty.

THE FOREGOING WARRANTY IS IN LIEU OF, AND SELLER DISCLAIMS, ALL OTHER EXPRESS AND IMPLIED WARRANTIES (EXCEPT OF TITLE), INCLUDING BUT NOT LIMITED TO IMPLIED WARRANTIES OF MERCHANTABILITY AND FITNESS FOR PARTICULAR PURPOSE. SELLER'S RESPONSIBILITIES UNDER THE FOREGOING WARRANTY ARE SELLER'S SOLE LIABILITY WITH RESPECT TO EQUIPMENT, PARTS OR SERVICES MANUFACTURED OR FURNISHED BY IT, OR ANY UNDERTAKINGS, ACTS OR OMISSIONS RELATING THERETO; AND SELLER SHALL HAVE NO OTHER LIABILITY WITH RESPECT THERETO, WHETHER BASED ON BREACH OF CONTRACT, NEGLIGENCE OR OTHER TORT OR ON ANY STRICT LIABILITY THEORY. IN NO EVENT SHALL SELLER BE LIABLE FOR ANY CONSEQUENTIAL OR INCIDENTAL DAMAGES.

FEBRUARY 20, 2019

PROJECT: IQUALUIT, CANADA - WWTP **SANITAIRE #: 18-9418SC**

DIMENSION / FABRICATION VERIFICATION SHEET

Please verify all dimensions and elevations, including inside tank dimensions, dropleg locations, and elevations of dropleg connection, face of flanges, flat floor and high point, low Point elevations of sloped floor. Please reply to these items when returning the approved submittals. Lack of response will delay the processing of this contract.

I have reviewed all dimensions and request Xylem to release droplegs, manifolds, and air distributors for fabrication based on the approved submittal or in accordance with the marked up drawings in the returned approved as noted submittal.

☐ Release For Fabrication

☐ DO NOT Release For Fabrication

Approver Title: _____

Approver Phone: _____

Approver Signature: _____

Approver Printed: _____

PROJECT: IQUALUIT, CANADA - WWTP **SANITAIRE #: 18-9418SC**

SITE CONTACT SHIPPING VERIFICATION

To ensure quality delivery of the proposed equipment in this submittal booklet, please provide the exact address that the equipment is expected to be delivered and any pertinent information for the jobsite. (i.e. Gate Information, Site Superintendent, No Friday Deliveries, Contact 2 Days Prior to Truck Arrival)

Address: 1100 Montée Masson

City, State, Zip: Laval, Qc, H7E 4P2

Recipient Name: Hugo Chartier

Recipient Title: Project Manager

Recipient Phone: 450-688-4012, ext 706

Recipient Email: hchartier@norclair.ca

Requested Ship Date: May 15th 2018, to be confirmed
(10 Weeks from Approval)

Additional Comments:

(NOTE: Requests for splitting the delivery of equipment into multiple shipments following mutual order acceptance will increase the cost of this project and a quote will be provided for additional freight costs.)

XYLEM GENERAL COMMENTS

1. The gussets on the diffuser connectors are suitable for use as lifting lugs.

2. All items furnished by Xylem are for installation by others.

3. Any valves on the air supply piping are supplied by others.

4. Bolts, gaskets, insulators and hardware for connecting the Xylem supplied dropleg to the air supply piping are supplied by others.

5. Any penetrations, wall sleeves, wall spools or seals required for installation of the Xylem supplied equipment are supplied by others.

6. Chemical treatment or lubrication of threaded stainless steel assemblies is supplied and installed by others.

7. Painting and protective coatings for any component supplied by Xylem are not included in the Xylem scope of supply for this contract.

8. The Xylem supplied stainless steel dropleg, manifold, and air distributor assemblies for the SANITAIRE equipment are fabricated by Felker Brothers in Marshfield, WI. Their welding procedures and qualifications were developed in accordance with ASME IX. Felker Brothers welders are current to date with ASME IX. Felker Brothers is ISO 9001:2000 certified.

9. The Xylem supplied welded stainless steel dropleg, manifold, and air distributor assemblies are cleaned in accordance with ASTM A380-88 Section 6.2.11. The acid solution is as defined in ASTM A380 Table A2.1 Annex A2. Materials have a final rinse using ordinary industrial or potable water and are dried in conformance with ASTM A380 Section 8.3. Xylem can provide cleaning notification or verification if required.

10. Expansion joints with fixed supports are not required by Xylem for manifolds or headers less than 36 METERS in length.

11. No special tools other than those shown on the drawings are required for equipment maintenance.

12. No spare parts other than those specified are required or recommended by Xylem.

13. The final equipment Installation, Operation & Maintenance (IOM) Manual is transmitted after submittal approval and before shipment.

14. A Bill of Materials is included in the final IOM Manual

15. Information on equipment storage, protection, and handling before and after installation are included in the IOM Manual.

16. Erection drawings marked “Approved For Construction” with piece marks are included with the final IOM Manual.

17. Instructions for the installation of SANITAIRE equipment are included in the IOM Manual.

18. Warranty information is included in the final IOM Manual.

19. Perform the Inspection, Level, Uniformity, Leakage and Operations Tests per the specifications and the instructions in the IOM Manual.

20. Xylem will provide manufacturer's services as specified. All equipment, materials and manpower required for specified testing in the field is supplied by others.

21. Qualifications of the manufacturer's field service representative can be supplied when inspection, startup or training is requested.

22. Xylem utilizes the pre-printed IOM Manual for training.

23. Video taping of training sessions for the Owner's personnel, if required, is supplied by others.

24. Xylem's fabrication tolerances allow +/- 10 [mm] variation in elevation from diffuser to diffuser along a header's length as measured at the diffuser connector. Angular variations of the threaded connector may cause the outboard ends of the diffuser to vary by an additional +/- 10 [mm] for a total range of outboard tip elevation variation of +/- 20 [mm]. For proper air distribution the diffuser levels should be adjusted around an average elevation for all diffusers in the assembly.

S&H INFORMATION

SANITAIRE®

Coarse Bubble Aeration System

Stainless Steel Headers - No Manifold, Replacement
LP Dual Pod diffusers

INSTALLATION, OPERATION AND MAINTENANCE MANUAL

TABLE OF CONTENTS

Page No.

INTRODUCTION ii

INSTALLATION AND START-UP
Receiving and Site Storage 1
Physical Inventory. 1
FIXED HEADER 1
Dropleg Installation 1
Manifold Installation 2
Header Installation 6
Header Installation Without Manifold 6
Header Installation With Manifold 9
9" Dual LP Diffuser Assembly 10
Purge System Installation. 11
Diffuser Assembly Installation and Leveling 12
Diffuser Installation 13
Aeration System Start-up Procedure 15

Page No.

PLANT OPERATION
Principles 18
Diffuser Operating Air Flow Range 18
Mixing. 19
Diffuser Fouling. 19

PREVENTATIVE MAINTENANCE
Moisture Purge. 21
Air Bumping. 21
Power Failures and Loss of Air Supply 21
Visual Inspection. 22
Air Main Inspection. 22
Aeration System Troubleshooting Guide 23

YEARLY MAINTENANCE AND CLEANING
Maintenance Schedule. 25
Lubrication Schedule. 25
Cleaning. 25

LONG TERM STORAGE PROCEDURES 27

INTRODUCTION

This manual covers the Installation, Start-up, Plant Operation, Maintenance and Repair of SANITAIRE Coarse Bubble Aeration Systems.

This manual is used for SANITAIRE Fixed and Removable Header Coarse Bubble Aeration Systems. The format and text of this manual have not been edited for specific projects or specification requirements.

Distinct sections are included for the installation of both system types. The installing Contractor should follow the instructions for the supplied system.

Before beginning the installation process, the installing Contractor should make sure the Sanitaire Erection “E” drawings are in their possession. The “E” drawings have the required component part number designations and are essential for proper installation.
Submittal “S” drawings do not contain the detailed information necessary to install the equipment properly. **DO NOT** use “S” drawings to lay out or install the equipment.



The Safety Alert Symbol means ATTENTION! BECOME ALERT! YOUR SAFETY IS INVOLVED!

! CAUTION

This symbol and signal word indicate a potentially hazardous situation which, if not avoided, MAY result in minor or moderate injury. This symbol MAY also be used to alert against unsafe practices.

CAUTION

This signal word indicates a situation which if not avoided, MAY result in product or property damage.

The precautions listed in this manual are not all-inclusive. If a procedure, method, tool or part is not specifically recommended, you must satisfy yourself that it is safe for you and others, and that the system will not be damaged or made unsafe as a result of your decision.

This material may not be copied, reproduced or stored in an electronic retrieval system without prior written approval from Sanitaire.

© Copyright Sanitaire 1999

INSTALLATION AND START-UP

RECEIVING AND SITE STORAGE

The equipment is delivered by flat bed trailer trucks. Before the arrival of the truck, select a dry, level area to temporarily store the equipment.

The aeration headers, manifolds and droplegs are shipped in maximum lengths of 41'-0". The diffusers, supports, support hardware and ancillary equipment are packed in boxes, if possible, according to item and size and shipped to the jobsite on pallets. The diffusers are shipped in cardboard boxes on wooden pallets. The diffusers should not be removed from the original packaging until final installation on the headers.

Unload the piping system components using a forklift or crane with a minimum 2000 lb. lifting capacity. Care must be taken during handling to avoid damage, particularly to the flanged ends and diffuser connectors. Nylon straps should be used to lift the piping off the truck. All equipment should be stored on blocks in a level position to avoid damage before installation.

DO NOT stack shipping units.

DO NOT store the units where snow removal or other heavy equipment could cause damage.

PHYSICAL INVENTORY

Sanitaire provides shipping lists for all components used for the SANITAIRE Coarse Bubble Aeration System as part of the project I, O & M manual. In addition, each shipment has a packing list of all items delivered.

Before installation, take a physical inventory of all components (by comparing the shipping and packing lists) and immediately report any missing or damaged items to the Sanitaire Production Department.

FIXED HEADER

CAUTION

Completely read the following instructions and review all Sanitaire Erection "E" drawings before beginning installation.

Definitions

- DROPLEG - The pipe that connects the airmain to the manifold.
- MANIFOLD - The pipe that connects the dropleg to the headers. There are no diffusers on this pipe.
- HEADER - The pipe that connects the manifolds to the diffusers. The diffuser connectors and diffusers are mounted on this pipe.
- DIFFUSER - The device attached to the header that distributes the air to the liquid.

Dropleg Installation (Fixed Header)

CAUTION

Before installing the upper dropleg section, all dirt and debris must be removed from the air main. The air blowers are normally used for this operation. The air filtration equipment should be installed and operating before blowing out the air main. Blowers may require a minimum back pressure when operating. Be sure to follow the blower manufacturer's requirements.

If dropleg supports are not installed, the air main must be capable of supporting the full weight of the upper stainless steel portion of the dropleg during system installation. If the air main is not capable of supporting the full weight of the upper stainless steel portion of the dropleg during system installation, temporary dropleg supports must be installed to prevent damage to the air main.

1. Locate the proper dropleg. All droplegs have a part number marked on the piece. This part number also appears on the Erection drawings for identification. Remove the protective plastic or wooden end plugs from the dropleg.

2. Using the Erection drawings, locate the dropleg connection point and mark the centerline location of the dropleg on the tank floor. Before connecting the upper portion of the dropleg to the air main, install any dropleg wall supports which may be required.

3. Attach the upper portion of the dropleg to the air main.

NOTE

When the upper dropleg is installed properly, it should be vertical with its centerline location as shown on the Erection drawings.

4. Use the installed stainless steel upper dropleg and the Erection drawings to locate and lay out the centerline of the manifold or header. All components of the system are referenced from the dropleg location.

NOTE

The manifold centerline may be located directly under the dropleg or offset from it. Review the Erection drawings before manifold or header layout. If the system does not have a manifold, proceed to the Header Installation section.

Manifold Installation (Fixed Header)

Use the Erection drawings and shipping lists to locate all manifold anchors and supports.

Sanitaire manufactures two types of manifold assemblies. They are the **in-line** manifold and the **raised** manifold. The manifold installation procedure covers both types.

The **in-line** manifold attaches to the headers with flanges or clamp couplings. Either the centerline or invert elevations of the manifold and headers are the same.

The **raised** manifold attaches to the headers with an adjustable support connection and clamp coupling. See Figure 1. The centerline elevation of the raised manifold is approximately 2'-0" higher than the centerline of the air header.

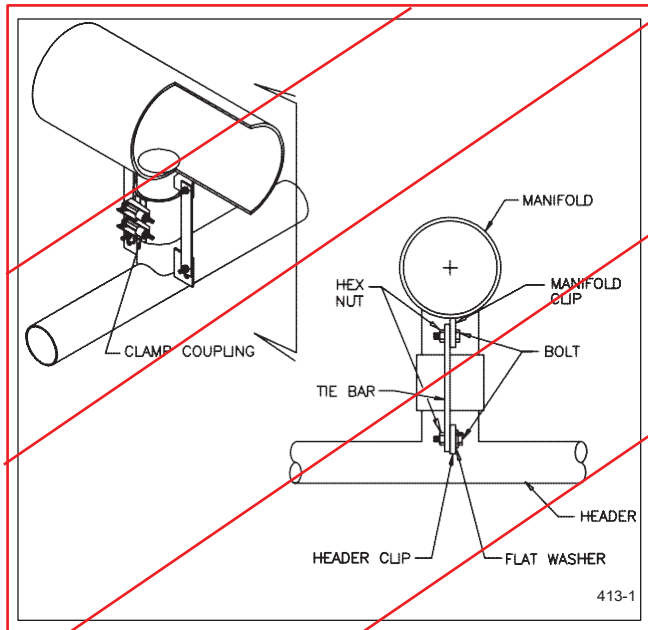

Figure 1. Adjustable Support Connection

1. The manifold layout centerline should be already established by the dropleg installation. Using the Erection drawings, mark the locations of the manifold supports. These locations are indexed from the centerline of the dropleg.

2. Following the Erection drawings, mark the manifold anchor locations at the specific support locations.

NOTE

Anchor spacings, sizes and embedments vary according to pipe size and support design. Be sure to accurately follow the anchor bolt settings and size information shown on the Erection drawings. Follow the anchor manufacturer's edge distance guidelines at sumps, construction joints and expansion joints.

3. Locate the proper manifold sections and lower them into the tank. Remove the protective end plugs and orient the pieces in the correct position. All sections have a part number marked on the piece. This part number also appears on the Erection drawings for identification. Before installing the anchors, lay the manifold section next to the anchor layout to check for possible interference with manifold connections.

NOTE

If interference does occur, the supports can be relocated providing the maximum support spacing does not exceed 17'-6".

CAUTION

Sanitaire supplies stainless steel materials only. The use of carbon steel anchors, hardware or support materials on SANITAIRE equipment is not acceptable. Installation of non-stainless materials will cause equipment failure.

4. Drill and set all manifold anchors according to the anchor manufacturer's installation instructions. The required anchor projection and embedment distances are shown on the Erection drawings.

NOTE

Sanitaire most frequently supplies expansion or adhesive type drill and set anchor bolts. Make sure you know which type your system incorporates and review the anchor bolt installation information provided in the project I, O & M manual. If your system incorporates a concrete pedestal support with embedded stainless steel "L" bolt anchors, follow the pedestal design and anchor locations shown on the Erection drawings. See Figure 2.

5. Located all floor mounted manifold supports and support hardware supplied by Sanitaire. See Figure 3.

NOTE

Sanitaire manufactures various types of supports depending on the piping configuration, size and field conditions. Job specific support details and hardware sizes are shown on the Erection drawing support details. Support assembly and hardware quantities are listed on the shipping and bolt usage lists in the project I, O & M manual.

6. Place each support assembly and hardware set at its designated location on the tank floor as shown on the Erection drawings.

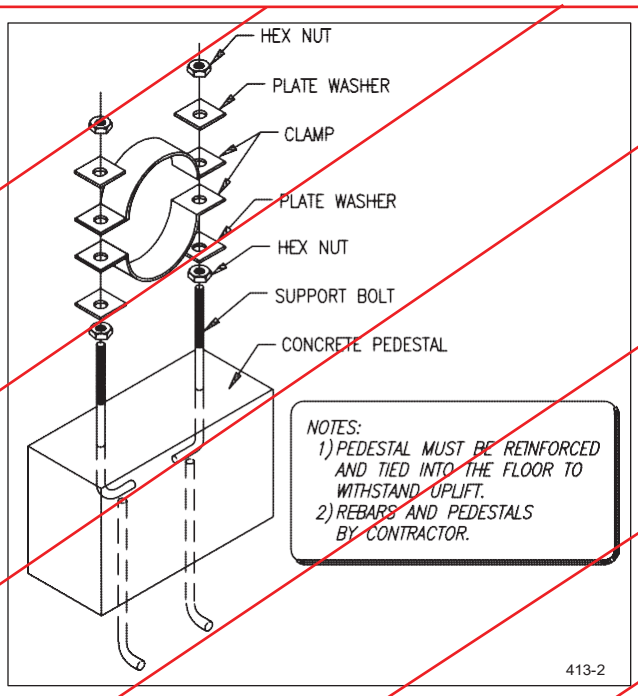

Figure 2. Concrete Pedestal Support

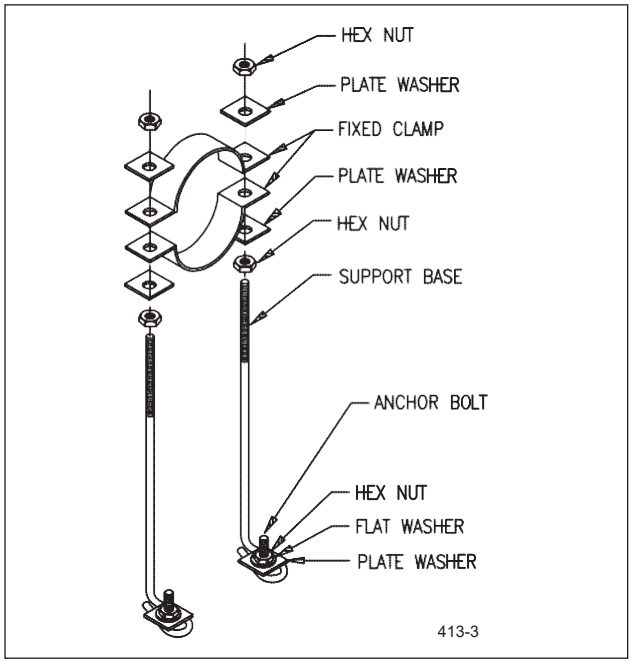

Figure 3. Simple Support

INSTALLATION AND START-UP

7. Place the support bases on the anchor bolts. Secure the support base to the anchor bolts with the stainless steel washers and nuts provided by Sanitaire. **Tighten the anchor bolts to the torque values listed in the anchor manufacturer's installation instructions.** Rod type bases must have a plate washer installed on the anchor bolt above the support base before installation of the anchor flat washer and nut.

CAUTION

Failure to properly torque expansion anchor bolts at installation reduces their load carrying capacity. Normal buoyant loads on the piping may then cause support assembly failure with resultant piping damage.

NOTE

For rod type support bases with diagonal struts, mount the strut on the support base above the plate washer before placement of the anchor bolt flat washer and nut.

8. Install the lower pipe support vertical adjusting nuts, washers and bottom band clamp or crosstree. Using a laser leveling system, adjust the lower support assembly to the correct elevation. If a band clamp support is used, the elevation of the clamp flange is the same as the manifold centerline elevation shown on the Erection drawings. If a crosstree style support is used, the crosstree elevation is the manifold centerline elevation shown on the Erection drawings minus one half the outside diameter of the pipe.

9. Place the stainless steel manifold piping on the support bottom band clamp or crosstree per the Erection drawings. Install the piece at the dropleg connection first and work away from the dropleg location. The clamp coupling for the dropleg to manifold connection should be temporarily installed at this time. See Figure 4. Installation instructions for the clamp coupling are included in the project I, O & M manual.

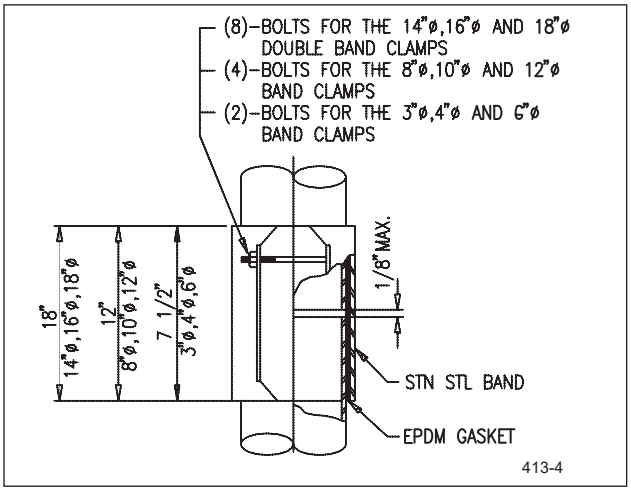

Figure 4. Clamp Coupling

NOTE

The following must be considered when setting the manifold pieces on the support bases:

A) Manifold piping flanges should be no closer than six inches to a support assembly.

B) SANITAIRE Fixed Header Coarse Bubble Aeration Systems normally have a fixed support at some point in the system. The fixed support may be floor or wall mounted. See Figures 5 and 6. If your system has a floor mounted frame or pedestal fixed support, be sure the fixing clip that is welded to the invert of the pipe mates up with the fixing link of the support base. If your system has a wall or floor mounted "T" bracket fixed support, make sure that the welded fin on the manifold is close enough to mate with the mounted "T" bracket. Do not mount the "T" bracket until the manifold leveling procedure is completed.

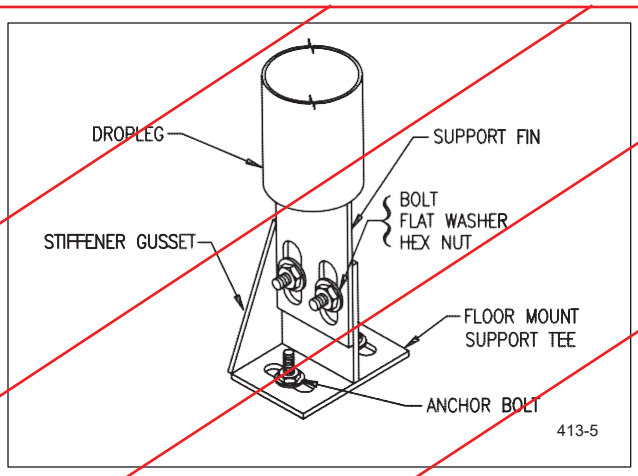

Figure 5. Floor Mount Fixed Support

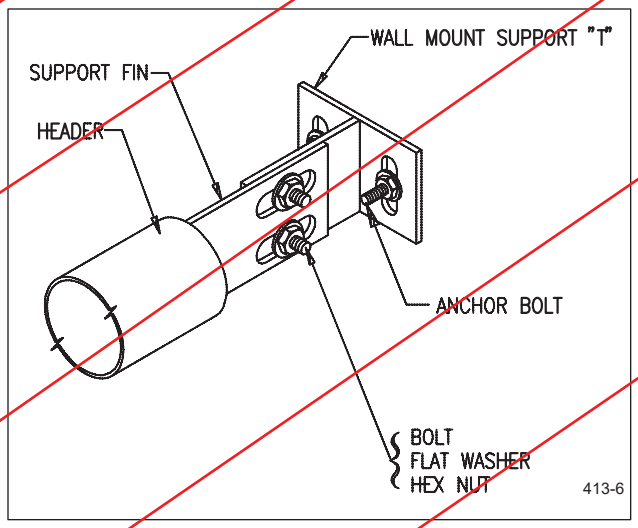

Figure 6. Wall Mount Fixed Support

10. Assemble all manifold joints. Sanitaire provides two types of manifold joints; flanged and expansion. Make sure all gaskets and O-rings are in place.

NOTE

Assemble, but do not fully tighten the joints until all necessary piping rotation for leveling purposes is complete.

11. Loosely install the top band clamp or "U" bolt on the proper support bases. Use the correct quantity, size and type of hardware on each support. Refer to the bolt usage list and Erection drawing support details.

12. Check all manifold sections for level. Start at the dropleg and adjust the piping heights as required using the **BOTTOM** vertical adjusting nuts. The manifold section which connects to the dropleg must be rotated as required so that any inclusive header connection ports are level horizontally for **in-line** manifolds or plumb vertically for **raised** manifolds. Install and tighten the **TOP** nuts on the band clamps or crosstrees **ONLY** on the support closest to the dropleg.

NOTE

If your system has "U" bolt type supports, tighten the bottom nuts on the "U" bolt only until light contact is made between the "U" bolt and manifold. Lock the "U" bolt in place by tightening the top nut.

13. Wall or floor mounted "T" bracket fixed supports, if supplied with your system, must be mounted now before continuing with the rest of the installation. Their installation is accomplished as follows:

A) Locate the "T" bracket as shown on the Erection drawings.

B) Set the "T" bracket on the tank wall or floor to match up with the fin welded on the manifold.

C) Mark the required anchor bolt locations.

D) Drill and set the anchors according to the anchor manufacturer's installation instructions. The required anchor projection and embedment distances are shown on the Erection drawings.

NOTE

A manifold section which connects to the "T" bracket may need to be removed in order to drill the anchor bolt holes. Place the manifold section back on the support stands when the anchors are set.

A) Secure the "T" bracket to the wall or floor using the anchor hardware. **Tighten the anchor bolts to the torque values listed in the anchor manufacturer's installation instructions.**

CAUTION

Failure to properly torque expansion anchor bolts at installation reduces their load carrying capacity. Normal buoyant loads on the piping may then cause support assembly failure with resultant piping damage.

B) Install the connecting hardware between the fixing fin and the "T" bracket.

14. If your system has a floor mounted frame or pedestal fixing support, install the fixing links and draw the hardware down tight. See the Erection drawings for fixed support details.

15. Rotate any remaining manifold sections per step 9. Tighten down all manifold flange or expansion joints using an alternating sequence pattern to provide equal torque distribution across the flange face. Make sure all gaskets and O-rings are in place. Expansion joint bolts must be double nutted. See Figures 7 and 8.

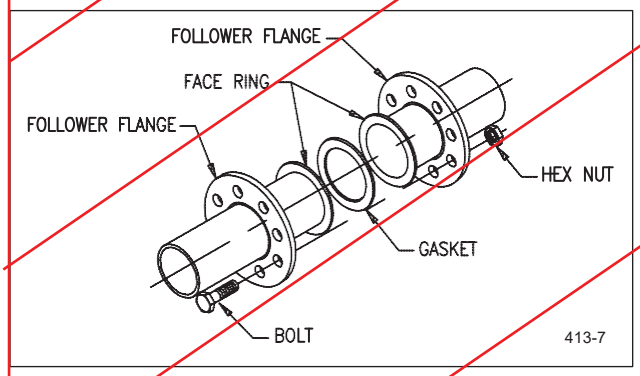

Figure 7. Sanitaire Flange

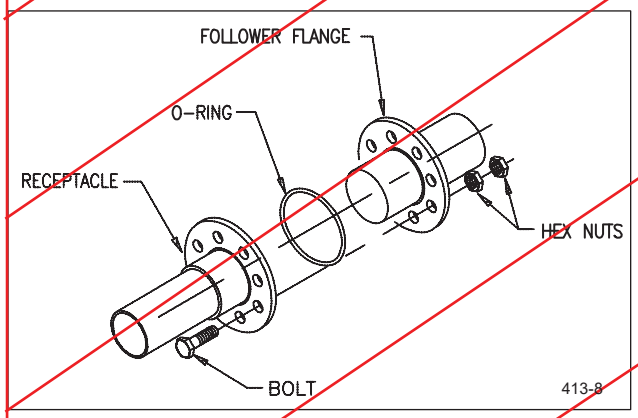

Figure 8. Expansion Joint

16. All manifold band clamps or "U" bolts can now be fully tightened as described in step 12.

17. Check the bolt on each removable end cap and tighten as required.

18. Fully tighten the dropleg clamp coupling hardware to the installation torque shown on the Erection drawings.

Header Installation (Fixed Header)

The following sections cover the installation of the air headers. Sanitaire manufactures headers for use without manifolds, headers attached to an inline manifold and headers attached to a raised manifold.

Header Installation Without Manifold (Fixed Header)

1. The air header centerline is set by the dropleg centerline. Using the Erection drawings, mark the locations of the header supports. These locations are indexed from the centerline of the dropleg.

2. Using the Erection drawings, mark the anchor locations at each support location.

NOTE

Anchor spacings, sizes and embedments vary according to pipe size and support design. Be sure to accurately follow the anchor bolt settings and size information shown on the Erection drawings. Follow the anchor manufacturer's edge distance guidelines at sumps, construction joints and expansion joints.

3. Locate the proper air header sections and lower them into the tank. Remove the protective end plugs and orient the pieces in the correct position. All sections have a part number marked on the piece. This part number also appears on the Erection drawings for identification. Before installing the anchors, lay the air header section next to the anchor layout to check for possible interference with joints or diffuser connectors.

NOTE

If interference does occur, the supports can be relocated providing the maximum support spacing does not exceed 17'-6".

CAUTION

Sanitaire supplies stainless steel materials only. The use of carbon steel anchors, hardware or support materials on SANITAIRE equipment is not acceptable. Installation of non-stainless materials will cause equipment failure.

4. Drill and set all header anchors according to the anchor manufacturer's installation instructions. The required anchor projection and embedment distances are shown on the Erection drawings.

NOTE

Sanitaire most frequently supplies expansion or adhesive type drill and set anchor bolts. Make sure you know which type your system incorporates and review the anchor bolt installation information provided in the project I, O & M manual. ~~If your system incorporates a concrete pedestal support with embedded stainless steel "L" bolt anchors, follow the pedestal design and anchor locations shown on the Erection drawings. Refer to Figure 2.~~

5. Locate all floor mounted header supports and support hardware supplied by Sanitaire. Refer to Figure 3.

NOTE

Sanitaire manufactures various types of supports depending on the piping configuration, size and field conditions. Job specific support details and hardware sizes are shown on the Erection drawing support details. Support assembly and hardware quantities are listed on the shipping and bolt usage lists in the project I, O & M manual.

6. Place each support assembly and hardware set at its designated location on the tank floor as shown on the Erection drawings.

7. Place the support bases on the anchor bolts. Secure the support base to the anchor bolts with the stainless steel washers and nuts provided by Sanitaire. **Tighten the anchor bolts to the torque values listed in the anchor manufacturer's installation instructions.** Rod type bases must have a plate washer installed on the anchor bolt above the support base before installation of the anchor flat washer and nut.

CAUTION

Failure to properly torque expansion anchor bolts at installation reduces their load carrying capacity. Normal buoyant loads on the piping may then cause support assembly failure with resultant piping damage.

NOTE

For rod type support bases with diagonal struts, mount the strut on the support base above the plate washer before placement of the anchor bolt flat washer and nut.

8. Install the lower pipe support vertical adjusting nuts, washers and bottom band clamp or crosstree. Using a laser leveling system, adjust the lower support assembly to the correct elevation. If a band clamp support is used, the elevation of the clamp flange is the same as the header centerline elevation shown on the Erection drawings. ~~If a crosstree style support is used, the crosstree elevation is the header centerline elevation shown on the Erection drawings minus one half the outside diameter of the pipe.~~

9. Place the stainless steel header piping on the support bottom band clamp ~~or crosstree~~ per the Erection drawings. Install the piece at the dropleg connection first and work out from there. The clamp coupling for the dropleg / header connection should be temporarily installed at this time. Refer to Figure 4. Installation instructions for the clamp coupling are included in the project I, O & M manual.

NOTE

The following must be considered when setting the header pieces on the support bases:

A) Header pipe flanges and diffuser connectors should be no closer than six inches to a support assembly.

B) SANITAIRE Fixed Header Coarse Bubble Aeration Systems have a fixed support at some point in the system. The fixed support may be floor or wall mounted. Refer to Figures 5 and 6. If your system has a floor mounted frame or pedestal fixed support, make sure the fixing clip that is welded to the invert of the pipe mates up with the fixing link of the support base. If your system has a wall or floor mounted "T" bracket fixed support , make sure that the welded fin on the header is close enough to mate with the mounted "T" bracket. Do not mount the "T" bracket until the header leveling procedure is completed.

10. Assemble all header joints. Sanitaire provides two types of header joints; flanged and expansion. Make sure all gaskets and O-rings are in place.

NOTE

Assemble, but do not fully tighten the joints until all necessary piping rotation for leveling purposes is complete.

11. Loosely install the top band clamp or "U" bolt on the proper support bases. Use the correct quantity, size and type of hardware on each support. Refer to the bolt usage list and Erection drawing support details.

12. Install and level the SANITAIRE diffusers. Refer to the Diffuser Installation and Leveling section.

13. Check all header pipe sections and diffusers again for level. Start at the dropleg and adjust the piping heights as required using the **BOTTOM** vertical adjusting nuts. Install and tighten the **TOP** nuts on the clamps or crosstrees **ONLY** on the support closest to the dropleg.

NOTE

If your system has "U" bolt type supports, tighten the bottom nuts on the "U" bolt only until light contact is made between the "U" bolt and manifold. Lock the "U" bolt in place by tightening the top nut.

14. Wall or floor mounted "T" bracket fixed supports, if supplied with your system, must be mounted now before continuing with the rest of the installation. Their installation is accomplished as follows:

A) Locate the "T" bracket as shown on the Erection drawings.

B) Set the "T" bracket on the tank wall or floor to match up with the fin welded on the header.

C) Mark the required anchor bolt locations.

D) Drill and set the anchors according to the anchor manufacturer's installation instructions. The required anchor projection and embedment distances are shown on the Erection drawings.

NOTE

A header section may need to be removed in order to drill the anchor bolt holes. Place the header section back on the support stands when the drilling is complete. Reassemble the removed header section.

E) Secure the "T" bracket to the wall or floor using the anchor hardware. **Tighten the anchor bolts to the torque values listed in the anchor manufacturer's installation instructions.**

CAUTION

Failure to properly torque expansion anchor bolts at installation reduces their load carrying capacity. Normal buoyant loads on the piping may then cause support assembly failure with resultant piping damage.

F) Install the connecting hardware between the fixing fin and the "T" bracket.

15. If your system has a floor mounted frame or pedestal fixing support, install the fixing links and draw the hardware down tight. See the Erection drawings for fixed support details.

16. Tighten down all header flange or expansion joints using an alternating sequence pattern to provide equal torque distribution across the flange face. Make sure all gaskets and O-rings are in place. Expansion joint bolts must be double nutted. Refer to Figures 7 and 8.

17. All header support band clamps or "U" bolts can now be fully tightened as described in step 13.

18. Fully tighten the dropleg clamp coupling hardware to the installation torque shown on the Erection drawings.

19. Check the bolt on each removable end cap and tighten as required. See Figure 9.

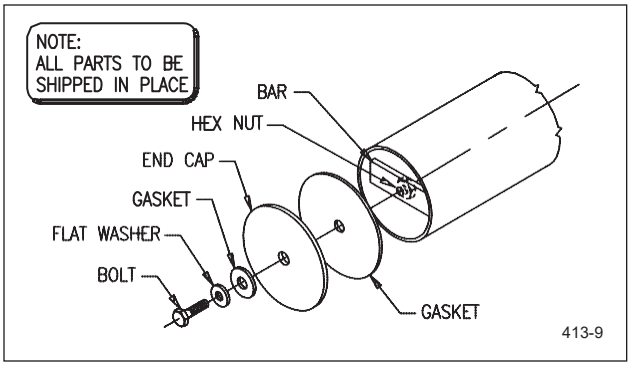

Figure 9. Removable End Cap

20. Proceed to the Aeration System Start-up Procedure section.

Header Installation With Manifold (Fixed Header)

1. The air header centerlines are set by the manifold connection centerlines. Using the Erection drawings, mark the locations of the header supports. These locations are indexed from the centerline of the manifold.

2. Using the Erection drawings, mark the anchor locations at each support location.

NOTE

Anchor spacings, sizes and embedments vary according to pipe size and support design. Be sure to accurately follow the anchor bolt settings and size information shown on the Erection drawings. Follow the anchor manufacturer's edge distance guidelines at sumps, construction joints and expansion joints.

3. Locate the proper air header sections and lower them into the tank. Remove the protective end plugs and orient the pieces in the correct position. All sections have a part number marked on the piece. This part number also appears on the Erection drawings for identification. Before installing the anchors, lay the air header section next to the anchor layout to check for possible interference with joints or diffuser connectors.

NOTE

If interference does occur, the supports can be relocated providing the maximum support spacing does not exceed 17'-6".

CAUTION

Sanitaire supplies stainless steel materials only. The use of carbon steel anchors, hardware or support materials on SANITAIRE equipment is not acceptable. Installation of non-stainless materials will cause equipment failure.

4. Drill and set all header anchors according to the anchor manufacturer's installation instructions. The required anchor projection and embedment distances are shown on the Erection drawings.

NOTE

Sanitaire most frequently supplies expansion or adhesive type drill and set anchor bolts. Make sure you know which type your system incorporates and review the anchor bolt installation information provided in the project I, O & M manual. If your system incorporates a concrete pedestal support with embedded stainless steel "L" bolt anchors, follow the pedestal design and anchor locations shown on the Erection drawings. Refer to Figure 2.

INSTALLATION AND START-UP

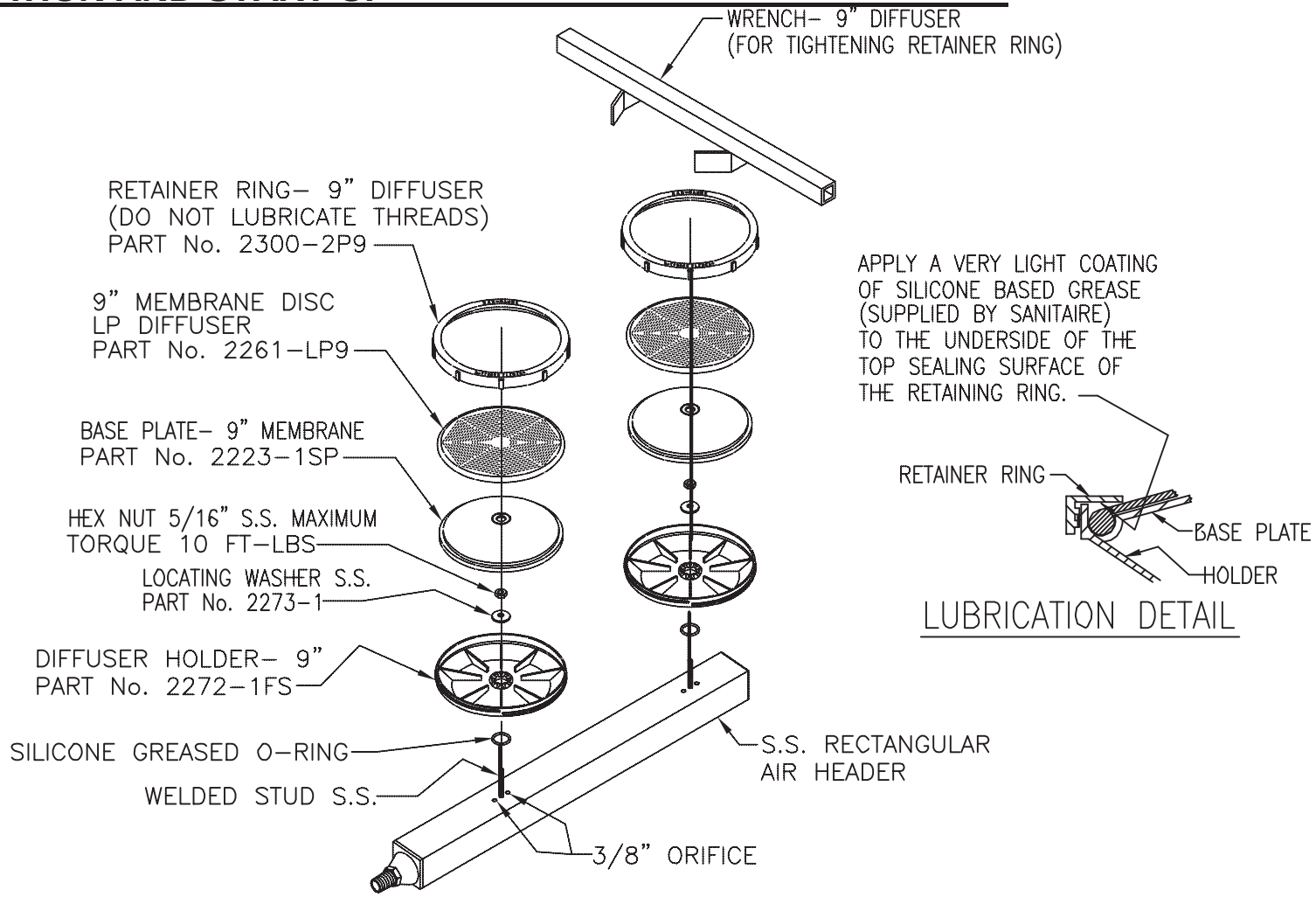

LUBRICATION DETAIL

9"ø DUAL LP DIFFUSER ASSEMBLY

DETAIL FB–9B

Sanitaire a xylem brand BROWN DEER, WISCONSIN 53223	THIS DRAWING IS THE PROPERTY OF XYLEM AND IS SUBMITTED IN CONFIDENCE. IT IS NOT TO BE DISCLOSED, USED OR DUPLICATED WITHOUT PERMISSION OF XYLEM.	DIFFUSER ASSEMBLY 9" DUAL LP DETAIL	DRAWN BY	DATE	EQUIP.	STANDARD NO. FB–9B	JOB
			CHKD BY	DATE			
			APPVD BY	DATE	REV.	SHEET OF	DWG NO.

REV 1				REV 3			
REV 2				REV 4			

7. Install the lower pipe clamp sections on all air distributor and drainline supports.

   Use the same technique as described in paragraph 6 of the dropleg and manifold installation section. The air distributor centerline elevation is shown in the erection drawings.

   The air distributor centerline elevation tolerance is ± 1/4" (6 mm).

8. Starting from the manifold, assemble the remaining air distributors in the support stands. Refer to step #3 of the air distributor and drainline installation section for joint assembly instructions.

9. Install the top half of the pipe clamp on each support and loosely install the top hex nuts.

10. Again, starting near the manifold, place a hand level on the top of diffuser holder perpendicular to the centerline of the distributor pipe. See Figure 28.



Figure 28

11. Rotate the distributor section until the pod is level.

12. Hold the pipe section level and tighten all fixed joints and/or anchor support clamps on sections which have an expansion joint.

13. After tightening, recheck for level both perpendicular and parallel to the distributor section.

14. Continue this procedure for all distributor and drainline sections.

15. Tighten all guide support nuts.

CAUTION

The guide support will be loose around the pipe – this is a design feature. Do not attempt to wrap anything around the pipe to pull the clamps tight against the pipe. See Figure 29.

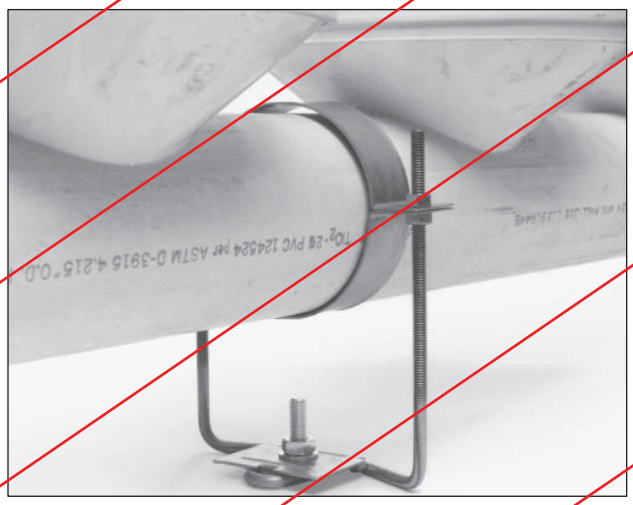

Figure 29

PURGE SYSTEM INSTALLATION

Sanitaire provides two types of purge system.

The most commonly used purge system consists of a sump and evacuation pipe.

- The sump for systems using in-line manifolds is built into the manifold pipe as shown in Figure 30A.

DIFFUSER INSTALLATION AND LEVELING

1. SANITAIRE coarse bubble stainless steel D-24 and D-12 diffusers are manufactured with 3/4" dia. NPT male connectors. See Figure 14. Various process applications require smaller diameter orifices to provide enough back pressure to evenly distribute the air flow throughout the system. Sanitaire has developed the following color coded factory installed orifice inserts:

COLOR	DIAMETER
Black	5/16"
White	3/8"
Gold	7/16"
Green	1/2"
Red	9/16"
Yellow	5/8"

NOTE

The 3/4" diameter orifice requires no insert. Check the equipment data sheets and shipping list in the project I, O & M manual to insure that the correct inserts have been installed.

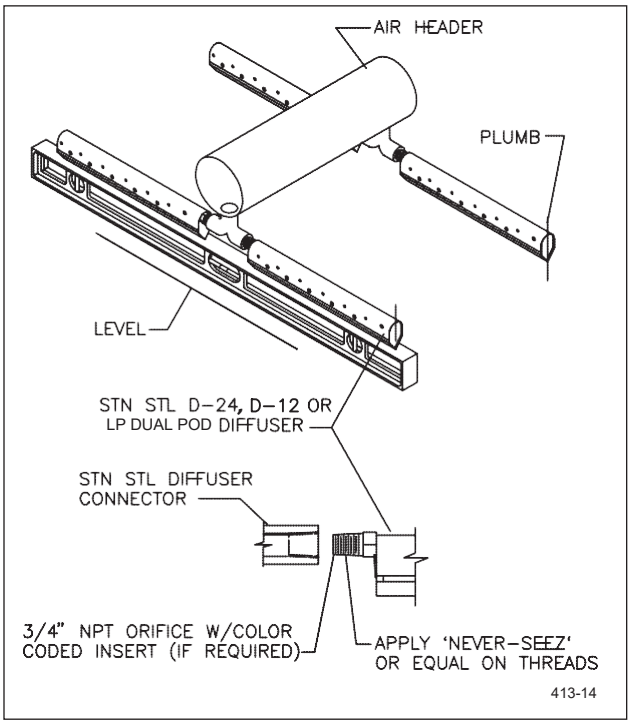

Figure 14. Diffuser Installation

2. See the Erection drawings for proper diffuser installation location. The number (1 or 2) of diffusers per connector varies from system to system depending on the process and available air rates. Threaded plugs are supplied for single diffuser installations.

3. A commercial thread compound such as NEVER-SEEZ, manufactured by Never-Seez Compound Corporation in Broadview, Illinois, or equal must be applied to the male diffuser connector threads before diffuser installation. Sanitaire does not supply any thread compound.

CAUTION

Failure to use a thread lubricant will cause the stainless steel threads to gall or strip.

NOTE

If diffusers are removed following the initial installation, thread compound must be applied upon reinstallation.

4. The diffusers should be screwed on by hand as far as possible. Wrench tighten the stainless steel D-24 and D-12 diffusers until the “V” shaped bottom deflector is pointed directly toward the floor. Make at least one complete turn after hand tightening to insure proper thread engagement.

5. After the diffusers are installed, the diffusers should be leveled as close as possible to a common horizontal plane. This can be accomplished by rotating the header pipe at the joint. Following this initial leveling, return to the appropriate header installation section for your system.

NOTE

Sanitaire's fabrication tolerances allow ± 3/8" variation in elevation from diffuser to diffuser along a header's length as measured at the threaded diffuser connection. Angular variations of the threaded connection may cause the outboard ends of the diffuser to vary by an additional ± 3/8" for a total range of outboard diffuser tip elevation variation of ± 3/4". For proper air distribution, the diffuser levels should be adjusted around an average elevation for all the diffusers in an assembly.

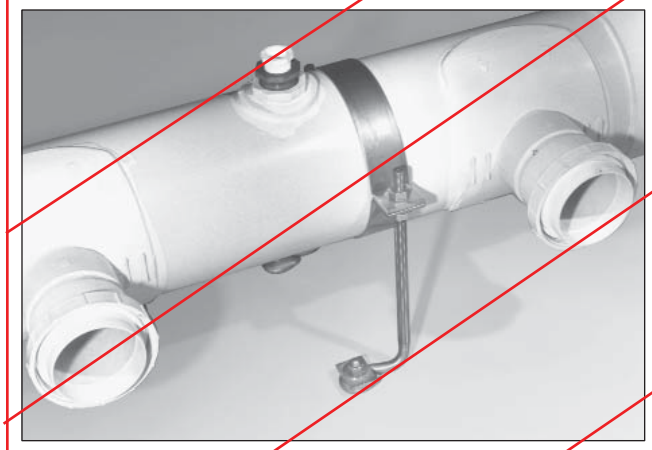

Figure 30A

- The sumps for systems using the raised manifold is attached to an air distributor or drainline section as shown in Figure 30B.

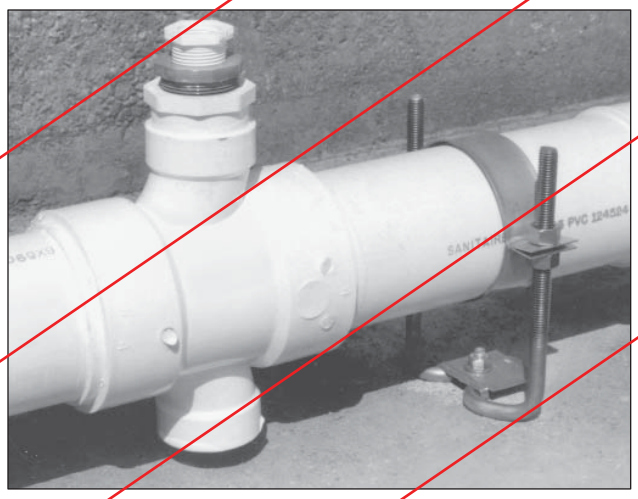

Figure 30B

- The evacuation pipe consists of 3/4" Ø (20 mm) Schedule 80 PVC pipe, fittings, and a valve mounted to the tank wall. See erection drawings for installation details.

The second type of purge system is the continuous purge system as shown in Figure 31. The manifold or an air distributor section is tapped at a low point and a membrane tube is attached. The membrane tube is placed at an elevation lower than the manifold or air distributor section.

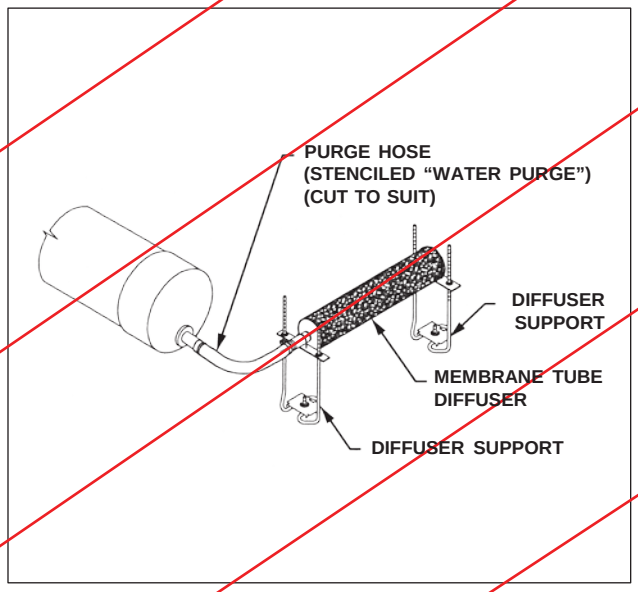

Figure 31

DIFFUSER INSTALLATION

Sanitaire manufacturers ~~two (2) types of~~ fine bubble disc diffusers. These are the ~~Ceramic Disc or the~~ Rubber Membrane Disc.

Some general installation guidelines, are as follows:

1. Install the diffusers just prior to the scheduled start-up of the aeration basin.

2. The diffuser holder must be cleaned prior to diffuser installation. See Figure 32.

3. Check the erection drawings for the location of possible blank diffuser sites and plug the orifice hole in accordance with Figure 37 and the installation instructions found on page 15.



Figure 32

To Install CERAMIC DISC diffusers:

1. Set the diffuser disc in the holder with the dished side and peripheral stepped edge up.

2. Lubricate the diffuser "O"-ring with a small amount of the lubricant provided by Sanitaire.

3. Place the diffuser "O"-ring in the slot or void between the diffuser holder vertical wall and the raised portion of the diffuser disc. See Figure 33.

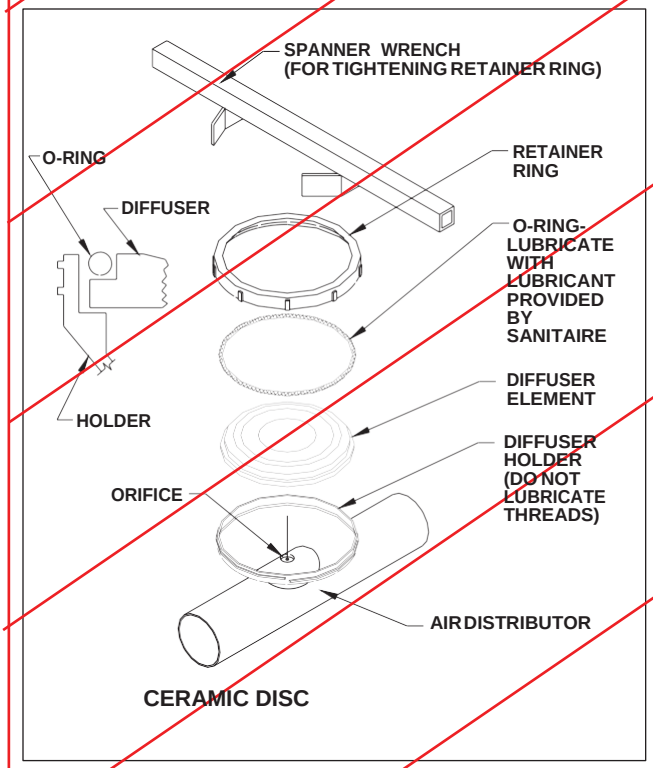

Figure 33

4. Turn the retaining ring to a hand-tight position making sure the "O"-ring stays in place.

5. Using the retaining ring spanner wrench, turn the retaining ring an additional 1/4 turn. See Figure 34.



Figure 34

To Install MEMBRANE DISC diffusers:

1. Set the diffuser PVC subplate in the diffuser holder with the flat side up. See Figure 35.



Figure 35

2. Place the membrane disc over the subplate. The integral "O"-ring should naturally fit down into the void created between the diffuser holder vertical wall and subplate.

3. Lubricate the diffuser retaining ring with a small amount of lubricant provided by Sanitaire by turning the ring upside down and swabbing the lubricant on the underside of the top surface of the retaining ring. See Figure 36.

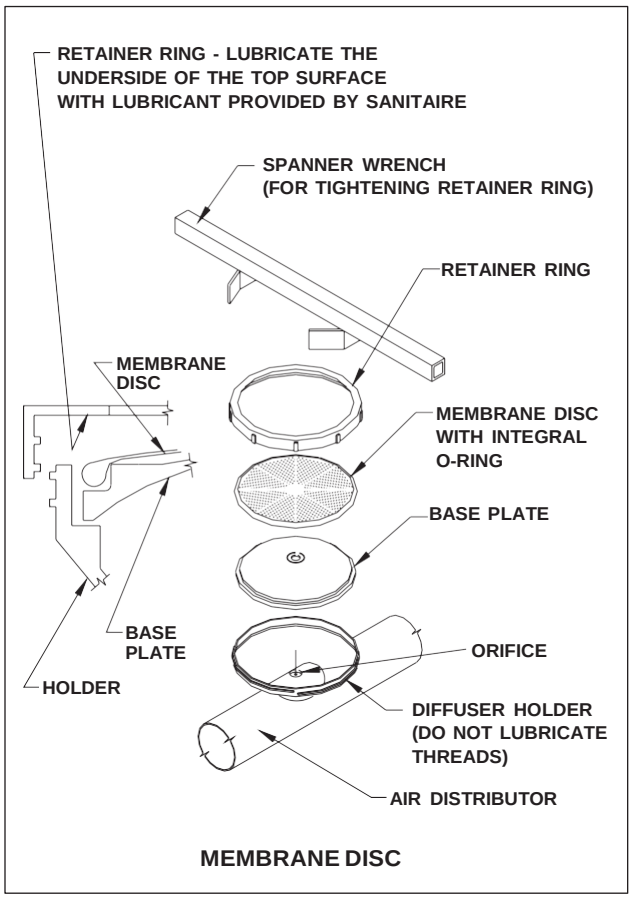

Figure 36

4. Turn the retaining ring to a hand-tight position.

5. Using the retaining ring spanner wrench, turn the retaining ring an additional 1/4 turn. See Figure 34.

BLANK DIFFUSER SITE ORIFICE PLUG INSTALLATION

Some projects will call for some of the diffusers to be initially not put into operation or left “BLANK”. These diffusers may be put into operation as process demand dictates.

Locate “BLANK” diffuser sites and plug the orifice as shown in Figure 37 and described on the erection drawings.

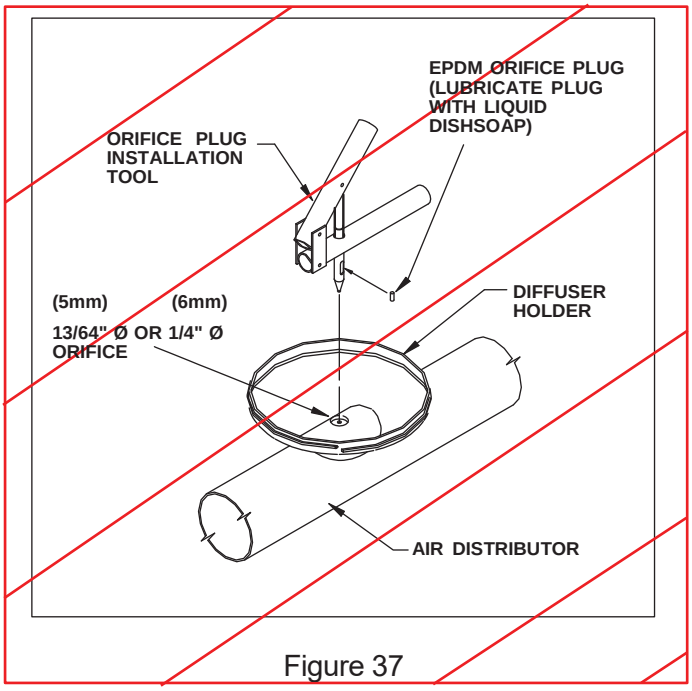

Figure 37

AERATION SYSTEM START-UP PROCEDURE

Once the aeration system is installed, perform a final tank inspection and look for loose nuts, missing or improperly placed hardware, missing retaining rings, non-connected joints, etc.; and make any repairs prior to following this start-up procedure.

NOTE

The start-up procedure should be completed prior to the site visit by Sanitaire service personnel or an authorized representative. This practice will save time for all parties involved.

The start-up procedure is as follows:

1. Fill the aeration tank with clean water to a level 1" (25 mm) below the top of the diffusers. While filling, proceed with steps 2-5. Step 6 will require a visual level inspection with the water level 1" (25 mm) below the top of the diffuser.

CAUTION

Water should be introduced to the basin at a rate and direction so that no abnormal stresses are imposed on the aeration pipe network that could cause damage.

2. While filling, disconnect each of the purge hoses from the sumps (not required on continuous purge systems).

3. When the water level reaches a point just over the top of the air distributor pipe, turn the air on at a low air flow rate of approximately 0.5 scfm/diffuser (0.85 m^3/hr/diffuser).

4. Check all submerged fixed, flanged, or expansion joints for air bubbles, which indicate leaks, and repair as required.

NOTE

Leaking at fixed and expansion joints is generally due to one of three conditions:

- *"O"-ring pinched or out of place (most common).*
- *Joint retaining ring cross threaded on spigot.*
- *Joint not tight.*

! CAUTION

When repairing pipe joints, turn off the air supply to the grid being worked on.

5. With the air ON, check each purge sump operation. Any water trapped in the pipe should be discharging from the sump assembly.

   If neither air or water is being discharged, check the sump eductor tube air orifice hole (see Figure 38). This hole may be plugged with debris or possibly glued over during manufacturing. Redrill or clean out as required and reassemble.

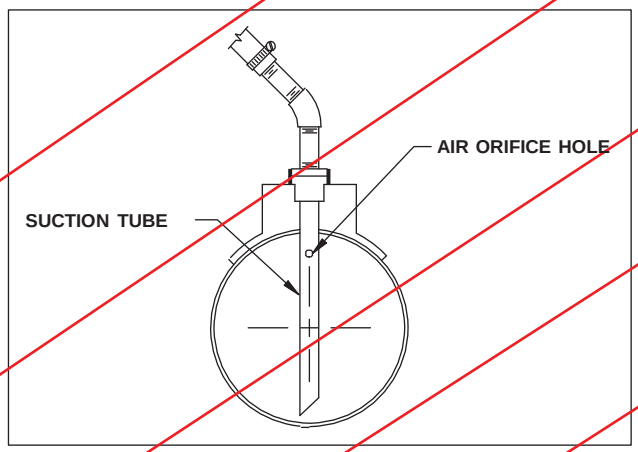

Figure 38

6. Turn the water supply OFF as it approaches a level 1" (25 mm) below the top of the diffusers. With the water OFF check the level of the aeration system. The distance from the top of the perimeter of the diffuser measured to the static water level should be relatively constant ± 1/4" (6 mm) for all diffuser heads. Raise, lower, or rotate the air distributor sections as required in order to level the aeration system.

7. Increase the air rate to about 1-1.5 scfm/diffuser (1.7 - 2.6 m^3/hr/diffuser) and turn the water supply back on.

8. Fill the basin to a maximum water level of 2" - 3" (50-75 mm) over the diffusers.

9. Check all diffuser units for uniform air distribution. Air should be discharging uniformly across the diffuser surface. See Figure 39.



Figure 39

Excessive air discharge as indicated by large coarse bubbles around the perimeter or "halo" of the diffuser indicates a loose retaining ring or improperly seated "O"-ring (see Figure 40). To correct this situation use the retaining ring spanner wrench to back off the retaining ring. Then reseat the "O"-ring and retighten to a hand-tight plus 1/4 turn position.

If no air is discharging from the diffuser surface, the air control orifice may be plugged with debris. To correct this situation, remove the diffuser assembly, clear the orifice (a welding rod or nail works well), and reinstall the diffuser.



Figure 40

10. Once the system is leak free and is purged of all entrapped water, reattach the purge hoses to the purge sumps.

11. Use a soap solution to check for leaks at the clamp coupling or flange joint which joins the PVC and stainless steel portions of the drop-leg.

12. Continue filling the basin to a point 3'-4' (1 m) over the diffusers.

NOTE

If your system has a raised manifold (ref. Figure 4), check for manifold flanged or fixed joint connection leaks as the water level rises and repair as required.

13. Allow the system to operate 3-4 hours in this mode prior to introducing the mixed liquor.

PLANT OPERATION

PRINCIPLES

The removal of carbonaceous BOD, the coagulation of non-settable colloidal solids, and the stabilization of organic matter are accomplished biologically using a variety of microorganisms (principally bacteria) in the activated sludge process. The microorganisms convert the colloidal and dissolved carbonaceous organic matter into various gases and cell tissue through synthesis.

Aerobic systems require the presence of molecular oxygen to maximize the conversion of the organic matter through a complex series of Biochemical Oxidation and Reduction Reactions.

Oxygen needed by the microorganisms is transferred to the mixed liquor by aeration. The fine bubble aeration system takes compressed atmospheric air and passes it through the diffuser element forming millions of fine bubbles that pass through the mixed liquor. Diffusion makes the oxygen in the compressed air accessible to the microorganisms.

Typically, fine bubble aeration systems are twice as efficient as coarse bubble systems. This translates to a 50% reduction in the required air volume to treat the same waste. Fine bubble systems are more efficient due to the increase in contact surface area between the air bubble and wastewater which makes the diffusion of the oxygen quicker/unit volume.

The drawback to the increased efficiency is that overtime fine bubble aeration systems may foul and require cleaning.

DIFFUSER OPERATING AIR FLOW RANGE

For CERAMIC DISC (air flow per diffuser):

SIZE	MIN	MAX
9" (230 mm)	0.5 scfm. (0.85 m^3/hr)	3.0 scfm (5.0 m^3/hr)
7" (178 mm)	0.35 scfm (0.6 m^3/hr)	2.0 scfm (3.5 m^3/hr)

NOTE

Above listed air flow rates are general design standards. Actual project design may vary.

Ceramic disc operating requirements:

1. Do not operate below the minimum air flow requirements. Solids settling will occur which results in a loss in oxygen transfer efficiency and possible diffuser fouling.

2. Non-operating ceramic discs allow mixed liquor to enter the pipe network. Do not intentionally shut off the air flow to the ceramic discs in a submerged state.

For MEMBRANE DISC (air flow per diffuser):

SIZE	MIN	MAX
9" (230 mm)	~~0.5 scfm (0.85 m^3/hr)~~	~~Short term: 7 scfm (11.9 m^3/hr) Long term: 4 scfm (6.8 m^3/hr)~~
7" (178 mm)	0.35 scfm (0.6 m^3/hr)	Short term: 4.8 scfm (8.1 m^3/hr) Long term: 3.0 scfm (5.0 m^3/hr)

NOTE

Above listed air flow rates are general design standards. Actual project design may vary.

9" DIA. SSII LP MEMBRANE DISC

MIN AIR RATE: 1.0 SCFM
SHORT TERM MAX AIR RATE: 25.0 SCFM
LONG TERM MAX AIR RATE: 12.0 SCFM

Membrane disc operating requirements:

1. When operating, do not reduce the air flow rate below the recommended minimums. Solids settling will occur which results in a loss of oxygen transfer efficiency and possible diffuser fouling.

2. Membrane disc systems are designed for continuous or intermittent submerged process use. Idle systems should be supplied with an alternate source of mixing.

NOTE

Solids will settle on the diffuser surface of idle systems and may promote diffuser fouling. The results of intermittent use are as follows:

- *A higher airflow and pressure may be required to lift the membrane disc off the subplate and start the grid.*
- *The diffuser may have to be cleaned if a sufficient loss in Oxygen Transfer efficiency is observed.*

General notes regarding air flow range

- The most common design average air flow range is 1 to 2 scfm/Diffuser (1.7 to 3.5 m^3/hr/Diffuser).
- Operating above this range results in a lower oxygen transfer efficiency and increased diffuser headloss.
- It may be necessary to operate at a higher airflow rate in order to meet the oxygen demand.
- Operating below this range will yield a slightly higher oxygen transfer efficiency, however, mixing requirements must be considered.

MIXING, D.O. LEVELS AND MINIMUM DIFFUSER AIR FLOW RATES

The generally accepted activated sludge plant mixing air rate standard is 0.12 scfm/$Ft.^2$ (2.2 m^3/hr/m^2) of tank surface area.

Often times conservative design will specify more diffusers with a higher minimum air flow requirement than is required by the process demand or mixing in a specific area. This is most common at the end of long plug flow reactors. The result of this is a high area D.O. level.

If the operator feels this D.O. level is not needed, the simplest solution is to take some of the diffuser units out of service by plugging the orifice as shown in the installation instructions. See Figure 37.

NOTE

Minimum mixing requirements must still be adhered to.

DIFFUSER FOULING

Operating experience shows that all fine bubble disc diffusers may foul or become clogged with continuous operation.

The rate of fouling, type of foulant, and strength of foulant depends primarily on the constituents in the wastewater.

The results of diffuser fouling include:

- loss of oxygen transfer efficiency due to bubble coalescence and coarse bubbling
- increased pressure requirements
- increased air demand.
- increased operating costs.

Diffuser fouling is divided into two categories: water side and air side. Air side fouling is very rare but does warrant some consideration. Water or mixed liquor side fouling is most common.

Causes of diffuser fouling include:

on WATER side:

- Fibrous material adhering to the edges of the diffuser units.
- Oils and greases in the wastewater.
- Precipitated deposits of iron and carbonates.
- Biological growths of slime.

SANITAIRE®

on AIR side:

- Dust and dirt from unfiltered or inadequately filtered air.
- Rust and scale from air main corrosion.
- Oxidation and subsequent flaking of bituminous air main coatings.
- Construction debris
- Mixed liquor solids entering through system leaks or cracks.

Several ways of determining if the diffusers are fouled are discussed in the preventative maintenance section of this manual.

The corrective action for fouled diffusers is cleaning. This is discussed in the yearly maintenance and diffuser cleaning section of this manual.

PREVENTATIVE MAINTENANCE

MOISTURE PURGE

Moisture enters the pipe system in three ways:

- Condensate build-up inside the pipe system due to high blower discharge temperatures and moist or humid air (primary cause).
- Minor leaks in the pipe system.
- Back flow through ceramic diffusers caused by a loss of air.

NOTE

Membrane diffusers are designed to seal on the subplate and prevent moisture from entering the system.

The effects of entrapped moisture are:

- Increased air velocity and headloss.
- Poor air distribution.

Sanitaire manufactures two types of purge systems: a standard, manually operated system (most common) and a continuous purge system.

The standard system uses a sump with an eductor line that extends from the grid to above the water surface and ends with a manual ball valve. To operate this system simply open the ball valve and the trapped liquid will be purged from the system. Close the valve when the water flow stops and a mist appears.

NOTE

For maximum purge results, lower the air flow to the grid. The air velocity will be reduced and more of the liquid will be forced to the sump.

The purge frequency is site determined; however, once a week is a good rule of thumb.

The second type of purge system is the continuous purge system which employs a diffuser unit attached to the bottom of the manifold or drainline. The entrapped moisture is continuously purged from the system.

The continuous purge systems are used on grids where it is not possible to reach a purge valve safely from a walkway.

AIR BUMPING

Air bumping is a technique that can be employed by operators to temporarily reduce back pressure in the system. Air bumping is the act of increasing the air flow rate per diffuser for 20-30 minutes once per week. An air rate per diffuser of 3 Scfm (5 m^3/hr) is generally used.

This practice will aid in sloughing off settled debris and may extend the period between diffuser cleanings.

POWER FAILURES AND LOSS OF AIR SUPPLY

The results of a power failure (loss of air supply) on each diffuser type are as follows:

for CERAMIC DISC diffusers:

- Solids settle on diffuser surface.
- Filtered mixed liquor penetrates the diffuser and enters the pipe network.
- Short term affect: none.
- Long term affect: fouling may occur on the surface and within the diffuser disc.

When the air supply is restored, the air pressure will build and the flow will reduce until sufficient water is pushed out of the system to allow air to be released through the diffusers.

NOTE

It is suggested that the operator open the purge valves as soon as possible after a power outage and evacuate the system. If the liquid is left in the system the flow will be reduced and the operating pressure will be higher than normal.

for MEMBRANE DISC diffusers:

- Solids settle on diffuser surface.
- Short term affect: none.
- Long term affect: the potential of surface fouling is possible and the diffusers may require a cleaning. This is generally the case for long term intermittently used membrane disc systems (i.e., Anoxic Zones, Batch Reactors).
- May require operator to shut off adjacent grids or turn on additional blowers to increase the air flow rate and force the membrane off the subplate surface. This is again generally the case for long term intermittently used membrane disc aeration systems.

VISUAL INSPECTION

Visually inspect the aeration basin surface pattern. The flow should be, for the most part, a nice quiescent pattern. Some coarse bubbling at the basin inlet may occur due to surfactants in the wastewater and is generally dispersed shortly downstream.

Excessive coarse bubbling throughout the tank indicates the diffusers may be fouling.

Large boiling in an isolated area indicates a failure in the submerged pipe system.

Visual inspection is an ongoing preventative maintenance step and can be done while taking routine samples, dissolved oxygen readings, etc.

AIR MAIN INSPECTION

Air main leaks are easily identified and usually are caused by loose joints or degraded gaskets. These types of leaks should be repaired quickly in order to prevent loss of system efficiency.

OPERATING PRESSURE AND AIRFLOW

Most blower systems are equipped with discharge pressure gauges. The operator should keep a regular log of pressure readings. A continuous increase in operating pressure indicates diffuser fouling. Likewise, a continuous increase in air demand without a change in the aeration basin loading indicates diffuser fouling.

SANITAIRE®

Fine Bubble Grid Aeration System
TROUBLESHOOTING GUIDE

Problem	Cause	Action
VISUAL INSPECTION		
Poor air distribution	Diffusers not level	Level system
	Grid flooded	Operate grid purge system
	Plugged orifice	Clean orifice
	Insufficient air	Provide more air
	Solids settling	Provide more air to grid
Visible mounding of air in one location	Broken pipe	Repair (see repair procedures)
Coarse bubbling (large bubbles)	Diffuser fouling	Clean diffusers (see cleaning procedure)
Air discharge from air main	Loose joints, degraded gaskets, or degraded air main	Repair as required
OPERATIONAL PROBLEMS		
Low D.O. Concentration	Too little air	Increase air flow
High D.O. Concentration	Too much air	Decrease air flow
		Decrease quantity of diffusers in service
Increased operating pressure	Diffuser fouling	Clean diffusers (see cleaning procedure)
	Line blockage or valve closed	Check air lines and valves
Increased air requirement/ no load change	Diffuser fouling	Clean diffusers (see cleaning procedure)
	Leak in air system	Inspect and repair as required

WARNING:

Prior to draining a tank, please READ these instructions carefully to minimize the potential for heat related damage to the Aeration System.

BASIN DRAINING PROCEDURE

Before draining a basin for diffuser inspection, tank cleaning or other maintenance operations, do the following:

- Place the basin in a manual mode to override any automatic 0.0./blower control systems.
- Adjust the grid(s) air control valve(s) to deliver an air flow rate equivalent to 0.5 scfm per diffuser or to a 25% open position if air flow metering is not available.
- AERATION TANK - Stop RAS flow to the basin.
- AEROBIC DIGESTER - Stop WAS flow to the basin.
- Turn off the air completely to the basin when the liquid level reaches 1 to 2 Ft. above the diffusers.
- When cleaning diffusers, the air can be turned on for short periods of time for the grid being cleaned.

NOTE: As the basin is draining, monitor the amount of air flowing to che submerged grid(s). THE AIR FLOW SHOULD BE KEPT TO A MINIMUM. THIS WILL PREVENT EXCESS HEAT BUILD-UP FROM DAMAGING THE PVC OR CPVC PIPING SYSTEM WHILE KEEPING THE SOLIDS IN SUSPENSION.

Refer to pages 27 and 28 for Diffuser Cleaning Procedure.

YEARLY MAINTENANCE AND DIFFUSER CLEANING

MAINTENANCE SCHEDULE

Sanitaire recommends the following maintenance schedule be observed at least once per year.

1. Drain down each tank.
2. Remove excess settled solids if any have accumulated.
3. Clean diffusers.
4. Inspect support hardware to ensure all components are intact and tight.
5. Inspect diffuser retaining rings to make sure all rings are in place and tight.
6. Inspect fixed and expansion joint retaining rings to make sure all rings are tight.

NOTE

For items 4-6, refer to the Installation Instructions.

LUBRICATION SCHEDULE

Since there are no moving parts on the SANITAIRE Fine Bubble Aeration Systems, a formal lubrication schedule is not required.

Three components require lubrication at the time of initial installation and future repairs. These components are:

- Ceramic Disc Diffuser "O"-Ring
- Membrane Disc Diffuser Retaining Ring
- ~~Expansion Barrel, 4" Ø black "O" Ring~~

Lubricate these items with the lubricants provided by Sanitaire and in accordance with the Installation Instructions.

CERAMIC DISC DIFFUSER CLEANING METHOD

1. Drain aeration basin (the air should remain on as basin is drained).
2. With the air left on – at approximately 1 scfm (1.7 m^3/hr) per diffuser – hose off each disc for twenty seconds with clean water at a nozzle pressure of 60 psig. Turn off the air supply when completed.
3. Put on the following safety equipment: eye goggles, rubber gloves, boots, sleeves, and apron. A breathing apparatus should be available in the event it is needed.

! CAUTION

Acid can be harmful if misused. Follow all manufacturers precautions and directions. Wear appropriate safety equipment. Do not breath acid vapors. Do not allow acid to make contact with eyes, skin or hair.

4. Carefully prepare a 50% by volume solution of 18˚ baume muriatic acid. Always add the acid to water.
5. Using an acid resistant compression sprayer, apply a uniform covering of the acid solution to all diffuser elements.

NOTE

Do not spray the acid solution on the stainless steel supports and hardware.

6. Allow the acid solution to sit on the diffusers for 30 minutes.
7. Turn the air back on at a rate of 1 scfm (1.7 m^3/hr) per diffuser and repeat the hosing procedure for 10 seconds per diffuser.
8. Inspect the aeration system to determine if any hardware was loosened or broken during the cleaning.

9. ~~Review and follow the start-up procedure as found in the Installation and Start-up Section of this manual.~~

MEMBRANE DISC DIFFUSER CLEANING METHOD

1. Drain aeration basin (the air should remain on as basin is drained).

2. With the air left on at approximately 1 scfm (1.7 m^3/hr) per diffuser, hose off each disc for twenty seconds with a clean water source at a nozzle pressure of 60 psig.

3. Turn off the air flow to the aeration grid being cleaned.

4. If required, use a rag or soft bristle brush to scrub each diffuser to remove stubborn slime growth, chemical precipitates, or oils. Do not use acids or aggressive cleaners.

5. Turn the air back on at a rate of 1 scfm (1.7 m^3/hr) per diffuser and repeat the hosing procedure for 10 seconds per diffuser.

6. Visually inspect the aeration system to determine if any hardware was loosened or broken during cleaning.

7. Review and follow the start-up procedure as found in the Installation and Start-up Section of this manual.

SANITAIRE®

LONG TERM STORAGE PROCEDURES

The procedure below was developed to protect the piping and diffusers from environmental damage.

NOTE

It must be understood that Sanitaire assumes no responsibility for damage or cleaning requirements as a result of long term storage.

For use when the aeration system is not in use, air is not available and flooding is undesirable.

1. Drain the tank dry and clean out solids and debris.

NOTE

The floor drains should remain open to prevent water from standing in the pipe system and tank. Equipment flooded by overflows or misdirected sewage flows will probably require cleaning before being placed in service.

CAUTION

Standing water allowed to freeze around the pipe may crush the pipe.

2. Before bringing the system on line, check all hardware for tightness. Check the gaskets and O-ring seals for deterioration or leakage. Replace as required.

NOTES



SANITAIRE

a xylem brand

wwwsanitaire.com

Corporate Office:
9333 N. 49th Street
Brown Deer, WI 53223
Tel 414 365 2200
Fax 414 365 2210

Branch Office:
71 Elm Street
Worcester, MA 01609
Tel 508 752 0998
Fax 508 754 7377

KCC 25M 9/2001

Printed in U.S.A.

ASSEMBLY INFORMATION

- Droplegs, manifolds, and headers are shipped to the jobsite assembled in lengths of 6 meters or less. If total header lengths required are greater than 6 meters the sections must be bolted together. The connection is a follower flange factory welded to the individual sections.

- The dropleg is shipped loose to the jobsite for field connection to header. Connection is a leveling flange with securing bolts.

- Diffusers must be installed on the header in the field. No special tools are needed for tightening.

- Supports must be assembled in the field.

EQUIPMENT WEIGHTS

DROPLEGS: 32 [kg]
MANIFOLDS: 50 [kg]

MAINTENANCE REQUIREMENTS

DAILY

1. No routine maintenance required.

WEEKLY

1. No routine maintenance required.

MONTHLY

1. No routine maintenance required.

BI YEARLY

1. No routine maintenance required.

YEARLY

1. Drain tank.
2. Remove excess settled solids if any have accumulated.
3. Clean diffusers. See I,O&M manual.
4. Inspect support hardware to ensure all components are intact and tight.

- **NO LUBRICATION OF PARTS OR LUBRICATION SCHEDULE IS REQUIRED.**
- **TROUBLESHOOTING GUIDE: SEE I,O&M MANUAL**

STAINLESS STEEL FIXED HEADER AERATION SYSTEM
COARSE BUBBLE AERATION EQUIPMENT DATA SHEETS

LOCATION: **TWAS TANK**

DROPLEG

MATERIAL: 304L STAINLESS STEEL

NUMBER: 4 SIZE: 100 [mm] Ø WALL THICKNESS: SCH 10S

HEADER

MATERIAL: 304L STAINLESS STEEL

NUMBER: 4 SIZE: 100 [mm] Ø WALL THICKNESS: SCH 10S

HEADER SUPPORTS

MATERIAL: 304L STAINLESS STEEL SIZE: 15 [mm] Ø
TYPE: SIMPLE

HEADER ANCHORS

MATERIAL: 304L STAINLESS STEEL
TYPE: Hilti HY 200R ADHESIVE SIZE: 12 [mm] Ø

DIFFUSERS

TYPE: DUAL POD - LP
CONNECTOR: 19 [mm]

GRID TYPE	HEADERS	DIFFUSERS PER HEADER	TOTAL DIFFUSERS INSTALLED PER GRID	TOTAL DIFFUSERS THIS GRID TYPE
1	1	28	28	112

CONTRACT SPARE PARTS LIST

QTY	DESCRIPTION	PART #
2	304L DUAL POD ASSY	
1	304 Wall Support	1390-1
2	304 Support-14	RSP-24S4

NOTE: The above listed special tools and spare parts are required by this contract. No other special tools or spare parts are specified, required or recommended.
A separate list of provided spares to be used during installation and commissioning will be included with the BOM in the Final I,O&M manual.

To order parts or service contact: Local Vendor:

SANITAIRE HEADQUARTERS:
XYLEM – SANITAIRE PRODUCTS
9333 N. 49TH STREET
BROWN DEER, WI 53223 USA
PH: 414-365-2200 / FX: 414-365-5784

FOR ANY ADDITIONAL ITEMS NOT INCLUDE WITH THIS CONTRACT

FREIGHT AND ALL APPLICABLE SALES TAXES WILL BE ADDED TO THE TOTAL. MINIMUM ORDER CHARGE IS $150.00.
TO PLACE AN ORDER, THE FOLLOWING INFORMATION WILL BE REQUESTED:

A. PURCHASE ORDER NUMBER.
B. THE BILL TO, SHIP TO ADDRESS.
C. IS YOUR FACILITY TAX EXEMPT? FAX A COPY OF YOUR EXEMPTION CERTIFICATE WITH YOUR CONFIRMING PAPERWORK. IF YOU ARE NOT TAX EXEMPT, PROVIDE YOUR SALES TAX PERCENT.
D. PROVIDE A WRITTEN PURCHASE ORDER FOR OUR RECORDS.

SANITAIRE

a xylem brand

Diffused Aeration Equipment

for

IQUALUIT

TWAS TANKS

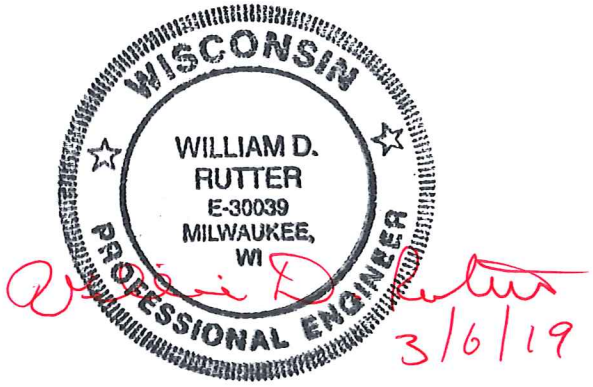

Sanitaire #18-9418SC

March 6, 2019

jro J:\18-9418sc\9418 Engineer\9418 Subm Book_R.1\3.4.2019 - Dual Pod - 9418SC.aer

Sanitaire Aeration Design Inputs for: IQUALUIT, Sanitaire #18-9418SC

Tank Geometry

2 Trains each Consisting of:

Parameter	Units	Pass 1
Parallel Reactors		1
Pass Process		Aerobic
SWD	m	4.0
Submergence	m	3.60
Volume	m^3	108.6
Reactor Geometry:		Rect
Length	m	11.8
Width	m	2.3

Oxygen/Air Distribution

	Zone	1
	Pass	1
Default		100.0%

Oxygenation

Parameter	Units	3.1m3/min	.37m3/(min-m)
No. Trains Operating		2	2
Air Rate	m3/hr	372.0	524.0

Standard Oxygen Correction Factor Parameters

Parameter	Units	3.1m3/min	.37m3/(min-m)
Site Elevation	MASL	12.3	12.3
Ambient Pressure	KPAA	101.22	101.22
Water Temperature	°C	20	20

Notes:

Bold, Italicized text indicate assumptions made by Sanitaire

A - Indicates Actual (AOR) Requirement.

S - Indicates Standard Condition (SOR) Oxygen requirement.

If the AOR/SOR parameter is not given, then its value will be evaluated later if suitable alpha, beta, D.O., theta, pressure, and temperature data is supplied.

Round tanks are evaluated as rectangular tanks diameter equal to length and equal surface area.

Annular tanks are evaluated as rectangular tanks of width equal to the annular width and equal surface area.

Sanitaire Project Name: IQUALUIT
Sanitaire Project #18-9418SC
Design Summary

		Operating Point & O2 Distribution	
	Units	3.1m3/min Default	.37m3/(min-m) Default
No. Trains in Operation		2	2
No. Grids in Operation		4	4
No. Operating Diffusers		112	112
SOR	KG/DAY	608.3	816.5
SOTE	%	24.4	23.3
Total Air Rate	m3/hr	372.0	524.0
Min.Diffuser Air Rate	m3/hr/diff.	3.32	4.68
Max. Diffuser Air Rate	m3/hr/diff.	3.32	4.68
Static Pressure	kpag	35.26	35.26
Diffuser DWP @ Min Air	kpag	1.84	1.98
Diffuser DWP @ Max Air	kpag	1.84	1.98
Pressure @ Top of Dropleg	kpag	37.24	37.53
Est. Blower Efficiency		70%	70%
Est. Motor Efficiency		90%	90%
Shaft Power	kW	5.13	7.27
Est. Motor Electrical Load	kW	5.70	8.08
Est. Standard Aeration Efficiency	kgSOR/kW -hr	4.94	4.68

Notes:

(1) Design air is the maximum of process air or mixing air

(2) Delivered oxygen based on design air

(3) Kilowatts based on adiabatic compression, 70% mechanical efficiency and 2.07 kpa lineloss

(4) Performance based on diffuser density (At/Ad), submergence, and diffuser unit air flow.

(5) Diffuser Air Flow based on Active Valve Modulation

(6) Blower Pressure Capability also requires consideration of:

A. The Air Main headloss (piping, fittings, valves, instrumentation, etc.) between the blower and the aeration assembly dropleg connections.

B. Potential for increased headloss resulting from diffuser fouling and/or aging. Please refer to the US EPA Fine Pore Design Manual (EPA/625/1-89/023), WEF Manual of Practice FD-13, and other technical publications for a detailed discussion on this subject. Note that this headloss consideration relates to all Fine Pore systems regardless of supplier or type of diffuser element.

C. Increased diffuser submergence during Peak Flow conditions.

(7) Air Flow defined at 20°C

(8) Fine Mixing air based on 2.19 $m^3/hr/m^2$

Sanitaire Project Name: IQUALUIT
Sanitaire Project #18-9418SC
Consulting Engineer:
Operating Condition: 3.1m3/min
Oxygen Distribution: Default

Aeration System Design

Parameter	Units	Zone 1	Totals/Overall
Pass		1	
SWD	m	4.00	
Subm	m	3.60	
Volume	m^3	108.6	217.1
No. Parallel Tanks		1	
No. Trains in Operation		2	
Grid Count		2	4
Dropleg Diameter	mm	100	
At/Ad		12.7235	
Diffuser Density	% Floor	7.86%	
Diffusers/Grid		28	112

Oxygen Transfer

Diffuser Type		SSLP	
Water Temp	°C	20	
Oxygen Distribution	%/Zone	100.0%	100.0%
Air Rate (7)	m3/hr	372.0	372.0

Performance

Design Air (1,7)	m3/hr	372.0	372.0
Diffuser Air Rate	m3/hr/Diff.	3.32	3.32
Delivered SOR	KG/DAY	608.3	608.3
Delivered SOTE	%	24.4%	24.4%
Pressure @ Top of Dropleg	kpag	37.24	37.24
Shaft Power	kW	5.1	5.1

Notes:

(1) Design air is the maximum of process air or mixing air

(2) Delivered oxygen based on design air

(3) Kilowatts based on adiabatic compression, 70% mechanical efficiency and 2.07 kpa lineloss

(4) Performance based on diffuser density (At/Ad), submergence, and diffuser unit air flow.

(5) Diffuser Air Flow based on Active Valve Modulation

(6) Blower Pressure Capability also requires consideration of:

A. The Air Main headloss (piping, fittings, valves, instrumentation, etc.) between the blower and the aeration assembly dropleg connections.

B. Potential for increased headloss resulting from diffuser fouling and/or aging. Please refer to the US EPA Fine Pore Design Manual (EPA/625/1-89/023), WEF Manual of Practice FD-13, and other technical publications for a detailed discussion on this subject. Note that this headloss consideration relates to all Fine Pore systems regardless of supplier or type of diffuser element.

C. Increased diffuser submergence during Peak Flow conditions.

(7) Air Flow defined at 20°C

(8) Fine Mixing air based on 2.19 $m^3/hr/m^2$

Sanitaire Project Name: IQUALUIT
Sanitaire Project #18-9418SC
Consulting Engineer:
Operating Condition: .37m3/(min-m)
Oxygen Distribution: Default

Aeration System Design

Parameter	Units	Zone 1	Totals/Overall
Pass		1	
SWD	m	4.00	
Subm	m	3.60	
Volume	m^3	108.6	217.1
No. Parallel Tanks		1	
No. Trains in Operation		2	
Grid Count		2	4
Dropleg Diameter	mm	100	
At/Ad		12.7235	
Diffuser Density	% Floor	7.86%	
Diffusers/Grid		28	112

Oxygen Transfer

Diffuser Type		SSLP	
Water Temp	°C	20	
Oxygen Distribution	%/Zone	100.0%	100.0%
Air Rate (7)	m3/hr	524.0	524.0

Performance

Design Air (1,7)	m3/hr	524.0	524.0
Diffuser Air Rate	m3/hr/Diff.	4.68	4.68
Delivered SOR	KG/DAY	816.5	816.5
Delivered SOTE	%	23.3%	23.3%
Pressure @ Top of Dropleg	kpag	37.53	37.53
Shaft Power	kW	7.3	7.3

Notes:

(1) Design air is the maximum of process air or mixing air

(2) Delivered oxygen based on design air

(3) Kilowatts based on adiabatic compression, 70% mechanical efficiency and 2.07 kpa lineloss

(4) Performance based on diffuser density (At/Ad), submergence, and diffuser unit air flow.

(5) Diffuser Air Flow based on Active Valve Modulation

(6) Blower Pressure Capability also requires consideration of:

A. The Air Main headloss (piping, fittings, valves, instrumentation, etc.) between the blower and the aeration assembly dropleg connections.

B. Potential for increased headloss resulting from diffuser fouling and/or aging. Please refer to the US EPA Fine Pore Design Manual (EPA/625/1-89/023), WEF Manual of Practice FD-13, and other technical publications for a detailed discussion on this subject. Note that this headloss consideration relates to all Fine Pore systems regardless of supplier or type of diffuser element.

C. Increased diffuser submergence during Peak Flow conditions.

(7) Air Flow defined at 20°C

(8) Fine Mixing air based on 2.19 $m^3/hr/m^2$

IQALUIT WWTP: TWAS TANKS
9 inch Membrane Disc (LP style) Diffusers with 9 mm orifice

SANITAIRE
a xylem brand

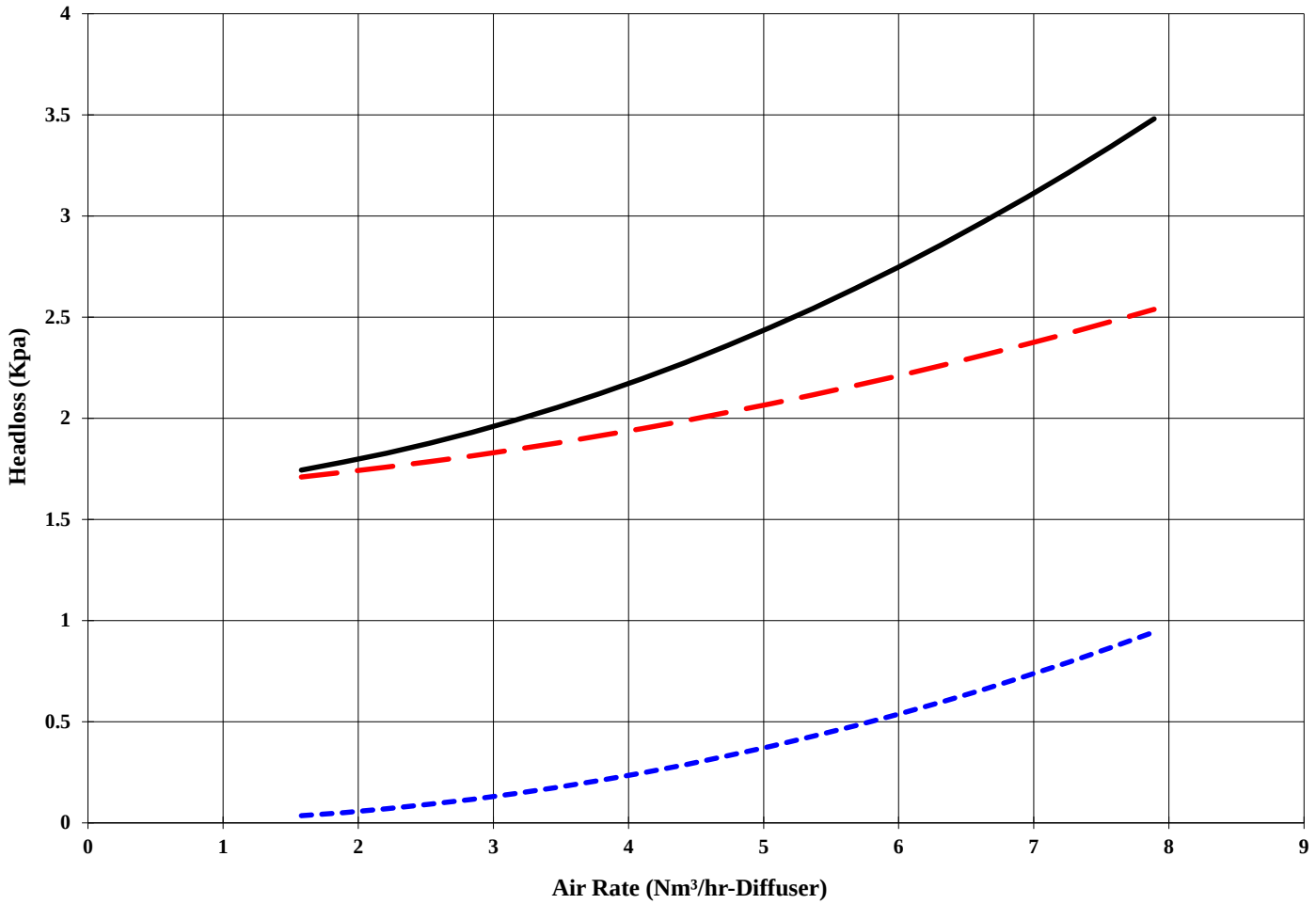

orifice (Kpa)	Air/diffuser (Nm³/hr)	Clean DWP (Kpa)
0.64516	2.11	17.86
6.4516	6.49	23.37
4	5.14	21.27
6	6.27	22.99
8	7.21	24.63
10	8.04	26.21
12	8.79	27.75
14	9.48	29.26
16	10.12	30.74
18	10.71	32.21
20	11.28	33.66
22	11.82	35.09
24	12.33	36.51
26	12.82	37.92
28	13.29	39.32
30	13.75	40.70
32	14.19	42.09
34	14.61	43.46
36	15.03	44.83
38	15.43	46.19
40	15.82	47.54
42	16.20	48.89
44	16.57	50.23
46	16.94	51.57
48	17.29	52.90
50	17.64	54.23
52	17.98	55.56
54	18.31	56.88
56	18.64	58.20
58	18.96	59.51
60	19.28	60.82
62	19.59	62.13
64	19.90	63.43
66	20.20	64.73
68	20.49	66.03
70	20.79	67.33
72	21.07	68.62
74	21.36	69.91
76	21.64	71.20
78	21.91	72.49
80	22.19	73.77

Operating Conditions at Diffuser: 19.8 Kpa, 311K air
12 m site elevation, 3.6 Submergence)

9" SANITAIRE® MEMBRANE DISC DIFFUSER SPECIFICATIONS
"SILVER SERIES II - LP"

MATERIAL PROPERTIES	VALUE/UNITS	TEST PROCEDURE
Base Compound	EPDM With Carbon Black for UV Protection	--
Tensile Strength (Unperforated)	1,200 PSI/Min.	ASTM D412
Elongation at Break	350% Min.	ASTM D412
Hardness (Durometer)	58 ± 5, Shore A	ASTM 2240
Accelerated Aging Compression Set (Under Constant Deflection) 22 Hrs. @ 70°C	40% Max.	ASTM D395 Test Method B
Accelerated Aging (Elongation (% Retained) 70 Hrs. @ 100°C	75% Max.	ASTM D573
Ozone Resistance 72 Hrs.; 40°C, 50 pphm	No cracks @ 2X magnification	ASTM D1171 Method A
Modulus @ 300%	500 PSI/Min.	ASTM D412
Dynamic Wet Pressure	6.0" – 8.0" w.c.	@ 1.5 SCFM
PHYSICAL PROPERTIES		
Nominal Diameter	9"	
Active Surface Area	0.41 $Ft.^2$	
Material Thickness	0.080"	
Check Valve Leakage Rate	0 ml H_2O after 48 hours unpressurized	

MECHANICAL DETAILS

INSTALLATION AND START-UP

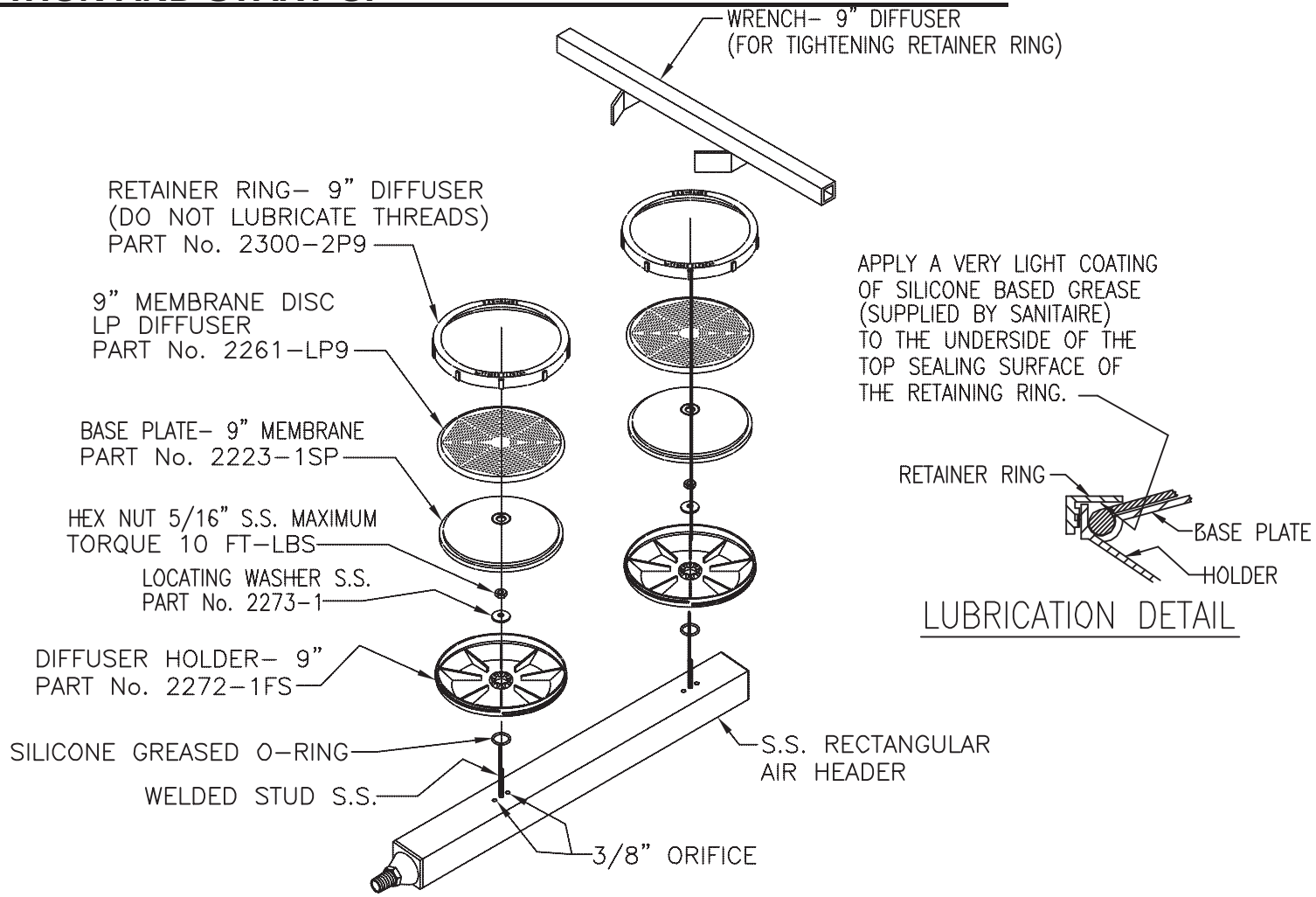

LUBRICATION DETAIL

9"ø DUAL LP DIFFUSER ASSEMBLY

DETAIL FB–9B

Sanitaire a xylem brand BROWN DEER, WISCONSIN 53223	THIS DRAWING IS THE PROPERTY OF XYLEM AND IS SUBMITTED IN CONFIDENCE. IT IS NOT TO BE DISCLOSED, USED OR DUPLICATED WITHOUT PERMISSION OF XYLEM.	DIFFUSER ASSEMBLY 9" DUAL LP DETAIL	DRAWN BY	DATE	EQUIP.	STANDARD NO. FB–9B	JOB
			CHKD BY	DATE			
			APPVD BY	DATE	REV.	SHEET OF	DWG NO.

REV 1				REV 3			
REV 2				REV 4			

JCM Industries, Inc.
P. O. Box 1220, Nash, TX 75569-1220
Phone 800-527-8482 or 903-832-2581
Fax 800-874-9524 or 903-838-6260
www.jcmindustries.com

JCM 166 Fabricated Lug All Stainless Steel Clamps

The JCM 166 Fabricated Lug All Stainless Steel Clamp offers an economical solution to problems such as breaks, splits, cracks, holes in all types of pipe. Available in standard sizes for cast iron, ductile iron, IPS PVC, C-900/905 PVC, steel, asbestos cement, polyethylene. The 166 is a stainless steel clamp that offers all the benefits of stainless: corrosion resistance, lightweight, flexible yet strong. The JCM 166 is especially recommended for hot soil conditions and corrosive environments.

The full circumferential gasket provides a complete repair while the molded in stainless steel bridge plate provides the full stainless steel barrier to aggressive elements.

JCM 166 Fabricated Lug All Stainless Steel Clamp Couplings with EPDM Gasket - Material Specifications

BOLTING ASSEMBLY:	18-8 Type 304 Stainless Steel
BAND:	18-8 Type 304 Stainless Steel
BOLTS AND NUTS:	18-8 Type 304 Stainless Steel
GASKET:	EPDM - has excellent resistance to aging factors including ozone, oxygen, elevated temperatures and fluctuations in weather. Recommended for service in hot water, steam and dry heat. Suitable for popular chemicals - ketones, alcohols, phosphate ester hydraulic fluids, glycols, dilute acids and alkalies. Maximum temperature 300°F wet. Not suitable for petroleum.

EPDM Gasket Material

Property	**Typical Value**
Service Temperature	**275°F Operating/ 300°F Maximum**
Tensile Strength	**1450 psi**
Elongation	**200%**

Strong Stainless Steel Studs - permanently attached to eliminate loose parts and nuts are treated to speed installation and prevent seizing.

Thick Gridded Gasket - with long tapered ends and recessed bridge plate assure even gasket pressure throughout range - without wrinkling or crimping.

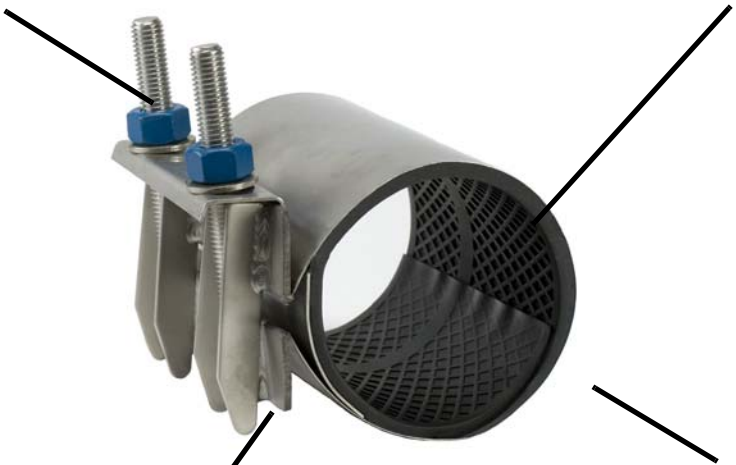

Image Reflects 7” Clamp Width

Positive Attachment of Band to Lugs - strong TIG welds eliminate mechanical weaknesses and prevents band separation. Thick stainless lifter bar plate prevents distortion or warpage during tightening.

Type 304 Stainless Steel Band - conforms to pipe irregularities, maintaining sealing pressure over the entire gasket.

NSF Certified to NSF/ANSI 61

JCM 166 Fabricated Lug Stainless Steel Universal Clamps



The JCM 166 Fabricated Lug All Stainless Steel Clamp offers an economical solution to problems such as breaks, splits, cracks, holes in all types of pipe. Available in standard sizes, the 166 is a stainless steel clamp that offers all the benefits of stainless: corrosion resistance, lightweight, flexible yet strong.

Nom. Pipe Size (IN.)	Clamp O.D. Range (IN.)	166 Stainless Steel Universal Clamp	Clamp Width - Approximate Weight					
			7"	12"	15"	18"	24"	30"
		Clamp Number	*Lbs.#*	*Lbs.#*	*Lbs.#*	*Lbs.#*	*Lbs.#*	*Lbs.#*
2 - 2-1/2	2.35 - 2.63 2.70 - 3.13	0238 0275	•	•	•	-	-	-
			5#	*8#*	*10#*			
3	3.46 - 3.70 3.73 - 4.13	0350 0400	•	•	•	-	-	-
			6#	*9#*	*11#*			
4	4.45 - 4.75 4.74 - 5.14 4.95 - 5.35 5.22 - 5.62	0450 0480 0500 0525	•	•	•	•	•	•
			7#	*10#*	*12#*	*17#*	*20#*	*24#*
6	5.95 - 6.35 6.56 - 6.96 6.85 - 7.25 7.05 - 7.45 7.45 - 7.85	0600 0663 0690 0710 0745	•	•	•	•	•	•
			9#	*13#*	*17#*	*20#*	*26#*	*34#*
8	7.95 - 8.35 8.54 - 8.94 8.99 - 9.39 9.27 - 9.67 9.90 - 10.30	0800 0863 0905 0940 1000	•	•	•	•	•	•
			11#	*16#*	*21#*	*25#*	*32#*	*44#*
10	10.60 - 11.00 11.04 - 11.44 11.34 - 11.74 11.75 - 12.15 12.00 - 12.40	1075 1110 1140 1175 1200	•	•	•	•	•	•
			15#	*18#*	*24#*	*30#*	*36#*	*50#*
12	12.60 - 13.02 13.10 - 13.50 13.40 - 13.80 13.70 - 14.10 14.00 - 14.40	1275 1320 1340 1370 1400	•	•	•	•	•	•
			17#	*20#*	*27#*	*34#*	*40#*	*56#*
		Number of Bolts	**2**	**3**	**4**	**4**	**6**	**8**

HOW TO ORDER

1. Determine O.D. of pipe.
2. Select proper clamp O.D. range and band width.
3. Determine Model Number.
4. Specify clamp number.
   Example: To fit Cast Iron pipe, 6.90 O.D. with 6" width, order: 166-0690-6

Available Options Upon Request

- Pipe sizes and ranges not listed
- Conductive Buttons
- Specialty Gaskets
- Other Sizes and Ranges

1. Clamp width should be equal to or greater than the pipe diameter for higher working pressures.
2. Not recommended for use for joining plain end pressure pipe.
3. Other ranges and widths available upon request.
4. Clamps do not prevent lateral movement of pipe. Applications in which the pipe may move out of the clamp, proper anchorage of the pipe must be provided.

NSF
Certified to NSF/ANSI 61

JCM 166 Fabricated Lug All Stainless Steel Clamp Couplings with EPDM Gasket

INSTALLATION INSTRUCTIONS

Failure to follow installation instructions will result in voided product warranty

1. Clean and scrape pipe. Remove any dirt or debris that would interfer with the complete sealing of the gasket around the pipe. Lubricate the pipe with soapy water. Do not use oil base pipe lubricant.
   Trick of the Trade: Place a mark on the pipe to each side of the damaged area equal to the width of the clamp. This presents a visual mark to center the repair clamp over the damage area (1/2 of this distance is center).

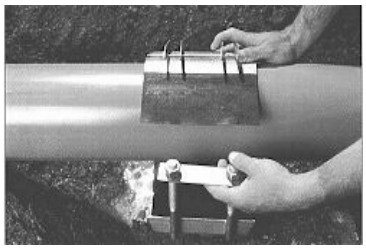

2. Inspect pipe for integrity, size and outside diameter. Confirm the proper size and range of repair clamp. Confirm proper outlet type and size.

3. Open the repair clamp by loosening (without removing) the nuts to the top of the stainless studs/bolts. Disengage the locking “C-Plate” and lift plate to open clamp. Wrap repair clamp around the pipe centering the clamp over the damaged area.

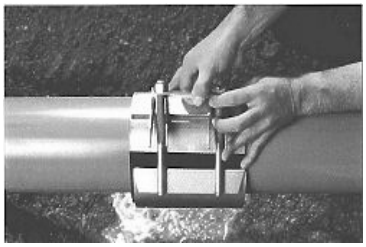

4. Tuck tapered gasket(s) in place ensuring there are no folds in the tapered edge.

5. Loosely close the clamp around the pipe by lifting the C-Plate(s) lip over the lug system stainless receiver bar, meeting the stud and fingers, and lock in place. Rotate the clamp slightly in the direction of the arrow stamped on the clamp band to ensure the tapered gasket lies flat under the clamp. **For Tapped Clamps:** Rotate tapped outlet into proper position.

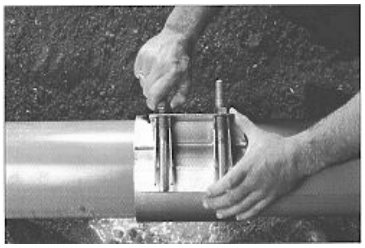

6. Complete tightening of the clamp by squeezing the lugs together and tighten the nuts. Start at the center bolt and work out toward clamp ends, alternating from one side to the other for equal gap between clamp halves. Continue tightening sequence to reach the appropriate torque levels.

7. Tighten the nuts evenly with a hand wrench to the following torque values. To ensure proper torque level, wait 15 minutes and retighten to recommended torque. *Trick of the Trade: Pneumatic wrenches could cause the stainless nuts to seize on the stainless steel studs.*



5/8” Bolts/Studs tighten to 70 Foot Pounds of Torque*

8. For JCM 163 Tapped Clamps, proceed with tapping process.

***Ensure proper torque level with a field grade torque wrench equal to the JCM 905 Torque Wrench. Thin wall, small diameter & flexible types of pipe are subject to many variables which affect torque values. Use descretion when tightening fittings on thin wall, small diameter & flexible pipe in order to not crush or severly deform the pipe.**

Note: Universal Clamp Couplings do not provide restraint of pipe ends. For applications in which pipe may pull out of clamp, external restraint must be provided.

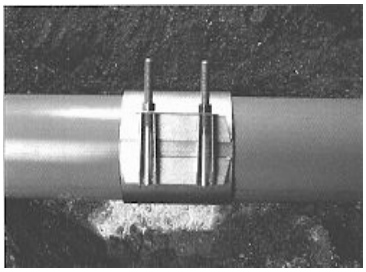

INT1660212

JCM Industries, Inc. / P. O. Box 1220 / Nash, TX 75569-1220

Recommendations For Installation Of Fittings With Stainless Steel Bolts And Nuts

This JCM Quality Fitting is equipped with 18-8 stainless steel bolts and nuts for superior corrosion resistance. It is the nature of stainless steel fasteners to gall and freeze if not properly handled. This undesirable characteristic is due to the inherent properties of the stainless material. The galling and freezing action is often triggered by the presence of metal chips, burrs and grains of sand on the threads of the bolts and nuts.

Extra care has been taken by JCM prior to assembly and packing of this fitting to assure a trouble-free installation.

1. The nuts and bolts are made from material of different hardness so that they have different strengths.
2. Standard 5/8” and 3/4” nuts are coated with a special (antiseize) coating. Additional lubricant may be needed. Oversized stainless steel hardware is provided without lubrication to prevent a build up of dirt, sand or grit during shipment. **A Molybdenum-Base lubricant is recommended.**
3. Each nut is assembled by hand to be sure that it went on the bolt freely.
4. The bolts and nuts are handled carefully to avoid damage to the threads.
5. The bolts and nuts are made to exacting specifications to assure that the correct material is used and that the thread form is correct.

The specially coated nuts supplied by JCM help to eliminate the galling caused by overtorquing, but **the bolts must be kept clean and not pitched or thrown into the tool bucket during installation.** During field installation, the threads MUST BE KEPT CLEAN AND FREE FROM NICKS.

When a mild steel or bronze bolt is used, the low ultimate strength of the material allows the nut to tear itself free. Not so with 18-8 Stainless Steel. The ultimate strength of the material is so great, that it increases rapidly with cold work. However, once foreign matter such as a grain of sand wedges the threads, or the thread form is altered by over-torquing, the nuts cannot be removed.

NOTE: Installation of this fitting with a pneumatic wrench may cause seizure of the nut. **A JCM 901 Master Wrench or JCM 905 Torque Wrench with Deep Socket is recommended.**

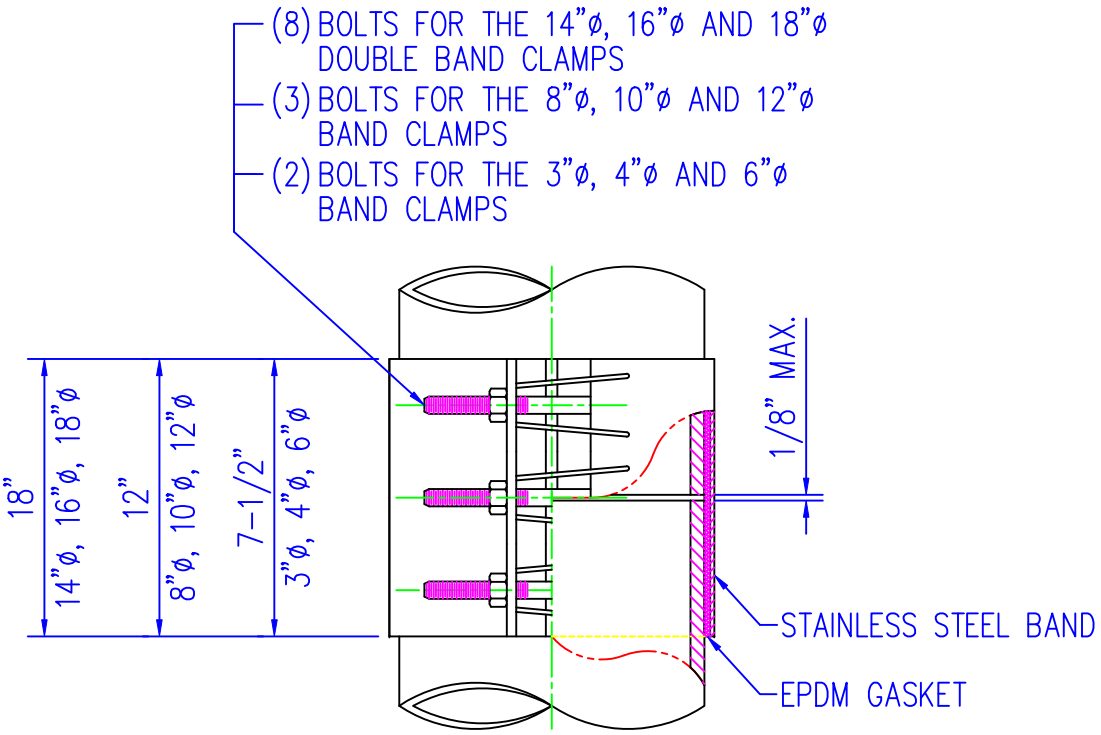

CLAMP COUPLING

	PART NUMBER	
SIZE ø	TUBE SIZE	PIPE SIZE
3"	166-0300-7	166-0350-7
4"	166-0400-7	166-0450-7
6"	166-0600-7	166-0663-7
8"	166-0800-12	166-0863-12
10"	166-1000-12	166-1075-12
12"	166-1200-12	166-1275-12

XYLEM-SANITAIRE_PRODUCTS

JCM INDUSTRIES, INC. NASH, TX.

CONTENTS MAY NOT BE DUPLICATED, REPRODUCED OR COPIED WITHOUT PERMISSION OF WATER POLLUTION CONTROL CORP.

DRAWN BY	CHECKED BY	APVD. BY	DWG. NO.	REV.
HPT	-----	-----	GEN-006009	--
DATE	NO. SHEETS	SCALE	PART NO.	
08/30/10	1_OF_1	-----	-------	

HIT-HY 200 Adhesive Anchoring System

1.0 Product Description

2.0 Technical Data

Listings/Approvals

ICC-ES (International Code Council)
ESR-3187

Independent Code Evaluation

IBC®/IRC® 2009 (ICC-ES AC308)

IBC®/IRC® 2006 (ICC-ES AC308)

IBC®/IRC® 2003 (ICC-ES AC308)

LEED®: Credit 4.1-Low Emitting Materials

The Leadership in Energy and Environmental Design (LEED) Green Building Rating system™ is the nationally accepted benchmark for the design, construction, and operation of high performance green buildings.

1.0 Product Description

The Hilti HIT-HY 200 Adhesive Anchoring System is used to resist static, wind and seismic tension and shear loads in normal-weight concrete having a compressive strength, f'_c, of 2,500 psi to 8,500 psi (17.2 MPa to 58.6 MPa). It is suitable to be used in cracked and uncracked concrete as defined per ICC-ES, ACI, and CSA.

Hilti HIT-HY 200 Adhesive is an injectable two-component hybrid adhesive. The two components are separated by means of a dual-cylinder foil pack attached to a manifold. The two components combine and react when dispensed through a static mixing nozzle attached to the manifold. Hilti HIT-HY 200 Adhesive is available in two options, Hilti HIT-HY 200-A, and Hilti HIT-HY 200-R. Both options utilize the same technical data. Hilti HIT-HY 200-A will have shorter working times and curing times than Hilti HIT-HY 200-R. The packaging for each is different which helps the user distinguish between the two adhesives.

Hilti HIT-HY 200 Adhesive comes with three cleaning options:

1. Traditional cleaning methods comprised of steel wire brushes and air nozzles,
2. Self-cleaning methods using the Hilti TE-CD or TE-YD hollow carbide drill bits used in conjunction of a Hilti vacuum cleaner that will remove drilling dust, automatically cleaning the hole, or
3. Use of the Hilti HIT-Z and HIT-Z-R threaded rods where hole cleaning is not required after drilling the hole. (Exceptions: If base material temperature is less than 41° F (5° C) or if diamond core drilling is used, then cleaning of the drilled hole is required).

Elements that are suitable for use with this system are as follows: threaded steel rods, Hilti HIS-(R)N steel internally threaded inserts, steel reinforcing bars and Hilti HIT-Z and HIT-Z-R specialty rods.

Hilti HIT-HY 200 Adhesive Technical Data Table of Contents

Element Type	 Hilti HIT-Z and HIT-Z-R (Threaded Rod)	 Rebar		 Hilti HAS Threaded Rod	 Hilti HIS-N and HIS-RN Internally Threaded Insert
		United States	Canada		
Pages	12 – 21	22 – 33	34 – 39	40 – 50	51 – 53
Tables	1 – 15	16 – 34	35 – 47	48 – 65	66 – 70

Information on Working Time and Cure Time on page 54

HIT-HY 200 Adhesive Anchoring System

2.0 Technical Data

2.1 Testing and Product Evaluation

Hilti HIT-HY 200 has been tested in accordance with ICC Evaluation Services (ICC-ES) Acceptance Criteria for Post-Installed Adhesive Anchors in Concrete Elements (AC308).

Hilti has had Hilti HIT-HY 200 evaluated according to AC308 and has received ESR-3187 from ICC-ES.

2.2 Adhesive Anchor Design Codes

2.2.1 United States

For post-installed and cast-in anchor systems, design calculations are performed according to ACI 318 Appendix D. This has been a requirement of the International Building Code (IBC) since 2003. ACI 318-11 Appendix D introduced for the first time specific equations for the design of adhesive anchor systems using threaded rod or rebar. Prior to this only post-installed expansion and undercut anchors and cast-in headed studs were recognized.

Prior to the publication of ACI 318-11, designers of post-installed adhesive anchor systems used ACI 318-08 Appendix D and Section 3.3 of AC308 which provides amendments to Appendix D. These amendments provide the relevant equations to design a post-installed adhesive anchor.

At the time of this publication, ESR-3187 for Hilti HIT-HY 200 includes the design provisions for ACI 318-08 and AC308 Section 3.3.

2.2.2 Canada

CSA A23.3-04 Annex D provides the required limit states design equations for post-installed mechanical anchors, and for cast-in headed studs. At the time of this publication, Annex D, which is a non-mandatory part of the Canadian code, does not address adhesive anchor design or test criteria.

Since Annex D does not provide guidance for the design of adhesive anchor systems, it is the position of Hilti that the design provisions of ACI 318-11 Appendix D can be used for the design of Hilti HIT-HY 200 in Canada. The foundations of a proper adhesive anchor design are now well established through ACI 318-11 and a proper chemical anchor design in the United States would be also relevant in Canada. It will be shown in later sections how to relate the results from technical data in this supplement to the Canadian design standard.

2.3 Design of Hilti HIT-HY 200 Adhesive Anchor System

2.3.1 Using technical data in ESR-3187

Technical data for the system components of Hilti HIT-HY 200 can be found in ICC-ES ESR-3187. This includes:

- Hilti HIT-HY 200-A and Hilti HIT-HY 200-R adhesives (with the same technical data).
- Hilti HIT-Z(-R) threaded rod which requires no cleaning.
- Standard threaded rods and rebar.
- Hilti HIS-(R)N internally threaded inserts.
- Hilti TE-CD and TE-YD hollow drill bits which automatically clean the drilled holes, for use with standard threaded rods, rebar, and the Hilti HIS-(R)N internally threaded inserts and have the same technical data as standard cleaning methods.

A designer can use the data in ESR-3187 to calculate the capacity of the Hilti HIT-HY 200 system in the following manner:

- For the Hilti HIT-Z(-R) threaded rods with no cleaning. This is a torque controlled adhesive anchor system, and at the time of this publication there are no provisions in ACI 318 Appendix D to design this system. A proposed design would be according to ACI 318-11 or ACI 318-08 Appendix D and AC308 Section 3.3 amendments to ACI 318.
- For standard threaded rods, rebar and the Hilti HIS-(R)N internally threaded inserts, a design using either ACI 318-11 Appendix D or ACI 318-08 Appendix D and AC308 Section 3.3 amendments to ACI 318 would be appropriate.

The tables from ESR-3187 are not included in this supplement, but can be found by downloading ESR-3187 from www.us.hilti.com or on the ICC-ES website at www.icc-es.org, or by contacting your local Hilti representative.

2.3.2 Using Hilti PROFIS Anchor Design Software

The Hilti PROFIS Anchor Design Software is the most innovative and comprehensive design software available for accurate and complete anchor designs.

For Hilti HIT-HY 200, the data from ESR-3187 is used as the data base for the program. PROFIS Anchor calculates the design capacity of the anchor system according to ACI 318-08 Appendix D and AC308 Section 3.3 amendments to ACI 318. The PROFIS Anchor HIT-HY 200 portfolio consists of the same system components listed in section 2.3.1.

This is the most accurate and best way to optimize the anchor design, especially for anchor systems with multiple anchors,

HIT-HY 200 Adhesive Anchoring System

complicated loading, edge distance constraints, and numerous other conditions.

Hilti PROFIS Anchor Design Software can be downloaded at www.us.hilti.com (US) or www.hilti.ca (Canada). Contact your local Hilti representative for a demonstration on this software at your office.

2.3.3 Using the New Hilti Simplified Design Tables

In lieu of providing a copy of ESR-3187 design tables in this supplement, Hilti is providing a new, simple approach for designing an anchor according to the current codes described in Section 2.2. Refer to Section 2.4 for a description of these new innovative tables.

2.4 Hilti Simplified Design Tables

The Hilti Simplified Design Tables is not a new "method" of designing an anchor that is different than the provisions of ACI 318 Appendix D or CSA A23.3 Annex D. Rather, it is a series of pre-calculated tables and reduction factors meant to help the designer create a quick calculation of the capacity of the Hilti anchor system, and still be compliant with the codes and criteria of ACI and CSA.

The Hilti Simplified Design Tables are formatted similar to the Allowable Stress Design (ASD) tables and reduction factors which was a standard of practice for design of post-installed anchors.

The Hilti Simplified Design Tables combine the simplicity of performing a calculation according to the ASD method with the code-required testing, evaluation criteria and technical data in ACI Appendix D and CSA Annex D.

2.4.1 Simplified Tables Data Development

The Simplified Tables have two table types. The single anchor capacity table and the reduction factor table.

Single anchor capacity tables show the design strength (for ACI) or factored resistance (for CSA) in tension and shear for a single anchor. This is the capacity of a single anchor with no edge distance or concrete thickness influences and is based on the assumptions outlined in the footnotes below each table.

Reduction factor tables are created by comparing the single anchor capacity to the capacity that includes the influence of a specific edge distance, spacing, or concrete thickness, using the equations of ACI 318-11 Appendix D.

2.4.2 Hilti HIT-Z(-R) Anchor Rods

The single anchor tension capacity is based on the lesser of concrete breakout strength or pullout strength:

ACI/AC308: $\Phi N_n = \min | \Phi N_{cb} ; \Phi N_{pn} |$

CSA: $N_r = \min | N_{cbr} ; N_{cpr} |$

$\Phi N_n = N_r$

The shear value is based on the pryout strength.

ACI/AC308: $\Phi V_n = \Phi V_{cp}$

CSA: $V_r = V_{cpr}$

$\Phi V_n = V_r$

Concrete breakout and pryout are calculated according to ACI 318 Appendix D and CSA A23.3 Annex D using the variables from ESR-3187. These values are equivalent.

Pullout for torque controlled adhesive anchors is not recognized in ACI or CSA, so this is determined from AC308 Section 3.3 and the value of $N_{p,uncr}$ or $N_{p,cr}$ from ESR-3187. This is a similar approach to mechanical anchor pullout strength. ACI and CSA values are equivalent.

2.4.3 Standard Threaded Rods, Rebar, and Hilti HIS-(R)N Internally Threaded Inserts

The single anchor tension capacity is based on the lesser of concrete breakout strength or bond strength:

ACI: $\Phi N_n = \min | \Phi N_{cb} ; \Phi N_a |$

CSA/ACI: $N_r = \min | N_{cbr} ; N_a |$

$\Phi N_n = N_r$

The shear value is based on the pryout strength.

ACI: $\Phi V_n = \Phi V_{cp}$

CSA/ACI: $V_r = V_{cpr}$

$\Phi V_n = V_r$

Concrete breakout is calculated according to ACI 318 Appendix D and CSA A23.3 Annex D using the variables from ESR-3187. These values are equivalent.

Bond strength is not recognized in CSA, so this is determined from ACI 318-11 Appendix D for both the US and Canada.

2.4.4 Steel Strength for All Elements

The steel strength is provided on a separate table and is based on calculations from ACI 318 Appendix D and CSA A23.3 Annex D. ACI and CSA have different reduction factors for steel strength, thus the values for both ACI and CSA are published.

2.4.5 How to Calculate Anchor Capacity Using Simplified Tables

The process for calculating the capacity of a single anchor or anchor group is similar to the ASD calculation process currently outlined in the 2011 North American Product Technical Guide Volume 2: Anchor Fastening Technical Guide on page 19.

The design strength (factored resistance) of an anchor is obtained as follows:

Tension:

ACI: $N_{des} = n \bullet min \mid \Phi N_n \bullet f_{AN} \bullet f_{RN} ; \Phi N_{sa} \mid$

CSA: $N_{des} = n \bullet min \mid N_r \bullet f_{AN} \bullet f_{RN} ; N_{sr} \mid$

Shear:

ACI: $V_{des} = n \bullet min \mid \Phi V_n \bullet f_{AV} \bullet f_{RV} \bullet f_{HV} ; \Phi V_{sa} \mid$

CSA: $V_{des} = n \bullet min \mid V_r \bullet f_{AV} \bullet f_{RV} \bullet f_{HV} ; V_{sr} \mid$

where:

- n = number of anchors
- N_{des} = design resistance in tension
- ΦN_n = design strength in tension considering concrete breakout, pullout, or bond failure (ACI)
- ΦN_{sa} = design strength in tension considering steel failure (ACI)
- N_r = factored resistance in tension considering concrete breakout, pullout, or bond failure (CSA)
- N_{sr} = factored resistance in tension considering steel failure (CSA)
- V_{des} = design resistance in shear
- ΦV_n = design strength in shear considering concrete failure (ACI)
- ΦV_{sa} = design strength in shear considering steel failure (ACI)
- V_r = factored resistance in shear considering concrete failure (CSA)
- V_{sr} = factored resistance in shear considering steel failure (CSA)
- f_{AN} = adjustment factor for spacing in tension
- f_{RN} = adjustment factor for edge distance in tension
- f_{AV} = adjustment factor for spacing in shear
- f_{RV} = adjustment factor for edge distance in shear
- f_{HV} = adjustment factor for concrete thickness in shear (this is a new factor that ASD did not use previously)

Adjustment factors are applied for all applicable near edge and spacing conditions.

For example, the capacity in tension corresponding to the anchor group based on worst case anchor “a” in the figure below is evaluated as follows:

ACI: $N_{des} = 4 \bullet \Phi N_n \bullet f_{A,x} \bullet f_{A,y} \bullet f_{R,x} \bullet f_{R,y}$

CSA: $N_{des} = 4 \bullet N_r \bullet f_{A,x} \bullet f_{A,y} \bullet f_{R,x} \bullet f_{R,y}$

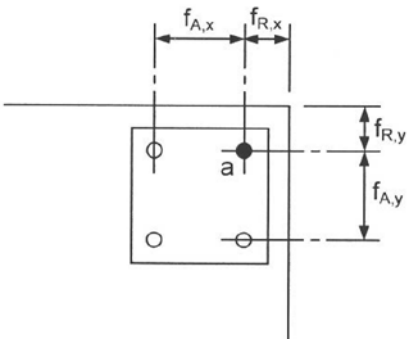

Note: designs are for orthogonal anchor bolt patterns and no reduction factor for the diagonally located adjacent anchor is required.

Where anchors are loaded simultaneously in tension and shear, interaction must be considered. The interaction equation is as follows:

ACI: $$\frac{N_{ua}}{N_{des}} + \frac{V_{ua}}{V_{des}} \leq 1.2$$

CSA: $$\frac{N_f}{N_{des}} + \frac{V_f}{V_{des}} \leq 1.2$$

where:

- N_{ua} = Required strength in tension based on factored load combinations of ACI 318 Chapter 9.
- V_{ua} = Required strength in shear based on factored load combinations of ACI 318 Chapter 9.
- N_f = Required strength in tension based on factored load combinations of CSA A23.3 Chapter 8.
- V_f = Required strength in shear based on factored load combinations of CSA A23.3 Chapter 8.

The full tension strength can be permitted if:

ACI: $$\frac{V_{ua}}{V_{des}} \leq 0.2$$

CSA: $$\frac{V_f}{V_{des}} \leq 0.2$$

HIT-HY 200 Adhesive Anchoring System

The full shear strength can be permitted if:

ACI: $\frac{N_{ua}}{N_{des}} \leq 0.2$

CSA: $\frac{N_f}{N_{des}} \leq 0.2$

2.4.6 Allowable Stress Design (ASD)

The values of N_{des} and V_{des} developed from Section 2.4.5 are design strengths (factored resistances) and are to be compared to the required strength in tension and shear from factored load combinations of ACI 318 Chapter 9 or CSA A23.3 Chapter 8.

The design strength (factored resistance) can be converted to an ASD value as follows:

$$N_{des,ASD} = \frac{N_{des}}{\alpha_{ASD}}$$

$$V_{des,ASD} = \frac{V_{des}}{\alpha_{ASD}}$$

where:

α_{ASD} = Conversion factor calculated as a weighted average of the load factors for the controlling load combination.

An example for the calculation of α_{ASD} is as follows:

Controlling strength design load combination is 1.2D + 1.6L, % contribution is 30% D, 70% L

α_{ASD} = 1.2 x 0.30 + 1.6 x 0.70 = 1.48

2.4.7 Seismic Design

To determine the seismic design strength (factored resistance) a reduction factor, α_{seis}, is applied to the applicable table values. This value of α_{seis} will be in the footnotes of the relevant design tables.

The value of α_{seis} for concrete / bond / pullout failure is based on 0.75 times a reduction factor determined from testing. The total reduction is footnoted in the tables.

The value of α_{seis} for steel failure is based on testing and is typically only applied for shear. There is no additional 0.75 factor. The reduction is footnoted in the tables.

The factored load and associated seismic load combinations that will be compared to the design strength (factored resistance) can be determined from ACI or CSA provisions and national or local code requirements. An additional value for $\phi_{non\text{-}ductile}$ may be needed based on failure mode or ductility of the attached components.

2.4.8 Sustained Loads and Overhead Use

Sustained loading is calculated by multiplying the value of ΦN_n or N_r by 0.55 and comparing the value to the tension dead load contribution (and any sustained live loads or other loads) of the factored load. Edge, spacing, and concrete thickness influences do not need to be accounted for when evaluating sustained loads.

Consideration of sustained loads is based on ACI 318-11 Appendix D. Since sustained loading is not addressed in CSA A23.3 Annex D, it is reasonable to use this approach for CSA based designs.

2.4.9 Accuracy of the Simplified Tables

Calculations using the Simplified Tables have the potential of providing a design strength (factored resistance) that is exactly what would be calculated using equations from ACI 318 Appendix D or CSA A23.3 Annex D.

The tables for the single anchor design strength (factored resistance) for concrete / bond / pullout failure or steel failure have the same values that will be computed using the provisions of ACI and CSA.

The load adjustment factors for edge distance influences are based on a single anchor near an edge. The load adjustment factors for spacing are determined from the influence of two adjacent anchors. Each reduction factor is calculated for the minimum value of either concrete or bond failure. When more than one edge distance and/or spacing condition exists, the load adjustment factors are multiplied together. This will result in a conservative design when compared to a full calculation based on ACI or CSA. Additionally, if the failure mode in the single anchor tables is controlled by concrete failure, and the reduction factor is controlled by bond failure, this will also give a conservative value (and vice versa).

The following is a general summary of the accuracy of the simplified tables:

- Single anchor tables have values equivalent to a calculation according to ACI or CSA.
- Since the table values, including load adjustment factors, are calculated using equations that are not linear, linear interpolation is not permitted. Use the smaller of the two table values listed. This provides a conservative value if the application falls between concrete compressive strengths, embedment depths, or spacing, edge distance, and concrete thickness.
- For one anchor near one edge, applying the edge distance factor typically provides accurate values

provided the failure mode of the table values is the same. If the failure mode is not the same, the values are conservative.

- For two to four anchors in tension with no edge reductions, applying the spacing factors provides a value that is equivalent to the ACI and CSA calculated values, provided the controlling failure modes of the table values are the same. If the failure mode is not the same, the values are conservative.
- The spacing factor in shear is conservative when compared to two anchors with no edge distance considerations. This factor is based on spacing near an edge and can be conservative for installations away from the edge of the concrete member. Note: for less conservative results, it is possible to use the spacing factor in tension for this application if there is no edge distance to consider.
- The concrete thickness factor in shear is conservative when compared to an anchor with no edge influences. This factor is based on applications near an edge. In the middle of a concrete member this is conservative. Note: for less conservative results, this factor can be ignored if the application is not near an edge.
- The load adjustment factors are determined by calculations according to ACI 318-11 Appendix D. This is more conservative than ACI 318-08 Appendix D because the $\psi_{g,Na}$ factor, which is always greater than or equal to 1.0, does not need to be calculated. Thus, some calculations will be more conservative than a calculation from the Hilti PROFIS Anchor Design Software (PROFIS uses ACI 318-08).

IMPORTANT NOTE:

For applications such as a four bolt or six bolt anchor pattern in a corner in a thin slab, the calculation can be up to 80% conservative when compared to a calculation according to ACI or CSA, and when using the Hilti PROFIS Anchor Design Software. It is always suggested to use the Hilti PROFIS Anchor Design Software or perform a calculation by hand using the provisions of ACI and CSA to optimize the design. This is especially true when the Simplified Table calculation does not provide a value that satisfies the design requirements. The fact that a Simplified Table calculation does not exceed a design load does not mean the HIT-HY 200 Adhesive system will not fulfill the design requirements. Additional assistance can be given by your local Hilti representative.

2.4.10 Limitations Using Simplified Tables

There are additional limitations that the Simplified Tables do not consider:

- Load Combinations: Table values are meant to be used with the load combinations of ACI 318 Section 9.2 and CSA A23.3 Chapter 8.
- Supplementary Reinforcement: Table values, including reduction factors, are based on Condition B which does not consider the effects of supplementary reinforcement, nor is there an influence factor that can be applied to account for supplementary reinforcement.
- Eccentric loading: Currently, there is not a method for applying a factor to the tables to account for eccentric loading.
- Moments or Torsion: While a designer can apply a moment or torsion to the anchor system and obtain a specific load per anchor, the tables themselves do not have specific factors to account for moments or torsion applied to the anchor system.
- Standoff: Standoff is not considered in the steel design tables.
- Anchor layout: The Simplified Tables assume an orthogonal layout.

As stated above, while the Simplified Tables are limited in application, the designer can use the Hilti PROFIS Anchor Design Software which does account for the conditions noted above.

There may be additional applications not noted above. Contact Hilti with any questions for specific applications.

HIT-HY 200 Adhesive Anchoring System

2.4.13 Hilti HIT-HY 200 Adhesive with Hilti HAS Threaded Rod



Hilti HAS Threaded Rod Installation Conditions

Permissible Concrete Conditions	Uncracked Concrete	Dry Concrete	**Permissible Drilling Method**	Hammer Drilling with Carbide Tipped Drill Bit
	Cracked Concrete	Water Saturated Concrete		Hilti TE-CD or TE-YD Hollow Drill Bit

Hilti HAS Threaded Rod Installation Specifications

Nominal Rod Diameter	Drill Bit Diameter	Embedment Depth	Embedment Depth Range	Maximum Installation Torque	Minimum Base Material Thickness
ød in (mm)	$ød_0$ in	$h_{ef,std}$ in (mm)	h_{ef} in (mm)	T_{max} ft-lb (Nm)	h_{min} in (mm)
3/8 (9.5)	7/16	3-3/8 (86)	2-3/8 – 7-1/2 (60 – 191)	15 (20)	h_{ef} + 1-1/4 (h_{ef} + 30)
1/2 (12.7)	9/16	4-1/2 (114)	2-3/4 – 10 (70 – 254)	30 (41)	
5/8 (15.9)	3/4	5-5/8 (143)	3-1/8 – 12-1/2 (79 – 318)	60 (81)	h_{ef} + $2d_0$
3/4 (19.1)	7/8	6-3/4 (171)	3-1/2 – 15 (89 – 381)	100 (136)	
7/8 (22.2)	1	7-7/8 (200)	3-1/2 – 17-1/2 (89 – 445)	125 (169)	
1 (25.4)	1-1/8	9 (229)	4 – 20 (102 – 508)	150 (203)	
1-1/4 (31.8)	1-3/8	11-1/4 (286)	5 – 25 (127 – 635)	200 (271)	

d_f	HAS	3/8	1/2	5/8	3/4	7/8	1	1-1/4
$d_{f,1}$	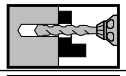	1/2	5/8	13/16*	15/16*	1-1/8*	1-1/4*	1-1/2*
$d_{f,2}$	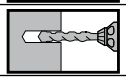	7/16	9/16	11/16	13/16	15/16	1-1/8*	1-3/8

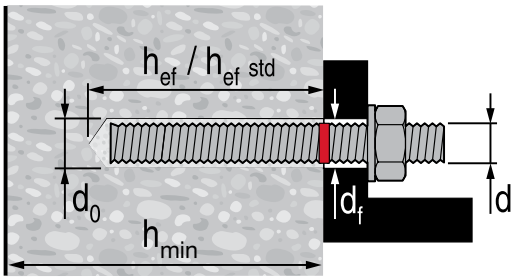





* Use two washers

Hilti HAS Threaded Rod Material Specifications

	Mechanical Properties			
	f_{ya}		Min. f_{uta}	
	ksi	(MPa)	ksi	(MPa)
Standard HAS-E rod material meets the requirements of ISO 898 Class 5.8	58	(400)	72.5	(500)
High Strength or 'Super HAS' rod material meets the requirements of ASTM A 193, Grade B7	105	(724)	125	(862)
Stainless HAS rod material meets the requirements of ASTM F 593 (AISI 304/316) Condition CW1 3/8" to 5/8"	65	(448)	100	(689)
Stainless HAS rod material meets the requirements of ASTM F 593 (AISI 304/316) Condition CW 3/4" to 1-1/4"	45	(310)	85	(586)
HAS Super & HAS-E Standard Nut Material meets the requirements of SAE J995 Grade 5				
HAS Stainless Steel Nut material meets the requirements of ASTM F 594				
HAS Standard and Stainless Steel Washers meet dimensional requirements of ANSI B18.22.1 Type A Plain				
HAS Stainless Steel Washers meet the requirements of AISI 304 or AISI 316 conforming to ASTM A 240				
HAS Super & HAS-E Standard Washers meet the requirements of ASTM F 884, HV				
All HAS Super Rods (except 7/8") & HAS-E Standard, nuts & washers are zinc plated to ASTM B 633 SC 1				
7/8" HAS Super rods hot-dip galvanized in accordance with ASTM A 153				
HAS Carbon steel HAS rods are furnished with a 0.005-mm-thick zinc electroplated coating				

Note: Special Order threaded rods may vary from standard materials.

HIT-HY 200 Adhesive Anchoring System

Table 48 — Hilti HIT-HY 200 Adhesive Design Strength (Factored Resistance) with Concrete / Bond Failure for Fractional Threaded Rod in Uncracked Concrete [1,2,3,4,5,6,7,8]

Anchor Diameter in. (mm)	Effective Embedment Depth in. (mm)	Tension — ΦN_n or N_r				Shear — ΦV_n or V_r			
		f'_c = 2500 psi (17.2 Mpa) lb (kN)	f'_c = 3000 psi (20.7 Mpa) lb (kN)	f'_c = 4000 psi (27.6 Mpa) lb (kN)	f'_c = 6000 psi (41.4 Mpa) lb (kN)	f'_c = 2500 psi (17.2 Mpa) lb (kN)	f'_c = 3000 psi (20.7 Mpa) lb (kN)	f'_c = 4000 psi (27.6 Mpa) lb (kN)	f'_c = 6000 psi (41.4 Mpa) lb (kN)
3/8 (9.5)	2-3/8 (60)	2,855 (12.7)	3,125 (13.9)	3,415 (15.2)	3,620 (16.1)	3,075 (13.7)	3,370 (15.0)	3,680 (16.4)	3,900 (17.3)
	3-3/8 (86)	4,835 (21.5)	4,855 (21.6)	4,855 (21.6)	5,150 (22.9)	10,415 (46.3)	10,460 (46.5)	10,460 (46.5)	11,085 (49.3)
	4-1/2 (114)	6,475 (28.8)	6,475 (28.8)	6,475 (28.8)	6,865 (30.5)	13,945 (62.0)	13,945 (62.0)	13,945 (62.0)	14,785 (65.8)
	7-1/2 (191)	10,790 (48.0)	10,790 (48.0)	10,790 (48.0)	11,440 (50.9)	23,245 (103.4)	23,245 (103.4)	23,245 (103.4)	24,640 (109.6)
1/2 (12.7)	2-3/4 (70)	3,555 (15.8)	3,895 (17.3)	4,500 (20.0)	5,510 (24.5)	7,660 (34.1)	8,395 (37.3)	9,690 (43.1)	11,870 (52.8)
	4-1/2 (114)	7,445 (33.1)	8,155 (36.3)	8,635 (38.4)	9,150 (40.7)	16,035 (71.3)	17,570 (78.2)	18,595 (82.7)	19,710 (87.7)
	6 (152)	11,465 (51.0)	11,510 (51.2)	11,510 (51.2)	12,200 (54.3)	24,690 (109.8)	24,795 (110.3)	24,795 (110.3)	26,280 (116.9)
	10 (254)	19,185 (85.3)	19,185 (85.3)	19,185 (85.3)	20,335 (90.5)	41,320 (183.8)	41,320 (183.8)	41,320 (183.8)	43,800 (194.8)
5/8 (15.9)	3-1/8 (79)	4,310 (19.2)	4,720 (21.0)	5,450 (24.2)	6,675 (29.7)	9,280 (41.3)	10,165 (45.2)	11,740 (52.2)	14,380 (64.0)
	5-5/8 (143)	10,405 (46.3)	11,400 (50.7)	13,165 (58.6)	14,300 (63.6)	22,415 (99.7)	24,550 (109.2)	28,350 (126.1)	30,795 (137.0)
	7-1/2 (191)	16,020 (71.3)	17,550 (78.1)	17,985 (80.0)	19,065 (84.8)	34,505 (153.5)	37,800 (168.1)	38,740 (172.3)	41,065 (182.7)
	12-1/2 (318)	29,975 (133.3)	29,975 (133.3)	29,975 (133.3)	31,775 (141.3)	64,565 (287.2)	64,565 (287.2)	64,565 (287.2)	68,440 (304.4)
3/4 (19.1)	3-1/2 (89)	5,105 (22.7)	5,595 (24.9)	6,460 (28.7)	7,910 (35.2)	11,000 (48.9)	12,050 (53.6)	13,915 (61.9)	17,040 (75.8)
	6-3/4 (171)	13,680 (60.9)	14,985 (66.7)	17,305 (77.0)	20,590 (91.6)	29,460 (131.0)	32,275 (143.6)	37,265 (165.8)	44,350 (197.3)
	9 (229)	21,060 (93.7)	23,070 (102.6)	25,900 (115.2)	27,455 (122.1)	45,360 (201.8)	49,690 (221.0)	55,785 (248.1)	59,130 (263.0)
	15 (381)	43,165 (192.0)	43,165 (192.0)	43,165 (192.0)	45,755 (203.5)	92,975 (413.6)	92,975 (413.6)	92,975 (413.6)	98,550 (438.4)
7/8 (22.2)	3-1/2 (89)	5,105 (22.7)	5,595 (24.9)	6,460 (28.7)	7,910 (35.2)	11,000 (48.9)	12,050 (53.6)	13,915 (61.9)	17,040 (75.8)
	7-7/8 (200)	17,235 (76.7)	18,885 (84.0)	21,805 (97.0)	26,705 (118.8)	37,125 (165.1)	40,670 (180.9)	46,960 (208.9)	57,515 (255.8)
	10-1/2 (267)	26,540 (118.1)	29,070 (129.3)	33,570 (149.3)	37,365 (166.2)	57,160 (254.3)	62,615 (278.5)	72,300 (321.6)	80,485 (358.0)
	17-1/2 (445)	57,100 (254.0)	58,755 (261.4)	58,755 (261.4)	62,280 (277.0)	122,990 (547.1)	126,545 (562.9)	126,545 (562.9)	134,140 (596.7)
1 (25.4)	4 (102)	6,240 (27.8)	6,835 (30.4)	7,895 (35.1)	9,665 (43.0)	13,440 (59.8)	14,725 (65.5)	17,000 (75.6)	20,820 (92.6)
	9 (229)	21,060 (93.7)	23,070 (102.6)	26,640 (118.5)	32,625 (145.1)	45,360 (201.8)	49,690 (221.0)	57,375 (255.2)	70,270 (312.6)
	12 (305)	32,425 (144.2)	35,520 (158.0)	41,015 (182.4)	48,805 (217.1)	69,835 (310.6)	76,500 (340.3)	88,335 (392.9)	105,120 (467.6)
	20 (508)	69,765 (310.3)	76,425 (340.0)	76,740 (341.4)	81,345 (361.8)	150,265 (668.4)	164,605 (732.2)	165,285 (735.2)	175,205 (779.3)
1-1/4 (31.8)	5 (127)	8,720 (38.8)	9,555 (42.5)	11,030 (49.1)	13,510 (60.1)	18,785 (83.6)	20,575 (91.5)	23,760 (105.7)	29,100 (129.4)
	11-1/4 (286)	29,430 (130.9)	32,240 (143.4)	37,230 (165.6)	45,595 (202.8)	63,395 (282.0)	69,445 (308.9)	80,185 (356.7)	98,205 (436.8)
	15 (381)	45,315 (201.6)	49,640 (220.8)	57,320 (255.0)	70,200 (312.3)	97,600 (434.1)	106,915 (475.6)	123,455 (549.2)	151,200 (672.6)
	25 (635)	97,500 (433.7)	106,805 (475.1)	119,905 (533.4)	127,100 (565.4)	210,000 (934.1)	230,045 (1023.3)	258,260 (1148.8)	273,755 (1217.7)

1 See Section 2.4 for explanation on development of load values.
2 See Section 2.4.6 to convert design strength (factored resistance) value to ASD value.
3 Linear interpolation between embedment depths and concrete compressive strengths is not permitted.
4 Apply spacing, edge distance, and concrete thickness factors in tables 52 - 65 as necessary. Compare to the steel values in tables 51 and 52. The lesser of the values is to be used for the design.
5 Data is for temperature range A: Max. short term temperature = 104° F (40° C), max. long term temperature = 75° F (24° C).
For temperature range B: Max. short term temperature = 176° F (80° C), max. long term temperature = 122° F (50° C) multiply above value by 0.80.
For temperature range C: Max. short term temperature = 248° F (120° C), max. long term temperature = 162° F (72° C) multiply above value by 0.70.
Short term elevated concrete temperatures are those that occur over brief intervals, e.g., as a result of diurnal cycling. Long term concrete temperatures are roughly constant over significant periods of time.
6 Tabular values are for dry concrete conditions. For water saturated concrete multiply design strength (factored resistance) by 0.85.
7 Tabular values are for short term loads only. For sustained loads including overhead use, see Section 2.4.8.
8 Tabular values are for normal weight concrete only. For lightweight concrete multiply design strength (factored resistance) by λ_a as follows:
For sand-lightweight, λ_a = 0.51. For all-lightweight, λ_a = 0.45.

HIT-HY 200 Adhesive Anchoring System

Table 49 — Hilti HIT-HY 200 Adhesive Design Strength (Factored Resistance) with Concrete / Bond Failure for Fractional Threaded Rod in Cracked Concrete [1,2,3,4,5,6,7,8,9]

Anchor Diameter in. (mm)	Effective Embedment Depth in. (mm)	Tension — ΦN_n or N_r				Shear — ΦV_n or V_r			
		f'_c = 2500 psi (17.2 Mpa) lb (kN)	f'_c = 3000 psi (20.7 Mpa) lb (kN)	f'_c = 4000 psi (27.6 Mpa) lb (kN)	f'_c = 6000 psi (41.4 Mpa) lb (kN)	f'_c = 2500 psi (17.2 Mpa) lb (kN)	f'_c = 3000 psi (20.7 Mpa) lb (kN)	f'_c = 4000 psi (27.6 Mpa) lb (kN)	f'_c = 6000 psi (41.4 Mpa) lb (kN)
3/8 (9.5)	2-3/8 (60)	1,900 (8.5)	1,900 (8.5)	1,900 (8.5)	2,015 (9.0)	2,045 (9.1)	2,045 (9.1)	2,045 (9.1)	2,165 (9.6)
	3-3/8 (86)	2,700 (12.0)	2,700 (12.0)	2,700 (12.0)	2,860 (12.7)	5,810 (25.8)	5,810 (25.8)	5,810 (25.8)	6,160 (27.4)
	4-1/2 (114)	3,600 (16.0)	3,600 (16.0)	3,600 (16.0)	3,815 (17.0)	7,750 (34.5)	7,750 (34.5)	7,750 (34.5)	8,215 (36.5)
	7-1/2 (191)	5,995 (26.7)	5,995 (26.7)	5,995 (26.7)	6,355 (28.3)	12,915 (57.4)	12,915 (57.4)	12,915 (57.4)	13,690 (60.9)
1/2 (12.7)	2-3/4 (70)	2,520 (11.2)	2,760 (12.3)	2,950 (13.1)	3,130 (13.9)	5,425 (24.1)	5,945 (26.4)	6,355 (28.3)	6,735 (30.0)
	4-1/2 (114)	4,830 (21.5)	4,830 (21.5)	4,830 (21.5)	5,120 (22.8)	10,400 (46.3)	10,400 (46.3)	10,400 (46.3)	11,025 (49.0)
	6 (152)	6,440 (28.6)	6,440 (28.6)	6,440 (28.6)	6,825 (30.4)	13,870 (61.7)	13,870 (61.7)	13,870 (61.7)	14,700 (65.4)
	10 (254)	10,730 (47.7)	10,730 (47.7)	10,730 (47.7)	11,375 (50.6)	23,115 (102.8)	23,115 (102.8)	23,115 (102.8)	24,500 (109.0)
5/8 (15.9)	3-1/8 (79)	3,050 (13.6)	3,345 (14.9)	3,860 (17.2)	4,470 (19.9)	6,575 (29.2)	7,200 (32.0)	8,315 (37.0)	9,625 (42.8)
	5-5/8 (143)	7,370 (32.8)	7,590 (33.8)	7,590 (33.8)	8,045 (35.8)	15,875 (70.6)	16,345 (72.7)	16,345 (72.7)	17,325 (77.1)
	7-1/2 (191)	10,120 (45.0)	10,120 (45.0)	10,120 (45.0)	10,725 (47.7)	21,790 (96.9)	21,790 (96.9)	21,790 (96.9)	23,100 (102.8)
	12-1/2 (318)	16,865 (75.0)	16,865 (75.0)	16,865 (75.0)	17,875 (79.5)	36,320 (161.6)	36,320 (161.6)	36,320 (161.6)	38,500 (171.3)
3/4 (19.1)	3-1/2 (89)	3,620 (16.1)	3,965 (17.6)	4,575 (20.4)	5,605 (24.9)	7,790 (34.7)	8,535 (38.0)	9,855 (43.8)	12,070 (53.7)
	6-3/4 (171)	9,690 (43.1)	10,615 (47.2)	10,980 (48.8)	11,635 (51.8)	20,870 (92.8)	22,860 (101.7)	23,645 (105.2)	25,065 (111.5)
	9 (229)	14,640 (65.1)	14,640 (65.1)	14,640 (65.1)	15,515 (69.0)	31,530 (140.3)	31,530 (140.3)	31,530 (140.3)	33,420 (148.7)
	15 (381)	24,395 (108.5)	24,395 (108.5)	24,395 (108.5)	25,860 (115.0)	52,550 (233.8)	52,550 (233.8)	52,550 (233.8)	55,700 (247.8)
7/8 (22.2)	3-1/2 (89)	3,620 (16.1)	3,965 (17.6)	4,575 (20.4)	5,605 (24.9)	7,790 (34.7)	8,535 (38.0)	9,855 (43.8)	12,070 (53.7)
	7-7/8 (200)	12,210 (54.3)	12,665 (56.3)	12,665 (56.3)	13,425 (59.7)	26,300 (117.0)	27,275 (121.3)	27,275 (121.3)	28,910 (128.6)
	10-1/2 (267)	16,885 (75.1)	16,885 (75.1)	16,885 (75.1)	17,900 (79.6)	36,370 (161.8)	36,370 (161.8)	36,370 (161.8)	38,550 (171.5)
	17-1/2 (445)	28,140 (125.2)	28,140 (125.2)	28,140 (125.2)	29,830 (132.7)	60,615 (269.6)	60,615 (269.6)	60,615 (269.6)	64,250 (285.8)
1 (25.4)	4 (102)	4,420 (19.7)	4,840 (21.5)	5,590 (24.9)	6,845 (30.4)	9,520 (42.3)	10,430 (46.4)	12,040 (53.6)	14,750 (65.6)
	9 (229)	14,920 (66.4)	16,340 (72.7)	16,615 (73.9)	17,610 (78.3)	32,130 (142.9)	35,195 (156.6)	35,785 (159.2)	37,930 (168.7)
	12 (305)	22,150 (98.5)	22,150 (98.5)	22,150 (98.5)	23,480 (104.4)	47,710 (212.2)	47,710 (212.2)	47,710 (212.2)	50,575 (225.0)
	20 (508)	36,920 (164.2)	36,920 (164.2)	36,920 (164.2)	39,135 (174.1)	79,520 (353.7)	79,520 (353.7)	79,520 (353.7)	84,290 (374.9)
1-1/4 (31.8)	5 (127)	6,175 (27.5)	6,765 (30.1)	7,815 (34.8)	9,570 (42.6)	13,305 (59.2)	14,575 (64.8)	16,830 (74.9)	20,610 (91.7)
	11-1/4 (286)	20,850 (92.7)	22,840 (101.6)	26,130 (116.2)	27,700 (123.2)	44,905 (199.7)	49,190 (218.8)	56,285 (250.4)	59,660 (265.4)
	5 (381)	32,095 (142.8)	34,840 (155.0)	34,840 (155.0)	36,935 (164.3)	69,135 (307.5)	75,045 (333.8)	75,045 (333.8)	79,545 (353.8)
	25 (635)	58,070 (258.3)	58,070 (258.3)	58,070 (258.3)	61,555 (273.8)	125,075 (556.4)	125,075 (556.4)	125,075 (556.4)	132,580 (589.7)

1 See Section 2.4 for explanation on development of load values.
2 See Section 2.4.6 to convert design strength (factored resistance) value to ASD value.
3 Linear interpolation between embedment depths and concrete compressive strengths is not permitted.
4 Apply spacing, edge distance, and concrete thickness factors in tables 52 - 65 as necessary. Compare to the steel values in tables 51 and 52. The lesser of the values is to be used for the design.
5 Data is for temperature range A: Max. short term temperature = 104° F (40° C), max. long term temperature = 75° F (24° C).
For temperature range B: Max. short term temperature = 176° F (80° C), max. long term temperature = 122° F (50° C) multiply above value by 0.80.
For temperature range C: Max. short term temperature = 248° F (120° C), max. long term temperature = 162° F (72° C) multiply above value by 0.70.
Short term elevated concrete temperatures are those that occur over brief intervals, e.g., as a result of diurnal cycling. Long term concrete temperatures are roughly constant over significant periods of time.
6 Tabular values are for dry concrete conditions. For water saturated concrete multiply design strength (factored resistance) by 0.85.
7 Tabular values are for short term loads only. For sustained loads including overhead use, see Section 2.4.8.
8 Tabular values are for normal weight concrete only. For lightweight concrete multiply design strength (factored resistance) by λ_a as follows:
For sand-lightweight, λ_a = 0.51. For all-lightweight, λ_a = 0.45.
9 Tabular values are for static loads only. For seismic loads, multiply cracked concrete tabular values by the following reduction factors:
3/8-in to 3/4-in diameter - α_{seis} = 0.60
7/8-in to 1-1/4-in diameter - α_{seis} = 0.75
See Section 2.4.7 for additional information on seismic applications.

HIT-HY 200 Adhesive Anchoring System

Table 50 — Steel Design Strength (ACI 318 Appendix D Based Design) for Hilti HAS Threaded Rods [3]

Anchor Diameter in. (mm)	HAS Standard ISO 898 Class 5.8 [5]			HAS-Super ASTM A193 B7 [5]			HAS SS AISI 304/316 SS [5]		
	Tensile[1] ϕN_{sa} lb (kN)	Shear[2] ϕV_{sa} lb (kN)	$\alpha_{seis,V}$ [4]	Tensile[1] ϕN_{sa} lb (kN)	Shear[2] ϕV_{sa} lb (kN)	$\alpha_{seis,V}$ [4]	Tensile[1] ϕN_{sa} lb (kN)	Shear[2] ϕV_{sa} lb (kN)	$\alpha_{seis,V}$ [4]
3/8 (9.5)	3,655 (16.3)	1,685 (7.5)	0.7	7,265 (32.3)	3,150 (14.0)	0.7	5,040 (22.4)	2,325 (10.3)	0.7
1/2 (12.7)	6,690 (29.8)	3,705 (16.5)	0.7	13,300 (59.2)	6,915 (30.8)	0.7	9,225 (41.0)	5,110 (22.7)	0.7
5/8 (15.9)	10,650 (47.4)	5,900 (26.2)	0.7	21,190 (94.3)	11,020 (49.0)	0.7	14,690 (65.3)	8,135 (36.2)	0.7
3/4 (19.1)	15,765 (70.1)	8,730 (38.8)	0.7	31,360 (139.5)	16,305 (72.5)	0.7	18,480 (82.2)	10,235 (45.5)	0.7
7/8 (22.2)	21,755 (96.8)	12,050 (53.6)	0.7	43,285 (192.5)	22,505 (100.1)	0.7	25,510 (113.5)	14,125 (62.8)	0.7
1 (25.4)	28,540 (127.0)	15,805 (70.3)	0.7	56,785 (252.6)	29,525 (131.3)	0.7	33,465 (148.9)	18,535 (82.4)	0.7
1-1/4 (31.8)	45,670 (203.1)	25,295 (112.5)	0.7	90,850 (404.1)	47,240 (210.1)	0.7	53,540 (238.2)	29,655 (131.9)	0.7

1 Tensile = $\phi A_{se,N} f_{uta}$ as noted in ACI 318 Appendix D
2 Shear = ϕ 0.60 $A_{se,N} f_{uta}$ as noted in ACI 318 Appendix D
3 See Section 2.4.6 to convert design strength (factored resistance) value to ASD value.
4 Reduction factor for seismic shear only. See Section 2.4.7 for additional information on seismic applications.
5 HAS Super rods are considered ductile steel elements. HAS Standard and HAS SS rods are considered brittle steel elements.

Table 51 — Steel Factored Resistance (CSA A23.3 Annex D Based Design) for Hilti HAS Threaded Rods [3]

Anchor Diameter in. (mm)	HAS Standard ISO 898 Class 5.8 [5]			HAS-Super ASTM A193 B7 [5]			HAS SS AISI 304/316 SS [5]		
	Tensile[1] ϕN_{sr} lb (kN)	Shear[2] ϕV_{sr} lb (kN)	$\alpha_{seis,V}$ [4]	Tensile[1] ϕN_{sr} lb (kN)	Shear[2] ϕV_{sr} lb (kN)	$\alpha_{seis,V}$ [4]	Tensile[1] ϕN_{sr} lb (kN)	Shear[2] ϕV_{sr} lb (kN)	$\alpha_{seis,V}$ [4]
3/8 (9.5)	3,345 (14.9)	1,555 (6.9)	0.7	6,585 (29.3)	3,090 (13.7)	0.7	4,610 (20.5)	2,140 (9.5)	0.7
1/2 (12.7)	6,125 (27.2)	3,410 (15.2)	0.7	12,060 (53.6)	6,785 (30.2)	0.7	8,445 (37.6)	4,705 (20.9)	0.7
5/8 (15.9)	9,750 (43.4)	5,430 (24.2)	0.7	19,210 (85.4)	10,805 (48.1)	0.7	13,445 (59.8)	7,490 (33.3)	0.7
3/4 (19.1)	14,430 (64.2)	8,040 (35.8)	0.7	28,430 (126.5)	15,990 (71.1)	0.7	16,915 (75.2)	9,425 (41.9)	0.7
7/8 (22.2)	19,915 (88.6)	11,095 (49.4)	0.7	39,245 (174.6)	22,075 (98.2)	0.7	23,350 (103.9)	13,010 (57.9)	0.7
1 (25.4)	26,125 (116.2)	14,555 (64.7)	0.7	51,485 (229.0)	28,960 (128.8)	0.7	30,635 (136.3)	17,065 (75.9)	0.7
1-1/4 (31.8)	41,805 (186.0)	23,290 (103.6)	0.7	82,370 (366.4)	46,335 (206.1)	0.7	49,010 (218.0)	27,305 (121.5)	0.7

1 Tensile = A_{se} ϕ_s f_{ut} R as noted in CSA A23.3 Annex D
2 Shear = A_{se} ϕ_s 0.60 f_{ut} R as noted in CSA A23.3 Annex D
3 See Section 2.4.6 to convert design strength (factored resistance) value to ASD value.
4 Reduction factor for seismic shear only. See Section 2.4.7 for additional information on seismic applications.
5 HAS Super rods are considered ductile steel elements. HAS Standard and HAS SS rods are considered brittle steel elements.

HIT-HY 200 Adhesive Anchoring System

Table 52 — Load Adjustment Factors for 3/8-in. Diameter Fractional Threaded Rods in Uncracked Concrete [1,2]

3/8 in Uncracked Concrete		Spacing Factor in Tension f_{AN}				Edge Distance Factor in Tension f_{RN}				Spacing Factor in Shear[3] f_{AV}				Edge Distance in Shear ⊥ Toward Edge f_{RV}				Edge Distance in Shear ∥ To Edge f_{RV}				Conc. Thickness Factor in Shear[4] f_{HV}			
Embedment h_{ef} in (mm)		2-3/8 (60)	3-3/8 (86)	4-1/2 (114)	7-1/2 (191)	2-3/8 (60)	3-3/8 (86)	4-1/2 (114)	7-1/2 (191)	2-3/8 (60)	3-3/8 (86)	4-1/2 (114)	7-1/2 (191)	2-3/8 (60)	3-3/8 (86)	4-1/2 (114)	7-1/2 (191)	2-3/8 (60)	3-3/8 (86)	4-1/2 (114)	7-1/2 (191)	2-3/8 (60)	3-3/8 (86)	4-1/2 (114)	7-1/2 (191)
Spacing (s) / Edge Distance (c_{a1}) / Concrete Thickness (h), — in (mm)	1-3/4 (44)	n/a	n/a	n/a	n/a	0.37	0.30	0.22	0.13	n/a	n/a	n/a	n/a	0.23	0.07	0.05	0.03	0.44	0.14	0.11	0.06	n/a	n/a	n/a	n/a
	1-7/8 (48)	0.59	0.59	0.57	0.54	0.38	0.31	0.23	0.13	0.57	0.53	0.53	0.52	0.25	0.08	0.06	0.04	0.38	0.16	0.12	0.07	n/a	n/a	n/a	n/a
	2 (51)	0.60	0.60	0.57	0.54	0.40	0.32	0.23	0.14	0.57	0.53	0.53	0.52	0.28	0.09	0.06	0.04	0.40	0.17	0.13	0.08	n/a	n/a	n/a	n/a
	3 (76)	0.65	0.65	0.61	0.57	0.51	0.39	0.28	0.17	0.61	0.55	0.54	0.53	0.51	0.16	0.12	0.07	0.51	0.32	0.24	0.14	n/a	n/a	n/a	n/a
	3-5/8 (92)	0.68	0.68	0.63	0.58	0.60	0.44	0.32	0.19	0.63	0.56	0.55	0.53	0.68	0.21	0.16	0.09	0.60	0.42	0.32	0.19	0.72	n/a	n/a	n/a
	4 (102)	0.69	0.69	0.65	0.59	0.66	0.47	0.34	0.20	0.64	0.57	0.55	0.54	0.79	0.24	0.18	0.11	0.66	0.47	0.37	0.22	0.75	n/a	n/a	n/a
	4-5/8 (117)	0.72	0.72	0.67	0.60	0.76	0.52	0.38	0.22	0.66	0.58	0.56	0.54	0.98	0.30	0.23	0.14	0.76	0.52	0.41	0.27	0.81	0.55	n/a	n/a
	5 (127)	0.74	0.74	0.69	0.61	0.82	0.55	0.40	0.23	0.68	0.58	0.57	0.55	1.00	0.34	0.26	0.15	0.82	0.55	0.43	0.31	0.84	0.57	n/a	n/a
	5-3/4 (146)	0.78	0.78	0.71	0.63	0.95	0.63	0.46	0.27	0.70	0.59	0.58	0.55		0.42	0.31	0.19	0.95	0.63	0.48	0.34	0.91	0.61	0.56	n/a
	6 (152)	0.79	0.79	0.72	0.63	0.99	0.66	0.48	0.28	0.71	0.60	0.58	0.56		0.45	0.34	0.20	0.99	0.66	0.49	0.34	0.92	0.63	0.57	n/a
	7 (178)	0.84	0.84	0.76	0.66	1.00	0.77	0.56	0.32	0.75	0.61	0.59	0.57		0.57	0.42	0.25	1.00	0.77	0.56	0.37	1.00	0.68	0.61	n/a
	8 (203)	0.89	0.89	0.80	0.68		0.88	0.64	0.37	0.79	0.63	0.61	0.58		0.69	0.52	0.31		0.88	0.64	0.41	1.00	0.72	0.66	n/a
	8-3/4 (222)	0.93	0.93	0.82	0.69		0.96	0.70	0.41	0.81	0.64	0.62	0.58		0.79	0.59	0.35		0.96	0.70	0.43		0.76	0.69	0.58
	9 (229)	0.94	0.94	0.83	0.70		0.99	0.72	0.42	0.82	0.65	0.62	0.59		0.83	0.62	0.37		0.99	0.72	0.44		0.77	0.69	0.59
	10 (254)	0.99	0.99	0.87	0.72		1.00	0.80	0.46	0.86	0.66	0.63	0.60		0.97	0.72	0.43		1.00	0.80	0.48		0.81	0.73	0.62
	11 (279)	1.00	1.00	0.91	0.74			0.88	0.51	0.89	0.68	0.65	0.60		1.00	0.83	0.50			0.88	0.51		0.85	0.77	0.65
	12 (305)			0.94	0.77			0.96	0.56	0.93	0.70	0.66	0.61			0.95	0.57			0.96	0.56		0.88	0.80	0.68
	14 (356)			1.00	0.81			1.00	0.65	1.00	0.73	0.69	0.63			1.00	0.72			1.00	0.65		0.96	0.87	0.73
	16 (406)				0.86				0.74	1.00	0.76	0.71	0.65				0.88				0.74		1.00	0.93	0.78
	18 (457)				0.90				0.83		0.79	0.74	0.67				1.00				0.83			0.98	0.83
	24 (610)				1.00				1.00		0.89	0.82	0.73								1.00			1.00	0.96
	30 (762)										0.99	0.90	0.79												1.00
	36 (914)										1.00	0.98	0.84												
	>48 (1219)											1.00	0.96												

Table 53 — Load Adjustment Factors for 3/8-in. Diameter Fractional Threaded Rods in Cracked Concrete [1,2]

3/8 in Cracked Concrete		Spacing Factor in Tension f_{AN}				Edge Distance Factor in Tension f_{RN}				Spacing Factor in Shear[3] f_{AV}				Edge Distance in Shear ⊥ Toward Edge f_{RV}				Edge Distance in Shear ∥ To Edge f_{RV}				Conc. Thickness Factor in Shear[4] f_{HV}			
Embedment h_{ef} in (mm)		2-3/8 (60)	3-3/8 (86)	4-1/2 (114)	7-1/2 (191)	2-3/8 (60)	3-3/8 (86)	4-1/2 (114)	7-1/2 (191)	2-3/8 (60)	3-3/8 (86)	4-1/2 (114)	7-1/2 (191)	2-3/8 (60)	3-3/8 (86)	4-1/2 (114)	7-1/2 (191)	2-3/8 (60)	3-3/8 (86)	4-1/2 (114)	7-1/2 (191)	2-3/8 (60)	3-3/8 (86)	4-1/2 (114)	7-1/2 (191)
Spacing (s) / Edge Distance (c_{a1}) / Concrete Thickness (h), — in (mm)	1-3/4 (44)	n/a	n/a	n/a	n/a	0.54	0.54	0.49	0.43	n/a	n/a	n/a	n/a	0.25	0.09	0.07	0.04	0.49	0.18	0.14	0.08	n/a	n/a	n/a	n/a
	1-7/8 (48)	0.59	0.59	0.57	0.54	0.55	0.55	0.50	0.44	0.57	0.54	0.53	0.52	0.27	0.10	0.08	0.05	0.55	0.20	0.15	0.09	n/a	n/a	n/a	n/a
	2 (51)	0.60	0.60	0.57	0.54	0.57	0.57	0.51	0.44	0.57	0.54	0.53	0.52	0.30	0.11	0.08	0.05	0.60	0.22	0.17	0.10	n/a	n/a	n/a	n/a
	3 (76)	0.65	0.65	0.61	0.57	0.69	0.69	0.60	0.49	0.61	0.56	0.55	0.53	0.55	0.20	0.15	0.09	0.88	0.41	0.30	0.18	n/a	n/a	n/a	n/a
	3-5/8 (92)	0.68	0.68	0.63	0.58	0.78	0.78	0.66	0.53	0.64	0.57	0.56	0.54	0.73	0.27	0.20	0.12	1.00	0.54	0.41	0.24	0.74	n/a	n/a	n/a
	4 (102)	0.69	0.69	0.65	0.59	0.83	0.83	0.70	0.55	0.65	0.58	0.56	0.55	0.85	0.31	0.23	0.14		0.63	0.47	0.28	0.77	n/a	n/a	n/a
	4-5/8 (117)	0.72	0.72	0.67	0.60	0.92	0.92	0.76	0.58	0.67	0.59	0.57	0.55	1.00	0.39	0.29	0.18		0.78	0.58	0.35	0.83	0.60	n/a	n/a
	5 (127)	0.74	0.74	0.69	0.61	0.98	0.98	0.80	0.60	0.69	0.60	0.58	0.56		0.44	0.33	0.20		0.87	0.66	0.39	0.86	0.62	n/a	n/a
	5-3/4 (146)	0.78	0.78	0.71	0.63	1.00	1.00	0.88	0.64	0.71	0.61	0.59	0.56		0.54	0.40	0.24		1.00	0.81	0.49	0.93	0.66	0.60	n/a
	6 (152)	0.79	0.79	0.72	0.63			0.91	0.66	0.72	0.62	0.60	0.57		0.58	0.43	0.26			0.86	0.52	0.95	0.68	0.62	n/a
	7 (178)	0.84	0.84	0.76	0.66			1.00	0.72	0.76	0.63	0.61	0.58		0.72	0.54	0.33			1.00	0.65	1.00	0.73	0.67	n/a
	8 (203)	0.89	0.89	0.80	0.68				0.78	0.80	0.65	0.63	0.59		0.89	0.66	0.40				0.78		0.78	0.71	n/a
	8-3/4 (222)	0.93	0.93	0.82	0.69				0.83	0.83	0.67	0.64	0.60		1.00	0.76	0.46				0.83		0.82	0.74	0.63
	9 (229)	0.94	0.94	0.83	0.70				0.85	0.84	0.67	0.64	0.60			0.79	0.48				0.85		0.83	0.76	0.64
	10 (254)	0.99	0.99	0.87	0.72				0.91	0.87	0.69	0.66	0.61			0.93	0.56				0.91		0.88	0.80	0.67
	11 (279)	1.00	1.00	0.91	0.74				0.98	0.91	0.71	0.67	0.62			1.00	0.64				0.98		0.92	0.84	0.70
	12 (305)			0.94	0.77				1.00	0.95	0.73	0.69	0.64				0.73				1.00		0.96	0.87	0.74
	14 (356)			1.00	0.81					1.00	0.77	0.72	0.66				0.92						1.00	0.94	0.79
	16 (406)				0.86						0.81	0.75	0.68				1.00							1.00	0.85
	18 (457)				0.90						0.85	0.79	0.70												0.90
	24 (610)				1.00						0.96	0.88	0.77												1.00
	30 (762)										1.00	0.98	0.84												
	36 (914)											1.00	0.91												
	>48 (1219)												1.00												

1 Linear interpolation not permitted
2 Shaded area with reduced edge distance is permitted provided the installation torque is reduced to 0.30 T_{max} for $5d \le s \le$ 16-in. and to 0.5 T_{max} for $s >$ 16-in.
3 Spacing factor reduction in shear, f_{AV}, assumes an influence of a nearby edge. If no edge exists, then $f_{AV} = f_{AN}$.
4 Concrete thickness reduction factor in shear, f_{HV}, assumes an influence of a nearby edge. If no edge exists, then $f_{HV} = 1.0$.

HIT-HY 200 Adhesive Anchoring System

Table 54 — Load Adjustment Factors for 1/2-in. Diameter Fractional Threaded Rods in Uncracked Concrete [1,2]

1/2 in Uncracked Concrete		Spacing Factor in Tension f_{AN}				Edge Distance Factor in Tension f_{RN}				Spacing Factor in Shear [3] f_{AV}				Edge Distance in Shear ⊥ Toward Edge f_{RV}				Edge Distance in Shear ∥ To Edge f_{RV}				Conc. Thickness Factor in Shear [4] f_{HV}			
Embedment h_{ef} in (mm)		2-3/4 (70)	4-1/2 (114)	6 (152)	10 (254)	2-3/4 (70)	4-1/2 (114)	6 (152)	10 (254)	2-3/4 (70)	4-1/2 (114)	6 (152)	10 (254)	2-3/4 (70)	4-1/2 (114)	6 (152)	10 (254)	2-3/4 (70)	4-1/2 (114)	6 (152)	10 (254)	2-3/4 (70)	4-1/2 (114)	6 (152)	10 (254)
Spacing (s) / Edge Distance (c_a) / Concrete Thickness (h), — in (mm)	1-3/4 (44)	n/a	n/a	n/a	n/a	0.34	0.26	0.20	0.11	n/a	n/a	n/a	n/a	0.10	0.05	0.03	0.02	0.21	0.11	0.07	0.04	n/a	n/a	n/a	n/a
	2-1/2 (64)	0.59	0.59	0.57	0.54	0.40	0.30	0.22	0.13	0.55	0.53	0.53	0.52	0.18	0.09	0.06	0.04	0.35	0.18	0.12	0.07	n/a	n/a	n/a	n/a
	3 (76)	0.61	0.61	0.58	0.55	0.45	0.32	0.24	0.14	0.56	0.54	0.53	0.52	0.23	0.12	0.08	0.05	0.45	0.24	0.15	0.09	n/a	n/a	n/a	n/a
	4 (102)	0.65	0.65	0.61	0.57	0.56	0.38	0.28	0.16	0.58	0.55	0.54	0.53	0.36	0.18	0.12	0.07	0.56	0.37	0.24	0.14	0.58	n/a	n/a	n/a
	5 (127)	0.68	0.68	0.64	0.58	0.69	0.43	0.32	0.19	0.60	0.57	0.55	0.54	0.50	0.26	0.17	0.10	0.69	0.43	0.33	0.20	0.65	n/a	n/a	n/a
	5-3/4 (146)	0.71	0.71	0.66	0.60	0.80	0.48	0.35	0.21	0.62	0.58	0.56	0.54	0.61	0.32	0.21	0.12	0.80	0.48	0.39	0.25	0.69	0.56	n/a	n/a
	6 (152)	0.72	0.72	0.67	0.60	0.83	0.49	0.36	0.21	0.63	0.58	0.56	0.54	0.65	0.34	0.22	0.13	0.83	0.49	0.40	0.26	0.71	0.57	n/a	n/a
	7 (178)	0.76	0.76	0.69	0.62	0.97	0.56	0.41	0.24	0.65	0.59	0.57	0.55	0.82	0.42	0.28	0.16	0.97	0.56	0.44	0.32	0.77	0.61	n/a	n/a
	7-1/4 (184)	0.76	0.76	0.70	0.62	1.00	0.58	0.43	0.25	0.65	0.60	0.57	0.55	0.87	0.45	0.29	0.17	1.00	0.58	0.45	0.32	0.78	0.62	0.54	n/a
	8 (203)	0.79	0.79	0.72	0.63		0.64	0.47	0.27	0.67	0.61	0.58	0.56	1.00	0.52	0.34	0.20		0.64	0.48	0.34	0.82	0.66	0.57	n/a
	9 (229)	0.83	0.83	0.75	0.65		0.72	0.53	0.31	0.69	0.62	0.59	0.56		0.62	0.40	0.24		0.72	0.53	0.36	0.87	0.70	0.60	n/a
	10 (254)	0.86	0.86	0.78	0.67		0.80	0.59	0.34	0.71	0.63	0.60	0.57		0.72	0.47	0.28		0.80	0.59	0.39	0.92	0.73	0.64	n/a
	11-1/4 (286)	0.91	0.91	0.81	0.69		0.90	0.66	0.39	0.74	0.65	0.61	0.58		0.86	0.56	0.34		0.90	0.66	0.42	0.97	0.78	0.67	0.57
	12 (305)	0.94	0.94	0.83	0.70		0.96	0.70	0.41	0.75	0.66	0.62	0.59		0.95	0.62	0.37		0.96	0.70	0.44	1.00	0.80	0.70	0.59
	14 (356)	1.00	1.00	0.89	0.73		1.00	0.82	0.48	0.79	0.69	0.64	0.60		1.00	0.78	0.47		1.00	0.82	0.49		0.87	0.75	0.63
	16 (406)			0.94	0.77			0.94	0.55	0.83	0.72	0.66	0.61			0.95	0.57			0.94	0.55		0.93	0.80	0.68
	18 (457)			1.00	0.80			1.00	0.62	0.88	0.74	0.68	0.63			1.00	0.68			1.00	0.62		0.98	0.85	0.72
	20 (508)				0.83				0.69	0.92	0.77	0.70	0.64				0.80				0.69		1.00	0.90	0.76
	22 (559)				0.87				0.76	0.96	0.80	0.72	0.66				0.92				0.76			0.94	0.79
	24 (610)				0.90				0.82	1.00	0.82	0.74	0.67				1.00				0.82			0.98	0.83
	30 (762)				1.00				1.00		0.90	0.80	0.71								1.00			1.00	0.93
	36 (914)										0.98	0.86	0.76												1.00
	>48 (1219)										1.00	0.98	0.84												

Table 55 — Load Adjustment Factors for 1/2-in. Diameter Fractional Threaded Rods in Cracked Concrete [1,2]

1/2 in Cracked Concrete		Spacing Factor in Tension f_{AN}				Edge Distance Factor in Tension f_{RN}				Spacing Factor in Shear [3] f_{AV}				Edge Distance in Shear ⊥ Toward Edge f_{RV}				Edge Distance in Shear ∥ To Edge f_{RV}				Conc. Thickness Factor in Shear [4] f_{HV}			
Embedment h_{ef} in (mm)		2-3/4 (70)	4-1/2 (114)	6 (152)	10 (254)	2-3/4 (70)	4-1/2 (114)	6 (152)	10 (254)	2-3/4 (70)	4-1/2 (114)	6 (152)	10 (254)	2-3/4 (70)	4-1/2 (114)	6 (152)	10 (254)	2-3/4 (70)	4-1/2 (114)	6 (152)	10 (254)	2-3/4 (70)	4-1/2 (114)	6 (152)	10 (254)
Spacing (s) / Edge Distance (c_a) / Concrete Thickness (h), — in (mm)	1-3/4 (44)	n/a	n/a	n/a	n/a	0.49	0.49	0.45	0.41	n/a	n/a	n/a	n/a	0.10	0.06	0.04	0.03	0.21	0.12	0.09	0.05	n/a	n/a	n/a	n/a
	2-1/2 (64)	0.59	0.59	0.57	0.54	0.55	0.55	0.50	0.44	0.55	0.54	0.53	0.52	0.18	0.10	0.07	0.04	0.35	0.20	0.15	0.09	n/a	n/a	n/a	n/a
	3 (76)	0.61	0.61	0.58	0.55	0.60	0.60	0.53	0.46	0.56	0.54	0.54	0.53	0.23	0.13	0.10	0.06	0.47	0.26	0.20	0.12	n/a	n/a	n/a	n/a
	4 (102)	0.65	0.65	0.61	0.57	0.69	0.69	0.60	0.49	0.58	0.56	0.55	0.53	0.36	0.20	0.15	0.09	0.72	0.40	0.30	0.18	0.58	n/a	n/a	n/a
	5 (127)	0.68	0.68	0.64	0.58	0.79	0.79	0.67	0.53	0.61	0.57	0.56	0.54	0.50	0.28	0.21	0.13	1.00	0.56	0.42	0.25	0.65	n/a	n/a	n/a
	5-3/4 (146)	0.71	0.71	0.66	0.60	0.88	0.88	0.73	0.56	0.62	0.58	0.57	0.55	0.62	0.35	0.26	0.16		0.70	0.52	0.31	0.70	0.57	n/a	n/a
	6 (152)	0.72	0.72	0.67	0.60	0.90	0.90	0.75	0.57	0.63	0.59	0.57	0.55	0.66	0.37	0.28	0.17		0.74	0.56	0.33	0.71	0.59	n/a	n/a
	7 (178)	0.76	0.76	0.69	0.62	1.00	1.00	0.83	0.62	0.65	0.60	0.58	0.56	0.83	0.47	0.35	0.21		0.94	0.70	0.42	0.77	0.63	n/a	n/a
	7-1/4 (184)	0.76	0.76	0.70	0.62			0.85	0.63	0.65	0.60	0.59	0.56	0.88	0.49	0.37	0.22		0.99	0.74	0.44	0.78	0.64	0.59	n/a
	8 (203)	0.79	0.79	0.72	0.63			0.91	0.66	0.67	0.61	0.59	0.57	1.00	0.57	0.43	0.26		1.00	0.86	0.51	0.82	0.68	0.62	n/a
	9 (229)	0.83	0.83	0.75	0.65			1.00	0.70	0.69	0.63	0.61	0.58		0.68	0.51	0.31			1.00	0.61	0.87	0.72	0.65	n/a
	10 (254)	0.86	0.86	0.78	0.67				0.75	0.71	0.64	0.62	0.58		0.80	0.60	0.36				0.72	0.92	0.76	0.69	n/a
	11-1/4 (286)	0.91	0.91	0.81	0.69				0.81	0.74	0.66	0.63	0.59		0.95	0.71	0.43				0.81	0.97	0.80	0.73	0.62
	12 (305)	0.94	0.94	0.83	0.70				0.85	0.75	0.67	0.64	0.60		1.00	0.79	0.47				0.85	1.00	0.83	0.75	0.64
	14 (356)	1.00	1.00	0.89	0.73				0.95	0.79	0.70	0.67	0.62			0.99	0.60				0.95		0.90	0.81	0.69
	16 (406)			0.94	0.77				1.00	0.84	0.73	0.69	0.63			1.00	0.73				1.00		0.96	0.87	0.73
	18 (457)			1.00	0.80					0.88	0.76	0.71	0.65				0.87						1.00	0.92	0.78
	20 (508)				0.83					0.92	0.79	0.74	0.67				1.00							0.97	0.82
	22 (559)				0.87					0.96	0.82	0.76	0.69											1.00	0.86
	24 (610)				0.90					1.00	0.84	0.78	0.70												0.90
	30 (762)				1.00						0.93	0.86	0.75												1.00
	36 (914)										1.00	0.93	0.80												
	>48 (1219)											1.00	0.90												

1 Linear interpolation not permitted
2 Shaded area with reduced edge distance is permitted provided the installation torque is reduced to 0.30 T_{max} for $5d \le s \le$ 16-in. and to 0.5 T_{max} for $s >$ 16-in.
3 Spacing factor reduction in shear, f_{AV}, assumes an influence of a nearby edge. If no edge exists, then $f_{AV} = f_{AN}$.
4 Concrete thickness reduction factor in shear, f_{HV}, assumes an influence of a nearby edge. If no edge exists, then $f_{HV} = 1.0$.

HIT-HY 200 Adhesive Anchoring System

Table 56 — Load Adjustment Factors for 5/8-in. Diameter Fractional Threaded Rods in Uncracked Concrete [1,2]

5/8 in Uncracked Concrete		Spacing Factor in Tension f_{AN}				Edge Distance Factor in Tension f_{RN}				Spacing Factor in Shear[3] f_{AV}				Edge Distance in Shear ⊥ Toward Edge f_{RV}				Edge Distance in Shear ∥ To Edge f_{RV}				Conc. Thickness Factor in Shear[4] f_{HV}			
Embedment h_{ef} in (mm)		3-1/8 (79)	5-5/8 (143)	7-1/2 (191)	12-1/2 (318)	3-1/8 (79)	5-5/8 (143)	7-1/2 (191)	12-1/2 (318)	3-1/8 (79)	5-5/8 (143)	7-1/2 (191)	12-1/2 (318)	3-1/8 (79)	5-5/8 (143)	7-1/2 (191)	12-1/2 (318)	3-1/8 (79)	5-5/8 (143)	7-1/2 (191)	12-1/2 (318)	3-1/8 (79)	5-5/8 (143)	7-1/2 (191)	12-1/2 (318)
Spacing (s) / Edge Distance (c_a) / Concrete Thickness (h), — in (mm)																									
1-3/4	(44)	n/a	n/a	n/a	n/a	0.33	0.25	0.18	0.11	n/a	n/a	n/a	n/a	0.09	0.04	0.03	0.01	0.19	0.08	0.06	0.03	n/a	n/a	n/a	n/a
3-1/8	(79)	0.59	0.59	0.57	0.54	0.44	0.30	0.22	0.13	0.56	0.54	0.53	0.52	0.22	0.10	0.07	0.04	0.44	0.20	0.13	0.07	n/a	n/a	n/a	n/a
4	(102)	0.62	0.62	0.59	0.55	0.52	0.33	0.25	0.14	0.58	0.55	0.53	0.52	0.32	0.15	0.10	0.05	0.52	0.29	0.19	0.10	n/a	n/a	n/a	n/a
4-5/8	(117)	0.63	0.63	0.60	0.56	0.59	0.36	0.27	0.16	0.59	0.55	0.54	0.53	0.40	0.18	0.12	0.06	0.59	0.36	0.24	0.13	0.60	n/a	n/a	n/a
5	(127)	0.65	0.65	0.61	0.57	0.63	0.38	0.28	0.16	0.60	0.56	0.54	0.53	0.45	0.21	0.13	0.07	0.63	0.38	0.27	0.14	0.63	n/a	n/a	n/a
6	(152)	0.68	0.68	0.63	0.58	0.76	0.42	0.31	0.18	0.62	0.57	0.55	0.53	0.59	0.27	0.18	0.09	0.76	0.42	0.35	0.19	0.69	n/a	n/a	n/a
7	(178)	0.70	0.70	0.66	0.59	0.86	0.47	0.34	0.20	0.64	0.58	0.56	0.54	0.75	0.34	0.22	0.12	0.88	0.47	0.38	0.24	0.74	n/a	n/a	n/a
7-1/8	(181)	0.71	0.71	0.66	0.60	0.87	0.47	0.35	0.20	0.64	0.58	0.56	0.54	0.77	0.35	0.23	0.12	0.90	0.47	0.38	0.24	0.75	0.57	n/a	n/a
8	(203)	0.73	0.73	0.68	0.61	0.95	0.52	0.38	0.22	0.66	0.59	0.57	0.55	0.91	0.41	0.27	0.14	1.00	0.52	0.41	0.29	0.79	0.61	n/a	n/a
9	(229)	0.76	0.76	0.70	0.62	1.00	0.57	0.42	0.25	0.68	0.60	0.58	0.55	1.00	0.50	0.32	0.17		0.57	0.45	0.32	0.84	0.65	0.56	n/a
10	(254)	0.79	0.79	0.72	0.63		0.64	0.47	0.27	0.70	0.62	0.59	0.56		0.58	0.38	0.20		0.64	0.48	0.34	0.89	0.68	0.59	n/a
11	(279)	0.82	0.82	0.74	0.65		0.70	0.52	0.30	0.72	0.63	0.60	0.56		0.67	0.43	0.23		0.70	0.52	0.36	0.93	0.71	0.62	n/a
12	(305)	0.85	0.85	0.77	0.66		0.77	0.56	0.33	0.74	0.64	0.60	0.57		0.76	0.50	0.26		0.77	0.56	0.38	0.97	0.75	0.65	n/a
14	(356)	0.91	0.91	0.81	0.69		0.89	0.66	0.38	0.77	0.66	0.62	0.58		0.96	0.62	0.33		0.89	0.66	0.41	1.00	0.81	0.70	0.57
16	(406)	0.97	0.97	0.86	0.71		1.00	0.75	0.44	0.81	0.69	0.64	0.59		1.00	0.76	0.41		1.00	0.75	0.46		0.86	0.75	0.61
18	(457)	1.00	1.00	0.90	0.74			0.84	0.49	0.85	0.71	0.66	0.60			0.91	0.49			0.84	0.50		0.91	0.79	0.64
20	(508)			0.94	0.77			0.94	0.55	0.89	0.73	0.67	0.61			1.00	0.57			0.94	0.55		0.96	0.83	0.68
22	(559)			0.99	0.79			1.00	0.60	0.93	0.75	0.69	0.63				0.66			1.00	0.60		1.00	0.87	0.71
24	(610)			1.00	0.82				0.66	0.97	0.78	0.71	0.64				0.75				0.66			0.91	0.74
26	(660)				0.85				0.71	1.00	0.80	0.73	0.65				0.84				0.71			0.95	0.77
28	(711)				0.87				0.77		0.82	0.74	0.66				0.94				0.77			0.99	0.80
30	(762)				0.90				0.82		0.85	0.76	0.67				1.00				0.82			1.00	0.83
36	(914)				0.98				0.99		0.92	0.81	0.71								0.99				0.91
>48	(1219)				1.00				1.00		1.00	0.92	0.77								1.00				1.00

Table 57 — Load Adjustment Factors for 5/8-in. Diameter Fractional Threaded Rods in Cracked Concrete [1,2]

5/8 in Cracked Concrete		Spacing Factor in Tension f_{AN}				Edge Distance Factor in Tension f_{RN}				Spacing Factor in Shear[3] f_{AV}				Edge Distance in Shear ⊥ Toward Edge f_{RV}				Edge Distance in Shear ∥ To Edge f_{RV}				Conc. Thickness Factor in Shear[4] f_{HV}			
Embedment h_{ef} in (mm)		3-1/8 (79)	5-5/8 (143)	7-1/2 (191)	12-1/2 (318)	3-1/8 (79)	5-5/8 (143)	7-1/2 (191)	12-1/2 (318)	3-1/8 (79)	5-5/8 (143)	7-1/2 (191)	12-1/2 (318)	3-1/8 (79)	5-5/8 (143)	7-1/2 (191)	12-1/2 (318)	3-1/8 (79)	5-5/8 (143)	7-1/2 (191)	12-1/2 (318)	3-1/8 (79)	5-5/8 (143)	7-1/2 (191)	12-1/2 (318)
Spacing (s) / Edge Distance (c_a) / Concrete Thickness (h), — in (mm)																									
1-3/4	(44)	n/a	n/a	n/a	n/a	0.46	0.46	0.43	0.40	n/a	n/a	n/a	n/a	0.09	0.04	0.03	0.02	0.19	0.09	0.06	0.04	n/a	n/a	n/a	n/a
3-1/8	(79)	0.59	0.59	0.57	0.54	0.55	0.55	0.50	0.44	0.56	0.54	0.53	0.52	0.22	0.10	0.07	0.04	0.45	0.20	0.15	0.09	n/a	n/a	n/a	n/a
4	(102)	0.62	0.62	0.59	0.55	0.62	0.62	0.55	0.46	0.58	0.55	0.54	0.53	0.33	0.15	0.11	0.06	0.65	0.30	0.22	0.13	n/a	n/a	n/a	n/a
4-5/8	(117)	0.63	0.63	0.60	0.56	0.66	0.66	0.58	0.48	0.59	0.55	0.54	0.53	0.40	0.18	0.13	0.08	0.81	0.37	0.27	0.16	0.60	n/a	n/a	n/a
5	(127)	0.65	0.65	0.61	0.57	0.69	0.69	0.60	0.49	0.60	0.56	0.55	0.53	0.45	0.21	0.15	0.09	0.91	0.41	0.30	0.18	0.63	n/a	n/a	n/a
6	(152)	0.68	0.68	0.63	0.58	0.77	0.77	0.66	0.53	0.62	0.57	0.56	0.54	0.60	0.27	0.20	0.12	1.00	0.54	0.40	0.24	0.69	n/a	n/a	n/a
7	(178)	0.70	0.70	0.66	0.59	0.86	0.86	0.72	0.56	0.64	0.58	0.57	0.55	0.75	0.34	0.25	0.15		0.68	0.50	0.30	0.74	n/a	n/a	n/a
7-1/8	(181)	0.71	0.71	0.66	0.60	0.87	0.87	0.73	0.56	0.64	0.58	0.57	0.55	0.77	0.35	0.26	0.15		0.70	0.51	0.31	0.75	0.58	n/a	n/a
8	(203)	0.73	0.73	0.68	0.61	0.95	0.95	0.78	0.59	0.66	0.59	0.58	0.55	0.92	0.42	0.30	0.18		0.84	0.61	0.37	0.79	0.61	n/a	n/a
9	(229)	0.76	0.76	0.70	0.62	1.00	1.00	0.85	0.62	0.68	0.60	0.58	0.56	1.00	0.50	0.36	0.22		1.00	0.73	0.44	0.84	0.65	0.58	n/a
10	(254)	0.79	0.79	0.72	0.63			0.91	0.66	0.70	0.62	0.59	0.57		0.58	0.43	0.26		1.00	0.85	0.51	0.89	0.68	0.61	n/a
11	(279)	0.82	0.82	0.74	0.65			0.98	0.69	0.72	0.63	0.60	0.57		0.67	0.49	0.29			0.98	0.59	0.93	0.72	0.64	n/a
12	(305)	0.85	0.85	0.77	0.66			1.00	0.73	0.74	0.64	0.61	0.58		0.77	0.56	0.34			1.00	0.67	0.97	0.75	0.67	n/a
14	(356)	0.91	0.91	0.81	0.69				0.81	0.78	0.66	0.63	0.59		0.97	0.71	0.42				0.81	1.00	0.81	0.73	0.61
16	(406)	0.97	0.97	0.86	0.71				0.89	0.82	0.69	0.65	0.61		1.00	0.86	0.52				0.89		0.86	0.78	0.66
18	(457)	1.00	1.00	0.90	0.74				0.97	0.85	0.71	0.67	0.62			1.00	0.62				0.97		0.92	0.82	0.70
20	(508)			0.94	0.77				1.00	0.89	0.73	0.69	0.63				0.72				1.00		0.97	0.87	0.73
22	(559)			0.99	0.79					0.93	0.76	0.71	0.65				0.83						1.00	0.91	0.77
24	(610)			1.00	0.82					0.97	0.78	0.73	0.66				0.95							0.95	0.80
26	(660)				0.85					1.00	0.80	0.75	0.67				1.00							0.99	0.84
28	(711)				0.87						0.83	0.76	0.69											1.00	0.87
30	(762)				0.90						0.85	0.78	0.70												0.90
36	(914)				0.98						0.92	0.84	0.74												0.98
>48	(1219)				1.00						1.00	0.95	0.82												1.00

1 Linear interpolation not permitted
2 Shaded area with reduced edge distance is permitted provided the installation torque is reduced to 0.30 T_{max} for $5d \le s \le$ 16-in. and to 0.5 T_{max} for $s >$ 16-in.
3 Spacing factor reduction in shear, f_{AV}, assumes an influence of a nearby edge. If no edge exists, then $f_{AV} = f_{AN}$.
4 Concrete thickness reduction factor in shear, f_{HV}, assumes an influence of a nearby edge. If no edge exists, then $f_{HV} = 1.0$.

HIT-HY 200 Adhesive Anchoring System

Table 58 — Load Adjustment Factors for 3/4-in. Diameter Fractional Threaded Rods in Uncracked Concrete [1,2]

3/4 in Uncracked Concrete		Spacing Factor in Tension f_{AN}				Edge Distance Factor in Tension f_{RN}				Spacing Factor in Shear[3] f_{AV}				Edge Distance in Shear								Conc. Thickness Factor in Shear[4] f_{HV}			
														⊥ Toward Edge f_{RV}				‖ To Edge f_{RV}							
Embedment h_{ef} in (mm)		3-1/2 (89)	6-3/4 (171)	9 (229)	15 (381)	3-1/2 (89)	6-3/4 (171)	9 (229)	15 (381)	3-1/2 (89)	6-3/4 (171)	9 (229)	15 (381)	3-1/2 (89)	6-3/4 (171)	9 (229)	15 (381)	3-1/2 (89)	6-3/4 (171)	9 (229)	15 (381)	3-1/2 (89)	6-3/4 (171)	9 (229)	15 (381)
Spacing (s) / Edge Distance (c_a) / Concrete Thickness (h), — in (mm)	1-3/4 (44)	n/a	n/a	n/a	n/a	0.33	0.24	0.18	0.10	n/a	n/a	n/a	n/a	0.09	0.03	0.02	0.01	0.17	0.07	0.05	0.02	n/a	n/a	n/a	n/a
	3-3/4 (95)	0.59	0.59	0.57	0.54	0.49	0.30	0.22	0.13	0.57	0.54	0.53	0.52	0.27	0.11	0.07	0.03	0.49	0.22	0.14	0.07	n/a	n/a	n/a	n/a
	4 (102)	0.60	0.60	0.57	0.54	0.51	0.31	0.23	0.13	0.57	0.54	0.53	0.52	0.29	0.12	0.08	0.04	0.51	0.24	0.16	0.08	n/a	n/a	n/a	n/a
	5 (127)	0.62	0.62	0.59	0.56	0.60	0.34	0.25	0.15	0.59	0.55	0.54	0.52	0.41	0.17	0.11	0.05	0.60	0.33	0.22	0.11	n/a	n/a	n/a	n/a
	5-1/4 (133)	0.63	0.63	0.60	0.56	0.63	0.35	0.26	0.15	0.60	0.55	0.54	0.52	0.44	0.18	0.12	0.06	0.63	0.35	0.23	0.11	0.62	n/a	n/a	n/a
	6 (152)	0.65	0.65	0.61	0.57	0.69	0.38	0.28	0.16	0.61	0.56	0.55	0.53	0.54	0.22	0.14	0.07	0.72	0.38	0.29	0.14	0.66	n/a	n/a	n/a
	7 (178)	0.67	0.67	0.63	0.58	0.76	0.41	0.30	0.18	0.63	0.57	0.55	0.53	0.68	0.28	0.18	0.09	0.84	0.41	0.34	0.18	0.72	n/a	n/a	n/a
	8 (203)	0.69	0.69	0.65	0.59	0.83	0.45	0.33	0.19	0.65	0.58	0.56	0.54	0.83	0.34	0.22	0.11	0.96	0.45	0.37	0.21	0.77	n/a	n/a	n/a
	8-1/2 (216)	0.71	0.71	0.66	0.59	0.87	0.47	0.35	0.20	0.66	0.59	0.56	0.54	0.91	0.37	0.24	0.12	1.00	0.47	0.38	0.24	0.79	0.59	n/a	n/a
	9 (229)	0.72	0.72	0.67	0.60	0.90	0.49	0.36	0.21	0.67	0.59	0.57	0.54	0.99	0.40	0.26	0.13		0.49	0.39	0.26	0.81	0.60	n/a	n/a
	10 (254)	0.74	0.74	0.69	0.61	0.98	0.53	0.39	0.23	0.68	0.60	0.58	0.55	1.00	0.47	0.31	0.15		0.53	0.42	0.30	0.86	0.64	n/a	n/a
	10-3/4 (273)	0.76	0.76	0.70	0.62	1.00	0.57	0.42	0.25	0.70	0.61	0.58	0.55		0.53	0.34	0.17		0.57	0.44	0.32	0.89	0.66	0.57	n/a
	12 (305)	0.79	0.79	0.72	0.63		0.64	0.47	0.27	0.72	0.62	0.59	0.56		0.62	0.40	0.20		0.64	0.48	0.34	0.94	0.70	0.60	n/a
	14 (356)	0.84	0.84	0.76	0.66		0.74	0.55	0.32	0.76	0.64	0.61	0.57		0.78	0.51	0.25		0.74	0.55	0.37	1.00	0.75	0.65	n/a
	16 (406)	0.89	0.89	0.80	0.68		0.85	0.62	0.37	0.79	0.66	0.62	0.58		0.96	0.62	0.30		0.85	0.62	0.40		0.80	0.70	n/a
	16-3/4 (425)	0.91	0.91	0.81	0.69		0.89	0.65	0.38	0.81	0.67	0.63	0.58		1.00	0.67	0.33		0.89	0.65	0.41		0.82	0.71	0.56
	18 (457)	0.94	0.94	0.83	0.70		0.95	0.70	0.41	0.83	0.68	0.64	0.58			0.74	0.36		0.95	0.70	0.43		0.85	0.74	0.58
	20 (508)	0.99	0.99	0.87	0.72		1.00	0.78	0.46	0.87	0.70	0.65	0.59			0.87	0.42		1.00	0.78	0.47		0.90	0.78	0.61
	22 (559)	1.00	1.00	0.91	0.74			0.86	0.50	0.91	0.72	0.67	0.60			1.00	0.49			0.86	0.50		0.94	0.82	0.64
	24 (610)			0.94	0.77			0.93	0.55	0.94	0.74	0.68	0.61				0.56			0.93	0.55		0.99	0.85	0.67
	26 (660)			0.98	0.79			1.00	0.59	0.98	0.76	0.70	0.62				0.63			1.00	0.59		1.00	0.89	0.70
	28 (711)			1.00	0.81				0.64	1.00	0.78	0.71	0.63				0.70				0.64			0.92	0.73
	30 (762)				0.83				0.68		0.80	0.73	0.64				0.78				0.68			0.95	0.75
	36 (914)				0.90				0.82		0.86	0.77	0.67				1.00				0.82			1.00	0.82
	>48 (1219)				1.00				1.00		0.99	0.86	0.73								1.00				0.95

Table 59 — Load Adjustment Factors for 3/4-in. Diameter Fractional Threaded Rods in Cracked Concrete [1,2]

3/4 in Cracked Concrete		Spacing Factor in Tension f_{AN}				Edge Distance Factor in Tension f_{RN}				Spacing Factor in Shear[3] f_{AV}				Edge Distance in Shear								Conc. Thickness Factor in Shear[4] f_{HV}			
														⊥ Toward Edge f_{RV}				‖ To Edge f_{RV}							
Embedment h_{ef} in (mm)		3-1/2 (89)	6-3/4 (171)	9 (229)	15 (381)	3-1/2 (89)	6-3/4 (171)	9 (229)	15 (381)	3-1/2 (89)	6-3/4 (171)	9 (229)	15 (381)	3-1/2 (89)	6-3/4 (171)	9 (229)	15 (381)	3-1/2 (89)	6-3/4 (171)	9 (229)	15 (381)	3-1/2 (89)	6-3/4 (171)	9 (229)	15 (381)
Spacing (s) / Edge Distance (c_a) / Concrete Thickness (h), — in (mm)	1-3/4 (44)	n/a	n/a	n/a	n/a	0.44	0.44	0.42	0.39	n/a	n/a	n/a	n/a	0.09	0.03	0.02	0.01	0.17	0.07	0.05	0.03	n/a	n/a	n/a	n/a
	3-3/4 (95)	0.59	0.59	0.57	0.54	0.55	0.55	0.50	0.44	0.57	0.54	0.53	0.52	0.27	0.11	0.07	0.04	0.54	0.22	0.15	0.09	n/a	n/a	n/a	n/a
	4 (102)	0.60	0.60	0.57	0.54	0.57	0.57	0.51	0.44	0.57	0.54	0.53	0.52	0.30	0.12	0.08	0.05	0.59	0.24	0.16	0.10	n/a	n/a	n/a	n/a
	5 (127)	0.62	0.62	0.59	0.56	0.63	0.63	0.56	0.47	0.59	0.55	0.54	0.53	0.41	0.17	0.11	0.07	0.83	0.34	0.22	0.13	n/a	n/a	n/a	n/a
	5-1/4 (133)	0.63	0.63	0.60	0.56	0.64	0.64	0.57	0.47	0.60	0.55	0.54	0.53	0.45	0.18	0.12	0.07	0.89	0.36	0.24	0.14	0.62	n/a	n/a	n/a
	6 (152)	0.65	0.65	0.61	0.57	0.69	0.69	0.60	0.49	0.61	0.56	0.55	0.53	0.54	0.22	0.15	0.09	1.00	0.44	0.29	0.18	0.67	n/a	n/a	n/a
	7 (178)	0.67	0.67	0.63	0.58	0.76	0.76	0.65	0.52	0.63	0.57	0.55	0.54	0.69	0.28	0.19	0.11		0.56	0.37	0.22	0.72	n/a	n/a	n/a
	8 (203)	0.69	0.69	0.65	0.59	0.83	0.83	0.70	0.55	0.65	0.58	0.56	0.54	0.84	0.34	0.23	0.14		0.68	0.45	0.27	0.77	n/a	n/a	n/a
	8-1/2 (216)	0.71	0.71	0.66	0.59	0.87	0.87	0.72	0.56	0.66	0.59	0.57	0.55	0.92	0.37	0.25	0.15		0.75	0.50	0.30	0.79	0.59	n/a	n/a
	9 (229)	0.72	0.72	0.67	0.60	0.90	0.90	0.75	0.57	0.67	0.59	0.57	0.55	1.00	0.41	0.27	0.16		0.82	0.54	0.32	0.82	0.61	n/a	n/a
	10 (254)	0.74	0.74	0.69	0.61	0.98	0.98	0.80	0.60	0.69	0.60	0.58	0.55		0.48	0.32	0.19		0.95	0.63	0.38	0.86	0.64	n/a	n/a
	10-3/4 (273)	0.76	0.76	0.70	0.62	1.00	1.00	0.84	0.62	0.70	0.61	0.58	0.56		0.53	0.35	0.21		1.00	0.70	0.42	0.89	0.66	0.58	n/a
	12 (305)	0.79	0.79	0.72	0.63			0.91	0.66	0.72	0.62	0.59	0.57		0.63	0.42	0.25			0.83	0.50	0.94	0.70	0.61	n/a
	14 (356)	0.84	0.84	0.76	0.66			1.00	0.72	0.76	0.64	0.61	0.58		0.79	0.52	0.31			1.00	0.63	1.00	0.76	0.66	n/a
	16 (406)	0.89	0.89	0.80	0.68				0.78	0.80	0.66	0.62	0.59		0.97	0.64	0.38				0.77		0.81	0.70	n/a
	16-3/4 (425)	0.91	0.91	0.81	0.69				0.81	0.81	0.67	0.63	0.59		1.00	0.68	0.41				0.81		0.83	0.72	0.61
	18 (457)	0.94	0.94	0.83	0.70				0.85	0.83	0.68	0.64	0.60			0.76	0.46				0.85		0.86	0.75	0.63
	20 (508)	0.99	0.99	0.87	0.72				0.91	0.87	0.70	0.65	0.61			0.89	0.54				0.91		0.90	0.79	0.66
	22 (559)	1.00	1.00	0.91	0.74				0.98	0.91	0.72	0.67	0.62			1.00	0.62				0.98		0.95	0.82	0.70
	24 (610)			0.94	0.77				1.00	0.94	0.74	0.69	0.63				0.70				1.00		0.99	0.86	0.73
	26 (660)			0.98	0.79					0.98	0.76	0.70	0.64				0.79						1.00	0.90	0.76
	28 (711)			1.00	0.81					1.00	0.79	0.72	0.65				0.89							0.93	0.78
	30 (762)				0.83						0.81	0.73	0.66				0.99							0.96	0.81
	36 (914)				0.90						0.87	0.78	0.70				1.00							1.00	0.89
	>48 (1219)				1.00						0.99	0.87	0.76												1.00

1 Linear interpolation not permitted
2 Shaded area with reduced edge distance is permitted provided the installation torque is reduced to 0.30 T_{max} for $5d \le s \le$ 16-in. and to 0.5 T_{max} for $s >$ 16-in.
3 Spacing factor reduction in shear, f_{AV}, assumes an influence of a nearby edge. If no edge exists, then $f_{AV} = f_{AN}$.
4 Concrete thickness reduction factor in shear, f_{HV}, assumes an influence of a nearby edge. If no edge exists, then $f_{HV} = 1.0$.

HIT-HY 200 Adhesive Anchoring System

Table 60 — Load Adjustment Factors for 7/8-in. Diameter Fractional Threaded Rods in Uncracked Concrete [1,2]

7/8 in Uncracked Concrete		Spacing Factor in Tension f_{AN}				Edge Distance Factor in Tension f_{RN}				Spacing Factor in Shear[3] f_{AV}				Edge Distance in Shear ⊥ Toward Edge f_{RV}				Edge Distance in Shear ∥ To Edge f_{RV}				Conc. Thickness Factor in Shear[4] f_{HV}			
Embedment h_{ef} in (mm)		3-1/2 (89)	7-7/8 (200)	10-1/2 (267)	17-1/2 (445)	3-1/2 (89)	7-7/8 (200)	10-1/2 (267)	17-1/2 (445)	3-1/2 (89)	7-7/8 (200)	10-1/2 (267)	17-1/2 (445)	3-1/2 (89)	7-7/8 (200)	10-1/2 (267)	17-1/2 (445)	3-1/2 (89)	7-7/8 (200)	10-1/2 (267)	17-1/2 (445)	3-1/2 (89)	7-7/8 (200)	10-1/2 (267)	17-1/2 (445)
Spacing (s) / Edge Distance (c_a) / Concrete Thickness (h), — in (mm)	1-3/4 (44)	n/a	n/a	n/a	n/a	0.36	0.23	0.17	0.10	n/a	n/a	n/a	n/a	0.09	0.03	0.02	0.01	0.18	0.05	0.04	0.02	n/a	n/a	n/a	n/a
	4-3/8 (111)	0.59	0.59	0.57	0.54	0.55	0.30	0.22	0.13	0.58	0.54	0.53	0.52	0.35	0.11	0.07	0.03	0.60	0.22	0.14	0.07	n/a	n/a	n/a	n/a
	5 (127)	0.60	0.60	0.58	0.55	0.58	0.32	0.23	0.14	0.59	0.54	0.53	0.52	0.43	0.13	0.09	0.04	0.66	0.27	0.17	0.08	n/a	n/a	n/a	n/a
	5-1/2 (140)	0.61	0.61	0.59	0.55	0.61	0.33	0.24	0.14	0.60	0.55	0.54	0.52	0.50	0.15	0.10	0.05	0.72	0.31	0.20	0.09	0.65	n/a	n/a	n/a
	6 (152)	0.63	0.63	0.60	0.56	0.64	0.34	0.26	0.15	0.61	0.55	0.54	0.52	0.57	0.17	0.11	0.05	0.78	0.34	0.23	0.11	0.68	n/a	n/a	n/a
	7 (178)	0.65	0.65	0.61	0.57	0.69	0.37	0.28	0.16	0.63	0.56	0.55	0.53	0.71	0.22	0.14	0.07	0.91	0.37	0.29	0.13	0.73	n/a	n/a	n/a
	8 (203)	0.67	0.67	0.63	0.58	0.75	0.41	0.30	0.18	0.65	0.57	0.55	0.53	0.87	0.27	0.17	0.08	1.00	0.41	0.34	0.16	0.78	n/a	n/a	n/a
	9 (229)	0.69	0.69	0.64	0.59	0.81	0.44	0.32	0.19	0.67	0.58	0.56	0.54	1.00	0.32	0.21	0.10		0.44	0.36	0.19	0.83	n/a	n/a	n/a
	9-7/8 (251)	0.71	0.71	0.66	0.59	0.86	0.47	0.35	0.20	0.69	0.59	0.56	0.54		0.37	0.24	0.11		0.47	0.38	0.22	0.87	0.59	n/a	n/a
	10 (254)	0.71	0.71	0.66	0.60	0.87	0.47	0.35	0.20	0.69	0.59	0.57	0.54		0.38	0.24	0.11		0.47	0.38	0.23	0.87	0.59	n/a	n/a
	11 (279)	0.73	0.73	0.67	0.60	0.93	0.51	0.37	0.22	0.71	0.60	0.57	0.54		0.43	0.28	0.13		0.51	0.41	0.26	0.91	0.62	n/a	n/a
	12 (305)	0.75	0.75	0.69	0.61	1.00	0.54	0.40	0.23	0.73	0.60	0.58	0.55		0.49	0.32	0.15		0.54	0.43	0.30	0.95	0.65	n/a	n/a
	12-1/2 (318)	0.76	0.76	0.70	0.62		0.57	0.42	0.24	0.74	0.61	0.58	0.55		0.52	0.34	0.16		0.57	0.44	0.32	0.97	0.66	0.57	n/a
	14 (356)	0.79	0.79	0.72	0.63		0.63	0.47	0.27	0.77	0.62	0.59	0.55		0.62	0.40	0.19		0.63	0.48	0.34	1.00	0.70	0.60	n/a
	16 (406)	0.83	0.83	0.75	0.65		0.73	0.53	0.31	0.80	0.64	0.60	0.56		0.76	0.49	0.23		0.73	0.53	0.36		0.75	0.65	n/a
	18 (457)	0.88	0.88	0.79	0.67		0.82	0.60	0.35	0.84	0.66	0.62	0.57		0.91	0.59	0.27		0.82	0.60	0.39		0.79	0.68	n/a
	19-1/2 (495)	0.91	0.91	0.81	0.69		0.88	0.65	0.38	0.87	0.67	0.63	0.58		1.00	0.66	0.31		0.88	0.65	0.41		0.82	0.71	0.55
	20 (508)	0.92	0.92	0.82	0.69		0.91	0.67	0.39	0.88	0.67	0.63	0.58			0.69	0.32		0.91	0.67	0.42		0.83	0.72	0.56
	22 (559)	0.96	0.96	0.85	0.71		1.00	0.73	0.43	0.92	0.69	0.64	0.59			0.80	0.37		1.00	0.73	0.45		0.87	0.76	0.59
	24 (610)	1.00	1.00	0.88	0.73		1.00	0.80	0.47	0.96	0.71	0.66	0.59			0.91	0.42			0.80	0.48		0.91	0.79	0.61
	26 (660)			0.91	0.75			0.87	0.51	0.99	0.73	0.67	0.60			1.00	0.48			0.87	0.51		0.95	0.82	0.64
	28 (711)			0.94	0.77			0.93	0.55	1.00	0.74	0.68	0.61				0.53			0.93	0.55		0.99	0.85	0.66
	30 (762)			0.98	0.79			1.00	0.59		0.76	0.70	0.62				0.59			1.00	0.59		1.00	0.88	0.68
	36 (914)			1.00	0.84				0.70		0.81	0.73	0.64				0.77				0.70			0.97	0.75
	>48 (1219)				0.96				0.94		0.92	0.81	0.69				1.00				0.94			1.00	0.87

Table 61 — Load Adjustment Factors for 7/8-in. Diameter Fractional Threaded Rods in Cracked Concrete [1,2]

7/8 in Cracked Concrete		Spacing Factor in Tension f_{AN}				Edge Distance Factor in Tension f_{RN}				Spacing Factor in Shear[3] f_{AV}				Edge Distance in Shear ⊥ Toward Edge f_{RV}				Edge Distance in Shear ∥ To Edge f_{RV}				Conc. Thickness Factor in Shear[4] f_{HV}			
Embedment h_{ef} in (mm)		3-1/2 (89)	7-7/8 (200)	10-1/2 (267)	17-1/2 (445)	3-1/2 (89)	7-7/8 (200)	10-1/2 (267)	17-1/2 (445)	3-1/2 (89)	7-7/8 (200)	10-1/2 (267)	17-1/2 (445)	3-1/2 (89)	7-7/8 (200)	10-1/2 (267)	17-1/2 (445)	3-1/2 (89)	7-7/8 (200)	10-1/2 (267)	17-1/2 (445)	3-1/2 (89)	7-7/8 (200)	10-1/2 (267)	17-1/2 (445)
Spacing (s) / Edge Distance (c_a) / Concrete Thickness (h), — in (mm)	1-3/4 (44)	n/a	n/a	n/a	n/a	0.43	0.43	0.41	0.38	n/a	n/a	n/a	n/a	0.09	0.03	0.02	0.01	0.18	0.06	0.04	0.02	n/a	n/a	n/a	n/a
	4-3/8 (111)	0.59	0.59	0.57	0.54	0.55	0.55	0.50	0.44	0.58	0.54	0.53	0.52	0.36	0.11	0.08	0.05	0.71	0.22	0.16	0.10	n/a	n/a	n/a	n/a
	5 (127)	0.60	0.60	0.58	0.55	0.58	0.58	0.52	0.45	0.60	0.54	0.54	0.53	0.43	0.13	0.10	0.06	0.87	0.27	0.19	0.12	n/a	n/a	n/a	n/a
	5-1/2 (140)	0.61	0.61	0.59	0.55	0.61	0.61	0.54	0.46	0.61	0.55	0.54	0.53	0.50	0.15	0.11	0.07	1.00	0.31	0.22	0.13	0.65	n/a	n/a	n/a
	6 (152)	0.63	0.63	0.60	0.56	0.64	0.64	0.56	0.47	0.61	0.55	0.54	0.53	0.57	0.18	0.13	0.08		0.35	0.25	0.15	0.68	n/a	n/a	n/a
	7 (178)	0.65	0.65	0.61	0.57	0.69	0.69	0.60	0.49	0.63	0.56	0.55	0.54	0.72	0.22	0.16	0.10		0.44	0.32	0.19	0.73	n/a	n/a	n/a
	8 (203)	0.67	0.67	0.63	0.58	0.75	0.75	0.64	0.52	0.65	0.57	0.56	0.54	0.88	0.27	0.20	0.12		0.54	0.39	0.24	0.78	n/a	n/a	n/a
	9 (229)	0.69	0.69	0.64	0.59	0.81	0.81	0.68	0.54	0.67	0.58	0.56	0.55	1.00	0.32	0.23	0.14		0.65	0.47	0.28	0.83	n/a	n/a	n/a
	9-7/8 (251)	0.71	0.71	0.66	0.59	0.86	0.86	0.72	0.56	0.69	0.59	0.57	0.55		0.37	0.27	0.16		0.74	0.54	0.32	0.87	0.59	n/a	n/a
	10 (254)	0.71	0.71	0.66	0.60	0.87	0.87	0.73	0.56	0.69	0.59	0.57	0.55		0.38	0.27	0.16		0.76	0.55	0.33	0.87	0.59	n/a	n/a
	11 (279)	0.73	0.73	0.67	0.60	0.93	0.93	0.77	0.59	0.71	0.60	0.58	0.56		0.44	0.32	0.19		0.87	0.63	0.38	0.92	0.62	n/a	n/a
	12 (305)	0.75	0.75	0.69	0.61	1.00	1.00	0.82	0.61	0.73	0.60	0.58	0.56		0.50	0.36	0.22		1.00	0.72	0.43	0.96	0.65	n/a	n/a
	12-1/2 (318)	0.76	0.76	0.70	0.62			0.84	0.62	0.74	0.61	0.59	0.56		0.53	0.38	0.23		1.00	0.77	0.46	0.98	0.66	0.59	n/a
	14 (356)	0.79	0.79	0.72	0.63			0.91	0.66	0.77	0.62	0.60	0.57		0.63	0.45	0.27			0.91	0.54	1.00	0.70	0.63	n/a
	16 (406)	0.83	0.83	0.75	0.65			1.00	0.71	0.81	0.64	0.61	0.58		0.77	0.55	0.33			1.00	0.67		0.75	0.67	n/a
	18 (457)	0.88	0.88	0.79	0.67				0.76	0.84	0.66	0.63	0.59		0.91	0.66	0.40				0.76		0.79	0.71	n/a
	19-1/2 (495)	0.91	0.91	0.81	0.69				0.80	0.87	0.67	0.64	0.60		1.00	0.75	0.45				0.80		0.82	0.74	0.62
	20 (508)	0.92	0.92	0.82	0.69				0.82	0.88	0.67	0.64	0.60			0.77	0.46				0.82		0.84	0.75	0.63
	22 (559)	0.96	0.96	0.85	0.71				0.87	0.92	0.69	0.65	0.61			0.89	0.54				0.87		0.88	0.79	0.66
	24 (610)	1.00	1.00	0.88	0.73				0.93	0.96	0.71	0.67	0.62			1.00	0.61				0.93		0.92	0.82	0.69
	26 (660)			0.91	0.75				0.99	1.00	0.73	0.68	0.63				0.69				0.99		0.95	0.86	0.72
	28 (711)			0.94	0.77				1.00	1.00	0.74	0.70	0.64				0.77				1.00		0.99	0.89	0.75
	30 (762)			0.98	0.79						0.76	0.71	0.65				0.85						1.00	0.92	0.77
	36 (914)			1.00	0.84						0.81	0.75	0.68				1.00							1.00	0.85
	>48 (1219)				0.96						0.92	0.84	0.74												0.98

1 Linear interpolation not permitted
2 Shaded area with reduced edge distance is permitted provided the installation torque is reduced to 0.30 T_{max} for $5d \le s \le$ 16-in. and to 0.5 T_{max} for $s >$ 16-in.
3 Spacing factor reduction in shear, f_{AV}, assumes an influence of a nearby edge. If no edge exists, then $f_{AV} = f_{AN}$.
4 Concrete thickness reduction factor in shear, f_{HV}, assumes an influence of a nearby edge. If no edge exists, then $f_{HV} = 1.0$.

HIT-HY 200 Adhesive Anchoring System

Table 62 — Load Adjustment Factors for 1-in. Diameter Fractional Threaded Rods in Uncracked Concrete [1,2]

Spacing (s) / Edge Distance (c_a) / Concrete Thickness (h), — in (mm)	1 in Uncracked Concrete	Spacing Factor in Tension f_{AN}				Edge Distance Factor in Tension f_{RN}				Spacing Factor in Shear[3] f_{AV}				Edge Distance in Shear ⊥ Toward Edge f_{RV}				Edge Distance in Shear ∥ To Edge f_{RV}				Conc. Thickness Factor in Shear[4] f_{HV}			
	Embedment h_{ef} in (mm)	4 (102)	9 (229)	12 (305)	20 (508)	4 (102)	9 (229)	12 (305)	20 (508)	4 (102)	9 (229)	12 (305)	20 (508)	4 (102)	9 (229)	12 (305)	20 (508)	4 (102)	9 (229)	12 (305)	20 (508)	4 (102)	9 (229)	12 (305)	20 (508)
	1-3/4 (44)	n/a	n/a	n/a	n/a	0.36	0.22	0.17	0.10	n/a	n/a	n/a	n/a	0.08	0.02	0.01	0.01	0.15	0.05	0.03	0.01	n/a	n/a	n/a	n/a
	5 (127)	0.59	0.59	0.57	0.54	0.55	0.30	0.22	0.13	0.59	0.54	0.53	0.52	0.37	0.11	0.07	0.03	0.61	0.22	0.14	0.07	n/a	n/a	n/a	n/a
	6 (152)	0.61	0.61	0.58	0.55	0.60	0.32	0.24	0.14	0.60	0.55	0.53	0.52	0.48	0.14	0.09	0.04	0.70	0.29	0.19	0.09	n/a	n/a	n/a	n/a
	6-1/4 (159)	0.61	0.61	0.59	0.55	0.61	0.33	0.24	0.14	0.61	0.55	0.54	0.52	0.51	0.15	0.10	0.05	0.73	0.30	0.20	0.09	0.65	n/a	n/a	n/a
	7 (178)	0.63	0.63	0.60	0.56	0.64	0.35	0.26	0.15	0.62	0.55	0.54	0.52	0.61	0.18	0.12	0.05	0.82	0.35	0.23	0.11	0.69	n/a	n/a	n/a
	8 (203)	0.65	0.65	0.61	0.57	0.69	0.38	0.28	0.16	0.64	0.56	0.55	0.53	0.74	0.22	0.14	0.07	0.93	0.38	0.29	0.13	0.74	n/a	n/a	n/a
	9 (229)	0.66	0.66	0.63	0.58	0.74	0.40	0.30	0.17	0.65	0.57	0.55	0.53	0.89	0.26	0.17	0.08	1.00	0.40	0.33	0.16	0.78	n/a	n/a	n/a
	10 (254)	0.68	0.68	0.64	0.58	0.79	0.43	0.32	0.19	0.67	0.58	0.56	0.53	1.00	0.31	0.20	0.09		0.43	0.35	0.19	0.83	n/a	n/a	n/a
	11 (279)	0.70	0.70	0.65	0.59	0.85	0.46	0.34	0.20	0.69	0.58	0.56	0.54		0.35	0.23	0.11		0.46	0.37	0.21	0.87	n/a	n/a	n/a
	11-1/4 (286)	0.71	0.71	0.66	0.59	0.86	0.47	0.34	0.20	0.69	0.59	0.56	0.54		0.37	0.24	0.11		0.47	0.38	0.22	0.88	0.58	n/a	n/a
	12 (305)	0.72	0.72	0.67	0.60	0.90	0.49	0.36	0.21	0.70	0.59	0.57	0.54		0.40	0.26	0.12		0.49	0.39	0.24	0.91	0.60	n/a	n/a
	13 (330)	0.74	0.74	0.68	0.61	0.96	0.52	0.38	0.22	0.72	0.60	0.57	0.54		0.46	0.30	0.14		0.52	0.41	0.28	0.94	0.63	n/a	n/a
	14 (356)	0.76	0.76	0.69	0.62	1.00	0.56	0.41	0.24	0.74	0.61	0.58	0.55		0.51	0.33	0.15		0.56	0.44	0.31	0.98	0.65	n/a	n/a
	14-1/4 (362)	0.76	0.76	0.70	0.62		0.57	0.42	0.24	0.74	0.61	0.58	0.55		0.52	0.34	0.16		0.57	0.44	0.32	0.99	0.66	0.57	n/a
	16 (406)	0.79	0.79	0.72	0.63		0.64	0.47	0.27	0.77	0.62	0.59	0.55		0.62	0.40	0.19		0.64	0.48	0.34	1.00	0.70	0.60	n/a
	18 (457)	0.83	0.83	0.75	0.65		0.72	0.52	0.31	0.81	0.64	0.60	0.56		0.74	0.48	0.22		0.72	0.52	0.36		0.74	0.64	n/a
	20 (508)	0.86	0.86	0.78	0.67		0.80	0.58	0.34	0.84	0.65	0.61	0.57		0.87	0.56	0.26		0.80	0.58	0.38		0.78	0.67	n/a
	22 (559)	0.90	0.90	0.81	0.68		0.87	0.64	0.38	0.88	0.67	0.63	0.58		1.00	0.65	0.30		0.87	0.64	0.41		0.82	0.71	n/a
	22-1/4 (565)	0.91	0.91	0.81	0.69		0.88	0.65	0.38	0.88	0.67	0.63	0.58			0.66	0.31		0.88	0.65	0.41		0.82	0.71	0.55
	24 (610)	0.94	0.94	0.83	0.70		0.95	0.70	0.41	0.91	0.68	0.64	0.58			0.74	0.35		0.95	0.70	0.43		0.85	0.74	0.57
	26 (660)	0.97	0.97	0.86	0.72		1.00	0.76	0.44	0.94	0.70	0.65	0.59			0.84	0.39		1.00	0.76	0.46		0.89	0.77	0.60
	28 (711)	1.00	1.00	0.89	0.73			0.82	0.48	0.98	0.71	0.66	0.60			0.94	0.43			0.82	0.49		0.92	0.80	0.62
	30 (762)			0.92	0.75			0.87	0.51	1.00	0.73	0.67	0.60			1.00	0.48			0.87	0.51		0.95	0.83	0.64
	36 (914)			1.00	0.80			1.00	0.62		0.77	0.70	0.62				0.63			1.00	0.62		1.00	0.91	0.70
	>48 (1219)				0.90				0.82		0.86	0.77	0.66				0.98				0.82			1.00	0.81

Table 63 — Load Adjustment Factors for 1-in. Diameter Fractional Threaded Rods in Cracked Concrete [1,2]

Spacing (s) / Edge Distance (c_a) / Concrete Thickness (h), — in (mm)	1 in Cracked Concrete	Spacing Factor in Tension f_{AN}				Edge Distance Factor in Tension f_{RN}				Spacing Factor in Shear[3] f_{AV}				Edge Distance in Shear ⊥ Toward Edge f_{RV}				Edge Distance in Shear ∥ To Edge f_{RV}				Conc. Thickness Factor in Shear[4] f_{HV}			
	Embedment h_{ef} in (mm)	4 (102)	9 (229)	12 (305)	20 (508)	4 (102)	9 (229)	12 (305)	20 (508)	4 (102)	9 (229)	12 (305)	20 (508)	4 (102)	9 (229)	12 (305)	20 (508)	4 (102)	9 (229)	12 (305)	20 (508)	4 (102)	9 (229)	12 (305)	20 (508)
	1-3/4 (44)	n/a	n/a	n/a	n/a	0.42	0.42	0.40	0.38	n/a	n/a	n/a	n/a	0.08	0.02	0.02	0.01	0.15	0.05	0.03	0.02	n/a	n/a	n/a	n/a
	5 (127)	0.59	0.59	0.57	0.54	0.55	0.55	0.50	0.44	0.59	0.54	0.53	0.52	0.37	0.11	0.07	0.04	0.74	0.22	0.15	0.09	n/a	n/a	n/a	n/a
	6 (152)	0.61	0.61	0.58	0.55	0.60	0.60	0.53	0.46	0.60	0.55	0.54	0.53	0.49	0.14	0.10	0.06	0.97	0.29	0.19	0.12	n/a	n/a	n/a	n/a
	6-1/4 (159)	0.61	0.61	0.59	0.55	0.61	0.61	0.54	0.46	0.61	0.55	0.54	0.53	0.52	0.15	0.10	0.06	1.00	0.31	0.21	0.12	0.66	n/a	n/a	n/a
	7 (178)	0.63	0.63	0.60	0.56	0.64	0.64	0.57	0.47	0.62	0.55	0.54	0.53	0.61	0.18	0.12	0.07		0.36	0.24	0.15	0.69	n/a	n/a	n/a
	8 (203)	0.65	0.65	0.61	0.57	0.69	0.69	0.60	0.49	0.64	0.56	0.55	0.53	0.75	0.22	0.15	0.09		0.44	0.30	0.18	0.74	n/a	n/a	n/a
	9 (229)	0.66	0.66	0.63	0.58	0.74	0.74	0.64	0.51	0.65	0.57	0.55	0.54	0.89	0.26	0.18	0.11		0.53	0.36	0.21	0.79	n/a	n/a	n/a
	10 (254)	0.68	0.68	0.64	0.58	0.79	0.79	0.67	0.53	0.67	0.58	0.56	0.54	1.00	0.31	0.21	0.13		0.62	0.42	0.25	0.83	n/a	n/a	n/a
	11 (279)	0.70	0.70	0.65	0.59	0.85	0.85	0.71	0.55	0.69	0.58	0.56	0.55		0.36	0.24	0.14		0.72	0.48	0.29	0.87	n/a	n/a	n/a
	11-1/4 (286)	0.71	0.71	0.66	0.59	0.86	0.86	0.72	0.56	0.69	0.59	0.57	0.55		0.37	0.25	0.15		0.74	0.50	0.30	0.88	0.59	n/a	n/a
	12 (305)	0.72	0.72	0.67	0.60	0.90	0.90	0.75	0.57	0.71	0.59	0.57	0.55		0.41	0.27	0.16		0.82	0.55	0.33	0.91	0.61	n/a	n/a
	13 (330)	0.74	0.74	0.68	0.61	0.96	0.96	0.79	0.59	0.72	0.60	0.58	0.55		0.46	0.31	0.19		0.92	0.62	0.37	0.95	0.63	n/a	n/a
	14 (356)	0.76	0.76	0.69	0.62	1.00	1.00	0.83	0.62	0.74	0.61	0.58	0.56		0.51	0.35	0.21		1.00	0.69	0.42	0.98	0.65	n/a	n/a
	14-1/4 (362)	0.76	0.76	0.70	0.62			0.84	0.62	0.74	0.61	0.58	0.56		0.53	0.36	0.21			0.71	0.43	0.99	0.66	0.58	n/a
	16 (406)	0.79	0.79	0.72	0.63			0.91	0.66	0.77	0.62	0.59	0.57		0.63	0.42	0.25			0.85	0.51	1.00	0.70	0.61	n/a
	18 (457)	0.83	0.83	0.75	0.65			1.00	0.70	0.81	0.64	0.61	0.58		0.75	0.50	0.30			1.00	0.61		0.74	0.65	n/a
	20 (508)	0.86	0.86	0.78	0.67				0.75	0.84	0.65	0.62	0.58		0.88	0.59	0.35				0.71		0.78	0.69	n/a
	22 (559)	0.90	0.90	0.81	0.68				0.80	0.88	0.67	0.63	0.59		1.00	0.68	0.41				0.80		0.82	0.72	n/a
	22-1/4 (565)	0.91	0.91	0.81	0.69				0.80	0.88	0.67	0.63	0.59			0.69	0.42				0.80		0.82	0.72	0.61
	24 (610)	0.94	0.94	0.83	0.70				0.85	0.91	0.68	0.64	0.60			0.78	0.47				0.85		0.86	0.75	0.63
	26 (660)	0.97	0.97	0.86	0.72				0.90	0.95	0.70	0.65	0.61			0.88	0.53				0.90		0.89	0.78	0.66
	28 (711)	1.00	1.00	0.89	0.73				0.95	0.98	0.71	0.66	0.62			0.98	0.59				0.95		0.92	0.81	0.68
	30 (762)			0.92	0.75				1.00	1.00	0.73	0.68	0.63			1.00	0.65				1.00		0.96	0.84	0.71
	36 (914)			1.00	0.80						0.77	0.71	0.65				0.86						1.00	0.92	0.78
	>48 (1219)				0.90						0.87	0.78	0.70				1.00							1.00	0.90

1 Linear interpolation not permitted
2 Shaded area with reduced edge distance is permitted provided the installation torque is reduced to 0.30 T_{max} for $5d \le s \le$ 16-in. and to 0.5 T_{max} for $s >$ 16-in.
3 Spacing factor reduction in shear, f_{AV}, assumes an influence of a nearby edge. If no edge exists, then $f_{AV} = f_{AN}$.
4 Concrete thickness reduction factor in shear, f_{HV}, assumes an influence of a nearby edge. If no edge exists, then $f_{HV} = 1.0$.

HIT-HY 200 Adhesive Anchoring System

Table 64 — Load Adjustment Factors for 1-1/4-in. Diameter Fractional Threaded Rods in Uncracked Concrete [1,2]

1-1/4 in Uncracked Concrete		Spacing Factor in Tension f_{AN}				Edge Distance Factor in Tension f_{RN}				Spacing Factor in Shear[3] f_{AV}				Edge Distance in Shear ⊥ Toward Edge f_{RV}				Edge Distance in Shear ∥ To Edge f_{RV}				Conc. Thickness Factor in Shear[4] f_{HV}			
Embedment h_{ef} in (mm)		5 (127)	11-1/4 (286)	15 (381)	25 (635)	5 (127)	11-1/4 (286)	15 (381)	25 (635)	5 (127)	11-1/4 (286)	15 (381)	25 (635)	5 (127)	11-1/4 (286)	15 (381)	25 (635)	5 (127)	11-1/4 (286)	15 (381)	25 (635)	5 (127)	11-1/4 (286)	11-1/4 (286)	25 (635)
Spacing (s) / Edge Distance (c_a) / Concrete Thickness (h), — in (mm)																									
1-3/4	(44)	n/a	n/a	n/a	n/a	0.35	0.23	0.16	0.09	n/a	n/a	n/a	n/a	0.05	0.02	0.01	0.01	0.11	0.03	0.02	0.02	n/a	n/a	n/a	n/a
6-1/4	(159)	0.59	0.59	0.57	0.54	0.55	0.31	0.22	0.13	0.59	0.54	0.53	0.52	0.37	0.11	0.07	0.03	0.63	0.22	0.14	0.07	n/a	n/a	n/a	n/a
7	(178)	0.60	0.60	0.58	0.55	0.58	0.33	0.23	0.14	0.60	0.54	0.53	0.52	0.43	0.13	0.08	0.04	0.69	0.26	0.17	0.08	n/a	n/a	n/a	n/a
8	(203)	0.62	0.62	0.59	0.55	0.62	0.35	0.25	0.14	0.61	0.55	0.54	0.52	0.53	0.16	0.10	0.05	0.78	0.31	0.20	0.10	0.66	n/a	n/a	n/a
9	(229)	0.63	0.63	0.60	0.56	0.65	0.37	0.26	0.15	0.62	0.55	0.54	0.52	0.63	0.19	0.12	0.06	0.87	0.37	0.24	0.11	0.70	n/a	n/a	n/a
10	(254)	0.65	0.65	0.61	0.57	0.69	0.39	0.28	0.16	0.64	0.56	0.55	0.53	0.74	0.22	0.14	0.07	0.97	0.39	0.29	0.13	0.74	n/a	n/a	n/a
11	(279)	0.66	0.66	0.62	0.57	0.73	0.41	0.29	0.17	0.65	0.57	0.55	0.53	0.86	0.25	0.16	0.08	1.00	0.41	0.33	0.15	0.78	n/a	n/a	n/a
12	(305)	0.68	0.68	0.63	0.58	0.77	0.44	0.31	0.18	0.66	0.57	0.55	0.53	0.98	0.29	0.19	0.09		0.44	0.35	0.17	0.81	n/a	n/a	n/a
13	(330)	0.69	0.69	0.64	0.59	0.82	0.46	0.33	0.19	0.68	0.58	0.56	0.54	1.00	0.33	0.21	0.10		0.46	0.36	0.20	0.84	n/a	n/a	n/a
14	(356)	0.70	0.70	0.66	0.59	0.86	0.49	0.34	0.20	0.69	0.59	0.56	0.54		0.36	0.24	0.11		0.49	0.38	0.22	0.87	0.58	n/a	n/a
14-1/4	(362)	0.71	0.71	0.66	0.60	0.87	0.49	0.35	0.20	0.69	0.59	0.56	0.54		0.37	0.24	0.11		0.49	0.38	0.23	0.88	0.59	n/a	n/a
15	(381)	0.72	0.72	0.67	0.60	0.90	0.51	0.36	0.21	0.70	0.59	0.57	0.54		0.40	0.26	0.12		0.51	0.39	0.24	0.91	0.60	n/a	n/a
16	(406)	0.73	0.73	0.68	0.61	0.95	0.54	0.38	0.22	0.72	0.60	0.57	0.54		0.45	0.29	0.13		0.54	0.41	0.27	0.94	0.62	n/a	n/a
17	(432)	0.75	0.75	0.69	0.61	0.99	0.56	0.40	0.23	0.73	0.60	0.58	0.55		0.49	0.32	0.15		0.56	0.43	0.29	0.96	0.64	n/a	n/a
18	(457)	0.76	0.76	0.70	0.62	1.00	0.60	0.42	0.25	0.75	0.61	0.58	0.55		0.53	0.35	0.16		0.60	0.44	0.32	0.99	0.66	0.57	n/a
20	(508)	0.79	0.79	0.72	0.63		0.66	0.47	0.27	0.77	0.62	0.59	0.55		0.62	0.40	0.19		0.66	0.48	0.34	1.00	0.70	0.60	n/a
22	(559)	0.82	0.82	0.74	0.65		0.73	0.51	0.30	0.80	0.63	0.60	0.56		0.72	0.47	0.22		0.73	0.51	0.36		0.73	0.63	n/a
24	(610)	0.85	0.85	0.77	0.66		0.80	0.56	0.33	0.83	0.65	0.61	0.57		0.82	0.53	0.25		0.80	0.56	0.37		0.76	0.66	n/a
26	(660)	0.88	0.88	0.79	0.67		0.86	0.61	0.36	0.86	0.66	0.62	0.57		0.92	0.60	0.28		0.86	0.61	0.39		0.79	0.69	n/a
28	(711)	0.91	0.91	0.81	0.69		0.93	0.65	0.38	0.88	0.67	0.63	0.58		1.00	0.67	0.31		0.93	0.65	0.41		0.82	0.71	0.55
30	(762)	0.94	0.94	0.83	0.70		1.00	0.70	0.41	0.91	0.68	0.64	0.58			0.74	0.35		1.00	0.70	0.43		0.85	0.74	0.57
36	(914)	1.00	1.00	0.90	0.74		1.00	0.84	0.49	0.99	0.72	0.66	0.60			0.98	0.45		1.00	0.84	0.50		0.94	0.81	0.63
>48	(1219)			1.00	0.82			1.00	0.66	1.00	0.79	0.72	0.63			1.00	0.70			1.00	0.66		1.00	0.94	0.72

Table 65 — Load Adjustment Factors for 1-1/4-in. Diameter Fractional Threaded Rods in Cracked Concrete [1,2]

1-1/4 in Cracked Concrete		Spacing Factor in Tension f_{AN}				Edge Distance Factor in Tension f_{RN}				Spacing Factor in Shear[3] f_{AV}				Edge Distance in Shear ⊥ Toward Edge f_{RV}				Edge Distance in Shear ∥ To Edge f_{RV}				Conc. Thickness Factor in Shear[4] f_{HV}			
Embedment h_{ef} in (mm)		5 (127)	11-1/4 (286)	15 (381)	25 (635)	5 (127)	11-1/4 (286)	15 (381)	25 (635)	5 (127)	11-1/4 (286)	15 (381)	25 (635)	5 (127)	11-1/4 (286)	15 (381)	25 (635)	5 (127)	11-1/4 (286)	15 (381)	25 (635)	5 (127)	11-1/4 (286)	11-1/4 (286)	25 (635)
Spacing (s) / Edge Distance (c_a) / Concrete Thickness (h), — in (mm)																									
1-3/4	(44)	n/a	n/a	n/a	n/a	0.40	0.40	0.39	0.37	n/a	n/a	n/a	n/a	0.05	0.02	0.01	0.01	0.11	0.03	0.02	0.01	n/a	n/a	n/a	n/a
6-1/4	(159)	0.59	0.59	0.57	0.54	0.55	0.55	0.50	0.44	0.59	0.54	0.53	0.52	0.37	0.11	0.07	0.04	0.74	0.22	0.14	0.08	n/a	n/a	n/a	n/a
7	(178)	0.60	0.60	0.58	0.55	0.58	0.58	0.52	0.45	0.60	0.54	0.53	0.52	0.44	0.13	0.08	0.05	0.88	0.26	0.17	0.09	n/a	n/a	n/a	n/a
8	(203)	0.62	0.62	0.59	0.55	0.62	0.62	0.55	0.46	0.61	0.55	0.54	0.52	0.54	0.16	0.10	0.06	1.00	0.32	0.21	0.11	0.66	n/a	n/a	n/a
9	(229)	0.63	0.63	0.60	0.56	0.65	0.65	0.57	0.48	0.62	0.55	0.54	0.53	0.64	0.19	0.12	0.07		0.38	0.25	0.14	0.70	n/a	n/a	n/a
10	(254)	0.65	0.65	0.61	0.57	0.69	0.69	0.60	0.49	0.64	0.56	0.55	0.53	0.75	0.22	0.14	0.08		0.44	0.29	0.16	0.74	n/a	n/a	n/a
11	(279)	0.66	0.66	0.62	0.57	0.73	0.73	0.63	0.51	0.65	0.57	0.55	0.53	0.86	0.26	0.17	0.09		0.51	0.33	0.18	0.78	n/a	n/a	n/a
12	(305)	0.68	0.68	0.63	0.58	0.77	0.77	0.66	0.53	0.66	0.57	0.55	0.54	0.98	0.29	0.19	0.10		0.58	0.38	0.21	0.81	n/a	n/a	n/a
13	(330)	0.69	0.69	0.64	0.59	0.82	0.82	0.69	0.54	0.68	0.58	0.56	0.54	1.00	0.33	0.21	0.12		0.66	0.43	0.24	0.85	n/a	n/a	n/a
14	(356)	0.70	0.70	0.66	0.59	0.86	0.86	0.72	0.56	0.69	0.59	0.56	0.54		0.37	0.24	0.13		0.73	0.48	0.26	0.88	0.58	n/a	n/a
14-1/4	(362)	0.71	0.71	0.66	0.60	0.87	0.87	0.73	0.56	0.70	0.59	0.57	0.54		0.38	0.25	0.14		0.75	0.49	0.27	0.89	0.59	n/a	n/a
15	(381)	0.72	0.72	0.67	0.60	0.90	0.90	0.75	0.57	0.71	0.59	0.57	0.55		0.41	0.26	0.15		0.82	0.53	0.29	0.91	0.61	n/a	n/a
16	(406)	0.73	0.73	0.68	0.61	0.95	0.95	0.78	0.59	0.72	0.60	0.57	0.55		0.45	0.29	0.16		0.90	0.58	0.32	0.94	0.63	n/a	n/a
17	(432)	0.75	0.75	0.69	0.61	0.99	0.99	0.81	0.61	0.73	0.60	0.58	0.55		0.49	0.32	0.18		0.98	0.64	0.35	0.97	0.64	n/a	n/a
18	(457)	0.76	0.76	0.70	0.62	1.00	1.00	0.85	0.62	0.75	0.61	0.58	0.56		0.54	0.35	0.19		1.00	0.70	0.38	0.99	0.66	0.57	n/a
20	(508)	0.79	0.79	0.72	0.63			0.91	0.66	0.77	0.62	0.59	0.56		0.63	0.41	0.23			0.82	0.45	1.00	0.70	0.61	n/a
22	(559)	0.82	0.82	0.74	0.65			0.98	0.69	0.80	0.63	0.60	0.57		0.72	0.47	0.26			0.94	0.52		0.73	0.63	n/a
24	(610)	0.85	0.85	0.77	0.66			1.00	0.73	0.83	0.65	0.61	0.57		0.82	0.54	0.30			1.00	0.59		0.77	0.66	n/a
26	(660)	0.88	0.88	0.79	0.67				0.77	0.86	0.66	0.62	0.58		0.93	0.60	0.33				0.67		0.80	0.69	n/a
28	(711)	0.91	0.91	0.81	0.69				0.81	0.88	0.67	0.63	0.59		1.00	0.68	0.37				0.75		0.83	0.72	0.59
30	(762)	0.94	0.94	0.83	0.70				0.85	0.91	0.68	0.64	0.59			0.75	0.41				0.83		0.86	0.74	0.61
36	(914)	1.00	1.00	0.90	0.74				0.97	0.99	0.72	0.66	0.61			0.98	0.54				0.97		0.94	0.81	0.67
>48	(1219)			1.00	0.82				1.00	1.00	0.79	0.72	0.65			1.00	0.84				1.00		1.00	0.94	0.77

1 Linear interpolation not permitted
2 Shaded area with reduced edge distance is permitted provided the installation torque is reduced to 0.30 T_{max} for $5d \le s \le$ 16-in. and to 0.5 T_{max} for $s >$ 16-in.
3 Spacing factor reduction in shear, f_{AV}, assumes an influence of a nearby edge. If no edge exists, then $f_{AV} = f_{AN}$.
4 Concrete thickness reduction factor in shear, f_{HV}, assumes an influence of a nearby edge. If no edge exists, then $f_{HV} = 1.0$.

HIT-HY 200 Adhesive Anchoring System

2.4.14 Installation Instructions

Installation Instructions For Use (IFU) are included with each product package. They can also be viewed or downloaded on-line at **www.us.hilti.com (US)** and **www.hilti.ca (Canada)** — "Service/Technical Info >> Technical Downloads >> Anchoring Systems". Because of the possibility of changes, always verify that downloaded IFU are current when used. Proper installation is critical to achieve full performance. Training is available on request. Contact Hilti Technical Services for applications and conditions not addressed in the IFU.

2.4.15 Working Time and Cure Time

HIT-HY 200-A

[°C]	[°F]	HIT-V, HAS, HIS-N, Rebar t_{work}	HIT-V, HAS, HIS-N, Rebar t_{cure}	HIT-Z t_{work}	HIT-Z t_{cure}
-10...-5	14...23	1.5 h	h	–	–
-4...0	24...32	50 min	4 h	–	–
1...5	33...41	25 min	2 h	–	–
6...10	42...50	15 min	1.25 h	15 min	1.25 h
11...20	51...68	7 min	45 min	7 min	45 min
21...30	69...86	4 min	30 min	4 min	30 min
31...40	87...104	3 min	30 min	3 min	30 min

HIT-HY 200-R

[°C]	[°F]	HIT-V, HAS, HIS-N, Rebar t_{work}	HIT-V, HAS, HIS-N, Rebar t_{cure}	HIT-Z t_{work}	HIT-Z t_{cure}
-10...-5	14...23	3 h	20 h	–	–
-4...0	24...32	2 h	8 h	–	–
1...5	33...41	1 h	4 h	–	–
6...10	42...50	40 min	2.5 h	40 min	2.5 h
11...20	51...68	15 min	1.5 h	15 min	1.5 h
21...30	69...86	9 min	1 h	9 min	1 h
31...40	87...104	6 min	1 h	6 min	1 h

DRAWINGS

08/31/15 STAINLESS STEEL FIXED HEADER SYSTEM MATERIAL AND MANUFACTURING SPECIFICATIONS (304L)

ITEM	MATERIAL SPECIFICATION	MANUFACTURING SPECIFICATION	NOTES
HEADER, DROPLEG, & CONNECTORS	304L STAINLESS STEEL ASTM A240	FITTINGS: ASTM A774 TUBULAR PRODUCTS: ASTM A778 DIMENSIONS: ASTM A554	———
SUPPORTS & DIFFUSERS	304L STAINLESS STEEL SHEET & PLATE PER ASTM A240 THREADED ROD PER ASTM A276	———	"L" GRADE NOT REQUIRED FOR NON-WELDED PARTS
SANITAIRE FIXED & EXPANSION JOINT FLANGES	304L STAINLESS STEEL ASTM A240	———	———
FOLLOWER FLANGES	304L STAINLESS STEEL ASTM A240	———	150# DRILLING FOR TERMINATION FLANGE CONNECTION
BOLTS, NUTS, & WASHERS	18-8 STAINLESS STEEL	———	———
GASKETS	FIBER-REINFORCED NEOPRENE	———	45 TO 50 DUROMETER SHORE A

HEADER DIAMETER (INCHES)	WALL THICKNESS (INCHES)	(GAUGE)
30"	0.172"	8
20" & 24"	0.140"	10
18" & LESS	0.109"	12

STAINLESS STEEL FABRICATION
FACTORY WELD ONLY WITH MIG, TIG, OR PLASMA-ARC WELDING INERT GAS PROCESSES. FULL PENETRATION BUTT WELDS, ER 316L FILLER WIRE. AFTER FABRICATION FINISH CLEAN ALL WELDED STAINLESS STEEL ASSEMBLIES BY FULL IMMERSION CLEANING TECHNIQUES IN ACCORDANCE TO 6.2.1 OF ASTM A380-88. THE ACID FOR USE DEFINED BY TABLE A2.1 OF ANNEX A2 OF ASTM A380. FINAL RINSE AND DRY IN ACCORDANCE TO SECTION 8.3 OF ASTM A380. ALL WELDED SURFACES TO CONFORM TO AISI NO. 2D FINISH.

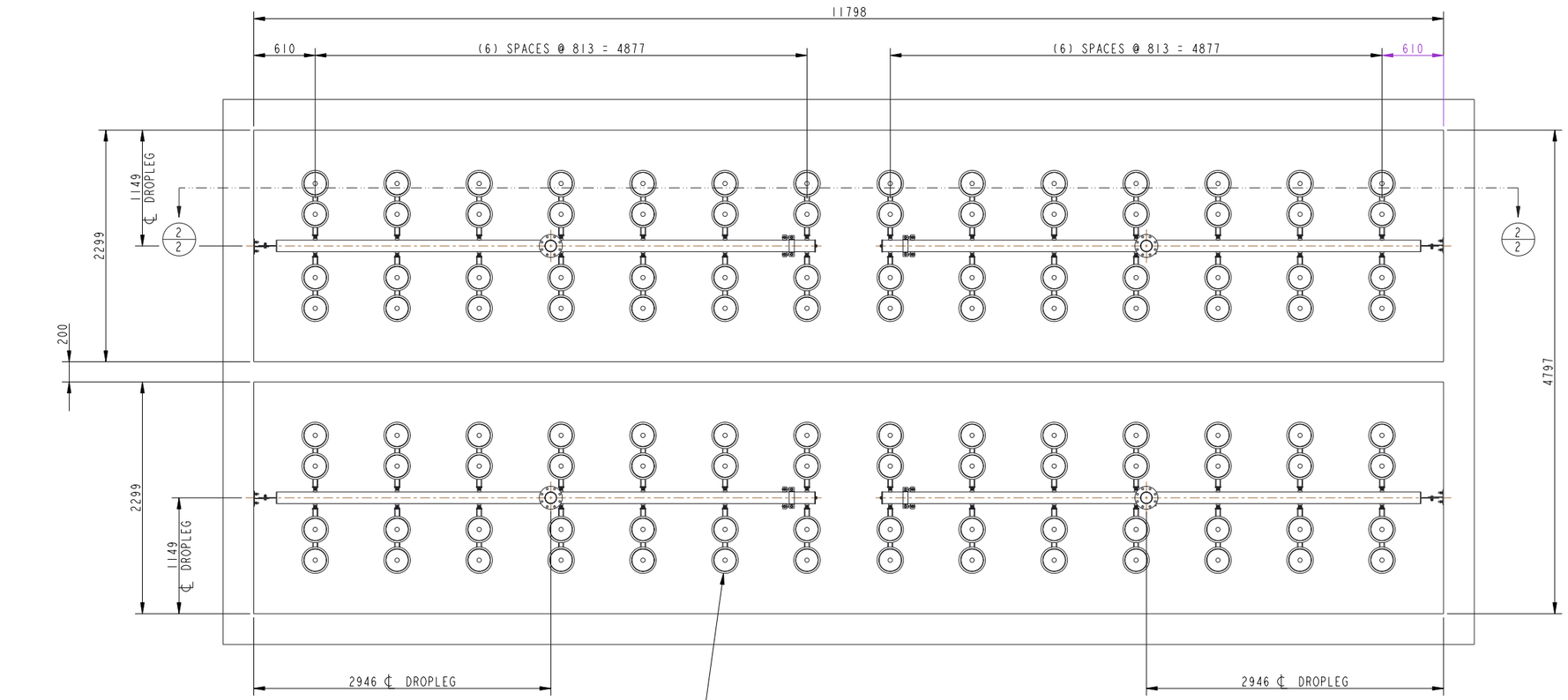

KEY PLAN 1

XX / X — VIEW, SECTION, OR DETAIL NUMBER; SHEET NUMBER ON WHICH VIEW, SECTION, OR DETAIL IS FOUND

NOTE:
PLEASE VERIFY ALL DIMENSIONS AND ELEVATIONS, INCLUDING: INSIDE TANK DIMENSIONS, DROPLEG LOCATIONS, ELEVATIONS OF DROPLEGS CONNECTIONS, FACE OF FLANGES, DIFFUSER ELEVATIONS, FLAT FLOOR AND HIGHPOINT/LOWPOINT ELEVATIONS OF SLOPED FLOOR.

FOR APPROVAL ONLY.
NOT FOR CONSTRUCTION.
xylem
12/05/18

WARNING
xylem DOES NOT ACCEPT RESPONSIBILITY FOR UNDOCUMENTED CUSTOMER INITIATED CHANGES TO ELECTRONICALLY TRANSMITTED DRAWINGS

REV	DATE	REVISION	BY
1	2/14/19	REVISED PER REVISION FORM DATE 2/11/19	AV

IQALUIT, CANADA
WASTEWATER TREATMENT PLANT

CONFIDENTIAL AND PROPRIETARY:
All rights reserved. This document is confidential, proprietary and copyrighted. It shall not be reproduced, disseminated or otherwise made available to third parties or otherwise used without prior written consent. Unlawful use - also in parts or in revised form - may be pursued under civil and criminal law.

KEY PLAN

SANITAIRE
a xylem brand
BROWN DEER, WISCONSIN 53223

DRWN BY TJC DATE 12/04/18	EQUIP.	JOB NO. 18-9418SC	SHEET 1 OF 3
CHKD BY - DATE -	STD.		
APPVD BY - DATE -	SIZE D REV. A	DWG. NO. E-1	

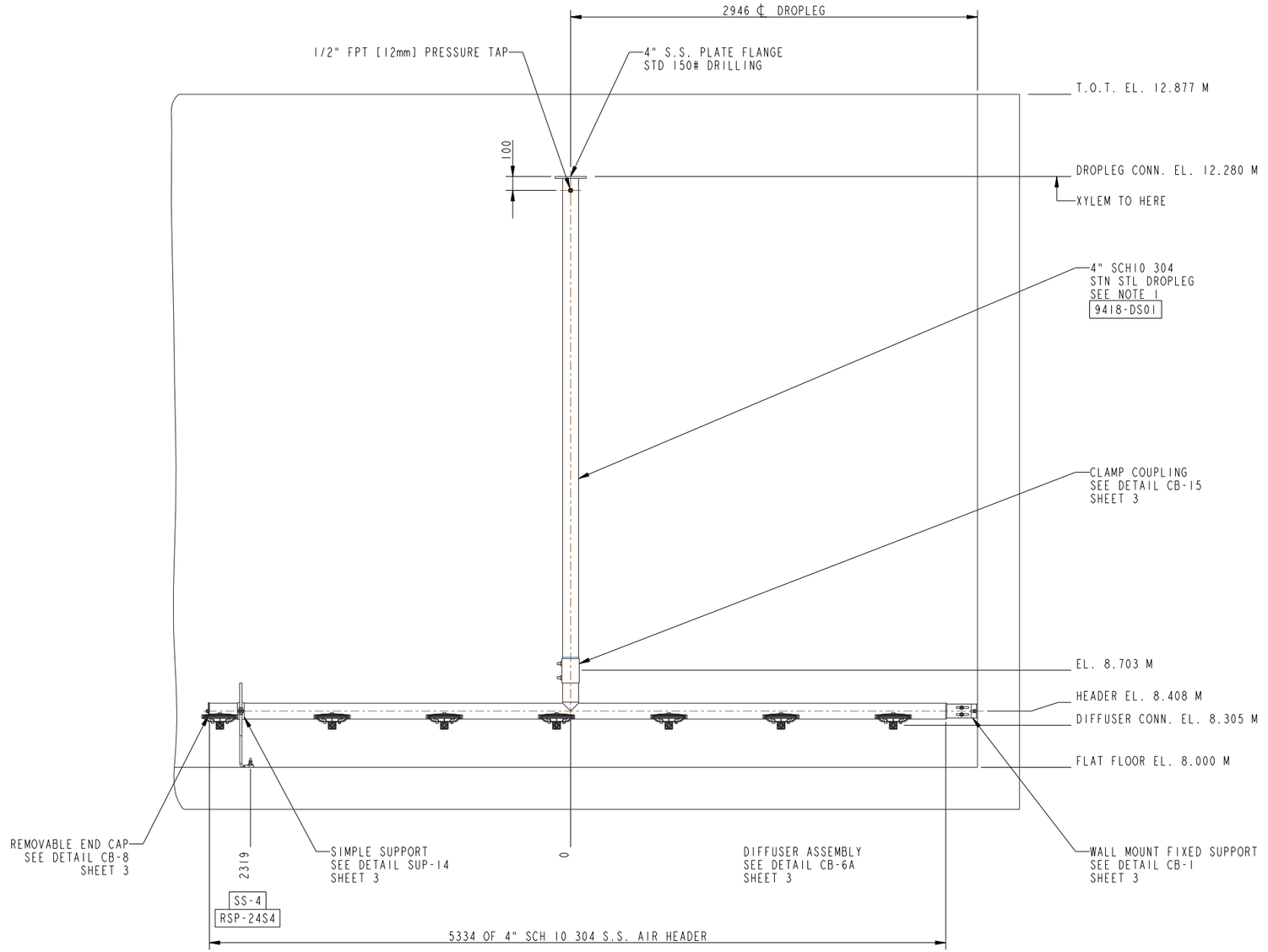

AIR HEADER

SECTION (2)

2 REQ'D AS SHOWN
2 REQ'D MIRROR IMAGE

NOTES:
1. INSTALLATION OF THE DROPLEG REQUIRES A PROPERLY SUPPORTED AIR MAIN AND CONNECTION.
2. SS-X / RSP-XXXX — REFERS TO THE MANIFOLD SUPPORT SIZE AND CORRESPONDS TO THE TABLE SHOWN WITH THE SUPPORT DETAIL. INDICATES THE SUPPORT STAND PART NUMBER.

NOTE:
PLEASE VERIFY ALL DIMENSIONS AND ELEVATIONS, INCLUDING: INSIDE TANK DIMENSIONS, DROPLEG LOCATIONS, ELEVATIONS OF DROPLEGS CONNECTIONS, FACE OF FLANGES, DIFFUSER ELEVATIONS, FLAT FLOOR AND HIGHPOINT/LOWPOINT ELEVATIONS OF SLOPED FLOOR.

FOR APPROVAL ONLY.
NOT FOR CONSTRUCTION.
xylem
12/05/18

WARNING
xylem DOES NOT ACCEPT RESPONSIBILITY FOR UNDOCUMENTED CUSTOMER INITIATED CHANGES TO ELECTRONICALLY TRANSMITTED DRAWINGS

REV	DATE	REVISION	BY

IQALUIT, CANADA
WASTEWATER TREATMENT PLANT

CONFIDENTIAL AND PROPRIETARY:
All rights reserved. This document is confidential, proprietary and copyrighted. It shall not be reproduced, disseminated or otherwise made available to third parties or otherwise used without prior written consent. Unlawful use - also in parts or in revised form - may be pursued under civil and criminal law.

MANIFOLD SECTION

SANITAIRE
a xylem brand
BROWN DEER, WISCONSIN 53223

DRWN BY TJC DATE 12/04/18	EQUIP.	JOB NO. 18-9418SC	SHEET 2 OF 3
CHKD BY - DATE -	STD.		
APPVD BY - DATE -	SIZE D REV. A	DWG. NO. E-2	

SUPPORT T	
HEADER DIAMETER	PART NUMBER
	304 S.S.
4"	1390-1

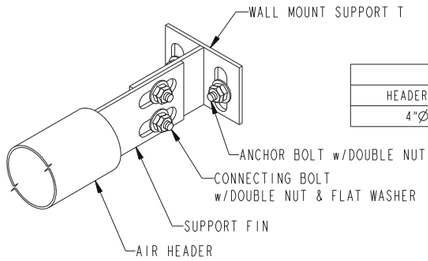

SIMPLE SUPPORT ADHESIVE ANCHOR CHART			
HEADER DIAMETER	ANCHOR BOLT	PROJECTION	EMBEDMENT
4"Ø (100)	1/2"Ø x 6 1/2"	2 1/4" (57)	4 1/4" (108)

CONNECTING BOLT CHART	
HEADER DIAMETER	BOLT
4"Ø	1/2"Ø x 1 1/2"

WALL MOUNT FIXED SUPPORT
DETAIL CB-1

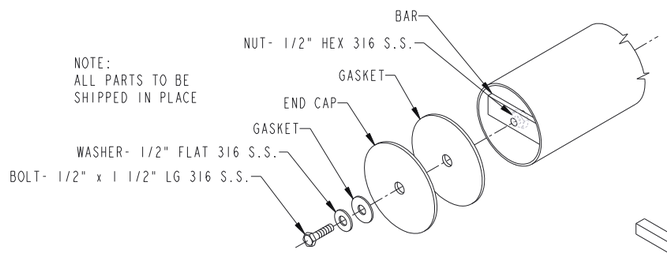

NOTE:
ALL PARTS TO BE
SHIPPED IN PLACE

REMOVABLE END CAP
DETAIL CB-8

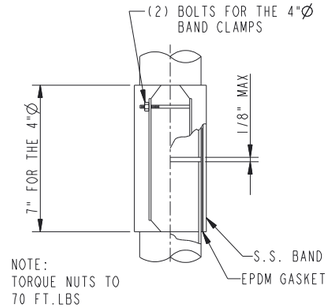

NOTE:
TORQUE NUTS TO
70 FT.LBS

CLAMP COUPLING
DETAIL CB-15

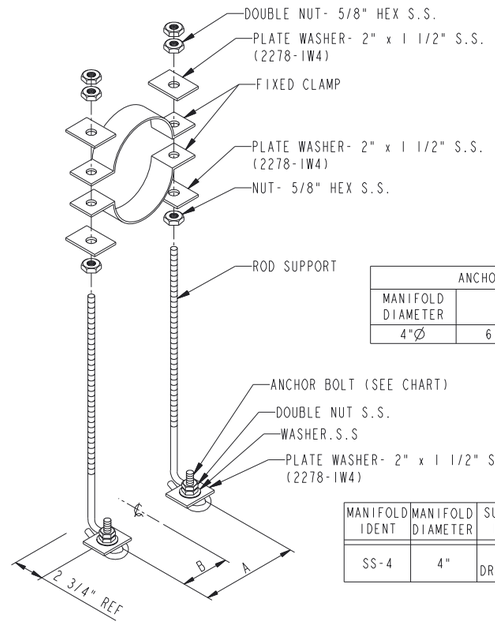

ANCHOR SPACING		
MANIFOLD DIAMETER	A	B
4"Ø	6 5/8"	3 5/16"

MANIFOLD IDENT	MANIFOLD DIAMETER	SUPPORT BASE	PIPE SIZE FIXED CLAMP
			304
SS-4	4"	SEE DRAWINGS	CF4500-4

SIMPLE SUPPORT
DETAIL SUP-14

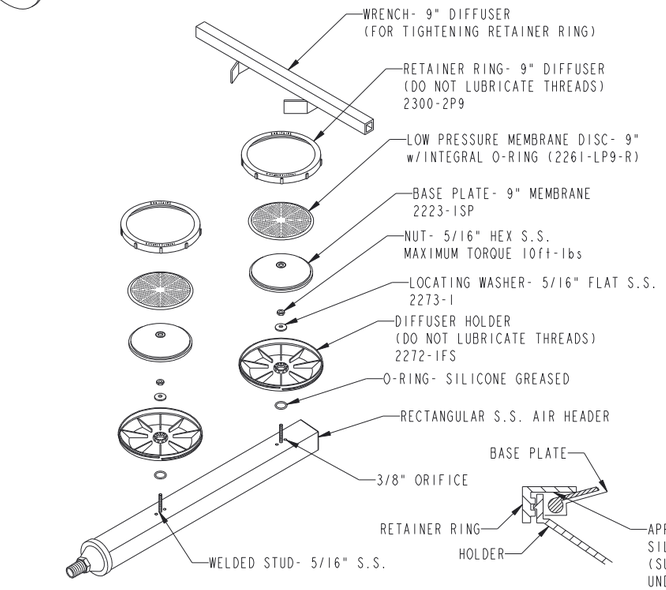

LUBRICATION DETAIL

9" DUAL LP DIFFUSER ASSEMBLY
DETAIL FB-9B

COARSE BUBBLE AERATION SYSTEM ADHESIVE ANCHOR CHART			
HEADER DIA.	ANCHOR BOLT	PROJECTION HOLD	EMBEDMENT
3"Ø (75) - 8"Ø (200)	1/2"Ø X 6 1/2"	2 1/4" (57)	4 1/4" (108)

NOTE:
PLEASE VERIFY ALL DIMENSIONS AND ELEVATIONS, INCLUDING: INSIDE TANK DIMENSIONS, DROPLEG LOCATIONS, ELEVATIONS OF DROPLEGS CONNECTIONS, FACE OF FLANGES, DIFFUSER ELEVATIONS, FLAT FLOOR AND HIGHPOINT/LOWPOINT ELEVATIONS OF SLOPED FLOOR.

FOR APPROVAL ONLY.
NOT FOR CONSTRUCTION.
xylem
12/05/18

WARNING
xylem DOES NOT ACCEPT RESPONSIBILITY FOR UNDOCUMENTED CUSTOMER INITIATED CHANGES TO ELECTRONICALLY TRANSMITTED DRAWINGS

REV	DATE	REVISION	BY

IQALUIT, CANADA
WASTEWATER TREATMENT PLANT

CONFIDENTIAL AND PROPRIETARY:
All rights reserved. This document is confidential, proprietary and copyrighted. It shall not be reproduced, disseminated or otherwise made available to third parties or otherwise used without prior written consent. Unlawful use - also in parts or in revised form - may be pursued under civil and criminal law.

DETAIL VIEWS

SANITAIRE
a xylem brand
BROWN DEER, WISCONSIN 53223

DRWN BY	TJC	DATE 12/04/18	EQUIP.	JOB NO.	18-9418SC
CHKD BY	-	DATE -	STD.		
APPVD BY	-	DATE -	SIZE D	DWG. NO.	E-3
			REV. A	SHEET	3 OF 3

REVIEWED BY CONTRACTOR

Kudlik Construction Ltd.

NAME: Sandra Rousseau P.Eng

DATE: Jan 28, 2019

NORCLAIR
MÉCANIQUE DE PROCÉDÉ

SHOP DRAWINGS

DA-MP-37 Victaulic coupling (DI piping)

Date : 2019-01-25

Information general	
Project : **WWTP UPGRADE - IQALUIT**	
Client : Kudlik Construction Ltd. To : Sandra Rousseau P.Eng., Project Manager	Project number : **2018-062** E-mail : srousseau@kudlik.biz
Contractor : **Norclair inc.**	Project number Norclair : **P1039**
Address : 1100, Montée Masson, Laval, QC, Canada H7E 4P2	
Project Manager : Hugo Chartier, Project Manager	E-mail: hchartier@norclair.ca
Phone : 450-688-4012 # 720	Cell. : 514-703-0263

Information, subcontractor or supplier	
Sub/supplier : Victaulic	
Contact : Matt Mastroberardino	Phone : 514-292-3722

Information on the equipment	
Speciality : **Process**	
Equipment : Victaulic coupling (DI piping)	
Drawing reference :	
Specification reference : **40 05 25** (Page xx / xx)	Division :
Article :	Number of pages : 16

CONSULTANT APPROVAL

STANTEC PROJECT #: 110126045

SUBMITTAL # DA-MP-37-Victaulic couplings (DI piping)

This review by Stantec is for general conformance with the design concept of Stantec's design of the:

- ☑ Process
- ☐ Structural
- ☐ Mechanical
- ☐ Electrical
- ☐ Other

component(s) only and does not mean that Stantec has verified or approves the shop drawing(s). The Contractor remains solely responsible for the shop drawing(s) and this review by Stantec does not relieve the Contractor of the Contractor's responsibility for errors or omissions in the shop drawing(s) or for meeting all requirements of the contract documents. This review does not mean that Stantec approves the detailed design inherent in the shop drawing, responsibility for which shall remain with the Contractor submitting same, nor does this review mean that Stantec accepts any deviation of the shop drawing(s) from the contract documents. The Contractor is responsible for confirming all dimensions and correlating them at the job site, for all construction means, methods and techniques, and for coordination of construction work of all trades, including coordination of all shop drawings.

Stantec

- ☑ REVIEWED
- ☐ REVIEWED, AS NOTED
- ☐ REVISE AND RESUBMIT
- ☐ NOT REVIEWED

DATE January 28, 2019

BY Alejandro Rojas, P.Eng

1100, montée Masson
Laval, QC, Canada
H7E 4P2

: 450-688-4012
: 450-661-6341
E-Mail : info@norclair.ca
www.norclair.ca

Victaulic® Grooved Coupling
Style 31

23.02



Patented

1.0 PRODUCT DESCRIPTION

Available Sizes

- 2 – 36"/DN80 – DN900

Pipe Material

- Ductile Iron with a minimum wall thickness of ANSI/AWWA C151/A21.51, Class 53

Maximum Working Pressure

- Up to 500 psi/3450 kPa

Function

- Provides a fully restrained pipe joint to the published maximum allowable working pressure.
- Joints are rigid or flexible depending on groove style.
- Rigid joints resist axial and angular movement.
- Flexible joints allow for restrained axial and angular movement to the couplings published capabilities.

2.0 CERTIFICATION/LISTINGS

Coupling design, materials and testing conform to the requirements of AWWA C606 standard for Grooved and Shouldered Joints.

NOTES

- Refer to Victaulic publication 10.01 for details

ALWAYS REFER TO ANY NOTIFICATIONS AT THE END OF THIS DOCUMENT REGARDING PRODUCT INSTALLATION, MAINTENANCE OR SUPPORT.

System No.		Location	
Submitted By		Date	

Spec Section		Paragraph	
Approved		Date	

 © 2018 Victaulic Company. All rights reserved.

3.0 SPECIFICATIONS – MATERIAL

Housing: Ductile iron conforming to ASTM A536, Grade 65-45-12. Ductile iron conforming to ASTM A395, Grade 65-45-15, is available upon special request.

Housing Coating: (specify choice)

- ☐ Standard: Phenolic Alkyd Primer (2.5 mil).
- ☐ Optional: Orange enamel.
- ☐ Optional: Coal tar epoxy coating (3 mils).
- ☐ Organic zinc primer (3 mils).
- ☐ Bituminous coating.

NOTE

- Others available, contact Victaulic.

Gasket: (specify choice[1])

- ☐ **Grade "M" FlushSeal™**
  Halogenated Butyl (Brown color code). Temperature range –20°F to +200°F/–29°C to +93°C. Specially compounded to conform to ductile pipe surfaces. Recommended for water service within the specified temperature range plus a variety of dilute acids, oil-free air, and many chemical services. UL classified in accordance with ANSI/NSF 61 for cold +86° F/+30°C potable water service. NOT RECOMMENDED FOR PETROLEUM SERVICES.
- ☐ **Grade "S" FlushSeal™**
  Nitrile (Red color code). Temperature range –20°F to +180°F/–29°C to + 82°C. Specifically compounded to conform to ductile pipe surfaces. Recommended for petroleum products, air with oil vapors, vegetable and mineral oils within the specified temperature range; except hot air over +140° F/+60° C and water over +150° F/+66°C. NOT RECOMMENDED FOR HOT WATER SERVICES.

[1] Services listed are General Service Guidelines only. It should be noted that there are services for which these gaskets are not compatible. Reference should always be made to the latest Victaulic Seal Selection Guide for specific gasket service guidelines and for a listing of services which are not compatible.

Bolts/Nuts: (specify choice)

- ☐ Standard: Carbon steel oval neck track bolts meeting the mechanical property requirements of ASTM A449 (imperial) and ISO 898-1 Class 9.8 (M10-M16) Class 8.8 (M20 and greater). Carbon steel hex nuts meeting the physical and chemical requirements of ASTM A563 Grade B (imperial - heavy hex nuts) and ASTM A563M Class 9 (metric - hex nuts). Track bolts and hex nuts are zinc electroplated per ASTM B633 ZN/FE5, finish Type III (imperial) or Type II (metric).
- ☐ Optional: Stainless steel oval neck track bolts meeting the requirements of ASTM F593, Group 2 (316 stainless steel), condition CW. Stainless steel heavy hex nuts meeting the requirements of ASTM F594, Group 2 (316 stainless steel), condition CW, with galling-resistant coating.[2]

[2] Optional bolts/nuts are available in imperial size only.

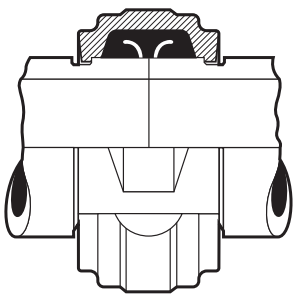

Exaggerated for Clarity

 © 2018 Victaulic Company. All rights reserved.

4.0 DIMENSIONS

Style 31

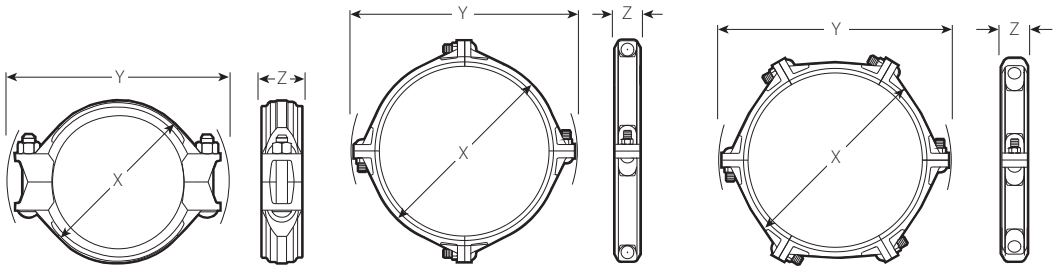

3 – 12" Sizes 14 – 20" Sizes 24 – 36" Sizes

Pipe Size		Bolt/Nut[3]		Dimensions			Weight
Nominal inches DN	Actual Outside Diameter inches mm	Qty.	Size inches	X inches mm	Y inches mm	Z inches mm	Approximate (Each) lb kg
3 DN80	3.960 100.6	2	½ x 2¾	5.50 140	7.63 194	2.13 54	4.8 2.2
4 DN100	4.800 121.9	2	⅝ x 3¼	6.25 159	9.20 234	2.09 53	7.5 3.4
6 DN150	6.900 175.3	2	⅝ x 3¼	8.28 210	11.19 284	2.22 56	9.4 4.3
8 DN200	9.050 229.9	2	¾ x 5	10.74 273	14.33 364	2.59 66	16.5 7.5
10 DN250	11.100 281.9	2	¾ x 5	12.84 326	16.44 418	2.75 70	22.5 10.2
12 DN300	13.200 335.3	2	⅞ x 5	15.27 388	19.16 487	2.75 70	30.0 14.0
14 DN350	15.300 388.6	4	1 x 3½	17.21 437	21.96 558	2.75 70	40.8 18.5
16 DN400	17.400 442.0	4	1 x 3½	19.90 505	23.96 609	3.50 89	61.3 27.8
18 DN450	19.500 495.3	4	1 x 3½	22.03 560	26.33 669	3.50 89	80.0 36.3
20 DN500	21.600 548.6	4	1⅛ x 4	24.13 613	28.69 729	3.50 89	76.0 34.5
24 DN600	25.800 655.3	6	1⅛ x 4	28.31 719	33.06 840	3.50 89	104.0 47.2
30 DN750	32.000 812.8	6	1⅛ x 4	35.02 890	39.39 1001	4.38 111	162.0 73.5
36 DN900	38.300 972.8	6	1⅛ x 4	41.56 1056	46.04 1169	4.44 113	200.0 90.7

[3] Number of bolts required equals number of housing segments. Metric thread size bolts are available (color coded gold) for all coupling sizes upon request. Contact Victaulic for details.

NOTES

- WARNING: Depressurize and drain the piping system before attempting to install, remove, or adjust any Victaulic piping products.
- WARNING: FOR ONE TIME FIELD TEST ONLY, the Maximum Joint Working Pressure may be increased to 1 ½ times the figures shown.

 © 2018 Victaulic Company. All rights reserved.

5.0 PERFORMANCE

Style 31

Size		Pipe End Separation[4]	Deflect FR. C_L[4]		Maximum Joint Working Pressure[5]	Maximum Permis. End Load[5]
Nominal inches DN	Actual Outside Diameter inches mm	Allowable inches mm	Per Cplg. Degree	Pipe In./Ft. mm	psi kPa	lb N
3 DN80	3.960 100.6	0 - 0.09 0 - 2.4	1° - 21´	0.28 23	500 3450	6200 27590
4 DN100	4.800 121.9	0 - 0.09 0 - 2.4	1° - 8´	0.21 17	500 3450	9000 40050
6 DN150	6.900 175.3	0 - 0.09 0 - 2.4	0° - 47´	0.14 12	400 2750	14950 66528
8 DN200	9.050 229.9	0 - 0.09 0 - 2.4	0° - 36´	0.11 9	400 2750	25600 113920
10 DN250	11.100 281.9	0 - 0.16 0 - 4.0	0° - 48´	0.15 13	350 2410	33850 150632
12 DN300	13.200 335.3	0 - 0.16 0 - 4.0	0° - 41´	0.13 11	350 2410	47.900 21150
14 DN350	15.300 388.6	0 - 0.16 0 - 4.0	0° - 35´	0.11 9	250 1725	45950 204470
16 DN400	17.400 442.0	0 - 0.25 0 - 6.4	0° - 49´	0.16 13	250 1725	59400 264330
18 DN450	19.500 495.3	0 - 0.25 0 - 6.4	0° - 44´	0.14 12	250 1725	74650 332190
20 DN500	21.600 548.6	0 - 0.25 0 - 6.4	0° - 40´	0.12 10	150 1035	54900 244305
24 DN600	25.800 655.3	0 - 0.25 0 - 6.4	0° - 33´	0.11 9	150 1035	78.400 34880
30 DN750	32.000 812.8	0 - 0.47 0 - 11.9	0° - 51´	0.17 14	150 1035	120570 536530
36 DN900	38.300 972.8	0 - 0.47 0 - 11.9	0° - 47´	0.15 13	150 1035	172815 769030

4 Allowable Pipe End Separation and Deflection figures show the maximum nominal range of movement available at each joint for pipe prepared to flexible cut grooved specifications. Pipe cut grooved to rigid cut grooved specifications does not permit expansion and contraction.

5 Working Pressure and End Load are total, from all internal and external loads, based on AWWA class 53 or higher ductile iron pipe radius cut grooved in accordance with Victaulic published radius cut groove dimensions.

NOTE

- WARNING: FOR ONE TIME FIELD TEST ONLY, the Maximum Joint Working Pressure may be increased to 1 ½ times the figures shown.

 © 2018 Victaulic Company. All rights reserved.

6.0 NOTIFICATIONS

WARNING



- **Read and understand all instructions before attempting to install, remove, adjust, or maintain any Victaulic piping products.**
- **Depressurize and drain the piping system before attempting to install, remove, adjust, or maintain any Victaulic piping products.**
- **Wear safety glasses, hardhat, and foot protection.**

Failure to follow these instructions could result in death or serious personal injury and property damage.

7.0 REFERENCE MATERIALS

23.01: AWWA Ductile Iron Pipe - Grooved System

23.05: AWWA (Cast) Fittings

25.05: Radius Cut Groove Specifications

29.01: Terms and Conditions/Warranty

I-300: Field Installation Handbook

I-ENDCAP: Victaulic® End Caps Installation Instructions

User Responsibility for Product Selection and Suitability
Each user bears final responsibility for making a determination as to the suitability of Victaulic products for a particular end-use application, in accordance with industry standards and project specifications, as well as Victaulic performance, maintenance, safety, and warning instructions. Nothing in this or any other document, nor any verbal recommendation, advice, or opinion from any Victaulic employee, shall be deemed to alter, vary, supersede, or waive any provision of Victaulic Company's standard conditions of sale, installation guide, or this disclaimer.

Intellectual Property Rights
No statement contained herein concerning a possible or suggested use of any material, product, service, or design is intended, or should be constructed, to grant any license under any patent or other intellectual property right of Victaulic or any of its subsidiaries or affiliates covering such use or design, or as a recommendation for the use of such material, product, service, or design in the infringement of any patent or other intellectual property right. The terms "Patented" or "Patent Pending" refer to design or utility patents or patent applications for articles and/or methods of use in the United States and/or other countries.

Note
This product shall be manufactured by Victaulic or to Victaulic specifications. All products to be installed in accordance with current Victaulic installation/assembly instructions. Victaulic reserves the right to change product specifications, designs and standard equipment without notice and without incurring obligations.

Installation
Reference should always be made to the Victaulic installation handbook or installation instructions of the product you are installing. Handbooks are included with each shipment of Victaulic products, providing complete installation and assembly data, and are available in PDF format on our website at www.victaulic.com.

Warranty
Refer to the Warranty section of the current Price List or contact Victaulic for details.

Trademarks
Victaulic and all other Victaulic marks are the trademarks or registered trademarks of Victaulic Company, and/or its affiliated entities, in the U.S. and/or other countries.

 © 2018 Victaulic Company. All rights reserved.

Victaulic® Transition Couplings
Style 307

23.03



Patented

1.0 PRODUCT DESCRIPTION

Available Sizes

- 3 – 12"/DN80 – DN300

Maximum Working Pressure

- Up to 500 psi/3450 kPa

Application

- Provides direct transition from cut or roll grooved IPS pipe to AWWA ductile iron pipe. For TWAS pumps assembly
- Provides a rigid pipe joint designed to restrict axial or angular movement.

Pipe Material

- Steel and ductile iron.

2.0 CERTIFICATION/LISTINGS

NOTE

- Refer to Victaulic publication 10.01 for details

ALWAYS REFER TO ANY NOTIFICATIONS AT THE END OF THIS DOCUMENT REGARDING PRODUCT INSTALLATION, MAINTENANCE OR SUPPORT.

System No.		Location	
Submitted By		Date	

Spec Section		Paragraph	
Approved		Date	

© 2018 Victaulic Company. All rights reserved.

3.0 SPECIFICATIONS – MATERIAL

Housing: Ductile iron conforming to ASTM A536, Grade 65-45-12. Ductile iron conforming to ASTM A395, Grade 65-45-15, is available upon special request.

Housing Coating: (specify choice)

☐ Standard: Orange enamel.

On request the following are available:

☐ Alkyd-phenolic primer (1.5 mil).

☐ Coal tar epoxy coating (3 mils).

☐ Optional: Organic zinc primer (3 mils).

☐ Optional: Bituminous coating.

☐ Optional: Hot dipped galvanized.

NOTE

- Others available, contact Victaulic.

Gasket: (specify choice[1])

☐ **Grade "M" Flush-Seal™**
Halogenated Butyl (Brown color code). Temperature range –20°F to +200°F/–29°C to +93°C. Specially compounded to conform to ductile pipe surfaces. Recommended for water service within the specified temperature range plus a variety of dilute acids, oil-free air, and many chemical services. UL classified in accordance with ANSI/NSF 61 for cold +86°F/+30°C potable water service. NOT RECOMMENDED FOR PETROLEUM SERVICES.

☐ **Grade "S" Flush-Seal™**
Nitrile (Red color code). Temperature range –20°F to +180°F/–29°C to + 82°C. Specifically compounded to conform to ductile pipe surfaces. Recommended for petroleum products, air with oil vapors, vegetable and mineral oils within the specified temperature range; except hot air over +140° F/+60° C and water over +150° F/+66°C. NOT RECOMMENDED FOR HOT WATER SERVICES.

1 Services listed are General Service Guidelines only. It should be noted that there are services for which these gaskets are not compatible. Reference should always be made to the latest Victaulic Seal Selection Guide for specific gasket service guidelines and for a listing of services which are not compatible.

Bolts/Nuts: (specify choice[2])

☐ **Standard:** Carbon steel oval neck track bolts meeting the mechanical property requirements of ASTM A449 (imperial) and ISO 898-1 Class 9.8 (M10-M16) Class 8.8 (M20 and greater). Carbon steel hex nuts meeting the mechanical property requirements of ASTM A563 Grade B (imperial – heavy hex nuts) and ASTM A563M Class 9 (metric – hex nuts). Track bolts and hex nuts are zinc electroplated per ASTM B633 ZN/FE5, finish Type III (imperial) or Type II (metric).

☐ **Optional (imperial):** Stainless steel oval neck track bolts meeting the mechanical property requirements of ASTM F593, Group 2 (316 Stainless Steel), condition CW. Stainless steel heavy nuts meeting the mechanical property requirements of ASTM F594, Group 2 (316 stainless steel), condition CW, with galling reducing coating.

2 Optional bolts/nuts are available in imperial size only.

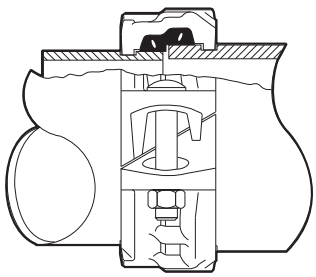

Exaggerated for Clarity

 © 2018 Victaulic Company. All rights reserved.

4.0 DIMENSIONS

Style 307

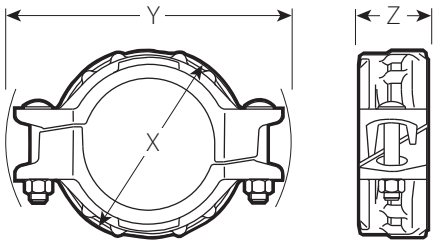

Pipe Size		Mating Pipe Actual Size		Bolt/Nut[3]		Dimensions			Weight
Nominal inches DN	Actual Outside Diameter inches mm	IPS Steel inches mm	AWWA Ductile inches mm	Qty.	Size inches	X inches mm	Y inches mm	Z inches mm	Approximate (Each) lb kg
3 DN80	3.960 100.6	3.500 88.9	3.96 100.6	2	½ x 2¾	5.50 140	7.38 187	2.07 53	6.0 2.7
4 DN100	4.800 121.9	4.500 114.3	4.80 121.9	2	½ x 3¼	6.38 162	9.00 229	2.19 56	8.0 3.6
6 DN150	6.900 175.3	6.625 168.3	6.90 175.3	2	5/8 x 3¼	8.44 214	11.13 283	2.31 59	9.0 4.1
8 DN200	9.050 229.9	8.625 219.1	9.05 229.9	2	¾ x 5	11.00 279	13.88 353	2.63 67	18.0 8.2
10 DN250	11.100 281.9	10.750 273.0	11.10 281.9	2	7/8 x 6½	13.13 334	16.50 419	2.63 67	22.0 10.0
12 DN300	13.200 335.3	12.750 323.9	13.20 335.3	2	7/8 x 6½	15.38 391	18.94 481	2.63 67	31.0 14.1

[3] Metric thread size bolts are available (color coded gold) for all coupling sizes upon request. Contact Victaulic for details.

5.0 PERFORMANCE

Style 307

Size		Pipe End Separation	Maximum Joint Working Pressure[4] psi kPa	Maximum Permis. End Load [4] lb N
Nominal inches DN	Actual Outside Diameter inches mm	Allowable inches mm		
3 DN80	3.960 100.6	0.03 1	500 3450	4810 21405
4 DN100	4.800 121.9	0.06 2	500 3450	7950 35377
6 DN150	6.900 175.3	0.06 2	400 2750	13780 61321
8 DN200	9.050 229.9	0.03 1	400 2750	23370 103997
10 DN250	11.100 281.9	0.03 1	350 2410	31760 141332
12 DN300	13.200 335.3	0.03 1	350 2410	44680 198826

[4] Working Pressure and End Load are total, from all internal and external loads, based on AWWA class 53 ductile iron pipe radius cut grooved in accordance with ANSI/AWWA C-606 specifications and ANSI standard wall carbon steel pipe cut or roll grooved in accordance with Victaulic specifications. Contact Victaulic for performance on other pipe.

 © 2018 Victaulic Company. All rights reserved.

6.0 NOTIFICATIONS

- WARNING: FOR ONE TIME FIELD TEST ONLY, the Maximum Joint Working Pressure may be increased to 1 ½ times the figures shown.
- For field installation only. Style 307 Transition couplings are essentially rigid and do not permit expansion/contraction.

⚠ WARNING



- **Read and understand all instructions before attempting to install, remove, adjust, or maintain any Victaulic piping products.**
- **Depressurize and drain the piping system before attempting to install, remove, adjust, or maintain any Victaulic piping products.**
- **Wear safety glasses, hardhat, and foot protection.**

Failure to follow these instructions could result in death or serious personal injury and property damage.

7.0 REFERENCE MATERIALS

10.01: Regulatory Approval Reference Guide
23.01: AWWA Ductile Iron Pipe - Grooved System
23.02 Style 31 Grooved Coupling
29.01: Terms and Conditions/Warranty
I-300: Field Installation Handbook: AWWA Products
I-ENDCAP: Victaulic® End Caps Installation Instructions

User Responsibility for Product Selection and Suitability
Each user bears final responsibility for making a determination as to the suitability of Victaulic products for a particular end-use application, in accordance with industry standards and project specifications, as well as Victaulic performance, maintenance, safety, and warning instructions. Nothing in this or any other document, nor any verbal recommendation, advice, or opinion from any Victaulic employee, shall be deemed to alter, vary, supersede, or waive any provision of Victaulic Company's standard conditions of sale, installation guide, or this disclaimer.

Intellectual Property Rights
No statement contained herein concerning a possible or suggested use of any material, product, service, or design is intended, or should be constructed, to grant any license under any patent or other intellectual property right of Victaulic or any of its subsidiaries or affiliates covering such use or design, or as a recommendation for the use of such material, product, service, or design in the infringement of any patent or other intellectual property right. The terms "Patented" or "Patent Pending" refer to design or utility patents or patent applications for articles and/or methods of use in the United States and/or other countries.

Note
This product shall be manufactured by Victaulic or to Victaulic specifications. All products to be installed in accordance with current Victaulic installation/assembly instructions. Victaulic reserves the right to change product specifications, designs and standard equipment without notice and without incurring obligations.

Installation
Reference should always be made to the Victaulic installation handbook or installation instructions of the product you are installing. Handbooks are included with each shipment of Victaulic products, providing complete installation and assembly data, and are available in PDF format on our website at www.victaulic.com.

Warranty
Refer to the Warranty section of the current Price List or contact Victaulic for details.

Trademarks
Victaulic and all other Victaulic marks are the trademarks or registered trademarks of Victaulic Company, and/or its affiliated entities, in the U.S. and/or other countries.

 © 2018 Victaulic Company. All rights reserved.

Vic-Flange® Adapter
Style 341

23.04



3 – 12" Sizes

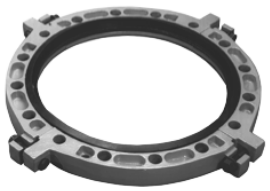

14 – 24" Sizes

1.0 PRODUCT DESCRIPTION

Available Sizes

- 3 – 24"/DN80 – DN600

Maximum Working Pressure

- Up to 250 psi/1725 kpa

Application

- Designed for directly incorporating flanged components with ANSI B16.1 (CL. 125) bolt hole patters into grooved piping systems.

Pipe Material

- Ductile iron, cast iron

2.0 CERTIFICATION/LISTINGS

NOTE

- Refer to Victaulic submittal publication 10.01 for details.

ALWAYS REFER TO ANY NOTIFICATIONS AT THE END OF THIS DOCUMENT REGARDING PRODUCT INSTALLATION, MAINTENANCE OR SUPPORT.

System No.		Location	
Submitted By		Date	

Spec Section		Paragraph	
Approved		Date	

© 2017 Victaulic Company. All rights reserved.

3.0 SPECIFICATIONS – MATERIAL

Housing:

Ductile iron conforming to ASTM A536, Grade 65-45-12. Ductile iron conforming to ASTM A395, Grade 65-45-15, is available upon special request.

Flange Coating: (specify choice)

- ☐ Standard: Alkyd-phenolic primer.
- ☐ Optional: Orange enamel.
- ☐ Optional: Coal tar epoxy coating (3 mils).
- ☐ Optional: Organic zinc primer (3 mils).
- ☐ Optional: Bituminous coating.

NOTE

- Others available, contact Victaulic.

Gasket: (specify choice[1])

☐ **Grade "M" Halogenated Butyl**
Halogenated Butyl (Brown color code). Temperature range –20°F to + 200°F/–29°C to +93°C. Specifically compounded to conform to ductile pipe surfaces. Recommended for water service within the specified temperature range plus a variety of dilute acids, oil-free air and many chemical services. UL classified in accordance with ANSI/NSF 61 for cold +86°F/+30°C potable water service. NOT RECOMMENDED FOR PETROLEUM SERVICES.

☐ **Grade "S" Nitrile**
Nitrile (Red color code). Temperature range –20°F to +180°F/–29°C to +82°C. Specially compounded to conform to ductile pipe surfaces. Recommended for petroleum products, air with oil vapors, vegetable and mineral oils within the specified temperature range; except hot dry air over + 140°F/+60°C) and water over +150°F/+66°C. NOT RECOMMENDED FOR HOT WATER SERVICES.

[1] Services listed are General Service Guidelines only. It should be noted that there are services for which these gaskets are not compatible. Reference should always be made to the latest Victaulic Gasket Selection Guide for specific gasket service guidelines and for a listing of services which are not compatible.

Bolts/Nuts: (specify choice)

☐ **Standard:** Carbon steel oval neck track bolts meeting the mechanical property requirements of ASTM A449. Carbon steel heavy hex nuts meeting the mechanical property requirements of ASTM A563 Grade B. Track bolts and heavy hex nuts are zinc electroplated per ASTM B633 ZN/FE5, finish Type III (imperial) or Type II (metric).

☐ **Optional:** Bolts – Stainless steel, meeting the mechanical property requirements of ASTM F593, Group 2 (316 stainless steel), condition CW. Nuts – Stainless Steel meeting the mechanical property requirements of ASTM F594, Group 2 (316 stainless steel), condition CW, with galling reducing coating.[2]

[2] Optional bolts/nuts are available in imperial size only.

 © 2017 Victaulic Company. All rights reserved.

4.0 DIMENSIONS

Style 341

Note: Gray area of mating face must be free from gouges, undulations or deformities of any type for effective sealing.

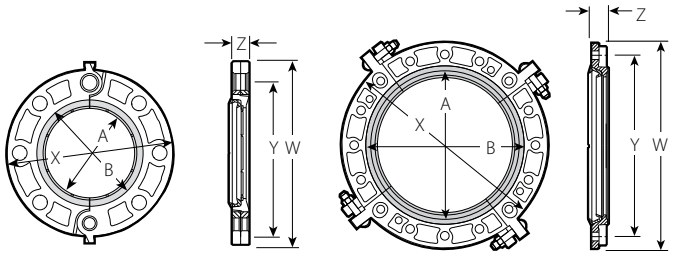

3 – 12" Sizes 14 – 24" Sizes

Size		Assembly Bolts[3]		Draw Bolts[4]		Dimensions				Weight
Nominal inches DN	Actual Outside Diameter inches mm	Qty.	Size inches	Qty.	Size inches	W inches mm	X inches mm	Y inches mm	Z inches mm	Approximate (Each) lb kg
3 80	3.96 100.6	4	⅝ x 3	–	–	8.44 214	7.50 191	6.00 152	0.94 24	5.4 2.4
4 100	4.80 121.9	8	⅝ x 3	–	–	9.94 252	9.00 229	7.50 191	0.94 24	8.2 3.7
6 150	6.90 175.3	8	¾ x 3 ½	–	–	12.00 305	11.00 279	9.50 241	1.00 25	12.0 5.4
8 200	9.05 229.9	8	¾ x 3 ½	–	–	14.63 372	13.50 343	11.75 298	1.13 29	17.4 7.9
10 250	11.10 281.9	12	⅞ x 4	–	–	17.13 435	16.00 406	14.25 362	1.19 30	24.6 11.2
12 300	13.20 335.5	12	⅞ x 4	–	–	20.13 511	19.00 483	17.00 432	1.25 32	34.4 15.6
14 350	15.30 388.6	12	1 x 4 ¼	4	⅝ x 3 ½	24.63 626	21.00 533	18.75 476	1.50 38	55.0 25.0
16 400	17.40 442.0	16	1 x 4 ¾	4	⅝ x 3 ½	27.25 693	23.50 597	21.25 540	1.88 48	80.0 36.3
18 450	19.50 495.3	16	1 ⅛ x 5 ½	4	¾ x 4 ¼	29.13 740	25.00 635	22.75 578	2.25 57	95.0 43.1
20 500	21.60 548.6	20	1 ⅛ x 5 ¾	4	¾ x 4 ¼	31.63 803	27.50 699	25.00 635	2.38 61	115.0 52.2
24 600	25.80 655.3	20	1 ¼ x 6¼	4	¾ x 5	36.13 918	32.00 813	29.50 749	2.50 64	150.0 68.0

[3] Total bolts required are to be supplied by the installer. Bolt sizes are for conventional flange-to-flange connections. Longer bolts are required when Vic-Flange Adapters are used with wafer-type valves.

[4] Supplied with Vic-Flange Adapter.

NOTE

- Metric thread size draw bolts are available (color coded gold) for all coupling sizes upon request. Contact Victaulic for details.

 © 2017 Victaulic Company. All rights reserved.

4.1 DIMENSIONS

Style 341
Required Sealing Surface

Note: Gray area of mating face must be free from gouges, undulations or deformities of any type for effective sealing.

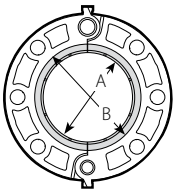

3 – 12" Sizes

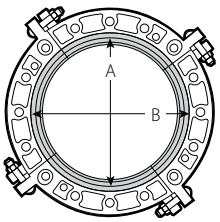

14 – 24" Sizes

Sealing Surface			
Flange Size		A	B
Nominal Diameter inches DN	Actual Outside Diameter inches mm	Maximum inches mm	Minimum inches mm
3 80	3.96 100.6	3.96 101	4.94 125
4 100	4.80 121.9	4.80 122	5.88 149
6 150	6.90 175.3	6.90 175	8.00 203
8 200	9.05 229.9	9.05 230	10.13 257
10 250	11.10 281.9	11.10 282	12.50 318
12 300	13.20 335.5	13.20 335	14.75 375
14 350	15.30 388.6	15.30 389	16.38 416
16 400	17.40 442.0	17.40 442	18.38 467
18 450	19.50 495.3	19.50 495	20.00 508
20 500	21.60 548.6	21.60 549	22.50 572
24 600	25.80 655.3	25.80 655	27.75 705

NOTE

- Vic-Flange gasket requires sufficient flat face area on the mating flange for proper gasket sealing. See chart for dimensions.

 © 2017 Victaulic Company. All rights reserved.

5.0 PERFORMANCE

Style 341

Size		Maximum Working Pressure[5]	Maximum End Load[5]
Nominal inches DN	Actual Outside Diameter inches mm	psi kPa	lb N
3 80	3.96 100.6	250 1725	3100 13795
4 100	4.80 121.9	250 1725	4500 20025
6 150	6.90 175.3	250 1725	9300 41385
8 200	9.05 229.9	250 1725	16000 71200
10 250	11.10 281.9	250 1725	23700 105465
12 300	13.20 335.5	250 1725	34000 151300
14 350	15.30 388.6	200 1375	36700 163315
16 400	17.40 442.0	150 1035	35600 158420
18 450	19.50 495.3	150 1035	44700 198915
20 500	21.60 548.6	150 1035	54900 244305
24 600	25.80 655.3	150 1035	78400 348880

[5] Working Pressure and End Load are total, from all internal and external loads, based on AWWA class 53 ductile iron pipe radius cut grooved in accordance with ANSI/AWWA C-606 and Victaulic specifications. Contact Victaulic for performance on other pipe.

NOTE

- WARNING: FOR ONE TIME FIELD TEST ONLY, the Maximum Joint Working Pressure may be increased to 1½ times the figures shown.

6.0 NOTIFICATIONS

Important Installation Considerations

- The gasket seating surfaces on the pipe and on the face of the mating flange must be free from gouges, indentations and deformities of any type for proper sealing. Refer to the installation instructions for complete information.
- Vic-Flange Adapters must be assembled so there is no interference with mating components.
- When wafer or lug-type valves are used adjoining a Victaulic fitting, check disc dimensions to ensure proper clearance.
- Vic-Flange Adapters must not be used as anchor points for tie rods across non-restrained joints.
- Mating Vic-Flange Adapters to rubber faced flanges, valves, etc. requires the use of a Vic-Flange Washer. Refer to the "Vic-Flange Washer Notes" section below.
- The lettering on the outside of the gasket must face the gasket pocket of the Vic-Flange Adapter. When installed correctly, the lettering on the gasket will not be visible.
- When mating two Vic-Flange Adapters, the hinge points/ draw bolt locations must be staggered, and a flange washer (3" – 12") or transition ring (14" – 24") must be used between the two Vic-Flange Adapters.

 © 2017 Victaulic Company. All rights reserved.

6.0 NOTIFICATIONS (Continued)

Vic-Flange Adapters require a smooth, hard surface at the mating flange face for proper sealing. Some applications, for which the Vic-Flange Adapter is otherwise well suited, do not provide an adequate mating surface. In such cases, a metal Vic-Flange Washer is recommended for insertion between the Vic-Flange Adapter and the mating flange to provide the necessary sealing surface. To ensure the proper Vic-Flange Washer is supplied, always specify the product style and size when ordering.

A. When mating to a serrated flange – a flange gasket should be used against the serrated flange. The Vic-Flange Washer should then be inserted between the Vic-Flange Adapter and the flange gasket.

B. When mating to a wafer-type valve that is rubber lined and partially rubber-faced (smooth or not) – the Vic-Flange Washer should be placed between the valve and the Vic-Flange Adapter.

C. When mating to a rubber-faced flange, valve, etc. – the Vic-Flange Washer must be placed between the Vic-Flange Adapter and the rubber-faced flange.

D. When mating to components (valves, strainers, etc.) where the component flange face has an insert – follow the same arrangement as if the Vic-Flange Adapter was being mated to a serrated flange. Refer to application "A" above.

E. When mating AWWA cast flanges to IPS flanges – the Vic-Flange Transition Ring is placed between the two Vic- Flange Adapters with the draw bolt locations staggered. If one flange is not a Vic-Flange Adapter (i.e. flanged valve), a flange gasket must be placed against that flange. The Vic-Flange Washer must then be inserted between the flange gasket and the Vic-Flange gasket. NOTE: Transition rings, rather than Vic-Flange Washers, must be used when mating Style 741 Vic-Flange Adapters to Style 341 Vic-Flange Adapters in sizes 14 – 24" (DN350 – DN600).

Torque Requirements

Vic-Flange adapters should be installed using the bolt torque listed below:

- 14 – 16" Sizes: 250 – 300 ft. lbs. (339 – 407 N•m)
- 18 – 20" Sizes: 300 – 350 ft. lbs. (407 – 475 N•m)
- 24" Size: 350 - 400 ft. lbs. (475 – 542 N•m)

Exceeding these values may create leakage. Additional levels of torque will not enhance gasket sealing.

7.0 REFERENCE MATERIALS

10.01: Regulatory Approval Reference Guide
23.01: AWWA Ductile Iron Pipe - Grooved System
23.05: AWWA (Cast) Fittings
29.01: Terms and Conditions/Warranty
I-300: Field Installation Handbook

User Responsibility for Product Selection and Suitability
Each user bears final responsibility for making a determination as to the suitability of Victaulic products for a particular end-use application, in accordance with industry standards and project specifications, and the applicable building codes and related regulations as well as Victaulic performance, maintenance, safety, and warning instructions. Nothing in this or any other document, nor any verbal recommendation, advice, or opinion from any Victaulic employee, shall be deemed to alter, vary, supersede, or waive any provision of Victaulic Company's standard conditions of sale, installation guide, or this disclaimer.

Intellectual Property Rights
No statement contained herein concerning a possible or suggested use of any material, product, service, or design is intended, or should be constructed, to grant any license under any patent or other intellectual property right of Victaulic or any of its subsidiaries or affiliates covering such use or design, or as a recommendation for the use of such material, product, service, or design in the infringement of any patent or other intellectual property right. The terms "Patented" or "Patent Pending" refer to design or utility patents or patent applications for articles and/or methods of use in the United States and/or other countries.

Note
This product shall be manufactured by Victaulic or to Victaulic specifications. All products to be installed in accordance with current Victaulic installation/assembly instructions. Victaulic reserves the right to change product specifications, designs and standard equipment without notice and without incurring obligations.

Installation
Reference should always be made to the Victaulic installation handbook or installation instructions of the product you are installing. Handbooks are included with each shipment of Victaulic products, providing complete installation and assembly data, and are available in PDF format on our website at www.victaulic.com.

Warranty
Refer to the Warranty section of the current Price List or contact Victaulic for details.

Trademarks
Victaulic and all other Victaulic marks are the trademarks or registered trademarks of Victaulic Company, and/or its affiliated entities, in the U.S. and/or other countries.

 © 2017 Victaulic Company. All rights reserved.

REVIEWED BY CONTRACTOR

Kudlik Construction Ltd.

NAME: Sandra Rousseau P.Eng

DATE: Fév 07, 2019

NORCLAIR
MÉCANIQUE DE PROCÉDÉ

SHOP DRAWINGS

DA-MP-38R1 Identification

Date : 2019-02-07

Information general	
Project : **WWTP UPGRADE - IQALUIT**	
Client : Kudlik Construction Ltd. To : Sandra Rousseau P.Eng., Project Manager	Project number : **2018-062** E-mail : srousseau@kudlik.biz
Contractor : **Norclair inc.**	Project number Norclair : **P1039**
Address : 1100, Montée Masson, Laval, QC, Canada H7E 4P2	
Project Manager : Hugo Chartier, Project Manager	E-mail: hchartier@norclair.ca
Phone : 450-688-4012 # 720	Cell. : 514-703-0263

Information, subcontractor or supplier	
Sub/supplier :	
Contact :	Phone :

Information on the equipment	
Speciality : **Process**	
Equipment : Identification	
Drawing reference :	
Specification reference : **40 05 40** (Page xx / xx)	Division :
Article :	Number of pages : 10

CONSULTANT APPROVAL

STANTEC PROJECT #: 110126045

SUBMITTAL # DA-MP-38R1 Identification

This review by Stantec is for general conformance with the design concept of Stantec's design of the:

☑ Process ☐ Electrical
☐ Structural ☐ Other
☐ Mechanical

Stantec

component(s) only and does not mean that Stantec has verified or approves the shop drawing(s). The Contractor remains solely responsible for the shop drawing(s) and this review by Stantec does not relieve the Contractor of the Contractor's responsibility for errors or omissions in the shop drawing(s) or for meeting all requirements of the contract documents. This review does not mean that Stantec approves the detailed design inherent in the shop drawing, responsibility for which shall remain with the Contractor submitting same, nor does this review mean that Stantec accepts any deviation of the shop drawing(s) from the contract documents. The Contractor is responsible for confirming all dimensions and correlating them at the job site, for all construction means, methods and techniques, and for coordination of construction work of all trades, including coordination of all shop drawings.

☑ REVIEWED

☐ REVIEWED, AS NOTED

☐ REVISE AND RESUBMIT

☐ NOT REVIEWED

DATE Feb 8, 2019

BY Alejandro Rojas, P.Eng

1100, montée Masson
Laval, QC, Canada
H7E 4P2

ne. : 450-688-4012
.ax : 450-661-6341
E-Mail : info@norclair.ca
www.norclair.ca

PIPE IDENTIFICATION

#	Tag	Qty	Pipe diam	Sticker height	Font height	Location	Sticker color	
			(mm)	(mm)	(mm)		Font	Outer area
P1	**RS**	3	200	150	64	Primary upper	White	Brown
P2	**RS**	2	250	150	64	Primary upper	White	Brown
P3	**SRS**	2	350	150	89	Primary upper	White	Brown
P4	**SCR**	1	350	150	89	Chute	White	Red
P5	**DPS**	1	350	150	89	Chute	White	Red
P6	**DR**	6	100	100	32	Primary upper	White	Black
P7	**PA**	10	200	150	64	Primary upper	White	Blue
P8	**PE**	6	350	150	89	Secondary	White	Brown
P9	**ML**	5	350	150	89	Secondary	White	Grey(Charcoal)
P10	**FE**	5	400	150	89	Secondary	Black	White
P11	**DSUB**	4	350	150	89	DAF	White	Dark blue
P12	**DSUB**	4	100	100	32	DAF	White	Dark blue
P13	**DSUB**	6	75	100	32	DAF	White	Dark blue
P14	**DSUB**	8	150	100	32	DAF	White	Dark blue
P15	**DR**	8	50	100	19	DAF	White	Black
P16	**DR**	8	100	100	32	DAF	White	Black
P17	**DR**	8	150	100	32	DAF	White	Black
P18	**TWAS**	30	100	100	32	Secondary	White	Dark blue
P19	**TWAS**	30	150	100	32	Secondary	White	Dark blue
P20	**PA**	50	200	150	64	Secondary	White	Blue
P21	**PA**	20	250	150	64	Secondary	White	Blue
P22	**PA**	10	100	100	32	Secondary	White	Blue
P23	**PLY**	60	50	100	19	Secondary	White	Foam green
P24	**DWS**	2	350	150	89	Chute BFP	White	Red
P25	**FIL**	15	100	100	32	Secondary	White	Green
P26								
P27								
P28								

Note HC, 2019-01-31:

No painting to be applied on:

- SS piping
- PVC piping
- Ductile iron piping (other than shop applied epoxy, COLORS are limited and will be confirmed with the client. Shop drawing to be provided for DI2 piping shortly.
- Any other piping

ARROWS

To match pipe identification stickers

#	Tag	Qty		Sticker height	*Arrow lenght*	*Arrow width*	Sticker color	
				(mm)	(mm)		**Font**	**Outer area**
A1		100		100	100	20	White	Green
A2		30		150	150	75	White	Green
A3		5		150	150	75	White	Grey
A4		60		150	150	75	White	Blue
A5		20		100	100	20	White	Blue
A6		60		100	100	20	White	Purple
A7								
A8								

TAGS VALVES

#	Tag	Qty	Round lamicoid diam.	Font height		Lamicoid color	
			(mm)	(mm)		Font	Outer area
TV1	ARV-01-100	1	40	12		White	Black
TV2	BFV-02-116	1	40	12		White	Black
TV3	BFV-02-126	1	40	12		White	Black
TV4	BFV-02-136	1	40	12		White	Black
TV5	BFV-02-150	1	40	12		White	Black
TV6	BFV-02-151	1	40	12		White	Black
TV7	BFV-02-153	1	40	12		White	Black
TV8	BFV-02-155	1	40	12		White	Black
TV9	BFV-02-170	1	40	12		White	Black
TV10	BFV-02-171	1	40	12		White	Black
TV11	BFV-02-175	1	40	12		White	Black
TV12	BFV-02-176	1	40	12		White	Black
TV13	BFV-02-181	1	40	12		White	Black
TV14	BFV-02-182	1	40	12		White	Black
TV15	BFV-02-183	1	40	12		White	Black
TV16	BFV-02-184	1	40	12		White	Black
TV17	BFV-02-191	1	40	12		White	Black
TV18	BFV-02-192	1	40	12		White	Black
TV19	BFV-02-193	1	40	12		White	Black
TV20	BFV-02-194	1	40	12		White	Black
TV21	BFV-02-205	1	40	12		White	Black
TV22	BFV-02-210	1	40	12		White	Black
TV23	BFV-02-216	1	40	12		White	Black
TV24	BFV-02-226	1	40	12		White	Black
TV25	BFV-02-312	1	40	12		White	Black
TV26	BFV-02-332	1	40	12		White	Black
TV27	BV-01-310	1	40	12		White	Black
TV28	BV-01-314	1	40	12		White	Black
TV29	BV-01-315	1	40	12		White	Black
TV30	BV-01-320	1	40	12		White	Black
TV31	BV-01-324	1	40	12		White	Black
TV32	BV-01-325	1	40	12		White	Black
TV33	BV-02-612	1	40	12		White	Black
TV34	BV-02-613	1	40	12		White	Black
TV35	BV-02-616	1	40	12		White	Black
TV36	BV-02-617	1	40	12		White	Black
TV37	BV-02-632	1	40	12		White	Black
TV38	BV-02-633	1	40	12		White	Black
TV39	BV-02-636	1	40	12		White	Black
TV40	BV-02-637	1	40	12		White	Black
TV41	BV-03-602	1	40	12		White	Black
TV42	BV-03-603	1	40	12		White	Black
TV43	BV-03-662	1	40	12		White	Black
TV44	BV-03-663	1	40	12		White	Black

TV45	**BV-03-666**	1	40	12		White	Black
TV46	**BV-03-667**	1	40	12		White	Black
TV47	**BV-03-682**	1	40	12		White	Black
TV48	**BV-03-683**	1	40	12		White	Black
TV49	**BV-03-686**	1	40	12		White	Black
TV50	**BV-03-687**	1	40	12		White	Black
TV51	**CV-01-111**	1	40	12		White	Black
TV52	**CV-01-112**	1	40	12		White	Black
TV53	**CV-01-113**	1	40	12		White	Black
TV54	**CV-02-620**	1	40	12		White	Black
TV55	**CV-02-640**	1	40	12		White	Black
TV56	**CV-03-601**	1	40	12		White	Black
TV57	**CV-03-670**	1	40	12		White	Black
TV58	**CV-03-690**	1	40	12		White	Black
TV59	**KV-01-001**	1	40	12		White	Black
TV60	**KV-01-111**	1	40	12		White	Black
TV61	**KV-01-112**	1	40	12		White	Black
TV62	**KV-01-121**	1	40	12		White	Black
TV63	**KV-01-211**	1	40	12		White	Black
TV64	**KV-01-212**	1	40	12		White	Black
TV65	**KV-01-221**	1	40	12		White	Black
TV66	**KV-01-222**	1	40	12		White	Black
TV67	**KV-01-232**	1	40	12		White	Black
TV68	**KV-02-211**	1	40	12		White	Black
TV69	**KV-02-221**	1	40	12		White	Black
TV70	**KV-02-230**	1	40	12		White	Black
TV71	**PLV-01-111**	1	40	12		White	Black
TV72	**PLV-01-112**	1	40	12		White	Black
TV73	**PLV-01-113**	1	40	12		White	Black
TV74	**PLV-02-306**	1	40	12		White	Black
TV75	**PLV-02-307**	1	40	12		White	Black
TV76	**PLV-02-308**	1	40	12		White	Black
TV77	**PLV-02-326**	1	40	12		White	Black
TV78	**PLV-02-327**	1	40	12		White	Black
TV79	**PLV-02-328**	1	40	12		White	Black
TV80	**PLV-02-621**	1	40	12		White	Black
TV81	**PLV-02-641**	1	40	12		White	Black
TV82	**PLV-02-643**	1	40	12		White	Black
TV83	**PLV-02-644**	1	40	12		White	Black
TV84	**PLV-02-645**	1	40	12		White	Black
TV85	**PLV-02-646**	1	40	12		White	Black
TV86	**PLV-02-647**	1	40	12		White	Black
TV87	**PLV-02-648**	1	40	12		White	Black
TV88	**PLV-03-650**	1	40	12		White	Black
TV89	**PLV-03-651**	1	40	12		White	Black
TV90	**PLV-03-660**	1	40	12		White	Black
TV91	**PLV-03-661**	1	40	12		White	Black

TV92	**PLV-03-672**	1	40		12		White	Black
TV93	**PLV-03-675**	1	40		12		White	Black
TV94	**PLV-03-676**	1	40		12		White	Black
TV95	**PLV-03-681**	1	40		12		White	Black
TV96	**PLV-03-692**	1	40		12		White	Black
TV97	**PLV-03-693**	1	40		12		White	Black
TV98	**PLV-03-696**	1	40		12		White	Black
TV99	**PRV-01-110**	1	40		12		White	Black
TV100	**PRV-01-311**	1	40		12		White	Black
TV101	**PRV-01-321**	1	40		12		White	Black
TV102	**PRV-04-780**	1	40		12		White	Black
TV103	**PRV-04-980**	1	40		12		White	Black
TV104	**BG-01-332**	1	40		12		White	Black
TV105	**BG-03-652**	1	40		12		White	Black
TV106	**BG-03-653**	1	40		12		White	Black
TV107								
TV108								
TV109	Tag to confirm for new valve CCN-016							
TV110								
TV111								

TAGS EQUIPEMENT

#	Tag	Qty	Round lamicoid diam.	Font height		Lamicoid color	
			(mm)	(mm)		**Font**	**Outer area**
TE1	**P-01-100**	1	40	12		White	Black
TE2	**P-01-120**	1	40	12		White	Black
TE3	**P-01-130**	1	40	12		White	Black
TE4							
TE5							

TAGS INSTRUMENTS

#	Tag	Qty	Round lamicoid diam.	Font height		Lamicoid color	
			(mm)	(mm)		Font	Outer area
TI1	FQIT-01-150	1	40	12		White	Black
TI2	FQIT-02-328	1	40	12		White	Black
TI3	FQIT-04-798	1	40	12		White	Black
TI4	FQIT-04-799	1	40	12		White	Black
TI5	FQIT-03-695	1	40	12		White	Black
TI6	FQIT-04-999	1	40	12		White	Black
TI7	FQIT-02-152	1	40	12		White	Black
TI8	FQIT-02-156	1	40	12		White	Black
TI9	FQIT-02-172	1	40	12		White	Black
TI10	LSLL-01-111	1	40	12		White	Black
TI11	LSL-01-112	1	40	12		White	Black
TI12	LSH-01-113	1	40	12		White	Black
TI13	LSHH-01-	1	40	12		White	Black
TI14	LSH-02-411	1	40	12		White	Black
TI15	PSH-02-619	1	40	12		White	Black
TI16	PSH-02-639	1	40	12		White	Black
TI17	PSH-03-669	1	40	12		White	Black
TI18	PSH-03-689	1	40	12		White	Black
TI19	LIT-01-100	1	40	12		White	Black
TI20	LE-01-100	1	40	12		White	Black
TI21	LIT-03-111	1	40	12		White	Black
TI22	LE-03-111	1	40	12		White	Black
TI23	LIT-03-121	1	40	12		White	Black
TI24	LE-03-121	1	40	12		White	Black
TI25	LSHH-03-	1	40	12		White	Black
TI26	LSLL-03-113	1	40	12		White	Black
TI27	LSHH-03-	1	40	12		White	Black
TI28	LSLL-03-123	1	40	12		White	Black
TI29	PI-02-615	1	40	12		White	Black
TI30	PI-02-618	1	40	12		White	Black
TI31	PI-02-635	1	40	12		White	Black
TI32	PI-02-638	1	40	12		White	Black
TI33	PI-02-664	1	40	12		White	Black
TI34	PI-02-684	1	40	12		White	Black
TI35	PI-02-688	1	40	12		White	Black
TI36	TT-01-950	1	40	12		White	Black
TI37	TT-01-951	1	40	12		White	Black
TI38	TT-02-952	1	40	12		White	Black
TI39	TT-02-953	1	40	12		White	Black
TI40	TT-02-954	1	40	12		White	Black
TI41	TT-03-955	1	40	12		White	Black
TI42	TT-01-660	1	40	12		White	Black
TI43	AIT-01-901	1	40	12		White	Black
TI44	AE-01-901A	1	40	12		White	Black

TI45	AE-01-901B	1	40	12		White	Black
TI46	AIT-01-902	1	40	12		White	Black
TI47	AE-01-902A	1	40	12		White	Black
TI48	AE-01-902B	1	40	12		White	Black
TI49	AIT-01-903	1	40	12		White	Black
TI50	AE-01-903A	1	40	12		White	Black
TI51	AE-01-903B	1	40	12		White	Black
TI52	AIT-01-904	1	40	12		White	Black
TI53	AE-01-904A	1	40	12		White	Black
TI54	AE-01-904B	1	40	12		White	Black
TI55	AIT-02-907	1	40	12		White	Black
TI56	AE-02-907	1	40	12		White	Black
TI57	AIT-02-908	1	40	12		White	Black
TI58	AE-02-908	1	40	12		White	Black
TI59	AIT-02-905	1	40	12		White	Black
TI60	AE-02-905	1	40	12		White	Black
TI61	AIT-02-801	1	40	12		White	Black
TI62	AE-02-801	1	40	12		White	Black
TI63	AIT-03-910	1	40	12		White	Black
TI64	AE-03-910	1	40	12		White	Black
TI65	AIT-03-906	1	40	12		White	Black
TI66	AE-03-906	1	40	12		White	Black
TI67	UA-940	1	40	12		White	Black
TI68	UA-941	1	40	12		White	Black
TI69	UA-942	1	40	12		White	Black
TI70	UA-943	1	40	12		White	Black
TI71	UA-944	1	40	12		White	Black
TI72	UL-920A	1	40	12		White	Black
TI73	UL-920B	1	40	12		White	Black
TI74	UL-920C	1	40	12		White	Black
TI75	UL-920D	1	40	12		White	Black
TI76	UL-920E	1	40	12		White	Black
TI77	UL-930A	1	40	12		White	Black
TI78	UL-930B	1	40	12		White	Black
TI79	UL-930C	1	40	12		White	Black
TI80	UL-930D	1	40	12		White	Black
TI81	UL-930E	1	40	12		White	Black
TI82	UL-921A	1	40	12		White	Black
TI83	UL-921B	1	40	12		White	Black
TI84	UL-921C	1	40	12		White	Black
TI85	UL-931A	1	40	12		White	Black
TI86	UL-931B	1	40	12		White	Black
TI87	UL-931C	1	40	12		White	Black
TI88	UL-922A	1	40	12		White	Black
TI89	UL-922B	1	40	12		White	Black
TI90	UL-922C	1	40	12		White	Black
TI91	UL-923A	1	40	12		White	Black

TI92	**UL-923B**	1	40	12		White	Black
TI93	**UL-923C**	1	40	12		White	Black
TI94	**UL-923D**	1	40	12		White	Black
TI95							
TI96							
TI97							

REVIEWED BY CONTRACTOR

Kudlik Construction Ltd.

NAME: Sandra Rousseau P.Eng

DATE: Fév 27, 2019

NORCLAIR
MÉCANIQUE DE PROCÉDÉ

SHOP DRAWINGS

DA-MP-39R1 DI2 piping (TWAS tanks to BFP)

Date : 2019-02-27

Information general	
Project : **WWTP UPGRADE - IQALUIT**	
Client : Kudlik Construction Ltd. To : Sandra Rousseau P.Eng., Project Manager	Project number : **2018-062** E-mail : srousseau@kudlik.biz
Contractor : **Norclair inc.**	Project number Norclair : **P1039**
Address : 1100, Montée Masson, Laval, QC, Canada H7E 4P2	
Project Manager : Hugo Chartier, Project Manager	E-mail: hchartier@norclair.ca
Phone : 450-688-4012 # 720	Cell. : 514-703-0263

Information, subcontractor or supplier	
Sub/supplier :	
Contact :	Phone :

Information on the equipment	
Speciality : **Process**	
Equipment : C	
Drawing reference :	
Specification reference : **40 05 13** (Page xx / xx)	Division :
Article :	Number of pages : 3

STANTEC PROJECT #: 110126045

SUBMITTAL # DA-MP-39R1 DI2 PIPING

This review by Stantec is for general conformance with the design concept of Stantec's design of the:

- ☑ Process
- ☐ Structural
- ☐ Mechanical
- ☐ Electrical
- ☐ Other

Stantec

☑ REVIEWED

☐ REVIEWED, AS NOTED

☐ REVISE AND RESUBMIT

☐ NOT REVIEWED

DATE February 27, 2019

BY Alejandro Rojas, P.Eng

component(s) only and does not mean that Stantec has verified or approves the shop drawing(s). The Contractor remains solely responsible for the shop drawing(s) and this review by Stantec does not relieve the Contractor of the Contractor's responsibility for errors or omissions in the shop drawing(s) or for meeting all requirements of the contract documents. This review does not mean that Stantec approves the detailed design inherent in the shop drawing, responsibility for which shall remain with the Contractor submitting same, nor does this review mean that Stantec accepts any deviation of the shop drawing(s) from the contract documents. The Contractor is responsible for confirming all dimensions and correlating them at the job site, for all construction means, methods and techniques, and for coordination of construction work of all trades, including coordination of all shop drawings.

1100, Montée Masson
Laval, QC, Canada
H7E 4P2

Phone : 450-688-4012
Fax : 450-661-6341
E-Mail : info@norclair.ca
www.norclair.ca

Sandra Rousseau

De: Hugo Chartier <hchartier@norclair.ca>
Envoyé: 12 février 2019 17:35
À: Sandra Rousseau
Objet: Iqaluit WWTP: DA-MP-39 DI2 piping
Pièces jointes: image004.emz; DA-MP-39-DI2 piping (TWAS to BFP) (2019-02-12).pdf

Sandra,
Please see attachment for approval.

Note that:

- Pump intake is 60mm higher than on Stantec drawings as per Veolia shop drawing.
- PI and PSH mounting details will be provided in another shop drawing.
- Grooved DI spools are limited in length. For safety issues, Victaulic recommends 200mm to be the minimum length. Shop fabricated can be somewhat shorter. Therefore, spool T5B and associated reducer will have to be made of stainless steel.

Thanks

NORCLAIR
MÉCANIQUE DE PROCÉDÉ

Hugo CHARTIER, ing.
Chef d'équipe Estimation
T. 450 688-4012 poste 706
C. 514 703-0263

1100, Montée Masson Laval, QC H7E 4P2
RBQ : 8263-7265-46

norclair.ca

Norclair inc. est inscrite au registre des entreprises autorisées par l'Autorité des marchés financiers (AMF) pour contracter/ sous-contracter avec un organisme public.

Rev01 below

PIPELINE LENGTHS HAVE NOT BEEN REVIEWED IN DETAIL. CONTRACTOR TO ENSURE PIPE LENGHTS MATCH THE REQUIREMENTS OF THE CONTRACT DRAWINGS.

FLUSHING CONNECTIONS MISSING BETWEEN TANKS AND VALVES. REFER TO P617.

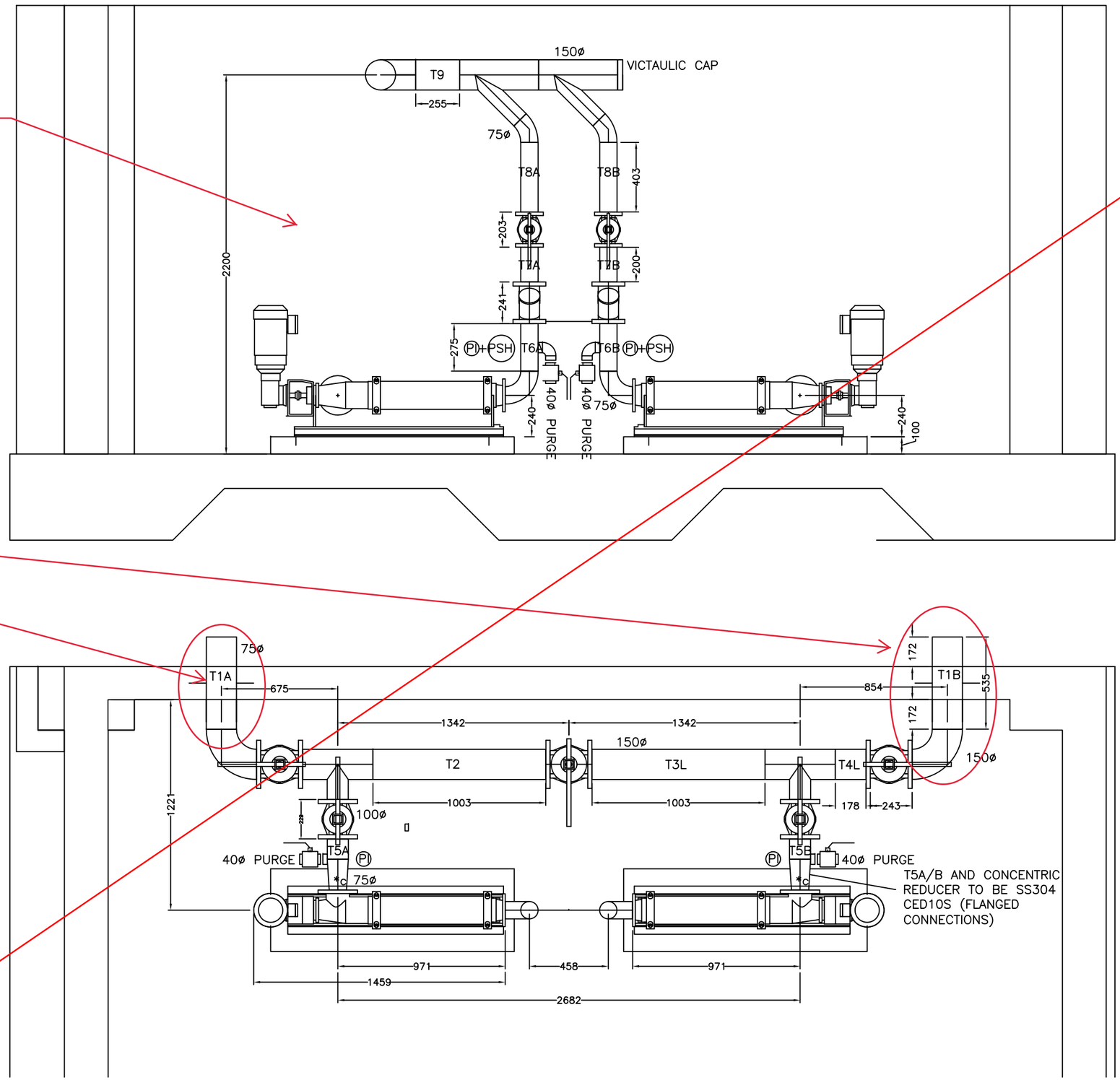

NOTES:

"L" SPOOLS TO BE FIELD FABRICATED.

ALL PIPING TO BE GLASS LINED DUCTILE IRON WITH EPOXY EXTERIOR COATING

ALL FITTINGS TO BE GLASS LINED 23.05 VICTAULIC FITTINGS WITH EPOXY EXTERIOR COATING

""c" REDUCERS ARE CONCENTRIC

""e" REDUCERS ARE ECCENTRIC

VICTAULIC COUPLINGS AND VIC FLANGES ARE NOT SHOW FOR CLARITY

PURGE VALVES ARE APPOLO 1" 76F-105-01A OR SIMILAR

REVISION:

FOR APPROVAL_v01	12/02/2019

NORCLAIR MÉCANIQUE DE PROCÉDÉ

CLIENT:

CITY OF IQALUIT

IQALUIT WWTP
TWAS piping (TWAS to BFP)

DATE: February 12 2019	SCALE: 1:25
DATA BY: H.C.	NORCLAIR JOB: P1039
DRAWN BY: H.C.	FIG: XX

Rev01 below

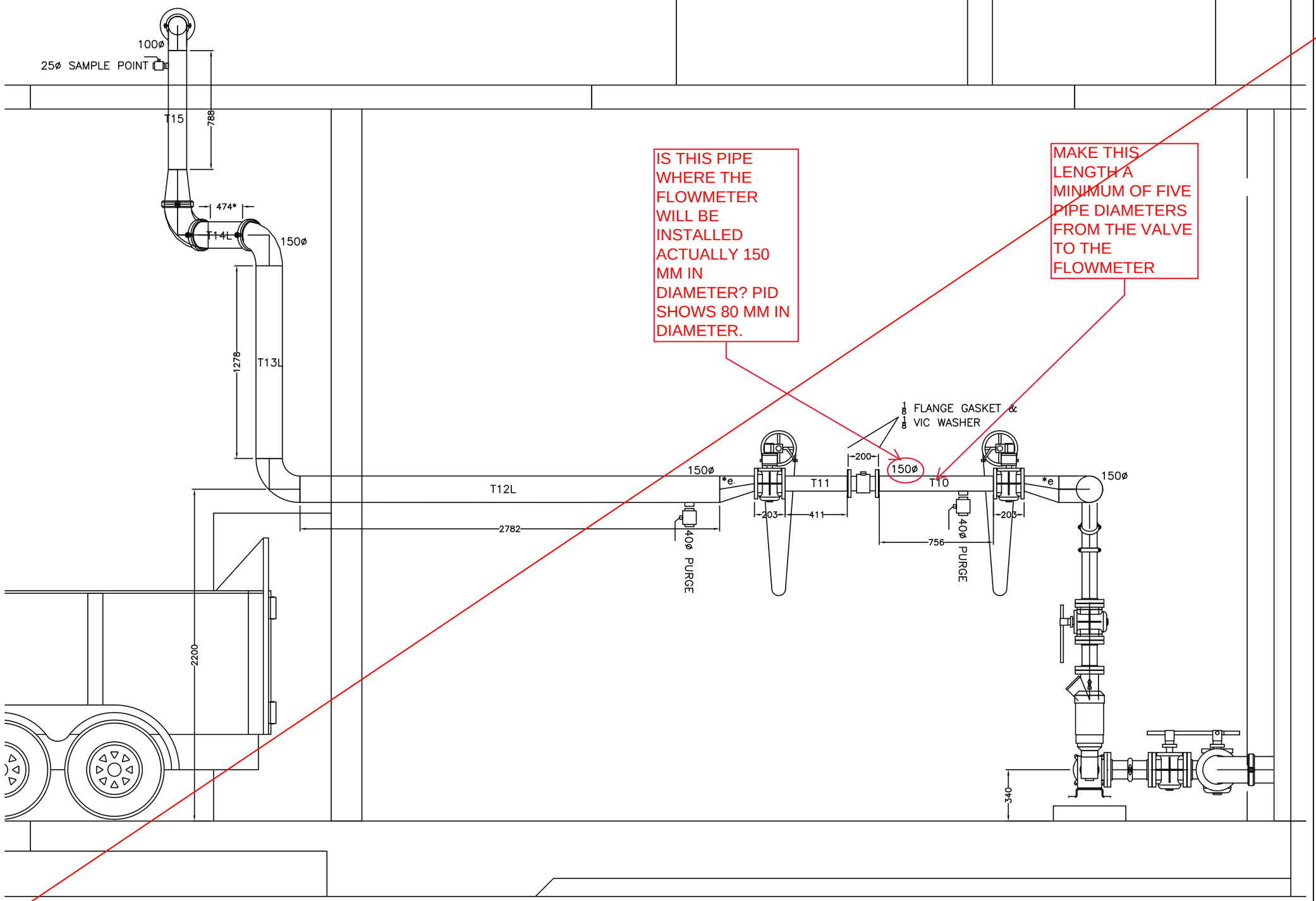

NOTES:

"L" SPOOLS TO BE FIELD FABRICATED.

ALL PIPING TO BE GLASS LINED DUCTILE IRON WITH EPOXY EXTERIOR COATING

ALL FITTINGS TO BE GLASS LINED 23.05 VICTAULIC FITTINGS WITH EPOXY EXTERIOR COATING

""C" REDUCERS ARE CONCENTRIC

""E" REDUCERS ARE ECCENTRIC

VICTAULIC COUPLINGS AND VIC FLANGES ARE NOT SHOW FOR CLARITY

PURGE VALVES ARE APPOLO 1" 76F-105-01A OR SIMILAR

REVISION:	
FOR APPROVAL_v01	12/02/2019

NORCLAIR
MÉCANIQUE DE PROCÉDÉ

CLIENT:

CITY OF IQALUIT

IQALUIT WWTP
TWAS piping (TWAS to BFP)

DATE: February 12 2019	SCALE: 1:25
DATA BY: H.C.	NORCLAIR JOB: P1039
DRAWN BY: H.C.	FIG: XX

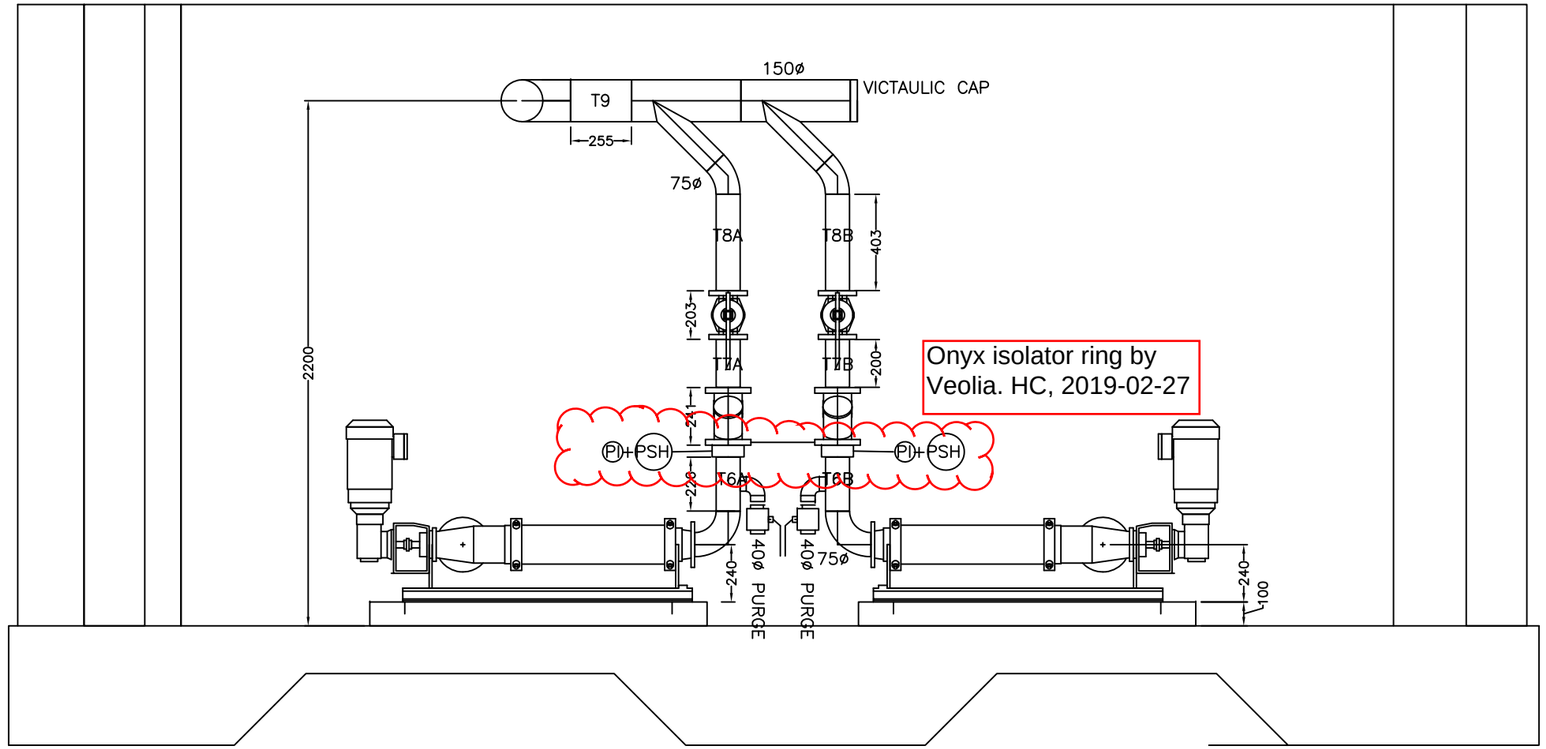

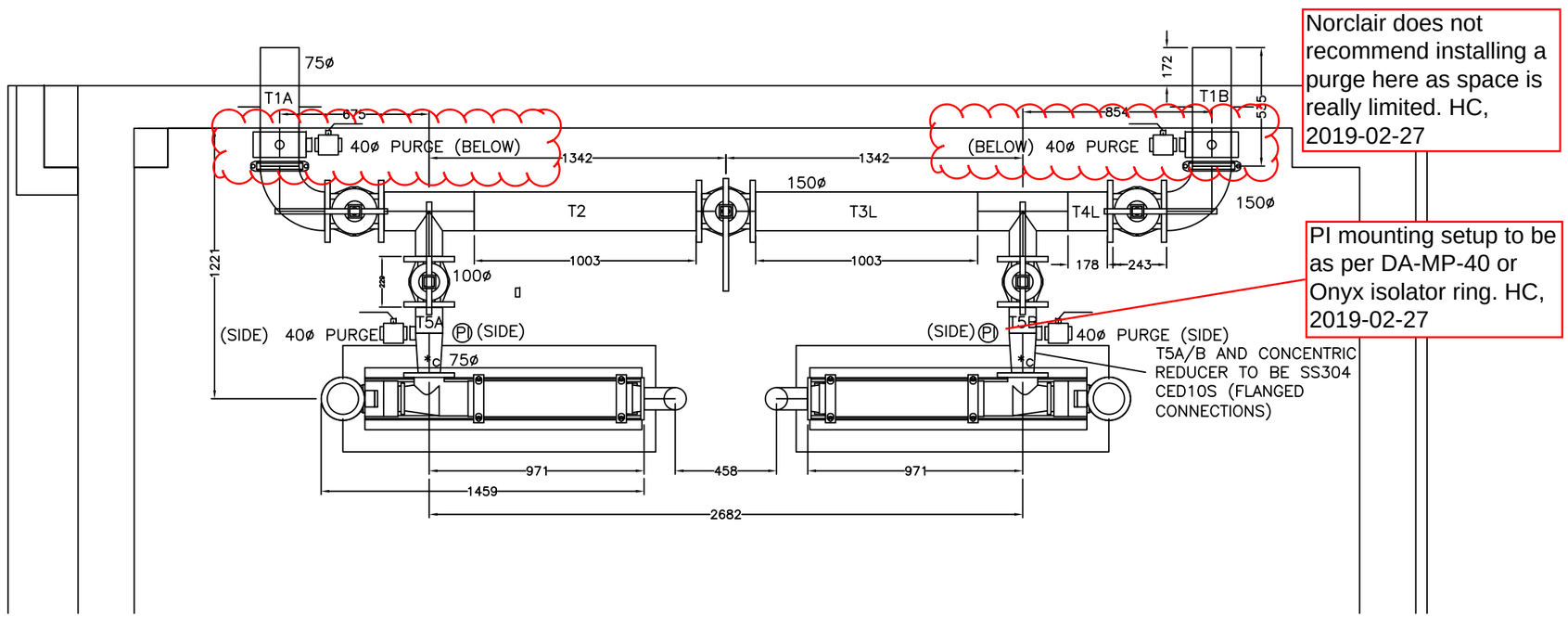

NOTES:

"L" SPOOLS TO BE FIELD FABRICATED.

ALL PIPING TO BE GLASS LINED DUCTILE IRON WITH EPOXY EXTERIOR COATING

ALL FITTINGS TO BE GLASS LINED 23.05 VICTAULIC FITTINGS WITH EPOXY EXTERIOR COATING

""c" REDUCERS ARE CONCENTRIC

""e" REDUCERS ARE ECCENTRIC

VICTAULIC COUPLINGS AND VIC FLANGES ARE NOT SHOW FOR CLARITY

PURGE VALVES ARE APPOLO 1" 76F-105-01A OR SIMILAR

REVISION:	
FOR APPROVAL_v02	27/02/2019

NORCLAIR
MÉCANIQUE DE PROCÉDÉ

CLIENT:

CITY OF IQALUIT

IQALUIT WWTP
TWAS piping (TWAS to BFP)

DATE: February 27 2019	SCALE: 1:25
DATA BY: H.C.	NORCLAIR JOB: P1039
DRAWN BY: H.C.	FIG: XX

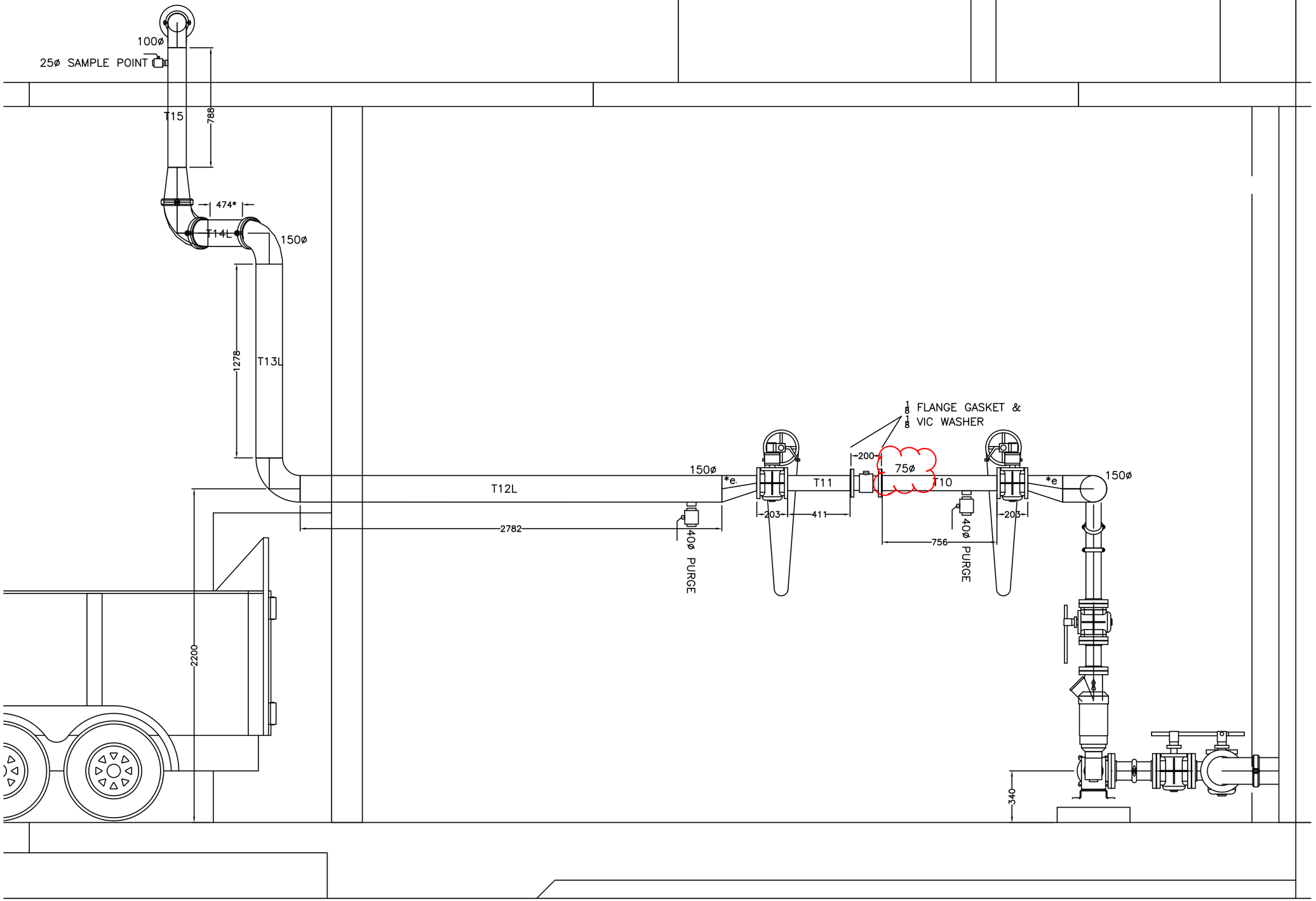

NOTES:

"L" SPOOLS TO BE FIELD FABRICATED.

ALL PIPING TO BE GLASS LINED DUCTILE IRON WITH EPOXY EXTERIOR COATING

ALL FITTINGS TO BE GLASS LINED 23.05 VICTAULIC FITTINGS WITH EPOXY EXTERIOR COATING

""C" REDUCERS ARE CONCENTRIC

""E" REDUCERS ARE ECCENTRIC

VICTAULIC COUPLINGS AND VIC FLANGES ARE NOT SHOW FOR CLARITY

PURGE VALVES ARE APPOLO 1" 76F-105-01A OR SIMILAR

REVISION:	
FOR APPROVAL_v01	27/02/2019

NORCLAIR
MÉCANIQUE DE PROCÉDÉ

CLIENT:

CITY OF IQALUIT

IQALUIT WWTP
TWAS piping (TWAS to BFP)

DATE: February 27 2019	SCALE: 1:25
DATA BY: H.C.	NORCLAIR JOB: P1039
DRAWN BY: H.C.	FIG: XX

REVIEWED BY CONTRACTOR
Kudlik Construction Ltd.
NAME: Sandra Rousseau P.Eng
DATE: Fév 13, 2019

NORCLAIR
MECANIQUE DE PROCEDE

SHOP DRAWINGS

DA-MP-40 PIT, PSH, BV16 mounting setup

Date : 2019-02-13

Information general	
Project : **WWTP UPGRADE - IQALUIT**	
Client : Kudlik Construction Ltd. To : Sandra Rousseau P.Eng., Project Manager	Project number : **2018-062** E-mail : srousseau@kudlik.biz
Contractor : **Norclair inc.**	Project number Norclair : **P1039**
Address : 1100, Montée Masson, Laval, QC, Canada H7E 4P2	
Project Manager : Hugo Chartier, Project Manager	E-mail: hchartier@norclair.ca
Phone : 450-688-4012 # 706	Cell. : 514-703-0263

Information, subcontractor or supplier
Sub/supplier :
Contact :

Information on the equipment
Speciality : **Process**
Equipment : PIT, PSH, BV16 mounting setup
Drawing reference :
Specification reference : **40 05 24 and 47 30 02**
Article :

STANTEC PROJECT #: 110126045

SUBMITTAL # DA-MP-40 PIT, PSH, BV16

This review by Stantec is for general conformance with the design concept of Stantec's design of the:

- [x] Process
- [ ] Structural
- [ ] Mechanical
- [ ] Electrical
- [ ] Other

component(s) only and does not mean that Stantec has verified or approves the shop drawing(s). The Contractor remains solely responsible for the shop drawing(s) and this review by Stantec does not relieve the Contractor of the Contractor's responsibility for errors or omissions in the shop drawing(s) or for meeting all requirements of the contract documents. This review does not mean that Stantec approves the detailed design inherent in the shop drawing, responsibility for which shall remain with the Contractor submitting same, nor does this review mean that Stantec accepts any deviation of the shop drawing(s) from the contract documents. The Contractor is responsible for confirming all dimensions and correlating them at the job site, for all construction means, methods and techniques, and for coordination of construction work of all trades, including coordination of all shop drawings.

Stantec

- [x] REVIEWED
- [ ] REVIEWED, AS NOTED
- [ ] REVISE AND RESUBMIT
- [ ] NOT REVIEWED

DATE FEBRUARY 19, 2019

BY Alejandro Rojas, P.Eng

Instrumentation

CONSULTANT APPROVAL

SHOP DRAWINGS ARE REVIEWED UNLESS NOTED OTHERWISE

REVIEWED AS MODIFIED	X
REVISE & RESUBMIT	
SEAL & SIGNATURE REQUIRED	

Stantec

DATE February 28, 2019

SIGNATURE [signature]

REVIEW BY STANTEC IS FOR THE SOLE PURPOSE OF ASCERTAINING GENERAL CONFORMITY WITH DESIGN. CONTRACTOR IS RESPONSIBLE FOR DIMENSIONS, FABRICATION AND CONSTRUCTION METHODS, COORDINATION OF SUB-TRADES, DETAIL DESIGN OF COMPONENTS, AND ERRORS OR OMISSIONS ON SHOP DRAWINGS.

- General comments within
- Regarding pressure switches, it is assumed the pressure switch for aeration blowers (PSL-02-130 on drawing P609) for low pressure identification will be submitted as a shop drawing in the future

1100, montée Masson
Laval, QC, Canada
H7E 4P2

Phone. : 450-688-4012
Fax : 450-661-6341
E-Mail : info@norclair.ca
www.norclair.ca

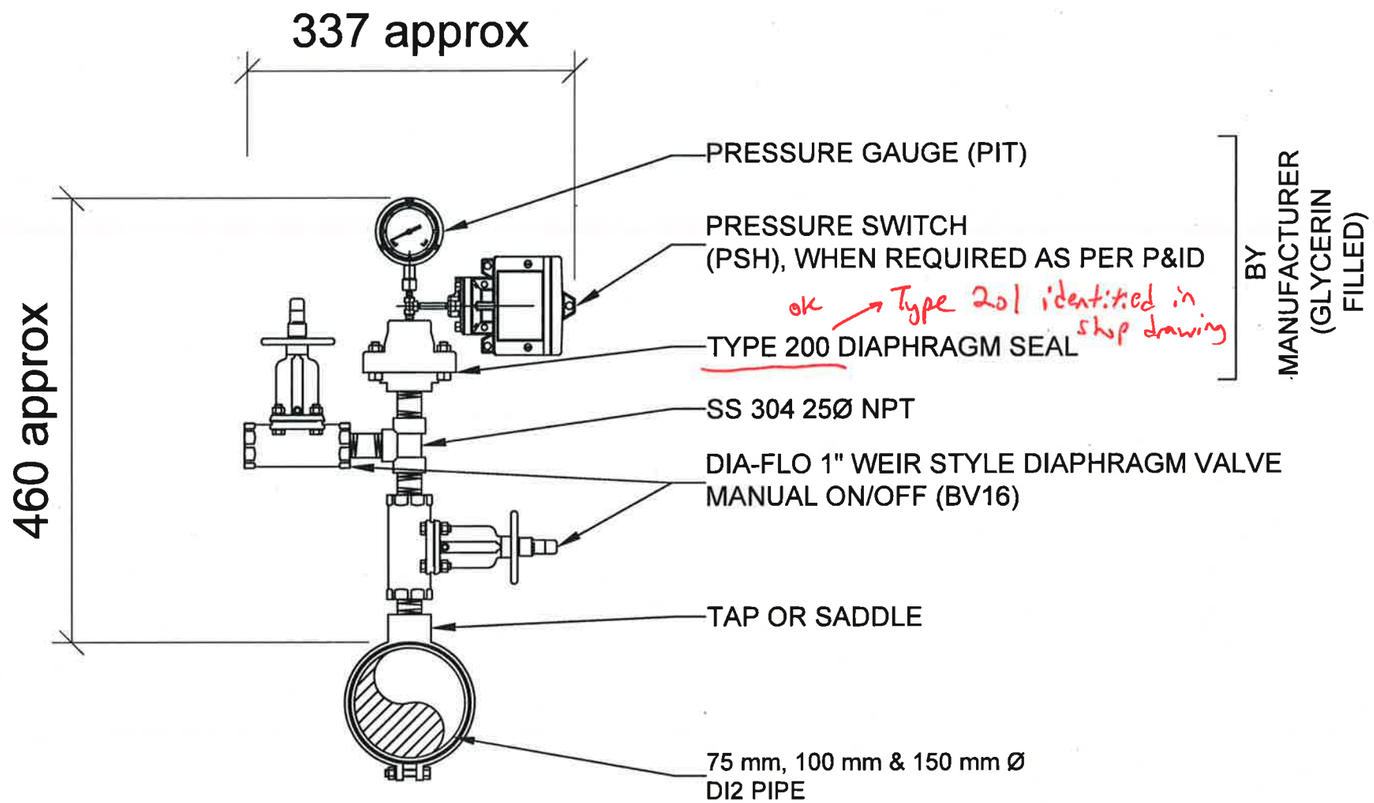

ok → Type 201 identified in shop drawing

NOTES:

# REV.	REVISION:	DATA
00	FOR APPROVAL	2019-02-13

NORCLAIR
MÉCANIQUE DE PROCÉDÉ

CUSTOMER: Iqaluit

CONSULTANT:
City of Iqaluit
Department of Engineering & Sustainability

PROJECT:
Iqaluit Wastewater Treatment Plant Upgrade

DRAWING:
GAUGE AND PRESSURE SWITCH MOUNTING SETUP

DATE:	2019-02-08	SCALE:	NONE
DRAWN BY:	E.A.	# PROJECT:	P1039
VERIFIED BY:	H.C.	# DRAWING:	XX

B.F.

ASHCROFT®
Trust the shield.®

Data Sheet

1009 Stainless Steel Case Gauge

FEATURES

- Meets ASME B40.100 specifications
- Corrosion resistant SS case
- Dry gauges are field fillable
- Power***Flex***™ movement provides superior resistance to shock, vibration and pulsation
- True Zero™ reduces reading errors by using "zero box" instead of conventional dial pins
- ***PLUS!***™ performance available for liquid filled performance with a dry gauge
- MSL helium leak tested to $1X10^{-6}$ scc/s
- Ventable fill plug
- Accessory kits for easy panel mounting

TYPICAL USES

- Pumps and compressors
- Boilers
- Equipment skids
- Specialized OEM equipment
- Hydraulics and pneumatics
- Severe ambient conditions



SPECIFICATIONS

Accuracy:	ASME B40.100, Grade 1A, ±1% of span (Dry) ±1.5% of span (Liquid filled)
Dial Sizes:	2½" (63mm), 3½" (100mm)
Ranges:	Minimum 0-15 psi, maximum 0-15,000 psi, vacuum and compound
Wetted Materials	
Tube:	316L SS tube
Process Connection:	316L SS socket (SW) Aluminum bronze socket (AW)
Non Wetted Materials	
Window:	Polycarbonate (Std.), Safety glass (XSG), Polysulfone (XPS) 3½" Dial only
Dial:	Black figures on white background, aluminum
Pointer:	Black, aluminum, adjustable (Std.), micrometer (XMP)
Movement:	Power***Flex*** movement Bottom plate – 304 SS Upper plate – 304 SS Pin – 304 SS Hairspring assembly – 304 SS Pinion – 304 SS Segment – Glass filled polyester
Case:	304 SS (Std.), 316L SS (XYW)
Ring:	304 SS (Std.), 316L SS (XYW)
Process Connection Location:	Lower, Back, Top, 3 o'clock, 9 o'clock
Process Connection Sizes:	⅛ NPT, ¼ NPT (see ordering code for more options)

KEY BENEFITS

- IP65 Rating
- NEMA 4X
- CRN Approved
- PED
- *PLUS!*™ Performance (XLL)

Dampening:	Glycerin case fill (Std. liquid fill), Silicone case fill (XGV), Halocarbon case fill (XGX), ***PLUS!*** Performance (XLL)
Weather Protection:	IP65 (Plug closed), IP54 (Plug vented) NEMA 4X (Plug closed)
Approvals:	CRN, RoHS, PED

MIN/MAX TEMPERATURE LIMITS

Version	Ambient	Process	Storage
Dry	-40/200°F (-40/93°C)	-40/250°F (-40/121°C)	-40/250°F (-40/121°C)
PLUS!	-40/150°F (-40/66°C)	-40/200°F (-40/93°C)	-40/150°F (-40/66°C)
Glycerin Fill	20/150°F (-7/66°C)	20/200°F (-7/93°C)	0/150°F (-18/66°C)
Silicone Fill	-40/150°F (-40/66°C)	-40/200°F (-40/93°C)	-40/150°F (-40/66°C)
Halocarbon Fill	-40/150°F (-40/66°C)	-40/200°F (-40/93°C)	-40/150°F (-40/66°C)

All specifications are subject to change without notice.
All sales subject to standard terms and conditions.
©2017 Ashcroft Inc. Ash Bul GS-3 1009 Rev D, 10/17

ashcroft.com
info@ashcroft.com
1.800.328.8258

Data Sheet

1009 Stainless Steel Case Gauge

ORDERING CODE

Example: **251009 SW L 02 L XC4 15#**

Dial Size/Series Code							
251009 – SS case	251009						
351009 – SS case							
System							
AW - 316L SS tube/Aluminum, bronze connection (Max. pressure 1000 psi)							
SW - 316L SS tube/316L SS process connection (Max. pressure 15,000 psi)		SW ✓					
Case Fill							
Dry, liquid fillable case							
L - Liquid filled case (Glycerin standard)			L ✓				
Process Connection Sizes							
01 - ⅛ NPT Male							
02 - ¼ NPT Male				02 ✓			
04 - ½ NPT Male							
RW - SAE 7/16 & 20 Straight thread							
EJ - 7/16 X 20 UNF-3A 37° flare							
KJ - ¼ Straight JIS, BSP - 1009SW							
KA - ¼ Tapered JIS, BSP - 1009SW							
13 - G ¼" DIN							
JP - ¼" Tubing, no throttle plug (max pressure 10,000 psi)							
JQ - 6mm Tubing, no throttle plug (max pressure 6,000 psi)							
JL - 9/16" 18 UNF-2A, N/A on 25 1009 lower							
Connection Location							
L - Lower mount connection					L		
B - Lower back mount connection							
D - Side connection (3 o'clock)							
E - Side connection (9 o'clock)							
T - Top connection							
Options (if choosing an option(s) must include an "X")						X__	
LL - ***PLUS!***™ performance							
GV - Silicone case fill							
GX - Halocarbon case fill							
TU - Throttle plug for ranges up to 1000 psi							
TS - Throttle plug for ranges up to 15,000 psi							
6B - Cleaned for oxygen service							
SG - Safety glass							
PS - Polysulfone window (3½" dial only)							
EO - Adjustable red set hand							
SH - Red set hand, stationary							
NH - SS tag wired to case							
FF - Front flange							
FW - Back flange							
UC - U-clamp							
EA - External zero adjust (3½" dial only)							
C4 - Individual calibration chart in accordance with ASME B40.100:2013. Accuracy traceable to N.I.S.T						C4	
SM - All SS movement							
YW - 316L SS case and ring							
Range (coding examples only, see range table for all standard ranges)							
Single Scales							
15# - 15 psi							15#
1BR - 1 bar							
1KSC - 1 kilograms per sq. cm							
100KP - 100 kilopascal							
Dual Scales							
15#/BR - 15 psi inner scale, 1 bar outer scale							
1BR/# - 1 bar inner scale, 15 psi outer scale							

All specifications are subject to change without notice.
All sales subject to standard terms and conditions.
©2017 Ashcroft Inc. Ash Bul GS-3 1009 Rev D, 10/17

ashcroft.com
info@ashcroft.com
1.800.328.8258

ASHCROFT®
Trust the shield.

1009 Stainless Steel Case Gauge

STANDARD RANGES				
psi	bar	kPa	Mpa	kg/cm²
30IMV	-1BR	-100KP	-.1MP	-1KSC
–	-1&.6BR	-100&60KP	-.1&.06MP	-1&.6KSC
30IMV&15#	–	–	–	–
–	-1&1.5BR	-100&150KP	-.1&.15MP	-1&1.5KSC
30IMV&30#	–	–	–	–
–	-1&3BR	-100&300KP	-.1&.3MP	-1&3KSC
30IMV&60#	–	–	–	–
–	-1&5BR	-100&500KP	-.1&.5MP	-1&5KSC
30IMV&100#	–	–	–	–
–	1&9BR	-100&900KP	-.1&.9MP	-1&9KSC
15#	1BR	100KP	.1MP	1KSC
20#	–	–	–	–
–	1.6BR	160KP	.16MP	1.6KSC
30#	–	–	–	–
–	2.5BR	250KP	.25MP	2.5KSC
60#	4BR	400KP	.4MP	4KSC
–	6BR	600KP	.6MP	6KSC
100#	–	–	–	–
120#	–	–	–	–
–	10BR	1,000KP	1MP	10KSC
160#	–	–	–	–
200#	–	–	–	–
–	16BR	1,600KP	1.6MP	16KSC
300#	–	–	–	–
–	25BR	2,500KP	2.5MP	25KSC
400#	–	–	–	–
500#	–	–	–	–
600#	40BR	4,000KP	4MP	40KSC
800#	–	–	–	–
–	60BR	6,000KP	6MP	60KSC
1,000#	–	–	–	–
1,500#	100BR	10,000KP	10MP	100KSC
2,000#	–	–	–	–
–	160BR	16,000KP	16MP	160KSC
3,000#	–	–	–	–
–	250BR	25,000KP	25MP	250KSC
4,000#	–	–	–	–
5,000#	–	–	–	–
6,000#	400BR	40,000KP	40MP	400KSC
8,000#	–	–	–	–
–	600BR	60,000KP	60MP	600KSC
10,000#	–	–	–	–
15,000#	1,000BR	100,000KP	100MP	1,000KSC

All specifications are subject to change without notice.
All sales subject to standard terms and conditions.
©2017 Ashcroft Inc. Ash Bul GS-3 1009 Rev D, 10/17

ashcroft.com
info@ashcroft.com
1.800.328.8258

ASHCROFT®
Trust the shield.®

1009 Stainless Steel Case Gauge

DIMENSIONS (dimensions in [ ] are millimeters)

2½˝ 1009 Lower and Back Connect

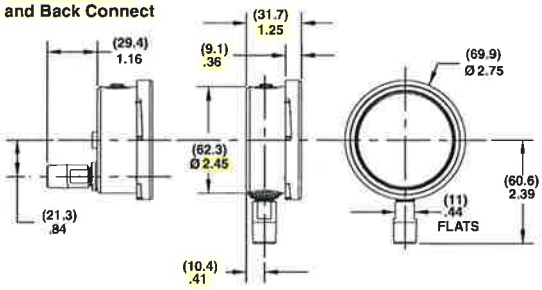

2½˝ 1009 Back Connect (XUC)

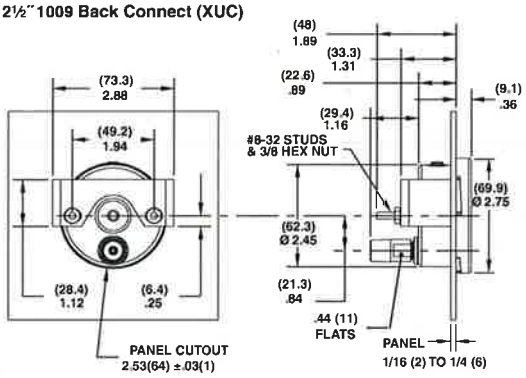

2½˝ 1009 Back Connect (XFF)

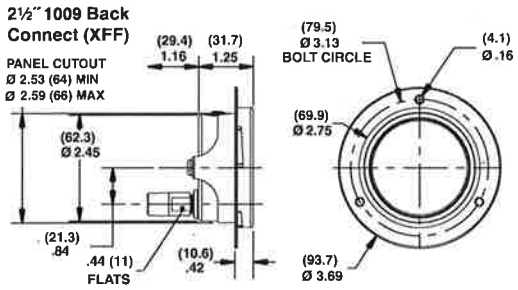

2½˝ 1009 Lower and Back Connect (XFW)

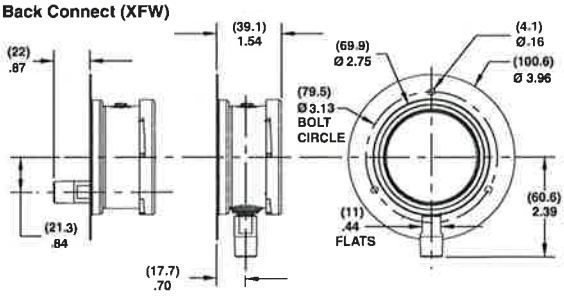

3½˝ 1009 Lower and Back Connect

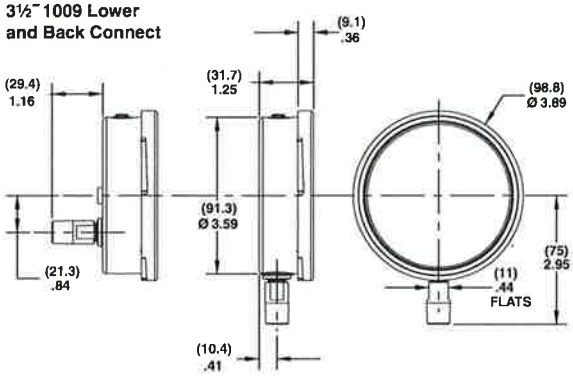

3½˝ 1009 Back Connect (XUC)

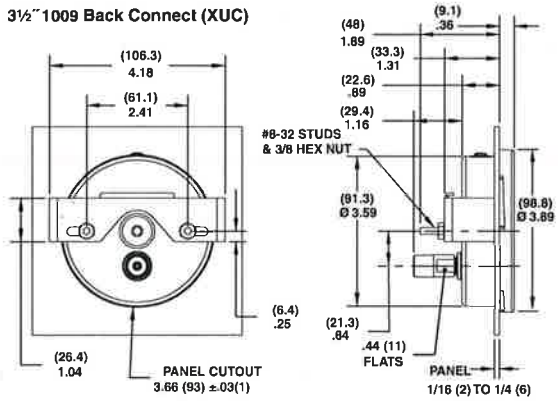

3½˝ 1009 Back Connect (XFF)

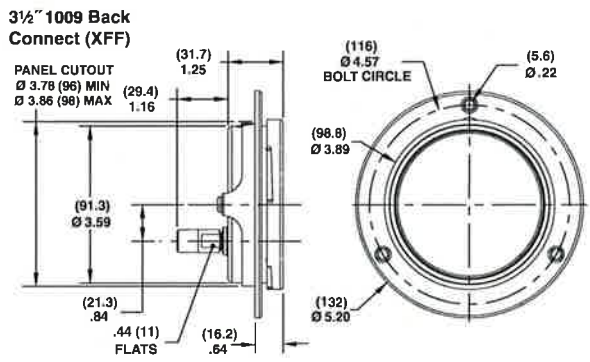

3½˝ 1009 Lower and Back Connect (XFW)

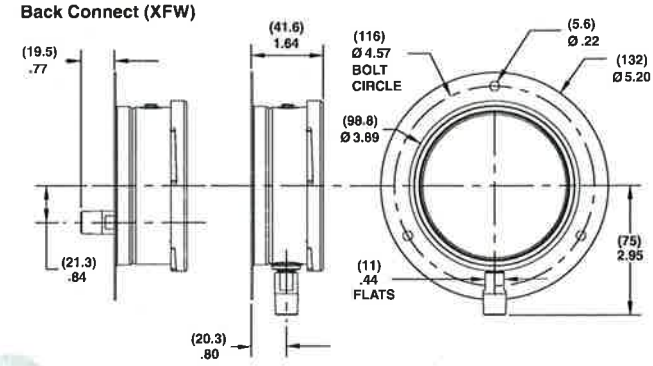

All specifications are subject to change without notice.
All sales subject to standard terms and conditions.
©2017 Ashcroft Inc. Ash But GS-3 1009 Rev D, 10/17

ashcroft.com
info@ashcroft.com
1.800.328.8258

ASHCROFT®
Trust the shield.®

1009 Stainless Steel Case Gauge with Tubing Connections

DIMENSIONS (dimensions in [ ] are millimeters)

2½˝ 1009 Lower and Back Connect

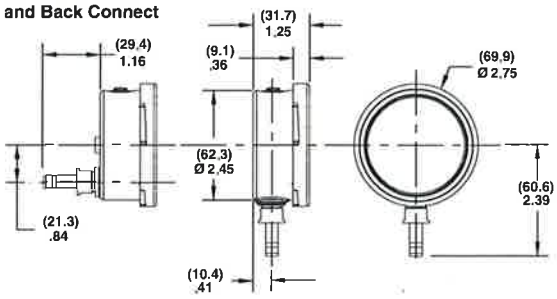

3½˝ 1009 Lower and Back Connect

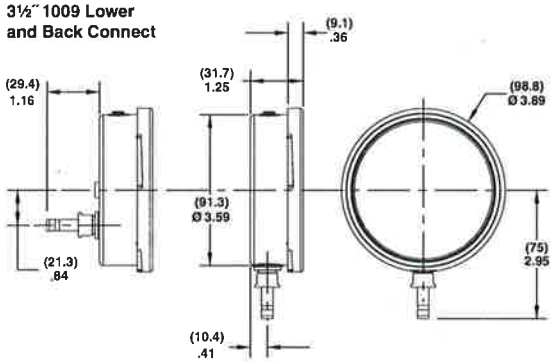

2½˝ 1009 Back Connect (XUC)

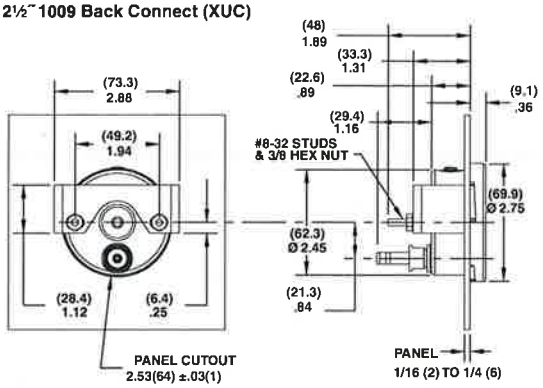

3½˝ 1009 Back Connect (XUC)

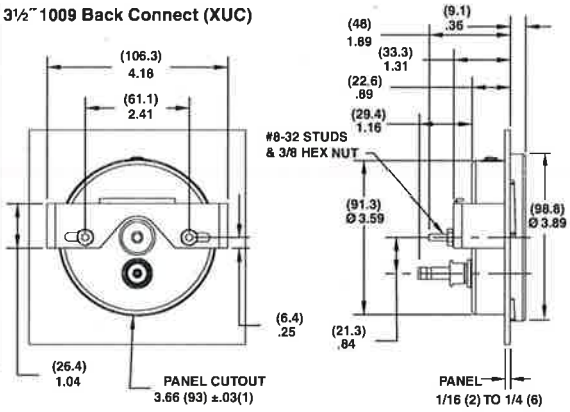

2½˝ 1009 Back Connect (XFF)

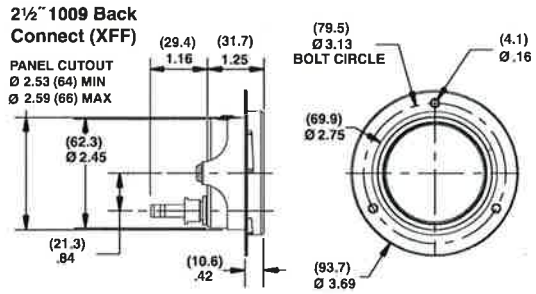

3½˝ 1009 Back Connect (XFF)

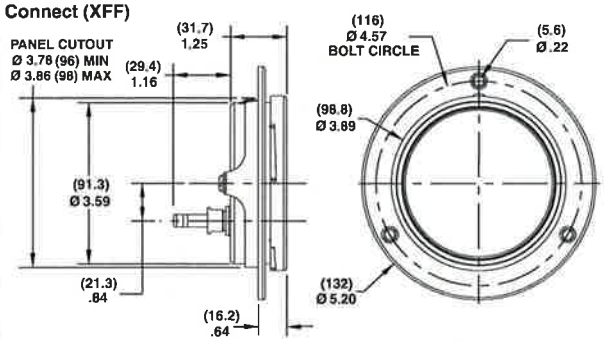

2½˝ 1009 Lower and Back Connect (XFW)

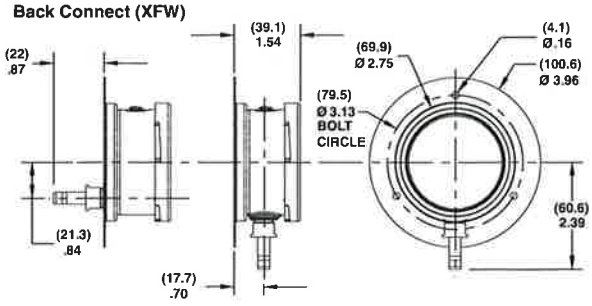

3½˝ 1009 Lower and Back Connect (XFW)

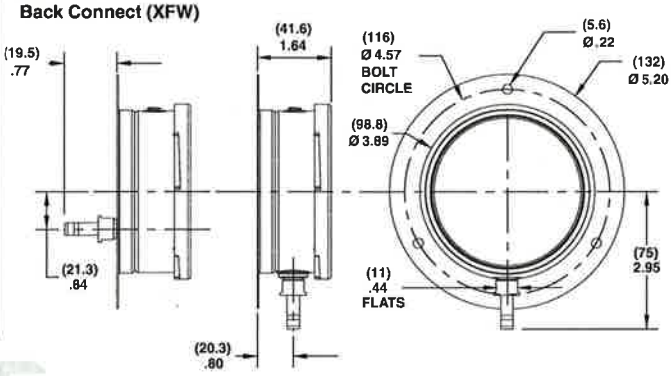

All specifications are subject to change without notice.
All sales subject to standard terms and conditions.
©2017 Ashcroft Inc. Ash Bul GS-3 1009 Rev D, 10/17

ashcroft.com
info@ashcroft.com
1.800.328.8258

ASHCROFT®
Trust the shield.®

Data Sheet

B-Series Switches – Pressure, Differential Pressure & Hydraulic



FEATURES

- Adjustable setpoints 15-100% of range
- Fixed or limited adjustable deadband
- Wide selection of switch elements
- Explosion proof enclosure provides uncompromising protection
- Special designs for NACE & fire applications
- SIL 3 Capable (B and D series only)

TYPICAL USES

- Offshore oil rigs
- Chemical and petrochemical plants
- Pulp and papermills
- Steel mills
- Power plants
- Water and sewage-treatment plants
- Other corrosive environments

SIL 3 CAPABLE

- Highly reliable
- Designed for use in wide range of applications
- Pressure ranges from vacuum to 7500 psi

FACTORY SEALED

CLASS I DIV 1 GROUPS B, C, & D
CLASS II DIV 1 GROUPS E, F, & G

Sira 02ATEX1391X IECEx SIR 14.0077X

II 2GD
Ex d IIC T6 Gb
Ex tb IIIC T85°C Db
Ta = -20 °C to +60°C

SPECIFICATIONS

Setpoint:	Factory set or field adjustable
Setpoint Repeatability:	±1% of full range (Additional setpoint shift of ±1% of range per 50 °F from initial setpoint set at 70 °F typical)
Enclosure Rating:	B4/Hydraulic: NEMA 4X, IP66 B7: NEMA 7/9, IP66
Enclosure Material:	Epoxy coated aluminum (standard) Optional: 316 stainless steel (NEMA 7/9 only)
Diaphragm Material:	Buna N, Viton, Teflon, SS, Monel
Pressure Connection:	¼ NPT Female (standard) Optional: ½ NPT Female , ¼ NPT Female & ½ NPT Male combo
Electrical Output:	SPDT or DPDT
Electrical Termination:	¾ NPT Female (standard) Optional: ½ NPT Female
Ambient Temperature Range:	–20°F to 150°F (–19 °C to 65 °C) All units calibrated at 70 °F
Process Temperature:	0 °F to 150 °F (Buna N or Teflon diaphragm) 20 °F to 300 °F (Viton diaphragm) 0°F to 300°F (SS or Monel diaphragm)
Pressure Ranges:	Pressure: Vac-3000# Differential: 0-600#D Hydraulic: 1000-7500#
Approvals:	UL E34743 (B4/D4) E38812 (B7/D7) CSA: 55541 ATEX: Sira 02ATEX1391X (B7/D7 with XCN) IECEx SIR 14.0077X FM: Limit Contol and Steam Limit Control

All specifications are subject to change without notice.
All sales subject to standard terms and conditions.
© 2017 Ashcroft Inc. Ash Bul SW10 B-P, Rev. C, 03/17

ashcroft.com
info@ashcroft.com
1.800.328.8258

ASHCROFT®
Trust the shield.®

B-Series Switches – Pressure, Differential Pressure & Hydraulic

PRESSURE, DIFFERENTIAL PRESSURE & HYDRAULIC RANGES

PRESSURE/VACUUM RANGES[1]			Overpressure Ratings		Approximate Deadband Switch Element[2] [3] [4] Buna-N Diaphragm				
Nominal Pressure			Proof psi	Burst psi	20, 26, 27	21, 24, 31	50	22	32, 42
Vacuum									
30IMV	–760mm Hg	-100 kPa	250	400	0.3-0.7	1.5-3.0	0.5-2.2	0.4-1.5	2.1-4.2
Compound									
15IWV/15IW	–375mm H_2O/375mm H_2O	–3.7 kPa/ 3.7 kPa	20	35	0.15-.75/0.15-.75	1.5-2.5/1.5-2.5	0.45-2.0/0.45-2.0	0.5-1.2/0.5-1.2	2.1-3.5/2.1-3.5
30IWV/30IW	–760mm H_2O/760mm H_2O	–7.5 kPa/ 7.5 kPa	20	35	0.30-.60/0.30-.60	1.5-2.5/1.5-2.5	0.45-2.0/0.45-2.0	0.5-1.5/0.5-1.5	2.1-3.5/ 2.1-3.5
30IMV/15#	–760mm Hg/ 1.0 kg/cm²	–100 kPa/100 kPa	250	400	0.5-1.0/0.3-0.7	2.0-3.0/0.3-0.7	0.75-2.5/0 .5-1.0	0.7-1.8/0.7-1.4	2.8-4.2/0.7-2.1
30IMV/30#	–760mm Hg/1.0 kg/cm²	–100 kPa/ 200 kPa	250	400	1.0-1.5/0.3-0.8	3.0-6.0/0.3-0.8	1.2-4.5/0.7-1.5	1.4-2.4/0.4-1.3	4.2-8.4/1.4-2.8
30 IMV/60#	–760mm Hg/4.0 kg/cm²	–100 kPa/ 400 kPa	250	400	2.0-3.0/0.7-1.5	5.0-9.0/3.0-5.0	2.5-7.0/3.0-5.0	2.8-4.5/3.0-5.0	7.0-12.0/4.2-7.0
Pressure									
10IW	250mm H_2O	2.5 kPa	20	35	0.2-0.5	1.0-2.0	0.35-1.5	0.4-1.0	1.4-2.8
30IW	750mm H_2O	7.5 kPa	20	35	0.3-0.6	1.5-2.5	0.45-2.0	0.5-2.0	2.1-3.5
60IW	1500mm H_2O	15 kPa	20	35	0.5-1.3	1.5-3.5	0.9-2.5	0.7-3.0	2.1-5.0
100IW	2500mm H_2O	25 kPa	20	35	0.6-1.6	2.5-5.5	1.1-4.0	1.0-4.0	3.5-7.7
15IW	3750mm H_2O	37 kPa	20	35	1.0-2.5	4.5-8.5	1.7-6.5	2.0-6.0	6.0-12.0
15#	1.0 kg/cm²	100 kPa	500	1500	0.1-0.35	0.5-1.5	0.2-1.0	0.4-1.0	0.7-2.1
30#	2.0 kg/cm²	200 kPa	500	1500	0.1-0.50	0.5-1.5	0.3-1.0	0.4-1.0	0.7-2.1
60#	4.0 kg/cm²	400 kPa	500	1500	0.3-1.0	1.0-3.5	0.7-2.5	0.6-2.0	1.4-5.0
100#	7.0 kg/cm²	700 kPa	1000	3000	0.5-1.7	1.5-5.0	1.1-3.5	1.0-4.5	2.1-7.0
200#	14 kg/cm²	1400 kPa	1000	3000	1-3	5-13	2-9	3.0-7.5	7.0-18.2
400#	28 kg/cm²	2800 kPa	2400	3000	4-7.5	5-24	5.5-15	4.0-11.0	7.0-33.6
600#	42 kg/cm²	4200 kPa	2400	3000	4-11	9-30	7-20	5.0-23.0	12.6-42
1000#[5]	70 kg/cm²	7000 kPa	12000[5]	18000	7-30	30-110	18-70	15-80	42-154
3000#	210 kg/cm²	2100 kPa	12000	18000	15-60	80-235	37-160	30.0-230	112-329

for PSH devices (TWAS)

DIFFERENTIAL PRESSURE RANGES			Pressure Ratings		Approximate Deadband Switch Element[2] [3] [4] Buna-N Diaphragm				
Nominal Pressure			Static Working Pressure	Proof psi	20, 26, 27	21, 24, 31	50	22	32, 42
30IWD	750mm H_2O	7.5 kPa	5.4	21.6	0.3-0.6	1.5-2.5	0.45-2.0	0.5-2.0	2.1-3.5
60IWD	1500mm H_2O	15 kPa	5.4	21.6	0.5-1.3	1.5-3.5	0.9-2.5	0.7-3.0	2.1-5.0
100IWD	2500mm H_2O	25 kPa	5.4	21.6	0.6-1.6	2.5-5.5	1.1-4.0	1.0-4.0	3.5-7.7
150IWD	3750mm H_2O	37 kPa	5.4	21.6	1.0-2.5	4.5-8.5	1.8-6.5	2.0-6.0	6.3-12.0
15#D	1.0 kg/cm²	100 kPa	500	2000	0.5-1.0	2.0-5.0	0.7-3.5	0.7-1.4	2.8-7.0
30#D	2.0 kg/cm²	200 kPa	500	2000	1.0-2.0	2.0-5.0	1.5-3.5	1.4-2.8	2.8-7.0
60#D	4.0 kg/cm²	400 kPa	500	2000	2.0-4.0	3.0-6.0	3.0-4.5	2.8-5.6	4.2-8.5
100#D	7.0 kg/cm²	700 kPa	1000	4000	4.0-10.0	11.0-20.0	7.0-15.0	6.0-14.0	16.0-28.0
200#D	14.0 kg/cm²	1400 kPa	1000	4000	5.0-15.0	12.0-40.0	10.0-26.0	7.0-21.0	17.0-56.0
400#D	28.0 kg/cm²	2800 kPa	1000	8000	10.0-20.0	20.0-60.0	15.0-40.0	14.0-28.0	28.0-84.0
600#D	42.0 kg/cm²	4200 kPa	1000	8000	20.0-40.0	80.0-150.0	30.0-115.0	30.0-56.0	12.0-210.0

NOTES:

1. Switches may generally be set between 15% and 100% of nominal range on increasing pressure. Consult factory for applications where setpoints must be lower.
2. All deadbands are given in English units as shown in the nominal range column. Deadbands shown are for switches with Buna N diaphragm.

Approximate deadbands for optional diaphragms:

Viton:	Multiply Buna N value by 1.4
Teflon:	Multiply Buna N value by 1.2
Stainless Steel:	Multiply Buna N value by 1.7
Monel:	Multiply Buna N value by 1.7

3. Deadbands given are for zero static working pressure.
4. For approximate deadbands for dual switch elements, multiply the single switch element by 1.6.
5. Proof pressure is 4000 psi with stainless steel and monel welded diaphragms.

All specifications are subject to change without notice.
All sales subject to standard terms and conditions.
© 2017 Ashcroft Inc. Ash Bul SW10 B-P, Rev. C, 03/17

ashcroft.com
info@ashcroft.com
1.800.328.8258

B.F.

ASHCROFT®
Trust the shield.®

B-Series Switches – Pressure, Differential Pressure

ORDERING CODE

Example: B4 20 B XPK 600#

Enclosure

B4 - Pressure switch, Type 400, watertight enclosure meets NEMA 3, 4, 4X, 13 and IP66 requirements.

B7 - Pressure switch, Type 700, explosion-proof enclosure meets Div. 1 & 2, NEMA 7, 9 and IP66 requirements. Standard housing epoxy coated aluminum. Use variation code XYW for 316SS housing.

D4 - Differential pressure switch, Type 400, water-tight enclosure meets NEMA 3, 4, 4X, 13 and IP66 requirements.

D7 - Differential pressure switch, Type 700, explosion- proof enclosure meets Div. 1 & 2, NEMA 7, 9 and IP66 requirements. Standard housing epoxy coated aluminum. Use variation code XYW for 316SS housing.

Switch Element Selection - UL/CSA Listed SPDT

20 - Narrow deadband ac, 15A - 125/250 Vac. Estimated dc rating, 0.4A, 120 Vdc (not UL listed).

21 - Ammonia service, 5A - 125/250 Vac

22 - Hermetically sealed switch, narrow deadband, 5A - 125/250 Vac. Estimated dc. rating, 2.5A, 28 Vdc (not UL listed).

23 - Heavy duty ac, 22A - 125/250 Vac

24 - General purpose, 15A - 125/250/480 Vac, ½A - 125 Vdc, ¼A - 250 Vdc; 6A, 30 Vdc. (Standard switch)

25 - Heavy duty dc, 10A - 125 Vac or dc, ⅛ HP - 125 Vac or dc. Not available with psid ranges.

26 - Sealed environment proof, 15A - 125/250 Vac. Estimated dc rating, 0.4A, 120 Vdc (not UL listed).

27 - High temperature 300°F, 15A - 125/250 Vac

28 - Manual reset trip on, increasing 15A - 125/250 Vac. Not available with type 700 enclosure.

29 - Manual reset trip on decreasing, 15A - 125/250 Vac. Not available with type 700 enclosure.

31 - Low level (gold) contacts, 1A - 125 Vac

32 - Hermetically sealed switch, general purpose, 11A - 125/250 Vac, 5A - 30 Vdc

42 - Hermetically sealed switch, gold contacts, 1A - 125 Vac

50 - Variable deadband, 15A - 125/250 Vac

Switch Element Selection - UL/CSA Listed Dual (2 SPDT)

61 - Dual narrow deadband, 15A - 125/250 Vac. Estimated dc rating, 0.4A, 120 Vdc (not UL listed).

62 - Dual sealed environment proof, 15A - 125/250 Vac. Estimated dc rating, 0.4A, 120 Vdc (not UL listed).

63 - Dual high temp. 300°F, 15A - 125/250 Vac

64 - Dual general purpose, 15A - 125/250/480 Vac, ½A- 125 Vdc, ¼A - 250 Vdc

65 - Dual ammonia service, 5A - 125/250 Vac

67 - Dual hermetically sealed switch, narrow deadband, 5A - 125/250 Vac. Wires cannot be terminated inside B400 switch enclosure. Estimated dc. rating, 2.5A, 28 Vdc (not UL listed).

68 - Dual hermetically sealed switch, general purpose, 11A - 125/250 Vac 5A, 30 Vdc. Wires cannot be terminated inside B400 switch enclosure.

70 - Dual low level gold contacts, 1A - 125 Vac

71 - Dual hermetically sealed switch, gold contacts, 1A - 125 Vac. Wires cannot be terminated inside B400 switch enclosure.

Actuator Seal	Process Temp.	Range				
Material	Limits °F(10)	Vac. H_2O	0-600 psi	0-1000 psi	0-3000 psi	Ambient operating temperature limits –20 to 150 °F, all styles, setpoint shift of ±1% of range per 50 °F temperature change is normal. Switches are calibrated at 70 °F reference
B - Buna N	0 to 150	•	•	•	•	
V - Viton	20 to 300	•	•	•	•	
T - Teflon	0 to 150	•	•	•	•	
S - 316L	0 to 300		•	•		Available on pressure only.
P - Monel	0 to 300		•	•		Available on pressure only.

Options - Use table from page 5

Range - Select from table page 2

All specifications are subject to change without notice.
All sales subject to standard terms and conditions.
© 2017 Ashcroft Inc. Ash Bul SW10 B-P, Rev. C, 03/17

ashcroft.com
info@ashcroft.com
1.800.328.8258

ASHCROFT®
Trust the shield.®

B-Series Switches – Hydraulic

ORDERING CODE

Example: H4 24 V XPK 3000#

Enclosure

H4 - Hydraulic pressure switch, Type 400, watertight enclosure meets NEMA 3, 4, 4X, 13 and IP66 requirements.

Switch Element Selection - UL/CSA Listed SPDT

20 - Narrow deadband ac, 15A - 125/250 Vac. Estimated dc rating, 0.4A, 120 Vdc (not UL listed)

22 - Hermetically sealed switch, narrow deadband, 5A - 125/250 Vac. Estimated dc rating, 2.5A, 28 Vdc (not UL listed).

23 - Heavy duty ac, 22A - 125/250 Vac

24 - General purpose, 15A - 125/250/480 Vac, ½A - 125 Vdc, ¼A - 250 Vdc; 6A, 30 Vdc. Standard switch.

25 - Heavy duty dc, 10A - 125 Vac or dc, 1/8 HP - 125 Vac or dc

26 - Sealed environment proof, 15A - 125/250 Vac. Estimated dc rating, 0.4A, 120 Vdc (not UL listed)

27 - High temperature 300°F, 15A - 125/250 Vac

28 - Manual reset trip on increasing, 15A - 125/250

29 - Manual reset trip on decreasing, 15A - 125/250 Vac

32 - Hermetically sealed switch, general purpose, 11A - 125/250 Vac, 5A - 30 Vdc

Switch Element Selection - UL/CSA Listed Dual (2 SPDT)

61 - Dual narrow deadband, 15A - 125/250 Vac. Estimated dc rating, 0.4A, 120 Vdc (not UL listed)

62 - Dual sealed environment proof, 15A - 125/250 Vac. Estimated dc rating, 0.4A, 120 Vdc (not UL listed)

63 - Dual high temp. 300°F, 15A - 125/250 Vac

64 - Dual general purpose, 15A - 125/250/480 Vac, ½A- 125 Vdc, ¼A - 250 Vdc

65 - Dual ammonia service, 5A - 125/250 Vac

70 - Dual low level gold contacts, 1A - 125 Vac

Actuator Seal

Material	Process Temp. Limits°F	Ambient operating temperature limits –20 to 150 °F, all styles, setpoint shift of ±1% of range per 50 °F temperature change is normal. Switches are calibrated at 70 ° F reference.
V - Viton	20 to 300	Viton O-ring, stainless steel pressure connection

Options Use table from page 6

Range

Range psi	Adjustable Setpoint Limits psi	Proof Pressure psi
1000	150 – 1000	12,000
2000	300 – 2000	12,000
3000	450 – 3000	12,000
5000	750 – 5000	10,000
7500	1125 – 7500	100,000

All specifications are subject to change without notice.
All sales subject to standard terms and conditions.
© 2017 Ashcroft Inc. Ash Bul SW10 B-P, Rev. C, 03/17

ashcroft.com
info@ashcroft.com
1.800.328.8258

ASHCROFT®
Trust the shield.®

B-Series Switches – Pressure, Differential Pressure & Hydraulic

OPTIONAL FEATURES AND ACCESSORIES

B-SERIES SWITCH OPTIONS

		Appicable Switch Series					
		Pressure		Differential Pressure		H	
Code	Description	(psi)	(in. H_2O)	(psi)	(in. H_2O)		Notes
XBP	Wall Mounting Bracket in. H_2O		•		•		
XCH	Chained Cover	•	•	•	•	•	
XC8	CSA Approval ✓	•	•	•	•		Standard on 400 Series
XCN	ATEX Directive 94/9/EC/IECEx Rating	•	•	•	•		700 Series only.
XD2	Dual Seal Rating (700 Series only)	•			•		
XFM	FM Approval – Single Element	•	•	•	•		N/A on all combinations.
	FM Approval – Dual Element	•	•	•	•		N/A on all combinations.
XFP	Fungus Proofing	•	•	•	•	•	
XFS	Factory Adjusted Setpoint	•	•	•	•	•	Advise static or working pressure for differential pressure switches.
XG3	Belleville Actuator	•					64 or 68 element only. N/A on all combinations.
XG5	UL Limit Control to 150″ H_2O				•		Buna N and Viton diaphragm. N/A on all combinations.
XG6	UL Limit Control to 600 psi	•					Buna N and Viton diaphragm.N/A on all combinations.
XG7	Secondary Chamber with Vent	•					SS diaphragm required. Teflon diaphragm is the backup. NEMA 7 only.
XG8	Steam Limit Control to 300 psi	•					
XG9	Fire Safe Welded Actuator	•					Stainless steel diaphragm only.
XHS	High Static Differential Pressure			•			12 Buna N and Viton diaphragm – 15#D & 30#D only.
XHX	High Pressure, 40 psi, (static) d/p only 160 psi (proof) d/p only 100 psi (proof) pressure only (″ H_2O)		•		•		
XJK	Left Conduit Connection	•	•	•	•	•	Standard on 700 Series. N/A with DPDT element on 400 Series.
XJL	¾″ to ½″ Reducing Bushing	•	•	•	•	•	
XJM	Metric Electrical Conduit Conn. M20 x 1.5	•	•	•	•	•	
XK3	Terminal Block (700 Series only)	•	•	•	•		Terminal Blocks standard with 700 dual switches.
XLE	6 foot Leads on the Micro Switch	•	•	•	•	•	
XNH	Tagging Stainless Steel	•	•	•	•	•	
XNN	Paper Tag	•	•	•	•	•	
XPK	Pilot Light(s) Top Mounted	•	•	•	•	•	N/A on 700 Series.
XPM	¾″ Sealed Conduit Connection w/16″ Lead Wires	•	•	•	•	•	
XTA	316 Stainless Steel Pressure Connection for in. H_2O Range		•		•		
XTM	2″ Pipe Mounting Bracket	•	•	•	•		
XUD	316 Stainless Steel Pressure Conn.			•			
X06	Pressure Connection: ½ NPT Male, ¼ NPT Female 316 Stainless Steel (Combination)	•	•	•	•		Standard with 1000 and 3000 psi ranges. Bottom connection only on DP in H_2O ranges.
X07	½ NPTF Press. Conn., 316 SS	•	•	•	•		N/A with Monel diaphragm.
X6B	Cleaned for Oxygen Service	•		•			Buna N cannot be cleaned for oxygen service.
X9F	Inches of Water Housing for Outdoor Use		•				
XYW	316SS Housing	•	•	•	•		
XMD	Metric Range on Label	•	•	•	•	•	

All specifications are subject to change without notice.
All sales subject to standard terms and conditions.
© 2017 Ashcroft Inc. Ash Bul SW10 B-P, Rev. C, 03/17

ashcroft.com
info@ashcroft.com
1.800.328.8258

ASHCROFT®
Trust the shield.®

B-Series Switches – Pressure, Differential Pressure & Hydraulic

B 400 DIMENSIONS

Pressure switch – psi ranges

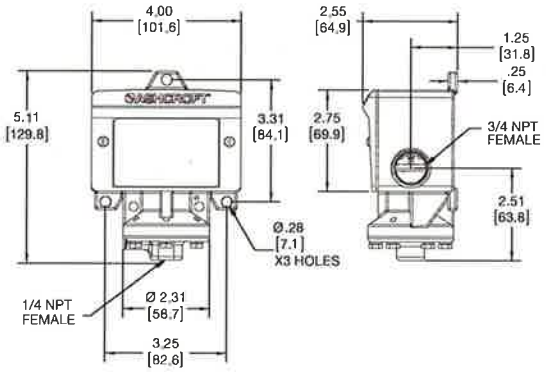

Pressure switch – inches of water ranges

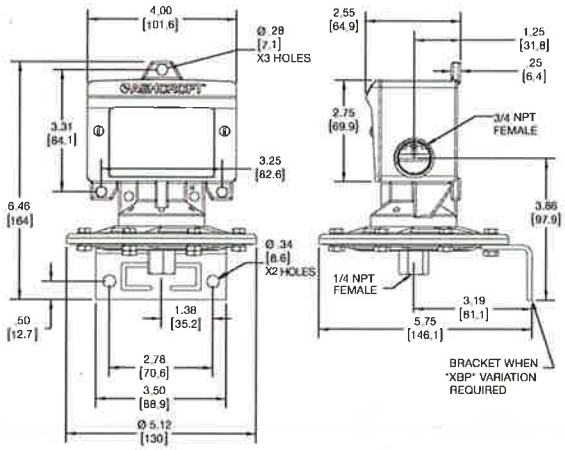

Differential pressure switch – psi differential ranges

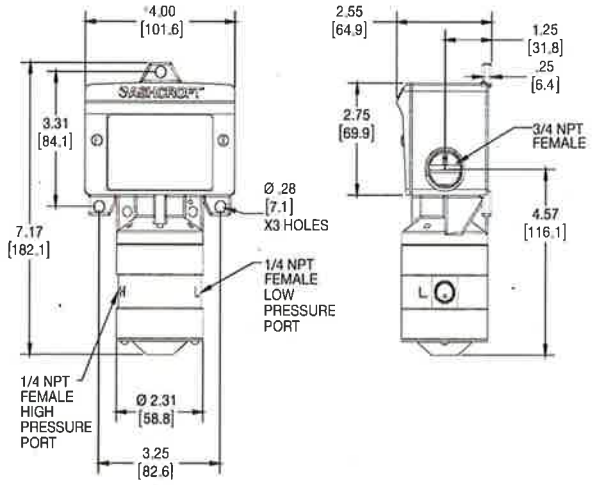

Differential pressure switch – inches of water ranges

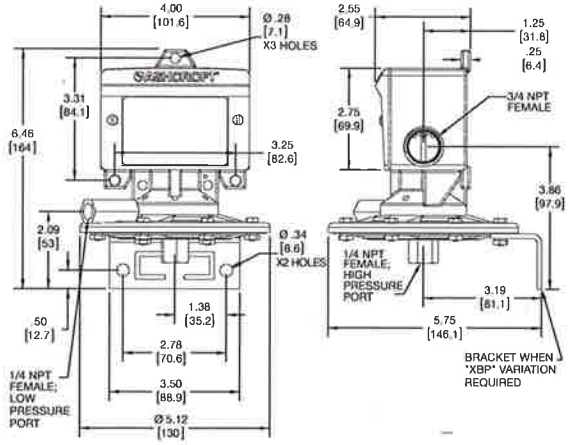



All specifications are subject to change without notice.
All sales subject to standard terms and conditions.
© 2017 Ashcroft Inc. Ash Bul SW10 B-P, Rev. C, 03/17

ashcroft.com
info@ashcroft.com
1.800.328.8258

ASHCROFT®
Trust the shield.®

B-Series Switches – Pressure, Differential Pressure & Hydraulic

B 700 DIMENSIONS

Pressure switch – psi ranges

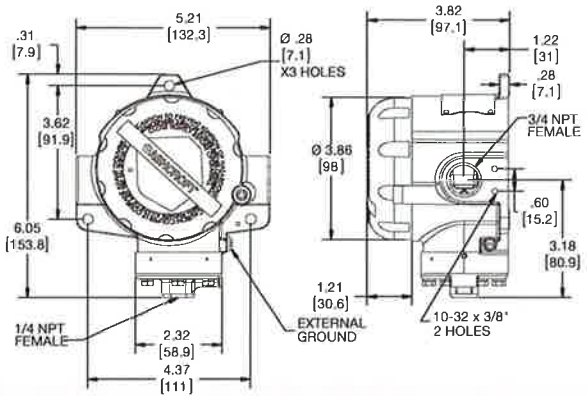

Pressure switch – inches of water ranges

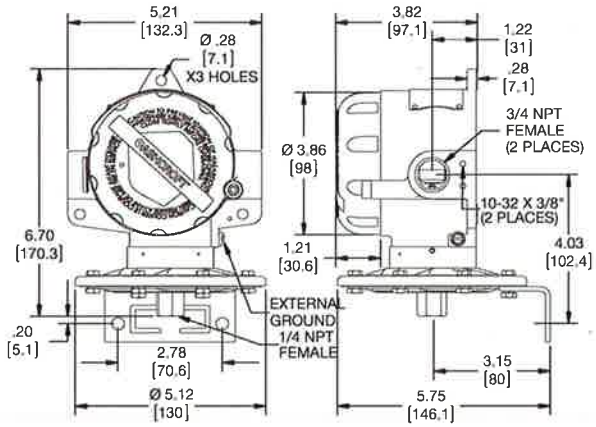

Differential pressure switch – psi differential ranges

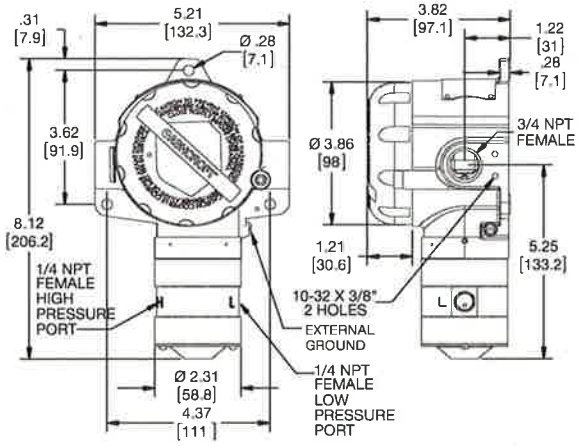

Differential pressure switch – inches of water ranges

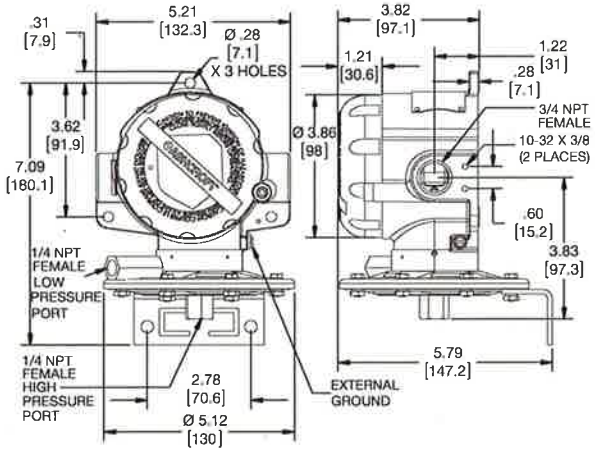



© 2017 Ashcroft Inc. Ash Bul SW10 B-P, Rev. C, 03/17
ashcroft.com
info@ashcroft.com
1.800.328.8258

ASHCROFT®
Trust the shield.®

B-Series Switches – Pressure, Differential Pressure - Explosion Proof

B 700 DIMENSIONS

Pressure switch – psi ranges

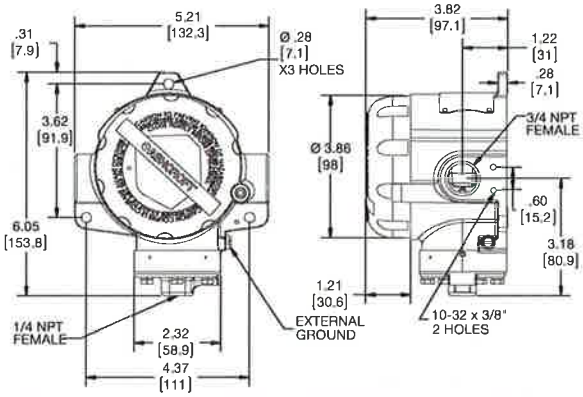

Pressure switch – inches of water ranges

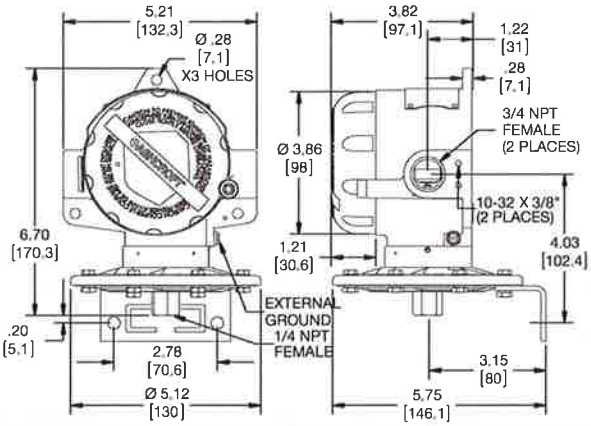

Differential pressure switch – psi differential ranges

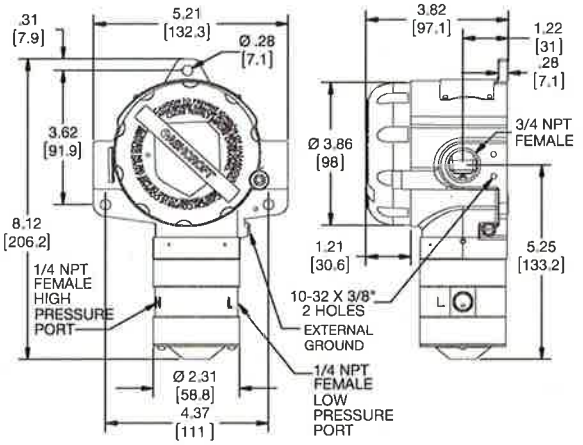

Differential pressure switch – inches of water ranges

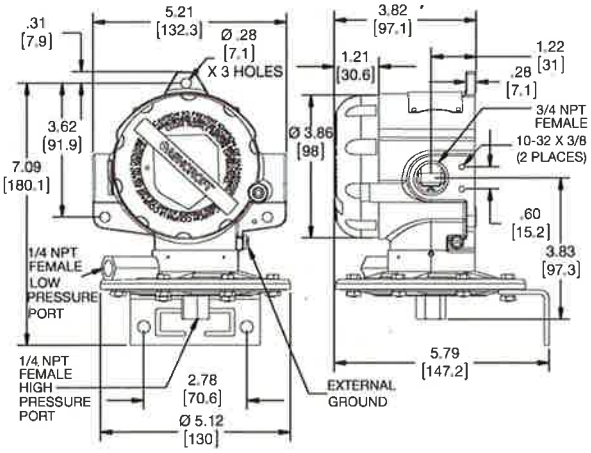



© 2017 Ashcroft Inc. Ash Bul SW10 B-P, Rev. C, 03/17
ashcroft.com
info@ashcroft.com
1.800.328.8258

ASHCROFT®
Trust the shield.®

B-Series Switches – Pressure, Differential Pressure & Hydraulic

Ashcroft Inc. supplies highly reliable Ashcroft® switches and controls for industrial and process applications. We begin with rock-solid designs, matching the most appropriate technology with the safety and reliability requirements of the applications. The materials of construction are specified to Ashcroft's exacting standards, and product is built to last in the toughest applications. Our modern, responsive manufacturing facility is supported by an extensive network of stocking distributors and factory sales offices located in virtually every part of the world. Special application assistance is always just a telephone call away.

The Ashcroft B-Series switch line is designed to satisfy most switch requirements. Materials of construction have been selected for long life. A wide variety of precision switch elements are available to meet every application requirement, including hermetically sealed contacts for added reliability and safety. The actuators we use have been proven in more than 20 years of service in the world's plants and mills. Special designs are available for fire safety, NACE, limit control and other more stringent requirements. Simplicity and ease of use are stressed to improve reliability of the installation.

Applications include: pumps, compressors, washers, filters, degreasers, evaporators, recovery systems, food processing, ground support equipment, reverse osmosis systems, heat exchangers, hydraulic systems, lubrication systems, marine equipment, textile machinery, heating and air conditioning equipment.

Pressure & Differential Pressure Switches

B-Series pressure, differential pressure and vacuum switches use two different actuators depending on setpoint requirements. For setpoints between 2 and 3000 psi, the simple, rugged diaphragm-sealed piston actuator is used. This design features high reliability and choice of actuator seal materials for virtually every application. An optional welded design is also available for setpoints up to 1000 psi for maximum reliability. This design is available in 316 SS or Monel. Differential pressure models use a unique, dual diaphragm-sealed piston design that features very high static operating pressures and small size.

For setpoints between 4.5 and 150 inches of H_2O, a large diaphragm is used for increased sensitivity in both pressure and differential pressure designs with good choice of materials of construction.

All standard models feature ±1 percent of range setpoint repeatability and a minimum of 400 percent of range proof pressures.

These standard designs perform well in applications where shock and vibration could be a problem and may be used in conjunction with Ashcroft diaphragm seals in extreme services such as slurries or abrasive process fluids.

All specifications are subject to change without notice.
All sales subject to standard terms and conditions.
© 2017 Ashcroft Inc. Ash Bul SW10 B-P, Rev. C, 03/17

ashcroft.com
info@ashcroft.com
1.800.328.8258

ASHCROFT®
Trust the shield.®

Type 200 Series Welded or Bonded Diaphragm Seal



TYPE 200 SHOWN

When isolation of the process from an instrument is required, Ashcroft offers a comprehensive line of diaphragm seals. Seal types include threaded, flanged, in-line threaded, in-line flanged, in-line socket weld, in-line butt weld, saddle and sanitary seals. Also available is a complete offering of isolation or iso-rings and isolation or iso-spools.

APPLICATIONS

- Elevated process temperatures
- Corrosive service
- Isolation of the process for safety
- Suspended solids in the process
- Sanitary connections
- Replacement of process dead leg
- Ease of cleaning between batches

FEATURES

- A metal diaphragm is welded to the top housing. Elastomeric diaphragms are bonded to the top housing. Either provides a double positive seal.
- A fill/bleed connection is standard, which permits filling the seal and instrument simultaneously after evacuation and allows the fill to flow into the completed unit.
- A thin Teflon PTFE gasket between the diaphragm and bottom housing ensures a leak-tight corrosion resistant seal even at high pressure.
- Top housing and pressure instrument are removable.
- Continuous-duty design will prevent loss of process fluid if pressure instrument is removed or fails.

SPECIFICATIONS

Model Number:	Type 200, 201, 202, 203, 204, 205, 206, 207, 208
Process Connection Size:	See Table A
Instrument Connection Size:	¼, ½ NPT
Diaphragm Material:	See Table B
Bottom Housing Materials:	See Table C
Filling Fluid:	See Table E

OPTIONS	**Code**
316 stainless steel top housing	**YT**
Stainless steel clamp rings and flanged ring – includes 300 stainless steel clamping bolts (1500 psi max)	**SE**
300 series stainless steel clamping bolts (max pres is 1500 psi)	**SB**
Pipe plugs for flushing connections – pipe plugs are available in the same materials as bottom housings per Table C	**PU**
5000 psi pressure rating Threaded inlet and metal diaphragm only	**HP**
Welded instrument to diaphragm seal	**DU**
Dual flushing connections (½ NPT) (Limited to 2″ thru 3″ flanged seals	**DB**
Ring joint (Flanged seal only)	**RJ**
Flat face (Flanged seal only)	**FF**
Clean for gaseous oxygen or strong oxidizing agent applications.	**6B**

HOW TO ORDER:

1. From Table A...select TYPE NUMBER based on process connection, process connection size and diaphragm type/construction. (e.g., Threaded/1″/capsule–code-10-200)
2. From Table B...select DIAPHRAGM MATERIAL. (e.g., 316L stainless steel–code S)
3. From Table C...select BOTTOM HOUSING MATERIAL. (e.g., 316 stainless steel–code S)
4. From Table D...select INSTRUMENT CONNECTION size. (e.g., 1/4 NPT–code 02T)
5. From Table E...select FILLING FLUID, if diaphragm seal will be attached to instrument. (e.g., Glycerin–code CG)

Typical Code: 10–200SS–02T–CG

All specifications are subject to change without notice.
All sales subject to standard terms and conditions.
© Ashcroft Inc. 2017 Rev. 05/17

Ashcroft Inc., 250 East Main Street, Stratford, CT 06614 USA
Tel: 203-378-8281 • Fax: 203-385-0408
email: info@ashcroft.com • www.ashcroft.com

ASHCROFT®
Trust the shield.®

Type 200 Series Welded or Bonded Diaphragm Seal

TYPE 200 SERIES WELDED OR BONDED SEAL TYPES

Type 200 –Threaded
¼, ½, ¾, 1 NPT



Type 201 –Threaded
with flushing connection
¼, ½, ¾, 1 NPT



Type 202 – Raised Face Flanged
½″, ¾″, 1″, 1½″, 2″, 3″



Type 203 – Raised Face Flanged
with flushing connection
½″, ¾″, 1″, 1½″, 2″, 3″
(raised face only)
1 piece with flushing conection



Type 204 – In-line Threaded
¼, ½, ¾, 1 NPT



Type 205 – Saddle
3,″ 4″ pipe only



Type 206 – In-line Flanged
½,″ ¾″ 1,″ 1½,″ 2,″ 3,″ 4,″ 6,″ 8″



Type 207 – In-line Socket Weld
½,″ ¾″ 1,″ 1½,″ 2″



Type 208 – In-line Butt Weld
¼,″ ½,″ ¾,″ 1,″ 1½,″ 2″



Table A – Process Connection/Type Number

	Process Connection Size/Code—Inches										Type Number
	Size	¼	½	¾	1	1½	2	3	4	6	8	
Process Connection	Code	25	50	75	10	15	20	30	40	60	80	Capsule
Threaded–female NPT		•	•	•	•	•						200
Threaded–female NPT (with flushing conn.)		•	•	•	•	•						201
Flanged[1]			•	•	•	•	•	•				202
Flanged (with flushing conn.)			•	•	•	•	•	•				203
In-line—threaded NPT		•	•	•	•							204
Saddle								•	AND LARGER			205
In-line—butt weld		•	•	•	•	•	•					208
In-line—flanged[2]			•	•	•	•	•	•	•	•	•	206
In-line—socket weld		•	•	•	•	•	•					207

Pressure Ratings—All 2500 psi except flanged seals are per ASME B 16.5, temperature limit determined by diaphragm, bottom housing and/or filling fluid.

Table B – Diaphragm Material

Material	Code
316L stainless steel	S
304 stainless steel	C
Monel 400	P
Nickel	N
Carpenter 20	D
Tantalum	U
Hastelloy B	G
Hastelloy C 22[6]	J
Hastelloy C 276[6]	H
Teflon[4]	T
Viton[5]	Y
Kalrez[12]	K
Titanium[14]	TI

Table C – Housing Materials

Material	Code
Steel	B
304L stainless steel	C
316L stainless steel	S
Hastelloy B	G
Hastelloy C 22[6]	J
Hastelloy C 276[6]	H
Carpenter 20	D
Monel "400"	M
Inconel "600"	W
Nickel	N
PVC[7][15]	V
Tantalum clad SS[8]	SU
Halar coated Monel[8][9]	BH
Teflon flanged steel[10]	T
Kynar[13][15]	KY
Titanium	TI

Table D – Instrument Connection

Size – NPT	Code
¼	02T
½	04T

Table E – Filling Fluid

Filling	Service	Connection to Instrument	Temperature Range °F	Code
Glycerin	Pressure	Direct Only	0/400	CG
Silicone	Pressure/Vacuum	Direct or Flexible Line	–40/500	CK, DJ[16]
Halocarbon	Pressure/Vacuum in presence of strong oxidizing agent	Direct or Flexible Line	–70/300	CF
Syltherm	Pressure/Vacuum	Direct or Flexible Line	–40/750	HA

Notes:

(1) 150, 300, 600, 900, 1500 & 2500 class flanges.
(2) 1″ 150 thru 8″ 300 class flanges only.
(3) Metal diaphragms welded; Teflon, Kalrez & Viton diaphragms bonded.
(4) Temp limits:–40/400°F.
(5) Max. pressure: 500 psi, Temp. limits:–40/350°F.
(6) Use on applications where NACE standard MR-01-75 2003 is standard.
(7) Maximum press./temp. Threaded: 200 psi/74°F, 125 psi/125°F, 80 psi/150°F. Flanged: 75 psi/100°F.
(8) Type 202 only.
(9) Temp. Limits: –40/300°F.
(10) Only available in 1″, 1½″, & 2″ 150 class, Types 202 max. press./temp. – 270 psi and 150°F. Consult factory for conditions beyond these limits.
(11) Max. pressure: 500 psi, Temp. limits:30/212°F.
(12) Maximum pressure/temp.: 200 psi and 180°F.
(13) Type 200: ¼ or ½ NPT only. Larger sizes offered with solvent weld joint. N/A in 201 or 203 design.
(14) Includes Titanium top housing.
(15) Type 200 only available in 1/4 NPT or 1/2 NPT. 3/4″ & 1″ size avalable as solvent welded joint only.
(16) CK for 50cSt, DJ for 10 cSt

All specifications are subject to change without notice.
All sales subject to stadard terms and conditions.
© Ashcroft Inc. 2017 Rev. 05/17

Ashcroft Inc., 250 East Main Street, Stratford, CT 06614 USA
Tel: 203-378-8281 • Fax: 203-385-0408
email: info@ashcroft.com • www.ashcroft.com

ASHCROFT®
Trust the shield.™

Type 200 Series Welded or Bonded Diaphragm Seal

DIMENSIONS

Type 200 – Threaded
¼, ½, ¾, 1 NPT

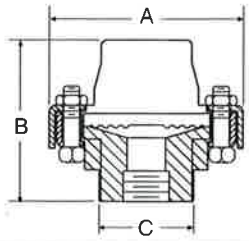

A		B		C	
in	mm	in	mm	in	mm
3¾	(95)	2⅞	(73)	1 13/16	(46)

Type 201 –Threaded
¼, ½, ¾, 1 NPT (with flushing connection)

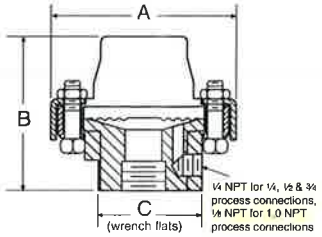

A		B		C	
in	mm	in	mm	in	mm
3¾	(95)	2⅞	(73)	1 13/16	(46)

Type 202 – Flanged
½,″ ¾,″

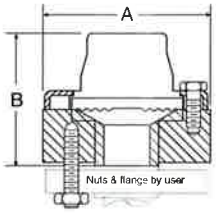

Flange Size	Flange Rating #	A in	A mm	B in	B mm
	150	3½	(89)	2 15/16	(75)
½″	300 or 600	3¾	(95)	3	(76)
	900 or 1500	4¾	(121)	3 3/16	(81)
	150	3⅞	(98)	2 13/16	(71)
¾″	300 or 600	4⅝	(117)	3	(76)
	900 or 1500	5⅛	(130)	3 3/16	(81)

Type 202 – Flanged 1″ (raised face only)
two piece bottom housing, 1½,″ 2,″ - PVC, Teflon and Kynar

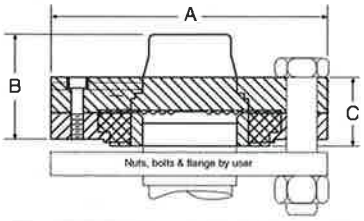

Flange Size	Flange Rating #	A in	A mm	B in	B mm	C in	C mm
1½″	150	5	(127)	2 5/16	(59)	1 13/32	(39)
2″	150	6	(152)	2⅛	(54)	1 9/16	(40)

Type 202 – Flanged (raised face only)
1½,″ 2,″ 3″ one piece bottom housing - all materials except PVC, Teflon and Kynar

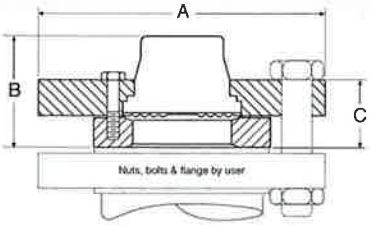

Flange Size	Flange Rating #	A in	A mm	B in	B mm	C in	C mm
	150	5	(127)			1½	(38)
1½″	300 or 600	6¼	(159)	2⅜	(61)	1½	(38)
	900 or 1500	7	(178)			1½	(38)
	150	6	(152)			1⅜	(35)
2″	300 or 600	6½	(165)	1 5/16	(49)	1½	(38)
	900 or 1500	8½	(216)			2⅛	(54)
	150	7½	(191)	2	(51)	1⅝	(41)
3″	300 or 600	8¼	(206)	2 1/16	(52)	1⅞	(47)
	900 or 1500	10½	(267)	2 1/16	(68)	3¼	(82)

Type 203 – Flanged
½,″ ¾″ (with flushing connection)

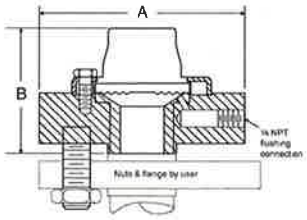

Flange Size	Flange Rating #	A in	A mm	B in	B mm
	150	3½	(89)	2 15/16	(75)
½″	300 or 600	3¾	(95)	3	(76)
	900 or 1500	4¾	(121)	3 3/16	(81)
	150	3⅞	(98)	2 13/16	(71)
¾″	300 or 600	4⅝	(117)	3	(76)

Type 202/203 – Flanged 1″ (raised face only)
one piece bottom housing, with and without flushing connection. Class 150, 300, 600

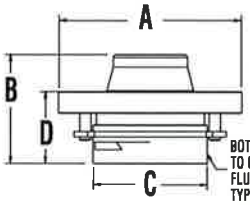

Flange Size	Flange Rating #	A in.	A mm	B in.	B mm	C in.	C mm
1	150 300 or 600	4-1/4 5	(100) (127)	2-9/16	(65)	1-23/32	(69)

Flange Size	Flange Rating #	D in.	D mm	103 & 203 only E in.	E mm
1	150 300 or 600	1-5/8	(41)	3/8	(9)

Type 202/203 – Flanged 1″ (raised face only)
one piece bottom housing, with and without flushing connection. Class 900, 1500, 2000

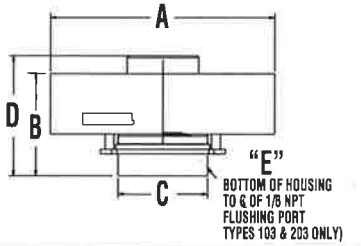

Flange Size	Flange Rating #	A in.	A mm	B in.	B mm	C in.	C mm
1	900 or 1500 2500	5-7/8 6-1/4	(149) (159)	2-7/8	(73)	2-1/4	(57)

Flange Size	Flange Rating #	D in.	D mm	103 & 203 only E in.	E mm
1	900 or 1500 2500	3-3/8	(86)	3/8	(9)

All specifications are subject to change without notice.
All sales subject to standard terms and conditions.
© Ashcroft Inc. 2017 Rev. 05/17

Ashcroft Inc., 250 East Main Street, Stratford, CT 06614 USA
Tel: 203-378-8281 • Fax: 203-385-0408
email: info@ashcroft.com • www.ashcroft.com

ASHCROFT
Trust the shield.

Type 200 Series Welded or Bonded Diaphragm Seal

DIMENSIONS

Type 203 – Flanged 1½," 2," 3" (raised face only)
one piece bottom housing with flushing connection

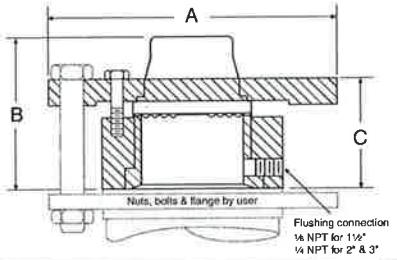

Flange Size	Rating #	A in	A mm	B in	B mm	C in	C mm
1½"	150	5	(127)	3	(76)	2 1/16	(52)
	300 or 600	6¼	(159)				
	900 or 1500	7	(178)				
2"	150	6	(152)	3 11/32	(84)	2⅜	(60)
	300 or 600	6½	(165)				
	900 or 1500	8½	(215)				
3"	150	7½	(191)	3 3/32	(79)	2 7/32	(56)
	300 or 600	8¼	(210)	3 3/16	(81)	2 7/32	(57)
	900	9½	(241)	3 23/32	(94)	2¾	(70)
	1500	10½	(267)				

Type 204 – In-Line Threaded
¼, ½, ¾, 1 NPT

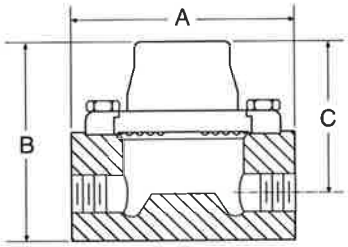

Process Connection	A in	A mm	B in	B mm	C in	C mm
¼ NPT	4	(102)	2 5/8	(67)	2⅛	(54)
½ NPT			3 5/8	(92)	2¾	(70)
¾ NPT			3⅞	(98)	3	(76)
1 NPT			3⅞	(98)	3	(76)

Type 205 – Saddle
4" Pipe only

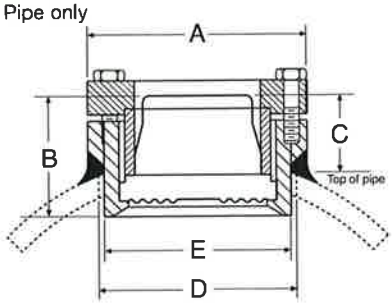

A in	A mm	B in	B mm	C in	C mm	D in	D mm	E in	E mm
3½	(89)	1 15/16	(50)	1 3/16	(31)	3	(76)	2 31/32	(75)

Type 205 – Saddle
3" Pipe only

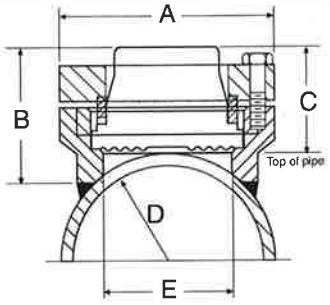

A in	A mm	B in	B mm	C in	C mm	D in	D mm	E in	E mm
3½	(89)	2¼	(57)	1⅞	(48)	1¾	(44)	2⅛	(54)

Type 206 – In-Line Flanged
½," 1," 1½," 2," 3"

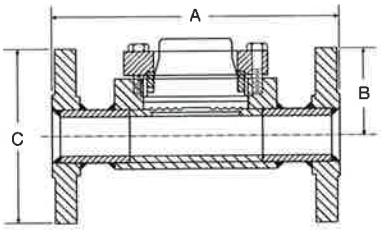

Flange Size	Rating #	A in	A mm	B in	B mm	C in	C mm
½"	150	7	(178)	2 1/16	(62)	3½	(89)
	300	7	(178)			3⅞	(98)
1"	150	7	(178)	2 1/16	(62)	4¼	(108)
	300	8	(203)			4⅞	(123)
1½"	150	8	(203)	2 11/16	(68)	5	(127)
	300	9	(229)			6⅛	(155)
2"	150	9	(229)	2 15/16	(75)	6	(152)
	300	10	(254)			6½	(165)
3"	150	11	(279)	3 5/8	(92)	7½	(229)
	300	12	(305)			8¼	(254)

Type 206 – In-Line Flanged
4," 6," 8"

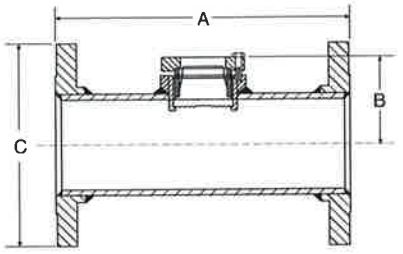

Flange Size	Rating #	A in	A mm	B In	B mm	C in	C mm
4"	150	13	(330)	3⅜	(86)	9	(229)
	300	14	(356)			10	(254)
6"	150	16	(406)	4 7/16	(113)	11	(279)
	300	17	(432)			12½	(318)
8"	150	16	(406)	5 7/16	(138)	13½	(343)

Type 207 – In-Line Welded
¼," ½," ¾," 1," 1½," 2"

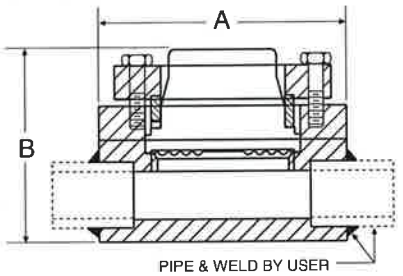

Pipe Size	A in	A mm	B in	B mm
¼"	4	(102)	2 11/32	(60)
½", ¾"			2 11/32	(60)
1"			2 15/32	(63)
1½"			2 23/32	(69)
2"			2 31/32	(75)

BULLETIN DS-200

All specifications are subject to change without notice.
All sales subject to standard terms and conditions.
© Ashcroft Inc. 2017 Rev. 05/17

Ashcroft Inc., 250 East Main Street, Stratford, CT 06614 USA
Tel: 203-378-8281 • Fax: 203-385-0408
email: info@ashcroft.com • www.ashcroft.com

BV16 valve

CONVAL QUEBEC MTL

February 4, 2019

Client: Hugo Chartier
Proposal No: 19-02-04 17
Factory No: 380624
Item No: ITEM 001

Figure Number: 1-2401-S-943-SP88CATB
DIA-FLO 1" WEIR STYLE DIAPHRAGM VALVE MANUAL ON/OFF

QTY: 16

Quoted Features

BODY	2401 - CAST IRON - SCREWED
DIAPHRAGM	S - NATURAL RUBBER
BONNET	943 - HANDWHEEL / DI W/TRAVEL STOP
EUROPEAN SERVICE	NO - THIS VALVE IS NOT FOR EUROPEAN SERVICE
CANADIAN SERVICE, REGISTRATION	QUE - THIS VALVE IS INTENDED FOR SERVICE IN THE CANADIAN PROVINCE OF QUEBEC
CRN NUMBER	CSA-0C8631.56R4 ✓
SPECIAL SERVICE/PREP	SP88CATB - VALVE CONSTRUCTED IN ACCORDANCE WITH MSS SP-88 CAT. B.
EXPORT INSTRUCTIONS	ECCN: EAR99 US EXPORT LICENSE MAY NOT BE REQUIRED

B.P.

ITT | Engineered Valves

DIMENSIONAL DATA

Valve size (1")

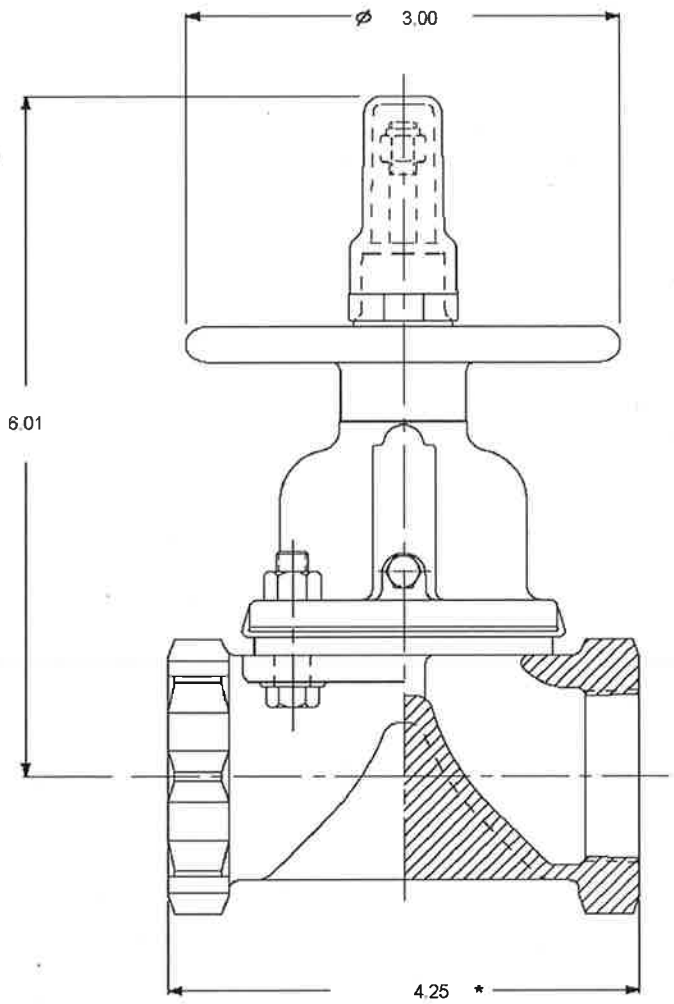

Customer Specified Tag

Notes and References

*Tolerance is -+0.06 in.

Weights

Weights

ACTUATOR	0.0 LB
BODY	4.0 LB
YOKE	0.0 LB

0.0 LB	APPROX. VALVE WTG (W/OUT ACCESSORIES OR PACKING)
4.0 LB	

All dimensions are in inches.

DRAWING IS FOR REFERENCE ONLY AND MAY NOT INCLUDE ALL SELECTED FEATURES. IF SPACE LIMITATIONS, INSTALLATION, ETC. ARE CRITICAL CONTACT CUSTOMER SERVICE. NOT CERTIFIED FOR CONSTRUCTION.

Customer: CONVAL QUEBEC MTL
Serial No:
Customer P.O. No:
Item No: ITEM 001
End User: Norclair / Hugo Chartier
Service:

Copyright 2019 ITT Corp

DRAWING NO 19-02-04 17-ITEM 001

B.F.

Flange Gasket and Storage Recommendations
Actuator Diaphragm Identification

Flange Gasket Recommendations

The use of a flange gasket is advisable when installing flanged diaphragm valves in a conventional piping system. Flange surfaces are best sealed with elastomeric type gaskets. However, the elastomeric gasket material must be chemically compatible with the service media, and must meet the applicable temperature and pressure requirements.

Plastic lined valves can be installed without a gasket when connecting to plastic lined piping. Installing a plastic lined valve to unlined piping must be avoided due to potential damage to the lining at the flange face, resulting in leakage.

Do not tighten each bolt in consecutive order either in a clockwise or counterclockwise direction. Use the criss-cross method when tightening flange bolts. Consult your piping supplier or piping engineer for the correct torque values to use.

Storage Recommendations

Lined Valves

Lined piping and valves should be stored, between delivery and use, away from direct sunlight, heat or outdoor seasonal weathering. Products with flexible type linings may be stored outdoors, providing the components are covered with protective tarpaulins and are not subjected to extreme temperature conditions.

Equipment lined with semi hard and especially bone hard materials must be protected and stored, preferably indoors, and should never be subjected to extreme cold climatic conditions because thermal stress and expansion may introduce cracking.

Diaphragm Shelf Life and Storage Recommendations

Diaphragm Material	Diaphragm Grade	Diaphragm Shelf Life
Buna N	DP & P	6 Years
Butyl	B & W1	10 Years
EPDM	M, M1 & 17	6 Years
Natural Rubber	S	4 Years
Neoprene	T	6 Years
Viton	V	10 Years
PTFE	TM, R2	14 Years

Storage Instructions:
Until the diaphragms are to be installed, they should be kept in a covered, adequately ventilated and dry location, preferably in their original containers. Storage temperatures should not cycle rapidly and should be maintained between 40° and 120° F.

Actuator Diaphragm Identification

	Actuator Diaphragms						
Size	#12	#25	#50	#75	#101	#130	#250
A	6 5/8 in	9 7/8 in	13 5/16"	14 in	15 11/16 in	17 9/16 in	21 7/16in
Bolt Holes	12	18	<——— NONE ———>				
	maximum recommended air pressure: 85 psi						

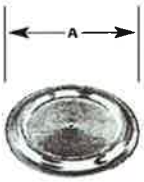

Facts and Recommended Guidelines

Dia-Flo Diaphragm Valve Facts you should be aware of...

All .75 in flanged valves (except solid plastic) are identical to 1in valves except the body end flanges accommodate .75 in flange dimensions. Therefore, bonnet assemblies and diaphragms for such bodies use 1in bonnet assemblies and diaphragms.

Similarly, 1.25 in valves (flanged or unflanged) use 1.5 in bonnet assemblies and diaphragms.

Diaphragm material properties become weaker with increasing temperature. Therefore, diaphragms operating at elevated temperatures are not to be used at maximum pressures. See pressure/temperature charts.

Cast iron, ductile iron and carbon steel should not be used below -20°F (-29°C) per ANSI standards.

Dia-Flo Diaphragm Airmotor actuators are designed to operate with air pressures up to 85 psi. The maximum pressure differential between upper and lower chambers is also 85 psi.

Maximum operating line pressure for valves equipped with dualrange bonnet assemblies is 100 psi.

Dualrange bonnet assemblies are only available on weir type valves, 1in through 6 in size.

Straightway valves are not ideal for throttling service due to poor control capability.

Straightway valves are not recommended for vacuum service.

Actuated DiaFlo valves used on vacuum service applications will require an additional amount of actuation pressure in order to open the valve. The total amount applied will be higher than that found in the applicable sizing chart, in order to compensate for the effect of the vacuum.

Large fail close (#25 and above) actuators are supplied as standard with travel stops.

Fail open and double acting valves are not normally supplied with travel stops, so if the available supply pressure exceeds the required pressure to close the valve, then the actuator should be ordered with a travel stop option or the supply pressure should be reduced using a regulator.

A minimum of 20 psi line pressure is required to utilize the direct loaded bonnet assembly. Direct loaded bonnets are always provided with diaphragms in the molded closed position.

When you specify a double-acting actuator with a top-mounted,single-acting positioner, the standard arrangement is that the bottom chamber is supplied with a cushion regulator. This will result in a fail open valve.

Recommended Guidelines for Weir and Straightway Valves

Maximum Velocity:	15 - 20 ft/sec for clear liquids 8 - 10 ft/sec for slurries
Maximum Solids percentages:	Weir Valves - not to exceed 15% Straightway Valves* - up to 30% * For solids between 30% and 50%, consult factory 50% and above - Not Recommended
Maximum allowable pressure drop across weir valve:	25% of Pinlet absolute

REVIEWED BY CONTRACTOR

Kudlik Construction Ltd.

NAME: Sandra Rousseau P.Eng

DATE: Fév 15, 2019

NORCLAIR
MÉCANIQUE DE PROCÉDÉ

SHOP DRAWINGS

DA-MP-41 DI2 piping spec

Date : 2019-02-15

Information general	
Project : **WWTP UPGRADE - IQALUIT**	
Client : Kudlik Construction Ltd. To : Sandra Rousseau P.Eng., Project Manager	Project number : **2018-062** E-mail : srousseau@kudlik.biz
Contractor : **Norclair inc.**	Project number Norclair : **P1039**
Address : 1100, Montée Masson, Laval, QC, Canada H7E 4P2	
Project Manager : Hugo Chartier, Project Manager	E-mail: hchartier@norclair.ca
Phone : 450-688-4012 # 706	Cell. : 514-703-0263

Information, subcontractor or supplier	
Sub/supplier :	
Contact :	Phone :

Information on the equipment	
Speciality : **Process**	
Equipment : DI2 piping spec	
Drawing reference :	
Specification reference : **40 05 13.01**	Division :
Article :	Number of pages : 19

CONSULTANT APPROVAL

STANTEC PROJECT #: 110126045

SUBMITTAL # DA-MP-41 DI2 PIPING SPEC.

This review by Stantec is for general conformance with the design concept of Stantec's design of the:

☑ Process ☐ Electrical
☐ Structural ☐ Other
☐ Mechanical

component(s) only and does not mean that Stantec has verified or approves the shop drawing(s). The Contractor remains solely responsible for the shop drawing(s) and this review by Stantec does not relieve the Contractor of the Contractor's responsibility for errors or omissions in the shop drawing(s) or for meeting all requirements of the contract documents. This review does not mean that Stantec approves the detailed design inherent in the shop drawing, responsibility for which shall remain with the Contractor submitting same, nor does this review mean that Stantec accepts any deviation of the shop drawing(s) from the contract documents. The Contractor is responsible for confirming all dimensions and correlating them at the job site, for all construction means, methods and techniques, and for coordination of construction work of all trades, including coordination of all shop drawings.

Stantec

☑ REVIEWED

☐ REVIEWED, AS NOTED

☐ REVISE AND RESUBMIT

☐ NOT REVIEWED

DATE FEBRUARY 19, 2019

BY Alejandro Rojas, P.Eng

1100, montée Masson
Laval, QC, Canada
H7E 4P2

hone. : 450-688-4012
Fax : 450-661-6341
E-Mail : info@norclair.ca
www.norclair.ca

CBGL911 GLASS LINING

REV 2016

APPLICATION

Glass lining inside of ductile iron pipe has been used successfully for over 40 years. Most commonly used for it's "non stick" characteristics to convey fluids containing higher solids concentration such as sludge, scum, and grease in sewage service and wastewater treatment plant applications.

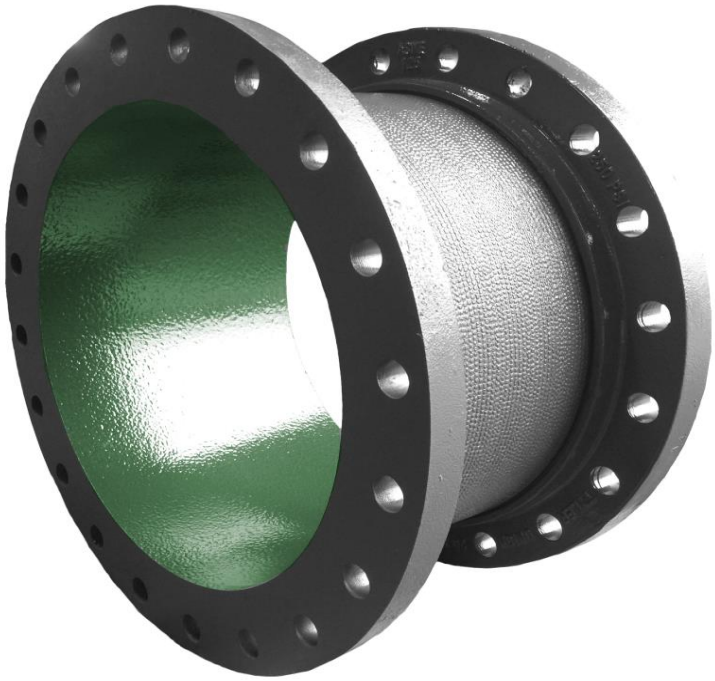

CBGL911 LINING MATERIAL

Glass lined pipe shall conform to ASTM B1000-15. The standard of quality shall be CBGL911. The glass powder shall be specifically formulated and shall be vitreous and inorganic. The lining must be proven to be successful in conveying sludge, scum, and grease in sewage service and wastewater treatment plant applications.

Any request for substitution of material must be accompanied by a successful history of lining ductile iron pipe and fittings which are used in these applications. The lining Applicator must be an ISO 9001:2000 certified company and must be able to provide recent third party, independent test reports verifying the following results. The lining Applicator must have a minimum of 5 years proven experience in production of glass lined ductile iron piping.
These physical and chemical tests must have been performed on coupons from the applicators regular production lined ductile iron pipe and/or fittings.

1. ASTM D-792 test for density in the range of 2.5 to 3.0 grams per cubic centimeter.
2. Immersion testing using ASTM C-283-97 (2002) in a solution of 8% sulfuric acid at a temperature of 148 degrees F. (64 degrees C) for a period of 10 minutes minimum. The glass shall have a minimum loss of surface gloss and a weight loss of no more than 2 milligrams per square inch (.31 mg per square centimeter).
3. Glass shall have no observed evidence of corrosion when exposed to an HCl solution of 3 pH and separately to a Na OH solution of 1 OpH; both elevated in temperature to 125 degrees F. (52 degrees C) for 10 minutes minimum.
4. Glass shall be capable of withstanding an instantaneous thermal shock of 350 degrees F. (176 degrees C) without cracking, crazing, blistering or spalling.
5. Glass lining have a minimum hardness of 6 on the MOHS scale.

WHY USE GLASS LINING?

Glass Lined ductile iron pipe assists in keeping your systems clean and free from clogging. Glass lining also helps protect the pipe from abrasion present in grit removal and other sewer process systems.

Glass lining is a porcelain material and common sewer materials resist sticking to it like they do with epoxy lining materials.

CBGL911 glass lining is also excellent for high temperature requirements where other protective linings cannot remain in service.

Did you know that you can get process valves with CBGL911 glass lining? Many valve manufacturers currently supply CBGL911 glass lined valves



Struvite buildup in sludge piping system

CBGL911 LINING APPLICATION

A. Surface Preparation

The entire surface area to receive the glass compound shall be inspected for the presence of oil, grease, or any other soluble substances. Any areas found with contamination shall be solvent cleaned to completely remove these substances. After cleaning, all surface areas shall be mechanically ground so as to remove any casting imperfections leaving only a smooth surface with no raised projections. Finally, the entire surface area to be lined shall be struck with a blast media so that all remaining impurities from the cleaning operations are removed. Only tightly adhering cast-in oxides may be left on the surface.



Surface grinding prep for a ductile iron casting

B. Lining

After surface preparation, the interior of the pipe or fitting shall receive an application of base glass compound which has been suspended in a water carrier. After the water has evaporated, the pipe or fitting shall be oven-fired at a temperature of 1375 degrees F. (746 degrees C) in order to fuse the glass to the metal surface. The subsequent finish coats are similarly processed with a resultant lining thickness of 10 mils (.25mm) minimum.

INSPECTION





CBGL911 Glass Lined Valve Components

1. All ductile iron pipe and fittings shall be checked for thickness using a magnetic film thickness gage by the method outlined in SSPC-PA2 Film Thickness Rating.

2. The lining shall be in accordance with the Applicator's industry standard tolerance for coverage and continuity. All pipe and fittings shall be visually inspected after lining at the Applicator's facility. Each and every pipe or fitting shall be tested with a 67.5 volt Tinker Rasor electronic device with a wetted sponge to determine the presence of pinholes or voids. Excessive pinholes shall be cause for rejection at the Applicator's facility.

3. Each and every pipe or fitting shall be marked on the interior glass surface using a permanent marker; the date of application and tests, the facility location and the number of acceptable pinholes detected. Quality Assurance reports will be maintained at the Applicator's facility evidencing all work performed and data recorded.

4. The Owner/or his Representative may witness at the Applicator's facility; the glass application process, review the Quality Assurance Reports and witness the actual tests conducted upon his product, all prior to the product leaving the facility. This may be done by written Specification or by sufficient notice to the Applicator to allow coordination of the visit.

CERTIFICATION

The Applicator must be able to supply a notarized Certificate of Compliance attesting to the fact that the glass lining has met all of the requirements of this specification and that the material lined has met the applicable standards of AWWA and ANSI where noted.

CBGL911 GLASS LINING

HANDLING

Glass lined pipe and fittings must be handled only from the exterior surfaces; no forks, straps, hooks, etc; shall come into contact with the interior surface of glass. Pipe and fittings that have been altered after it left the Applicator's facility, such as field cuts or further fabrication, may not exhibit the same tested results as was documented at the Applicator's facility.

HC: Exterior coating is MacroPoxy 5500 (brick red color)



FIELD REPAIR

CBGL911 Glass repair Epoxy shall be used for touch-up or repair in accordance with the Manufacturer's recommendation below.

1. Remove burrs caused by field cutting of ends or handling damage and smooth out the edge of the lining if rough.

2. Remove all traces of oil, grease, asphalt, dust,dirt, etc.

3. Remove any damaged lining caused by field cutting operations' or handling and clean any exposed metal by sanding or scraping. Sandblasting or power tool cleaning roughening is also acceptable. It is recommended that any loose lining be removed by chiseling, cutting, or scraping into well-adhered lined area before patching. Be sure to overlap at least 1" of lining in the area to be repaired.

4. With the area to be sealed or repaired absolutely clean and suitably roughened, apply a coat of CBGL Glass Repair Epoxy using the following procedure:

a. Mixing procedure - The Repair Kit for CBGL 911 Glass Lining contains two small cans of CBGL 911 Glass Repair Epoxy. CBGL 911 Glass Repair Epoxy is a two-component epoxy and the contents of the small container shall be mixed with the contents of the large container. if less than the full contents of each can is to be mixed, the material may be mixed using the mixing ratio printed on the labels. Add Q4-5311 Part B to A4-5311 Part A. Mix thoroughly with enclosed paddle. All activated material must be used within one hour of mixing.

b. Application of Material- After the material has been thoroughly mixed, it can be applied to the properly prepared surface by brush. Brushing is usually best due to the fact that the areas to be repaired are usually small.

5. It is important to coat the entire freshly cut exposed metal surface of the cut pipe end. To ensure proper sealing, overlap at least one inch of the lining with this repair material.



TECHNICAL DATA CBGL 911 GLASS REPAIR EPOXY

DESCRIPTION:	A brushable polyamidoamine epoxy designed for sealing cut ends and repairs when pipes are lined with CBGL 911 Glass Lining.
LIMITATIONS:	CBGL911 Glass Repair Epoxy should be used over glass or bare metal for repairing cut ends of pipe or damaged areas in CBGL Glass Lining. The Glass Repair Epoxy must be used over properly prepared ductile iron surfaces or roughened glass lining.
SURFACE PREPARATION	The surface preparation shall be equal to the specifications for the project or as outlined in the touch-up procedure. Do not apply glass repair epoxy over wet or frozen surfaces,or over glass surfaces that have not been roughened.
DRY FILM: THICKNESS:	As outlined in specifications, usually 3.0 to 5.0 mils per coat in two coats for 6.0 to 10.0 mils dry film thickness.
APPLICATION:	Brush
THINNING:	Thin or cleanup with Methyl Ethyl Ketone.
PHYSICAL DATA:	VOLATILE ORGANIC CONTENTS: 2.90 lbs. per gallon
SAFETY DATA:	See individual product label for safety and health data information. Individual Material Safety Data Sheets are available upon request.

Ductile Iron AWWA (Cast) Fittings



AWWA FITTINGS
Victaulic fittings for AWWA size pipe are supplied with rigid radius grooves in accordance with ANSI/AWWA C-606. Fittings conform to ANSI A21.10/AWWA C-110 for center-to-end dimensions and AWWA C-153 or ANSI A21.10/AWWA C-110 for wall thickness.

While most requirements are specified "black" or non-coated, fittings can be supplied with an alkyd-phenolic primer, or bituminous coating. Coal tar epoxy and other coatings are also available. The standard black asphalt coating used on our cement lined AWWA size fittings is NSF 61 Listed. Cast surfaces will be provided with surface equivalent to SSPC-SP6 prior to coating unless specified otherwise. Fittings are available with flanged ends wherever grooved ends are shown.

Linings include cement/mortar Type 2 (standard) and others. Fittings can readily be prepared for glass lining by others.

Fittings are rated for working pressures to 350 psi/2400 kPa (ductile iron) in 3 – 12"/80 – 300 mm sizes and to 250 psi/1725 kPa (gray iron) in sizes 3 – 12"/ 80 – 300 mm, and to 250 psi/1725 kPa (ductile iron), or 150 psi/1035 kPa (gray iron) for 14"/350 mm and larger. Victaulic fittings shown have an end-to-end dimension tolerance of ±⅛" in all sizes and styles.

CAST FITTINGS – TAPPED
Victaulic can supply tapped fittings on order to ANSI B16.1 dimension locations. Specify fitting size, tap location by letter on order.

BASE FITTINGS
Grooved end base 90° elbows and base tees are available with dimensions to ANSI B16.1.

MATERIAL SPECIFICATIONS

Fitting: Ductile iron conforming to ASTM A-536, Grade 65-45-12. Ductile iron conforming to ASTM A-395, grade 65-45-15 is available upon special request.

Fitting Coating: (specify choice*)

- **Standard on request:**
  - Non-coated
  - Alkyd-phenol primer
  - Bituminous coating

HC: Exterior coating is MacroPoxy

- **Optional:**
  - Coal tar epoxy coating
  - Cement/mortar lining – Type II
  - Glass Lining
  - Other linings available. Contact Victaulic.

* Coatings are applied per manufacturer's recommended mils.

JOB/OWNER
System No. _____
Location _____

CONTRACTOR
Submitted By _____
Date _____

ENGINEER
Spec Sect _____ Para _____
Approved _____
Date _____

VICTAULIC IS A REGISTERED TRADEMARK OF VICTAULIC COMPANY. © 2007 VICTAULIC COMPANY. ALL RIGHTS RESERVED. PRINTED IN THE USA.

Ductile Iron AWWA (Cast) Fittings

DIMENSIONS

Elbows

NO. 100-C 90° Long Radius Elbow
NO. 10-C 90° Elbow
NO. 11-C 45° Elbow
NO. 12-C 22½° Elbow
NO. 13-C 11¼° Elbow

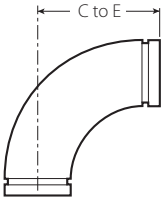

NO. 100-C

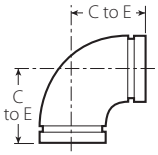

NO. 10-C

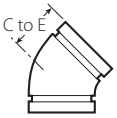

NO. 11-C

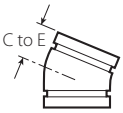

NO. 12-C

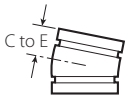

NO. 13-C

Size		No. 100-C 90° Long Radius Elbow		No. 10-C 90° Elbow		No. 11-C 45° Elbow		No. 12-C 22½° Elbow		No. 13-C 11¼° Elbow	
Nominal Size Inches/ mm	Actual Outside Dia. Inches mm	C to E Inches mm	Approx. Weight Each Lbs kg	C to E Inches mm	Approx. Weight Each Lbs. kg	C to E Inches mm	Approx. Weight Each Lbs. kg	C to E Inches mm	Approx. Weight Each Lbs. kg	C to E Inches mm	Approx. Weight Each Lbs. kg
3 80	3.960 100.6	7.75 197	19.3 8.8	5.50 140	8.6 3.9	3.00 76	5.8 2.6	3.00 76	12.5 5.7	3.00 76	9.0 4.1
4 100	4.800 121.9	9.00 229	28.0 12.7	6.50 165	12.0 5.4	4.00 102	8.4 3.8	4.00 102	11.5 5.2	4.00 102	11.5 5.2
6 150	6.900 175.3	11.50 292	55.0 25.0	8.00 203	22.0 10.0	5.00 127	15.0 6.8	5.00 127	25.0 11.3	5.00 127	21.5 9.8
8 200	9.050 229.9	14.00 356	83.0 37.7	9.00 229	38.0 17.2	5.50 140	28.8 13.1	5.50 140	39.5 17.9	5.50 140	39.0 17.7
10 250	11.100 281.9	16.50 419	160.0 72.6	11.00 279	76.0 34.5	6.50 165	43.3 19.6	6.50 165	67.0 30.4	6.50 165	77.0 34.9
12 300	13.200 335.3	19.00 483	210.0 95.3	12.00 305	92.0 41.7	7.50 191	72.0 32.7	7.50 191	108.0 49.0	7.50 191	120.0 54.4
14 350	15.300 388.6	21.50 546	261.0 118.4	14.00 356	174.0 78.9	7.50 191	104.0 47.2	7.50 191	92.0 41.7	7.50 191	101.0 45.8
16 400	17.400 442.0	24.00 610	337.0 152.9	15.00 381	239.0 108.4	8.00 203	142.0 64.4	8.00 203	112.0 50.8	8.00 203	121.0 54.9
18 450	19.500 495.3	26.50 673	451.0 204.6	16.50 419	328.0 148.8	8.50 216	186.0 84.4	8.50 216	145.0 65.8	8.50 216	146.0 66.2
20 500	21.600 548.6	29.00 737	588.0 266.7	18.00 457	413.0 187.3	9.50 241	246.0 111.6	9.50 241	200.0 90.7	9.50 241	202.0 91.6
24 600	25.800 655.3	34.00 864	909.0 412.3	22.00 559	668.0 303.0	11.00 279	414.0 187.8	11.00 279	282.0 127.9	11.00 279	284.0 128.8
30 750	32.000 762.0	41.50 1054	2136.0 968.9	25.00 635	1002.0 454.4	15.00 381	720.0 326.6	15.00 381	681.0 308.9	15.00 381	699.0 317.1
36 900	38.300 914.4	49.00 1245	3120.0 1415.2	28.00 711	1608.0 729.4	18.00 457	1152.0 522.6	18.00 457	975.0 442.3	18.00 457	1124.0 509.8

VICTAULIC IS A REGISTERED TRADEMARK OF VICTAULIC COMPANY. © 2007 VICTAULIC COMPANY. ALL RIGHTS RESERVED. PRINTED IN THE USA.

Ductile Iron AWWA (Cast) Fittings

Tee, True Wye, Cross, Lateral, and Cap

NO. 20-C Tee
NO. 33-C True Wye
NO. 35-C Cross
NO. 30-C 45° Lateral
NO. 60-C Cap

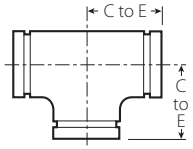

NO. 20-C

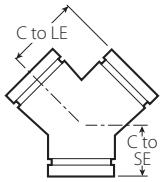

NO. 33-C

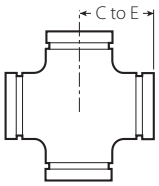

NO. 35-C

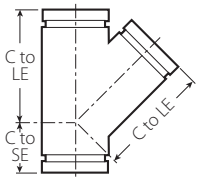

NO. 30-C



NO. 60-C

Size		No. 20-C Tee		No. 33-C True Wye			No. 35-C Cross		No. 30-C 45° Lateral			No. 60-C Cap†	
Nominal Size Inches/ mm	Actual Outside Dia. Inches mm	C to E Inches mm	Approx. Wgt. Each Lbs. kg	C to LE Inches mm	C to SE Inches mm	Approx. Wgt. Each Lbs. kg	C to E Inches mm	Approx. Wgt. Each Lbs. kg	C to LE Inches mm	C to SE Inches mm	Approx. Wgt. Each Lbs. kg	T Thickness Inches mm	Approx. Wgt. Each Lbs. kg
3 80	3.960 100.6	5.50 140	14.2 6.4	5.50 140	3.00 76	25.00 635	5.50 140	24.0 10.9	10.00 254	3.00 76	28.0 12.7	1.22 31	3.0 1.4
4 100	4.800 121.9	6.50 165	19.0 8.6	6.50 165	3.00 76	55.0 25.0	6.50 165	40.0 18.1	12.00 305	3.00 76	38.4 12.7	1.16 29	5.0 2.3
6 150	6.900 175.3	8.00 203	34.0 15.4	8.00 203	3.50 89	90.0 40.8	8.00 203	71.0 32.2	14.50 368	3.50 89	67.0 30.4	1.16 29	9.0 4.1
8 200	9.050 229.9	9.00 229	59.0 26.8	9.00 229	4.50 114	140.0 63.5	9.00 229	106.0 48.1	17.50 445	4.50 114	120.0 54.4	1.34 34	16.0 7.3
10 250	11.100 281.9	11.00 279	111.0 50.4	11.00 279	5.00 127	220.0 99.8	11.00 279	225.0 102.1	20.50 521	5.00 127	215.0 97.5	1.53 39	37.2 16.9
12 300	13.200 335.3	12.00 305	136.0 61.7	12.00 305	5.50 140	315.0 142.9	12.00 305	310.0 140.6	24.50 622	5.50 140	346.0 157.0	1.53 39	52.0 23.6
14 350	15.300 388.6	14.00 356	262.0 118.8	14.00 356	6.00 152	+	14.00 356	307.0 139.3	27.00 686	6.00 152	492.0 223.2	2.75* 70	55.0 25.0
16 400	17.400 442.0	15.00 381	304.0 137.9	15.00 381	6.50 165	+	15.00 381	426.0 193.2	30.00 762	6.50 165	696.0 315.7	2.75* 70	68.0 30.9
18 450	19.500 495.3	16.50 419	408.0 185.1	16.50 419	7.00 178	+	16.50 419	567.0 254.9	32.00 813	7.00 178	870.0 394.6	2.75* 70	90.0 40.8
20 500	21.600 548.6	18.00 457	552.0 250.4	18.00 457	8.00 203	+	18.00 457	717.0 325.2	35.00 889	8.00 203	1103.0 500.3	2.75* 70	110.0 50.0
24 600	25.800 655.3	22.00 559	980.0 444.5	22.00 559	9.00 229	+	22.00 559	1177.0 533.9	40.50 1029	9.00 229	1746.0 792.0	2.75* 70	165.0 74.8
30 750	32.000 762.0	25.00 635	1552.0 704.0	25.00 635	10.00 254	+	25.00 635	1366.0 619.6	49.00 1245	10.00 254	3280.0 1487.8	4.00* 102	300.0 136.1
36 900	38.300 914.4	28.00 711	2050.0 929.9	28.00 711	15.00 381	+	28.00 711	1885.0 855.0	56.00 1422	15.25 387	5020.0 2277.1	4.00* 102	536.0 243.1

* Dish caps. + Contact Victaulic for details.

† Caps from ½ – 3"/15 – 80 mm tap sizes.

Bullhead Tee

NO. 21-C

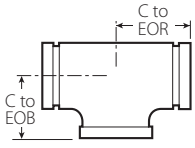

NO. 21-C

Size	Dimensions – Inches/mm		Approx. Weight Each
Nominal Size Inches/ mm	C to EOR	C to EOB	Lbs. kg
4 × 4 × 6 100 × 100 × 150	+	+	47.0 21.3
6 × 6 × 8 150 × 150 × 200	8.00 203	8.00 203	79.0 35.8
8 × 8 × 10 200 × 200 × 250	11.00 279	11.00 279	164.0 74.4
10 × 10 × 12 250 × 250 × 300	+	+	226.0 102.5

+ Contact Victaulic for details.

VICTAULIC IS A REGISTERED TRADEMARK OF VICTAULIC COMPANY. © 2007 VICTAULIC COMPANY. ALL RIGHTS RESERVED. PRINTED IN THE USA.

Ductile Iron AWWA (Cast) Fittings

Reducing Fittings

NO. 25-C Reducing Tee
NO. 35-CR Reducing Cross
NO. 30-CR 45° Reducing Lateral

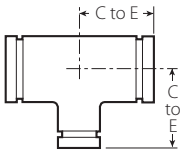

NO. 25-C

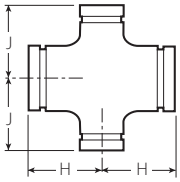

NO. 35-CR

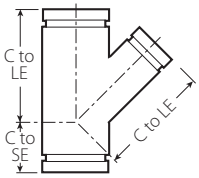

NO. 30-CR

Size			No. 25-C Reducing Tee			No. 35-CR Reducing Cross			No. 30-CR 45° Reducing Lateral		
Nominal Size Inches/ mm			C to EOR Inches mm	C to EOB Inches mm	Approx. Weight Each Lbs. kg	H Inches mm	J Inches mm	Approx. Weight Each Lbs. kg	C to LE Inches mm	C to SE Inches mm	Approx. Weight Each Lbs. kg
4 100	×	3 80	6.50 165	6.50 165	26.4 12.0	6.50 165	6.50 165	22.0 10.0	12.00 305	3.00 76	45.0 20.4
6 150	×	3 80	8.00 203	8.00 203	30.0 13.6	8.00 203	8.00 203	46.0 20.9	14.50 368	3.50 89	74.0 33.6
		4 100	8.00 203	8.00 203	34.0 15.4	8.00 203	8.00 203	38.0 17.2	14.50 368	3.50 89	80.0 36.3
8 200	×	3 80	9.00 229	9.00 229	+	—	—	—	—	—	—
		4 100	9.00 229	9.00 229	78.0 35.4	9.00 229	9.00 229	76.0 34.5	17.50 445	4.50 114	125.0 56.7
		6 150	9.00 229	9.00 229	80.0 36.3	9.00 229	9.00 229	59.0 26.8	17.50 445	4.50 114	140.0 63.5
10 250	×	4 100	11.00 279	11.00 279	120.0 54.4	11.00 279	11.00 279	120.0 54.4	20.50 521	5.00 127	204.0 92.5
		6 150	11.00 279	11.00 279	128.0 58.1	11.00 279	11.00 279	114.0 51.7	20.50 521	5.00 127	212.0 96.2
		8 200	11.00 279	11.00 279	130.0 59.0	11.00 279	11.00 279	123.0 56.8	20.50 521	5.00 127	236.0 107.1
12 300	×	4 100	12.00 305	12.00 305	112.0 50.8	12.00 305	12.00 305	174.0 78.9	24.50 622	5.50 140	290.0 131.5
		6 150	12.00 305	12.00 305	180.0 81.7	12.00 305	12.00 305	130.0 59.0	24.50 622	5.50 140	302.0 137.0
		8 200	12.00 305	12.00 305	186.0 84.4	12.00 305	12.00 305	139.0 63.1	24.50 622	5.50 140	324.0 147.0
		10 250	12.00 305	12.00 305	192.0 87.1	12.00 305	12.00 305	154.0 69.9	24.50 622	5.50 140	356.0 161.5
14 350	×	6 150	14.00 356	14.00 356	238.0 108.0	14.00 356	14.00 356	215.0 97.5	27.00 686	6.00 152	330.0 149.7
		8 200	14.00 356	14.00 356	241.0 109.3	14.00 356	14.00 356	221.0 100.3	27.00 686	6.00 152	346.0 156.9
		10 250	14.00 356	14.00 356	258.0 114.8	14.00 356	14.00 356	235.0 106.6	27.00 686	6.00 152	540.0 244.9
		12 300	14.00 356	14.00 356	267.0 121.1	14.00 356	14.00 356	244.0 110.7	27.00 686	6.00 152	625.0 283.5
16 400	×	6 150	15.00 381	15.00 381	288.0 130.6	15.00 381	15.00 381	266.0 120.7	30.00 762	6.50 165	570.0 258.6
		8 200	15.00 381	15.00 381	315.0 142.9	15.00 381	15.00 381	276.0 125.2	30.00 762	6.50 165	585.0 265.4
		10 250	15.00 381	15.00 381	319.0 144.7	15.00 381	15.00 381	291.0 132.0	30.00 762	6.50 165	630.0 285.8
		12 300	15.00 381	15.00 381	330.0 149.7	15.00 381	15.00 381	305.0 138.4	30.00 762	6.50 165	650.0 294.8
		14 350	15.00 381	15.00 381	341.0 154.7	15.00 381	15.00 381	280.0 127.0	30.00 762	6.50 165	692.0 313.9

TABLE CONTINUED ON NEXT PAGE

VICTAULIC IS A REGISTERED TRADEMARK OF VICTAULIC COMPANY. © 2007 VICTAULIC COMPANY. ALL RIGHTS RESERVED. PRINTED IN THE USA.

Ductile Iron AWWA (Cast) Fittings

Reducing Fittings

NO. 25-C Reducing Tee
NO. 35-CR Reducing Cross
NO. 30-CR 45° Reducing Lateral

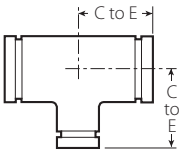

NO. 25-C

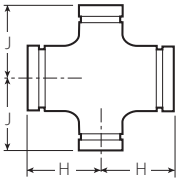

NO. 35-CR

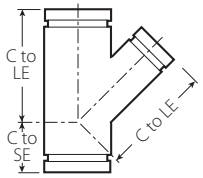

NO. 30-CR

Size		No. 25-C Reducing Tee			No. 35-CR Reducing Cross			No. 30-CR 45° Reducing Lateral		
Nominal Size Inches/ mm		C to EOR Inches mm	C to EOB Inches mm	Approx. Weight Each Lbs. kg	H Inches mm	J Inches mm	Approx. Weight Each Lbs. kg	C to LE Inches mm	C to SE Inches mm	Approx. Weight Each Lbs. kg
18 450	× 8 200	13.00 330	15.50 394	326.0 147.9	13.00 330	15.50 394	272.0 123.4	+	+	+
	10 250	13.00 330	15.50 394	332.0 150.6	13.00 330	15.50 394	277.0 125.6	32.00 813	7.00 178	765.0 347.0
	12 300	13.00 330	15.50 394	339.0 153.8	13.00 330	15.50 394	291.0 132.0	32.00 813	7.00 178	800.0 362.9
	14 350	16.50 419	16.50 419	441.0 200.0	16.50 419	16.50 419	361.0 163.7	32.00 813	7.00 178	865.0 392.4
	16 400	16.50 419	16.50 419	453.0 205.5	16.50 419	16.50 419	367.0 166.5	32.00 813	7.00 178	895.0 406.0
20 500	× 6 150	14.00 356	17.00 432	+	—	—	—	—	—	—
	8 200	14.00 356	17.00 432	412.0 186.9	14.00 356	17.00 432	343.0 155.6	—	—	—
	10 250	14.00 356	17.00 432	419.0 190.1	14.00 356	17.00 432	343.0 155.6	+	+	+
	12 300	14.0 356	17.00 432	426.0 193.2	14.00 356	17.00 432	357.0 161.9	35.00 889	8.00 203	1000.0 453.6
	14 350	14.00 356	17.00 432	443.0 201.0	14.00 356	17.00 432	327.0 148.3	35.00 889	8.00 203	1062.0 481.7
	16 400	18.00 457	18.00 457	571.0 259.0	18.00 457	18.00 457	458.0 207.7	35.00 889	8.00 203	1105.0 501.2
	18 450	18.00 457	18.00 457	584.0 264.9	18.00 457	18.00 457	469.0 212.7	35.00 889	8.00 203	1150.0 521.6
24 600	× 6 150	15.00 381	19.00 483	+	—	—	—	—	—	—
	8 200	15.00 381	19.00 483	+	+	+	+	+	+	+
	10 250	15.00 381	19.00 483	+	+	+	+	+	+	+
	12 300	15.00 381	19.00 483	593.0 269.0	15.00 381	19.00 483	475.0 215.5	+	+	+
	14 350	15.00 381	19.00 483	610.0 276.7	15.00 381	19.00 483	450.0 204.1	40.50 1029	9.00 229	1510.0 684.9
	16 400	15.00 381	19.00 483	620.0 281.2	15.00 381	19.00 483	446.0 202.3	40.50 1029	9.00 229	1580.0 716.7
	18 450	22.00 559	22.00 559	918.0 416.4	22.00 559	22.00 559	782.0 354.7	40.50 1029	9.00 229	871.0 395.1
	20 500	22.00 559	22.00 559	937.0 425.0	22.00 559	22.00 559	788.0 357.4	40.50 1029	9.00 229	1705.0 773.4

TABLE CONTINUED ON NEXT PAGE

VICTAULIC IS A REGISTERED TRADEMARK OF VICTAULIC COMPANY. © 2007 VICTAULIC COMPANY. ALL RIGHTS RESERVED. PRINTED IN THE USA.

Ductile Iron AWWA (Cast) Fittings

Reducing Fittings

NO. 25-C Reducing Tee
NO. 35-CR Reducing Cross
NO. 30-CR 45° Reducing Lateral

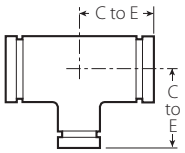

NO. 25-C

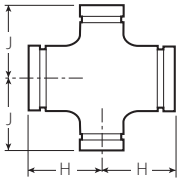

NO. 35-CR

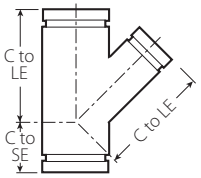

NO. 30-CR

Size		No. 25-C Reducing Tee			No. 35-CR Reducing Cross			No. 30-CR 45° Reducing Lateral		
Nominal Size Inches/ mm		C to EOR Inches mm	C to EOB Inches mm	Approx. Weight Each Lbs. kg	H Inches mm	J Inches mm	Approx. Weight Each Lbs. kg	C to LE Inches mm	C to SE Inches mm	Approx. Weight Each Lbs. kg
30 750	× 6 150	18.00 457	23.00 584	+	18.00 457	23.00 584	—	—	—	—
	8 200	18.00 457	23.00 584	+	18.00 457	23.00 584	+	+	+	+
	10 250	18.00 457	23.00 584	+	18.00 457	23.00 584	+	+	+	+
	12 300	18.00 457	23.00 584	1175.0 533.0	18.00 457	23.00 584	888.0 402.8	49.00 1245	10.00 254	2178.0 987.9
	14 350	18.00 457	23.00 584	1250.0 567.0	18.00 457	23.00 584	853.0 386.9	49.00 1245	10.00 254	2208.0 1001.5
	16 400	18.00 457	23.00 584	1437.0 651.0	18.00 457	23.00 584	843.0 382.4	49.00 1245	10.00 254	2248.0 1019.7
	18 450	18.00 457	23.00 584	1450.0 657.7	18.00 457	23.00 584	839.0 380.6	49.00 1245	10.00 254	2294.0 1040.6
	20 500	18.00 457	23.00 584	1462.0 663.2	18.00 457	23.00 584	835.0 378.8	49.00 1245	10.00 254	2339.0 1061.0
	24 600	25.00 635	25.00 635	1475.0 669.1	25.00 635	25.00 635	1304.0 591.5	49.00 1245	10.00 254	2451.0 1111.8
36 900	× 8 200	20.00 508	26.0 660	+	20.00 508	26.00 660	+	+	+	+
	10 250	20.00 508	26.00 660	+	20.00 508	26.00 660	+	+	+	+
	12 300	20.00 508	26.00 660	+	20.00 508	26.00 660	1262.0 572.4	+	+	+
	14 350	20.00 508	26.00 660	+	20.00 508	26.00 660	1222.0 554.3	54.00 1372	15.25 387	+
	16 400	20.00 508	26.00 660	+	20.00 508	26.00 660	1213.0 550.2	54.00 1372	15.25 387	3493.0 1584.4
	18 450	20.00 508	26.00 660	+	20.00 508	26.00 660	1204.0 546.1	54.00 1372	15.25 387	3533.0 1602.6
	20 500	20.00 508	26.00 660	+	20.00 508	26.00 660	1190.0 539.8	54.00 1372	15.25 387	3574.0 1621.2
	24 600	20.00 508	26.00 660	+	20.00 508	26.00 660	1163.0 527.5	54.00 1372	15.25 387	3675.0 1667.0
	30 750	28.00 711	28.00 711	+	28.00 711	28.00 711	1865.0 846.0	56.00 1422	15.25 387	3879.0 1759.5

+ Contact Victaulic for details.

IMPORTANT NOTE:

Non-standard reducing cross sizes are available. Contact Victaulic for details.

VICTAULIC IS A REGISTERED TRADEMARK OF VICTAULIC COMPANY. © 2007 VICTAULIC COMPANY. ALL RIGHTS RESERVED. PRINTED IN THE USA.

Ductile Iron AWWA (Cast) Fittings

Reducers and Reducing Elbows

NO. 50-C Concentric Reducer
NO. 51-C Eccentric Reducer
NO. 10-CR 90° Reducing Elbow
NO. 100-CR 90° Long Radius Reducing Elbow

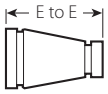

NO. 50-C

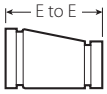

NO. 51-C

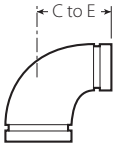

NO. 10-CR

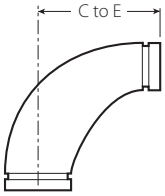

NO. 100-CR

Size			No. 50-C Concentric Reducer		No. 51-C Eccentric Reducer		No. 10-CR 90° Reducing Elbow		No. 100-CR 90° Long Radius Red. El.	
Nominal Size Inches/ mm			E to E Inches mm	Approx. Weight Each Lbs. kg	E to E Inches mm	Approx. Weight Each Lbs. kg	C to E Inches mm	Approx. Weight Each Lbs. kg	C to E Inches mm	Approx. Weight Each Lbs. kg
4 100	×	3 80	7.00 178	10.0 4.5	7.00 178	12.0 5.4	6.50 165	17.0 7.7	9.00 229	20.0 8.1
6 150	×	3 80	9.00 229	15.0 6.8	9.00 229	20.0 9.1	8.00 203	28.5 12.9	11.50 292	36.0 16.3
		4 100	9.00 229	16.5 7.5	9.00 229	25.0 11.3	8.00 203	29.6 13.4	11.50 292	40.0 18.1
8 200	×	3 80	11.00 279	33.0 15.0	11.00 279	+	—	—	—	—
		4 100	11.00 279	28.0 12.7	11.00 279	35.0 15.9	9.00 229	46.5 21.1	14.00 356	60.0 27.2
		6 150	11.00 279	34.0 15.4	11.00 279	44.0 20.0	9.00 229	48.5 22.0	14.00 356	71.0 32.2
10 250	×	4 100	12.00 305	42.0 19.1	12.00 305	54.0 24.5	11.00 279	68.0 30.8	16.50 419	90.0 40.8
		6 150	12.00 305	46.0 20.9	12.00 305	60.0 27.2	11.00 279	77.0 34.9	16.50 419	106.0 48.1
		8 200	12.00 305	50.0 22.7	12.00 305	70.0 31.8	11.00 279	88.0 39.9	16.50 419	121.0 54.9
12 300	×	4 100	14.00 356	60.0 27.2	14.00 356	82.0 37.2	12.00 305	+	+	+
		6 150	14.00 356	70.0 31.8	14.00 356	84.0 38.1	12.00 305	110.0 49.9	19.00 483	143.0 64.9
		8 200	14.00 356	74.0 33.6	14.00 356	91.0 41.3	12.00 305	126.0 57.2	19.00 483	163.0 73.9
		10 250	14.00 356	84.0 38.1	14.00 356	110.0 49.9	12.00 305	150.0 68.0	19.00 483	188.0 85.3
14 350	×	6 150	16.00 406	89.0 40.4	16.00 406	104.0 47.2	14.00 356	+	+	+
		8 200	16.00 406	102.0 46.3	16.00 406	121.0 54.9	14.00 356	135.0 61.2	21.50 546	183.0 83.0
		10 250	16.00 406	112.0 50.8	16.00 406	135.0 61.2	14.00 356	170.0 77.1	21.50 546	213.0 96.6
		12 300	16.00 406	126.0 57.4	16.00 406	150.0 68.0	14.00 356	195.0 88.5	21.50 546	240.0 108.9
16 400	×	6 150	18.00 457	11.0 49.9	18.00 457	140.0 63.5	—	—	+	+
		8 200	18.00 457	122.0 55.3	18.00 457	160.0 72.6	15.00 381	+	24.00 610	228.0 103.4
		10 250	18.00 457	135.0 61.2	18.00 457	168.0 76.2	15.00 381	195.0 88.5	24.00 610	263.0 119.3
		12 300	18.00 457	146.0 66.2	18.00 457	190.0 86.2	15.00 381	240.0 108.9	24.00 610	295.0 133.8
		14 350	18.00 457	173.0 78.5	18.00 457	210.0 95.3	15.00 381	280.0 127.0	24.00 610	290.0 131.5

TABLE CONTINUED ON NEXT PAGE

VICTAULIC IS A REGISTERED TRADEMARK OF VICTAULIC COMPANY. © 2007 VICTAULIC COMPANY. ALL RIGHTS RESERVED. PRINTED IN THE USA.

Ductile Iron AWWA (Cast) Fittings

Reducers and Reducing Elbows

NO. 50-C Concentric Reducer
NO. 51-C Eccentric Reducer
NO. 10-CR 90° Reducing Elbow
NO. 100-CR 90° Long Radius Reducing Elbow

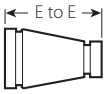

NO. 50-C

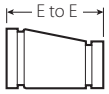

NO. 51-C

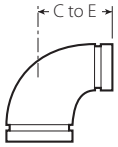

NO. 10-CR

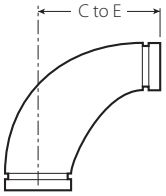

NO. 100-CR

Size		No. 50-C Concentric Reducer		No. 51-C Eccentric Reducer		No. 10-CR 90° Reducing Elbow		No. 100-CR 90° Long Radius Red. El.	
Nominal Size Inches/ mm		E to E Inches mm	Approx. Weight Each Lbs. kg	E to E Inches mm	Approx. Weight Each Lbs. kg	C to E Inches mm	Approx. Weight Each Lbs. kg	C to E Inches mm	Approx. Weight Each Lbs. kg
18 450	× 8 200	19.00 483	148.0 67.1	19.00 483	180.0 81.6	16.50 419	+	—	—
	10 250	19.00 483	158.0 71.1	19.00 483	215.0 97.5	16.50 419	+	26.50 673	+
	12 300	19.00 483	173.0 78.5	19.00 483	215.0 97.5	16.50 419	305.0 138.3	26.50 673	336.0 152.4
	14 350	19.00 483	200.0 90.7	19.00 483	230.0 104.3	16.50 419	345.0 156.5	26.50 673	355.0 161.0
	16 400	19.00 483	220.0 100.0	19.00 483	275.0 124.7	16.50 419	360.0 163.3	26.50 673	386.0 175.1
20 500	× 8 200	20.00 508	173.0 78.5	20.00 508	+	—	—	—	—
	10 250	20.00 508	182.0 82.6	20.00 508	215.0 97.5	18.00 457	+	29.00 737	+
	12 300	20.00 508	201.0 91.2	20.00 508	250.0 113.4	18.00 457	365.0 165.6	29.00 737	+
	14 350	20.00 508	230.0 104.3	20.00 508	270.0 122.5	18.00 457	405.0 183.7	29.00 737	+
	16 400	20.00 508	251.0 113.9	20.00 508	300.0 136.1	18.00 457	440.0 199.6	29.00 737	466.0 211.4
	18 450	20.00 508	275.0 124.7	20.00 508	320.0 145.2	18.00 457	485.0 220.0	29.00 737	507.0 230.0
24 600	× 8 200	24.00 610	257.0 116.6	24.00 610	300.0 136.1	+	+	+	+
	10 250	24.00 610	274.0 124.3	24.00 610	300.0 136.1	+	+	+	+
	12 300	24.00 610	293.0 132.9	24.00 610	395.0 179.2	22.00 559	590.0 267.6	34.00 864	+
	14 350	24.00 610	331.0 150.1	24.00 610	425.0 192.8	22.00 559	630.0 285.8	34.00 864	+
	16 400	24.00 610	358.0 162.4	24.00 610	455.0 206.4	22.00 559	690.0 313.0	34.00 864	658.0 298.5
	18 450	24.00 610	386.0 175.1	24.00 610	465.0 210.9	22.00 559	735.0 333.4	34.00 864	+
	20 500	24.00 610	418.0 189.6	24.00 610	525.0 238.1	22.00 559	815.0 369.7	34.00 864	759.0 344.3

TABLE CONTINUED ON NEXT PAGE

VICTAULIC IS A REGISTERED TRADEMARK OF VICTAULIC COMPANY. © 2007 VICTAULIC COMPANY. ALL RIGHTS RESERVED. PRINTED IN THE USA.

Ductile Iron AWWA (Cast) Fittings

Reducers and Reducing Elbows

NO. 50-C Concentric Reducer
NO. 51-C Eccentric Reducer
NO. 10-CR 90° Reducing Elbow
NO. 100-CR 90° Long Radius Reducing Elbow

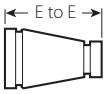

NO. 50-C

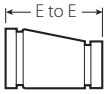

NO. 51-C

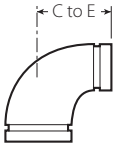

NO. 10-CR

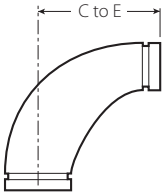

NO. 100-CR

Size		No. 50-C Concentric Reducer		No. 51-C Eccentric Reducer		No. 10-CR 90° Reducing Elbow		No. 100-CR 90° Long Radius Red. El.	
Nominal Size Inches/ mm		E to E Inches mm	Approx. Weight Each Lbs. kg	E to E Inches mm	Approx. Weight Each Lbs. kg	C to E Inches mm	Approx. Weight Each Lbs. kg	C to E Inches mm	Approx. Weight Each Lbs. kg
30 750	× 8 200	+	+	+	+	+	+	—	—
	10 250	+	+	+	+	+	+	—	—
	12 300	30.00 762	+	30.00 762	+	+	+	—	—
	14 350	30.00 762	+	30.00 762	+	25.00 635.0	+	—	—
	16 400	30.00 762	+	30.00 762	+	25.00 635.0	+	41.50 1054	+
	18 450	30.00 762	+	30.00 762	+	25.00 635.0	+	41.50 1054	+
	20 500	30.00 762	+	30.00 762	+	25.00 635.0	+	41.50 1054	+
	24 600	30.00 762	+	30.00 762	+	25.00 635.0	1170.0 530.7	41.50 1054	+
36 900	× 8 200	+	+	+	+	+	+	—	—
	10 250	+	+	+	+	+	+	—	—
	12 300	+	+	+	+	+	+	—	—
	14 350	36.00 914	+	36.00 914	+	+	+	—	—
	16 400	36.00 914	+	36.00 914	+	+	+	—	—
	18 450	36.00 914	+	36.00 914	+	+	+	—	—
	20 500	36.00 914	1280.0 580.6	36.00 914	+	+	+	49.00 1245	+
	24 600	36.00 914	1370.0 621.4	36.00 914	+	+	+	49.00 1245	+
	30 750	36.00 914	1450.0 657.7	36.00 914	+	+	+	49.00 1245	+

\+ Contact Victaulic for details.

IMPORTANT NOTE:

For 30"/750 mm sizes and larger contact Victaulic for details.

VICTAULIC IS A REGISTERED TRADEMARK OF VICTAULIC COMPANY. © 2007 VICTAULIC COMPANY. ALL RIGHTS RESERVED. PRINTED IN THE USA.

Ductile Iron AWWA (Cast) Fittings

Base Fittings

NO. 10-CB Base Elbow
NO. 20-CB Base Tee
NO. 25-CB Reducing Base Tee
NO. 100-CB Long Radius Base Elbow

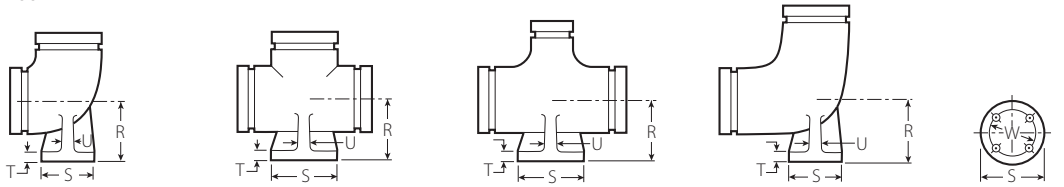

NO. 10-CB NO. 20-CB NO. 25-CB NO. 100-CB ROUND BASE

Size		Dimensions – Inches/mm					Approx. Weight Each			
Nominal Size Inches/ mm	Actual Outside Dia. Inches mm	R	U	T	S	W	No. 10-CB Base Elbow Lbs. kg	No. 20-CB Base Tee Lbs. kg	No. 100-CB LR Base Elbow Lbs. kg	No. 25-CB Red. Base Tee Lbs. kg
3 80	3.960 100.6	4.88 124	0.50 13	0.56 14	5.00 127	3.88 99	19.0 8.6	19.0 8.6	—	+
4 100	4.800 121.9	5.50 140	0.50 13	0.62 16	6.00 152	4.75 121	23.6 10.7	26.0 11.8	—	+
6 150	6.900 175.3	7.00 178	0.62 16	0.69 18	7.00 178	5.50 140	42.0 19.1	50.0 22.7	—	+
8 200	9.050 229.9	8.38 213	0.88 22	0.94 24	9.00 229	7.50 191	75.0 34.0	92.0 41.7	—	+
10 250	11.100 281.9	9.75 248	0.88 22	0.94 24	9.00 229	7.50 191	114.0 51.7	125.0 56.7	—	+
12 300	13.200 335.3	11.25 286	1.00 25	1.00 25	11.00 279	9.50 241	152.0 69.0	183.0 83.0	—	+
14 350	15.300 388.6	12.50 318	1.00 25	1.00 25	11.00 279	9.50 241	—	—	340.0 154.2	+
16 400	17.400 442.0	13.75 349	1.00 25	1.00 25	11.00 279	9.50 241	—	—	425.0 192.8	+
18 450	19.500 495.3	15.00 381	1.12 29	1.12 29	13.50 343	11.75 299	—	—	591.0 268.1	+
20 500	21.600 548.6	16.00 406	1.12 29	1.12 29	13.50 343	11.75 299	—	—	717.0 325.2	+
24 600	25.800 655.3	18.50 470	1.12 29	1.12 29	13.50 343	11.75 299	—	—	1056.0 479.0	+

+ 90° reducing elbows are available with a base. Contact Victaulic for details.

IMPORTANT NOTES:

Bolt hole template shown for round base is the same as for the flange of the supporting pipe size, except using only four holes in all cases so placed as to straddle center lines.

The bases of these fittings are intended for support in compression and are not to be used for anchors or supports in tension or sheer.

Grooved end base 90° elbows (#X-90 CDI) and base tees (#X-CDI) are available with dimensions to ANSI B16.1.

Side base fittings are available. Contact Victaulic for details.

For Center to End dimensions, refer to corresponding fitting without the base.

VICTAULIC IS A REGISTERED TRADEMARK OF VICTAULIC COMPANY. © 2007 VICTAULIC COMPANY. ALL RIGHTS RESERVED. PRINTED IN THE USA.

Ductile Iron AWWA (Cast) Fittings

Flared and Outlet Fittings

NO. 10-CF 90° Flare
NO. 100-CF 90° Long Radius Flare
NO. 43-CF Straight Flare
NO. 10-CS 90° Side Outlet
NO. 20-CS Tee Side Outlet

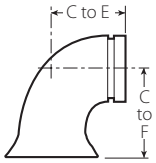

NO. 10-CF

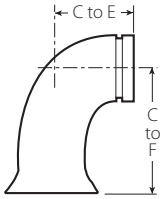

NO. 100-CF

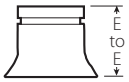

NO. 43-CF

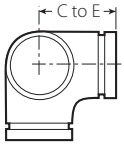

NO. 10-CS

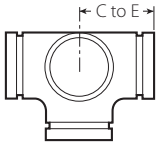

NO. 20-CS

Size		No. 10-CF 90° Flare			No. 100-CF 90° Long Radius Flare			No. 43-CF Straight Flare		No. 10-CS* 90° Side Outlet		No. 20-CS* Tee Side Outlet	
Nominal Size Inches/ mm	Actual Outside Dia. Inches mm	C to E Inches mm	C to F Inches mm	Approx. Wgt. Each Lbs. kg	C to E Inches mm	C to F Inches mm	Approx. Wgt. Each Lbs. kg	E to E Inches mm	Approx. Wgt. Each Lbs. kg	C to E Inches mm	Approx. Wgt. Each Lbs. kg	C to E Inches mm	Approx. Wgt. Each Lbs. kg
3 80	3.960 100.6	5.50 140	9.00 229	18.0 8.2	7.75 197	11.25 286	23.0 10.4	8.00 203	13.0 5.9	5.50 140	13.0 5.9	5.50 140	28.0 12.7
4 100	4.800 121.9	6.50 165	9.50 241	35.0 15.9	9.00 229	12.50 318	42.0 19.1	8.00 203	17.0 7.7	6.50 165	30.0 13.6	6.50 165	42.0 19.1
6 150	6.900 175.3	8.00 203	11.50 292	70.0 31.8	11.50 292	15.00 381	68.0 30.9	8.00 203	23.0 10.4	8.00 203	58.0 26.3	8.00 203	85.0 38.6
8 200	9.050 229.9	9.00 229	13.50 343	120.0 54.4	14.00 356	18.50 470	118.0 53.5	10.00 254	43.0 19.5	9.00 229	90.0 40.8	9.00 229	114.0 51.7
10 250	11.100 281.9	11.00 279	16.50 419	157.0 71.2	16.50 419	22.50 572	188.0 85.3	10.00 254	58.0 26.3	11.00 279	124.0 56.3	11.00 279	219.0 99.3
12 300	13.200 335.3	12.00 305	18.50 470	190.0 86.2	19.00 483	25.50 648	275.0 124.7	12.00 305	100.0 45.4	12.00 305	170.0 77.1	12.00 305	295.0 133.8
14 350	15.300 388.6	14.00 356	21.50 546	235.0 106.6	21.50 546	29.00 737	325.0 147.4	12.00 305	90.0 40.8	14.00 356	+	+	+
16 400	17.400 442.0	15.00 381	23.00 584	300.0 136.1	24.00 610	32.00 813	435.0 197.3	16.00 406	145.0 65.8	15.00 381	+	+	+
18 450	19.500 495.3	16.50 419	25.00 635	391.0 177.4	26.50 673	35.00 889	571.0 259.0	16.00 406	205.0 93.0	16.50 419	+	+	+
20 500	21.600 548.6	18.00 457	27.00 686	496.0 255.0	29.00 737	38.00 965	731.0 331.6	18.00 457	221.0 100.3	18.00 457	+	+	+
24 600	25.800 655.3	22.00 559	32.50 826	808.0 366.5	34.00 864	44.50 1130	1642.0 744.8	18.00 457	293.0 132.9	22.00 559	+	+	+
30 750	32.000 762.0	+	+	+	+	+	+	24.00 610	567.0 257.2	+	+	+	+
36 900	38.300 914.4	+	+	+	+	+	+	24.00 610	736.0 333.9	+	+	+	+

\+ Contact Victaulic for details.

* Reducing side outlet 90° Elbows, Tees, and Crosses are available. Contact Victaulic for details.

VICTAULIC IS A REGISTERED TRADEMARK OF VICTAULIC COMPANY. © 2007 VICTAULIC COMPANY. ALL RIGHTS RESERVED. PRINTED IN THE USA.

Protective & Marine Coatings

Certified to NSF/ANSI 61

MACROPOXY® 5500
LOW VOC POTABLE WATER EPOXY

PART A B58-X740 SERIES
PART B B58VX740 HARDENER
PART B B58VX745 OAP HARDENER

Revised: Nov. 02, 2015

PRODUCT INFORMATION

4.86

PRODUCT DESCRIPTION

MACROPOXY 5500 is a high solids, polyamidoamine epoxy tank lining developed for potable water storage tanks. Superior spray and performance properties make **MACROPOXY 5500** ideal for field or shop applications.

- Low odor, Low VOC
- Outstanding application properties
- Recommended for potable water

PRODUCT CHARACTERISTICS

Finish: Semi-Gloss
Color: Red Primer; White, ~~Light Blue and Beige Topcoats~~ Topcoat is brick red
Volume Solids: 74% ± 2%, mixed
Weight Solids: 82% ± 2%, mixed
VOC (EPA Method 24): <100 g/L; 0.83 lb/gal
Mix Ratio: 1:1 by volume

Primer Recommended Spreading Rate per coat:

B58RX740	Minimum	Maximum
Wet mils (microns)	**3.0** (75)	**8.0** (200)
Dry mils (microns)	**2.0** (50)	**6.0** (150)
~Coverage sq ft/gal (m^2/L)	**197** (4.8)	**593** (14.4)
Theoretical coverage sq ft/gal (m^2/L) @ 1 mil / 25 microns dft	**1187** (29.1)	

NOTE: Brush or roll application may require multiple coats to achieve maximum film thickness and uniformity of appearance.

Primer Drying Schedule @ 6.0 mils wet (150 microns):

B58RX740	@ 50°F/10°C	@ 77°F/25°C *50% RH*	@ 100°F/38°C
To touch:	2 hours	1.5 hours	1 hour
To handle:	24 hours	16 hours	5 hours
To recoat:			
minimum:	48 hours	16 hours	5 hours
maximum:	3 months	3 months	3 months
Cure for:			
immersion:	14 days*	7 days	7 days
Pot Life:	3 hours	1.5 hours	1 hour
Sweat-in-time:	None	None	None

If maximum recoat time is exceeded, abrade surface before recoating.
Drying time is temperature, humidity, and film thickness dependent.
*For **Potable Water Service**, allow a minimum of 7 days at/above 77°F (25°C) cure to service. Sterilize and rinse per AWWA C652.

Topcoats Recommended Spreading Rate per coat:

	Minimum	Maximum
Wet mils (microns)	**8.0** (200)	**18.0** (400)
Dry mils (microns)	**6.0** (150)	**14.0** (350)
~Coverage sq ft/gal (m^2/L)	**79** (1.9)	**197** (4.8)
Theoretical coverage sq ft/gal (m^2/L) @ 1 mil / 25 microns dft	**1187** (29.1)	

NOTE: Brush or roll application may require multiple coats to achieve maximum film thickness and uniformity of appearance.

PRODUCT CHARACTERISTICS (CONT'D)

Topcoats Drying Schedule @ 10.0 mils wet (250 microns):

	@ 50°F/10°C	@ 77°F/25°C *50% RH*	@ 100°F/38°C
To touch:	2 hours	1.5 hours	1 hour
To handle:	24 hours	16 hours	5 hours
To recoat:			
minimum:	48 hours	16 hours	5 hours
maximum:	3 months	3 months	3 months
Cure for:			
immersion:	14 days*	7 days	7 days
Pot Life:	3 hours	1.5 hours	1 hour
Sweat-in-time:	None	None	None

If maximum recoat time is exceeded, abrade surface before recoating.
Drying time is temperature, humidity, and film thickness dependent.
*For **Potable Water Service**, allow a minimum of 7 days at/above 77°F (25°C) cure to service. Sterilize and rinse per AWWA C652.

Shelf Life:	24 months, unopened Store indoors at 40°F (4.5°C) to 100°F (38°C).
Flash Point:	75°F (24°C), Seta Flash, mixed
Reducer/Clean Up:	Reducer R7K111

RECOMMENDED USES

- For potable water service, consult WWW.NSF.ORG
- Water treatment plants
- Complies with AWWA D102 for ICS #1, #2, & #5; for OCS #5 & #6
- Complies with AWWA D102 Meets the requirements of AWWA C210

PERFORMANCE CHARACTERISTICS

Substrate*: Steel
Surface Preparation*: SSPC-SP10/NACE 2
System Tested*:
1 ct. Macropoxy 5500 @ 6.0 mils (150 microns) dft
*unless otherwise noted below

Test Name	Test Method	Results
Abrasion Resistance	ASTM D4060, CS17 wheel, 1000 cycles, 1 kg load	120 mg loss
Adhesion	ASTM D4541	>1700 psi
Corrosion Weathering	ASTM D5894, 36 cycles, 12,000 hours	Rating 10 per ASTM D714 for blistering; Rating 9 per ASTM D616 for rusting
Direct Impact Resistance	ASTM D2794	30 in. lb.
Dry Heat Resistance	ASTM D2485	250ºF(121ºC)
Flexibility	ASTM D522, 180° bend, 1" mandrel	Pass
Humidity Resistance	ASTM D4585, 6000 hours	No blistering, cracking or rusting
Immersion	18 months fresh and salt water	Rating 10 per ASTM D714 for blistering; Rating 10 per ASTM D616 for rusting
Pencil Hardness	ASTM D3363	4H

Epoxy coatings may darken or discolor following application and curing.
Above are typical results and should not be construed as a specification.

continued on back

Protective & Marine Coatings

Certified to NSF/ANSI 61

MACROPOXY® 5500
LOW VOC POTABLE WATER EPOXY

PART A	B58-X740	SERIES
PART B	B58VX740	HARDENER
PART B	B58VX745	OAP HARDENER

Revised: Nov. 02, 2015

PRODUCT INFORMATION

4.86

RECOMMENDED SYSTEMS

Immersion and Atmospheric:	Dry Film Thickness / ct. Mils	(Microns)
Ductile Iron Pipe:		
Shop Applied:		
1-2 cts. Macropoxy 5500LT	6.0-14.0	(150-350)
or		
Field Applied:		
1 ct. Macropoxy 5500 or 5500 Primer	3.0-14.0	(75-350)
1 ct. Macropoxy 5500	6.0-14.0	(150-350)
Steel:		
2-3 cts. Macropoxy 5500	6.0-14.0*	(150-350)
or		
1 ct. Macropoxy 5500 Primer	2.0-6.0	(50-150)
1-3 cts. Macropoxy 5500	6.0-14.0*	(150-350)
Potable Water, Immersion, Steel:		
***AWWA D102: Inside Coating System No. 1**		
minimum AWWA	8.0	(200)
1 ct. Macropoxy 5500	3.0	(75)
1 ct. Macropoxy 5500	5.0	(125)
***AWWA D102: Inside Coating System No. 2**		
minimum AWWA	12.0	(300)
1 ct. Macropoxy 5500	3.0	(75)
1 ct. Macropoxy 5500	4.0	(100)
1 ct. Macropoxy 5500	5.0	(125)
AWWA D012: Inside Coating System No. 3		
1ct. Macropoxy 5500 Primer	2.0 mils	(50)
1ct. SherPlate PW	20.0 mils	(500)
AWWA D102: Inside Coating System No. 4		
1ct. Macropoxy 5500 Primer	2.0 mils	(50)
1ct. SherFlex S	30.0 mils	(750)
AWWA D102: Inside Coating System No. 5		
1ct. Corothane I Galvapac Zinc	2.0 mils	(50)
1ct. Macropoxy 5500	4.0 mils	(100)
1ct. Macropox 5500	4.0 mils	(100)

Acceptable for use with AWWA D102: Component of Outside Coating System No. 5 and No. 6

Other acceptable topcoats over Macropoxy 5500 Primer: Dura-Plate UHS

*Maximum of 28.0 mils (700 microns) for entire system

The systems listed above are representative of the product's use, other systems may be appropriate.

DISCLAIMER

The information and recommendations set forth in this Product Data Sheet are based upon tests conducted by or on behalf of The Sherwin-Williams Company. Such information and recommendations set forth herein are subject to change and pertain to the product offered at the time of publication. Consult your Sherwin-Williams representative to obtain the most recent Product Data Information and Application Bulletin.

SURFACE PREPARATION

Surface must be clean, dry, and in sound condition. Remove all oil, dust, grease, dirt, loose rust, and other foreign material to ensure adequate adhesion.

Refer to product Application Bulletin for detailed surface preparation information.

Minimum recommended surface preparation:

Iron & Steel
- Atmospheric: SSPC-SP2/3
- Immersion: SSPC-SP10/NACE 2, 2-4 mil (50-100 micron) profile

Ductile Iron Pipe: NAPF 500.03.03

Surface Preparation Standards

	Condition of Surface	ISO 8501-1 BS7079:A1	Swedish Std. SIS055900	SSPC	NACE
White Metal		Sa 3	Sa 3	SP 5	1
Near White Metal		Sa 2.5	Sa 2.5	SP 10	2
Commercial Blast		Sa 2	Sa 2	SP 6	3
Brush-Off Blast		Sa 1	Sa 1	SP 7	4
Hand Tool Cleaning	Rusted	C St 2	C St 2	SP 2	-
	Pitted & Rusted	D St 2	D St 2	SP 2	-
Power Tool Cleaning	Rusted	C St 3	C St 3	SP 3	-
	Pitted & Rusted	D St 3	D St 3	SP 3	-

TINTING

Do not Tint.

APPLICATION CONDITIONS

Surface / Material Temperature:	50°F (10°C minimum, 120°F (50°C) maximum with surface temp 5ºF (2.8°C) above dew point
Air Temperature:	50°F (10°C) minimum, 100°F (38°C) maximum
Relative Humidity:	85% maximum. At least 5°F (2.8°C) above dew point

ORDERING INFORMATION

Packaging:
- Part A: 1 gallon (3.78L) and 5 gallon (18.9L) containers
- Part B: 1 gallon (3.78L) and 5 gallon (18.9L) containers

Weight: 13.3 ± 0.2 lb/gal ; 1.6 Kg/L, mixed, may vary by color

SAFETY PRECAUTIONS

Refer to the MSDS sheet before use.

Published technical data and instructions are subject to change without notice. Contact your Sherwin-Williams representative for additional technical data and instructions.

WARRANTY

The Sherwin-Williams Company warrants our products to be free of manufacturing defects in accord with applicable Sherwin-Williams quality control procedures. Liability for products proven defective, if any, is limited to replacement of the defective product or the refund of the purchase price paid for the defective product as determined by Sherwin-Williams. NO OTHER WARRANTY OR GUARANTEE OF ANY KIND IS MADE BY SHERWIN-WILLIAMS, EXPRESSED OR IMPLIED, STATUTORY, BY OPERATION OF LAW OR OTHERWISE, INCLUDING MERCHANTABILITY AND FITNESS FOR A PARTICULAR PURPOSE.

Protective & Marine Coatings

Certified to NSF/ANSI 61

MACROPOXY® 5500
LOW VOC POTABLE WATER EPOXY

PART A	B58-X740	SERIES
PART B	B58VX740	HARDENER
PART B	B58VX745	OAP HARDENER

Revised: Nov. 02, 2015

APPLICATION BULLETIN

4.86

SURFACE PREPARATIONS

Surface must be clean, dry, and in sound condition. Remove all oil, dust, grease, dirt, loose rust, and other foreign material to ensure adequate adhesion.

Carbon Steel, Immersion Service:
The surface shall be abrasive blasted to SSPC-SP10/NACE No. 2 Near-White Blast Cleaning with a 2-4 mil (50-100 micron) profile. The anchor profile shall be sharp with no evidence of a peen surface. The finished surface shall be free of all visible oil, grease, dust, dirt, mill scale, rust, coating, oxides, corrosion products, and other foreign matter with no more than 5% staining. After blasting, all dust and loose residue should be removed from the surface by acceptable means. Coat steel the same day as it is prepared and prior to the formation of rust.

Iron & Steel: Minimum surface preparation is Hand Tool Clean per SSPC-SP2. Remove all oil and grease from surface by Solvent Cleaning per SSPC-SP1. For better performance, use Commercial Blast Cleaning per SSPC-SP6/NACE 3, blast clean all surfaces using a sharp, angular abrasive for optimum surface profile (2 mils / 50 microns). Prime any bare steel within 8 hours or before flash rusting occurs.

Ductile Iron Pipe: Minimum surface preparation is Power Tool Clean per NAPF 500.03.02. Remove all oil and grease from surface by Solvent Cleaning per NAPF 500.03.01. For better performance, use Blast Cleaning per NAPF 500.03.03, blast clean all surfaces using a sharp, angular abrasive for optimum surface profile. Prime any bare DIP before flash rusting occurs.

Surface Preparation Standards

	Condition of Surface	ISO 8501-1 BS7079:A1	Swedish Std. SIS055900	SSPC	NACE
White Metal		Sa 3	Sa 3	SP 5	1
Near White Metal		Sa 2.5	Sa 2.5	SP 10	2
Commercial Blast		Sa 2	Sa 2	SP 6	3
Brush-Off Blast		Sa 1	Sa 1	SP 7	4
Hand Tool Cleaning	Rusted	C St 2	C St 2	SP 2	-
	Pitted & Rusted	D St 2	D St 2	SP 2	-
Power Tool Cleaning	Rusted	C St 3	C St 3	SP 3	-
	Pitted & Rusted	D St 3	D St 3	SP 3	-

APPLICATION CONDITIONS

Temperature:	50°F (10°C) minimum, 120°F (50°C) maximum (air, surface, and material) At least 5°F (2.8°C) above dew point
Relative humidity:	85% maximum

APPLICATION EQUIPMENT

The following is a guide. Changes in pressures and tip sizes may be needed for proper spray characteristics. Always purge spray equipment before use with listed reducer. Any reduction must be compliant with existing VOC regulations and compatible with the existing environmental and application conditions.

Reducer/Clean Up ..... Reducer R7K111

Airless Spray
- Pressure.....2700-3000 psi
- Hose.....3/8" ID with 1/4" whip
- Tip 519-525
- Filter .....none
- Reduction.....As needed up to 10% by volume

Brush
- Brush.....Nylon/Polyester or Natural Bristle
- Reduction.....As needed up to 10% by volume

Roller
- Cover .....3/8" woven with solvent resistant core
- Reduction.....As needed up to 10% by volume

If specific application equipment is not listed above, equivalent equipment may be substituted.

continued on back

Protective & Marine Coatings

Certified to NSF/ANSI 61

MACROPOXY® 5500
LOW VOC POTABLE WATER EPOXY

PART A	B58-X740	SERIES
PART B	B58VX740	HARDENER
PART B	B58VX745	OAP HARDENER

Revised: Nov. 02, 2015

APPLICATION BULLETIN

4.86

APPLICATION PROCEDURES

Surface preparation must be completed as indicated.

Mix contents of each component thoroughly with low speed power agitation. Make certain no pigment remains on the bottom of the can. Then combine one part by volume of Part A with one part by volume of Part B. Thoroughly agitate the mixture with power agitation.

If reducer solvent is used, add only after both components have been thoroughly mixed.

Apply paint at the recommended film thickness and spreading rate as indicated below:

Primer Recommended Spreading Rate per coat:

B58RX740	Minimum	Maximum
Wet mils (microns)	**3.0** (75)	**8.0** (200)
Dry mils (microns)	**2.0** (50)	**6.0** (150)
~Coverage sq ft/gal (m^2/L)	**197** (4.8)	**593** (14.4)
Theoretical coverage sq ft/gal (m^2/L) @ 1 mil / 25 microns dft	**1187** (29.1)	

NOTE: Brush or roll application may require multiple coats to achieve maximum film thickness and uniformity of appearance.

Primer Drying Schedule @ 6.0 mils wet (150 microns):

B58RX740	@ 50°F/10°C	@ 77°F/25°C *50% RH*	@ 100°F/38°C
To touch:	2 hours	1.5 hours	1 hour
To handle:	24 hours	16 hours	5 hours
To recoat:			
minimum:	48 hours	16 hours	5 hours
maximum:	3 months	3 months	3 months
Cure for:			
immersion:	14 days*	7 days	7 days

If maximum recoat time is exceeded, abrade surface before recoating.

Drying time is temperature, humidity, and film thickness dependent.

Pot Life:	3 hours	1.5 hours	1 hour
Sweat-in-time:	None	None	None

*For **Potable Water Service**, allow a minimum of 7 days at/above 77°F (25°C) cure to service. Sterilize and rinse per AWWA C652.

Topcoats Recommended Spreading Rate per coat:

	Minimum	Maximum
Wet mils (microns)	**8.0** (200)	**18.0** (400)
Dry mils (microns)	**6.0** (150)	**14.0** (350)
~Coverage sq ft/gal (m^2/L)	**79** (1.9)	**197** (4.8)
Theoretical coverage sq ft/gal (m^2/L) @ 1 mil / 25 microns dft	**1187** (29.1)	

NOTE: Brush or roll application may require multiple coats to achieve maximum film thickness and uniformity of appearance.

Topcoats Drying Schedule @ 10.0 mils wet (250 microns):

	@ 50°F/10°C	@ 77°F/25°C *50% RH*	@ 100°F/38°C
To touch:	2 hours	1.5 hours	1 hour
To handle:	24 hours	16 hours	5 hours
To recoat:			
minimum:	48 hours	16 hours	5 hours
maximum:	3 months	3 months	3 months
Cure for:			
immersion:	14 days*	7 days	7 days

If maximum recoat time is exceeded, abrade surface before recoating.

Drying time is temperature, humidity, and film thickness dependent.

Pot Life:	3 hours	1.5 hours	1 hour
Sweat-in-time:	None	None	None

*For **Potable Water Service**, allow a minimum of 7 days cure to service. Sterilize and rinse per AWWA C652.

Application of coating above maximum or below minimum recommended spreading rate may adversely affect coating performance.

CLEAN UP INSTRUCTIONS

Clean spills and spatters immediately with R7K111. Clean tools immediately after use with R7K111. Follow manufacturer's safety recommendations when using any solvent.

PERFORMANCE TIPS

Note: Once maxiumum pot life is exceeded, product may be sprayable but will not hold sag.

Stripe coat all crevices, welds, and sharp angles to prevent early failure in these areas.

When using spray application, use a 50% overlap with each pass of the gun to avoid holidays, bare areas, and pinholes. If necessary, cross spray at a right angle.

Spreading rates are calculated on volume solids and do not include an application loss factor due to surface profile, rough-ness or porosity of the surface, skill and technique of the applicator, method of application, various surface irregularities, material lost during mixing, spillage, over thinning, climatic conditions, and excessive film build.

Excessive reduction of material can affect film build, appearance, and adhesion.

Do not mix previously catalyzed material with new.

Do not apply the material beyond recommended pot life.

In order to avoid blockage of spray equipment, clean equipment before use or before periods of extended downtime with Reducer R7K111.

Tinting is not recommended for immersion service.

Do not use Quik-Kick Epoxy Accelerator.

Insufficient ventilation, incomplete mixing, miscatalyzation, and external heaters may cause premature yellowing.

Excessive film build, poor ventilation, and cool temperatures may cause solvent entrapment. Avoid entrapment by following the recommended application procedures.

For Immersion Service: Electrical holiday inspection should be performed in accordance with NACE SP 0188 "Discontinuity (Holiday) Testing of Protective Coatings" or ASTM D 5162-91 "Standard Practice for Discontinuity (Holiday) Testing of Non-conductive Protective Coating of Metallic Substrates."

Refer to Product Information sheet for additional performance characteristics and properties.

SAFETY PRECAUTIONS

Refer to the MSDS sheet before use.

Published technical data and instructions are subject to change without notice. Contact your Sherwin-Williams representative for additional technical data and instructions.

DISCLAIMER

The information and recommendations set forth in this Product Data Sheet are based upon tests conducted by or on behalf of The Sherwin-Williams Company. Such information and recommendations set forth herein are subject to change and pertain to the product offered at the time of publication. Consult your Sherwin-Williams representative to obtain the most recent Product Data Information and Application Bulletin.

WARRANTY

The Sherwin-Williams Company warrants our products to be free of manufacturing defects in accord with applicable Sherwin-Williams quality control procedures. Liability for products proven defective, if any, is limited to replacement of the defective product or the refund of the purchase price paid for the defective product as determined by Sherwin-Williams. NO OTHER WARRANTY OR GUARANTEE OF ANY KIND IS MADE BY SHERWIN-WILLIAMS, EXPRESSED OR IMPLIED, STATUTORY, BY OPERATION OF LAW OR OTHERWISE, INCLUDING MERCHANTABILITY AND FITNESS FOR A PARTICULAR PURPOSE.

REVIEWED BY CONTRACTOR

Kudlik Construction Ltd.

NAME: Sandra Rousseau P.Eng

DATE: Mar 19, 2019

NORCLAIR
MÉCANIQUE DE PROCÉDÉ

SHOP DRAWINGS

DA-MP-43R1 BFP Chute (#17) **Date :** 2019-03-19

Information general	
Project : **WWTP UPGRADE - IQALUIT**	
Client : Kudlik Construction Ltd. To : Sandra Rousseau P.Eng., Project Manager	Project number : **2018-062** E-mail : srousseau@kudlik.biz
Contractor : **Norclair inc.**	Project number Norclair : **P1039**
Address : 1100, Montée Masson, Laval, QC, Canada H7E 4P2	
Project Manager : Hugo Chartier, Project Manager E-mail: hchartier@norclair.ca	
Phone : 450-688-4012 # 706	Cell. : 514-703-0263

Information, subcontractor or supplier	
Sub/supplier : Norclair	
Contact :	Phone :

Information on the equipment	
Speciality : **Process**	
Equipment : BFP Chute (#17)	
Drawing reference :	
Specification reference : (Page xx / xx)	Division :
Article :	Number of pages : 4

CONSULTANT APPROVAL

MAKE CHUTE MORE SLOPED TO AVOID ISSUES OF SOLIDS ACCUMULATION. CONTRACTOR TO MAKE SURE THAT THE CHUTE SLOPE WILL BE APPROPRIATE TO CONVEY THE SOLIDS TO THE TRAILER ACCORDING TO THE FINAL LENGTH OF TRAILER SELECTED.

STANTEC PROJECT #: 110126045

SUBMITTAL # DA-MP-43R1

This review by Stantec is for general conformance with the design concept of Stantec's design of the:

☐ Process ☐ Electrical
☐ Structural ☐ Other
☐ Mechanical

component(s) only and does not mean that Stantec has verified or approves the shop drawing(s). The Contractor remains solely responsible for the shop drawing(s) and this review by Stantec does not relieve the Contractor of the Contractor's responsibility for errors or omissions in the shop drawing(s) or for meeting all requirements of the contract documents. This review does not mean that Stantec approves the detailed design inherent in the shop drawing, responsibility for which shall remain with the Contractor submitting same, nor does this review mean that Stantec accepts any deviation of the shop drawing(s) from the contract documents. The Contractor is responsible for confirming all dimensions and correlating them at the job site, for all construction means, methods and techniques, and for coordination of construction work of all trades, including coordination of all shop drawings.

Stantec

☐ REVIEWED

☑ REVIEWED, AS NOTED

☐ REVISE AND RESUBMIT

☐ NOT REVIEWED

DATE 03/27/2019

BY Alejandro Rojas

1100, montée Masson
Laval, QC, Canada
H7E 4P2

Phone. : 450-688-4012
Fax : 450-661-6341
E-Mail : info@norclair.ca
www.norclair.ca

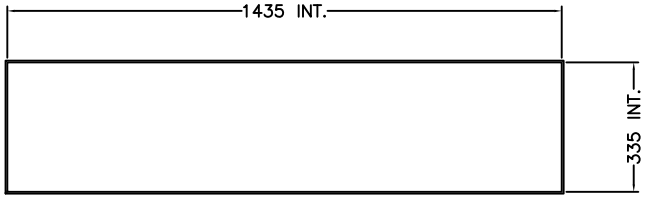

TOP VIEW

NOTES:
PLATES TO BE STAINLESS STEEL 316 3/16"
ANGLES TO BE STAINLESS STEEL 316 (DIMENSIONS AS INDICATED)

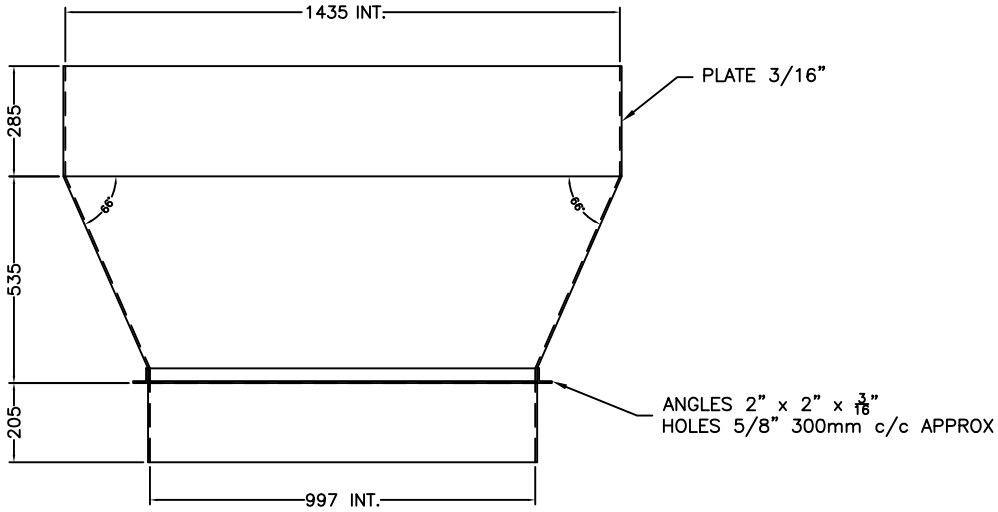

FRONT VIEW

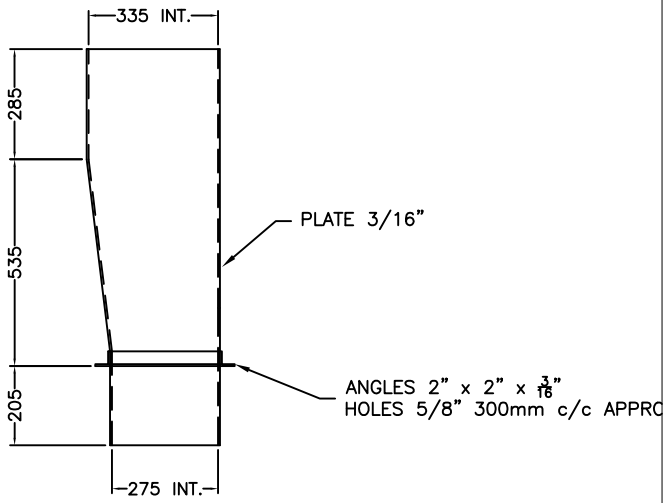

SIDE VIEW

# REV.	REVISION:	DATE:
0	FOR APPROVAL	2019-03-06

CLIENT: Iqaluit

PROJECT:
Iqaluit Wastewater Treatment Plant Upgrade

NORCLAIR MÉCANIQUE DE PROCÉDÉ

TITLE OF THE DRAWING:
IQALUIT WWTP
Chute detail 17 - UPPER

DATE: 2019-03-19	SCALE: NOT TO SCALE
DRAWING BY: E.A.	No PROJECT NORCLAIR: P1039
CHECKED BY: H.C.	No DRAWING: 01/3

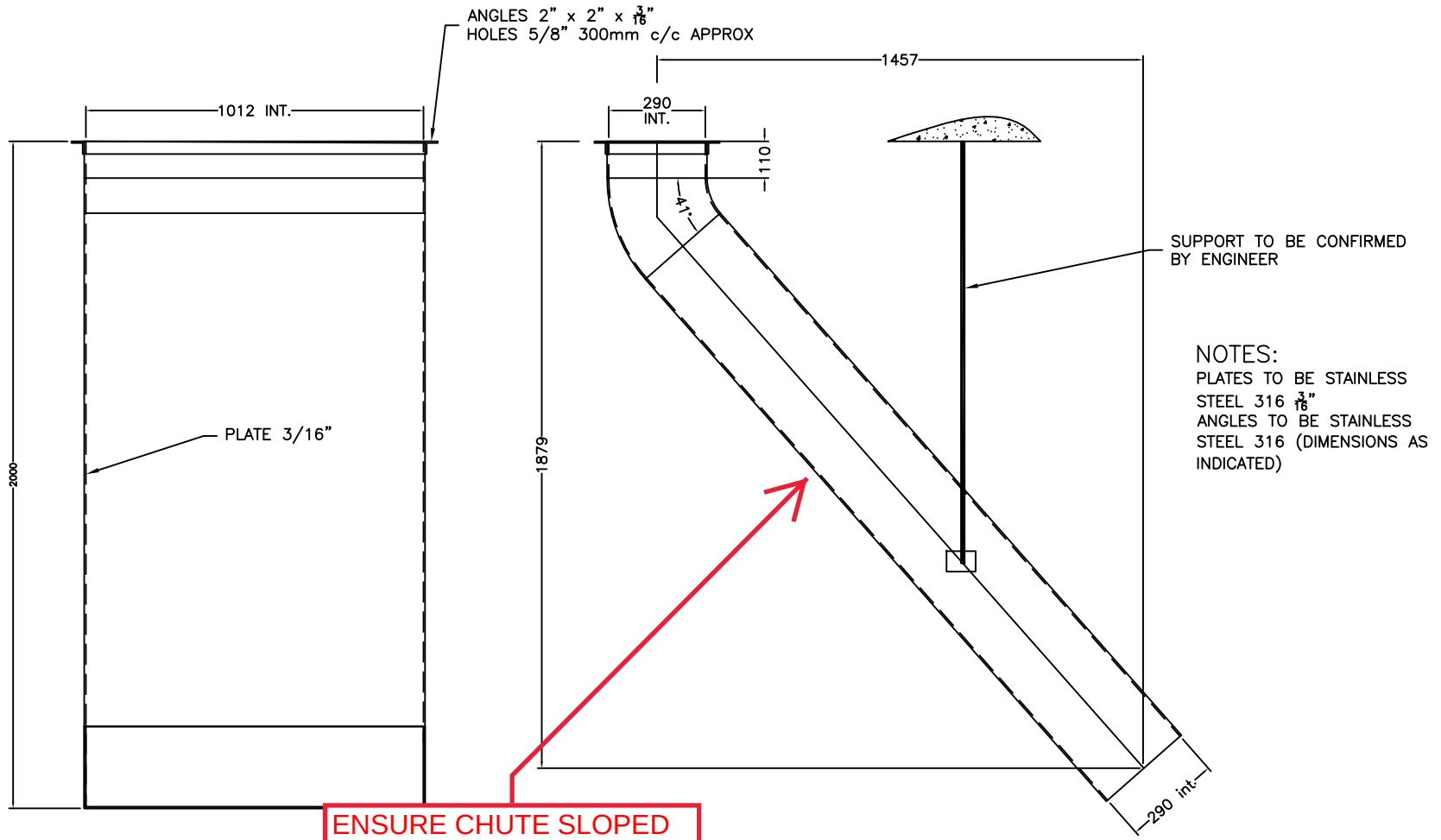

# REV.	REVISION:	DATE:
0	FOR APPROVAL	2019-03-06

CLIENT: Iqaluit

PROJECT:

Iqaluit Wastewater Treatment Plant Upgrade

NORCLAIR MÉCANIQUE DE PROCÉDÉ

TITLE OF THE DRAWING:

IQALUIT WWTP
Chute detail 17 - LOWER

DATE: 2019-03-19	SCALE: NOT TO SCALE
DRAWING BY: E.A.	No PROJECT NORCLAIR: P1039
CHECKED BY: H.C.	No DRAWING: 02/3

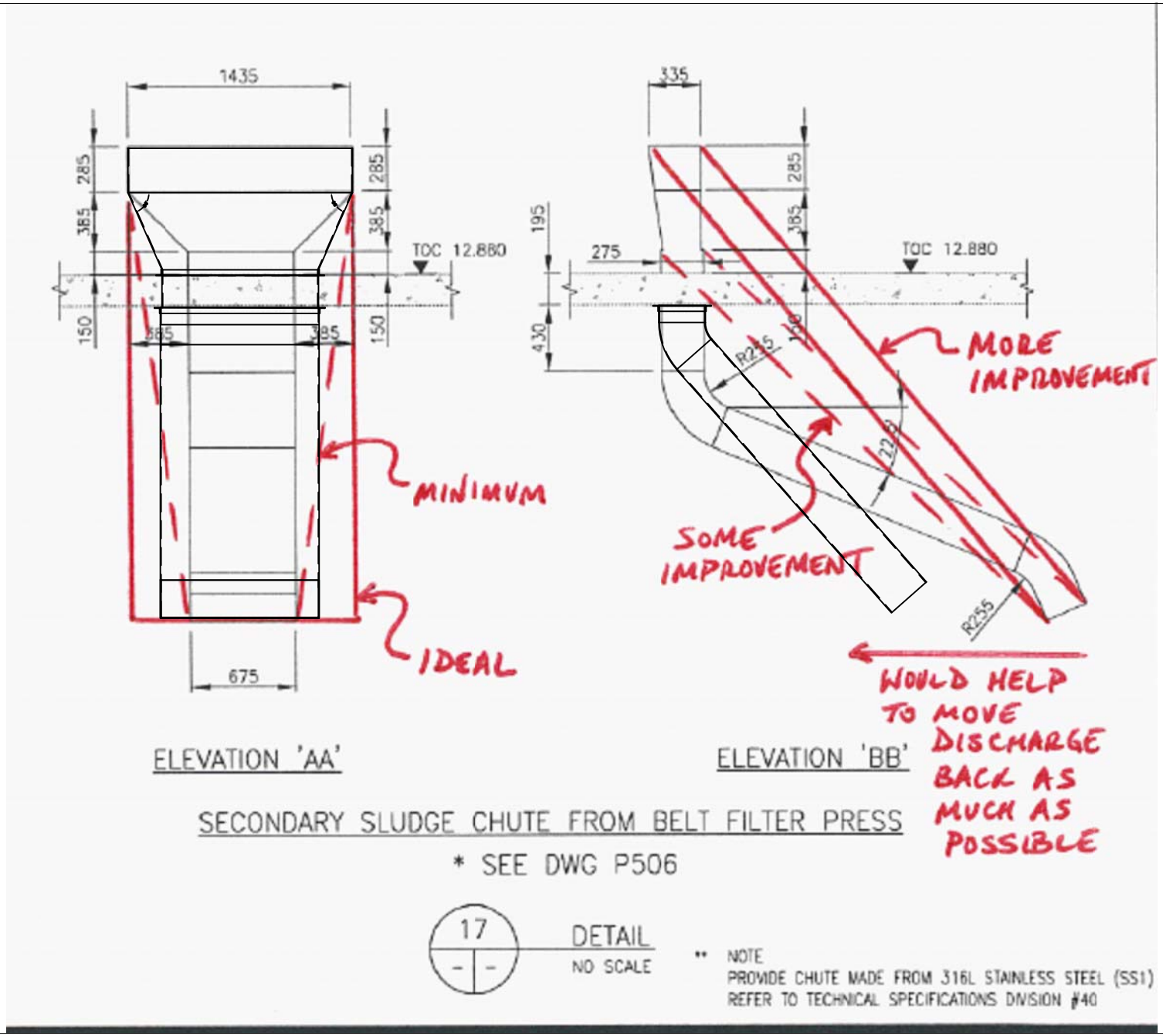

ELEVATION 'AA'

ELEVATION 'BB'

SECONDARY SLUDGE CHUTE FROM BELT FILTER PRESS

* SEE DWG P506

17 — DETAIL
NO SCALE

** NOTE
PROVIDE CHUTE MADE FROM 316L STAINLESS STEEL (SS1)
REFER TO TECHNICAL SPECIFICATIONS DIVISION #40

# REV.	REVISION:	DATE:
0	FOR APPROVAL	2019-03-06

CLIENT: Iqaluit

PROJECT:

Iqaluit Wastewater Treatment Plant Upgrade

NORCLAIR MÉCANIQUE DE PROCÉDÉ

TITLE OF THE DRAWING:

IQALUIT WWTP
Chute detail 17 - COMPARAISON

DATE: 2019-03-19	SCALE: NOT TO SCALE
DRAWING BY: E.A.	No PROJECT NORCLAIR: P1039
CHECKED BY: H.C.	No DRAWING: 03/3

REVIEWED BY CONTRACTOR

Kudlik Construction Ltd.

NAME: Sandra Rousseau P.Eng

DATE: Mar 19, 2019

NORCLAIR
MÉCANIQUE DE PROCÉDÉ

SHOP DRAWINGS

DA-MP-44 (FRP vent 8in) **Date :** 2019-03-19

Information general	
Project : **WWTP UPGRADE - IQALUIT**	
Client : Kudlik Construction Ltd. To : Sandra Rousseau P.Eng., Project Manager	Project number : **2018-062** E-mail : srousseau@kudlik.biz
Contractor : **Norclair inc.**	Project number Norclair : **P1039**
Address : 1100, Montée Masson, Laval, QC, Canada H7E 4P2	
Project Manager : Dominic Papineau, Project Manager	E-mail: hchartier@norclair.ca
Phone : 450-688-4012 # 706	Cell. : 514-703-0263

Information, subcontractor or supplier	
Sub/supplier : Precisioneering DKG	
Contact : Cliff Ng	Phone : (800) 465-1800 x234

Information on the equipment	
Speciality : **Process**	
Equipment : FRP vent 8in	
Drawing reference : P505	
Specification reference : **40 05 15** (Page all / 10)	Division :
Article :	Number of pages : 2

CONSUL

STANTEC PROJECT #: 110126045 SUBMITTAL # DA-MP-44 FRP VENT

This review by Stantec is for general conformance with the design concept of Stantec's design of the:

☑ Process ☐ Electrical
☐ Structural ☐ Other
☐ Mechanical

component(s) only and does not mean that Stantec has verified or approves the shop drawing(s). The Contractor remains solely responsible for the shop drawing(s) and this review by Stantec does not relieve the Contractor of the Contractor's responsibility for errors or omissions in the shop drawing(s) or for meeting all requirements of the contract documents. This review does not mean that Stantec approves the detailed design inherent in the shop drawing, responsibility for which shall remain with the Contractor submitting same, nor does this review mean that Stantec accepts any deviation of the shop drawing(s) from the contract documents. The Contractor is responsible for confirming all dimensions and correlating them at the job site, for all construction means, methods and techniques, and for coordination of construction work of all trades, including coordination of all shop drawings.

Stantec

☑ REVIEWED

☐ REVIEWED, AS NOTED

☐ REVISE AND RESUBMIT

☐ NOT REVIEWED

DATE MARCH 19, 2019

BY Alejandro Rojas, P.Eng

1100, montée Masson
Laval, QC, Canada
H7E 4P2

Phone. : 450-688-4012
Fax : 450-661-6341
E-Mail : info@norclair.ca
www.norclair.ca

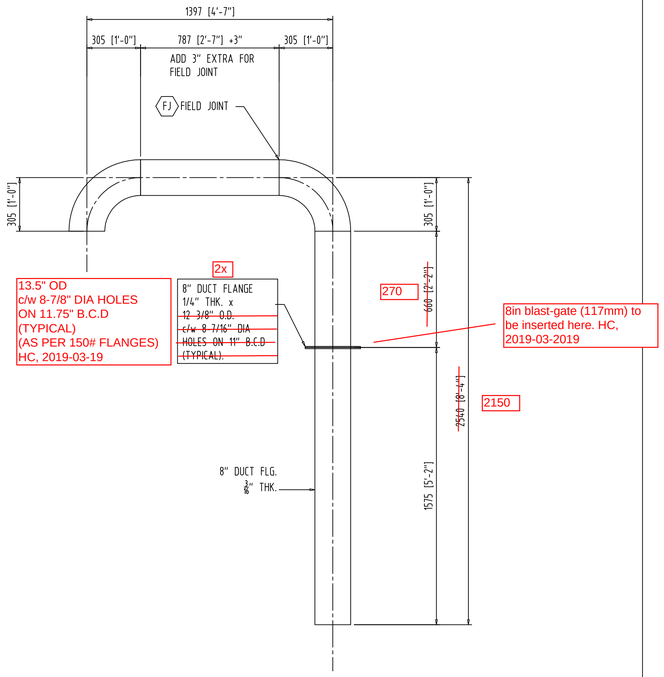

200-FOA

1 REQUIRED

2x required

T

GENERAL NOTES

SHOP ORDER NO.	DRAWING NO.	REV
TH14927-1	D-14927-1	1

SHOP ORDER NO. VE18899	CONSTRUCTION DETAILS		
CORROSION LINER REINFORCING	1-C GLASS + 2 MAT		
LINER	DERAKANE 510C	COLOR	GREY
HLU STRUCTURAL	DERAKANE 510C	COLOR	GREY
HOT COAT OUTER SKIN	HETRON 197P	COLOR	GREY
SPECIFICATION	CGSB 41-GP-22 & ASTM D4097		

QUALITY CONTROL

BARCOL HARDNESS	MINIMUM	TOP HEAD	SHELL	BOTTOM
THICKNESS	TOP HEAD	SHELL	BOTTOM	MANWAY BUILT-UP

INTERIOR CLEAN

INSPECTED BY:	WITNESSED BY:
DATE:	DATE:
GENERAL ORIENTATION	DETAILED ORIENTATION

LAMINATE SEQUENCE

THK.	HLU LAMINATE
3/16	V - 2M. 2M. H
1/4	V - 2M. M R M M. H
5/16	V - 2M. 2(MR) M. H
3/8	V - 2M. 3(MR) M. H
7/16	V - 2M. 3(MR) MM. H
1/2	V - 2M. 3(MR) M. MRM. H

NOTE:
- S = SYNTHETIC VEIL
- V = C - GLASS VEIL
- M = 1 1/2 oz CHOPPED STRAND MAT
- R = WOVEN ROVING 24 OZ
- H = HOT COAT

CERTIFIED
FOR PRODUCTION

BY:.....

DATE: .....

BY	DATE	REVISION	NO
WVI	25JUL18	REVISED PER CUSTOMER COMMENTS AS NOTED WITH ⚠	⚠
WVI	.	ISSUED FOR REVIEW AND APPROVAL	⚠

DO NOT SCALE THIS DRAWING USE DIMENSIONS ONLY

THE INFORMATION AND KNOW HOW ON THIS DRAWING ARE CONFIDENTIAL AND MAY NOT BE USED OR REPRODUCED WITHOUT WRITTEN PERMISSION OF PRECISIONEERING DXG

DRAWN	W Inumerable
CHECKED	
DATE	JULY 2014
SCALE	3/4" = 1'-0"

PRECISIONEERING DXG
303 NANTUCKET BLVD. SCARBOROUGH ONTARIO CANADA M1P 2P2 Email: sales@PRECISIONEERING.COM

CAD FILE NO: VE18899-1 | SIZE D

FRP DUCTING FOR
NORCLAIR

CUSTOMER REFERENCE DWG.	PURCHASE ORDER NO.	SHOP ORDER NO.	DRAWING NO.	REV
.	P1039-08003	VE18899	D-18899-1	1

REVIEWED BY CONTRACTOR

Kudlik Construction Ltd.

NAME: Sandra Rousseau P.Eng

DATE: Mar 21, 2019

NORCLAIR
MÉCANIQUE DE PROCÉDÉ

SHOP DRAWINGS

DA-MP-45 Expansion joint **Date :** 2019-03-20

Information general	
Project : **WWTP UPGRADE - IQALUIT**	
Client : Kudlik Construction Ltd. To : Sandra Rousseau P.Eng., Project Manager	Project number : **2018-062** E-mail : srousseau@kudlik.biz
Contractor : **Norclair inc.**	Project number Norclair : **P1039**
Address : 1100, Montée Masson, Laval, QC, Canada H7E 4P2	
Project Manager : Dominic Papineau, Project Manager	E-mail: hchartier@norclair.ca
Phone : 450-688-4012 # 706	Cell. : 514-703-0263

Information, subcontractor or supplier	
Sub/supplier : Connectall	
Contact : Andre Tinker	Phone : (514) 335-7755 ext 230

Information on the equipment	
Speciality : **Process**	
Equipment : Expansion joint	
Drawing reference : P609	
Specification reference : **40 05 30** (Page XX/ XX)	Division :
Article :	Number of pages : 2

CONSULTANT

STANTEC PROJECT #: 110126045

SUBMITTAL # DA-MP-45

This review by Stantec is for general conformance with the design concept of Stantec's design of the:

- ☑ Process
- ☐ Electrical
- ☐ Structural
- ☐ Other
- ☐ Mechanical

component(s) only and does not mean that Stantec has verified or approves the shop drawing(s). The Contractor remains solely responsible for the shop drawing(s) and this review by Stantec does not relieve the Contractor of the Contractor's responsibility for errors or omissions in the shop drawing(s) or for meeting all requirements of the contract documents. This review does not mean that Stantec approves the detailed design inherent in the shop drawing, responsibility for which shall remain with the Contractor submitting same, nor does this review mean that Stantec accepts any deviation of the shop drawing(s) from the contract documents. The Contractor is responsible for confirming all dimensions and correlating them at the job site, for all construction means, methods and techniques, and for coordination of construction work of all trades, including coordination of all shop drawings.

Stantec

- ☑ REVIEWED
- ☐ REVIEWED, AS NOTED
- ☐ REVISE AND RESUBMIT
- ☐ NOT REVIEWED

DATE March 21, 2019

BY Alejandro Rojas, P.Eng

1100, montée Mass
Laval, QC, Canada
H7E 4P2

88-4012
61-6341
rclair.ca
www.norclair.ca

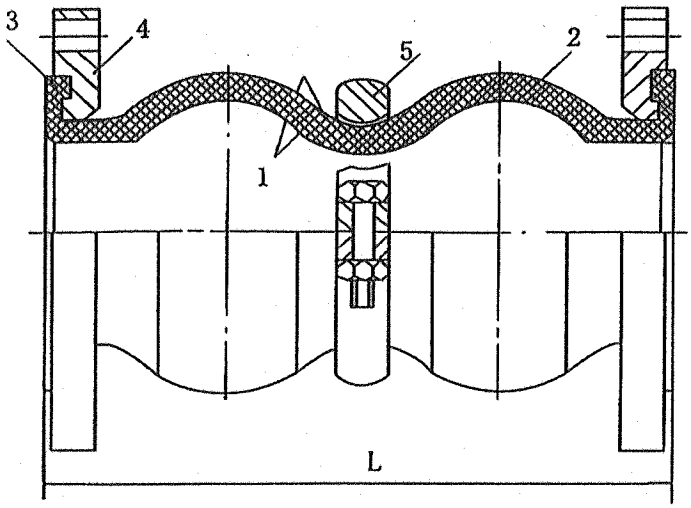

Control Rods must be used when pressures meet or exceed....(without ancres)	
150 PSI	1-1/4" to 4"
135 PSI	5" to 10"
90 PSI	12" to 14"
45 PSI	16" to 20"

Important: Control Units assemblies are always recommended for **Spring-Mounted** equipment and **Unachored Systems**.
Control Units **must** be used when maximum pressure (design, test, surge, operating) are higher than the ratings shown in the table above.

Part #	Diameter[2]		Overall Length (L) Face to Face		Allowable Movement				Working Pressure
Code[1]	In.	mm	In.	mm	Axial Compression	Axial Extension	Lateral Deflection	Angular Deflection	@ 70°F
CRJ-20-X-020	1-1/4	32	7	180	2"	1-3/16"	±1-3/4"	35°	214 PSI
CRJ-20-X-024	1-1/2	38	7	180	2"	1-3/16"	±1-3/4"	35°	214 PSI
CRJ-20-X-032	2	50	7	180	2"	1-3/16"	±1-3/4"	35°	214 PSI
CRJ-20-X-040	2-1/2	65	7	180	2"	1-3/16"	±1-3/4"	35°	214 PSI
CRJ-20-X-048	3	80	7	180	2"	1-3/8"	±1-3/4"	35°	214 PSI
2x CRJ-20-X-064	4	100	9	230	2"	1-3/8"	±1-1/2"	35°	214 PSI
CRJ-20-X-080	5	125	9	230	2"	1-3/8"	±1-1/2"	35°	214 PSI
3x CRJ-20-X-096	6	150	9	230	2"	1-3/8"	±1-1/2"	35°	214 PSI
CRJ-20-X-128	8	200	13	330	2-1/4"	1-3/8"	±1-3/8"	30°	214 PSI
CRJ-20-X-160	10	250	13	330	2-1/4"	1-3/8"	±1-3/8"	30°	214 PSI
CRJ-20-X-192	12	300	13	330	2-1/4"	1-3/8"	±1-3/8"	30°	214 PSI
CRJ-20-X-224	14	350	14	355	1-1/2"	1"	±1"	20°	114 PSI
CRJ-20-X-256	16	400	14	355	1-1/2"	1"	±1"	20°	114 PSI
CRJ-20-X-288	18	450	14	355	1-1/2"	1"	±1"	20°	114 PSI
CRJ-20-X-320	20	500	14	355	1-1/2"	1"	±1"	20°	114 PSI

[1] To complete the part #; replace the "X" with the following: for EPDM "E"; for Nitrile "NBR"; for Neoprene "CR"; for Butyl "IIR" .
[2] Diameters over 20" available upon request.

ITEM	DESCRIPTION	Material	Rating[3]
1	Body	Synthetic Rubber (EPDM, Nitrile, Neoprene or Butyl)	Pos. Pressure: 1-1/4" to 12" = 214 PSI
2	Reinforcement	Nylon Cord	14" to 20" = 114 PSI
3	Wire Reinforcement	Steel	Neg. Pressure: 26 In/Hg
4	Floating Flange 150#	Zinc Plated Mild Steel RST-37-2	Temp.:-22°F(-30°C) up to 250°F(121°C)
5	Control Ring	Malleable Iron	

[3] Please note that temperature rating depends on the rubber used, please contact customer service for exact rating.

REV	DESCRIPTION	DATE	BY

PROJECT	
CUSTOMER	
ENGINEER	
REFERENCE	

TOLERANCES UNLESS OTHERWISE SPECIFIED

FRACTION DECIMAL ANGULAR

PROPERTY OF CONNECTALL LTÉE

THIS DOCUMENT AND ALL KNOWLEDGE AND KNOWHOW IT CONTAINS ARE THE PROPERTY OF CONNECTALL. INFORMATION DESCRIBED CAN NOT DE REPRODUCED, COPIED OR TRANSFERED WITHOUT AUTORISATION AND SHALL BE USED FOR THE SOLE INTENT TO WHICH THIS DRAWING WAS ISSUED FOR.

CONNECTALL LTD.
6060 CYPIHOT STREET
ST-LAURENT, QUEBEC
H4S 1Y5

TITLE : **Double-Sphere Flanged Connector 1-1/4" to 20"**
Model: R2

DRAWN BY	DATE	CHECKED BY	DATE	SCALE	DRAWING NO.		REV	
FD	28/05/08	lb	28/05/08	N/A		E-125		NR

REVIEWED BY CONTRACTOR

Kudlik Construction Ltd.

NAME: Sandra Rousseau P.Eng
DATE: Avr 04, 2019

NORCLAIR
MÉCANIQUE DE PROCÉDÉ

SHOP DRAWINGS

DA-MP-46 Piping MBBR sieve manifold **Date :** 2019-04-04

Information general	
Project : **WWTP UPGRADE - IQALUIT**	
Client : Kudlik Construction Ltd. To : Sandra Rousseau P.Eng., Project Manager	Project number : **2018-062** E-mail : srousseau@kudlik.biz
Contractor : **Norclair inc.**	Project number Norclair : **P1039**
Address : 1100, Montée Masson, Laval, QC, Canada H7E 4P2	
Project Manager : Dominic Papineau, Project Manager	E-mail: hchartier@norclair.ca
Phone : 450-688-4012 # 706	Cell. : 514-703-0263

Information, subcontractor or supplier	
Sub/supplier :	
Contact :	Phone :

Information on the equipment	
Speciality : **Process**	
Equipment : MBBR sieve manifold	
Drawing reference : P609	
Specification reference : **40 05 30** (Page XX/ XX)	Division :
Article :	Number of pages : 2

CONSULTANT APPI

STANTEC PROJECT #: 110126045

SUBMITTAL # DA-MP-46 MBBR Sieve Manifold.

This review by Stantec is for general conformance with the design concept of Stantec's design of the:

☑ Process ☐ Electrical
☐ Structural ☐ Other
☐ Mechanical

component(s) only and does not mean that Stantec has verified or approves the shop drawing(s). The Contractor remains solely responsible for the shop drawing(s) and this review by Stantec does not relieve the Contractor of the Contractor's responsibility for errors or omissions in the shop drawing(s) or for meeting all requirements of the contract documents. This review does not mean that Stantec approves the detailed design inherent in the shop drawing, responsibility for which shall remain with the Contractor submitting same, nor does this review mean that Stantec accepts any deviation of the shop drawing(s) from the contract documents. The Contractor is responsible for confirming all dimensions and correlating them at the job site, for all construction means, methods and techniques, and for coordination of construction work of all trades, including coordination of all shop drawings.

Stantec

☑ REVIEWED
☐ REVIEWED, AS NOTED
☐ REVISE AND RESUBMIT
☐ NOT REVIEWED

DATE April 9, 2019

BY Alejandro Rojas, P.Eng

1100, montée Masson
Laval, QC, Canada
H7E 4P2

Phone. : 450-688-4012
Fax : 450-661-6341
E-Mail : info@norclair.ca
www.norclair.ca

MBBR MANIFOLD
MATERIAL: SS 304L 10S
QTY: 2

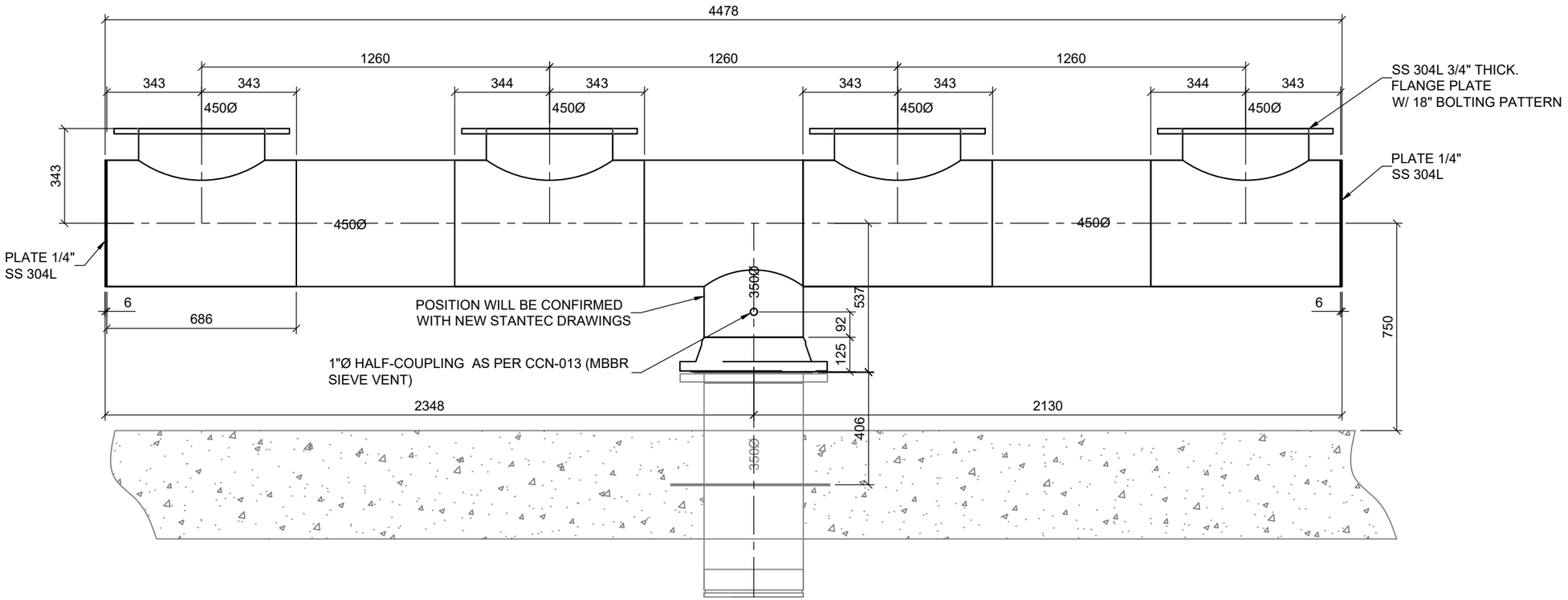

# PART	DESCRIPTION	UNIT QTY	TOTAL QTY
MAN-01	- PIPE 18"Ø SS 304 Sch10S	-	-
	- 18" Ø FLANGE PLATE 3/4" THICK. SS 304L	4 x	8 x
	- 18"x18"Ø TEE SS 304L Sch10S	4 x	8 x
	- 18" Ø PLATE 1/4" THICK. SS 304L	2 x	4 x
	- PIPE 14"Ø SS 304L Sch10S	-	-
	- 14"Ø NPS WELDING NECK FLANGE CLASS 150 SS 304L	1 x	2 x
	- 1"Ø HALF-COUPLING SS 304L	1 x	2 x

NOTES:

# REV.	REVISION:	DATE
00	FOR APPROVAL	2019-04-04

NORCLAIR
MÉCANIQUE DE PROCÉDÉ

CUSTOMER:
Iqaluit
ᐃᖃᓗᐃᑦ

CONSULTANT:
City of Iqaluit
Department of Engineering & Sustainability

PROJECT:
Iqaluit Wastewater Treatment Plant Upgrade

DRAWING:
MANIFOLD MBBR
FABRICATION

DATE:	2019-04-04	SCALE:	AUCUNE
DRAWN BY:	E.A.	# PROJECT:	P1039
VERIFIED BY:	H.C.	# DRAWING:	P1039-MAN-01

REVIEWED BY CONTRACTOR

Kudlik Construction Ltd.

NAME: Sandra Rousseau P.Eng

DATE: Avr 17, 2019

NORCLAIR
MÉCANIQUE DE PROCÉDÉ

SHOP DRAWINGS

DA-MP-47 DI2 piping (DAF to TWAS tanks)

Date : 2019-04-16

Information general	
Project : **WWTP UPGRADE - IQALUIT**	
Client : Kudlik Construction Ltd. To : Sandra Rousseau P.Eng., Project Manager	Project number : **2018-062** E-mail : srousseau@kudlik.biz
Contractor : **Norclair inc.**	Project number Norclair : **P1039**
Address : 1100, Montée Masson, Laval, QC, Canada H7E 4P2	
Project Manager : Hugo Chartier, Project Manager	E-mail: hchartier@norclair.ca
Phone : 450-688-4012 # 706	Cell. : 514-703-0263

Information, subcontractor or supplier	
Sub/supplier :	
Contact :	Phone :

Information on the equipment	
Speciality : **Process**	
Equipment :	
Drawing reference :	
Specification reference : **40 05 13** (Page xx / xx)	Division :
Article :	Number of pages : 6

SPECIFIC DIMENSIONS OF SPOOLS WERE NOT REVIEWED. CONTRACTOR TO ENSURE SPOOL DIMENSIONS ARE CORRECT FOR THE INSTALLATION.

CONSULTANT APPROVAL

STANTEC PROJECT #: 110126045

SUBMITTAL # DA-MP-47 DI2 Piping.

This review by Stantec is for general conformance with the design concept of Stantec's design of the:

- ☑ Process
- ☐ Structural
- ☐ Mechanical
- ☐ Electrical
- ☐ Other

component(s) only and does not mean that Stantec has verified or approves the shop drawing(s). The Contractor remains solely responsible for the shop drawing(s) and this review by Stantec does not relieve the Contractor of the Contractor's responsibility for errors or omissions in the shop drawing(s) or for meeting all requirements of the contract documents. This review does not mean that Stantec approves the detailed design inherent in the shop drawing, responsibility for which shall remain with the Contractor submitting same, nor does this review mean that Stantec accepts any deviation of the shop drawing(s) from the contract documents. The Contractor is responsible for confirming all dimensions and correlating them at the job site, for all construction means, methods and techniques, and for coordination of construction work of all trades, including coordination of all shop drawings.

Stantec

- ☐ REVIEWED
- ☑ REVIEWED, AS NOTED
- ☐ REVISE AND RESUBMIT
- ☐ NOT REVIEWED

DATE April 17, 2019

BY Alejandro Rojas, P.Eng

1100, montée Masson
Laval, QC, Canada
H7E 4P2

50-688-4012
50-661-6341
@norclair.ca
www.norclair.ca

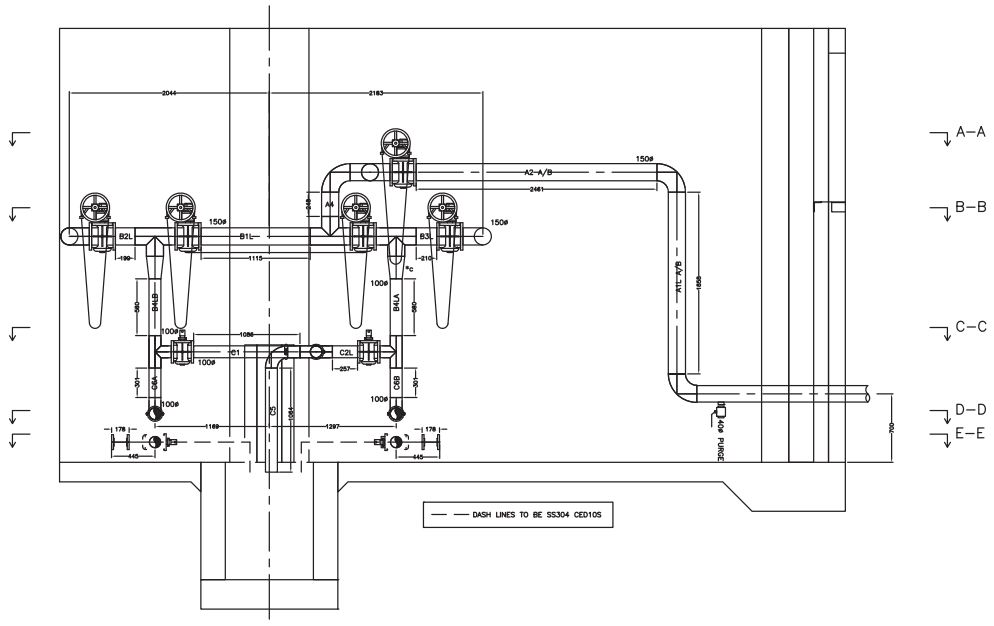

SECTION 1

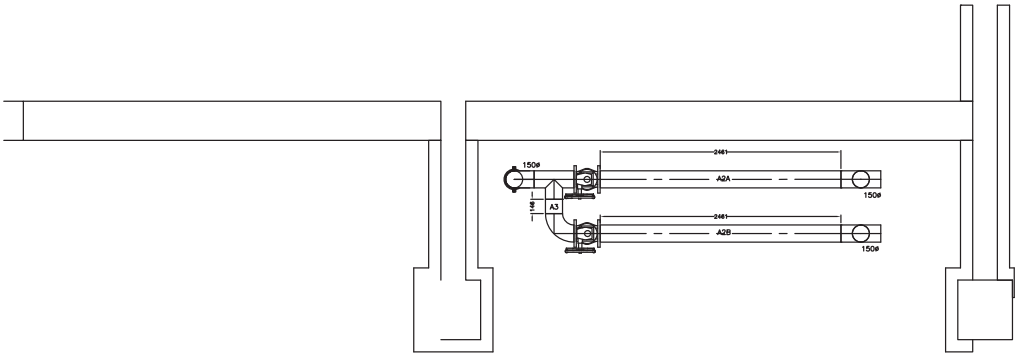

PLAN A

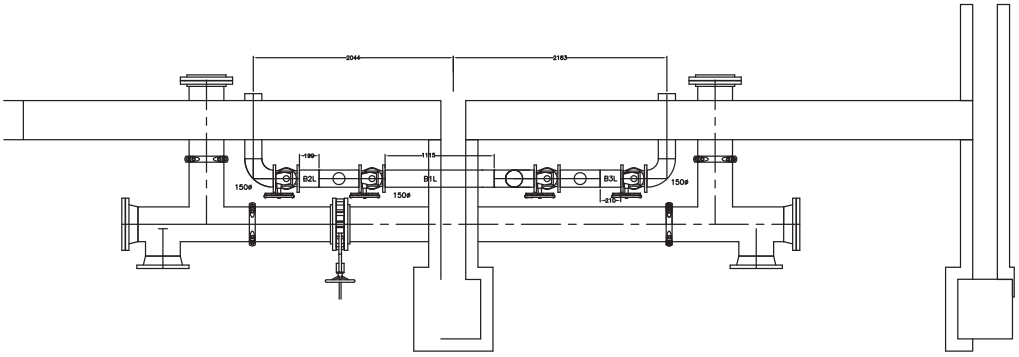

PLAN B

NOTE:

"L" SPOOLS TO BE FIELD FABRICATED

ALL PIPING TO BE GLASS LINED DUCTILE IRON WITH EPOXY EXTERIOR COATING

ALL FITTING TO BE GLASS LINED 23.05 VICTAULIC FITTINGS WITH EPOXY EXTERIOR COATING

"*c" REDUCERS ARE CONCENTRIC

"*e" REDUCERS ARE ECCENTRIC

VICTAULIC COUPLINGS AND VIC FLANGES ARE NOT SHOWN FOR CLARITY

PURGE VALVES ARE APPOLO 1" 76F-105-01A OR SIMILAR

REVISION:		
01	FOR APPROVAL	2019-04-16

PROJECT:

Iqaluit Wastewater Treatment Plant Upgrade

CLIENT:

CITY OF IQALUIT

Iqaluit

ᐃᖃᓗᐃᑦ

NORCLAIR MÉCANIQUE DE PROCÉDÉ

TWAS PIPING: DAF TO TWAS TANKS A & B SECTIONS

DATE: 2019-04-16	SCALE: 1:50
VERIFIED BY: H.C.	N. PROJECT NORCLAIR: P-1039
DRAWN BY: E.A.	N. DRAWING: P1039-01

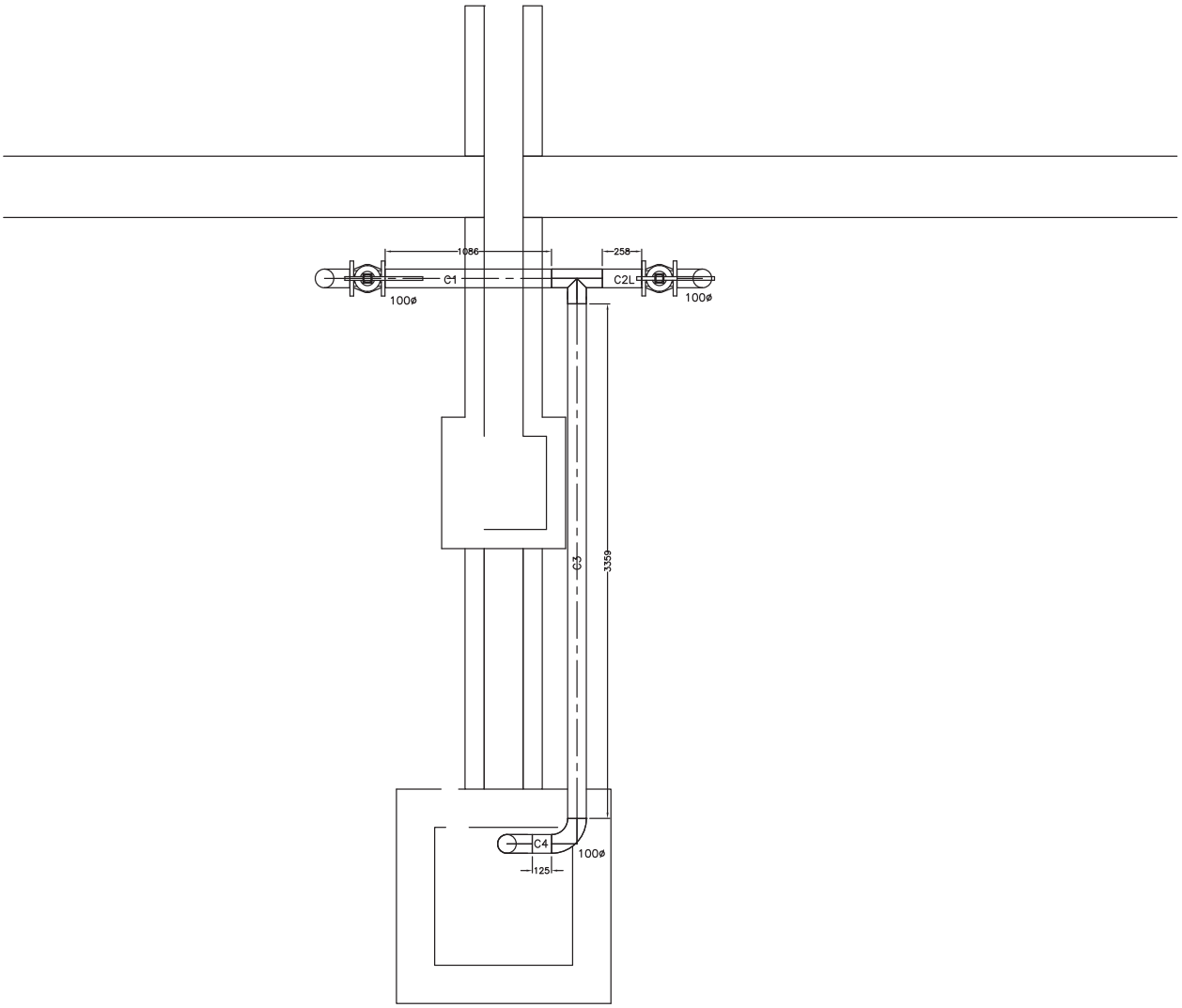

PLAN C

NOTE:

"L" SPOOLS TO BE FIELD FABRICATED

ALL PIPING TO BE GLASS LINED DUCTILE IRON WITH EPOXY EXTERIOR COATING

ALL FITTING TO BE GLASS LINED 23.05 VICTAULIC FITTINGS WITH EPOXY EXTERIOR COATING

""c" REDUCERS ARE CONCENTRIC

""e" REDUCERS ARE ECCENTRIC

VICTAULIC COUPLINGS AND VIC FLANGES ARE NOT SHOWN FOR CLARITY

PURGE VALVES ARE APPOLO 1" 76F-105-01A OR SIMILAR

REVISION:		
01	FOR APPROVAL	2019-04-16

PROJECT:

Iqaluit Wastewater Treatment Plant Upgrade

CLIENT:

CITY OF IQALUIT

Iqaluit

ᐃᖃᓗᐃᑦ

NORCLAIR MÉCANIQUE DE PROCÉDÉ

TWAS PIPING: DAF TO TWAS TANKS (C SECTIONS)

DATE: 2019-04-16	SCALE: 1:30
VERIFIED BY: H.C.	N. PROJECT NORCLAIR: P-1039
DRAWN BY: E.A.	N. DRAWING: P1039-02

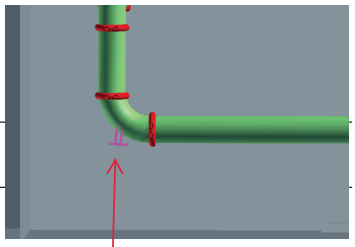

PLAN D

NOTE:

"L" SPOOLS TO BE FIELD FABRICATED

ALL PIPING TO BE GLASS LINED DUCTILE IRON WITH EPOXY EXTERIOR COATING

ALL FITTING TO BE GLASS LINED 23.05 VICTAULIC FITTINGS WITH EPOXY EXTERIOR COATING

""c" REDUCERS ARE CONCENTRIC

""e" REDUCERS ARE ECCENTRIC

VICTAULIC COUPLINGS AND VIC FLANGES ARE NOT SHOWN FOR CLARITY

PURGE VALVES ARE APPOLO 1" 76F-105-01A OR SIMILAR

REVISION:		
01	FOR APPROVAL	2019-04-16

PROJECT:

Iqaluit Wastewater Treatment Plant Upgrade

CLIENT:

CITY OF IQALUIT

Iqaluit

NORCLAIR MÉCANIQUE DE PROCÉDÉ

TWAS PIPING: DAF TO TWAS TANKS (D SECTIONS)

DATE: 2019-04-16	SCALE: 1:30
VERIFIED BY: H.C.	N. PROJECT NORCLAIR: P-1039
DRAWN BY: E.A.	N. DRAWING: P1039-03

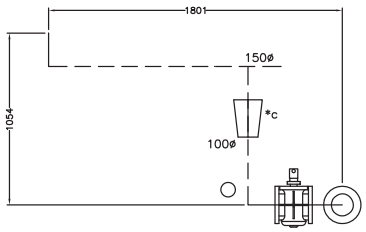

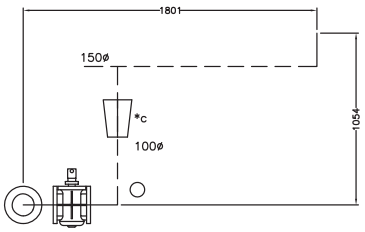

SECTION 2

— — — DASH LINES TO BE SS304 CED10S

NOTE:

"L" SPOOLS TO BE FIELD FABRICATED

ALL PIPING TO BE GLASS LINED DUCTILE IRON WITH EPOXY EXTERIOR COATING

ALL FITTING TO BE GLASS LINED 23.05 VICTAULIC FITTINGS WITH EPOXY EXTERIOR COATING

""c" REDUCERS ARE CONCENTRIC

""e" REDUCERS ARE ECCENTRIC

VICTAULIC COUPLINGS AND VIC FLANGES ARE NOT SHOWN FOR CLARITY

PURGE VALVES ARE APPOLO 1" 76F-105-01A OR SIMILAR

REVISION:		
01	FOR APPROVAL	2019-04-16

PROJECT:

Iqaluit Wastewater Treatment Plant Upgrade

CLIENT:

CITY OF IQALUIT

Iqaluit

ᐃᖃᓗᐃᑦ

NORCLAIR MÉCANIQUE DE PROCÉDÉ

TWAS PIPING: DAF TO TWAS TANKS (F SECTIONS)

DATE: 2019-04-16	SCALE: 1:30
VERIFIED BY: H.C.	N. PROJECT NORCLAIR: P-1039
DRAWN BY: E.A.	N. DRAWING: P1039-04

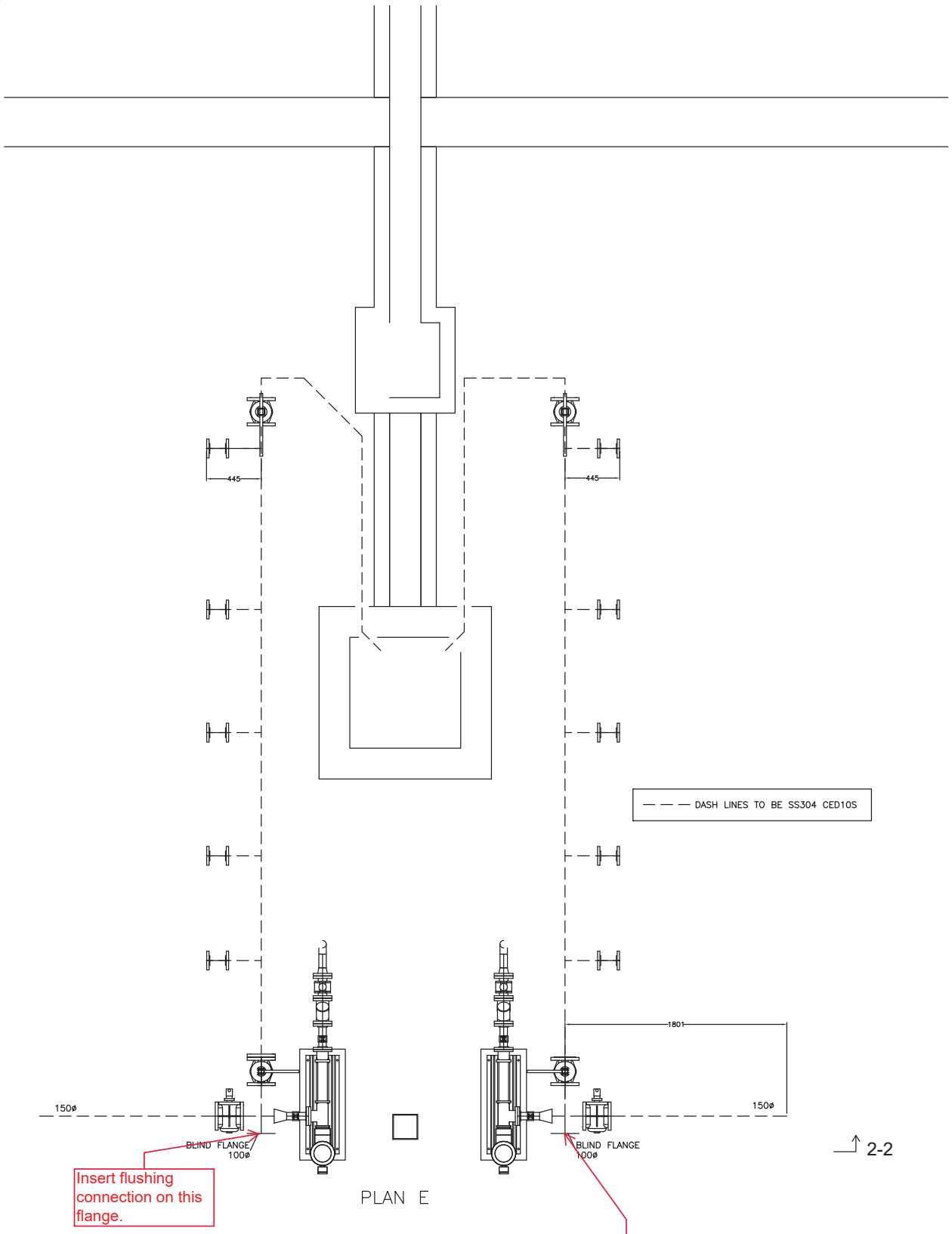

NOTE:

"L" SPOOLS TO BE FIELD FABRICATED

ALL PIPING TO BE GLASS LINED DUCTILE IRON WITH EPOXY EXTERIOR COATING

ALL FITTING TO BE GLASS LINED 23.05 VICTAULIC FITTINGS WITH EPOXY EXTERIOR COATING

""c" REDUCERS ARE CONCENTRIC

""e" REDUCERS ARE ECCENTRIC

VICTAULIC COUPLINGS AND VIC FLANGES ARE NOT SHOWN FOR CLARITY

PURGE VALVES ARE APPOLO 1" 76F-105-01A OR SIMILAR

REVISION:		
01	FOR APPROVAL	2019-04-16

PROJECT:

Iqaluit Wastewater Treatment Plant Upgrade

CLIENT:

CITY OF IQALUIT

Iqaluit

ᐃᖃᓗᐃᑦ

NORCLAIR MÉCANIQUE DE PROCÉDÉ

TWAS PIPING: DAF TO TWAS TANKS (E SECTIONS)

DATE: 2019-04-16	SCALE: 1:30
VERIFIED BY: H.C.	N. PROJECT NORCLAIR: P-1039
DRAWN BY: E.A.	N. DRAWING: P1039-04

REVIEWED BY CONTRACTOR
Kudlik Construction Ltd.
NAME: Sandra Rousseau P.Eng
DATE: Avr 24, 2019

NORCLAIR
MÉCANIQUE DE PROCÉDÉ

SHOP DRAWINGS

DA-MP-48R3 Process air piping (prefab only)

Date : 2019-04-24

Information general	
Project : **WWTP UPGRADE - IQALUIT**	
Client : Kudlik Construction Ltd. To : Sandra Rousseau P.Eng., Project Manager	Project number : **2018-062** E-mail : srousseau@kudlik.biz
Contractor : **Norclair inc.**	Project number Norclair : **P1039**
Address : 1100, Montée Masson, Laval, QC, Canada H7E 4P2	
Project Manager : Hugo Chartier, Project Manager	E-mail: hchartier@norclair.ca
Phone : 450-688-4012 # 706	Cell. : 514-703-0263

Information, subcontractor or supplier	
Sub/supplier :	
Contact :	Phone :

Information on the equipment	
Speciality : **Process**	
Equipment :	
Drawing reference :	
Specification reference : **40 05 13** (Page xx / xx)	Division :
Article :	Number of pages : 12

SPOOL DIMENSIONS HAVE NOT BEEN CHECKED IN DETAIL. CONTRACTOR TO ENSURE DIMENSIONS ARE CORRECT FOR THE INSTALLATION AND MATCH CONNECTION TO AERATION SYSTEM IN MBBR TRAINS AS PER VEOLIA'S APPROVED SHOP DRAWINGS.

CONSULTANT APPROVAL

STANTEC PROJECT #: 110126045

SUBMITTAL # DA-MP-48R3

Stantec

This review by Stantec is for general conformance with the design concept of Stantec's design of the:

- ☑ Process
- ☐ Electrical
- ☐ Structural
- ☐ Other
- ☐ Mechanical

component(s) only and does not mean that Stantec has verified or approves the shop drawing(s). The Contractor remains solely responsible for the shop drawing(s) and this review by Stantec does not relieve the Contractor of the Contractor's responsibility for errors or omissions in the shop drawing(s) or for meeting all requirements of the contract documents. This review does not mean that Stantec approves the detailed design inherent in the shop drawing, responsibility for which shall remain with the Contractor submitting same, nor does this review mean that Stantec accepts any deviation of the shop drawing(s) from the contract documents. The Contractor is responsible for confirming all dimensions and correlating them at the job site, for all construction means, methods and techniques, and for coordination of construction work of all trades, including coordination of all shop drawings.

- ☐ REVIEWED
- ☑ REVIEWED, AS NOTED
- ☐ REVISE AND RESUBMIT
- ☐ NOT REVIEWED

DATE May 8, 2019

BY Alejandro Rojas, P.Eng

1100, montée Mass
Laval, QC, Canada
H7E 4P2

-4012
-6341
air.ca
air.ca

PIPE SPECIFICATION DATASHEET – SS2

COMMODITY CODE	PIPE SIZE (mm)	EXPOSURE		OPERATING PRESS./TEMP. (kPa) / (C)	TEST PRESS. (kPa)
PA	75 – 1200	Pumphouses, Tunnels, Exterior, Submerged		75	150
PIPE					
LOCATION	**SIZE (mm)**	**MATERIAL**	**RATING**	**MATERIAL SPECIFICATION**	**REMARKS**
WWTP Building, Exterior, Underground, Submerged	75 100 – 200 250 – 300 350 – 450 500 – 600 650 – 1200	304L Stainless Steel 304L Stainless Steel 304L Stainless Steel 304L Stainless Steel 304L Stainless Steel 304L Stainless Steel	11 Gauge 14 Gauge 12 Gauge 11 Gauge 10 Gauge 4.7 mm	Material: ASTM A240 Fabrication: ASTM A778	
COATINGS					
LOCATION	**SIZE (mm)**	**MATERIAL**	**FACTORY/ FIELD**	**MATERIAL SPECIFICATION**	**REMARKS**
LININGS					
LOCATION	**SIZE (mm)**	**MATERIAL**	**FACTORY/ FIELD**	**MATERIAL SPECIFICATION**	**REMARKS**
JOINTS					
LOCATION	**SIZE (mm)**	**TYPE**	**SPACING**	**MATERIAL SPECIFICATION**	**REMARKS**
WWTP Building, Exterior, Underground, Submerged	>75	Butt Welded Van Stone Flange	N/A 24 m	ANSI B16.5 ASTM A312	Note 3
Exterior, Submerged	>75	Butt Welded	N/A	ANSI B16.9	
Exterior, Submerged	>75	Van Stone Angle Ring, Backing Flanges	18 m and 500 mm above liquid level		Note 3
EQUIPMENT CONNECTIONS					
EQUIPMENT END	**SIZE (mm)**	**PIPE END**	**RATING**	**SPECIFICATION**	**REMARKS**
Cast Iron, Flanged	75 – 1200	Rolled Angle, Van Stone, Backing Flange	Cl 125 FF	ANSI B16.1 ASTM A774	
Steel, Flanged	75 – 1200	Rolled Angle, Van Stone, Backing Flange	Cl 150, RF	ANSI B16.5 ASTM A774	
Steel Plain End	75 – 1200	Flange Adaptor and Van Stone, Backing Flange	Cl 125	ASTM A774 ANSI B16.5	

PIPE SPECIFICATION DATASHEET – SS2

PROVIDE 304L SS FLANGES AS SPECIFIED

FITTINGS AND APPURTENANCES

ITEM	SIZE (mm)	MATERIAL	RATING	SPECIFICATION	REMARKS
Van Stone Flanges, Rolled Angle FF or RF	75 – 1200	304L St. Steel 304L SS Steel Backing Flange	Cl 125	Flanges: ASTM A774 Pattern: ANSI B16.1	Note 1
Ell – Short Radius Ell – Long Radius Tees, Reducers Reducing Outlets, Y	75 – 1200	304L Stainless Steel, Single Longitudinal Weld Seam	Same as Pipe	General: MSS SP43 Material: ASTM A774 Dimensions: ANSI B16.1	Note 2
3-Piece Ell	350 – 550	304L Stainless Steel, Single Longitudinal Weld Seam	Same as Pipe	Material: ASTM A778 Dimensions: ANSI B16.1	
5-Piece Ell	600 – 1200	304L Stainless Steel	Same as Pipe	Material: ASTM A778 Dimensions: ANSI B16.1	
Cap	75 – 1200	304L Stainless Steel	Same as Pipe	Material: ASTM A778 Dimensions: ANSI B16.1	
Expansion Couplings	75 – 1200	Synthetic Rubber Galvanized Steel Flange	Same As Pipe		
Bolts		Stainless Steel	Hex. Head	ASTM A193 Gr. B8, Cl 1	
Nuts	≥ 25 mm >25 mm	Stainless Steel	Hex. Heavy Hex.	ASTM A194 Gr. 8	
Flange Gaskets	75 – 250	Reinforced Synthetic Fibre-Nitrile Binder	1.6 mm thick		
Flange Gaskets	>300	Reinforced Synthetic Fibre-Nitrile Binder	3.2 mm thick		

PROVIDE FLANGES OF SS304L AS PER ASTM A774 "ASTM A774/A774M, As-Welded Wrought Austenitic Stainless Steel Fittings for General Corrosive Service at Low and Moderate Temperatures"

INSPECTION AND TESTING

Pneumatic at 150 kPag for 24 hour period.
Visual and random nondestructive testing for welds.

CLEANING AND CONDITIONING

1. Remove debris.
2. Passivate all piping after completion of welding.

NOTES

1. Flanges shall be Van Stone type, with galvanized mild steel backing rings, drilled and faced to Class 150 in accordance with ANSI B16.5. In submerged and exterior locations use stainless steel back-up rings.
2. Provide beveled edges for all welded fittings and connections.
3. The drawings may indicate coupling, flanges, or other joints that may be disassembled at a minimum number of locations. In addition, provide joints noted in these specification sheets at the specified maximum spacing to allow for pipe disassembly through the remainder of the pipe runs. Contractor is to locate.
4. For PA piping, insulation shall be a minimum 50 mm thickness and as required for personnel protection at the design temperature of the pipe ensuring the surface temperature is below 40 deg C.
5. Pipe spools to be shop fabricated. Field welds require approval by Engineer.

ALTHOUGH THIS NOTE STATES TO PROVIDE BACKING RINGS OF GALVANIZED MILD STEEL, FOR THIS SPECIFIC CASE PROVIDE SS 304L BACKING RINGS TO AVOID POTENTIAL GALVANIC CORROSION ISSUES DUE TO DISCIMILAR METALS.

HC. 2019-04-24:
As agreed before (see DA-MP-10 and RFI-038), there is no need for SS backing ring unless piping is submerged, therefore only process air connections in the TWAS tanks will be made with SS304L backing ring.

PA piping not shown will be field fabricated.

Line A

Line B

Line C

Line D

PRESS ROOM

ELECTRICAL ROOM

* DAF AND MBBR NOT SHOWN FOR CLARITY

Will the pipe droplegs from header to valves be field fitted? Confirm.

HC. 2019-04-24: Yes

Will this spool be field fitted? Confirm.

HC. 2019-04-24: Yes

Will the pipe droplegs from header to valves be field fitted? Confirm.

HC. 2019-04-24: Yes

Revision	By	Appd.	YY.MM.DD
2 ISSUED FOR ADDENDUM #018	TR	AR	04.04.19
1 ISSUED FOR CONSTRUCTION	TR	AR	18.05.23
0 ISSUED FOR BID	TR	AR	18.04.09
Issued	By	Appd.	YY.MM.DD

Consultants

Permit-Seal

NUNAMI STANTEC LIMITED

1088C Noble House
Iqaluit NU
www.stantec.com

The Contractor shall verify and be responsible for all dimensions. DO NOT scale the drawing - any errors or omissions shall be reported to Stantec without delay.
The Copyrights to all designs and drawings are the property of Stantec. Reproduction or use for any purpose other than that authorized by Stantec is forbidden.

Client/Project
Iqaluit

IQALUIT WASTEWATER TREATMENT PLANT UPGRADE

City of Iqaluit, Nunavut

File Name: P507 | TRohl Dwn. | Chkd. | Dsgn. | 2017.10.03 YY.MM.DD

Title
PROCESS
UPPER - PROCESS AIR (PA) PIPING DETAIL

Project No. 110126045

Scale 1:75 (0, 750, 2250, 3750mm)

Drawing No. P507

Sheet 2 of

Revision

ORIGINAL SHEET - ISO A1

V:\1107\active\110126045\drawings\04-process\current\P507.dwg
2019/04/04 9:02 PM By: Rohl, Thomas

T-mass FQIT insertion

ITEM A-1
QTY: 1
A-1

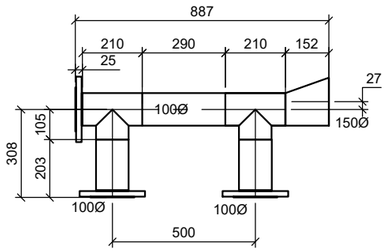

# PART	DESCRIPTION	UNIT QTY	TOTAL QTY
A-1	- PIPE 4" SS 304L Sch10S	-	-
	- FLANGE 4" GALVANIZED CL 150	3 x	3 x
	- 4"Ø NPS ANGLE COLLARS	3 x	3 x
	- 4"x4"Ø TEE SS 304L Sch10S	2 x	2 x
	- 6"x4"Ø ECCENTRIC REDUCER SS 304L Sch10S	1 x	1 x

ITEM A-3
QTY: 1
A-3

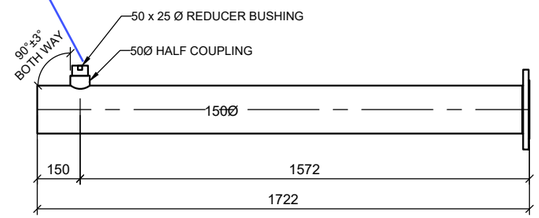

# PART	DESCRIPTION	UNIT QTY	TOTAL QTY
A-3	- PIPE 6" SS 304L Sch10S	-	-
	- FLANGE 6" GALVANIZED CL 150	1 x	1 x
	- 6"Ø NPS ANGLE COLLARS	1 x	1 x
	- 50Ø HALF COUPLING SS 304L	1 x	1 x
	- 50Ø NIPPLE SS 304L Sch 40	1 x	1 x
	- 50Ø COUPLING SS 304L	1 x	1 x
	- 50 x 25 Ø REDUCER BUSHING SS 304L	1 x	1 x

PROVIDE FLANGES OF SS304L AS PER ASTM A774 "ASTM A774/A774M, As-Welded Wrought Austenitic Stainless Steel Fittings for General Corrosive Service at Low and Moderate Temperatures"

ITEM A-2
QTY: 1
A-2

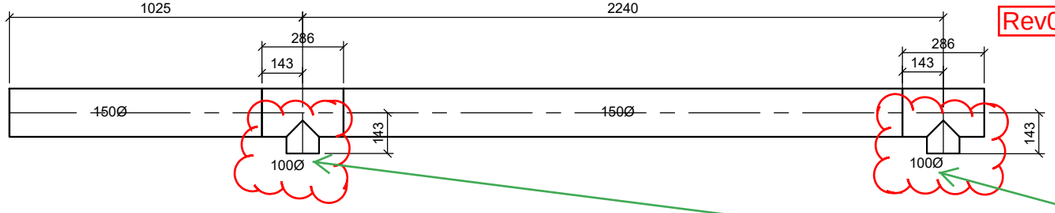

Rev01

# PART	DESCRIPTION	UNIT QTY	TOTAL QTY
A-2	- PIPE 6" SS 304L Sch10S	-	-
	- 6"x6"Ø TEE SS 304L Sch10S	2 x	2 x

6"x4" ?

HC. 2019-04-24:
Agreed

Will the pipe droplegs from header to valves be field fitted? Confirm.

HC. 2019-04-24:
Yes

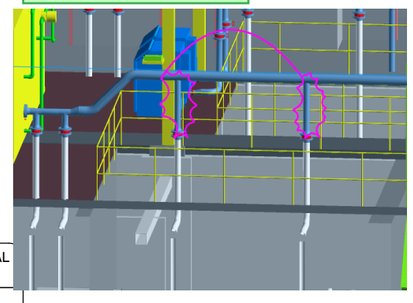

A SECTION

ITEM A-4
QTY: 1
A-4

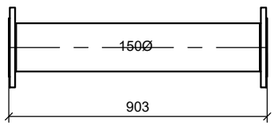

# PART	DESCRIPTION	UNIT QTY	TOTAL QTY
A-4	- PIPE 6" SS 304L Sch10S	-	-
	- FLANGE 6" GALVANIZED CL 150	2 x	2 x
	- 6"Ø NPS ANGLE COLLARS	2 x	2 x

ITEM A-5
QTY: 1
A-5

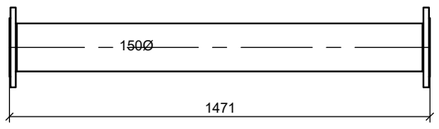

# PART	DESCRIPTION	UNIT QTY	TOTAL QTY
A-5	- PIPE 6" SS 304L Sch10S	-	-
	- FLANGE 6" GALVANIZED CL 150	2 x	2 x
	- 6"Ø NPS ANGLE COLLARS	2 x	2 x

NOTES:

# REV.	REVISION:	DATE
0	FOR APPROVAL	2019-04-04
1	REVISION 1	2019-04-18

NORCLAIR
MÉCANIQUE DE PROCÉDÉ

CUSTOMER: Iqaluit

CONSULTANT:
City of Iqaluit
Department of Engineering & Sustainability

PROJECT:
Iqaluit Wastewater Treatment Plant Upgrade

DRAWING TITLE:
PROCESS AIR PIPING
A SECTION

DATE:	2019-03-26	SCALE:	AUCUNE
DRAWN BY:	E.A.	N. PROJECT:	P1039
VERIFIED BY:	H.C.	N. DRAWING:	P1039-AIR-FAB-01

ITEM B-1
QTY: 1
B-1

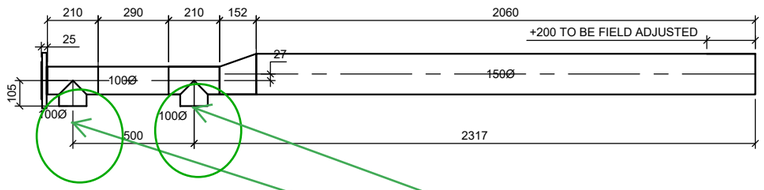

# PART	DESCRIPTION	UNIT QTY	TOTAL QTY
B-1	- PIPE 4" SS 304L Sch10S	-	-
	- FLANGE 4" GALVANIZED CL 150	1 x	1 x
	- 4"Ø NPS ANGLE COLLARS	1 x	1 x
	- 4"x4"Ø TEE SS 304L Sch10S	2 x	2 x
	- 6"x4"Ø ECCENTRIC REDUCER SS 304L Sch10S	1 x	1 x
	- PIPE 6" SS 304L Sch10S	-	-

T-mass FQIT insertion

ITEM B-1
QTY: 1
B-2

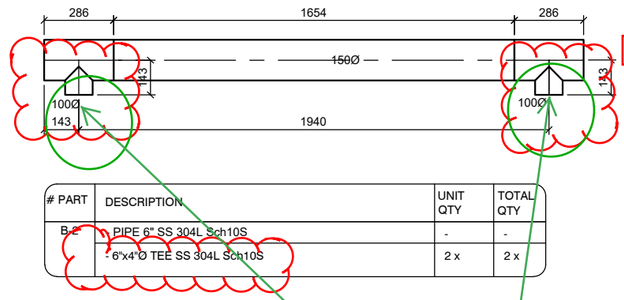

# PART	DESCRIPTION	UNIT QTY	TOTAL QTY
B-2	- PIPE 6" SS 304L Sch10S	-	-
	- 6"x4"Ø TEE SS 304L Sch10S	2 x	2 x

Rev01

ITEM B-3
QTY: 1
B-3

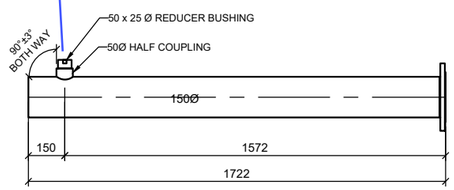

# PART	DESCRIPTION	UNIT QTY	TOTAL QTY
B-3	- PIPE 6" SS 304L Sch10S	-	-
	- FLANGE 6" GALVANIZED CL 150	1 x	1 x
	- 6"Ø NPS ANGLE COLLARS	1 x	1 x
	- 50Ø HALF COUPLING SS 304L	1 x	1 x
	- 50Ø NIPPLE SS 304L Sch 40	1 x	1 x
	- 50Ø COUPLING SS 304L	1 x	1 x
	- 50 x 25 Ø REDUCER BUSHING SS 304L	1 x	1 x

ITEM B-4
QTY: 1
B-4

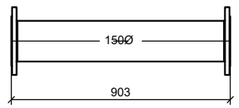

# PART	DESCRIPTION	UNIT QTY	TOTAL QTY
B-4	- PIPE 6" SS 304L Sch10S	-	-
	- FLANGE 6" GALVANIZED CL 150	2 x	2 x
	- 6"Ø NPS ANGLE COLLARS	2 x	2 x

Will the pipe droplegs from header to valves be field fitted? Confirm.

HC. 2019-04-24:
Yes

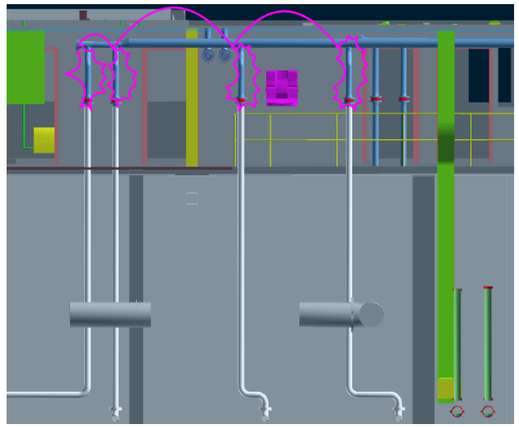

ITEM B-5
QTY: 1
B-5

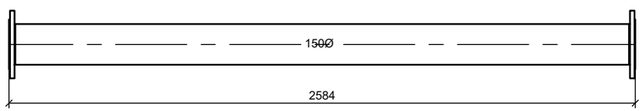

# PART	DESCRIPTION	UNIT QTY	TOTAL QTY
B-5	- PIPE 6" SS 304L Sch10S	-	-
	- FLANGE 6" GALVANIZED CL 150	2 x	2 x
	- 6"Ø NPS ANGLE COLLARS	2 x	2 x

B SECTION

NOTES:

PROVIDE FLANGES OF SS304L AS PER ASTM A774 "ASTM A774/A774M, As-Welded Wrought Austenitic Stainless Steel Fittings for General Corrosive Service at Low and Moderate Temperatures"

HC. 2019-04-24:
ASTM A774 does not apply for A-312 NPS (ced10) piping.
See last page of shop drawing for mill test of angle collars and galvanized backing rings showing material and bolting specification.

# REV.	REVISION:	DATE
0	FOR APPROVAL	2019-04-04
1	REVISION 1	2019-04-18

NORCLAIR MÉCANIQUE DE PROCÉDÉ

CUSTOMER: Iqaluit

CONSULTANT:
City of Iqaluit
Department of Engineering & Sustainability

PROJECT:
Iqaluit Wastewater Treatment Plant Upgrade

DRAWING TITLE:
PROCESS AIR PIPING
B SECTION

DATE:	2019-03-26	SCALE:	AUCUNE
DRAWN BY:	E.A.	N. PROJECT:	P1039
VERIFIED BY:	H.C.	N. DRAWING:	P1039-AIR-FAB-02

T-mass FQIT insertion

ITEM C-1 QTY: 1 C-1

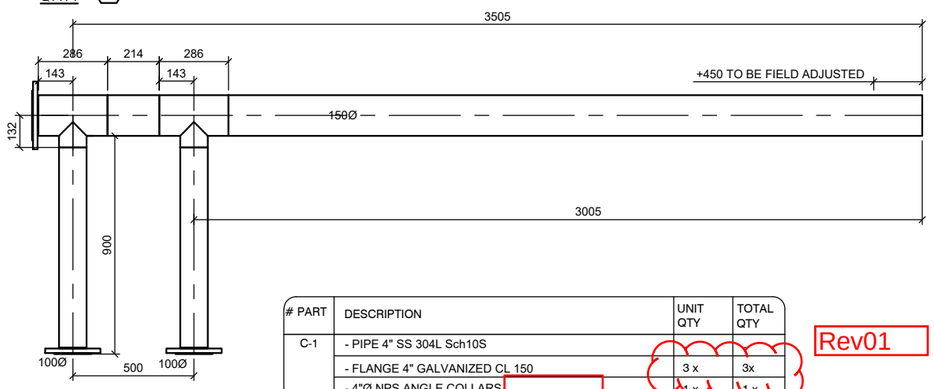

# PART	DESCRIPTION	UNIT QTY	TOTAL QTY
C-1	- PIPE 4" SS 304L Sch10S		
	- FLANGE 4" GALVANIZED CL 150	3 x	3x
	- 4"Ø NPS ANGLE COLLARS	1 x	1 x
	- 4"x4"Ø TEE SS 304L Sch10S	2 x	2 x
	- PIPE 6" SS 304L Sch10S	-	-
	- 6"x6"Ø TEE SS 304L Sch10S	2 x	2 x

Rev01

ITEM C-2 QTY: 1 C-2

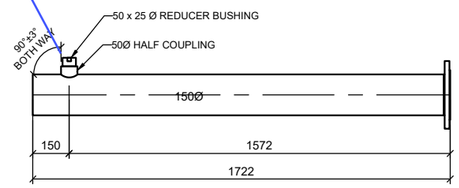

# PART	DESCRIPTION	UNIT QTY	TOTAL QTY
C-2	- PIPE 6" SS 304L Sch10S	-	-
	- FLANGE 6" GALVANIZED CL 150	1 x	1 x
	- 6"Ø NPS ANGLE COLLARS	1 x	1 x
	- 50Ø HALF COUPLING SS 304L	1 x	1 x
	- 50Ø NIPPLE SS 304L Sch 40	1 x	1 x
	- 50Ø COUPLING SS 304L	1 x	1 x
	- 50 x 25 Ø REDUCER BUSHING SS 304L	1 x	1 x

ITEM C-3 QTY: 1 C-3

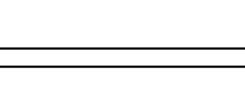

# PART	DESCRIPTION	UNIT QTY	TOTAL QTY
C-3	- PIPE 6" SS 304L Sch10S	-	-
	- FLANGE 6" GALVANIZED CL 150	2 x	2 x
	- 6"Ø NPS ANGLE COLLARS	2 x	2 x

ITEM C-4 QTY: 1 C-4

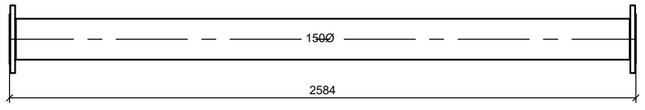

# PART	DESCRIPTION	UNIT QTY	TOTAL QTY
C-4	- PIPE 6" SS 304L Sch10S	-	-
	- FLANGE 6" GALVANIZED CL 150	2 x	2 x
	- 6"Ø NPS ANGLE COLLARS	2 x	2 x

C SECTION

NOTES:

HC. 2019-04-24:
ASTM A774 does not apply for A-312 NPS (ced10) piping.
See last page of shop drawing for mill test of angle collars and galvanized backing rings showing material and bolting specification.

PROVIDE FLANGES OF SS304L AS PER ASTM A774 "ASTM A774/A774M, As-Welded Wrought Austenitic Stainless Steel Fittings for General Corrosive Service at Low and Moderate Temperatures"

# REV.	REVISION:	DATE
0	FOR APPROVAL	2019-04-04

NORCLAIR MÉCANIQUE DE PROCÉDÉ

CUSTOMER: Iqaluit

CONSULTANT:
City of Iqaluit
Department of Engineering & Sustainability

PROJECT:
Iqaluit Wastewater Treatment Plant Upgrade

DRAWING TITLE:
PROCESS AIR PIPING
C SECTION

DATE:	2019-03-26	SCALE:	AUCUNE
DRAWN BY:	E.A.	N. PROJECT:	P1039
VERIFIED BY:	H.C.	N. DRAWING:	P1039-AIR-FAB-03

ITEM D-1
QTY: 1
D-1

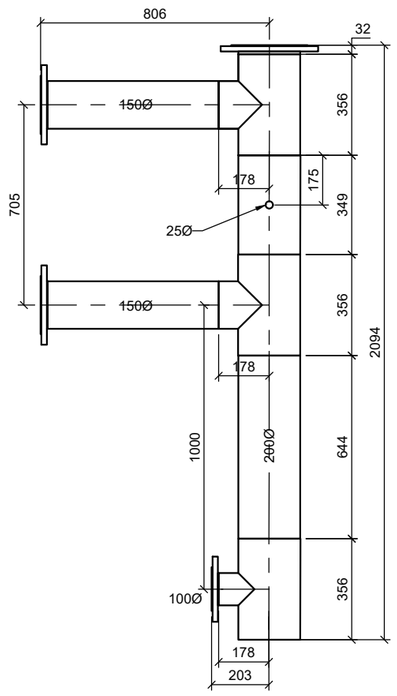

# PART	DESCRIPTION	UNIT QTY	TOTAL QTY
D-1	- PIPE 8" SS 304L Sch10S	-	-
	- FLANGE 8" GALVANIZED CL 150	1 x	1 x
	- 8"Ø NPS ANGLE COLLARS	1 x	1 x
	- PIPE 6" SS 304L Sch10S	-	-
	- FLANGE 6" GALVANIZED CL 150	2 x	2 x
	- 6"Ø NPS ANGLE COLLARS	2 x	2 x
	- 8"x6"Ø TEE SS 304L Sch10S	2 x	2 x
	- 8"x4"Ø TEE SS 304L Sch10S	1 x	1 x
	- FLANGE 4" GALVANIZED CL 150	1 x	1 x
	- 4"Ø NPS ANGLE COLLARS	1 x	1 x
	- 1"Ø HALF-COUPLING SS 304L	1 x	1 x

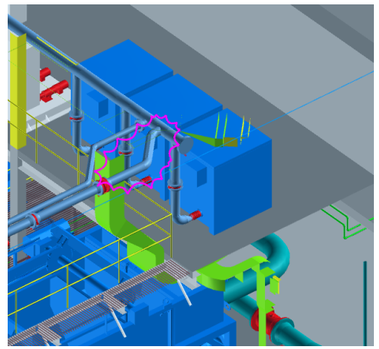

Will the spool from main header to expansion joint be field fitted? Confirm.

HC. 2019-04-24:
Yes

ITEM D-2
QTY: 1
D-2

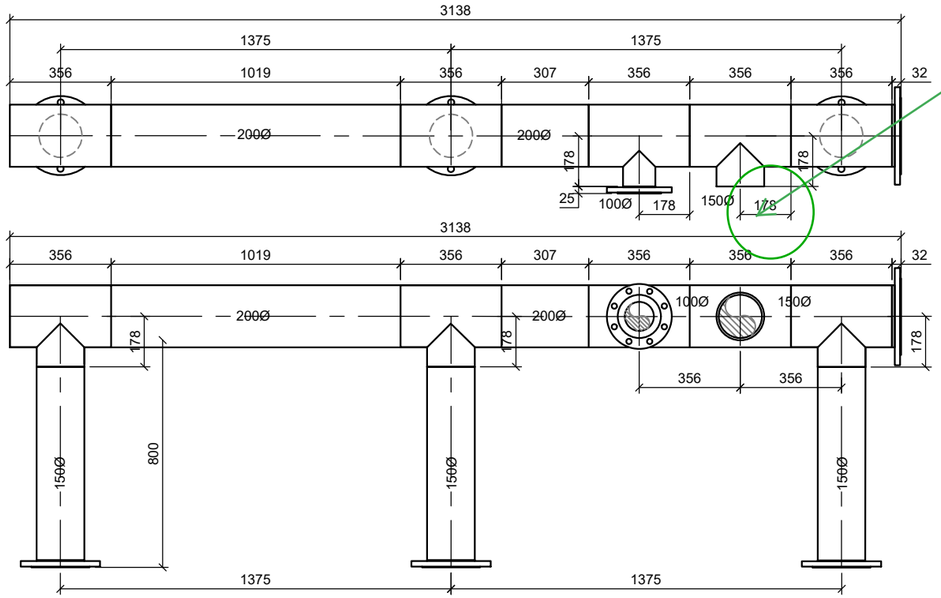

# PART	DESCRIPTION	UNIT QTY	TOTAL QTY
D-2	- PIPE 8" SS 304L Sch10S	-	-
	- FLANGE 8" GALVANIZED CL 150	1 x	1 x
	- 8"Ø NPS ANGLE COLLARS	1 x	1 x
	- PIPE 6" SS 304L Sch10S	-	-
	- FLANGE 6" GALVANIZED CL 150	3 x	3 x
	- 6"Ø NPS ANGLE COLLARS	3 x	3x
	- 6"x6"Ø TEE SS 304L Sch10S	3 x	3 x
	- 6"x4"Ø TEE SS 304L Sch10S	1 x	1 x
	- FLANGE 4" GALVANIZED CL 150	1 x	1 x
	- 4"Ø NPS ANGLE COLLARS	1 x	1 x

D SECTION

NOTES:

HC. 2019-04-24:
ASTM A774 does not apply for A-312 NPS (ced10) piping.
See last page of shop drawing for mill test of angle collars and galvanized backing rings showing material and bolting specification.

PROVIDE FLANGES OF SS304L AS PER ASTM A774 "ASTM A774/A774M, As-Welded Wrought Austenitic Stainless Steel Fittings for General Corrosive Service at Low and Moderate Temperatures"

# REV.	REVISION:	DATE
0	FOR APPROVAL	2019-04-04
1	REVISION	2019-04-12

NORCLAIR
MÉCANIQUE DE PROCÉDÉ

CUSTOMER: Iqaluit

CONSULTANT:
City of Iqaluit
Department of Engineering & Sustainability

PROJECT:
Iqaluit Wastewater Treatment Plant Upgrade

DRAWING TITLE:
PROCESS AIR PIPING
D SECTION

DATE:	2019-03-26	SCALE:	AUCUNE
DRAWN BY:	E.A.	N. PROJECT:	P1039
VERIFIED BY:	H.C.	N. DRAWING:	P1039-AIR-FAB-04

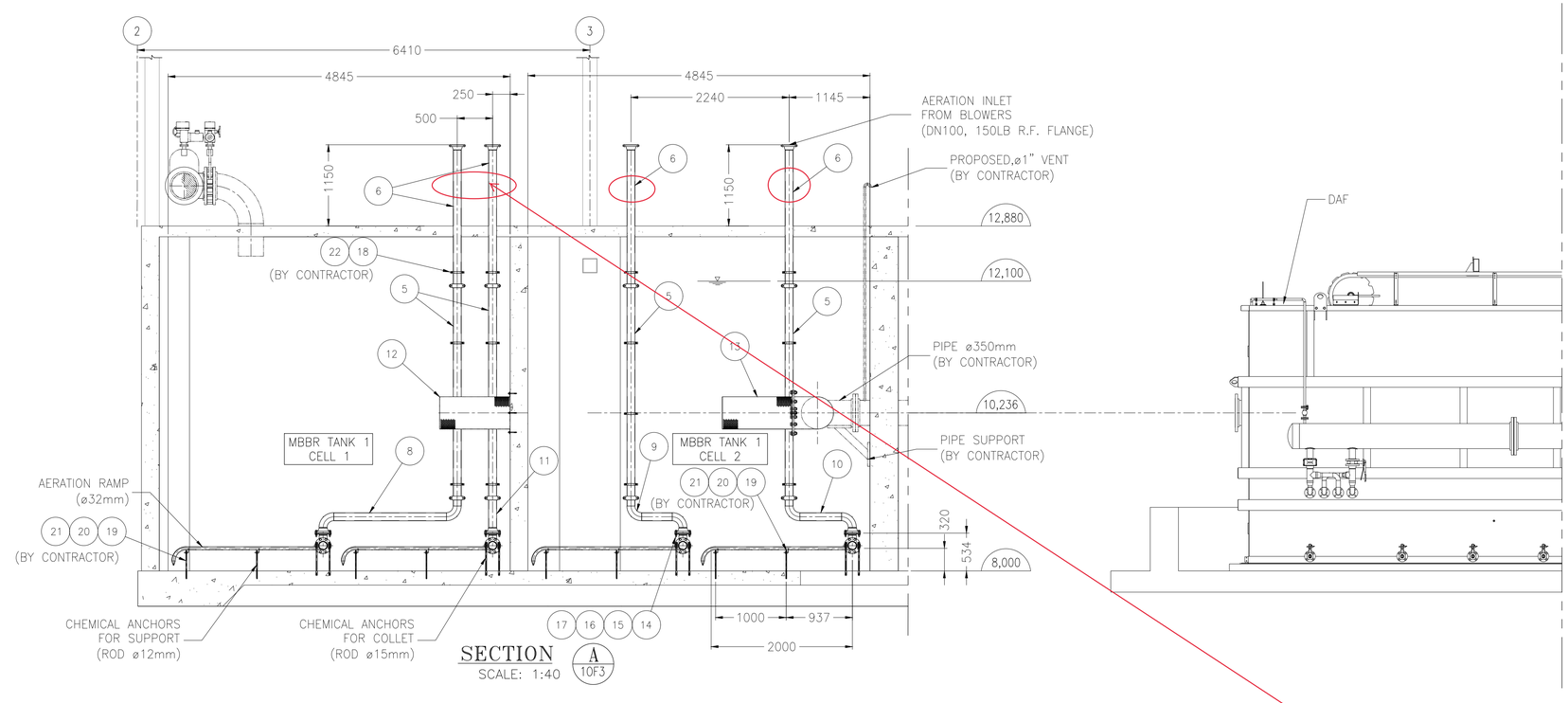

SECTION
SCALE: 1:40
A
10F3

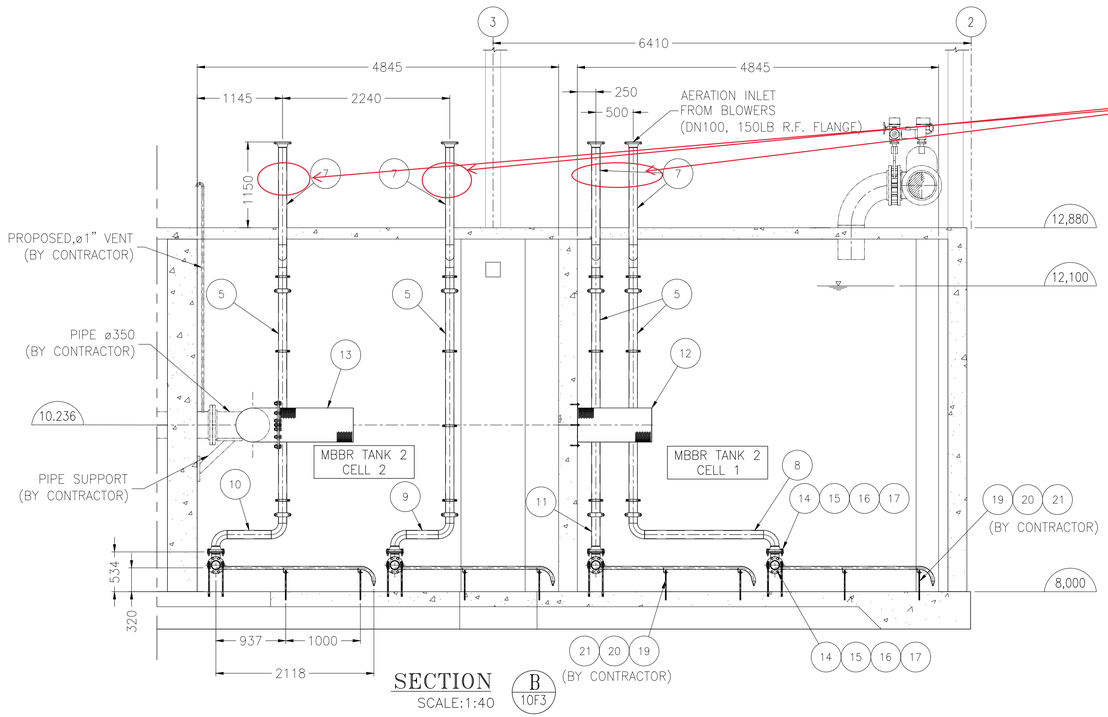

SECTION
SCALE:1:40
B
10F3

AIR PLUG CONNECTIONS ON PROCESS AIR HEADERS ARE MISSING. REFER TO PID P610.

INSERT PLUG CONNECTIONS.

HC, 2019-04-18:
This piping is by Veolia.

ASK VEOLIA TO PROVIDE UPDATED DRAWINGS SHOWING AIR PLUG CONNECTIONS

HC, 2019-04-24
Veolia already provided such drawing.
See DA-Veolia-GA-07-MBBR-rev04

REV.	DESCRIPTION	DATE	RÉVISÉ REVISED	VÉRIFIÉ CHECKED	APPROUVÉ APPROVED
3	FOR APPROVAL III	2018-12-18	F.C.	F.V.	C.B.
2	FOR APPROVAL II	2018-11-20	F.C.	F.V.	C.B.
1	FOR APPROVAL	2018-11-07	F.C.	G.H.	G.H.

VEOLIA WATER TECHNOLOGIES

DESSINATEUR/DESIGNER F.C.	DATE 218-10-03
VÉRIFICATEUR/CHECKER S.M.	DATE
INGÉNIEUR/ENGINEER G.H	DATE

CLIENT: IQALUIT WWTP

TITRE / TITLE

MBBR

FIELD INSTALLATION DRAWING

ÉCHELLE / SCALE: 1:40

PROJET / PROJECT	DESSIN No /DRAWING No	INTERNE / INTERNAL	FEUILLET / SHEET	REV./REV
5000218036 – FI0007		MBBR	2/3	3

Ce document est la propriété de VEOLIA et ne peut être reproduit sans son autorisation écrite.
This document is the property of VEOLIA and cannot be reproduced without its written authorization

REF:

ANSI D

Dec. 20, 2018 7:45:05 – W:\2018\5000218036 Iqaluit WWTP (TM#5662)\15- Dessins execution_Drawings\5- FI\5000218036-FI0007-MBBR_3 (OPTION-1).dwg – ConnorF

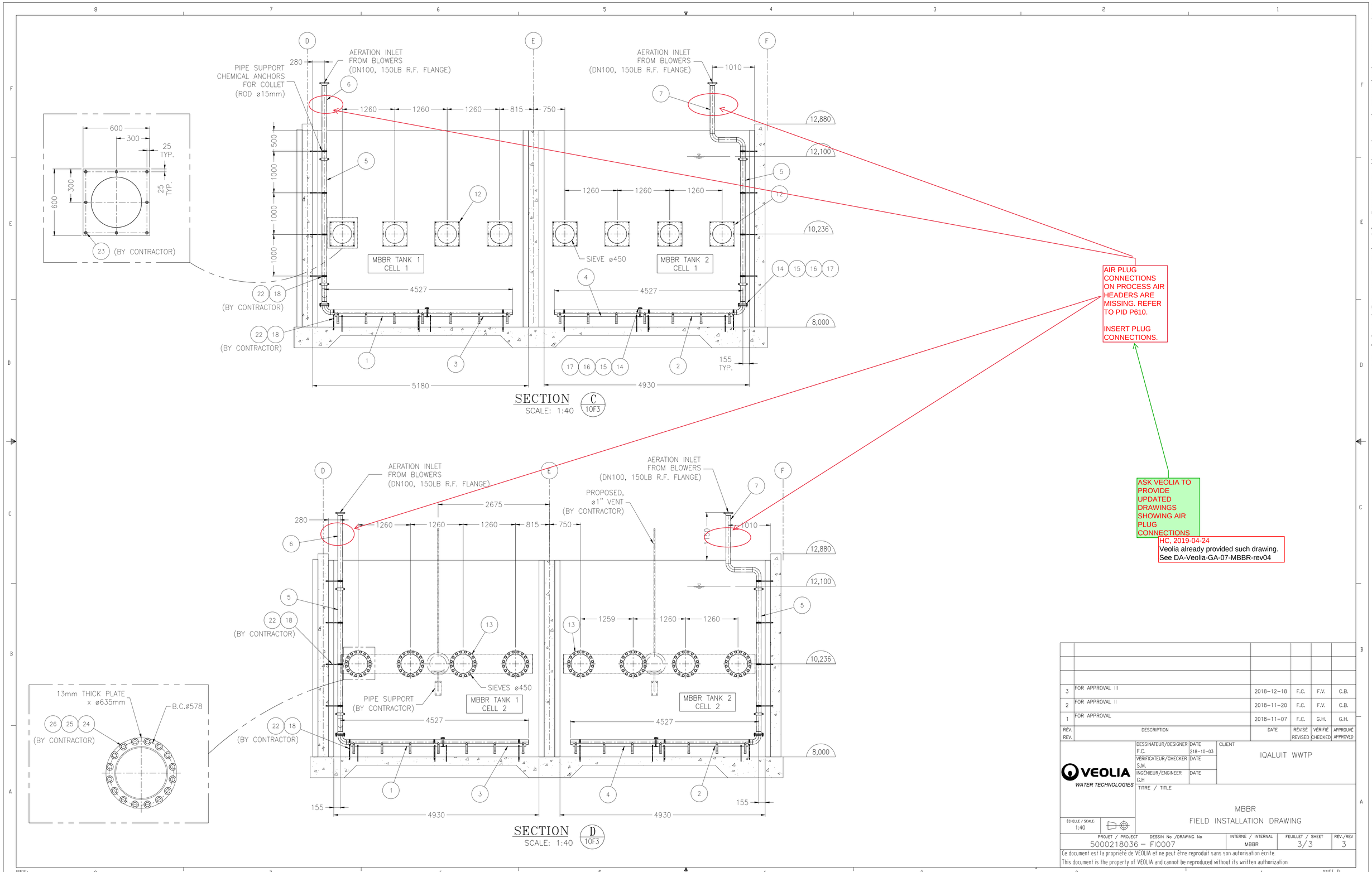

REV. REV.	DESCRIPTION	DATE	RÉVISÉ REVISED	VÉRIFIÉ CHECKED	APPROUVÉ APPROVED
3	FOR APPROVAL III	2018-12-18	F.C.	F.V.	C.B.
2	FOR APPROVAL II	2018-11-20	F.C.	F.V.	C.B.
1	FOR APPROVAL	2018-11-07	F.C.	G.H.	G.H.

VEOLIA WATER TECHNOLOGIES

DESSINATEUR/DESIGNER F.C.	DATE 218-10-03	CLIENT IQALUIT WWTP
VÉRIFICATEUR/CHECKER S.M.	DATE	
INGÉNIEUR/ENGINEER G.H	DATE	

TITRE / TITLE

MBBR
FIELD INSTALLATION DRAWING

ÉCHELLE / SCALE: 1:40

PROJET / PROJECT	DESSIN No /DRAWING No	INTERNE / INTERNAL	FEUILLET / SHEET	REV./REV
5000218036	FI0007	MBBR	3/3	3

Ce document est la propriété de VEOLIA et ne peut être reproduit sans son autorisation écrite.
This document is the property of VEOLIA and cannot be reproduced without its written authorization

REF: ANSI D

Dec 20, 2018 7:45:34 - W:\2018\5000218036 Iqaluit WWTP (TM95602)\15- Dessins execution_Drawings\5- FI\5000218036-FI0007-MBBR_3 (OPTION-1).dwg - CotnoirF

Example only:
Mill test of similar fittings.

PINACLE VERIFIED STAINLESS

INSPECTION CERTIFICATION AND MILL TEST REPORT
According to EN 10204 3.1.B

SC MFG GROUP (CHINA) INC. / SECOND DIVISION
Niangniang Miao Industry Area, Yunhe District ,
Cangzhou City, Hebei Province, CHINA
Tel : 86-317-2120955 Fax : 86-317-2120700

Customer:
PinAcle Stainless Steel Inc.
4665 Rue Cousens
St-Laurent, QC
Canada H4S 1X5

Manufactuer's Symbol

MTR No.	GWKH-2018148
Date of issue:	22-Nov-18
Grade:	304L
Made From:	CASTING
Material Specification:	ASTM/A351M-2013b
Dimensional Specification	ANSI/ASME B1.20.1-2013,ASTM A733-03

Order No. 98959 **SC MFG GROUP** **P.O.#SC-28047**

Chemical Analysis

Item No.	Item Description	THREADED	Heat No.	MTR	QTY	%C	%Si	%Mn	%P	%S	%Cr	%Ni	%Mo
43	3 IPS 3/4 x 3/4 x 1/8	BW	18J2805	304L	1,000 pcs	0.024	0.389	0.923	0.037	0.003	17.32	8.44	0.137
44	4 IPS 1 x 1 x 1/8	BW	18K1001	304L	1,500 pcs	0.026	0.397	0.969	0.041	0.005	17.36	8.42	0.136
45	6 IPS 1 x 1 x 0.134	BW	18K1010	304L	200 pcs	0.02	0.561	1.185	0.032	0.002	17.43	8.7	0.168

Mechanical Properties

Heat No.	Item Description	Tensile	Yield	Elong	Red. Area	Bend	Flattening	Hardness	Impact	Hydrostat.	Xray	Heat
		MPa	MPa	%	%	Test	Test	HRC	Test	Test	Test	Test
18J2805	3 IPS 3/4 x 3/4 x 1/8	650	272	47	-	ok	ok	71	ok	15Mpa	-	1060℃
18K1001	4 IPS 1 x 1 x 1/8	650	272	47	-	ok	ok	71	ok	15Mpa	-	1060℃
18K1010	6 IPS 1 x 1 x 0.134	650	272	47	-	ok	ok	71	ok	15Mpa	-	1060℃

Heat Treatment: **SOLUTION TREATED, 1060 °C (20 Minutes) Water Quenched**

Misc: Material in accordance with NACE MR0175-2015, MR0103-2015,ASTM A262 E ,MR0175/ISO15156
Free from Mercury contamination Addition of filler metal? ☐ No ■Yes
WE CERTIFY THIS MATERIAL HAS BEEN MANUFACTURED AND EXAMINED IN ACCORDANCE WITH ALL REQUIREMENTS OF THE SPECIFICATION(S) AND THE RESULTS OF ALL EXAMINATIONS ARE ACCEPTABLE.

Wang Jin Heng
Quality Assurance Manager

CANADIAN REGISTRATION NUMBERS			
ON	0A15545.5	NL	0A15545.50
QC	CSA-0A15545.56	NS	0A15545.58
AB		PE	0A15545.59
SK	CSA-0A15545.56	NT	0A15545.5T
MB	0A15545.54	YT	0A15545.5Y
NB	0A15545.57	NU	0A15545.5N

Example only:
Mill test of similar fittings.

INSPECTION CERTIFICATE AND MILL TEST REPORT

SC MFG. GROUP INC.
/ JIANGYIN TIANNING METAL PIPE FITTING CO.LTD
No. 115 LONG DING RD,SHANGUAN INDUSTRIAL ZONE,
JIANGYIN CITY,JIANGSU PROVINCE, CHINA

Customer:

Pinacle Stainless Steel Inc.

4665 Rue Cousens
St-Laurent, QC
Canada H4S 1X5

Manufacturer's Symbol

SC-TN

According to
3. 1/ EN 10204

MTR No.	RY18-003
Date of issue:	05-Nov-18
Grade:	Q235 CLASS B
Made From:	STEEL INGOT AND ROUND BAR
Material Specification:	ASTM 283
Dimensional Specification:	According to clients' drawing

Order No. 100929 **SC MFG PO No.SC-18003-7**

Chemical Analysis

Item No.	Item Description	Material	Heat No.	QTY	%C	%Mn	%P	%S	%Si	%Ni	%Cr	%Mo	%N
1	3" Galv Plate flanges 150 Drilling 3/4" THICK	Q235 B	653	800	0.15	0.40	0.022	0.021	0.16	0.01	0.07	-	-
2	4" Galv Plate flanges 150 Drilling 3/4" THICK	Q235 B	653	900	0.15	0.40	0.022	0.021	0.16	0.01	0.07	-	-
3	5" Galv Plate flanges 150 Drilling 3/4" THICK	Q235 B	653	200	0.15	0.40	0.022	0.021	0.16	0.01	0.07	-	-

Mechanical Properties

Heat No	Item Description	Material	Tensile	Yield	Elong.	Red. Area	Hardness	Impact	PT	UT	Visual &	Other	
			MPa	MPa	%	%	HB	Test	Test	Test	Dimension		
653	3" Galv Plate flanges 150 Drilling 3/4" THICK	Q235 B	428	296	33	-	-	-	-	-	ok	-	
	4" Galv Plate flanges 150 Drilling 3/4" THICK	Q235 B	428	296	33	-	-	-	-	-	ok	-	
	5" Galv Plate flanges 150 Drilling 3/4" THICK	Q235 B	428	296	33	-	-	-	-	-	ok	-	

HOT DIP GALVANIZING TECHNOLOGICAL PROCESS:
WORKPIECE, DEGREASING ,WASHING ,PICKLING,WASHING,DIP TO HELP PLATING SOLVENT,DRYING PREHEATING,HOT DIP GALVANIZING, FINISHING ,COOLING,PASSIVATION,RINSING,DRYING,INSPECTION

NOTE: ALL HOT DIP GALVANIZING PROCESSES IN ACCORDANCE WITH ASTM A123 & CSA G164M92(R2003) FOR HOT DIP GALVANIZING

WE CERTIFY THIS MATERIAL HAS BEEN MANUFACTURED AND EXAMINED
IN ACCORDING WITH ALL REQUIREMENTS OF THE SPECIFICATION(S)
AND THE RESULTS OF ALL EXAMINATIONS ARE ACCEPTABLE.

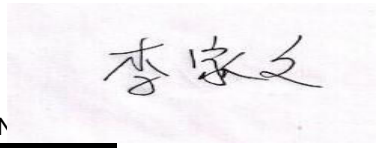

LI JIA WEN
Quality Assurance Manager

REVIEWED BY CONTRACTOR

Kudlik Construction Ltd.

NAME: Sandra Rousseau P.Eng

DATE: Avr 24, 2019

NORCLAIR
MÉCANIQUE DE PROCÉDÉ

SHOP DRAWINGS

DA-MP-49R2 Process piping (MBBR to plant outlet)

Date : 2019-04-24

Information general	
Project : **WWTP UPGRADE - IQALUIT**	
Client : Kudlik Construction Ltd. To : Sandra Rousseau P.Eng., Project Manager	Project number : **2018-062** E-mail : srousseau@kudlik.biz
Contractor : **Norclair inc.**	Project number Norclair : **P1039**
Address : 1100, Montée Masson, Laval, QC, Canada H7E 4P2	
Project Manager : Hugo Chartier, Project Manager	E-mail: hchartier@norclair.ca
Phone : 450-688-4012 # 706	Cell. : 514-703-0263

Information, subcontractor or supplier	
Sub/supplier :	
Contact :	Phone :

Information on the equipment	
Speciality : **Process**	
Equipment :	
Drawing reference :	
Specification reference : **40 05 13** (Page xx / xx)	Division :
Article :	Number of pages : 13

SPOOL DIMENSIONS HAVE NOT BEEN CHECKED IN DETAIL. CONTRACTOR TO ENSURE DIMENSIONS ARE CORRECT FOR THE INSTALLATION AND MATCH CONNECTION TO MBBRs AND DAF UNITS AS PER VEOLIA'S APPROVED SHOP DRAWINGS.

CONSULTANT APPROVAL

STANTEC PROJECT #: 110126045

SUBMITTAL # DA-MP-49R2

This review by Stantec is for general conformance with the design concept of Stantec's design of the:

☑ Process ☐ Electrical
☐ Structural ☐ Other
☐ Mechanical

component(s) only and does not mean that Stantec has verified or approves the shop drawing(s). The Contractor remains solely responsible for the shop drawing(s) and this review by Stantec does not relieve the Contractor of the Contractor's responsibility for errors or omissions in the shop drawing(s) or for meeting all requirements of the contract documents. This review does not mean that Stantec approves the detailed design inherent in the shop drawing, responsibility for which shall remain with the Contractor submitting same, nor does this review mean that Stantec accepts any deviation of the shop drawing(s) from the contract documents. The Contractor is responsible for confirming all dimensions and correlating them at the job site, for all construction means, methods and techniques, and for coordination of construction work of all trades, including coordination of all shop drawings.

Stantec

☐ REVIEWED

☑ REVIEWED, AS NOTED

☐ REVISE AND RESUBMIT

☐ NOT REVIEWED

DATE May 8, 2019

BY Alejandro Rojas, P.Eng

1100, montée Masson
Laval, QC, Canada
H7E 4P2

: 450-688-4012
: 450-661-6341
E-Mail : info@norclair.ca
www.norclair.ca

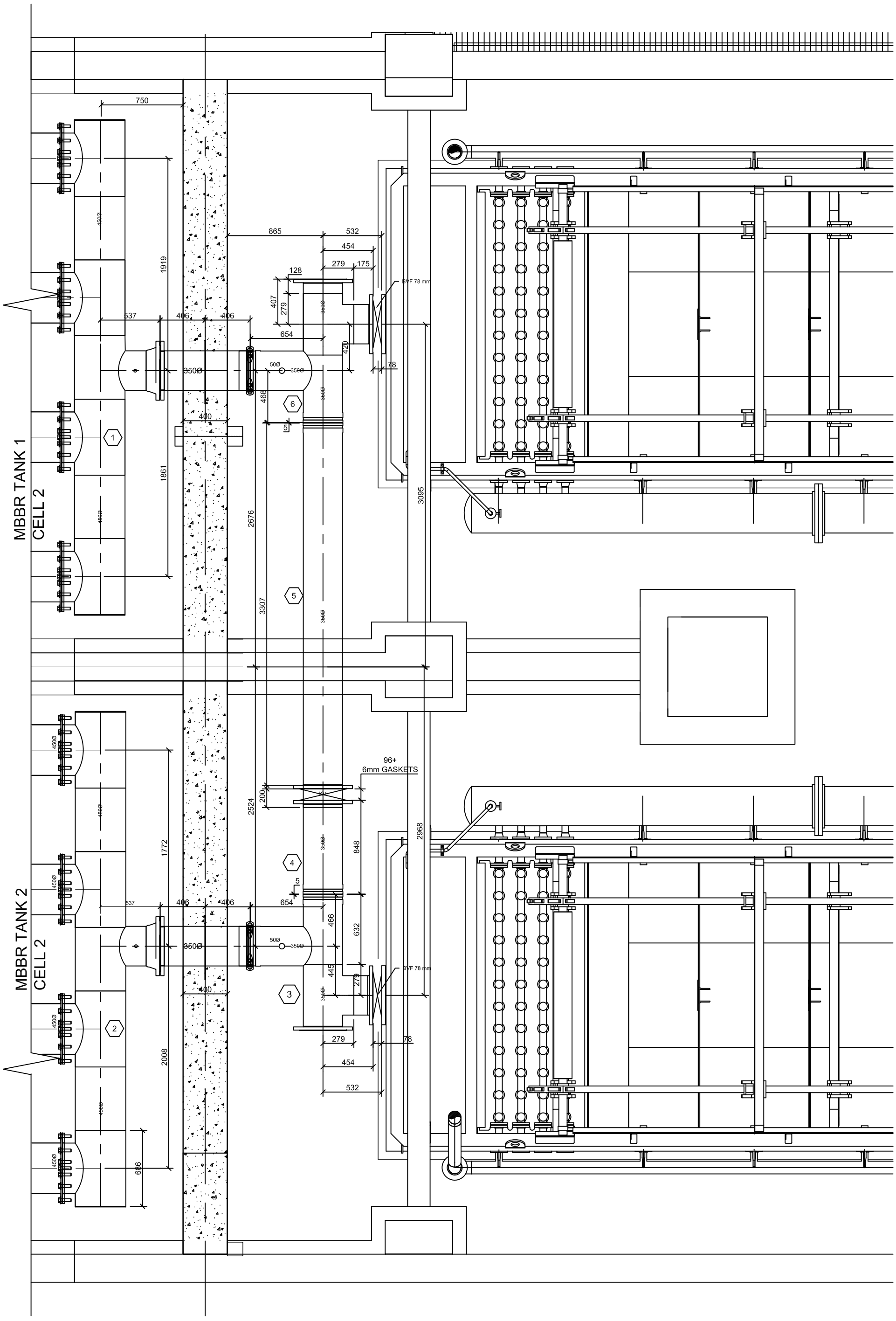

REVISION:		
01	FOR APPROVAL	2019-04-23
02	REVISION	2019-04-24

PROJECT:

Iqaluit Wastewater Treatment Plant Upgrade

CLIENT:

CITY OF IQALUIT

Iqaluit

ᐃᖃᓗᐃᑦ

NORCLAIR
MÉCANIQUE DE PROCÉDÉ

DAF UNITS 1 & 2 LOWER LEVEL MANIFOLD INSTALLATION ITEMS 1 @ 6

DATE: 2019-04-17	SCALE: 1:50
VERIFIED BY: H.C.	N. PROJECT NORCLAIR: P-1039
DRAWN BY: E.A.	N. DRAWING: P1039-INST. 01-06

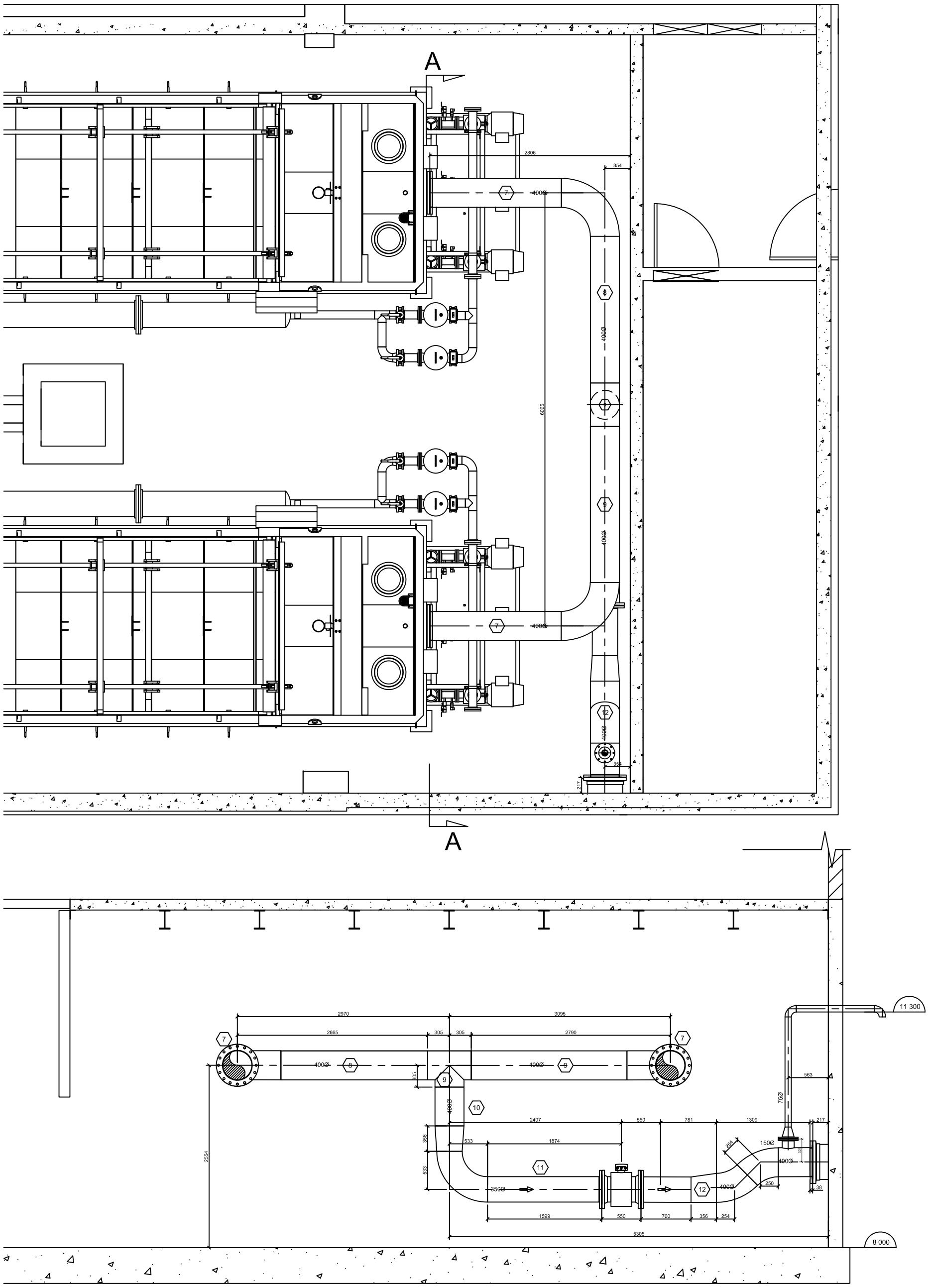

A - A

REVISION:		
01	FOR APPROVAL	2019-04-18
02	REVISION	2019-04-24

PROJECT:

Iqaluit Wastewater Treatment Plant Upgrade

CLIENT:

CITY OF IQALUIT

Iqaluit

ᐃᖃᓗᐃᑦ

NORCLAIR MÉCANIQUE DE PROCÉDÉ

DAF UNITS 1 & 2 LOWER LEVEL PIPES INSTALLATION ITEMS 7 @ 12

DATE: 2019-04-17	SCALE: 1:50
VERIFIED BY: H.C.	N. PROJECT NORCLAIR: P-1039
DRAWN BY: E.A.	N. DRAWING: P1039-INST. 07-12

ITEM: 3
MATERIAL: SS 304L 10S
QTY: 1

3

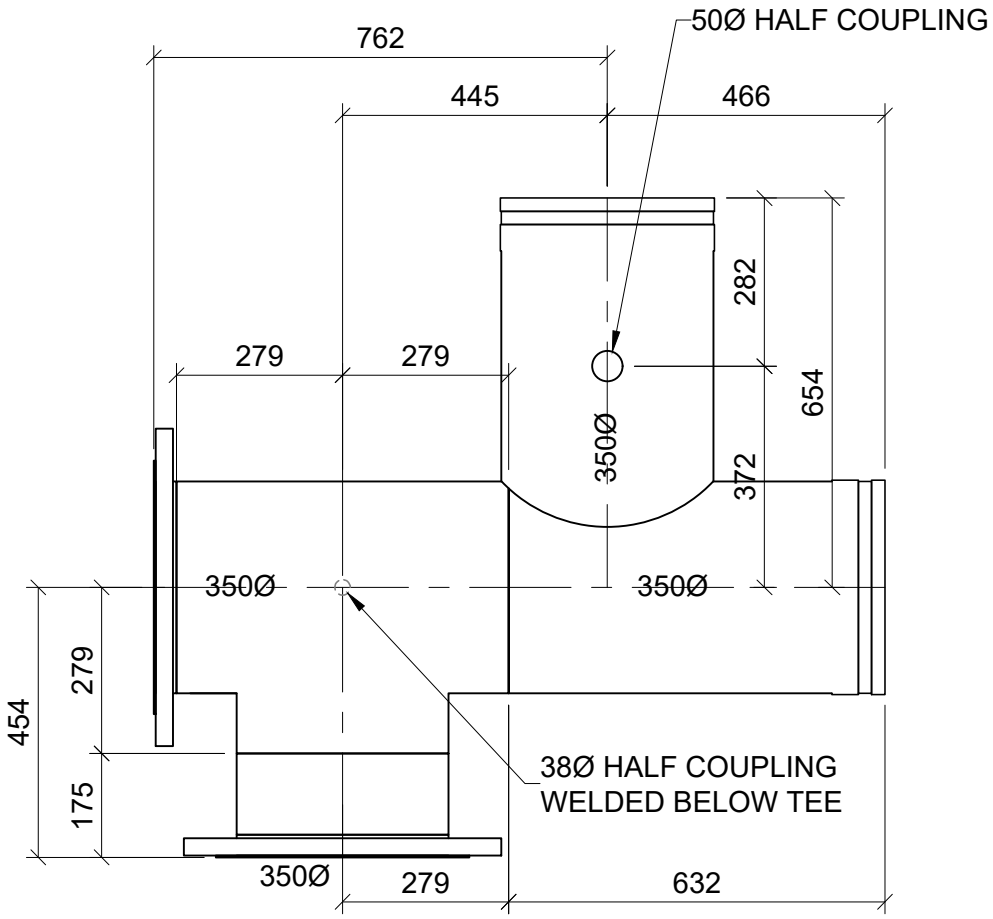

# PART	DESCRIPTION	UNIT QTY	TOTAL QTY
ITEM 3	- PIPE 14"Ø SS 304L Sch10S	-	-
	- 14" Ø BACKING FLANGE GALVANIZED STEEL	2x	2 x
	- 14" Ø ANGLE COLLAR SS 304L	2x	2 x
	- 14"x14"Ø TEE SS 304L Sch10S	1 x	1 x
	- 1 1/2"Ø HALF-COUPLING SS 304L	1 x	1 x
	- 2"Ø HALF-COUPLING SS 304L	1 x	1 x

# REV.	REVISION :	DATE :
00	FABRICATION	2019-04-23
01	REVISION	2019-04-24

CLIENT : Iqaluit

PROJECT :
Iqaluit Wastewater Treatment Plant Upgrade

NORCLAIR MÉCANIQUE DE PROCÉDÉ

TITLE OF THE DRAWING:
DAF - FABRICATION ITEM 03

DATE : 2019-04-12	SCALE : AUCUNE
DRAWN BY : A.E.	No PROJECT NORCLAIR : P1039
VERIFIED BY : H.C.	No DRAWING : P1039-FAB-03

ITEM: 4
MATERIAL: SS 304L 10S
QTY: 1

4

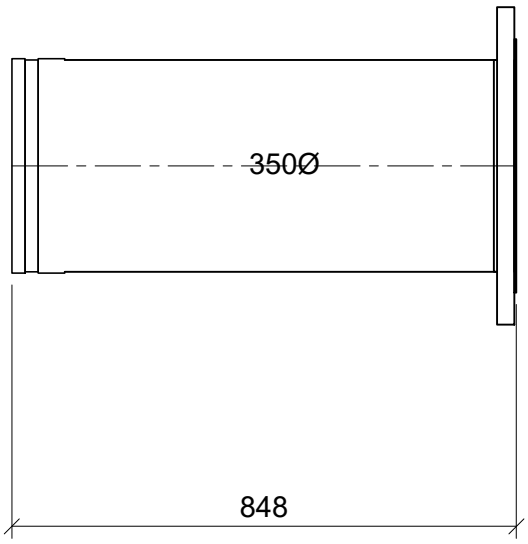

# PART	DESCRIPTION	UNIT QTY	TOTAL QTY
ITEM 4	- PIPE 14"Ø SS 304L Sch10S	-	-
	- 14" Ø BACKING FLANGE GALVANIZED STEEL	1x	1 x
	- 14" Ø ANGLE COLLAR SS 304L	1x	2 x

# REV.	REVISION :	DATE :
00	FABRICATION	2019-04-18
01	REVISION	2019-04-24

CLIENT : Iqaluit

PROJECT :
Iqaluit Wastewater Treatment Plant Upgrade

NORCLAIR MÉCANIQUE DE PROCÉDÉ

TITLE OF THE DRAWING:
FABRICATION ITEM 04

DATE :	2019-04-11	SCALE :	AUCUNE
DRAWN BY :	A.E.	No PROJECT NORCLAIR :	P1039
VERIFIED BY :	H.C.	No DRAWING :	P1039-FAB-04

ITEM: 5
MATERIAL: SS 304L 10S
QTY: 1

5

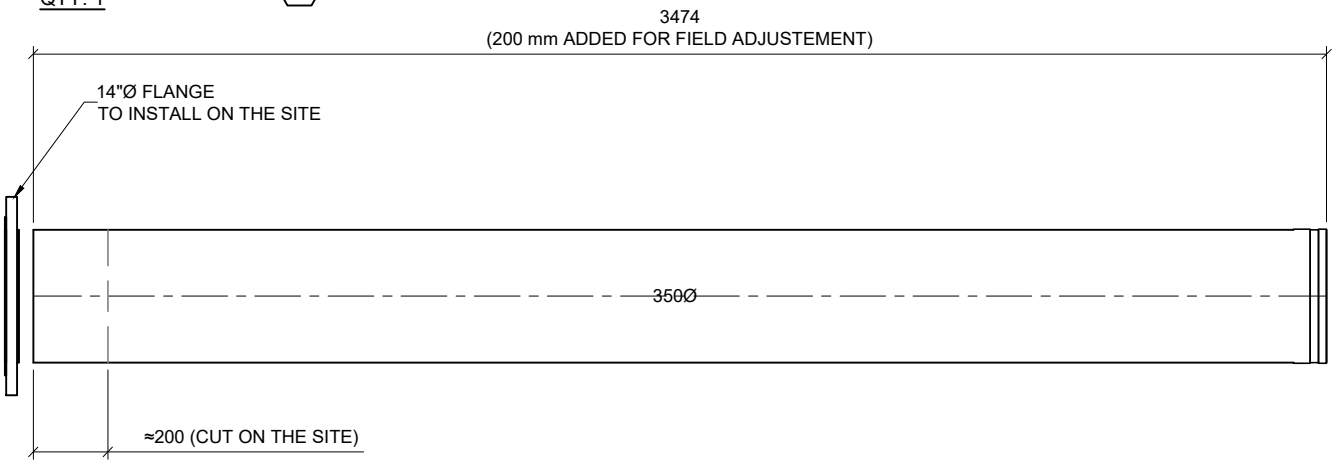

# PART	DESCRIPTION	UNIT QTY	TOTAL QTY
MAN01	- PIPE 14"Ø SS 304L Sch10S	-	-
	- 14" Ø BACKING FLANGE GALVANIZED STEEL	1x	1 x
	- 14" Ø ANGLE COLLAR SS 304L	1x	1 x

# REV.	REVISION :	DATE :
00	FABRICATION	2019-04-18
01	REVISION	2019-04-24

CLIENT : Iqaluit

PROJECT :

Iqaluit Wastewater Treatment Plant Upgrade

NORCLAIR MÉCANIQUE DE PROCÉDÉ

TITLE OF THE DRAWING:

DAF - FABRICATION ITEM 05

DATE : 2019-04-11	SCALE : AUCUNE
DRAWN BY : A.E.	No PROJECT NORCLAIR : P1039
VERIFIED BY : H.C.	No DRAWING : P1039-FAB-05

ITEM: 6
MATERIAL: SS 304L 10S
QTY: 1

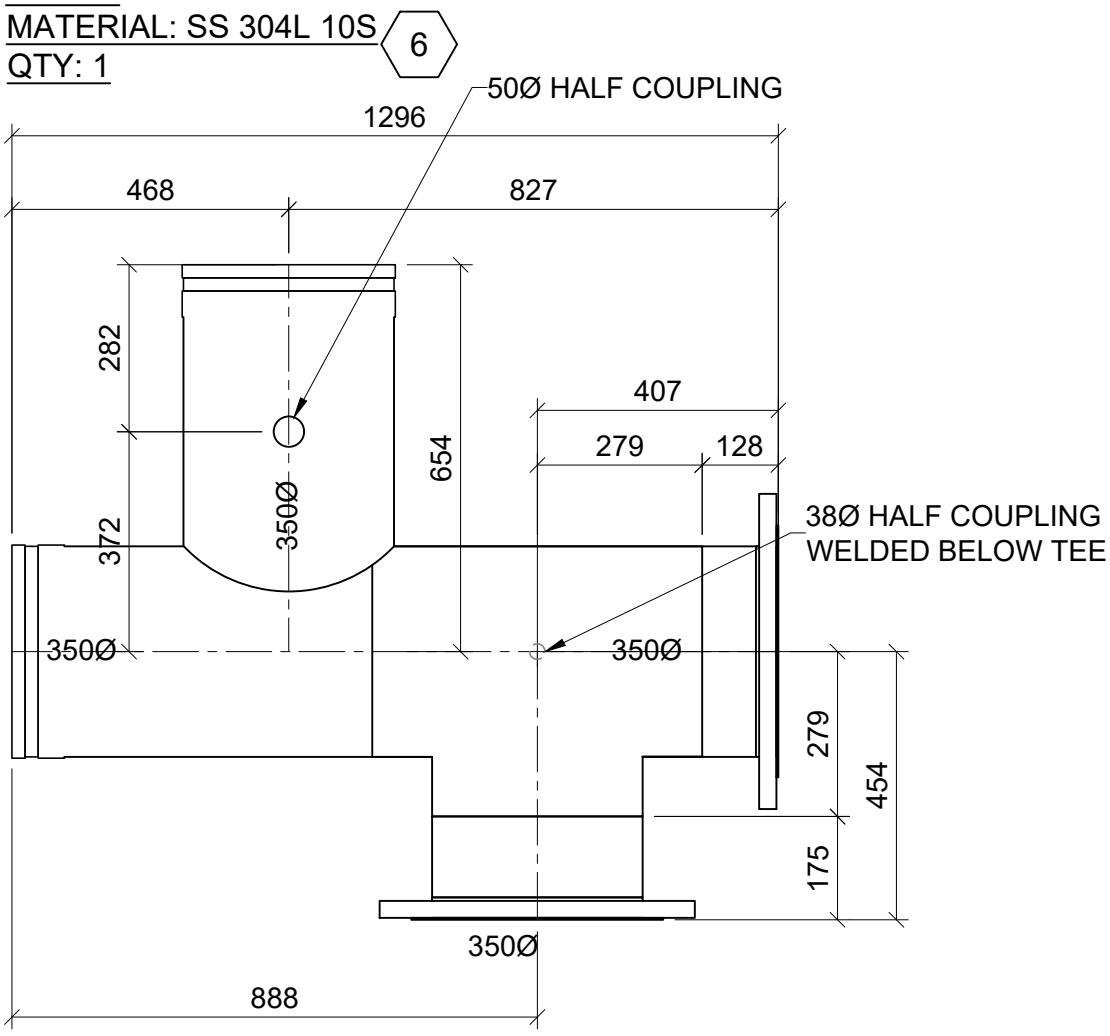

# PART	DESCRIPTION	UNIT QTY	TOTAL QTY
ITEM 6	- PIPE 14"Ø SS 304L Sch10S	-	-
	- 14" Ø BACKING FLANGE GALVANIZED STEEL	2x	2 x
	- 14" Ø ANGLE COLLAR SS 304L	2x	2 x
	- 14"x14"Ø TEE SS 304L Sch10S	1 x	1 x
	- 1 1/2"Ø HALF-COUPLING SS 304L	1 x	1 x
	- 2"Ø HALF-COUPLING SS 304L	1 x	1 x

# REV.	REVISION :	DATE :
00	FABRICATION	2019-04-23
01	REVISION	2019-04-24

CLIENT : Iqaluit

PROJECT :
Iqaluit Wastewater Treatment Plant Upgrade

NORCLAIR MÉCANIQUE DE PROCÉDÉ

TITLE OF THE DRAWING:
DAF - FABRICATION ITEM 06

DATE : 2019-04-12	SCALE : AUCUNE
DRAWN BY : A.E.	No PROJECT NORCLAIR : P1039
VERIFIED BY : H.C.	No DRAWING : P1039-FAB-06

ITEM: 7
MATERIAL: SS 304L 10S
QTY: 2

7

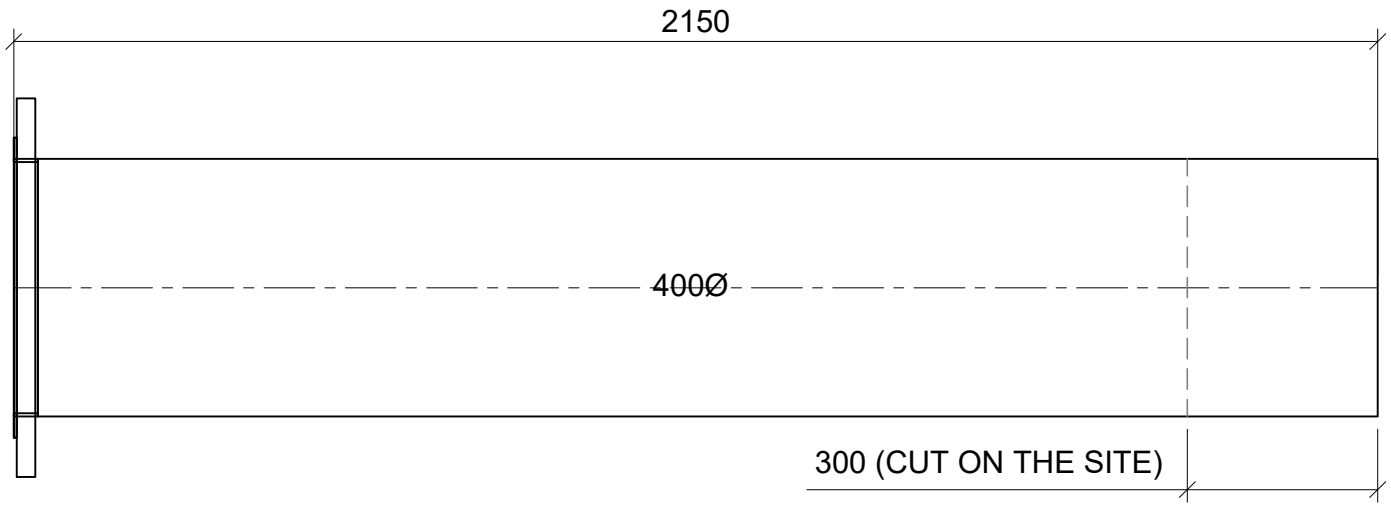

# PART	DESCRIPTION	UNIT QTY	TOTAL QTY
ITEM 7	- PIPE 16"Ø SS 304L Sch10S	-	-
	- 16" Ø BACKING FLANGE GALVANIZED STEEL	1x	2 x
	- 16" Ø ANGLE COLLAR SS 304L	1x	2 x

# REV.	REVISION :	DATE :
00	FABRICATION	2019-04-18
01	REVISION	2019-04-24

CLIENT : Iqaluit

PROJECT :
Iqaluit Wastewater Treatment Plant Upgrade

NORCLAIR MÉCANIQUE DE PROCÉDÉ

TITLE OF THE DRAWING:
DAF - FABRICATION ITEM 07

DATE : 2019-04-12	SCALE : AUCUNE
DRAWN BY : A.E.	No PROJECT NORCLAIR : P1039
VERIFIED BY : H.C.	No DRAWING : P1039-FAB-07

ITEM: 8
MATERIAL: SS 304L 10S
QTY: 1

8

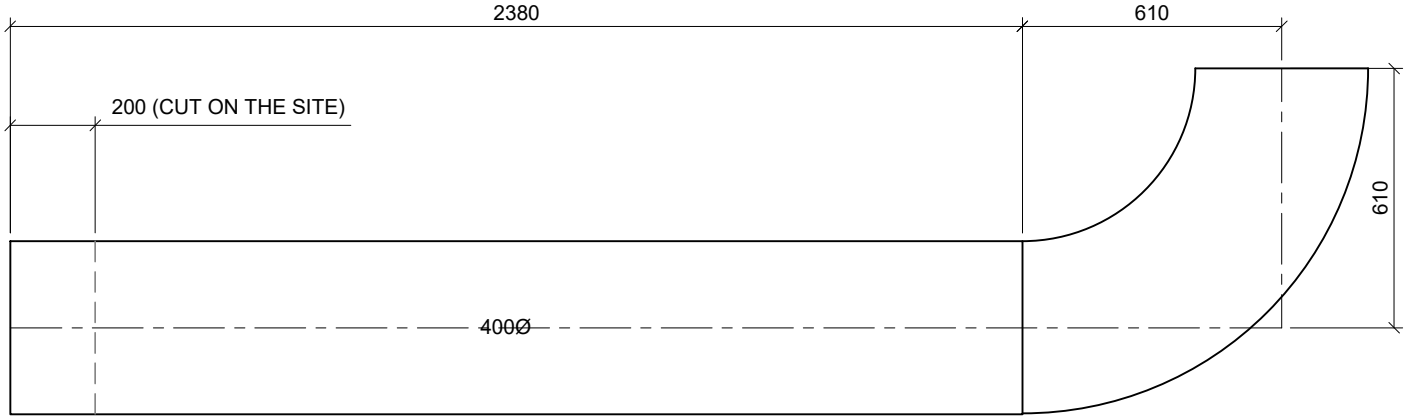

# PART	DESCRIPTION	UNIT QTY	TOTAL QTY
ITEM 8	- PIPE 16"Ø SS 304L Sch10S	-	-
	- 16" Ø NPS 90° ELBOW SS 304L Sch10S	1x	1x

# REV.	REVISION :	DATE :
00	FABRICATION	2019-04-18
01	REVISION	2019-04-24

CLIENT : Iqaluit

PROJECT :

Iqaluit Wastewater Treatment Plant Upgrade

NORCLAIR MÉCANIQUE DE PROCÉDÉ

TITLE OF THE DRAWING:

DAF - FABRICATION ITEM 08

DATE : 2019-04-12	SCALE : AUCUNE
DRAWN BY : A.E.	No PROJECT NORCLAIR : P1039
VERIFIED BY : H.C.	No DRAWING : P1039-FAB-08

ITEM: 9
MATERIAL: SS 304L 10S
QTY: 1

9

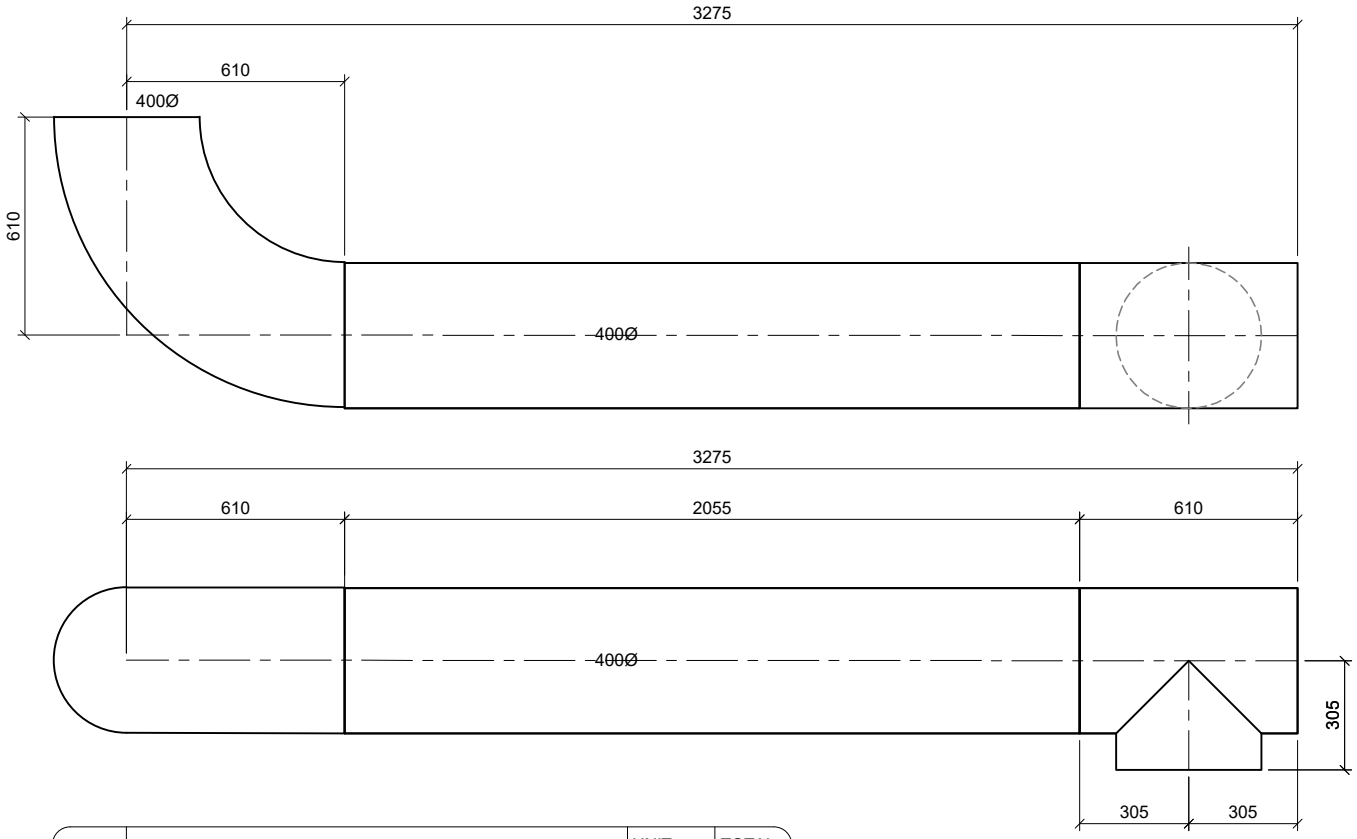

# PART	DESCRIPTION	UNIT QTY	TOTAL QTY
ITEM 9	- PIPE 16"Ø SS 304L Sch10S	-	-
	- 16" Ø 90° ELBOW SS 304L Sch10S	1x	1x
	- 16"x16"Ø TEE SS 304L Sch10S	1x	1x

# REV.	REVISION :	DATE :
00	FABRICATION	2019-04-18
01	REVISION	2019-04-24

CLIENT : Iqaluit

PROJECT :

Iqaluit Wastewater Treatment Plant Upgrade

NORCLAIR MÉCANIQUE DE PROCÉDÉ

TITLE OF THE DRAWING:

DAF - FABRICATION ITEM 09

DATE : 2019-04-12	SCALE : AUCUNE
DRAWN BY : A.E.	No PROJECT NORCLAIR : P1039
VERIFIED BY : H.C.	No DRAWING : P1039-FAB-09

ITEM: 10
MATERIAL: SS 304L 10S
QTY: 1

10

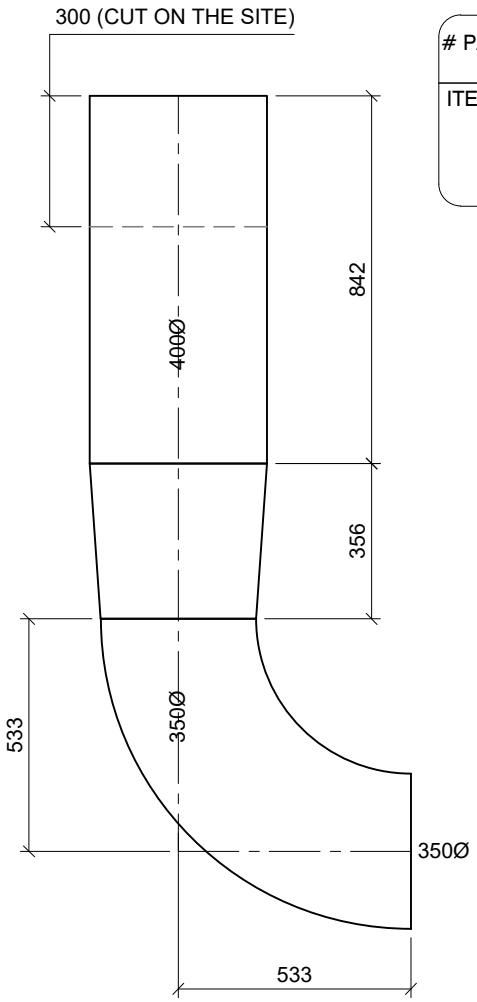

# PART	DESCRIPTION	UNIT QTY	TOTAL QTY
ITEM 10	- PIPE 16"Ø SS 304L Sch10S	-	-
	- 16" X 14" Ø REDUCER SS 304L Sch10S	1x	1x
	- 14" Ø 90° ELBOW SS 304L Sch10S		

# REV.	REVISION :	DATE :
00	FABRICATION	2019-04-18
01	REVISION	2019-04-24

CLIENT : Iqaluit

PROJECT :

Iqaluit Wastewater Treatment Plant Upgrade

NORCLAIR MÉCANIQUE DE PROCÉDÉ

TITLE OF THE DRAWING:

DAF - FABRICATION ITEM 10

DATE : 2019-04-12	SCALE : AUCUNE
DRAWN BY : A.E.	No PROJECT NORCLAIR : P1039
VERIFIED BY : H.C.	No DRAWING : P1039-FAB-10

ITEM: 11
MATERIAL: SS 304L 10S
QTY: 1

11

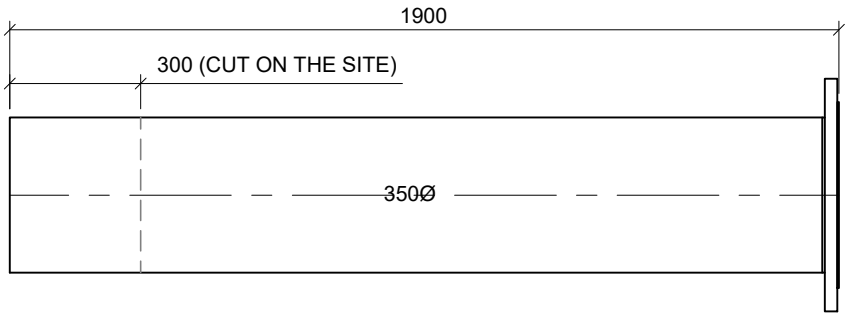

# PART	DESCRIPTION	UNIT QTY	TOTAL QTY
ITEM 11	- PIPE 14"Ø SS 304L Sch10S	-	-
	- 14" Ø BACKING FLANGE GALVANIZED STEEL	1x	2 x
	- 14" Ø ANGLE COLLAR SS 304L	1x	2 x

# REV.	REVISION :	DATE :
00	FABRICATION	2019-04-18
01	REVISION	2019-04-24

CLIENT : Iqaluit

PROJECT :
Iqaluit Wastewater Treatment Plant Upgrade

NORCLAIR MÉCANIQUE DE PROCÉDÉ

TITLE OF THE DRAWING:
DAF - FABRICATION ITEM 11

DATE : 2019-04-12	SCALE : AUCUNE
DRAWN BY : A.E.	No PROJECT NORCLAIR : P1039
VERIFIED BY : H.C.	No DRAWING : P1039-FAB-11

ITEM: 12
MATERIAL: SS 304L 10S
QTY: 1

12

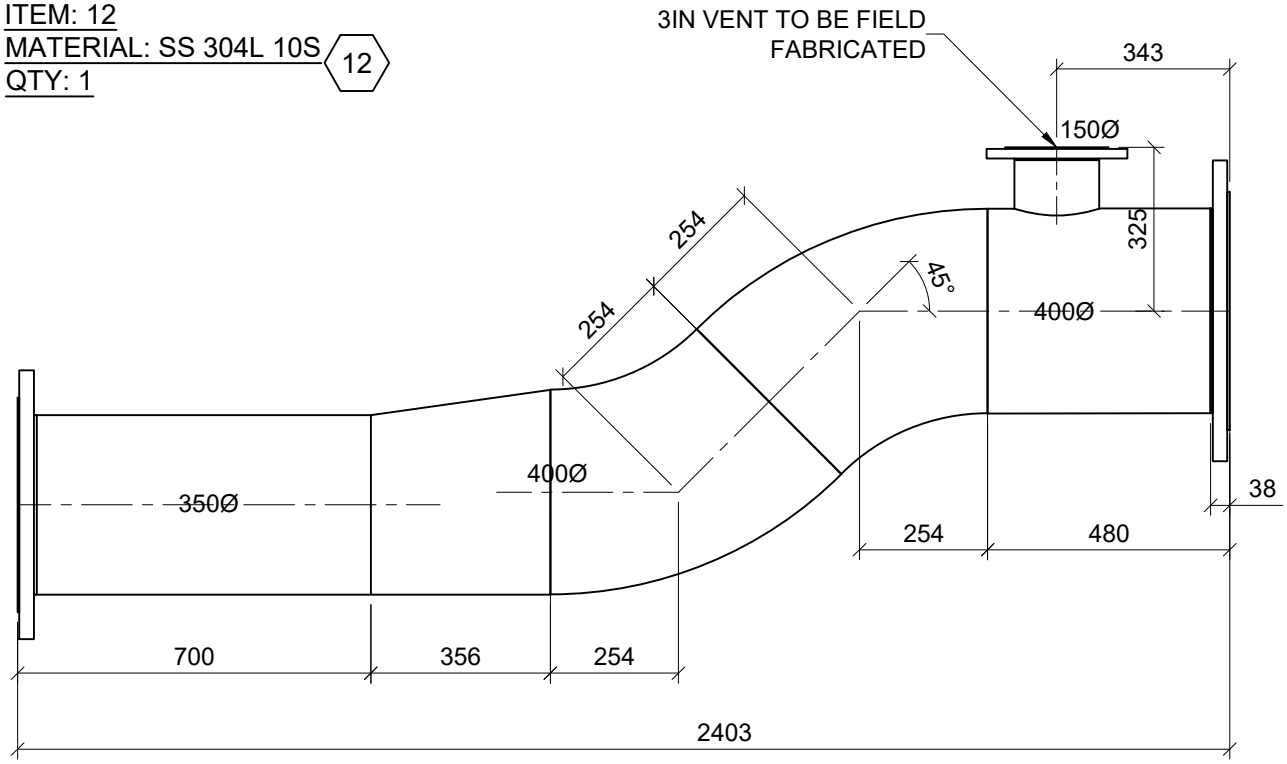

# PART	DESCRIPTION	UNIT QTY	TOTAL QTY
ITEM 12	- PIPE 14"Ø SS 304L Sch10S	-	-
	- 14" Ø BACKING FLANGE GALVANIZED STEEL	1x	1x
	- 14" Ø ANGLE COLLAR SS 304L	1x	1x
	- 16" X 14" Ø ECCENTRIC REDUCER SS 304L Sch10S	1x	1x
	- 16" Ø 45° ELBOW SS 304L Sch10S	2x	2x
	- PIPE 6"Ø SS 304L Sch10S	-	-
	- 6" Ø BACKING FLANGE GALVANIZED STEEL	1x	1x
	- 6" Ø ANGLE COLLAR SS 304L	1x	1x
	- 16" Ø BACKING FLANGE GALVANIZED STEEL	1x	1x
	- 16" Ø ANGLE COLLAR SS 304L	1x	1x

# REV.	REVISION :	DATE :
00	FABRICATION	2019-04-18
01	REVISION	2019-04-24

CLIENT : Iqaluit

PROJECT :
Iqaluit Wastewater Treatment Plant Upgrade

NORCLAIR MÉCANIQUE DE PROCÉDÉ

TITLE OF THE DRAWING:
DAF - FABRICATION ITEM 12

DATE : 2019-04-12	SCALE : AUCUNE
DRAWN BY : A.E.	No PROJECT NORCLAIR : P1039
VERIFIED BY : H.C.	No DRAWING : P1039-FAB-12

(2x) 3in - CCN-021
(1x) 4in - BV-03-699

REVIEWED BY CONTRACTOR
Kudlik Construction Ltd.
NAME: Sandra Rousseau P.Eng
DATE: Mai 21, 2019

NORCLAIR
MÉCANIQUE DE PROCÉDÉ

SHOP DRAWINGS

DA-MP-50R1 Butterfly valve BFV02

Date : 2019-05-18

Information general	
Project : **WWTP UPGRADE - IQALUIT**	
Client : Kudlik Construction Ltd. To : Sandra Rousseau P.Eng., Project Manager	Project number : **2018-062** E-mail : srousseau@kudlik.biz
Contractor : **Norclair inc.**	Project number Norclair : **P1039**
Address : 1100, Montée Masson, Laval, QC, Canada H7E 4P2	
Project Manager : Hugo Chartier, Project Manager	E-mail: hchartier@norclair.ca
Phone : 450-688-4012 # 706	Cell. : 514-703-0263

Information, subcontractor or supplier	
Sub/supplier : DM Valves	
Contact :	Phone :

Information on the equipment	
Speciality : **Process**	
Equipment : Butterfly valve	
Drawing reference :	
Specification reference : **40 05 25** (Page xx / xx)	Division :
Article :	Number of pages : 4

CONSULTANT APPROVAL

PROVIDE VALVE DISCS MADE FROM DUCTILE IRON AS PER SECTION 40 05 25 AND IN CONSISTENCY WITH VEOLIA'S SUPPLY.

STANTEC PROJECT #: 110126045
SUBMITTAL # DA-MP-50R1-BFV02.

This review by Stantec is for general conformance with the design concept of Stantec's design of the:
☑ Process ☐ Electrical
☐ Structural ☐ Other
☐ Mechanical

component(s) only and does not mean that Stantec has verified or approves the shop drawing(s). The Contractor remains solely responsible for the shop drawing(s) and this review by Stantec does not relieve the Contractor of the Contractor's responsibility for errors or omissions in the shop drawing(s) or for meeting all requirements of the contract documents. This review does not mean that Stantec approves the detailed design inherent in the shop drawing, responsibility for which shall remain with the Contractor submitting same, nor does this review mean that Stantec accepts any deviation of the shop drawing(s) from the contract documents. The Contractor is responsible for confirming all dimensions and correlating them at the job site, for all construction means, methods and techniques, and for coordination of construction work of all trades, including coordination of all shop drawings.

Stantec

☐ REVIEWED
☑ REVIEWED, AS NOTED
☐ REVISE AND RESUBMIT
☐ NOT REVIEWED

DATE MAY 21, 2019
BY Alejandro Rojas, P.Eng

1100, montée Masson
Laval, QC, Canada
H7E 4P2

4012
Fax : 450-661-6341
E-Mail : info@norclair.ca
www.norclair.ca

ATTENTION

THIS DOCUMENT IS VALID IF AND ONLY IF YOU PERSONALLY DOWNLOADED IT FROM WWW.BRAY.COM
IF YOU RECEIVED THIS DOCUMENT FROM ANY OTHER SOURCE, PLEASE TAKE INTO CONSIDERATION THAT ALTERATIONS COULD HAVE BEEN MADE, FOR AN ORIGINAL COPY, PLEASE CONTACT BRAY VALVE AT 281-894-5454

SERIES 31H
ES11A-0598
Date: October 2009

Valve Size	A	B	C	D	E	F	G	J	K	L	M	Lug Bolting Data BC	Lug Bolting Data No. of Holes	Lug Bolting Data Threads UNC-2B	ADAPTER CODE
2"	3.69	1.62	4.32	10.62	5.50	3.54	3.16	1.25	1.32	2.30	2.55	4.75	4	.62-11	A
2½"	4.19	1.75	4.32	10.62	6.00	3.54	3.16	1.25	1.91	2.57	2.55	5.50	4	.62-11	A
✓3"	4.88	1.75	4.32	10.62	6.25	3.54	3.16	1.25	2.55	2.81	2.55	6.00	4	.62-11	A
✓4"	6.06	2.00	4.32	10.62	7.00	3.54	3.16	1.25	3.57	4.09	2.55	7.50	8	.62-11	B
5"	7.12	2.12	4.32	10.62	7.50	3.54	3.16	1.25	4.63	4.61	2.55	8.50	8	.75-10	C
6"	8.12	2.12	4.32	10.62	8.00	3.54	3.16	1.25	5.45	5.06	2.55	9.50	8	.75-10	C
8"	10.50	2.50	6.66	11.75	9.50	5.91	3.16	1.25	7.45	6.05	3.70	11.75	8	.75-10	D
10"	12.75	2.50	6.66	11.75	10.75	5.91	3.16	2.00	9.53	7.69	3.70	14.25	12	.88-9	E

Note: K dim is disc chordal dimension at valve face.

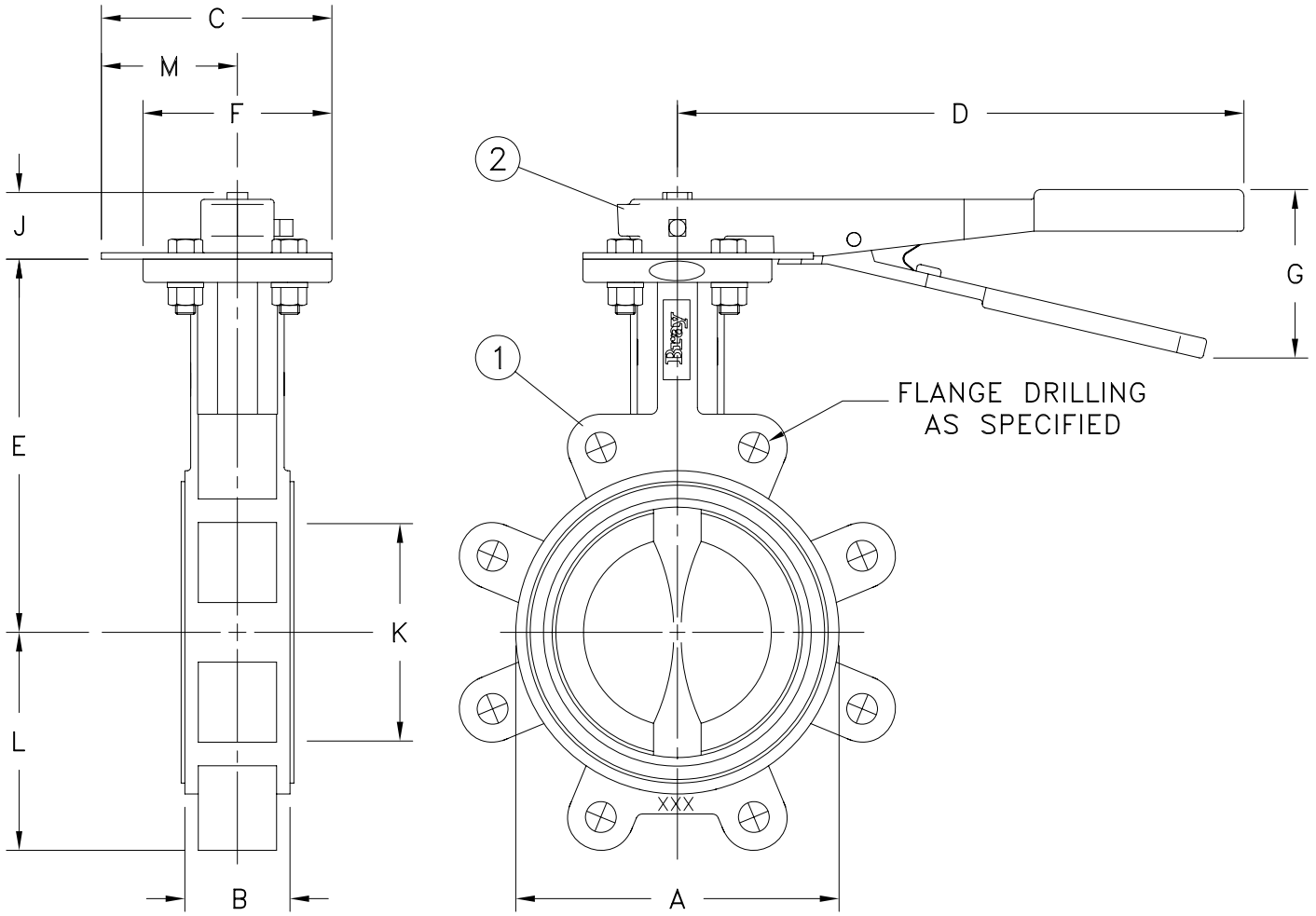

ITEM	NAME	QTY	SERIES/PART No.	MATERIAL	SPECIFICATION / REMARKS
2	HANDLE KIT	1			
1	VALVE	1			

Valve Size _____ Pressure Rating _____

Flg. Drilling _____

Customer/Project _____

Inq./P.O. No. _____

Bray Order No. _____

Certified Correct By _____ Date _____

DIMENSIONAL DRAWING (INCHES)
SERIES 31H, SIZES 2" THRU 10" BUTTERFLY VALVES
WITH SERIES 01 HANDLE KIT
250 P.S.I. (17.2 BAR)

Bray CONTROLS
A Division of BRAY INTERNATIONAL, Inc.

SHEET	REV.
1 OF 1	2

DRAWING NO. ES11A-0598

ERN 12391

The Bray Series 30/31 features a high strength one piece stem design utilizing an efficient internal disc to stem connection. This resilient seated butterfly valve provides a primary and secondary seal between the disc and seat as well as the stem and seat which ensures the total encapsulation of the line media and zero external leakage.

Product Description
Body – Ductile Iron ASTM A536 with polyester red coating
Style – Lug, according to ANSI class 125/150
Disc – Aluminum Bronze
Seat – Buna-N Bonded
Stem – 416SS
Bushing – Acytal
Stem seal – Buna n
Operation Pressure – 250 PSI
Operator
10 position manuel operated lever



PRESSURE RATINGS

BIDIRECTIONAL BUBBLE TIGHT SHUT OFF – Standard Disc* Downstream flanges and disc in closed position		
Series 30/31 Standard Disc*	2"-12" (50-300mm)	175 psi (12 bar)
	14"-20" (350-500mm)	150 psi (10.3 bar)
DEAD END SERVICE – Lug Bodies and Standard Disc* No downstream flanges and disc in closed position		
Series 31	2"-12" (50-300mm)	75 psi (5.2 bar)
	14"-20" (350-500mm)	50 psi (3.4 bar)
BODY: 250 psi (17.2 bar) CWP		

*For low pressure (50 psi) applications, Bray offers a standard reduced disc diameter to decrease seating torques and extend seat life, thus increasing the valve's performance and reducing actuator costs.

VELOCITY LIMITS FOR ON/OFF SERVICES

FLUIDS: 30 ft/sec (9 m/s)	**GASES:** 175 ft/sec (54 m/s)

1 – **STEM RETAINING ASSEMBLY:** The stem is retained in the body by means of a unique stainless steel Spirolox® retaining ring, a thrust washer and two C-rings, manufactured from brass as standard, stainless steel upon request.

2 – **STEM BUSHING:** Non-corrosive, heavy duty acetal bushing absorbs actuator side thrust.

3 – **STEM SEAL:** Double "U" cup seal design is self-adjusting and gives positive sealing in both directions.

4 – **PRIMARY AND SECONDARY SEALS:** These seals prevent line media from coming in contact with the stem or body. The primary seal is an interference fit of the molded seat flat with the disc hub. The secondary seal is created because the stem diameter is greater than the diameter of the seat stem hole.

5 – **BODY:** One piece wafer or lug style. Polyester coating for excellent corrosion resistance. Nylon 11 coating is available as an option.

6 – **SEAT:** Bray's tongue and groove seat design provides complete isolation of flowing media from the body. The seat also features a molded o-ring which eliminates the use of flange gaskets.

7 – **DISC:** Casting is spherically machined and hand polished to provide a bubble tight shutoff, minimum torque, and longer seat life. Bray's resilient Nylon 11 coating comes as standard.

8 – **STEM:** Precision double "D" disc to stem connection drives the disc without the need for screws or pins. The close tolerance, double "D" connection that drives the valve disc is an exclusive feature of the Bray valve. Disassembly of the Bray stem is just a matter of pulling the stem out of the disc.



MATERIAL SELECTION OPTIONS

BODY	DISC	STEM	SEAT
Cast Iron✦	Nylon 11 Coated Ductile Iron✦	416 Stainless Steel✦	BUNA-N Food Grade✦
Ductile Iron✦	316 Stainless Steel✦	304 Stainless Steel	EPDM Food Grade✦
Carbon Steel	Nickel Aluminum Bronze	316 Stainless Steel	FKM*
Aluminum	Coated Ductile Iron	Monel® K500	White BUNA-N Food Grade
	Halar® Coated Ductile Iron		Bonded EPDM
	304 Stainless Steel		Bonded BUNA-N
	Duplex Stainless Steel		
	Super Duplex Stainless Steel		
	Hastelloy®		

✦Standard Option

*FKM is the ASTM D1418 designation for fluorinated hydrocarbon elastomers (also called fluor

Monel® is a registered trademark of The International Nickel Company, Inc.

Halar® is a registered trademark of Solvay Solexis, Inc.

Hastelloy® is a registered trademark of Haynes International, Inc.

PROVIDE VALVE DISCS MADE FROM DUCTILE IRON AS PER SECTION 40 05 25 AND IN CONSISTENCY WITH VEOLIA'S SUPPLY.



SERIES 31H

2"-20" (50mm-500mm)

Series 31H Lug valves are drille ME Class 125/150 and PN16 flanges. Series 31H valves are designed for manual operation only.

PRESSURE RATINGS

BIDIRECTIONAL BUBBLE TIGHT SHUT OFF AND DEAD END SERVICE	
2"-20" (50-500mm)	250 psi (17.2 bar)
BODY: 250 psi (17.2 bar) CWP	

VELOCITY LIMITS FOR ON/OFF SERVICES

FLUIDS: 30 ft/sec (9 m/s)	**GASES:** 175 ft/sec (54 m/s)

STANDARD MATERIAL SELECTIONS

Body	Cast Iron Ductile Iron
Disc	Nickel Aluminum Bronze Nylon 11 Coated Ductile Iron 316 Stainless Steel
Stem	416 Stainless Steel
Seat	Bonded EPDM Bonded BUNA-N

Material availability depends on valve size and series. Other materials are available. Please consult your local Bray representative for your specific application.

REVIEWED BY CONTRACTOR

Kudlik Construction Ltd.

NAME: Sandra Rousseau P.Eng

DATE: Mai 13, 2019

NORCLAIR
MÉCANIQUE DE PROCÉDÉ

SHOP DRAWINGS

DA-MP-51 Process air piping (DAF inlet)

Date : 2019-05-13

Information general	
Project : **WWTP UPGRADE - IQALUIT**	
Client : Kudlik Construction Ltd. To : Sandra Rousseau P.Eng., Project Manager	Project number : **2018-062** E-mail : srousseau@kudlik.biz
Contractor : **Norclair inc.**	Project number Norclair : **P1039**
Address : 1100, Montée Masson, Laval, QC, Canada H7E 4P2	
Project Manager : Hugo Chartier, Project Manager	E-mail: hchartier@norclair.ca
Phone : 450-688-4012 # 706	Cell. : 514-703-0263

Information, subcontractor or supplier	
Sub/supplier :	
Contact :	Phone :

Information on the equipment	
Speciality : **Process**	
Equipment :	
Drawing reference :	
Specification reference : **40 05 13** (Page xx / xx)	Division :
Article :	Number of pages : 2

CONSULTANT APPROVAL

STANTEC PROJECT #: 110126045

SUBMITTAL # DA-MP-51 Process Air Piping (DAF Inlet)

This review by Stantec is for general conformance with the design concept of Stantec's design of the:

- ☑ Process
- ☐ Structural
- ☐ Mechanical
- ☐ Electrical
- ☐ Other

component(s) only and does not mean that Stantec has verified or approves the shop drawing(s). The Contractor remains solely responsible for the shop drawing(s) and this review by Stantec does not relieve the Contractor of the Contractor's responsibility for errors or omissions in the shop drawing(s) or for meeting all requirements of the contract documents. This review does not mean that Stantec approves the detailed design inherent in the shop drawing, responsibility for which shall remain with the Contractor submitting same, nor does this review mean that Stantec accepts any deviation of the shop drawing(s) from the contract documents. The Contractor is responsible for confirming all dimensions and correlating them at the job site, for all construction means, methods and techniques, and for coordination of construction work of all trades, including coordination of all shop drawings.

Stantec

- ☐ REVIEWED
- ☑ REVIEWED, AS NOTED
- ☐ REVISE AND RESUBMIT
- ☐ NOT REVIEWED

DATE May 13, 2019

BY Alejandro Rojas, P.Eng

SPOOL DIMENSIONS WERE NOT REVIEWED IN DETAIL. CONTRACTOR TO ENSURE SPOOL DIMENSIONS MATCH DAF AIR CONNECTIONS FOR APPROPRIATE INSTALLATION.

PROCESS AIR : DAF INLET

ITEM IN-1A
QTY: 1

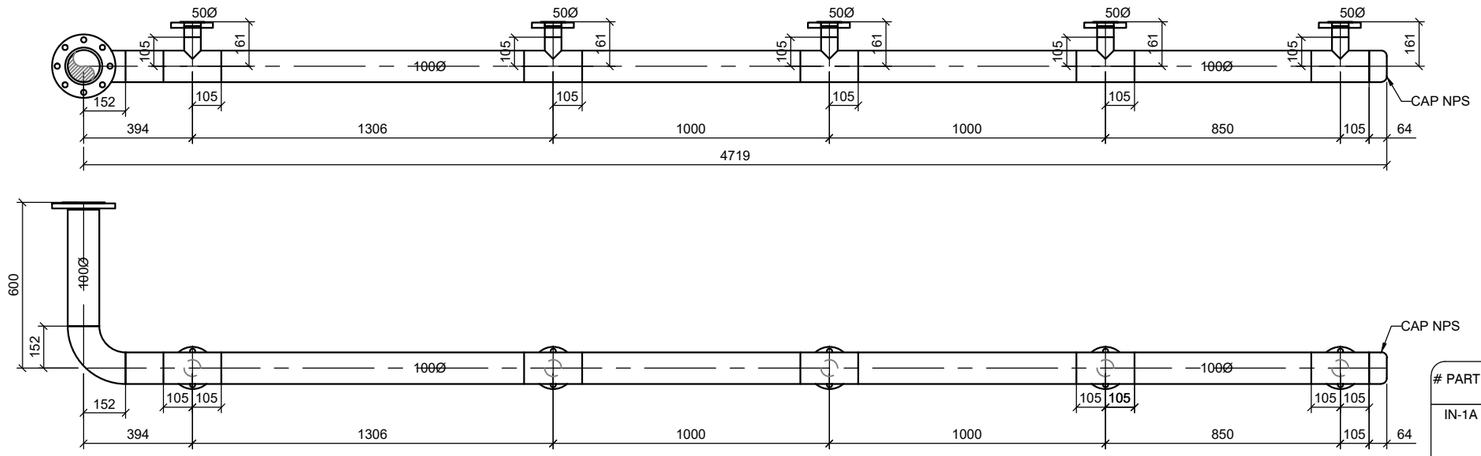

# PART	DESCRIPTION	UNIT QTY	TOTAL QTY
IN-1A	- PIPE 4"Ø SS 304L Sch10S	-	-
	- FLANGE 4"Ø GALVANIZED CL 150	1x	1x
	- 4"Ø NPS ANGLE COLLARS SS 304L	1x	1x
	- 4"Ø 90° ELBOW LONG RADIUS SS 304L Sch10S	1x	1x
	- 4"x2"Ø TEE SS 304L Sch10S	5x	5x
	- PIPE 2"Ø SS 304L Sch10S	-	-
	- FLANGE 2"Ø GALVANIZED CL 150	5x	5x
	- 2"Ø NPS ANGLE COLLARS SS 304L	5x	5x

ITEM IN-1B
QTY: 1

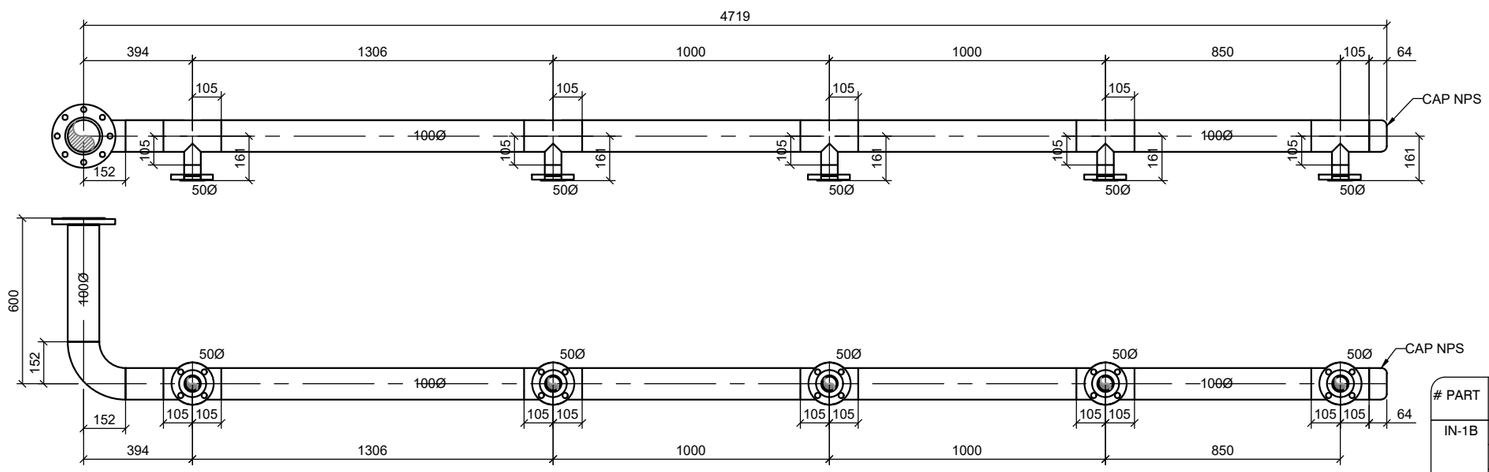

# PART	DESCRIPTION	UNIT QTY	TOTAL QTY
IN-1B	- PIPE 4"Ø SS 304L Sch10S	-	-
	- FLANGE 4"Ø GALVANIZED CL 150	1x	1x
	- 4"Ø NPS ANGLE COLLARS SS 304L	1x	1x
	- 4"Ø 90° ELBOW LONG RADIUS SS 304L Sch10S	1x	1x
	- 4"x2"Ø TEE SS 304L Sch10S	5x	5x
	- PIPE 2"Ø SS 304L Sch10S	-	-
	- FLANGE 2"Ø GALVANIZED CL 150	5x	5x
	- 2"Ø NPS ANGLE COLLARS SS 304L	5x	5x

NOTES:

# REV.	REVISION:	DATE
0	FOR APPROVAL	2019-05-13

NORCLAIR MÉCANIQUE DE PROCÉDÉ

CUSTOMER: Iqaluit

CONSULTANT: Nunami Stantec

PROJECT:

Iqaluit Wastewater Treatment Plant Upgrade

DRAWING TITLE:

PROCESS AIR PIPING
DAF INLET

DATE:	2019-05-09	SCALE:	AUCUNE
DRAWN BY:	E.A.	N. PROJECT:	P1039
VERIFIED BY:	H.C.	N. DRAWING:	P1039-AIR-FAB-05

REVIEWED BY CONTRACTOR

Kudlik Construction Ltd.

NAME: Sandra Rousseau P.Eng

DATE: Mai 13, 2019

NORCLAIR
MÉCANIQUE DE PROCÉDÉ

SHOP DRAWINGS

DA-MP-52 Process piping (DAF drain)

Date : 2019-05-13

Information general	
Project : **WWTP UPGRADE - IQALUIT**	
Client : Kudlik Construction Ltd. To : Sandra Rousseau P.Eng., Project Manager	Project number : **2018-062** E-mail : srousseau@kudlik.biz
Contractor : **Norclair inc.**	Project number Norclair : **P1039**
Address : 1100, Montée Masson, Laval, QC, Canada H7E 4P2	
Project Manager : Hugo Chartier, Project Manager	E-mail: hchartier@norclair.ca
Phone : 450-688-4012 # 706	Cell. : 514-703-0263

Information, subcontractor or supplier	
Sub/supplier :	
Contact :	Phone :

Information on the equipment	
Speciality : **Process**	
Equipment :	
Drawing reference :	
Specification reference : **40 05 13** (Page xx / xx)	Division :
Article :	Number of pages : 2

CONSULTA

STANTEC PROJECT #: 110126045

SUBMITTAL # DA-MP-52 Process Piping (DAF Drain)

This review by Stantec is for general conformance with the design concept of Stantec's design of the:

- ☑ Process
- ☐ Electrical
- ☐ Structural
- ☐ Other
- ☐ Mechanical

component(s) only and does not mean that Stantec has verified or approves the shop drawing(s). The Contractor remains solely responsible for the shop drawing(s) and this review by Stantec does not relieve the Contractor of the Contractor's responsibility for errors or omissions in the shop drawing(s) or for meeting all requirements of the contract documents. This review does not mean that Stantec approves the detailed design inherent in the shop drawing, responsibility for which shall remain with the Contractor submitting same, nor does this review mean that Stantec accepts any deviation of the shop drawing(s) from the contract documents. The Contractor is responsible for confirming all dimensions and correlating them at the job site, for all construction means, methods and techniques, and for coordination of construction work of all trades, including coordination of all shop drawings.

Stantec

- ☐ REVIEWED
- ☑ REVIEWED, AS NOTED
- ☐ REVISE AND RESUBMIT
- ☐ NOT REVIEWED

DATE May 13, 2019

BY Alejandro Rojas, P.Eng

1100, montée Masson
Laval, QC, Canada
H7E 4P2

Phone. : 450-688-4012
Fax : 450-661-6341
E-Mail : info@norclair.ca
www.norclair.ca

Piping not shown will be field fabricated.

PROCESS AIR : DAF DRAIN

ITEM DR-1 DR-1
QTY: 2

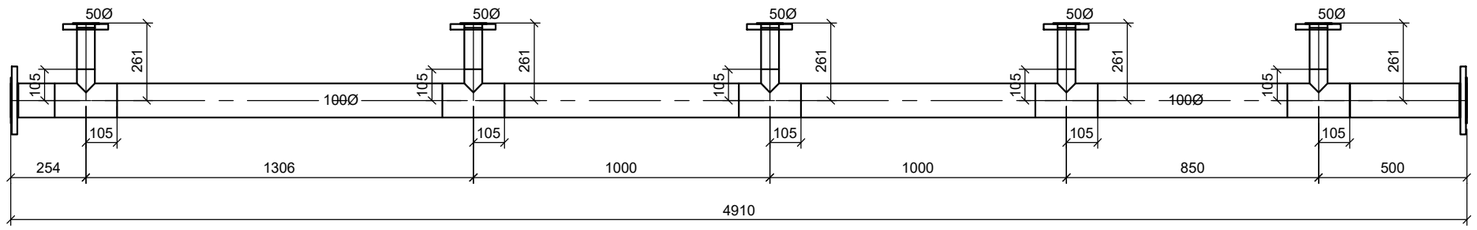

# PART	DESCRIPTION	UNIT QTY	TOTAL QTY
DR-1	- PIPE 4"Ø SS 304L Sch10S	-	-
	- FLANGE 4"Ø GALVANIZED CL 150	2x	4x
	- 4"Ø NPS ANGLE COLLARS SS 304L	2x	4x
	- 4"x2"Ø TEE SS 304L Sch10S	5x	5x
	- PIPE 2" SS 304L Sch10S	-	-
	- FLANGE 2" GALVANIZED CL 150	5x	5x
	- 2"Ø NPS ANGLE COLLARS SS 304L	5x	5x

ITEM DR-2A DR-2A
QTY: 1

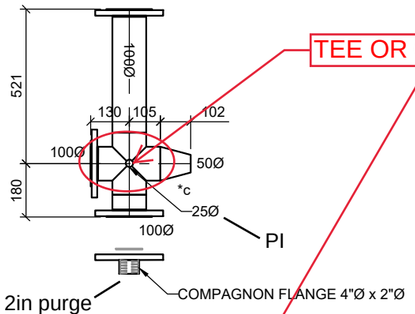

TEE OR CROSS?

# PART	DESCRIPTION	UNIT QTY	TOTAL QTY
DR-2A	- PIPE 4" SS 304L Sch10S	-	-
	- FLANGE 4" GALVANIZED CL 150	3x	3x
	- 4"Ø NPS ANGLE COLLARS SS 304L	3x	3x
	- 4" x 4"Ø TEE SS 304L Sch10S	1x	1x
	- 4" x 2"Ø CONCENTRIC REDUCER SS 304L Sch10S	1x	1x
	- 4" x 2"Ø COMPAGNON FLANGE SS 304L	1x	1x
	- 25Ø HALF COUPLING SS 304L	1 x	1 x

ITEM DR-2B DR-2B
QTY: 1

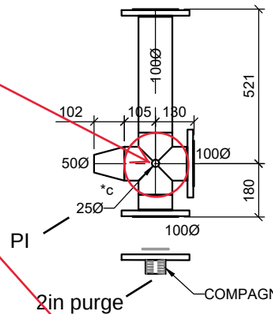

# PART	DESCRIPTION	UNIT QTY	TOTAL QTY
DR-2B	- PIPE 4" SS 304L Sch10S	-	-
	- FLANGE 4" GALVANIZED CL 150	3x	3x
	- 4"Ø NPS ANGLE COLLARS SS 304L	3x	3x
	- 4" x 4"Ø TEE SS 304L Sch10S	1x	1x
	- 4" x 2"Ø CONCENTRIC REDUCER SS 304L Sch10S	1x	1x
	- 4" x 2"Ø COMPAGNON FLANGE SS 304L	1x	1x
	- 25Ø HALF COUPLING SS 304L	1 x	1 x

SPOOLS DO NOT PRESENT SPECIFIC DIMENSIONS PRESENTED ON 3D MODEL AND CONTRACT DRAWINGS. CONTRACTOR TO ENSURE APPROPRIATE INSTALLATION IN THE FIELD AS PER CONTRACT DRAWINGS TO MATCH DAF CONNECTIONS AND INSTALLATION.

ITEM DR-3 DR-3
QTY: 2

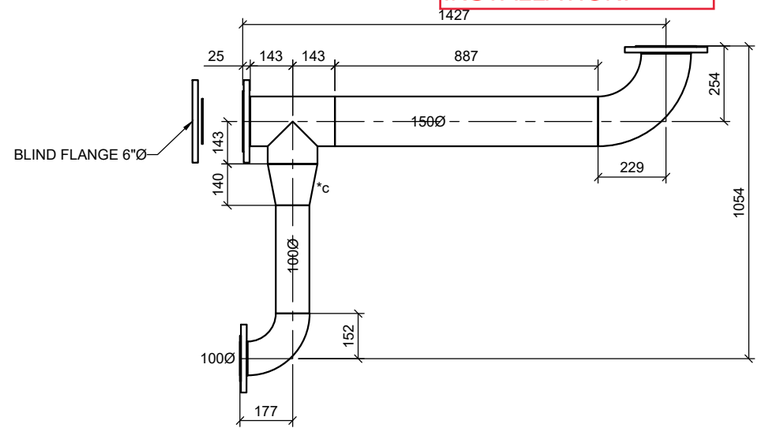

# PART	DESCRIPTION	UNIT QTY	TOTAL QTY
DR-3	- PIPE 4"Ø SS 304L Sch10S	-	-
	- FLANGE 4"Ø GALVANIZED CL 150	1x	2x
	- 4"Ø NPS ANGLE COLLARS SS 304L	1x	2x
	- 4"Ø 90° ELBOW LONG RADIUS SS 304L Sch10S	1x	2x
	- 4" x 6"Ø CONCENTRIC REDUCER SS 304L Sch10S	1x	2x
	- PIPE 6"Ø SS 304L Sch10S	-	-
	- FLANGE 6"Ø GALVANIZED CL 150	2x	4x
	- 6"Ø NPS ANGLE COLLARS SS 304L	2x	4x
	- 6" x 6"Ø TEE SS 304L Sch10S	1x	2x
	- 6"Ø 90° ELBOW LONG RADIUS SS 304L Sch10S	1x	2x
	- 6"Ø BLIND FLANGE GALVANIZED CL 150	1x	2x

NOTES:

# REV.	REVISION:	DATE
0	FOR APPROVAL	2019-05-13

NORCLAIR MÉCANIQUE DE PROCÉDÉ

CUSTOMER: Iqaluit

CONSULTANT: Nunami Stantec

PROJECT:

Iqaluit Wastewater Treatment Plant Upgrade

DRAWING TITLE:

PROCESS AIR PIPING
DAF DRAIN

DATE:	2019-05-10	SCALE:	AUCUNE
DRAWN BY:	E.A.	N. PROJECT:	P1039
VERIFIED BY:	H.C.	N. DRAWING:	P1039-DR-FAB-01

(2x) 2in - BV-02-620A/640A

REVIEWED BY CONTRACTOR
Kudlik Construction Ltd.
NAME: Sandra Rousseau P.Eng
DATE: Mai 21, 2019

NORCLAIR
MÉCANIQUE DE PROCÉDÉ

SHOP DRAWINGS

DA-MP-54 Ball valve - BV-02-620A/640A

Date : 2019-05-18

Information general	
Project : **WWTP UPGRADE - IQALUIT**	
Client : Kudlik Construction Ltd. To : Sandra Rousseau P.Eng., Project Manager	Project number : **2018-062** E-mail : srousseau@kudlik.biz
Contractor : **Norclair inc.**	Project number Norclair : **P1039**
Address : 1100, Montée Masson, Laval, QC, Canada H7E 4P2	
Project Manager : Hugo Chartier, Project Manager	E-mail: hchartier@norclair.ca
Phone : 450-688-4012 # 706	Cell. : 514-703-0263

Information, subcontractor or supplier	
Sub/supplier : DM Valves	
Contact :	Phone :

Information on the equipment	
Speciality : **Process**	
Equipment : Butterfly valve	
Drawing reference :	
Specification reference : **40 05 25** (Page xx / xx)	Division :
Article :	Number of pages : 7

CONSULTANT APPROVAL

STANTEC PROJECT #: 110126045

SUBMITTAL # DA-MP-54-Ball Valves

This review by Stantec is for general conformance with the design concept of Stantec's design of the:

- ☑ Process
- ☐ Structural
- ☐ Mechanical
- ☐ Electrical
- ☐ Other

Stantec

component(s) only and does not mean that Stantec has verified or approves the shop drawing(s). The Contractor remains solely responsible for the shop drawing(s) and this review by Stantec does not relieve the Contractor of the Contractor's responsibility for errors or omissions in the shop drawing(s) or for meeting all requirements of the contract documents. This review does not mean that Stantec approves the detailed design inherent in the shop drawing, responsibility for which shall remain with the Contractor submitting same, nor does this review mean that Stantec accepts any deviation of the shop drawing(s) from the contract documents. The Contractor is responsible for confirming all dimensions and correlating them at the job site, for all construction means, methods and techniques, and for coordination of construction work of all trades, including coordination of all shop drawings.

- ☑ REVIEWED
- ☐ REVIEWED, AS NOTED
- ☐ REVISE AND RESUBMIT
- ☐ NOT REVIEWED

DATE May 21, 2019

BY Alejandro Rojas, P.Eng

1100, montée Mass
Laval, QC, Canada
H7E 4P2

Phone. : 450-688-4012
Fax : 450-661-6341
E-Mail : info@norclair.ca
www.norclair.ca

Flow-Tek®
Subsidiary of BRAY INTERNATIONAL, Inc.



BALL VALVE

Brand – BRAY/FLOWTEK
Model – F15

Diametre:
2 inches (50mm)

.....

Product Description
Body – Stainless steel ASTM A351 Gr. CF8M, 2-Pieces
Style – Full port, Flanged ANSI class 125/150
Ball – Stainless Steel ASTM A351 Gr. CF8M
Seat – TFM
Stem – Stainless steel 316
Operation Pressure – ASME class 150

Operator
Manuel operated lever

FLANGED SERIES

2 PIECE FLANGED FULL PORT ½" - 12"

F15 - ASME Class 150 | ~~F30 - ASME Class 300~~

FLANGED SERIES BALL VALVES

Flow-Tek's F15/~~F30~~ Flanged Series ball valves feature a floating ball design for low torque and increased cycle life. As standard, large size valves feature trunnion-type ball support. These rugged ball valves are ideal for industrial applications.

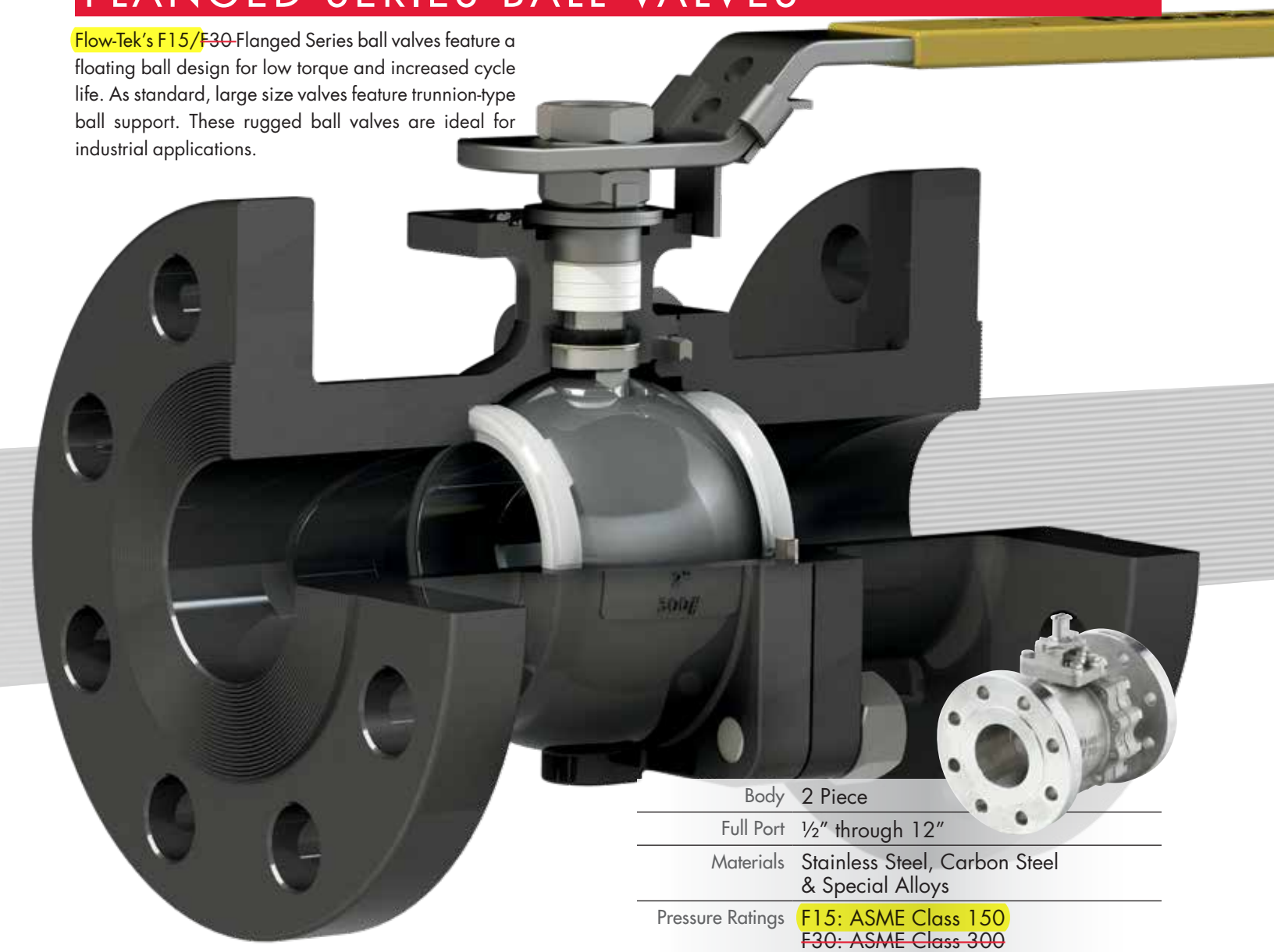

Body	2 Piece
Full Port	½" through 12"
Materials	Stainless Steel, Carbon Steel & Special Alloys
Pressure Ratings	F15: ASME Class 150 ~~F30: ASME Class 300~~

SECURE MOUNT

Flanged Series valves offer ease of automation due to an integrally cast actuator mounting pad which complies with ISO 5211 through 2" valve sizes.

STEM SEALS

Flanged Series ½"– 2" valves feature live-loaded, self-adjusting primary and secondary sealing. Utilizing Belleville washers, the stem seal automatically adjusts to compensate for changes in temperature and normal wear. 2½"– 12" valves utilize an independent packing gland which can be easily adjusted without removing mounting hardware or operator. The packing gland is contoured to more uniformly distribute the load across the packing. The primary stem seal is a combination of a thrust washer and a thrust washer protector. An adjustable stem packing creates a secondary seal between the stem and body. The stem packing is composed of RPTFE V-rings as standard – graphite stem packing is standard on all fire safe valves.

BALL

Flow-Tek balls are precision machined and mirror finished for bubble-tight shut off and less operating torque. As an added safety feature, a hole in the stem slot of each ball equalizes pressure between the body cavity and the line media flow.

BODY

½"– 4" valve bodies are investment cast and solution annealed/ normalized for the highest quality and added strength. All body castings are marked with a foundry heat number for full traceability. Carbon steel bodies are phosphate coated for increased corrosion resistance.

SEAT

Flow-Tek's seat design ensures bi-directional, bubble-tight sealing with low operating torque. All resilient seats feature relief slots or seat O.D. clearance to relieve pressure past the upstream seat, and positive preloading to ensure low pressure/vacuum sealing.

STEM ASSEMBLIES

Flow-Tek manufactures heavy duty, high quality stems with double "D" connection to ball and operator mounting. Stem and ball design ensure positive contact. All Flow-Tek stems are internal entry and blowout proof for maximum safety.

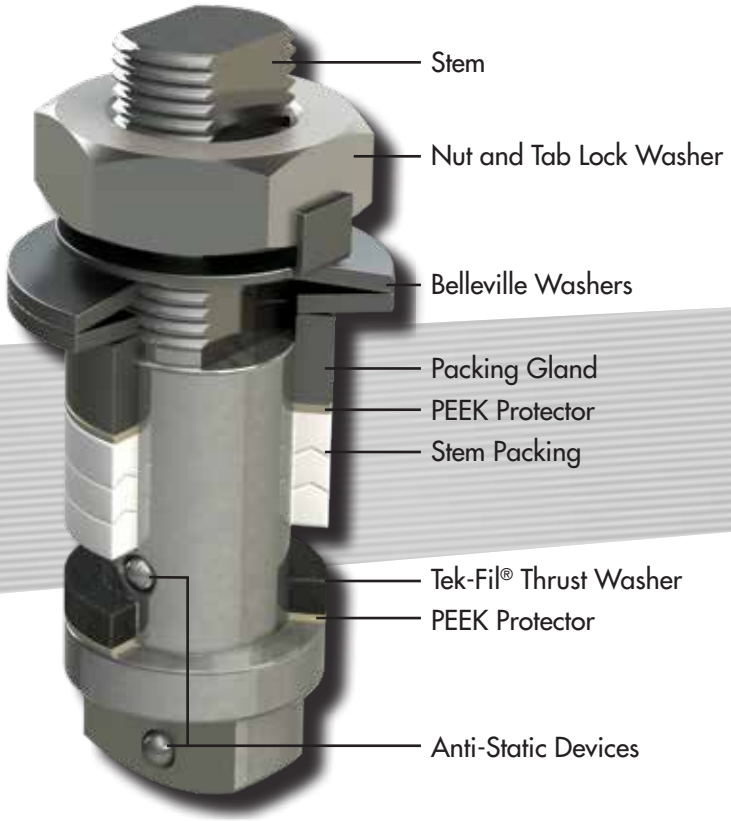

BALL SUPPORT Valve Sizes 6" through 12"

As standard, larger sized valves feature trunnion-type ball support. This support helps to maintain continuous contact between the ball and seats, preventing seat damage and blow-by. The results are less seat wear, lower torque, and longer service life.

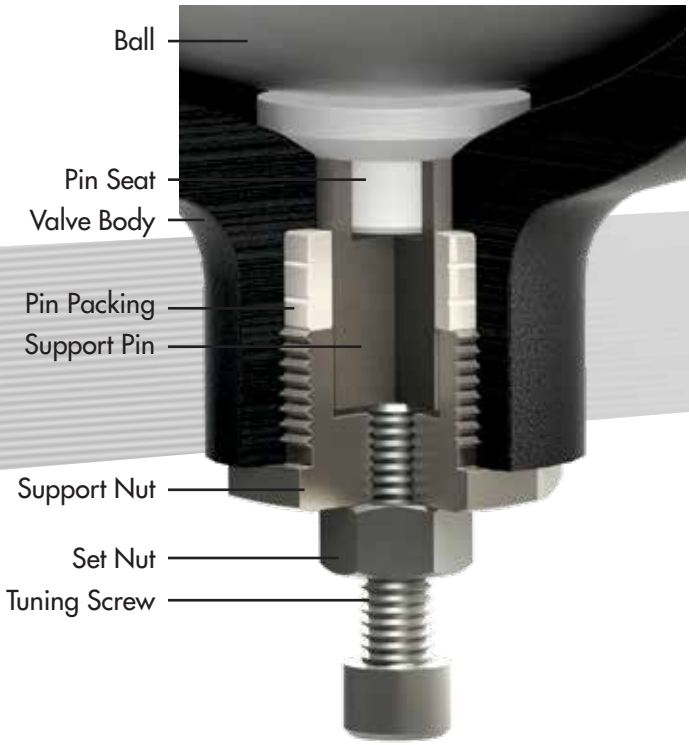

SMART STEM Valve Sizes ½" through 2"

Flow-Tek's interchangeable family of valves feature strong, large diameter stems with live-loaded, self-adjusting sealing utilizing Belleville washers which automatically adjust to compensate for changes in temperature and wear. Manual adjustments which can cause damage to the seal and seat are not required. The assembly is secured by a saddle-type lock washer which prevents stem nuts from unthreading in high cycle automation applications.

STEM PACKING

An adjustable V-ring design creates a multiple seal between the stem and body. Each stem assembly is composed of three or four (dependent on valve size) rings providing a very high cycle life by resisting creep and cold flow. The thrust washer and the thrust washer protector combine to provide a primary seal, reduce torque and prevent galling. This arrangement is a Flow-Tek exclusive.

LOCKING DEVICE



All manually operated valves feature a locking device to prevent accidental movement of ball position. Valves ½"–2" feature a safety trigger that locks the handle in the open or closed position. The handle lock can be bypassed, if needed, with a small bolt through the handle in the release position.

On all sizes a padlock can be added to secure the handle in position, preventing unwanted movement of the ball.

FIRE SAFE - Certified to API 607

Flanged Series valves with graphite stem seals have been thoroughly fire tested and meet these standards.

In the event of a fire, after heat destroys the primary resilient seat, the ball makes contact with the secondary metal seat, forming a secure seal. The body seal, composed of stainless steel and graphite wound into a spiral, prevents external leakage. The graphite stem rings prevent stem leakage.

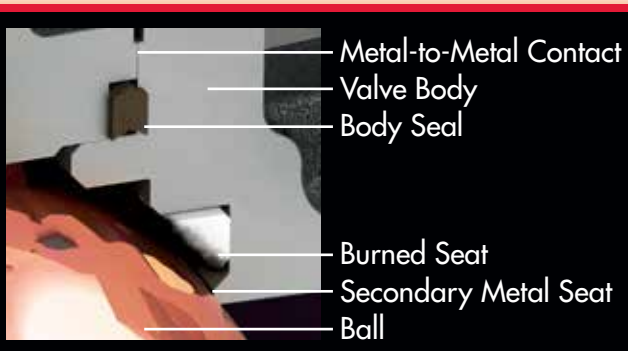

PRESSURE / TEMPERATURE

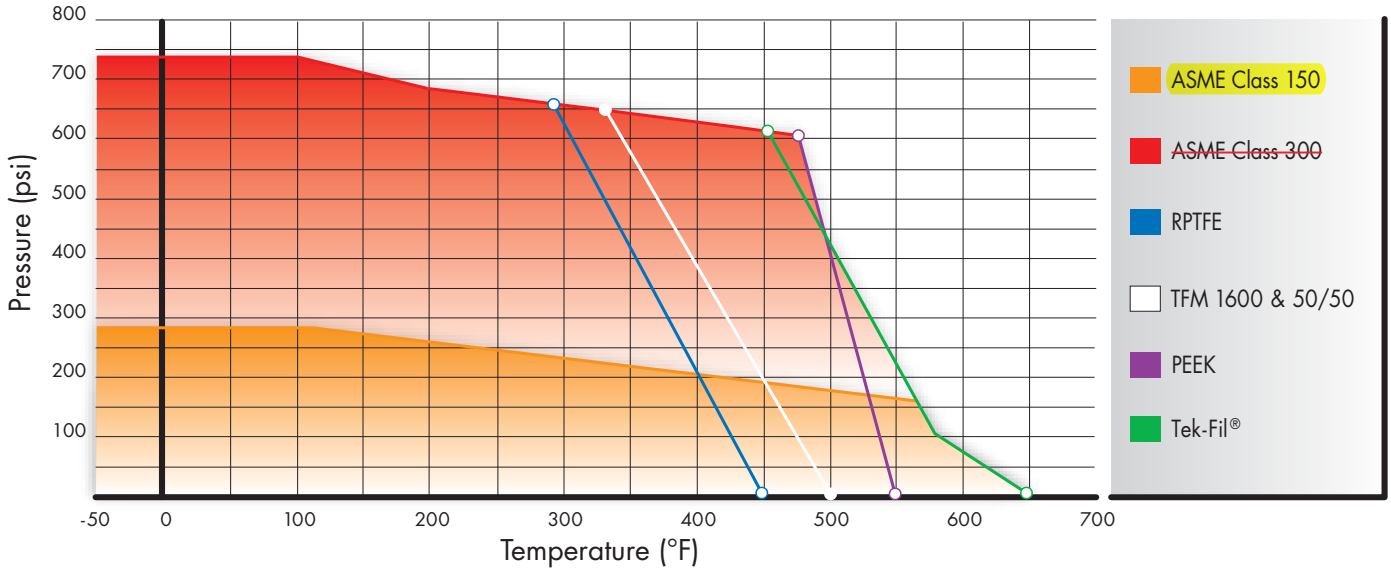

Carbon steel valves limited to -20°F

STEAM SERVICE PRESSURE RATINGS: WSP

	TFM Seats		Tek-Fil Seats		PEEK Seats	
	PSI	°F	PSI	°F	PSI	°F
Class 150	150	365	190	383	170	374
~~Class 300~~	~~150~~	~~365~~	~~425~~	~~454~~	~~425~~	~~454~~

Vacuum service to 29.9 inches Hg. gauge.

SPECIAL OPTIONS/SERVICES

Cavity Fillers	Media Containment Units
Spring Return Handles	NACE
Vented Balls	Polished Internals
Characterized Balls	Special Cleaning
Chlorine Service	Silicone Free

SEAT SELECTION

A wide range of seat materials are available to meet most applications. The standard seat is TFM 1600. Options include:

- ~~RPTFE~~
- ~~Stainless Steel/PTFE (50/50)~~
- ~~UHMWPE~~
- ~~Virgin PTFE~~
- ~~PEEK~~
- Tek-Fil® (carbon/graphite filled TFM)
- ~~Full metal seats~~
- ~~Cavity Fillers~~



PEEK seats offer high pressure/temperature capability. Tek-Fil® seats offer reduced torque in high temperature, high cycle, and steam service applications. TFM 1600 seats offer the exceptional chemical resistance of PTFE plus lower porosity and permeability, improved temperature range and reduced valve torques.

SPECIFICATIONS

- Valve sizes ¼" through 12"
- Design meets MSS-SP-110
- Threaded end connections meet ASME B1.20.1 NPT
- Socket weld end connections meet ASME B16.11
- Butt weld end (Schedule 40) connections meet MSS SP-72 /ASME B16.25
- Flanged end connections meet ASME Class 150

Valve body and end cap connections are high quality investment cast and solution annealed/normalized. Body and end cap wall thickness meets ASME B16.34.

Valve stems are blow-out proof for maximum safety and meet ASME B16.34 specification.

All valves are factory tested to MSS SP-72 and API 598.

ISO 9001

COMPONENTS & MATERIALS

ITEM/NAME	STAINLESS STEEL	~~CARBON STEEL~~	QTY.
1. Body	ASTM A351 Gr CF8M	ASTM A216 Gr WCB	1
2. End Cap	ASTM A351 Gr CF8M	ASTM A216 Gr WCB	1
3. Ball	ASTM A351 Gr CF8M		1
4. Seat	TFM 1600		2
5. Stem	ASTM A479 Type 316		1
6. Body Seal	Spiral Wound (316/Graphite)		1
7. Body Nut	ASTM A194 Gr 8		*
8. Body Stud	ASTM A193 B8	ASTM A193 B7	*
9. Anti-Static Device	SS304		2
10. Packing Protector	PEEK		1
11. Thrust Washer Protector	PEEK		1
12. Thrust Washer	Tek-Fil		1
13. Stem Bearing	15% RPTFE		1
14. Stem Packing	RPTFE ~~or Graphite~~		**
15. Packing Gland	ASTM A167 Type 304		1
16. Packing Follower	ASTM A351 Gr CF8M	~~ASTM A216 Gr WCB~~	1
17. Gland Bolt	SS304		2
18. Belleville Washer	SS301		2
19. Tab Lock Washer	SS304		1
20. Travel Stop Housing	CF8M	~~WCB~~	1
21. Housing Bolt	SS304	~~Alloy Steel~~	4
22. Travel Stop	SS304	~~Zinc Plated Carbon Steel~~	1
23. Travel Stop Sleeve	ASTM A167 Type 304		1
24. Travel Stop Bolt	SS304		1
25. Handle	SS304 or Ductile Iron***		1
26. Lock Nut	ASTM A167 Type 304		2
27. Handle Bolt	Carbon Steel		1
28. Handle Sleeve	Vinyl through 2"		1
29. Locking Device	SS304		1
30. Snap Ring	Nickel Plated Carbon Steel		2

* Quantity depends on valve size.
** RPTFE packing is composed of 3 or 4 pieces depending on size.
Graphite packing is composed of a single piece.
*** Ductile Iron used forvalve sizes ≥ 2½".

Flow-Tek offers the seat, body seal, thrust washer and stem packing as recommended spare parts. These parts are available as a packaged repair kit.

½" – 2" VALVES

Carbon steel bodies on valve sizes ½" – 4" are black phosphate coated.

All stainless steel bodies are solution annealed/normalized.

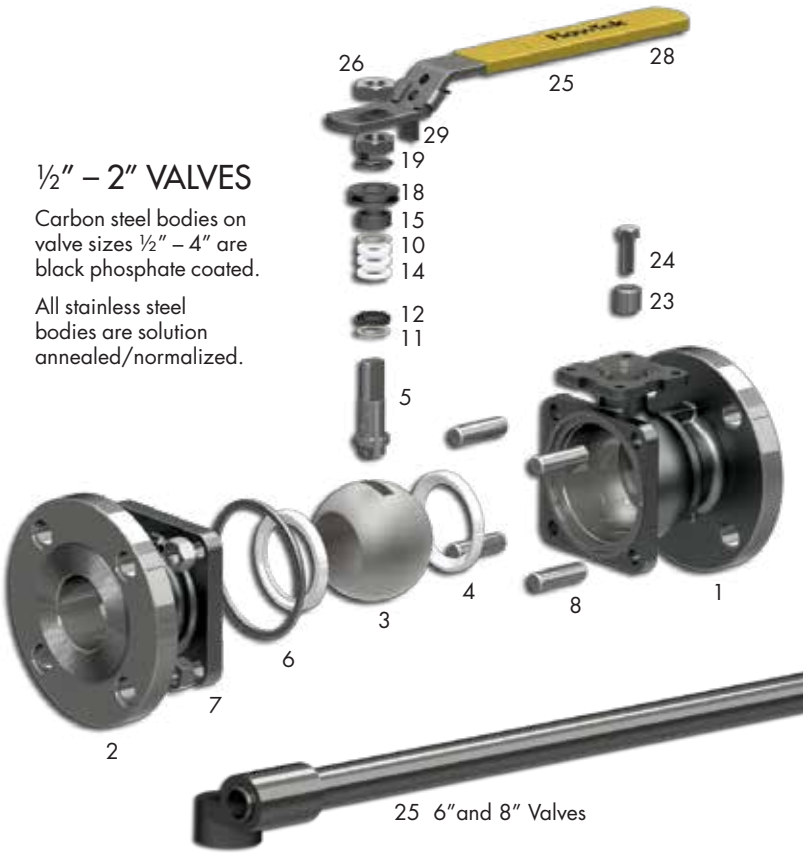



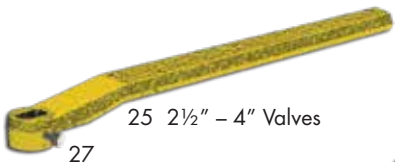

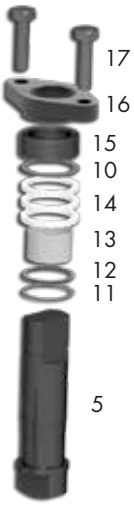

2½" – 12" VALVES

Ball support is included on 6"-12" F15 valves and 6"-12" F30 valves.



F15/F30 DIMENSIONS ½" – 2" VALVES (15mm - 50mm)

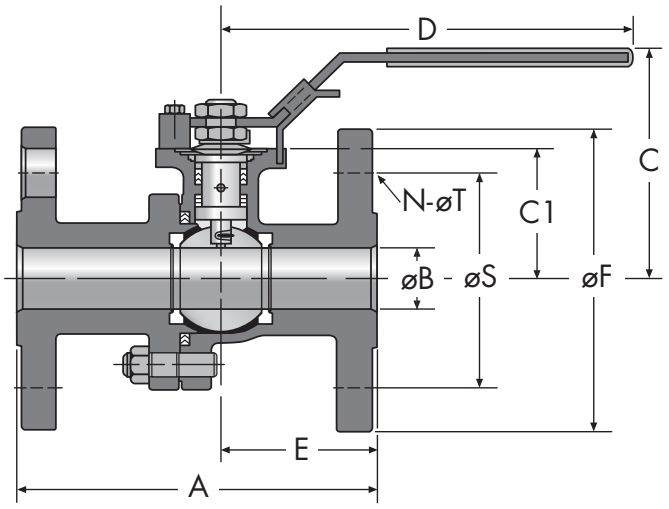

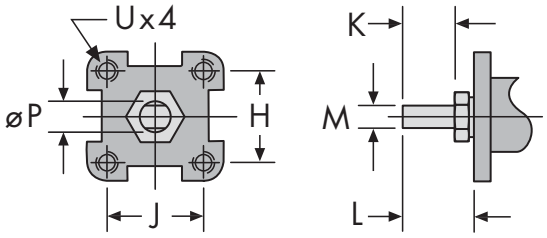

DIMENSIONS – Secure Mount

	Size	H	J	F0	BC DIA.	K	L	M	øP	U UNC
INCHES	1/2	1.17	1.17	F04	1.65	0.31	0.61	0.25	0.37	#10-24
	3/4	1.17	1.17	F04	1.65	0.31	0.61	0.25	0.37	#10-24
	1	1.39	1.39	F05	1.97	0.43	0.82	0.31	0.43	1/4-20
	1-1/2	1.95	1.95	F07	2.76	0.55	0.95	0.37	0.62	5/16-18
	2	1.95	1.95	F07	2.76	0.55	0.95	0.37	0.62	5/16-18
MILLIMETERS	15	29.7	29.7	F04	41.9	7.9	15.5	6.0	9.4	#10-24
	20	29.7	29.7	F04	41.9	7.9	15.5	6.0	9.4	#10-24
	25	35.0	35.0	F05	50.0	10.9	20.8	7.9	10.9	1/4-20
	40	49.5	49.5	F07	70.0	14.0	24.0	9.5	15.8	5/16-18
	50	49.5	49.5	F07	70.0	14.0	24.0	9.5	15.8	5/16-18

Model F15 – Class 150

	Size	A	øB	C	C1	D	E	øF	øS	N / øT	C_V	Torque*		Weight	
INCHES	1/2	4.25	0.59	2.88	1.54	6.50	1.79	3.50	2.38	4 x 0.62	32	36	LBS-IN	4	LBS
	3/4	4.62	0.79	2.97	1.67	6.50	2.01	3.88	2.75	4 x 0.62	60	65		5	
	1	5.00	0.98	3.41	2.05	7.87	2.13	4.25	3.12	4 x 0.62	105	95		10	
	1-1/2	6.50	1.49	4.20	2.60	9.84	2.76	5.00	3.88	4 x 0.62	275	230		14	
	2	7.00	1.97	4.53	2.95	10.43	3.07	6.00	4.75	4 x 0.75	500	390		20.5	
MILLIMETERS	15	108.0	15.0	73.25	39.0	165.0	45.5	88.9	60.5	4 x 15.8	28	4	Nm	2	KG
	20	117.0	20.0	75.40	42.4	165.0	51.0	98.6	69.9	4 x 15.8	52	7		2	
	25	127.0	24.9	86.69	52.0	199.9	54.0	108.0	79.0	4 x 15.8	91	11		4.5	
	40	165.0	37.9	106.60	66.0	249.9	70.0	127.0	98.6	4 x 15.8	238	26		6	
	~~50~~	~~177.8~~	~~50.0~~	~~115.01~~	~~74.9~~	~~264.9~~	~~78.0~~	~~152.0~~	~~120.7~~	~~4 x 19.0~~	~~433~~	~~44~~		~~9~~	

~~Model F30 – Class 300~~

	Size	A	øB	C	C1	D	E	øF	øS	N / øT	C_V	Torque*		Weight	
INCHES	1/2	5.50	0.59	2.92	1.57	6.50	2.44	3.75	2.62	4 x 0.62	32	40	LBS-IN	5	LBS
	3/4	6.00	0.79	2.97	1.67	6.50	2.72	4.62	3.25	4 x 0.75	60	70		7	
	1	6.50	0.98	3.41	2.05	7.87	2.91	4.88	3.50	4 x 0.75	105	108		10	
	1-1/2	7.50	1.49	4.04	2.60	9.84	3.27	6.12	4.50	4 x 0.88	275	270		19	
	2	8.50	1.97	4.53	2.95	10.43	3.94	6.50	5.00	8 x 0.75	500	445		25	
MILLIMETERS	15	139.7	15.0	74.23	39.9	165.0	62.0	95.0	66.6	4 x 15.8	28	5	Nm	2	KG
	20	152.0	20.0	75.40	42.0	165.0	69.0	117.0	82.6	4 x 19.0	52	8		3	
	25	165.0	24.9	86.61	52.0	199.9	73.9	124.0	88.9	4 x 19.0	91	12		5	
	40	190.5	37.9	102.50	66.0	249.9	83.0	155.5	114.0	4 x 22.0	238	31		9	
	50	215.9	50.0	115.06	74.9	264.9	100.0	165.0	127.0	8 x 19.0	433	50		11	

Face to Face dimensions meet ASME B16.10 long pattern and short pattern (sizes 1/2 " thru 2").
***Torque** at maximum rated pressure, clean water, TFM 1600 seating material. Other seat materials exhibit different torques. Please refer to TB 1005 for specific torques.

REVIEWED BY CONTRACTOR

Kudlik Construction Ltd.

NAME: Sandra Rousseau P.Eng

DATE: Jun 25, 2019

please confirm the support 17-18-19
can be supported by the structure SR.

NORCLAIR
MÉCANIQUE DE PROCÉDÉ

SHOP DRAWINGS

DA-MP-55 Piping support Phase 2 **Date :** 2019-06-25

Information general	
Project : **WWTP UPGRADE - IQALUIT**	
Client : Kudlik Construction Ltd. To : Sandra Rousseau P.Eng., Project Manager	Project number : **2018-062** E-mail : srousseau@kudlik.biz
Contractor : **Norclair inc.**	Project number Norclair : **P1039**
Address : 1100, Montée Masson, Laval, QC, Canada H7E 4P2	
Project Manager : Hugo Chartier, Project Manager E-mail: hchartier@norclair.ca	
Phone : 450-688-4012 # 706	Cell. : 514-703-0263

Information, subcontractor or supplier	
Sub/supplier : Norclair	
Contact :	Phone :

Information on the equipment	
Speciality : **Process**	
Equipment : Piping support (primary)	
Drawing reference :	
Specification reference : **40 05 13** (Page xx / xx)	Division :
Article :	Number of pages : 65

CONSULTANT APPROVAL

STANTEC PROJECT #: 110126045

This review by Stantec is for general conformance with the design concept of Stantec's design of the:

☐ Architectural ☐ Electrical
☑ Structural ☐ Other
☐ Mechanical

component(s) only and does not mean that Stantec has verified or approves the shop drawing(s). The Contractor remains solely responsible for the shop drawing(s) and this review by Stantec does not relieve the Contractor of the Contractor's responsibility for errors or omissions in the shop drawing(s) or for meeting all requirements of the contract documents. This review does not mean that Stantec approves the detailed design inherent in the shop drawing, responsibility for which shall remain with the Contractor submitting same, nor does this review mean that Stantec accepts any deviation of the shop drawing(s) from the contract documents. The Contractor is responsible for confirming all dimensions and correlating them at the job site, for all construction means, methods and techniques, and for coordination of construction work of all trades, including coordination of all shop drawings.

SUBMITTAL # Piping support

Stantec

☐ REVIEWED
☑ REVIEWED, AS NOTED
☐ REVISE AND RESUBMIT
☐ NOT REVIEWED

DATE 2019-06-26

BY Petr Polivka

DAF subnatant pipe shall be supported for gravity load at every DAF tank platform joist W150x18, see page 19 (18 of64) of this document

All members shall be hot dip galvanized or stainless steel.

1100, montée Masson
Laval, QC, Canada
H7E 4P2

Phone. : 450-688-4012
Fax : 450-661-6341
E-Mail : info@norclair.ca
www.norclair.ca

CUSTOMER : **IQALUIT WASTE WATER TREATMENT PLANT UPGRADE**



MANUFACTURER : **NORCLAIR**

DESCRIPTION : **PIPING SUPPORTS**

JOB # : **P1039**

CALCULATION # : **PC-1933**

DRAWING : **ref VEOLIA 5000218036-F10007**
P1039-01/02/03
P201/P202/P203
P503/P504/P507/P508

CODE : **NBCC 2015**
ASME B31.3 2014 ed
MSS SP-58 2009 ed

0	2019 March 27	For approval	S. Cloutier	
Rev	Date	Description	Prep. by	Appr. by

PIPING SUPPORTS

Sheet :	of
By :	
Date :	2019 March 27
PC-1933	Rev:

SEISMIC LOADS

(FOR PIPING)

AS PER NBCC 2015

IQALUIT NUNAVUT

$S_a(0.2) = 0.087$

$S_a(0.5) = 0.065$

$S_a(1.0) = 0.043$

$S_a(2.0) = 0.023$

$F_a = 1.24$

$I_E = 1.5$

$C_p = 1$

$A_r = 1$

$R_p = 3$

$A_x = 3$

$$V_p = 0.3\, F_a \cdot S_a(0.2)\, I_E \cdot S_p \cdot W_p$$

$$A_x = 1 + 2\,\frac{h_x}{h_n} = 1 + 2 \times 1 = 3$$

$$S_p = \frac{C_p \cdot A_r \cdot A_x}{R_p}$$

$$S_p = \frac{1 \times 1 \times 3}{3} = 1$$

$$V_p = 0.3 \times F_a \cdot S_a(0.2) \cdot I_E \cdot S_p \cdot W_p$$

$$= 0.3 \times 1.24 \times 0.087 \times 1.5 \times 1 \times W_p$$

$$V_p = 0.05\ W_p$$

PIPING SUPPORTS

Sheet :	of
By :	
Date :	2019 March 27
PC-1933	Rev:

WEIGHT LINEAR PIPING

FULL OF WATER

PIPE 14" ø sch 10S = 95 Lbs/ft

PIPE 18" ø sch 10S = 150 Lbs/ft

PIPE 6" ø sch 10S = 10 Lbs/ft (AIR)

PIPE 4" ø DUCTIL IRON = 21.5 Lbs/ft

PIPE 6" ø ductil IRON = 35.5 Lbs/ft

PIPE 8" ø sch 10S = 13.4 Lbs/ft (AIR service)

PIPE 16" ø sch 10S = 120 Lbs/ft

FLANGE WEIGHT

PAIR + bolts and nuts

RING FLANGE 16" ø = 190 #

RING FLANGE 14" ø = 200 #

FLANGE 18" ø = 180 #

SORF FLANGE 14" ø = 240 #

6" ø = 48 Lbs

8" ø = 70 Lbs FLANGE

PIPING SUPPORTS

Sheet :	of
By :	
Date :	2019 March 27
PC-1933	Rev:

VALVE WEIGHT

KNIF VALVE 16"Ø WITH ACTUATOR = 370 Lbs

VALVE VALMATIC 4"Ø = 72 Lbs

VALVE VALMATIC 6"Ø = 139 Lbs

VICTAULIC 6"Ø = 9,5 Lbs

" 4"Ø = 8 Lbs

VICTAULIC FLANGE CONNECTION 6"Ø = 12 Lbs

" " " 4"Ø = 8 Lbs

PIPING SUPPORTS

Sheet :	of
By :	
Date :	2019 March 27
PC-1933	Rev:

support # 1

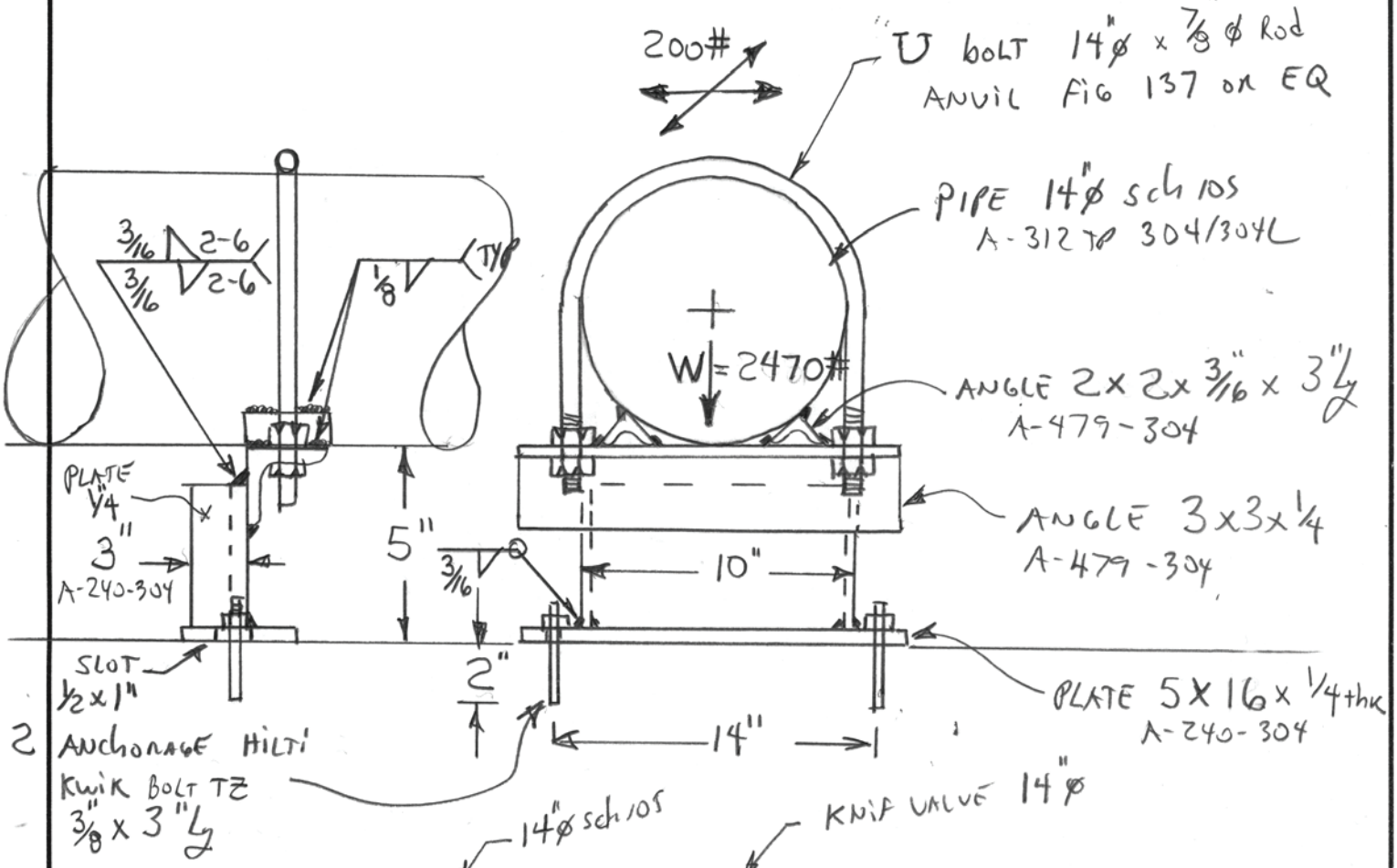

14"ø sch 10S

KNIF VALVE 14"ø

$$W_1 = (20\,ft \times 95\,lbs/ft) + 370\,lbs + 200$$

$$= 2470\,lbs \quad (9.3\,KN)$$

$$V_{p1} = 0.05 \times 2270\,lbs = 114\,lbs$$

USE 200 lbs

0.9 KN

LOCAL STRESS on 14"SCH 10S PIPE

Geometry	
Height (radial)	1"
Width (circumferential)	8"
Length	3"
Fillet Weld Size:	0.125"
Located On	TUYAU 14" SCH 10S (24" from bottom end)
Location Angle	0.00°

Applied Loads	
Radial load, P_r	2 550 lb_f
Circumferential moment, M_c	0 lb_f-in
Circumferential shear, V_c	200 lb_f
Longitudinal moment, M_L	0 lb_f-in
Longitudinal shear, V_L	0 lb_f
Torsion moment, M_t	0 lb_f-in
Internal pressure, P	75 psi
Mean shell radius, R_m	6.8943"
Design factor	3

Maximum stresses due to the applied loads at the lug edge (includes pressure)

$\gamma = R_m / T = 6.8943 / 0.1645 = 41.9103$

$C_1 = 4.125$, $C_2 = 1.625$ in

Local circumferential pressure stress = $P*R_i / T$ =3 106 psi

Local longitudinal pressure stress = $P*R_i / (2*T)$ =1 553 psi

Maximum combined stress (P_L+P_b+Q) = -35 658 psi
Allowable combined stress (P_L+P_b+Q) = ±3*S = ±60 000 psi

The maximum combined stress (P_L+P_b+Q) is within allowable limits.

Maximum local primary membrane stress (P_L) = -7 227 psi
Allowable local primary membrane stress (P_L) = ±1.5*S = ±30 000 psi

The maximum local primary membrane stress (P_L) is within allowable limits.

Stresses at the lug edge per WRC Bulletin 107										
Figure	**value**	**β**	**A_u**	**A_l**	**B_u**	**B_l**	**C_u**	**C_l**	**D_u**	**D_l**
3C*	1.725	0.3582	0	0	0	0	-3 879	-3 879	-3 879	-3 879
4C*	2.6787	0.5065	-6 023	-6 023	-6 023	-6 023	0	0	0	0
1C	0.0617	0.5219	0	0	0	0	-34 885	34 885	-34 885	34 885
2C-1	0.0061	0.5219	-3 449	3 449	-3 449	3 449	0	0	0	0
3A*	1.0517	0.4386	0	0	0	0	0	0	0	0
1A	0.0608	0.5447	0	0	0	0	0	0	0	0
3B*	2.8274	0.3215	0	0	0	0	0	0	0	0
1B-1	0.0098	0.4283	0	0	0	0	0	0	0	0
Pressure stress*			3 106	3 106	3 106	3 106	3 106	3 106	3 106	3 106
Total circumferential stress			-6 366	532	-6 366	532	-35 658	34 112	-35 658	34 112
Primary membrane circumferential stress*			-2 917	-2 917	-2 917	-2 917	-773	-773	-773	-773
3C*	0.9953	0.5065	-2 238	-2 238	-2 238	-2 238	0	0	0	0
4C*	3.9048	0.3582	0	0	0	0	-8 780	-8 780	-8 780	-8 780
1C-1	0.0229	0.4141	-12 948	12 948	-12 948	12 948	0	0	0	0
2C	0.03	0.4141	0	0	0	0	-16 962	16 962	-16 962	16 962
4A*	4.0178	0.4386	0	0	0	0	0	0	0	0
2A	0.0259	0.4351	0	0	0	0	0	0	0	0
4B*	1.4939	0.3215	0	0	0	0	0	0	0	0
2B-1	0.0237	0.3519	0	0	0	0	0	0	0	0
Pressure stress*			1 553	1 553	1 553	1 553	1 553	1 553	1 553	1 553
Total longitudinal stress			-13 633	12 263	-13 633	12 263	-24 189	9 735	-24 189	9 735
Primary membrane longitudinal stress*			-685	-685	-685	-685	-7 227	-7 227	-7 227	-7 227
Shear from M_t			0	0	0	0	0	0	0	0
Circ shear from V_c			74	74	-74	-74	0	0	0	0
Long shear from V_L			0	0	0	0	0	0	0	0
Total Shear stress			74	74	-74	-74	0	0	0	0
Combined stress (P_L+P_b+Q)			-13 634	12 263	-13 634	12 263	-35 658	34 112	-35 658	34 112
* denotes primary stress.										

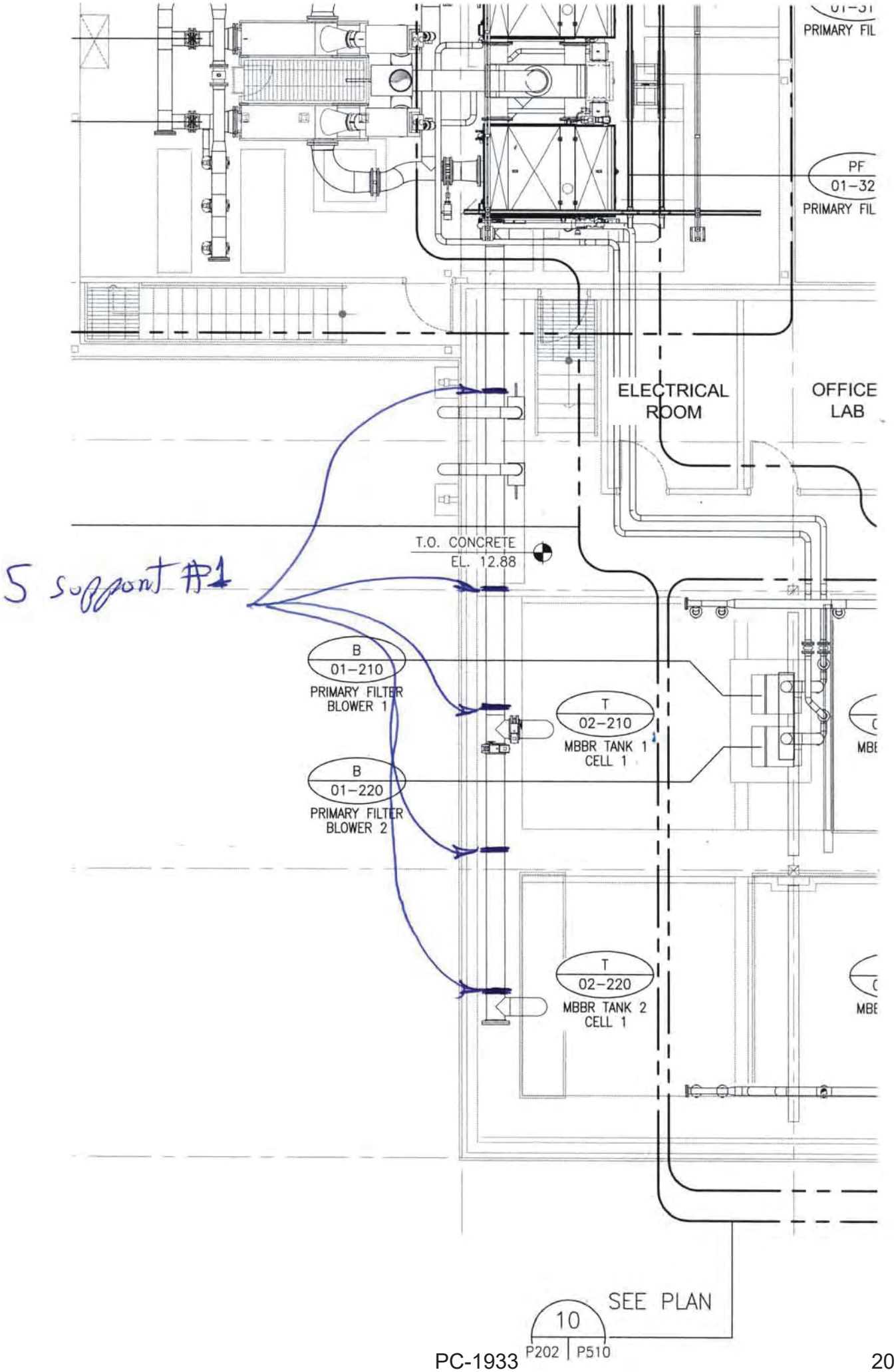
PRIMARY FIL
PF
01–32
PRIMARY FIL
ELECTRICAL ROOM
OFFICE LAB
T.O. CONCRETE
EL. 12.88
5 support #1
B
01–210
PRIMARY FILTER BLOWER 1
T
02–210
MBBR TANK 1 CELL 1
B
01–220
PRIMARY FILTER BLOWER 2
T
02–220
MBBR TANK 2 CELL 1
SEE PLAN
10
P202 | P510

PIPING SUPPORTS

Sheet :	of
By :	
Date :	2019 March 27
PC-1933	Rev:

Support # 2

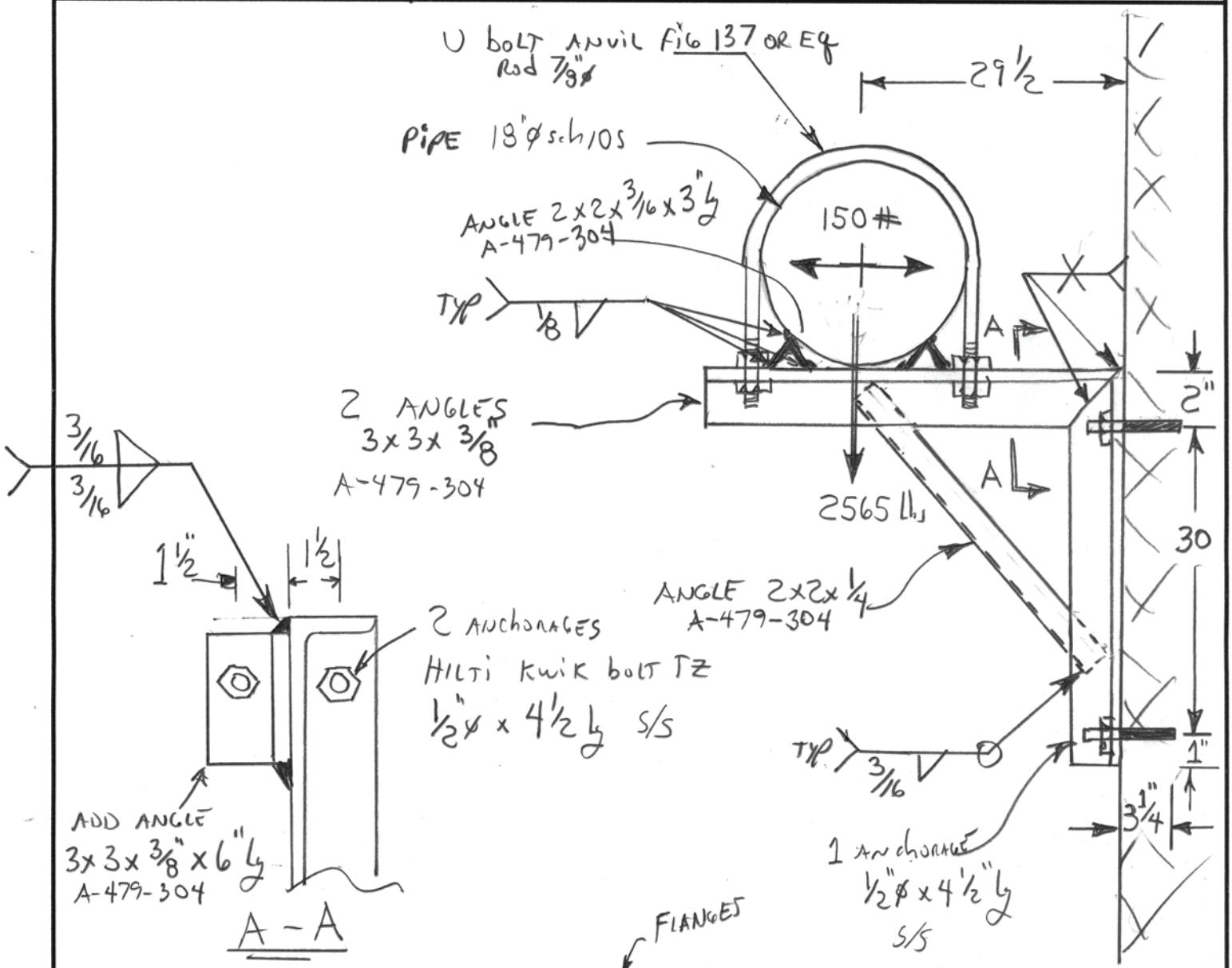

$W = (14.7\,ft \times 150\,\#/ft) + 2 \times 180\,\#$

$= 2205\,\# + 360 = 2565\ Lbs$

$V_p = 0.05 \times 2565\,\# = 129\ Lbs$

USE 150 #

PIPING SUPPORTS	Sheet : of
	By :
	Date : 2019 March 27
	PC-1933 Rev:

Support #2

TRACTION ON ANCHORAGES

$$T = \frac{W \times L}{a} + \frac{V_p \times h}{a}$$

2 ANCHORAGES ON TOP

2522

$$T = \frac{2565 \times 29\frac{1}{2}"}{30} + \frac{150 \times (30" + 2" + 9)}{30} = 2727 \text{ lbs}$$

1363 lbs / ANCHORAGE

MOMENT ON ANGLE AROUND ANCHORAGE

$$M = PL = 1363 \text{ lbs} \times 1.5" = 2045 \text{ lbs·in}$$

$$\sigma = \frac{M}{S} = \frac{2045 \text{ lbs·in}}{0.140 \text{ in}^3} = 14542 \text{ psi} < 20\,000 \text{ psi}$$

$$\frac{6 \times (3/8)^2}{6}$$

OK ANGLE 3 x 3 x 3/8

PIPING SUPPORTS	Sheet : of
	By :
	Date : 2019 March 27
	PC-1933 Rev:

Support #2

ANGLE 2 x 2 x 1/4 IN COMPRESSION

As per Johnson methode

MAT A-479-304

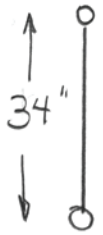

$$\frac{KL}{r} = \frac{1 \times 34}{0.425} = 80 < 136$$

$\sigma_y = 30\,000$ psi

$S = 0.277\ in^3$

$A = 0.814\ in^2$

$r = 0.425$

$C_c = 136$

$E = 28 \times 10^6$ psi

$x = 0.628$ in

$$\sigma_a = \frac{\left(1 - \frac{\left(\frac{KL}{r}\right)^2}{2C_c}\right)\sigma_y}{FS}$$

$$\sigma_a = \frac{\left(1 - \frac{90^2}{2 \times 136^2}\right) \times 30000}{2.5} = 9924 \text{ psi}$$

$$\sigma_{comp} = \frac{F}{A} = \frac{2854\ lbs}{0.814\ in^2} = 3506 \text{ psi}$$

$$\sigma_{Flex} = \frac{F \cdot x}{S} = \frac{2854\ lbs \times 0.628\ in}{0.277\ in^3} = 6470 \text{ psi}$$

$$\frac{\sigma_{Flex}}{\sigma_a} + \frac{\sigma_{comp}}{\sigma_a} = \frac{6470}{20000} + \frac{3506}{9924} = 0.68 < 1$$

OK ANGLE 2 x 2 x 1/4

LOCAL STRESS on 18"SCH 10S PIPE

Geometry	
Height (radial)	1"
Width (circumferential)	12"
Length	3"
Fillet Weld Size:	0.125"
Located On	TUYAU 18" SCH 10S (24" from bottom end)
Location Angle	0.00°

Applied Loads	
Radial load, P_r	2 600 lb_f
Circumferential moment, M_c	0 lb_f-in
Circumferential shear, V_c	200 lb_f
Longitudinal moment, M_L	0 lb_f-in
Longitudinal shear, V_L	0 lb_f
Torsion moment, M_t	0 lb_f-in
Internal pressure, P	1 psi
Mean shell radius, R_m	8.8943"
Design factor	3

Maximum stresses due to the applied loads at the lug edge (includes pressure)

$\gamma = R_m / T = 8.8943 / 0.1645 = 54.0684$

$C_1 = 6.125$, $C_2 = 1.625$ in

Local circumferential pressure stress = $P*R_i / T$ =54 psi

Local longitudinal pressure stress = $P*R_i / (2*T)$ =27 psi

Maximum combined stress (P_L+P_b+Q) = -40 114 psi
Allowable combined stress (P_L+P_b+Q) = ±3*S = ±60 000 psi

The maximum combined stress (P_L+P_b+Q) is within allowable limits.

Maximum local primary membrane stress (P_L) = -9 073 psi
Allowable local primary membrane stress (P_L) = ±1.5*S = ±30 000 psi

The maximum local primary membrane stress (P_L) is within allowable limits.

Stresses at the lug edge per WRC Bulletin 107										
Figure	**value**	**β**	**A_u**	**A_l**	**B_u**	**B_l**	**C_u**	**C_l**	**D_u**	**D_l**
3C*	2.1659	0.3252	0	0	0	0	-3 849	-3 849	-3 849	-3 849
4C*	3.0976	0.5774	-5 505	-5 505	-5 505	-5 505	0	0	0	0
1C	0.063	0.6035	0	0	0	0	-36 319	36 319	-36 319	36 319
2C-1	0.0047	0.6035	-2 710	2 710	-2 710	2 710	0	0	0	0
3A*	1.1598	0.4425	0	0	0	0	0	0	0	0
1A	0.0584	0.6172	0	0	0	0	0	0	0	0
3B*	3.7691	0.2843	0	0	0	0	0	0	0	0
1B-1	0.0073	0.4577	0	0	0	0	0	0	0	0
Pressure stress*			54	54	54	54	54	54	54	54
Total circumferential stress			-8 161	-2 741	-8 161	-2 741	-40 114	32 524	-40 114	32 524
Primary membrane circumferential stress*			-5 451	-5 451	-5 451	-5 451	-3 795	-3 795	-3 795	-3 795
3C*	1.0373	0.5774	-1 843	-1 843	-1 843	-1 843	0	0	0	0
4C*	5.1206	0.3252	0	0	0	0	-9 100	-9 100	-9 100	-9 100
1C-1	0.0157	0.4202	-9 051	9 051	-9 051	9 051	0	0	0	0
2C	0.03	0.4202	0	0	0	0	-17 295	17 295	-17 295	17 295
4A*	4.9387	0.4425	0	0	0	0	0	0	0	0
2A	0.0232	0.4675	0	0	0	0	0	0	0	0
4B*	1.9326	0.2843	0	0	0	0	0	0	0	0
2B-1	0.0205	0.3265	0	0	0	0	0	0	0	0
Pressure stress*			27	27	27	27	27	27	27	27
Total longitudinal stress			-10 867	7 235	-10 867	7 235	-26 368	8 222	-26 368	8 222
Primary membrane longitudinal stress*			-1 816	-1 816	-1 816	-1 816	-9 073	-9 073	-9 073	-9 073
Shear from M_t			0	0	0	0	0	0	0	0
Circ shear from V_c			50	50	-50	-50	0	0	0	0
Long shear from V_L			0	0	0	0	0	0	0	0
Total Shear stress			50	50	-50	-50	0	0	0	0
Combined stress (P_L+P_b+Q)			-10 868	9 977	-10 868	9 977	-40 114	32 524	-40 114	32 524
* denotes primary stress.										

PIPING SUPPORTS

Sheet :	of
By :	
Date :	2019 March 27
PC-1933	Rev:

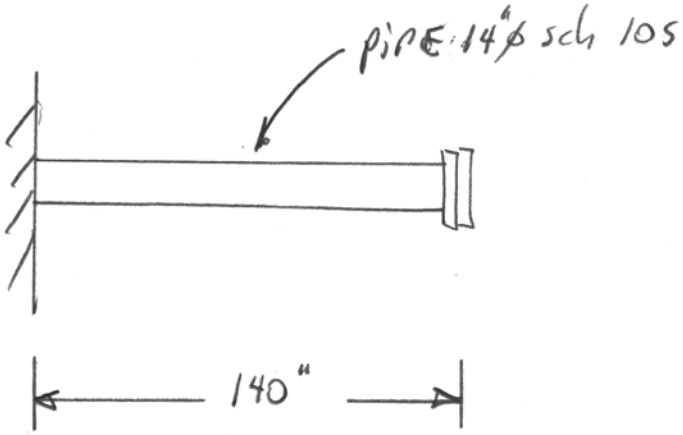

$$M = \frac{PL}{2} = \frac{1700\ lbs \times 140"}{2} = 119\,000\ lbs\ in$$

$$S = \frac{\pi (D^4 - d^4)}{32\ D} = \frac{\pi (14^4 - 13.67^4)}{32 \times 14} = 24,5\ in^3$$

$$\sigma = \frac{M}{S} = \frac{119\,000\ psi}{24.5\ in^3} = 4860\ psi < 12\,400\ psi$$

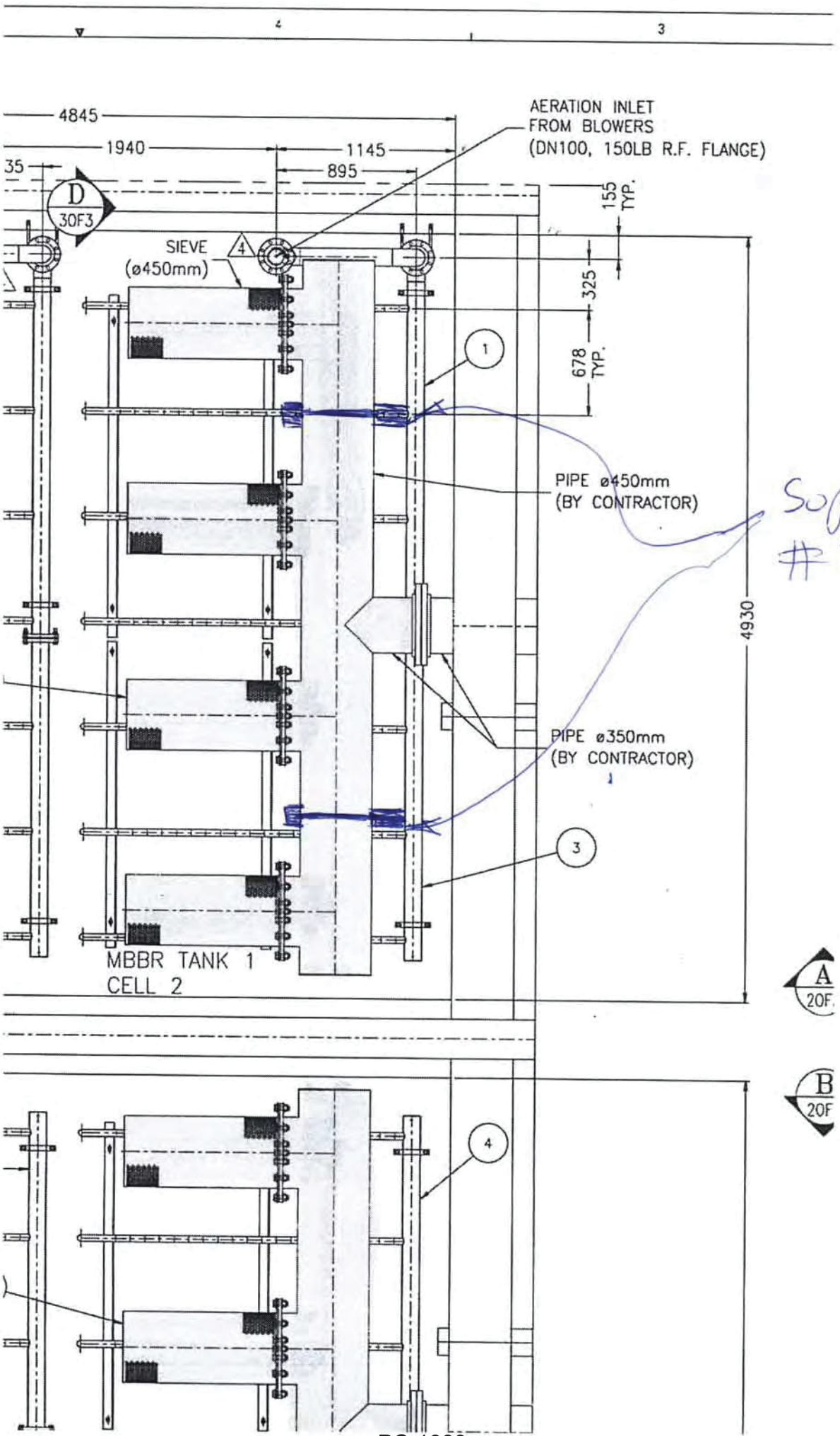
4845
1940
1145
895
35
D
30F3
AERATION INLET
FROM BLOWERS
(DN100, 150LB R.F. FLANGE)
155
TYP.
SIEVE
(ø450mm)
4
325
678
TYP.
1
PIPE ø450mm
(BY CONTRACTOR)
Support
#2
4930
PIPE ø350mm
(BY CONTRACTOR)
3
MBBR TANK 1
CELL 2
A
20F
B
20F
4

PIPING SUPPORTS

Sheet :	of
By :	
Date :	2019 March 27
PC-1933	Rev:

SUPPORT # 3

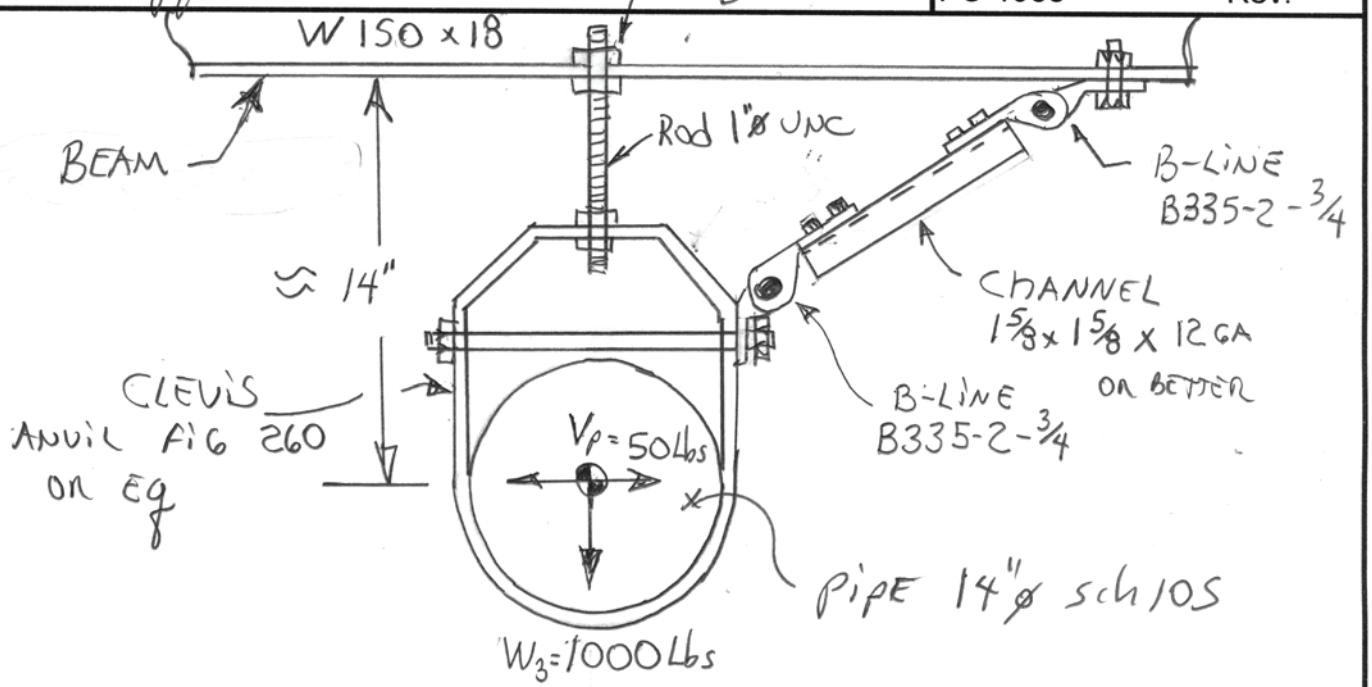

pipe 14"ø — flange

$W_3 = (7.5\ ft \times 95\ Lbs/ft) + 240\ Lbs = 952\ Lbs$ use 1000 Lbs

$W_{TOTAL} = (18\ ft \times 95\ Lbs/ft) + 240\ Lbs + 100 = 2050\ Lbs$

$V_{p\ TOTAL} = 0.05 \times 2050\ Lb = 105\ Lbs$

ON AXIAL LOAD ASSUME 200 Lbs AS hydrolic RAM

PIPING SUPPORTS

support #4

Sheet :	of
By :	
Date :	2019 March 27
PC-1933	Rev:

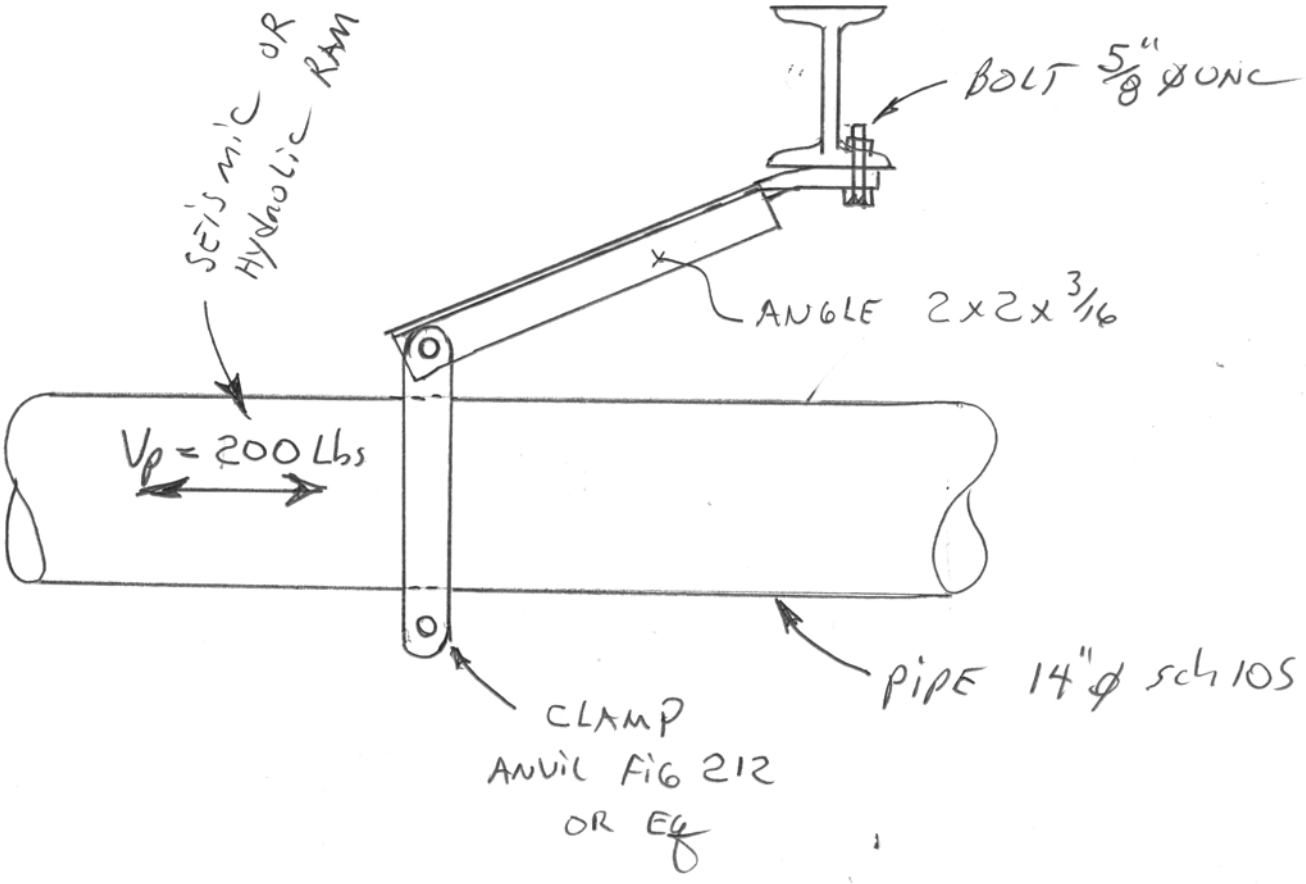

PIPING SUPPORTS

Sheet :	of
By :	
Date :	2019 March 27
PC-1933	Rev:

AF subnatant pipe shall be supported for gravity load at every DAF tank platform joist W150x18

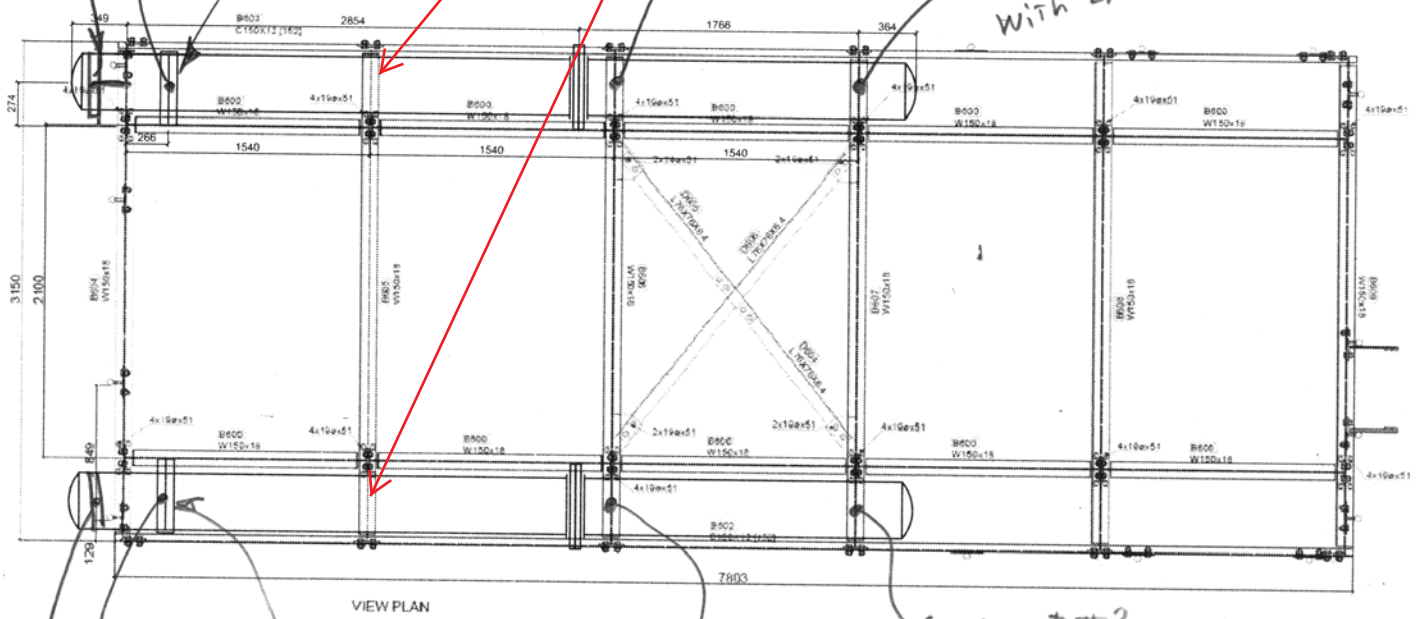

Axial support #4

support #3 with LATERAL BRACE

ADD W150x18

support #3 with NO LATERAL BRACE

support #3 with LATERAL BRACE

ADD W150 x 18

support #3 with LATERAL BRACE

support #3 with NO LATERAL BRACE

Axial support #4

PIPING SUPPORTS

SUPPORT # 5

Sheet :	of
By :	
Date :	2019 March 27
PC-1933	Rev:

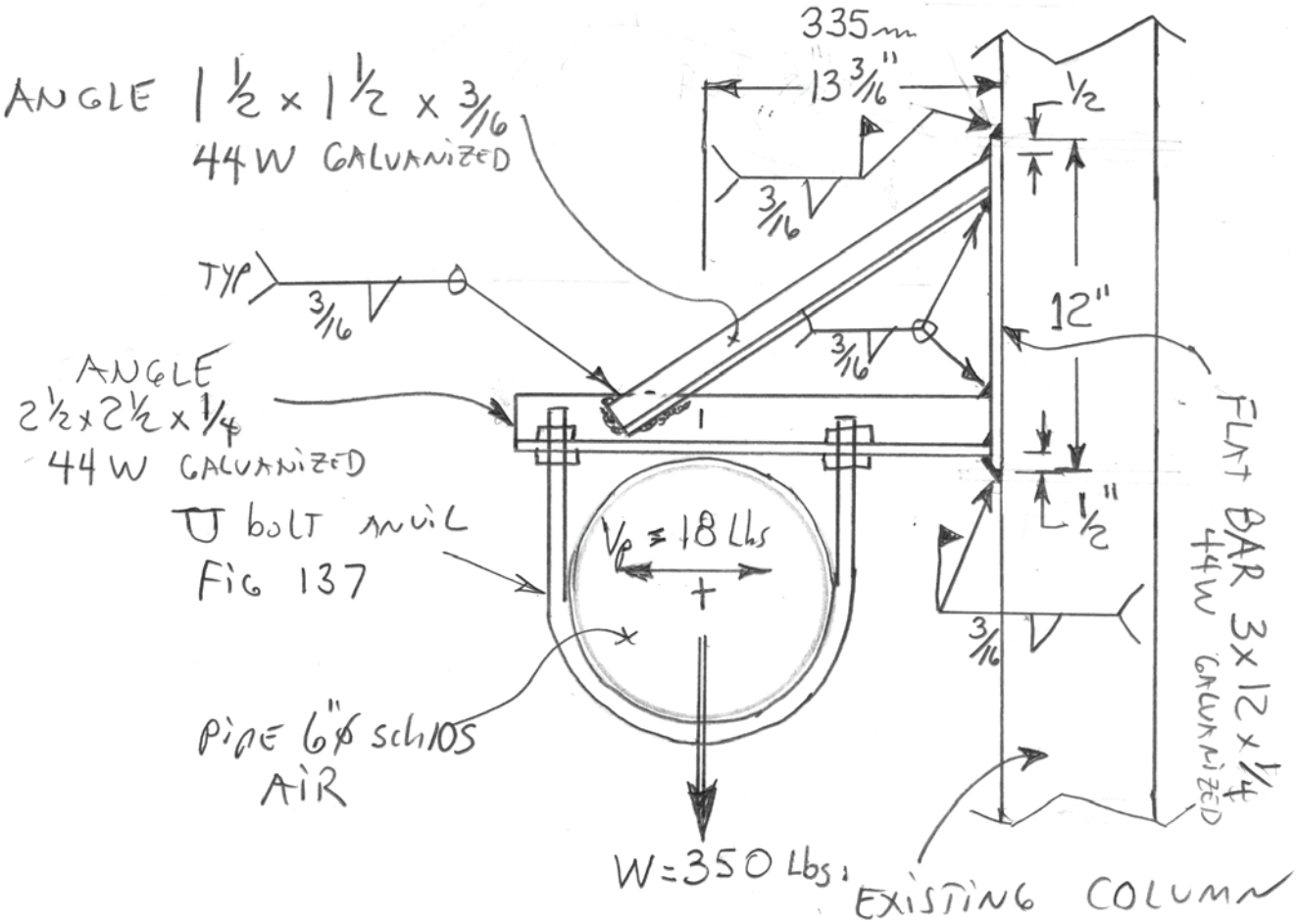

$W_5 = (10' \times 10\ Lbs/ft) + 68\ Lbs + 125\ Lbs + 48\ Lbs = 341\ Lbs$

USE 350 Lbs

$V_{p5} = 0.05 \times 350\ Lbs = 18\ Lbs$

PIPING SUPPORTS

Sheet :	of
By :	
Date :	2019 March 27
PC-1933	Rev:

SUPPORT # 6

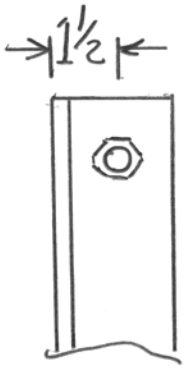

A-A

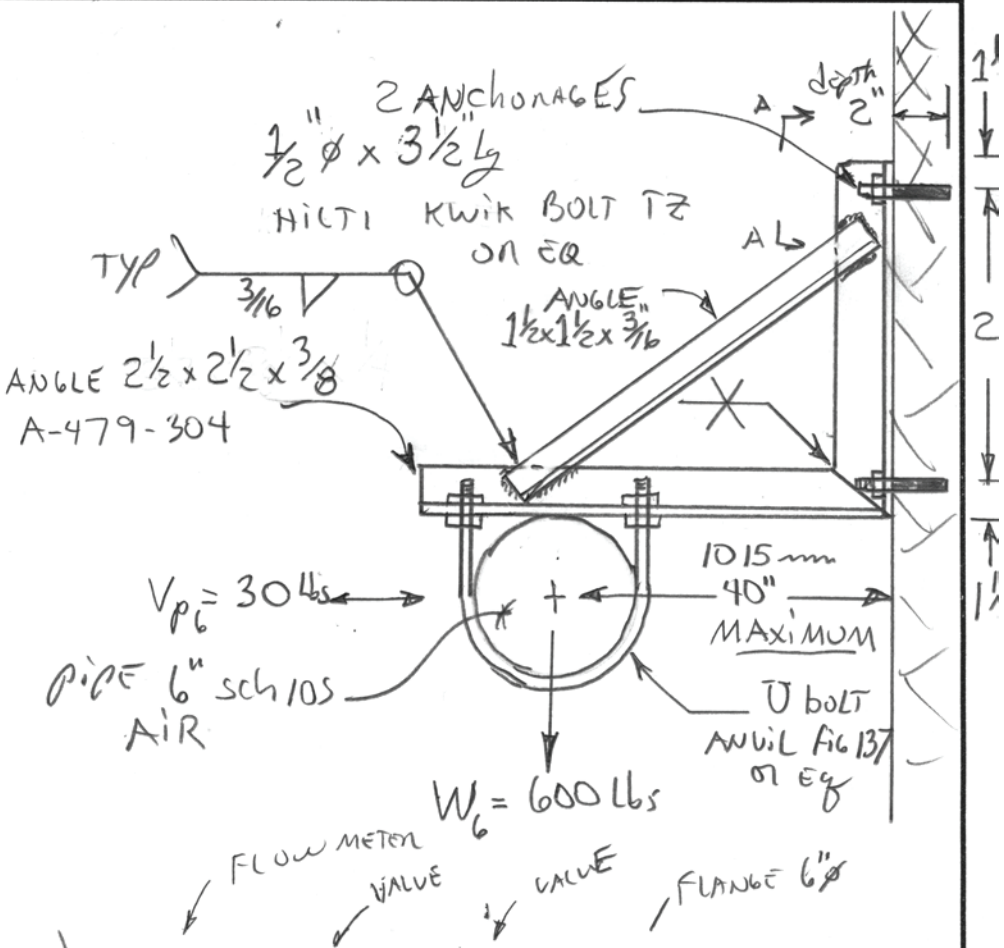

$W_6 = (12\,Ft \times 10\,Lbs/Ft) + 68\,Lbs + 110\,Lbs + 125\,Lbs + 3 \times 48\,Lbs$

$= 567\,Lbs$ USE 600 Lbs

$V_{p6} = 0.05 \times 567\,Lbs = 28.4\,Lbs$ USE 30 Lbs

$W_{TOTAL} = (46\,Ft \times 10\,Lbs/Ft) + 68 + 110 + 125 + 3 \times 48 = 907\,Lbs$

$V_{p\,TOTAL} = 0.05 \times 907 = 45$ USE 150 Lbs

PIPING SUPPORTS	Sheet : of
	By :
	Date : 2019 March 27
	PC-1933 Rev:

support # 6

TRACTION ON ANCHORAGE

$$T = \frac{W \times L}{a}$$

$$T = \frac{600\ Lbs \times 40"}{24"} = 1000\ Lbs$$

HILTI KWIK BOLT TZ

OK $\frac{1}{2}"\varnothing \times 3\frac{1}{2}"$ Lg

MOMENT ON ANGLE

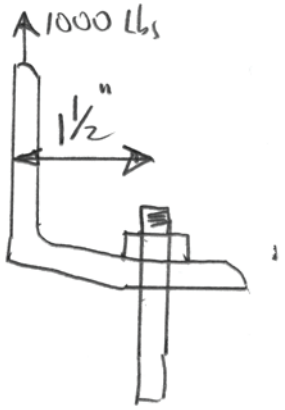

$$M = PL = 1000 Lbs \times 1\frac{1}{2}" = 1500\ Lbs \cdot in$$

$$\sigma = \frac{M}{S} = \frac{1500\ Lbs \cdot in}{0.105} = 14\,222\ psi < 20\,000\ psi$$

$$\frac{4.5 \times \frac{3}{8}^2}{6}$$

PIPING SUPPORTS

Sheet :	of
By :	
Date :	2019 March 27
PC-1933	Rev:

Support # 7

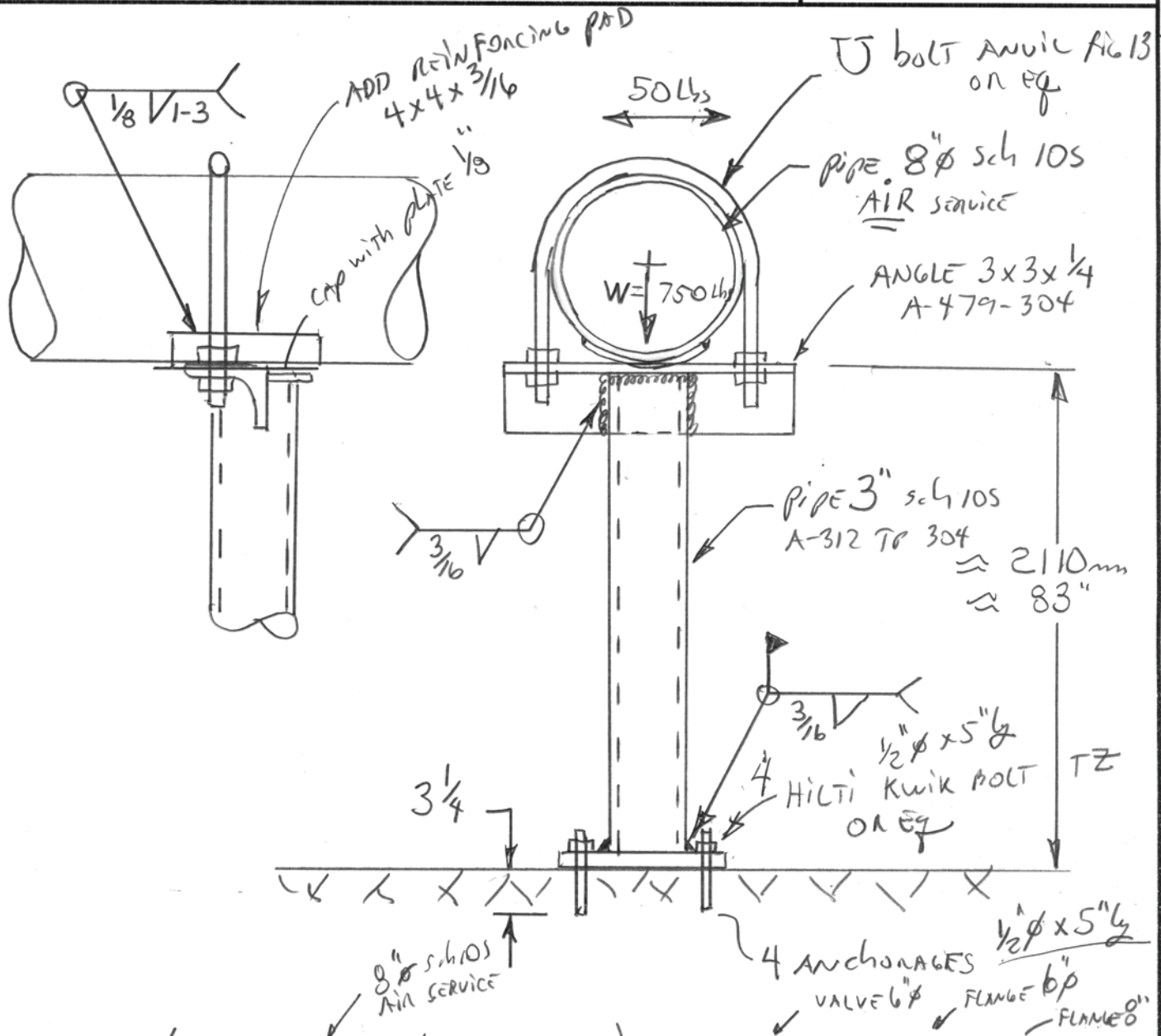

$W_6 = (10\,ft \times 13.4\,lbs/ft) + (14\,ft \times 10\,lbs/ft) + 2 \times 124\,lbs + 2 \times 48 + 85\,lbs$

$= 703$ lbs

USE 750 #

$V_p = 0.05 \times 750 = 40$ lbs

USE 50 lbs

PIPING SUPPORTS

Support #7

Sheet :	of
By :	
Date :	2019 March 27
PC-1933	Rev:

BASE PLATE

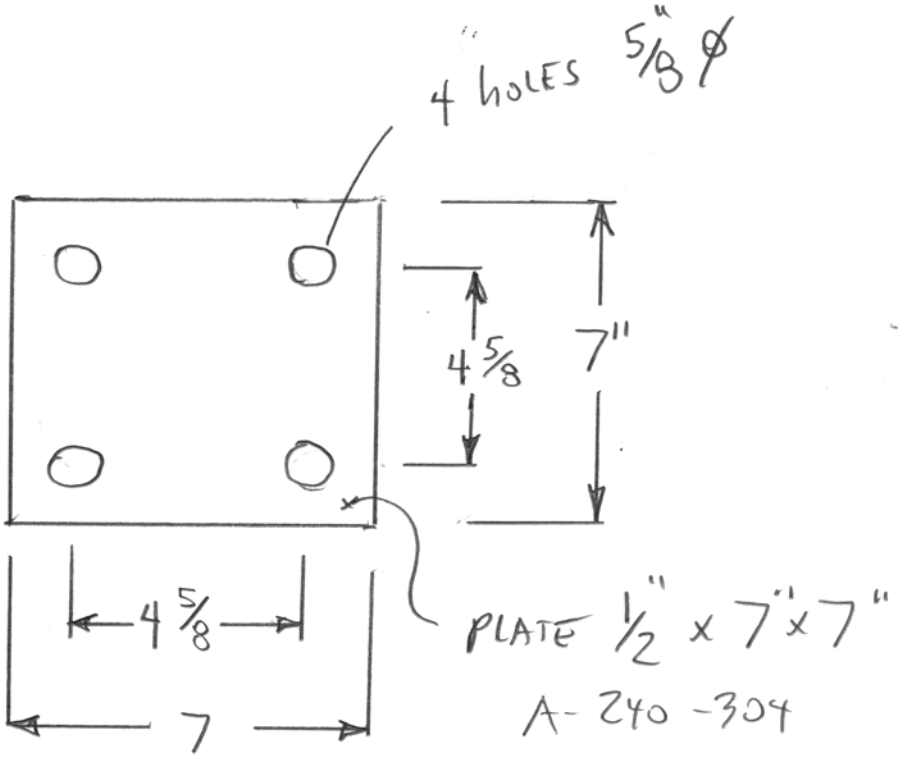

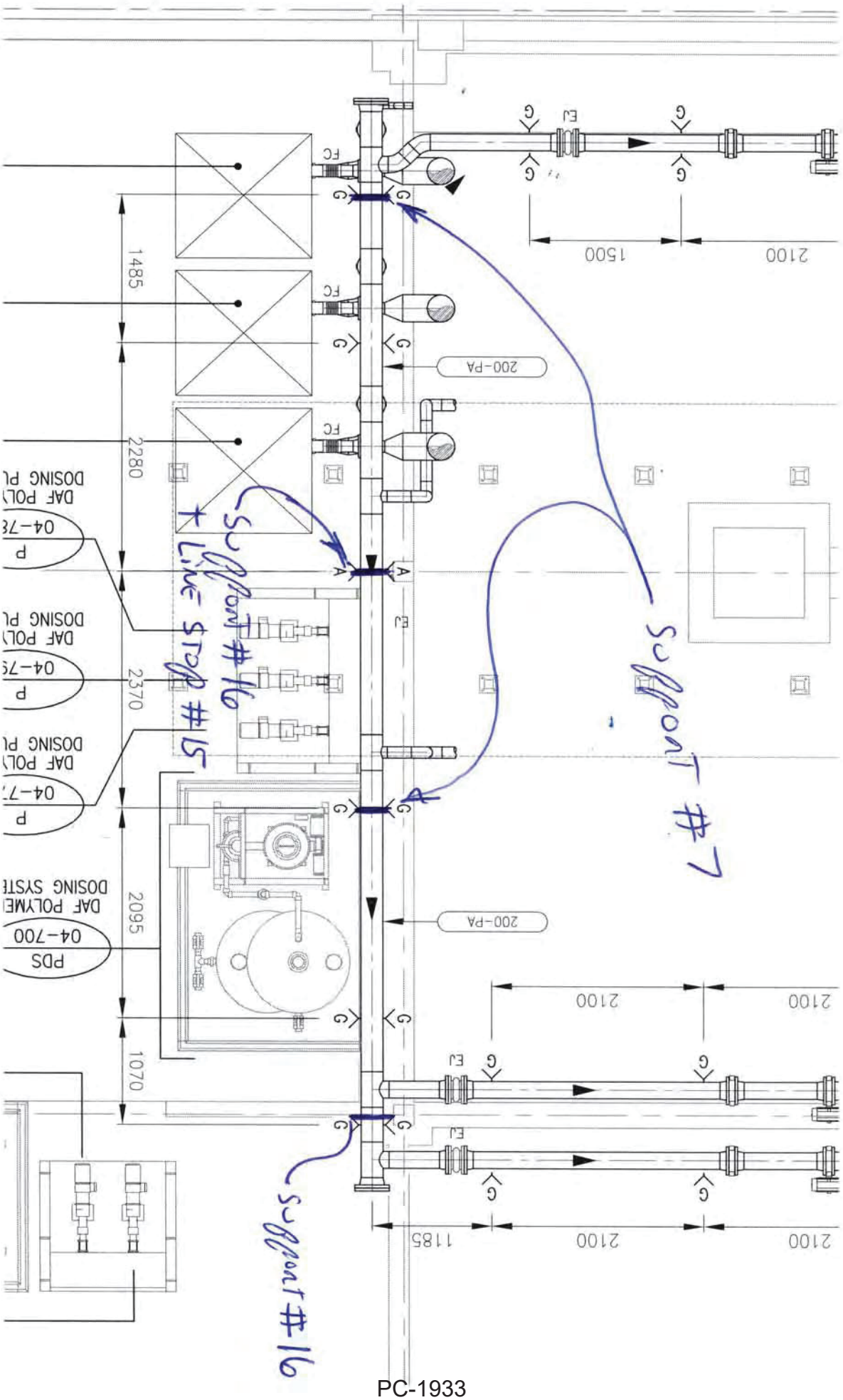
1485
2280
2370
2095
1070
1500
2100
1185
200-PA
DAF POLYME
DOSING SYSTE
PDS
04-700
Support #16
+ Line Stop #15
Support #7
Support #16

LOCAL STRESS ON 8"SCH 10S

Geometry	
Height (radial)	6"
Width (circumferential)	0.25"
Length	3"
Fillet Weld Size:	0.125"
Located On	Cylinder #1 (18" from right end)
Location Angle	0.00°
Reinforcement Pad	
Thickness	0.1875"
Width	4"
Length	4"
Weld Size	0.125"

Applied Loads	
Radial load, P_r	700 lb_f
Circumferential moment, M_c	0 lb_f-in
Circumferential shear, V_c	0 lb_f
Longitudinal moment, M_L	0 lb_f-in
Longitudinal shear, V_L	0 lb_f
Torsion moment, M_t	0 lb_f-in
Internal pressure, P	15 psi
Mean shell radius, R_m	4.256"
Design factor	3

Maximum stresses due to the applied loads at the lug edge (includes pressure)

$\gamma = R_m / T = 4.256 / 0.2615 = 16.2753$

$C_1 = 0.25$, $C_2 = 1$ in

Note: Actual lug $C_1 / C_2 < 1 / 4$, $C_1 / C_2 = 1 / 4$ used as this is the minimum ratio covered by WRC 537.

Local circumferential pressure stress = $P*R_i / T$ =855 psi

Local longitudinal pressure stress = $P*R_i / (2*T)$ =428 psi

Maximum combined stress (P_L+P_b+Q) = -10 050 psi
Allowable combined stress (P_L+P_b+Q) = ±3*S = ±60 000 psi

The maximum combined stress (P_L+P_b+Q) is within allowable limits.

Maximum local primary membrane stress (P_L) = -1 261 psi

Allowable local primary membrane stress (P_L) = ±1.5*S = ±30 000 psi

The maximum local primary membrane stress (P_L) is within allowable limits.

Stresses at the lug edge per WRC Bulletin 537										
Figure	**Y**	**β**	**A_u**	**A_l**	**B_u**	**B_l**	**C_u**	**C_l**	**D_u**	**D_l**
3C*	2.3279	0.1739	0	0	0	0	-1 464	-1 464	-1 464	-1 464
4C*	2.7857	0.141	-1 752	-1 752	-1 752	-1 752	0	0	0	0
1C	0.1537	0.1034	0	0	0	0	-9 441	9 441	-9 441	9 441
2C-1	0.1288	0.1034	-7 908	7 908	-7 908	7 908	0	0	0	0
3A*	0.2752	0.0932	0	0	0	0	0	0	0	0
1A	0.1016	0.1219	0	0	0	0	0	0	0	0
3B*	1.5927	0.148	0	0	0	0	0	0	0	0
1B-1	0.0506	0.133	0	0	0	0	0	0	0	0
Pressure stress*			855	855	855	855	855	855	855	855
Total circumferential stress			-8 805	7 011	-8 805	7 011	-10 050	8 832	-10 050	8 832
Primary membrane circumferential stress*			-897	-897	-897	-897	-609	-609	-609	-609
3C*	2.5688	0.141	-1 616	-1 616	-1 616	-1 616	0	0	0	0
4C*	2.6856	0.1739	0	0	0	0	-1 689	-1 689	-1 689	-1 689
1C-1	0.1245	0.1469	-7 649	7 649	-7 649	7 649	0	0	0	0
2C	0.0925	0.1469	0	0	0	0	-5 680	5 680	-5 680	5 680
4A*	0.3719	0.0932	0	0	0	0	0	0	0	0
2A	0.0522	0.1708	0	0	0	0	0	0	0	0
4B*	0.4839	0.148	0	0	0	0	0	0	0	0
2B-1	0.0628	0.1833	0	0	0	0	0	0	0	0
Pressure stress*			428	428	428	428	428	428	428	428
Total longitudinal stress			-8 837	6 461	-8 837	6 461	-6 941	4 419	-6 941	4 419
Primary membrane longitudinal stress*			-1 188	-1 188	-1 188	-1 188	-1 261	-1 261	-1 261	-1 261
Shear from M_t			0	0	0	0	0	0	0	0
Circ shear from V_c			0	0	0	0	0	0	0	0
Long shear from V_L			0	0	0	0	0	0	0	0
Total Shear stress			0	0	0	0	0	0	0	0
Combined stress (P_L+P_b+Q)			-8 837	7 011	-8 837	7 011	-10 050	8 832	-10 050	8 832
* denotes primary stress.										

Maximum stresses due to the applied loads at the pad edge (includes pressure)

$\gamma = R_m / T = 4.256 / 0.074 = 57.5135$

$C_1 = 2.125$, $C_2 = 2.125$ in

Local circumferential pressure stress = $P*R_i / T$ =855 psi

Local longitudinal pressure stress = $P*R_i / (2*T)$ =428 psi

Maximum combined stress (P_L+P_b+Q) = -40 062 psi
Allowable combined stress (P_L+P_b+Q) = ±3*S = ±60 000 psi

The maximum combined stress (P_L+P_b+Q) is within allowable limits.

Maximum local primary membrane stress (P_L) = -6 947 psi
Allowable local primary membrane stress (P_L) = ±1.5*S = ±30 000 psi

The maximum local primary membrane stress (P_L) is within allowable limits.

Stresses at the pad edge per WRC Bulletin 537										
Figure	**Y**	**β**	**A_u**	**A_l**	**B_u**	**B_l**	**C_u**	**C_l**	**D_u**	**D_l**
3C*	1.1552	0.4993	0	0	0	0	-2 568	-2 568	-2 568	-2 568
4C*	3.318	0.4993	-7 375	-7 375	-7 375	-7 375	0	0	0	0
1C	0.05	0.4993	0	0	0	0	-38 349	38 349	-38 349	38 349
2C-1	0.0039	0.4993	-2 975	2 975	-2 975	2 975	0	0	0	0
3A*	1.018	0.4993	0	0	0	0	0	0	0	0
1A	0.0564	0.4993	0	0	0	0	0	0	0	0
3B*	1.8782	0.4993	0	0	0	0	0	0	0	0
1B-1	0.0058	0.4993	0	0	0	0	0	0	0	0
Pressure stress*			855	855	855	855	855	855	855	855
Total circumferential stress			-9 495	-3 545	-9 495	-3 545	-40 062	36 636	-40 062	36 636
Primary membrane circumferential stress*			-6 520	-6 520	-6 520	-6 520	-1 713	-1 713	-1 713	-1 713
3C*	1.1552	0.4993	-2 568	-2 568	-2 568	-2 568	0	0	0	0
4C*	3.318	0.4993	0	0	0	0	-7 375	-7 375	-7 375	-7 375
1C-1	0.008	0.4993	-6 101	6 101	-6 101	6 101	0	0	0	0
2C	0.03	0.4993	0	0	0	0	-23 009	23 009	-23 009	23 009
4A*	5.3981	0.4993	0	0	0	0	0	0	0	0
2A	0.0229	0.4993	0	0	0	0	0	0	0	0
4B*	1.0341	0.4993	0	0	0	0	0	0	0	0
2B-1	0.0128	0.4993	0	0	0	0	0	0	0	0
Pressure stress*			428	428	428	428	428	428	428	428
Total longitudinal stress			-8 241	3 961	-8 241	3 961	-29 956	16 062	-29 956	16 062
Primary membrane longitudinal stress*			-2 140	-2 140	-2 140	-2 140	-6 947	-6 947	-6 947	-6 947
Shear from M_t			0	0	0	0	0	0	0	0
Circ shear from V_c			0	0	0	0	0	0	0	0
Long shear from V_L			0	0	0	0	0	0	0	0
Total Shear stress			0	0	0	0	0	0	0	0
Combined stress (P_L+P_b+Q)			-9 495	7 506	-9 495	7 506	-40 062	36 636	-40 062	36 636
* denotes primary stress.										

Pipe 3" SCH 10S

ASME Section VIII Division 1, 2013 Edition				
Component		Support Skirt		
Skirt is Attached To		13.2		
Skirt Attachment Offset		0" up from the bottom seam		
Material		SA-312 TP304 Wld & smls pipe (II-D p. 94, ln. 19)		
		Impact Tested[1]	**Normalized**	**Fine Grain Practice**
		No	No	No
Design Temperature				
Internal		100° F		
Dimensions				
Inner Diameter	**Top**	3.26"		
	Botttom	3.26"		
Length (includes base ring thickness)		73"		
Nominal Thickness		0.12"		
Corrosion	**Inner**	0"		
	Outer	0"		
Weight				
New		26.79 lb		
Corroded		26.79 lb		
Joint Efficiency				
Top		0.55		
Bottom		0.8		

[1] Impact testing requirements are not checked for supports

Skirt design thickness, largest of the following + corrosion = 0.0753 in

The governing condition is due to weight, compressive stress at the base, operating & corroded.

The skirt thickness of 0.105 in is adequate.

Results Summary							
Loading	**Condition**	**Tensile or Compressive Side**	**Governing Skirt Location**	**Temperature (° F)**	**Allowable Stress (psi)**	**Calculated Stress/E (psi)**	**Required thickness (in)**
Weight	operating, corroded	Tensile	bottom	100	20 000	9 158.91	0.055
		Compressive			13 625.98	8 555.25	0.0753
	empty, corroded	Tensile	bottom	70	20 000	9 894.65	0.0594
		Compressive			13 625.98	7 966.66	0.0702

Loading due to weight, operating & corroded

Windward side (tensile)

Required thickness, tensile stress at base:

$t = -W / (\pi*D*S_t*E) + 48*M / (\pi*D^2*S_t*E)$
$= -782.46 / (\pi*3.38*20\,000*0.8) + 48*712.5 / (\pi*3.38^2*20\,000*0.8)$
$= 0.055$ in

Required thickness, tensile stress at the top:

$t = -W_t / (\pi*D_t*S_t*E) + 48*M_t / (\pi*D_t^2*S_t*E)$
$= -755.67 / (\pi*3.38*20\,000*0.55) + 48*104.2 / (\pi*3.38^2*20\,000*0.55)$
$= 0.0062$ in

Leeward side (compressive)

Required thickness, compressive stress at base:

$t = W / (\pi*D*S_c*E_c) + 48*M / (\pi*D^2*S_c*E_c)$
$= 782.46 / (\pi*3.38*13\,626*1) + 48*712.5 / (\pi*3.38^2*13\,626*1)$
$= 0.0753$ in

Required thickness, compressive stress at the top:

$t = W_t / (\pi*D_t*S_c*E_c) + 48*M_t / (\pi*D_t^2*S_c*E_c)$
$= 755.67 / (\pi*3.38*13\,626*1) + 48*104.2 / (\pi*3.38^2*13\,626*1)$
$= 0.0155$ in

Base Plate 7 x 7 x 1/2"

Inputs	
Base configuration	single base plate without gussets
Base plate material	A-240-304
Base plate allowable stress, S_p	20 000 psi
Foundation compressive strength	1 658 psi
Concrete ultimate 28-day strength	3 000 psi
Bolt circle, BC	6.5"
Base plate inner diameter, D_i	1"
Base plate outer diameter, D_o	7"
Base plate thickness, t_b	0.5"
Anchor Bolts	
Material	A-307 gr B
Allowable stress, S_b	15 000 psi
Bolt size and type	0.5" coarse threaded
Number of bolts, N	4
Corrosion allowance (applied to root radius)	0"
Anchor bolt clearance	0.125"
Bolt root area (corroded), A_b	0.13 in^2
Diameter of anchor bolt holes, d_b	0.625"
Initial bolt preload	15% (2 250 psi)
Bolt at 0°	No

Results Summary							
Load	Vessel condition	Base V (lb_f)	Base M (lb_f-ft)	W (lb)	Required bolt area (in^2)	t_r Base (in)	Foundation bearing stress (psi)
Weight	operating, corroded	100	712.5	787.5	0.0746	0.4552	451.05
Weight	operating, new	100	712.5	787.5	0.0746	0.4552	451.05
Weight	empty, corroded	100	712.5	37.5	0.0871	0.4521	444.96
Weight	empty, new	100	712.5	37.5	0.0871	0.4521	444.96

Anchor bolt load (governing)

P = -W / N + 48 * M / (N*BC)
= -37.46 / 4 + 48 * 712.5 / (4*6.5)
= 1 306.09 lb_f

Required area per bolt = P / S_b = 0.0871 in^2

The area provided (0.126 in^2) by the specified anchor bolt is adequate.

Support calculations (Jawad & Farr chapter 12, governing)

Base plate width, t_c:	3	in
Average base plate diameter, d:	4	in
Base plate elastic modulus, E_s:	28.0E+06	psi
Base plate yield stress, S_y:	30 000	psi

E_c = 57 000*Sqr(3 000) = 3 122 019 psi

n = E_s/E_c = 28.0E+06 / 3 122 019 = 8.9686

t_s = (N*A_b) / (π*d)
= (4*0.126) / (π*4)
= 0.0401 in

From table 12.4 for k = 0.263103:

K_1 = 2.5225, K_2 = 1.4072
L_1 = 0.9478, L_2 = 2.2828, L_3 = 0.8347

Total tensile force on bolting

T = (12*M - W *(L_1 + L_3)) / (L_2 + L_3)
= (12*712.5 - 787.46 *(0.9478 + 0.8347)) / (2.2828 + 0.8347)
= 2 292.48 lb_f

Tensile stress in bolts use the larger of f_s or bolt preload = 2 250 psi

f_s = T / (t_s * (d / 2) * K_1)
= 2 292.48 / (0.0401 * (4 / 2) * 2.5225)
= 11 330 psi

Total compressive load on foundation

C_c = T + W + Bolt Preload
= 2 292.48 + 787.46 + 1 134
= 4 213.94 lb_f

Foundation bearing stress

$f_c = C_c / (((t_c - t_s) + n*t_s)*(d / 2)*K_2)$
= 4 213.94 / (((3 - 0.0401) + 8.9686*0.0401)*(4 / 2)*1.4072)
= 451 psi

As f_c <= 1 658 psi the base plate width is satisfactory.

$k = 1 / (1 + f_s / (n*f_c))$
= 1 / (1 + 11 330 / (8.9686*451))
= 0.263103

Base plate required thickness (governing)

$t_r = (3*f_c*L^2 / S_p)^{0.5}$
= $(3*451*1.75^2 / 20\ 000)^{0.5}$
= 0.4552 in

The base plate thickness is satisfactory.

PIPING SUPPORTS

Sheet :	of
By :	
Date :	2019 March 27
PC-1933	Rev:

SUPPORT # 8

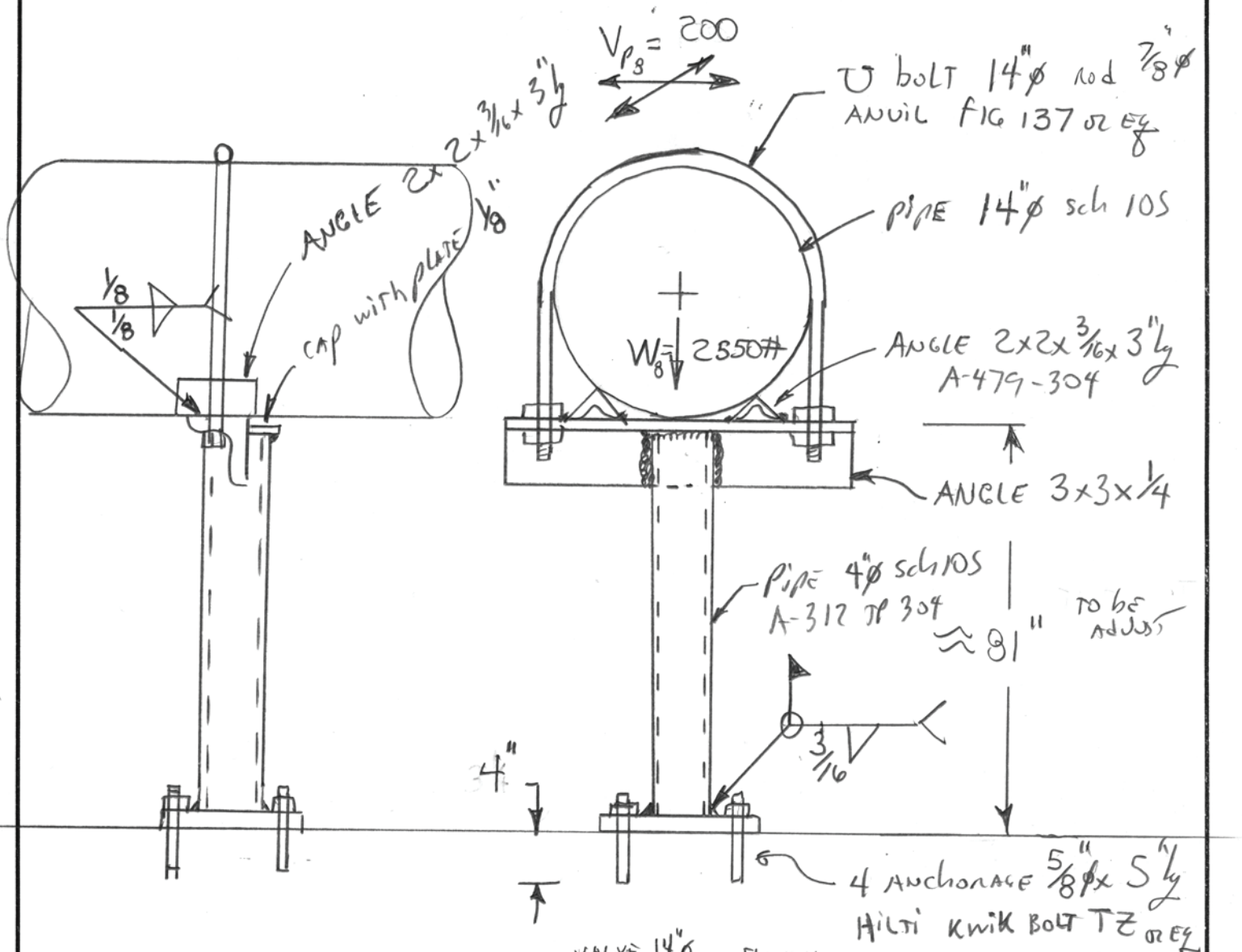

$W_8 = (10\,Ft \times 95\,\#/Ft) + 3 \times 220 + 3 \times 240 + 80 + 2 \times 66 = 2542\ Lbs$

(VALVE 14"ø, FLANGES, BLIND, VICTAULIC)

USE 2550 #

$V_{p8} = 0.05 \times 2550 = 130\ Lbs$

USE 200 #

PIPING SUPPORTS

Sheet :	of
By :	
Date :	2019 March 27
PC-1933	Rev:

BASE PLATE

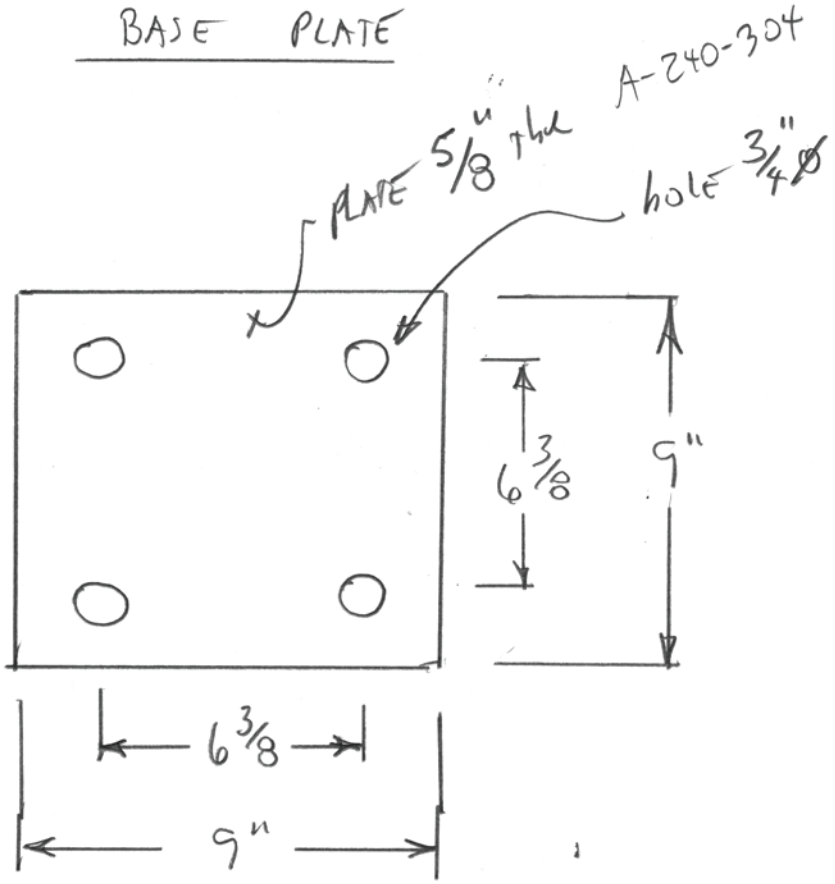

Pipe 4" SCH 10S

ASME Section VIII Division 1, 2013 Edition				
Component		Support Skirt		
Skirt is Attached To		13.2		
Skirt Attachment Offset		0" up from the bottom seam		
Material		SA-312 TP304 Wld & smls pipe (II-D p. 94, ln. 19)		
		Impact Tested[1]	**Normalized**	**Fine Grain Practice**
		No	No	No
Design Temperature				
Internal		100° F		
Dimensions				
Inner Diameter	**Top**	4.26"		
	Botttom	4.26"		
Length (includes base ring thickness)		70"		
Nominal Thickness		0.12"		
Corrosion	**Inner**	0"		
	Outer	0"		
Weight				
New		33.22 lb		
Corroded		33.22 lb		
Joint Efficiency				
Top		0.55		
Bottom		0.8		

[1] Impact testing requirements are not checked for supports

Skirt design thickness, largest of the following + corrosion = 0.0956 in

The governing condition is due to weight, compressive stress at the base, operating & corroded.

The skirt thickness of 0.105 in is adequate.

Results Summary							
Loading	**Condition**	**Tensile or Compressive Side**	**Governing Skirt Location**	**Temperature (° F)**	**Allowable Stress (psi)**	**Calculated Stress/E (psi)**	**Required thickness (in)**
Weight	operating, corroded	Tensile	bottom	100	20 000	9 404.85	0.0564
		Compressive			13 307.43	10 600.3	0.0956
	empty, corroded	Tensile	bottom	70	20 000	11 297.39	0.0678
		Compressive			13 307.43	9 086.27	0.0819

Loading due to weight, operating & corroded

Windward side (tensile)

Required thickness, tensile stress at base:

$t = -W / (\pi * D * S_t * E) + 48 * M / (\pi * D^2 * S_t * E)$
$= -2\,539.93 / (\pi * 4.38 * 20\,000 * 0.8) + 48 * 1\,365.4 / (\pi * 4.38^2 * 20\,000 * 0.8)$
$= 0.0564$ in

Required thickness, tensile stress at the top:

$t = -W_t / (\pi * D_t * S_t * E) + 48 * M_t / (\pi * D_t^2 * S_t * E)$
$= -2\,506.71 / (\pi * 4.38 * 13\,307 * 1) + 48 * 198.8 / (\pi * 4.38^2 * 13\,307 * 1)$
$= 0.0018$ in

Leeward side (compressive)

Required thickness, compressive stress at base:

$t = W / (\pi * D * S_c * E_c) + 48 * M / (\pi * D^2 * S_c * E_c)$
$= 2\,539.93 / (\pi * 4.38 * 13\,307 * 1) + 48 * 1\,365.4 / (\pi * 4.38^2 * 13\,307 * 1)$
$= 0.0956$ in

Required thickness, compressive stress at the top:

$t = W_t / (\pi * D_t * S_c * E_c) + 48 * M_t / (\pi * D_t^2 * S_c * E_c)$
$= 2\,506.71 / (\pi * 4.38 * 13\,307 * 1) + 48 * 198.8 / (\pi * 4.38^2 * 13\,307 * 1)$
$= 0.0256$ in

Base Plate 7 x 7 x 1/2"

Inputs	
Base configuration	single base plate without gussets
Base plate material	A-240-304
Base plate allowable stress, S_p	20 000 psi
Foundation compressive strength	1 658 psi
Concrete ultimate 28-day strength	3 000 psi
Bolt circle, BC	8"
Base plate inner diameter, D_i	2"
Base plate outer diameter, D_o	9"
Base plate thickness, t_b	0.625"
Anchor Bolts	
Material	A-307 gr B
Allowable stress, S_b	15 000 psi
Bolt size and type	0.625" coarse threaded
Number of bolts, N	4
Corrosion allowance (applied to root radius)	0"
Anchor bolt clearance	0.125"
Bolt root area (corroded), A_b	0.2 in^2
Diameter of anchor bolt holes, d_b	0.75"
Initial bolt preload	15% (2 250 psi)
Bolt at 0°	No

Results Summary							
Load	Vessel condition	Base V (lb_f)	Base M (lb_f-ft)	W (lb)	Required bolt area (in^2)	t_r Base (in)	Foundation bearing stress (psi)
Weight	operating, corroded	200	1 365.4	2 549.9	0.094	0.5558	406.77
Weight	operating, new	200	1 365.4	2 549.9	0.094	0.5558	406.77
Weight	empty, corroded	200	1 365.4	49.9	0.1357	0.5504	398.99
Weight	empty, new	200	1 365.4	49.9	0.1357	0.5504	398.99

Anchor bolt load (governing)

P = -W / N + 48 * M / (N*BC)
= -49.93 / 4 + 48 * 1 365.4 / (4*8)
= 2 035.65 lb_f

Required area per bolt = P / S_b = 0.1357 in^2

The area provided (0.202 in^2) by the specified anchor bolt is adequate.

Support calculations (Jawad & Farr chapter 12, governing)

Base plate width, t_c:	3.5	in
Average base plate diameter, d:	5.5	in
Base plate elastic modulus, E_s:	28.0E+06	psi
Base plate yield stress, S_y:	30 000	psi

E_c = 57 000*Sqr(3 000) = 3 122 019 psi

n = E_s/E_c = 28.0E+06 / 3 122 019 = 8.9686

t_s = (N*A_b) / (π*d)
= (4*0.202) / (π*5.5)
= 0.0468 in

From table 12.4 for k = 0.319605:

K_1 = 2.3995, K_2 = 1.5615
L_1 = 0.9924, L_2 = 2.9096, L_3 = 1.3913

Total tensile force on bolting

T = (12*M - W *(L_1 + L_3)) / (L_2 + L_3)
= (12*1 365.4 - 2 549.93 *(0.9924 + 1.3913)) / (2.9096 + 1.3913)
= 2 396.47 lb_f

Tensile stress in bolts use the larger of f_s or bolt preload = 2 250 psi

f_s = T / (t_s * (d / 2) * K_1)
= 2 396.47 / (0.0468 * (5.5 / 2) * 2.3995)
= 7 766 psi

Total compressive load on foundation

C_c = T + W + Bolt Preload
= 2 396.47 + 2 549.93 + 1 818
= 6 764.4 lb_f

Foundation bearing stress

$f_c = C_c / (((t_c - t_s) + n*t_s)*(d / 2)*K_2)$
= 6 764.4 / (((3.5 - 0.0468) + 8.9686*0.0468)*(5.5 / 2)*1.5615)
= 407 psi

As f_c <= 1 658 psi the base plate width is satisfactory.

$k = 1 / (1 + f_s / (n*f_c))$
= 1 / (1 + 7 766 / (8.9686*407))
= 0.319605

Base plate required thickness (governing)

$t_r = (3*f_c*L^2 / S_p)^{0.5}$
= $(3*407*2.25^2 / 20\ 000)^{0.5}$
= 0.5558 in

The base plate thickness is satisfactory.

PIPING SUPPORTS

Sheet :	of
By :	
Date :	2019 March 27
PC-1933	Rev:

SUPPORT # 9

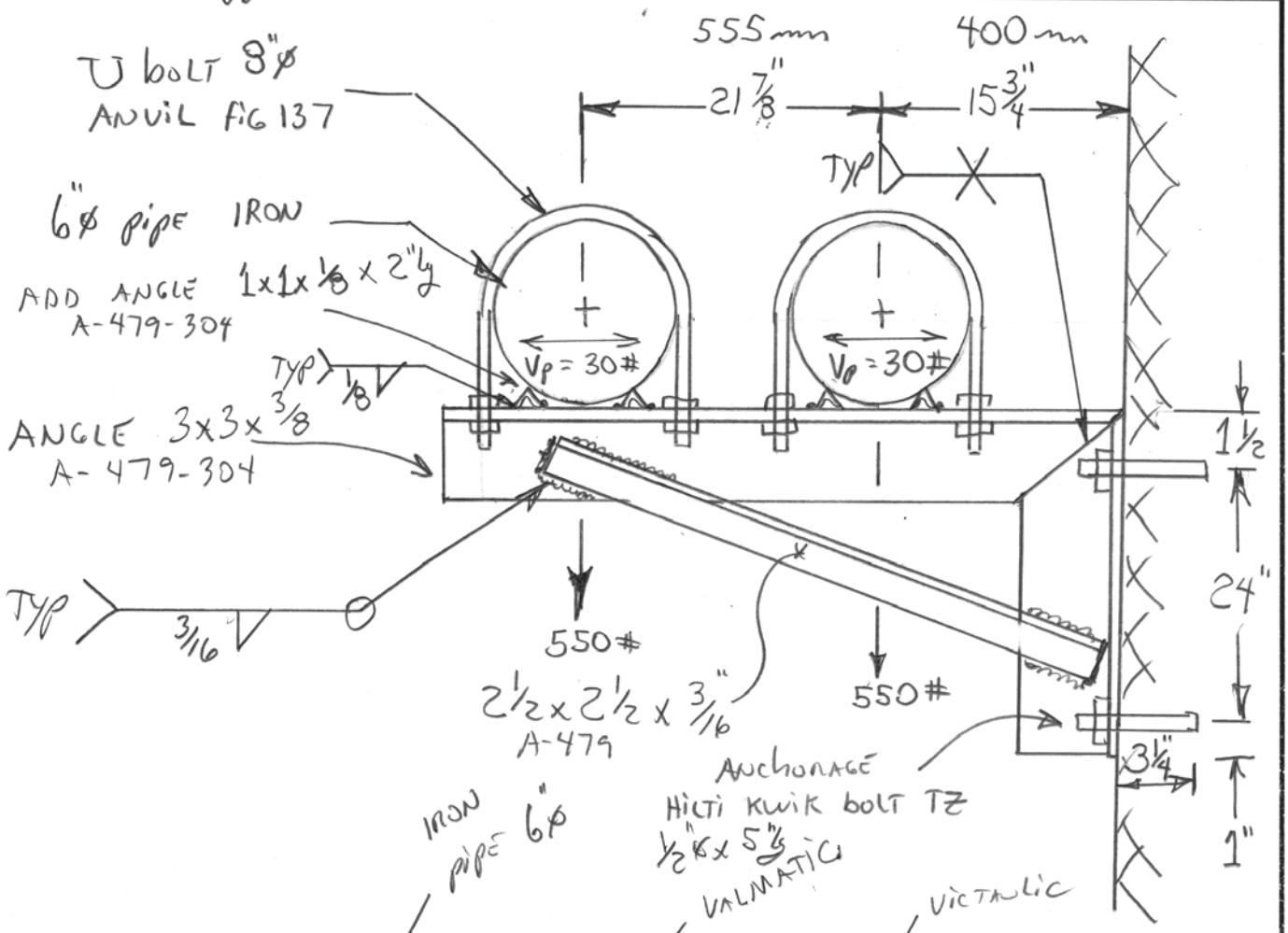

$$W_9 = \left(9.5\ ft \times 35.5\ lbs/ft\right) + 139\ Lbs + 5 \times 12 = 536\ Lbs$$

(IRON 6"ø; VICTAULIC)

OR

$$W_9 = \left(13\ ft \times 35.5\ lbs/ft\right) + 4 \times 9.5\# = 499\ Lbs$$

USE 550#

$$V_{p9} = 0.05 \times 550\# = 27.5 \quad \text{use } 30\#$$

PIPING SUPPORTS	Sheet : of
	By :
	Date : 2019 March 27
	PC-1933 Rev:

SUPPORT #9

TENSION ON ANCHORAGE

$$T = \frac{550\ Lbs \times 15\frac{3}{4}"}{25"} + \frac{550\ Lbs \times 37\frac{5}{8}}{25"} + 2 \times 30\ Lbs$$

$$= 1234\ Lbs \quad \text{OK ANCHOR } \tfrac{1}{2}"\varnothing \times 5"Lg$$
$$< 2415\ Lbs$$

MOMENT ON ANGLE

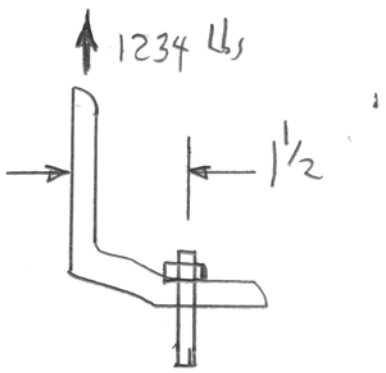

$$M = \frac{PL}{2} = \frac{1234\ Lbs \times 1.5}{2} = 926\ Lbs \cdot in$$

$$\sigma = \frac{M}{S} = \frac{926\ Lbs.in}{0.07\ in^3} = 13170\ psi < 20000\ psi$$

$$\frac{3 \times \frac{3}{8}^2}{6}$$

PIPING SUPPORTS

Sheet :	of
By :	
Date :	2019 March 27
PC-1933	Rev:

SUPPORT #9

ANGLE $2\frac{1}{2} \times 2\frac{1}{2} \times \frac{3}{16}$ AS per JOHNSON

MAT A-479-304

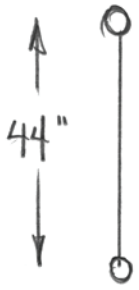

$$\frac{KL}{r} = \frac{1 \times 44}{0.506} = 87 < C_c$$

$\sigma_y = 30\,000$ psi

$S = 0.33$ in^3

$A = 0.969$ in^2

$r = 0.506$

$C_c = 136$

$E = 28 \times 10^6$

$$\sigma_a = \frac{1 - \frac{(KL/r)^2}{2C_c^2}}{FS} \sigma_y$$

$$= \frac{1 - \frac{87^2}{2 \times 137^2}}{2,5} \times 30\,000 = 9580 \text{ psi}$$

$$\sigma_{REEL} = \frac{P}{A} = \frac{1400 \text{ lbs}}{0,969} = 1445 \text{ psi}$$

$$\sigma_{FLEX} = \frac{1400 \text{ lbs} \times 0.713}{0,33} = 3024 \text{ lbs in}$$

$$\frac{\sigma_{FLEX}}{\sigma_a} + \frac{\sigma_c}{\sigma_a} = \frac{3024}{20000} + \frac{1445}{9590} = 0,3 < 1$$

OK

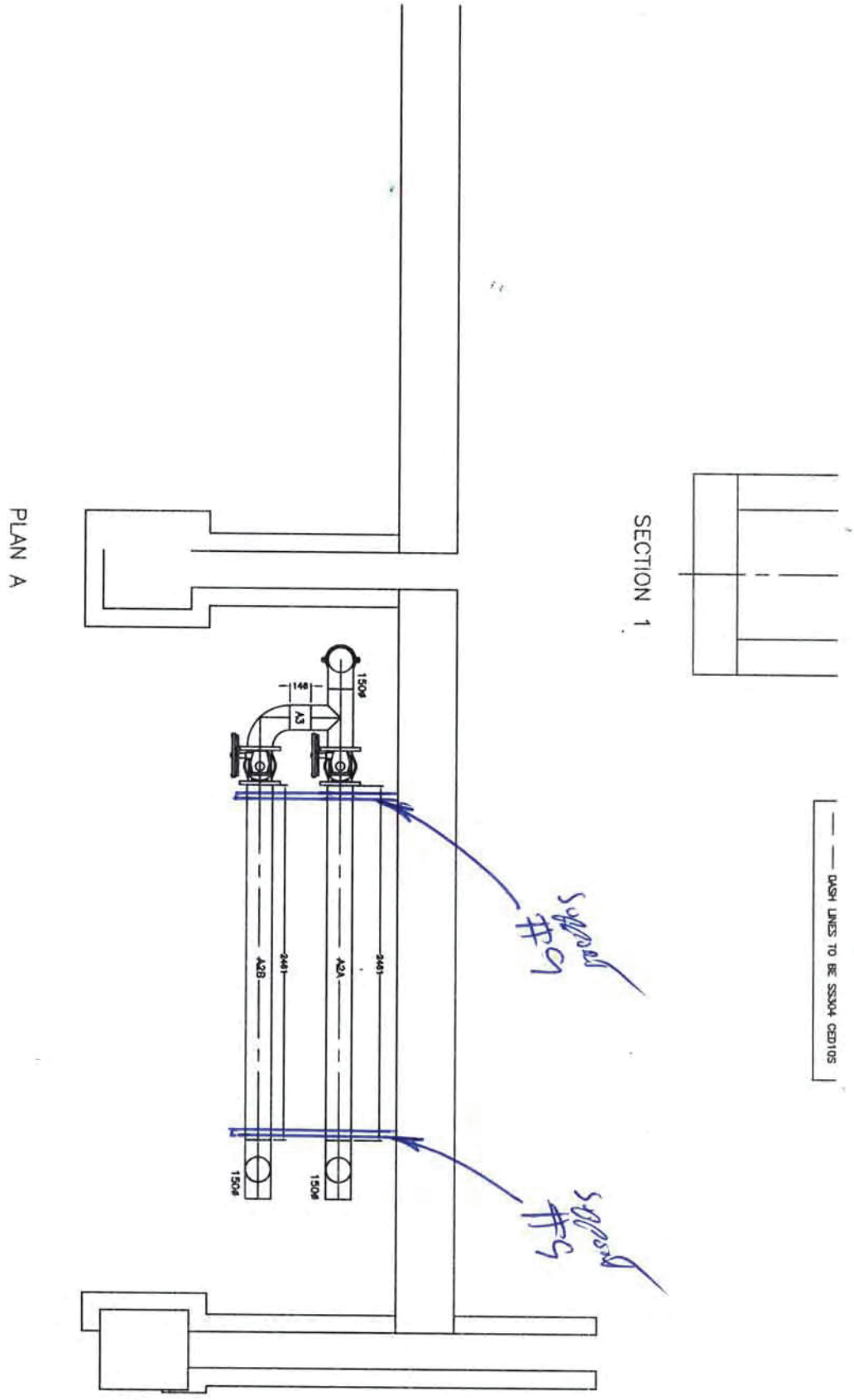
PLAN A
SECTION 1
DASH LINES TO BE SS304 CED105
150ø
148
A3
A2B
2461
A2A
2461
150ø
150ø
Support #9
Support #9

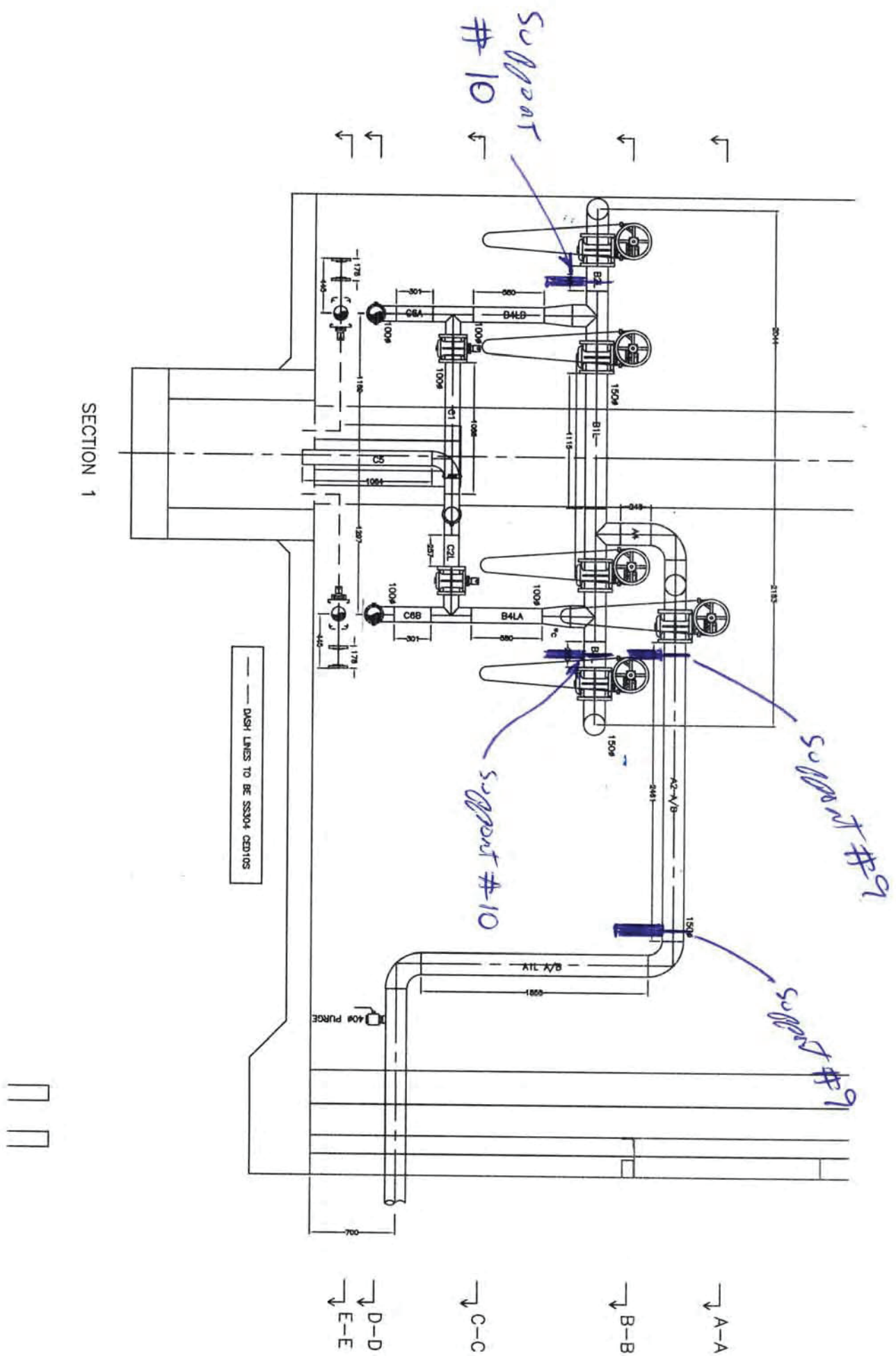
SECTION 1
DASH LINES TO BE SS304 CED10S
Support #10
Support #10
Support #9
Support #9
A-A
B-B
C-C
D-D
E-E
C5
C6A
C6B
B4LB
B4LA
A1L A/B
A2-A/B
40ø PURGE

PIPING SUPPORTS

Sheet :	of
By :	
Date :	2019 March 27
PC-1933	Rev:

SUPPORT #10

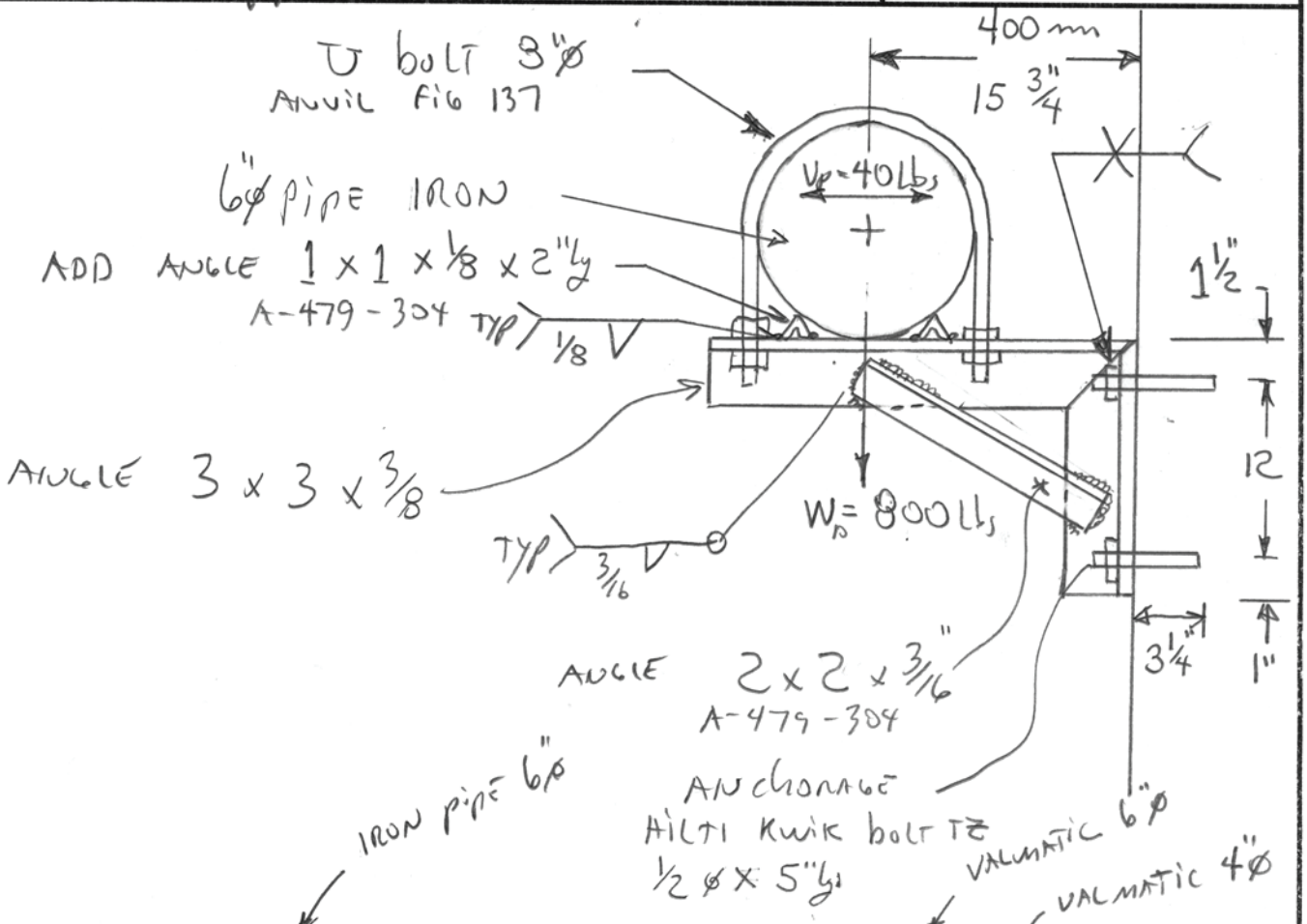

$$W_{10} = \left(5\,ft \times 35.5\,\#/ft\right) + \left(7\,ft \times 21.5\,\#/ft\right) + 2 \times 139 + 72 + 4 \times 9.5 + 2 \times 8$$

(A = VICTAULIC)

$$= 732\ Lbs$$

USE 900 Lbs

$$V_{p_{10}} = 0.05 \times 900 = 40\ Lbs$$

PIPING SUPPORTS	Sheet : of
	By :
	Date : 2019 March 27
Support #10	PC-1933 Rev:

TENSION ON ANCHORAGE

$$T = \frac{800\# \times 15\frac{3}{4}}{13''} + 40\ \text{Lbs} = 1010\ \text{Lbs}$$

OK ANCHOR $\frac{1}{2}''\phi \times 5''\text{lg}$

< 2400 Lbs

MOMENT ON ANGLE

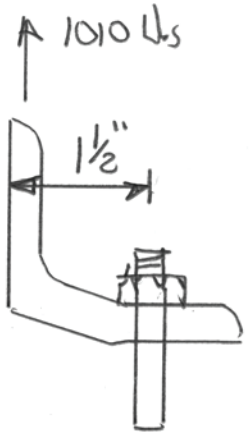

$$M = \frac{PL}{2} = \frac{1010\ \text{Lbs} \times 1.5''}{2} = 760\ \text{Lbs in}$$

$$\sigma = \frac{M}{S} = \frac{760\ \text{Lbs in}}{0.07} = 10825\ \text{psi} < 20\,000\ \text{psi}$$

PIPING SUPPORTS

Sheet :	of
By :	
Date :	2019 March 27
PC-1933	Rev:

SUPPORT # 11

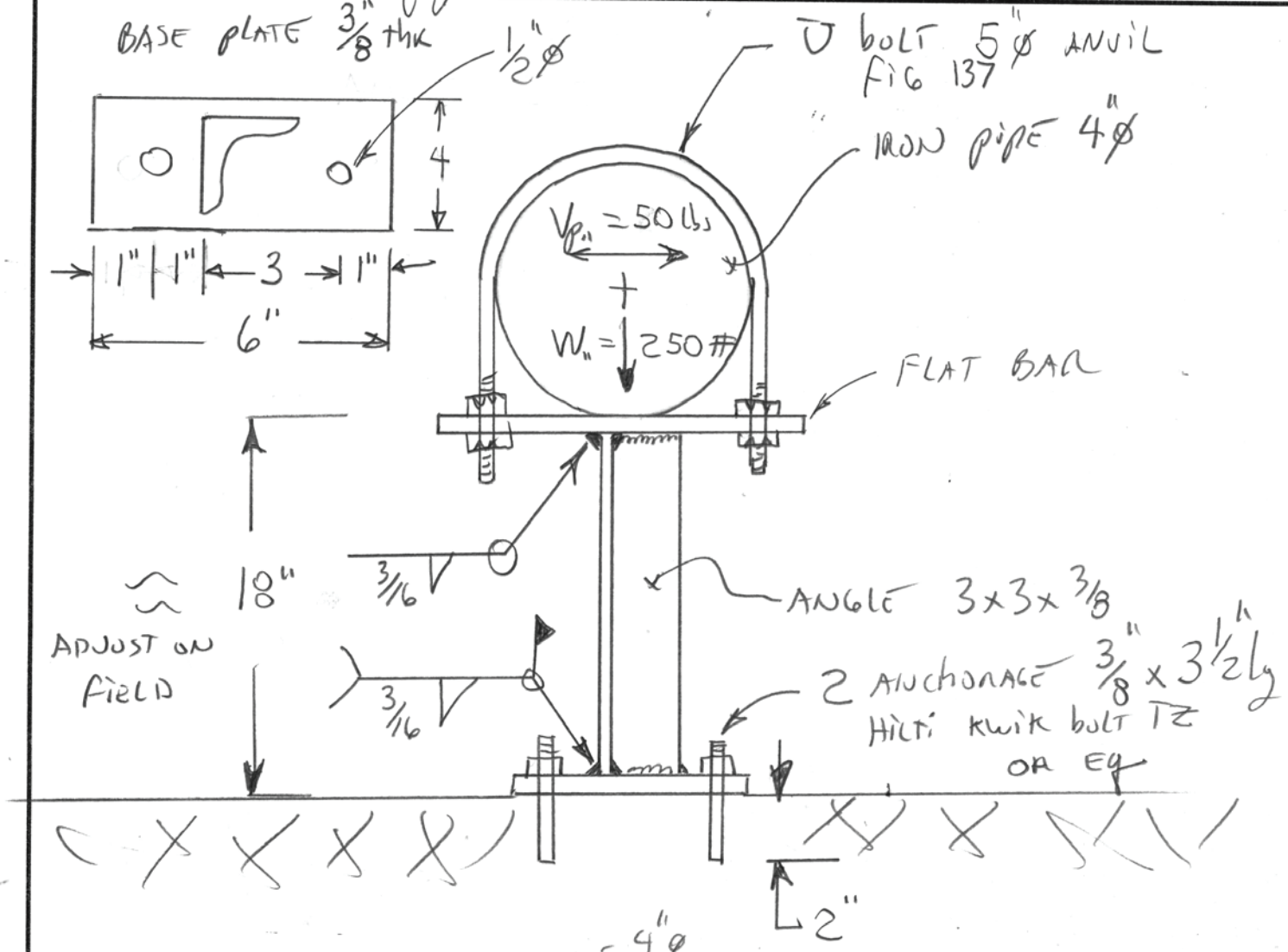

IRON PIPE 4" Ø

VICTAULIC

$W_{11} = (10\,ft \times 21.5) + 4 \times 8\,lbs = 250\,lbs$

$V_p = 0.05 \times 250 = 12.5$

USE 50 lbs

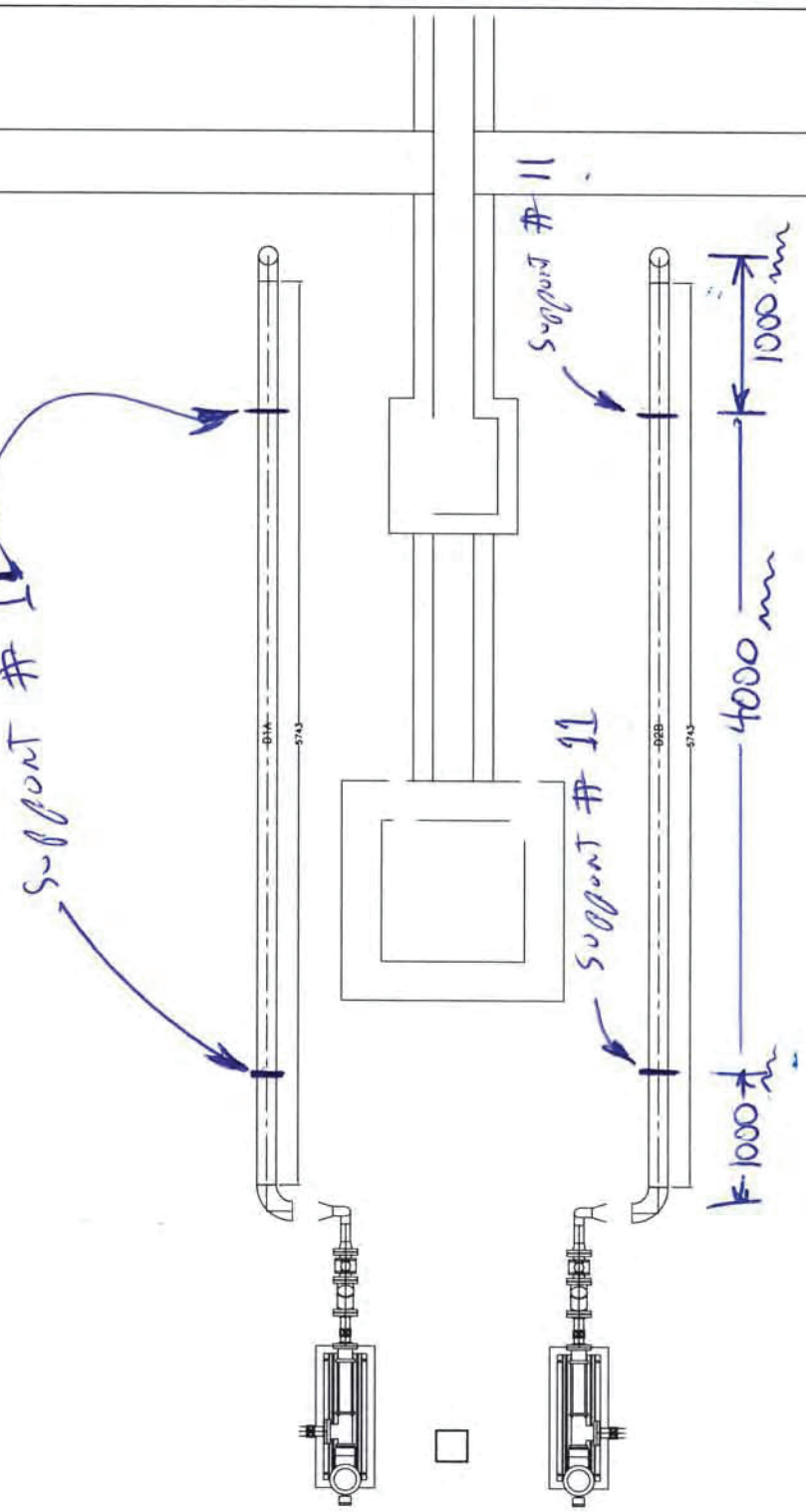

PLAN D

NOTE:
"L" SPOOLS TO BE FIELD FABRICATED
ALL PIPING TO BE GLASS LINED DUCTILE IRON WITH EPOXY EXTERIOR COATING
ALL FITTING TO BE GLASS LINED 23.05 VICTAULIC FITTINGS WITH EPOXY EXTERIOR COATING
"c" REDUCERS ARE CONCENTRIC
"e" REDUCERS ARE ECCENTRIC
VICTAULIC COUPLINGS AND VIC FLANGES ARE NOT SHOWN FOR CLARITY
PURGE VALVES ARE APPOLO 1" 76F-105-01A OR SIMILAR

REVISION:		
01	FOR APPROVAL	2019-04-16

PROJECT: **Iqaluit Wastewater Treatment Plant Upgrade**

CLIENT: **CITY OF IQALUIT** Iqaluit

NORCLAIR MÉCANIQUE DE PROCÉDÉ

TWAS PIPING: DAF TO TWAS TANKS (D SECTIONS)

DATE: 2019-04-16	SCALE: 1:30
VERIFIED BY: H.C.	N. PROJECT NORCLAIR: P-1039
DRAWN BY: E.A.	N. DRAWING: P1039-03

PIPING SUPPORTS	Sheet : of
	By :
	Date : 2019 March 27
	PC-1933 Rev:

SUPPORT # 12

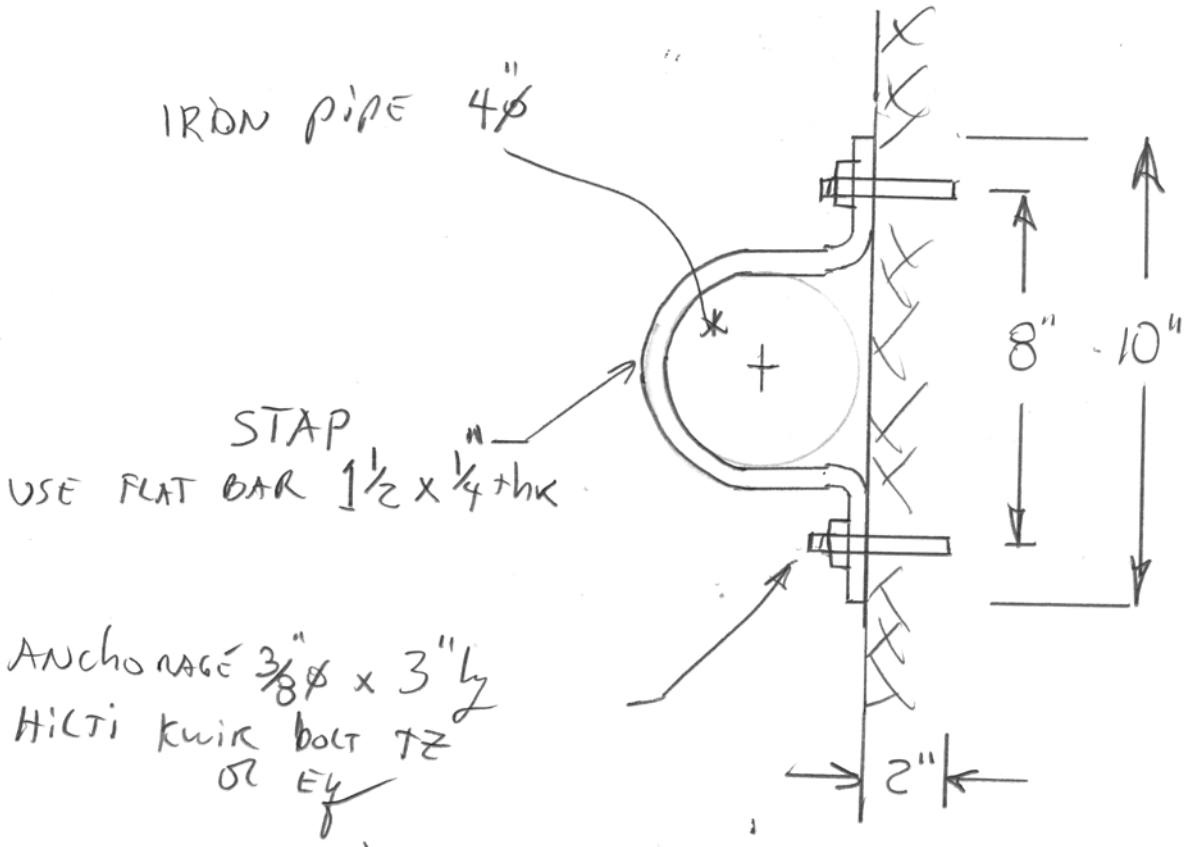

$W_{12} = (11\ ft \times 21.5\ lbs/ft) = 236\ lbs$

$V_p = 0.05 \times 236 = 12\ lbs$

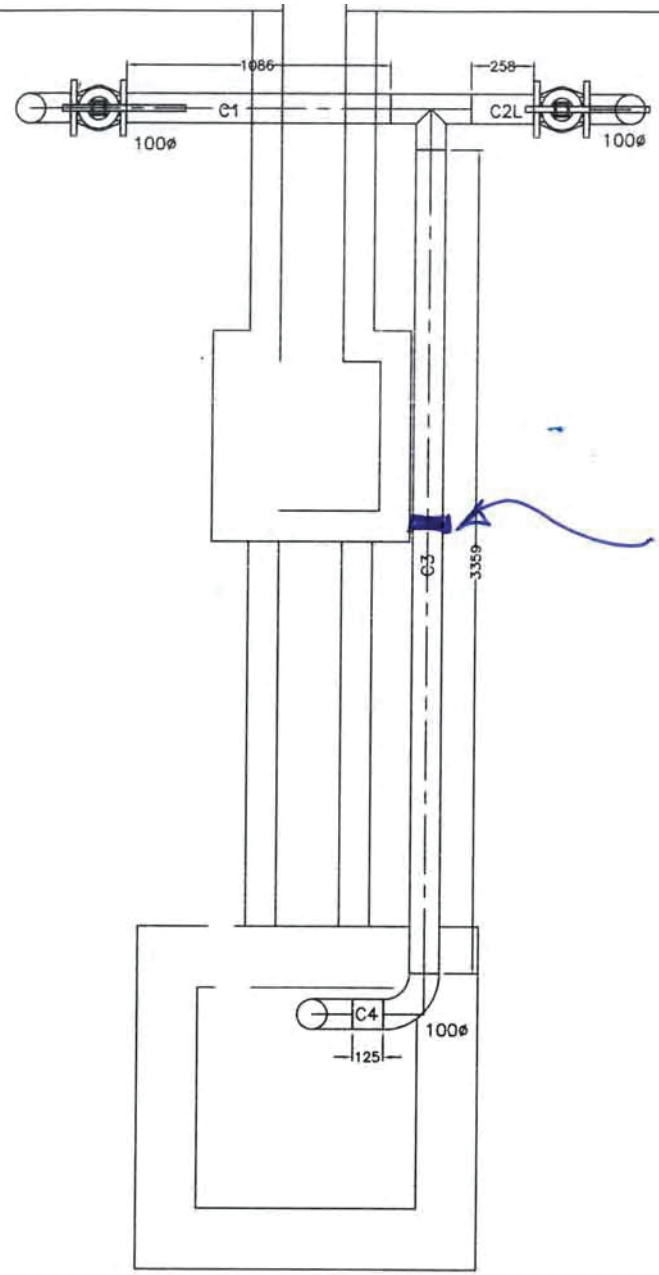

Support #12
ADD pipe ~~clip~~ STAP

PLAN C

PIPING SUPPORTS

SUPPORT # 13

Sheet :	of
By :	
Date :	2019 March 27
PC-1933	Rev:

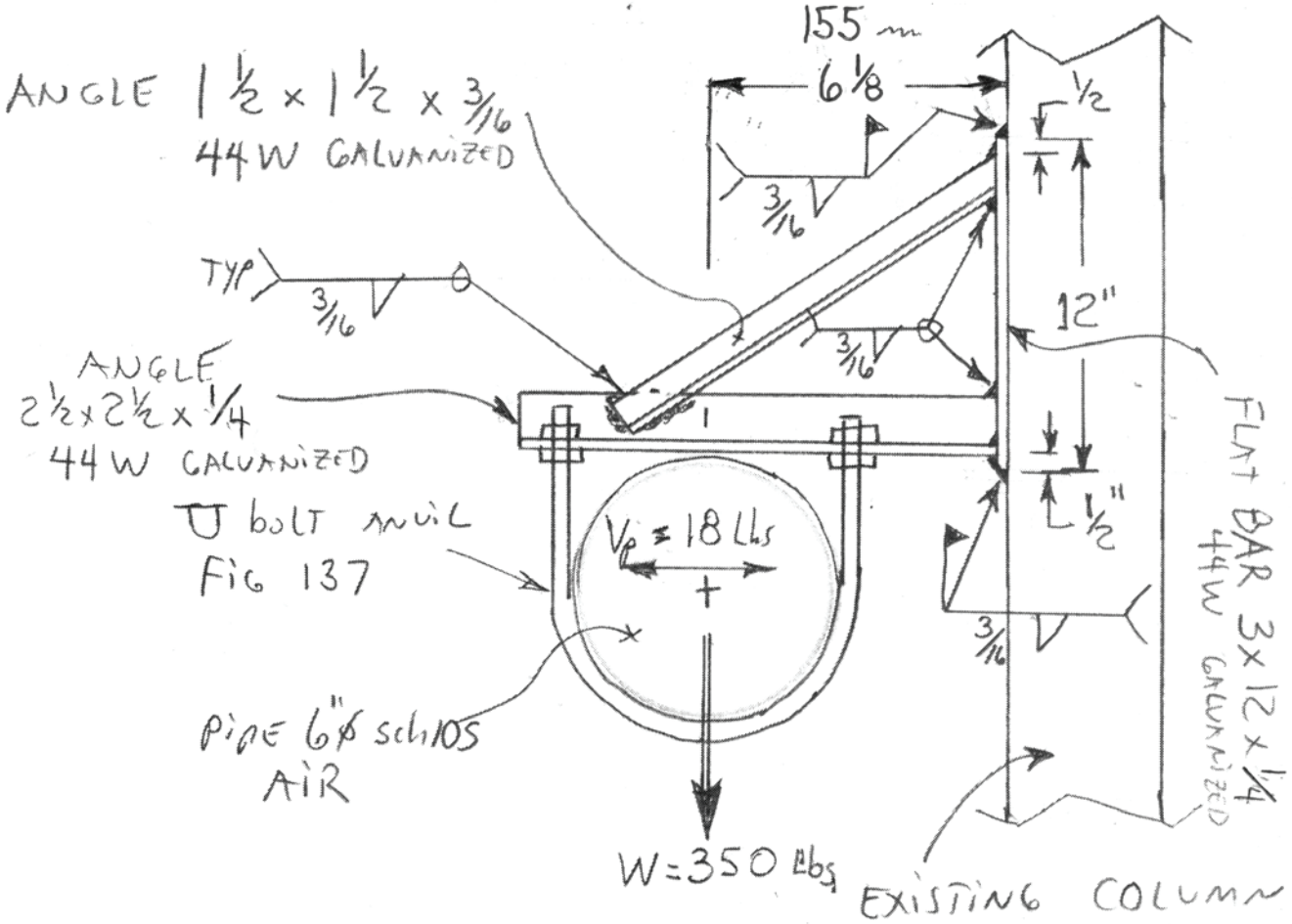

$$W_5 = (10' \times 10\ Lbs/ft) + 68\ Lbs + 125\ Lbs + 48\ Lbs = 341\ Lbs$$

(6" ø sch 10S AIR; Flow meter; Butterfly valve; Flange 6" ø)

USE 350 Lbs

$$V_{p5} = 0.05 \times 350\ Lbs = 18\ Lbs$$

PIPING SUPPORTS

Sheet :	of
By :	
Date :	2019 March 27
PC-1933	Rev:

SUPPORT # 14

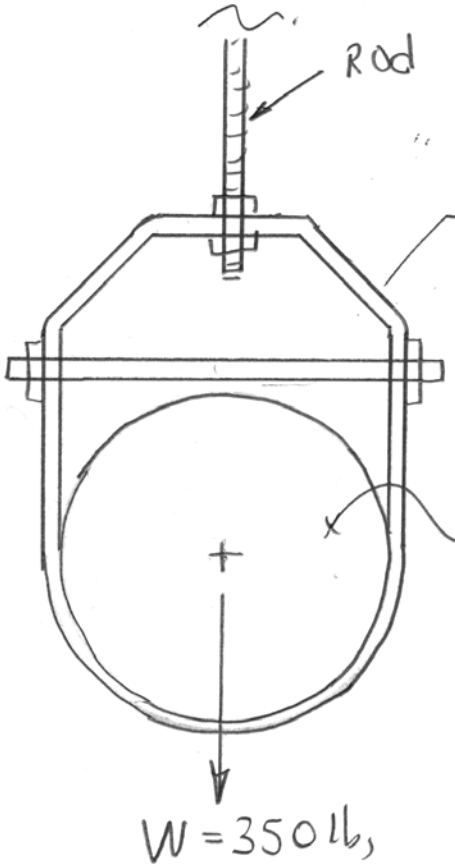

PIPING SUPPORTS

LINE STOP #15

Sheet :	of
By :	
Date :	2019 March 27
PC-1933	Rev:

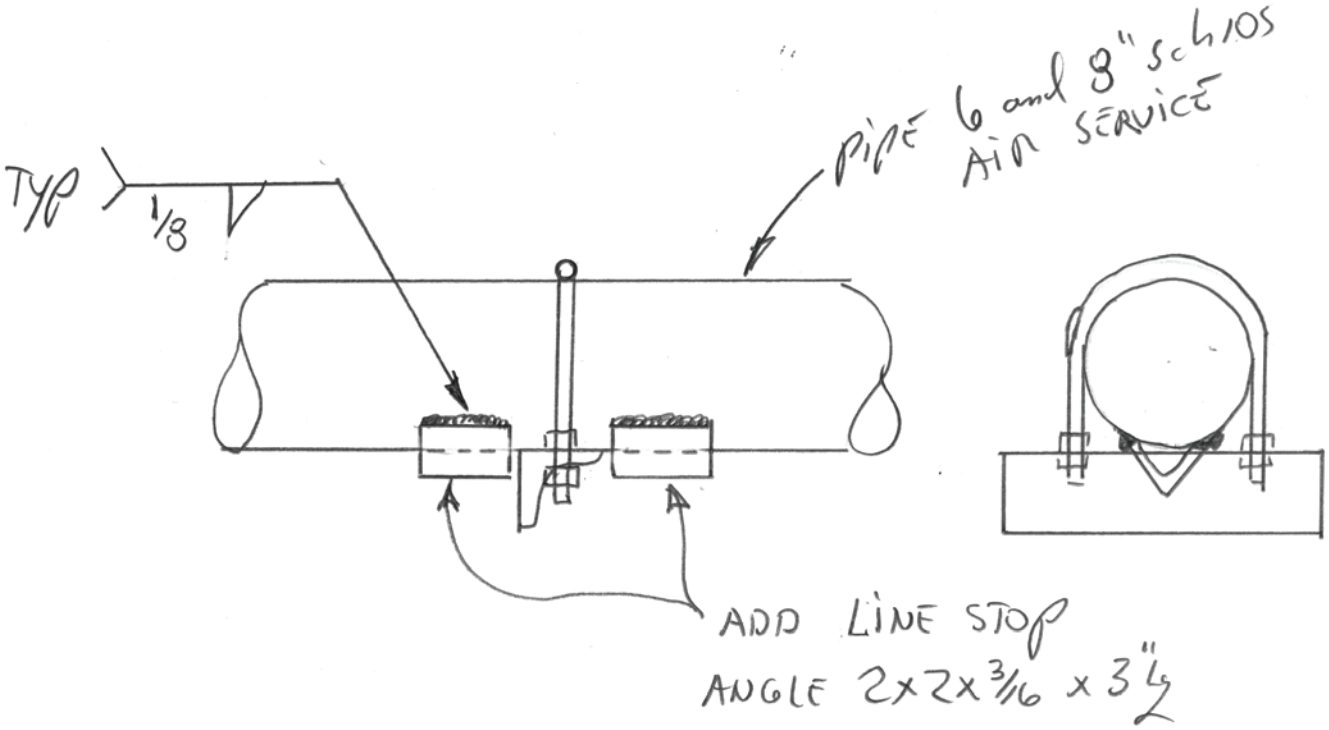

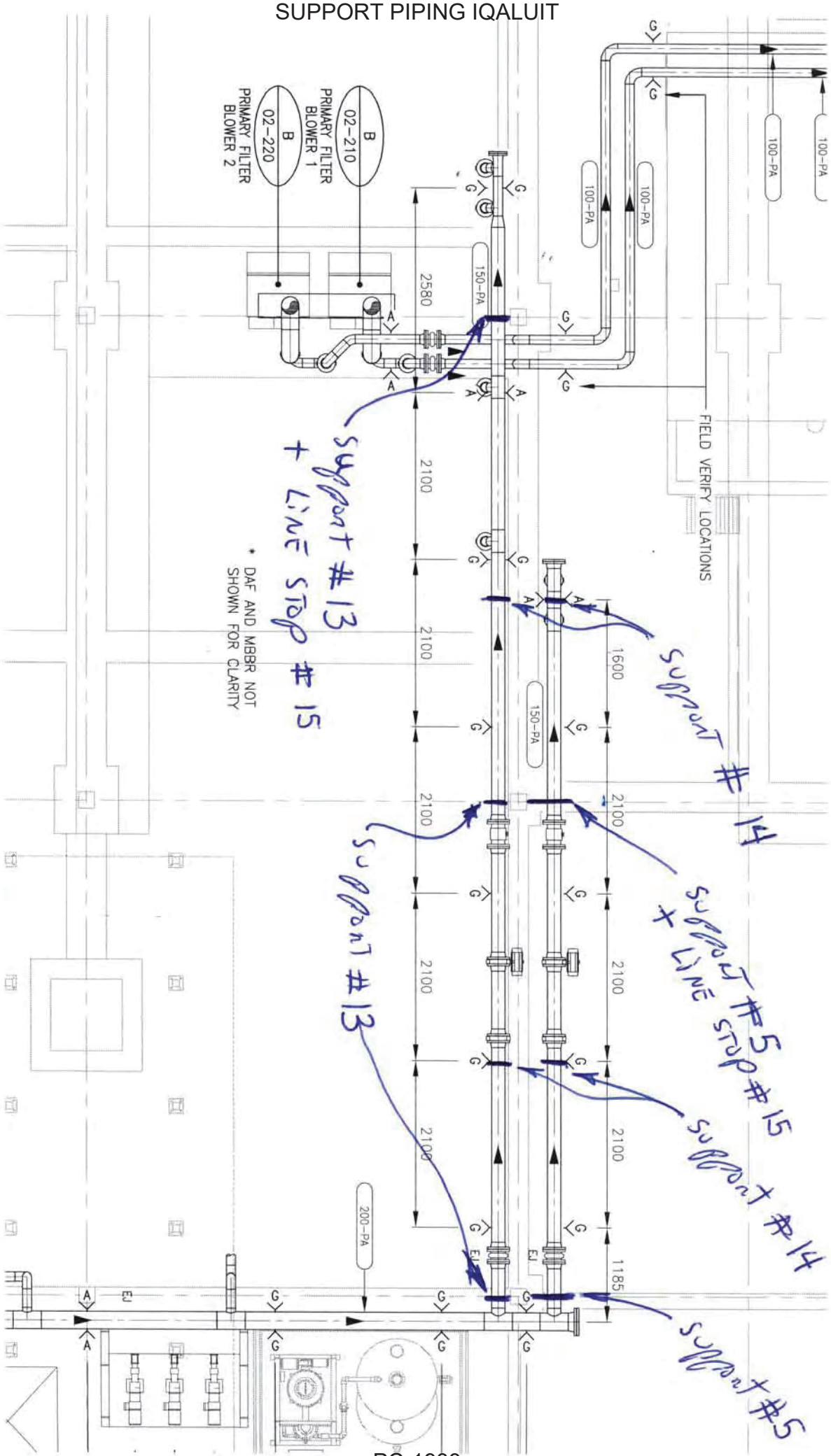
B
02-210
PRIMARY FILTER
BLOWER 1
B
02-220
PRIMARY FILTER
BLOWER 2
100-PA
150-PA
200-PA
2580
2100
1600
1185
FIELD VERIFY LOCATIONS
* DAF AND MBBR NOT
SHOWN FOR CLARITY
SUPPORT #13
+ LINE STOP #15
SUPPORT #14
SUPPORT #15
+ LINE STOP #15
SUPPORT #13
SUPPORT #5
EJ

PIPING SUPPORTS

SUPPORT # 16

Sheet :	of
By :	
Date :	2019 March 27
PC-1933	Rev:

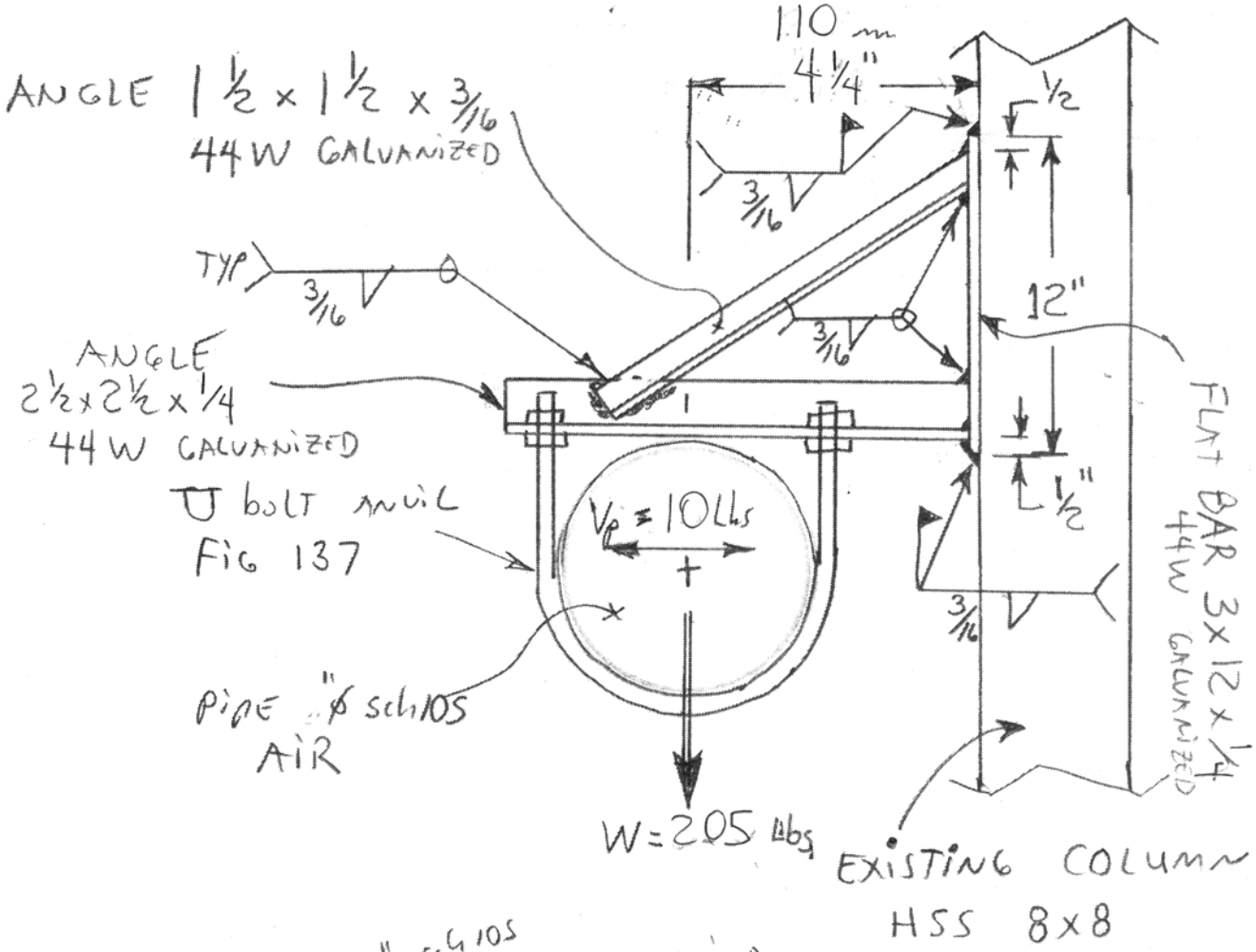

8" ø sch 10S AIR

FLANGE + BLIND

$W_5 = (9' \times 13.4\ Lbs/ft) + 85\ Lbs = 205$

$V_{P5} = 0.05 \times 205\ Lbs = 10\ Lbs$

PIPING SUPPORTS

Sheet :	of
By :	
Date :	2019 March 27
PC-1933	Rev:

support #17

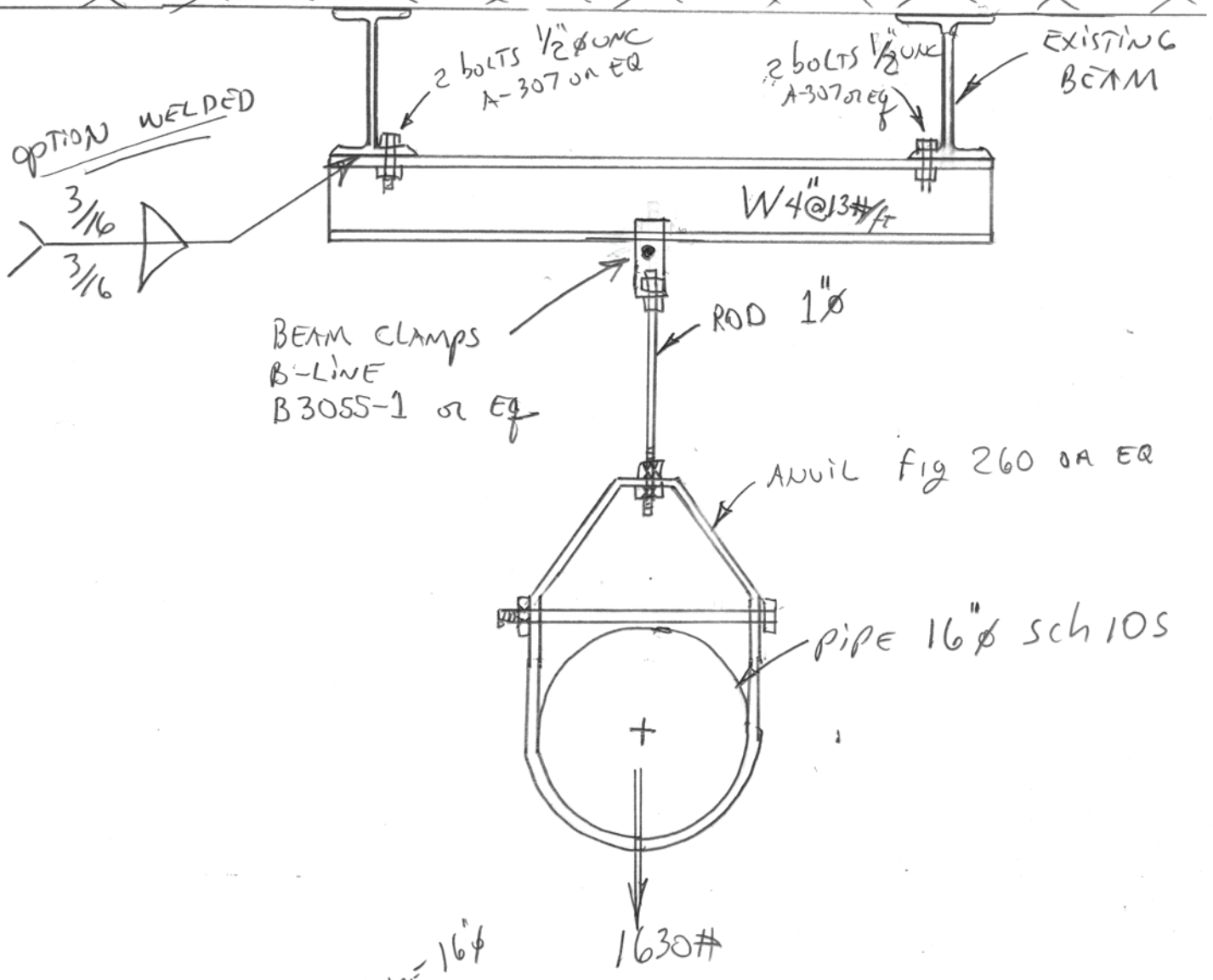

pipe 16"ϕ FLANGE

$W = (12\ ft \times 120\ \#/ft) + 190\# = 1630\ Lbs$

$M = \frac{PL}{4} = \frac{1630\ Lbs \times 54"}{4} = 22005\ Lbs \cdot in$

$S = \frac{M}{\sigma_a} = \frac{22005}{21600} = 1.02\ in^3 < 5.43\ in^3$

OK W4@13#/ft
A-36 or 44W

PIPING SUPPORTS

Sheet :	of
By :	
Date :	2019 March 27
PC-1933	Rev:

Support # 18

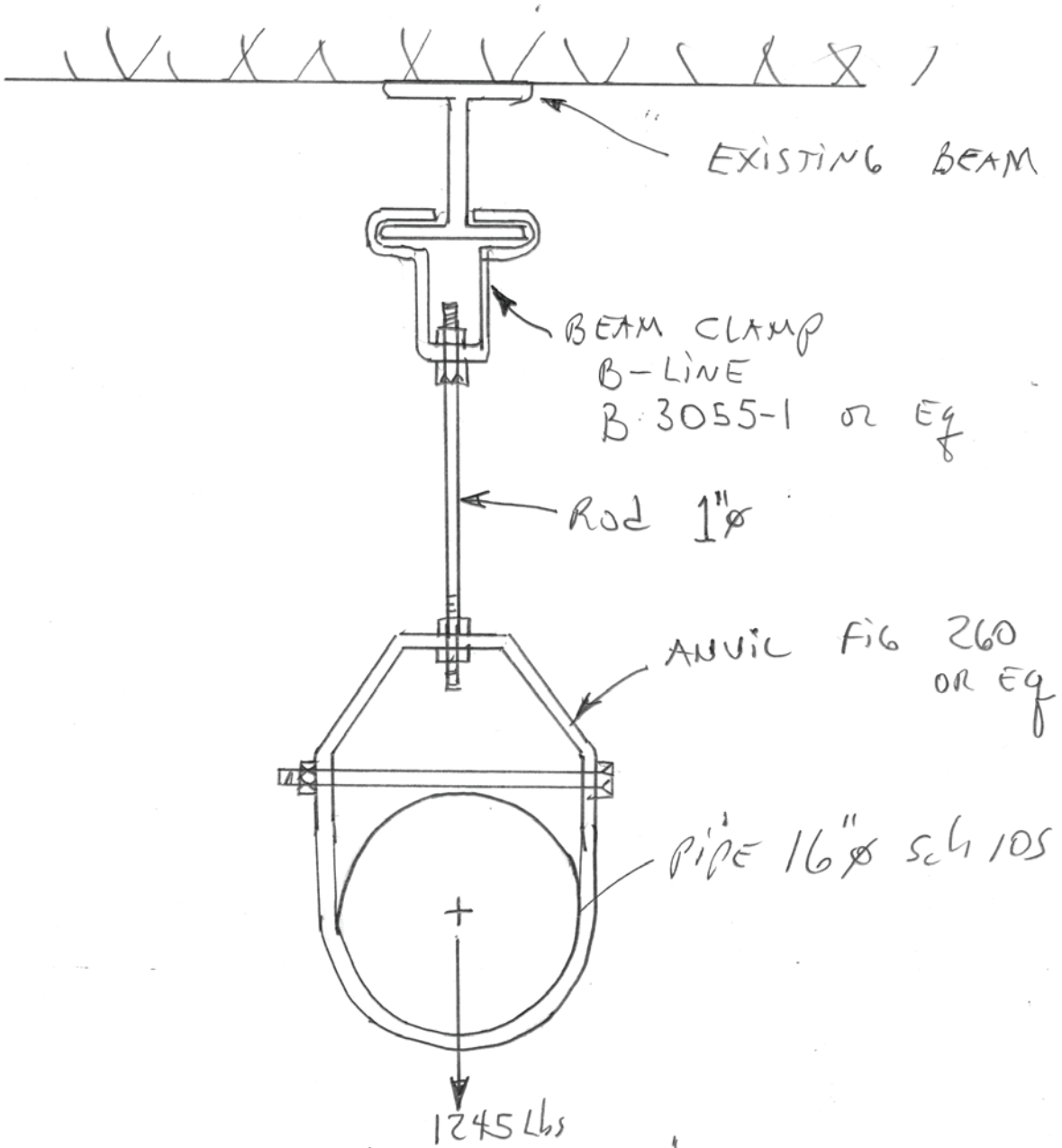

pipe 16"ø pipe 14"ø

$W = (8\ ft \times 120\ \#/ft) + (31 \times 95\ \#/ft) = 1245\ Lbs$

PIPING SUPPORTS

Support # 19

Sheet :	of
By :	
Date :	2019 March 27
PC-1933	Rev:

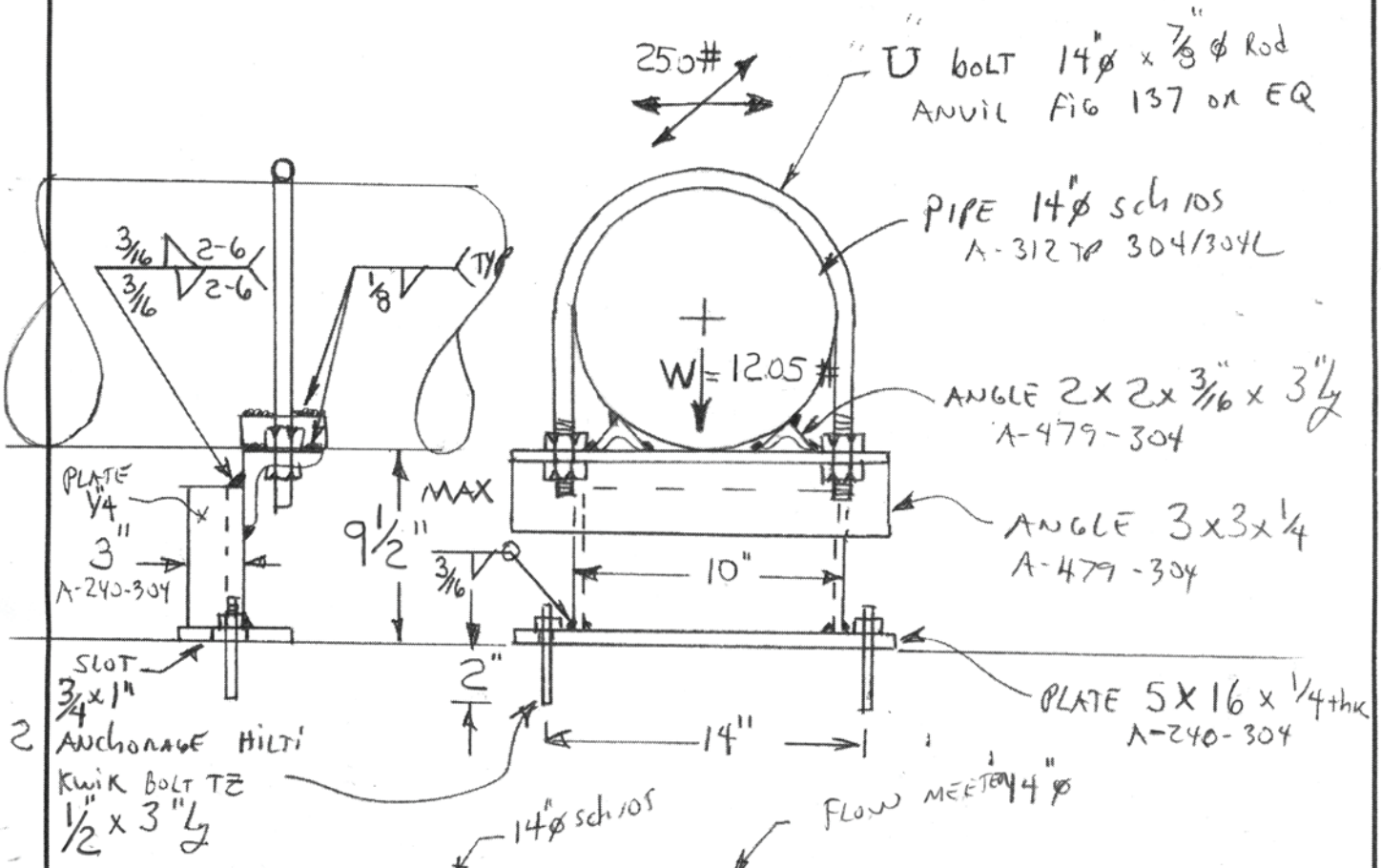

$$W_1 = (9\ Ft \times 95\ Lbs/Ft) + 15.0\ Lbs + 200$$

$$= 1205\ Lbs \quad (5.3\ KN)$$

$$V_{f1} = 0.05 \times 4340\ Lbs = 217\ Lbs$$

USE 250 Lbs

1.1 KN

PIPING SUPPORTS	Sheet : of
	By :
	Date : 2019 March 27
SUPPORT # 19	PC-1933 Rev:

MOMENT ON SADDLE = $V_p \times h_{..} = 250 \times 17''$

$= 4250$ lbs·in

$$S = \frac{M}{\sigma_a} = \frac{4250 \text{ lbs·in}}{20\,000 \text{ psi}} = 0.21 \text{ in}^3 < 1.26 \text{ in}^3$$

TENSION ON ANCHORAGE

$$T = \frac{M}{N_b\, a} = \frac{4250}{2 \text{ anchor} \times 2\frac{1}{2}} = 850 \text{ lbs/anchorage}$$

OK $\frac{1}{2}''\phi \times 3''$ lg

KWIK BOLT TZ

OR EQ

Feuille/Sheet :	de/of
Par/By :	
Date :	
	rev:

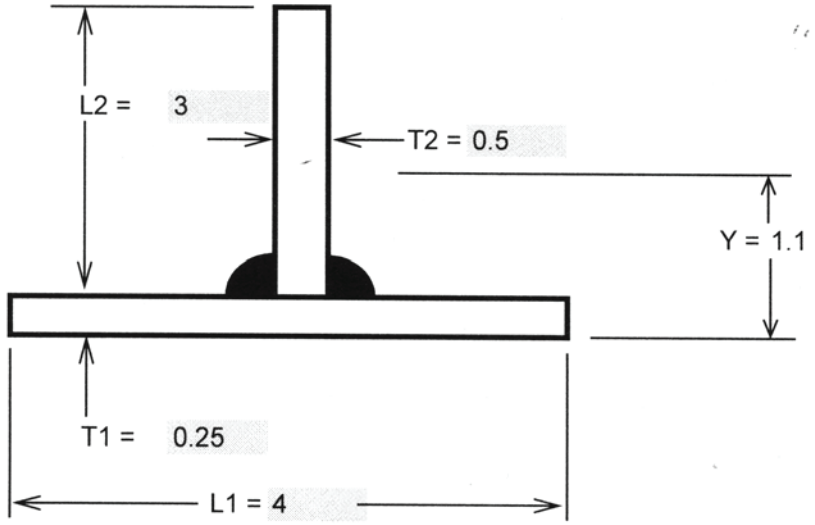

$$Y_1 = \frac{\sum A_i \times Y_i}{\sum A_i} = \frac{(L_1 \times T_1)(T_1/2) + (L_2 \times T_2(T_1 + L_2/2)}{(L_1 \times T_1) + (L_2 \times T_2)} = \quad 1.10 \text{ po}$$

I = 0.0052 + 0.9506 + 1.125 + 0.6338

I = 2.7146 po^4

$$S_1 = \frac{I}{Y_1} = \quad 2.47 \text{ po}^3$$

$$S_2 = \frac{I}{Y_2} = \quad 1.26 \text{ po}^3$$

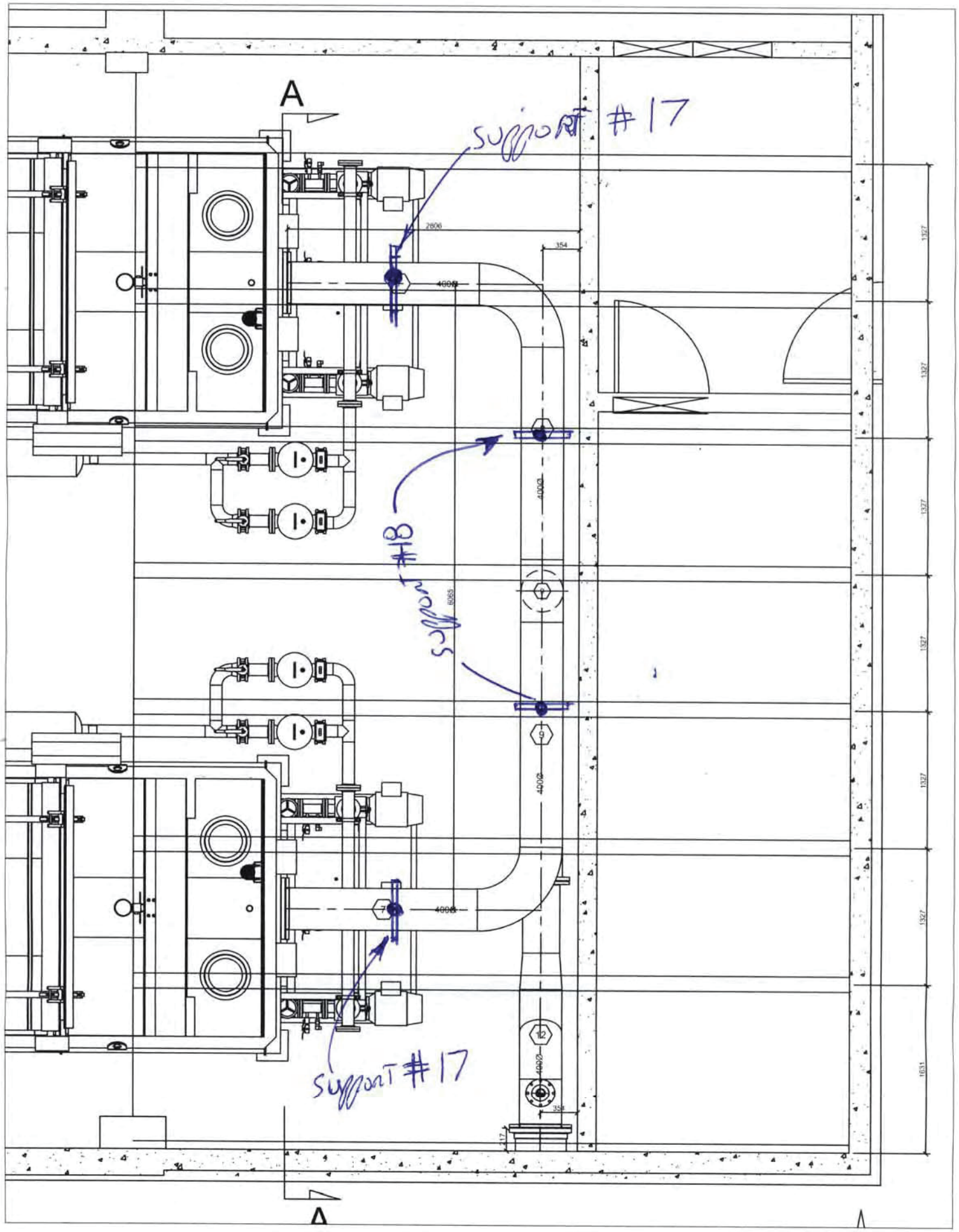
A
SUPPORT #17
SUPPORT #18
SUPPORT #17
A

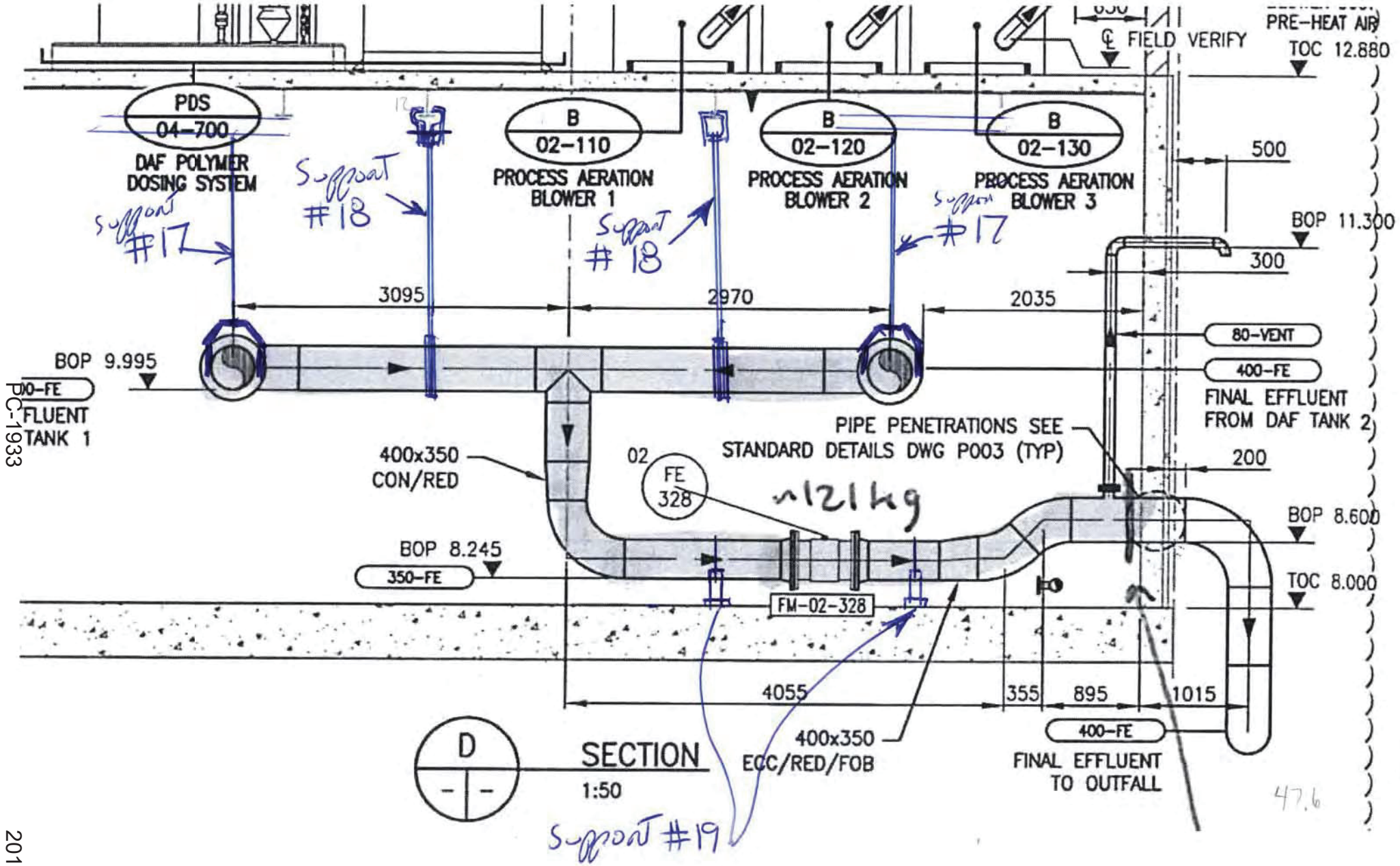
PDS
04-700
DAF POLYMER
DOSING SYSTEM
B
02-110
PROCESS AERATION
BLOWER 1
B
02-120
PROCESS AERATION
BLOWER 2
B
02-130
PROCESS AERATION
BLOWER 3
℄ FIELD VERIFY
PRE-HEAT AIR
TOC 12.880
BOP 11.300
BOP 9.995
BOP 8.600
BOP 8.245
TOC 8.000
500
300
200
3095
2970
2035
4055
355
895
1015
80-VENT
400-FE
FINAL EFFLUENT
FROM DAF TANK 2
PIPE PENETRATIONS SEE
STANDARD DETAILS DWG P003 (TYP)
400x350
CON/RED
02
FE
328
~121kg
350-FE
FM-02-328
400x350
ECC/RED/FOB
400-FE
FINAL EFFLUENT
TO OUTFALL
D
SECTION
1:50
Support #17
Support #18
Support #18
Support #17
Support #19
47.6

REVIEWED BY CONTRACTOR

Kudlik Construction Ltd.

NAME: Sandra Rousseau P.Eng

DATE: Jun 25, 2019

NORCLAIR
MÉCANIQUE DE PROCÉDÉ

SHOP DRAWINGS

DA-MP-56 Back pressure valve (CCN-26)

Date : 2019-05-13

Information general	
Project : **WWTP UPGRADE - IQALUIT**	
Client : Kudlik Construction Ltd. To : Sandra Rousseau P.Eng., Project Manager	Project number : **2018-062** E-mail : srousseau@kudlik.biz
Contractor : **Norclair inc.**	Project number Norclair : **P1039**
Address : 1100, Montée Masson, Laval, QC, Canada H7E 4P2	
Project Manager : Hugo Chartier, Project Manager	E-mail: hchartier@norclair.ca
Phone : 450-688-4012 # 706	Cell. : 514-703-0263

Information, subcontractor or supplier	
Sub/supplier : Veolia	
Contact : Clement Bekaert	Phone :

Information on the equipment	
Speciality : **Process**	
Equipment :	
Drawing reference :	
Specification reference : (Page xx / xx)	Division :
Article :	Number of pages : 7

CONSULTANT APPROVAL

STANTEC PROJECT #: 110126045

SUBMITTAL # DA-MP-56 BPV

This review by Stantec is for general conformance with the design concept of Stantec's design of the:

- ☑ Process
- ☐ Structural
- ☐ Mechanical
- ☐ Electrical
- ☐ Other

component(s) only and does not mean that Stantec has verified or approves the shop drawing(s). The Contractor remains solely responsible for the shop drawing(s) and this review by Stantec does not relieve the Contractor of the Contractor's responsibility for errors or omissions in the shop drawing(s) or for meeting all requirements of the contract documents. This review does not mean that Stantec approves the detailed design inherent in the shop drawing, responsibility for which shall remain with the Contractor submitting same, nor does this review mean that Stantec accepts any deviation of the shop drawing(s) from the contract documents. The Contractor is responsible for confirming all dimensions and correlating them at the job site, for all construction means, methods and techniques, and for coordination of construction work of all trades, including coordination of all shop drawings.

Stantec

- ☑ REVIEWED
- ☐ REVIEWED, AS NOTED
- ☐ REVISE AND RESUBMIT
- ☐ NOT REVIEWED

DATE June 27, 2019

BY Alejandro Rojas, P.Eng

1100, montée Masso
Laval, QC, Canada
H7E 4P2

Phone. : 450-688-4012
Fax : 450-661-6341
E-Mail : info@norclair.ca
www.norclair.ca

Qty = 2

PDF Published September 17, 2014

SB12 Series Back Pressure/Relief Valves

CHEMLINE PLASTICS
SUPERIOR FLOW SOLUTIONS

PVC PP PVDF

CRN Registered as Category C Fittings Consult Chemline

NSF 3 Certified to NSF/ANSI 61

SERIES: SB12

SIZES: 3/8" – 4" 1.5in

ENDS: True Union Socket, Threaded or ChemFlare™[1] Spigot[2] Bodies with Plain, Socket, Threaded or Flanged ends

DIAPHRAGM: PTFE Bonded EPDM

SEALS: EPDM, FKM (Viton®)



True Union Ends
Easy installation and maintenance

The Chemline SB Series Back Pressure/ Relief Valve has two functions. As a ***back pressure valve***, installed in-line downstream of a pump, the back pressure below the metering pump is maintained. When installed in the branch of a tee it is a ***pressure relief valve***. The valve stays closed until inlet pressure reaches the set pressure which is adjusted by turning the spring tensioning bolt. Inlet pressure acts upward against the piston allowing excess pressure to flow upwards through the orifice.

The SB12 Series has a built-in check valve function, desirable for dosing applications. It is not so sensitive as to open with every pulsation from a metering pump.

features

True Union Ends
- Easy installation and maintenance
- Eliminate chemical leakage problems common with old fashioned threaded connections

Long Cycling Life
- Dynamic seal is PTFE bonded EPDM for high chemical resistance
- This moulded diaphragm is designed for superior sealing and flex life

Superior Performance in Dosing Systems
- Valves are hydraulically designed for very low hysteresis ("backlash") and to eliminate chatter
- Built-in check (non-return) function
- Valve opening depends on inlet pressure only and is uneffected by changes in downstream (back) pressure

CRN Registration numbers by province
- Ontario: OC10134.5
- Newfoundland: OC10134.50
- Alberta: OC10134.52
- Saskatchewan/Manitoba/Quebec: OC10134.56
- New Brunswick: OC10134.57
- Nova Scotia: OC10134.58
- P.E.I.: OC10134.59
- British Columbia: not required

technical

Set Pressure Ranges
- 1/2" to 2" – 5 to 150 psi
- 2-1/2" and 3" – 7.5 to 150 psi
- 2-1/2" to 4" – 4 to 60 psi (optional)
- 4" – 7.5 to 90 psi

Maximum Viscosity
- 120cP is maximum recommended service viscosity

[1] For ChemFlare™ end connectors, consult Chemline.
[2] PP and PVDF spigot ends have DIN dimensions and will butt fuse directly to Chemline PP and PVDF piping systems.
[3] PVC valves with EPDM or FKM (Viton®) seals are certified under NSF/ANSI Standard 61 for contact with drinking water.

09/14 ©Chemline Plastics Limited 2014
Chemline is a registered trade mark of Chemline Plastics Limited

SB12 Series Back Pressure/Relief Valves 1/2" to 2"

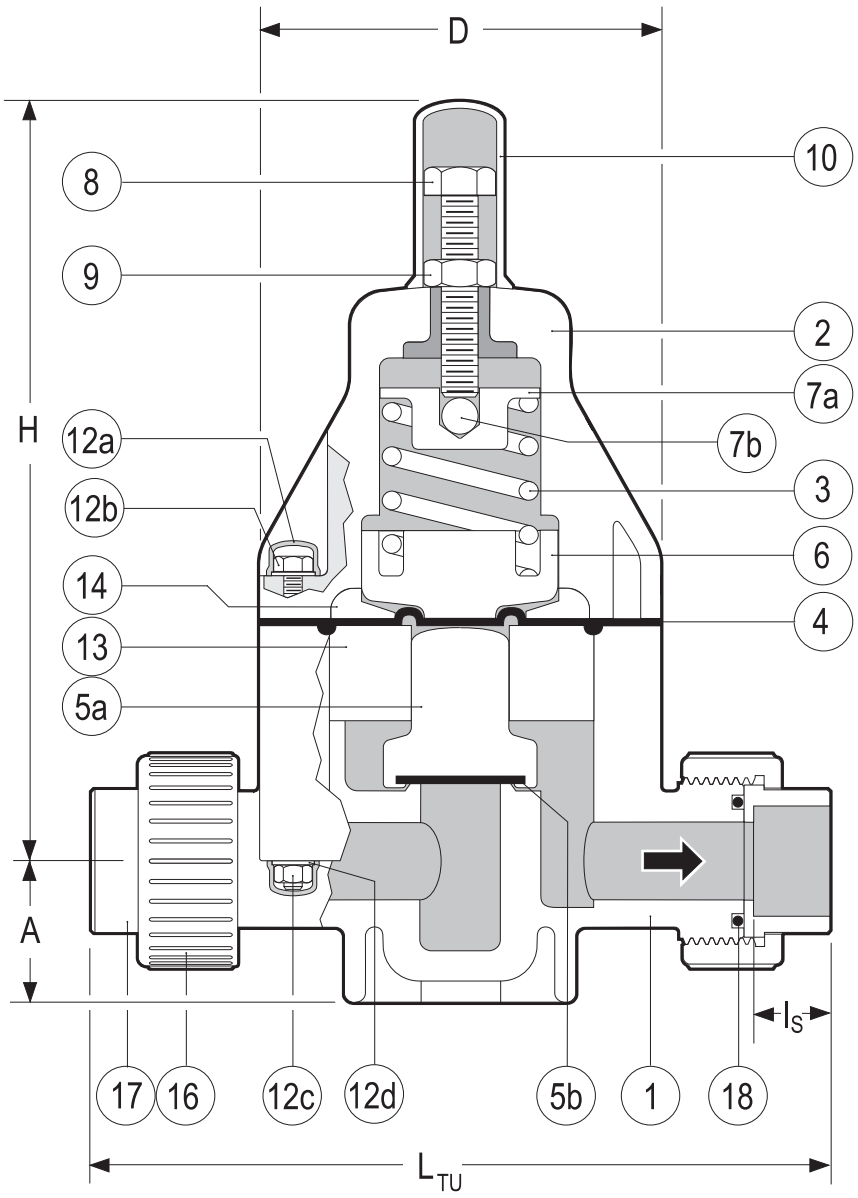

True Union Body

PARTS

▲ Recommended Spare Parts

No.	Part	Pcs.	Materials
1	Body	1	PVC, PP, PVDF
2	Bonnet	1	PPG
3	Spring	1	Galvanized Steel
4▲	Control Diaphragm	1	PTFE bonded EPDM
5a▲	Piston	1	PVC, PP, PVDF
5b▲	Seat	1	EPDM, FPM(Viton®)
6	Lower Spring Retainer	1	PPG
7a	Upper Spring Retainer	1	Cad. Plated Steel
7b	Ball	1	304 SS
8	Spring Tensioning Bolt	1	304 SS
9	Lock Nut	1	304 SS
10	Spring Bolt Cap	1	PE
12a	Bolt/Nut Cap	8/12[1]	PE
12b	Hex Bolt	4/6[1]	304 SS
12c	Hex Nut	4/6[1]	304 SS
12d	Washer	8/12[1]	304 SS
13	Spacer Disc	1	PVC, PP, PVDF
14	Pressure Plate	1	PP
16	Union Nut	2	PVC, PP, PVDF
17	End Connector	2	PVC, PP, PVDF
18▲	Face O-Ring	2	EPDM, FPM(Viton®)

[1] 1/2" size / 3/4" to 2" sizes

OTHER ENDS

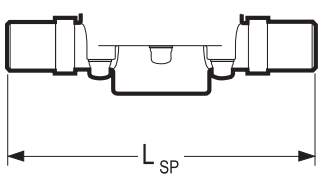

Spigot Body

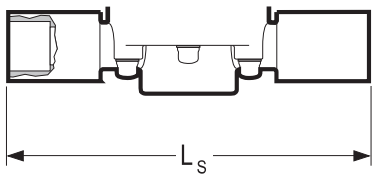

Socket

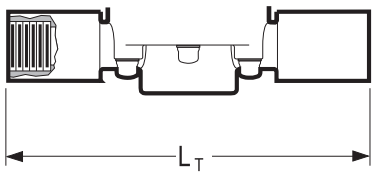

Threaded

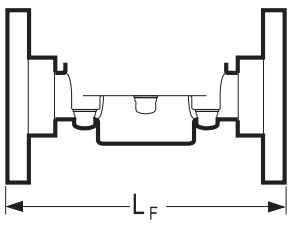

Flanged

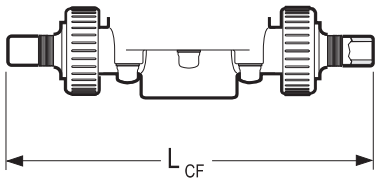

ChemFlare™

DIMENSIONS INCHES — WEIGHTS LB. — Cv VALUES

			PVC								PP and PVDF						
Size	D	H	A	I_S	L_{TU}[2]	L_{SP}[3]	L_S	L_T	L_F	L_{CF}	A	L_{SP}[3]	L_{TU}[2]	PVC	PP	PVDF	USGPM Flow at 1 psi △P
3/8"	3.2	6.9	1.0	0.6	6.5	5.7	7.4	7.2	4.5	8.2	0.9	5.7	**	1.8	1.5	2.2	2.1
1/2"	3.2	6.9	1.0	0.6	6.8	5.7	8.0	7.8	6.3	8.3[4]	0.9	5.7	7.1	1.9	1.6	2.4	3.0
3/4"	4.2	8.0	1.5	0.7	8.3	6.9	9.3	8.9	7.4	9.7	1.4	6.9	8.4	4.1	3.5	4.6	6.6
1"	4.2	8.0	1.5	0.9	8.5	6.9	9.6	9.3	7.4	10.2	1.4	6.9	8.7	4.2	3.5	4.7	8.7
1-1/4"	5.8	10.3	2.2	1.0	10.9	8.8	11.6	11.2	9.2	13.5	2.1	8.8	10.9	11.0	9.0	12.0	18.0
1-1/2"	5.8	10.3	2.2	1.2	11.1	8.8	12.2	11.5	9.5	–	2.1	8.8	11.2	11.2	9.2	12.2	20.0
2"	5.8	10.3	2.2	1.5	11.3	9.6	12.9	12.0	10.0	–	2.1	8.8	13.2	11.4	9.4	12.4	21.4

[2] True Union bodies come standard with socket ends. Threaded union ends are available. ** Consult Chemline.

[3] Spigot bodies are used for non union socket, threaded or flanged ends. All spigot ends have metric dimensions and the PP and PVDF spigots butt fuse directly to Chemline PP and PVDF piping. [4] Tube size can be reduced to 1/4" tube, LCF = 7.74" for 1/4", 8.26" for 3/8".

MAXIMUM PRESSURES PSI

	PVC				PP					PVDF					
Size	20°C 68°F	30°C 86°F	40°C 104°F	50°C 122°F	30°C 86°F	40°C 104°F	50°C 122°F	60°C 140°F	70°C 158°F	30°C 86°F	50°C 122°F	70°C 158°F	80°C 176°F	90°C 194°F	100°C 212°F
1/2"– 2"	150	105	60	15	150	90	60	37.5	15	150	100	60	45	30	15

Temperature Ranges: PVC 0 to 50°C (32 to 122°F), **PP** 10 to 70°C (50 to 158°F), **PVDF** –30 to 100°C (–22 to 212°F).

SB12 Series Back Pressure/Relief Valves 1/2” to 2”

pressure loss nomogram for SB12 valves 3/8” to 2”

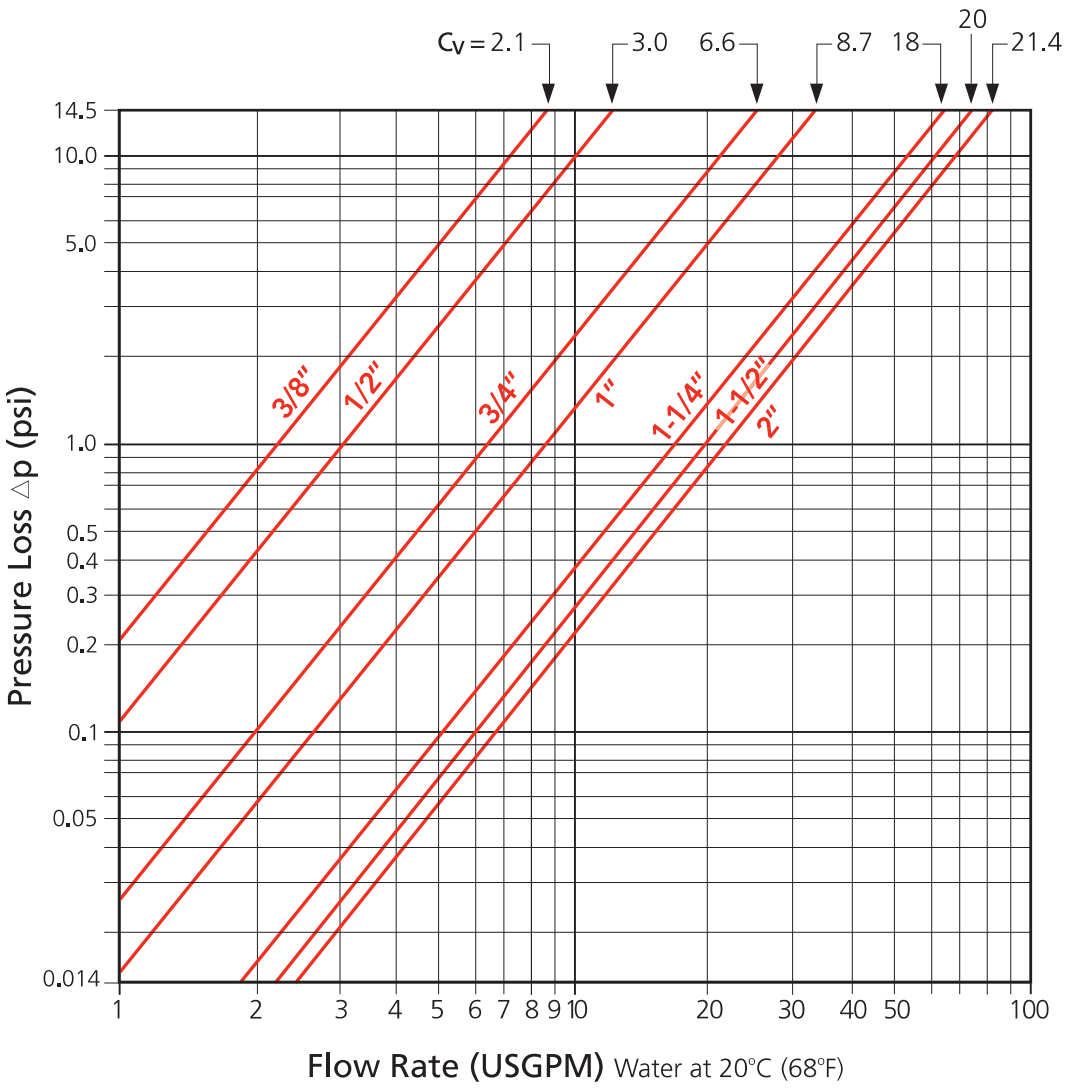

typical dosing system schematic

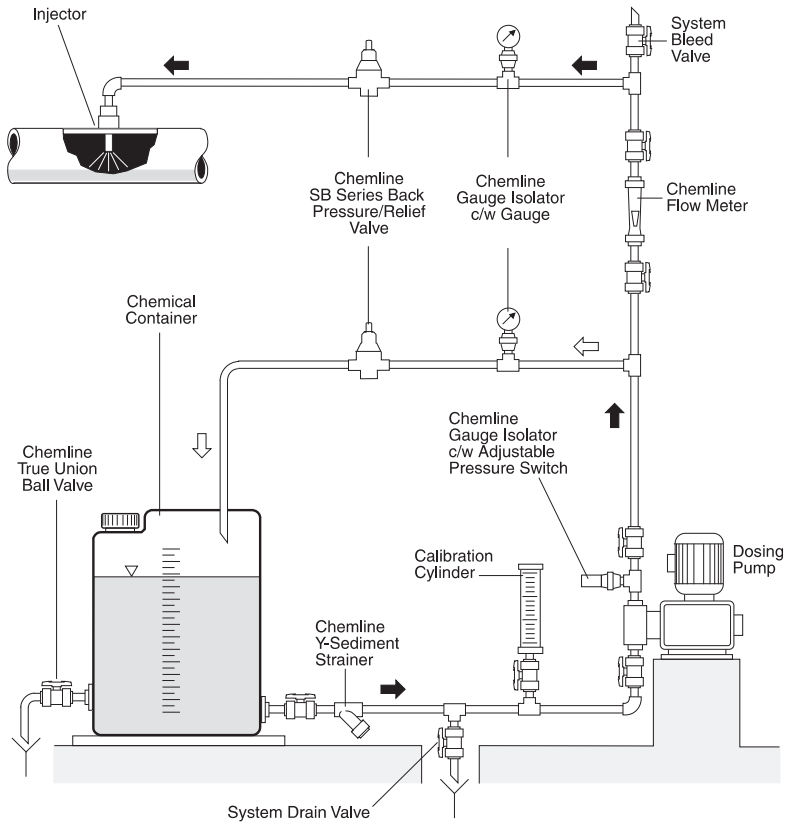

application of pressure relief valves

Constant System Pressure

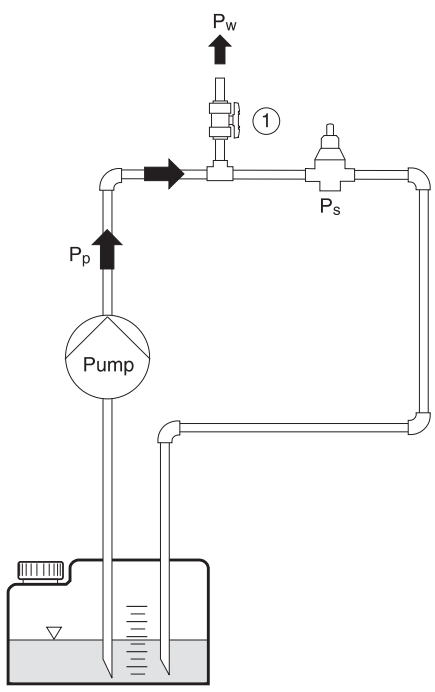

$P_p \geq P_w$
$P_p \geq P_s$ → valve opens
$P_p \leq P_s$ → valve closed

Consumer 1 and/or 2 Open, Valve Closes

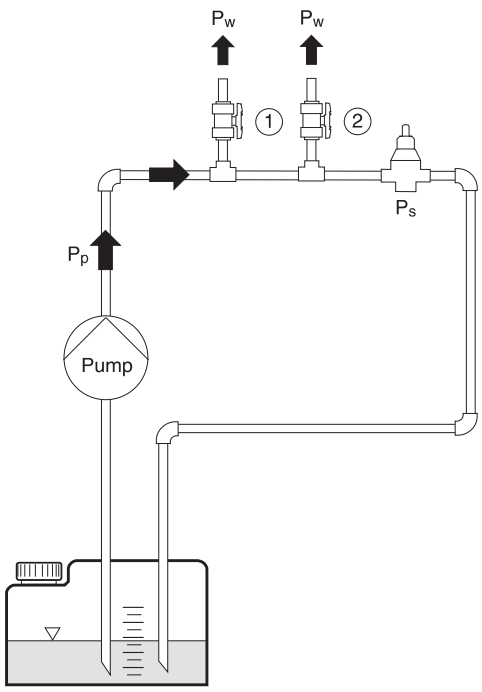

$P_p \geq P_s$ → valve opens
$P_p \leq P_s$ → valve closed

Non-Return Valve

Container 1 is located above the pump

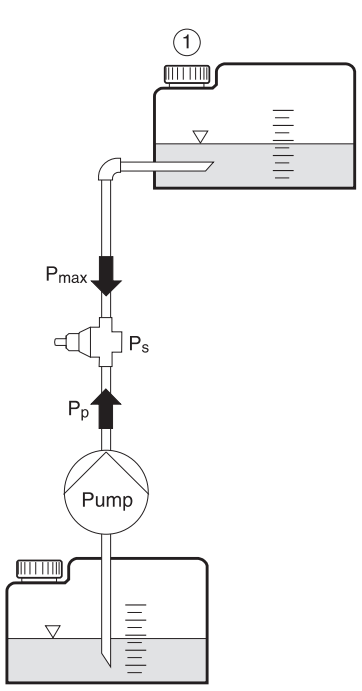

$P_s \geq P_{max}$
$P_p \geq P_s$ → valve opens
$P_p \leq P_s$ → valve closed

Overflow Valve

Pressure of container or application system should not exceed the maximum pressure value

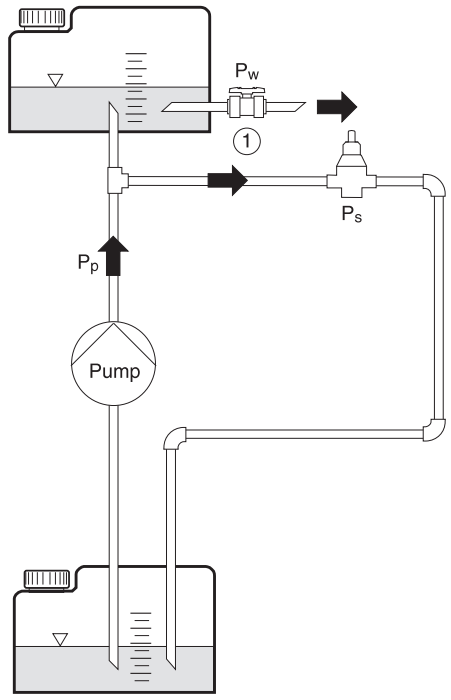

$P_s \leq P_w$
$P_p \geq P_s$ → valve opens
$P_p \leq P_s$ → valve closed

P_w = Working Pressure
P_p = Pump Pressure
P_s = Set Pressure

SB12 Series Back Pressure/Relief Valves 1/2" to 2"

working pressure vs. flow rate

The curves show the relationship between the working pressure and the approximate flow rate through the valve for water at 20°C (68°F) . These values will vary depending on:

- The configuration of the piping and the pressure losses associated with it
- The fluid if not water at 20°C (68°F)
- Whether the pressure is rising or falling, hysteresis is approximately 4 psi for 1/2" to 2" valves. For valves 2-1/2" to 4", hysteresis is approximately 14.5 psi.

operation examples

1. The valve is set closed at 100 psi. At a pressure increase of 10 psi, a flow of approximately 1.0 USGPM will be reached.
   - set pressure = 100 psi
   - working pressure = 110 psi
   - opening pressure = approximately 104 psi
2. The valve is set closed at 50 psi. At a pressure increase of 10 psi, a flow of approximately 1.0 USGPM will be reached.
   - set pressure = 50 psi
   - working pressure = 60 psi
   - opening pressure = approximately 54 psi

3/8" Valves

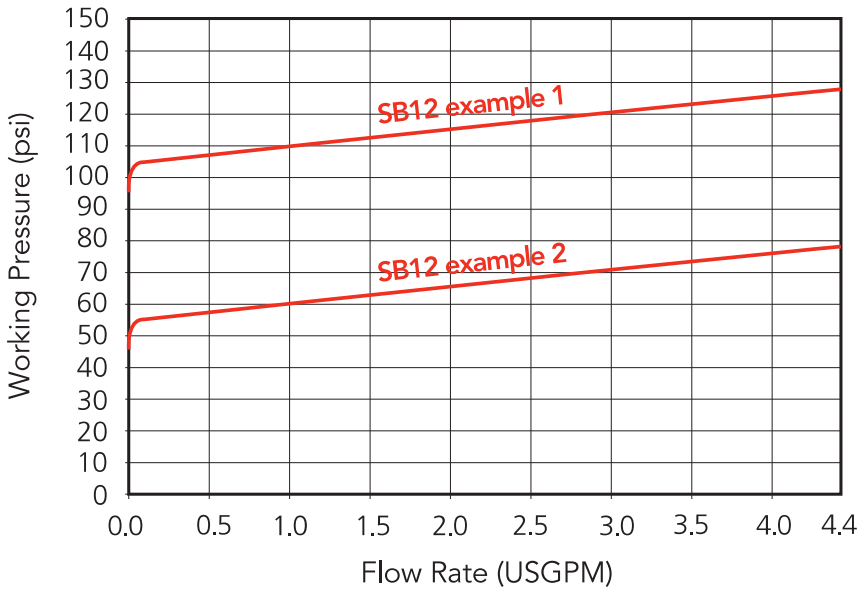

1/2" Valves

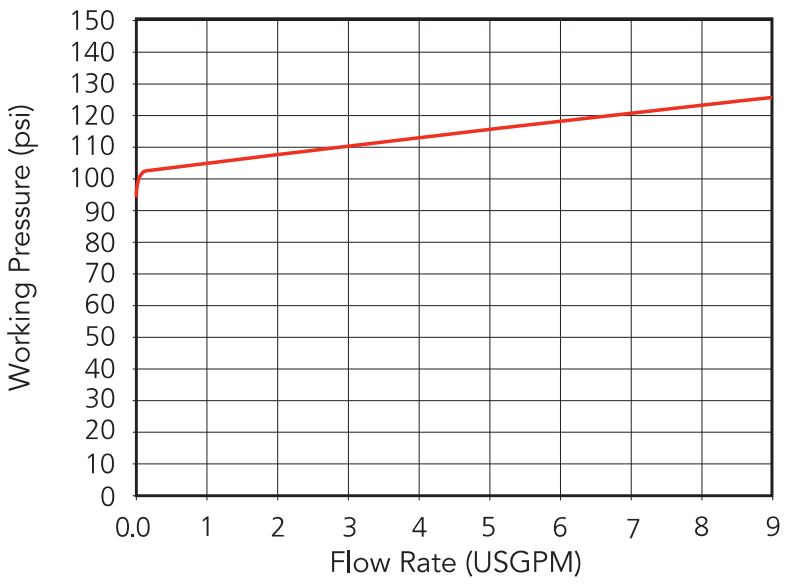

3/4" Valves

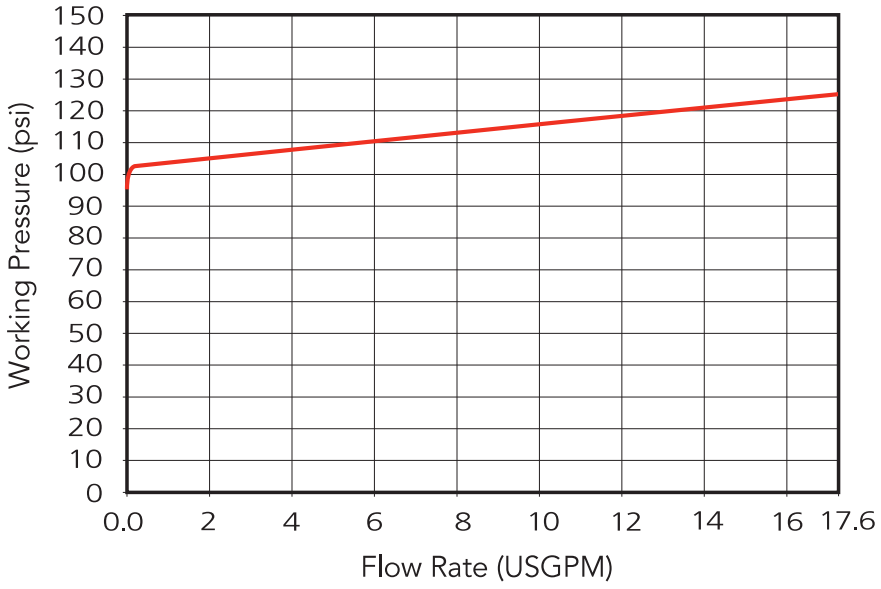

1" Valves

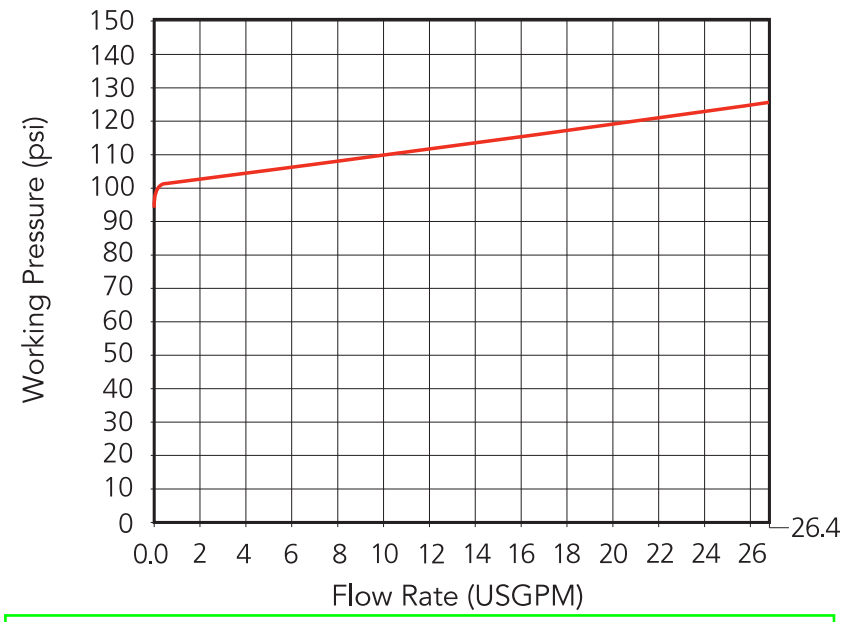

1-1/4" Valves

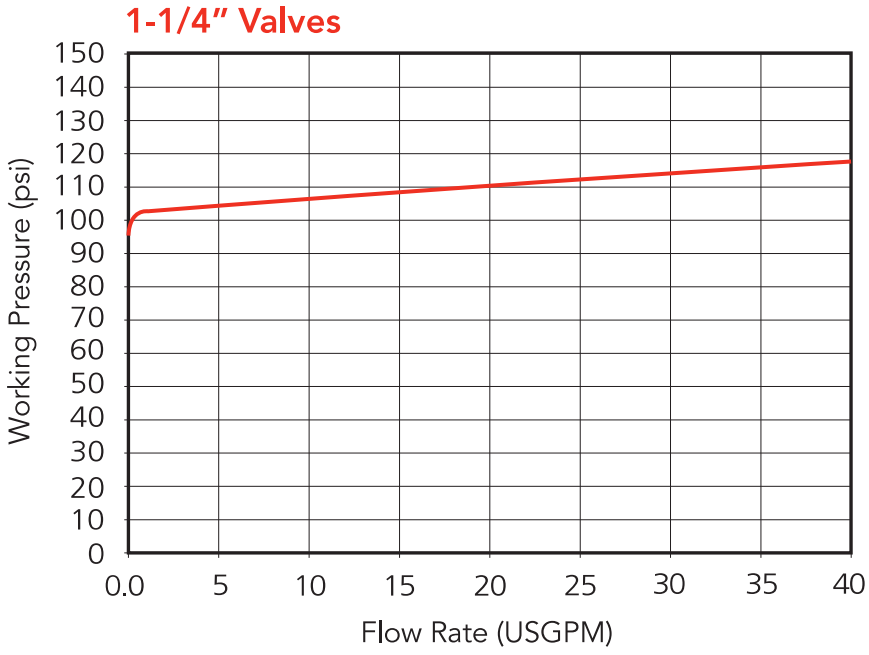

1-1/2" Valves

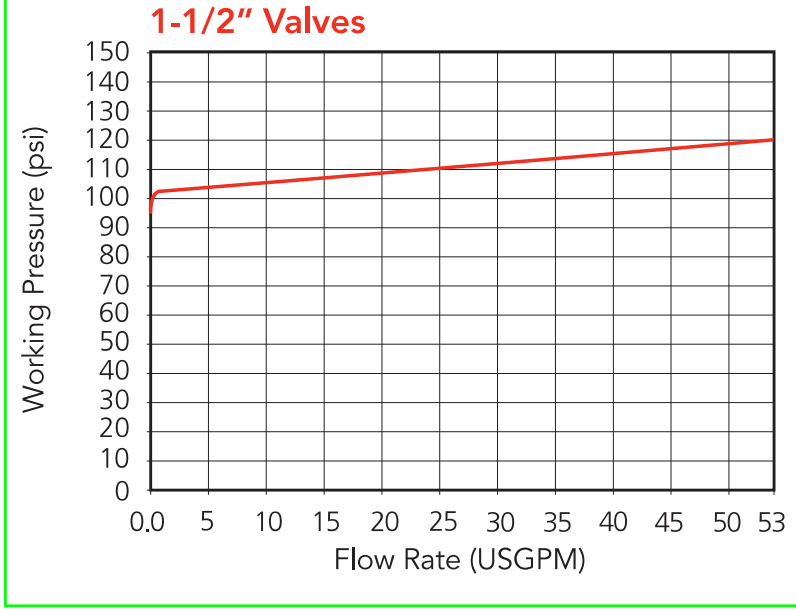

2" Valves

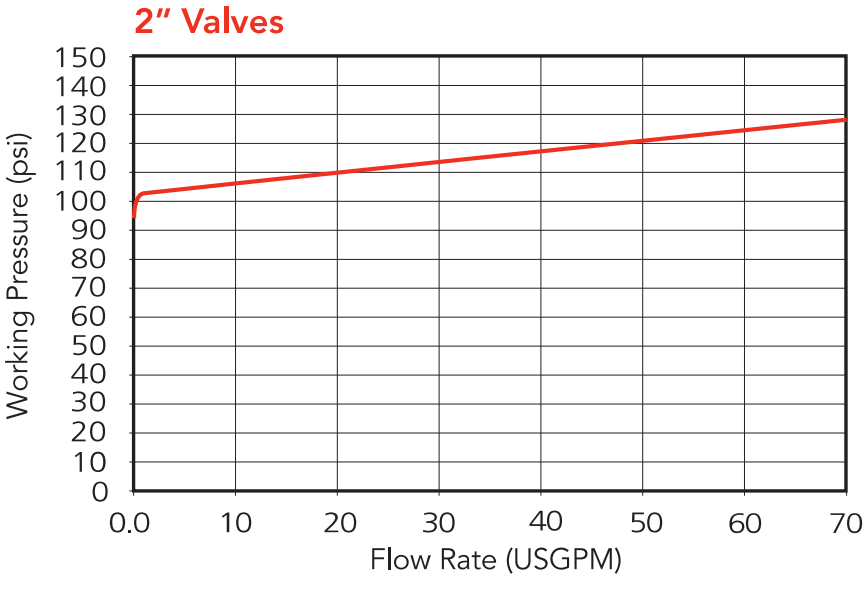

PDF Published June 23, 2014

Gauge Isolators

CHEMLINE PLASTICS
SUPERIOR FLOW SOLUTIONS

PVC PP PVDF

CRN Registered Consult Chemline

NSF[4] Certified to NSF/ANSI 61

SERIES: SG

INLET CONNECTION: 1/4" or 1/2" Threaded[1]

INSTRUMENT CONNECTION: 1/4" or 1/2" Threaded

DIAPHRAGM: PTFE

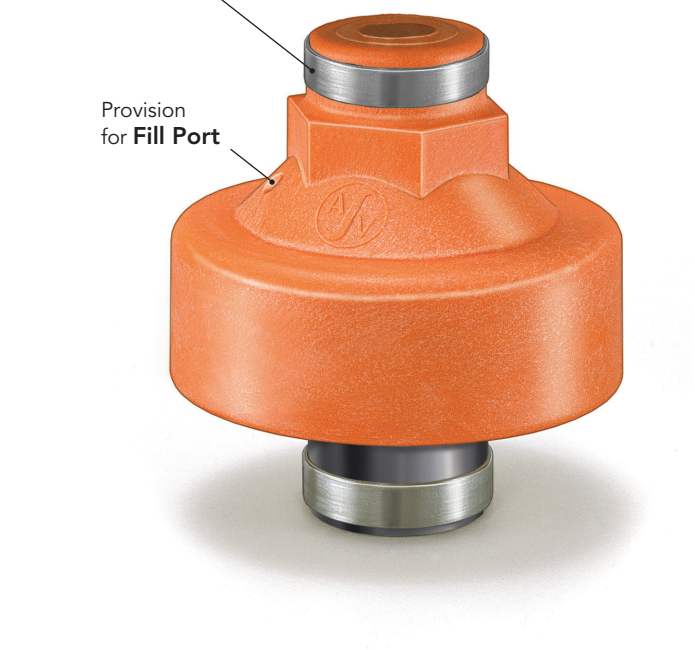

Chemline SG Series Gauge Isolators allow inexpensive pressure gauges, or any other pressure instrument to be used in corrosive services. The upper chamber (gauge side) is filled with a stable fluid such as glycol or glycerine[2]. A diaphragm separates it from the lower chamber which receives the media under pressure.

The 1/2" gauge connection allows use of the popular 4" and 4-1/2" diameter gauges. Pressure switches or transmitters may also be installed. Customers can easily fill isolators and install their own gauges.

features

Easy to Mount Gauges

- It is easy to fill an isolator and field mount a gauge. No special equipment is required.
- Will accept popular 4" and 4-1/2" diameter gauges

Provision for Fill Port

- Housing may be drilled and tapped by Chemline or customer for a threaded fill port. This is used for filling isolator using a vacuum filling station

High Chemical Resistance

- Choice of body materials for a wide range of applications
- PTFE bonded EPDM dished diaphragm for high chemical resistance and sensitivity

Heavy Duty Design for Safety

- PPG[3] top chamber
- Heavy wall connection ports

CRN Registration number by province

- Ontario: OH16085.5

Optional Gauges

- Isolators are available alone or with gauge mounted and prefilled with glycol[2]

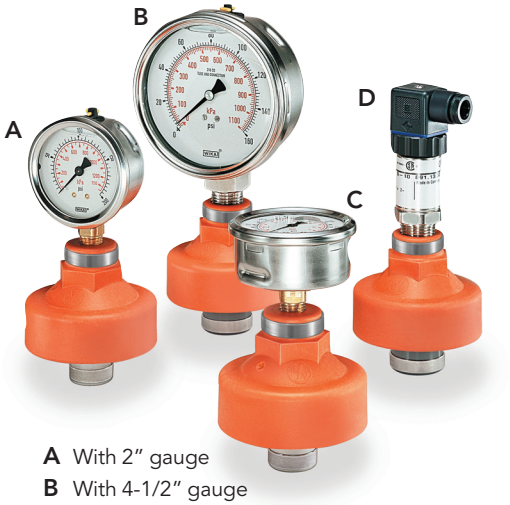

A With 2" gauge
B With 4-1/2" gauge
C With 2" back mount gauge
D With pressure transmitter

[1] Other available inlet connections are 1/2" socket or 1/2" to 1" flanged.
[2] Other fluids are available for special applications such as chlorine service.
[3] Glass reinforced polypropylene.
[4] PVC isolators are certified under NSF/ANSI Standard 61 for contact with drinking water.

06/14 ©Chemline Plastics Limited 2014
Chemline is a registered trade mark of Chemline Plastics Limited

Gauge Isolators

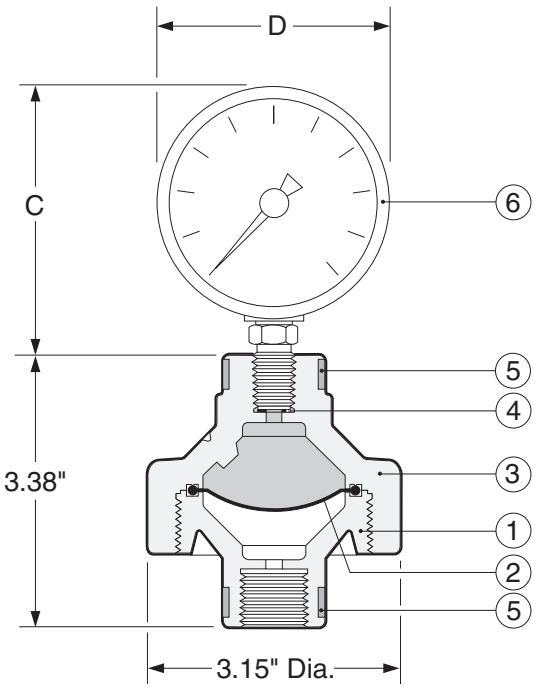

PARTS

No.	Part	Pcs.	Materials
1	Body	1	PVC, PP, PVDF
2	Diaphragm	1	PTFE
3	Bonnet	1	PPG[1]
4	Gasket	1	EPDM
5	Stainless Steel Bands	2	304 SS
6	Optional Gauge	1	See below

[1]PPG = Glass reinforced polypropylene

OPTIONAL GAUGES

- Chemline offers the gauges listed below mounted to isolator and prefilled with glycol, glycerine or special fluid for chlorine applications. These gauges have dials and cases filled with either glycol (standard), glycerine or silicon for corrosion resistance and dampening.
- Chemline SG gauge isolators are not recommended for vacuum applications. They will not affect the gauge accuracy as low as approximately 3 psi. The accuracy depends on the process conditions and the gauge installed on it.

OTHER OPTIONS

- **Flanged** inlet connections
- **Threaded Fill Port** – drilled, tapped and plugged
- Chemline will mount any pressure instrument supplied free issue by customer

DIMENSIONS (Gauge Isolator with optional gauge installed) INCHES

Optional Gauge Ordering No.	Gauge Diameter	Gauge Connection	Housing	Bourdon Tube	Window	Accuracy	Dimensions C	Dimensions D(max.)
P025-xx	2-1/2"	1/4"	316 SS	Brass	Polycarbonate	±1.5% of span	3.1	2.5
P025-xx-SS	2-1/2"	1/4"	316 SS	316 SS	Polycarbonate	±1.5% of span	3.1	2.5
P025-xx-SS/BM	2-1/2" Back Mount	1/4"	316 SS	316 SS	Polycarbonate	±1.5% of span	1.6	2.5
P025-xx-BM	2-1/2" Back Mount	1/4"	316 SS	Brass	Polycarbonate	±1.5% of span	1.6	2.5
P040-xx-SS	4"	1/2"	316 SS	316 SS	Safety Glass	±1% of span	4.5	4.0
P045-xx-SS	4-1/2"	1/2"	PBTP Plastic[2]	316 SS	Acrylic	±0.5% of span	6.3	5.8

xx denotes the maximum gauge pressure i.e., 30, 60, 100, 160 or 200 psi. See data page for recommended working pressures.
[2] PBTP = glass filled polyester.

WORKING PRESSURES PSI

WEIGHTS

Material	10 – 20°C 50 – 68°F	30°C 86°F	40°C 104°F	50°C 122°F	60°C 140°F	70°C 158°F	80°C 176°F	90°C 194°F	100°C 212°F	120°C 248°F	Net Weights Pounds[3]
PVC	150	100	80	45	15	–	–	–	–	–	1.0
PP	150	125	100	80	65	45	–	–	–	–	0.7
PVDF	150	150	150	125	105	85	70	60	45	30	1.3

Temperature Ranges: PVC 0 to 60°C (32 to 140°F), **PP** 10 to 80°C (50 to 176°F), **PVDF** –30 to 120°C (–22 to 248°F).
NR = Not Recommended. [3] Weights are for unfilled 1/2" x 1/2" isolators without gauges. 1/2" x 1/4" isolators are 20% lighter.

ORDERING EXAMPLE

Chemline Gauge Isolators SG	A	005-	002	P	G
Body Material	**A** – PVC **B** – PP **K** – PVDF				
Inlet Size	**002** – 1/4" **005** – 1/2"(Standard)				
Instrument Connection	**002** – 1/4" **005** – 1/2"				
Diaphragm	**P** – PTFE bonded EPDM				
Filling & Mounting	**G** –Add only if isolator is supplied filled with glycol and gauge or pressure instrument is mounted by Chemline. Separate gauge item numbers are listed above.				

Example: Chemline SG Series Gauge Isolator, PVC, 1/2" x 1/4" FNPT inlet x instrument connections, PTFE diaphragm.

CHEMLINE PLASTICS
SUPERIOR FLOW SOLUTIONS
55 Guardsman Road, Thornhill, ON, L3T 6L2, Canada | ISO 9001:2008 Certified
tel.905.889.7890 | fax.905.889.8553 | request@chemline.com | chemline.com

REVIEWED BY CONTRACTOR
PILITAK ENTERPRISES
NAME: Sandra Rousseau P.Eng
DATE: Jun 03, 2019

VEOLIA

SHOP DRAWINGS

Spdiflow DAF Submittal package Date : 2019-05-31

General Information			
Project	WWTP UPGRADE - IQALUIT		
Client:	Kudlik Construction Ltd.	Project Number	2018-062
To:	Sandra Rousseau P.Eng., Project Manger	E-mail:	srousseau@kudlik.biz
Contractor	Veolia Water Technologies Canad Inc.	Project Number	5000218036
Address	4105 Sartelon, Ville St. Laurent PQ, H4S 2B3		
Project Manger:	Clément Bekaert	E-mail:	clement.bekaert@veolia.com
Phone:	514-334-7230 x 3243	Cell:	514-246-6232

Information on the Equipment	
Specialty:	Process
Equipment:	Spidflow DAF
Drawing Reference:	
Specification reference:	46.71.24
Article:	
Revision:	Rev02
Titre:	Spidflow submittal package
Numero client:	DA-Veolia-DS-01-Spidflow
Numero Veolia	5000218036_DS_0001_GEN_VWT
Envoyer pour:	Approbation/Information: Approbation

STANTEC PROJECT #: 110126045

SUBMITTAL # DA-Veolia-DS-01 Spidflow Rev 02.

This review by Stantec is for general conformance with the design concept of Stantec's design of the:

- [x] Process
- [ ] Electrical
- [ ] Structural
- [ ] Other
- [ ] Mechanical

component(s) only and does not mean that Stantec has verified or approves the shop drawing(s). The Contractor remains solely responsible for the shop drawing(s) and this review by Stantec does not relieve the Contractor of the Contractor's responsibility for errors or omissions in the shop drawing(s) or for meeting all requirements of the contract documents. This review does not mean that Stantec approves the detailed design inherent in the shop drawing, responsibility for which shall remain with the Contractor submitting same, nor does this review mean that Stantec accepts any deviation of the shop drawing(s) from the contract documents. The Contractor is responsible for confirming all dimensions and correlating them at the job site, for all construction means, methods and techniques, and for coordination of construction work of all trades, including coordination of all shop drawings.

Stantec

- [x] REVIEWED
- [ ] REVIEWED, AS NOTED
- [ ] REVISE AND RESUBMIT
- [ ] NOT REVIEWED

DATE June 6, 2019

BY Alejandro Rojas, P.Eng

Consultant Approval

SHOP DRAWINGS ARE REVIEWED UNLESS NOTED OTHERWISE

REVIEWED AS MODIFIED	X
REVISE & RESUBMIT	
SEAL & SIGNATURE REQUIRED	

Stantec

DATE June 6, 2019

SIGNATURE

REVIEW BY STANTEC IS FOR THE SOLE PURPOSE OF ASCERTAINING GENERAL CONFORMITY WITH DESIGN. CONTRACTOR IS RESPONSIBLE FOR DIMENSIONS, FABRICATION AND CONSTRUCTION METHODS, COORDINATION OF SUB-TRADES, DETAIL DESIGN OF COMPONENTS, AND ERRORS OR OMISSIONS ON SHOP DRAWINGS.

4105 Sartelon
Ville St. Laurent, PQ
H4S-2B3

Phone: 514-334-7230
Fax: 514-334-5070
www.veoliawatertechnologies.ca

STANTEC PROJECT #: 110126045

SUBMITTAL # DA-Veolia-DS-01 Spidflow Rev 02

This review by Stantec is for general conformance with the design concept of Stantec's design of the:

- [ ] Architectural
- [x] Electrical
- [ ] Structural
- [ ] Other
- [ ] Mechanical

component(s) only and does not mean that Stantec has verified or approves the shop drawing(s). The Contractor remains solely responsible for the shop drawing(s) and this review by Stantec does not relieve the Contractor of the Contractor's responsibility for errors or omissions in the shop drawing(s) or for meeting all requirements of the contract documents. This review does not mean that Stantec approves the detailed design inherent in the shop drawing, responsibility for which shall remain with the Contractor submitting same, nor does this review mean that Stantec accepts any deviation of the shop drawing(s) from the contract documents. The Contractor is responsible for confirming all dimensions and correlating them at the job site, for all construction means, methods and techniques, and for coordination of construction work of all trades, including coordination of all shop drawings.

Stantec

- [ ] REVIEWED
- [x] REVIEWED, AS NOTED
- [ ] REVISE AND RESUBMIT
- [ ] NOT REVIEWED

DATE 2019-06-27

BY Konrad Goluch

All motors shall have type TEFC enclosure

Projet	IQALUIT
Projet#:	5000218036
Document #:	5000218036_DS_0001_PM_VWT Rev 2
Par:	FV
Verif.:	GH
approb.:	CB

SUBMITTAL PACKAGE

SPIDFLOW

Projet	IQALUIT
Projet#:	5000218036
Document #:	5000218036_DS_0001_PM_VWT
Par:	FV
Verif.:	GP
approb.:	CB

SPIDFLOW

PROCESS DATASHEET

Section Manuel OM: 4.3.1.1

VEOLIA				VWT DOC#		PDS_0001_SFP-650	
				PROJECT NUMBER		5000218036	
				DATE		2018-09-28	
				SPIDFLOW			
CLIENT	REV	DESCRIPTION		DATE	BY	CHKD	APP.
CITY OF IQALUIT	1	FOR APPROVAL		2017-10-04	G.H.	G.H.	G.P.
	2	FOR APPROVAL II		2019-05-29	F.V.	G.P.	C.B.
PROJECT	3						
IQALUIT WATER TREATMENT PLANT	4						
	5						
	6						
	7						REV
GENERAL INFORMATION	Technology			-	SPIDFLOW		
	Number of Trains			-	2		
	Application			-	Waste Water		
	Model				SFP-650		
	Number of units			-	1		
ENVIRONMENT	Equipmement location			-	Interior		
	Altitude			m	< 1000		
	Temp Min. - Water			°C	5		
	Temp Max. - Water			°C	25		
	Temp Min. - AIR			°C	5		
	Temp Max. -AIR			°C	35		
	Max Humidity			%	100		
	Cassified Zone			-	Unclassified		
	Corrosive Atmosphere			-	Non corrosive		
	Freeze Conditions			-	Non Freezing Conditions		
	Comments			-	NA		
APPROBATION & CERTIFICATION OF COMPONENTS	NSF-61		Yes/No	-	No		
	CSA / UL		Yes/No		Yes		
	Other			-	N/A		
SAFETY	Electric Zone Classification (NFPA 820)			-	N/A		
	Province / State				Iqaluit		
PERFORMANCES	Application			-	Municipal		
	Design Capacity per Unit			m^3/d	6 525		
	Total Client Design Capacity (if trains parallel)			m^3/d	13 050		
	Client Rise Rate			m/h	31.25		
	Nominal Unit Capacity (@30 m/h)			m^3/d	6 220		
	Retention time at nominal capacity (30 m/h)	Injection		min	1,2		
		Aeration		min	1		
		Flotation		min	6.6		
TECHNICAL DESCRIPTION	Tank Information per unit	Overall length, flange to flange (approx.)		mm	8029		2
		Overall width (approx.)		mm	2965		2
		Height (without scraper)		mm	3682		2
		Liquid depth		mm	3300		
		Recommended Clearance (around)		mm (in)	625 (20)		
		Recommended Clearance (above)		mm (in)	1000 (40)		
		Dry weight		lbs (kg)	26 300 (11 929)		2
		Operating weight		lbs (kg)	160 400 (72 756)		2
	Nozzles per unit	Number		-	48		
		Nozzle material		-	Polypropylene		
		Diaphragm material			Polyethylene		
		Connection		in (mm)	1''		
		Manufacturer			Opalium		
		Quantity			48		
	Scrapper per unit	Gearbox Manufacturer		-	Nord		
		Gearbox Model		-	SK90		
		Rotation (Clockwise, Counter-Clockwise)		-	Clockwise		
		Chain material		-	FRP		
		Number of blades		-	4		
		Sludge flow @ Qmin		m^3/h	0.21		
		Sludge flow @ Qmax		m^3/h	2.1		
		Monitoring module		-	EL-FI 20		
	Motor per unit	Power		HP	0,25		
		Type			TEFC		
		Manufacturer			WEG		

TECHNICAL DESCRIPTION	**Pump per unit**		**Quantity**	-	3		
			Duty/Stand-by	-	2 Duty / 1 Stand-by		
			Max. simultaneous operating pump	-	2		
			Manufacturer	-	Edur		
			Model	-	LBUX 602 C 160L		
			Recirculation % per pump	**% of Nominal flow**	10 - 18%		
			Power	**HP**	20		
			Flow	**m3/h**	20		
			Head	**psi (bar)**	108 (7.4)		
			Diameter	**NPT**	3 po (suction) / 2.5 po (discharge)		
	Strainer per unit		**Diameter Inlet/outlet**	**mm (in)**	150 (6)		
			Material	-	304 stainless steel (std)		
			Quantity	-	2		
	White water recirculation line		**Recirculation Line diameter**	**mm (in)**	350 (14)		
			Material	-	304 stainless steel (std)		
	Air Mixing		**Air flow**	**SCFM**	150		
			Header Diameter	**mm (in)**	75 (3)		
			Ramification Diameter	**mm (in)**	25 (1)		
OTHER MATERIAL OF CONSTRUCTION	**Bottom Collector**				304 stainless steel		
	Anti-Vortex Baffles			-	304 stainless steel		
	Hardware (Immersed)			-	304 stainless steel		
	Hardware (Surfaced state)			-	304 stainless steel		
CONNECTIONS	**Inlet flange**			**mm (in)**	350 (14)		2
	Outlet flange			**mm (in)**	400 (16)		2
	Drain diameter			**mm (in)**	50 (2)		
	Outlet sludge diameter			**mm (in)**	150 (6)		
	Air washing system diameter			**mm (in)**	50 (2)		2
	White water nozzles diameter			**mm (in)**	150 (6)		2
VALVES PER UNIT	**X**	**Modulating valve - Clarified Water**	**Manufacturer**	-	Bray		
			Type	-	Butterfly Lug Serie 31		
			Model | Diam.	-	Serie 31 & S92	300 (12)	
			Quantity	-	2		
		Isolation valve ON/OFF sludge	**Type**		-		2
			Model | Diam.		-	-	2
			Quantity		-		2
		Isolation valve ON/OFF air mixing	**Type**		-		2
			Model | Diam.		-	-	2
			Quantity		-		2
	X	**Isolation valve ON/OFF - Strainer**	**Type**		Butterfly Lug Serie 31		
			Model | Diam.		Serie 31 & S70	100 (4)	2
			Quantity		2		
	X	**Drain valve ON/OFF- Strainer**	**Type**		Ball valve		
			Model | Diam.		Flow-tek & Actuator S70	50 (2)	2
			Quantity		2		
	X	**Valve ON/OFF - White water**	**Manufacturer**	-	Bray		
			Type	-	Butterfly Lug Serie 31		
			Model | Diam.	-	Serie 31 & S70	75 (3)	2
			Quantity	-	1		
	X	**Isolation Valve - Flotation zone Drain**	**Manufacturer**	-	Pratt		2
			Type	-	Plug valve		2
			Model | Diam.	-	611A	50 (2)	2
			Quantity	-	5		
	X	**Isolation Valve - White Water Drain**	**Manufacturer**	-	Bray		
			Type	-	Butterfly Lug Serie 31		
			Model | Diam.	-	Serie 31	50 (2)	
			Quantity	-	1		
	X	**Isolation Valve - Air Mixing**	**Manufacturer**		Bray		
			Type		Butterfly Lug Serie 31		
			Model | Diam.		Serie 31	50 (2)	2
			Quantity		5		2
	X	**Isolation Valve - Pump Recirculation lines**	**Manufacturer**		Bray		
			Type		Butterfly Lug Serie 31		
			Model | Diam.		Serie 31	75 (3)	
			Quantity		3		2
	X	**Isolation Valve - Pump Recirculation lines**	**Type**		Butterfly Lug Serie 31		
			Model | Diam.		Serie 31	100 (4)	
			Quantity		3		
	X	**Check valve - White Water pump**	**Manufacturer**		Bray		
			Type		Wafer		2
			Model | Diam.		Rite 210	100 (4)	2
			Quantity		3		
	X	**Isolation valve Outlet- Strainer**	**Type**		Butterfly Lug Serie 31		
			Model | Diam.		Serie 31	100 (4)	
			Quantity		2		
	X	**Other**	**Manufacturer**	-			
			Type	-			
			Model | Diam.	-			
			Quantity	-			

INSTRUMENTATION PER UNIT	N/A	Raw Water Flowmeter	Manufacturer	-	NA		
			Model | Diam.				
		Zone : *Unclassified*	Quantity	-			
	X	Level Switch (High High)	Manufacturer	-	Flygt		
			Model | Diam.		ENM-10	4''	
		Zone : *Unclassified*	Quantity	-	1		
	N/A	Raw water pH probe	Manufacturer	-	-		2
			Model | Diam.		-		2
		Zone : *Unclassified*	Quantity	-	-		2
	N/A	Raw water pH transmitter	Manufacturer	-	-		2
			Model | Diam.		-	-	2
		Zone : *Unclassified*	Quantity	-	-		2
	N/A	Raw water Turbidity probe	Manufacturer	-	-		2
			Model | Diam.		-	-	2
		Zone : *Unclassified*	Quantity	-	-		2
	N/A	Raw water Turbidity transmitter	Manufacturer	-	-		2
			Model | Diam.		-	-	2
		Zone : *Unclassified*	Quantity	-	-		2
	X	Clarified water turbidity probe	Manufacturer	-	Hach		
			Model | Diam.		Solitax	1.5''	
		Zone : *Unclassified*	Quantity	-	1		
	X	Clarified Water Turbidity transmitter	Manufacturer	-	Hach		
			Model | Diam.		SC200	NA	
		Zone : *Unclassified*	Quantity	-	1		
	X	Level transmitter	Manufacturer	-	E&H		2
			Model | Diam.		PMP51-CA21JD1FGDR1JA1 + AAZ1	1/2	2
		Zone : *Unclassified*	Quantity	-	1		2
	X	Pressure transmitter (Recirculation)	Manufacturer	-	E&H		2
			Model | Diam.		PMP51-CA21JD1PGDRKJA1+AAZ1	1/2	2
		Zone : *Unclassified*	Quantity	-	2		2
	X	Pressure Gauge (White water skid)	Manufacturer	-	2.5'' Ashcroft		2
			Model | Diam.		1 009	1/2	2
		Zone : *Unclassified*	Quantity	-	8		2
	X	Other (specify): Recirculation Flowmeter	Manufacturer	-	E&H		2
		Zone : *Unclassified*	Model | Diam.		Promag 5W4C80	3''	2
			Quantity	-	1		2
		Commentaries		-			
CHEMICALS		Coagulant Dosing	Dosing	L/hr	NA		
		Polymer Dosing	Dosing	L/hr	5-100		
POWER SUPPLY		Voltage		V	575		
		Phase		ph	3		
		Frequency		Hz	60		
COMMENTS							

Projet	IQALUIT
Projet#:	5000218036
Document #:	5000218036_DS_0001_PM_VWT
Par:	BB
Verif.:	GH
approb.:	CB

SPIDFLOW

SCRAPER

Section Manuel OM: 4.3.1.2

CS-999-200 : Identification sheet

VWTC PROJECT NUMBER:	Iqaluit WWTP	REV:	02
PROJECT NAME:	5000218036	SUBMITTED TO (COMPANY):	
ENGINEER:	F.VINCI	SUBMITTED TO (RESPONSIBLE)	
PROJECT MANAGER:	C. BEKAERT	PROJECT NUM REFERENCE.:	
PHONE NUMBER:		LOT NUMBER:	

SUPPLIER	EQPT CODE	EQPT TAG NO	DIA	DESCRIPTION	INFO 1	INFO 2	INFO 3	APPLIC.	NOTE	REV
VEOLIA	ST-999-200	DDR-02-311		SURFACE SCRAPER	CHAIN SURFACE SCRAPER SYSTEM // 2-SHAFT, SURFACE SCUM SCRAPING SYSTEM // BASIN LENGTH: 4M // BASIN WIDTH: 2,5M // STEEL MATERIAL AISI304 // INCL. EL-FI DRIVE OVER/UNDERLOAD GUARD // SPEED OF SCRAPER 2,0 CM/S	GEARBOX NORD SK9033 // CW BEACH PLATE // CW NCS720S CHAIN //FRP FLIGHTS	SURFACE SCRAPER MOTOR // NORD MODEL # 63L/4 // POWER SUPPLY : 575 V/ 3 PH / 60 HZ // HIGH PERFORMANCE, INVERTER DUTY, NEMA 56C, 0,25 HP // CSA OR CUL APPROVED			2
VEOLIA	ST-999-200	DDR-02-321		SURFACE SCRAPER	DEWA CHAIN SURFACE SCRAPER SYSTEM // 2-SHAFT, SURFACE SCUM SCRAPING SYSTEM // BASIN LENGTH: 4M // BASIN WIDTH: 2,5M // STEEL MATERIAL AISI304 // INCL. EL-FI DRIVE OVER/UNDERLOAD GUARD // SPEED OF SCRAPER 2,0 CM/S	GEARBOX NORD SK9033 // CW BEACH PLATE // CW NCS720S CHAIN //FRP FLIGHTS	SURFACE SCRAPER MOTOR // NORD MODEL # 63L/4 // POWER SUPPLY : 575 V/ 3 PH / 60 HZ // HIGH PERFORMANCE, INVERTER DUTY, NEMA 56C, 0,25 HP // CSA OR CUL APPROVED			2

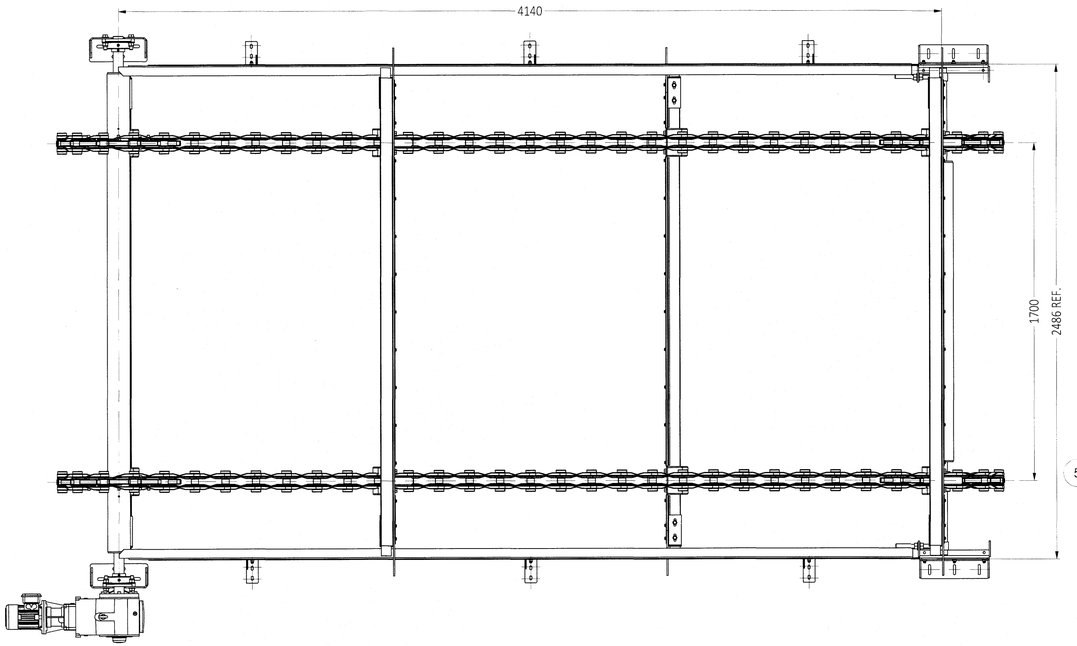

ITEM: 5000218036-SA301-22 (1X) ⚠1
ITEM: 5000218036-SA305-22 (1X)
QUANTITÉ TOTALE: 2
POIDS: 363 Kg (801 Lbs)

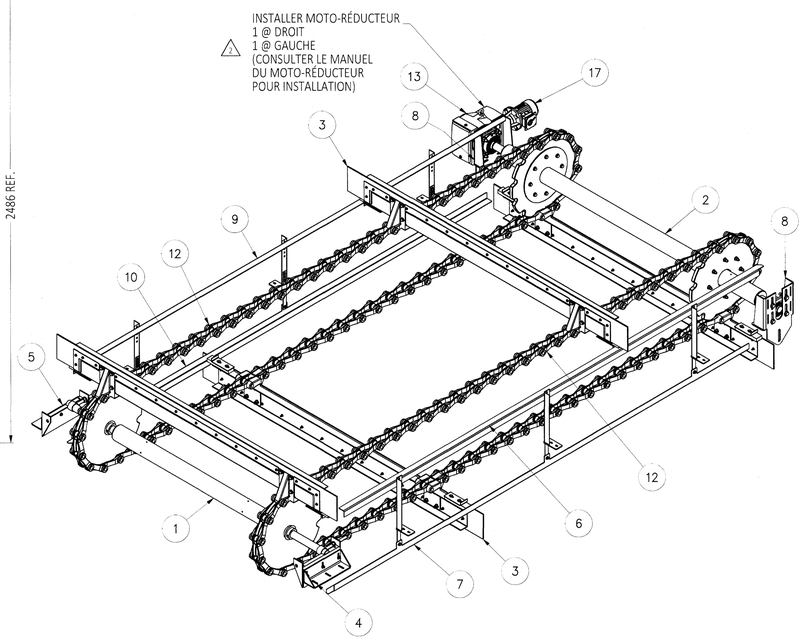

PA X	ITEM	DESCRIPTION	MATÉRIEL MATERIAL	NUMÉRO REF. REF. NUMBER	QTÉ QTY	ATELIER SHOP QTÉ TOT. TOT. QTY	E	S
	1	ARBRE DE TENSION A/C ROUE DENTÉE		SA501	1	2		
	2	ARBRE D'ENTRAÎNEMENT A/C ROUE DENTÉE		SA502	1	2		
	3	SUPPORT DE LAME DE RACLEUR		SA503	⚠1 4	8		
	4	GLISSIÈRE TENSION DROIT		SA504	1	2		
	5	GLISSIÈRE TENSION GAUCHE		SA505	1	2		
	6	SUPPORT DE GUIDE DROIT SUPÉRIEUR	Generic	SA506	1	2		
	7	SUPPORT DE GUIDE DROIT INFÉRIEUR	Generic	SA507	1	2		
	8	SUPPORT D'ARBRE D'ENTRAÎNEMENT		SA508	2	4		
	9	SUPPORT DE GUIDE GAUCHE SUPÉRIEUR	Generic	SA509	1	2		
	10	SUPPORT DE GUIDE GAUCHE INFÉRIEUR	Generic	SA510	1	2		
	12	CHAÎNE NON MÉTALLIQUE (ALLIED-LOCKE INDUSTRIEL) #NCS720S , LONGEUR:10.100m (66 MAILLONS)		ST-999-201	2	4		
	13	RÉDUCTEUR À ENGRENAGES CONIQUES À ANGLE DROIT (NORD) SK 9033.1 AZBD 56C		ST-999-210	1	2		
	14	CLAVETTE 1/2" LARGEUR X 1/2" HAUTEUR (INCLUS AVEC RÉDUCTEUR)	Generic	ST-999-210	1	2		
	15	RONDELLE PLATE Ø3/4" TYPE A ÉTROIT(INCLUS AVEC RÉDUCTEUR)	AISI 304	ST-999-210	1	2		
	16	BTH. Ø3/4"-10UNC X 1 1/2" LG.(INCLUS AVEC RÉDUCTEUR)	ASTM-F593D-304	ST-999-210	1	2		
	17	MOTEUR (NORD) 63L/4	Generic	ST-999-211	1	2		
	18	ÉCROU Ø5/8"-11UNC	ASTM-F594C-304	FXNUYY200221	1	2		
	19	RONDELLE PLATE Ø5/8" TYPE A ÉTROIT	AISI 304	FXWAYY200674	7	14		
	23	BTH. Ø5/8"-11UNC X 4 LG.	ASTM-F593C-304	FXSCYY200501	1	2		

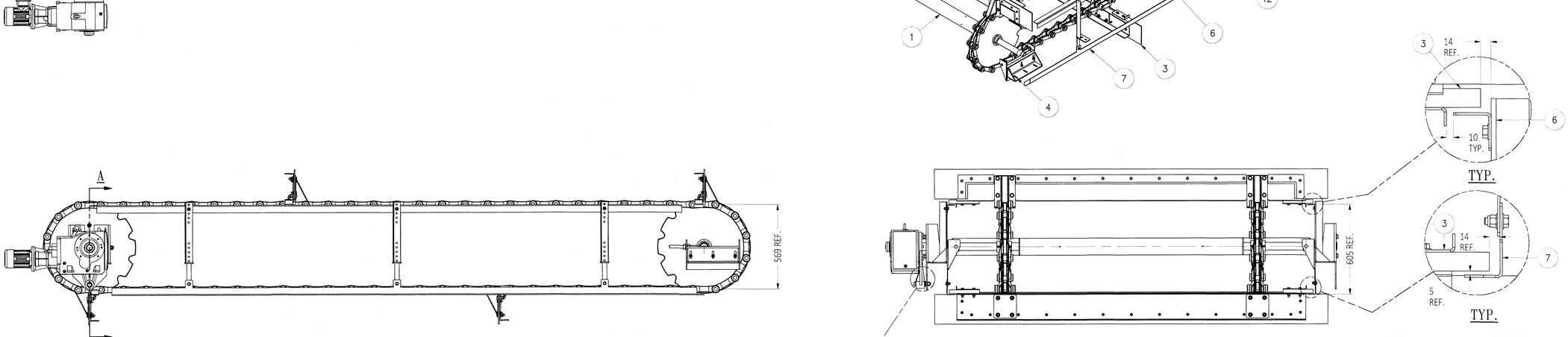

RÉV. REV.	DESCRIPTION	DATE	RÉVISÉ REVISED	VÉRIFIÉ CHECKED	APPROUVÉ APPROVED
2	POUR ASSEMBLAGE	2019-04-08	A.D.	S.M.	F.V.
1	POUR ASSEMBLAGE	2019-03-26	A.D.	S.M.	F.V.

TOLÉRANCES GÉNÉRALES:

DIMENSIONS EN mm:
0 @ 600 : ± 0.5
600 @ 4000 : ± 1.0
> 4000 : ± 3.0

DIMENSIONS EN POUCES:
0 @ 24 : ± 1/32 [± .03]
24 @ 160 : ± 1/16 [± .05]
> 160 : ± 1/8 [± .1]

ANGLES: ± 0° 10'
BRISER TOUTES LES ARÊTES
SURFACES USINÉES: 250

VEOLIA WATER TECHNOLOGIES

DESSINATEUR/DESIGNER	A.D.	DATE 2019-03-26
VÉRIFICATEUR/CHECKER	S.M.	DATE 2019-03-26
INGÉNIEUR/ENGINEER	F.V.	DATE 2019-03-26

CLIENT: IQALUIT WWTP

TITRE / TITLE:
SPIDFLOW
RACLEUR
DÉTAIL D'ASSEMBLAGE

ÉCHELLE / SCALE: 1:15

PROJET / PROJECT	DESSIN No / DRAWING No	INTERNE / INTERNAL	FEUILLET / SHEET	REV./REV.
5000218036	SA500	SPF	1 / 1	2

Ce document est la propriété de VEOLIA et ne peut être reproduit sans son autorisation écrite.
This document is the property of VEOLIA and cannot be reproduced without its written authorization.

REF. ANSI D

NON-METALLIC CHAINS AND ATTACHMENTS

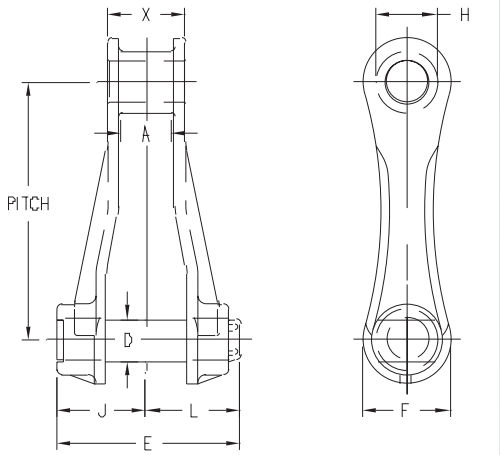

NCS720S

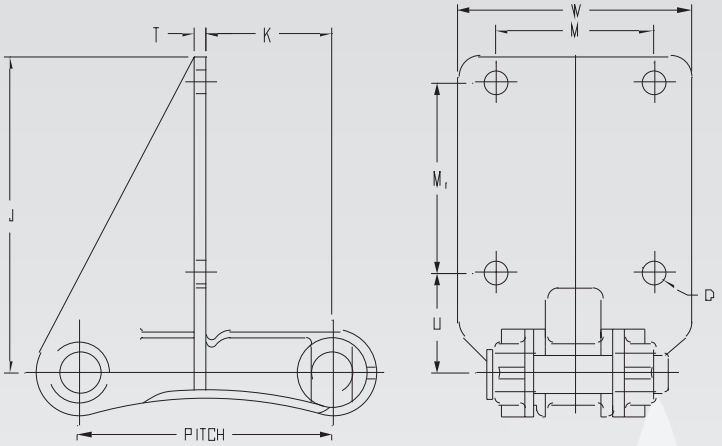

NCS720S-F22

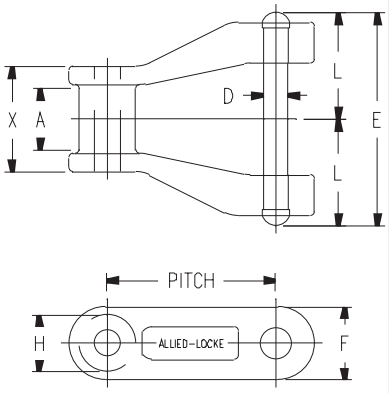

NH78

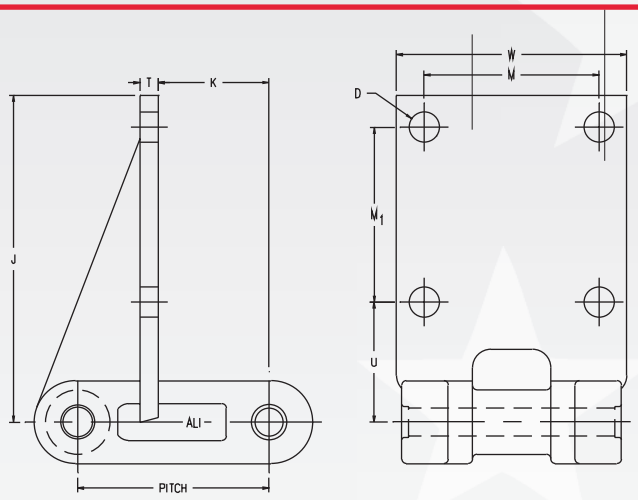

NH78-F2

ALI Catalog No.	Pitch in Inches	Links Per 10 Feet	Weight Per Foot in Lbs.	Average Ultimate Strength in Lbs.	Maximum Allowable Sprocket Face A	Over-All Width Detachable Cottered C	Pin Dia. D	Over-All Width Fixed Riveted E	Height of Side Bar F	Dia. of Barrel H	Head of Pin to Center Line J	End of Pin to Center Line Detachable Cottered K	End of Pin to Center Line Fixed Riveted L	Bearing Length X
NCS720S	6.00	20	1.5	6,000	1.12	4.29	.93	—	2.03	1.44	2.10	2.19	—	1.81
NH78	2.609	46	1.5	3,100	.94	—	.38	3.19	1.12	.88	—	—	1.59	1.62

ALI Attachment No.	Pitch in Inches	D		J	K	M	M_1	T	U	W
		Bolt Diameter	Hole Diameter							
NCS720S-F226	6.000	0.50	0.56	6.14	3.00	3.75	2.62	0.25	2.38	5.50
NCS720S-F228	6.000	0.50	0.56	7.50	3.00	3.75	4.50	0.25	2.38	5.50
NH78-F2	2.609	0.38	0.41	4.44	1.50	2.38	2.38	0.25	1.62	3.12

FF–0002

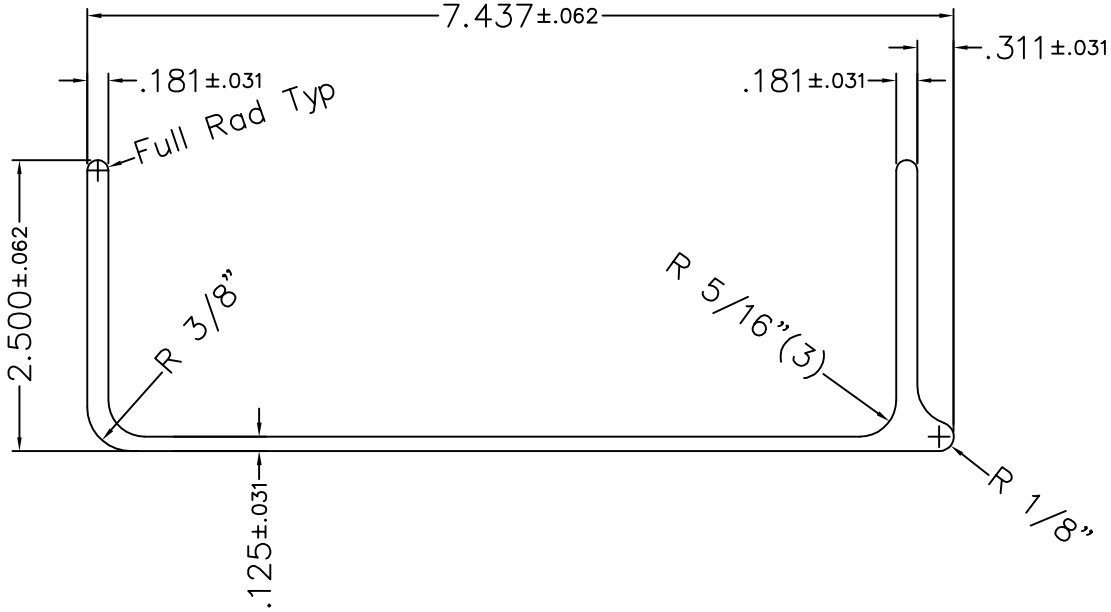

MATERIAL:

FIBERGLASS REINFORCED ISOPHTHALIC POLYESTER RESIN. REINFORCEMENT SHALL CONSIST OF CONTINUOUS STRAND, FIBERGLASS MAT. AND UNIDIRECTIONAL FIBERGLASS ROVING. GLASS CONTENT 55% MINIMUM BY WEIGHT.

MECHANICAL PROPERTIES (COUPOND	UNIT	TEST METHOD
LONGITUDINAL TENSILE STRENGTH	47,500 PSI. AVG	ASTM D638
TRANSVERSE TENSILE STRENGTH	7,000 PSI. AVG.	ASTM D638
LONGITUDINAL FLEXURAL STRENGTH	40,000 PSI. AVG	ASTM D790
TRANSVERSE FLEXURAL STRENGTH	10,000 PSI. AVG.	ASTM D790
LONGITUDINAL COMPRESSIVE STRENGTH	40,000 PSI. AVG.	ASTM D695
TRANSVERSE COMPRESSIVE STRENGTH	10,000 PSI. AVG.	ASTM D695
LONGITUDINAL TENSILE MODULUS	3.2 X 10^6 PSI.	ASTM D638
LONGITUDINAL FLEXTURAL MODULUS	2.0 X 10^6 PSI. AVG.	ASTM D790
SHEAR STREGNTH (BY PUNCH TOOL)	14,000 PSI. AVG.	ASTM D732
MODULAS OF ELASTICITY (FULL SECTION Y–Y)	4.8 x 10^6 PSI. MIN.	ANSI A14.5–1989

PHYSICAL PROPERTIES		
DENSITY	0.058–0.062 LBS./IN.	ASTN D1505–68
SPECIFIC GRAVITY	1.61 – 1.75	ASTM D792
WATER ABSORBTION	0.6% MAX	ASTM D570
BARCOL HARDNESS	40 AVERAGE	ASTM D2583–01

TOLERANCES

SQUARENESS OF END CUT MAXIUMUM DEVIATION IS 1°
ANGULARITY +/– 2°
LENGTH +/– 1/8" UP TO 20' LONG
FLATNESS: MAX. DEVIATION FROM FLAT IS .008" X INCH OF WIDTH
TWIST: 3" MAXIUM UP TO 20 FEET LONG
STAIGHTNESS: MAXIMUM DEVIATION FROM STRAIGHT
.030"/FT UP TO 20' IN LENGTH
.050"/FT. FOR LENGTHS GREATER THAN 20'
CHECKED WITH STRING (NO WEIGHT MINIMIZING).

NOTE: ALL TOLERANCES +/–.062 UNLESS OTHERWISE SPECIFIED

Cross Sectional Properties		
Area	1.873	in^2
Ix	15.589	in^4
Iy	1.114	in^4
Ixy	0.220	in^4
Sx	4.111	in^3
Sy	0.603	in^3
rx	2.885	in
ry	0.771	in

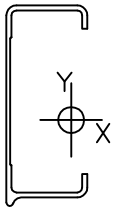

REVISIONS			
NO.	DATE	BY	CHANGE
1.			
2.			
3.			
4.			
5.			

MATERIAL

TREATMENT

ALLIED - LOCKE IND.
P.O. BOX 509 DIXON, IL. 61021
INDUSTRIAL DIVISION

TITLE: 8" Sludge Flight

DRAWN BY: LSG | SCALE: NONE | DRAWNING NO.: FF–0002

CHK'D | DATE: 11/12/03

90 SERIES RIGHT ANGLE HELICAL-BEVEL
SPEED REDUCERS/GEAR MOTORS

NORD DRIVESYSTEMS

PERFORMANCE SPECIFICATIONS

Configuration : right angle
Integral motor HP (min/ max) : 0.16 / 200
Integral motor kW (min/ max) : 0.12 / 160
Typical efficiency : 95.5%
Number of gear reductions : 3 to 6

MOUNTING STYLES

Footed housing style : standard
B5 flange outside diameter range [in] : 7.87 to 25.98
B5 flange outside diameter range [mm] : 200 to 660
Shaft mount housing available
B14 flange outside diameter range [in] : 5.51 to 17.72
B14 flange outside diameter range [mm] : 140 to 450

OPTIONS

NEMA C-face or IEC input adapter
Custom adapter flange
Flange pilot removed
Bolt-on torque arm with shock dampener
Effective drywell with flange

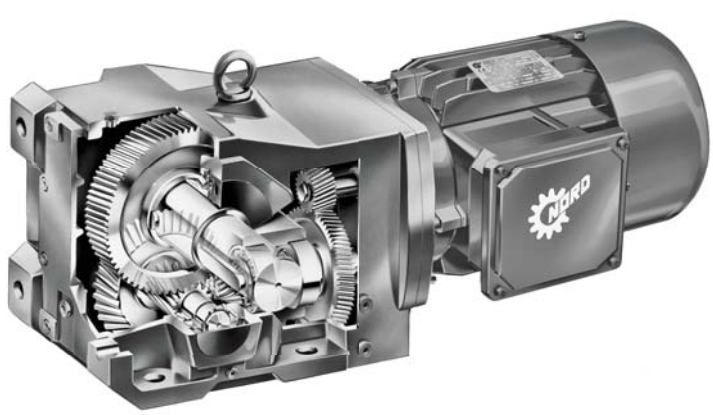

RATIO AND SPEED

Minimum standard ratio : 8.04:1
Maximum standard ratio : 134:32.68
Minimum output speed from 1750 rpm motor : 0.13 rpm
Maximum output speed from 1750 rpm motor : 218 rpm

Unit Size	Torque Max *		Ratio Range	Solid Shaft Dia.		Keyed Hollow Shaft Dia.				Shrink Disc Shaft Dia.	
	[lb-in]	[Nm]	Min-Max	[in]	[mm]	Std-[in]	Opt-[in]	Opt-[in]	[mm]	[in]	[mm]
SK 9012.1	3,540	400	8.09 - 332.37	1.250	30	1.375	1.438	1.250	35	1.375	35
SK 9013.1	3,540	400	141.29 - 1690.10	1.250	30	1.375	1.438	1.250	35	1.375	35
SK 9016.1	5,399	610	12.51 - 277.84	1.375	35	1.500	1.438	-	40	1.500	40
SK 9017.1	5,399	610	134.32 - 1412.69	1.375	35	1.500	1.438	-	40	1.500	40
SK 9022.1	7,611	860	8.78 - 276.86	1.375	35	1.500	1.438	-	40	1.500	40
SK 9023.1	7,611	860	228.47 - 1899.29	1.375	35	1.500	1.438	-	40	1.500	40
SK 9032.1	13,718	1,550	8.48 - 295.85	1.750	45	2.000	1.938	1.688	50	2.000	50
SK 9033.1	13,718	1,550	167.45 - 3635.95	1.750	45	2.000	1.938	1.688	50	2.000	50
SK 9042.1	24,780	2,800	8.83 - 329.69	2.375	60	2.375	1.438	1.188	60	2.375	60
SK 9043.1	24,780	2,800	172.08 - 4246.38	2.375	60	2.375	1.438	1.188	60	2.375	60
SK 9052.1	42,480	4,800	8.10 - 289.61	2.875	70	2.750	2.938	-	70	2.750	70
SK 9053.1	42,480	4,800	164.99 - 3735.92	2.875	70	2.750	2.938	-	70	2.750	70
SK 9072.1	75,225	8,200	9.16 - 245.76	3.625	90	3.250	2.938	-	80	3.250	80
SK 9072.1/32	75,225	8,200	311.10 - 4512.24	3.625	90	3.250	2.938	-	80	3.250	80
SK 9082.1	115,050	13,000	8.04 - 296.80	4.375	110	4.000	3.938	4.438	110	4.000	110
SK 9082.1/42	115,050	13,000	285.05 - 4671.14	4.375	110	4.000	3.938	4.438	110	4.000	110
SK 9086.1	177,000	20,000	8.04 - 230.64	4.750	120	4.750	-	-	120	4.750	120
SK 9086.1/52	177,000	20,000	144.80 - 4818.83	4.750	120	4.750	-	-	120	4.750	120
SK 9092.1	283,200	32,000	10.68 - 297.51	5.500	140	-	-	-	150	5.500	150
SK 9092.1/52	283,200	32,000	191.28 - 4916.63	5.500	140	-	-	-	150	5.500	150
SK 9096.1	442,500	50,000	16.78 - 200.57	7.500	190	-	-	-	155/160	6.00/6.25	155/160
SK 9096.1/62	442,500	50,000	208.95 - 1623.67	7.500	190	-	-	-	155/160	6.00/6.25	155/160
SK 9096.1/63	442,500	50,000	1774.21 - 13432.68	7.500	190	-	-	-	155/160	6.00/6.25	155/160

*** Torque may vary by ratio**

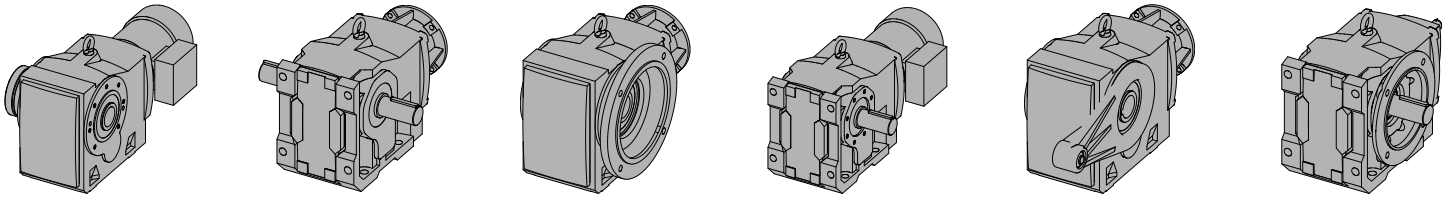

90 SERIES RIGHT ANGLE HELICAL-BEVEL



SHAFT DATA

- AISI 1045 or 4140 input and output shaft material
- Inch shaft key dimensions according to AISI B17
- Metric shaft key dimensions according to DIN 6885
- Standard output shaft drill and tap
- 2 hollow shaft keys
- Shrink disc size range [in] : 1.375 to 5.500
- Shrink disc size range [mm] : 35 to 150
- Minimum gripping safety factor range [h6 fit] : 2.6 to 6.3

SHAFT DATA OPTIONS

Double solid output shaft, Shaft fixing element, Custom shaft diameters, Hollow spline per DIN 5480, Custom spline, Cross drilled holes, 304 stainless steel



MOTOR MOUNTING

- Integral motor : 1/6 to 200 HP
- C-face adapter frame size range : 56C to 360TC
- IEC adapter [B5] frame size range : IEC 63 to IEC 315
- Sugar scoop motor availability : 56 to 365T
- Top mount platform motor availability : 56 to 405T

MOTOR MOUNTING OPTIONS

Custom motor adapter, Custom coupling diameter



GEARING

- Up to AGMA Class 13 gear quality rating
- 58 Rockwell C minimum gear hardness
- Ground or skive hobbed hard gear teeth finishing
- Standard drop forged gear blanks
- 275% momentary overload capacity
- Standard hunting tooth ratios

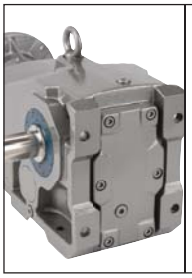

HOUSING

- Class 35 gray iron housing material
- Single setup machining method
- UNICASE™ one piece housing design
- Seals directly contact main housing
- Exceptional housing torsional stiffness
- Thick housing wall section
- Castings are dip sealed



BEARINGS

- ABEC-1 quality bearings
- Ball or tapered standard output bearing
- Tapered or spherical heavy-duty output bearing



LUBRICANT & SEALING COMPONENTS

- Factory filled ISO 220 mineral oil
- Standard AUTOVENT™ breather style
- QUADRILIP™ output seal design
- 1 double lip & 1 single lip output shaft oil seals
- Nitrile rubber Oil seals

LUBRICANT & SEALING OPTIONS

Custom synthetic lubricating oil, Custom temperature lubricating oil, Fluid grease lubricant, Food grade lubricating oil, Long term storage preparation, Magnetic drain plug, Bulls eye sight glass, Custom drain plug, Fluorinated rubber oil seal material, Custom oil seals



INTERNAL PARTS ASSEMBLY

- Heavy press fit assembly method
- Standard reversing duty
- Typical backlash range [arc minutes] : 7 to 13

INTERNAL PARTS ASSEMBLY OPTIONS

Internal backstop



ENVIRONMENTAL PROTECTION

- Exterior primer coverage on all metal exterior surfaces
- Water Based Resin paint type
- 316 stainless steel flake paint additive
- H1 USDA incidental contact exposure

ENVIRONMENTAL OPTIONS

Severe duty and washdown duty paint options, Custom paint, Shaft seal covers, High pressure washdown IP66 oil seals

DRIVESYSTEMS

www.nord.com

NORD Gear Corporation
National Customer Service Toll-Free: 888.314.6673
info.us@nord.com

NORD Gear Limited
Toll-Free in Canada: 800.668.4378
info.ca@nord.com

WEST
Corona, CA (Los Angeles)
Phone: 608.849.0190

MIDWEST
Waunakee, WI (Madison)
Phone: 608.849.7300

EAST
Charlotte, NC
Phone: 608.849.0140

CANADA
Brampton, ON (Toronto)
Phone: 905.796.3606

10020002 1/1011

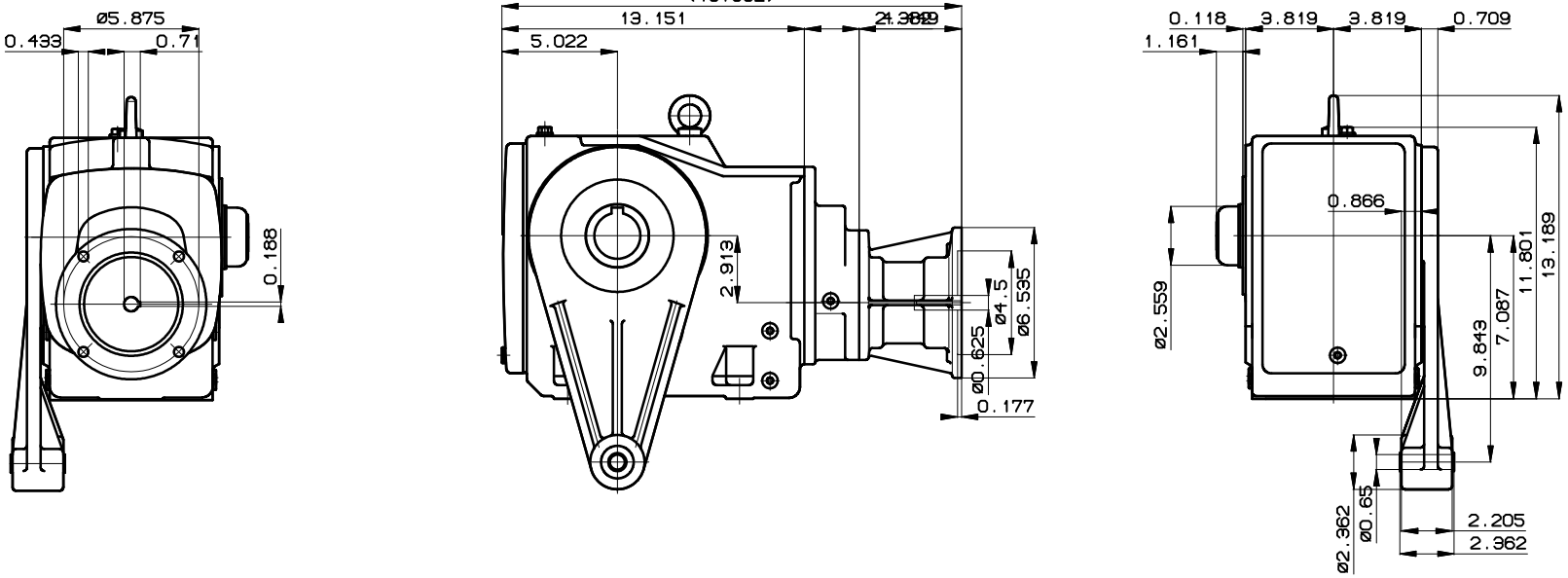

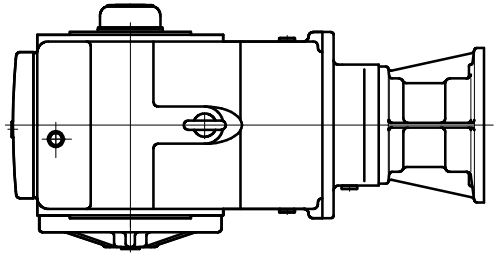

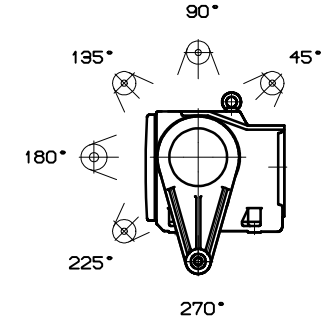

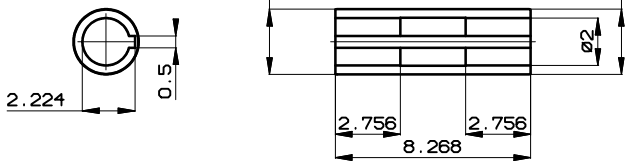

SK 9033.1 AZBD 56C

NORD

Nord Internet: http://www.nord.com

NORD DRIVESYSTEMS

	Date	Name
Drawn	21/03/2019	singhj

Technical changes reserved!
This drawing is created with NORDCAD 9.1.0 s

HIGH PERFORMANCE MOTORS
GEAR MOTORS

NORD DRIVESYSTEMS

60 HERTZ LINE FREQUENCY - SF 1:15

230V - 3 phase : 0.16 to 40 hp
460V - 3 phase : 0.16 to 250 hp
575V - 3 phase : 0.16 to 250 hp

OPTIONS

115/230V - 1 phase : 0.16 to 2 hp
208V - 3 phase : 0.16 to 10 hp

50 HERTZ LINE FREQUENCY

230/400V - 3 phase : 0.12 to 2.2 kW
400/690V - 3 phase : 3 to 200 kW

OPTIONS

230V - 1 phase : 0.09 to 1.5 kW



Motor Power		Full Load Speed	Integral Model Number	Mounting Options					Full Load Current			Starting Torque	Break-down Torque
				NEMA T-Frame	NEMA C-Face	IEC Footed B3 Style	IEC Flanged B3 Style	IEC Flanged B14 Style	230V	460V	575V		
[hp]	[kW]	[rpm]							[A]	[A]	[A]	[%]	[%]
0.16	0.12	1700	63S/4	56T	56C	63S-B3	63S-B5	63S-B14	0.88	0.44	0.37	210	220
0.25	0.18	1680	63L/4	56T	56C	63L-B3	63L-B5	63L-B14	1.12	0.56	0.46	210	220
0.33	0.25	1710	71S/4	56T	56C	71S-B3	71S-B5	71S-B14	1.56	0.78	0.66	250	240
0.50	0.37	1720	71L/4	56T	56C	71L-B3	71L-B5	71L-B14	1.90	0.95	0.80	245	260
0.75	0.55	1710	80S/4	56T	56C	80S-B3	80S-B5	80S-B14	2.70	1.35	1.12	220	220
1	0.75	1650	80L/4	56T	56C	80L-B3	80L-B5	80L-B14	3.66	1.83	1.46	220	230
1.5	1.1	1660	90S/4	56T, 143T	56C, 143TC	90S-B3	90S-B5	90S-B14	4.84	2.42	1.94	270	260
2	1.5	1660	90L/4	145T	145TC	90L-B3	90L-B5	90L-B14	6.34	3.17	2.54	255	250
3	2.2	1705	100L/4	182T	182TC	100L-B3	100L-B5	100L-B14	9.00	4.50	3.60	230	260
5	3.7	1725	100L/40	184T	184TC	100La-B3	100La-B5	100La-B14	15.2	7.62	6.10	270	310
7.5	5.5	1735	132S/4	213T	213TC	132S-B3	132S-B5	132S-B14	19.8	9.90	7.92	245	275
10	7.5	1735	132M/4	215T	215TC	132M-B3	132M-B5	132M-B14	26	12.9	10.3	290	320
15	11	1770	160M/4	254T	254TC	160M-B3	160M-B5	-	38	19.2	-	245	300
20	15	1765	160L/4	256TC	256TC	160L-B3	160L-B5	-	49	25	-	290	330
25	18.5	1750	180MX/4	-	-	-	-	-	60	30	-	295	340
30	22	1755	180LX/4	-	-	-	-	-	71	36	-	340	370
40	30	1780	200L/4	-	-	-	-	-	96	48	-	290	260
50	37	1765	225S/4	-	-	-	-	-	-	58	-	310	350
60	45	1770	225M/4	-	-	-	-	-	-	70	-	310	260
75	55	1782	250M/4	-	-	-	-	-	-	89	-	280	320
100	75	1788	280S/4	-	-	-	-	-	-	118	-	290	350
125	90	1786	280M/4	-	-	-	-	-	-	144	-	280	330
150	110	1788	315S/4	-	-	-	-	-	-	176	-	280	310
175	132	1790	315M/4	-	-	-	-	-	-	200	-	300	340
200	150	1790	315Ma/4	-	-	-	-	-	-	230	-	320	360
250	187	1790	315L/4	-	-	-	-	-	-	280	-	320	330

HIGH PERFORMANCE MOTORS



INVERTER DUTY

- Motors conform with NEMA MG-1-2006 Section 31.4.4.2
- Speed range 5:1 constant torque from 60Hz to 12Hz
- Speed range 20:1 constant torque from 80Hz to 4Hz

INVERTER DUTY OPTIONS

- 10:1 Speed range: constant torque from 60Hz to 6Hz
- 1000:1 Speed range: constant torque from 60Hz to 0Hz
- Blower cooling fans
- Incremental encoder
- Class H magnet wire insulation



INTERNATIONAL CERTIFICATIONS

- Underwriters Laboratories Recognized component :
- Canadian Standards Association approved for most installations in Canada :
- CSA approved according to both US and Canadian standards :
- European Union (EU) member states approved according to Low Voltage Directive : CE



MOUNTING STYLES

- Integral motor with speed reducer
- NEMA C-face flange
- DIN B5, IEC FF metric face flange mount
- DIN B14, IEC metric face flange mount
- DIN B3, IEC metric foot mount



ENVIRONMENTAL PROTECTION

- IP55 enclosure protection
- Totally Enclosed Fan Cooled (TEFC)
- Tropical protection

ENVIRONMENTAL OPTIONS

NSD+ severe duty protection, Encapsulated windings for IEEE45 Marine Duty, IP66 enclosure, End bell drain holes, Drip cover (RD), Wind protected double drip cover (RDD), Space heater (SH), Additional epoxy coating on inside surface of motor



MULTIPLE SPEED OPTIONS

- 1800/3600 rpm - 4 pole and 2 pole windings
- 900/3600 rpm - 8 pole and 2 pole windings



STANDARD CONSTRUCTION FEATURES

- Corrosion resistant aluminum alloy housing
- Double coated magnet wire insulation
- Insulation lined slots
- First turn winding protection
- Varnish dipped stator
- Shaft lip seals both end bells
- Inorganic insulation for tropical protection
- Sealed stator to end bell connections
- Cast metal terminal box
- Gasket sealed terminal box
- Non sparking low inertia fan
- Dynamically balanced rotor
- Anti-corrosion coated rotor
- Bearing grease resists water
- Terminal block power connector
- Reversible rotation direction
- Four conduit box locations
- Four cable entry locations
- Threaded cable entry







THERMAL WINDING PROTECTION OPTIONS

- Thermostat sensor (TW)
- Thermistor sensors (TF)



POWER OFF BRAKE

- Ready to go…wired by factory
- Manual hand release lever included
- Downward adjustable torque is included, specification is required
- AC to DC voltage rectifier is included
- IP55 enclosure protection is included

POWER OFF BRAKE OPTIONS

NSD+ severe duty protection, Corrosion protection (RG), Dust protection (SR), Lockable hand release lever (FHL), Oversize brake, Undersize brake, Inverter duty modifications, Faster torque release enhancement, Faster torque stopping enhancement, Current sensing relay for automatic control(IR) Heating circuit (BSH), Micro switch wear indicator, IP 66 enclosure



OTHER OPTIONS

- Over-running clutch (FK)
- Anti-rotation backstop (RLS)
- Extended motor shaft beyond fan cover (WE)
- High inertia metal fan for soft start (Z)
- Quick power disconnect plug (MS1)

DRIVESYSTEMS

www.nord.com

NORD Gear Corporation
National Customer Service Toll-Free: 888.314.6673
info.us@nord.com

NORD Gear Limited
Toll-Free in Canada: 800.668.4378
info.ca@nord.com

WEST
Corona, CA (Los Angeles)
Phone: 608.849.0190

MIDWEST
Waunakee, WI (Madison)
Phone: 608.849.7300

EAST
Charlotte, NC
Phone: 608.849.0140

CANADA
Brampton, ON (Toronto)
Phone: 905.796.3606

100200015/1011

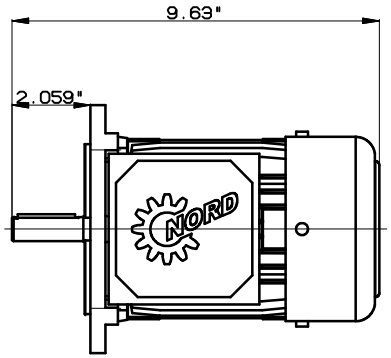

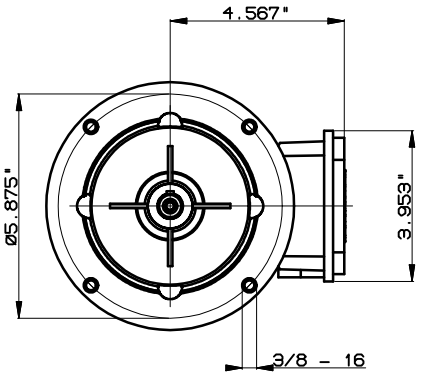

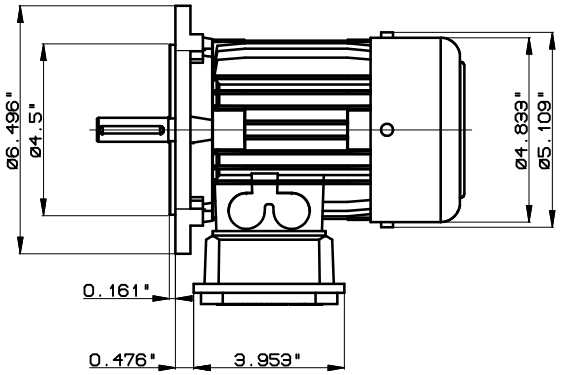

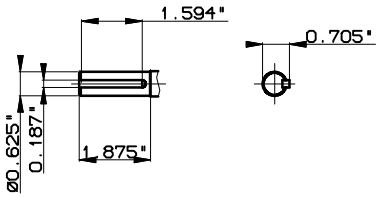

NEMA B14 63 L

KK1/1

NORD

Nord Internet: http://www.nord.com

DRIVESYSTEMS

	Date	Name
Drawn	21/03/19	singhj

Technical changes reserved!
This drawing is created with NORDCAD 9.1.0 s

emotron®

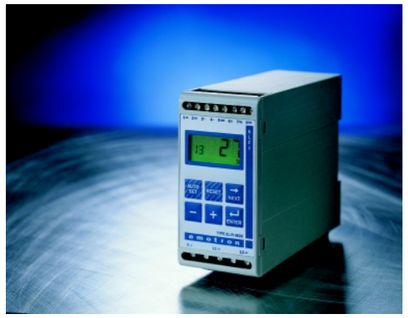

EL-FI® M20

SHAFT POWER MONITOR

INSTRUCTION MANUAL

Motor shaft output power measurement

1 INSIDE THE BOX ...

This instruction manual describes the installation and commissioning of the M20 load monitor. The M20 supervises induction motor driven equipment and provides alarms when abnormal conditions are detected. The M20's ability to provide reliable monitoring & protection ensures production equipment is optimised and expensive breakdowns and interruptions are minimized. Due to the special method of subtracting motor power losses, the monitor is able to accurately measure the shaft power supplied by the motor to the application. This advanced technique allows the M20 to monitor the "application" load only as opposed to the "total" motor load, which includes the varying motor losses.

- Check the delivery. Your shipment should contain the M20 load monitor, a current transformer and this instruction manual.
- Check carefully that the ordered equipment complies with the motors input voltage and that the current transformer rating is as stated on the delivery packaging.
- Check that the contents have not been damaged in shipping.

Note!
If in doubt contact your supplier before starting to install or commissioning the product.

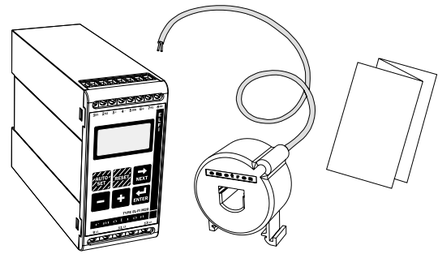

2 SAFETY

- Study this manual thoroughly before installing and using the monitor.
- The monitor must be installed by qualified personal.
- Always disconnect supply circuits prior to installing.
- The installation must comply with standard and local regulations.
- Pay special attention to this SAFETY section and the part marked "CAUTION!" in the OPERATION section.
- Should questions or uncertainties arise, please contact your local sales outlet or see section 11 SERVICE.

Note!
Do not remove or break the seal on the housing. The warranty will be cancelled.

3 WIRING

This wiring example shows how the M20 can be used to control the starting and stopping circuit of the motor. Other wiring configurations are possible.

1. The current transformer CTMxxx must be placed in the same phase that is connected to terminal 9, phase L1.
2. For single-phase connection see fig 2.

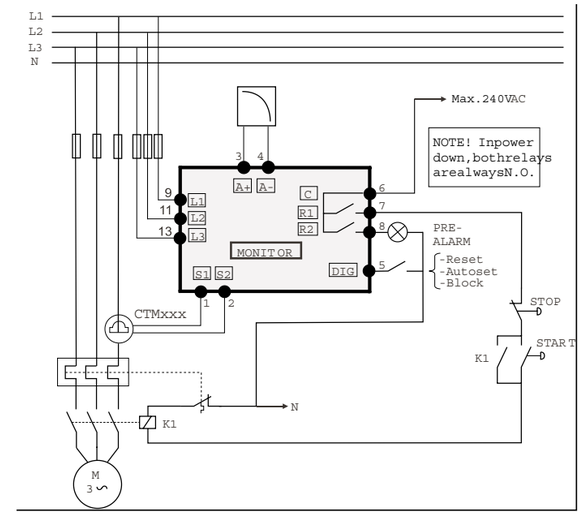

Fig 1. Connection example

Note!
If the START/STOP is connected according to fig. 1, it is recommended that terminals 6 and 7 be by-passed during programming. After the programming is completed the by-pass must be taken out.

3 Continue

ALTERNATIVE EXAMPLE FOR SINGLE-PHASE CONNECTION

This wiring example shows the deviant power connection to be made with regard to a single-phase connection. Refer to fig. 1 for the remaining wiring.

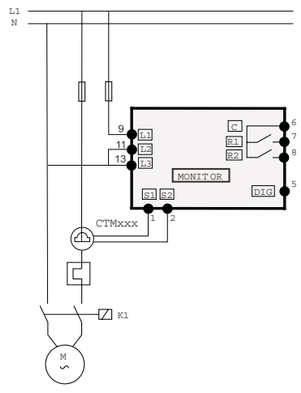

Fig 2. Single-phase connection example.

EXAMPLE - DIGITAL INPUT

The Digital Input use the terminals 5 (DIG) and 6 (C-reference). It can have either a VAC or a VDC signal. See also section 7 ADVANCED FEATURES.

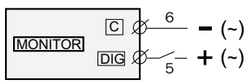

Fig 3. Wiring example for digital input.

4 SELECTION CURRENT TRANSFORMER

FOR MOTORS LESS THAN 100A

1. Check the rated motor current on the motor plate.
2. Compare this value with the current in table 1.
3. From table 1, select the current transformer and the appropriate numbers of windings.

Note!
Max length of the CTM cable is 1 m (39.37 in).

EXAMPLE:

- Rated motor current = 12A.
- Select 10.1-12.5A from the first colon in table 1.
- This gives:
  - CTM025 with 2 windings.

RATED MOTOR CURRENT [A]	CURRENT TRANSFORMER TYPE NUMBER OF WINDINGS			
	CTM 010	CTM 025	CTM 050	CTM 100
0.4 – 1.0	10			
1.01 – 2.0	5			
2.01 – 3.0	3			
3.1 – 5.0	2			
5.1 – 10.0	1			
10.1 – 12.5		2		
12.6 –25.0		1		
26.0 – 50.0			1	
51.0 – 100.0				1

Table 1. CT less than 100A.

Note!
Normally the appropriate Current Transformer (CT) will have been ordered and shipped with the M20, check that this is the case; contact the supplier if in doubt.

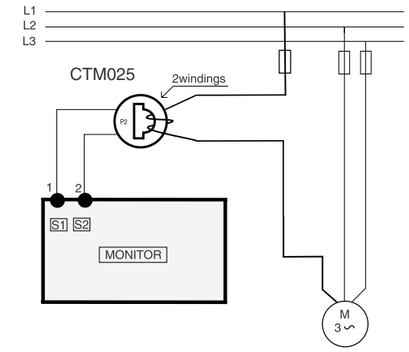

Fig 4. Example CTM 025 with 2 windings for an 12 A motor.

Note!
The transformer connection and orientation are not polarity sensitive.

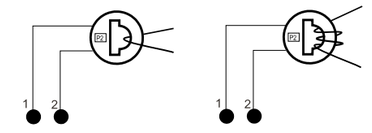

Fig 5. Example 1 and 3 windings.

Protected by utility patent SE 9703952-3
International utility patent application pending WO 9925049

01-2551-01 r1

Emotron AB
Mörsaregatan 12
Box 222 25
SE-250 24 Helsingborg
Sweden
Tel.: +46 42 169900
Fax: +46 42 169949
www.emotron.com

6:4 Monitor Function (Window 05)

Monitor (Protection)	Indication in window 05	Alarm	Output Relay (default)
OVER- and UNDER-LOAD (default)	—	MAX Main-Alarm	Relay 1 (NC): 6-7
	—	MAX Pre-Alarm	Relay 2 (NO): 6-8
		MIN Pre-Alarm	Relay 2 (NO): 6-8
		MIN Main-Alarm	Relay 1 (NC): 6-7
OVERLOAD	—	MAX Main-Alarm	Relay 1 (NC): 6-7
		MAX Pre-Alarm	Relay 2 (NO): 6-8
UNDERLOAD		MIN Pre-Alarm	Relay 2 (NO): 6-8
	—	MIN Main-Alarm	Relay 1 (NC): 6-7

Over- and underload monitor

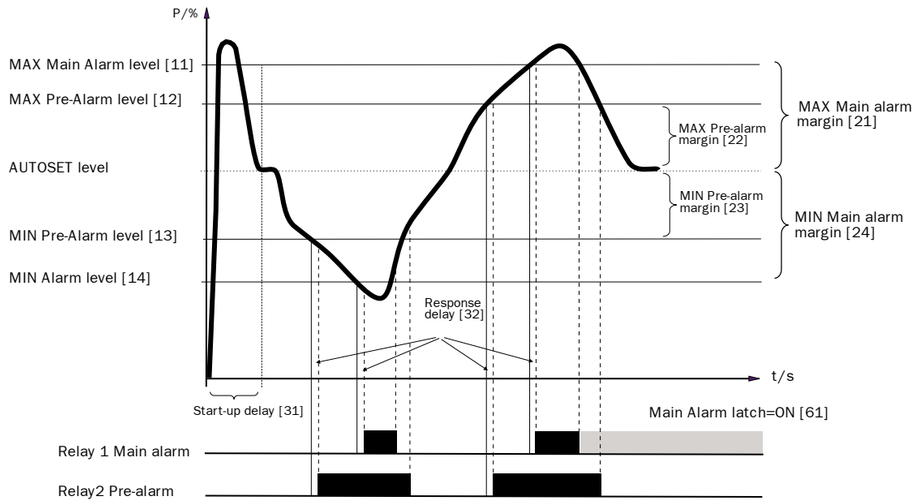

Fig 7. Over- and underload monitor

Programming

1. Go to window 05. The default selection is OVER- and UNDER-LOAD monitor.
2. Press − or + to select UNDERLOAD or OVERLOAD monitor.



OVER- and UNDERLOAD UNDERLOAD OVERLOAD

3. Press ↵ ENTER to confirm the change.

6:5 Set the START DELAY (window 31)

A START DELAY must be set to allow the motor and machine to speed up and to allow the power in-rush currents to be ignored by the monitor.

Programming

1. Determine in seconds, how long it takes for the motor and machine to reach speed and for the power in-rush to pass. This will be the minimum START DELAY.
2. Go to window 31 (default = 2.0s).
3. Press − or + to set the determined START DELAY time in seconds.
4. Press ↵ ENTER to confirm the change.

Example: Start Delay 2.0 s



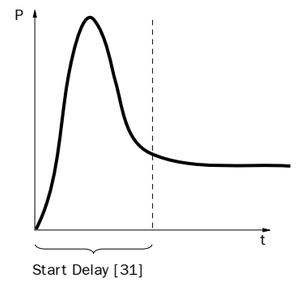

Fig 8. Start Delay

6:6 Set Alarm levels with AUTOSET

The AUTOSET command performs a measurement of the actual motor load and automatically sets the relevant Alarm levels depending on the selected monitor function.

Protection (Monitor function window 5)	Alarm	Margin Value (Default margins)	Margins (Windows)	Alarm Level at AUTOSET
OVER- and UNDERLOAD (Default)	MAX Main-Alarm	16%	21: MAX Main Alarm margin	Normal machine load+Window 21
	MAX Pre-Alarm	8%	22: MAX Pre-Alarm margin	Normal machine load+Window 22
	MIN Pre-Alarm	8%	23: MIN Pre-Alarm margin	Normal machine load-Window 23
	MIN Main-Alarm	16%	24: MIN Main Alarm margin	Normal machine load-Window 24
OVERLOAD	MAX Main-Alarm	16%	21: MAX Main Alarm margin	Normal machine load+Window 21
	MAX Pre-Alarm	8%	22: MAX Pre-Alarm margin	Normal machine load+Window 22
UNDERLOAD	MIN Pre-Alarm	8%	23: MIN Pre-Alarm margin	Normal machine load-Window 23
	MIN Main-Alarm	16%	24: MIN Main Alarm margin	Normal machine load-Window 24

Programming

1. Start the motor and let it run at the normal machine load, until the START DELAY has expired.
2. Press AUTO SET for 3 seconds. This can be done in any window.
3. The display shows "SEt", to confirm that the AUTOSET level has been measured and the Alarm levels have been set. The display reverts to window 01.

3 seconds



4. If the alarm levels are too high or too low, readjust the appropriate MARGINS (see table above) and perform a new AUTOSET. Alternatively, alarm levels can be set manually - see section 7.

6:7 Set the RESPONSE DELAY (Window 32)

A RESPONSE DELAY allows the machine to remain in an over- or underload condition for a specific time before the alarm relays are activated.

Programming

1. Determine in seconds, how long an under- or overload condition is allowed. This depends on machine properties and behavior. This will be the RESPONSE DELAY.
2. Go to window 32 (default = 0.5s).
3. Press − or + to set the determined RESPONSE DELAY time in seconds.
4. Press ↵ ENTER to confirm the change.

Example: RESPONSE DELAY



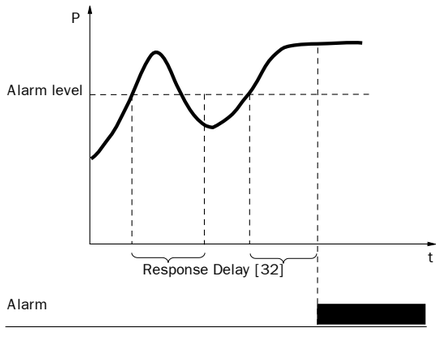

Fig 9. Response Delay

7 ADVANCED FEATURES

Set ALARM LEVELS manually (Window 11-14)

The alarm levels can be set manually, without using the AUTOSET. Also after an AUTOSET has been performed, these levels can be readjusted e.g. for fine-tuning.

Protection (Monitor function window 05)	Alarm levels (Window)	Default
OVER- and UNDERLOAD (Default)	11: MAX Main Alarm	100%
	12: MAX Pre-Alarm	100%
	13: MIN Pre-Alarm	0%
	14: MIN Main Alarm	0%
OVERLOAD	11: MAX Main Alarm	100%
	12: MAX Pre-Alarm	100%
UNDERLOAD	13: MIN Pre-Alarm	0%
	14: MIN Main Alarm	0%

Set MARGINS (window 21-24)

The MARGINS for the AUTOSET can be changed manually. After the adjustment, the AUTOSET action must be performed once again to activated the new margins.

Protection (Monitor function window 05)	Window	Default
OVER- and UNDERLOAD (Default)	21: MAX Main Alarm margin	16%
	22: MAX Pre-Alarm margin	8%
	23: MIN Pre-Alarm margin	8%
	24: MIN Main Alarm margin	16%
OVERLOAD	21: MAX Main Alarm margin	16%
	22: MAX Pre-Alarm margin	8%
UNDERLOAD	23: MIN Pre-Alarm margin	8%
	24: MIN Main Alarm margin	16%

Set HYSTERESIS (Window 33)

The HYSTERESIS of an Alarm level prevents the alarm relay "chattering" if the load fluctuates even in a normal "stable" condition . Apply also for pre-alarm. This feature is normally only used if the "Main Alarm Latch" (Window 61) is set to "OFF". Default = 0%.

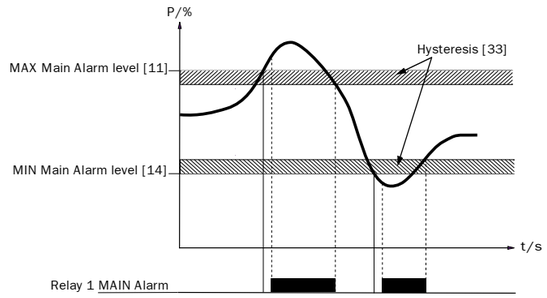

Fig. 10 Hysteresis

Set MAIN ALARM LATCH (Window 61)

The MAIN ALARM LATCH keeps the MAIN ALARM output active, even if the alarm condition has been removed (relay R1). A latched alarm output can be reset by:

- the reset key
- external reset via Digital input (see window 81).
- switching of the power of the monitor (see also "Wiring").

Default = OFF.

Set ALARM AT NO MOTOR CURRENT (Window 62)

The "ALARM AT NO MOTOR CURRENT" gives an alarm if the motor current becomes zero (ON). Default = OFF (No alarm at no motor current).

Set RELAY OUTPUTS (Window 63 and 64)

The RELAY OUTPUTs R1 and R2 can be set to NO or NC contacts.

Note!
If the power to the load monitor is switched off the relay contacts are allways in the NO.

Set DIGITAL INPUT (window 81)

The DIGITAL INPUT can be set for:

RES: External RESET (Default)	to reset an Alarm.
AU: External AUTOSET	to perform an AUTOSET with an external command.
bLo: Block Pre-Alarm	to block the Pre-Alarm function and start the Block timer. If the input is high a Pre-Alarm is blocked, e.g. it is neglected. See also window 82.

Set BLOCK TIMER (window 82)

To set the timer for the blocking time after the Block command is released (see also window 81). Default = 0.0 sec.

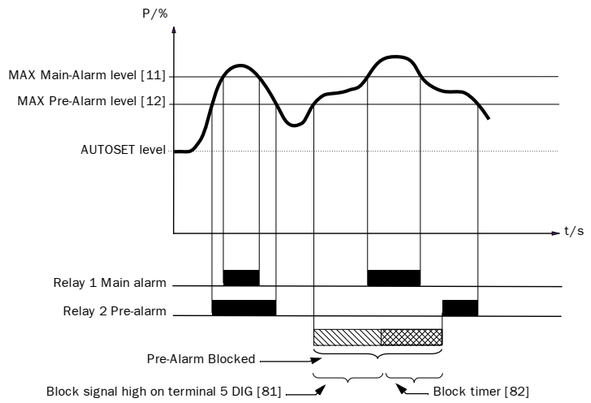

Fig 11. Block timer

Projet	IQALUIT
Projet#:	5000218036
Document #:	5000218036_DS_0001_PM_VWT
Par:	FV
Verif.:	GP
approb.:	CB

SPIDFLOW

WHITE WATER PUMP(S)

Section Manuel OM: 4.3.1.3

CS-912-003 : Identification sheet

VWTC PROJECT NUMBER:	Iqaluit WWTP	REV:	02
PROJECT NAME:	5000218036	SUBMITTED TO (COMPANY):	
ENGINEER:	F.VINCI	SUBMITTED TO (RESPONSIBLE)	
PROJECT MANAGER:	C. BEKAERT	PROJECT NUM REFERENCE.:	
PHONE NUMBER:		LOT NUMBER:	

SUPPLIER	EQPT CODE	EQPT TAG NO	DIA	DESCRIPTION	INFO 1	INFO 2	INFO 3	APPLIC.	NOTE	REV
SHANLEY PUMP & EQUIPMENT	ST-912-003	P-02-410		WHITE WATER PUMPS	EDUR WHITE WATER PUMP // MODEL : LBUX 602C 160L // Q = 20 M3/H @ 7.4 BAR // DIN FLANGES // INLET DN80 PN16 X OUTLET DN65 PN40 // CAST IRON BODY WITH SS INTERNAL COMPONENT	WEG PREMIUM EFFICIENCY W22, 20 HP MOTOR, 575V, 3PH, 60 HZ // TEFC, 2 POLES, 3500 RPM, 256TC // 1,25 SF // CLASS1 DIV2 // MODEL # 02036ET3H256TC-W22 // CW AIR FLOWMETER GF 8431-2125				2
SHANLEY PUMP & EQUIPMENT	ST-912-003	P-02-420		WHITE WATER PUMPS	EDUR WHITE WATER PUMP // MODEL : LBUX 602C 160L // Q = 20 M3/H @ 7.4 BAR // DIN FLANGES // INLET DN80 PN16 X OUTLET DN65 PN40 // CAST IRON BODY WITH SS INTERNAL COMPONENT	WEG PREMIUM EFFICIENCY W22, 20 HP MOTOR, 575V, 3PH, 60 HZ // TEFC, 2 POLES, 3500 RPM, 256TC // 1,25 SF // CLASS1 DIV2 // MODEL # 02036ET3H256TC-W22 // CW AIR FLOWMETER GF 8431-2125				2
SHANLEY PUMP & EQUIPMENT	ST-912-003	P-02-430		WHITE WATER PUMPS	EDUR WHITE WATER PUMP // MODEL : LBUX 602C 160L // Q = 20 M3/H @ 7.4 BAR // DIN FLANGES // INLET DN80 PN16 X OUTLET DN65 PN40 // CAST IRON BODY WITH SS INTERNAL COMPONENT	WEG PREMIUM EFFICIENCY W22, 20 HP MOTOR, 575V, 3PH, 60 HZ // TEFC, 2 POLES, 3500 RPM, 256TC // 1,25 SF // CLASS1 DIV2 // MODEL # 02036ET3H256TC-W22 // CW AIR FLOWMETER GF 8431-2125				2
SHANLEY PUMP & EQUIPMENT	ST-912-003	P-02-440		WHITE WATER PUMPS	EDUR WHITE WATER PUMP // MODEL : LBUX 602C 160L // Q = 20 M3/H @ 7.4 BAR // DIN FLANGES // INLET DN80 PN16 X OUTLET DN65 PN40 // CAST IRON BODY WITH SS INTERNAL COMPONENT	WEG PREMIUM EFFICIENCY W22, 20 HP MOTOR, 575V, 3PH, 60 HZ // TEFC, 2 POLES, 3500 RPM, 256TC // 1,25 SF // CLASS1 DIV2 // MODEL # 02036ET3H256TC-W22 // CW AIR FLOWMETER GF 8431-2125				2

SUPPLIER	EQPT CODE	EQPT TAG NO	DIA	DESCRIPTION	INFO 1	INFO 2	INFO 3	APPLIC.	NOTE	REV
SHANLEY PUMP & EQUIPMENT	ST-912-003	P-02-450		WHITE WATER PUMPS	EDUR WHITE WATER PUMP // MODEL : LBUX 602C 160L // Q = 20 M3/H @ 7.4 BAR // DIN FLANGES // INLET DN80 PN16 X OUTLET DN65 PN40 // CAST IRON BODY WITH SS INTERNAL COMPONENT	WEG PREMIUM EFFICIENCY W22, 20 HP MOTOR, 575V, 3PH, 60 HZ // TEFC, 2 POLES, 3500 RPM, 256TC // 1,25 SF // CLASS1 DIV2 // MODEL # 02036ET3H256TC-W22 // CW AIR FLOWMETER GF 8431-2125				2
SHANLEY PUMP & EQUIPMENT	ST-912-003	P-02-460		WHITE WATER PUMPS	EDUR WHITE WATER PUMP // MODEL : LBUX 602C 160L // Q = 20 M3/H @ 7.4 BAR // DIN FLANGES // INLET DN80 PN16 X OUTLET DN65 PN40 // CAST IRON BODY WITH SS INTERNAL COMPONENT	WEG PREMIUM EFFICIENCY W22, 20 HP MOTOR, 575V, 3PH, 60 HZ // TEFC, 2 POLES, 3500 RPM, 256TC // 1,25 SF // CLASS1 DIV2 // MODEL # 02036ET3H256TC-W22 // CW AIR FLOWMETER GF 8431-2125				2

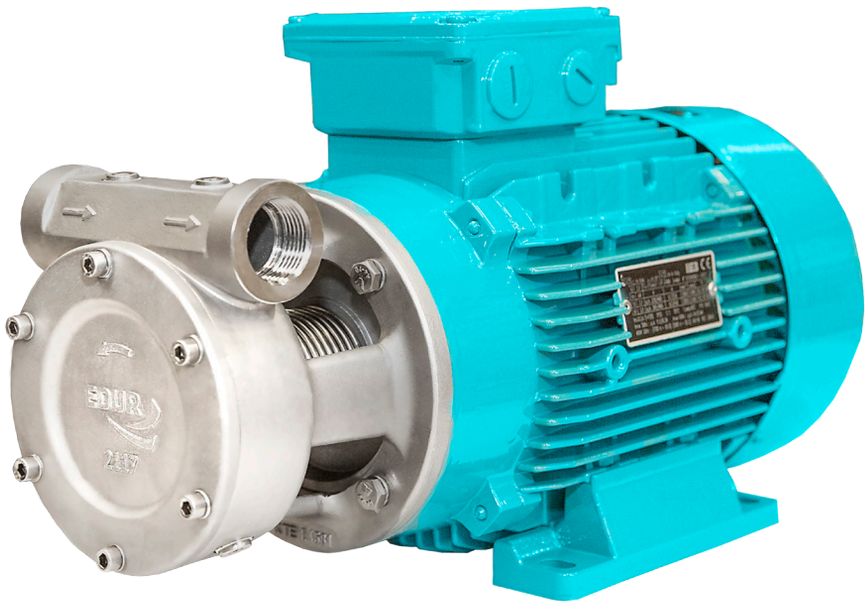

PBU

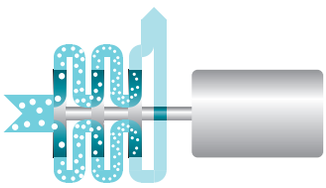

Multiphase
PBU LBU

Horizontal centrifugal pumps for the transport of liquid-gas mixtures and for the enrichment of liquids with gases. A dispersion with very fine bubbles is being achieved. Therefore the multiphase pumps are also acting as dynamic mixer with high shearing forces.

Some main applications are water and wastewater treatment, dissolved air flotation, neutralization, biofuel plants, bio-reactors, ozonation, crude oil water separation on oil fields and oil rigs as well as general process technology.

Other types:

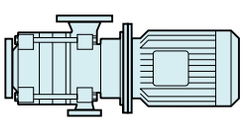

LBU

Advantages

- **High Energy-Efficiency**
  - optimal enrichment and mixing of liquids with gases
  - high degree of dispersion
  - low velocity of flow
  - optimized impeller approach flow
  - low internal friction losses
- **Technical Superiority**
  - open impellers without axial thrust
  - compensation of radial forces by means of diffuser
  - direct gas input acc. to VDMA 24430
- **Process Reliability**
  - gas contents up to 30 %
  - stable creation of micro bubbles
- **Easy Installation**
  - modular construction for customized solutions
  - bloc-design
- **Application**
  - operating pressure up to 40 bar
  - temperature -40° C to +140°C
  - viscosity up to 115 mm²/s



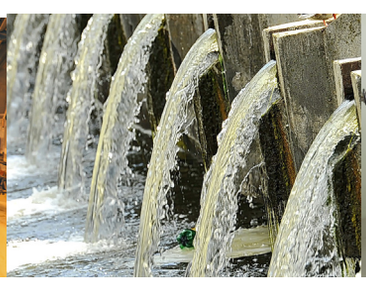




EDUR®

wastewater treatment

DAF dispersion flotation ozonation

micro bubbles

biological sewage works

Multiphase
PBU LBU

Characteristics

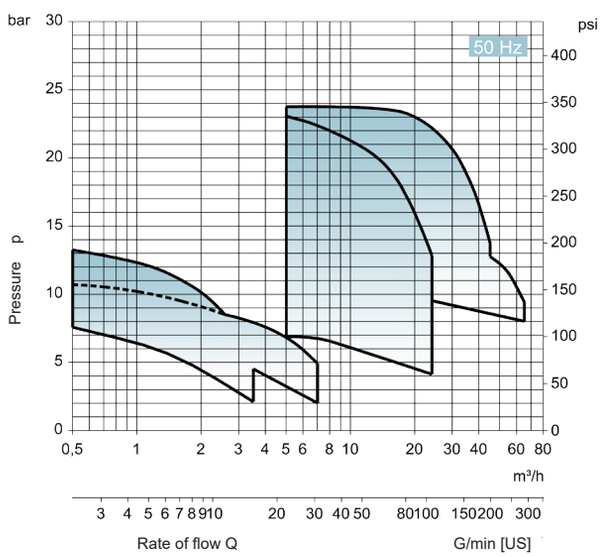

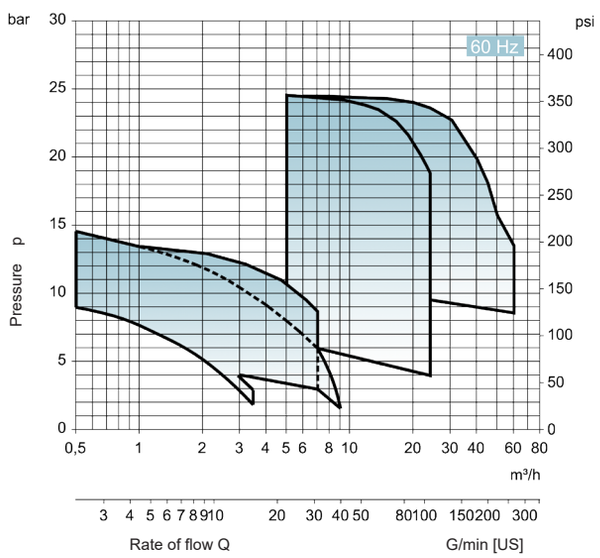

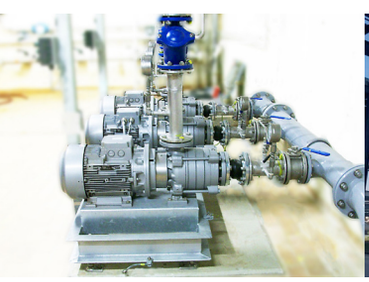







EDUR-Pumpenfabrik
Eduard Redlien GmbH & Co. KG
Edisonstraße 33
24145 Kiel – Germany

Tel. + 49 431 68 98 68
Fax + 49 431 68 98 800

www.edur.com
info@edur.de

Pump View and List of Spare Parts

LBU, LBKU

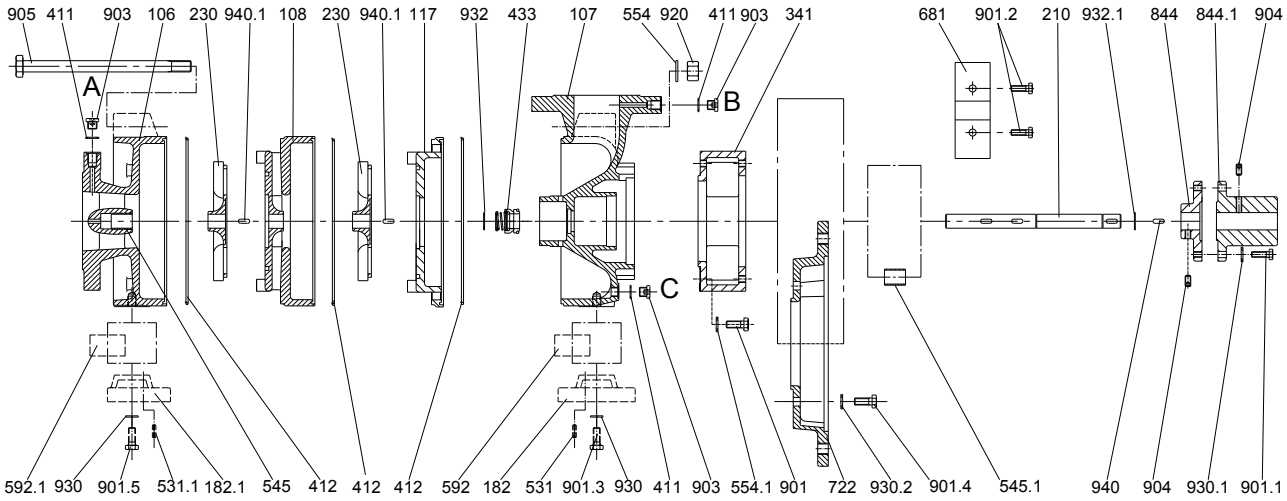

A: Screwed plug G1/4 for vent and pressure gauge connection
B: Screwed plug G1/4 for vent and pressure gauge connection
C: Screwed plug G1/4 for drain

VBU

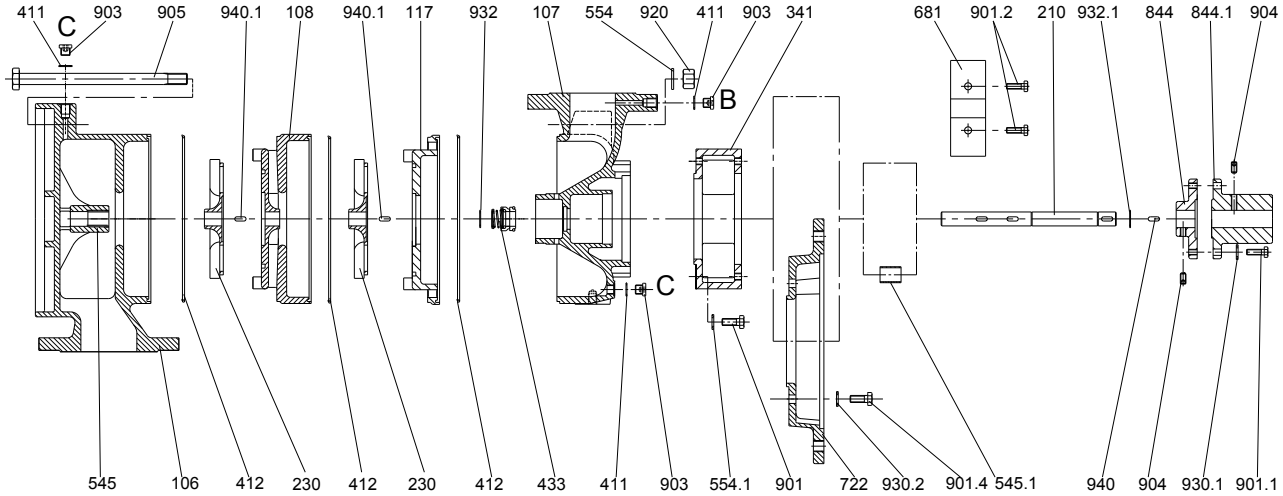

LBE/ VBE/ LBKE/ LBUX/ VBUX, delivery side

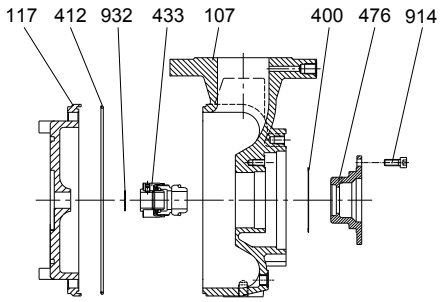

part no.	designation
106	suction casing
107	delivery casing
108	stage casing
117	end stage casing
182/.1	foot
210	shaft
230	impeller
341	lantern
400	gasket
411	joint ring
412	o-ring
433	mechanical seal
476	support to stationary element
531/.1	locking sleeve

part no.	designation
545/.1	bearing bush
554/.1	washer
592/.1	base (underlayer)
681	coupling guard
722	intermediate flange
844/.1	coupling half
901/.1-.5	hexagon screw
903	screwed plug
904	hexagon socket set screw
905	tie bolt
914	hexagon socket head cap screw
920	nut
930/.1-.2	tooth lock washer
932/.1	circlip
940/.1	key

When ordering spare parts, please indicate serial no., type no. and parts no.

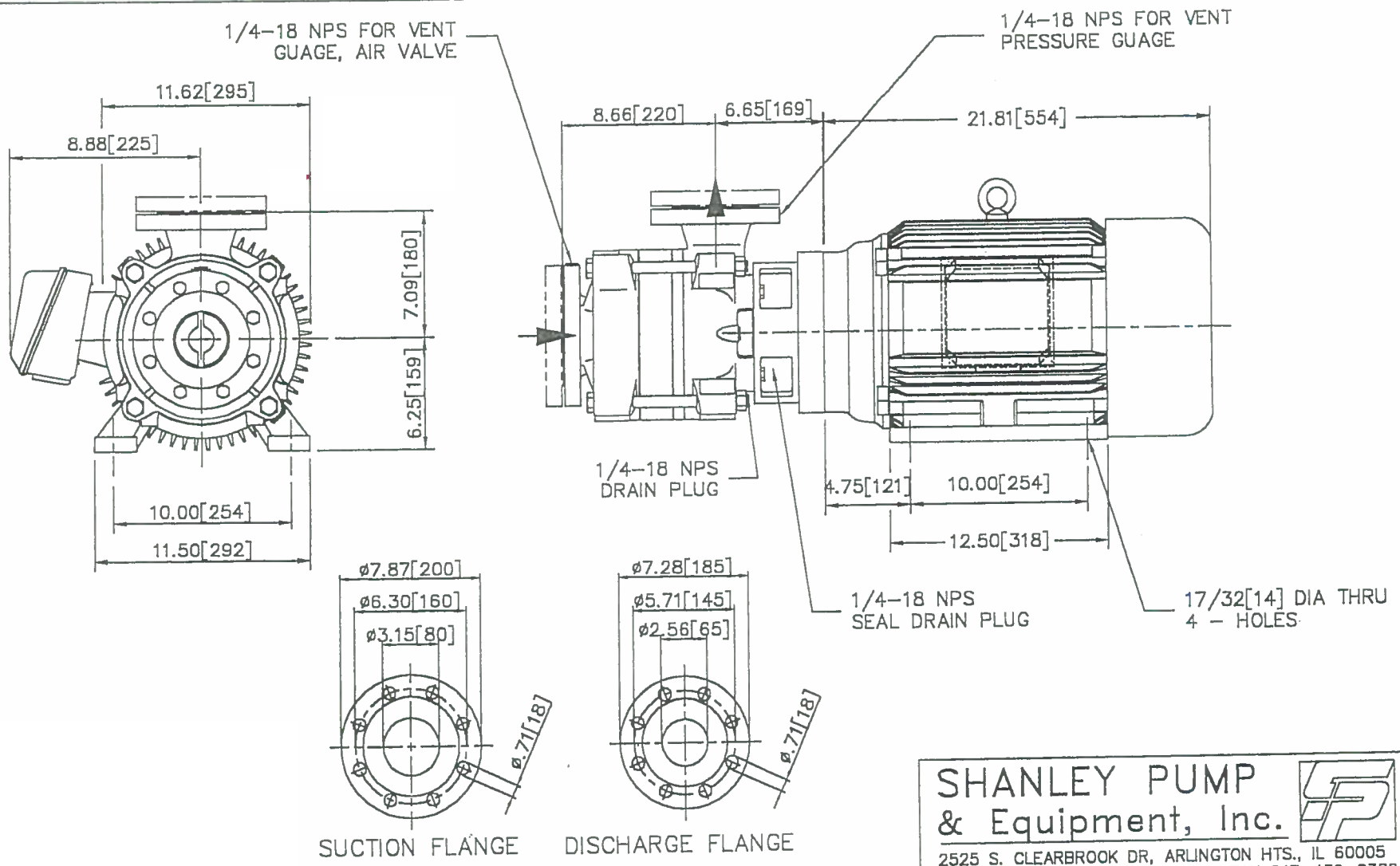

PUMP SPECIFICATIONS	
MODEL #:	LBUX602C160L
CASING:	NODULAR CAST IRON
IMPELLER:	STAINLESS STEEL
IMPELLER DIA:	160mm
INLET SIZE:	DN80 PN16 DIN 2533
OUTLET SIZE:	DN65 PN40 DIN 2535
NOMINAL FLOW:	100 GPM
NOMINAL AIR FLOW:	45 SLPM
FLOW RANGE @ 12% AIR:	25 TO 130 GPM

DRIVE SPECIFICATIONS
MOTOR MFG: BALDOR OR EQUAL
HP_RPM_VOLT: 20 HP_3600 RPM_3/60/230-460V
FRAME SIZE: 256TC
ENCLOSURE: TEFC
TOTAL PACKAGE WEIGHT: 369 LBS
COMMENTS:

SHANLEY PUMP & Equipment, Inc.

2525 S. CLEARBROOK DR, ARLINGTON HTS., IL 60005
PHONE 847-439-9200 FAX 847-439-9388

DRAWING NO. LBUX602C160La	
CUST.:	CUST. P.O.
SHANLEY JOB:	QUOTE NO.
DATE: 03-03-00	REVISED: 09-11-00
DIMENSIONS: INCHES[MilliMeters]	
DRAWN BY: JAM	CERTIFIED BY:

LBU602C160L / 12.6 kW

Kennlinien für Fördergut mit einer Dichte von 1 kg/dm³,Viskosität von 1mm/s², Temperatur von 20°C

Characteristic curves for pumped media with a density of 1 kg/dm³,viscosity 1mm/s²,temperature of 20°C

QH

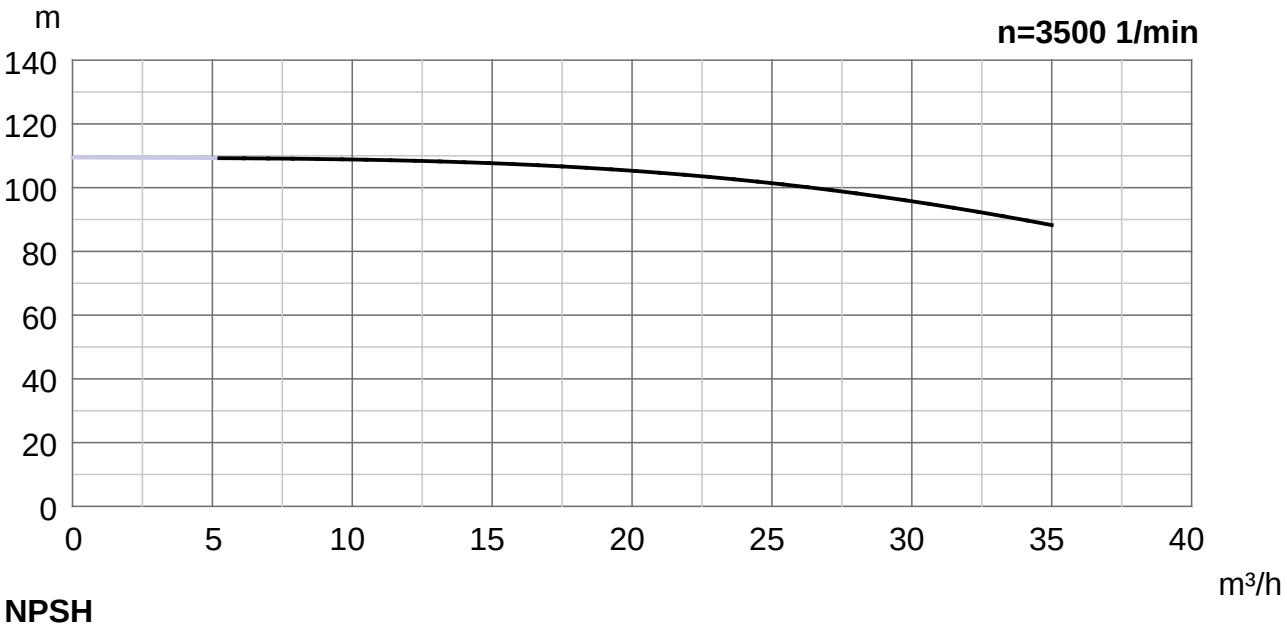

NPSH

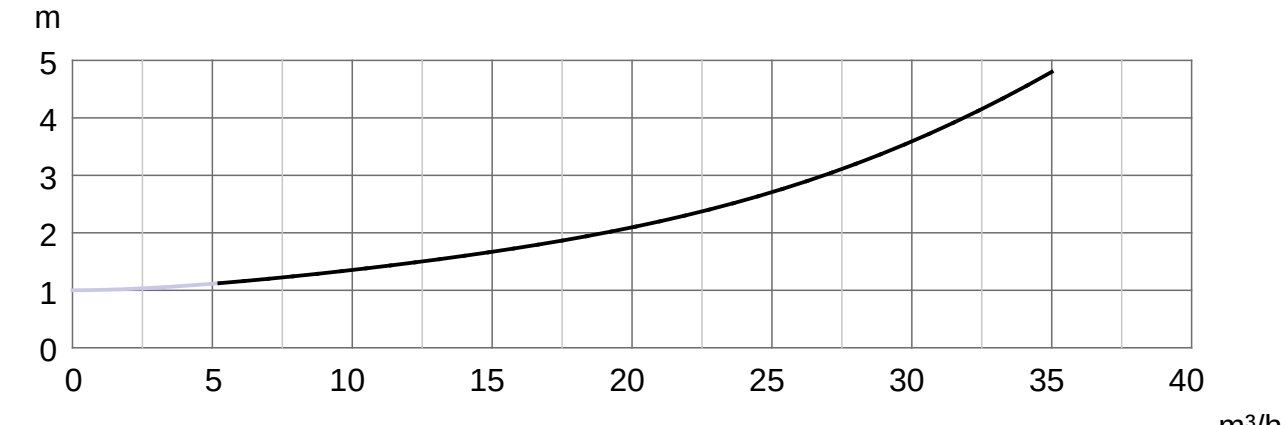

P

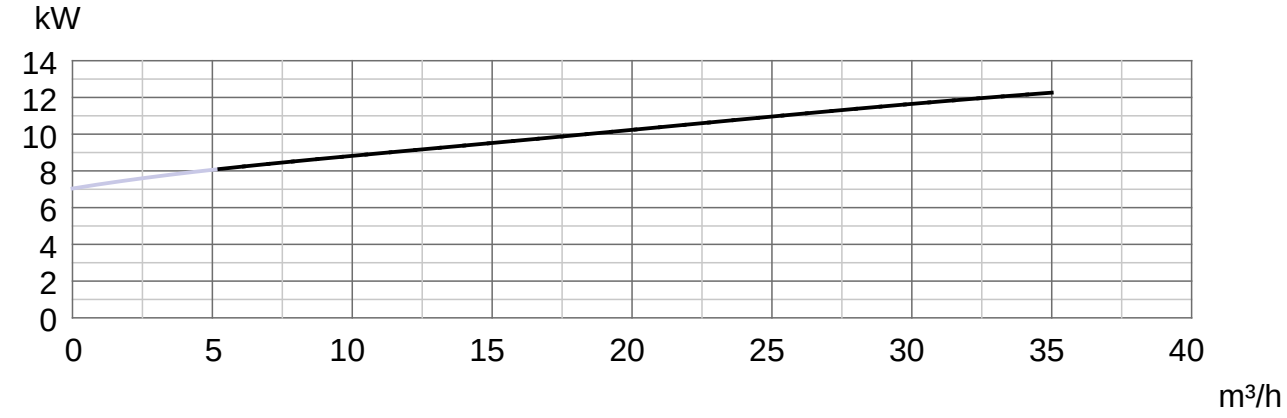

EDUR Pumpenfabrik Eduard Redlien GmbH & Co. KG • Edisonstrasse 33 • 24145 Kiel • Germany
Tel. +49(0)431/ 689868 • Fax +49(0)431/ 6898800 • Mail info@edur.de

LBU602C160L / 12.6 kW

Measurements (in mm) and Weight

Subject to technical alterations

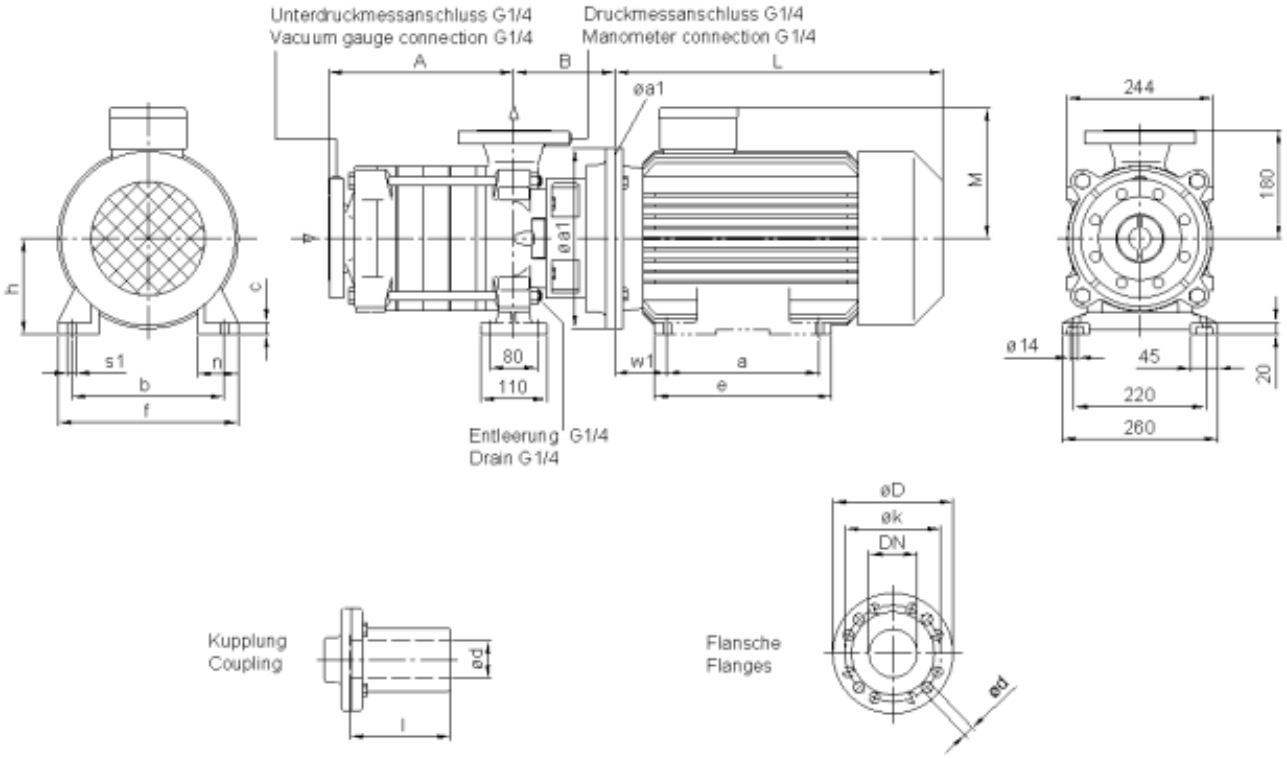

Motor		Pump		Flanges				Weight
L	517	A	220	DIN	EN 1092-2			162 kg
M	250	B	169	**Inlet branch**		**Outlet branch**		
		a	210	DNs	80	DNd	65	
		a1	300	PN	16	PN	40	
		b	254	D	200	D	185	
		c	22	k	160	k	145	
		d	42	d	19	d	19	
		e	260	**holes**	8	**holes**	8	
		f	320					
		h	160					
		l	112					
		n	69					
		s	15					
		w1	108					

EDUR Pumpenfabrik Eduard Redlien GmbH & Co. KG • Edisonstraße 33 • 24145 Kiel • Germany
Tel. +49(0)431/ 689868 • Fax +49(0)431/ 6898800 • Mail info@edur.de

V MEDIUM RANGE PTFE FLOW METERS

Incorporating traditional variable area precision glass technology, these rugged PTFE flow meters offer accurate and economical solutions to medium flow range measurements. **V meters** are designed with unique rotatable scales of dual air-water direct reading graduations showing SCFM and SLPM (air), as well as GPM and LPM (water) markings.

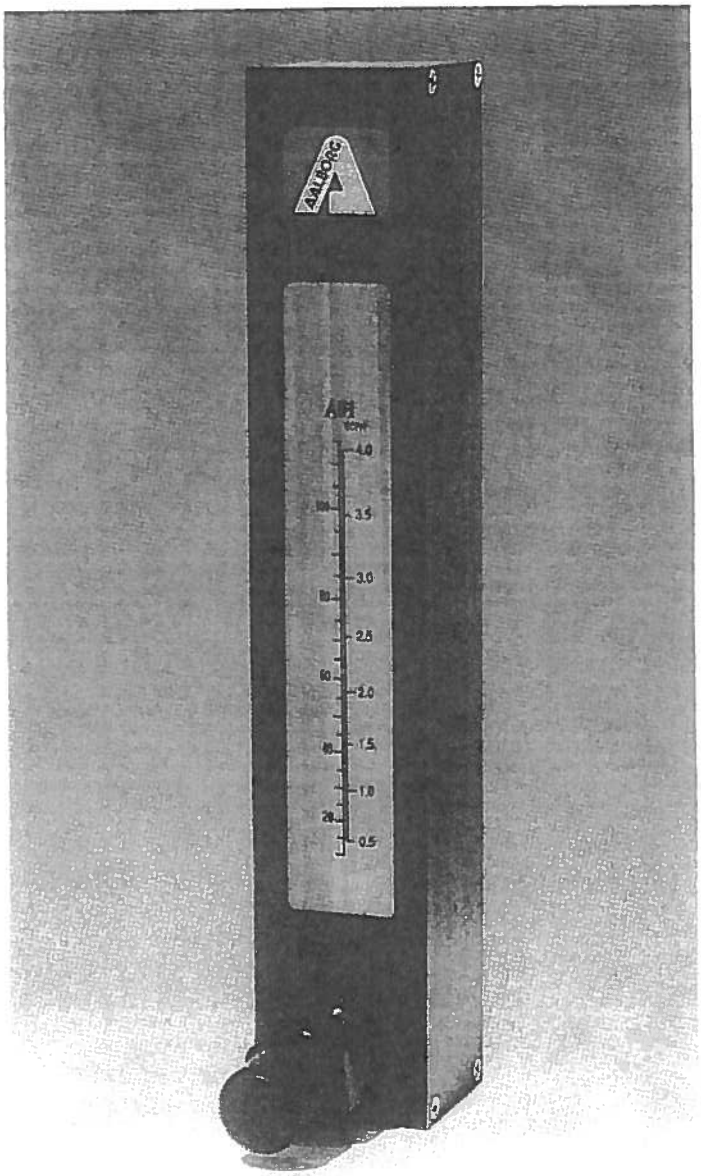

LEAK INTEGRITY

Flow meters are individually tested on a Mass Spectrometer Leak Detector and certified to a leak integrity rating of 1 X 10^{-7} sccs Helium or better.

SPECIFICATIONS	
SCALES	Rotatable, direct reading air, (SCFM-SLPM) and water (GPM-LPM). Scale length is 127mm (nominal).
ACCURACY	±5% of full scale.
MAXIMUM TEMPERATURE	150°F (65°C.)
MAXIMUM PRESSURE	100 psig (6.7) bars.
CONNECTIONS	3/8" NPT female in line or horizontal rear.
LEAK INTEGRITY	Individually leak tested and certified.

MATERIALS OF CONSTRUCTION	
TUBE SHIELDS	Polycarbonate.
FLOW TUBES	Heavy walled precision formed borosilicate glass.
FLOATS	PTFE.
WETTED PARTS	PTFE, PCTFE.
SEALS	PTFE.

DIMENSIONS (PANEL MOUNT MODEL)

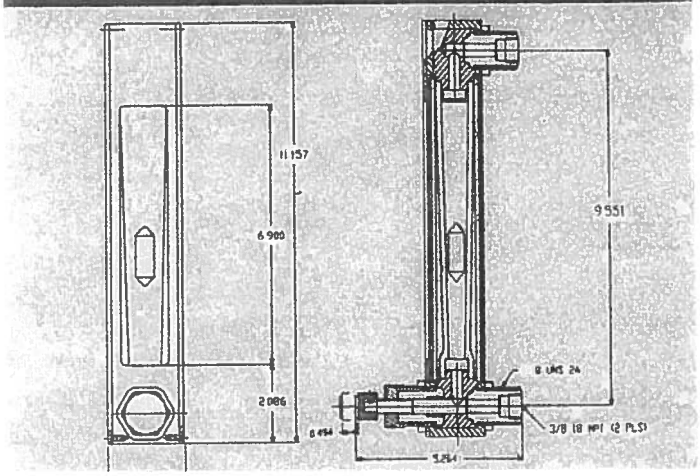

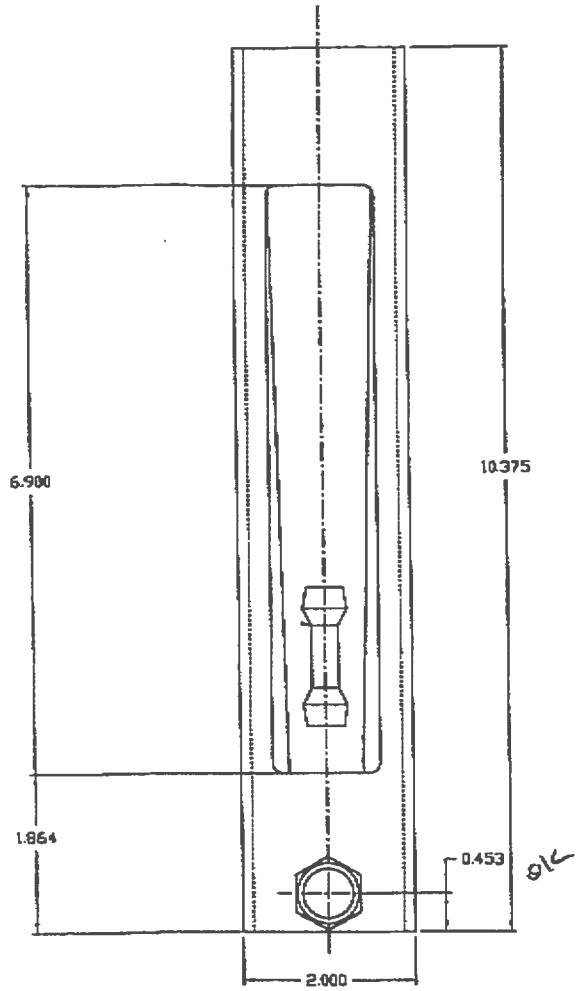

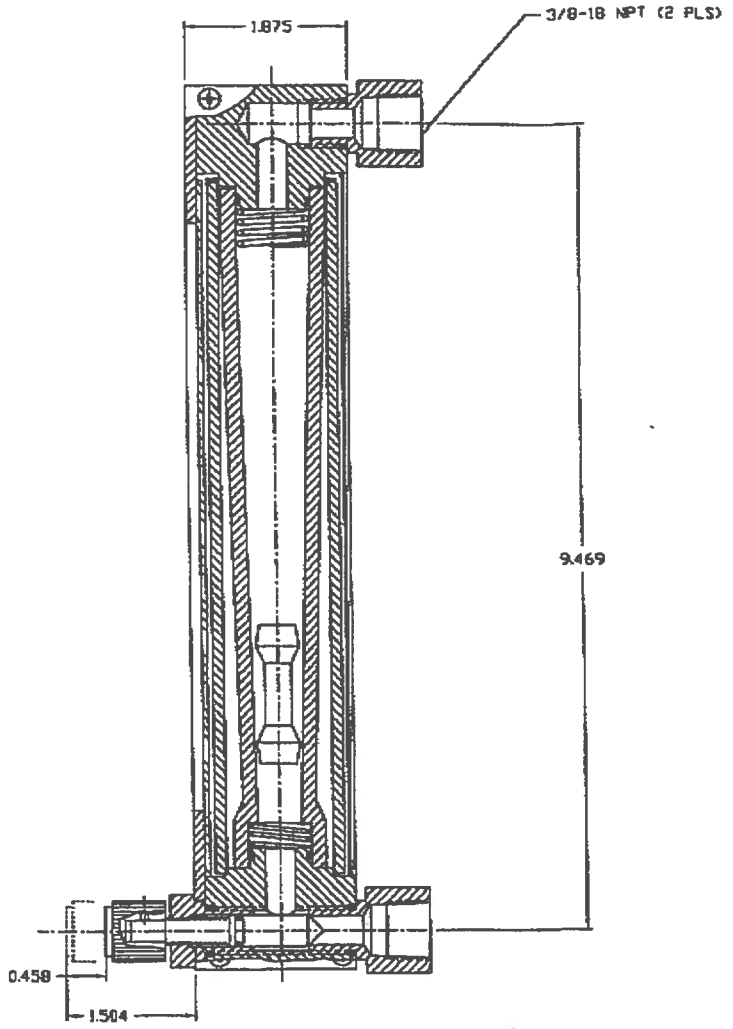

TOLERANCES (UNLESS OTHERWISE SPECIFIED) DECIMAL: ±0.005 IN FRACTION: ±1/64 IN ANGULAR: ±1/2°	AALBORG ORANGEBURG NEW YORK	
SCALE FULL / COMPUTER SYMBOL	TITLE: PANEL V FLOWMETER VALVE OPTION	
SUPERSEDES		
DRAWN / DATE		
CHECKED	DWG. D SIZE / DWG.NO.	REV.
APPROVED		

TOTAL P.01

FLOW METER INSTRUCTIONS

GENERAL INFORMATION

Inspect instrument for possible visible damage resulting from shipping. Notify UPS or other carrier as well as the distributor where the flow meter was purchased of any claims.

Flow meters always must be installed in a vertical position, any significant deviation from vertical will affect the readings.

Valves should be closed before installation and opened gradually after all connections are carefully inspected. A leak test is highly recommended especialy when hazardous fluids are involved.

CAUTION: Excessive tightening of valves may damage the orifice.

It is important that all lines to be connected to the flow meter are purged of any dust or other residual contamination prior to installing the meter. All P and S style flow meters are equipped with a filter in the inlet port. In some applications an additional filter should be installed at the inlet of the flow meter.

STICKING FLOATS

Before installing open the valve of the flow meter and check to make sure that the float or floats are moving freely in the flow tube. This is best done by slowly tilting the flow meter from horizontal to vertical while observing if the float is rolling freely.

All meters are thoroughly inspected at the factory prior to shipping and are sealed in polyethylene bags to prevent dirt from entering into the flow passages. Certain small bore flow tubes have a clearance between the float and the inside walls of the flow tube of only a few ten thousandths of an inch. In some cases these flow tubes are found to have floats that are sluggish of not moving due to condensation resulting from temperature changes during shipping.

It is advisable to blow a dry clean gas through the meter to free float.

SAFETY INFORMATION

P and S style flow meters are designed to be operated at pressures not exceeding 200 psig (13.6 bars), or temperatures not exceeding 250 degrees F (121deg.C).

T style flow meters are designed to be operated at pressures not exceeding 100 psig (6.8 bars), or temperatures not exceeding 150 degrees F (65.5deg.C).

NOTE: When using a T style PTFE flow meter, at a pressure and/or temperature greater than standard the leak integrity approaches 1x10. Standard conditions are considered to be 14.7 psia (1 bar) and 70 degrees F (21deg.C).

All meters are factory tested for leakage prior to shipping. For hazardous fluids the flow meter must be re-tested at the time of installation in the system, prior to usage. It is also important that a leak integrity test is performed periodically to maintain safe operating conditions.

Flow meters must be protected from breakage due to external conditions such as objects bumping into or hitting the instrument, extreme vibrations, or attack by corrosive materials. It is the responsibility of the customer to acquaint the operator(s) of this flow meter with all appropriate safety information.

VALVE ALIGNMENT

The built-in needle valve may be positioned at either the inlet or the outlet of the flow meter. Valves are factory installed at the inlet of the flow meter unless otherwise requested.

APPLICATION	VALVE POSITION
Exhaust pressure at Atmospheric conditions	Valve at Inlet
Exhaust pressure other that Atmospheric conditions *	Valve at Outlet
Vacuum	Valve at Outlet
Liquid flow	Valve at Inlet or Outlet

*When using a flow meter with exhaust pressure greater than atmospheric conditions the standard calibrations can not be used. A calibration for the operating pressure must be obtained.

OPERATING INSTRUCTIONS

Close valve (if applicable) before initial use, then pressurize the system.

Slowly open the valve until the float is at the desired flow rate. The flow rate is read at the center of the float.

FLOW TUBE INSTALLATION OR REMOVAL

Remove the Front Shield and Back Plate. **Do not** remove the side panels from the flow meter.

To remove the flow tube:

P style meters: insert a 5/32" hex wrench into the Pressure Nut at the top of the flow meter. While holding the flow tube between your thumb and forefinger, turn the wrench counter clockwise to release the flow tube. Carefully remove the flow tube as not to damage it.

S and T style meters: insert a 3/32" diameter rod in the holes of the Lock Nut at the top of the flow tube. While holding the flow tube between your thumb and forefinger, turn the tool clockwise to release the flow tube. It may be necessary to push the Tube Adapter into the upper block to remove the flow tube.

To reinstall the flow tube reverse the above procedure. Take care to assure that the flow tube is centered, in the meter, at the top and bottom before tightening.

T style meters require additional tightening to insure proper sealing at the flow tube ends. The flow meter should be tightened again 24 hours after the initial tightening.

A leak integrity test is recommended after disassembling any flow meter.

FLOW TUBE CLEANING

If necessary, remove the flow tube from the frame as explained above, and clean as follows:

Insert a plastic rod that will fit into the flow tube with no obstruction, into the bottom of the flow tube and push the retaining plugs and float out of the flow tube. Use tweezers to handle the float and store the float and the plugs in a lint free container. Before removing note the position of the plugs for reference when reassembling.

Using a suitable solvent clean all the parts including the flow tube, dry them by means of a clean stream of air or gas.

To reassemble the flow tube use the push rod to first install the lower plug, next insert the float and then the upper plug.

Test by slowly tilting the flow tube from horizontal to vertical to assure that the float is moving freely. If the float is free follow the instructions above to reinstall the flow tube in the frame.

MAINTENANCE

Under normal operating conditions no special maintenance is required. Dirt or contamination may create problems within the flow tube by causing a restriction in the flow passage. Such conditions can be diagnosed by examining the flow tube. The most obvious indication of obstruction is the float being stuck in the flow tube. If the existence of the contamination is determined the condition may be rectified in a number of ways. The easiest being (if possible), to disconnect the inlet and the outlet of the flow meter and purge the instrument by using a clean and dry stream of gas. The action of the float within the bore of the flow tube very often causes particles to be dislodged through the outlet of the flow meter.

		No.:
		Date: 28-SEP-2018

Customer :

TECHNICAL PROPOSAL

Three-phase induction motor - Squirrel cage rotor

Product line : W22 NEMA Premium Efficiency Motors

Catalog Number :
List Price : $

Notes:

Performed by:	Checked:

No.:

Date: 28-SEP-2018

DATA SHEET

Three-phase induction motor - Squirrel cage rotor

Customer	:	
Product line	:	W22 NEMA Premium Efficiency Motors

Frame	:	254/6T
Output	:	20 HP
Frequency	:	60 Hz
Poles	:	2
Full load speed	:	3520 rpm
Slip	:	2.22 %
Voltage	:	575 V
Rated current	:	18.6 A
Locked rotor current	:	113 A
Locked rotor current (Il/In)	:	6.1
No-load current	:	5.20 A
Full load torque	:	40.7 Nm
Locked rotor torque	:	200 %
Breakdown torque	:	240 %
Design	:	B
Insulation class	:	F
Temperature rise	:	80 K
Locked rotor time	:	21 s (hot)
Service factor	:	1.25
Duty cycle	:	S1
Ambient temperature	:	-20°C - +40°C
Altitude	:	1000 m
Degree of Protection	:	IP55
Approximate weight	:	122 kg
Moment of inertia	:	0.06471 kgm²
Noise level	:	72 dB(A)

	D.E.	N.D.E.
Bearings	6309 C3	6209 C3
Regreasing interval	19000 h	20000 h
Grease amount	13 g	9 g

Load	Power factor	Efficiency (%)
100%	0.89	91.0
75%	0.87	91.7
50%	0.82	91.0

Notes:

Performed by	Checked

	No.:
	Date: 28-SEP-2018

PERFORMANCE CURVES RELATED TO RATED OUTPUT

Three-phase induction motor - Squirrel cage rotor

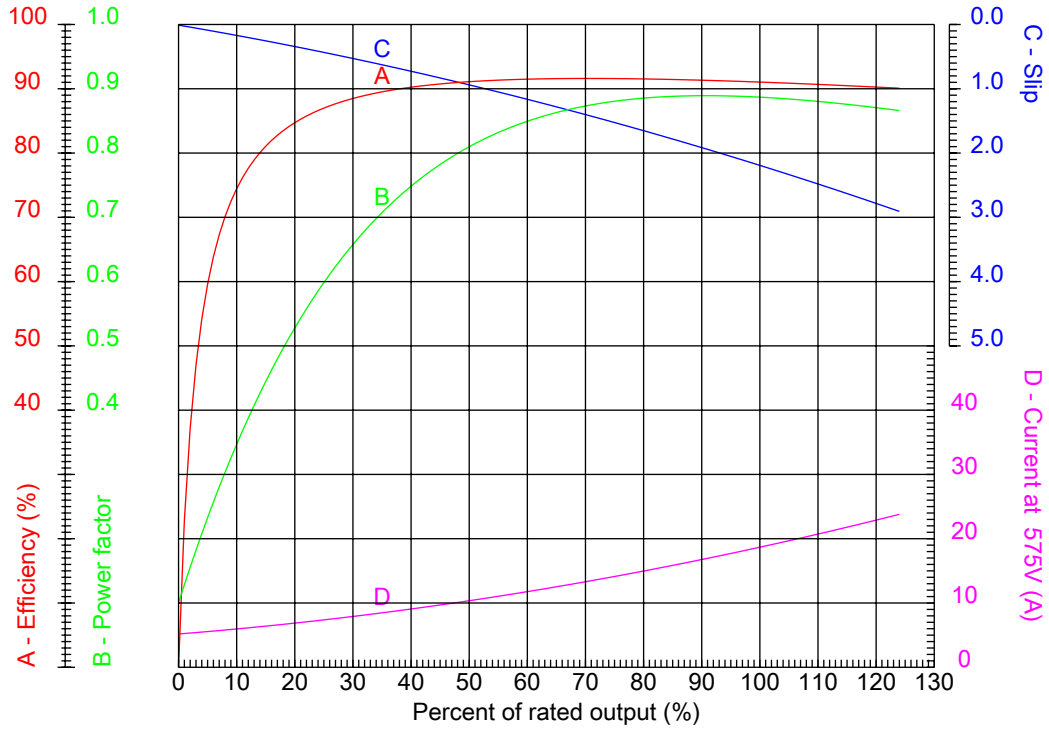

Customer	:
Product line	: W22 NEMA Premium Efficiency Motors

Frame	: 254/6T	Locked rotor current (Il/In)	: 6.1
Output	: 20 HP	Duty cycle	: S1
Frequency	: 60 Hz	Service factor	: 1.25
Full load speed	: 3520 rpm	Design	: B
Voltage	: 575 V	Locked rotor torque	: 200 %
Rated current	: 18.6 A	Breakdown torque	: 240 %
Insulation class	: F		

Notes:

Performed by	Checked

	No.:
	Date: 28-SEP-2018

CHARACTERISTIC CURVES RELATED TO SPEED

Three-phase induction motor - Squirrel cage rotor

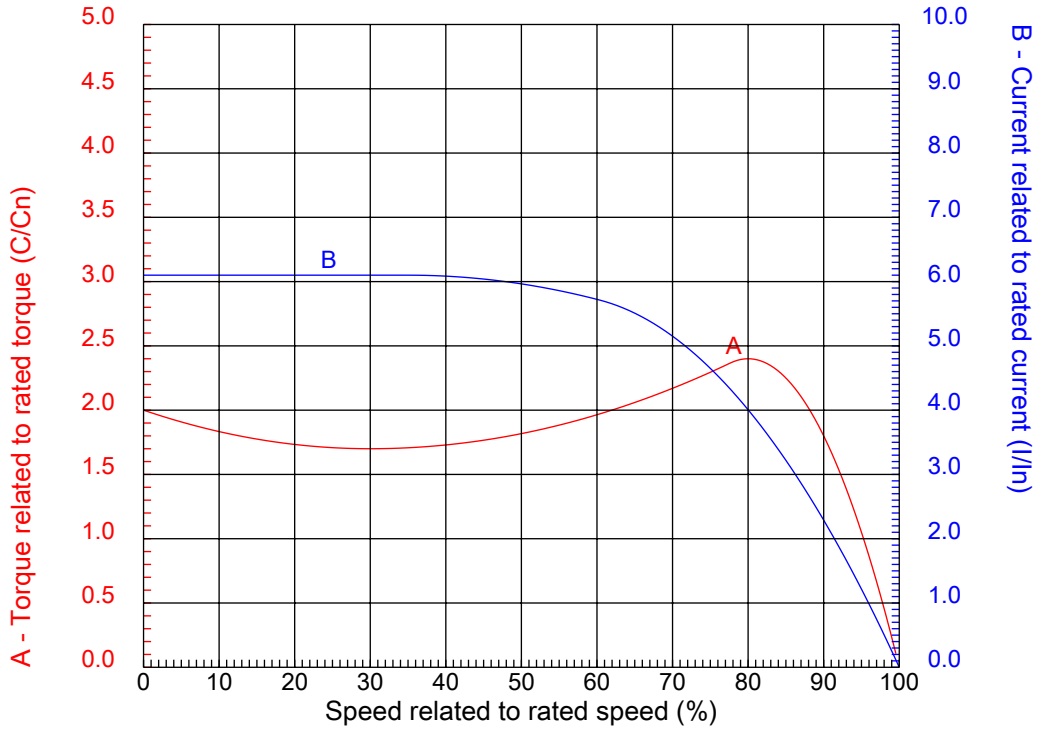

Customer	:
Product line	: W22 NEMA Premium Efficiency Motors

Frame	: 254/6T	Locked rotor current (Il/In)	: 6.1
Output	: 20 HP	Duty cycle	: S1
Frequency	: 60 Hz	Service factor	: 1.25
Full load speed	: 3520 rpm	Design	: B
Voltage	: 575 V	Locked rotor torque	: 200 %
Rated current	: 18.6 A	Breakdown torque	: 240 %
Insulation class	: F		

Notes:

Performed by	Checked

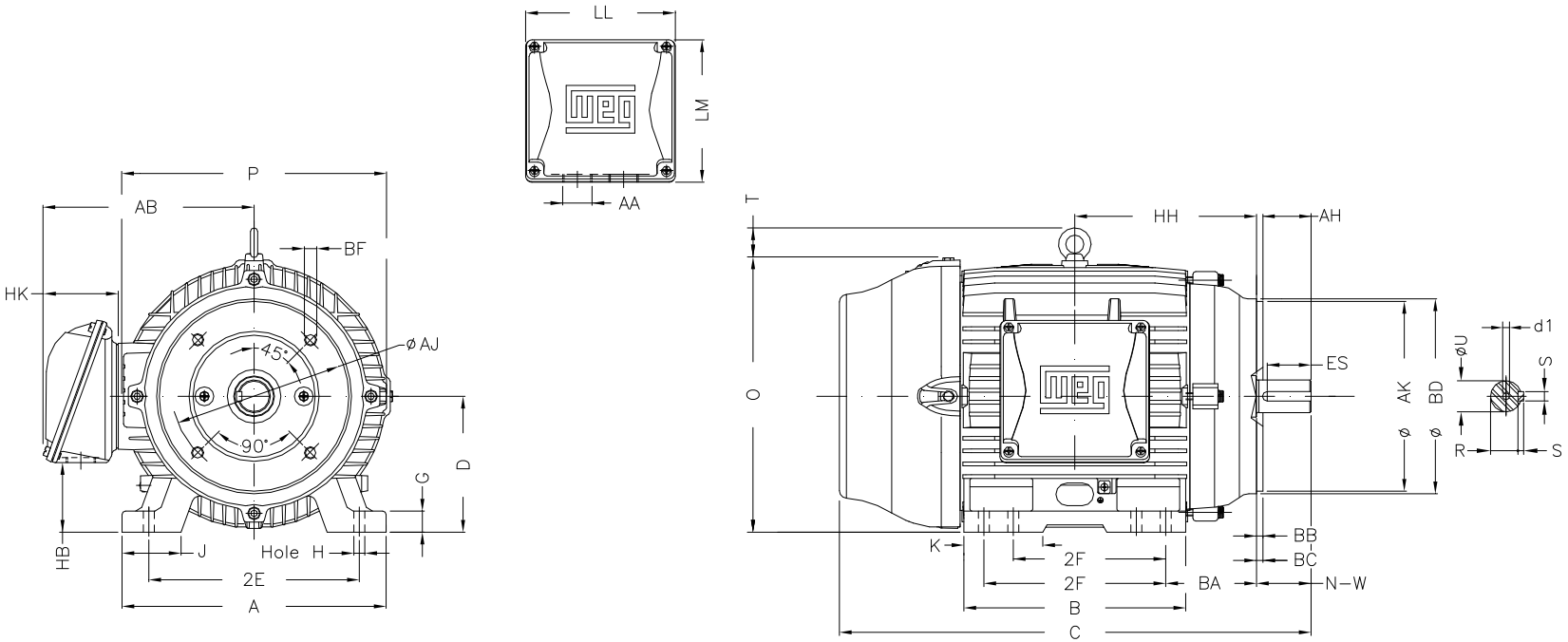

2E 10.000	J 1.787	A 11.496	P 12.953	AB 10.483
2F 8.252/10.000	K 2.559	B 11.732	BA 4.250	FBA 6.852
U 1.625	N-W 4.000	ES 2.756	S 0.375	R 1.416
depth 0.375	D 6.250	G 0.669	HB 3.061	O 12.598
T 2.313	HF 6.565	HH 9.250	HK 3.976	H 0.531
C 24.945	FC 28.477	LL 7.815	LM 7.480	AA NPT 1 1/2"
d1 A 4	Flange FC-184	AJ 7.250	AK 8.500	BD 8.875
BF UNC 1/2"x13	BB 0.250	BC 0.250	AH 3.750	

Notes:

Performed by:

Checked:

Customer:

W22 NEMA Premium Efficiency Motors

Three-phase induction motor

Frame 254/6T - IP55

28-SEP-2018

Projet	IQALUIT
Projet#:	5000218036
Document #:	5000218036_DS_0001_PM_VWT
Par:	BB
Verif.:	GH
approb.:	CB

SPIDFLOW

STRAINER

Section Manuel OM: 4.3.1.3

CS-912-005 : Identification sheet

VWTC PROJECT NUMBER:	Iqaluit WWTP	REV:	01
PROJECT NAME:	5000218036	SUBMITTED TO (COMPANY):	
ENGINEER:	G. HÉBERT	SUBMITTED TO (RESPONSIBLE)	
PROJECT MANAGER:	C. BEKAERT	PROJECT NUM REFERENCE.:	
PHONE NUMBER:		LOT NUMBER:	

SUPPLIER	EQPT CODE	EQPT TAG NO	DIA	DESCRIPTION	INFO 1	INFO 2	INFO 3	APPLIC.	NOTE	REV
IFC	ST-912-005	STR-02-510		WHITE WATER SCREEN	PUMP STRAINER // IFC MODEL #: B150FSS4BW1-OB // STRAINER TYPE: FABRICATED INLINE SIMPLEX BASKET STRAINER WITH OPEN BOTTOM BASKET// INLET / OUTLET DETAILS:4” ANSI 150 LB. RF FLANGED PER ASME B16.5 // BODY / SHELL DIAMETER: 8.63” OD//	BASKET ELEMENT: TYPE 304 STAINLESS STEEL WEDGE-WIRE CONSTRUCTION WITH 1/16” REVERSE ROLLED SLOTTED OPENINGS. NOTE: STRAINER BASKET WILL BE EQUIPPED WITH OPEN BOTTOM				1
IFC	ST-912-005	STR-02-520		WHITE WATER SCREEN	PUMP STRAINER // IFC MODEL #: B150FSS4BW1-OB // STRAINER TYPE: FABRICATED INLINE SIMPLEX BASKET STRAINER WITH OPEN BOTTOM BASKET// INLET / OUTLET DETAILS:4” ANSI 150 LB. RF FLANGED PER ASME B16.5 // BODY / SHELL DIAMETER: 8.63” OD//	BASKET ELEMENT: TYPE 304 STAINLESS STEEL WEDGE-WIRE CONSTRUCTION WITH 1/16” REVERSE ROLLED SLOTTED OPENINGS. NOTE: STRAINER BASKET WILL BE EQUIPPED WITH OPEN BOTTOM				1
IFC	ST-912-005	STR-02-530		WHITE WATER SCREEN	PUMP STRAINER // IFC MODEL #: B150FSS4BW1-OB // STRAINER TYPE: FABRICATED INLINE SIMPLEX BASKET STRAINER WITH OPEN BOTTOM BASKET// INLET / OUTLET DETAILS:4” ANSI 150 LB. RF FLANGED PER ASME B16.5 // BODY / SHELL DIAMETER: 8.63” OD//	BASKET ELEMENT: TYPE 304 STAINLESS STEEL WEDGE-WIRE CONSTRUCTION WITH 1/16” REVERSE ROLLED SLOTTED OPENINGS. NOTE: STRAINER BASKET WILL BE EQUIPPED WITH OPEN BOTTOM				1

SUPPLIER	EQPT CODE	EQPT TAG NO	DIA	DESCRIPTION	INFO 1	INFO 2	INFO 3	APPLIC.	NOTE	REV
IFC	ST-912-005	STR-02-540		WHITE WATER SCREEN	PUMP STRAINER // IFC MODEL #: B150FSS4BW1-OB // STRAINER TYPE: FABRICATED INLINE SIMPLEX BASKET STRAINER WITH OPEN BOTTOM BASKET// INLET / OUTLET DETAILS:4” ANSI 150 LB. RF FLANGED PER ASME B16.5 // BODY / SHELL DIAMETER: 8.63” OD//	BASKET ELEMENT: TYPE 304 STAINLESS STEEL WEDGE-WIRE CONSTRUCTION WITH 1/16” REVERSE ROLLED SLOTTED OPENINGS. NOTE: STRAINER BASKET WILL BE EQUIPPED WITH OPEN BOTTOM				1

industries served

ISLIP Flow Control products are designed to exacting specifications, and manufactured to the highest standards, resulting in an extensive range of flow controls that are built for dependability, and years of use. IFC's products are found around the globe. From Arizona to Australia, and Singapore to Saudi Arabia, ISLIP is there. We are the manufacturer of choice for professionals who know that quality, service and dependability equal success.



- **Metals & Mining**
- **Pulp & Paper**
- **Oil & Gas**
- **Exploration**
- **Chemicals**
- **Water Treatment**
- **Power Generation**

Whether it is a generating station or water authority in North America, a refining plant in Chile or offshore explorations in Vietnam, IFC delivers solutions.

Contact us today. At ISLIP Flow Controls, we speak your language

IFC
ISLIP FLOW CONTROLS Inc.
Our Knowledge Sets us Apart.

Easy access to friendly help is always just a call or click away.

CANADA - 1145 Sutton Drive, Unit #3, Burlington, ON L7L 5Z8
Toll Free: 1.866.872.0072 Toll Free Fax: 1.866.872.0073 Local Calls: 905.335.8777 Local Fax: 905.335.0977

USA - PO Box 2989, Buffalo, NY 14240-2989

Visit us on the web at: www.islipflowcontrols.com

IFC
ISLIP FLOW CONTROLS Inc.
Our Knowledge Sets us Apart.



For Strainers, Valves and Pipeline Accessories.

Our *Knowledge* Sets Us Apart.

ISLIP Flow Controls is the industry's answer for full-service solutions. We are the knowledge leaders you can depend on to resolve your flow control challenges in the industrial, oil & gas, petrochemical, HVAC and commercial industries.

Working with us means working with a front-line business partner you can trust. It is a customer-focused approach that has made us the manufacturer of choice for Strainers, Valves and Pipeline Accessories. It's exacting professional performance that delivers quick response and exceptional service. And, it is the benefit of intelligent people who have the experience and expertise to create workable solutions tailored to you and your business, project by project.



what sets us apart ?

At ISLIP Flow Controls, we have built an entire company on our dedication to quality. It isn't just our superior products and competitive prices that have made us the manufacturer of choice for users on five continents, it is so much more.

"They speak our language. We like their expertise and understanding of the business…"
Vanessa Nugent, Fluor Canada for the Imperial Oil ULSD Project

It's superb personal service, exacting detail, and a precise knowledge of the industries we work with. We offer solutions that are as individual as we are.

"ISLIP has the answers. They're not afraid to take on the challenge of new applications…"
Amy Ng, Delta Fountains

It's the kind of dependable advice and prompt response that's there when you need it most. With us, expertise and a new solution are just a call away.

"ISLIP offers instant, direct contact…" FMC Smith Meter, Guy Roussel-Dupre

And, it's commitment you can count on. We stock what you need; we ship on time.

"We often get same-day pick up. There's a good inventory. They're easy to work with…"
Greg White, Industrial Mine & Pipe

iFC
ISLIP FLOW CONTROLS Inc.
Our Knowledge Sets us Apart.



products

All ISLIP Flow Control products are strictly manufactured and tested in accordance with applicable ASME and CSA standards as well as specific customer requirements.

Visit us online at **www.islipflowcontrols.com** for comprehensive details specifications on all our products. Find helpful downloads, catalogues on all the products we offer, and important certification documents. We will even help you find the right product for your individual applications with our convenient on-line Help List specifier.



When you work with IFC, you'll receive quality products that arrive on time and within budget. They are supported by certifications that carry the kind of assurance you can depend on, backed by a staff of experts who are there when you need them.

IFC manufactures and stocks a full line of Flow Control Products. Most product lines are available in sizes up to 60" in diameter and pressures up to 10,000 PSIG. Readily available and stocked materials of construction are cast and ductile iron, bronze, carbon steel and stainless steel in pressure classes 125 lb through 1500 lb. For extreme and special operating conditions, products manufactured from special alloys can also be supplied.





Ball Valves – One-Piece, Two-Piece & Three-Piece



Temp. Cone, Basket & Plate Strainers



Butterfly Valves – Resilient Seated & High Performance



Silent Check Valves



Dual Disc Check Valves



Duplex/Dual Basket Strainers

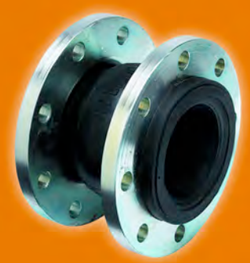

Rubber Connectors



Y Strainers



Basket/Simplex Strainers



Suction Diffusers



Triple Duty Valves



Custom-Fabricated Strainers and Valves, including IFC's Self-Cleaning Strainer



who we are

With over 30 years experience, professionals have made ISLIP Flow Controls their number one choice for Strainers, Valves and Pipeline Accessories.

Since founder David Islip formed the business, we have maintained a family company with family values: integrity, commitment to superior service, dedication to solving problems and a continuing responsibility to develop the best products in every market we serve. It is this kind of expertise that allows us to give our customers the buying benefits of a big business and the personal attention of small enterprise.

the ISLIP network

Choosing ISLIP Flow Controls means selecting the style of service you prefer most – working directly with the in-house experts at our Head Office or dealing face-to face with our appointed agents. No matter the choice, you can depend on industry experience and the kind of know-how it takes to solve the toughest problems.

Rest assured local IFC Master Distributors and Representatives are trusted professionals, who carry the face of ISLIP Flow Controls into every business they visit, providing the links that help us play a vital role in day-to-day success in markets across the country, and around the world. They serve as support to Specifiers, Contractors and Engineers, and work on our behalf to introduce IFC products to new markets. With a ready-to-access inventory of our entire product line, your local ISLIP Master Distributor can make a genuine difference on a project when dollars and cents really count.

our promise

Islip Flow Controls has redefined the meaning of exceptional quality and outstanding service. In fact, we have made it a part of how we do business every day. It is our Continuing Commitment to Customer Care and it means we go the extra mile to make sure we always exceed your expectations.



Count on us for

- **Friendly knowledgeable help that's there when you need it**
- **Dependable quality**
- **Delivery that's on-time**
- **Competitive pricing**
- **Customized engineering solutions**

We are your professional resource just a call or click away.

ISLIP FLOW CONTROLS Inc.
Our Knowledge Sets us Apart.

BILL OF MATERIALS

ITEM	DESCRIPTION	SPECIFICATIONS	QTY.
1	INLET/OUTLET FLANGE	4" 150 LB. R.F. SCH.40. C.STEEL ASME SA105 WELD NECK FLANGE PER ASME B16.5–2009	2
2	COVER GASKET	8" 150 LB. FLEXITALLIC 304 SS SPRIAL WOUND W/ GRAPHITE FILLER	1
3	COVER FLANGE	8" 150 LB. R.F. C.STEEL ASME SA105 BLIND FLANGE PER ASME B16.5–2009	1
4	BODY RING	1/4" THK. C.STEEL ASME SA36 (IFC–BO–9)	1
5	COVER STUDS	3/4" X 4 1/4" LG. C.STEEL ASME SA193 B7	8
6	COVER NUTS	3/4" C.STEEL ASME SA194 2H	16
7	BODY FLANGE	8" 150 LB. R.F. SCH.STD. C.STEEL ASME SA105 WELD NECK FLANGE PER ASME B16.5–2009	1
8	BASKET ASSEMBLY	1/16" PERF. – TYPE 304 SS – 6 3/8"ø X 14" LG. (OPEN BOTTOM)	1
9	BODY PIPE	8" SCH.40. C.STEEL SMLS PIPE ASME SA106–B X 15" LG.	1
10	INLET/OUTLET PIPE	4" SCH.40. C.STEEL SMLS PIPE ASME SA106–B X 2 13/16" LG.	2
11	DRAIN COUPLING	1" NPS 6000 LB. C.STEEL ASME SA105 N.P.T. HALF COUPLING C/W PLUG PER ASME B16.11–2011	1
12	BOTTOM CAP	8" NPS SCH.40. C.STEEL ASME SA234–WPB WELD CAP PER ASME B16.9–2012	1
13	LIFTING LUG	C.STEEL ASME SA36	1
14	VENT COUPLING	1/2" NPS 6000 LB. C.STEEL ASME SA105 N.P.T. HALF COUPLING C/W PLUG PER ASME B16.11–2011	1
15	SUPPORT RING	1/4" THK. C.STEEL ASME SA36 (SEE DETAIL)	1
16	SUPPORT BANDING	1/8" THK. X 1" WIDE X 20 7/16" LG. C.STEEL ASME SA36	1

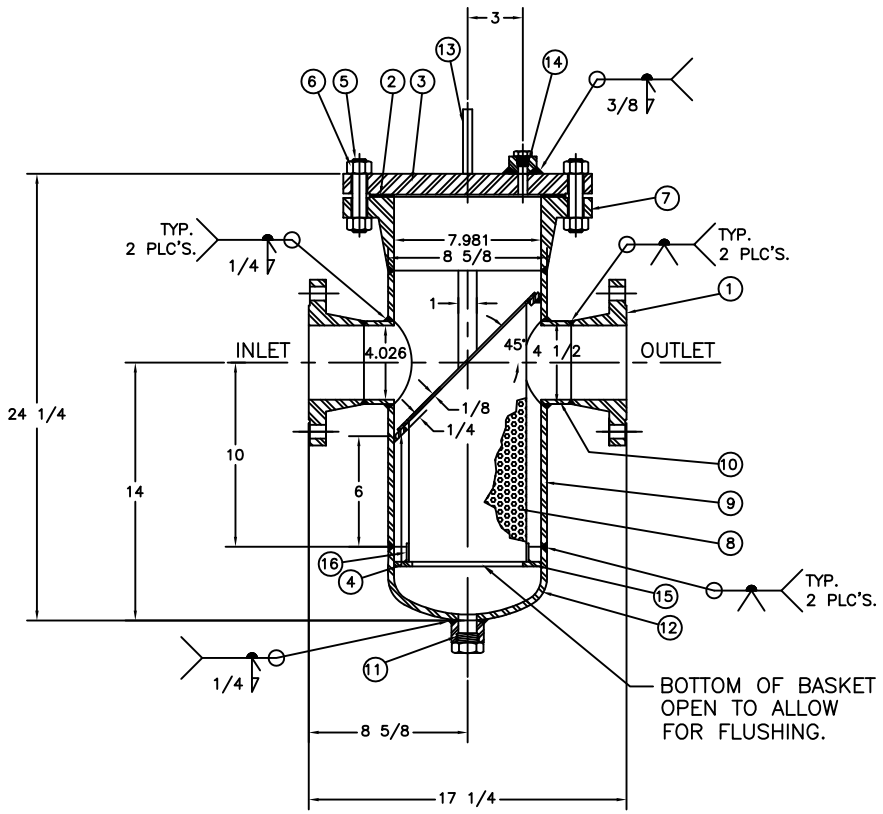

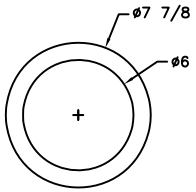

ITEM 15 DETAIL

STRAINER NAMEPLATE (QTY.2)

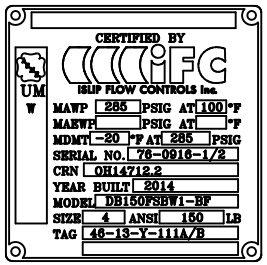

GENERAL NOTES

1. FLANGE BOLT HOLES STRADDLE NORMAL ℄ UNLESS NOTED.
2. ALL DIMENSIONS ARE IN INCHES UNLESS NOTED.
3. SPARE PARTS ITEM 2 AND 8.
4. EXPOSED INSIDE EDGES SHALL BE CHAMFERED OR ROUNDED PER UG–76(c).
5. MATERIAL IMPACT TEST EXEMPT PER UG–20(f) AND UCS–66(c).

REV	DATE	BY	REVISION DESCRIPTION

This drawing is the property of *ISLIP FLOW CONTROLS* and is subject to return upon request. It shall not be copied or duplicated in any manner and shall not be submitted to outside parties for examination without the consent of *ISLIP FLOW CONTROLS* It shall be used for reference to work under contract or proposals submitted by *ISLIP FLOW CONTROLS* only.

DESIGN SPECIFICATIONS						CONSTRUCTION DATA	
DESIGN CODE:	ASME SECTION VIII, DIV.1, 2013 ED.	INTERNAL CORROSION ALLOWANCE:	0.118" / 3mm	WPS UTILIZED:	IFC–014	INLET/OUTLET:	4" ANSI 150 LB. RFWN
PIPING CODE:	N/A	EXTERNAL CORROSION ALLOWANCE:	NIL	CRN	OH14712.2	DRAIN:	1" NPS N.P.T.
CODE STAMP:	ASME CODE UM–STAMP, CRN FITTING ALBERTA	M.D.M.T. :	–20°F / –29°C	TOTAL WEIGHT (EMPTY)	175 LBS.	VENT:	1/2" NPS N.P.T.
MAWP/TEMP:	285 psig AT 100°F / 1960 kPag AT 38°C	HYDROSTATIC TEST:	371 psig/2548 kPag FOR 10 MIN.	TOTAL WEIGHT (FULL)	N/A	DIFFERENTIALS:	N/A
MAEWP/TEMP:	N/A	N.D.E. REQUIREMENTS:	VISUAL	EST. CAPACITY:	0.72 cu.ft.	FILTRATION LEVEL:	1/16" PERF.
SEISMIC CODE:	N/A	HEAT TREATMENTS:	NONE	INTERNAL FINISH	NONE	FILTRATION AREA:	217 SQ. IN.
WIND CODE:	NONE (WEIGHT ONLY)	SERVICE TYPE:	NON LETHAL	EXTERNAL FINISH	STD. RED PRIMER	OPEN AREA/PIPE AREA:	6.97/1

TOLERANCES	
FRACTIONAL	± 1/8"
ANGULAR	± 1°
X.X	± .1"
X.XX	± .03"
X.XXX	± .015"
UNLESS OTHERWISE SPECIFIED	

IFC WORK ORDER:	76–0916
MODEL	B150FSBW1
SIZE	4" X 8"
DRAWING DESCRIPTION	BASKET STRAINER ASSEMBLY
ISLIP FLOW CONTROLS DWG. No.	D–10874–B
SHEET No	1
REV	0

ISLIP FLOW CONTROLS Inc.
BURLINGTON–ONTARIO–CANADA / BUFFALO–N.Y.–U.S.A.
DESIGNED : DM | APPROVED : DM/JM
DRAWN : DM. | SCALE : 1 : 3
CHECKED : JM | DATE : JUNE.18/14

BACKFLUSH/BACKWASH OPTION:

Custom Fabricated simplex and duplex strainers are available with this important option.

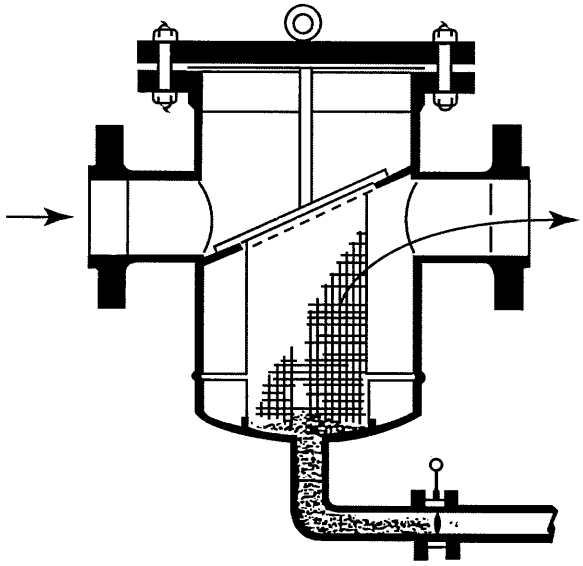

(A) Valve closed - dirt accumulated

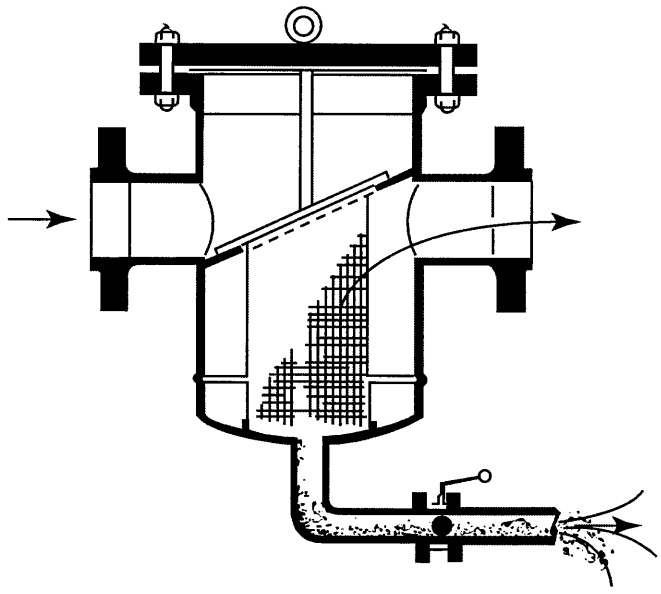

(B) Valve open - dirt removed thru backwash piping.

In many systems, particularly where solids are heavy and well defined, dirt accumulates as shown above (A). When the backflush valve is open, (B), the differential pressure between the operating pressure and the backflush system removes the dirt, all without shutting the system down. This simple process is referred to as backflushing.

Backwashing occurs when backflushing is supplemented by fluid flowing, under pressure, in the reverse direction into an empty strainer. This flow reversal backwashes the element and removes the residual dirt. Backwashing is often regarded as a second step, used to remove dirt not removed by backflushing.

STEAM JACKET OPTION:

Custom Fabricated simplex basket and tee strainers in all sizes are also available with this option. This modification is designed to have no impact on the function or normal maintenance.

Steam jacketing is available in carbon steel and 316SS for service up to 450°F. Steam jacketing is used to maintain critical fluid temperatures through the strainer. High temperatures are often required to process and transport high viscous fluids.

Projet	IQALUIT
Projet#:	5000218036
Document #:	5000218036_DS_0001_PM_VWT
Par:	BB
Verif.:	GH
approb.:	CB

SPIDFLOW

WHITE WATER DIFFUSION NOZZLE

Section Manuel OM: 4.3.1.4

CS-912-004 : Identification sheet

VWTC PROJECT NUMBER:	Iqaluit WWTP	REV:	01
PROJECT NAME:	5000218036	SUBMITTED TO (COMPANY):	
ENGINEER:	G. HÉBERT	SUBMITTED TO (RESPONSIBLE)	
PROJECT MANAGER:	C. BEKAERT	PROJECT NUM REFERENCE.:	
PHONE NUMBER:		LOT NUMBER:	

SUPPLIER	EQPT CODE	EQPT TAG NO	DIA	DESCRIPTION	INFO 1	INFO 2	INFO 3	APPLIC.	NOTE	REV
OPALIUM	ST-912-004	NOZZLES		WHITE WATER NOZZLES	WHITE WATER NOZZLES // MODEL # 3,3 // LATIS # FANZFT201999 // FLOW 0,83 M3/H @ 5 BAR (72,5 PSI)					1
OPALIUM	ST-912-004	NOZZLES (2)		WHITE WATER NOZZLES	WHITE WATER NOZZLES // MODEL # 3,3 // LATIS # FANZFT201999 // FLOW 0,83 M3/H @ 5 BAR (72,5 PSI)					1

BUSE DE DIFFUSION D'EAU BLANCHE

WHITE WATER DIFFUSION NOZZLE

CARACTERISTIQUES TECHNIQUES
TECHNICAL CHARACTERISTICS

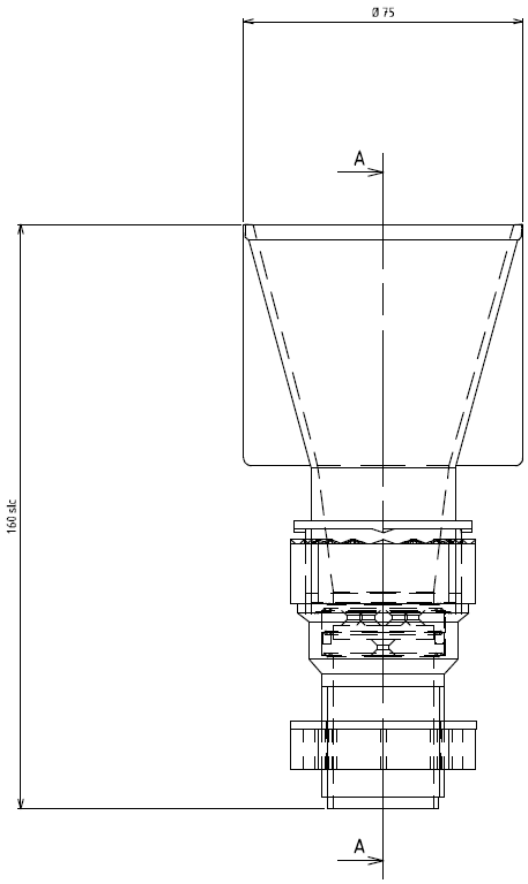

Figure 1: Vue d'ensemble / *General View*

Veolia Water Technologies – Municipal Standard Solutions
178 Avenue du Maréchal de Lattre de Tassigny • 94120 Fontenay-sous-Bois • France
Tel +33 1 45 14 12 12 • email: municipalsolutions@veolia.com • www.opalium.com

BUSE DE DIFFUSION D'EAU BLANCHE

WHITE WATER DIFFUSION NOZZLE

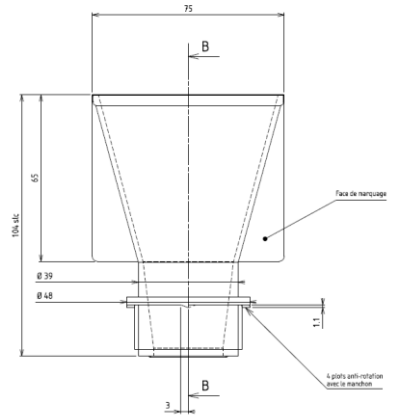

Figure 2: Cône / *Cone*

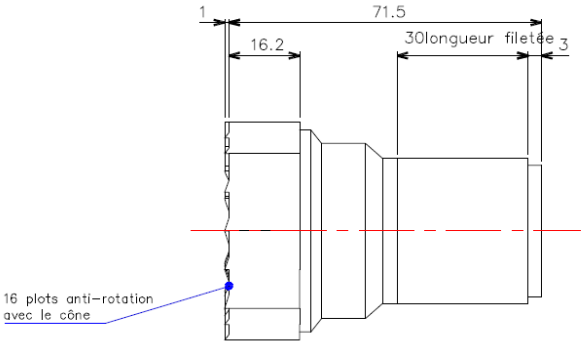

Figure 3: Manchon / Coupling









Figure 4: Diaphragme à 1 trou / *Diaphragm with 1 hole*



Figure 5: Contre écrou / *Lock nut*

Figure 6: Diaphragme à 6 trous / *Diaphragm with 6 holes*

Composition / *Composition* :

La buse de diffusion d'eau blanche est composée de 5 éléments pré-assemblés : le cône, 2 diaphragmes (1 et 6 trous), un manchon, un contre écrou (cf. plans en premières pages et photos en annexes
A white water nozzle is made up of 5 pieces pre assembled: a cone, 2 diaphragms (1 and 6 holes), a coupling and a locknut. Cf. drawings above and pictures in annex. It must be installed as received from the supplier: do not try to take it apart.

Veolia Water Technologies – Municipal Standard Solutions
178 Avenue du Maréchal de Lattre de Tassigny • 94120 Fontenay-sous-Bois • France
Tel +33 1 45 14 12 12 • email: municipalsolutions@veolia.com • www.opalium.com

VEOLIA Direction Technique & Performance	**BUSE DE DIFFUSION D'EAU BLANCHE** ***WHITE WATER DIFFUSION NOZZLE***	**Folio** ***Sheet*** **1/11**
		Date ***Date*** **25/07/14**

Document N° ***Document N°*** **FT 208 D**	**Plan : Diffuseur Eau blanche** ***Drawings: White water nozzle*** **2306001-001**	**Note procédé** ***Process note***
Distribué par OPALIUM ***Dispatched by OPALIUM*** **C.FAUGERAS**	**Rédigé par** ***Written by*** **S. TROTTIER**	**Approuvé par** ***Approved by*** **D. PASTORELLI**
REV D : 25/07/14	**dimension - tolerance**	
REV C: 28/04/14	**Process of fabrication diaphragm (injection) – raw material evolution**	
REV B : 09/12/13	**Raw material evolution**	
REV A : 17/02/10		

CARACTERISTIQUES TECHNIQUES
TECHNICAL CHARACTERISTICS

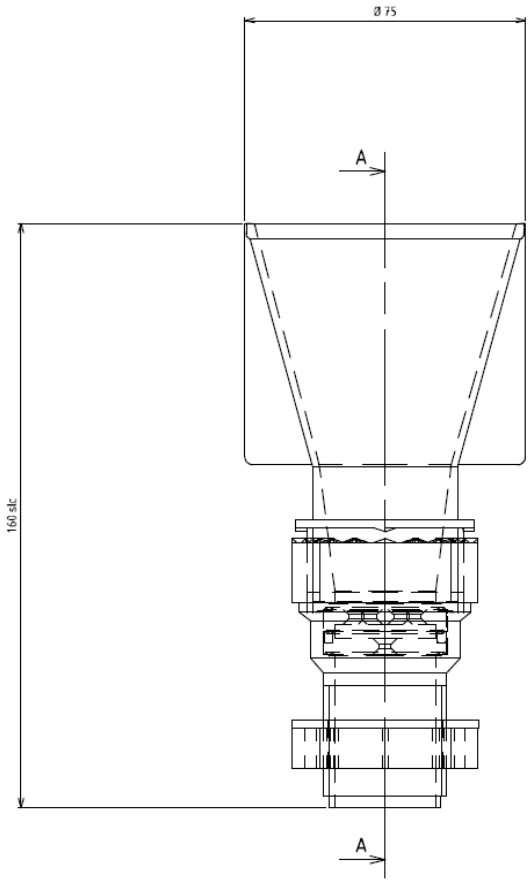

Figure 1: Vue d'ensemble / *General View*

Ce document comporte des informations confidentielles propriétés d'OTV. Il ne peut être reproduit ou utilisé sans autorisation écrite d'OTV.
This document contains confidential information which is the property of OTV. It shall not be reproduced or used without the express prior written authorization of OTV.

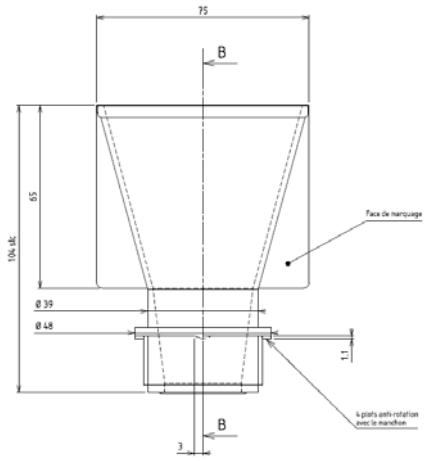

Figure 2: Cône / *Cone*

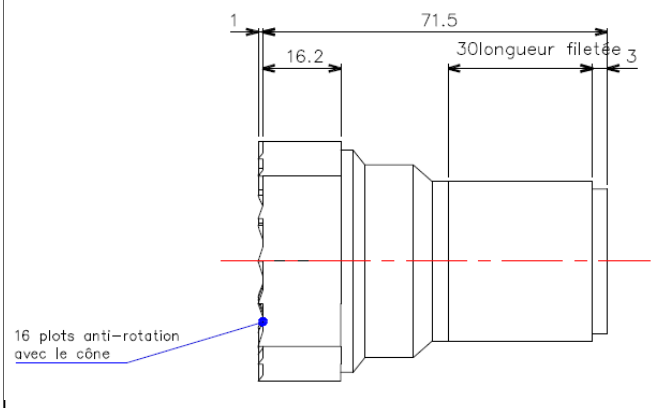

Figure 3: Manchon / Coupling





Figure 5: Contre écrou / *Lock nut*



Figure 4: Diaphragme à 1 trou / *Diaphragm with 1 hole*





Figure 6: Diaphragme à 6 trous / *Diaphragm with 6 holes*

Composition / *Composition* :

La buse de diffusion d'eau blanche est composée de 5 éléments pré-assemblés : le cône, 2 diaphragmes (1 et 6 trous), un manchon, un contre écrou (cf. plans en premières pages et photos en annexes
A white water nozzle is made up of 5 pieces pre assembled: a cone, 2 diaphragms (1 and 6 holes), a coupling and a locknut. Cf. drawings above and pictures in annex. It must be installed as received from the supplier: do not try to take it apart.

Ce document comporte des informations confidentielles propriétés d'OTV. Il ne peut être reproduit ou utilisé sans autorisation écrite d'OTV.
This document contains confidential information which is the property of OTV. It shall not be reproduced or used without the express prior written authorization of OTV.

Caractéristiques / *Design criteria* :

Pression de travail / *Operating pressure)* / Débit (*flow)* :

Il existe 3 différents diffuseurs capables de délivrer différents débits unitaires moyens. Le nombre de diffuseurs est à sélectionner en fonction de ces débits unitaires moyens. /
3 types of nozzle are available, each delivering a different unit average flow at the operation pressure. The number of nozzles has to be chosen according to these unit average flows.

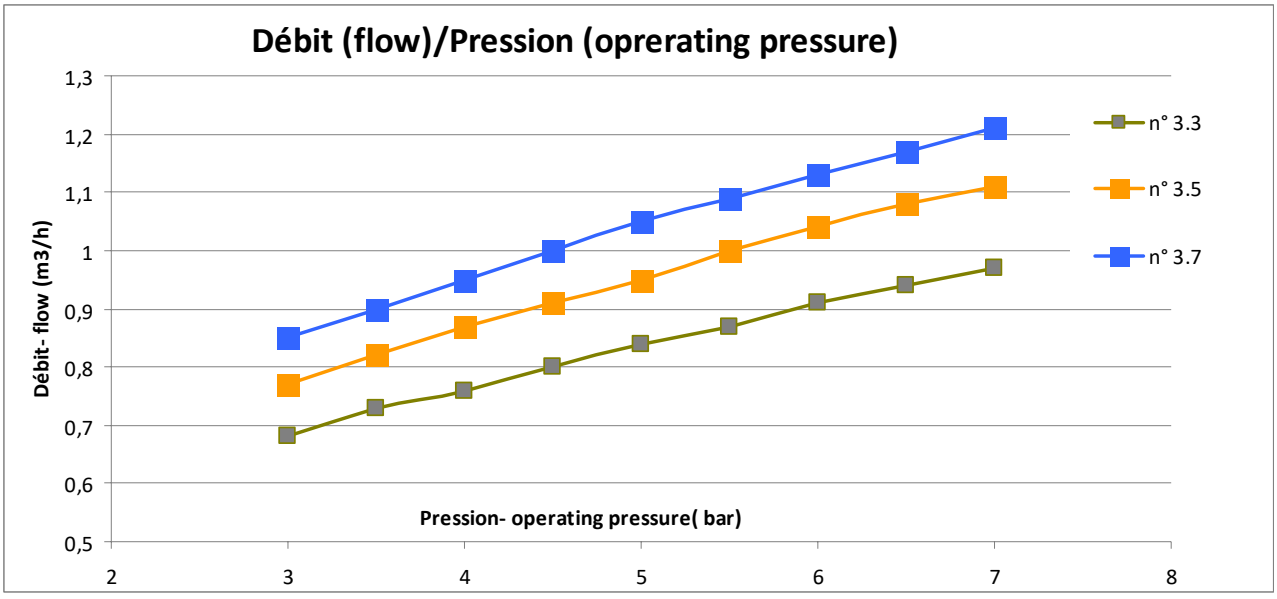

	Pressions en amont de buse - operating pressure (bar)								
	3	**3,5**	**4**	**4,5**	**5**	**5,5**	**6**	**6,5**	**7**
Buse n°	Débit- flow (m3/h)								
3,7	*0,85*	*0,90*	*0,95*	*1,00*	*1,05*	*1,09*	*1,13*	*1,16*	*1,21*
3,5	*0,78*	*0,82*	*0,88*	*0,92*	*0,97*	*1,01*	*1,04*	*1,08*	*1,12*
3,3	*0,68*	*0,73*	*0,76*	*0,80*	*0,83*	*0,87*	*0,90*	*0,93*	*0,96*

Les valeurs de débits sont données avec une tolérance de ± 5 %.
The flow values are provided with a tolerance of ± 5%.

Encombrement / *Size* :

- Hauteur totale / *Total height* = **160 mm ± 2 mm (suivant serrage)**
- Diamètre haut du cône / *Cone top diameter* = **75 mm ± 0,5 mm**

Dimensions utiles pour la liaison avec la conduite de distribution d'eau blanche (manchon) / *Useful information for its installation on the white water circuit* :

- Filetage selon norme E 03 004/005 (pas du gaz) / *Thread according to the norm E 03 004/005 (gas thread)*

Ce document comporte des informations confidentielles propriétés d'OTV. Il ne peut être reproduit ou utilisé sans autorisation écrite d'OTV.
This document contains confidential information which is the property of OTV. It shall not be reproduced or used without the express prior written authorization of OTV.

- Longueur filetée totale / *Total threaded lenght* = **30 mm ± 0,5 mm**
- Longueur minimum sous contre écrou (y compris filetée) = **20 mm dont 17 mm de filet** / *Minimum Lenght after installing the locknut (thread included* de filetage / *20 mm of which 17 of thread*

Note : Les diffuseurs d'eau blanche sont fabriqués par moulage. Les moules ont été spécialement ajustés afin d'assurer une étanchéité parfaite (sans Loctite) avec l'emploi d'adaptateurs avec manchon taraudé femelle Simona (www.simona.de), détail en annexes. L'emploi de Loctite (ou équivalent) est néanmoins vivement recommandé afin de prévenir tout risque de fuite et de desserrement des buses.
Note: Nozzles are molded. The casts have been designed to ensure a leak free connexion, without sealant (Loctite for example) when screwed on a Simona coupling (www.simona.de), details in annexes. Sealant (Loctite or similar) is however highly recommended to prevent any leakage and the nozzles to loosen.

Ce document comporte des informations confidentielles propriétés d'OTV. Il ne peut être reproduit ou utilisé sans autorisation écrite d'OTV.
This document contains confidential information which is the property of OTV. It shall not be reproduced or used without the express prior written authorization of OTV.

PROCEDURE DE RECEPTION
ACCEPTANCE PROCEDURE

Avant de procéder à l'installation, vérifier que le matériel n'est pas endommagé et que la livraison est complète.
Prior to proceed with the installation, check that the equipment are not damage and the order complete.

Contrôle du conditionnement / *Packaging check* :

Toutes les crépines sont rangées dans un carton conventionnel. / *All the nozzles are store in a regular cardboard.*
Tous les cartons seront rangés sur palettes filmées. / *All cardboard boxes are stored on film wrapped pallets.*

Contrôle d'identification du matériel / *Material identification check* :

- La désignation du matériel / *Equipment designation*
- Le nom ou le numéro de l'affaire / *Project name or reference*
- Le nombre de colis / *Number of cardboard boxes*
- Le nombre de pièces pour la livraison / *Number of nozzles*
- Le poids du colis / *Weight of the shipment*

Contrôle du marquage / *Marking check* :

Zone de marquage : l'une des deux oreilles : EBOTV
Marking area: one of the ear: EBOTV –

Contrôle d'aspect / *Visual aspect check* :

Un contrôle visuel doit être réalisé sur un échantillon. *A visual check must be performed on sampled items.*

- Contrôle de l'ébavurage : Toutes les pièces doivent être ébavurées soigneusement, tout particulièrement l'orifice du diaphragme à 1 trou. *Deburring check: All parts must be correctly deburred, especially the diaphragm with 1 hole:*

Ce document comporte des informations confidentielles propriétés d'OTV. Il ne peut être reproduit ou utilisé sans autorisation écrite d'OTV.
This document contains confidential information which is the property of OTV. It shall not be reproduced or used without the express prior written authorization of OTV.

- Contrôle de la matière des diaphragmes/ ***Material check diaphragms*** : PPE+PS blend (Noryl® 731)
- Contrôle de la matière cône, Manchon et contre écrou : **Polypropylène** / *Material check cone, coupling and loknut:* ***Polypropylen***

<u>Contrôle dimensionnel sur les cotes fonctionnelles / *Principal dimensions check* :</u>

Vérification des cotes fonctionnelles au pied à coulisse, jauge de profondeur, pige.
Contrôler que les cotes fonctionnelles sont dans les tolérances : ± 0,05 mm pour les orifices principalement.
Check that the principal dimensions are according to the tolerances: ± 0,05 mm for the orifices. Use a vernier caliper, and a gauge.

<u>Précautions de stockage / *Storage precautions* :</u>

 Les diffuseurs ne doivent pas être stockés en exposition directe à la lumière du soleil : le matériau s'oxyde et devient cassant (les flottateurs doivent être couverts, mais prendre garde également lorsque les buses sont installées). Malgré la bonne résistance à la chaleur du **PP (jusqu'à 70°C),** il est également recommandé de veiller à ne pas les stocker à des températures trop élevées afin de ne pas déformer les diffuseurs. Précaution d'autant plus valable que l'installation est faite dans des pays au climat désertique.
The nozzles should not be stored under direct sun light: material is getting fragile (floatators must be covered, but be careful when the nozzles are installed). Also, despite the good heat resistance of the material ***(up to 70°C),*** *it is recommended not to store them at high temperature so they do not loose their shape. This is specially the case for desert area.*

Ce document comporte des informations confidentielles propriétés d'OTV. Il ne peut être reproduit ou utilisé sans autorisation écrite d'OTV.
This document contains confidential information which is the property of OTV. It shall not be reproduced or used without the express prior written authorization of OTV.

NOTICE D'INSTRUCTION D'UTILISATION
UTILIZATION GUIDE

Instruction de montage / *Installation instructions* :

➢ Outils nécessaires / *Tools* :

1. Outil spécifique (cf. Annexes). Se rapprocher d'Opalium pour se procurer cet outil. / *Specific tool (cf. Annexes). Opalium is supplying this tool.*
2. Loctite 5331 (à conserver entre 8 et 21 °C) ou similaire (vérifier les conditions de stockage) / *Loctite 5331 (to be stored between 8°C and 21°C) or similar.*

➢ Vérifications d'avant montage / *Preparation* :

1. Vérifier l'état général de la buse, qu'elle ne soit pas abimée (oreille cassée ou pliée), qu'il n'y ait pas de détritus à l'intérieur. Vérifier également le manchon de la rampe de distribution. / *Check the general aspect of the nozzle: clean, no damage (ear not bended or broken for example). Also check the coupling on the distribution pipe.*
2. Vérifier que le diaphragme à 6 trous est visible depuis le cône et celui à 1 trou depuis le manchon. SI cela n'avait pas été fait à la réception du produit, vérifier l'ébavurage de l'orifice unique. / *Make sure that the diaphragm with 6 holes is clearly visible from the cone and the one with hole from the coupling. In case this was not done at the reception of the equipment, check the drilling of the holes, as shown above.*
3. Vérifier que le cône est correctement serré dans le manchon (serrage complet, pas d'ergots l'un sur l'autre : ces ergots, situés sur le cône et le manchon, empêche les 2 parties de se desserrer). / *Check that the cone is correctly screwed on the coupling: complete screwing, no fin on top of each (fins are the small triangle parts that prevent the cone and the coupling to unscrew).*
4. Vérifier, à l'aide de l'outil, que le contre-écrou est bien serré sur la partie haute du manchon. / *Check that the locknut is correctly screwed on the top part of the coupling.*

➢ Installation / *Installation* :

1. Appliquer la Loctite (ou similaire) sur les deux parties à visser (manchon du diffuseur et manchon de la rampe de distribution). / *Apply the Loctite (or equivalent) on both couplings (nozzle and distribution pipe).*
2. Commencer à serrer à la main le diffuseur dans le manchon de la rampe de diffusion, en prenant garde à l'insérer droit. / *Start by manually screwing the nozzle to the distribution pipe. Pay attention to screw vertically.*
3. A l'aide de l'outil, serrer le diffuseur (placer l'outil sur le manchon du diffuseur). Le couple de serrage maximal est de 10 N.m. / *Set the tool on the coupling of the nozzle (not the locknut) and tight it Maximum torque is 10 N.m.*
4. Vérifier, à l'aide de l'outil, que le contre-écrou est bien serré sur la partie haute du manchon. / *Check that the locknut is correctly screwed on the top part of the coupling.*

Ce document comporte des informations confidentielles propriétés d'OTV. Il ne peut être reproduit ou utilisé sans autorisation écrite d'OTV.
This document contains confidential information which is the property of OTV. It shall not be reproduced or used without the express prior written authorization of OTV.

➢ Précautions / *Precautions* :

1. Ne pas utiliser les oreilles du cône à des fins de serrage. Elles sont fragiles, et risquent de se déchirer ou casser. Il ne faut pas utiliser de buses dont les oreilles ont été endommagées. / *Do not use the ears of the nozzles to screw. They are fragile and could break. Nozzles with damages ears shall not be used.*
2. Ne pas utiliser de pinces multiprises ou tout autre outil à dents pour faire le serrage. Les dents endommageraient le diffuseur. Utiliser uniquement cet outil spécifique ou faire le montage manuellement. / *Do not use a pair of pliers or a pipe wrench to tight the nozzle. Such tools would irreversibly damage the nozzle. Only use the specific tool or install them manually.*

➢ Démontage / *Disassembly* :

Pour dévisser le diffuseur de la rampe, utiliser l'outil spécificque sur le manchon du diffuseur. Il est conseillé de limiter les serrages / desserrages des diffuseurs pour ne pas les endommager. Penser à nettoyer les résidus de Loctite. / *To disassemble the nozzle, use only the specific tool employed for the installation. It is recommended to limit the number of installation / removal in order not to damage the nozzle. It also highly recommended to clean the couplings from residual Loctite.*

Les diffuseurs en eux mêmes ne sont pas démontables. Les ergots entre le cône et le manchon seraient endommagés si l'utilisateur tente de desserrer les 2 parties. / *The different parts of the nozzle cannot be disassembled. The fins between the cone and the coupling would be damaged, and become useless for further utilization.*

➢ En cas de problème / *Troubleshooting* :

L'une des causes de chute rapide de la pression et d'augmentation du débit de l'eau blanche peut être le desserrage puis expulsion ou même la casse d'un diffuseur. S'ils ne surviennent pas à la mise en route de l'ouvrage, ces 2 phénomènes sont peu susceptibles d'apparaitre, grâce à l'emploi de Loctite. / *One of the reason why white water pressure could drop, and flow increase is the damage of the nozzle. It could be loosening and ejected or even broken. These 2 phenomena are most likely to occur at the start up of the plant, thank to the use of Loctite.*

Au contraire, si le débit d'eau blanche diminue et la pression augmente, cela peut être dû au colmatage d'un orifice des diaphragmes après un long arrêt (coquillage par exemple en utilisation eau de mer). / *On the other hand, if the flow is reducing but the pressure increasing, this could be due to the clogging of the diaphragms. This could eventually happen after a long break if the white water system was not flushed. Shells could have developed inside it in the case of seawater.*

Finalement, il convient de surveiller le fonctionnement des pompes de recirculation pour s'assurer du fonctionnement normal du système d'eau blanche, spécialement après une longue période d'arrêt durant laquelle le circuit d'eau blanche n'aurait pas été vidangé. / *It is recommended to check on the operation of the white water pumps to ensure the good running of the white water system. Changes in flow, pressure or pump frequency could be the sign of a dysfunction.*

Ce document comporte des informations confidentielles propriétés d'OTV. Il ne peut être reproduit ou utilisé sans autorisation écrite d'OTV.
This document contains confidential information which is the property of OTV. It shall not be reproduced or used without the express prior written authorization of OTV.

ANNEXES
ANNEXES



Figure 7 : Buse de diffusion d'eau blanche / *White water diffusion nozzle*

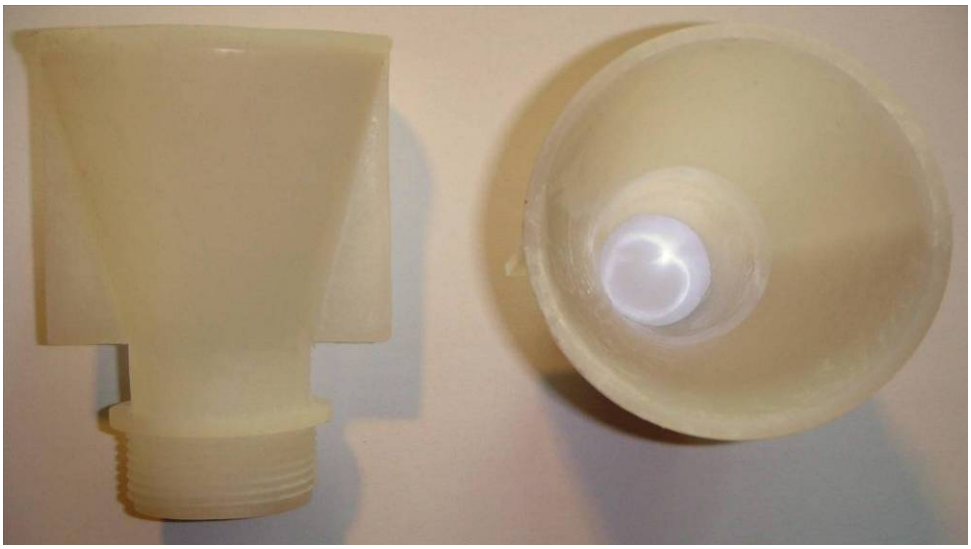

Figure 8 : Cône / *Cone*

Ce document comporte des informations confidentielles propriétés d'OTV. Il ne peut être reproduit ou utilisé sans autorisation écrite d'OTV.
This document contains confidential information which is the property of OTV. It shall not be reproduced or used without the express prior written authorization of OTV.



Figure 9 : Diaphragmes / *Diaphragms*

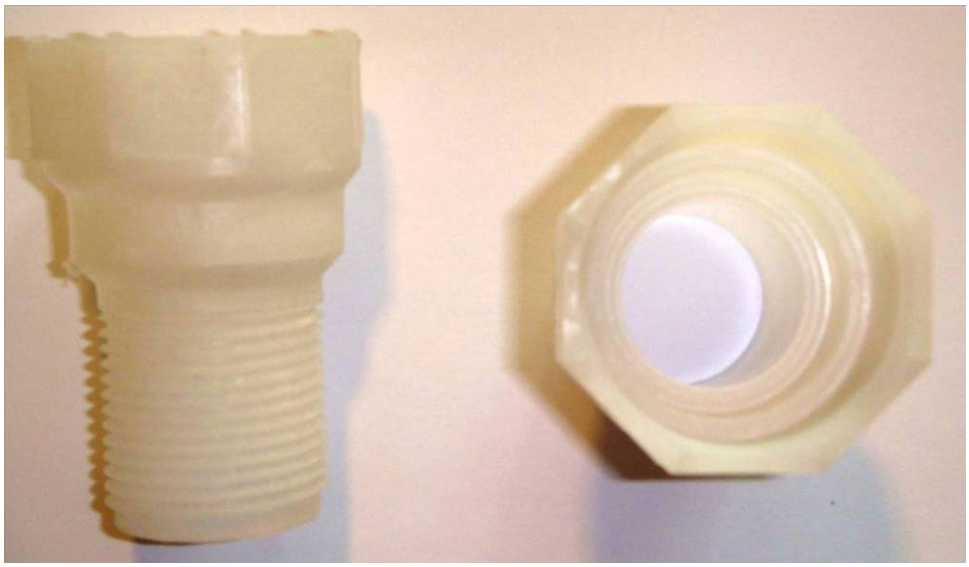

Figure 10 : Manchon / *Coupling*

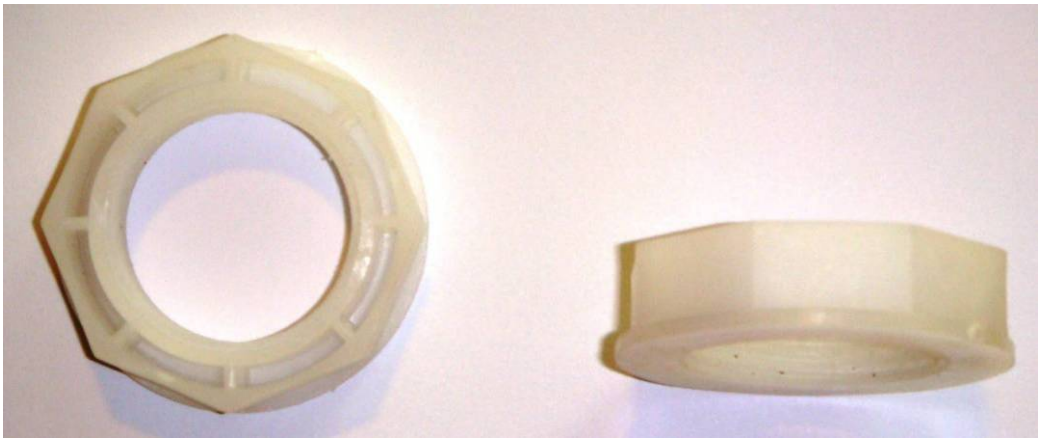

Figure 11 : Contre écrou / *Locknut*

Ce document comporte des informations confidentielles propriétés d'OTV. Il ne peut être reproduit ou utilisé sans autorisation écrite d'OTV.
This document contains confidential information which is the property of OTV. It shall not be reproduced or used without the express prior written authorization of OTV.



Figure 12: Outil spécifique de serrage manuel / *Manual Specific tool*



Figure 13: Outil spécifique de serrage adaptable sur clé dynamométrique / *Specific tool for torque wrench*

Ce document comporte des informations confidentielles propriétés d'OTV. Il ne peut être reproduit ou utilisé sans autorisation écrite d'OTV.
This document contains confidential information which is the property of OTV. It shall not be reproduced or used without the express prior written authorization of OTV.

Project	IQALUIT
Project#:	5000218036
Document #:	5000218036_DS_0001_PM_VWT
By:	BB
Chkd.:	GH
Approv.:	CB

SPIDFLOW

VALVES

Section Manuel OM: 4.3.1.5

CS-912-045 : Identification sheet

VWTC PROJECT NUMBER:	Iqaluit WWTP	REV:	01
PROJECT NAME:	5000218036	SUBMITTED TO (COMPANY):	
ENGINEER:	G. HÉBERT	SUBMITTED TO (RESPONSIBLE)	
PROJECT MANAGER:	C. BEKAERT	PROJECT NUM REFERENCE.:	
PHONE NUMBER:		LOT NUMBER:	

SUPPLIER	EQPT CODE	EQPT TAG NO	DIA	DESCRIPTION	INFO 1	INFO 2	INFO 3	APPLIC.	NOTE	REV
BRAY	ST-912-045	CV-02-405		CHECK VALVE WHITE WATER	CHECK VALVE # V0415XEZ205 4" ANSI 150 316 S/STEEL WITH EPDM // CRN# REQUIRED					1
BRAY	ST-912-045	CV-02-420		CHECK VALVE WHITE WATER	CHECK VALVE # V0415XEZ205 4" ANSI 150 316 S/STEEL WITH EPDM // CRN# REQUIRED					1
BRAY	ST-912-045	CV-02-435		CHECK VALVE WHITE WATER	CHECK VALVE # V0415XEZ205 4" ANSI 150 316 S/STEEL WITH EPDM // CRN# REQUIRED					1
BRAY	ST-912-045	CV-02-455		CHECK VALVE WHITE WATER	CHECK VALVE # V0415XEZ205 4" ANSI 150 316 S/STEEL WITH EPDM // CRN# REQUIRED					1

SUPPLIER	EQPT CODE	EQPT TAG NO	DIA	DESCRIPTION	INFO 1	INFO 2	INFO 3	APPLIC.	NOTE	REV
BRAY	ST-912-045	CV-02-470		CHECK VALVE WHITE WATER	CHECK VALVE # V0415XEZ205 4" ANSI 150 316 S/STEEL WITH EPDM // CRN# REQUIRED					1
BRAY	ST-912-045	CV-02-485		CHECK VALVE WHITE WATER	CHECK VALVE # V0415XEZ205 4" ANSI 150 316 S/STEEL WITH EPDM // CRN# REQUIRED					1

Bray/Rite® Check Valves

1" (25mm) - 60" (1500mm)
ASME Class 125 - 2500

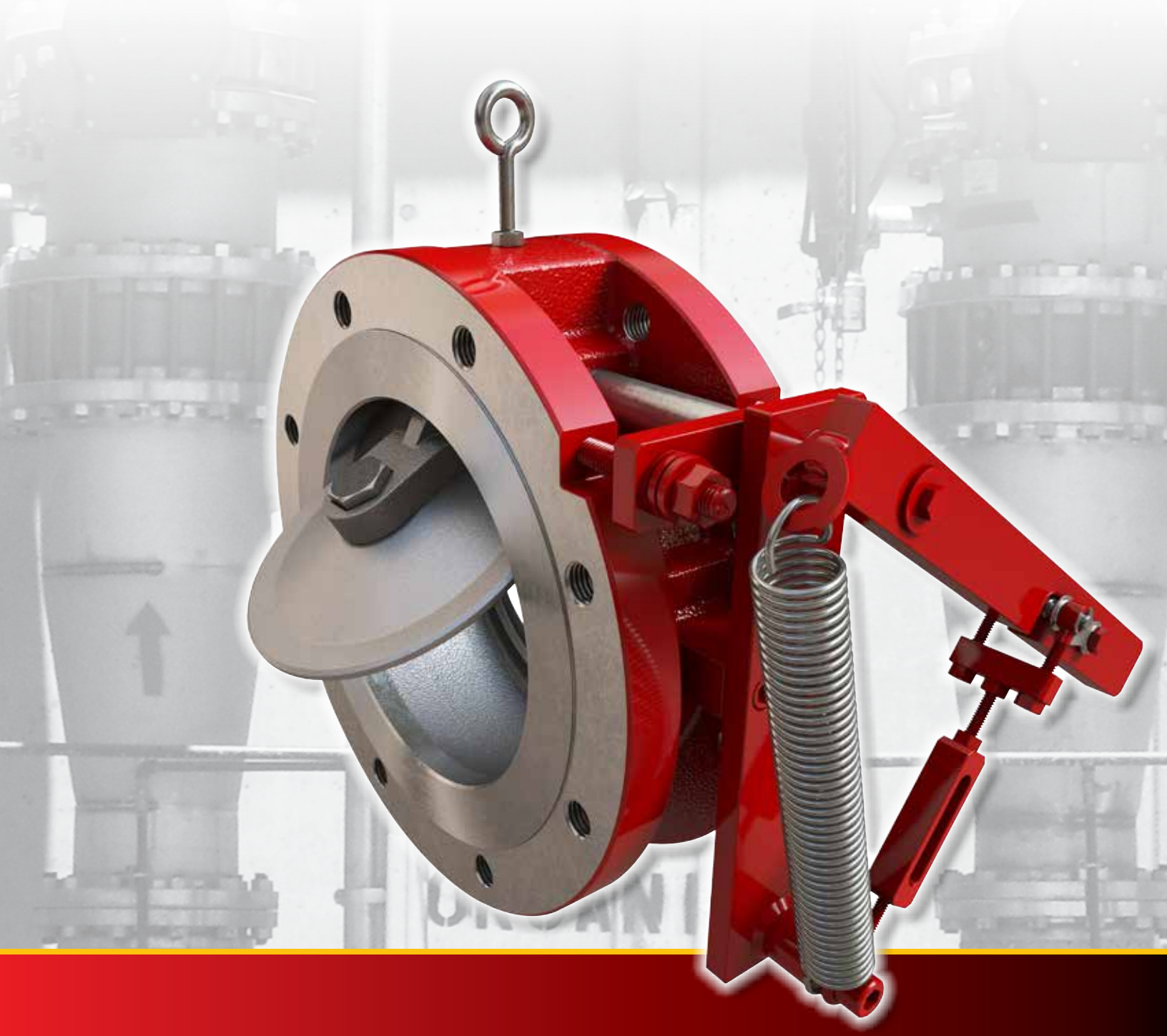

Bray®

WWW.BRAY.COM

YOUR GLOBAL FLOW CONTROL PARTNER™

Rite Corporation, headquartered in Quebec, Canada and founded in 1963, designs and manufactures exceptional Bray/Rite check valves, cam and groove quick couplings, and fluid handling loading and unloading equipment. For over 40 years, Rite has earned a reputation for reliability. This reputation is based on our highest quality manufacturing standards, premium components and thorough control procedures. With a worldwide sales and distribution network, we offer our customers full support wherever the project location.

Our engineers specialize in innovative, individual solutions to industry needs and will assist you with your project requirements. Our knowledgeable sales and support staff are committed to outstanding service and, above all, customer satisfaction. We look forward to recommending a practical and economical solution to your fluid control applications.

Bray/Rite Valves continue to be the premier wafer combination swing check valve. Designed in 1970, their performance remains unsurpassed. The line offers a wide range of valves and accessories, all fully stocked and readily available. Their successful, long term use in applications worldwide has made the Bray/Rite the industry standard for economy, durability and reliability.

State of the Art Check Valves, Bray/Rite is Rite Sized.

Rite's Bray/Rite wafer combination swing check valves are flow–activated and *Rite Sized*. Bray/Rite inlet ports and disc have been shape optimized to achieve a fully open position at low flow rates (3 ft/s on average). Therefore, the Bray/Rite operates exceptionally well in the flow rates typically found in pipelines containing control valves and lines with varying media flows.

Compare the Bray/Rite to typical full-sized swing check valves. Due in part to their oversized, heavier discs, these valves only fully open at an average flow rate of 11 ft/s. When activated at a lower flow rate, these valves loose true controllability and do not fully open. A partially open disc creates an obstruction that produces a higher pressure drop and fluttering of the valve disc – disturbing the flow and increasing the chance of water hammer.

Bray/Rite is *Rite Sized* to eliminate these problems. It has been engineered to accelerate line media through the valve and achieve a virtually unobstructed full opening in low pressure. *Rite Sized*, combined with the limited movement of internal parts during operation, reduces wear – enhancing the long service life of a Bray/Rite valve.

SIZE RANGE
1" (25mm) – 60" (1500mm)
ASME CLASS: 125 - 2500
API, DIN, BS, JIS
Classes Available



SGS
Québec CSA B51, N285.0
PG
ULC
FM APPROVED
SP
Drinking Water NSF / ANSI 61
CE
MEMBER PEI PETROLEUM EQUIPMENT INSTITUTE

ZERO LEAKAGE Bray/Rite valves, either resilient or metal seated, offer zero leakage in all pressure classifications. Each valve is hydrostatically tested at the factory and shipped with a certificate of compliance to MSS SP61. Rite has achieved zero leakage metal-to-metal sealing by a proven, engineered design backed by high quality manufacturing craftsmanship. As the disc closes toward the seat, the increased velocity of the line media and the unique shape of our seat remove all particles from the sealing surfaces – ensuring zero leakage.

LOW PRESSURE DROPS The low pressure drop of the Bray/Rite valve was achieved by Rite's many years of research and development in combination with universities and federal research agencies. Several theses and papers were published including *Minimizing the pressure loss of wafer type swing check valve ASME 79/MA-NE-5*. These results – primarily the optimum valve diameter and elliptical inlet shape – have been incorporated into the Bray/Rite design. Like a venturi, the aerodynamic shape accelerates the line media through the valve with the lowest possible pressure drop. Pressure drops at the full open position are between 0.5 to 0.7 psi for all size valves. Additionally, the disc shape and mass have been optimized to use the pipeline media flow as a lifting force on the disc, thus allowing a full open valve position in low line velocity.

HIGH FLOW CAPACITY Bray/Rite's valve inlet elliptical shape and optimum diameter, plus its virtually unobstructed opening combine to produce a substantially higher flow capacity (C_V) than other wafer combination swing check valves.

REDUCED WATER HAMMER An additional focus of Rite's R&D program was linked to Water Hammer Prediction. Findings were applied in the design of the valve to largely reduce or eliminate water hammer by closing the valve at the right moment (before reverse flow occurs). The Bray/Rite uses gravity, assisted by an internal spring, to pull the disc toward the closed position on decelerating line media flow. Rite has developed proprietary predictive software to select the best solution for your specific application.

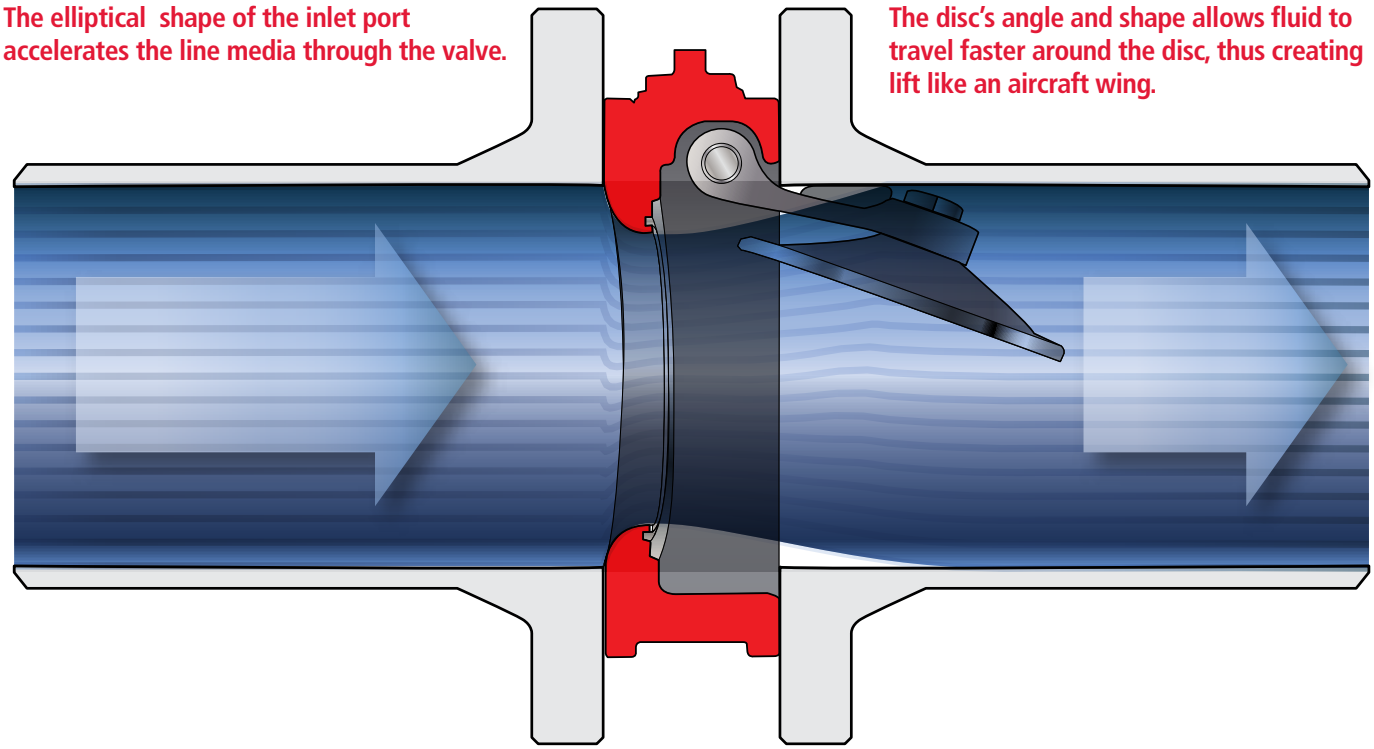

THE RITE ADVANTAGES

Bray/Rite SEATS Zero leakage shut off, even at 0 psi, is achieved through lapped metal seating surfaces. The seat and the disc edges are precisely machined then hand polished for a perfect fit. The disc hinge provides an even force at the disc to seat contact point, ensuring a uniform seal. Controlled tolerances maintain the proper disc to seat alignment. The spring assisted closure tension holds the disc in place when line pressure is removed.

RESILIENT SEATS A dynamic, O-ring seat is contained in a specially designed body groove. As line pressure is applied, the valve disc uniformly compresses the seat into the groove ensuring a zero leakage seal. The seat is easily replaced, simplifying maintenance.

METAL-TO-METAL SEATS Integral metal seats feature an engineered and precision machined angle that minimizes the metal-to-metal contact point between the disc and seat for a perfect seal. Pressure is applied evenly over the disc, eliminating galling and reducing wear.

METAL SEAT INSERT Carbon steel and ductile iron bodies have a stainless steel seat inserted into the body seal area, offering the same precision design as the integral metal-to-metal seat. These bodies are also available with a Resilient Seat Insert.

INHERENTLY FIRE SAFE All Bray/Rite valves are inherently fire safe due to the valve design, materials and construction. In the event of a pipeline fire, both resilient seated and metal seated valves provide metal-to-metal contact between the seat and disc and surpass all leak test standards.

Pressure Drop with Water

Valve Size	Cv	Min Flow to Fully Open Valve		Approx Pressure Drop w/ Water
Inch/ mm		GPM	Ft/ sec.	PSI @ 10 ft/sec.
1 / 25	30	28	10.4	0.78
1.5 / 40	38	68	10.7	2.1
2 / 50	84	46	4.4	1.7
2.5 / 65	137	76	5.1	1.4
3 / 75	221	197	8.5	1.1
4 / 100	373	157	4	1.4
5 / 125	679	352	5.6	1.1
6 / 150	931	367	4.1	1.5
8 / 200	1,440	428	2.7	1.6
10 / 250	2,623	837	3.4	1.1
12 / 300	3,531	1,229	3.5	1.2
14 / 350	3,226	1,180	2.7	2
16 / 400	3, 911	1,447	2.5	2.6
18 / 450	5,799	3,376	4.8	1.7
20 / 500	7,769	6,500	6.3	1.5
24 / 600	10,105	8,321	5.9	1.6
26 / 650	13,350	9,200	5.5	1.5
28 / 700	15,000	9,520	5.6	1.5
30 / 750	18,041	10,303	5.1	0.9
32 / 800	20,900	12,150	5	1.4
36 / 900	25,675	15,850	5.2	2
40 / 1,000	39,340	25,310	6.1	2.4
42 / 1,050	47,914	31,304	7.5	2.7
48 / 1,200	44,983	33,095	5.9	1.6
54 / 1,350	63,000	45,000	6	0.9
60 / 1,500	70,500	62,800	6.2	1.1

Notice the full open stable minimum velocity and the efficiency calculated at a normal velocity of 10 f/sec.

Resilient Seat



Metal-To-Metal Seat



Metal Seat Insert





The convex profile of the disc reacts to line flow like an airfoil. The velocity above the disc is higher than the velocity below, thus effectively creating lift.

PUMPING COST SAVINGS Pumping costs have been often overlooked but are now gaining in importance due to the increasing cost of energy. With Bray/Rite's long service life, its cost is actually insignificant to the end user compared to the energy lost pumping the fluid through the valve. Below is a comparison between different valve styles, assuming all valves are 100% open.

Yearly Energy Costs Comparison At 10 F/S - $0.10/kWh

VALVE SIZE / INCHES	2	2.5	3	4	5	6	8	10	12
Bray/Rite	$42	$66	$99	$174	$250	$254	$635	$872	$1,113
Tilting Disc	$50	$66	$102	$161	$250	$272	$425	$606	$739
Center Guided "Silent"	$115	$214	$339	$608	$1,002	$1,409	$2,541	$4,006	$3,447
Full Size Swing Check	$57	$66	$99	$191	$250	$415	$680	$1,002	$1,347
Dual Door	$218	$209	$314	$441	$491	$707	$979	$1,118	$1,282

HORIZONTAL / VERTICAL INSTALLATION

Unlike most conventional check valves, Bray/Rite wafer combination swing check valves are ideal for both horizontal and vertical pipeline installation – requiring only a single line for operation. This greatly increases pipeline layout flexibility and significantly reduces costs. In vertical installations, typical swing check valves must have an offset pipe section installed since these valves only function in a horizontal position. **See factory for vertical down applications.**

Bray/Rite horizontal assembly compared to conventional check valve assembly.

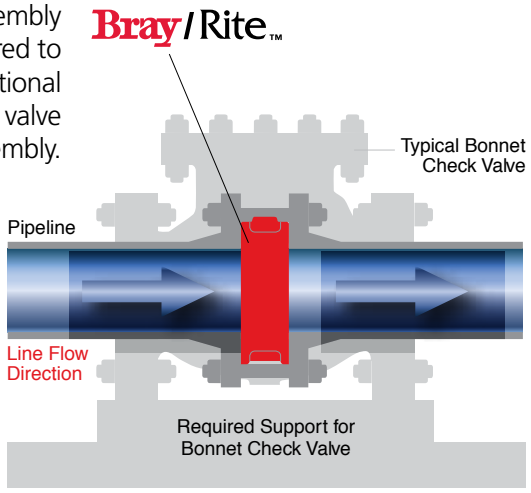

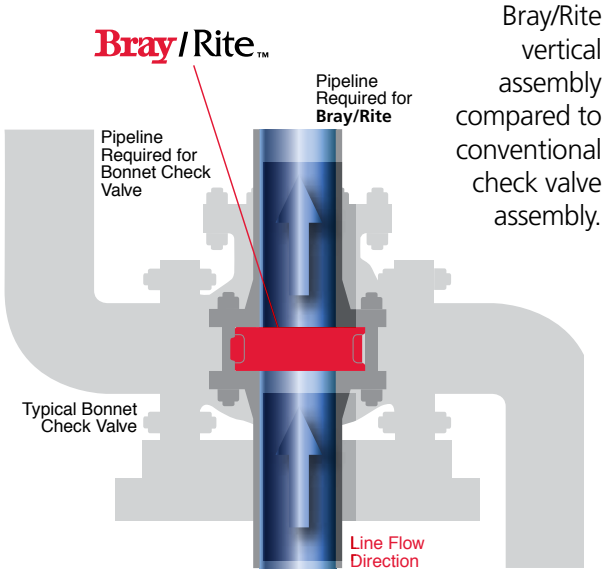

Bray/Rite vertical assembly compared to conventional check valve assembly.

LIGHT WEIGHT & REDUCED SIZE Installation costs are greatly reduced by Bray/Rite's light weight and minimal space requirements. Their compact design minimizes the distance between faces and are easily installed between all flanges.

Bray/Rite valves do not require added support to maintain pipeline integrity and need only 30% of the space of typical full size swing check valves.

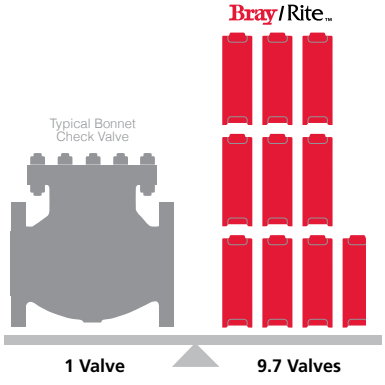

THE RITE ACCESSORIES

Bray/Rite has designed and manufactured an extensive range of accessories for specific applications.
Some commonly used accessories and a PVC body uniquely designed for a specific application are shown below. Bray/Rite valves can be fitted with any one or a combination of accessories, including safety caging.



EXTERNAL LEVER & SPRINGS (SA-01)

Provide additional external force to anticipate closure in applications where rapid media flow reversal requires the valve to close faster than standard.

Applications: Pump protection when pumping in parallel into a common header.

DUAL WEIGHTS (SA-10)

Two opposing weights, one to adjust cracking pressure and one to counter balance the disc.

Applications: Insures valve is fully open on very low flows.



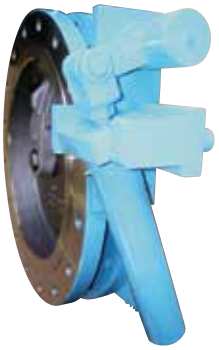

EXTERNAL LEVER & COMPRESSION SPRING (SA-40)

Provide additional force to anticipate valve closure, using an enclosed compression spring, in applications where rapid media flow reversal requires the valve to close faster than standard.

Applications: Pump protection when pumping in parallel into a common header, where spring force required is higher than a SA-01 or if an enclosed spring is preferred.

HYDRAULIC PNEUMATIC SPEED CONTROLS (H-100, SA-50)

Slow the opening of the valve to protect the disc assembly in the last few degrees of travel. These units offer adjustable speed control and are ideal in fluctuating flow applications. The H-100 uses the SA-01 spring. The SA-50 uses the SA-40 compression spring.

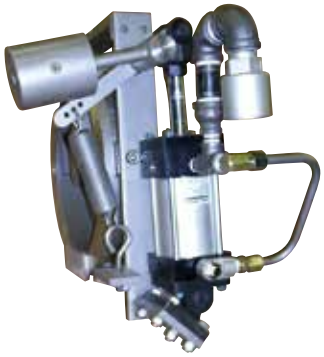



EXTERNAL LEVER & WEIGHT (SA-16)

Provide additional external mass to increase the cracking pressure (pressure required to open the disc) and increase the closing force of the moving disc.

Applications: Where increased cracking pressure is required. Waste Water service or where suspended solids are present in the process (the weight will insure inertia induced positive closure). Relief valve with adjustable cracking pressure.

LIMIT SWITCH (SA-2)

Provides remote indication of valve position and a positive indication of flow. If two are installed the first shows the closed position, the second the fully opened valve. (A partially opened valve is subject to premature wear.)

Applications: Automated control systems.

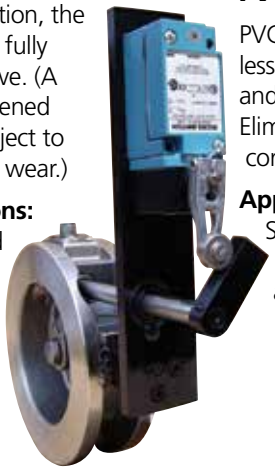



EXTERNAL LEVER, SPRING & WEIGHT (SA-1)

These units use the combination of a weight and spring to add cracking pressure and closing force to the disc.

Applications: Where performing both functions of faster closure and solid handling are required, primarily in waste water

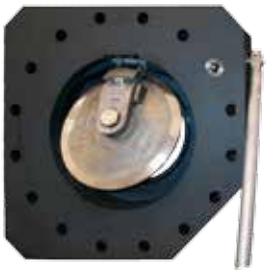

PVC (PEZ SA-4AX)

PVC Body with passivated stainless steel or titanium internals and position indication lever. Eliminates internal body corrosion.

Applications: Used for Salt water, marine life support systems, desalination applications..

SELECTION PROCESS

A **Gather Process Information**
Line Fluid / Pressure / Temperature /Flow Rate / Location / Function

B **Gather Pipe Information**
Size / Material /
Flange Rating / Schedule

C **Select Valve Size** – Based on:
- Full open valve at minimum flow
- or Pipe size

D **Select Design Standard**
- ASME: 125 / 150 / 300
- API 594: 150 / 300 / 400 / 600 / 900 / 1500 / 2500
- PN: 10 / 16 / 25 / 40

E **Verify Conditions**
- Valve full open at minimum flow
- Max velocity 15 f/sec for Liquid
- Max velocity Mach 0.33 for Gas
- Non-reciprocating service
- No accessories required
- Installed with a minimum of 5 pipe diameters upstream and 3 downstream from a disturbance
- Not installed on close coupled multiple pump header

F **Select Model**
If answer is YES to All conditions:
- Select Model 210 (ASME, DIN) Models 201 - 205 (API 594)
- or if ULC FM* approved required select 212 (ASME), 312 (DIN) 2"-12" ONLY

If answer is NO to Any condition:

Select Model 260 (ASME, DIN) Models 201 - 205 (API 594)

G **Select Pressure Class and Body, Seat & Spacers Materials, and specific application accessories as required**

ORDERING EXAMPLE

A 6" heavy duty, Class 150 wafer combination swing check valve, carbon steel body with stainless steel inserted seat, stainless steel spacers and an external spring accessory would be written as follows:

06 15 SMZ SA01



SELECTION INFORMATION

Description			Color
1 Size	01-60	1"- 60" ASME 25mm-1500mm DIN	
2 Model	201	API 594 #400/600	Grey
	203	API 594 #900/1500	Grey
	205	API 594 #150/300	Grey
	210	Standard ASME / DIN	
	212	ULC FM Approved ASME *	Red
	312	ULC FM Approved DIN *	Red
	260	Heavy Duty ASME / DIN	
	211	Flanged Body	
3 Pressure Class	10	PN 10	
	12	ASME 125 lb	
	15	ASME 150 lb	
	16	PN 16	
	25	PN 25	
	30	ASME 300 lb	
	40	PN 40	
	–	Other	
4 Body	C	ASTM A 126 CLB	Black
	D	ASTM A 395	Green
	S	ASTM A 216 WCB	Yellow (Class 300) Blue (Class 150)
	X	ASTM A 351 CF8M	None
	T	Titanium	None
	–	Other **	
5 Seat	B	BUNA -N	
	E	EPDM	
	M	A240 - 304 (Inserted or Integral) ***	
	T	PTFE	
	V	Viton	
6 Spacer	T	PTFE (Standard on 1"-12" Cast Iron Bodies)	
	Z	A479 - 316	
	–	Other **	
7 Special Application Assessories	SA-01	External Spring	
	SA-1	External Spring & Weight	
	SA-3	Backflush Lever and External Spring	
	SA-2	Limit Switch	
	SA-4	External Position Indicator	
	SA-4A	Backflush Lever	
	SA-7	Emergency Shut-off, Fusible Link	
	SA-10	Dual Balanced Weights	
	SA-40	External Compression Spring	
	SA-16	External Weight	
	SA-40A	External Compression Spring and Weight	
	H-100	External Spring, Weight, Hydraulic Damper	
	SA-50	External Compression Spring, Weight, & Hydraulic Damper	
	–	Other	

* ULC Approved under NFPA No. 11,13,14,15,20,22,24. FM Approved.
** Available in most exotic materials, please consult factory.
*** Inserted pressed-in interference seat at a minimum of 304 SS for carbon steel and ductile iron bodies, or seat is intergral to body.

Note: Spacers are located on both sides of the disc hinge, ensuring a uniform seal.
Note: The standard Bray/Rite is a wafer body style. Flanged Ends, RTJ style and other connections are available, please consult factory.

THE RITE DIMENSIONS

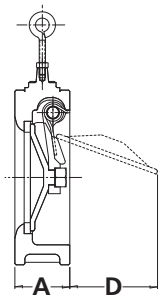

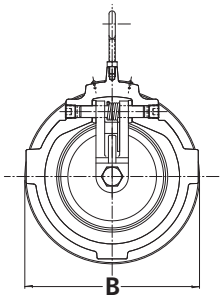

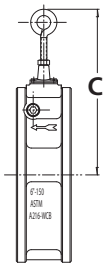

Models 210 (ANSI), 205 (API 594), Class 125/150

Nominal Pipe Size		A		A		B		C		D		Weight		Weight	
		210		205		210/205						210 SS		205 SS	
Inch	mm	Inch	mm	Inch	mm	Inch	mm	Inch	mm	Inch	mm	lbs	kg	lbs	kg
1	25	2	50.8			2 5/8	66.7	3.4	86.3					1.9	0.85
1½	40	2½	63.5			3 3/8	85.7	4 1/8	104.7			3.8	1.8		
2	50	1¾ 2⅛*	44.5	2 3/8	60.3	4 1/8	104.8	4 1/4	107.9	1 3/16	30.1	4.2	1.9	6.0	2.7
2½	65	1 7/8 2⅜*	47.6	2 5/8	66.7	4 7/8	123.8	4½	114.3	1 3/8	34.9	6.1	2.8	9.0	4.1
3	80	2 2⅝*	50.8	2 7/8	73.0	5 3/8	136.5	5	127.0	1 5/8	41.2	8.4	3.8	13.0	5.9
4	100	2¼	57.2	2 7/8	73.0	6 7/8	174.6	5 3/4	146.0	2 3/4	69.8	13.5	6.2	19.3	8.75
5	125	2½	63.5	3 1/4	82.5	7 3/4	196.9	6½	165.1	3 5/8	92.0	18.1	8.2	23.0	10.4
6	150	2¾	69.9	3 7/8	98.4	8 3/4	222.3	7 1/4	184.5	4½	114.3	22.5	10.2	34.0	15.4
8	200	2⅞	73.0	5	127.0	11	279.4	8 1/4	209.5	5 3/4	146.0	34.5	15.7	65.0	29.5
10	250	3⅛	79.4	5 3/4	146.0	13 3/8	339.7	9 5/8	244.4	7½	190.5	50.9	23.1	88.1	40
12	300	3⅜	85.7	7 1/8	181.0	16 1/8	409.6	10 3/4	273.0	8 3/4	222.2	83.7	38.0	154.2	70
14	350	4¼	108.0	7 1/4	184.0	17 5/8	447.7	13	330.2	7 1/4	184.1	115.0	53.0	200	90.8
16	400	4¼	108.0	7½	191.0	20 1/8	511.2	14½	368.3	8 1/4	209.5	130.0	59.0	230	104.4
18	450	4¼	108.0	8	203.0	21½	546.1	15 1/4	387.3	10½	266.7	170.0	77.2	320	145.3
20	500	5½	139.7	8 5/8	219.0	23 3/4	603.3	18 3/4	476.2	11	279.4	230.0	104.4	360	163.4
24	600	6	152.4	8 3/4	222.0	28 3/16	716.0	20½	520.7	15	381.0	385.0	175.0	560	254.2
26	650			12.5	318	29.25	749.3	20.88	530.4	17	432.0			965	438.1
28	700	6½	165.1			32 5/8	828.7	26	660.4	17 3/4	450.8	580.0	263.3		
30	750	9	228.6	12	305.0	34 5/8	879.5	27½	698.5	16 1/4	412.7	965.0	438.1	1300	590.2
32	800	9	228.6			36 13/16	936.8	29	736.6	16 3/4	425.4	1235.0	560.7		
36	900	11½	292.1	14½	368.0	41 1/8	1044.6	30	762.0	18 1/4	463.5	1525.0	692.4	2000	908.0
40	1000	11½	292.1			45 5/8	1158.9	35 1/4	895.3	21½	546.1	2200.0	998.8		
42	1050	12	304.8	17	432.0	48	1219.2	33 1/4	844.5	28	711.2	2235.0	1014.7	3200	1452.8
48	1200	14	355.6	20 5/8	523.9	54½	1384.3	38 1/4	971.5	24½	622.3	3250.0	1475.5	3910	1775
54	1350	23	584.2			61	1549.4	43	1092.2	19 3/8	492.1	5500.0	2497.0		
60	1500	23	584.2			67 3/8	1711.3	38 1/4	971.5	33	838.2	7000.0	3178.0		

* For Cast Iron

Models 210 (ANSI), 205 (API 594), Class 300

Nominal Pipe Size		A		A		B		C		D		Weight		Weight	
		210		205		210/205						210 SS		205 SS	
Inch	mm	Inch	mm	Inch	mm	Inch	mm	Inch	mm	Inch	mm	lbs	kg	lbs	kg
1	25	2	50.8			2⅞	73.0	3 2/5	86.4			1.9	0.85		
1½	40	2½	63.5			3¾	95.2	4 1/8	104.8			4.4	2.0		
2	50	1¾	44.5	2⅜	60.3	4⅜	111.1	4 1/4	108.0	1 3/16	30.0	4.0	1.8	8.4	3.8
2½	65	1⅞	47.6	2⅝	66.7	5⅛	130.2	4½	114.0	1½	38.0	5.9	2.7	13.2	6.0
3	80	2	50.8	2⅞	73.0	5⅞	149.2	5	127.0	1 11/16	43.0	7.9	3.6	15.4	7.0
4	100	2¼	57.2	2⅞	73.0	7⅛	181.0	5 3/4	146.0	2 7/16	62.0	11.9	5.4	22.5	10.2
5	125	2½	63.5	3¼	82.5	8½	215.9	6½	165.0	3⅜	86.0	18.9	8.6	27.5	12.5
6	150	2¾	69.9	3⅞	98.4	9⅞	250.8	7 1/4	184.0	4¼	108.0	26.9	12.2	43.0	19.5
8	200	2⅞	73.0	5	127.0	12⅛	308.0	8 1/4	210.0	5⅜	136.0	41.9	19.0	76.0	34.5
10	250	3⅛	79.4	5¾	146.0	14¼	362.0	9 5/8	244.0	7	178.0	61.7	28.0	109.0	49.5
12	300	3⅜	85.7	7⅛	181.0	16⅝	422.3	10 3/4	273.0	8⅛	206.0	94.7	43.0	198.2	90.0
14	350	8¾	222.3	8¾	222.0	19⅛	486.0	13	330.0	7¼	184.0	286.3	130.0	286.3	130.0
16	400	9⅛	231.8	9⅛	232.0	21¼	540.0	14½	368.0	8¼	210.0	352.4	160.0	352.4	160.0
18	450	10⅜	263.5	10⅜	264.0	23½	597.0	15 1/4	387.0	10½	267.0	440.5	200.0	440.5	200.0
20	500	11½	292.1	11½	292.0	25¾	654.0	18 3/4	476.0	11	280.0	572.7	260.0	572.7	260.0
24	600	12½	317.5	12½	318.0	30½	774.0	20½	520.0	15	381.0	925.1	420.0	925.1	420.0

Model 201 (API 594), Class 600

Nominal Pipe Size		A		B		B		C		D		Weight	
				400lbs		600lbs							
Inch	mm	Inch	mm	Inch	mm	Inch	mm	Inch	mm	Inch	mm	lbs	kg
2	50	2⅜	60.3	4⅜	111.1	4⅜	111.1	4⅝	117	½	13	7	3
2½	65	2⅝	66.7	5⅛	130.2	5⅛	130.2	5⅛	130	⅝	16	10	4.5
3	80	2⅞	73	5⅞	149.2	5⅞	149.2	6	152	¾	19	14.5	6.6
4	100	3⅛	79.4	7	177.8	7⅝	193.7	6¾	171	1½	38	24	11
6	150	5⅜	136.5	9¾	247.6	10½	266.7	9½	241	2⅛	54	54	25
8	200	6½	165.1	12	304.8	12⅝	320.7	10¾	273	2¾	70	96	44
10	250	8⅜	212.7	14⅛	358.8	15¾	400	12	305	3	76	171	78
12	300	9	228.6	16½	419.1	18	457.2	14¾	375	4⅛	105	250	114

Rite Corporation
A Subsidiary of Bray International, Inc.
10250 Parkway, Montreal, Quebec, Canada H1J 2K4
Tél 514.324.8900 Fax 514.324.9525
© 2016 Rite Corporation. All rights reserved.
R-3001_EN_V31_2016-10

Ritepro Corporation

A SUBSIDIARY OF / UNE FILIALE DE BRAY INTERNATIONAL INC.

INSTALLATION AND MAINTENANCE MANUAL

FOR

CHECK RITE WAFER TYPE SWING CHECK VALVES

MI-200

SIZES 1½" - 42"

ANSI SERIES: 125 - 2500

MODELS 201, 202, 203, 205, 210, 211, 212, 260, 262

10 August 2005

Ritepro Corporation, 12200 Albert Hudon, Montreal, Quebec, Canada, H1G 3K7
Tel: (514) 324-8900 ! Fax: (514) 324-9525
Web Site: www.ritepro.com ! Email: sales@ritepro.com

Table of Contents

Subject ***Page***

1.0 Introduction to Check Rite Wafer Type Swing Check Valves 2

2.0 Description of Check Rite Valves 2

3.0 Dis-Assembly and Assembly Instructions for Check Rite Wafer Type Swing Check Valves 4

4.0 Installation Instructions 6

5.0 Maintenance Requirements and Information 7

6.0 Check Rite and Spool Installation 8

7.0 Nameplates 8
Serial Number 8
Figure Number 8

8.0 Safety Warnings 9

9.0 Non Shock Pressure -Temperature Ratings 10
Cast Iron (ASTM A126-CLB) 10
Ductile Iron (ASTM A395) 10
Carbon Steel (ASTM A216-WCB) 10
Stainless Steel (ASTM A351-CF8M) 11

Illustrations

2" - 12" Series 125/150/300 Model 210 12

14" - 42" Series 125/150 Model 210 13

Stud Dimensions E-8 ANSI Series 125 - 1500 14

Spool Dimensions E-9 ANSI Series 125 / 150 / 300 15

2" - 12" Series 150 / 300 Model 262... 16

1.0 Introduction to Check Rite Wafer Type Swing Check Valves

Modern piping applications demand better features, performance and economy in a check valve.

Features:

- Simplicity
- Compactness
- Minimum Weight

Performance Characteristics:

- Silent operation
- Non Slamming
- Rapid Response
- Low Pressure Drop
- Bubble Tight Shut-Off

A combination of these features and performance characteristics ensure long service life as characterized by Check Rite.

2.0 Description of Check Rite Valves.

Check Rite valves consist of a compact Body (1) with a single plate Disc (12) attached to a Hinge (2) which in turn is supported by a Hinge Pin (7) inside an off-center body cavity.

The Disc is mechanically biased to the closed position by a torsional Spring (5) located between the two hinge lugs. The Hinge Pin (7) is retained by two NPT Pipe Plugs (8) inside the Body (1). The Seat (3) can be:

- Metal to Metal
- Metal to Buna, Viton or Teflon

An Eyebolt (10) located on the top of the Check Rite valve aids for easy installation.

The Nameplate (11) located on the top pad specifies:

- Size
- Serial Number
- Figure Number (Pressure Class and Materials)
- Ritepro Corporation

Check Rite valves are designed to open when a pressure of less than 1 psi (.07 bar) is applied across the face of the Disc (12).

Check Rite valves are provided for installation inside the bolt circle and between standard flanges, using flat faced asbestos gaskets or as specified.

Check Rite valves are normally installed with the Eyebolt pointing vertically upwards in a horizontal run of pipe, with the arrow on the Body pointing in the direction of flow.

> For vertical pipe run applications, the flow direction is the only orientation required in a straight length of pipe.

All Check Rite valves are hydrostatically tested in accordance with MSS-SP-61 test procedures and zero leakage criteria.

In addition a "Zero Head Leakage" test is performed, where the Check Rite valves are placed in a horizontal position (see sketch) with the flow direction pointing vertically upwards.

An internal hydrostatic pressure equivalent to the head of water which can be retained within the downstream portion of the valve body is applied. During this one hour test, no leakage is allowed.

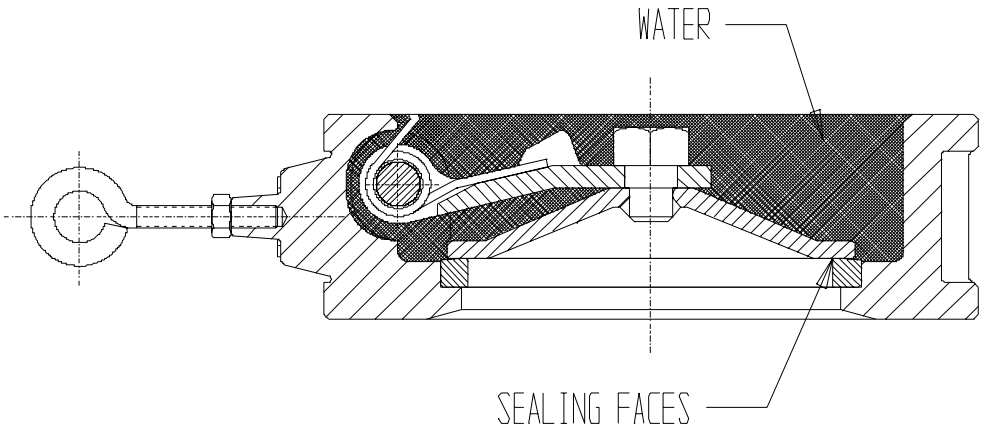

Check Rite valves are manufactured to high quality levels as specified in the applicable standards such as ANSI, MSS, API and CSA.

Check Rite valves in sizes 14" to 42" in classes 125 to 300 and all sizes in the higher pressure classes have a different Hinge-Disc connection which is illustrated on the applicable Specification Sheets.

The standard connection for small valves 2" to 12" classes 125 to 300 is a welded assembly, by means of a Shoulder Pin (4) passing through the Hinge (2) and Seal-welded to the Disc (12). In the larger sizes and higher pressure classes, the Disc (12) is assembled to the Hinge (2) with a Nut (15) and secured by welding.

A heavy duty Hinge (2) is available for valves sizes 2" to 24" in which the Disc (12) is attached to the Hinge (2) with a Nut (15) and a weld is used to secure the components. This is the Model 260-262 valve. All other dimensions, maintenance procedures, and O-Ring sizes apply as stated in this manual.

3.0 Dis-Assembly and Assembly Instructions for Check Rite Wafer Type Swing **Check Valves**

The simple design of the Check Rite valve permits for easy assembly and disassembly.

The following assembly procedure applies to all Check Rite valves.

To Dis-assemble the valve:

a) Place the Body (1) in a horizontal position with the disc assembly showing.
b) Remove the Plugs (8) on either side of the Body (1).
c) Hold the Spring (5) in position and slide the Pin (7) out of the Body (1).
d) Slowly release the pressure on the Spring (5) and remove it from the valve.
e) The Hinge-Disc Assembly can now be lifted from the Body (and disassembled, if required, on large sizes).
f) Remove the Spacers (6).
g) Remove the O-Ring (14) if required.

To re-assemble the valve:

a) Clean all parts with Varsol or other acceptable solvent.
b) Place the Body (1) in a horizontal position with the seating face pointing upwards.
c) If required, insert O-Ring (14) in the seat groove. (See next page for installation instructions).
d) Place the Hinge-Disc Assembly (2,12) in the body cavity.
e) Insert the Pin (7) through the plug hole on either side of the Body and slide a Spacer (6) in between the Body (1) and adjacent hinge lug.
f) Press Torsion Spring (5) between the hinge lugs and body cavity, then advance the Pin (7) through the Spring (5) and the second hinge lug.
g) Slide the second Spacer (6) between the Body and hinge lug and advance the Pin (7) into the Body (1).

Position the Hinge Pin (7) central to the valve body prior to the installation of the retaining Plugs (8).

h) Check that the torsion spring ends are seated properly.
i) Apply Teflon tape or sealing compound on retaining Plugs (8), install Plugs and tighten both sides with an Allen key.

j) **Check:**

aa) that the valve opens and closes freely.

bb) that adequate freedom of movement of the Shoulder Pin-Disc connection is provided for the disc to adapt a self-aligning position with the seat.

IMPORTANT-INSERT O-RING AS FOLLOWS

aa) Place O-Ring (14) on top of seat groove.

bb) To prevent looping, insert the O-Ring as shown by pressing the O-Ring into the groove in the following numerical sequence.

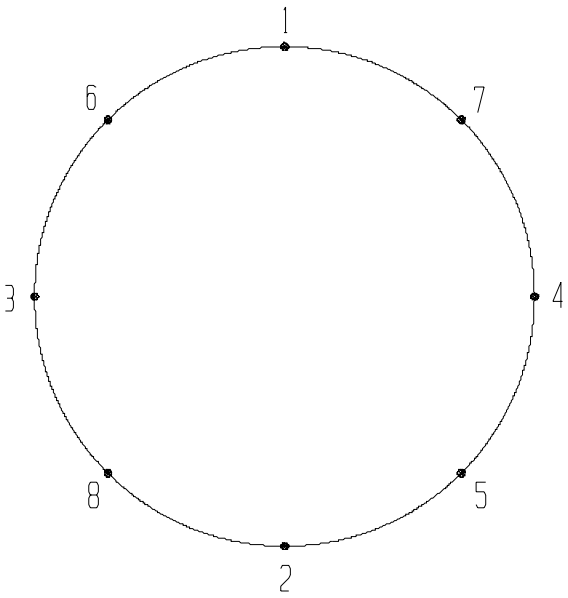

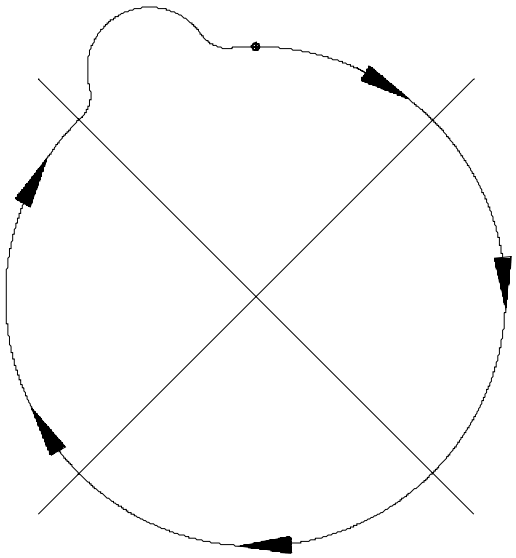

Right Wrong

cc) Having engaged the O-Ring in the groove according to the above illustration, proceed to smooth out the O-Ring using thumb pressure.

It is important to smooth out the O-Ring so that there are no visible ripples or loops.

It should be noted that the O-Ring groove is slightly larger than the O-Ring and it follows that the O-Ring must be hoop stretched to engage the groove.

4.0 Installation Instructions

The stud selection sheet (Specification Sheet E-8) shows the ease with which Check Rite valves are installed.

The valve is inserted between two companion flanges with gaskets on the contact faces. Studs are installed, which will span the valve, and tightened in the same manner as any flange connection.

The Check Rite valve outside diameter is designed to locate the valve in the same centerline as the companion flanges when mounted inside the studs.

The normal installation of a Check Rite valve is for horizontal flow with the hinge pin (7) in the horizontal upper position, or for vertical flow, with the flow direction upwards.

When removing a Check Rite valve from the line, only one half of the studs need to be removed and the others loosened.

IMPORTANT:

1) Check the flow arrow on the body before inserting the Check Rite valve between the flanges.

2) Pipeline flanges must be parallel and have the same pressure class rating as the valve.

3) There must be no obstructions in the flange or pipe bore as this would prevent the valve from opening fully.

If slip-on flanges are used, make sure that no weld projects into the pipe bore.

5.0 Maintenance Requirements and Information

No periodical maintenance work is required for Check Rite valves. For replacement of O-Rings refer to Section 3.0, "Assembly and Dis-assembly of Check Rite Valves".

The standard O-Ring numbers, Plug sizes and Allen key sizes for class 125/150/300 are listed below for valves 2"-42". For other classes, contact the factory.

Valve Size	*O-Ring Size S/N 82*	*O-Ring Size S/N 88*	*Plug Size NPT*	*Allen Key Size*
2"	127	128	1/4"	1/4"
2.5"	133	133	1/4"	1/4"
3"	141	141	3/8"	5/16"
4"	235	235	3/8"	5/16"
5"	243	242	3/8"	5/16"
6"	249	248	3/8"	5/16"
8"	260	259	1/2"	3/8"
10"	368	368	1/2"	3/8"
12"	448	447	3/4"	9/16"
14"	449		3/4"	9/16"
16"	453		3/4"	9/16"
18"	455		3/4"	9/16"
20"	458		1"	5/8"
24"	462		1"	5/8"
30"	471		1 1/2" *	1 1/4" *
36"	473		1 1/2" *	1 1/4" *
42"	3/8 x110"		2" *	1 5/16" *

* Square Head Plug

6.0 Check Rite and Spool Installation

As shown on Specification Sheet E-9, when a standard flanged valve is replaced with a wafer valve, a spool piece can be inserted with the Check Rite valve to obtain the required face to face dimension.

The installation instructions in Section 4.0 above apply.

7.0 Nameplates

Serial Number

The serial number gives the style of the valve internals and the date of manufacture of the valve.

The valve internals are based on either model 210 or 212. The first two digits of the serial number give the model.

82	Model 210
88	Model 212

For standard valves, the date of assembly is included in the Serial Number stamped on the nameplate attached to the valve. The last four digits of the serial number are the month and year of manufacture.

For UL/FM valves, the serial number is specified by UL and can be any numeric value. These valves are identified by the red paint and a special nameplate is used which includes the UL and FM logos. These valves are always based on Model 212.

A unique serial number is given to all special valves (not UL/FM). For special valves (including UL/FM) the month and year of manufacture are either stamped on the nameplate or on the exterior diameter of the flange, depending on valve size.

Figure Number

The figure number consists of at least five alphanumeric characters. The first two give the class of the valve. The next three give the principle materials of construction.

If the valve has a special model number, ie Model 260, this is stamped at the end of the code or if space prohibits this, then either underneath the code or on the outside diameter of the flange. The table on the following page explains the codes used.

UL/FM valves have either 212 or 312 for a figure number. The materials of construction are always cast iron body, buna seat, stainless internals and Teflon spacer. The applicable specification sheet gives more detailed information.

Valve Class	125	150	300	600	900	1500
Code	12	15	30	60	90	150

Body Material	Cast Iron	Ductile Iron	Steel	Stainless Steel
Code	C	D	S	X

Seat Material	Buna N	EPDM	Stainless Steel	Viton
Code	B	E	M	V

Spacer Material	Teflon	Bronze	Stainless Steel
Code	T	Y	Z

For example a class 150 check valve with a ductile iron body, stainless steel seat and Teflon spacers would be stamped: **15DMT**

8.0 Safety Warnings

1. The valve must be installed in the correct line size between flanges of the correct class.
2. The valve materials of construction must be compatible with the fluids being handled.
3. Pressures and temperatures must be kept within the limits specified by the appropriate ANSI standard, ie: B16.1, B16.34, B16.42, or within the limits specified by the particular design. These values are given on the following pages.
4. An arrow on the body indicates the direction of flow through the valve. The valve must be installed with the arrow pointing in the correct direction.
5. For flow in the horizontal direction, the valve shall be installed with the Pin in the horizontal upper position with the eye bolt pointing vertically upwards.
6. The valve must be installed in the correct location in the pipeline. The disc must not open into or against other piping components such as valves, elbows, or tees. For the best performance and life of the valve, a minimum of 10 pipe diameters of straight pipe upstream and downstream of the valve is suggested. Any reduction in this length upstream of the valve reduces the life of the valve proportionally.
7. Plugs must not be removed from the valve while the pipeline is under pressure.
8. Flow rates must be within acceptable limits. Too high a rate may cause extreme pressure drops and erosion of the components. Too low a flow may cause the disc assembly to oscillate and cause wear which may lead to premature failure of the internals.
9. Care should be taken in handling the valve. Mishandling may lead to damage of the sealing components or damage to the externals.
10. Disturbed flow will reduce greatly the life of the valve. Best practice should have 5 straight pipe diameter upstream and 3 downstream.

9.0 Non Shock Pressure -Temperature Ratings

All temperatures in °F and pressures in psi.

Cast Iron (ASTM A126-CLB) **Ratings from ANSI B16.1.**
Class 125

	Temperature											
Size	***-20 to 150***	***200***	***225***	***250***	***275***	***300***	***325***	***353***	***375***	***406***	***425***	***450***
1"-12"	*200*	*190*	*180*	*175*	*170*	*165*	*155*	*150*	*145*	*140*	*130*	*125*
14"-24"	*150*	*135*	*130*	*125*	*120*	*110*	*105*	*100*				
28" to 48"	*150*	*115*	*100*	*85*	*65*	*50*						

Ductile Iron *(ASTM A395)* ***Ratings from ANSI B16.42.***
Class 150

	Temperature						
Size	***-20 to 100***	***200***	***300***	***400***	***500***	***600***	***650***
2"-42"	*250*	*235*	*215*	*200*	*170*	*140*	*125*

Carbon Steel *(ASTM A216-WCB)*
Ratings from ANSI B16.34.
Permissible, but not recommended for prolonged usage above about 800°F.

	Pressure Class				
Temperature	***150***	***300***	***600***	***900***	***1500***
-20 to 100	*285*	*740*	*1480*	*2220*	*3705*
200	*260*	*675*	*1350*	*2025*	*3375*
300	*230*	*655*	*1315*	*1970*	*3278*
400	*200*	*635*	*1270*	*1900*	*3170*
500	*170*	*600*	*1200*	*1795*	*2995*
600	*140*	*550*	*1095*	*1640*	*2735*
650	*125*	*535*	*1075*	*1610*	*2685*
700	*110*	*535*	*1065*	*1600*	*2665*
750	*95*	*505*	*1010*	*1510*	*2520*
800	*80*	*410*	*825*	*1235*	*2060*
850	*65*	*270*	*535*	*805*	*1340*
900	*50*	*170*	*345*	*515*	*860*
950	*35*	*105*	*205*	*310*	*515*
1000	*20*	*50*	*105*	*155*	*260*

Stainless Steel *(ASTM A351-CF8M)*
Ratings from ANSI B16.34.

	Pressure Class				
Temperature	***150***	***300***	***600***	***900***	***1500***
-20 to 100	*275*	*720*	*1440*	*2160*	*3600*
200	*240*	*620*	*1240*	*1860*	*3095*
300	*215*	*560*	*1120*	*1680*	*2795*
400	*195*	*515*	*1030*	*1540*	*2570*
500	*170*	*480*	*955*	*1435*	*2390*
600	*140*	*450*	*905*	*1355*	*2255*
650	*125*	*445*	*890*	*1330*	*2220*
700	*110*	*430*	*865*	*1295*	*2160*
750	*95*	*425*	*845*	*1270*	*2110*
800	*80*	*415*	*830*	*1245*	*2075*
850	*65*	*405*	*810*	*1215*	*2030*
900	*50*	*395*	*790*	*1180*	*1970*
950	*35*	*385*	*775*	*1160*	*1930*
1000	*20*	*365*	*725*	*1090*	*1820*
1050		*360*	*720*	*1080*	*1800*
1100		*325*	*645*	*965*	*1610*
1150		*275*	*550*	*825*	*1370*
1200		*205*	*410*	*620*	*1030*
1250		*180*	*365*	*545*	*910*
1300		*140*	*275*	*410*	*685*
1350		*105*	*205*	*310*	*515*
1400		*75*	*150*	*225*	*380*
1450		*60*	*115*	*175*	*290*
1500		*40*	*85*	*125*	*205*

Illustrations

2" - 12" Series 125/150/300 Model 210
14" - 42" Series 125/150 Model 210
Stud Dimensions E-8 ANSI Series 125 - 1500
Spool Dimensions E-9 ANSI Series 125 / 150 / 300
ANSI Series 150/300 Model 262

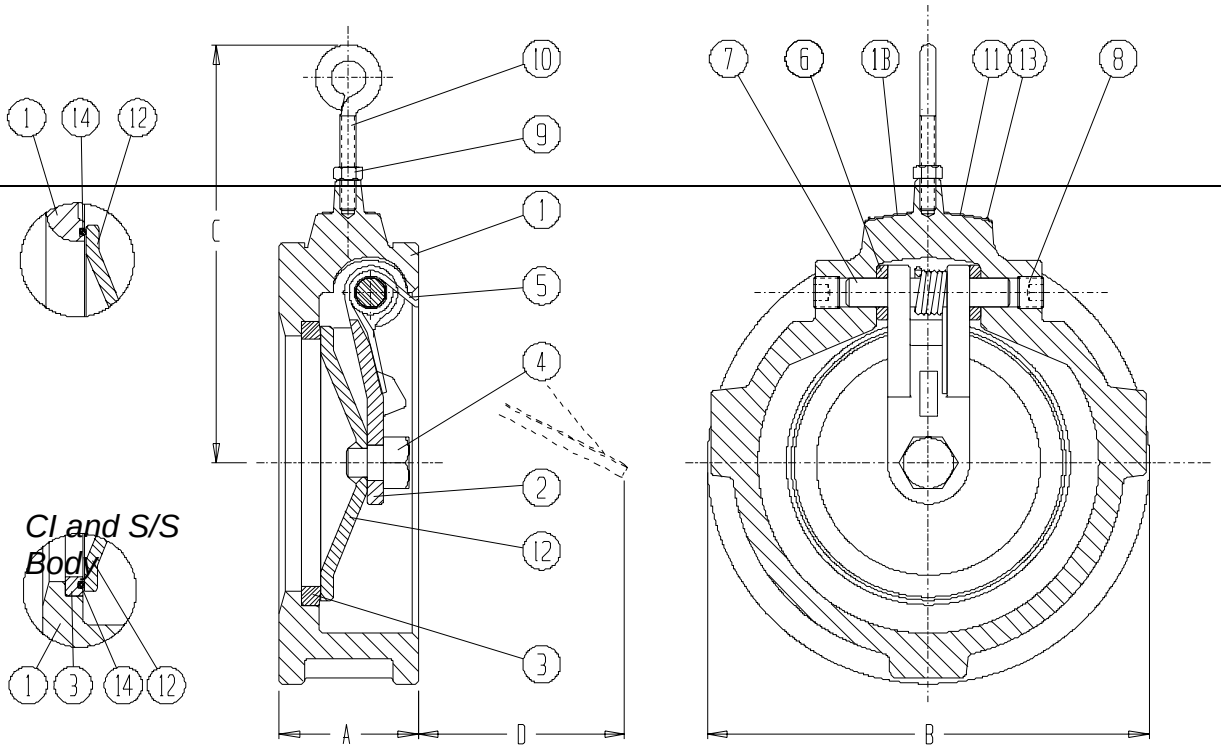

CI and S/S Body

DI and Steel Body

Item	Description	Standard Material
1	Body	ASTM A216-WCB
2	Hinge	ASTM A351-CF8M
3	Seat	ASTM A351-CF8
4	Shoulder Pin	ASTM A479-316
5	Spring	ASTM A313-316
6	Spacer	ASTM A479-316, Teflon
7	Pin	ASTM A479-316

Item	Description	Standard Material
8	Plug	Steel
9	Lock Nut	Steel Zinc Plated
10	Eye Bolt	Steel Zinc Plated
11	Name Plate	Aluminium
12	Disc	ASTM A240-316
13	Rivet	Steel Cad. Plated
14	O-Ring	Buna N, Viton, Teflon

Other body materials available: A126-CLB, A395, A351-CF8M, Monel, Alloy 20, Hastelloy, 254SMO.

Nominal Pipe Size		A		B Class 125/150		B Class 300		C		D		Weight	
Inch	mm	Inch	mm	Inch	mm	Inch	mm	Inch	mm	Inch	mm	lbs	kg
2	50	1.75 *	44.5	4.13	104.8	4.38	111.1	4.25	108	1.19	30	3.5	1.6
2 1/2	65	1.88 *	47.6	4.88	123.8	5.13	130.2	4.50	114	1.50	38	5.0	2.3
3	80	2.00 *	50.8	5.38	136.5	5.88	149.2	5.00	127	1.69	43	6.5	2.9
4	100	2.25	57.2	6.88	174.6	7.13	181.0	5.75	146	2.44	62	11	5.0
5	125	2.50	63.5	7.75	196.9	8.50	215.9	6.50	165	3.38	86	15	6.8
6	150	2.75	69.9	8.75	222.3	9.88	250.8	7.25	184	4.25	108	20	9.0
8	200	2.88	73.0	11.00	279.4	12.13	308.0	8.25	210	5.38	136	30	13.6
10	250	3.13	79.4	13.38	339.7	14.25	362.0	9.63	244	7.00	178	47	21.3
12	300	3.38	85.7	16.13	409.6	16.63	422.3	10.75	273	8.13	206	70	32

* Face to face for Cast Iron Class 125: 2": 2.13"
2½": 2.38"
3": 2.63"

Ritepro Corporation
A Subsidiary of Bray International, Inc

STANDARD SPECIFICATION SHEET
Check Rite Wafer Check Valves A-5
Series 125/150 Model 210
Date: 28 August 2001

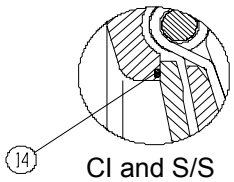

CI and S/S Body

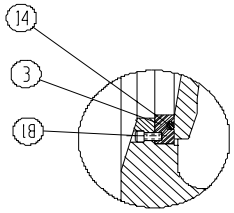

DI and Steel Body

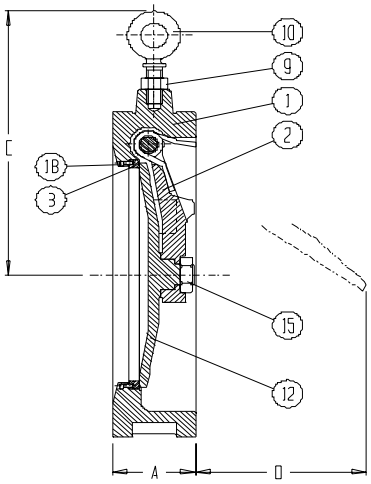

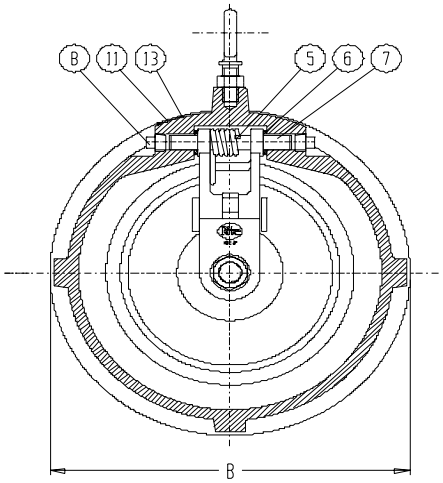

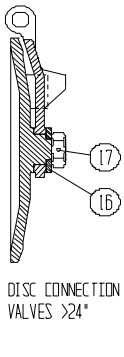

Item	Description	Standard Material
1	Body	ASTM A216-WCB *
2	Hinge	ASTM A216-WCB
3	Seat	ASTM A240-304
5	Spring	17-7PH Stainless
6	Spacer	ASTM A479-316
7	Pin	ASTM A479-316
8	Plug	Steel
9	Lock Nut	Steel Zinc Plated
10	Eye Bolt	Steel Zinc Plated

Item	Description	Standard Material
11	Name Plate	Aluminium
12	Disc	ASTM A351-CF8 **
13	Rivet	Steel Cad. Plated
14	O-Ring	Buna N, Viton, Teflon
15	Disc Nut	Steel
16	Disc Washer	Steel
17	Dowel Pin	Steel
18	SHCS	Steel

** 32" & Larger: A216-WCB with 304 overlay.

*Other body materials available: A126-CLB, A395, A351-CF8M, Monel, Alloy 20, Hastelloy, 254SMO.

Nominal Pipe Size		A		B		C		D		Weight	
Inch	*mm*	*Inch*	*mm*	*Inch*	*mm*	*Inch*	*mm*	*Inch*	*mm*	*lbs*	*kg*
14	*350*	*4.25*	*108.*	*17.6*	*447.*	*13.0*	*330*	*7.25*	*184*	*115*	*52*
16	*400*	*4.25*	*108.*	*20.1*	*511.*	*14.5*	*368*	*8.25*	*210*	*130*	*59*
18	*450*	*4.25*	*108.*	*21.5*	*546.*	*15.2*	*387*	*10.5*	*267*	*170*	*77*
20	*500*	*5.50*	*139.*	*23.7*	*603.*	*18.7*	*476*	*11.0*	*280*	*230*	*104*
24	*600*	*6.00*	*152.*	*28.1*	*714.*	*20.5*	*520*	*15.0*	*381*	*415*	*188*
28	*700*	*6.50*	*165.*	*32.5*	*825.*	*26.1*	*664*	*17.7*	*451*	*519*	*235*
30	*750*	*9.00*	*228.*	*34.6*	*879.*	*27.5*	*698*	*16.2*	*412*	*965*	*438*
32	*800*	*11.0*	*279.*	*36.7*	*933.*	*28.2*	*718*	*14.0*	*356*	*1150*	*522*
36	*900*	*11.5*	*292.*	*41.1*	*1044*	*30.0*	*762*	*18.2*	*464*	*1525*	*692*
42	*1050*	*12.0*	*304.*	*47.8*	*1216*	*33.2*	*844*	*28.0*	*712*	*2235*	*1014*

Ritepro Corporation
A Subsidiary of Bray International, Inc

STANDARD SPECIFICATION SHEET
Stud Dimensions E-8
ANSI Series 125 - 1500
Date: *20 April 2001*

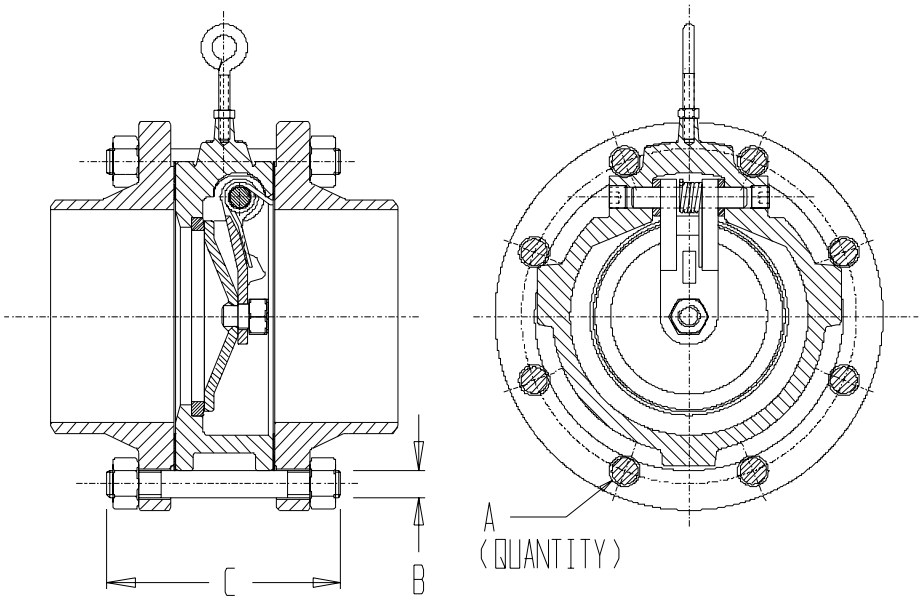

Nominal Pipe Size		Series 125 & 150			Series 250 & 300			Series 400		
		A	Stud Size B*C		A	Stud Size B*C		A	Stud Size B*C	
Inch	mm	Studs	Inch	mm	Studs	Inch	mm	Studs	Inch	mm
2	50	4	5/8*4.75	16*20	8	5/8*5.00	16*130	8	5/8*6.50	16*165
2 1/2	65	4	5/8*5.25	16*135	8	3/4*5.75	20*145	8	3/4*7.25	20*185
3	80	4	5/8*5.50	16*140	8	3/4*6.00	20*155	8	3/4*7.75	20*200
4	100	8	5/8*5.75	16*145	8	3/4*6.50	20*165	8	7/8*8.50	22*220
5	125	8	3/4*6.25	20*160	8	3/4*7.00	20*180			
6	150	8	3/4*6.50	20*165	12	3/4*7.50	20*190	12	7/8*11 .25	22*285
8	200	8	3/4*7.00	20*180	12	7/8*8.25	22*210	12	1*13.00	24*330
10	250	12	7/8*7.75	22*200	16	1*9.25	24*235	16	1 1/8*15.75	28*400
12	300	12	7/8*8.00	22*205	16	1 1/8*10.00	28*255	16	1 1/4*17.00	32*435
14	350	12	1*9.25	24*235	20	1 1/8*14.00	28*280			
16	400	16	1*9.50	24*245	20	1 1/4*14.75	32*295			
18	450	16	1 1/8*10.25	28*260	24	1 1/4*15.50	32*300			
20	500	20	1 1/8*11.50	28*295	24	1 1/4*16.75	32*345			
24	600	20	1 1/4*12.75	32*325	24	1 1/2*17.75	38*385			
30	750	28	1 1/4*18.00	32*460						
36	900	32	1 1/2*19.50	38*495						
42	1050	36	1 1/2*20.50	38*520						

Nominal Pipe Size		Series 600			Series 900			Series 1500		
		A	Stud Size B*C		A	Stud Size B*C		A	Stud Size B*C	
Inch	mm	Studs	Inch	mm	Studs	Inch	mm	Studs	Inch	mm
2	50	8	5/8*6.50	16*165	8	7/8*9.50	22*245	8	7/8*9.50	22*245
2 1/2	65	8	3/4*7.25	20*185	8	1*9.50	24*245	8	1*9.50	24*245
3	80	8	3/4*7.75	20*200	8	7/8*9.00	22*230	8	1 1/8*10.25	28*260
4	100	8	7/8*8.75	22*225	8	1 1/8*10.75	28*275	8	1 1/4*11.75	32*300
6	150	12	1*12.00	24*305	12	1 1/8*14.00	28*360	12	1 3/8*16.50	35*420
8	200	12	1 1/8*14.00	28*360	12	1 3/8*16.75	35*425	12	1 5/8*19.50	35*495
10	250	16	1 1/4*16.75	32*425	16	1 3/8*18.75	35*480	12	1 7/8*23.50	48*600
12	300	20	1 1/4*17.50	32*435	20	1 3/8*21.50	35*545	16	2*27.00	50*685

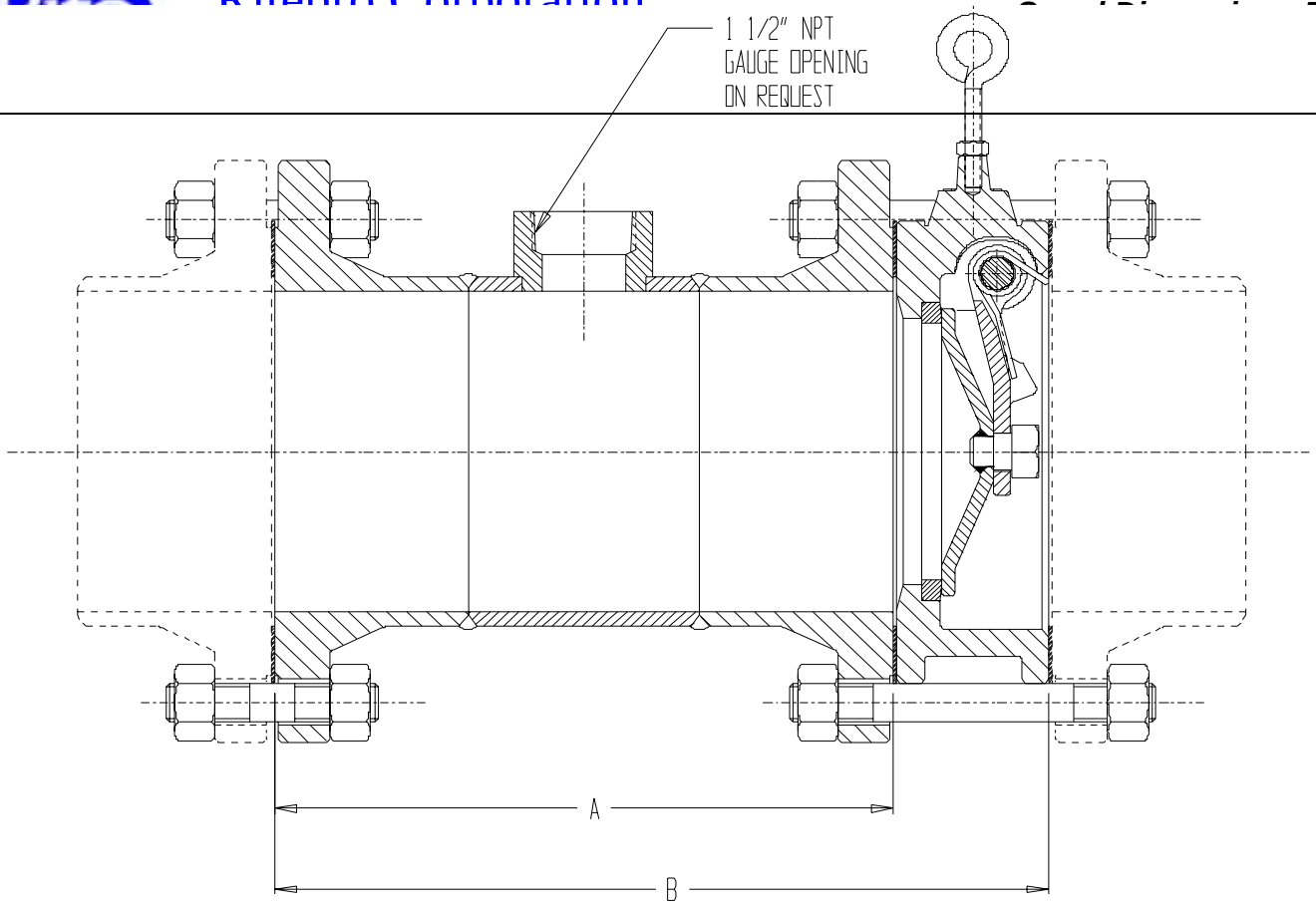

Nominal Pipe Size		Series 150				Series 300			
		A		B		A		B	
Inch	mm	Inch	mm	Inch	mm	Inch	mm	Inch	mm
2	50	6.19*	157*	8.0	203	8.69	221	10.5	267
2 1/2	65	6.56*	167*	8.5	216	9.56	243	11.5	292
3	80	7.44*	189*	9.5	241	10.44	265	12.5	318
4	100	9.19	233	11.5	292	11.69	297	14.0	356
5	125	10.44	265	13.0	330	13.19	335	15.75	400
6	150	11.19	284	14.0	356	14.69	373	17.5	445
8	200	16.56	421	19.5	495	18.06	459	21.0	533
10	250	21.31	541	24.5	622	21.31	541	24.5	622
12	300	24.06	611	27.5	699	24.56	624	28.0	711
14	350	26.69	678	31.0	787	25.69	652	33.0	838
16	400	29.69	754	34.0	864	26.44	672	34.0	864
18	450	34.19	868	38.5	978	30.44	773	38.5	978
20	500	32.94	837	38.5	978	31.31	795	40.0	1016
24	600	44.96	1141	51.0	1295	44.18	1122	53.0	1346
30	750	50.94	1294	60.0	1524				
36	900	65.44	1662	77.0	1956				

Dimension "B" corresponds to ANSI B16.10.

Nominal Pipe Size	Series 125	
	A	
Inch	Inch	mm
2	5.81	148
2 1/2	6.06	154
3	6.81	173

Remaining dimensions same as Series 150.

Ritepro Corporation
A Subsidiary of Bray International, Inc

STANDARD SPECIFICATION SHEET
Check Rite Wafer Type Swing Check Valve
ANSI Series 150/300 Model 262
Date: 21 April 2005

Designed to meet ANSI 16.34.

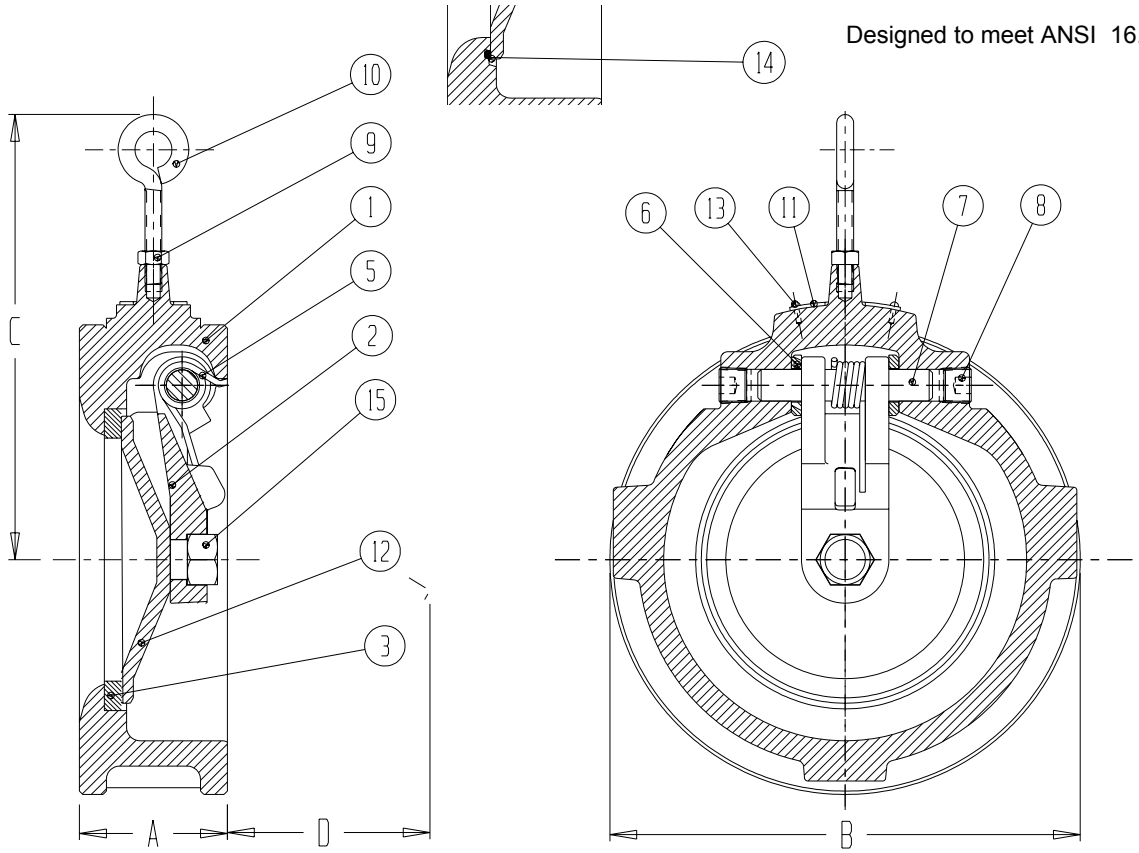

Item	Description	Standard Material
1	Body	ASTM A216-WCB
		ASTM A351-CF8M
		ASTM A395
2	Hinge	ASTM A351-CF8M
3	Seat	ASTM A240-304
5	Spring	ASTM A313-316
6	Spacer	ASTM A479-316
		TEFLON
7	Pin	ASTM A479-316

Item	Description	Standard Material
8	Plug	Steel
9	Lock Nut	Steel Zinc Plated
10	Eye Bolt	Steel Zinc Plated
11	Name Plate	Aluminium
12	Disc	ASTM A351-CF8M
13	Rivet	Steel Cad. Plated
14	O'ring	Buna, Viton , Teflon
15	Disc Nut	Stainless Steel

Nominal Pipe Size		A		B Class 150		B Class 300		C		D		Weight	
Inch	mm	Inch	mm	Inch	mm	Inch	mm	Inch	mm	Inch	mm	lbs	kg
2	50	1.75	44.5	4.13	104.8	4.38	111.1	4.25	108	1.19	30	3.5	1.6
2 1/2	65	1.88	47.6	4.88	123.8	5.13	130.2	4.50	114	1.50	38	5.0	2.3
3	80	2.00	50.8	5.38	136.5	5.88	149.2	5.00	127	1.69	43	6.5	2.9
4	100	2.25	57.2	6.88	174.6	7.13	181.0	5.75	146	2.44	62	11.6	5.3
5	125	2.50	63.5	7.75	196.9	8.50	215.9	6.50	165	3.38	86	15.5	7.0
6	150	2.75	69.9	8.75	222.3	9.88	250.8	7.25	184	4.25	108	20.6	9.4
8	200	2.88	73.0	11.00	279.4	12.13	308.0	8.25	210	5.38	136	33.0	15.0
10	250	3.13	79.4	13.38	339.7	14.25	362.0	9.63	244	7.00	178	48.5	22.0
12	300	3.38	85.7	16.13	409.6	16.63	422.3	10.75	273	8.13	206	72.8	33

CS-999-030 : Identification sheet

VWTC PROJECT NUMBER:	Iqaluit WWTP	REV:	02
PROJECT NAME:	5000218036	SUBMITTED TO (COMPANY):	
ENGINEER:	F.VINCI	SUBMITTED TO (RESPONSIBLE)	
PROJECT MANAGER:	C. BEKAERT	PROJECT NUM REFERENCE.:	
PHONE NUMBER:		LOT NUMBER:	

SUPPLIER	EQPT CODE	EQPT TAG NO	DIA	DESCRIPTION	INFO 1	INFO 2	INFO 3	APPLIC.	NOTE	REV
BRAY	ST-999-030	BFV-02-309		CONTROL VALVE SPIDFLOW	MODULATING VALVE // 311200-11011390 12 in. BRAY SERIES 31 BUTTERFLY VALVE , 50 PSI CLOSURE, DUCTILE IRON BODY, DUCTILE CAST IRON, NYLON 11 COATED, 416SS SHAFT, Buna-N SEAT, // F / O, FAIL OPEN ACTUATOR	922100-11300532, S92 / 210 PNEUM ACT- 50MM KEYED // 6A1600-24610536, MTG KIT, S6A POS TO S92-160 / 210 // 6DR5220-0EN000AA0, E / P, 2-4W, HART, 9C5500-74603536, S55 FILTER REG WITH MTG KIT				2
BRAY	ST-999-030	BFV-02-310		CONTROL VALVE SPIDFLOW	MODULATING VALVE // 311200-11011390 12 in. BRAY SERIES 31 BUTTERFLY VALVE , 50 PSI CLOSURE, DUCTILE IRON BODY, DUCTILE CAST IRON, NYLON 11 COATED, 416SS SHAFT, Buna-N SEAT, // F / O, FAIL OPEN ACTUATOR	922100-11300532, S92 / 210 PNEUM ACT- 50MM KEYED // 6A1600-24610536, MTG KIT, S6A POS TO S92-160 / 210 // 6DR5220-0EN000AA0, E / P, 2-4W, HART, 9C5500-74603536, S55 FILTER REG WITH MTG KIT				2
BRAY	ST-999-030	BFV-02-329		CONTROL VALVE SPIDFLOW	MODULATING VALVE // 311200-11011390 12 in. BRAY SERIES 31 BUTTERFLY VALVE , 50 PSI CLOSURE, DUCTILE IRON BODY, DUCTILE CAST IRON, NYLON 11 COATED, 416SS SHAFT, Buna-N SEAT, // F / O, FAIL OPEN ACTUATOR	922100-11300532, S92 / 210 PNEUM ACT- 50MM KEYED // 6A1600-24610536, MTG KIT, S6A POS TO S92-160 / 210 // 6DR5220-0EN000AA0, E / P, 2-4W, HART, 9C5500-74603536, S55 FILTER REG WITH MTG KIT				2

SUPPLIER	EQPT CODE	EQPT TAG NO	DIA	DESCRIPTION	INFO 1	INFO 2	INFO 3	APPLIC.	NOTE	REV
BRAY	ST-999-030	BFV-02-330		CONTROL VALVE SPIDFLOW	MODULATING VALVE // 311200-11011390 12 in. BRAY SERIES 31 BUTTERFLY VALVE , 50 PSI CLOSURE, DUCTILE IRON BODY, DUCTILE CAST IRON, NYLON 11 COATED, 416SS SHAFT, Buna-N SEAT, // F / O, FAIL OPEN ACTUATOR	922100-11300532, S92 / 210 PNEUM ACT- 50MM KEYED // 6A1600-24610536, MTG KIT, S6A POS TO S92-160 / 210 // 6DR5220-0EN000AA0, E / P, 2-4W, HART,9C5500-74603536, S55 FILTER REG WITH MTG KIT				2

CS-999-005 : Identification sheet

VWTC PROJECT NUMBER:	Iqaluit WWTP	REV:	02
PROJECT NAME:	5000218036	SUBMITTED TO (COMPANY):	
ENGINEER:	F.VINCI	SUBMITTED TO (RESPONSIBLE)	
PROJECT MANAGER:	C. BEKAERT	PROJECT NUM REFERENCE.:	
PHONE NUMBER:		LOT NUMBER:	

SUPPLIER	EQPT CODE	EQPT TAG NO	DIA	DESCRIPTION	INFO 1	INFO 2	INFO 3	APPLIC.	NOTE	REV
BRAY	ST-999-005	BFV-02-625		ON-OFF WHITE WATER VALVE	ON/OFF WHITE WATER VALVE, 3 INCHES BRAY SERIE 31 BUTTERFLY VALVE, MAXIMUM PRESSURE, DUCTILE CAST IRON BODY, DUCTILE CAST IRON DISC, NYLON 11 CAST, 416SS SHAFT, Buna-N SEAT//	Item 700061-113DA536 ELECTRICAL ACTUATOR,120V N4,600 IN-LB,30S,IRB // Item 7070A1-22600536 S70 ADAPTER KIT-70A1 // Item 70A000-22901536 SW KIT - AUX O/C SWITCHES		WITH CRN		2
BRAY	ST-999-005	BFV-02-645		ON-OFF WHITE WATER VALVE	ON/OFF WHITE WATER VALVE, 3 INCHES BRAY SERIE 31 BUTTERFLY VALVE, MAXIMUM PRESSURE, DUCTILE CAST IRON BODY, DUCTILE CAST IRON DISC, NYLON 11 CAST, 416SS SHAFT, Buna-N SEAT	Item 700061-113DA536 ELECTRICAL ACTUATOR,120V N4,600 IN-LB,30S,IRB // Item 7070A1-22600536 S70 ADAPTER KIT-70A1 // Item 70A000-22901536 SW KIT - AUX O/C SWITCHES		WITH CRN		2

CS-999-006 : Identification sheet

VWTC PROJECT NUMBER:	Iqaluit WWTP	REV:	02
PROJECT NAME:	5000218036	SUBMITTED TO (COMPANY):	
ENGINEER:	F.VINCI	SUBMITTED TO (RESPONSIBLE)	
PROJECT MANAGER:	C. BEKAERT	PROJECT NUM REFERENCE.:	
PHONE NUMBER:		LOT NUMBER:	

SUPPLIER	EQPT CODE	EQPT TAG NO	DIA	DESCRIPTION	INFO 1	INFO 2	INFO 3	APPLIC.	NOTE	REV
BRAY	ST-999-006	BFV-02-511		ON-OFF SCREEN INLET VALVE	ON/OFF VALVE STRAINER INLET // 310400-11010390, 4 in. BRAY SERIES 31 BUTTERFLY VALVE, MAXIMUM PRESSURE, DUCTILE IRON BODY, DUCTILE CAST IRON, NYLON 11 COATED, 416SS SHAFT, Buna-N SEAT,	Item 700061-113DA536 ELECTRICAL ACTUATOR,120V N4,600 IN-LB,30S,IRB // Item 7070B1-22600536 S70 ADAPTER KIT-70B1 // Item 70A000-22901536 SW KIT - AUX O/C SWITCHES		WITH CRN		2
BRAY	ST-999-006	BFV-02-521		ON-OFF SCREEN OUTLET VALVE	ON/OFF VALVE STRAINER INLET // 310400-11010390, 4 in. BRAY SERIES 31 BUTTERFLY VALVE, MAXIMUM PRESSURE, DUCTILE IRON BODY, DUCTILE CAST IRON, NYLON 11 COATED, 416SS SHAFT, Buna-N SEAT,	Item 700061-113DA536 ELECTRICAL ACTUATOR,120V N4,600 IN-LB,30S,IRB // Item 7070B1-22600536 S70 ADAPTER KIT-70B1 // Item 70A000-22901536 SW KIT - AUX O/C SWITCHES		WITH CRN		2
BRAY	ST-999-006	BFV-02-531		ON-OFF SCREEN INLET VALVE	ON/OFF VALVE STRAINER INLET // 310400-11010390, 4 in. BRAY SERIES 31 BUTTERFLY VALVE, MAXIMUM PRESSURE, DUCTILE IRON BODY, DUCTILE CAST IRON, NYLON 11 COATED, 416SS SHAFT, Buna-N SEAT,	Item 700061-113DA536 ELECTRICAL ACTUATOR,120V N4,600 IN-LB,30S,IRB // Item 7070B1-22600536 S70 ADAPTER KIT-70B1 // Item 70A000-22901536 SW KIT - AUX O/C SWITCHES		WITH CRN		2
BRAY	ST-999-006	BFV-02-541		ON-OFF SCREEN OUTLET VALVE	ON/OFF VALVE STRAINER INLET // 310400-11010390, 4 in. BRAY SERIES 31 BUTTERFLY VALVE, MAXIMUM PRESSURE, DUCTILE IRON BODY, DUCTILE CAST IRON, NYLON 11 COATED, 416SS SHAFT, Buna-N SEAT,	Item 700061-113DA536 ELECTRICAL ACTUATOR,120V N4,600 IN-LB,30S,IRB // Item 7070B1-22600536 S70 ADAPTER KIT-70B1 // Item 70A000-22901536 SW KIT - AUX O/C SWITCHES		WITH CRN		2

CS-999-016 : Identification sheet

VWTC PROJECT NUMBER:	Iqaluit WWTP	REV:	02
PROJECT NAME:	5000218036	SUBMITTED TO (COMPANY):	
ENGINEER:	F.VINCI	SUBMITTED TO (RESPONSIBLE)	
PROJECT MANAGER:	C. BEKAERT	PROJECT NUM REFERENCE.:	
PHONE NUMBER:		LOT NUMBER:	

SUPPLIER	EQPT CODE	EQPT TAG NO	DIA	DESCRIPTION	INFO 1	INFO 2	INFO 3	APPLIC.	NOTE	REV
BRAY	ST-999-016	BFV-02-165 BFV-02-166 BFV-02-170 BFV-02-171 BFV-02-172 BFV-02-365 BFV-02-366 BFV-02-370 BFV-02-371 BFV-02-372		DAF ISOLATION AIR	310200-1101030A // 2 in. BRAY SERIES 31 BUTTERFLY VALVE LUG, MAXIMUM PRESSURE, DUCTILE CAST IRON BODY, DUCTILE CAST IRON, COATED WITH NYLON 11, SHAFT IN 416SS, Buna-N SEAT	010200-21100007 HANDLE KIT (EDI) 2-3"				2
BRAY	ST-999-016	BFV-02-167 BFV-02-367		DAF CLARIFIED WATER DRAIN	310200-1101030A // 2 in. BRAY SERIES 31 BUTTERFLY VALVE LUG, MAXIMUM PRESSURE, DUCTILE CAST IRON BODY, DUCTILE CAST IRON, COATED WITH NYLON 11, SHAFT IN 416SS, Buna-N SEAT	010200-21100007 HANDLE KIT (EDI) 2-3"				2

CS-999-008 : Identification sheet

VWTC PROJECT NUMBER:	Iqaluit WWTP	REV:	02
PROJECT NAME:	5000218036	SUBMITTED TO (COMPANY):	
ENGINEER:	F.VINCI	SUBMITTED TO (RESPONSIBLE)	
PROJECT MANAGER:	C. BEKAERT	PROJECT NUM REFERENCE.:	
PHONE NUMBER:		LOT NUMBER:	

SUPPLIER	EQPT CODE	EQPT TAG NO	DIA	DESCRIPTION	INFO 1	INFO 2	INFO 3	APPLIC.	NOTE	REV
BRAY	ST-999-008	BFV-02-400 BFV-02-415 BFV-02-430 BFV-02-450 BFV-02-465 BFV-02-480		WHITE WATER PUMP MANUAL ISOLATION VALVE	310300-1101030A S31 3" DI,NDI,416,BUNA 3 in. BRAY SERIES 31 BUTTERFLY VALVE LUG TYPE, FULL RATED, DUCTILE IRON BODY, NYLON 11 COATED DUCTILE IRON DISC, 416SS SHAFT, Buna-N SEAT,	Item 010200-21100 007 HANDLE KIT (EDI) 2-3" WITH CRN				2
BRAY	ST-999-008	BFV-02-168 BFV-02-368		INLET WHITE WATER MANUAL ISOLATION VALVE	310300-1101030A S31 3" DI,NDI,416,BUNA 3 in. BRAY SERIES 31 BUTTERFLY VALVE LUG TYPE, FULL RATED, DUCTILE IRON BODY, NYLON 11 COATED DUCTILE IRON DISC, 416SS SHAFT, Buna-N SEAT,	Item 010200-21100 007 HANDLE KIT (EDI) 2-3" WITH CRN				2

CS-999-009 : Identification sheet

VWTC PROJECT NUMBER:	Iqaluit WWTP	REV:	02
PROJECT NAME:	5000218036	SUBMITTED TO (COMPANY):	
ENGINEER:	F.VINCI	SUBMITTED TO (RESPONSIBLE)	
PROJECT MANAGER:	C. BEKAERT	PROJECT NUM REFERENCE.:	
PHONE NUMBER:		LOT NUMBER:	

SUPPLIER	EQPT CODE	EQPT TAG NO	DIA	DESCRIPTION	INFO 1	INFO 2	INFO 3	APPLIC.	NOTE	REV
BRAY	ST-999-009	BFV-02-406		ISOLATION WHITE WATER VALVE	310400-1101030A // 4 in. BRAY SERIES 31 BUTTERFLY VALVE EAR TYPE, MAXIMUM PRESSURE, DUCTILE IRON BODY, DUCTILE CAST IRON, NYLON 11 COVER, 416SS SHAFT, Buna-N SEAT,	010400-21100007 HANDLE KIT (EDI) 4"// 020400-70050529 HANDLE LOCKING PLATE 4", BRAY PADLOCK KIT // CRN# REQUIRED				2
BRAY	ST-999-009	BFV-02-421		ISOLATION WHITE WATER VALVE	310400-1101030A // 4 in. BRAY SERIES 31 BUTTERFLY VALVE EAR TYPE, MAXIMUM PRESSURE, DUCTILE IRON BODY, DUCTILE CAST IRON, NYLON 11 COVER, 416SS SHAFT, Buna-N SEAT,	010400-21100007 HANDLE KIT (EDI) 4"// 020400-70050529 HANDLE LOCKING PLATE 4", BRAY PADLOCK KIT // CRN# REQUIRED				2
BRAY	ST-999-009	BFV-02-436		ISOLATION WHITE WATER VALVE	310400-1101030A // 4 in. BRAY SERIES 31 BUTTERFLY VALVE EAR TYPE, MAXIMUM PRESSURE, DUCTILE IRON BODY, DUCTILE CAST IRON, NYLON 11 COVER, 416SS SHAFT, Buna-N SEAT,	010400-21100007 HANDLE KIT (EDI) 4"// 020400-70050529 HANDLE LOCKING PLATE 4", BRAY PADLOCK KIT // CRN# REQUIRED				2
BRAY	ST-999-009	BFV-02-456		ISOLATION WHITE WATER VALVE	310400-1101030A // 4 in. BRAY SERIES 31 BUTTERFLY VALVE EAR TYPE, MAXIMUM PRESSURE, DUCTILE IRON BODY, DUCTILE CAST IRON, NYLON 11 COVER, 416SS SHAFT, Buna-N SEAT,	010400-21100007 HANDLE KIT (EDI) 4"// 020400-70050529 HANDLE LOCKING PLATE 4", BRAY PADLOCK KIT // CRN# REQUIRED				2

SUPPLIER	EQPT CODE	EQPT TAG NO	DIA	DESCRIPTION	INFO 1	INFO 2	INFO 3	APPLIC.	NOTE	REV
BRAY	ST-999-009	BFV-02-471		ISOLATION WHITE WATER VALVE	310400-1101030A // 4 in. BRAY SERIES 31 BUTTERFLY VALVE EAR TYPE, MAXIMUM PRESSURE, DUCTILE IRON BODY, DUCTILE CAST IRON, NYLON 11 COVER, 416SS SHAFT, Buna-N SEAT,	010400-21100007 HANDLE KIT (EDI) 4"// 020400-70050529 HANDLE LOCKING PLATE 4", BRAY PADLOCK KIT // CRN# REQUIRED				2
BRAY	ST-999-009	BFV-02-486		ISOLATION WHITE WATER VALVE	310400-1101030A // 4 in. BRAY SERIES 31 BUTTERFLY VALVE EAR TYPE, MAXIMUM PRESSURE, DUCTILE IRON BODY, DUCTILE CAST IRON, NYLON 11 COVER, 416SS SHAFT, Buna-N SEAT,	010400-21100007 HANDLE KIT (EDI) 4"// 020400-70050529 HANDLE LOCKING PLATE 4", BRAY PADLOCK KIT // CRN# REQUIRED				2

CS-999-010 : Identification sheet

VWTC PROJECT NUMBER:	Iqaluit WWTP	REV:	02
PROJECT NAME:	5000218036	SUBMITTED TO (COMPANY):	
ENGINEER:	F.VINCI	SUBMITTED TO (RESPONSIBLE)	
PROJECT MANAGER:	C. BEKAERT	PROJECT NUM REFERENCE.:	
PHONE NUMBER:		LOT NUMBER:	

SUPPLIER	EQPT CODE	EQPT TAG NO	DIA	DESCRIPTION	INFO 1	INFO 2	INFO 3	APPLIC.	NOTE	REV
BRAY	ST-999-010	BFV-02-513		ISOLATION WHITE WATER VALVE	310400-1101030A // 4 in. BRAY SERIES 31 BUTTERFLY VALVE EAR TYPE, MAXIMUM PRESSURE, DUCTILE IRON BODY, DUCTILE CAST IRON, NYLON 11 COVER, 416SS SHAFT, Buna-N SEAT,	010400-21100007 HANDLE KIT (EDI) 4"// CRN# REQUIRED				2
BRAY	ST-999-010	BFV-02-523		ISOLATION WHITE WATER VALVE	310400-1101030A // 4 in. BRAY SERIES 31 BUTTERFLY VALVE EAR TYPE, MAXIMUM PRESSURE, DUCTILE IRON BODY, DUCTILE CAST IRON, NYLON 11 COVER, 416SS SHAFT, Buna-N SEAT,	010400-21100007 HANDLE KIT (EDI) 4"// CRN# REQUIRED				2
BRAY	ST-999-010	BFV-02-543		ISOLATION WHITE WATER VALVE	310400-1101030A // 4 in. BRAY SERIES 31 BUTTERFLY VALVE EAR TYPE, MAXIMUM PRESSURE, DUCTILE IRON BODY, DUCTILE CAST IRON, NYLON 11 COVER, 416SS SHAFT, Buna-N SEAT,	010400-21100007 HANDLE KIT (EDI) 4"// CRN# REQUIRED				2
BRAY	ST-999-010	BFV-02-553		ISOLATION WHITE WATER VALVE	310400-1101030A // 4 in. BRAY SERIES 31 BUTTERFLY VALVE EAR TYPE, MAXIMUM PRESSURE, DUCTILE IRON BODY, DUCTILE CAST IRON, NYLON 11 COVER, 416SS SHAFT, Buna-N SEAT,	010400-21100007 HANDLE KIT (EDI) 4"// CRN# REQUIRED				2

CS-999-007 : Identification sheet

VWTC PROJECT NUMBER:	Iqaluit WWTP	REV:	02
PROJECT NAME:	5000218036	SUBMITTED TO (COMPANY):	
ENGINEER:	F.VINCI	SUBMITTED TO (RESPONSIBLE)	
PROJECT MANAGER:	C. BEKAERT	PROJECT NUM REFERENCE.:	
PHONE NUMBER:		LOT NUMBER:	

SUPPLIER	EQPT CODE	EQPT TAG NO	DIA	DESCRIPTION	INFO 1	INFO 2	INFO 3	APPLIC.	NOTE	REV
BRAY	ST-999-007	BFV-02-512 BFV-02-522 BFV-02-532 BFV-02-542		ON-OFF SCREEN DRAIN VALVE	2'' ON/OFF VALVE STRAINER OUTLET // 140200-11000SSRR-NN, 2 "7108-3-R-R-L, 2" 3-PIECE FLOW-TEK INDUSTRIAL BALL VALVE END CAPS 316L STAINLESS STEEL BODY / 316 STAINLESS STEEL PIN, RPTFE SEATS, RPTFE STEM SEAL	Item 700082-113DA536 ELECTRICAL ACTUATOR,120V N4,800IN-LBS,15S IR // Item EZ-010D-3 EZ MOUNTING KIT // Item 70A000-22901536 SW KIT - AUX O/C SWITCHEs		CRN# REQUIRED		2



Bray®

BUTTERFLY VALVES

RESILIENT SEATED

SERIES 30/31 Wafer/Lug

2" - 20" (50mm-500mm)

CELEBRATING 20 YEARS

The High Performance Company

SERIES 30

2"–20" (50mm–500mm)
Bray® Controls is proud to offer a high quality line of butterfly valves to meet the requirements of today's market. Combining years of field application experience, research and development, Bray has designed many unique features in the Series 30/31 not previously available. The results are longer service life, greater reliability, ease of parts replacement and interchangeability of components.

DISC AND STEM CONNECTION

(**A**) Features a high-strength through stem design. The close tolerance, double "D" connection that drives the valve disc is an exclusive feature of the Bray valve. It eliminates stem retention components being exposed to the line media, such as disc screws and taper pins, which commonly result in leak paths, corrosion, and vibration failures. Disc screws or taper pins, due to wear and corrosion, often

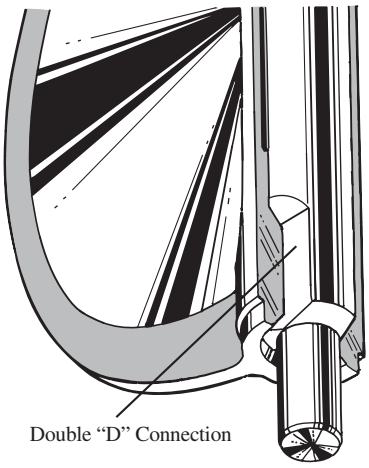

require difficult machining for disassembly. Disassembly of the Bray stem is just a matter of pulling the stem out of the disc. Without fasteners obstructing the line flow, the Series 30/31 C_V values are higher than many other valves, turbulence is reduced, and pressure recovery is increased. The stem ends and top mounting flange are standardized for interchangeability with Bray actuators.

DISC (**B**) Casting is spherically machined and hand polished to provide a bubble-tight shut off, minimum torque, and longer seat life. The disc O.D. clearance is designed to work with all standard piping.

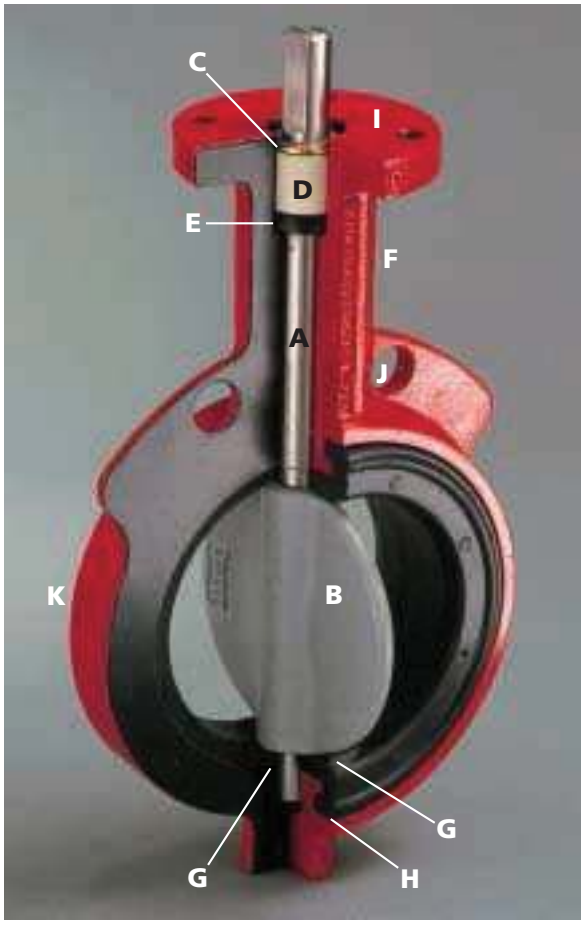

STEM RETAINING ASSEMBLY (C)

The stem is retained in the body by means of a unique Stainless Steel "Spirolox®" retaining ring, a thrust washer and two C-rings, manufactured from brass as standard, stainless steel upon request. The retaining ring may be easily removed with a standard hand tool. The stem retaining assembly prevents unintentional removal of the stem during field service.

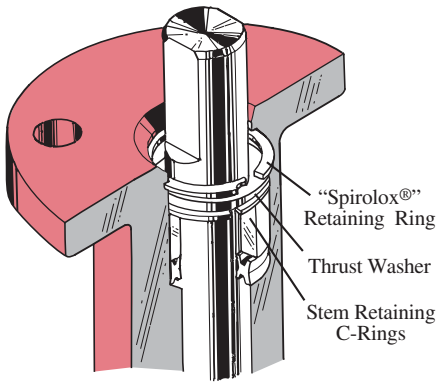

STEM BUSHING (D)

Non-corrosive, heavy duty acetal bushing absorbs actuator side thrusts.

STEM SEAL (E)

Double "U" cup seal design is self-adjusting and gives positive sealing in both directions. Prevents external substances from entering the stem bore.

NECK (**F**) Extended neck length allows for 2" of piping insulation and is easily accessible for mounting actuators.

PRIMARY AND SECONDARY SEALS (G)

The Primary Seal is achieved by an interference fit of the molded seat flat with the disc hub. The Secondary Seal is created because the stem diameter is greater than the diameter of the seat stem hole. These seals prevent line media from coming in contact with the stem or body.

BRAY UNIQUE SEAT DESIGN (H)

One of the valve's key elements is Bray's unique *tongue and groove* seat design. This resilient seat features lower torque than many valves on the market today and provides complete isolation of flowing media from the body. The tongue-and-groove seat to body retention method is superior to traditional designs, making field replacement simple and fast. The seat is specifically designed to seal with slip-on or weld-neck flanges. The seat features a molded O-ring which eliminates the use of flange gaskets. An important maintenance feature is

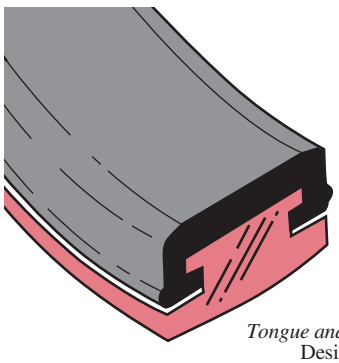

Tongue and Groove Design

*"Spirolox®" designation is a registered trademark of Kaydon Ring and Seal, Inc.

that all resilient seats for Bray butterfly valves Series 20, 21, 30, 31 and 34 are completely interchangeable.

ACTUATOR MOUNTING FLANGE AND STEM CONNECTION (I)
Universally designed to ISO 5211 for direct mounting of Bray® power actuators and manual operators.

FLANGE LOCATING HOLES (J)
Provide quick and proper alignment during installation.

BODY (K) One-piece wafer or lug style. Polyester coating for excellent corrosion resistance. Bray valve bodies meet ANSI 150 pressure ratings for hydrostatic shell test requirements.

DESIGN FEATURES

Bray's Series 30 valve is a wafer version with flange locating holes, and the Series 31 is the companion lug version for dead-end service and other flange requirements. All Bray valves are tested to 110% of full pressure rating before shipment.

A major design advantage of Bray valve product lines is international compatibility. The same valve is compatible with most world flange standards – ANSI Class 125/150, BS 10 Tables D and E, BS 4504 NP 10/16, DIN ND 10/16, AS 2129 and JIS 10. In addition the valves are designed to comply with ISO 5752 face-to-face and ISO 5211 actuator mounting flanges. Therefore, one valve design can be used in many different world markets.

Due to a modular concept of design, all Bray® handles, manual gear operators and pneumatic and electric actuators mount directly to Bray valves. No brackets or adapters are required.



Bray interchangeability and compatibility offers you the best in uniformity of product line and low-cost performance in the industry today.

POLYESTER COATING CORROSION PROTECTION
Bray's standard product offers valve bodies with a polyester coating, providing excellent corrosion and wear resistance to the valve's surface. The Bray polyester coating is a hard, gloss red finish.

Chemical Resistance – resists a broad range of chemicals including: dilute aqueous acids and alkalies, petroleum solvents, alcohols, greases and oils. Offers outstanding resistance to humidity and water.

Weatherability – outdoor tested resistant to ultra-violet radiation.

Abrasion Resistance – excellent resistance to abrasion.

Impact Resistance – withstands impact without chipping or cracking.

NYLON 11 COATING
Optionally available for valve bodies where outstanding protection and performance is needed. A thermoplastic produced from a vegetable base, this coating is inert to fungus growth and molds. Nylon 11 is *USDA Approved*, as well as certified to ANSI/NSF 61 for water service.

Corrosion Resistance – superior resistance to a broad range of chemical environments. Salt spray tested in excess of 2,000 hours and seawater immersion tested for over 10 years without corrosion to metal substrates.

Nylon 11 features a very low coefficient of friction and excellent resistance to impact and ultra-violet radiation.

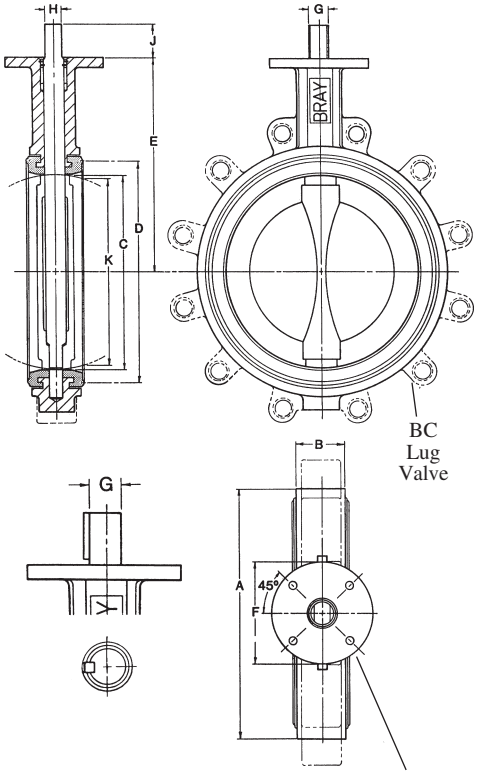

See chart for Actuator Mounting Flange Drilling.

DIMENSIONS SERIES 30 Wafer

Valve Size ins	Valve Size mm	A	B	C	D	E	F	Mounting Flange Drig. BC	No. Holes	Hole Dia.	G	H	J	K
2	50	3.69	1.62	2.00	2.84	5.50	3.54	2.76	4	.39	.55	.39	1.25	1.32
2 1/2	65	4.19	1.75	2.50	3.34	6.00	3.54	2.76	4	.39	.55	.39	1.25	1.91
3	80	4.88	1.75	3.00	4.03	6.25	3.54	2.76	4	.39	.55	.39	1.25	2.55
4	100	6.06	2.00	4.00	5.16	7.00	3.54	2.76	4	.39	.63	.43	1.25	3.57
5	125	7.06	2.12	5.00	6.16	7.50	3.54	2.76	4	.39	.75	.51	1.25	4.63
6	150	8.12	2.12	5.75	7.02	8.00	3.54	2.76	4	.39	.75	.51	1.25	5.45
8	200	10.50	2.50	7.75	9.47	9.50	5.91	4.92	4	.57	.87	.63	1.25	7.45
10	250	12.75	2.50	9.75	11.47	10.75	5.91	4.92	4	.57	1.18	.87	2.00	9.53
12	300	14.88	3.00	11.75	13.47	12.25	5.91	4.92	4	.57	1.18	.87	2.00	11.47

SERIES 31 Lug

Lug Bolting Data BC	No. Holes	Threads UNC-2B
4.75	4	5/8-11
5.50	4	5/8-11
6.00	4	5/8-11
7.50	8	5/8-11
8.50	8	3/4-10
9.50	8	3/4-10
11.75	8	3/4-10
14.25	12	7/8-9
17.00	12	7/8-9

Valve Size ins	Valve Size mm	A	B	C	D	E	F	Mounting Flange Drig. BC	No. Holes	Hole Dia.	G	J	KEY SIZE	K
14	350	17.05	3.00	13.25	15.28	13.62	5.91	4.92	4	.57	1.38	2.00	.39x.39	13.04
16	400	19.21	4.00	15.25	17.41	14.75	5.91	4.92	4	.57	1.38	2.00	.39x.39	14.85
18	450	21.12	4.25	17.25	19.47	16.00	8.27	6.50	4	.81	1.97	2.50	.39x.47	16.85
20	500	23.25	5.00	19.25	21.59	17.25	8.27	6.50	4	.81	1.97	2.50	.39x.47	18.73

Lug Bolting Data BC	No. Holes	Threads UNC-2B
18.75	12	1-8
21.25	16	1-8
22.75	16	1 1/8-7
25.00	20	1 1/8-7

SELECTION DATA

FLANGE REQUIREMENTS

Bray valves are designed for installation between ANSI Class 125/150 lb. weld-neck or slip-on flanges, BS 10 Tables D & E, BS 4504 NP 10/16, DIN ND 10/16, AS 2129 and JIS 10, either flat faced or raised faced. While weld-neck flanges are recommended, Bray has specifically designed its valve seat to work with slip-on flanges, thus eliminating common failures of other butterfly valve designs. When using raised face flanges be sure to properly align valve and flange. Type C stub-end flanges are not recommended.

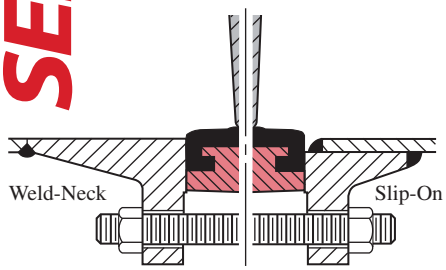

PRESSURE RATINGS*

For bi-directional bubble-tight shut off, disc in closed position:

Inches	mm	psig	bar
2-12	50-300	175	12
14-20	350-500	150	10

For Dead-end Service Applications:

With *downstream flanges installed* or with *vulcanized seats,* the dead-end pressure ratings are equal to valve bi-directional ratings as stated above. With no downstream flanges or with seats that are not vulcanized, the dead-end pressure rating for 2"-12" valves is 75 psi (5 bar) for 14"-20" valves, 50 psi (3.5 bar).

*Pressure Ratings are based on standard disc diameters. For low pressure application, Bray offers a standard reduced disc diameter to decrease seating torques and to extend seat life, thus increasing the valve's performance and reducing actuator costs for the customer.

VELOCITY LIMITS

For On/Off Services:
Fluids – 30 ft / sec (9m / s)
Gases – 175 ft / sec (54m / s)

C_V VALUES–VALVE SIZING COEFFICIENT

Valve Size		Disc Position (degrees)								
ins	mm	90°	80°	70°	60°	50°	40°	30°	20°	10°
2	50	144	114	84	61	43	27	16	7	1
2 1/2	65	282	223	163	107	67	43	24	11	1.5
3	80	461	364	267	154	96	61	35	15	2
4	100	841	701	496	274	171	109	62	27	3
5	125	1376	1146	775	428	268	170	98	43	5
6	150	1850	1542	1025	567	354	225	129	56	6
8	200	3316	2842	1862	1081	680	421	241	102	12
10	250	5430	4525	2948	1710	1076	667	382	162	19
12	300	8077	6731	4393	2563	1594	1005	555	235	27
14	350	10538	8874	5939	3384	2149	1320	756	299	34
16	400	13966	11761	7867	4483	2847	1749	1001	397	45
18	450	17214	14496	10065	5736	3643	2237	1281	507	58
20	500	22339	18812	12535	7144	4536	2786	1595	632	72

C_V is defined as the volume of water in U.S.G.P.M. that will flow through a given restriction or valve opening with a pressure drop of one (1) p.s.i. at room temperature. Recommended control angles are between 25°–70° open. Preferred angle for control valve sizing is 60°–65° open.

EXPECTED SEATING/UNSEATING TORQUES (Lb.-Ins.)

Valve Size		Full-Rated Pressure Valves				Reduced Disc Diameter
		ΔP (PSI)				ΔP (PSI)
ins	mm	50	100	150	175	50
2	50	125	130	135	140	125
2 1/2	65	195	205	215	220	195
3	80	260	275	290	297	260
4	100	400	425	450	462	267
5	125	615	670	725	755	410
6	150	783	871	953	1003	537
8	200	1475	1650	1825	1915	983
10	250	2240	2520	2800	2940	1493
12	300	3420	3870	4320	4545	2280
14	350	4950	5700	6450	—	3300
16	400	6400	7700	9000	—	4267
18	450	7850	9850	11850	—	5267
20	500	10300	12900	15500	—	6867

Valve Torque Rating – Bray has classified valve torque ratings according to 3 types: non-corrosive lubricating service, general service, and severe service. Torques listed above are for general services. Consult Bray for torque information corresponding to specific applications.

TO USE TORQUE CHART, NOTE THE FOLLOWING:
1) For Bray valves, Series 20, 21, 30, 31 and 34.
2) Review Technical Bulletin No. 1001, Expected Seating/Unseating Torques, for explanation of the 3 service classes and their related seating/unseating torque values for given pressure differentials of Full-Rated and Reduced Disc Diameter valves.
3) Dynamic Torque values are not considered. See Technical Bulletin No. 1002 for evaluation of Dynamic Torque values vs. Seating/Unseating Torque values.
4) Do not apply a safety factor to above torque values when determining actuator output torque requirement.
5) For 3 way assemblies where one valve is opening and other is closing, multiply torque by 1.5 factor.

SPECIFICATIONS

RECOMMENDED SPECIFICATIONS FOR BRAY SERIES 30/31 SHALL BE:

- Polyester coated, cast iron, wafer or lug bodies.
- With flange locating holes that meet ANSI Class 125/150 (or BS 10 Tables D & E, BS 4504 NP 10/16, DIN ND 10/16, AS 2129 and JIS 10) drillings.
- Through-stem direct drive double "D" design requiring no disc screws or pins to connect stem to disc with no possible leak paths in disc/stem connection.
- Stem mechanically retained in body neck and no part of stem or body exposed to line media.
- Tongue-and-groove seat design with primary hub seal and a molded O-ring suitable for weld-neck and slip-on flanges. Seat totally encapsulates the body with no flange gaskets required.
- Spherically machined, hand polished disc edge and hub for minimum torque and maximum sealing capability.
- Equipped with non-corrosive bushing and self-adjusting stem seal.
- Bi-directional and tested to 110% of full rating.
- Bi-directional pressure ratings:
2"-12" valves: 175 psi, 14"-20" valves: 150 psi
Lug bodies for dead end service
With downstream flanges or vulcanized seats, pressure ratings are equal to bi-directional ratings as stated above.
With no downstream flanges or non-vulcanized seats: 2"-12" valves: 75 psi, 14"-20" valves: 50 psi
- No field adjustment necessary to maintain optimum field performance.
- The valve shall be Bray Series 30 wafer / 31 lug or equal.

WEIGHTS

Valve Size		Series 30	Series 31
ins	mm		
2	50	5.5	7.0
2 1/2	65	7.0	8.0
3	80	7.5	9.0
4	100	11.5	15.0
5	125	14.0	20.0
6	150	17.0	23.0
8	200	34.0	42.0
10	250	49.0	66.0
12	300	67.0	88.0
14	350	95.0	114.0
16	400	135.0	166.0
18	450	200.0	226.0
20	500	260.0	305.0

Weights are in lbs.

MATERIALS SELECTION

2"–20" (50mm-500mm)

BODY:

- Cast Iron ASTM A126 Class B
- Ductile Iron ASTM A536
- Cast Steel ASTM A216 WCB
- Aluminum ASTM B26

SEAT:

- Buna-N – Food Grade
- EPDM – Food Grade
- FKM*
- White Buna-N – Food Grade

STEM:

- Coated Carbon Steel
- 416 Stainless Steel ASTM A582 Type 416
- 304 Stainless Steel ASTM A276 Type 304
- 316 Stainless Steel ASTM A276 Type 316
- Monel

DISC:

- Aluminum Bronze ASTM B148-954
- Coated Ductile Iron ASTM A536 Gr. 65-45-12
- Ductile Iron, Nylon 11 Coated, ASTM A536 Gr. 65-45-12
- Ductile Iron, Halar® Coated, ASTM A536 Gr. 65-45-12
- 316 Stainless Steel ASTM A351 CF8M
- Hastelloy® C-276 ASTM B575 Alloy N10276

TEMPERATURE RANGE OF SEATS

Type	Maximum	Minimum
EPDM	+250°F(121°C)	-40°F(-40°C)
Buna-N	+212°F(100°C)	0°F(-18°C)
FKM*	+400°F(204°C)	0°F(-18°C)

COMPONENTS

No.	Qty.	Description
1	1	Body
2	1	Seat
3	1	Disc
4	1	Stem
5	1	Stem Seal
6	1	Stem Bushing
7	2	Stem Retainer
8	1	Thrust Washer
9	1	Retaining Ring

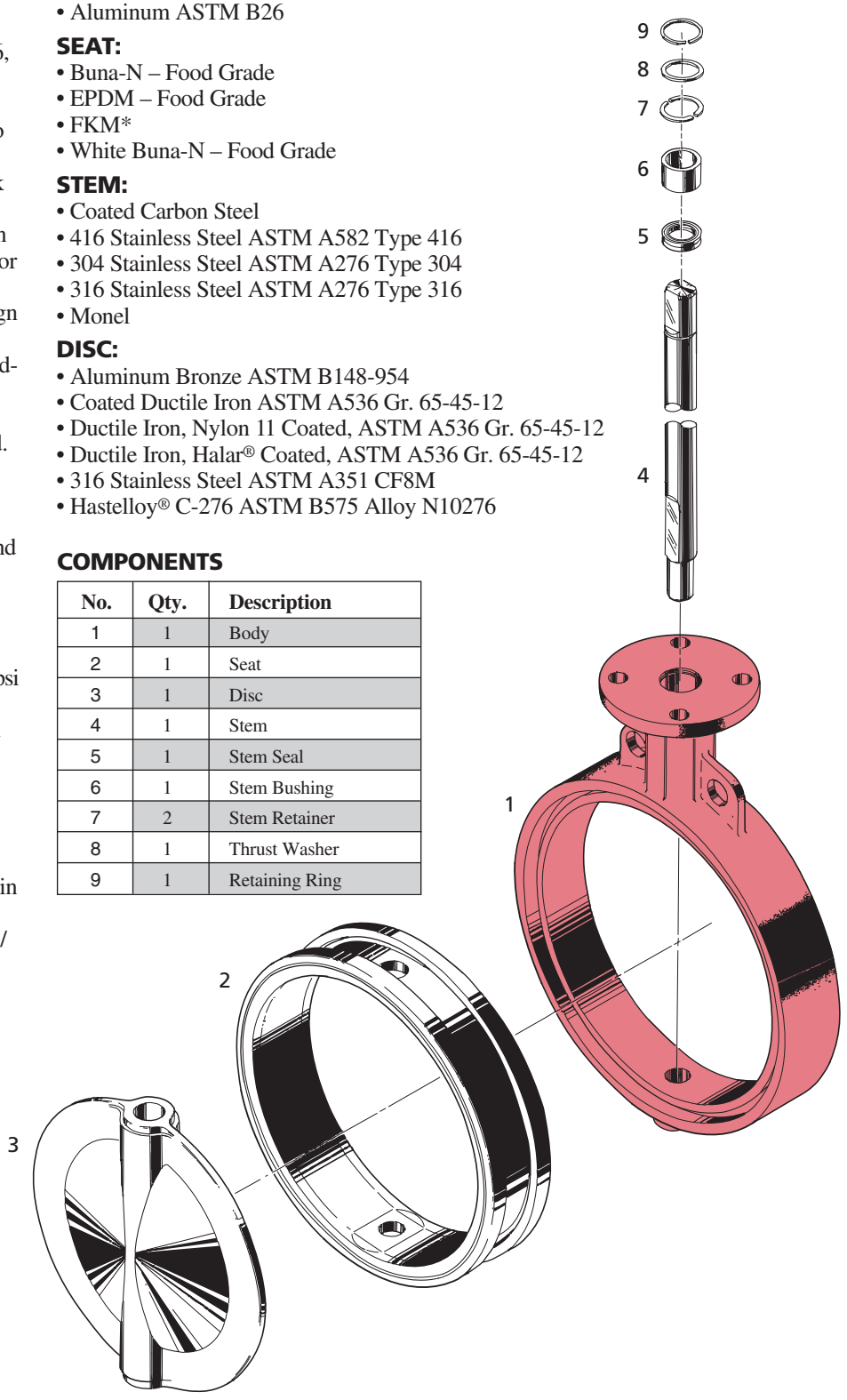

*FKM is the ASTM D1418 designation for Fluorinated Hydrocarbon Elastomers (also called Fluoroelastomers).

Hastelloy® is a registered trademark of Haynes International, Inc.
Halar® is a registered trademark of Ausimont U.S.A., Inc.

ASSEMBLY

INSTALLATION

Position the disc in the partially open position, maintaining the disc within the body face-to-face. Place the body between the flanges and install flange bolts. *Do not use flange gaskets.* Before tightening flange bolts, carefully open the disc to the full open position to ensure proper alignment and clearance of the disc O.D. with the adjacent pipe I.D. Leave disc in the full open position and tighten flange bolts per required specification. Once bolts are tightened, carefully rotate disc to closed position to ensure disc O.D. clearance.

MAINTENANCE AND REPAIR

The many Bray features minimize wear and maintenance requirements. No routine lubrication is required. All components – stem, disc, seat, bushing, stem seal, etc., are field replaceable, no adjustment is needed. If components require replacement, remove the valve from the line by placing the disc near the closed position, spread the flanges, support the valve, then remove the flange bolts. No valve maintenance, including removal of manual or power actuators, should be performed until the piping system is completely depressurized.

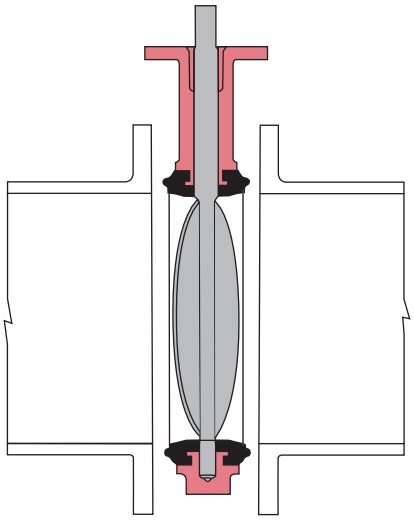

Disc in the Near Closed Position

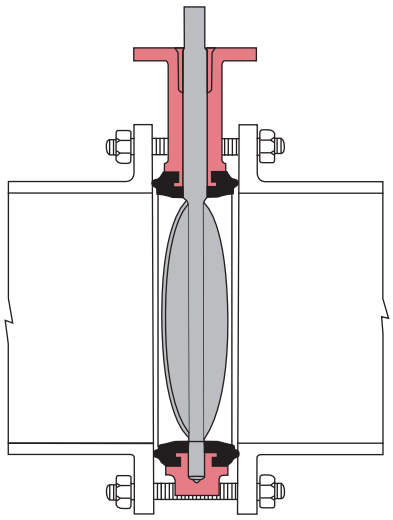

Disc in the Partially Open Position

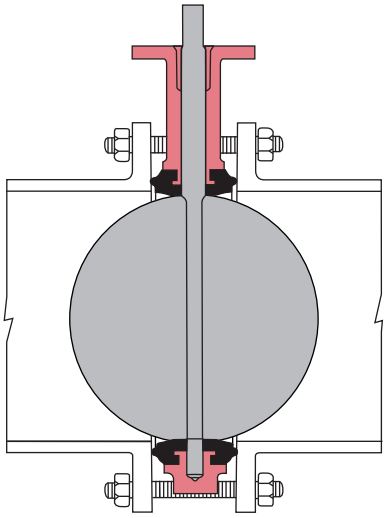

Disc in the Full Open Position

DISASSEMBLY

Remove the handle, gear operator, or actuator from actuator mounting flange. Remove "Spirolox®" retaining ring. Remove stem with its thrust washer and two C-ring stem retainers. Remove bushing and seal. Remove the disc from the seat, protecting disc edge at all times. Push the seat into an oval shape, then remove the seat from the body.

ASSEMBLY

Push the valve seat into an oval and push it into the body with seat stem holes aligned to body stem holes. Push stem into the stem hole of body. For aid in inserting disc, slightly protrude stem beyond the I.D. of the top of the seat. Install a light coating of foodgrade silicone oil (for silicone free applications use soap and water) on the I.D. of seat. Insert the disc into the seat by lining up the disc hole with the stem hole of the seat. Note: the broached double "D" flats in the disc must be toward the bottom of valve body. (Take special care when lining disc up with stem.) With a downward pressure and rotating the stem back and forth, push the stem until the stem touches the bottom of the body stem hole. Make certain that when pushing the stem through disc bottom, the broached flats of stem and disc are aligned. After the stem has engaged the disc, but before the stem is firmly seated in the body, replace the stem seal and bushing. Install the two C-ring stem retainers in the groove in the stem and thrust washer on top of the C-rings. Seat the stem firmly in the body and install the "Spirolox®" retaining ring back into position.

DISTRIBUTOR

All statements, technical information, and recommendations in this bulletin are for general use only. Consult Bray representatives or factory for the specific requirements and material selection for your intended application. The right to change or modify product design or product without prior notice is reserved.
United States patent number 5,152,501.
Other patents issued and applied for worldwide.

Bray® CONTROLS
A Division of BRAY INTERNATIONAL, Inc.
13333 Westland East Blvd. Houston, Texas 77041
281.894.5454 FAX 281.894.9499 www.bray.com

Bray® is a registered trademark of BRAY INTERNATIONAL, Inc.
© 2006 Bray International. All rights reserved.

Bray VALVE & CONTROLS
A Subsidiary of BRAY INTERNATIONAL, Inc.

SERIES 31
ES-0014
Date: June 1993

Valve Size	A	B	C	D	E	F	Top Plate Drilling BC	Top Plate Drilling No. of Holes	Top Plate Drilling Hole Diameter	G	H	J	K	L	Lug Bolting Data BC	Lug Bolting Data No. of Holes	Lug Bolting Data Threads UNC-2B	Adapter Code	Weight
2	3.69	1.62	2.00	2.84	5.50	3.54	2.76	4	.39	.55	.39	1.25	1.32	2.30	4.75	4	.62-11	A	7.0
2½	4.19	1.75	2.50	3.34	6.00	3.54	2.76	4	.39	.55	.39	1.25	1.91	2.57	5.50	4	.62-11	A	8.0
3	4.88	1.75	3.00	4.03	6.25	3.54	2.76	4	.39	.55	.39	1.25	2.55	2.81	6.00	4	.62-11	A	9.0
4	6.06	2.00	4.00	5.16	7.00	3.54	2.76	4	.39	.63	.43	1.25	3.57	4.09	7.50	8	.62-11	B	15.0
5	7.12	2.12	5.00	6.16	7.50	3.54	2.76	4	.39	.75	.51	1.25	4.63	4.61	8.50	8	.75-10	C	20.0
6	8.12	2.12	5.75	7.02	8.00	3.54	2.76	4	.39	.75	.51	1.25	5.45	5.06	9.50	8	.75-10	C	23.0
8	10.50	2.50	7.75	9.47	9.50	5.91	4.92	4	.57	.87	.63	1.25	7.45	6.05	11.75	8	.75-10	D	42.0
10	12.75	2.50	9.75	11.47	10.75	5.91	4.92	4	.57	1.18	.87	2.00	9.53	7.69	14.25	12	.88-9	E	66.0
12	14.88	3.00	11.75	13.47	12.25	5.91	4.92	4	.57	1.18	.87	2.00	11.47	9.02	17.00	12	.88-9	E	88.0

Note: K dim is disc chordal dimension at valve face

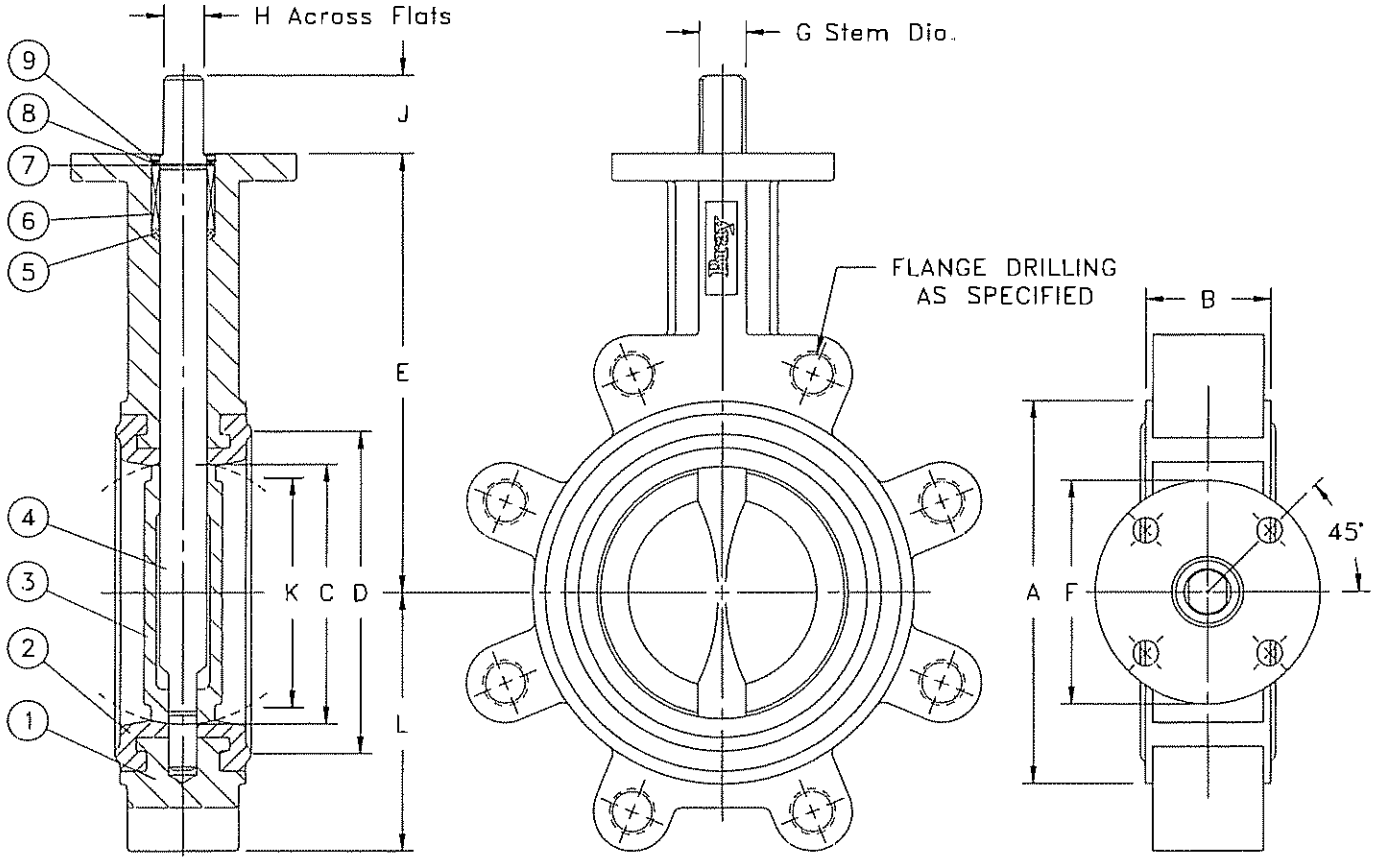

ITEM No.	NAME	No. REQUIRED	SERIES/PART No.	MATERIAL	SPECIFICATION/REMARKS
9	RETAINING RING	1			
8	THRUST WASHER	1			
7	STEM RETAINER	2			
6	BUSHING	1			
5	PACKING	1			
4	STEM	1			
3	DISC	1			
2	SEAT	1			
1	BODY	1			

Valve Size _____ Flg Drilling _____
Pressure Rating _____
Customer/Project _____
Inq/P O No _____
Bray Order No _____
Certified Correct By _____ Date _____

The High Performance Company

BRAY VALVE & CONTROLS
A Subsidiary of BRAY INTERNATIONAL, Inc.

PARTS LIST AND DIMENSIONS (Inches)
BUTTERFLY VALVE, SERIES 31 SIZES 2"-12"

Series	Size	Part No	Material Trim Code	Drawing No
				ES-0014

Bray

REV 1 / ERN-123B

DISK NO 301

Valve Size	A	B	C	D	E	
2,2 1/2,3	.552	.395	10.62	1.38	1.12	
4	.631	.434	10.62	1.38	1.12	
5,6	.749	.513	10.62	1.38	1.12	
8	.867	.631	11.75	2.00	1.62	
10,12	1.182	.867	11.75	2.00	1.62	

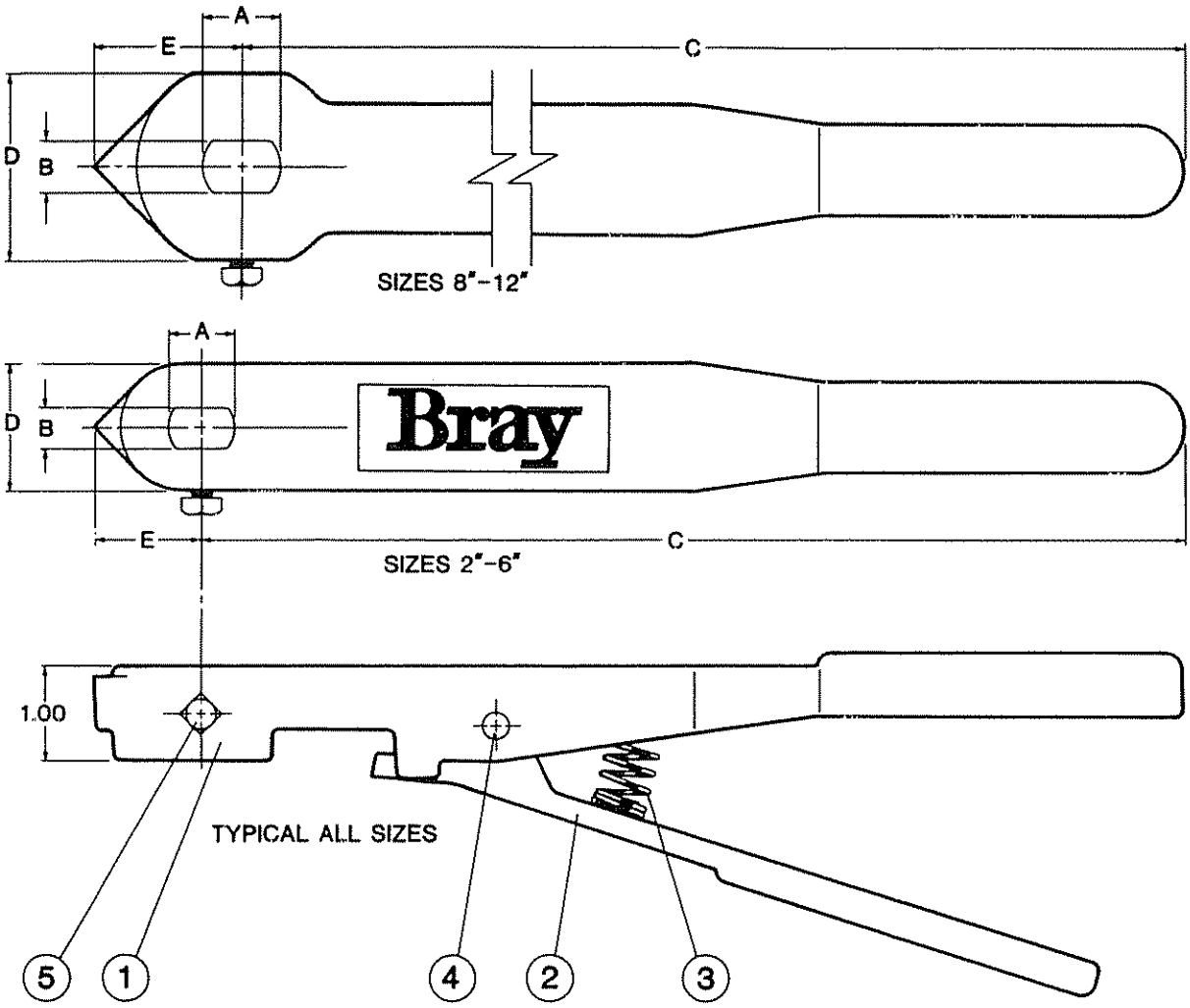

ITEM No.	NAME	No. REQUIRED	SERIES/PART No.	MATERIAL	SPECIFICATION/REMARKS
5	SET SCREW	1			
4	HINGE PIN	1			
3	SPRING	1			
2	LATCH	1			
1	HANDLE	1			

The High Performance Company

BRAY CONTROLS
A Subsidiary of BRAY INTERNATIONAL, Inc.

DIMENSIONS (Inches)
LEVER ACTUATOR, SERIES 01
SIZE 2"–12"

Series	Size	Part No.	Material Trim Code	Drawing No.
				ES-0028

Bray



Series 70
Electric Actuator

RUGGED ELECTRIC ACTUATOR FOR ROTARY VALVES

300 TO 18,000 LB-IN OUTPUT TORQUE

Bray Controls' years of proven success in electric actuation, combined with innovative engineering, has produced the Series 70. The Series 70 features on-off or modulating control. This red, round electric actuator for rotary valves delivers highly reliable service.

Bray's unique, customer–friendly designed Control Center has many advantages over present industry standards including:

- **UL, CSA and CE certification of most units**
- **Ease of customer field wiring directly to the terminal strip without interference from other components**
- **Simple and unique manual override handwheel system**
- **Lowest profile and lightest weight actuator on the market**
- **Simple finger or screw driver adjustment of travel limit cams without interference from other components**
- **Highly visible valve status display on most units**
- **Externally adjustable travel stops**
- **Captive housing screws**

Additionally, components not requiring customer access are protected underneath the Power Center cover plate.

LOW PROFILE, COMPACT, HIGH TORQUE DESIGN

The Series 70 is by far the most compact, lowest profile design of any electric actuator delivering comparable torque output. Thorough research and many years of field experience have gone into the development of this state-of-the-art actuator – *the product of the future*. This design offers the advantages of greatly reduced space requirements, lighter weight and ease of installation and maintenance when compared to other electric actuators. When mounted directly to Bray valves, the Series 70 is especially compact.



The Series 70 compared to a typical actuator, both mounted to 4" Bray valves.

DIRECT MOUNTING OF THE SERIES 70 ON BRAY VALVES

Bray actuators mount directly to Bray valves without using any external linkage. Field installation is simple and misalignment is minimized. For sanitary processing and outdoor applications, the Bray direct mounting system reduces the possibility of contamination buildup or corrosion between the valve and actuator. The mounting pattern complies with ISO 5211 and VDI/VDE 3845 (NAMUR recommendations). Standard rotation is 90° reversible. Bray can provide linkages for mounting the Series 70 to other devices requiring 90° rotation. Please consult the Bray factory for further information.

EXTERIOR FEATURES

EXPLOSION PROOF ENCLOSURE

The Series 70 waterproof/explosion proof unit is UL NEMA 4,4x,7&9 listed and certified to specifications for hazardous locations. The rugged, heavy duty housing contains precision machined bores and flanges to meet flame path requirements. Waterproof /explosion proof models are currently available with 800 to 2,000 lb.-in. output torque, continuous or intermittent duty.



MECHANICAL TRAVEL STOPS

Stainless steel mechanical travel stops permit precise field adjustment of actuator movement to specific degrees of rotation. The travel stops are located outside the base for easy readjustment without removing the cover. Stainless steel lock nuts with O-ring seals hold the travel stops securely in place. The travel stops are normally set at the factory to allow 0° and 90° travel.





Series 70 manual override handwheel with optional spinner.

ENCLOSURE (A)
The Series 70 waterproof unit is UL NEMA 4, 4x listed. Die-cast aluminum cover and base are high-quality polyester powder coated for exceptional corrosion, wear, impact and ultra-violet resistance

MANUAL OVERRIDE (B)
A manual override handwheel is standard on all models to rotate the valve without electrical power. A yellow caution stripe around the handwheel hub indicates the handwheel is engaged for manual operation.

CAPTIVE COVER BOLTS (C)
The cover is attached to the base by stain-less steel bolts. When the cover is removed the bolts are held captive in the cover. This prevents time consuming problems caused from lost or misplaced bolts.

VALVE STATUS DISPLAY (D)
The Series 70 features a highly visible valve status display on most units. Prominently labeled and color coded – yellow for open, red for closed – the display indicates valve position through the full range of travel. The display can be seen from almost any angle. Made of high impact, heat and chemical resistant clear polycarbonate, this display withstands caustic wash down and offers excellent corrosion protection. Potential leak paths are eliminated since the indicator cover utilizes a static seal, not a dynamic seal.

ELECTRICAL CABLE CONNECTIONS (E) (Optional) A multi-pin, watertight cable receptacle offers full compatibility with today's industrial wiring systems. Factory pre-wiring prevents errors and allows quick–connect field installation. Cord sets with connection/flying leads or extension cords with connections on both ends can plug directly into the receptacle.





CONDUIT ENTRIES (F)
The Series 70 features two conduit connections in either NPT or metric threads. One entry is for power, one for control wiring.

PILOT DRILLED HOLES FOR LOCAL CONTROL STATION MOUNTING (G)
The conduit entry panel has four holes which may be easily tapped for the installation of optional local Control Station.



CLEAN AND EASY ACCESS TO ALL FIELD WIRING AND ADJUSTMENTS

Bray has specifically engineered the Series 70 Control Center for customer–friendly convenience. Designed like a junction box, the Series 70 offers by far the easiest access to terminal block wiring, cam adjustments and switch installation. Accessories are easily added, either before installation or after installation. Therefore, the time required for field start-up and adjustment is greatly reduced, and maintenance can be performed with assured ease and safety.

Bray's unique design, modular system of components and accessories, and innovative features combine to best meet today's industrial requirements.

TORQUE LIMITING SWITCHING SYSTEM (Optional)

The torque limiting switching system consists of two SPDT mechanical switches and two factory calibrated set screws. The upper cam adjusts the torque limit in the open direction, and the lower cam adjusts the torque limit in the closed direction. The switches independently respond to predetermined loads in both the open and closed travel directions by sensing the movement of the worm shaft, and interrupting the electrical power to the motor. The switches operate at any point of actuator travel.



Torque Limit Switches shown with mounting bracket sectioned for clarity.

SERIES 70 APPLICATIONS

The Series 70 is the ideal choice for process control applications involving:

- Automation and computer systems
- Butterfly, ball, plug and other rotary valves
- Dampers, switches, safety and flow-control devices
- Machine and fixture indexing
- Hostile environments demanding excellent moisture, chemical and corrosion resistance
- Long service life and rugged reliability

INDUSTRIES

Bray's Series 70 Electric Actuators are used in a wide range of industries world wide, including: Chemical, Pharmaceutical, Petroleum Refining and Oilfield, Microelectronics, Pulp and Paper, Water and Waste Water Treatment, Brewing, Food Processing, Beverages, Power, Marine, Mining, Textile and HVAC.

CONTROL CENTER FEATURES

TRAVEL LIMIT SPDT SWITCHES (A)

Bray has provided two SPDT mechanical switches as standard. These durable, high quality switches are mechanically isolated and electrically independent. The dedicated circuits eliminate any voltage cross-over between the switches. This switch combination is used for both open and closed positions of the valve and requires only one cam for each direction of valve travel. Bray's design provides synchronicity between motor control and position display. Switches are easily accessible without interference from other components. Each switch is marked with open or close labels and the cams are color coded, green for open and red for close, eliminating the possibility of making wrong adjustments of travel limits or field wiring errors.

AUXILIARY SWITCHES (Optional)

Independent dry-contact SPDT mechanical switches are available to indicate travel position to remote customer control systems.

AUTOMATIC POWER CUTOUT SWITCH (B)

The Series 70 is supplied with a SPDT mechanical switch which cuts power to the motor when the handwheel is engaged for manual operation. This switch also functions as a safety emergency shutdown device that immediately stops the actuator motor even if electrical power is still being applied to the actuator.

CERTIFICATIONS / APPROVALS

Bray has gained UL, CSA and CE certifications on most intermittent and continuous duty actuators. These certifications insure that the Series 70 has been designed to the highest quality requirements and most stringent safety standards worldwide. Substantial resources have been invested to assure our customers that the Series 70 is the best actuator on the market and will remain so.



CAMS / CAM ADJUSTMENT (C)
Bray's patented cam design is an outstanding feature of the Series 70. Cams for each switch are *infinitely* adjustable by finger touch or screwdriver with no special tools needed. The adjustment knobs rotate the specially formed cams. Each cam is color coded – the red adjustment knob controls the red cam (close position), and the green knob controls the green cam (open position). Standard factory setting allows 90° travel between open and closed positions.

TERMINAL BLOCK (D)
The actuator switches are pre-wired to a terminal block. The block has been designed for ease of customer wiring without interference from other components and features clearly marked terminal numbers. The block has been placed near the two conduit entries with ample room for running wire leads. A wiring diagram is included inside the cover for easy reference. The ground wire screw (**E**) is plated green and positioned for easy access. With some optional features Bray installs a second terminal block for Bray factory wiring and customer field wiring of additional limit switches.

O-RING SEAL FOR WATERTIGHT ENCLOSURE (F)
The large seal between the cover and base provides a waterproof seal and prevents internal corrosion. The Bray Series 70 O-ring seal is the best design for watertight enclosures and is far superior to commonly used gaskets.



HEATER (G) (Optional)
Pre-wired to the terminal block, a self-regulating heater prevents condensation from collecting inside the actuator, which could cause damage to the electrical components. The heater is mounted below the switch plate. Heaters are ideal for use in applications with extremely wide temperature or humidity ranges.



Bray designed the Series 70 to completely separate the Control Center from the Power Center. The Power Center, located in the actuator base, consists of motor, gear train, capacitor, output drive and heater. This design protects the power drive system as each component has been engineered to require no customer servicing. The Power Center components have been uniquely configured to maintain the extremely low profile of the Series 70.

POWER CENTER FEATURES

MOTOR (A), CAPACITOR (B), GEAR TRAIN (C) AND WORM GEAR (H) The Series 70 has a 120 or 220 VAC single phase permanent split-capacitor reversible induction motor. The motor features a built-in thermal overload protector of a bi-metallic strip in the windings set at 275°F (135°C) with automatic reset. The heavy-duty spur gear train is composed of precision cut, multi-staged gears and shafts. The gears and shafts are heat treated high alloy steel and will withstand locked rotor conditions. The gear train is permanently lubricated at the factory. This gear train drives the worm shaft which in turn drives the segmented worm gear output shaft.

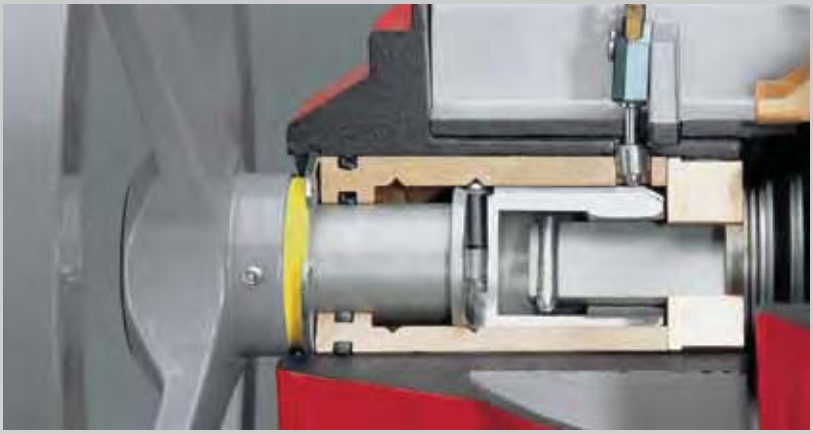

Above photograph is a sectional view of the manual override assembly with override disengaged. Photograph below shows manual override engaged.

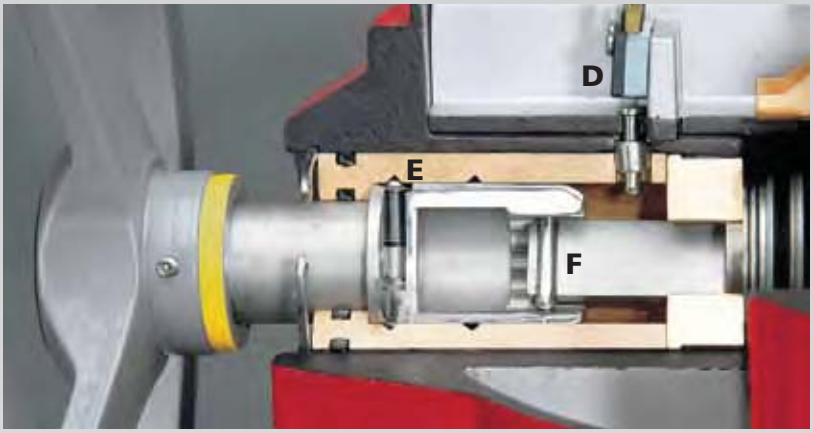

MANUAL OVERRIDE HANDWHEEL ASSEMBLY

- **Pull to engage for manual operation.**
- **Rotate handwheel to position valve.**
- **Push to disengage for power operation.**

A simple pull engages the handwheel for manual operation. The Bray manual override system ensures positive and fast manual operation without the use of extra tools or levers. When the handwheel is engaged, the electrical power to the motor is cut off by means of the Automatic Power Cutout Switch (**D**). When engaged, the manual override shaft is held in position by a Ball Detent (**E**). The Ball Detent also holds the shaft in position when the handwheel is pushed in to disengage the override. The Drive Pin (**F**) engages and disengages the manual override shaft from the worm and segmented worm gear output shaft. When the handwheel is pushed or pulled, the drive pin smoothly engages the worm shaft.

SELF-LOCKING OUTPUT DRIVE ASSEMBLY

The output drive assembly features a self-locking worm and worm gear drive which holds the valve in the desired position without the need for electro-mechanical braking systems. The worm shaft directly drives the worm gear. The Worm (**G**) is made of chrome-moly steel and the segmented Worm Gear (**H**) is a precision machined aluminum bronze casting. The worm gear and Output Shaft (**I**) are one part. The output shaft is the driving member that positions the valve. The worm gear drives the valve status display shaft which operates the infinitely adjustable cams to limit the electrical travel of the actuator.





MECHANICAL TORQUE LIMITING SYSTEM (**Optional**)

The mechanical torque limiting system consists of a Worm Shaft, a Worm (**G**), a set of Torque Disc Springs (**J**) and a Shaft Groove (**K**) for torque limiting switches. The torque disc springs, located on each side of the worm, resist the linear movement of the worm shaft. The worm shaft is driven against the torque disc springs in response to output torque. The shaft groove actuates the torque limiting switches, located above in the Control Center, to start and stop the motor. (Please refer to the Control Center section on page 4 for description of the Torque Limiting Switching System). The precisely controlled movement of this system is the main torque limiting element of the Series 70.



MODULATING ACTUATOR FOR PRECISION CONTROL OF VALVE POSITION

The Bray Series 70 Electric Actuator can be equipped with a Servo for precise control of valve position. The Servo consists of a microprocessor controlled circuit board and a feedback potentiometer assembly, which both fit entirely within the standard Series 70 actuator housing. The circuit board has terminal blocks for customer field wiring, and other terminals for internal connections to the actuator components. The feedback potentiometer is driven by a gear set connected to the actuator output drive. Also available are Servos capable of serial bus communication, such as DeviceNet.

COMMAND CENTER OPTIONS

SERVO PRO OPERATION

The Servo Pro can be configured by the factory or the customer to accept several types of input signals, such as 4-20 mADC, 0-10 VDC, 0-5 VDC or potentiometer control. Each terminal connection and indicator is clearly labeled to simplify field wiring and operation. The input signal electronically represents the *desired* actuator position, and the internal feedback potentiometer signal electronically represents the *actual* actuator position. The microprocessor constantly compares the two signals, and if a difference is detected, drives the actuator in the proper direction until the signals are equal. When a balance is reached, the microprocessor turns off the actuator motor. The worm gear then mechanically holds the valve in the desired position until the input signal is changed again.



Feedback Potentiometer Gear

SPEED CONTROL

Adjustments are configurable for both open and closed speed control of the actuator motor. In addition, an approach control circuit senses when the actuator is about to reach the desired valve position, and pulses the motor to avoid overshooting the set point.

POTENTIOMETER CALIBRATION

Calibration of the feedback potentiometer is done through a unique gear arrangement that is easily accessible and eliminates the need of any special tools. A simple adjustment of Bray's patented cam drive aligns the potentiometer gear as easily as a travel cam.

SERVO PRO FEATURES / SPECIFICATIONS

Note: Servo is available for modulating service – continuous duty actuators only.

Note: "Standard" is the way the Servo is set at the factory.
"Configurable" means the customer, or the factory, can modify the Servo by setting 10 DIP switches.

POWER INPUT	24 , 120 or 24 0 VAC, 50/60 Hz (power must match motor)
POWER CONSUMPTION	2 Watts (not including actuator power)
INPUT SIGNAL	Standard: 4-20 mADC 250 Ohm Input Impedance. Configurable: 0-10 VDC, 2-10 VDC, 10K Ohm or greater potentiometer, 0-10 VDC has 2.1 K Ohm Input Impedance
CALIBRATION	Single Button Autocalibration
INDICATORS	Power: Green LED Status: Flashing Red / Green LED Motor: Red LED (Close), Green LED (Open)
CONTROL MODES	Standard: Full Range, Direct Acting Reverse Acting, Split Range
FAIL POSITION (Loss of Input Signal)	Standard: Fail Closed Configurable: Fail Open
CONTROL CHARACTERISTIC	Linear
DUTY CYCLE	100%
INTERNAL FEEDBACK	10K Ohm Potentiometer, gear driven
RETRANSMISSION OUTPUT	Standard: 4-20 mADC Configurable: 0-5 VDC, 0-10 VDC, 2-10 VDC Retransmission Output is designed to drive an isolated 250 –500 Ohm resistive load.
SPEED CONTROL	Standard: Full Speed (Speed Control is Disabled) Configurable: Bidirectional – Independent Open and Close Trim Pots adjustment

FEEDBACK POTENTIOMETER
The feedback potentiometer gear has a green rib which should be aligned with the slot on top of the cam-indicator shaft when in the fully open position. This simple alignment ensures the potentiometer will provide the Servo Pro with continuous, accurate actuator-valve position feedback.

VOLTAGE SPIKE PROTECTION
Voltage spikes that can damage electrical equipment are very common in industrial locations. Large voltage spikes can be caused by switching power loads, such as large motor drives, at the customer location. The output stage TRIACs of the Servo Pro are protected against damage from voltage spikes by a special combination of

- limit switch circuitry
- metal oxide varistor (MOV) for transient voltage suppression
- zero crossing detection

DEVICENET SERVO PRO
Bray also offers the Series 70 with the most advanced serial bus communication Servo on the market. The Bray **DeviceNet Servo Pro** is fully ODVA (Open DeviceNet Vendor Association) compliant. Benefits include greatly simplified field wiring and installation, advanced control and diagnostics in real-time from a remote location, and full network integration. Please contact your Bray representative for more information.

CONTROL STATION (Optional)
Bray has designed a manual local electrical control station that flush mounts directly to the Series 70. The Control Station features:

- a local–off–remote control switch
- an open–stop–close switch
- two lights which locally indicate open and closed valve position

The cover plate can be rotated in any 90° increment, allowing the customer to operate and view the station with ease. The enclosure is aluminum and weatherproof (NEMA 4, 4X, IP 65). Additionally, the control station has captive cover bolts and two input ports available in the following thread connections: 3/4" NPT or M25. Two different multi-pin, watertight electrical cable connections are also available.



Control Station



Servo Pro shown

DIMENSIONS

WATERPROOF ENCLOSURE Dimensions are in Inches [Millimeters in brackets]

Actuator Series	A	B	C	D	E	F	G	H	J	K (UNC) x B.C.	M (UNC) x B.C.	N	P	Q	øR	S	T	U	Wt. lbs [kgs]
S70-003 S70-005	7.5 [191]	5.6 [142]	3.0 [76]	5.1 [130]	1.9 [48]	1.94 [49.3]	.19 [4.8]	1/2 ‡	2.0 [51]	5/16-18 x ø2.76 F07	—	.75 [19]	.51 [13]	1.75 [44]	3.5 [89]	–	–	–	12 [6]
S70-008 S70-012 S70-020	10.1 [257]	7.8 [198]	3.7 [94]	6.5 [165]	2.5 [64]	2.69 [68.3]	.56 [14.2]	3/4 ‡	2.6 [66]	5/16-18 x ø2.76 F07	1/2-13 x ø4.92 F12	1.18 [30]	.87 [22]	2.20 [56]	8 [203]	–	–	–	28 [13]
S70-030 S70-050 S70-065	12.1 [307]	9.5 [241]	5.6 [142]	7.2 [183]	2.9 [74]	3.19 [81]	.56 [14.2]	3/4 ‡	3.1 [79]	1/2-13 x ø4.92 F12	3/4-10 x ø6.50 F16	See Detail A1			12 [305]	–	–	–	48 [22]
S70-130/131 S70-180/181	12.1 [307]	9.5 [241]	5.6 [142]	12.5 [317]	8.1 [206]	9.2 [234]	.56 [14.2]	3/4 ‡	8.3 [211]	1/2-13 x ø4.92 F12	3/4-10 x ø6.50 F16	See Detail A2			12 [305]	6.1 [155]	12.7 [323]	8 [203]	83 [38]

WATERPROOF / EXPLOSION PROOF ENCLOSURE Dimensions are in Inches [Millimeters in brackets]

Actuator Series	A	B	C	D	E	F	G	H	J	K (UNC) x B.C.	M (UNC) x B.C.	N	P	Q	øR	Wt. lbs [kgs]
S70-708 S70-712 S70-720	12.5 [317]	8.0 [203]	3.7 [94]	7.67 [195]	2.5 [64]	2.69 [68.3]	.56 [14.2]	3/4 ‡	2.6 [66]	5/16-18 x ø2.76 F07	1/2-13 x ø4.92 F12	1.18 [30]	.87 [22]	2.01 [51]	8 [203]	34 [16]

WATERPROOF ENCLOSURE - S70-003 TO S70-065

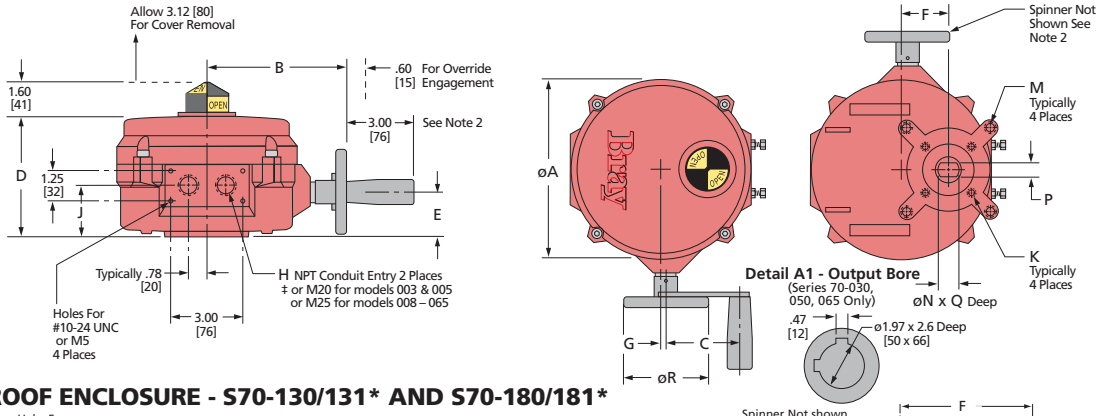

WATERPROOF ENCLOSURE - S70-130/131* AND S70-180/181*

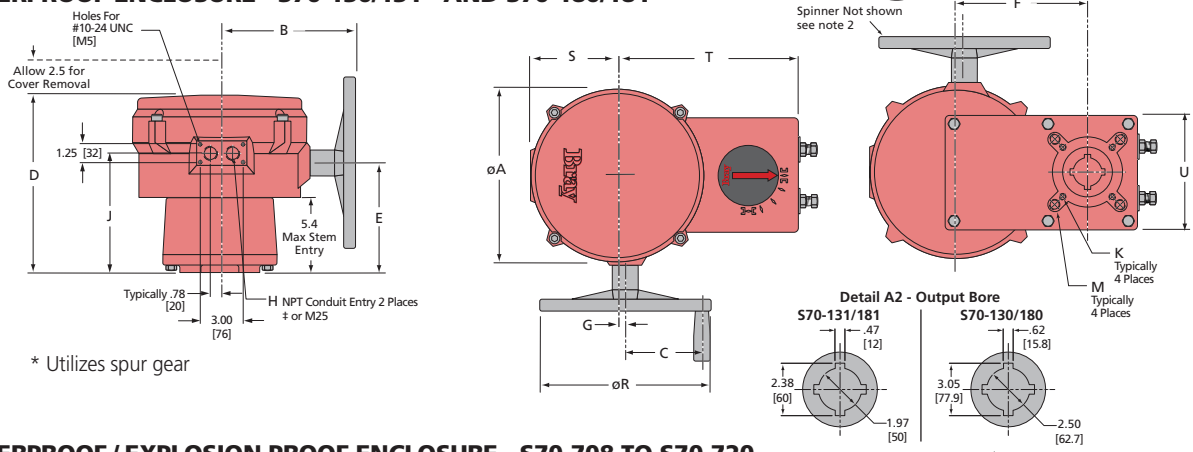

* Utilizes spur gear

WATERPROOF / EXPLOSION PROOF ENCLOSURE - S70-708 TO S70-720

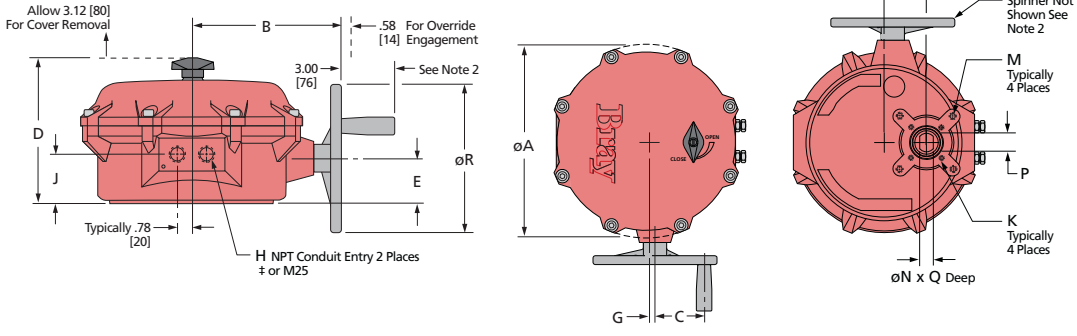

Notes:

1) Dimensions are in Inches, [Millimeters in brackets].
2) Handwheel Spinner shown in drawing is available as an option.
3) K & M Dimensions are also available in M8, M12, and M20.
4) N Dimension is also available with Double Square (Star) drive.

Actuator Series	Torque Output lb/in [Nm]	Single Phase Motors Current Rating (Amps) At All Speeds (locked rotor)			Speed for 90° Operations					Manual Override Gear Ratio	Rim Pull lbs [kgs]	Bray Valve Sizes for Direct Mounting
					On-Off Intermittent‡			Continuous:				
		VAC	Hz	Amps	Optional Speeds		Standard Speeds	On/Off	MOD			
S70-003	300 [34]	120	50/60	0.8		8 sec.	15 sec.	30 sec.	30+ sec.	30:1	11.4 [5]	2" through 6"
		220	50/60	0.5								
S70-005	500 [57]	120	50/60	1.4			15 sec.	30 sec.	30+ sec.	30:1	19.0 [9]	2" through 6"
		220	50/60	0.6								
S70-005	500 [57]	24	50/60	1.5			.	60 sec.	60+ sec.	30:1	19.0 [9]	2" through 6"
S70-008 S70-708	800 [90]	120	50/60	2.1	6 sec.	10 sec.	15 sec.	30 sec.	30+ sec.	30:1	13.0 [6]	2" through 12"
		220	50/60	0.9								
S70-012 S70-712	1200 [136]	120	50/60	2.1		10 sec.	15 sec.	30 sec.	30+c sec.	30:1	20.0 [9]	2" through 12"
		220	50/60	0.9								
S70-020 S70-720	2000 [226]	120	50/60	2.1			15 sec.	30 sec.	30+. sec	30:1	33.0 [15]	2" through 12"
		220	50/60	0.9								
S70-020	2000 [226]	24	50/60	2.0				60 sec.	60+ sec.	30:1	33.0 [15]	2" through 12"
S70-030	3000 [339]	120	50/60	3.0			18 sec.	30 sec.	30+ sec.	30:1	33.0 [15]	8" through 20"
		220	50/60	1.4								
S70-050	5000 [565]	120	50/60	3.0			18 sec.	30 sec.	30+ sec.	30:1	55.0 [25]	8" through 20"
		220	50/60	1.4								
S70-050	5000 [565]	24	50/60	3.0			70 sec.			30:1	55.0 [25]	8" through 20"
S70-065	6500 [735]	120	50/60	3.0				30 sec.	30+ sec.	30:1	72.0 [33]	8" through 20"
		220	50/60	1.4								
S70-130 S70-131	13000 [1469]	120	50/60	3.0				90 sec.	90+ sec.	90:1	86.0 [39]	12" through 22"
		220	50/60	1.4								
S70-180 S70-181	18000 [2034]	120	50/60	3.2				125 sec.	125+ sec.	90:1	86.0 [39]	16" through 36"
		220	50/60	1.5								

‡ The duty cycle for intermittent on-off operation is 25%. The continuous duty actuator with Servo is rated for 100% modulating operation.
12 VDC, 24 VDC and 3-Phase Motors are available as an option, please consult your Bray representative or the factory.

TYPICAL WIRING DIAGRAMS

ON–OFF
With Optional Torque Limit Switches, Auxiliary Limit Switches and Heater

Wiring Diagrams are For Reference Only. Do NOT use for field wiring.

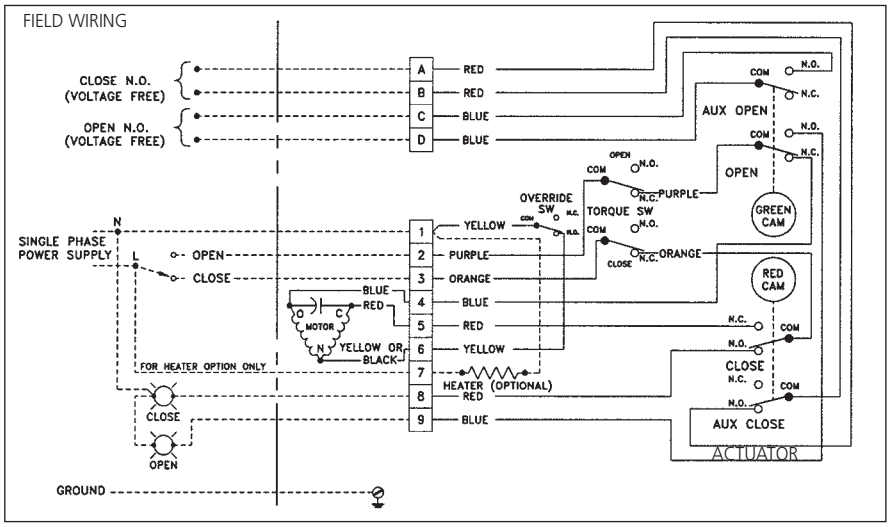

MODULATING–Servo Pro
With Optional Heater

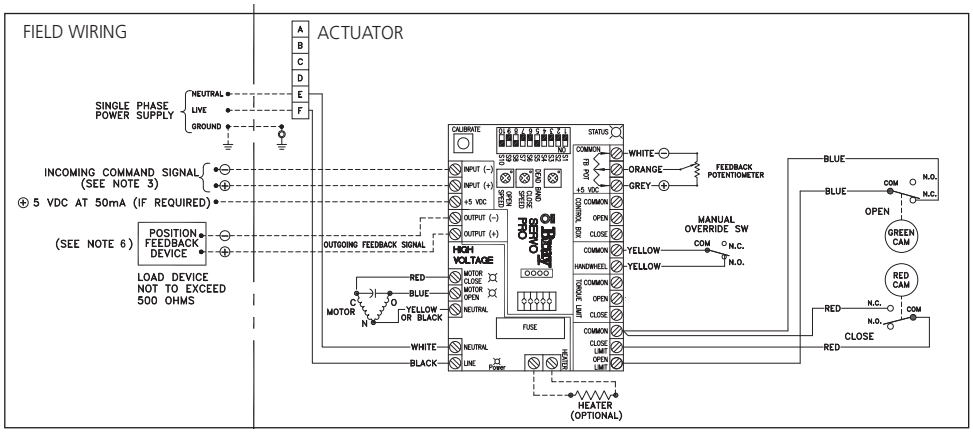

Notes:
1) Actuators are shown in closed position.
2) Manual Override is not engaged.
3) Actuators are shown with optional Heater
4) All switches are Single Pole, Double Throw.
5) Terminal block accepts field wiring from 12-22 AWG, 14-22 AWG for Servo.
6) Modulating Unit: Position Feedback Output is designed to drive an isolated 250 -500 Ohm resistive load.

SPECIFICATIONS

The electric actuator shall be compact and low–profile to greatly reduce space requirements. The actuator shall feature ease of access to field wiring and adjustment. The actuator shall be built to withstand line vibration and shock without failure and shall bolt directly to Bray valve mounting flanges without using brackets.

MOTOR A single phase permanent split-capacitor reversible motor with voltages of 120 and 220 VAC 50/60 Hz shall be standard. Motor insulation shall be Class F or better. The motor shall contain a built-in UL approved automatic reset thermal overload protector set at 275°F (135°C) embedded in motor windings. A variety of 3-Phase 50/60 Hz and DC motors shall be available upon request.

DUTY CYCLE The duty cycle for intermittent on-off operation shall be 25%. The continuous duty actuator with Servo shall be rated for 100% modulating operation.

SELF-LOCKING OUTPUT DRIVE ASSEMBLY The actuator shall have a self-locking output drive assembly consisting of a worm and worm gear output drive mechanism. The output drive assembly shall have precision cut multi-staged gears which will withstand locked rotor conditions. The output drive assembly shall be permanently lubricated at the factory and shall drive a chrome-moly steel worm which drives the composite aluminum bronze segmented worm gear / output shaft.

WIRING Actuator switches shall be pre-wired to a terminal block for ease of access and all internal wiring shall range from 12-22 AWG.

SWITCHES All travel switches shall be Single Pole, Double Throw, Form C type, 10A at 125/250 VAC, 1/2 A at 125 VDC, UL listed and CSA approved. Travel Limit switches shall limit actuator in both the open and closed position of valve travel.

CAMS Cams for each travel limit switch shall be infinitely adjustable by finger touch or screw driver, as provided by Bray's patented design.

CONDUIT ENTRIES All units shall have 2 conduit entries. Conduit entries for models 003 and 005 shall be either 1/2" NPT or M 20. Conduit entries for models 008 – 181 shall be either 3/4" NPT or M 25.

MECHANICAL TRAVEL STOPS Mechanical stainless steel travel stops shall be located outside the actuator for ease of adjustment and contain stainless steel lock nuts to hold the travel stops in place. O-rings provide waterproof seals. The travel stops shall limit the actuator movement to specific degrees of rotation.

MANUAL OVERRIDE All units shall be equipped with an aluminum manual override handwheel to rotate the valve without electrical power. The override assembly shall ensure positive and fast manual operation without the use of extra tools or levers.

EMERGENCY SHUT-OFF An automatic power cutout switch shall be provided to cut power to the motor when actuator handwheel is engaged for manual operation. This switch shall function as a safety emergency shutdown device and shall be accessible from outside the housing.

ENCLOSURE The die-cast aluminum enclosure shall be certified to UL, CSA & CE waterproof standards (NEMA 4, 4X, IP 65). Cover shall be polyester powder coated for exceptional corrosion, wear, impact and UV resistance. The enclosure shall have captive cover bolts, therefore preventing time consuming problems due to lost or misplaced bolts. A UL listed waterproof / explosion proof enclosure (NEMA 4, 4X, 7, 9) shall be available.

VALVE STATUS DISPLAY The actuator shall have a highly visible display prominently labeled to indicate valve position throughout the full range of travel.

TEMPERATURE RATING Actuators shall be designed for temperature ranges of -40°F (-40°C) to +150°F (65°C).

OPTIONAL EQUIPMENT

The actuator shall be designed to include any of the following accessories as an option.

TORQUE LIMITING SYSTEM with 2 SPDT mechanical switches and 2 factory calibrated screws. The worm shaft shall be driven against the torque disc springs in response to the output torque. The switches contact the worm shaft groove in response to predetermined loads and interrupt the electrical power to the motor. Switches shall operate at any point of actuator travel.

HEATER with self-regulating temperature control to prevent condensation buildup. The heater shall be pre-wired to the terminal block. Rated output is 15 W at 24, 120 or 220 VAC.

SERVO A microprocessor controlled Servo shall be available for precise modulating control of valve position in response to an analog input signal. The Servo shall have an analog output signal proportional to actual valve position as standard. This analog signal shall be configurable to either current or voltage output. The Servo shall have voltage spike protection on all Input terminals. Independent adjustments shall be provided for both open and closed Speed Control of the actuator and deadband. Input Signals: 4-20 mADC into 250 Ohm, 0-10 VDC, 0-5 VDC, 10k Ohm or greater potentiometer. 10K Ohm Potentiometer shall be used for internal feedback. Calibration of the Servo shall be accomplished by pressing a single button to initiate the calibration routine. Inputs for the control box and handwheel, LED status indicators and self-diagnostic capability shall also be provided.

DeviceNet Servos shall be available.

CONTROL STATION for manual local electrical operation of the actuator. The Control Station shall flush mount to the actuator and feature a local / off / remote control switch, an open–stop–close switch, and two lights which locally indicate open and closed valve position. The enclosure shall be aluminum and waterproof (NEMA 4, 4X, IP 65).



The Bray Series 70 Electric Actuators
Series 70-003/005, 008/012/020 and 70-030/050/065.

DISTRIBUTOR

All statements, technical information, and recommendations in this bulletin are for general use only. Consult Bray representatives or factory for the specific requirements and material selection for your intended application. The right to change or modify product design or product without prior notice is reserved.

United States patent number 5,305,781. Other patents applied for worldwide.

Bray CONTROLS
A Division of BRAY INTERNATIONAL, Inc.
13333 Westland East Blvd. Houston, Texas 77041
281.894.5454 FAX 281.894.9499 www.bray.com

© 2008 Bray International. All rights reserved.

B-1016_EL_S/70_2009-10

Flow-Tek®
Subsidiary of BRAY INTERNATIONAL, Inc.



FLANGED SERIES

2 PIECE FLANGED FULL PORT ½" - 12"

F15 - ASME Class 150 | F30 - ASME Class 300

FLANGED SERIES BALL VALVES

Flow-Tek's F15/F30 Flanged Series ball valves feature a floating ball design for low torque and increased cycle life. As standard, large size valves feature trunnion-type ball support. These rugged ball valves are ideal for industrial applications.

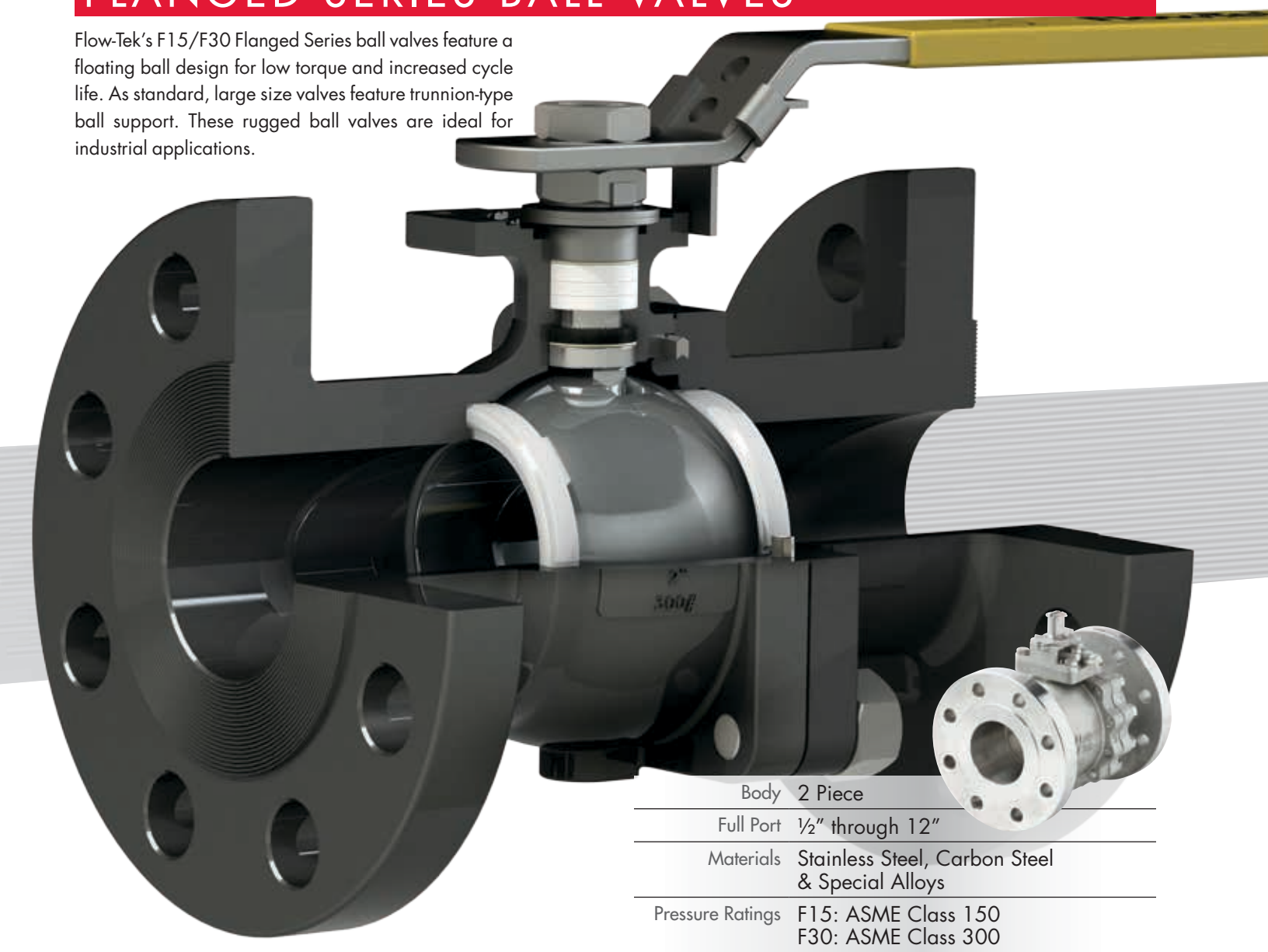

Body	2 Piece
Full Port	½" through 12"
Materials	Stainless Steel, Carbon Steel & Special Alloys
Pressure Ratings	F15: ASME Class 150 F30: ASME Class 300

SECURE MOUNT

Flanged Series valves offer ease of automation due to an integrally cast actuator mounting pad which complies with ISO 5211 through 2" valve sizes.

STEM SEALS

Flanged Series ½"– 2" valves feature live-loaded, self-adjusting primary and secondary sealing. Utilizing Belleville washers, the stem seal automatically adjusts to compensate for changes in temperature and normal wear. 2½"– 12" valves utilize an independent packing gland which can be easily adjusted without removing mounting hardware or operator. The packing gland is contoured to more uniformly distribute the load across the packing. The primary stem seal is a combination of a thrust washer and a thrust washer protector. An adjustable stem packing creates a secondary seal between the stem and body. The stem packing is composed of RPTFE V-rings as standard – graphite stem packing is standard on all fire safe valves.

BALL

Flow-Tek balls are precision machined and mirror finished for bubble-tight shut off and less operating torque. As an added safety feature, a hole in the stem slot of each ball equalizes pressure between the body cavity and the line media flow.

BODY

½"– 4" valve bodies are investment cast and solution annealed/ normalized for the highest quality and added strength. All body castings are marked with a foundry heat number for full traceability. Carbon steel bodies are phosphate coated for increased corrosion resistance.

SEAT

Flow-Tek's seat design ensures bi-directional, bubble-tight sealing with low operating torque. All resilient seats feature relief slots or seat O.D. clearance to relieve pressure past the upstream seat, and positive preloading to ensure low pressure/vacuum sealing.

STEM ASSEMBLIES

Flow-Tek manufactures heavy duty, high quality stems with double "D" connection to ball and operator mounting. Stem and ball design ensure positive contact. All Flow-Tek stems are internal entry and blowout proof for maximum safety.

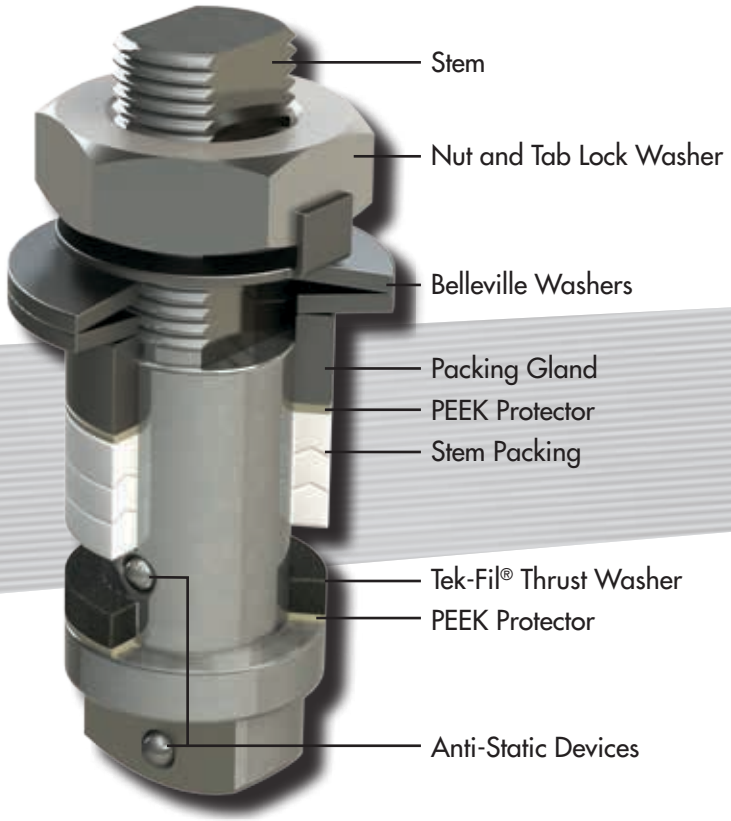

BALL SUPPORT Valve Sizes 6" through 12"

As standard, larger sized valves feature trunnion-type ball support. This support helps to maintain continuous contact between the ball and seats, preventing seat damage and blow-by. The results are less seat wear, lower torque, and longer service life.

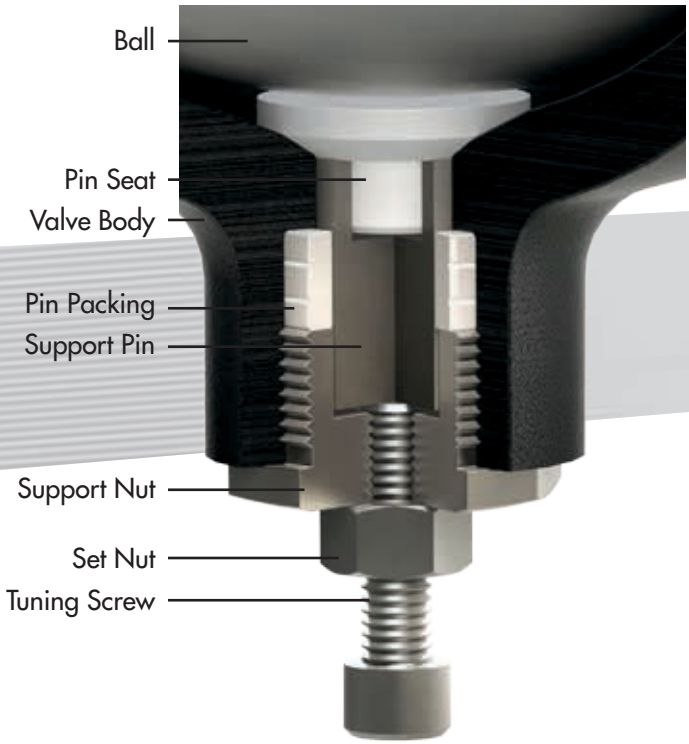

SMART STEM Valve Sizes ½" through 2"

Flow-Tek's interchangeable family of valves feature strong, large diameter stems with live-loaded, self-adjusting sealing utilizing Belleville washers which automatically adjust to compensate for changes in temperature and wear. Manual adjustments which can cause damage to the seal and seat are not required. The assembly is secured by a saddle-type lock washer which prevents stem nuts from unthreading in high cycle automation applications.

STEM PACKING

An adjustable V-ring design creates a multiple seal between the stem and body. Each stem assembly is composed of three or four (dependent on valve size) rings providing a very high cycle life by resisting creep and cold flow. The thrust washer and the thrust washer protector combine to provide a primary seal, reduce torque and prevent galling. This arrangement is a Flow-Tek exclusive.

LOCKING DEVICE



All manually operated valves feature a locking device to prevent accidental movement of ball position. Valves ½"–2" feature a safety trigger that locks the handle in the open or closed position. The handle lock can be bypassed, if needed, with a small bolt through the handle in the release position.

On all sizes a padlock can be added to secure the handle in position, preventing unwanted movement of the ball.

FIRE SAFE - Certified to API 607

Flanged Series valves with graphite stem seals have been thoroughly fire tested and meet these standards.

In the event of a fire, after heat destroys the primary resilient seat, the ball makes contact with the secondary metal seat, forming a secure seal. The body seal, composed of stainless steel and graphite wound into a spiral, prevents external leakage. The graphite stem rings prevent stem leakage.

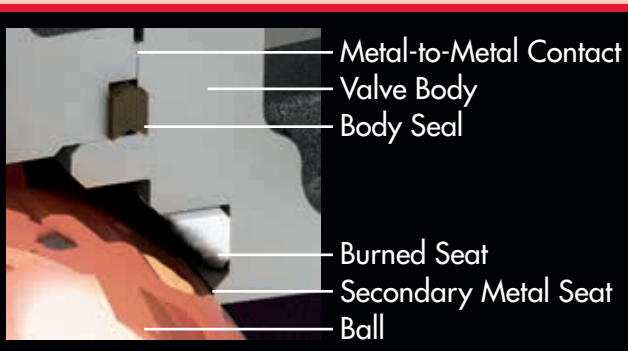

PRESSURE / TEMPERATURE

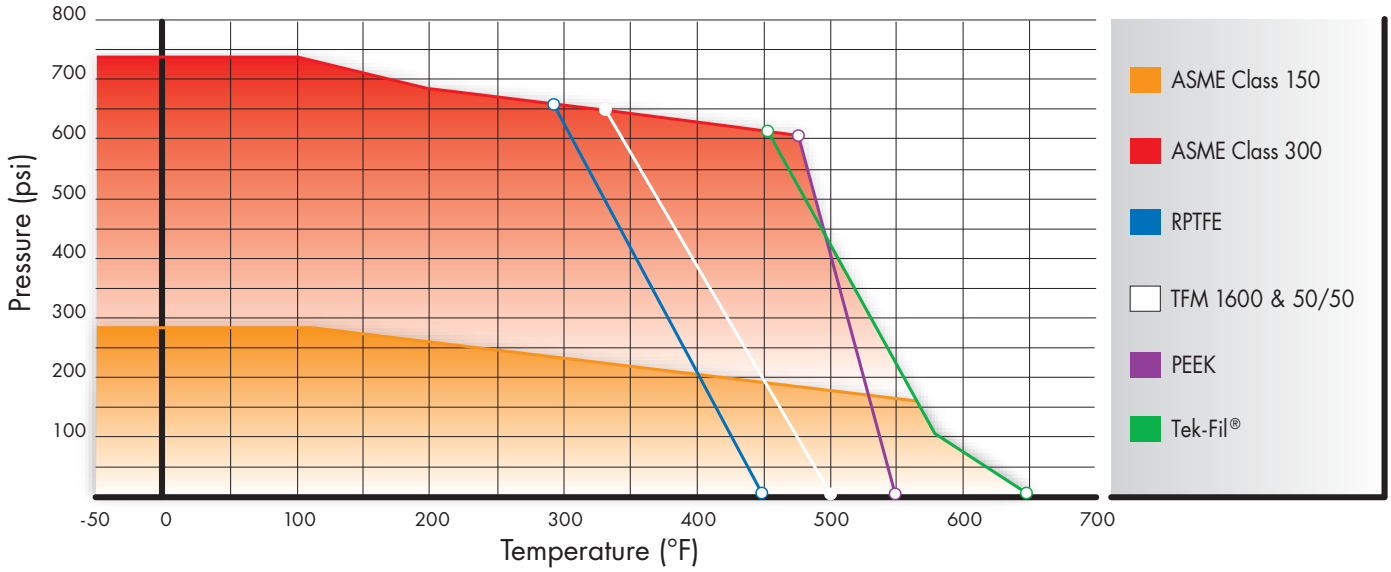

Carbon steel valves limited to -20°F

STEAM SERVICE PRESSURE RATINGS: WSP

	TFM Seats		Tek-Fil Seats		PEEK Seats	
	PSI	°F	PSI	°F	PSI	°F
Class 150	150	365	190	383	170	374
Class 300	150	365	425	454	425	454

Vacuum service to 29.9 inches Hg. gauge.

SPECIAL OPTIONS/SERVICES

Cavity Fillers	Media Containment Units
Spring Return Handles	NACE
Vented Balls	Polished Internals
Characterized Balls	Special Cleaning
Chlorine Service	Silicone Free

SPECIFICATIONS

- Valve sizes ¼" through 12"
- Design meets MSS-SP-110
- Threaded end connections meet ASME B1.20.1 NPT
- Socket weld end connections meet ASME B16.11
- Butt weld end (Schedule 40) connections meet MSS SP-72 /ASME B16.25
- Flanged end connections meet ASME Class 150

Valve body and end cap connections are high quality investment cast and solution annealed/normalized. Body and end cap wall thickness meets ASME B16.34.

Valve stems are blow-out proof for maximum safety and meet ASME B16.34 specification.

All valves are factory tested to MSS SP-72 and API 598.

SEAT SELECTION

A wide range of seat materials are available to meet most applications. The standard seat is TFM 1600. Options include:

- RPTFE
- Stainless Steel/PTFE (50/50)
- UHMWPE
- Virgin PTFE
- PEEK
- Tek-Fil® (carbon/graphite filled TFM)
- Full metal seats
- Cavity Fillers



PEEK seats offer high pressure/temperature capability. Tek-Fil® seats offer reduced torque in high temperature, high cycle, and steam service applications. TFM 1600 seats offer the exceptional chemical resistance of PTFE plus lower porosity and permeability, improved temperature range and reduced valve torques.

ISO 9001

COMPONENTS & MATERIALS

ITEM/NAME	STAINLESS STEEL	CARBON STEEL	QTY.
1. Body	ASTM A351 Gr CF8M	ASTM A216 Gr WCB	1
2. End Cap	ASTM A351 Gr CF8M	ASTM A216 Gr WCB	1
3. Ball	ASTM A351 Gr CF8M		1
4. Seat	TFM 1600		2
5. Stem	ASTM A479 Type 316		1
6. Body Seal	Spiral Wound (316/Graphite)		1
7. Body Nut	ASTM A194 Gr 8		*
8. Body Stud	ASTM A193 B8	ASTM A193 B7	*
9. Anti-Static Device	SS304		2
10. Packing Protector	PEEK		1
11. Thrust Washer Protector	PEEK		1
12. Thrust Washer	Tek-Fil		1
13. Stem Bearing	15% RPTFE		1
14. Stem Packing	RPTFE or Graphite		**
15. Packing Gland	ASTM A167 Type 304		1
16. Packing Follower	ASTM A351 Gr CF8M	ASTM A216 Gr WCB	1
17. Gland Bolt	SS304		2
18. Belleville Washer	SS301		2
19. Tab Lock Washer	SS304		1
20. Travel Stop Housing	CF8M	WCB	1
21. Housing Bolt	SS304	Alloy Steel	4
22. Travel Stop	SS304	Zinc Plated Carbon Steel	1
23. Travel Stop Sleeve	ASTM A167 Type 304		1
24. Travel Stop Bolt	SS304		1
25. Handle	SS304 or Ductile Iron***		1
26. Lock Nut	ASTM A167 Type 304		2
27. Handle Bolt	Carbon Steel		1
28. Handle Sleeve	Vinyl through 2"		1
29. Locking Device	SS304		1
30. Snap Ring	Nickel Plated Carbon Steel		2

* Quantity depends on valve size.
** RPTFE packing is composed of 3 or 4 pieces depending on size.
Graphite packing is composed of a single piece.
*** Ductile Iron used forvalve sizes ≥ 2½".

Flow-Tek offers the seat, body seal, thrust washer and stem packing as recommended spare parts. These parts are available as a packaged repair kit.

½" – 2" VALVES

Carbon steel bodies on valve sizes ½" – 4" are black phosphate coated.

All stainless steel bodies are solution annealed/normalized.

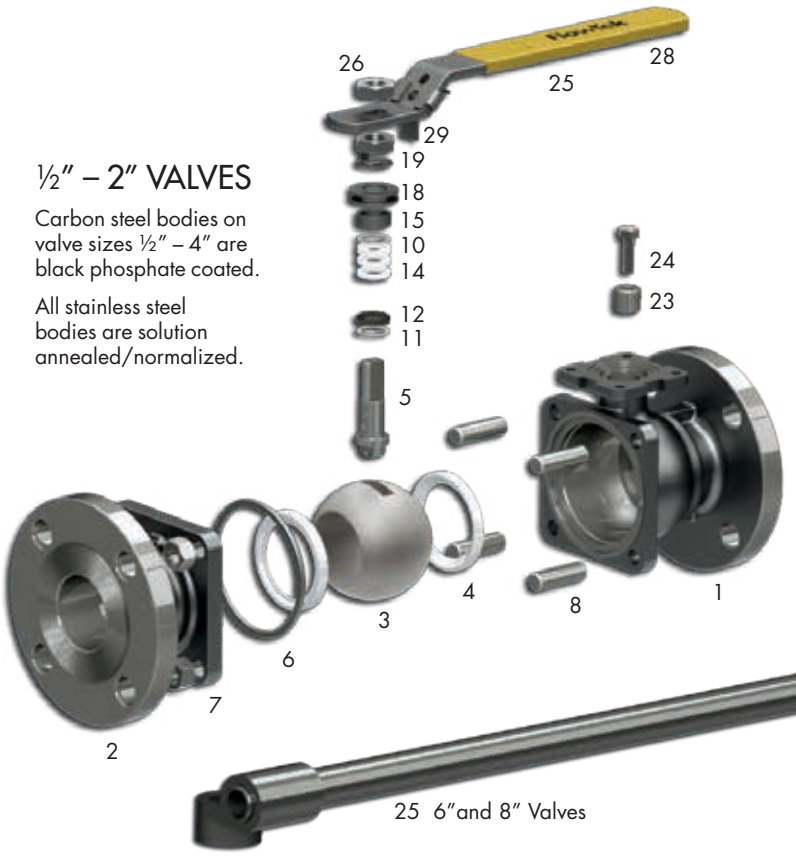

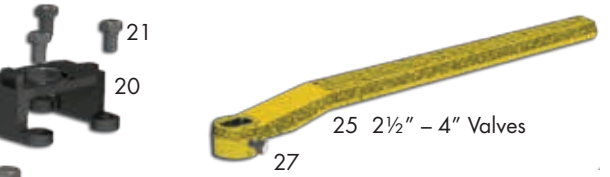





2½" – 12" VALVES

Ball support is included on 10"-12" F15 valves and 6"-12" F30 valves.

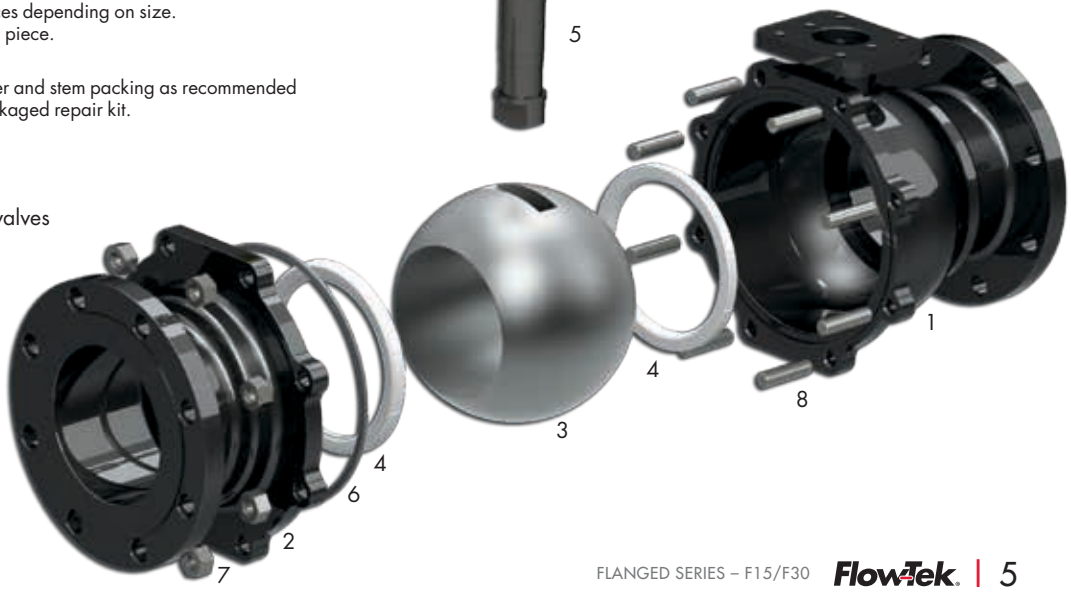

F15/F30 DIMENSIONS ½" – 2" VALVES (15mm - 50mm)

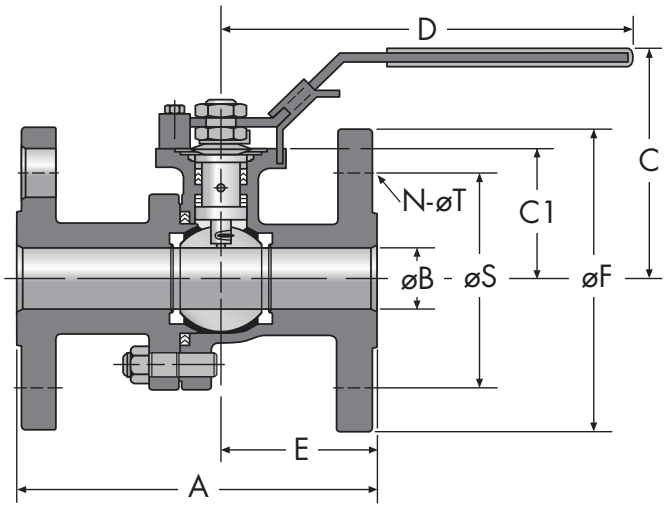

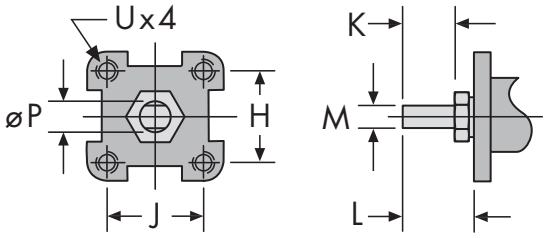

DIMENSIONS – Secure Mount

	Size	H	J	F0	BC DIA.	K	L	M	øP	U UNC
INCHES	1/2	1.17	1.17	F04	1.65	0.31	0.61	0.25	0.37	#10-24
	3/4	1.17	1.17	F04	1.65	0.31	0.61	0.25	0.37	#10-24
	1	1.39	1.39	F05	1.97	0.43	0.82	0.31	0.43	1/4-20
	1-1/2	1.95	1.95	F07	2.76	0.55	0.95	0.37	0.62	5/16-18
	2	1.95	1.95	F07	2.76	0.55	0.95	0.37	0.62	5/16-18
MILLIMETERS	15	29.7	29.7	F04	41.9	7.9	15.5	6.0	9.4	#10-24
	20	29.7	29.7	F04	41.9	7.9	15.5	6.0	9.4	#10-24
	25	35.0	35.0	F05	50.0	10.9	20.8	7.9	10.9	1/4-20
	40	49.5	49.5	F07	70.0	14.0	24.0	9.5	15.8	5/16-18
	50	49.5	49.5	F07	70.0	14.0	24.0	9.5	15.8	5/16-18

Model F15 – Class 150

	Size	A	øB	C	C1	D	E	øF	øS	N / øT	C_V	Torque*		Weight	
INCHES	1/2	4.25	0.59	2.88	1.54	6.50	1.79	3.50	2.38	4 x 0.62	32	36	LBS-IN	4	LBS
	3/4	4.62	0.79	2.97	1.67	6.50	2.01	3.88	2.75	4 x 0.62	60	65		5	
	1	5.00	0.98	3.41	2.05	7.87	2.13	4.25	3.12	4 x 0.62	105	95		10	
	1-1/2	6.50	1.49	4.20	2.60	9.84	2.76	5.00	3.88	4 x 0.62	275	230		14	
	2	7.00	1.97	4.53	2.95	10.43	3.07	6.00	4.75	4 x 0.75	500	390		20.5	
MILLIMETERS	15	108.0	15.0	73.25	39.0	165.0	45.5	88.9	60.5	4 x 15.8	28	4	Nm	2	KG
	20	117.0	20.0	75.40	42.4	165.0	51.0	98.6	69.9	4 x 15.8	52	7		2	
	25	127.0	24.9	86.69	52.0	199.9	54.0	108.0	79.0	4 x 15.8	91	11		4.5	
	40	165.0	37.9	106.60	66.0	249.9	70.0	127.0	98.6	4 x 15.8	238	26		6	
	50	177.8	50.0	115.01	74.9	264.9	78.0	152.0	120.7	4 x 19.0	433	44		9	

Model F30 – Class 300

	Size	A	øB	C	C1	D	E	øF	øS	N / øT	C_V	Torque*		Weight	
INCHES	1/2	5.50	0.59	2.92	1.57	6.50	2.44	3.75	2.62	4 x 0.62	32	40	LBS-IN	5	LBS
	3/4	6.00	0.79	2.97	1.67	6.50	2.72	4.62	3.25	4 x 0.75	60	70		7	
	1	6.50	0.98	3.41	2.05	7.87	2.91	4.88	3.50	4 x 0.75	105	108		10	
	1-1/2	7.50	1.49	4.04	2.60	9.84	3.27	6.12	4.50	4 x 0.88	275	270		19	
	2	8.50	1.97	4.53	2.95	10.43	3.94	6.50	5.00	8 x 0.75	500	445		25	
MILLIMETERS	15	139.7	15.0	74.23	39.9	165.0	62.0	95.0	66.6	4 x 15.8	28	5	Nm	2	KG
	20	152.0	20.0	75.40	42.0	165.0	69.0	117.0	82.6	4 x 19.0	52	8		3	
	25	165.0	24.9	86.61	52.0	199.9	73.9	124.0	88.9	4 x 19.0	91	12		5	
	40	190.5	37.9	102.50	66.0	249.9	83.0	155.5	114.0	4 x 22.0	238	31		9	
	50	215.9	50.0	115.06	74.9	264.9	100.0	165.0	127.0	8 x 19.0	433	50		11	

Face to Face dimensions meet ASME B16.10 long pattern and short pattern (sizes 1/2 " thru 2").
***Torque** at maximum rated pressure, clean water, TFM 1600 seating material. Other seat materials exhibit different torques. Please refer to TB 1005 for specific torques.

F15/F30 DIMENSIONS 2½" – 12" VALVES (65mm - 300mm)

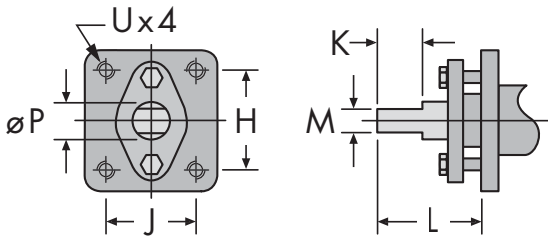

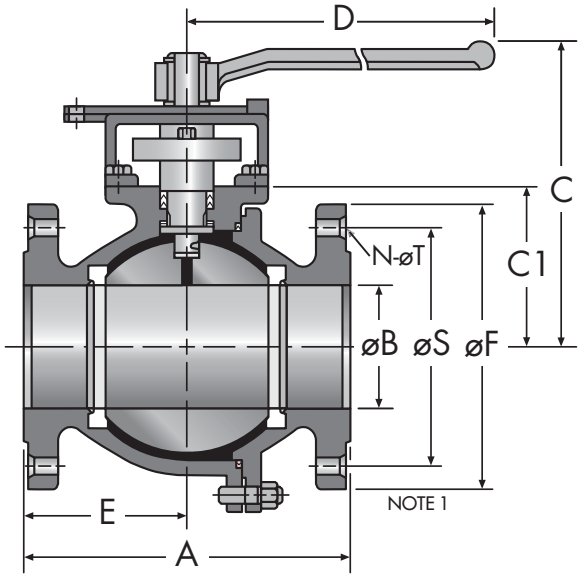

DIMENSIONS – Secure Mount

	Size	H	J	F0	BC DIA.	K	L	M	øP	U UNC
INCHES	2-1/2 - 4	3.54	1.87	F10	—	1.75	3.10	0.67	1.10	1/2-13
	6	3.37	3.37	F12	4.77	1.61	3.58	1.02	1.71	1/2-13
	8[1]	3.37	3.37	F12	4.77	2.13[1]	3.58[1]	1.02	1.71	1/2-13
	10-12[2]	4.53	4.53	F16	6.40	2.15	3.86[2]	1.38	1.97[2]	5/8-11
MILLIMETERS	65 - 100	89.9	47.5	F10	—	44.5	78.7	17.0	27.9	1/2-13
	150	85.6	85.6	F12	121.0	40.9	90.9	25.9	43.5	1/2-13
	200	85.6	85.6	F12	121.0	54.0	90.9	25.9	43.5	1/2-13
	250-300	115.0	115.0	F16	162.6	54.6	98.0	35.0	50.0	5/8-11

Model F15 – Class 150

	Size	A	øB	C	C1	D	E	øF	øS	N / øT	C_V	Torque*		Weight
INCHES	2-1/2	7.50	2.56	6.63	3.39	15.35	3.08	7.00	5.50	4 x 0.75	780	500		36
	3	8.00	2.99	6.92	3.66	15.35	3.74	7.50	6.00	4 x 0.75	1,150	650		45
	4	9.00	3.99	7.59	4.39	15.35	4.47	9.00	7.50	8 x 0.75	2,100	1,505		65
	6	15.50	5.98	12.38	7.17	15.35	7.62	11.00	9.50	8 x 0.88	5,000	3,250	LBS	157
	8	18.00	7.87	12.66	7.60	38.98	8.35	13.50	11.75	8 x 0.88	9,600	4,750		290
	10	21.00	9.84	14.80	9.88	38.98	10.47	16.00	14.25	12 x 1.00	15,000	13,700		500
	12	24.00	11.81	16.37	11.46	38.98	12.01	19.00	17.00	12 x 1.00	21,000	19,700		700
MILLIMETERS	65	190.5	65.0	168.40	86.0	389.9	78.0	177.8	139.7	4 x 19.0	675	56		16
	80	203.0	76.0	175.65	93.0	389.9	95.0	190.5	152.0	4 x 19.0	995	73		20
	100	228.6	101.0	192.90	111.5	389.9	113.5	228.6	190.5	8 x 19.0	1,817	170		29.5
	150	393.7	151.9	314.55	182.0	389.9	193.6	279.0	241.0	8 x 22.0	4,325	367	KG	71
	200	457.0	199.9	321.58	193.0	990.0	212.0	342.9	298.5	8 x 22.0	8,304	537		132
	250	533.0	249.9	375.85	251.0	990.0	265.9	406.0	362.0	12 x 25.0	12,975	1,548		227
	300	609.6	300.0	415.85	291.0	990.0	305.0	482.6	431.8	12 x 25.0	18,165	2,226		318

Model F30 – Class 300

	Size	A	øB	C	C1	D	E	øF	øS	N / øT	C_V	Torque*		Weight
INCHES	2-1/2	9.50	2.56	6.55	3.39	15.35	4.18	7.50	5.88	8 x 0.88	780	600		44
	3	11.12	2.99	6.85	3.72	15.35	5.57	8.25	6.62	8 x 0.88	1,150	850		61
	4	12.00	3.99	7.56	4.35	15.35	5.96	10.00	7.88	8 x 0.88	2,100	2,600		96
	6	15.88	5.98	12.37	7.19	38.98	7.60	12.50	10.62	12 x 0.88	5,000	5,300	LBS	243
	8	19.75	7.87	13.82	8.64	38.98	9.33	15.00	13.00	12 x 1.00	9,600	7,600		430
	10	22.38	9.84	-	9.69	38.98	11.18	17.50	15.25	16 x 1.12	15,000	17,800		610
	12	25.50	11.81	-	11.26	38.98	12.80	20.50	17.75	16 x 1.25	21,000	24,800		950
MILLIMETERS	65	241.0	65.0	166.40	86.0	389.9	106.0	190.5	149.0	8 x 22.0	675	68		20
	80	282.5	76.0	173.90	94.5	389.9	141.5	209.6	168.0	8 x 22.0	995	96		27.7
	100	304.8	101.0	192.05	110.5	389.9	151.0	254.0	200.0	8 x 22.0	1,817	294		44
	150	403.0	151.9	314.20	182.6	990.0	193.0	317.5	269.8	12 x 22.0	4,325	599	KG	110
	200	501.7	199.9	351.05	219.5	990.0	237.0	381.0	330.0	12 x 25.0	8,304	859		195
	250	568.5	249.9	-	246.0	990.0	284.0	444.5	387.0	16 x 28.5	12,975	2,011		277
	300	647.7	300.0	-	286.0	990.0	325.0	520.7	450.9	16 x 31.8	18,165	2,802		431

[1] For 8" F30: K=1.61, L=3.42

[2] For 10" F30: L=3.82, P=2.165

NOTE 1: Ball Support as shown on Page 2 is included on 10"-12" F15 and 6"-12" F30 valves.

NOTE 2: 2½", 3" & 4" valves feature a NAMUR stem slot for ease of limit switch mounting.

Face to Face dimensions meet ASME B16.10 long pattern in all sizes and short pattern sizes up to 4" F15 and up to 6" F30.

***Torque** at maximum rated pressure, clean water, TFM 1600 seating material. Other seat materials exhibit different torques. Please refer to TB 1005 for specific torques.



Bray®

SERIES 92/93 Rack & Pinion
Double Acting & Spring Return

PNEUMATIC ACTUATOR

The High Performance Company

SERIES 92/93

Styling, strength, compactness, and simplicity of design have been combined to produce the best rotary actuator on the market today. Bray Controls introduces this newest line of high performance, highest quality pneumatic actuators, the Series 92/93.

Engineering excellence and precision manufacturing has produced a modular product line with reduced overall size requirements and economic savings. In addition all Brayline Accessories are fully modular and directly mount to the actuator – providing flexibility and efficiency at reduced cost.

Bray Series 92/93 actuators are rack and pinion, opposed-piston actuators available in two versions: double acting for rotation of 90°, 135° and 180°, and spring return for 90° rotation. Their ideal use is actuating butterfly, ball or plug valves, but they can be applied anywhere a rotation of 90°, 135° or 180° is needed. Rotated on low friction acetal bearings, Bray units are well suited to handle offset loads to the gear and output shaft assembly.

The Series 92/93 actuators were designed primarily for pneumatic operation up to a maximum pressure of 140 psig (10 Bar) and for temperature ranges of -40°F (-40°C) to +200°F (+95°C). For higher and lower temperature applications, consult factory.

All double acting and spring return units are suitable for both on-off and throttling applications. Actuators which can be actuated with other media such as hydraulic oil or water are also available as an option.

The Series 92/93 is completely enclosed and self contained. The many features minimize maintenance and provide safe, simple disassembly and assembly.

The INTEGRAL PORTING (**A**) reduces the cost of external tubing that is also easily damaged. The unique, lubricated ACETAL PISTON GUIDES (**B**) and RINGS (**C**). Both have a very low coefficient of friction and absorb the side thrusts of the pistons. The piston cylinder walls in the body are honed to a very fine finish thus reducing the overall coefficient of friction. These features extend the life of the actuator and make the Series 92/93 one of the most efficient actuators on the market.

The OUTPUT SHAFT BEARINGS (**D**) on the top and bottom of the pinion are made of low-friction acetal.

The OUTPUT SHAFT and PINION GEAR (**E**) are one-piece, manufactured from hardened alloy steel and zinc-plated for corrosion protection.

The SHAFT POSITION INDICATOR (**F**) clearly shows open or closed position and is easily removable for MANUAL OVERRIDE FUNCTION of the actuator.

The BODY (**G**) is extruded aluminum with anodized corrosion protective coating. The END CAPS (**H**) are polyester coated for chemical resistance. This coating is resistant to dilute aqueous acids, salts, aliphatic hydrocarbons, detergents, petroleum solvents, alcohols, greases and oils.

The TRAVEL STOP (**I**) adjusting screws limit the travel of the actuator to specific degrees of rotation in both open and closed directions. The PISTONS (**J**) are die-cast aluminum.

The two PNEUMATIC SUPPLY PORTS (**K**) are 1/8" NPT on size 48 actuators. The other sizes have 1/4" NPT ports. NAMUR interface is standard on all actuator sizes.

All Bray Series 92/93 actuators have permanently lubricated factory packed bearings and guides. No further lubrication is necessary under normal operating conditions. All seals, including PISTON SEALS (**L**), are permanently lubricated Buna-N O-rings.

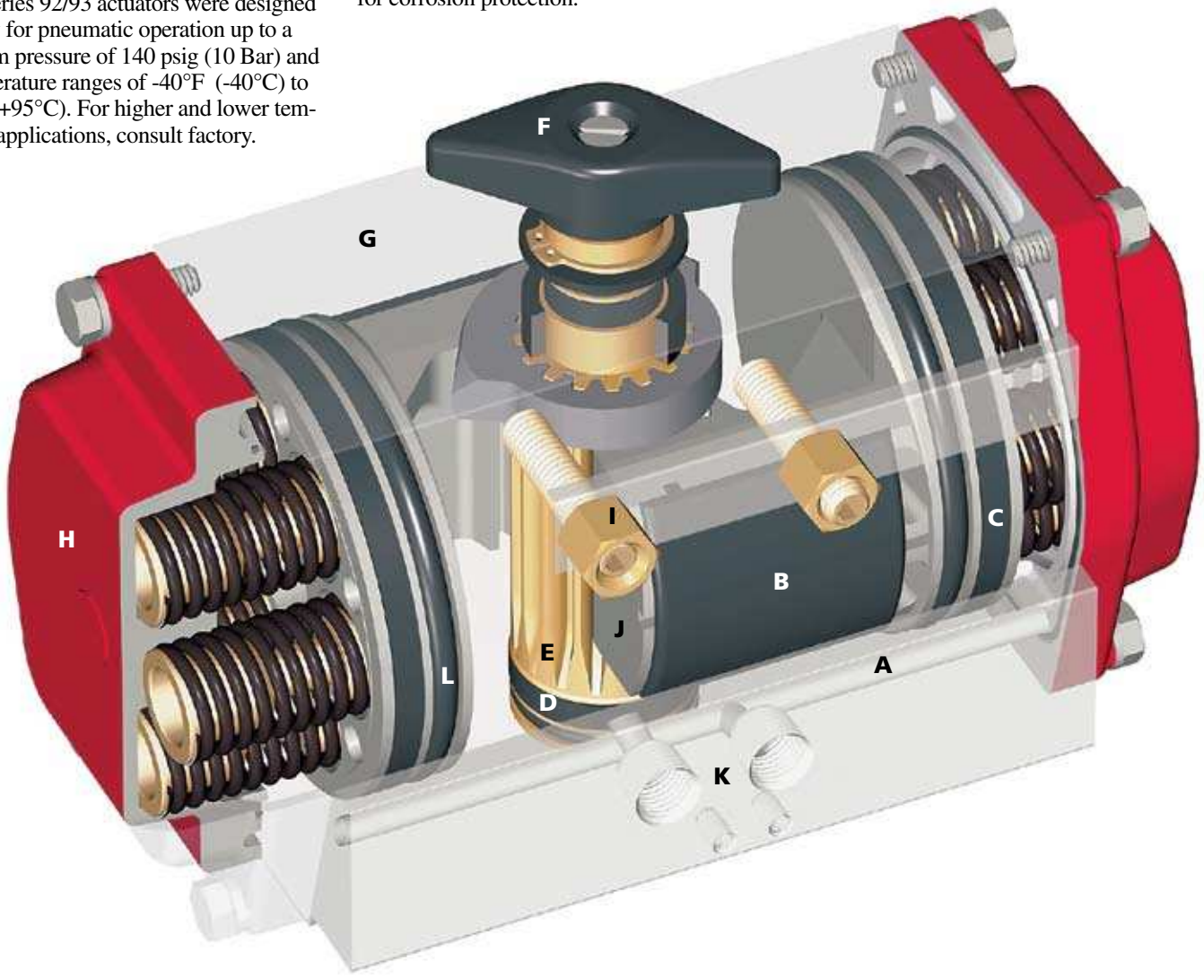

ENGINEERING

Double Acting/ Spring Return

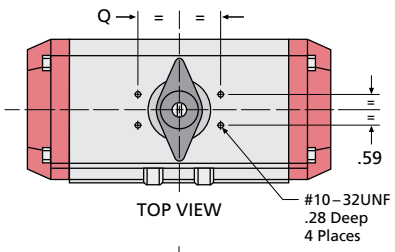

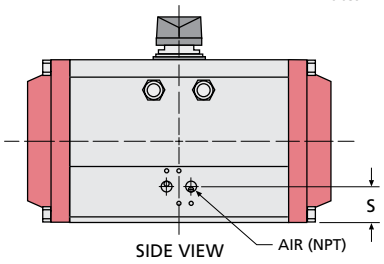

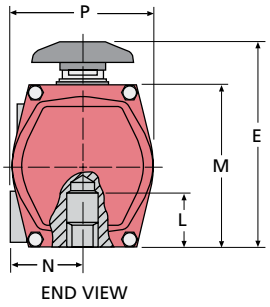

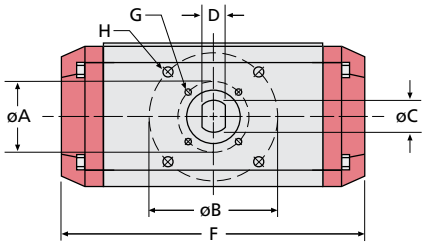

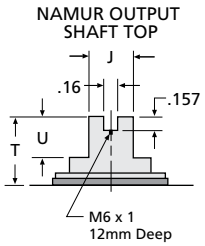

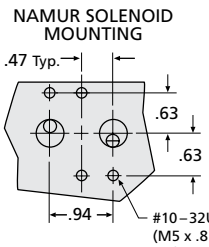

Special Note: Sizes 210 and 255 actuators have end-cap travel stops not bi-directional travel stops. Please consult factory for production release date of bi-directional stops for these size S92/93 actuators.

SERIES 92/93 DIMENSIONS

SIZE	48	63	83	92	118	127	160*	210	255‡
AIR NPT	1/8	1/4	1/4	1/4	1/4	1/4	1/4	1/4	1/4
A ISO "F"†	1.42 F 03	1.97 F 05	1.97 F 05	1.97 F 05	2.76 F 07	2.76 F 07	—	4.92 F 12	6.50 F 16
B ISO "F"†	1.97 F 05	2.76 F 07	2.76 F 07	2.76 F 07	4.92 F 12	4.92 F 12	4.92 F 12	6.50 F 16	7.87x4.72 Rect.
C	.55	.55	.75	.75	1.18	1.18	1.18	1.97	2.50
D	.40	.40	.51	.51	.87	.87	.87	.47	.62
E	3.88	4.53	5.43	5.78	7.28	8.09	9.36	11.45	13.35
F	6.10	5.58	7.40	8.59	11.90	12.31	15.54	17.80	26.70
G (UNC)	10-32 x .23	1/4-20 x .32	1/4-20 x .32	1/4-20 x .32	5/16-18 x .46	5/16-18 x .46	—	1/2-13 x .78	M16x2 x 28mm
H (UNC)	1/4-20 x .25	5/16-18 x .40	5/16-18 x .40	5/16-18 x .40	1/2-13 x .69	1/2-13 x .69	1/2-13 x .75	5/8-11 x 1.11	M16x2 x 28mm
J	.38	.38	.50	.50	1.12	1.12	1.12	1.12	1.12
L	1.38	1.38	1.46	1.46	2.20	2.20	2.20	2.76	4.25
M	2.50	3.46	4.27	4.61	5.52	6.32	7.80	10.04	11.89
N	1.60	1.72	2.02	2.18	2.53	2.72	3.07	4.25	4.75
P	2.78	3.11	3.83	4.17	4.91	5.44	6.82	8.83	10.75
Q	3.15	3.15	3.15	3.15	3.15	3.15	5.12	5.12	5.12
S	1.25	.89	.89	.94	1.36	1.36	1.39	1.44	1.50
T	1.10**	.79	.79	.79	.79	.79	1.18	1.18	1.18
U	.47	.47	.47	.47	.47	.47	.75	.75	.75

Note: Double Acting and Spring Return actuators have the same overall dimensions. The double acting unit of the size 48 actuator is optionally available with flat end caps with an F dimension of 4.00.

† ISO "F" means mounting flange-drilling pattern.

* Dimensions for Size 160A in table. Size 160B (keyed stem version) has C dimension of 1.38 and D dimension of .39.

‡ Dimensions for Size 255A in table. Size 255B actuator has a C dimension of 3.00 and D dimension of .75.

** Size 48 has a T dimension of .79 with use of NAMUR top plate.

Actuator Speeds

SIZE	48	63	83	92	118	127	160	210	255
Open Stroke/ Close Stroke	1/4	1/4	1/4	1/4	1/2	1/2	1	2	2 3/4

Note: Times shown are in seconds at 80 PSIG supply pressure with 6ft. tubing having an internal diameter of approximately 1/4". Bray S92/93 actuation times are very dependent on the flow capacity of their air supply. The use of smaller port solenoids, solenoid manifolds, smaller I.D. air supply tubing and/or extended lengths of tubing can significantly reduce the actuation time and/or initial response to the command signal.

Actuator Weights

SIZE	48	63	83	92	118	127	160	210	255
Double Acting	1.8	3.4	6.1	8.4	16.4	20.9	38.1	65.0	144.0
Spring Return	2.4	4.1	7.9	10.8	21.7	27.3	52.6	95.3	192.6

Weights are in lbs. Spring Return unit weights are with full set of springs per piston.

Actuator Volumes (ins³)

SIZE	48	63	83	92	118	127	160	210	255
Counter-clockwise	5.7	9.6	24.8	34.8	73.8	96.7	187.5	360.0	750.0
Clockwise	4.8	13.4	32.6	45.9	95.5	130.8	259.6	450.0	900.0

Counter-clockwise: Air volume in cubic inches required to push pistons apart, full travel.
Clockwise: Air volume in cubic inches required to push pistons together, full travel.

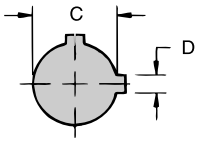

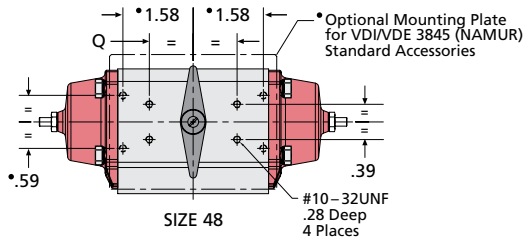

TORQUE

DOUBLE ACTING TORQUE CURVE

Series 92 – (Air to Air)

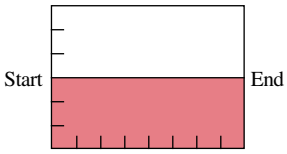

The Series 92 Actuator has a constant output torque throughout travel from start to end, clockwise or counterclockwise rotation.

SERIES 92 ACTUATOR TORQUE DATA

Double Acting Pneumatic Operated
Torque Output (Lb.-Ins.)

Actuator Size	Air Supply Pressure (PSIG)				
	40	60	80	100	120
48	75	113	150	188	225
63	145	221	297	373	449
83	351	536	721	906	1091
92	493	753	1013	1272	1532
118	1058	1615	2171	2728	3285
127	1410	2152	2894	3636	4378
160	2797	4270	5742	7214	8687
210	5783	8826	11870	14914	17957
255	14211	21691	29171	36650	44130

SINGLE ACTING TORQUE CURVES

Series 93 – (Spring Return)

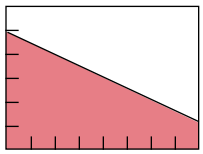

Counterclockwise (Air Stroke)

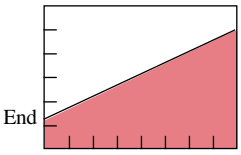

Clockwise (Spring Stroke)

SERIES 93 ACTUATOR TORQUE DATA

Air Operated, With Spring Return, Torque Output (Lb.-Ins.)

Actuator Size	No. Springs per Piston	Air Supply Pressure (PSIG)											
		40		60		80		100		120		Spring Stroke	
		Start	End	Start	End	Start	End	Start	End	Start	End	Start	End
48	1	51	32	89	70	126	107	164	145	201	182	43	24
	2/1	39	10	77	48	114	85	152	123	189	160	65	36
	2			64	27	101	64	139	102	176	139	86	49
	3/2			52	5	89	42	127	80	164	117	108	61
	3					77	21	115	59	152	96	129	73
63	2	91	65	167	141	243	217	319	293	395	369	80	54
	3	64	27	140	103	216	179	292	255	368	331	118	81
	4			113	65	189	141	265	217	341	293	156	108
	5			86	27	162	103	238	179	314	255	194	135
	6					135	65	211	141	287	217	232	162
83	2	210	167	395	352	580	537	765	722	950	907	184	141
	3	156	76	341	261	526	446	711	631	896	816	275	195
	4			281	176	466	361	651	546	836	731	360	255
	5			220	97	405	282	590	467	775	652	439	316
	6					369	185	554	370	739	555	536	352
92	2	310	232	570	492	830	752	1089	1011	1349	1271	261	183
	3	218	101	478	361	738	621	997	880	1257	1140	392	275
	4			386	231	646	491	905	750	1165	1010	522	367
	5			294	94	554	354	813	613	1073	873	659	459
	6					462	229	721	488	981	748	784	551
118	2	692	469	1249	1026	1805	1582	2362	2139	2919	2696	589	366
	3	509	174	1066	731	1622	1287	2179	1844	2736	2401	884	549
	4			883	437	1439	993	1996	1550	2553	2107	1178	732
	5			700	142	1256	698	1813	1255	2370	1812	1473	915
	6					1073	404	1630	961	2187	1518	1767	1098
127	2	880	465	1622	1207	2364	1949	3106	2691	3848	3433	945	530
	3			1357	733	2099	1475	2841	2217	3583	2959	1419	795
	4			1094	261	1836	1003	2578	1745	3320	2487	1891	1058
	5					1568	529	2310	1271	3052	2013	2365	1326
	6					1302	57	2044	799	2786	1541	2837	1592
160	2	1819	1118	3292	2591	4764	4063	6236	5535	7709	7008	1679	978
	3	1399	349	2872	1822	4344	3294	5816	4766	7289	6239	2448	1398
	4			2452	1123	3924	2595	5396	4067	6869	5540	3147	1818
	5			2030	353	3502	1825	4974	3297	6447	4770	3917	2240
	6					3154	1196	4626	2668	6099	4141	4546	2588
210	2	3833	2508	6876	5551	9920	8595	12964	11639	16007	14682	3275	1950
	3	2859	868	5902	3911	8946	6955	11990	9999	15033	13042	4915	2924
	4			4930	2275	7974	5319	11018	8363	14061	11406	6551	3896
	5			3949	638	6993	3682	10037	6726	13080	9769	8188	4877
	6					6022	2031	9066	5075	12109	8118	9839	5848
255	2	9487	6747	16967	14227	24447	21707	31926	29186	39406	36666	7464	4724
	3	7125	3015	14605	10495	22085	17975	29564	25454	37044	32934	11196	7086
	4			12243	6762	19723	14242	27202	21721	34682	29201	14929	9448
	5			9880	3030	17360	10510	24839	17989	32319	25469	18661	11811
	6					14998	6778	22477	14257	29957	21737	22393	14173



TRAVEL STOP Two independent adjusting screws are located on the center of the output shaft to precisely limit the travel of the actuator to specific degrees of rotation. The travel stops permit bidirectional adjustment of actuator movement in both the open and closed positions.



SPRING RETURN Bray's Series 93 spring return models employ a unique cartridge system. The actuator was designed to save both space and cost. The housing length of the spring return unit is the same as the double acting unit. Converting from double acting to spring return actuation is just a matter of removing the end caps and adding the unique spring cartridges. The actuator can be disassembled and assembled without cumbersome equipment or danger to the installer due to springs releasing. 40, 60, 80, and 100 psi services are standard, optional ratings are available.



DIRECT MOUNTING Bray actuators comply with ISO 5211 dimensions and mount directly to Bray valves without using external linkages. Field installation is simple, misalignment is minimized and contamination buildup between valve and actuator is reduced. Bray can provide linkage for mounting actuators to other devices requiring 90° to 180° rotation.

BrayLINE ACCESSORIES

SERIES 63 3-WAY AND 4-WAY SOLENOID VALVE
For electrical operation of pneumatic actuator on-off functions, Bray Series 63 solenoids are direct-mounted to the actuator by NAMUR interface. The pilot operated spool control valve is convertible from 3-Way (3/2) to 4-Way (5/2). Both watertight (NEMA 4, 4X) and explosion proof (NEMA 4,4X,7,9) housings are standard. NPT and IP65 DIN connections are offered with both single and dual coils. The air supply connection is 1/4" NPT and the electrical connection is 1/2" NPT. A manual override screw is located on the top of the valve body. Stainless Steel housings, digital Bus solenoids and a Series 55 speed control that allows independent control in both directions of travel are also available.



VALVE STATUS MONITOR SERIES 50 The Series 50 signals actuator and valve position to local and remote stations. The compact valve status monitor mounts directly to the top of the actuator. Features include finger-touch control cams, captive cover bolts, local position indicator and two conduit entries for easy wiring. Rated for 15 amps at 125 or 250 volts AC, the Series 50 is provided with internal travel switches that are prewired to a terminal block. Standard switches are two single pole double throw (SPDT) micro switches. Available switch options are 4 micro switches, 2 proximity switches, 2 pneumatic switches or potentiometer for continuous read out. The housing is available in waterproof (NEMA 4,4X) or explosion proof (NEMA 4,4X,7,9).





SERIES 52 VALVE STATUS MONITOR
The Bray 2N1 ProxSensor provides 2 proximity sensors in 1 self-contained, fully sealed, compact enclosure. The sensors are completely encapsulated with epoxy resin in a polymer enclosure for superior moisture, chemical and corrosion protection. AC, DC, Intrinsically Safe and BUS Network versions are offered. Features include LED indicators, high visibility pointer for local position indication, non-magnetic targets and multi-pin electrical cable connector. A Valve Position Display is available as an option. AC Sensor units operate on 20-250 VAC with a maximum load current of 500mA. DC Sensor units operate on 10-30VDC with a maximum load current of 200mA. BUS Network powered units with solenoid drive are AS-i, DeviceNet and PROFIBUS DP.



SERIES 6A ELECTRO-PNEUMATIC POSITIONERS
Series 6A intelligent electro-pneumatic positioners offer precise, microprocessor driven flow control and advanced communication combined with the lowest air consumption on the market. For use with either double or single acting actuators, Series 6A positioners can accept an analog 4-20 mA, HART, Foundation Fieldbus or Profibus PA input signal. Features include an LCD display, keypad, auto calibration and adaptive control. Both waterproof (NEMA 4, 4X) and explosion proof (NEMA 4,4X, 7,9) housings are available.

Brayline Accessories and Bray Actuators both comply with VDI/VDE 3845 (NAMUR recommendations).

SPECIFICATIONS

SPACE SAVING MODULAR PRODUCT LINE

The actuator shall be pneumatically operated and must travel a minimum of 90° in each direction and must be able to overtravel at 3% in each direction past 90°. The actuator shall be totally enclosed and contained in a single enclosure, with no external moving parts. All pneumatic passage ways must be integral to the actuator housing so as to eliminate the need for external tubing. Actuator shall be rack and pinion design, and the output torque shall be linear throughout travel. Actuator shall be provided with pistons that have acetal piston guides and rings thus greatly extending the life of the actuator and reducing friction to the minimum. Actuator must be supplied with two independent travel stop adjustments, the 0° and 90° travel positions have travel adjustments of +5° to –5° (see Diagram A below). The actuator shall be provided with mechanical visual position indicator, and the indicator must be able to be removed easily thus exposing the output shaft for use of manually overriding the actuator when needed. The output shaft and pinion must be of one piece and must be manufactured out of hardened alloy steel and zinc plated for corrosion protection. Actuator shall be able to mount in any position without loss of performance. The actuator shall bolt directly to Bray valve mounting flange without need for any brackets.

Actuator housing shall be anodized aluminum and all external fasteners shall be carbon steel, zinc plated. Springs shall be spring steel, coated for corrosion protection. All seals shall be Buna-N and bearings made of lubricated acetal resin.

The actuator shall be factory lubricated. Actuator design must have smooth housing lines so it will self-drain. The actuator shall be factory tested to ensure proper operation.

STANDARD MATERIALS

Body:	Extruded aluminum alloy, anodized
End Caps:	Die cast aluminum alloy with corrosion resistant polyester coating
Pistons:	Die cast aluminum alloy
Output Shaft/Pinion:	Carbon Steel, zinc plated
Travel Stop:	Alloy Steel
Shaft Bearings:	Acetal
Piston Guides:	Acetal
Fasteners:	Stainless Steel
Springs:	Spring Steel, protective coating
O-Ring Seals:	Buna-N
Options:	Polyester coated body exterior Electroless Nickel plated body exterior Hard Anodized body exterior Stainless Steel pinion

SPRING RETURN – MODULAR DESIGN

The Spring Return System for fail-safe services must be installed in the same housing as the double acting actuator, with no additional housing extensions required, therefore saving weight and space. The spring system must be supplied as a self-contained spring cartridge system. This is a safety feature that ensures disassembly of the actuator without danger of spring release when end caps are removed. Actuator shall be Bray Series 92 or 93 or approved equal.

SERVICE DATA:

Actuators shall be designed for pneumatic operation up to a maximum pressure of 140 PSIG (10 Bar) and for temperature ranges of -40°F (-40°C) to +200°F (+95°C). Filtered air is recommended but not required. All double acting and spring return units shall be suitable for both on-off and throttling applications. Optional units shall be able to operate with other media such as hydraulic oil or water, consult factory for further information.

OPTIONAL EQUIPMENT

See Bray brochure #1030 for Solenoid, brochures #1011 and #1029 for Pneumatic and Electro-Pneumatic Positioners and brochures #1012 and #1015 for Valve Status Monitors.

Diagram A Travel Stop Adjustments
The 0° and 90° travel positions have travel adjustments of +5° max. to –5° min.

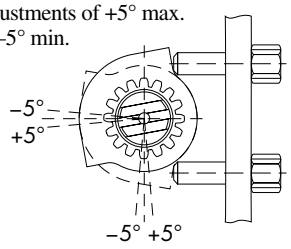

Caution: Care should be taken not to over adjust the travel stops in too far or out too far.

ACTUATOR COMPONENTS

Item No.	Qty.	Description
1	1	Body
2	2	Piston
3	1	Pinion
4	2	End Cap
5*	12 max.	Spring Cartridge Assembly
6	1	Upper Bearing
7	1	Lower Bearing
8	1	Retaining Ring
9	1	Nylon Washer
10	2	Acetal-Bearing Pad
11	2	Acetal-Guide Ring
12	2	Stop Nut
13	2	Travel Adjusting Screw Stop
14	2	O-Ring–Travel Stop
15	1	Acetal Spacer
16	1	Travel Stop
17	8	Hex Head Cap Screw
18	8	Washer
19	2	O-Ring–Piston
20	2	O-Ring–End Cap
21	1	O-Ring–Shaft-Top
22	1	O-Ring–Shaft-Bottom
23	1	Indicator Pointer
24	1	Indicator Pointer Screw

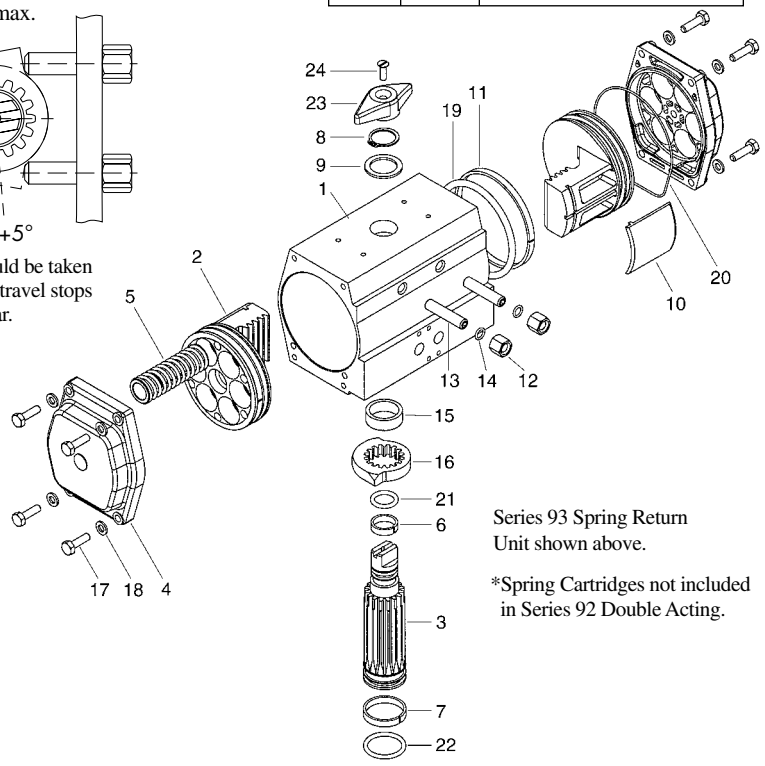

Series 93 Spring Return Unit shown above.

*Spring Cartridges not included in Series 92 Double Acting.

DISTRIBUTOR

All statements, technical information, and recommendations in this bulletin are for general use only. Consult Bray representatives or factory for the specific requirements and material selection for your intended application. The right to change or modify product design or product without prior notice is reserved.

Patented and patents applied for all over the world.
Bray® is a registered trademark of BRAY INTERNATIONAL, Inc.

Bray® CONTROLS
A Division of BRAY INTERNATIONAL, Inc.
13333 Westland East Blvd. Houston, Texas 77041
281.894.5454 FAX 281.894.9499 www.bray.com

© 2007 Bray International. All rights reserved.

SERIES 55
FILTER REGULATORS

The Bray Series 55 Filter Regulator is a 5 micron filter designed to provide nominal filtration removal of solids and liquids from the compressed air with accurate control to any pneumatic control device and are strongly recommended for use with the Bray Series 64 and 6A positioners.

LOCKING KNOB: Allows for downstream pressure adjustment and locks the pressure setting in place.

THREADED COLLAR: Permits easy attachment of bracket for panel mounting.

PRESSURE PORTS: 1/4" NPT or 1/4 G Metric

BOWL QUICK RELEASE: Allows for easy removal of the bowl and guard for access to the filter element without the need for special tools.

TRANSPARENT POLYCARBONATE BOWL: Provides easy view of liquid levels.

METAL BOWL GUARD: Provides sturdy breakage protection from external environmental factors.

PUSHBUTTON DRAIN: Allows for easy removal of liquid from the bowl.

SERIES 55 FILTER REGULATORS

Pressure Ports	1/4" NPT or G 1/4
Gauge Ports	G 1/8
Flow (SCFM)*	30
Set Pressure	7 – 125 PSIG (0.05 - 0.85 MPa) (0.5 - 8.6 Bar)
Filter Regulator Body	Zinc / Non-Removable Rising Knob
Bonnet	Plastic
Springs	Steel
Bowls (2 Ounce)	Transparent Polycarbonate with Metal Guard Metal (Zinc) w/Sight Gauge
Filter Element	5 Micron Standard – Plastic
Pressure Ratings**	0 – 250 PSIG (0 - 1.70 MPa) (0 – 17.2 bar)
Temperature Ratings	32°F - 175°F (0°C - 80°C)

*SCFM = Standard cubic feet per minute at 100 psig inlet, 90 psig no flow secondary setting and 10 psig pressure drop.
**Do not attach to pressurized gas bottles.



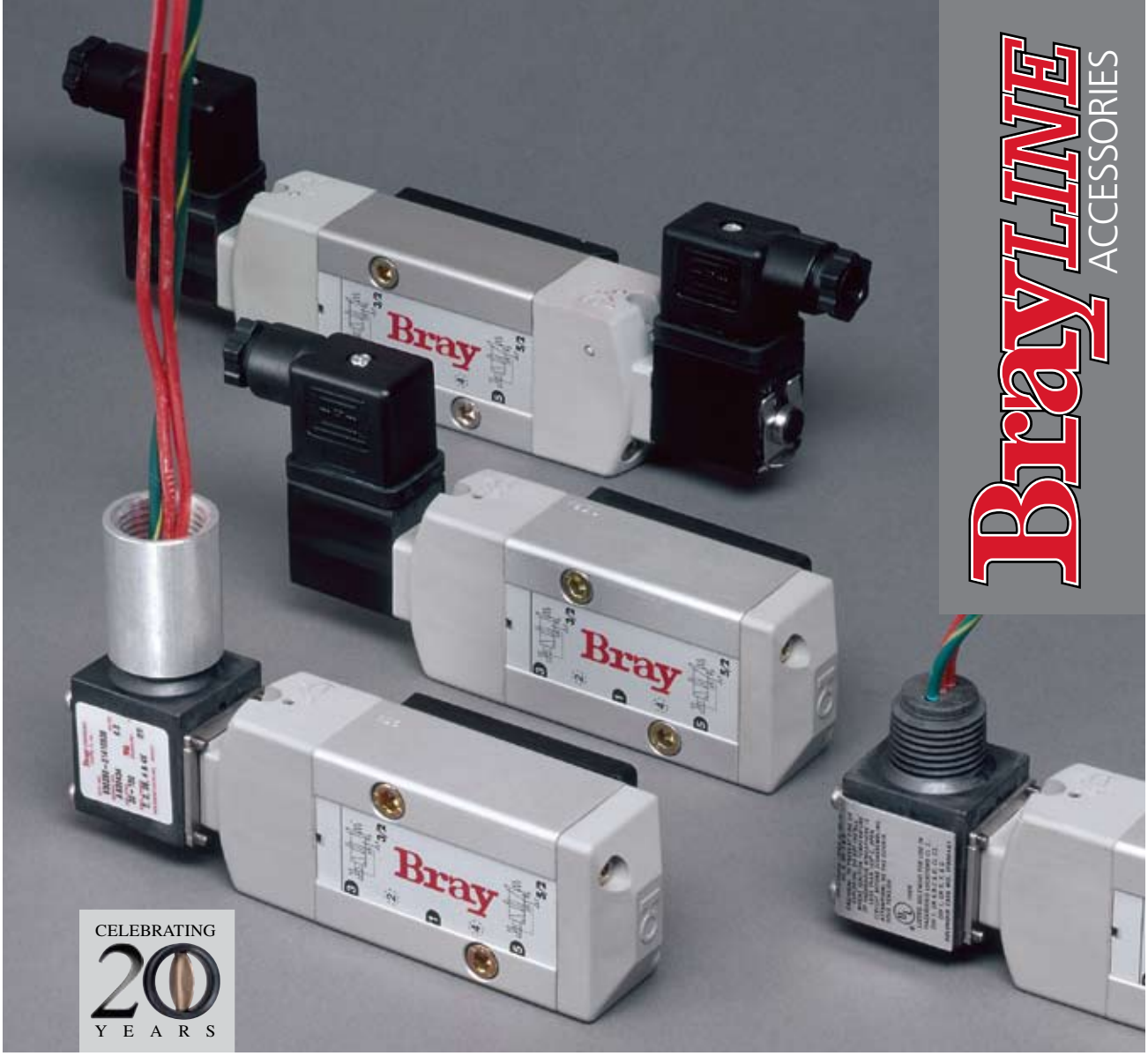

BrayLINE ACCESSORIES

SERIES 63 NEMA 4 & NEMA 4,4x, 7,9
SINGLE & DUAL COIL NPT & DIN
CONVERTIBLE 3-WAY & 4-WAY

SOLENOIDS

PILOT OPERATED SPOOL CONTROL VALVES

Far superior in performance when compared to the commonly used poppet type valves, the rugged Series 63 delivers long, trouble-free service.

FEATURES

Bray Controls offers the high flow Brayline Series 63 Solenoid Valve. The compact, modular, pilot operated spool control valve is convertible from 3-Way (3/2) to 4-Way (5/2). These units can be used with either spring return or double acting actuators where on/off electrical operation is required. Three standard coil housings/connectors are available: General Purpose Watertight (NEMA 4, 4x) and Explosion Proof (NEMA 4, 4x, 7 & 9) units have 1/2" NPT connections, and IP65 DIN units have cable gland PG9 connectors. All housings types are offered with single or dual coils. The coils are UL recognized and CSA certified. All Series 63 solenoids carry the CE mark.

MANUAL OVERRIDE

Each unit contains as standard a mechanical manual override located on the solenoid valve block. In the event of electrical power failure, overriding is simply a matter of rotating the manual override screw which will divert the air from one chamber of the pneumatic actuator to the other.

DIRECT MOUNTING

Meeting NAMUR (VDI/VDE 3845) standards, all Brayline Series 63 solenoid valves direct mount to the integral porting system of Bray Series 92/93 pneumatic actuators. No external piping is required. Bray's direct mounting permits quick and simple field installation.

SERIES 55 SPEED CONTROL

Speed controls that allow independent control of speed in both directions of actuator travel are optionally available.

CONVERTIBLE 3 & 4 WAY

Solenoid is shipped with both 3-Way (marked 3/2) and 4-Way (marked 5/2) flow plates, flow gaskets, O-rings that mount between flow plate and actuator, and mounting bolts.

OPTIONS

The Series 63 is available in the following options: stainless steel housings, low-powered units and intrinsically safe units. Intelligent, digital Bus solenoids are offered in DeviceNet and Profibus-PA protocols, and AS-I Interface solenoids with IP65 DIN/PG9 cable gland connectors are available. All direct mount to Bray pneumatic actuators.

The High Performance Company

SPECIFICATIONS

COIL HOUSINGS

Three standard coil housings are offered. The watertight (NEMA 4, 4x) housing offers a molded and potted coil with UL recognized components and CSA certification. The watertight and explosion proof (NEMA 4,4x,7,9) housing is UL listed and C.S.A. certified for hazardous locations Class I, Div.1 (Groups A-D) and Class II, Div.1 (Groups E-G).
The IP65 DIN housing has UL recognized components and CSA certification.

Standard solenoid valves are supplied as single coil units. Double coil units are also available for customers who require actuators to remain in last position during electrical power failure.

VALVE DESIGN Pilot Operated Spool

MEDIA Dry or lubricated air or inert gases

SPRING RETURN ACTUATORS The Series 63 Solenoid Valve fills the spring chamber with supply air rather than drawing air from the surrounding atmosphere. This keeps the spring chamber clean and dry, and improves the performance and service life of the actuator.

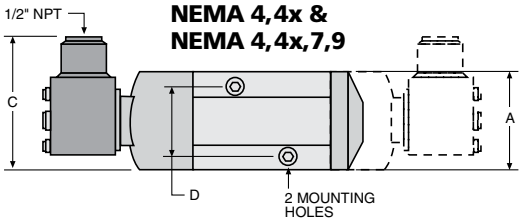

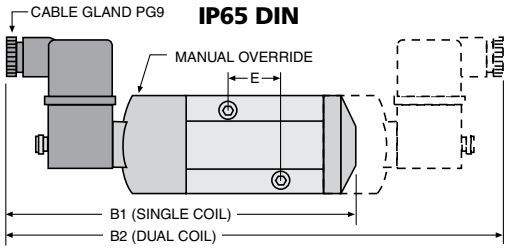

ELECTRICAL CHARACTERISTICS

COIL ELECTRICAL:

NEMA Housings:
24, 120, 220, 240 Volts AC, 50-60 HZ
6, 12, 24, 120 Volts DC, 50-60 HZ
IP65 DIN Housings:
24, 120, 240 Volts AC, 50-60 HZ
12, 24, 120 Volts DC, 50-60 HZ
Insulation-Class F Coils Maximum Temperature Rating: 311°F (155°C)

FLOW - 1/4" PIPE: $C_V = .7$
Flow = 30 scfm, 150 psi max.
Note: Bray S92/93 actuation times are very dependent on the flow capacity of their air supply. It is strongly recommended that only the Bray S63 high flow solenoid be used with the Bray S92/93 actuators. The use of smaller port solenoids, solenoid manifolds, small I.D. air supply tubing and/or extended lengths of tubing can significantly reduce the actuation time and/or the initial response to the command signal.

NOMINAL POWER (Watts)
NEMA Housings: A.C - 6.3, DC - 6.9
DIN Housing: A.C - 2.5, DC - 3.0

OPERATING SPEED: 10 cycles per minute - with more if needed

DUTY CYCLE: Continuous

FLOW SCHEMATICS

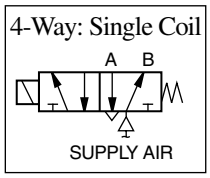

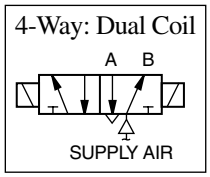

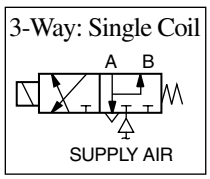

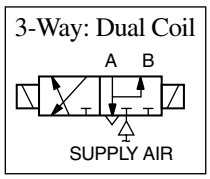

MECHANICAL CHARACTERISTICS

MOUNTING:

NAMUR (VDI/VDE 3845), mountable in any position, hardware included

MATERIALS:

Body: Anodized Aluminum
Spring: Phosphate treated black steel
Shading Coil: Copper
Seals: NBR + PUR
Core / Tube: Stainless / Brass
End Covers & Plate: 6/6 glass filled polyamide (PA/FV)
Spool: Aluminum
Internal Parts: Zamak, Steel, Acetal

PNEUMATIC PORTS: 1/4" NPT

CONNECTIONS:

NEMA Housings: Electrical: 1/2" NPT
DIN Housing: Electrical: Cable Gland PG9

CONSTRUCTION:

Standard construction is molded and potted coil with 18" leads, Class F Insulation. Other insulation classes available. The IP65 DIN coil and magnet structure are epoxy encased.
Molded Cordsets and connectors are available for IP65 DIN coil housings, please consult Bray representative or factory for further information.

NORMAL AMBIENT TEMPERATURE RANGE

NEMA Housings:
AC: -13°F (-25°C) to +140°F (+67°C)
DC: -13°F (-25°C) to +77°F (+25°C)
DIN Housing: AC & DC:
-13°F (-25°C) to +140°F (+67°C)

OPTIONAL ENCLOSURE:

Low power, intrinsically safe DIN Housing, CENELEC (Ex d,m,em &i) listed.

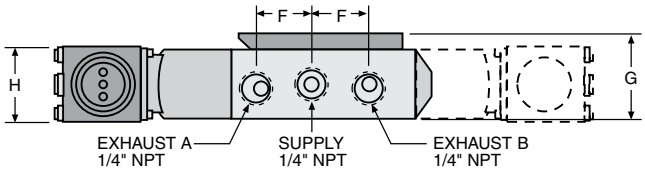

DIMENSIONS

Valve Size	Coil Housing	A	B1	B2	C	D	E	F	G	H
1/4"	NEMA 4, 4x	1.77	5.75	7.84	2.40	1.26	0.95	0.87	1.31	1.18
1/4"	NEMA 4,4x,7,9	1.77	5.75	7.84	2.40	1.26	0.95	0.87	1.31	1.18
1/4"	IP65 DIN	1.77	6.28	8.90	2.82	1.26	0.95	0.87	1.31	—

All statements, technical information and recommendation in this bulletin are for general use only. Consult Bray representatives or factory for the specific requirements and material selection for your intended application. The right to change or modify product design or product without prior notice is reserved.

Bray Controls is certified to ISO 9001 standards.

Bray® CONTROLS
A Division of BRAY INTERNATIONAL, Inc.
13333 Westland East Blvd. Houston, Texas 77041
281.894.5454 FAX 281.894.9499 www.bray.com

Bray® is a registered trademark of BRAY INTERNATIONAL, Inc.
© 2007 Bray International. All rights reserved. B-1030 04/07

BRAY INTERNATIONAL, INC

USA
Houston, TX +281.894.5454

FLOW-TEK

USA
Houston, TX +832.912.2300

CHINA
Hangzhou, Zhejiang +86.571.828.52200

BRAZIL
Paulinia SP-Brazil +55.19.3517.5555

BRAY CONTROLS / FLOW-TEK

BRAY CONTROLS USA
Houston, TX +832.912.2300

ARGENTINA
Buenos Aires +54.11.4362.0666

BENELUX
Heerhugowaard +31.72.572.1410

BRAZIL
Paulinia SP-Brazil +55.19.3517.6161

CANADA
Montréal +514.344.2729

CHILE
Santiago +56.2739.2966

CHINA
Hangzhou, Zhejiang +86.571.828.52200

GERMANY
Krefeld +49.2151.53360

INDIA
Gujarat +91.2667.664444

MEXICO
Zapopan, Jalisco +52.33.3836.4460

PACIFIC
Melbourne, Australia +613.9580.9755

PERU
Lima +511.251.0251

POLAND
Oświęcim +48.33.842.1968

UNITED KINGDOM
Inchinnan +44.141.812.5199

VIETNAM
Ho Chi Minh City +84.8.3742.3428

RITEPRO

CANADA
Montréal +514.324.8900

CHINA
Hangzhou, Zhejiang +86.571.828.52200

All statements, technical information, and recommendations in this bulletin are for general use only. Consult Flow-Tek representatives or factory for the specific requirements and material selection for your intended application. The right to change or modify product design or product without prior notice is reserved.

Flow-Tek® is a registered trademark of Bray International, Inc.
© 2016 Flow-Tek, Inc. All rights reserved.

F-2400_EN_F15/30_11_2016



▲ **FLOW-TEK - USA - Office & Manufacturing**

Global manufacturing, service around the corner

To serve you locally, each region maintains a factory certified sales and service network for all Bray International products.

ABS Quality Evaluations, Inc. ★ Management System Certification

▼ **WORLD HEADQUARTERS - BRAY INTERNATIONAL , INC. - USA**



Flow-Tek®

Subsidiary of BRAY INTERNATIONAL, Inc.
8323 N. Eldridge Pkwy #100 Houston, Texas 77041
832.912.2300 Fax: 832.912.2301 www.flow-tek.com

CS-912-052 : Identification sheet

VWTC PROJECT NUMBER:	Iqaluit WWTP	REV:	02
PROJECT NAME:	5000218036	SUBMITTED TO (COMPANY):	
ENGINEER:	F.VINCI	SUBMITTED TO (RESPONSIBLE)	
PROJECT MANAGER:	C. BEKAERT	PROJECT NUM REFERENCE.:	
PHONE NUMBER:		LOT NUMBER:	

SUPPLIER	EQPT CODE	EQPT TAG NO	DIA	DESCRIPTION	INFO 1	INFO 2	INFO 3	APPLIC.	NOTE	REV
KINGTRON	ST-999-015	BV-02-401,BV-02-402, BV-02-403,BV-02-407, BV-02-408,BV-02-409, BV-02-417,BV-02-418, BV-02-422,BV-02-423, BV-02-424,BV-02-432, BV-02-433,BV-02-437, BV-02-438,BV-02-439, BV-02-451,BV-02-452, BV-02-453,BV-02-457, BV-02-458,BV-02-459, BV-02-467,BV-02-468, BV-02-472,BV-02-473, BV-02-474,BV-02-482, BV-02-483,BV-02-487, BV-02-488,BV-02-489, BV-02-510,BV-02-511, BV-02-514,BV-02-518, BV-02-519,BV-02-520, BV-02-521,BV-02-523, BV-02-524,BV-02-525, BV-02-526,BV-02-527, BV-02-528,BV-02-529, BV-02-530,BV-02-531, BV-02-540,BV-02-541 BV-02-543,BV-02-545, BV-02-546,BV-02-547, BV-02-564,BV-02-568, BV-02-569,BV-02-574, BV-02-578,BV-02-579, BV-02-410,BV-02-425, BV-02-440,BV-02-460, BV-02-475,BV-02-490, BV-02-314,BV-02-315, BV-02-364,BV-02-365,		GENERAL ISOLATION VALVE	STAINLESS STEEL 1/2'' BALL VALVE // KingTron S-212T with reinforced PTFE seat // CRN required					2

2-PIECE STANDARD PORT BALL VALVES

FIG. S-212T / C-212T: THREADED ENDS, 2000 PSI(138 BAR) W.O.G..

FEATURES:

- Reinforced TFE seats increase durability.
- Adjustable packing gland.
- Bottom-loaded blow-out proof stem.
- Basic design complied with ANSI B16.34 & EN 12516-1.
- NPT threaded ends complied with ANSI B 1.20.1..
- Rc, Rp & G Threaded ends complied with BS 21/2779, JIS B-0203/0202, DIN 259/2999, ISO 228-1, AS1722.1/1722.2 are upon request.
- Tested according to API 598.



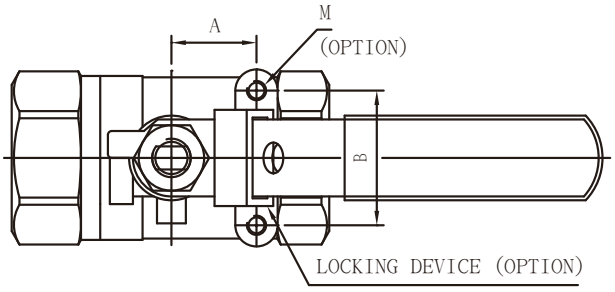

MATERIALS LIST:

NO.	PARTS	S-212T	C-212T
1	BODY	ASTM A351-CF8M	ASTM A216-WCB
2	SEAT	REINFORCED PTFE	REINFORCED PTFE
3	BALL	ASTM A351-CF8M/316	ASTM A351-CF8/304
4	GASKET	PTFE	PTFE
5	END CAP	ASTM A351-CF8M	ASTM A216-WCB
6	HANDLE NUT	AISI 304	AISI 304
7	HANDLE WASHER	AISI 304	AISI 304
8	GLAND	AISI 304	AISI 304
9	STEM PACKING	PTFE	PTFE
10	THRUST WASHER	PTFE	PTFE
11	STEM	ASTM A276-316	ASTM A276-304
12	HANDLE	AISI 304	ZINC PLATED STEEL
13	HANDLE COVER	PVC	PVC

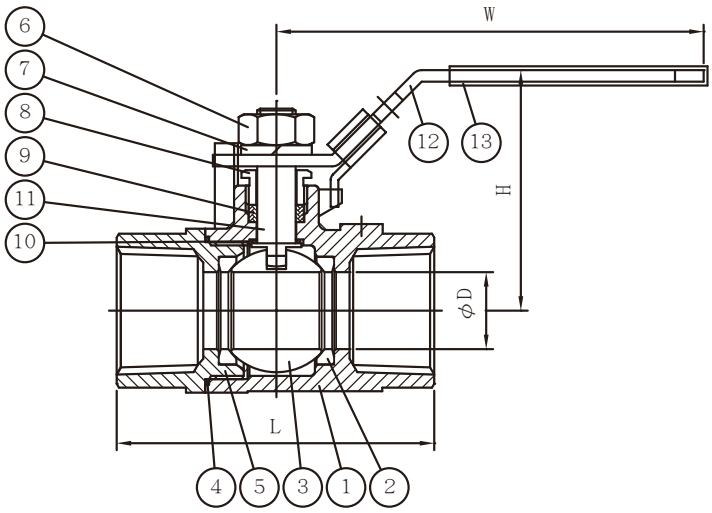

OPTIONS:

-L: LOCKING DEVICE. -V: VENTED BALL.
-M: TAPPED MOUNTING PAD. -W: BODY JOINT FULLY WELDED.
-A: ANTI-STATIC DEVICE.

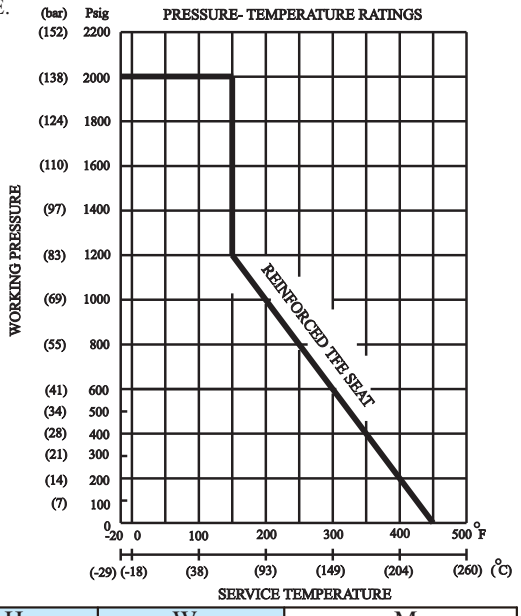

DIMENSIONS

SIZE		ϕD		L		A		B		H		W		M
inch	DN	in	mm	in	mm	in	mm	in	mm	in	mm	in	mm	(OPTION)
1/4"	8	0.37	9.5	2.09	53	0.50	12.7	1.12	28.5	2.13	54	3.70	94	10-24UNC
3/8"	10	0.37	9.5	2.09	53	0.50	12.7	1.12	28.5	2.13	54	3.70	94	10-24UNC
1/2"	15	0.49	12.5	2.38	60.5	0.50	12.7	1.12	28.5	2.13	54	3.70	94	10-24UNC
3/4"	20	0.59	15	2.70	68.5	0.50	12.7	1.12	28.5	2.24	57	3.70	94	10-24UNC
1"	25	0.79	20	3.25	82.5	0.87	22.1	1.38	35	2.46	62.5	4.37	111	10-24UNC
1 1/4"	32	0.98	25	3.58	91	0.93	23.6	1.38	35	2.87	73	5.37	136.5	10-24UNC
1 1/2"	40	1.26	32	3.94	100	0.93	23.6	1.50	38.1	3.09	78.5	5.37	136.5	1/4-20UNC
2"	50	1.50	38	4.61	117	0.93	23.6	1.50	38.1	3.48	88.5	6.57	167	1/4-20UNC

We reserve the rights to modify our product design or construction for improvement without prior notice.

CS-999-017 : Identification sheet

VWTC PROJECT NUMBER:	Iqaluit WWTP	REV:	02
PROJECT NAME:	5000218036	SUBMITTED TO (COMPANY):	
ENGINEER:	F.VINCI	SUBMITTED TO (RESPONSIBLE)	
PROJECT MANAGER:	C. BEKAERT	PROJECT NUM REFERENCE.:	
PHONE NUMBER:		LOT NUMBER:	

SUPPLIER	EQPT CODE	EQPT TAG NO	DIA	DESCRIPTION	INFO 1	INFO 2	INFO 3	APPLIC.	NOTE	REV
KITZ	ST-999-017	GV-02-510 GV-02-520 GV-02-530 GV-02-540		WHITE WATER STRAINER DRAIN VALVE	KITZ AKUJM2, 2" STAINLESS STEEL GLOBE VALVE THREADED // WITH CRN					2

ST-999-019 : Identification sheet

VWTC PROJECT NUMBER:	Iqaluit WWTP	REV:	2
PROJECT NAME:	5000218036	SUBMITTED TO (COMPANY):	
ENGINEER:	F.VINCI	SUBMITTED TO (RESPONSIBLE)	
PROJECT MANAGER:	C. BEKAERT	PROJECT NUM REFERENCE.:	
PHONE NUMBER:		LOT NUMBER:	

SUPPLIER	EQPT CODE	EQPT TAG NO	DIA	DESCRIPTION	INFO 1	INFO 2	INFO 3	APPLIC.	NOTE	REV
KITZ	ST-999-019	GV-02-313 GV-02-333		MANUAL AIR PURGE VALVE	AKUJM07, ¾" 200WOG CF8M-10 IP SB GLOBE VALVE KITZ AKUJM// WITH CRN					2

GLOBE
200 WOG STAINLESS STEEL

Screw-In-Bonnet • Inside Screw • Non-Rising Stem
Stainless Steel Disc

CODE # 33 (AKUJM)
THREADED

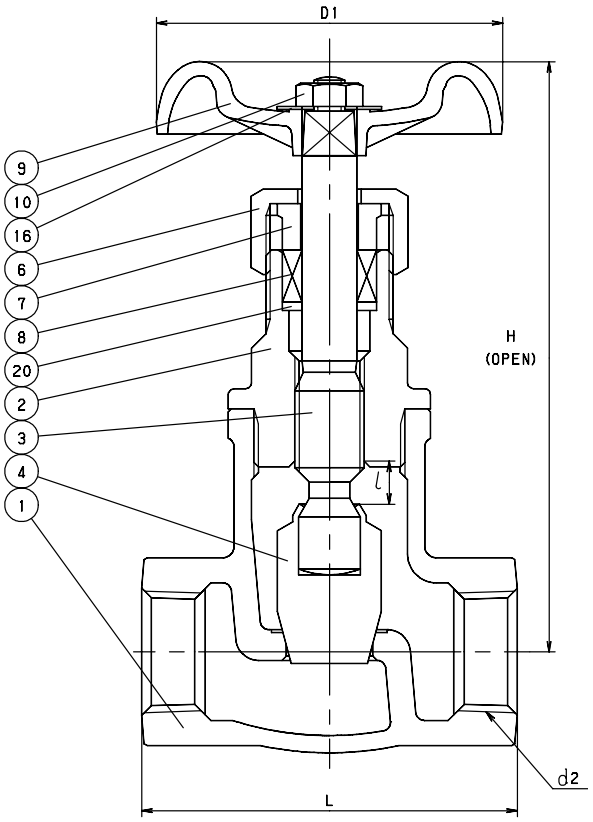

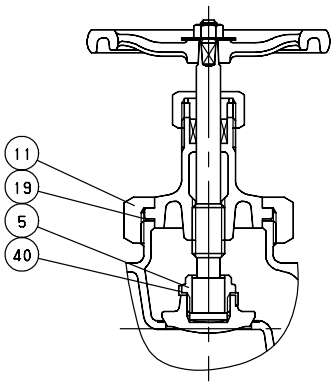

$2^1/_2$ and Larger

STANDARDS	
END TO END	KITZ
THREADED ENDS	ANSI B1.20.1
WALL THICKNESS	KITZ
DESIGN	KITZ

PRESSURE/TEMPERATURE

200 PSIG @ 250ºF – STATIC FLUID
150 PSIG @ 250°F – PULSATING FLUID / GAS
120 PSIG @ 350°F – SATURATED STEAM

MATERIAL LIST

NO.	NAME OF PART	SPECIFICATION
1	BODY	STAINLESS STEEL (A351 Gr. CF8M)
2	BONNET	STAINLESS STEEL (A351 Gr. CF8M)
3	STEM	STAINLESS STEEL (A276, TYPE 316)
4	DISC	STAINLESS STEEL (A276, TYPE 316)
5	LOCK NUT	STAINLESS STEEL (A276, TYPE 316)
6	PACKING NUT	STAINLESS STEEL (A276, TYPE 304) or (A351 Gr. CF8)
7	GLAND	STAINLESS STEEL (A276, TYPE 316)
8	GLAND PACKING	ARAMID FIBERS WITH GRAPHITE
9	HAND WHEEL ($^3/_8$ – $^3/_4$)	ZINC DIE-CAST (B86)
	(1 – 3)	ALUMINUM DIE-CAST (B85)
10	WHEEL NUT	CARBON STEEL (A307 Gr. B)
11	BONNET RING	STAINLESS STEEL (A351 Gr. CF8M)
16	NAME PLATE	ALUMINUM
19	GASKET	ARAMID FIBER SHEET
20	PACKING WASHER	STAINLESS STEEL (A276, TYPE 316)
40	LOCK PLATE	STAINLESS STEEL

DIMENSIONS - WEIGHTS - QUANTITIES

d2 SIZE	H	D1	L	APPROX. NET WT.	CARTON QTY
$^3/_8$	4.29	2.36	2.17	1.31	48
$^1/_2$	4.37	2.36	2.56	1.44	48
$^3/_4$	4.41	2.76	3.15	2.06	30
1	5.59	3.54	3.54	3.04	24
$1^1/_4$	5.91	3.54	4.13	4.33	15
$1^1/_2$	6.73	3.94	4.72	6.25	12
2	7.44	4.53	5.51	9.83	6
$2^1/_4$	9.96	7.09	7.09	14.67	3
3	11.02	8.86	7.87	21.50	2

CS-999-020 : Identification sheet

VWTC PROJECT NUMBER:	Iqaluit WWTP	REV:	02
PROJECT NAME:	5000218036	SUBMITTED TO (COMPANY):	
ENGINEER:	F.VINCI	SUBMITTED TO (RESPONSIBLE)	
PROJECT MANAGER:	C. BEKAERT	PROJECT NUM REFERENCE.:	
PHONE NUMBER:		LOT NUMBER:	

SUPPLIER	EQPT CODE	EQPT TAG NO	DIA	DESCRIPTION	INFO 1	INFO 2	INFO 3	APPLIC.	NOTE	REV
SHARPE	ST-999-020	GV-02-401 GV-02-416 GV-02-431 GV-02-451 GV-02-466 GV-02-481		ADJUSTMENT WHITE WATER VALVE	3" globe valves, flanged, cast steel body, 316SS internals SHARPE #SV45114030					2

SMITH-COOPER® INTERNATIONAL

SHARPE®
Valves, Automation & Controls

Series 45114
150# Flanged Cast Steel Globe Valve

Design Features

- Outside screw and yoke
- Bolted bonnet
- Welded Seat
- Yoke Integrated with Bonnet
- Loose Disc
- Rising stem and non-rising hand-wheel

Applicable Standards

• Steel valves	ANSI B16.34
• Face to face	ANSI B16.10
• End flanges	ANSI B16.5
• Butt-weld ends	ANSI B16.25
• Inspection and test	API 598
• NACE	MR-0175



USA 800-766-0076
Fax 323-890-4456
www.smithcooper.com
Los Angeles, CA
Chicago, IL
Atlanta, GA
Vancouver, WA
Houston, TX

SHARPE®
Valves, Automation & Controls

Series 45114
150# Flanged Cast Steel Globe Valve

2"- 6" Dimensions, Parts & Materials

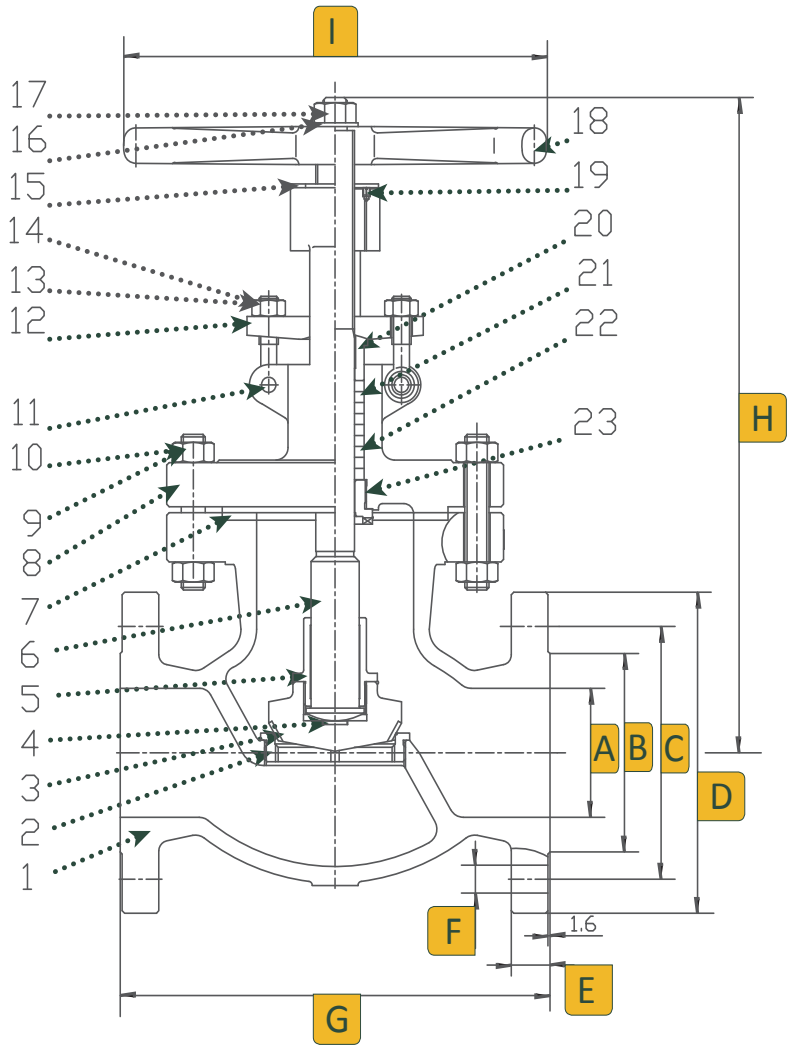

No.	Part Name	Material
1	Body	Carbon Steel ASTM A216 - WCB
2	Seat	A105 & STL.6
3	Disc	A105 & 410 Stainless Steel
4	Thrust Plate	410 Stainless Steel
5	Disc Cover	410 Stainless Steel
6	Stem	A182 F6a
7	Gasket	304 Stainless Steel & Flexible Graphite
8	Bonnet	Carbon Steel ASTM A216 - WCB
9	Stud	B7 Steel A193
10	Nut	2H Steel A194
11	Pin	Carbon Steel
12	Gland Flange	Carbon Steel
13	Eye Bolt	B7 Steel A193
14	Eye Nut	2H Steel A194
15	Stem Nut	D-2
16	Gasket	410 Stainless Steel
17	Nut	Carbon Steel
18	Hand-wheel	Ductile Iron
19	Screw	Carbon Steel
20	Gland	410 Stainless Steel
21	Packing	Flexable Graphite
22	Packing	Flexible Graphite
23	Back Seat	410 Stainless Steel

Dimensions (Inches)

Size	A	B	C	D	E	F	G	H	I	Num of Bolt Holes
2	2.01	3.62	4.76	6.00	0.75	0.75	8.00	13.43	7.87	4
2-1/2	2.52	4.13	5.51	7.00	0.88	0.75	8.50	14.45	9.84	4
3	2.99	5.00	6.00	7.50	0.94	0.75	9.50	14.76	9.84	4
4	4.02	6.18	7.50	9.00	0.94	0.75	11.50	19.02	11.81	8
6	5.98	8.50	9.50	11.00	1.00	0.875	16.00	20.35	13.78	8

SHARPE®
Valves, Automation & Controls

Series 45114
150# Flanged Cast Steel Globe Valve

8"- 16" Dimensions, Parts & Materials

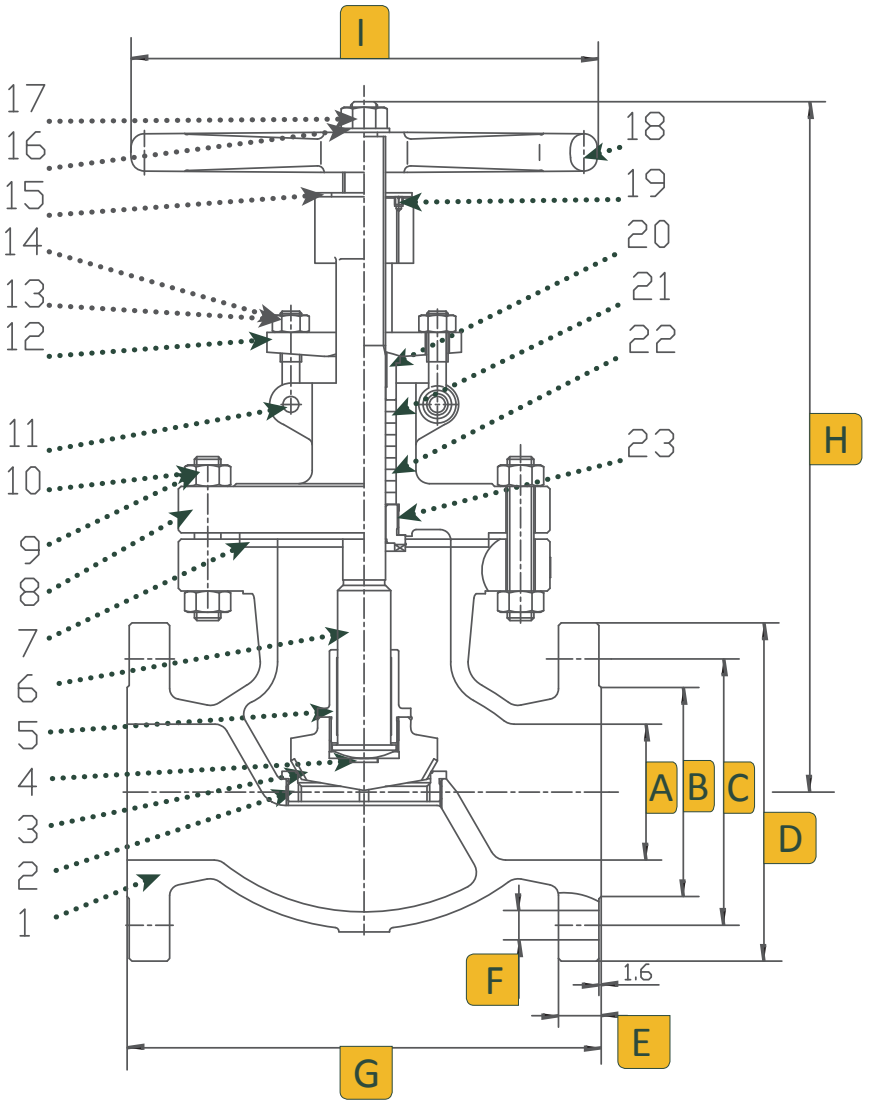

No.	Part Name	Material
1	Body	Carbon Steel ASTM A216 - WCB
2	Seat	A105 & STL.6
3	Disc	A105 & 410 Stainless Steel
4	Thrust Plate	410 Stainless Steel
5	Disc Cover	410 Stainless Steel
6	Stem	A182 F6a
7	Gasket	304 Stainless Steel & Flexible Graphite
8	Bonnet	Carbon Steel ASTM A216 - WCB
9	Stud	B7 Steel A193
10	Nut	2H Steel A194
11	Pin	Carbon Steel
12	Gland Flange	Carbon Steel
13	Eye Bolt	B7 Steel A193
14	Eye Nut	2H Steel A194
15	Stem Nut	D-2
16	Gasket	410 Stainless Steel
17	Nut	Carbon Steel
18	Hand-wheel	Ductile Iron
19	Screw	Carbon Steel
20	Gland	410 Stainless Steel
21	Packing	Flexible Graphite
22	Packing	Flexible Graphite
23	Back Seat	410 Stainless Steel

Dimensions (Inches)

Size	A	B	C	D	E	F	G	H	I	Num of Bolt Holes
8	8.00	10.62	11.75	13.50	1.12	0.875	19.50	23.23	15.75	8
10	10.00	12.75	14.25	16.00	1.18	1.00	24.50	29.70	17.72	12
12	12.00	15.00	17.00	19.00	1.25	1.00	27.50	37.10	22.05	12
14	13.27	16.25	18.75	21.00	1.37	1.125	31.00	37.40	22.05	12
16	15.21	18.50	21.25	23.50	1.44	1.125	36.00	38.00	25.20	16

Series 45114
150# Flanged Cast Steel Globe Valve

Technical Information

Temperature °F	Working Pressure psi
-20 to 100	285
200	260
300	230
400	200
500	170
600	140
650	125
700	110
750	95
800	80
850	65
900	50
950	35
1000	20

How to Order

Size	Series	Class		Ends		Body Material		Options	
2 2-1/2 3 4 6 8 10 12 14* 16*	45	1	150	1 2	Flange Butt-weld*	4	Carbon Steel		

*POA

Example: 8 - 45 - 1 - 1 - 4 = 8-45-1-1-4

Due to continuous development of our product range, we reserve the right to change the dimensions and information for this product as required.

CS-999-004 : Identification sheet

VWTC PROJECT NUMBER:	Iqaluit WWTP	REV:	02
PROJECT NAME:	5000218036	SUBMITTED TO (COMPANY):	
ENGINEER:	F.VINCI	SUBMITTED TO (RESPONSIBLE)	
PROJECT MANAGER:	C. BEKAERT	PROJECT NUM REFERENCE.:	
PHONE NUMBER:		LOT NUMBER:	

SUPPLIER	EQPT CODE	EQPT TAG NO	DIA	DESCRIPTION	INFO 1	INFO 2	INFO 3	APPLIC.	NOTE	REV
PRATT	ST-999-004	PLV-02-301 PLV-02-302 PLV-02-303 PLV-02-304 PLV-02-305 PLV-02-371 PLV-02-372 PLV-02-373 PLV-02-374 PLV-02-375		DAF DRAIN VALVE	PRATT PLUG VALVE #611A-E1-L-2" 2" PLUG VALVE 611A-E1-L, LEVER DUCTILE IRON BODY , FLG X FLG CONNECTION, 175PSIG WORKING PRESSURE, BUNA PLUG					2

PRATT

Henry Pratt Company

1/2" - 2" Ballcentric® Plug Valve



Engineering Creative Solutions
for Fluid Systems Since 1901

A Tradition of Excellence

With the development of the first rubber seated butterfly valve more than 70 years ago, the Henry Pratt Company became a trusted name in the flow control industry, setting the standard for product quality and customer service. Today Pratt provides the following range of superior products to the water, wastewater and power generation industries.

Butterfly Valves: from 3" to 162"

Rectangular Valves: 1' x 1' to 14' x 16'

Ball Valves –
Rubber Seated: from 4" to 60"
Metal Seated: from 6" to 48"

Plug Valves: from 1/2" to 72", 100% port available up to 48", 3 ways

Air Valves for Water and Wastewater: from 1/2" to 20"

Hydraulic Control Systems

Valve Controls

Energy Dissipating Valves and Fixed Energy Dissipaters

Cone Valves

Check Valves

Plunger Valves

A Commitment to Meeting The Customers' Needs

Henry Pratt valves represent a long-term commitment to both the customer and to a tradition of product excellence. This commitment is evident in the number of innovations we have brought to the industries we serve. In fact, the Henry Pratt Company was the first to introduce many of the flow control products in use today, including the first rubber seated butterfly valve, one of the first nuclear N-Stamp valves, and the bonded seat butterfly valve.

Innovative Products For Unique Applications

Though many of the standard valves we produce are used in water filtration and distribution applications, Pratt has built a reputation on the ability to develop specialized products that help customers to meet their individual operational challenges.

Creative Engineering for Fluid Systems

Pratt's ability to provide practical solutions to complex issues is demonstrated by the following case histories.

Earthquake Proof Valves

Pratt designed and manufactured hydraulically actuated valves for a water storage application so that the valves would automatically operate in the event of earthquakes. This led to the development of a valve that will withstand acceleration forces of up to 6gs.

Custom Actuation/Isolation Valves

Pratt has designed and manufactured nuclear quality quarter-turn valves and parts since the first nuclear-powered generating plants were built. Our custom valves are able to close in a millisecond, using specially designed Pratt electro-pneumatic actuators.

Valves Designed for Harsh Environments

Pratt designed and manufactured a 144" diameter butterfly valve for the emergency cooling system at a jet engine test facility. The valve was designed to supply water to help dissipate the tremendous heat generated by the engines during testing.

PRATT
Henry Pratt Company

Through experience, commitment and creative engineering, Pratt is uniquely suited to provide superior products for our customers' special needs.
For more information, contact our corporate headquarters in Aurora, Illinois.

Scope of Line

The Henry Pratt criteria of quality, reliability, safety and value are embodied in the Ballcentric® Plug Valve setting higher standards for dependable performance with excellent features achieved by the utilization of the very latest design and manufacturing techniques.

- Computer Aided Design
- High Integrity Casting
- CNC manufacturing delivers consistent sizes on all components

All complemented by a rigorous Quality Control System

Body

The Ballcentric® Plug Valve body casting is ASTM A536 65-45-12 ductile iron using high pressure molding techniques. Threaded connection available on 1/2"-2" sizes. Flanged connection available on 2" size.

Flange diameter, thickness and drilling conform to ANSI B16.1 Class 125.

Seat

The valve seat shall be furnished with an overlay of corrosion and abrasion resistant epoxy.

Stem Seal

High integrity sealing by combining the advantages of a resilient and abrasion resistant U-Cup seal. From vacuum to high pressure, the self-adjusting sealing system (per AWWA C504) gives positive, trouble-free service and is retained independently of the plug stem or external torque device, thereby eliminating periodic maintenance.

Bearings

The plug rotates in permanently lubricated stainless steel bearings, located in the body and bonnet, along with upper and lower PTFE thrust washers which ensure consistently low operating torque.

Plug

Supported on integral trunnions, the plug is totally encapsulated with an elastomer that is molded to the casting providing tight shut off even under vacuum conditions. High integrity corrosion-free sealing is achieved by a variety of abrasion resistant elastomers which protect the plug right up to the trunnions. When assembled, the light compression of the elastomers onto PTFE thrust washers prevents entry of abrasive materials into the bearings.

Bonnet Seal

Superior “O” ring sealing with metal/metal contact means lower bolting stresses compared with compression gaskets.

Flow

The full round port design with streamlined internal contours gives the highest industry capacity straight through flow in the full open position, reducing turbulence and pressure drop and the effect of erosive media. Handling of sludges and slurries is therefore enhanced.

Travel Stops

Adjustable open and closed travel stops are fitted as standard on both wrench and gear operated Ballcentric® Plug Valves.

Features and Benefits

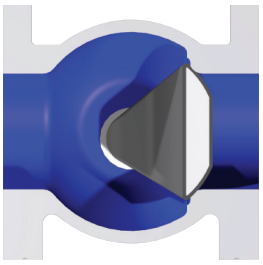

- Valve in closed position for bubble tight shut-off
- Normal flow direction gives pressure assisted sealing
- Torques are low even in reverse flow

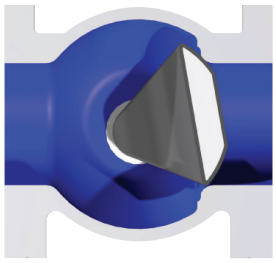

- Plug rotates away from the seat for instant opening
- Seat wear and operating torque reduced
- No further seat contact until valve is closed again

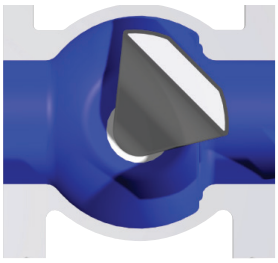

- Design of Ballcentric® plug valve allows modulating control over the full 90˚ travel
- Ideally suited for balancing service
- Standard rotary valve provides control and tight shut off in one valve

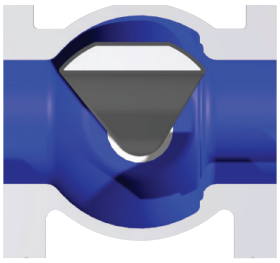

- Plug is out of flow path when fully open
- Straight through, uninterrupted smooth flow
- Round port reduces turbulence and erosion, lowers pumping costs and can be “pigged” to clean the pipeline

Installation

The Ballcentric® Plug Valve is suitable for flow and shut-off in either direction. Seat end downstream is the preferred orientation and any reverse flow requirement should be stated at the time of order. For use on fluids with suspended solids, installation with the seat upstream and the valve stem horizontal is recommended with plug rotation to the top of the valve.

In-Line Maintenance

In the unlikely event of stem leakage, the stem seals can be easily replaced without removing the bonnet. Access to the body for cleaning or inspection does not require removal from the line.

Modular Construction

Design of the bonnet and stem allows for on-site adaption of gear operators, power actuators, or extension devices on to standard valves. Conversion can be easily undertaken without removing the valve bonnet, thereby minimizing downtime.

Power Operation

Pneumatic, electric or hydraulic operation is available, complete with accessories such as limit switches, solenoid valves and positioners when required.

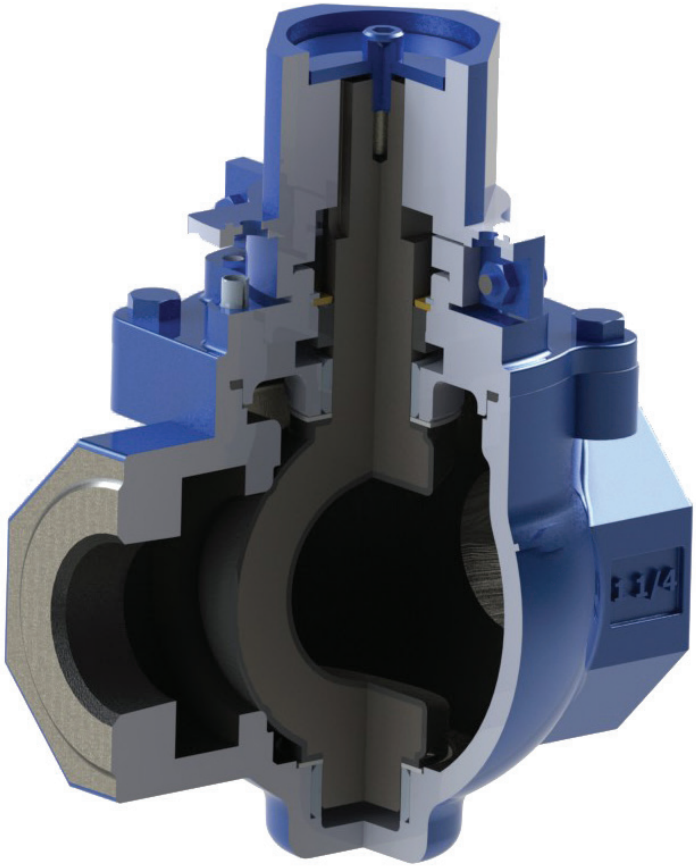

Standard Materials of Construction, Fig. 613A/611A, 1/2" - 2"

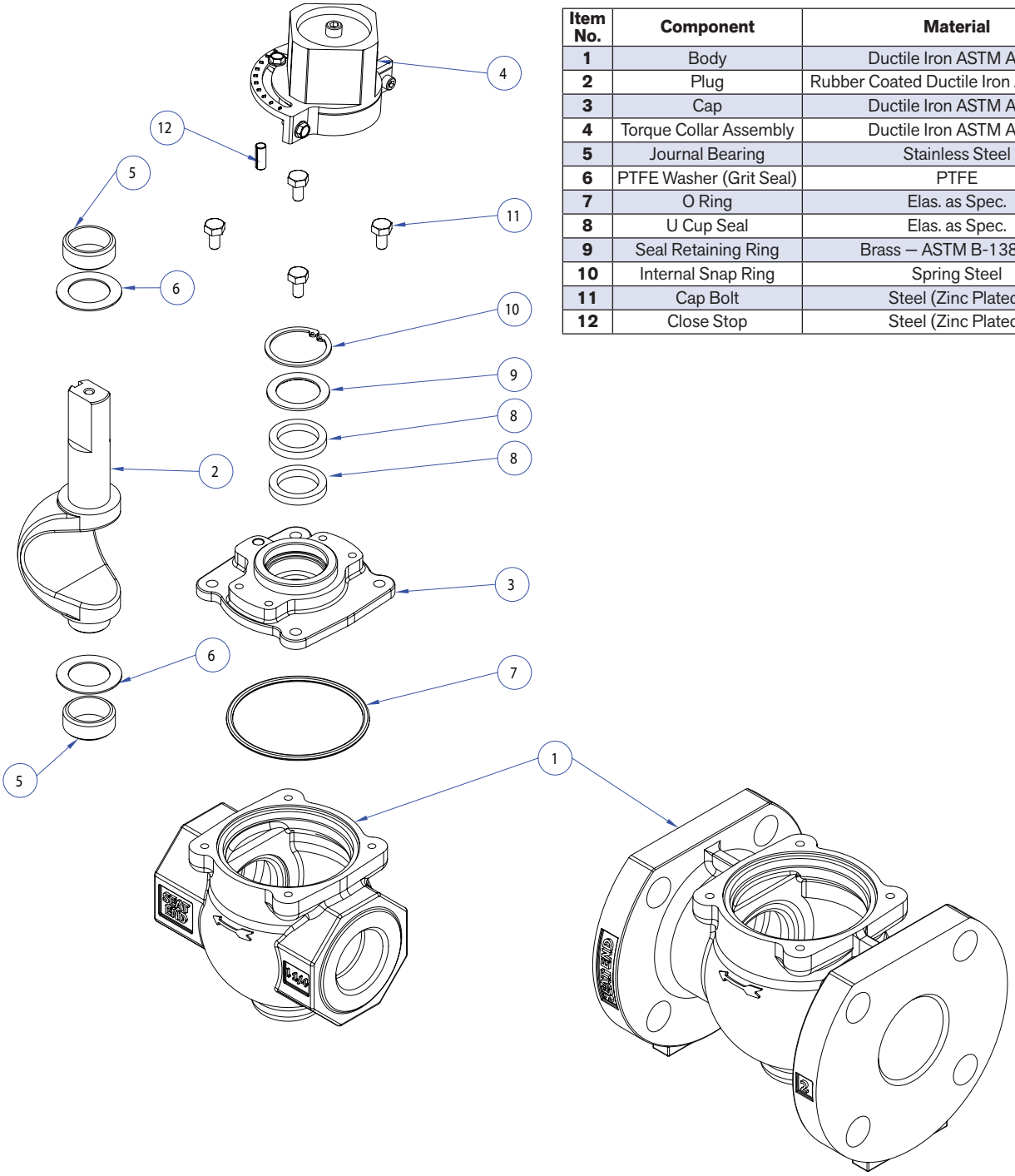

Item No.	Component	Material	Qty.
1	Body	Ductile Iron ASTM A536	1
2	Plug	Rubber Coated Ductile Iron ASTM A536	1
3	Cap	Ductile Iron ASTM A536	1
4	Torque Collar Assembly	Ductile Iron ASTM A536	1
5	Journal Bearing	Stainless Steel	2
6	PTFE Washer (Grit Seal)	PTFE	2
7	O Ring	Elas. as Spec.	1
8	U Cup Seal	Elas. as Spec.	2
9	Seal Retaining Ring	Brass – ASTM B-138-675	1
10	Internal Snap Ring	Spring Steel	1
11	Cap Bolt	Steel (Zinc Plated)	AR
12	Close Stop	Steel (Zinc Plated)	1

Technical Data

ORDERING INFORMATION

Valve Types	Designation
Threaded NPT Ductile Iron	613A
ANSI 125 Flanged Ductile Iron (2" only)	611A
Threaded NPT 316 SS	603AS
ANSI 150 Flanged 316SS (2" only)	601AS

SEAT

Epoxy	E
316SS (on stainless steel valve only)	S

ELASTOMER TRIM

EPDM	0
Buna-Nitrile	1
Viton*	2
Neoprene*	3

* Consult factory for availability

MANUAL OPERATORS

Lever/Wrench	L
Direct Nut	TC
Above Ground Gear & Handwheel	AGHW
Above Ground Gear & 2" Nut	AGNUT
Buried Gear with 2" Nut	BG
Memory Stop Gear & Handwheel	MGHW
Above Ground Gear & Chainwheel	AGCW

Valves are only tested for bi-directional shut-off if specified at time of order. Contact Henry Pratt for bi-directional ratings.

PRESSURE RATING

613A	NPT	400 PSI
611A	ANSI 125	175 PSI
603AS	NPT	400 PSI
601AS	ANSI 150	275 PSI

Body Hydrotest = 150% of rated pressure
Seat Test = 100% of rated pressure
Testing per AWWA C517

ELASTOMERS AVAILABLE FOR BALLCENTRIC® PLUG VALVE

Nitrile

A general purpose material sometimes referred to as BUNA-N or HYCAR with a -20°F to 212°F temperature range. Used on sewage, water, hydrocarbon and mineral oils.

EPDM

An excellent polymer for use on chilled water through to LP steam applications having a temperature range of -35°F to 250F. Resistance to many acids, alkalies, detergents, phosphate esters, alcohols and glycols is an added benefit.

Neoprene

This versatile material shows outstanding resistance to abrasion and ozone. Chemical resistance to a wide range of petroleum base products and dilute acids and alkalies. Temperature range -20°F to 225°F.

Viton

Retention of mechanical properties at high temperature is an important feature of this elastomer: temperature range is -10°F to 300°F. It also has excellent resistance to oils, fuels, lubricants and most mineral acids and aromatic hydrocarbons.

Note: Viton not for water or steam applications.

Elastomer Selection Chart

Service	Elastomer	Average Useful Temp. Range	Service	Elastomer	Average Useful Temp. Range	Service	Elastomer	Average Useful Temp. Range
Acetone	EPDM	–35°F to 250°F	Caustic Soda	EPDM	–35°F to 250°F	Oil, Animal	Nitrile	–20°F to 212°F
Air	EPDM	–35°F to 250°F	Cement Slurry	EPDM	–35°F to 250°F	Oil, Mobil Therm Light	Viton	10°F to 250°F
Air w/Oil	Nitrile	0°F to 212°F	Copper Sulphate	EPDM	–35°F to 250°F	Oil, Mobil Therm 600	Viton	10°F to 250°F
Alcohol AMYL	EPDM	0°F to 212°F	Creosote (Coal)	Nitrile	–20°F to 212°F	Oil, Mobil Therm 603	Nitrile	–20°F to 212°F
Alcohol Aromatic	Viton	10°F to 250°F	Coal Slurry	Nitrile	–20°F to 212°F	Oil, Lubricating	Nitrile	–20°F to 212°F
Alcohol Butyl	Neoprene	–20°F to 225°F	Diesel Fuel No. 3	Nitrile	–20°F to 212°F	Oil, Vegetable	Nitrile	–20°F to 212°F
Alcohol Denatured	Nitrile	–20°F to 212°F	Diethylene Glycol	EPDM	–35°F to 250°F	Paint, Latex	Nitrile	–20°F to 212°F
Alcohol Ethyl	EPDM	–20°F to 250°F	Ethylene Glycol	EPDM	–35°F to 250°F	Phosphate Ester	EPDM	–35°F to 250°F
Alcohol Grain	Nitrile	–20°F to 212°F	Fatty Acid	Nitrile	–20°F to 212°F	Propane	Nitrile	–20°F to 212°F
Alcohol Isopropyl	Neoprene	–20°F to 225°F	Fuel Oil No. 2	Nitrile	–20°F to 212°F	Rape Seed Oil	EPDM	–35°F to 250°F
Alcohol Methyl	EPDM	–20°F to 250°F	Fertilizer Liquid H4N2O2	EPDM	–35°F to 250°F	Sewage with Oils	Nitrile	–20°F to 212°F
Ammonia Anhydrous	Neoprene	–20°F to 225°F	Gasoline Keg	Nitrile	–20°F to 212°F	Sodium Hydroxide 20%	EPDM	–35°F to 250°F
Ammonium Nitrate	EPDM	–20°F to 250°F	Gas Natural	Nitrile	–20°F to 212°F	Starch	EPDM	–35°F to 250°F
Ammonia, water	EPDM	–20°F to 250°F	Glue, Animal	Nitrile	–20°F to 212°F	Steam to 250°F	EPDM	–35°F to 250°F
Animal Fats	Nitrile	–20°F to 212°F	Green Liquor	EPDM	–20°F to 212°F	Stoddard, Solvent	Nitrile	–20°F to 80°F
Black Liquor	EPDM	–20°F to 250°F	Hydraulic Oil (Petro)	Nitrile	–20°F to 212°F	Sulphuric Acid 10% 50%	Neoprene	–20°F to 158°F
Blast Furnace Gas	Neoprene	–20°F to 225°F	Hydrogen	Nitrile	–20°F to 212°F	Sulphuric Acid 100%	Viton	10°F to 300°F
Butane	Nitrile	–20°F to 212°F	JF4, JP5	Viton	–20°F to 212°F	Trichloroethylene Dry	Viton	10°F to 300°F
Bunker Oil "C"	Nitrile	–20°F to 212°F	Kerosene	Nitrile	0°F to 212°F	Triethanol Amine	EPDM	–35°F to 250°F
Calcium Chloride	EPDM	–20°F to 250°F	Ketone	EPDM	–35°F to 250°F	Varnish	Viton	10°F to 300°F
Carbon Dioxide	EPDM	–20°F to 250°F	Lime Slurry	EPDM	–35°F to 250°F	Water, Fresh	EPDM	–35°F to 250°F
Carbon Monoxide (Cold)	Neoprene	–20°F to 150°F	Methane	Nitrile	–20°F to 212°F	Water, Salt	EPDM	–35°F to 250°F
Carbon Monoxide (Hot)	Viton	10°F to 300°F	Methyl Ethyl Ketone	EPDM	–35°F to 250°F	Xylene	Viton	10°F to 300°F
Carbon Tetrachloride	Viton	10°F to 300°F	Naptha (Berzin)	Nitrile	–20°F to 212°F			

NOTE: Above elastomer/temperature chart are guidelines only. See Henry Pratt Compatibility Chart for specific applications.

Threaded End:
Fig. 613A Ductile Iron/603AS Stainless Steel 1/2" - 2"

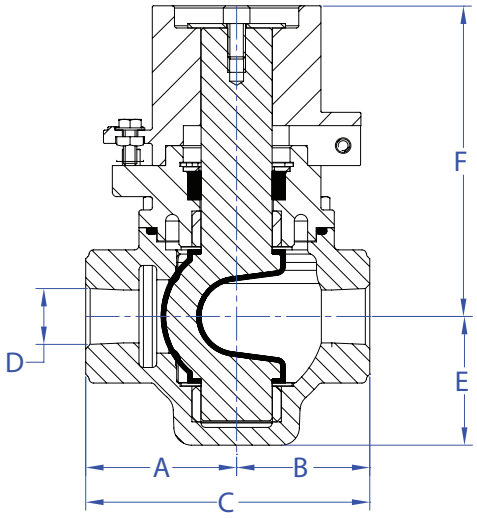

THREADED ENDS						
SIZE	1/2	3/4	1	1-1/4	1-1/2	2
A	2.13	2.13	2.13	3.00	3.00	3.00
B	1.88	1.88	1.88	2.50	2.50	2.50
C	4.00	4.00	4.00	5.50	5.50	5.50
D	½ " NPT	¾" NPT	1" NPT	1¼" NPT	1½" NPT	2" NPT
E	1.81	1.81	1.81	2.50	2.50	2.50
F	4.38	4.38	4.38	5.00	5.00	5.00
WEIGHT (approx.)	7.50	7.25	7.00	13.00	11.75	10.00

Flanged End:
Fig. 611A Ductile Iron/601AS Stainless Steel 2"

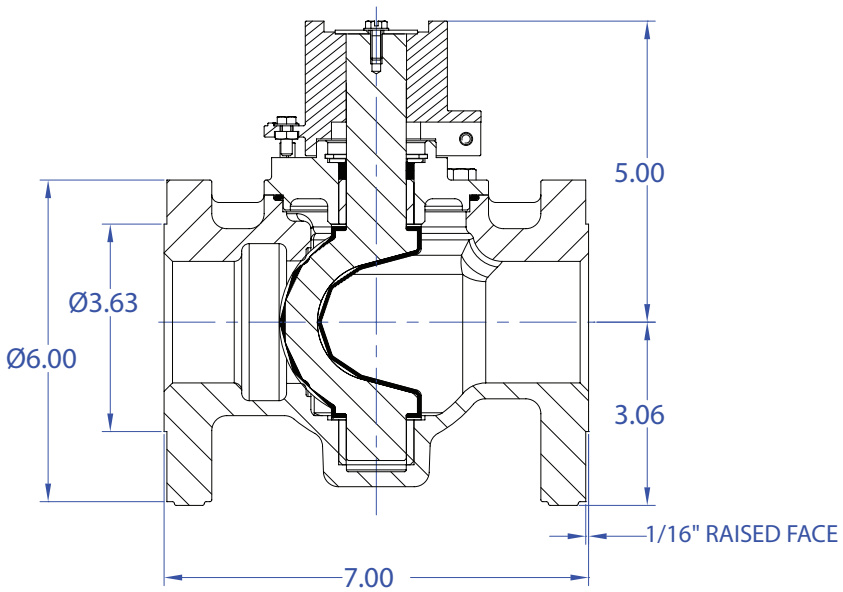

FLANGED ENDS	
SIZE	2
WEIGHT (approx.)	18.00

Note: RAISED FACE IS ONLY ON THE 2" FIG. 601AS STAINLESS STEEL.

PRATT PRODUCT GUIDE

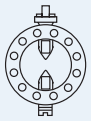

Model
2FII



Monoflange
MKII

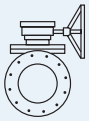

Plug
Valve

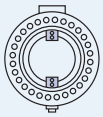

Triton®
XR70

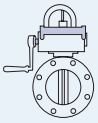

Indicating Butterfly Valve
UL & FM approved

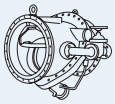

Tilting Disc
Check Valve

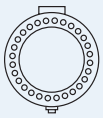

Triton®
XL

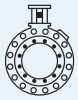

N-Stamp Nuclear
Butterfly Valve

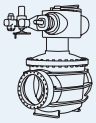

Cone
Valve

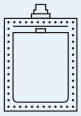

Rectangular



PIVA Post Indicating Valve Assembly
UL & FM approved

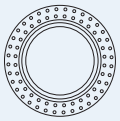

Sleeve
Valve

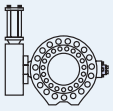

Rubber Seated
Ball Valve

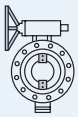

Triton®
HP250

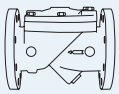

Check
Valve

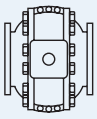

Metal Seated
Ball Valve



Control
Systems

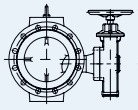

Plunger Valve

PRATT

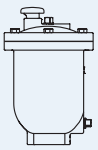

Air Valve

Henry Pratt Company
401 South Highland Avenue
Aurora, Illinois 60506-5563 - US
P: 630-844-4000 F: 630-844-4160
www.henrypratt.com
ISO 9001: 2000 Certified

©2014 Henry Pratt Company | Printed in the U.S.A. | HPSMPLUG-0414

ST-999-018 : Identification sheet

VWTC PROJECT NUMBER:	Iqaluit WWTP	REV:	02
PROJECT NAME:	5000218036	SUBMITTED TO (COMPANY):	
ENGINEER:	F.VINCI	SUBMITTED TO (RESPONSIBLE)	
PROJECT MANAGER:	C. BEKAERT	PROJECT NUM REFERENCE.:	
PHONE NUMBER:		LOT NUMBER:	

SUPPLIER	EQPT CODE	EQPT TAG NO	DIA	DESCRIPTION	INFO 1	INFO 2	INFO 3	APPLIC.	NOTE	REV
FLOW CONTROL COMPONENTS	ST-999-018	CV-02-404 CV-02-428 CV-02-443 CV-02-463 CV-02-478 CV-02-493		INLET AIR CHECK VALVE	FCC90B05, 1/2 FCC 90B 200WOG 316SS CAST STEEL THREADED CHECK VALVE					2

CAST 316 STAINLESS STEEL VALVES

FIG. 90B-200 SWING CHECK VALVE (CF8M)
FIG. 91B-200 WEDGE GATE VALVE (CF8M)
FIG. 92B-200 GLOBE VALVE (CF8M)



Design Features

- 200 WOG/120 WSP @ 350°F Rated
- Investment Cast
- Compact Design

An economical choice to handle a variety of corrosive fluids.

FLOW CONTROL COMPONENTS

M. A. Stewart & Sons Ltd.
VALVES AND FITTINGS

CAST 316 STAINLESS STEEL VALVES

PRESSURE TEMPERATURE RATING 200 WOG/120 WSP @ 350°F

FIG. 90B–200 N.P.T. or FIG. 90BSW Socket Weld

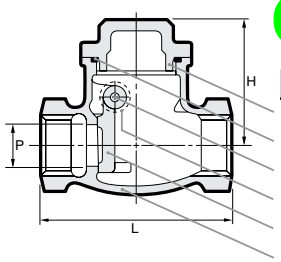

PARTS / MATERIAL
1. Cap / CF8M
2. Gasket / PTFE
3. Hinge Pin / 316
4. Plug / 316
5. Disc / CF8M
6. Body / CF8M

DIMENSIONS								
Valve	1/2	3/4	1	1 1/4	1 1/2	2	2 1/2	3
in/mm	15	20	25	32	40	50	65	75
L	2.60	3.18	3.58	4.19	4.75	5.50	7.06	7.89
in/mm	66	81	91	106.5	121	141	160	190
H	1.81	2.13	2.36	2.76	2.95	3.23	3.58	3.94
in/mm	46	54	60	70	75	82	91	100
P	0.59	0.79	0.98	1.22	1.46	1.89	2.48	2.95
in/mm	15	20	25	31	37	48	63	75
lbs/kg	0.66	1.06	1.65	2.53	3.40	5.60	8.38	13.01
	0.30	0.48	0.75	1.15	1.54	2.54	3.80	5.90

FIG. 91B–200 N.P.T. Only (Non-Rising Stem)

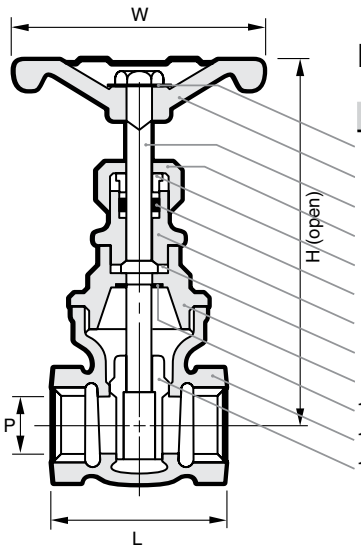

PARTS / MATERIAL
1. Name Plate / Aluminum
2. Handwheel / FCD
3. Stem / 316
4. Packing Nut / CF8
5. Gland / CF8M
6. Gland Packing / PTFE
7. Packing Box / 316
8. Stem Washer / 316
9. Bonnet / CF8M
10. Snap Ring / 316
11. Body / CF8M
12. Disc / CF8M

DIMENSIONS						
Valve	1/2	3/4	1	1 1/4	1 1/2	2
in/mm	15	20	25	32	40	50
L	2.24	2.38	2.64	2.99	3.43	3.70
in/mm	57	60.5	67	76	87	94
H	3.98	4.25	4.65	5.08	6.81	7.40
in/mm	101	108	118	129	173	186
W	2.44	2.44	2.87	2.87	3.74	4.61
in/mm	62	62	73	73	95	117
P	0.63	0.80	0.98	1.25	1.48	1.90
in/mm	16.1	20.3	25.0	31.8	37.5	48.3
lbs/kg	1.15	1.39	1.79	2.60	4.41	6.22
	0.52	0.63	0.81	1.18	2.00	2.82

FIG. 92B–200 N.P.T. Only (Rising Stem)

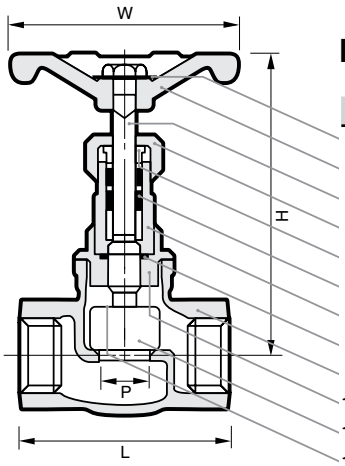

NAME / MATERIAL
1. Name Plate / Aluminum
2. Handwheel / FCD
3. Stem / 316
4. Packing Nut / CF8M
5. Gland / CF8M
6. Gland Packing / PTFE
7. Packing Box / 316
8. Stem Washer / 316
9. Body / CF8M
10. Bonnet / CF8M
11. Disc / 316
12. Snap Ring / 316

DIMENSIONS						
Valve	1/2	3/4	1	1 1/4	1 1/2	2
in/mm	15	20	25	32	40	50
L	2.60	2.70	3.08	3.39	3.86	4.35
in/mm	66	68.5	78.3	86	98	110.5
H open	4.02	3.98	4.09	4.72	5.59	6.18
in/mm	102	101	104	120	142	157
H close	3.78	3.66	3.74	4.41	4.88	5.43
in/mm	96	93	95	112	124	138
W	2.44	2.44	2.87	3.74	3.74	4.61
in/mm	62	62	73	95	95	117
P	0.59	0.63	0.75	0.94	1.26	1.50
in/mm	15	16	19	24	32	38
lbs/kg	0.88	0.99	1.37	2.31	3.09	4.63
	0.40	0.45	0.62	1.05	1.40	2.10

M. A. Stewart & Sons Ltd.
VALVES AND FITTINGS

SURREY, BC
P: 604.594.8431
F: 604.594.4335
surrey@mastewart.com

EDMONTON, AB
P: 780.436.9051
F: 780.435.0463
edmonton@mastewart.com

AJAX, ON
P: 905.683.7303
F: 905.683.9108
ajax@mastewart.com

MONTREAL, QC
P: 514.421.6311
F: 514.421.6323
montreal@mastewart.com

2/16/11-90.2

Projet	IQALUIT
Projet#:	5000218036
Document #:	5000218036_DS_0001_PM_VWT
Par:	BB
Verif.:	GH
approb.:	CB

SPIDFLOW

INSTRUMENTATION

Section Manuel OM: 4.3.1.6

CS-999-011 : Identification sheet

VWTC PROJECT NUMBER:	Iqaluit WWTP	REV:	02
PROJECT NAME:	5000218036	SUBMITTED TO (COMPANY):	
ENGINEER:	F.VINCI	SUBMITTED TO (RESPONSIBLE)	
PROJECT MANAGER:	C. BEKAERT	PROJECT NUM REFERENCE.:	
PHONE NUMBER:		LOT NUMBER:	

SUPPLIER	EQPT CODE	EQPT TAG NO	DIA	DESCRIPTION	INFO 1	INFO 2	INFO 3	APPLIC.	NOTE	REV
ENDRESS & HAUSER	ST-999-011	LIT-02-331 LIT-02-341		LEVEL SPIDFLOW	PRESSURE TRANSMITTER // MANUF: E & H // MODEL: PMP51-CA21JD1FGDR1JA1 + AAZ1 APPROVAL: CA CSA C / US IS CL.I, II, III DIV.1 GR.A-G, CSA C / US IS CL.I DIV.2 GR.A-D, EX IA, C: ZONE 0.1.2 / US: ZONE 0,1,2,20,21,22 OUTPUT: 2 4-20MA HART	Display, Operation: LCD, push button on display/electronics // Housing: F31 Alu, glass window // CONNECTION. ELECT .: D NPT1 / 2, IP66 / 68 NEMA4X / 6P MEASUREMENT RANGE: 1F 400MBAR / 40KPA / 6PSI RELATIVE, 4MH2O / 13 FT H2O / 160 IN H2O /	OVERPRESSURE: 6BAR / 600KPA / 90PSI // CALIB .; UNIT: D CELL RANGE; MM / MH2O // CONNECTION. PROCESS: R1J TAPPING ANSI FNPT1 / 2, 316L // MTL MEMBRANE: A 316L / FILLING LIQUID: 1 SILICONE OIL / LANGUAGE OF CONFIG: AA ENGLISH/ MARKING:TAGGING			2

CS-999-012 : Identification sheet

VWTC PROJECT NUMBER:	Iqaluit WWTP	REV:	02
PROJECT NAME:	5000218036	SUBMITTED TO (COMPANY):	
ENGINEER:	F.VINCI	SUBMITTED TO (RESPONSIBLE)	
PROJECT MANAGER:	C. BEKAERT	PROJECT NUM REFERENCE.:	
PHONE NUMBER:		LOT NUMBER:	

SUPPLIER	EQPT CODE	EQPT TAG NO	DIA	DESCRIPTION	INFO 1	INFO 2	INFO 3	APPLIC.	NOTE	REV
ENDRESS & HAUSER	ST-999-012	PT-02-520 PT-02-527 PT-02-540 PT-02-547		PRESSURE TRANSMITTER	E+H // PMP51-CA21JD1PGDRKJA1+AAZ1 // APPROVAL: CA CSA C/US IS CL.I,II,III DIV.1 GR.A-G, CSA C/US IS CL.I DIV.2 GR.A-D, EX IA, C: ZONE 0,1,2/US: ZONE 0,1,2,20,21,22 // OUTPUT: 2 4-20MA HART // DISPLAY, OPERATION: 1 LCD, PUSH BUTTON ON DISPLAY/ ELECTRONICS //	SENSOR RANGE: 1P 10BAR/1MPA/150PSI GAUGE, 100MH2O/333FTH2O/ 4000INH2O OVERLOAD: 40BAR/4MPA/600PSI / / REFERENCE ACCURACY: G STANDARD // CALIBRATION; UNIT: D SENSOR RANGE; MM/ MH2O // PROCESS CONNECTION: RKJ THREAD ANSI MNPT1/2 HOLE 11.4MM, 316L	MEMBRANE MATERIAL: A 316L // FILL FLUID: 1 SILICONE OIL // LANGUAGE: AA ENGLISH // MARKING:TAGGING // CRN # REQUIRED			2

Level | Pressure | Flow | Temperature | Liquid Analysis | Registration | Systems Components | Services | Solutions

Technical Information

Cerabar M PMC51, PMP51, PMP55

Process pressure measurement
Pressure transmitter with ceramic and metallic sensors; With analog electronics or communication via HART, PROFIBUS PA or FOUNDATION Fieldbus



Application

The Cerabar M pressure transmitter is used for the following measuring tasks:
- Absolute pressure and gauge pressure measurement in gases, steams or liquids in all areas of process engineering and process measurement technology
- Level, volume or mass measurements in liquids
- High process temperature
  - without diaphragm seals up to 130°C (266°F), for a maximum of 60 minutes 150 °C (302 °F)
  - with diaphragm seals up to 400°C (752°F)
- High pressure up to 400 bar (6000 psi)
- International usage thanks to a wide range of approvals

Your benefits

- Very good reproducibility and long-term stability
- High reference accuracy: up to ±0.15%, as PLATINUM version: ±0.075%
- Turn down up to 100:1
- End-to-end modularity for differential pressure, hydrostatics and pressure (Deltabar M – Deltapilot M – Cerabar M), e.g.
  - replaceable display
  - universal electronics
- Easy commissioning without the need for an operating tool
- Easy and safe menu-guided operation
  - on-site via display module
  - via 4 to 20 mA with HART
  - via PROFIBUS PA
  - via FOUNDATION Fieldbus
- Device versions compliant with ASME-BPE
- Used for process pressure monitoring up to SIL2, certified to IEC 61508 Edition 2.0 and IEC 61511 by TÜV NORD

TI00436P/00/EN/17.12
No. 71190907

Endress+Hauser
People for Process Automation

Table of contents

Function and system design 4
Device selection 4
Measuring principle 5
Level measurement (level, volume and mass) 6
Electrical differential pressure measurement with gauge pressure sensors 6
System integration (except analog electronics) 6
Communication protocol 7

Input 8
Measured variable 8
Measuring range 8
Explanation of terms 10

Output 11
Output signal 11
Signal range 11
Signal on alarm 11
Load - 4 to 20 mA analog and 4 to 20 mA HART 11
Resolution 11
Dead time, Time constant 12
Dynamic behavior: current output (analog electronics) 12
Dynamic behavior: current output (HART electronics) 12
Dynamic behavior: digital output (HART electronics) 12
Dynamic behavior: PROFIBUS PA 13
Dynamic behavior: FOUNDATION Fieldbus 13
Damping 13
Data of the FOUNDATION Fieldbus interface 14

Power supply 16
Electrical connection 16
Supply voltage 18
Start-up current HART 19
Current consumption 19
Cable entry 19
Cable specification 19
Residual ripple 19
Influence of power supply 19

Performance characteristics – general 19
Reference operating conditions 19
Uncertainty of measurement for small absolute pressure ranges . . 19
Long-term stability 20
Influence of orientation 20
Warm-up period 20

Performance characteristics – ceramic process isolating diaphragm 21
Reference accuracy – PMC51 21
Total performance – PMC51 21
Total error - PMC51 22
Thermal change in the zero output and the output span – PMC51 22

Performance characteristics – metallic process isolating diaphragm 23
Reference accuracy – PMP51, PMP55 23
Total performance – PMP51 24
Total error - PMP51 25
Thermal change in the zero output and the output span – PMP51 and PMP55 25

Operating conditions (installation) 26
General installation instructions 26
Measuring arrangement for devices without diaphragm seal – PMC51, PMP51 26
Measuring arrangement for devices with diaphragm seal – PMP55 26
Wall and pipe mounting 26
"Separate housing" version 27
Oxygen applications 28
PWIS cleaning 28
Ultrapure gas applications 28
Applications with hydrogen 28

Operating conditions (environment) 29
Ambient temperature range 29
Storage temperature range 29
Degree of protection 29
Climate class 29
Vibration resistance 30
Electromagnetic compatibility 30
Overvoltage protection (optional) 30

Operating conditions (process) 31
Process temperature range PMC51 31
Process temperature limits 31
Pressure specifications 32

Mechanical construction 33
F31 aluminum housing dimensions 33
F15 stainless steel housing dimensions (hygienic) 33
Process connections PMC51 (with ceramic process isolating diaphragm) 33
Process connections PMC51 (with ceramic process isolating diaphragm) - continued 35
Process connections PMC51 (with ceramic process isolating diaphragm) - continued 36
Process connections PMC51 (with ceramic process isolating diaphragm) - continued 37
Process connections PMC51 (with ceramic process isolating diaphragm) - continued 38
Process connections PMC51 (with ceramic process isolating diaphragm) - continued 38
Process connections PMC51 (with ceramic process isolating diaphragm) - continued 39
Process connections PMC51 (with ceramic process isolating diaphragm) - continued 41
Process connections PMP51 (with metallic process isolating diaphragm) 42
Process connections PMP51 (with metallic process isolating diaphragm) - continued 43
Process connections PMP51 (with metallic process isolating diaphragm) - continued 45
Process connections PMP51 (with metallic process isolating

diaphragm) – continued 46
Process connections PMP51 (with metallic process isolating diaphragm) – continued 46
Process connections PMP51 (with metallic process isolating diaphragm) – continued 47
Process connections PMP51 (with metallic process isolating diaphragm) – continued 49
PMP55 basic device 49
Process connections PMP55 (with diaphragm seal) 50
Process connections PMP55 (with diaphragm seal) – continued . 51
Process connections PMP55 (with diaphragm seal) – continued . 52
Process connections PMP55 (with diaphragm seal) – continued . 52
Process connections PMP55 (with diaphragm seal) – continued . 58
Process connections PMP55 (with diaphragm seal) – continued . 60
Process connections PMP55 (with diaphragm seal) – continued . 62
Process connections PMP55 (with diaphragm seal) – continued . 63
Process connections PMP55 (with diaphragm seal) – continued . 65
Wall and pipe mounting with mounting bracket 66
Weight 66
Material (not wetted) 67
Material (wetted) 70

Human interface 71
Operating elements 71
Onsite operation 73
Remote operation 74
Hardware and software for onsite and remote operation 75

Planning instructions for diaphragm seal systems . . . 76
Applications 76
Function and design 76
Diaphragm seal filling oils 77
Operating temperature range 78
Installation instructions 78

Certificates and approvals 80
CE mark 80
Ex approvals 80
Suitability for hygienic processes 80
Pharma (CoC) 80
Functional safety SIL 80
Marine approval 80
CRN approvals 80
Pressure Equipment Directive (PED) 80
Drinking water approval 80
Standards and guidelines 81
North-American practice for installation of process seals 81

Ordering information 82
PMC51 82
PMC51 (continued) 83
PMC51 (continued) 84
PMC51 (continued) 85
PMP51 87
PMP51 (continued) 88
PMP51 (continued) 89
PMP51 (continued) 90
PMP55 92
PMP55 (continued) 93
PMP55 (continued) 94
PMP55 (continued) 95
PMP55 (continued) 96
PMP55 (continued) 97

Documentation 98
Technical Information 98
Operating Instructions 98
Brief Operating Instructions 98
Functional safety manual (SIL) 98
Safety Instructions 98
Installation/Control Drawings 99

Accessories 100
Shutoff valve 100
Siphon 100
Welding necks and Weld-in tool flanges 101
Mounting bracket for wall and pipe mounting 101
M12 connector 101

Configuration data sheet (HART, PROFIBUS PA, FOUNDATION Fieldbus electronics) 102
Level 102
Pressure 103

Configuration data sheet (analog electronics) 104
Pressure 104

Function and system design

Device selection

Cerabar M – Product family	**PMC51** P01-PMC51xxx-16-xx-xx-xx-000 **With capacitive measuring cell and ceramic process isolating diaphragm (Ceraphire®)**	**PMP51** P01-PMP51xxx-16-xx-xx-xx-000 **With piezoresistive measuring cell and metallic welded process isolating diaphragm**	**PMP55** P01-PMP55xxx-16-xx-xx-xx-000 **With diaphragm seal**
Field of application	– Gauge pressure and absolute pressure – Level		
Process connections	– Thread – EN flanges DN 25 – DN 80 – ANSI flanges 1" – 4" – JIS flanges 50 A – 100 A – Flush-mounted hygienic connections	– Thread – EN flanges DN 25 – DN 80 – ANSI flanges 1" – 4" – JIS flanges 25 A – 100 A – Prepared for diaphragm seal mount – Flush-mounted hygienic connections	– Wide range of diaphragm seals
Measuring ranges	From –100/0 to 100 mbar (–1.5/0 to 1.5 psi) to –1/0 to 40 bar (–15/0 to 600 psi)	From –400/0 to 400 mbar (–6/0 to 6 psi) to –1/0 to 400 bar (–15/0 to 6000 psi)	
OPL [1]	Max. 60 bar (900 psi)	Max. 600 bar (9000 psi)	
Process temperature range	–40 to +130 °C (–40 to +266°F) For a maximum of 60 minutes: +150 °C (+302 °F)	–40 to +130°C (–40 to +266°F) For a maximum of 60 minutes: +150 °C (+302 °F)	–70 to 400 °C (–94 to +752 °F) depending on the filling oil
Ambient temperature range	– Without LCD display: -40 to +85°C (–40 to +185 °F) – With LCD display: –20 to +70°C (–4 to +158°F) (extended temperature application range (-40 to 85°C (-40 to 185°F)) with restrictions in optical properties such as display speed and contrast) – Separate housing: –20 to +60°C (–4 to +140°F) – Diaphragm seal systems depending on the version		
Reference accuracy	– Up to ±0.15% of the set span – PLATINUM version: up to ±0.075% of the set span		Up to ±0.15% of the set span
Supply voltage	– 11.5 to 45 V DC (versions with plug-in connection 35 V DC) – For intrinsically safe device versions: 11.5 to 30 V DC		
Output	4 to 20 mA, 4 to 20 mA with superimposed HART protocol		
Options	– PMP51, PMP55: NACE-compliant materials – PMC51, PMP51, PMP55: inspection certificate 2.2 or 3.1 or other certificates – 3A approval and EHEDG approval – Specific firmware versions – Initial device settings – Separate housing – Broad range of accessories		
Specialties	– Metal-free measurement with PVDF connection – Special cleaning of the transmitter to remove paint-wetting substances, for use in paint shops	– Process connections with minimum oil volume – Gas-tight, elastomer-free	– Wide range of diaphragm seals – For extreme medium temperatures – Process connections with minimum oil volume – Completely welded versions

1) OPL = over pressure limit; depends on the lowest-rated element, with regard to pressure, of the selected components

Measuring principle

Ceramic process isolating diaphragm used in PMC51 (Ceraphire®)

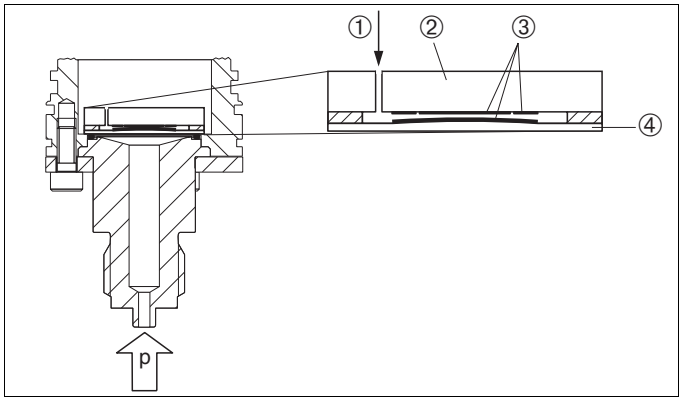

P01-PMC71xxx-03-xx-xx-xx-000

Ceramic sensor

1 Air pressure (gauge pressure sensors)
2 Ceramic substrate
3 Electrodes
4 Ceramic process isolating diaphragm

Metallic process isolating diaphragm used in PMP51 and PMP55

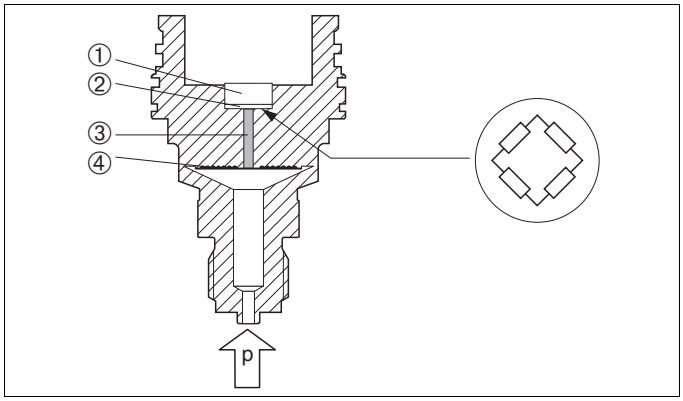

P01-PMP7xxxx-03-xx-xx-xx-000

Metallic sensor

1 Silicon measuring element, substrate
2 Wheatstone bridge
3 Channel with fill fluid
4 Metallic process isolating diaphragm

Ceramic process isolating diaphragm used in PMC51 (Ceraphire®)

The ceramic sensor is a dry sensor, i.e. the process pressure acts directly on the robust ceramic process isolating diaphragm and deflects it. A pressure-dependent change in capacitance is measured at the electrodes of the ceramic substrate and the process isolating diaphragm. The measuring range is determined by the thickness of the ceramic process isolating diaphragm.

Advantages:
- Guaranteed overload resistance up to 40 times the nominal pressure
- Thanks to ultrapure 99.9% ceramic (Ceraphire®, see also "www.endress.com/ceraphire")
  - extremely high chemical stability, comparable with Alloy C
  - less relaxation
  - high mechanical stability
- Can be used in absolute vacuum
- Outstanding surface finish, $R_a \leq 0.3$ µm (11.8 µin)

Metallic process isolating diaphragm used in PMP51 and PMP55

PMP51

The operating pressure deflects the process isolating diaphragm and a fill fluid transfers the pressure to a resistance bridge (semiconductor technology). The pressure-dependent change in the bridge output voltage is measured and evaluated.

Advantages:
- Can be used for process pressure up to 400 bar (6000 psi)
- High long-term stability
- Guaranteed overload resistance up to 4 times the nominal pressure
- Significantly less thermal effect compared to diaphragm seal systems

PMP55

The operating pressure acts on the process isolating diaphragm of the diaphragm seal and is transferred to the process isolating diaphragm of the sensor by a diaphragm seal fill fluid. The process isolating diaphragm is deflected and a fill fluid transfers the pressure to a resistance bridge. The pressure-dependent change in the bridge output voltage is measured and evaluated.

Advantages:
- Depending on the version, can be used for process pressure up to 400 bar (6000 psi) and simultaneous extreme process temperatures
- High long-term stability
- Guaranteed overload resistance up to 4 times the nominal pressure

Level measurement (level, volume and mass)

Function and design

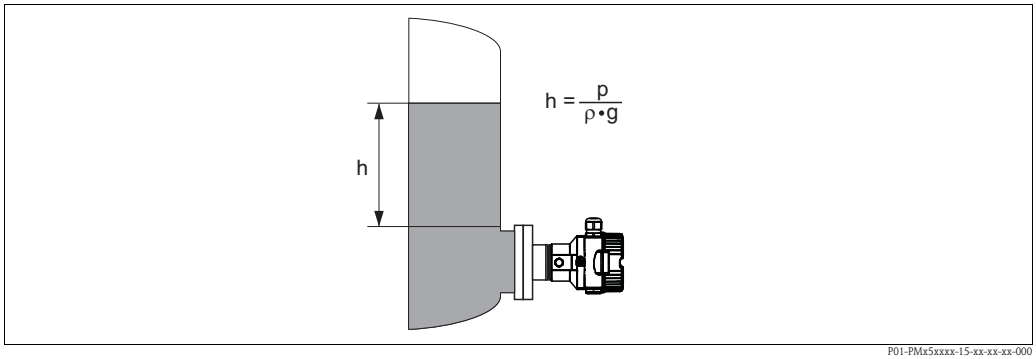

P01-PMx5xxxx-15-xx-xx-xx-000

Level measurement

h *Height (level)*
p *Pressure*
ρ *Density of the medium*
g *Gravitation constant*

Your benefits

- Choice of different level measuring modes in the device software
- Volume and mass measurements in any tank shapes by means of a freely programmable characteristic curve
- Choice of diverse level units
- Has a wide range of uses, even in the following cases:
  – in the event of foam formation
  – in tanks with agitators or screen fittings
  – in the event of liquid gases

Electrical differential pressure measurement with gauge pressure sensors

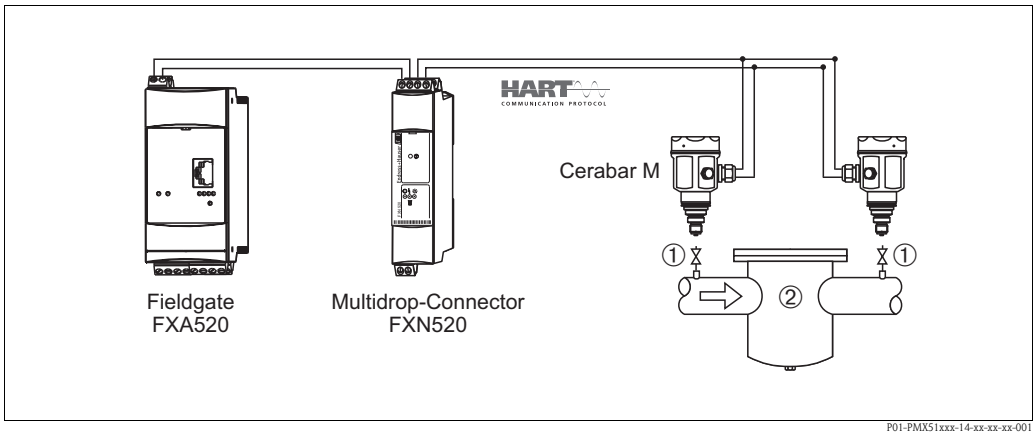

P01-PMX51xxx-14-xx-xx-xx-001

1 *Shut-off valves*

2 *e.g. filter*

In the example given, two Cerabar M devices (each with a gauge pressure sensor) are interconnected. The pressure difference can thus be measured using two independent Cerabar M devices.

Caution!
If using intrinsically safe devices, strict compliance with the rules for interconnecting intrinsically safe circuits as stipulated in IEC60079-14 (proof of intrinsic safety) is mandatory.

System integration (except analog electronics)

The device can be fitted with a tag name and a preset bus address, see → 82 ff "Ordering information" feature 895 "Identification:" version "Z1" and "Z2".

Communication protocol

- 4 to 20 mA without communication protocol (analog electronics)
- 4 to 20 mA with HART communication protocol
- PROFIBUS PA
  - The Endress+Hauser devices meet the requirements of the FISCO model.
  - Due to the low current consumption of 11 mA ± 1 mA, the following number of devices can be operated on one bus segment if installing as per FISCO:
    - up to 8 Cerabar M for Ex ia, CSA IS and FM IS applications
    - up to 31 Cerabar M for all other applications, e.g. in non-hazardous areas, Ex nA, etc.

  Further information on PROFIBUS PA can be found in Operating Instructions BA00034S "PROFIBUS DP/PA: Guidelines for planning and commissioning" and in the PNO Guideline.
- FOUNDATION Fieldbus
  - The Endress+Hauser devices meet the requirements of the FISCO model.
  - Due to the low current consumption of 16 mA ± 1 mA, the following number of devices can be operated on one bus segment if installing as per FISCO:
    - up to 6 Cerabar M for Ex ia, CSA IS and FM IS applications
    - up to 22 Cerabar M for all other applications, e.g. in non-hazardous areas, Ex nA, etc.

  Further information on FOUNDATION Fieldbus, such as requirements for bus system components can be found in Operating Instructions BA00013S "FOUNDATION Fieldbus Overview".

Input

Measured variable

- Analog electronics: Absolute pressure and gauge pressure
- HART electronics: Absolute pressure and gauge pressure, from which level (level, volume or mass) is derived

Measuring range

PMC51 – with ceramic process isolating diaphragm (Ceraphire®) for gauge pressure

Nominal value	Range limit		Smallest calibratable span (preset at the factory) [1]	MWP [2]	OPL [3]	Vacuum resistance	Version in the order code [4]
	lower (LRL)	upper (URL)					
	[bar (psi)]	[bar (psi)]	[bar (psi)]	[bar (psi)]	[bar (psi)]	[bar_{abs} (psi_{abs})]	
100 mbar (1.5 psi)	–0.1 (–1.5)	+0.1 (+1.5)	0.01 (0.15)	2.7 (40.5)	4 (60)	0.7 (10.5)	1C
250 mbar (3.75 psi)	–0.25 (–3.75)	+0.25 (+3.75)	0.01 (0.15)	3.3 (49.5)	5 (75)	0.5 (7.5)	1E
400 mbar (6 psi)	–0.4 (–6)	+0.4 (+6)	0.02 (0.3)	5.3 (79.5)	8 (120)	0	1F
1 bar (15 psi)	–1 (–15)	+1 (+15)	0.05 (1)	6.7 (100.5)	10 (150)	0	1H
2 bar (30 psi)	–1 (–15)	+2 (+30)	0.1 (1.5)	12 (180)	18 (270)	0	1K
4 bar (60 psi)	–1 (–15)	+4 (+60)	0.2 (3)	16.7 (250.5)	25 (375)	0	1M
10 bar (150 psi)	–1 (–15)	+10 (+150)	0.5 (7.5)	26.7 (400.5)	40 (600)	0	1P
40 bar (600 psi)	–1 (–15)	+40 (+600)	2 (30)	40 (600)	60 (900)	0	1S

PMC51 – with ceramic process isolating diaphragm (Ceraphire®) for absolute pressure

Nominal value	Range limit		Smallest calibratable span (preset at the factory) [1]	MWP [2]	OPL [3]	Vacuum resistance	Version in the order code [4]
	lower (LRL)	upper (URL)					
	[bar_{abs} (psi_{abs})]	[bar_{abs} (psi_{abs})]	[bar (psi)]	[bar_{abs} (psi_{abs})]	[bar_{abs} (psi_{abs})]	[bar_{abs} (psi_{abs})]	
100 mbar (15 psi)	0	+0.1 (+1.5)	0.01 (0.15)	2.7 (40.5)	4 (60)	0	2C
250 mbar (3.75 psi)	0	+0.25 (+3.75)	0.01 (0.15)	3.3 (49.5)	5 (75)	0	2E
400 mbar (6 psi)	0	+0.4 (+6)	0.02 (0.3)	5.3 (79.5)	8 (120)	0	2F
1 bar (15 psi)	0	+1 (+15)	0.05 (1)	6.7 (100.5)	10 (150)	0	2H
2 bar (30 psi)	0	+2 (+30)	0.1 (1.5)	12 (180)	18 (270)	0	2K
4 bar (60 psi)	0	+4 (+60)	0.2 (3)	16.7 (250.5)	25 (375)	0	2M
10 bar (150 psi)	0	+10 (+150)	0.5 (7.5)	26.7 (400.5)	40 (600)	0	2P
40 bar (600 psi)	0	+40 (+600)	2 (30)	40 (600)	60 (900)	0	2S

1) Recommended turn down: Max 10:1.
Factory calibration turn down: Max 20:1, higher on request or configurable in the device.

2) The MWP (maximum working pressure) for the measuring device depends on the lowest-rated element, with regard to pressure, of the selected components, i.e. the process connection (→ 🖹 33 ff) has to be taken into consideration in addition to the measuring cell (→ see Table above). Pay attention to the pressure-temperature dependence also. For the appropriate standards and other information, see → 🖹 32, "Pressure specifications" section.

3) OPL: over pressure limit depends on the lowest-rated element, with regard to pressure, of the selected components

4) Version in the order code → see also → 🖹 82 ff, feature 70 "Sensor range"

PMP51 and PMP55 – metallic process isolating diaphragm for gauge pressure

Nominal value	Range limit		Smallest calibratable span (preset at the factory) [1]	MWP [2]	OPL [3]	Vacuum resistance [4] Silicone oil/ Inert oil	Version in the order code [5]
	lower (LRL) [bar (psi)]	upper (URL) [bar (psi)]	[bar (psi)]	[bar (psi)]	[bar (psi)]	[bar_{abs} (psi_{abs})]	
400 mbar (6 psi)	–0.4 (–6)	+0.4 (+6)	0.02 (0.3)	4 (60)	6 (90)	0.01/0.04 (0.15/0.6)	1F
1 bar (15 psi)	–1 (–15)	+1 (+15)	0.05 (1)	6.7 (100)	10 (150)		1H
2 bar (30 psi)	–1 (–15)	+2 (+30)	0.1 (1.5)	13.3 (200)	20 (300)		1K
4 bar (60 psi)	–1 (–15)	+4 (+60)	0.2 (3)	18.7 (280.5)	28 (420)		1M
10 bar (150 psi)	–1 (–15)	+10 (+150)	0.5 (7.5)	26.7 (400.5)	40 (600)		1P
40 bar (600 psi)	–1 (–15)	+40 (+600)	2 (30)	100 (1500)	160 (2400)		1S
100 bar (1500 psi)	–1 (–15)	+100 (+1500)	5 (75)	100 (1500)	400 (6000)		1U
400 bar (6000 psi)	–1 (–15)	+400 (+6000)	20 (300)	400 (6000)	600 (9000)		1W

PMP51 and PMP55 – metallic process isolating diaphragm for absolute pressure

Nominal value	Range limit		Smallest calibratable span (preset at the factory) [1]	MWP [2]	OPL [3]	Vacuum resistance [4] Silicone oil/ Inert oil	Version in the order code [5]
	lower (LRL) [bar_{abs} (psi_{abs})]	upper (URL) [bar_{abs} (psi_{abs})]	[bar (psi)]	[bar_{abs} (psi_{abs})]	[bar_{abs} (psi_{abs})]	[bar_{abs} (psi_{abs})]	
400 mbar (6 psi)	0	+0.4 (+6)	0.02 (0.3)	4 (60)	6 (90)	0.01/0.04 (0.15/0.6)	2F
1 bar (15 psi)	0	+1 (+15)	0.05 (1)	6.7 (100)	10 (150)		2H
2 bar (30 psi)	0	+2 (+30)	0.1 (1.5)	13.3 (200)	20 (300)		2K
4 bar (60 psi)	0	+4 (+60)	0.2 (3)	18.7 (280.5)	28 (420)		2M
10 bar (150 psi)	0	+10 (+150)	0.5 (7.5)	26.7 (400.5)	40 (600)		2P
40 bar (600 psi)	0	+40 (+600)	2 (30)	100 (1500)	160 (2400)		2S
100 bar (1500 psi)	0	+100 (+1500)	5 (75)	100 (1500)	400 (6000)		2U
400 bar (6000 psi)	0	+400 (+6000)	20 (300)	400 (6000)	600 (9000)		2W

1) Recommended turn down: Max 10:1.
Factory calibration turn down: Max 20:1, higher on request or configurable in the device.

2) The MWP (maximum working pressure) for the measuring device depends on the lowest-rated element, with regard to pressure, of the selected components, i.e. the process connection (→ 🖹 33 ff) has to be taken into consideration in addition to the measuring cell (→ see Table above). Pay attention to the pressure-temperature dependence also. For the appropriate standards and other information, see → 🖹 32, "Pressure specifications" section.

3) OPL: over pressure limit (= sensor overload limit)

4) The vacuum resistance applies to the measuring cell at reference conditions. The pressure and temperature application limits of the selected filling oil must also be observed for the PMP55. → 🖹 77, "Diaphragm seal filling oils" section.

5) Version in the order code → 🖹 82 ff, feature 70 "Sensor range"

Explanation of terms

Explanation of terms: turn down (TD), set span and span based on zero point

Case 1:
- |Lower range value (LRV)| ≤ |Upper range value (URV)|

Example:
- Lower range value (LRV) = 0 bar
- Upper range value (URV) = 0.5 bar (7.5 psi)
- Nominal value (URL) = 1 bar (15 psi)

Turn down:
- TD = URL / |URV| = 2:1

Set span:
- URV – LRV = 0.5 bar (7.5 psi)
  This span is based on the zero point.

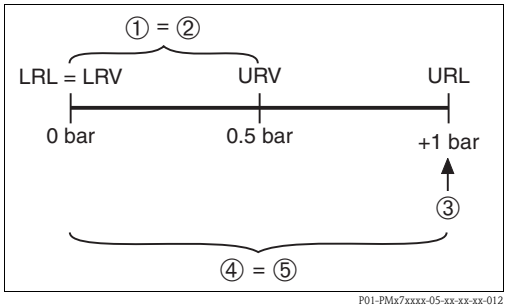

Example: 1 bar (15 psi) measuring cell

Case 2:
- |Lower range value (LRV)| ≤ |Upper range value (URV)|

Example:
- Lower range value (LRV) = 0 bar
- Upper range value (URV) = 0.5 bar (7.5 psi)
- Nominal value (URL) = 1 bar (15 psi)

Turn down:
- TD = URL / |URV| = 2:1

Set span:
- URV – LRV = 0.5 bar (7.5 psi)
  This span is based on the zero point.

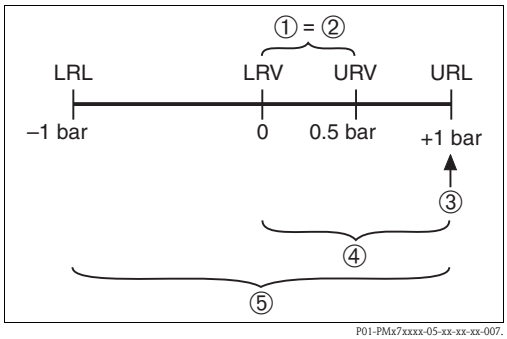

Example: 1 bar (15 psi) measuring cell

Case 3:
- |Lower range value (LRV)| ≥ |Upper range value (URV)|

Example:
- Lower range value (LRV) = –0.6 bar (–9 psi)
- Upper range value (URV) = 0 bar
- Nominal value (URL) = 1 bar (15 psi)

Turn down:
- TD = URL / |LRV| = 1.67:1

Set span:
- URV – LRV = 0.6 bar (–9 psi)
  This span is based on the zero point.

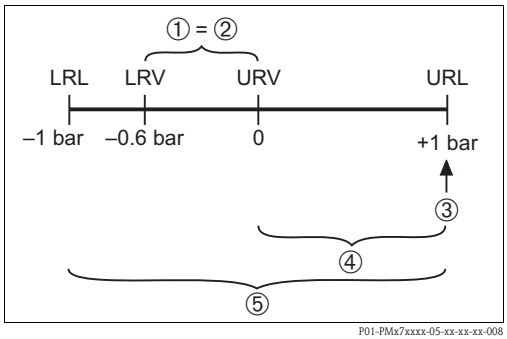

Example: 1 bar (15 psi) measuring cell

1 Set span
2 Span based on zero point
3 Nominal value ≙ upper range limit (URL)
4 Nominal measuring range
5 Sensor measuring range
LRL Lower range limit
URL Upper range limit
LRV Lower range value
URV Upper range value

Output

Output signal

- 4 to 20 mA analog, 2-wire
- 4 to 20 mA with superimposed digital communication protocol HART 6.0, 2-wire
- Digital communication signal PROFIBUS PA (Profile 3.02)
- Digital communication signal FOUNDATION Fieldbus

Signal range

4 to 20 mA analog, 4 to 20 mA HART: 3.8 to 20.5 mA

Signal on alarm

As per NAMUR NE 43

- 4 to 20 mA Analog:
  - Signal overshoot: > 20.5 mA
  - Signal undershoot: < 3.8 mA
  - Min Alarm (3.6 mA)
- 4 to 20 mA HART
  Options:
  - Max. alarm: can be set from 21 to 23 mA (factory setting: 22 mA)
  - Hold measured value: last measured value is held
  - Min. alarm: 3.6 mA
- PROFIBUS PA: can be set in the Analog Input block,
  Options: Last Valid Out Value (factory setting), Fail-safe Value, Status Bad
- FOUNDATION Fieldbus: can be set in the Analog Input block,
  Options: Last Good Value, Fail-safe Value (factory setting), Wrong Value

Load - 4 to 20 mA analog and 4 to 20 mA HART

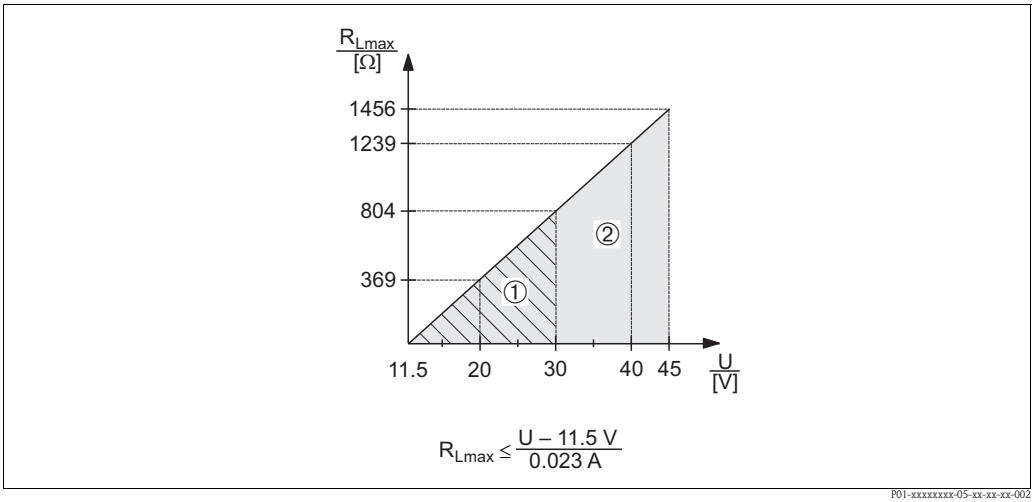

Load diagram

1 Power supply 11.5 to 30 V DC for intrinsically safe device versions
2 Power supply 11.5 to 45 V DC (versions with plug-in connector 35 V DC) for other types of protection and for uncertified device versions
R_{Lmax} Maximum load resistance
U Supply voltage

Note!
When operating via a handheld terminal or via a PC with an operating program, a minimum communication resistance of 250 Ω must be taken into account.

Resolution

- Current output: 1 µA
- Display HART: can be set (factory setting: presentation of the maximum accuracy of the transmitter)

Dead time, Time constant

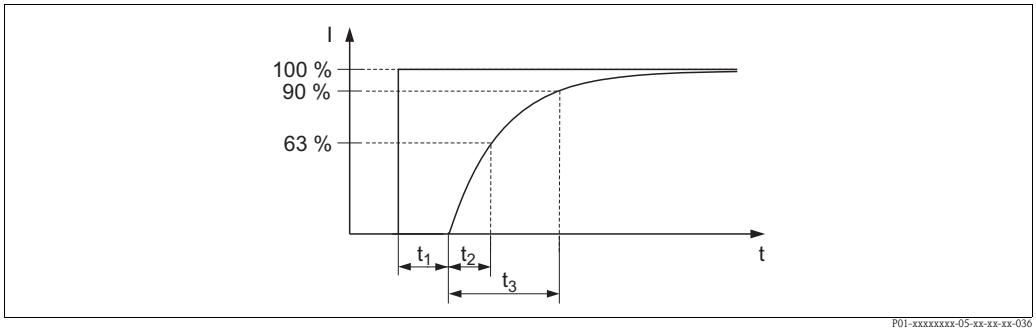

Presentation of the dead time and the time constant

Dynamic behavior: current output (analog electronics)

	Type	Dead time (t_1) [ms]	Time constant T63 (= t_2) [ms]	Time constant T90 (= t_3) [ms]
max.	PMC51	60	40	50
max.	PMP51	40	40	50
max.	PMP55	PMP51 + influence of the diaphragm seal		

Dynamic behavior: current output (HART electronics)

	Type	Dead time (t_1) [ms]	Time constant T63 (= t_2) [ms]	Time constant T90 (= t_3) [ms]
max.	PMC51	50	85	200
max.	PMP51	70	80	185
max.	PMP55	PMP51 + influence of the diaphragm seal		

Dynamic behavior: digital output (HART electronics)

	Type	Dead time (t_1) [ms]	Dead time (t_1) [ms] + Time constant T63 (= t_2) [ms]	Dead time (t_1) [ms] + Time constant T90 (= t_3) [ms]
min.	PMC51	210	295	360
max.		1010	1095	1160
min.	PMP51	210	285	345
max.		1010	1085	1145
max.	PMP55	PMP51 + influence of the diaphragm seal		

Reading cycle

- Acyclic: max. 3/s, typical 1/s (depends on command # and number of preambles)
- Cyclic (Burst): max. 3/s, typical 2/s

The Cerabar M commands the BURST MODE function for cyclic value transmission via the HART communication protocol.

Cycle time (Update time)

Cyclic (Burst): min. 300 ms

Response time

- Acyclic: min. 330 ms, typical 590 ms (depends on command # and number of preambles)
- Cyclic (Burst): min. 160 ms, typical 350 ms (depends on command # and number of preambles)

Dynamic behavior: PROFIBUS PA

	Type	Dead time (t_1) [ms]	Dead time (t_1) [ms] + Time constant T63 (= t_2) [ms]	Dead time (t_1) [ms] + Time constant T90 (= t_3) [ms]
min.	PMC51	85	170	235
max.		1185	1270	1335
min.	PMP51	85	160	220
max.		1185	1260	1320
max.	PMP55	PMP51 + influence of the diaphragm seal		

Reading cycle

- Cyclic: max. 30/s (dependent on the number and type of function blocks used in a closed-control loop)
- Acyclic: typical 25/s

Cycle time (update time)

min. 100 ms
The cycle time in a bus segment in cyclic data communication depends on the number of devices, on the segment coupler used and on the internal PLC cycle time.

Response time

- Cyclic: approx. 8 to 13 ms (depends on Min. Slave Interval)
- Acyclic: approx. 23 to 35 ms (depends on Min. Slave Interval)

Dynamic behavior: FOUNDATION Fieldbus

	Type	Dead time (t_1) [ms]	Dead time (t_1) [ms] + Time constant T63 (= t_2) [ms]	Dead time (t_1) [ms] + Time constant T90 (= t_3) [ms]
min.	PMC51	95	180	245
max.		1095	1180	1245
min.	PMP51	95	170	230
max.		1095	1170	1230
max.	PMP55	PMP51 + influence of the diaphragm seal		

Reading cycle

- Cyclic: max. 10/s (dependent on the number and type of function blocks used in a closed-control loop)
- Acyclic: typical 5/s

Cycle time (update time)

Cyclic: min. 100 ms

Response time

- Cyclic: max. 20 ms (for standard bus parameter settings)
- Acyclic: typical 70 ms (for standard bus parameter settings)

Damping

A damping affects all outputs (output signal, display).

- Via on-site display, handheld terminal or PC with operating program, continuous from 0...999 s
- Via DIP-switch on the electronic insert, switch position "on" (= set value) and "off" (= damping switched off)
- Factory setting: 2 s

Data of the FOUNDATION Fieldbus interface

Basic data

Device Type	0x1019
Device Revision	01 (hex)
DD Revision	0x01021
CFF Revision	0x000102
ITK Version	5.2.0
ITK Certification Driver No.	IT067700
Link-Master (LAS) capable	Yes
Link Master / Basic Device selectable	Yes; Factory setting: Basic Device
Number of VCRs	44
Number of Link Objects in VFD	50
Number of FB-Schedule Objects	40

Virtual communication references (VCRs)

Permanent Entries	44
Client VCRs	0
Server VCRs	5
Source VCRs	8
Sink VCRs	0
Subscriber VCRs	12
Publisher VCRs	19

Link settings

Slot time	4
Min. inter PDU delay	12
Max. response delay	40

Transducer Blocks

Block	Content	Output values
TRD1 Block	Contains all parameters related to the measurement	■ Pressure or level (channel 1) ■ Process temperature (channel 2) ■ Measured pressure value (channel 3) ■ Max. pressure (channel 4) ■ Level before linearization (channel 5)
Diagnostic Block	Contains diagnostic information	Error code via DI channels (channel 10 to 15)
Display Block	Contains parameters to configure the onsite display	No output values

Function blocks

Block	Content	Number of blocks	Execution time	Functionality
Resource Block	The Resource Block contains all the data that uniquely identify the device. It is an electronic version of a nameplate of the device.	1		enhanced
Analog Input Block 1 Analog Input Block 2	The AI Block receives the measuring data from the Sensor Block, (selectable via a channel number) and makes the data available to other function blocks at its output. Enhancement: digital outputs for process alarms, fail safe mode.	2	25 ms	enhanced
Digital Input Block	This block contains the discrete data of the Diagnose Block (selectable via a channel number 10 to 15) and provides them for other blocks at the output.	1	20 ms	standard
Digital Output Block	This block converts the discrete input and thus initiates an action (selectable via a channel number) in the DP Flow Block or in the im TRD1 Block. Channel 20 resets the counter for max. pressure transgressions value and Channel 21 resets the Totalizer.	1	20 ms	standard
PID Block	The PID Block serves as a proportional-integral-derivative controller and is used almost universally for closed-loop-control in the field including cascade and feedforward. Input IN can be indicated on the display. The selection is performed in the Display Block (DISPLAY_MAIN_LINE_CONTENT).	1	40 ms	standard
Arithmetic Block	This block is designed to permit simple use of popular measurement math functions. The user does not have to know how to write equations. The math algorithm is selected by name, chosen by the user for the function to be performed.	1	35 ms	standard
Input Selector Block	The Input Selector Block facilitates the selection of up to four inputs and generates an output based on the configured action. This block normally receives its inputs from AI Blocks. The block performs maximum, minimum, average and 'first good' signal selection. Inputs IN1 to IN4 can be indicated on the display. The selection is performed in the Display Block (DISPLAY_MAIN_LINE_1_CONTENT).	1	30 ms	standard
Signal Characterizer Block	The Signal Characterizer Block has two sections, each with an output that is a non-linear function of the respective input. The non-linear function is generated by a single look-up table with 21 arbitrary x-y pairs.	1	40 ms	standard
Integrator Block	The Integrator Block integrates a variable as a function of the time or accumulates the counts from a Pulse Input Block. The block may be used as a totalizer that counts up until reset or as a batch totalizer that has a setpoint, where the integrated or accumulated value is compared to pre-trip and trip settings, generating a binary signal when the setpoint is reached.	1	35 ms	standard

Additional function block information:

Instantiate Function Block	YES
Number of instantiate blocks	20

Power supply

Electrical connection

Note!
- When using the measuring device in hazardous areas, installation must comply with the corresponding national standards and regulations and the Safety Instructions or Installation or Control Drawings.
  → 98 ff, "Safety Instructions" and "Installation/Control Drawings" sections.
- According to IEC/EN61010 a suitable disconnector has to be installed for the device
- HART: Overvoltage protection HAW569-DA2B for the non-hazardous area, ATEX II 2 (1) Ex ia IIC and IEC Ex ia can be ordered as an option (see "Ordering information" section).
- Protective circuits against reverse polarity, HF influences and overvoltage peaks are installed.
- The digital communication signal is transmitted to the bus via a 2-wire connection. The bus also provides the power supply.

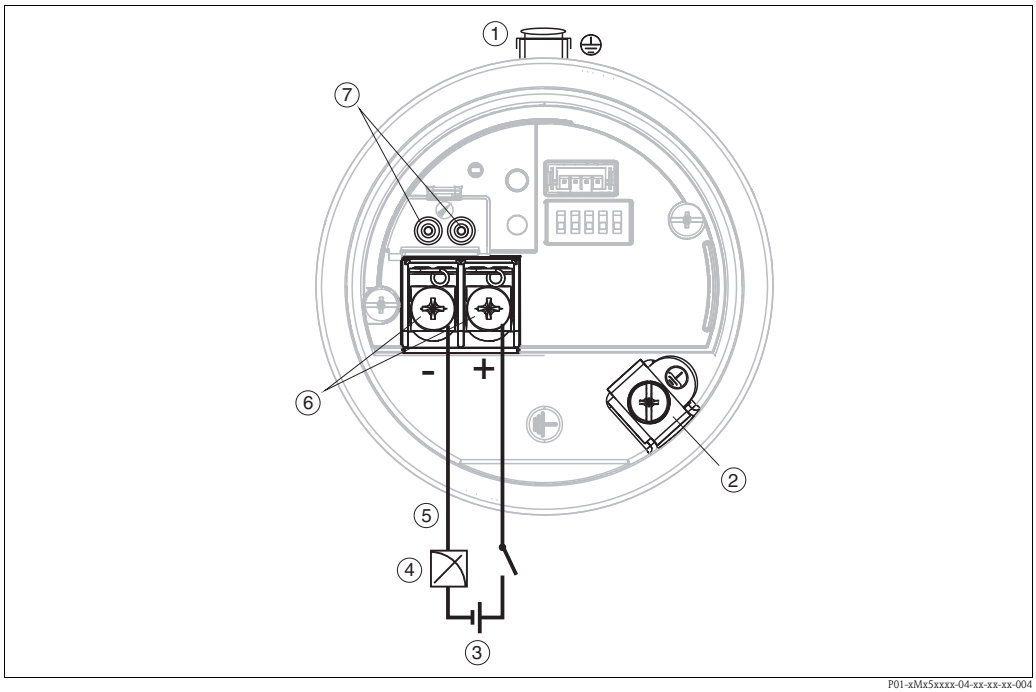

P01-xMx5xxxx-04-xx-xx-xx-004

Electrical connection

1 External grounding terminal
2 Internal grounding terminal
3 Supply voltage → 18
4 4...20 mA for HART devices
5 For HART and FOUNDATION Fieldbus devices: With a handheld terminal, all the parameters can be configured anywhere along the bus line via menu operation.
6 Terminals
7 For HART devices: test terminals, see section "Taking 4 to 20 mA test signal"

4 to 20 mA Analog, 4 to 20 mA HART

Taking 4 to 20 mA test signal

A 4 to 20 mA test signal may be measured via the test terminals without interrupting the measurement.

PROFIBUS PA

For further information on the network structure and grounding, and for further bus system components such as bus cables, see the relevant documentation, e.g. Operating Instructions BA00034S "PROFIBUS DP/PA: Guidelines for planning and commissioning" and the PNO Guideline.
Cable specifications:
Use a twisted, shielded two-wire cable, preferably cable type A

Note!
For further information on the cable specifications, see Operating Instructions BA00034S "PROFIBUS DP/PA: Guidelines for planning and commissioning", the PNO Guideline 2.092 PROFIBUS PA User and Installation Guideline" and IEC 61158-2 (MBP).

FOUNDATION Fieldbus

The digital communication signal is transmitted to the bus via a 2-wire connection. The bus also provides the power supply. For further information on the network structure and grounding and for further bus system components such as bus cables, see the relevant documentation, e.g. Operating Instructions BA00013S "FOUNDATION Fieldbus Overview" and the FOUNDATION Fieldbus Guideline.
Cable specifications:
Use a twisted, shielded two-wire cable, preferably cable type A

Note!
For further information on the cable specifications, see Operating Instructions BA00013S "FOUNDATION Fieldbus Overview", FOUNDATION Fieldbus Guideline and IEC 61158-2 (MBP).

Devices with valve connector

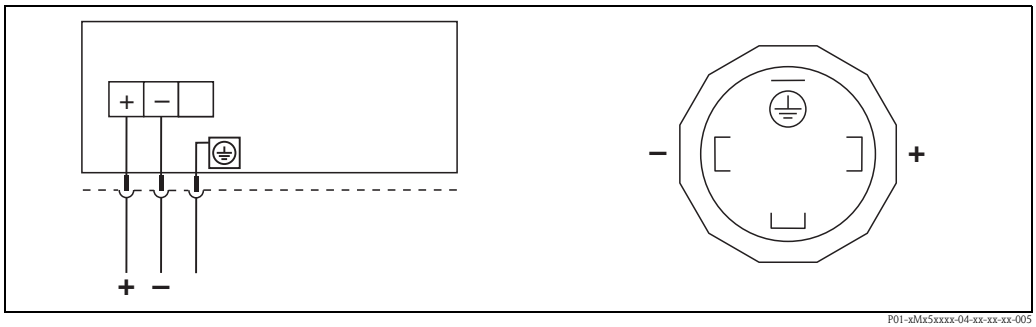

Left: electrical connection for devices with a valve connector
Right: view of the connector at the device

Material: PA 6.6

Devices with Harting plug Han7D

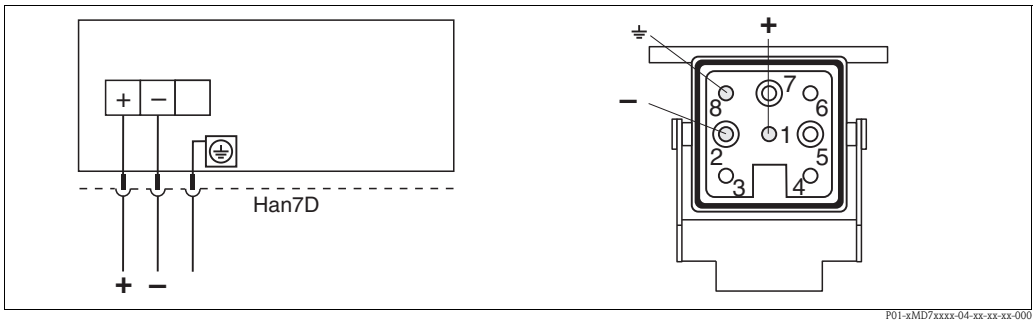

Left: electrical connection for devices with Harting plug Han7D
Right: view of the plug connector at the device

Material: CuZn

Connecting the cable version

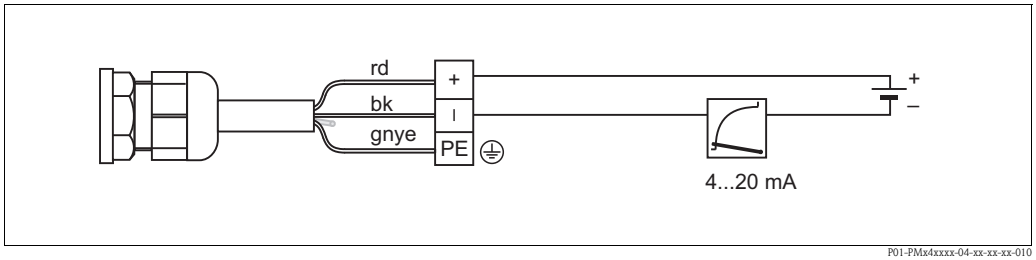

rd = red, bk = black, gnye = green-yellow

Devices with M12 plug

PIN assignment for M12 connector

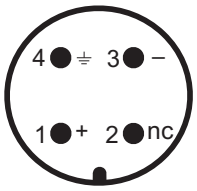

PIN	Meaning
1	Signal +
2	Not assigned
3	Signal –
4	Earth

Endress+Hauser offers the following accessories for devices with an M12 plug:
Plug-in jack M 12x1, straight
- Material: body PA; coupling nut CuZn, nickel-plated
- Degree of protection (fully locked): IP66/67
- Order number: 52006263

Plug-in jack M 12x1, elbowed
- Material: body PBT/PA; coupling nut GD-Zn, nickel-plated
- Degree of protection (fully locked): IP66/67
- Order number: 71114212

Cable 4x0.34 mm² (20 AWG) with M12 socket, elbowed, screw plug, length 5 m (16 ft)
- Material: body PUR; coupling nut CuSn/Ni; cable PVC
- Degree of protection (fully locked): IP66/67
- Order number: 52010285

Devices with 7/8" plug

PIN assignment for 7/8" connector

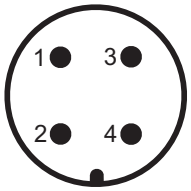

PIN	Meaning
1	Signal –
2	Signal +
3	Shield
4	Not assigned

External thread: 7/8 - 16 UNC
- Material: housing / body CuZn, nickel-plated
- Protection: IP66/68

Cable gland

Approval	Type	Clamping area
Standard, II1/2G Exia, IS	Plastic M20x1.5	5 to 10 mm (0.2 to 0.39 in)
ATEX II1/2D, II1/2GD Exia, II3G Ex nA	Metal M20x1.5 (Ex e)	7 to 10.5 mm (0.28 to 0.41 in)

Terminals

For wire cross-sections of 0.5 to 2.5 mm² (20 to 14 AWG).

Supply voltage

Note!
- When using the measuring device in hazardous areas, installation must comply with the corresponding national standards and regulations and the Safety Instructions or Installation or Control Drawings.
- All explosion protection data are given in separate documentation which is available upon request. The Ex documentation is supplied as standard with all devices approved for use in explosion hazardous areas. → 98 ff, "Safety Instructions" and "Installation/Control Drawings" sections.

4 to 20 mA, 4 to 20 mA HART

Type of protection	Supply voltage
■ Intrinsically safe	11.5 ... 30 V DC
■ Other types of protection ■ Devices without certificate	11.5 ... 45 V DC (Versions with plug-in connection 35 V DC)

PROFIBUS PA

■ Version for non-hazardous areas: 9 to 32 V DC

FOUNDATION Fieldbus

■ Version for non-hazardous areas: 9 to 32 V DC

Start-up current HART

12 mA or 22 mA (selectable)

Current consumption

■ PROFIBUS PA: 11 mA ± 1 mA, switch-on current corresponds to IEC 61158-2, Clause 21
■ FOUNDATION Fieldbus: 16 mA ± 1 mA, switch-on current corresponds to IEC 61158-2, Clause 21

Cable entry

→ 🖹 82 ff, feature 50 "Electrical connection".

Cable specification

■ Endress+Hauser recommends using twisted, shielded two-wire cables.
■ Terminals for wire cross-sections 0.5 to 2.5 mm^2 (20 to 14 AWG)
■ Cable outer diameter: 5 to 9 mm (0.2 to 0.35 in) depends on the used cable gland (→ 🖹 18)

Residual ripple

No influence on 4 to 20 mA signal up to ± 5 % residual ripple within the permitted voltage range [according to HART hardware specification HCF_SPEC-54 (DIN IEC 60381-1)]

Influence of power supply

≤ 0.001% of URL/1 V

Performance characteristics – general

Reference operating conditions

■ As per IEC 60770
■ Ambient temperature T_A = constant, in the range of: +21 to +33°C (+70 to +91°F)
■ Humidity φ = constant, in the range of: 5 to 80 % RH
■ Ambient pressure p_A = constant, in the range of: 860 to 1060 mbar (12.47 to 15.37 psi)
■ Position of the measuring cell: constant, in range: ±1° horizontally
■ Input of LOW SENSOR TRIM and HIGH SENSOR TRIM for lower range value and upper range value
■ Span based on zero point
■ Material of the process isolating diaphragm PMC51: Al_2O_3 (aluminum-oxide ceramic, Ceraphire®)
■ Material of the process isolating diaphragm PMP51 and PMP55: AISI 316L
■ Filling oil PMP51 and PMP55: silicone oil
■ Supply voltage: 24 V DC ± 3 V DC
■ Load with HART: 250 Ω

Uncertainty of measurement for small absolute pressure ranges

The smallest expanded uncertainty of measurement that can be returned by our standards is:
■ 0.4% of the measured value in the range of 1 to 30 mbar
■ 1% of the measured value in the range < 1 mbar.

Long-term stability

PMC51	Measuring range	Long-term stability of URL / 1 year
PMC51 with thread or flange	≤ 1 bar (15 psi)	±0.2 %
	> 1 bar (15 psi)	±0.1 %
PMC51 with hygienic process connection	≤ 1 bar (15 psi)	±0.35 %
	> 1 bar (15 psi)	±0.2 %

PMP51	Long-term stability of URL / 1 year
Measuring range	
≤ 1 bar (15 psi)	±0.25 %
> 1 bar to 10 bar (15 to 150 psi)	±0.1 %
40 bar (600 psi)	±0.1 %
100 bar (1500 psi)	±0.1 %
400 bar (6000 psi)	±0.1 %

Influence of orientation

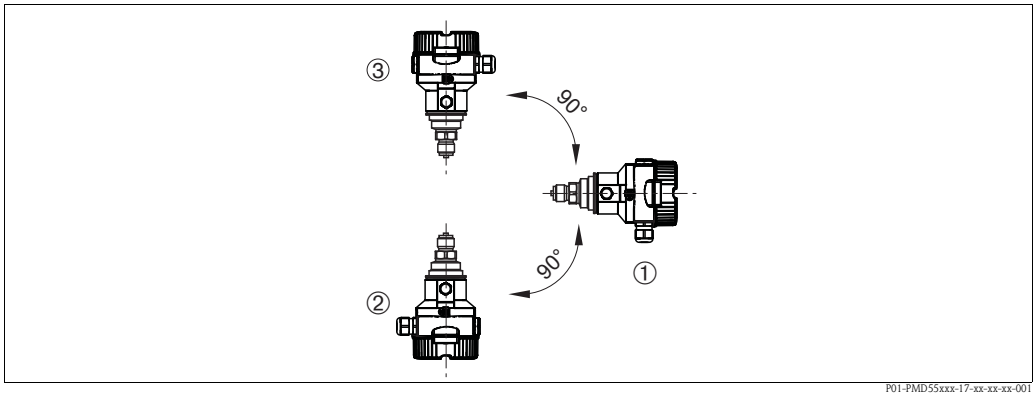

Measuring error in mbar (psi)

	① Axis of the diaphragm perpendicular	② Diaphragm points up	③ Diaphragm points down
PMC51	Calibration position, no measuring error	< +0.2 mbar (0.003 psi)	< -0.2 mbar (0.003 psi)
PMP51 with process connections 1/2" thread and silicone oil		< +4 mbar (0.06 psi)	< -4 mbar (0.06 psi)
PMP51 with process connections > thread 1/2" and flanges		< +10 mbar (0.145 psi) This value is doubled for inert oil.	< -10 mbar (0.145 psi) This value is doubled for inert oil.

Note!
Position-dependent zero point shift can be corrected at the device. → 🖹 26, "General installation instructions" section and → 🖹 78 ff, "Installation instructions" section.

Warm-up period

- 4 to 20 mA analog: ≤1.5 s
- 4 to 20 mA HART: ≤5 s
- PROFIBUS PA: ≤8 s
- FOUNDATION Fieldbus: ≤20 s (after a TOTAL-reset ≤45 s)

Performance characteristics – ceramic process isolating diaphragm

Reference accuracy – PMC51

The reference accuracy comprises the non-linearity according to limit point setting, hysteresis and non-reproducibility as per IEC 60770. The data refer to the calibrated span.

Gauge pressure sensors		
Measuring cell	**Standard reference accuracy**	**Platinum reference accuracy**
100 mbar (1.5 psi)	■ TD 1:1 to ≤ TD 10:1 = 0.15 % ■ TD > 10:1 to TD 20:1 = 0.20 %	■ TD 1:1 to ≤ TD 10:1 = ±0.075 % ■ TD > 10:1 to TD 20:1 = ±0.0075 x TD
250 mbar (3.75 psi), 400 mbar (6 psi), 1 bar (15 psi), 2 bar (30 psi), 4 bar (60 psi), 10 bar (150 psi)	■ TD 1:1 to ≤ TD 10:1 = 0.15 % ■ TD > 10:1 to TD 20:1 = 0.20 %	■ TD 1:1 to ≤ TD 10:1 = ±0.075 % ■ TD > 10:1 to TD 20:1 = ±0.1 %
40 bar (600 psi)	■ TD 1:1 to ≤ TD 10:1 = 0.15 % ■ TD > 10:1 to TD 20:1 = 0.20 %	■ TD 1:1 to ≤ TD 10:1 = ±0.075 % ■ TD > 10:1 to TD 20:1 = ±0.0075 x TD

Absolute pressure sensors		
Measuring cell	**Standard reference accuracy**	**Platinum reference accuracy**
100 mbar (1.5 psi)	■ TD 1:1 to ≤ TD 10:1 = 0.15 % ■ TD > 10:1 to TD 20:1 = ±0.0015 x TD	■ TD 1:1 to TD 5:1 = ±0.075 % ■ TD > 5:1 to TD 20:1 = ±0.015 x TD
250 mbar (3.75 psi)	■ TD 1:1 to ≤ TD 10:1 = 0.15 % ■ TD > 10:1 to TD 20:1 = 0.20 %	■ TD 1:1 to ≤ TD 10:1 = ±0.075 % ■ TD > 10:1 to TD 13:1 = ±0.1 %
400 mbar (6 psi), 1 bar (15 psi), 2 bar (30 psi), 4 bar (60 psi), 10 bar (150 psi)	■ TD 1:1 to ≤ TD 10:1 = 0.15 % ■ TD > 10:1 to TD 20:1 = 0.20 %	■ TD 1:1 to ≤ TD 10:1 = ±0.075 % ■ TD > 10:1 to TD 20:1 = ±0.1 %
40 bar (600 psi)	■ TD 1:1 to ≤ TD 10:1 = 0.15 % ■ TD > 10:1 to TD 20:1 = 0.20 %	■ TD 1:1 to ≤ TD 10:1 = ±0.075 % ■ TD > 10:1 to TD 20:1 = ±0.0075 x TD

Total performance – PMC51

The "Total performance" specification comprises the non-linearity including hysteresis, non-reproducibility as well as the thermal change in the zero point. All specifications apply to the temperature range –10 to +60°C (+14 to +140°F) and Turndown 1:1.

Signal output	**Measuring cell**	**% URL**
HART, PROFIBUS PA, FOUNDATION Field-bus	100 mbar (1.5 psi), 250 mbar (3.75 psi), 400 mbar (6 psi)	±0.575
	1 bar (15 psi), 2 bar (30 psi), 4 bar (60 psi), 10 bar (150 psi), 40 bar (600 psi)	±0.5
Analog (4 to 20 mA)	100 mbar (1.5 psi), 250 mbar (3.75 psi), 400 mbar (6 psi)	±0.775
	1 bar (15 psi), 2 bar (30 psi), 4 bar (60 psi), 10 bar (150 psi), 40 bar (600 psi)	±0.7

Total error - PMC51

The total error comprises the long-term stability and the total performance. All specifications apply to the temperature range –10 to +60°C (+14 to +140°F) and Turndown 1:1.

	Signal output	Measuring cell	% URL
			1 year
PMC51 with thread or flange	HART, PROFIBUS PA, FOUNDATION Fieldbus	100 mbar (1.5 psi), 250 mbar (3.75 psi), 400 mbar (6 psi)	±0.55
		1 bar (15 psi), 2 bar (30 psi), 4 bar (60 psi), 10 bar (150 psi), 40 bar (600 psi)	±0.47
	Analog (4 to 20 mA)	100 mbar (1.5 psi), 250 mbar (3.75 psi), 400 mbar (6 psi)	±0.75
		1 bar (15 psi), 2 bar (30 psi), 4 bar (60 psi), 10 bar (150 psi), 40 bar (600 psi)	±0.67
PMC51 with hygienic process connection	HART, PROFIBUS PA, FOUNDATION Fieldbus	100 mbar (1.5 psi), 250 mbar (3.75 psi), 400 mbar (6 psi)	±0.925
		1 bar (15 psi), 2 bar (30 psi), 4 bar (60 psi), 10 bar (150 psi), 40 bar (600 psi)	±0.7
	Analog (4 to 20 mA)	100 mbar (1.5 psi), 250 mbar (3.75 psi), 400 mbar (6 psi)	±1.125
		1 bar (15 psi), 2 bar (30 psi), 4 bar (60 psi), 10 bar (150 psi), 40 bar (600 psi)	±0.9

Thermal change in the zero output and the output span – PMC51

PMC51 with thread or flange

Signal output	Measuring cell	% of the calibrated measuring span		
		–40 to -20°C (–40 to –4°F)	–10 to +60°C (+14 to +140°F)	–20 to +100°C (–4 to +212°F)
HART, PROFIBUS PA, FOUNDATION Fieldbus	100 mbar (1.5 psi), 250 mbar (3.75 psi), 400 mbar (6 psi)	±(0,6 + 0,45 x TD)	±0,2 + 0,275 x TD	±(0,4 + 0,425 x TD)
	1 bar (15 psi), 2 bar (30 psi), 4 bar (60 psi), 10 bar (150 psi), 40 bar (600 psi)	±0,5 + 0,35 x TD	±0,1 + 0,15 x TD	±(0,225 + 0,525 x TD)
Analog (4 to 20 mA)	100 mbar (1.5 psi), 250 mbar (3.75 psi), 400 mbar (6 psi)	±(0,6 + 0,45 x TD)	±0.4 + 0.275 x TD	±0.7 + 0.425 x TD
	1 bar (15 psi), 2 bar (30 psi), 4 bar (60 psi), 10 bar (150 psi), 40 bar (600 psi)	±0,5 + 0,35 x TD	±0.3 + 0.15 x TD	±0.525 + 0.525 x TD

PMC51 with hygienic process connection

Signal output	Measuring cell	% of the calibrated measuring span	
		–10 to +60°C (+14 to +140°F)	–20 to +130°C (–4 to +266°F)
HART, PROFIBUS PA, FOUNDATION Fieldbus	100 mbar (1.5 psi), 250 mbar (3.75 psi), 400 mbar (6 psi)	±(0,4 + 0,275 x TD)	±(0,7 + 0,425 x TD)
	1 bar (15 psi), 2 bar (30 psi), 4 bar (60 psi), 10 bar (150 psi), 40 bar (600 psi)	±(0,3 + 0,15 x TD)	±(0,525 + 0,525 x TD)
Analog (4 to 20 mA)	100 mbar (1.5 psi), 250 mbar (3.75 psi), 400 mbar (6 psi)	±(0,4 + 0,275 x TD)	±(0,7 + 0,425 x TD)
	1 bar (15 psi), 2 bar (30 psi), 4 bar (60 psi), 10 bar (150 psi), 40 bar (600 psi)	±(0,3 + 0,15 x TD)	±(0,525 + 0,525 x TD)

Performance characteristics – metallic process isolating diaphragm

Reference accuracy – PMP51, PMP55

The reference accuracy comprises the non-linearity according to limit point setting, hysteresis and non-reproducibility as per IEC 60770. The data refer to the calibrated span.

Gauge pressure sensors/absolute pressure sensors

	PMP51 and PMP55 without capillary	
Measuring cell	**Standard reference accuracy**	**Platinum reference accuracy** [1]
400 mbar (6 psi)	■ TD 1:1 = ±0.15 % ■ TD >1:1 to TD 20:1 = ±0.15 % x TD	Not available
	PMP51 with hygienic process connection: ■ TD 1:1 = ±0.3 % ■ TD >1:1 to TD 10:1 = ±0.3 % x TD	PMP51 with hygienic process connection: ■ TD 1:1 = ±0.2 % ■ TD >1:1 to TD 10:1 = ±0.2 % x TD
1 bar (15 psi)	■ TD 1:1 to TD 5:1 = ±0.15 % ■ TD >5:1 to TD 20:1 = ±0.03 % x TD	■ TD 1:1 to TD 2.5:1 = ±0.075 % ■ TD >2.5:1 to TD 20:1 = ±0.03 % x TD
	PMP51 with hygienic process connection: ■ TD 1:1 = ±0.3 % ■ TD >1:1 to TD 10:1 = ±0.3 % x TD	PMP51 with hygienic process connection: ■ TD 1:1 = ±0.2 % ■ TD >1:1 to TD 10:1 = ±0.2 % x TD
2 bar (30 psi)	■ TD 1:1 to TD 10:1 = ±0.15 % ■ TD >10:1 to TD 20:1 = ±0.015 % x TD	■ TD 1:1 to TD 5:1 = ±0.075 % ■ TD >5:1 to TD 20:1 = ±0.015 % x TD
	PMP51 with hygienic process connection: ■ TD 1:1 to TD ≤5:1: 0.15 % ■ TD >5:1 to TD ≤10:1: 0.2 %	PMP51 with hygienic process connection: ■ TD 1:1 to TD ≤5:1: 0.075 % ■ TD >5:1 to TD ≤10:1: 0.1 %
4 bar (60 psi)	■ TD 1:1 to TD 10:1 = ±0.15 % ■ TD >10:1 to TD 20:1 = ±0.20 %	■ TD 1:1 to TD 10:1 = ±0.075 % ■ TD 10:1 to TD 20:1 = ±0.0075 % x TD
	PMP51 with hygienic process connection: ■ TD 1:1 to TD ≤10:1: 0.15 % ■ TD >10:1 to TD 20:1: ±0.2 %	PMP51 with hygienic process connection: ■ TD 1:1 to TD ≤10:1: 0.075 % ■ TD >5:1 to TD 20:1: ±0.1 %
10 bar (150 psi), 40 bar (600 psi)	■ TD 1:1 to TD 10:1 = ±0.15 % ■ TD >10:1 to TD 20:1 = ±0.20 %	■ TD 1:1 to TD 10:1 = ±0.075 % ■ TD 10:1 to TD 20:1 = ±0.1 %
	PMP51 with hygienic process connection: ■ TD 1:1 to TD ≤10:1: 0.15 % ■ TD >10:1 to TD 20:1: ±0.2 %	PMP51 with hygienic process connection: ■ TD 1:1 to TD ≤10:1: 0.075 % ■ TD >5:1 to TD 20:1: ±0.1 %
100 bar (1500 psi)	■ TD 1:1 to TD 10:1 = ±0.15 % ■ TD >10:1 to TD 20:1 = ±0.20 %	■ TD 1:1 to TD 10:1 = ±0.075 % ■ TD 10:1 to TD 20:1 = ±0.0075 %
400 bar (6000 psi)	■ TD 1:1 to TD 5:1 = ±0.15 % ■ TD >5:1 to TD 20:1 = ±(0.03 % x TD)	■ TD 1:1 to TD 5:1 = ±0.15 % ■ TD >5:1 to TD 20:1 = ±(0.03 % x TD)

1) Only PMP51, PMP55 with direct diaphragm seal mounting

Gauge pressure sensors/absolute pressure sensors

	PMP55 with capillary	
Measuring cell	**Standard reference accuracy**	**Platinum reference accuracy [1)]**
400 mbar (6 psi)	■ TD 1:1 = ±0.15 % ■ TD >1:1 to TD 20:1 = ±0.15 % x TD	Not available
1 bar (15 psi)	■ TD 1:1 to TD 3.75:1 = ±0.15 % ■ TD >3.75:1 to TD 20:1 = ±0.04 % x TD	■ TD 1:1 to TD 2:1 = ±0.1 % ■ TD >2:1 to TD 20:1 = ±0.04 % x TD
2 bar (30 psi)	■ TD 1:1 to TD 3.75:1 = ±0.15 % ■ TD >3.75:1 to TD 20:1 = ±0.04 % x TD	■ TD 1:1 to TD 2.5:1 = ±0.1 % ■ TD >2.5:1 to TD 20:1 = ±0.04 % x TD
4 bar (60 psi)	■ TD 1:1 to TD 10:1 = ±0.15 % ■ TD >10:1 to TD 20:1 = ±0.20 %	■ TD 1:1 to TD 10:1 = ±0.075 % ■ TD 10:1 to TD 20:1 = ±0.0075 % x TD
10 bar (150 psi), 40 bar (600 psi)	■ TD 1:1 to TD 10:1 = ±0.15 % ■ TD >10:1 to TD 20:1 = ±0.20 %	■ TD 1:1 to TD 10:1 = ±0.075 % ■ TD 10:1 to TD 20:1 = ±0.1 %
100 bar (1500 psi)	■ TD 1:1 to TD 10:1 = ±0.15 % ■ TD >10:1 to TD 20:1 = ±0.20 %	■ TD 1:1 to TD 10:1 = ±0.075 % ■ TD 10:1 to TD 20:1 = ±0.0075 % x TD
400 bar (6000 psi)	■ TD 1:1 to TD 5:1 = ±0.15 % ■ TD >5:1 to TD 20:1 = ±(0.03 % x TD)	■ TD 1:1 to TD 5:1 = ±0.15 % ■ TD >5:1 to TD 20:1 = ±(0.03 % x TD)

1) Only PMP51, PMP55 with direct diaphragm seal mounting

Total performance – PMP51

The "Total performance" specification comprises the non-linearity including hysteresis, non-reproducibility as well as the thermal change in the zero point. All specifications apply to the temperature range –10 to +60°C (+14 to +140°F) and Turndown 1:1.

Signal output	**Measuring cell**	**PMP51**	**PMP51 with hygienic process connection**	**PMP51 with gold/rhodium-coated process isolating diaphragm**
		% of URL		
HART, PROFIBUS PA, FOUNDATION Fieldbus	400 mbar (6 psi)	±0.34	±0.34	±1.25
	1 bar (15 psi)		±0.25	±0.75
	2 bar (30 psi)		±0.25	±0.45
	4 bar (60 psi)	±0.30	±0.25	±0.3
	10 bar (150 psi), 40 bar (600 psi)	±0.25	±0.25	±0.25
	100 bar (1500 psi)	±0.25	-	±0.25
	400 bar (6000 psi)	±0.4	-	±0.4
Analog (4 to 20 mA)	400 mbar (6 psi)	±0.34	±0.54	±1.25
	1 bar (15 psi)		±0.54	±0.75
	2 bar (30 psi)		±0.45	±0.45
	4 bar (60 psi)	±0.30	±0.45	±0.3
	10 bar (150 psi), 40 bar (600 psi)	±0.25	±0.45	±0.25
	100 bar (1500 psi)	±0.25	-	±0.25
	400 bar (6000 psi)	±0.4	-	±0.4

Total error - PMP51

The total error comprises the long-term stability and the total performance. All specifications apply to the temperature range –10 to +60°C (+14 to +140°F) and Turndown 1:1.

Signal output	Measuring cell	% of URL/year
HART, PROFIBUS PA, FOUNDATION Fieldbus	400 mbar (6 psi)	±0.59
	≥1 bar to 40 bar (15 psi to 600 psi)	±0.35
	≥40 bar to 100 bar (600 psi to 1500 psi)	±0.35
	400 bar (6000 psi)	±0.5
Analog (4 to 20 mA)	400 mbar (6 psi)	±0.79
	≥1 bar to 40 bar (15 psi to 600 psi)	±0.55
	≥40 bar to 100 bar (600 psi to 1500 psi)	±0.55
	400 bar (6000 psi)	±0.5

Thermal change in the zero output and the output span – PMP51 and PMP55

Note!
When using a PMP55, the influence from the respective diaphragm seal must also be taken into account (→ 🖹 76 ff "Planning instructions for diaphragm seal systems").

PMP51 and PMP55 (basic device)

Measuring cell	–10 to +60 °C (+14 to +140°F)	–40 to –10°C, +60 to +85°C (–40 to +14°F, +140 to +185°F)
	% of the calibrated measuring span	
400 mbar (6 psi), 1 bar (15 psi), 2 bar (30 psi), 4 bar (60 psi), 10 bar (150 psi), 40 bar (600 psi), 100 bar (1500 psi)	±(0.34 + 0.15 x TD)	±(0.4 + 0.25 x TD)
400 bar (6000 psi)	±(0.3 + 0.35 x TD)	±(0.3 + 0.7 x TD)

PMP51 with hygienic process connection

Signal output	Measuring cell	–10 to +60 °C (+14 to +140°F)	–40 to –10°C, +60 to +125°C (–40 to +14°F, +140 to +257°F)
		% of the calibrated measuring span	
HART, PROFIBUS PA, FOUNDATION Fieldbus	Clamp ½" / 400 mbar (6 psi)	±(0.1 + 0.4 x TD)	±(0.8 + 1.5 x TD)
	400 mbar (6 psi), 1 bar (15 psi)	±(0.1 + 0.25 x TD)	±(0.1 + 1.1 x TD)
	2 bar (30 psi), 4 bar (60 psi), 10 bar (150 psi), 40 bar (600 psi)	±(0.1 + 0.2 x TD)	±(0.1 + 0.5 x TD)
Analog (4 to 20 mA)	Clamp ½" / 400 mbar (6 psi)	±(0.3 + 0.4 x TD)	±(1.1 + 1.5 x TD)
	400 mbar (6 psi), 1 bar (15 psi)	±(0.3 + 0.25 x TD)	±(0.4 + 1.1 x TD)
	2 bar (30 psi), 4 bar (60 psi), 10 bar (150 psi), 40 bar (600 psi)	±(0.3 + 0.2 x TD)	±(0.4 + 0.5 x TD)

Operating conditions (installation)

General installation instructions

- The position-dependent zero point shift can be corrected:
  – directly at the device via operating keys on the electronic insert
  – directly at the device via operating keys on the display (except analog electronics)
  – via digital communication if the cover is not open (except analog electronics)
  Note!
  In hazardous areas, comply strictly with the safety instructions when the housing cover is closed and open.
- Endress+Hauser offers a mounting bracket for installing the device on pipes or walls.
  See also → 🖹 26, "Wall and pipe mounting" section.
- Use flushing rings for flange and cell diaphragm seals if medium buildup or clogging can be expected at the diaphragm seal connection. The flushing ring can be inserted between the process connection and the diaphragm seal. Thanks to the two lateral flushing bore holes, material buildup in front of the process isolating diaphragm can be rinsed away and the pressure chamber can be ventilated.
- To guarantee the leak-tightness of the transmitter, Endress+Hauser recommends that only genuine cable glands be used (also available as spare parts).

Measuring arrangement for devices without diaphragm seal – PMC51, PMP51

Cerabar M transmitters without diaphragm seals are mounted as per the norms for a manometer (DIN EN 837-2). We recommend the use of shutoff devices and siphons. The orientation depends on the measuring application.

Pressure measurement in gases

- Mount Cerabar M with shutoff device above the tapping point so that any condensate can flow into the process.

Pressure measurement in steams

- Mount Cerabar M with siphon above the tapping point.
- Fill the siphon with liquid before commissioning.
  The siphon reduces the temperature to almost the ambient temperature.

Pressure measurement in liquids

- Mount Cerabar M with shutoff device below or at the same level as the tapping point.

Level measurement

- Mount Cerabar M below the lowest measuring point (zero point of the measurement).
- Do not mount the device at the following positions: In the filling curtain, in the tank outlet or at a point in the container which could be affected by pressure pulses from an agitator or a pump.
- The calibration and functional test can be carried out more easily if you mount the device downstream of a shutoff device.

Measuring arrangement for devices with diaphragm seal – PMP55

- → 🖹 76, "Planning instructions for diaphragm seal systems" section.

Wall and pipe mounting

For installing the device on pipes or walls, Endress+Hauser provides a mounting bracket which is included in the scope of supply or can be ordered as a separate accessory (part no. 71102216).
For the dimensions, see → 🖹 66.

"Separate housing" version

With the "separate housing" version, you are able to mount the housing with the electronics insert at a distance from the measuring point. This version allows for trouble-free measurement:
- Under particularly difficult measuring conditions (at installation locations that are cramped or difficult to access)
- If extreme cleaning of the measuring point is required
- If the measuring point is exposed to vibrations
- For space-saving installations

You can choose between different cable versions:
- PE (2 m (6.6 ft), 5 m (16 ft) and 10 m (33 ft))
- FEP (5 m (16 ft)).

→ 82 ff, feature 600, "Separate housing".

For the dimensions, → 66.

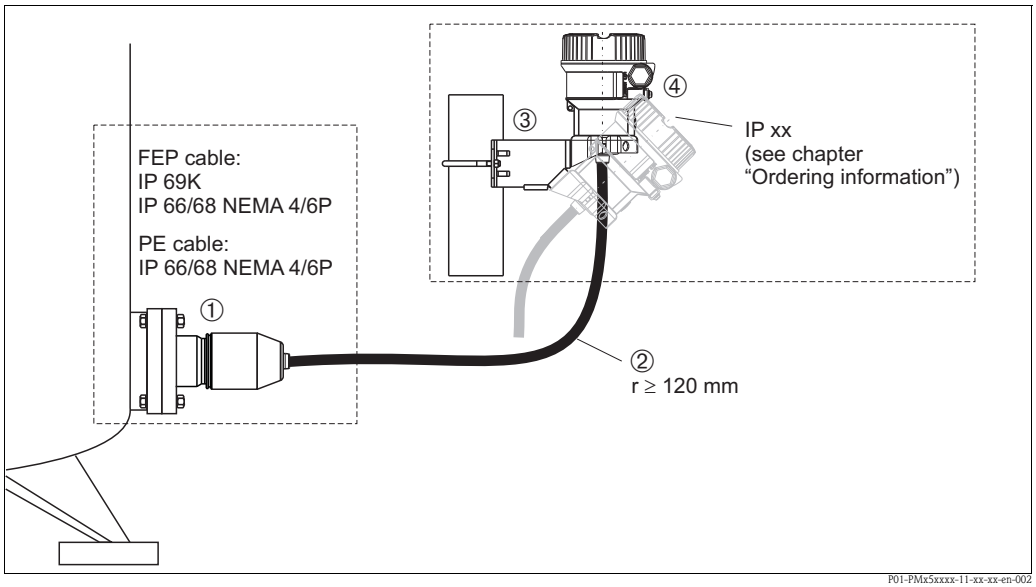

In the case of the "separate housing" version, the sensor is delivered with the process connection and cable ready mounted. The housing and a mounting bracket are enclosed as separate units. The cable is provided with a socket at both ends. These sockets are simply connected to the housing and the sensor.

1 Process connection with sensor
2 Cable, both ends are fitted with a socket
3 Mounting bracket provided, suitable for pipe and wall mounting (for pipes from 1 1/4" up to 2" diameter)
4 Housing with electronic insert

Degree of protection for the process connection and sensor with the use of
- FEP cable:
  - IP 69K
  - IP 66 NEMA 4/6P
  - IP 68 (1.83 mH_2O for 24 h) NEMA 4/6P
- PE cable:
  - IP 66 NEMA 4/6P
  - IP 68 (1.83 mH_2O for 24 h) NEMA 4/6P

Technical data of the PE and FEP cable:
- Minimum bending radius: 120 mm (4.72 in)
- Cable extraction force: max. 450 N (101 lbf)
- Resistance to UV light

Use in hazardous area:
- Intrinsically safe installations (Ex ia/IS)
- FM/CSA IS: for Div.1 installation only

Reduction in installation height

If the separate housing is used, the mounting height of the process connection is reduced compared to the dimensions of the standard version (see graphic).

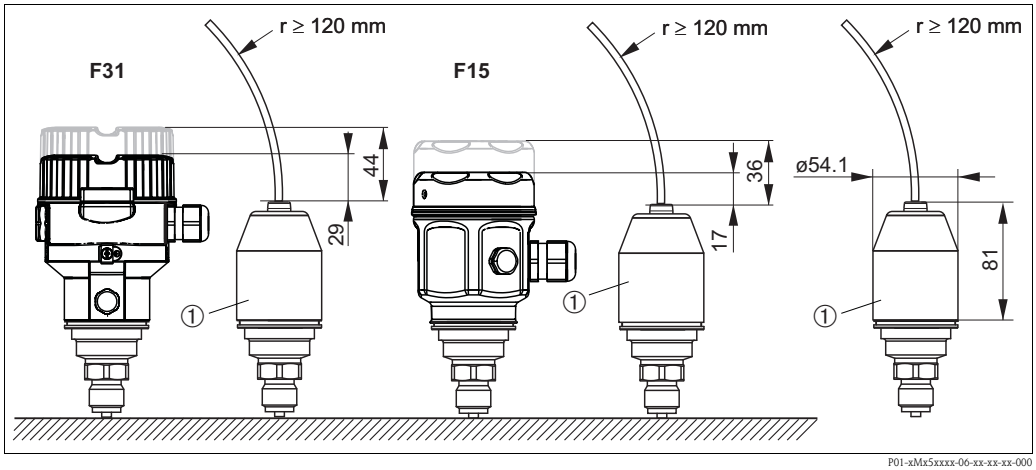

Oxygen applications

Oxygen and other gases can react explosively to oils, grease and plastics. As a result, the following are some of the precautions that must be taken:
– All components of the system, such as measuring devices, must be cleaned in accordance with the BAM (DIN 19247) requirements.
– Depending on the materials used, a certain maximum temperature and maximum pressure must not be exceeded for oxygen applications.

The devices suitable for gaseous oxygen applications are listed in the following table with the specification p_{max}.

Ordering code for devices[1] cleaned for oxygen applications	**p_{max} for oxygen applications**	**T_{max} for oxygen applications**
PMC51 [2] – devices with sensors, nominal value < 10 bar (150 psi)	Over pressure limit (OPL) of sensor[3], [4]	60°C (140°F)
PMC51 [2] – devices with sensors, nominal value ≥ 10 bar (150 psi)	40 bar (600 psi)	60°C (140°F)
PMP51 PMP55 [2]	Depends on the lowest-rated element, with regard to pressure, of the selected components: over pressure limit (OPL) of sensor [3], process connection (1.5 x PN) or fill fluid (160 bar (2320 psi))	85°C (185°F)

1) Only device, not accessory or enclosed accessory

2) Feature 570 "Service" version "HB"

3) → 82 ff "Ordering information", feature 70 "Sensor range"

4) PMC51 with PVDF thread or PVDF flange p_{max} = 15 bar (225 psi)

PWIS cleaning

Special cleaning of the transmitter to remove paint-wetting substances, for use in paint shops
→ 85 feature 570 "Service", version "HC".

Ultrapure gas applications

Endress+Hauser also provides devices which have been cleaned of oil and grease for special applications, such as for ultrapure gas. No special restrictions regarding the process conditions apply to these devices.

→ 82 ff, "Ordering information PMC51", feature 570 "Service" version "HA".
→ 88 ff, "Ordering information PMP51", feature 570 "Service" version "HA".

Applications with hydrogen

With regard to materials in which hydrogen formation takes place, hydrogen atoms can diffuse through the metallic process isolating diaphragm. This can result in incorrect measurement results.
Endress+Hauser offers process isolating diaphragms with a gold/rhodium coating for such instances.

→ 87 ff "Ordering information PMP51" and
→ 92 ff "Ordering information PMP55", feature 170 "Membrane Material" version "M".

Operating conditions (environment)

Ambient temperature range

Version	PMC51	PMP51	PMP55
Without LCD display	–40°C to +85°C (–40°F to +185°F)		
With LCD display [1]	–20°C to +70°C (–4°F to +158°F)		
With M12 plug , elbowed	–25°C to +85°C (–13°F to +185°F)		
With separate housing	–20°C to +60°C (–4°F to +140°F) (installation without insulation)		—
Diaphragm seal systems	—	—	→ 🖹 76

1) Extended temperature application range (–40°C to +85°C (–40°F to +185°F)) with restrictions in optical properties such as display speed and contrast

Note!
For high-temperature applications, either a PMP55 with a temperature isolator or with a capillary can be used. If vibrations also occur in the application, Endress+Hauser recommends you use a PMP55 with a capillary. If a PMP55 with a temperature isolator or capillary is used, we recommend a suitable bracket for mounting (see "Wall and pipe mounting" section on → 🖹 26).
For devices for use in hazardous areas, see Safety Instructions, Installation or Control Drawing. (→ 🖹 98 ff, "Safety Instructions" and "Installation/Control Drawings" sections)

Storage temperature range

Version	PMC51	PMP51	PMP55
Without LCD display	–40°C to +90°C (–40°F to +194°F)		
With LCD display	–40°C to +85°C (–40°F to +185°F)		
With M12 plug , elbowed	–25°C to +85°C (—13°F to +185°F)		
With separate housing	–40°C to +60°C (–40°F to +140°F)		—
Diaphragm seal systems	—	—	→ 🖹 76

Degree of protection

- → 🖹 82 ff, feature 50 "Electrical connection".
- Separate housing (→ 🖹 27)

Climate class

Class 4K4H (air temperature: –20 to 55°C (–4 to +131°F), relative humidity: 4 to 100%) satisfied as per DIN EN 60721-3-4 (condensation possible).

Vibration resistance

Device/Additional option	Test standard	Vibration resistance
Devices without mounting bracket	GL VI-7-2 ■ Part 7: Guidelines for the Performance of Type Approvals ■ Chapter 2: Test Requirements for Electrical / Electronic Equipment and Systems	guaranteed for 5 to 25 Hz: ±1.6 mm (0.06 in); 25 to 100 Hz: 4 g in all 3 planes
	IEC 61298-3 IEC 60068-2-6	guaranteed for 10 to 60 Hz: ±0.35 mm (0.01 in); 60 to 2000 Hz: 2 g in all 3 planes
Devices with mounting bracket	IEC 61298-3 IEC 60068-2-6	guaranteed for 10 to 60 Hz: ±0.15 mm (0.01 in); 60 to 500 Hz: 2 g in all 3 planes

Note!
For high-vibration applications, either a PMC51/PMP51 with a separate housing or a PMP55 with a capillary can be used. We recommend a suitable bracket for mounting (see "Wall and pipe mounting" section on → 26).

Electromagnetic compatibility

- Electromagnetic compatibility as per all the relevant requirements of the EN 61326 series and NAMUR Recommendation EMC (NE21). Details can be found in the Declaration of Conformity (in the Download area of "www.de.endress.com", "search area - Approvals and Certificates", "Manufact. Declaration").
- Maximum deviation: < 0.5 % of span

Overvoltage protection (optional)

The device can be fitted with overvoltage protection, see → 82 ff "Ordering information" feature 610 "Accessory mounted:" version "NA". The overvoltage protection is mounted at the factory on the housing thread (M20x1.5) for the cable gland and is approx. 70 mm (2.76 in) in length (take additional length into account when installing). The device is connected as illustrated in the following graphic.
For details refer to TI001013KEN, XA01003KA3 and BA00304KA2.

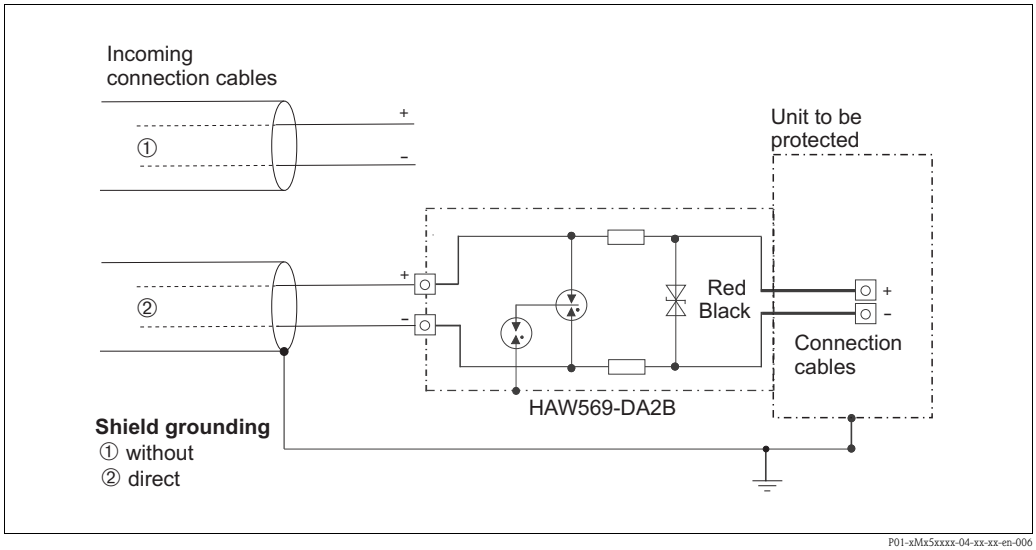

P01-xMx5xxxx-04-xx-xx-en-006

Operating conditions (process)

Process temperature range PMC51

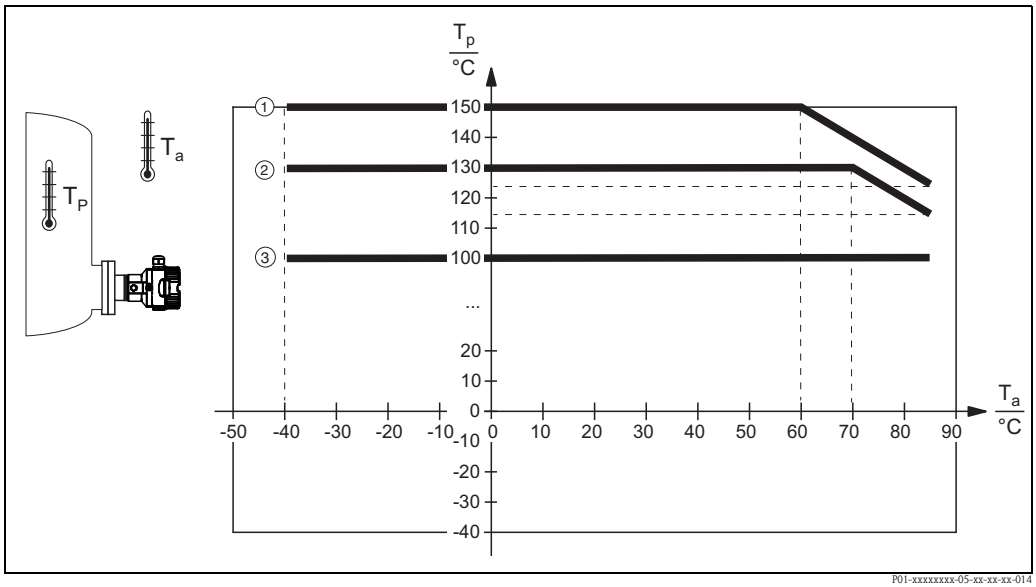

T_a = Ambient temperature; T_p = Process temperature; ①, ② and ③ see following chapter.

Process temperature limits

PMC51 (with ceramic process isolating diaphragm)

- ③: –40 to +100°C (–40 to +212°F) for threaded process connections or flange process connections
- ②: –40 to +130°C (–40 to +266°F) for hygienic process connections
- ①: For a maximum of 60 minutes: +150 °C (+302 °F)
- Observe the process temperature range of the seal. See also the following table.

Version for feature 190 in the order code	Seal	Notes	Process temperature range	
			Thread or flange	Hygienic process connection
A	FKM Viton	-	-20 to +100°C (-4 to +212°F)	-
A [1]	FKM Viton	cleaned for O2 application	-5 to +60°C (+23 to +140°F)	-
B	FKM Viton	FDA [2], 3A Class I, USP Class VI	-5 to +100°C (+23 to +212°F)	-5 to +150 °C (+23 to +302°F)
F	NBR	FDA [2]	-10 to +100°C (-14 to +212°F)	-
H	NBR, Low temperature	-	-40 to +100°C (-40 to +212°F)	-
G	HNBR	FDA [2], 3A Class I, KTW, AFNOR, BAM	-25 to +100°C (-13 to +212°F)	-20 to +125 °C (-4 to +257°F)
J	EPDM 70	FDA [2]	-40 to +100°C (-40 to +212°F)	-
K	EPDM 291	FDA [2], 3A Class II, USP Class VI, DVGW, KTW, W270, WRAS, ACS, NSF61	-	-15 to +150 °C (+5 to +302°F)
L	FFKM Kalrez 6375	-	+5 to +100°C (+41 to +212°F)	-
M	FFKM Kalrez 7075	-	+5 to +100°C (+41 to +212°F)	-
N	FFKM Kalrez 6221	FDA [2], USP Class VI	-5 to +100°C (+23 to +212°F)	-5 to +150 °C (+23 to +302°F)
P	Fluoroprene XP40	FDA [2], USP Class VI, 3A Class I	+5 to +100°C (+41 to +212°F)	+5 to +150 °C (+41 to +302°F)
S	VMQ Silicone	FDA [2]	-35 to +85°C (-31 to +185°F)	-20 to +85 °C (-4 to +185°F)

1) With feature 570 "Service", version "HB - Cleaned for oxygen service"

2) Suitable for foods FDA 21 CFR 177.2600

Applications with jumps in temperature

Extreme jumps in temperature can result in temporary measuring errors. Temperature compensation takes effect after several minutes. Internal temperature compensation is faster the smaller the jump in temperature and the longer the time interval involved.
For further information please contact your local Endress+Hauser Sales Center.

PMP51 (with metallic process isolating diaphragm)

Description	Temperature operating range
Process connections with internal process isolating diaphragm	-40 to +125°C (-40 to +257°F)
Process connections with flush-mounted process isolating diaphragm, G 1 A, G 1 1/2 A, G 2 A, 1 NPT, 1 1/2 NPT, 2 NPT, M 44 x 1.25, EN/DIN, ANSI and JIS flanges	-40 to +100°C (-40 to +212°F)
Process connections with flush-mounted process isolating diaphragm, G 1/2 A, M 20x1.5	-20 to +85°C (-4 to +185°F)
Hygienic process connections	–40 to +130 °C (–40 to +266 °F) For a maximum of 60 minutes: +150 °C (+302 °F)

PMP55 (with diaphragm seal)

- Depending on the diaphragm seal and filling oil from -70°C (-94°F) up to +400°C (+752°F). Observe the temperature application limits → 📄 76.

Note!
- The PTFE foil used is designed to protect the unit against abrasion. It does not provide protection against corrosive media.
- Do not use diaphragm seals with 0.25 mm (0.01 in) PTFE foil on AISI 316L (1.4435/1.4404) for vacuum applications, upper temperature limit +204 °C (+399 °F).
- For oxygen applications, observe → 📄 28, "Oxygen applications" section.

Pressure specifications

- The maximum pressure for the measuring device depends on the lowest-rated element with regard to pressure.
  See the following sections:
  – → 📄 8 ff, "Measuring range" section
  – "Mechanical construction" section.
  The MWP (maximum working pressure) is specified on the nameplate. This value refers to a reference temperature of +20°C (68°F), or 100°F (38°C) for ANSI flanges, and may be applied to the device for an unlimited time. Observe temperature dependency of the MWP.
- The pressure values permitted at higher temperatures can be found in the following standards:
  – EN 1092-1: 2001 Tab. 18 [1]
  – ASME B 16.5a – 1998 Tab. 2-2.2 F316
  – ASME B 16.5a – 1998 Tab. 2.3.8 N10276
  – JIS B 2220.
- The test pressure corresponds to the over pressure limit of the device (over pressure limit OPL = 1.5 x MWP [2]) and may be applied for only a limited time period in order to avoid permanent damage.
- The Pressure Equipment Directive (EC Directive 97/23/EC) uses the abbreviation "PS". The abbreviation "PS" corresponds to the MWP (maximum working pressure) of the measuring device.
- In the case of sensor range and process connection combinations where the OPL (over pressure limit) of the process connection is smaller than the nominal value of the sensor, the device is set at the factory, at the very maximum, to the OPL value of the process connection. If you want to use the entire sensor range, select a process connection with a higher OPL value (1.5 x PN; PN = MWP).
- In oxygen applications, the values for "p_{max} and T_{max} for oxygen applications" as per → 📄 28, "Oxygen applications" may not be exceeded.
- Avoid steam hammering! Steam hammering can cause zero point drift.
  Recommendation:
  Residue (such as condensation or drops of water) can remain at the process isolating diaphragm after CIP cleaning and lead to local steam hammering if immediately steam is introduced. In practice, drying the process isolating diaphragm (e.g. by blowing off excess moisture) has proven to be a successful way of avoiding steam hammering.

1) With regard to their stability-temperature property, the materials 1.4435 and 1.4404 are grouped together under 13EO in EN 1092-1 Tab. 18. The chemical composition of the two materials can be identical.
2) The equation does not apply for PMP51 and PMP55 with a 40 bar (600 psi) - or a 100 bar (1500 psi) - measuring cell.

Mechanical construction

F31 aluminum housing dimensions

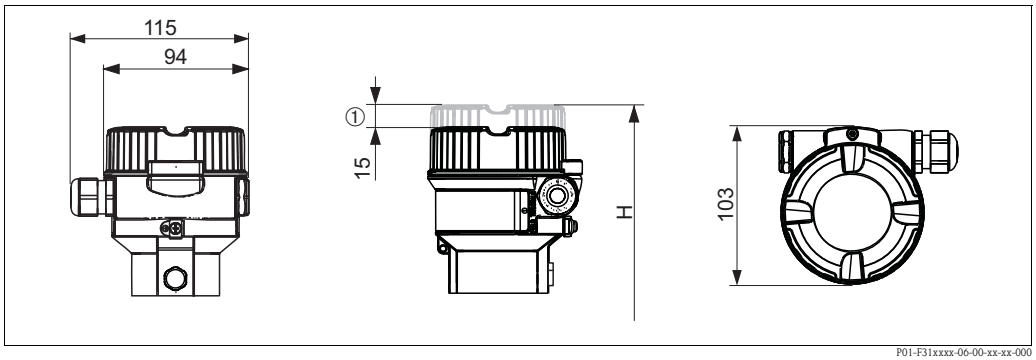

Front view, left-hand side view, top view
① The cover with viewing window is 15 mm (0.59 in) higher than the cover without viewing window.
→ For installation height H for housing with viewing window, see the specific process connection. Housing weight → 🖹 66

F15 stainless steel housing dimensions (hygienic)

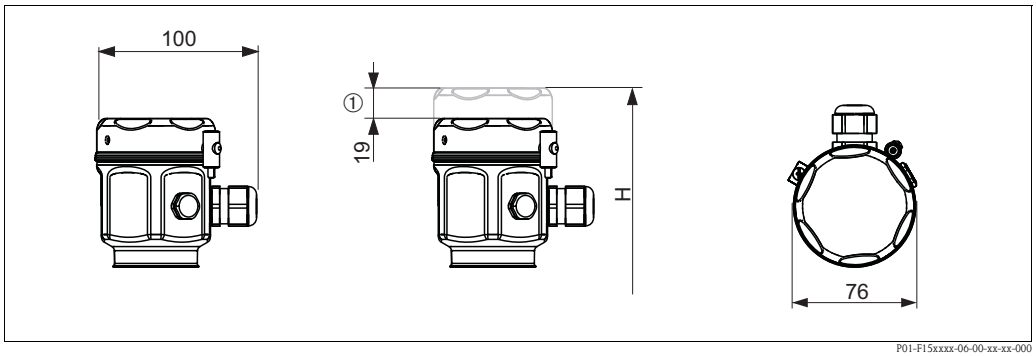

Front view, top view.
① The cover with viewing window is 19 mm (0.75 in) higher than the cover without viewing window.
→ For installation height H for housing with viewing window, see the specific process connection. Housing weight → 🖹 66

Process connections PMC51 (with ceramic process isolating diaphragm)

Thread, internal process isolating diaphragm

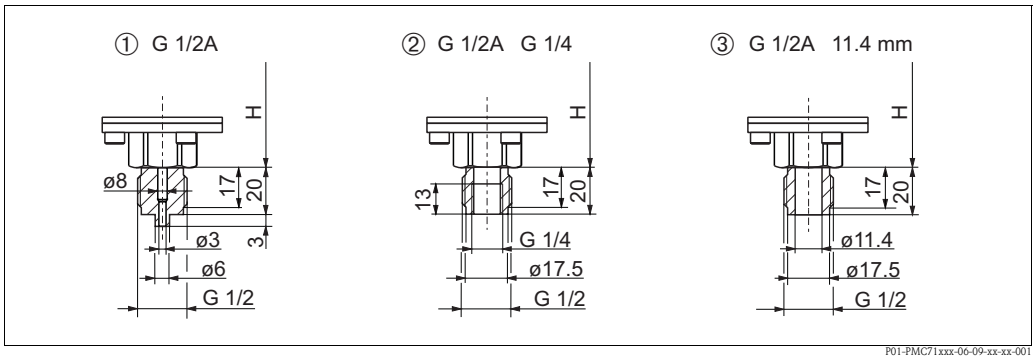

Process connections PMC51, thread ISO 228
Installation height H → 🖹 34.

1 Thread ISO 228 G 1/2 A EN 837;
Material version GCJ: AISI 316L, version GCC: Alloy C276
Version GCF: PVDF (max.: 15 bar (217.5 psi), –10 to +60 °C (+14 to +140 °F)), mount version "GCF" with a mounting bracket only (→ 🖹 26); weight: 0.63 kg (1.39 lbs)

2 Thread ISO 228 G 1/2 A G 1/4 (female);
Material version GLJ: AISI 316L, version GLC: Alloy C276; weight: 0.63 kg (1.39 lbs)

3 Thread ISO 228 G 1/2 A hole 11.4 mm (0.45 in);
Material version GMJ: AISI 316L, version GMC: Alloy C276; weight: 0.63 kg (1.39 lbs)

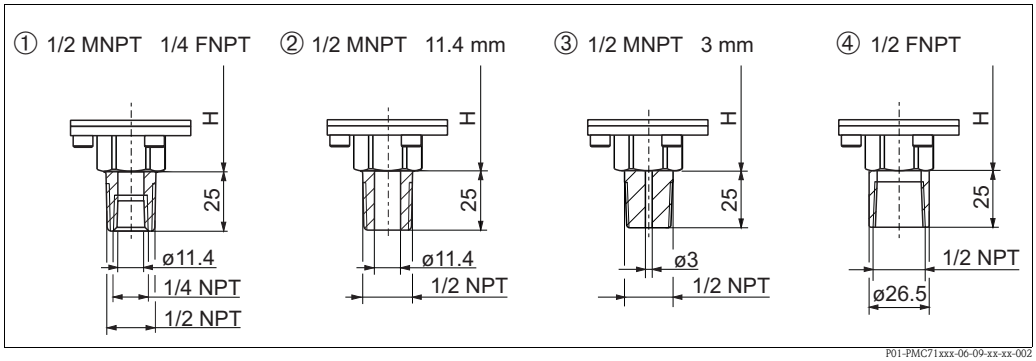

Process connections PMC51, thread ANSI
Installation height H → 🖹 34.

1 Thread ANSI 1/2 MNPT 1/4 FNPT;
Material version RLJ: AISI 316L, version RLC: Alloy C276; weight: 0.63 kg (1.39 lbs)
2 Thread ANSI 1/2 MNPT hole 11.4 (0.45 in);
Material version RKJ: AISI 316L; version RKC: Alloy C276; weight: 0.63 kg (1.39 lbs)
3 Thread ANSI 1/2 MNPT hole 3 mm (0.12 in);
Material version RJF: PVDF (max.: 15 bar (225 psi), –10 to +60 °C (+14 to +140 °F)) mount with mounting bracket only (→ 🖹 26); weight: 0.63 kg (1.39 lbs)
4 Thread ANSI FNPT 1/2
Material version R1J: AISI 316L, version R1C: Alloy C276; weight: 0.63 kg (1.39 lbs)

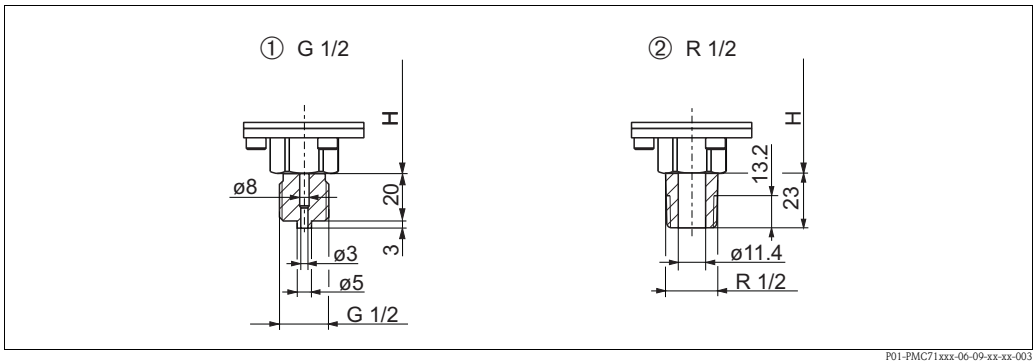

Process connections PMC51, thread JIS
Installation height H → 🖹 34.

1 Version GNJ: thread JIS B0202 G 1/2 (male), material: AISI 316L; weight: 0.63 kg (1.39 lbs)
2 Version GOJ: thread JIS B0203 R 1/2 (male), material: AISI 316L; Weight: 0.63 kg (1.39 lbs)

Installation height H for devices with threaded connection and internal process isolating diaphragm

F31 housing	F15 housing
154 mm (6.06 in)	146 mm (5.75 in)

Process connections PMC51 (with ceramic process isolating diaphragm) – continued

Thread, flush-mounted process isolating diaphragm

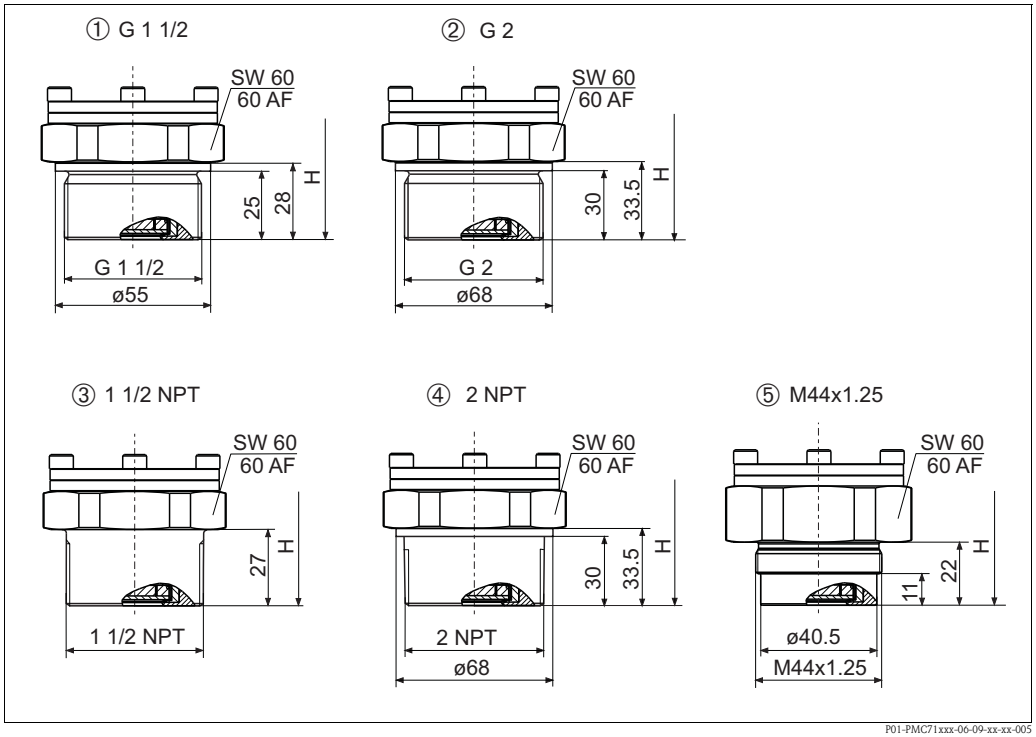

Process connections PMC51,
→ Installation height, see table below.

1 Thread ISO 228 G 1 1/2 A;
Material version GVJ: AISI 316L; weight: 0.63 kg (1.39 lbs)
2 Thread ISO 228 G 2 A;
Material version GWJ: AISI 316L; weight: 0.63 kg (1.39 lbs)
3 Thread ANSI 1 1/2 MNPT;
Material version U7J: AISI 316L; weight: 0.63 kg (1.39 lbs)
4 Thread ANSI 2 MNPT;
Material version U8J: AISI 316L; weight: 0.63 kg (1.39 lbs)
5 Thread DIN 13 M 44x1.25;
Material version G4J: AISI 316L; weight: 0.63 kg (1.39 lbs)

Installation height H for devices with threaded connection and flush-mounted process isolating diaphragm

F31 housing	F15 housing
201 mm (7.91 in)	193 mm (7.6 in)

Process connections PMC51 (with ceramic process isolating diaphragm) – continued

EN/DIN flanges, connection dimensions as per EN 1092-1/DIN 2527

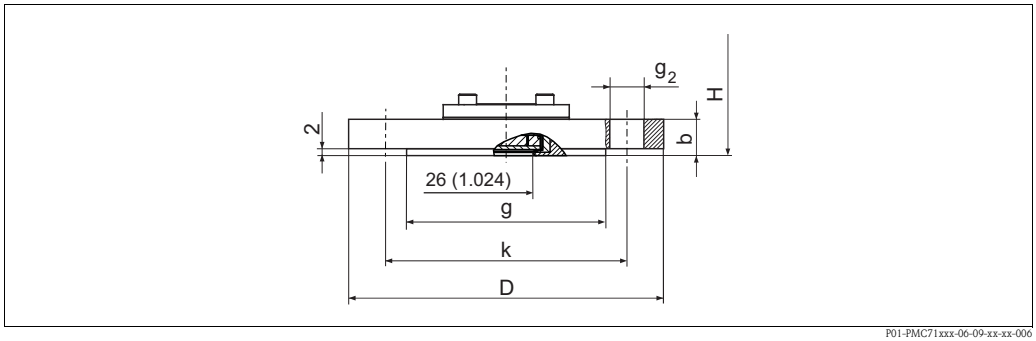

Process connection PMC51, EN/DIN flange with raised face (flush-mounted process isolating diaphragm)
Installation height H → 🖹 38.

	Flange							Boltholes			
Version	**Material**	**Nominal diameter**	**Nominal pressure**	**Shape** [1]	**Diameter D** [mm]	**Thickness b** [mm]	**Raised face g** [mm]	**Quantity**	**Diameter g_2** [mm]	**Hole circle k** [mm]	**Flange weight** [2] [kg]
CNJ	AISI 316L	DN 25	PN 10-40	B1 (D)	115	18	68	4	14	85	1.4
CPJ	AISI 316L	DN 32	PN 10-40	B1 (D)	140	18	78	4	18	100	2.0
CQJ	AISI 316L	DN 40	PN 10-40	B1 (D)	150	18	88	4	18	110	2.4
CQP	ECTFE [4]	DN 40	PN 10-40	B1 (D)	150	21	88	4	18	110	2,6
CXJ	AISI 316L	DN 50	PN 10-40	B1 (D)	165	20	102	4	18	125	3.2
CFF	PVDF [3]	DN 50	PN 10-16	B1 (D)	165	18	102	4	18	125	2.9
CRP	ECTFE [4]	DN 50	PN 25-40	B1 (D)	165	20	102	4	18	125	3.2
CZJ	AISI 316L	DN 80	PN 10-40	B1 (D)	200	24	138	8	18	160	5.5
CSP	ECTFE [4]	DN 80	PN 25-40	B1 (D)	200	24	138	8	18	160	5.5

1) Designation as per DIN 2527 in brackets

2) Housing weight → 🖹 66

3) OPL.: 15 bar (225 psi)
Process temperature range: –10 to +60 °C (+14 to +140 °F)

4) ECTFE coating on AISI 316L (1.4404). When operating in hazardous areas, avoid electrostatic charging of the plastic surfaces.

Process connections PMC51 (with ceramic process isolating diaphragm) – continued

ANSI flanges, connection dimensions as per ANSI B 16.5, raised face RF

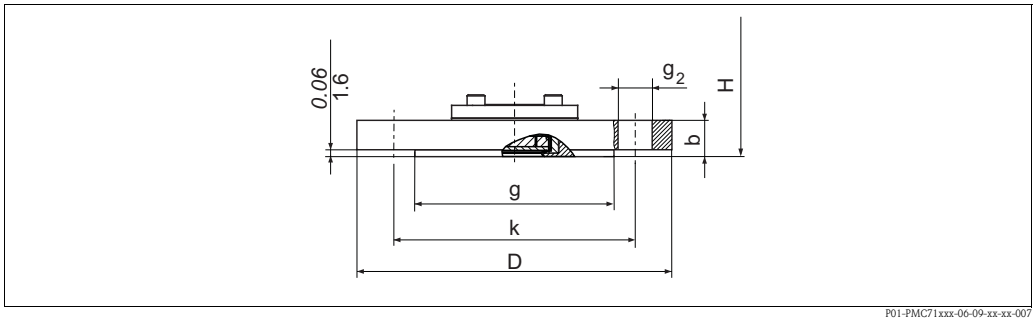

Process connection PMC51, ANSI flange with raised face RF (flush-mounted process isolating diaphragm)
Installation height H → 🖹 38.

	Flange						Boltholes			
Version	**Material**	**Nominal diameter**	**Class**	**Diameter D**	**Thickness b**	**Raised face g**	**Quantity**	**Diameter g_2**	**Hole circle k**	**Flange weight 1)**
		[in]	[lb./sq.in]	[in] / [mm]	[in] / [mm]	[in] / [mm]		[in] / [mm]	[in] / [mm]	[kg]
ACJ	AISI 316/316L 2)	1	150	4.25 / 108	0.56 / 14.2	2 / 50.8	4	0.62 / 15.7	3.12 / 79.2	0.9
ANJ	AISI 316/316L 2)	1	300	4.88 / 123.9	0.69 / 17.2	2 / 50.8	4	0.75 / 19	3.5 / 88.9	1.4
AEJ	AISI 316/316L 2)	1 1/2	150	5 / 127	0.69 / 17.5	2.88 / 73.2	4	0.62 / 15.7	3.88 / 98.6	1.0
AQJ	AISI 316/316L 2)	1 1/2	300	6.12 / 155.4	0.81 / 20.6	2.88 / 73.2	4	0.88 / 22.4	4.5 / 114.3	2.6
AFJ	AISI 316/316L 2)	2	150	6 / 152.4	0.75 / 19.1	3.62 / 91.9	4	0.75 / 19.1	4.75 / 120.7	2.4
AFN	ECTFE 3)	2	150	6 / 152.4	0.75 / 19.1	3.62 / 91.9	4	0.75 / 19.1	4.75 / 120.7	2.4
AFF	PVDF 4)	2	150	6 / 152.4	0.75 / 19.1	3.62 / 91.9	4	0.75 / 19.1	4.75 / 120.7	0.5
ARJ	AISI 316/316L 2)	2	300	6.5 / 165.1	0.88 / 22.4	3.62 / 91.9	8	0.75 / *19.1*	5 / 127	3.2
AGJ	AISI 316/316L 2)	3	150	7.5 / 190.5	0.94 / 23.9	5 / 127	4	0.75 / 19.1	6 / 152.4	4.9
AGN	ECTFE 3)	3	150	7.5 / 190.5	0.94 / 23.9	5 / 127	4	0.75 / 19.1	6 / 152.4	4.9
AGF	PVDF 4)	3	150	7.5 / 190.5	0.94 / 23.9	5 / 127	4	0.75 / 19.1	6 / 152.4	0.9
ASJ	AISI 316/316L 2)	3	300	8.25 / 209.5	1.12 / 28.6	5 / 127	8	0.88 / 22.4	6.62 / 168.1	6.8
AHJ	AISI 316/316L 2)	4	150	9 / 228.6	0.94 / 23.9	6.19 / 157.2	8	0.75 / 19.1	7.5 / 190.5	7.1
AHN	ECTFE 3)	4	150	9 / *228.6*	0.94 / 23.9	6.19 / 157.2	8	0.75 / 19.1	7.5 / 190.5	7.1
ATJ	AISI 316/316L 2)	4	300	10 / 254	1.25 / 31.8	6.19 / 157.2	8	0.88 / 22.4	7.88 / 200.2	11.6

1) Housing weight → 🖹 66

2) Combination of AISI 316 for required pressure resistance and AISI 316L for required chemical resistance (dual rated)

3) ECTFE coating on AISI 316/316L (1.4404/1.4435). When operating in hazardous areas, avoid electrostatic charging of the plastic surfaces.

4) OPL.: 15 bar (225 psi)
Process temperature range: –10 to +60 °C (+14 to +140 °F)

Process connections PMC51 (with ceramic process isolating diaphragm) - continued

JIS flanges, connection dimensions as per JIS B 2220 BL, raised face RF

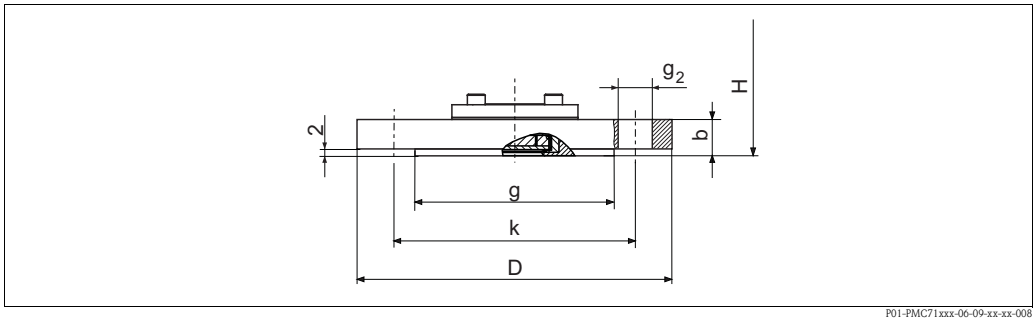

Process connection PMC51, JIS flange with raised face RF (flush-mounted process isolating diaphragm), material: AISI 316L → Installation height H, see table below.

	Flange					Boltholes			
Version	**Nominal diameter**	**Nominal pressure**	**Diameter** **D** [mm]	**Thickness** **b** [mm]	**Raised face** **g** [mm]	**Quantity**	**Diameter** **g_2** [mm]	**Hole circle** **k** [mm]	**Flange weight** [1)] [kg]
KFJ	50 A	10 K	155	16	96	4	19	120	2.0
KGJ	80 A	10 K	185	18	127	8	19	150	3.3
KHJ	100 A	10 K	210	18	151	8	19	175	4.4

1) Housing weight, see → 66

Process connections PMC51 (with ceramic process isolating diaphragm) - continued

Installation height H for devices with flange

F31 housing	**F15 housing**
201 mm (7.91 in)	193 mm (7.6 in)

Process connections PMC51 (with ceramic process isolating diaphragm) - continued

Hygienic process connection, flush-mounted process isolating diaphragm

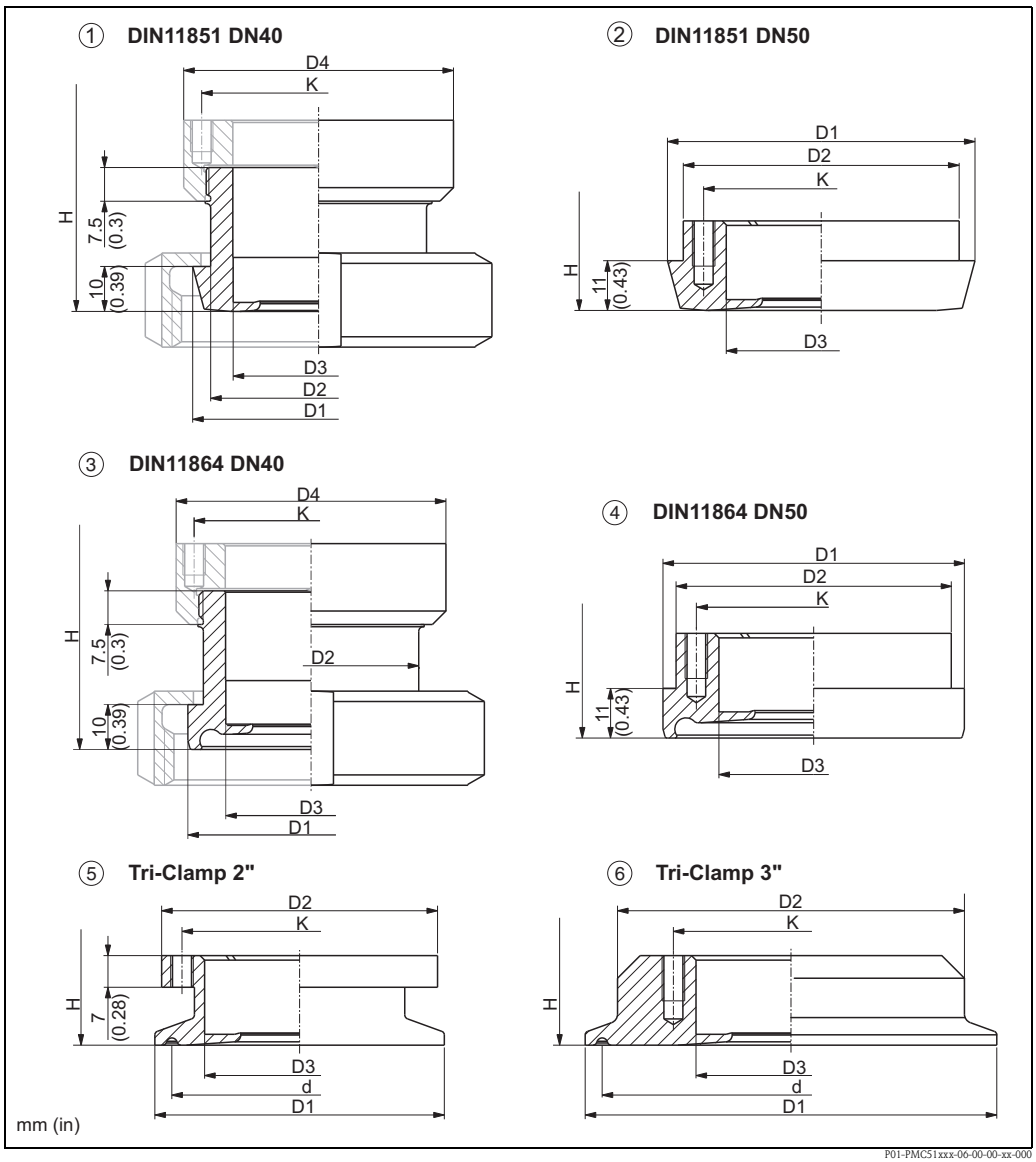

Hygienic process connections, material: AISI 316L (1.4435); Delta ferrite content <1 %
Surface roughness of the surfaces in contact with the medium R_a 0.76 µm (30 µin). Diaphragm seal versions optionally in conformity with ASME-BPE for use in biochemical processes, wetted surfaces R_a 0.38 µm (15 µin), electropolished; to be ordered using feature 570 "Service", version "HK" in the order code.

Pos.	Version	Nominal pressure PN	Outer-Ø D1	Outer-Ø D2	Internal-Ø D3	Outer-Ø D4	Seal-Ø d	Hole circle K[1)]	Height H	Weight [kg/lbs]
1	MZJ	25	56 (2.2)	48 (1.89)	38 (1.5)	60 (2.36)	-	52 (2.05)	max. 220 (8.66)	0.652 (1.44)
2	MRJ	25	68 (2.68)	61 (2.4)	42 (1.65)	-	-	52 (2.05)		0.276 (0.61)
3	NCJ	16	54.9 (2.16)	48 (1.89)	38 (1.5)	60 (2.36)	-	52 (2.05)		0.656 (1.45)
4	NDJ	16	66.8 (2.63)	61 (2.4)	42 (1.65)	-	-	52 (2.05)		0.288 (0.64)
5	TDJ	40	64 (2.52)	61 (2.4)	42 (1.65)	-	56.5 (2.22)	52 (2.05)		0.171 (0.38)
6	TFJ	40	91 (3.58)	76.7 (3.02)	42 (1.65)	-	83.5 (3.29)	52 (2.05)		0.539 (1.19)

mm (in)

1) 4 x M5 thread

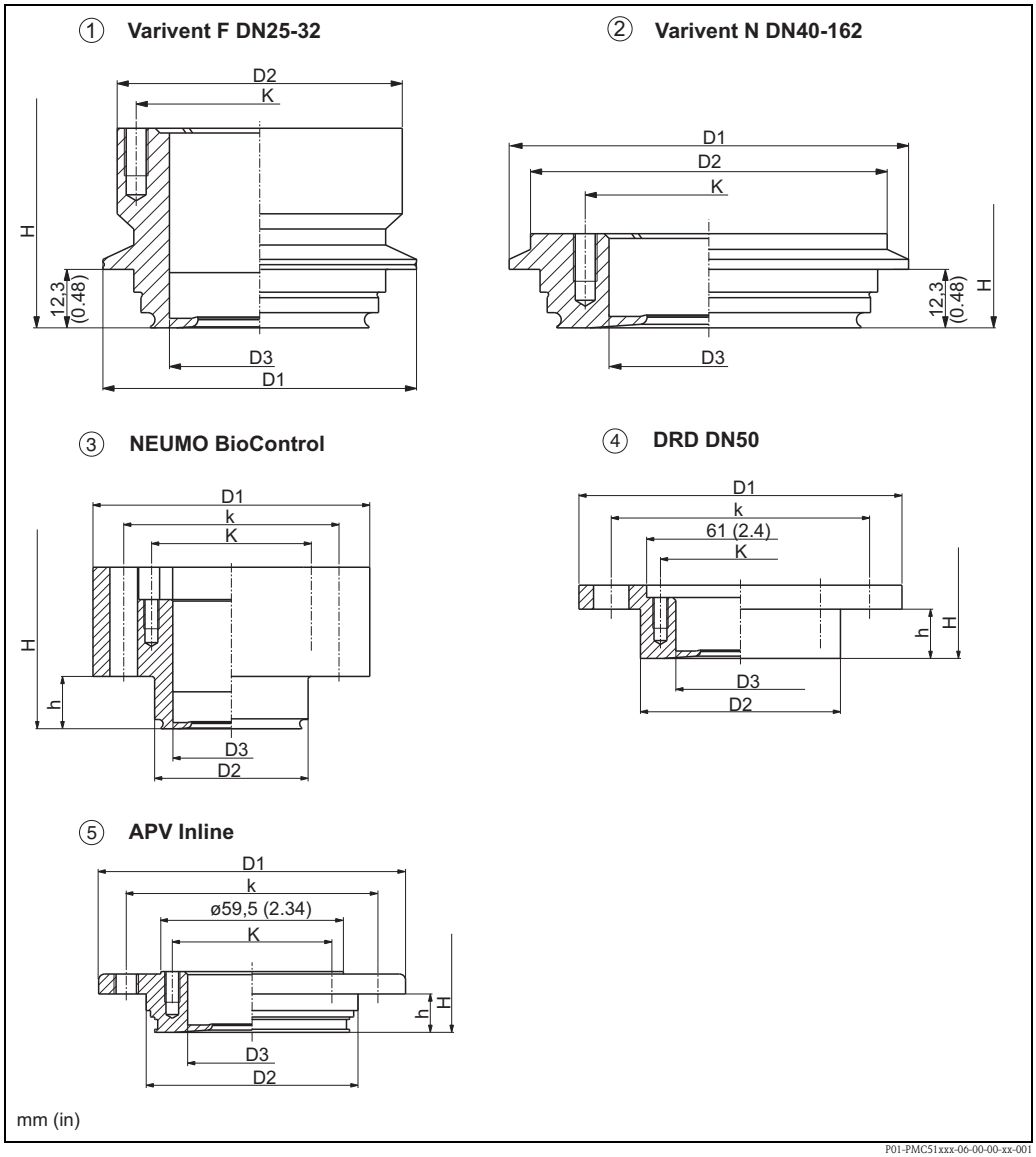

Hygienic process connections, material: AISI 316L (1.4435); Delta ferrite content <1 %
Surface roughness of the surfaces in contact with the medium R_a 0.76 µm (30 µin). Diaphragm seal versions optionally in conformity with ASME-BPE for use in biochemical processes, wetted surfaces R_a 0.38 µm (15 µin), electropolished; to be ordered using feature 570 "Service", version "HK" in the order code.

Pos.	Version	Nominal pressure PN	Outer-Ø D1	Outer-Ø D2	Internal-Ø D3	Hole circle K	Hole circle k[1)]	Height H	Height h	Weight [kg/lbs]
1	TQJ	40	66 (2.6)	60 (2.36)	38 (1.5)	52 (2.05)[2)]	-	max. 220 (8.66)	-	0.459 (1.01)
2	TRJ	40	84 (3.31)	75 (2.95)	42 (1.65)	52 (2.05)[2)]	-		-	0.426 (0.94)
3	S4J	40	90 (3.54)	49.9 (1.96)	38 (1.5)	52 (2.05)[2)]	90 (3.54)[3)]		17 (0.67)	1.34 (2.95)
4	TIJ	25	105 (4.13)	65 (2.56)	42 (1.65)	52 (2.05)[2)]	84 (3.31)[4)]		16 (0.63)	0.619 (1.36)
5	TMJ	40	100 (3.94)	69 (2.72)	42 (1.65)	52 (2.05)[2)]	82 (3.23)[5)]		12.5 (0.49)	0.519 (1.14)

mm (in)

1) 4 x M5 thread

2) 4 x M5 thread

3) 4 x ∅9 (0.35); 4 screws DIN912 M8 x 45 are enclosed (material (A4-80))

4) 4 x ∅11.5 (0.45)

5) 6 x ∅8.6 (0.34) + 2 x M8 thread; 8 x 45° (=360)

Process connections PMC51 (with ceramic process isolating diaphragm) - continued

Universal adapter

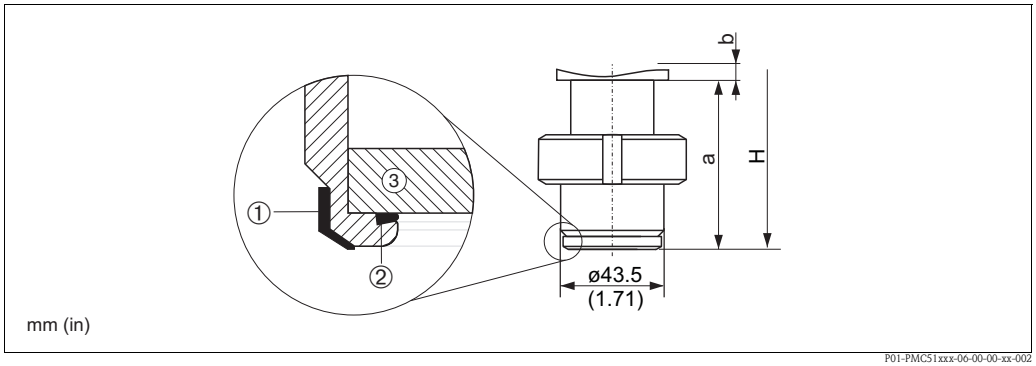

Material: b = top section AISI 316L (1.4404), a = bottom section AISI 316L (1.4435); Endress+Hauser supplies the slotted nut in stainless steel AISI 304 (DIN/EN material number 1.4301) or in AISI 304L (DIN/EN material number 1.4307).

Surface roughness of the surfaces in contact with the medium R_a 0.76 µm (30 µin). Diaphragm seal versions optionally in conformity with ASME-BPE for use in biochemical processes, wetted surfaces R_a 0.38 µm (15 µin), electropolished; to be ordered using feature 570 "Service", version "HK" in the order code.

Version	Process connection approval[1)]	Material of the molded seal ① (changeable)	Material of the measuring cell seal ② (not changeable) at the ceramic sensor ③	Measuring cell seal approval	Nominal Pressure PN	Weight [kg/lbs]
UPJ	EHEDG, 3A	Silicone (Spare part order no.: 52023572)	EPDM (Order version "K")	FDA[2)] 3A Class II, USP Class VI. DVGW, KTW, W270, WRAS, ACS, NSF61	10	0.74 (1.63)
UNJ	EHEDG	EPDM (Spare part order no.: 71100719)	EPDM (Order version "J")	FDA[2)]		

1) EHEDG or 3A approval only with approved process connection.

2) Suitable for foods FDA 21 CFR 177.2600

Installation height H, devices with universal adapter

F31 housing	F15 housing
196 mm (7.72 in)	189 mm (7.44 in)

Process connections PMP51 (with metallic process isolating diaphragm)

Thread, internal process isolating diaphragm

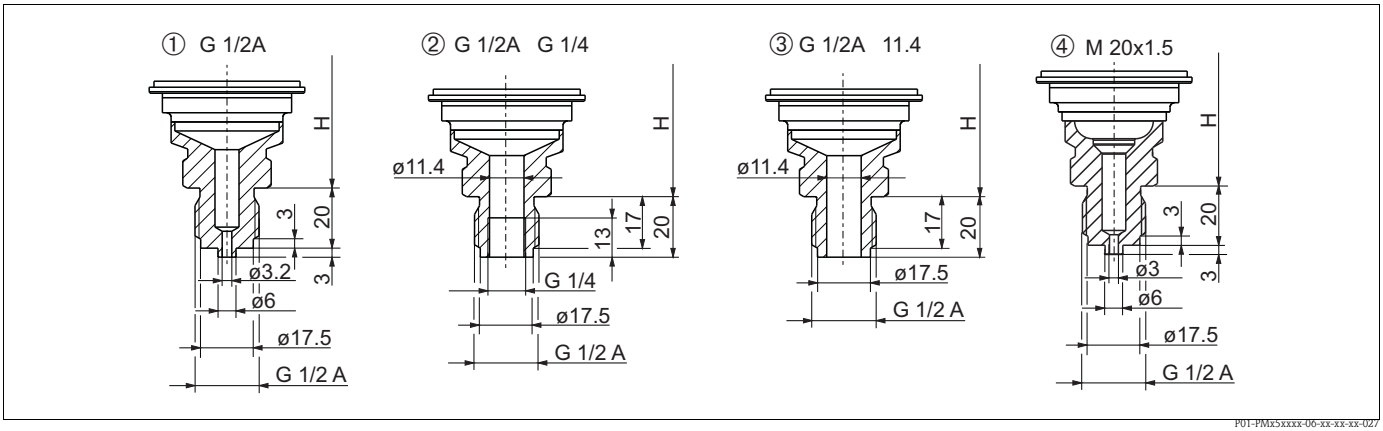

Process connections PMP51, thread ISO and DIN
Installation height H → 🖹 42.

1 Thread ISO 228 G 1/2 A EN 837;
Material version GCJ: AISI 316L, version GCC: Alloy C276; weight: 0.6 kg (1.32 lbs)
2 Thread ISO 228 G 1/2 A G 1/4 (female);
Material version GLJ: AISI 316L, version GLC: Alloy C276; weight: 0.6 kg (1.32 lbs)
3 Thread ISO 228 G 1/2 A hole 11.4 mm (0.45 in);
Material version GMJ: AISI 316L, version GMC: Alloy C276; weight: 0.6 kg (1.32 lbs)
4 Thread DIN13 M20x1.5
Material version G1J: AISI 316L; weight 0.4 kg (0.88 lbs)

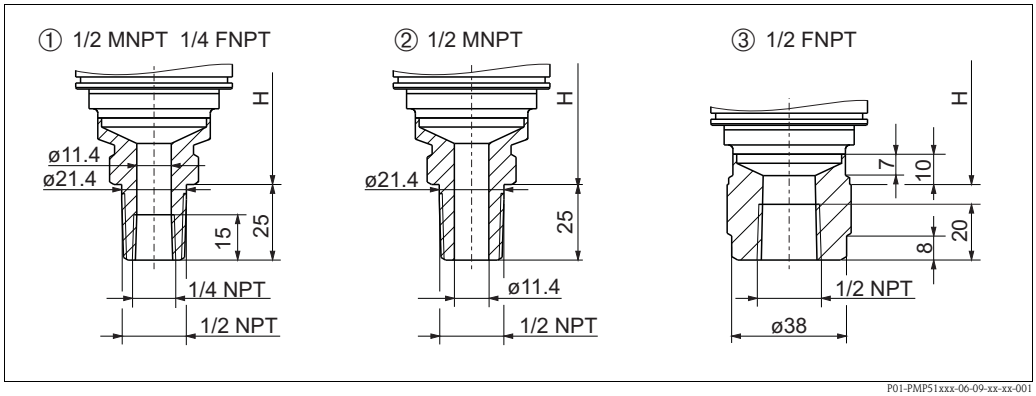

Process connections PMP51, thread ANSI
Installation height H → 🖹 42.

1 Thread ANSI 1/2 MNPT 1/4 FNPT;
Material version RLJ: AISI 316L, version RLC: Alloy C276; weight: 0.6 kg (1.32 lbs)
2 Thread ANSI 1/2 MNPT hole: 400 bar (6000 psi) = 11.4 mm (0.45 in)
Material version RKJ: AISI 316L, version RKC: Alloy C276; weight: 0.6 kg (1.32 lbs)
3 Thread ANSI 1/2 FNPT;
Material version R1J: AISI 316L, version R1C: Alloy C276/2.4819; Weight: 0.7 kg (1.54 lbs)

Installation height H for devices with threaded connection and internal process isolating diaphragm

	F31 housing	**F15 housing**
Height H	169 mm (6.65 in)	150 mm (5.91 in)

Process connections PMP51 (with metallic process isolating diaphragm) – continued

Thread, flush-mounted process isolating diaphragm

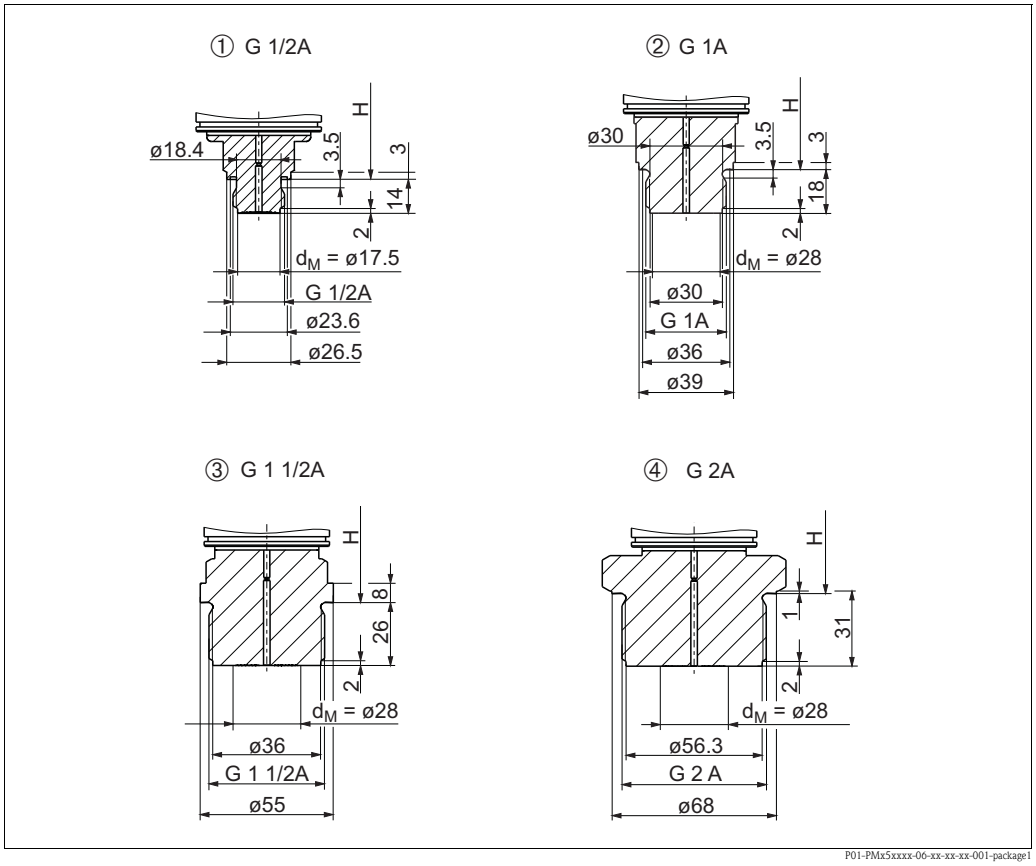

Thread ISO 228
Installation height H → 📄 44.

1 Thread ISO 228 G 1/2 A DIN 3852 (viton seal included);
Material version GRJ: AISI 316L, version GRC: : Alloy C276; weight: 0.4 kg (0.88 lbs)
2 Thread ISO 228 G 1 A (viton seal included);
Material version GTJ: AISI 316L; weight: 0.7 kg (1.54 lbs)
3 Thread ISO 228 G 1 1/2 A
Material version GVJ: AISI 316L; weight: 1.1 kg (2.43 lbs)
4 Thread ISO 228 G 2 A
Material version GWJ: AISI 316L; weight: 1.5 kg (3.31 lbs)

Note!
Endress+Hauser offers a pressure sensor dummy for the welding neck with order number 52002643. Order number for pressure sensor dummy: 52005082

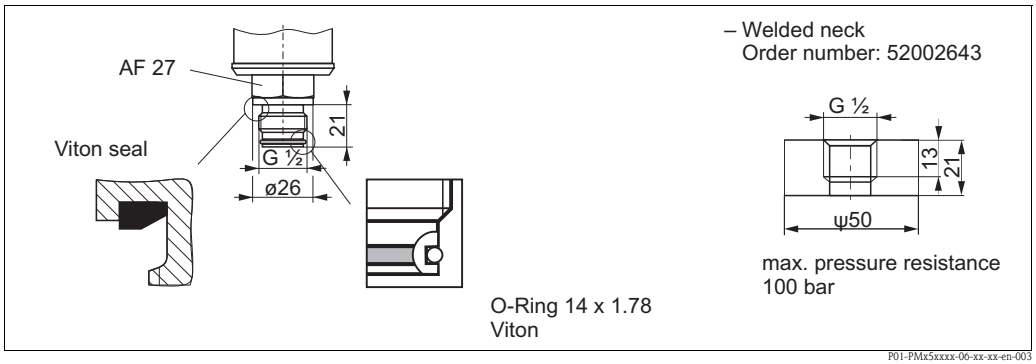

Version G0J: Thread ISO 228 G1/2; weight: 0.4 kg (0.88 lbs)

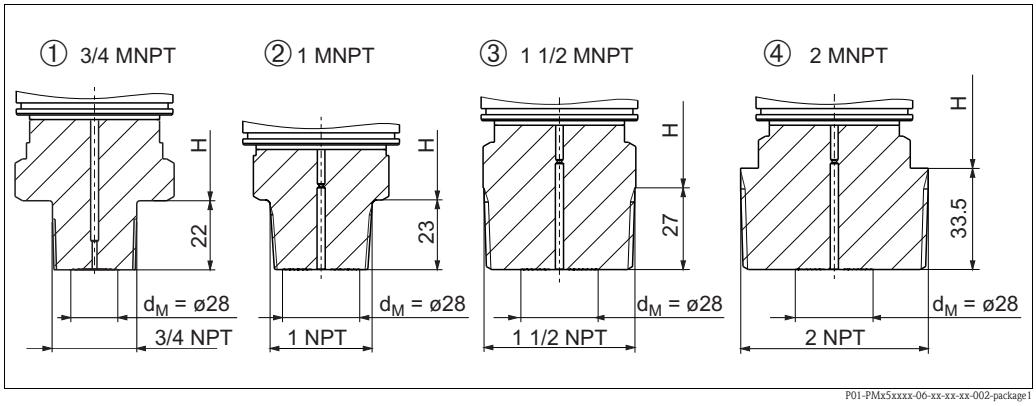

Process connections PMP51 thread ANSI
Installation height H see following table.

1 Thread ANSI 3/4 MNPT;
Material version U4J: AISI 316L; weight: 0.6 kg (1.32 lbs)
2 Thread ANSI 1 MNPT;
Material version U5J: AISI 316L; weight: 0.7 kg (1.54 lbs)
3 Thread ANSI 1 1/2 MNPT;
Material version U7J: AISI 316L; weight: 1.0 kg (2.21 lbs)
4 Thread ANSI 2 MNPT
Material version U8J: AISI 316L; weight: 1.3 kg (2.86 lbs)

Installation height H for devices with threaded connection and flush-mounted process isolating diaphragm

Description	F31 housing	F15 housing
G 1/2	163 mm (6.42 in)	148 mm (5.83 in)
G 1	167 mm (6.57 in)	152 mm (5.98 in)
G 1 1/2 A	163 mm (6.42 in)	148 mm (5.83 in)
G 2 A	162 mm (6.38 in)	147 mm (5.79 in)
3/4 MNPT	165 mm (6.5 in)	150 mm (5.91 in)
1 MNPT	162 mm (6.38 in)	147 mm (5.79 in)
1 1/2 MNPT	169 mm (6.65 in)	150 mm (5.91 in)
2 MNPT	199 mm (7.83 in)	144 mm (5.67 in)
M 20x1.5	163 mm (6.42 in)	148 mm (5.83 in)

Process connections PMP51 (with metallic process isolating diaphragm) - continued

EN/DIN flanges, connection dimensions as per EN 1092-1/DIN 2527

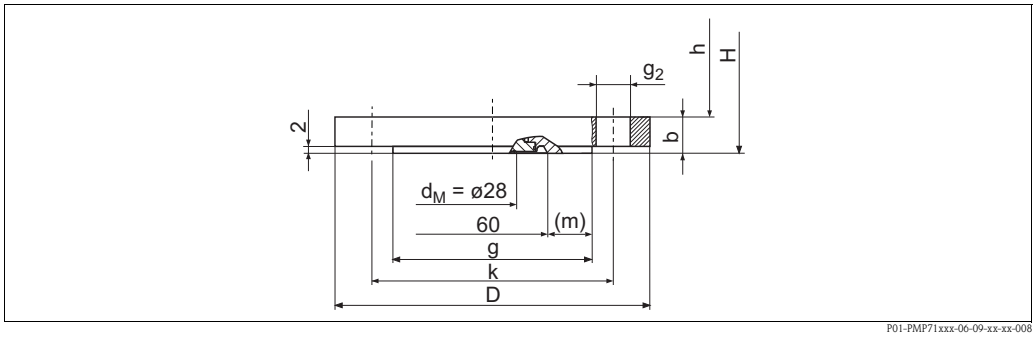

Process connection PMP51, EN/DIN flange with raised face, material AISI 316L

H: device height = height of device without flange h + flange thickness b
Height H → 🖹 46.

	Flange [1]							Boltholes			
Version	**Nominal diameter**	**Nominal pressure**	**Shape [2]**	**Diameter** **D** [mm]	**Thickness** **b** [mm]	**Raised face** **g** [mm]	**Width of the raised face** **(m)** [mm]	**Quantity**	**Diameter** **g_2** [mm]	**Hole circle** **k** [mm]	**Flange weight [3]** [kg]
CNJ	DN 25	PN 10-40	B1 (D)	115	18	68 [4]	4	4	14	85	1.2
CPJ	DN 32	PN 10-40	B1 (D)	140	18	78 [4]	9	4	18	100	1.9
CQJ	DN 40	PN 10-40	B1 (D)	150	18	88 [4]	14	4	18	110	2.2
CXJ	DN 50	PN 25/40	B1 (D)	165	20	102	-	4	18	125	3.0
CZJ	DN 80	PN 10-40	B1 (D)	200	24	138	-	8	18	160	5.5

1) The roughness of the surface in contact with the medium is R_a 0.8 µm (31.5 µin). Lower surface roughness available on request.

2) Designation as per DIN 2527 in brackets

3) Housing weight → 🖹 66

4) With these process connections the sealing surface is smaller than described in the standard. Due to a smaller sealing surface a special seal must be used. Contact a seal manufacturer or your local Endress+Hauser Sales Center.

Process connections PMP51 (with metallic process isolating diaphragm) - continued

ANSI flanges, connection dimensions as per ANSI B 16.5, raised face RF

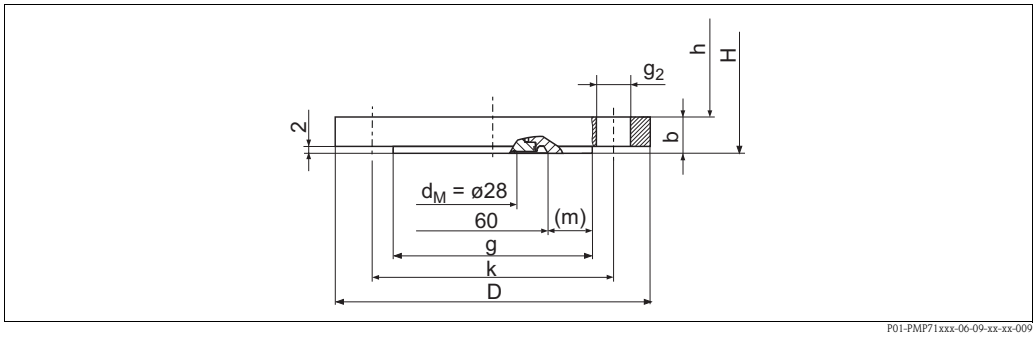

Process connection PMP51, ANSI flange with raised face RF (see table below)

H: device height = height of device without flange h + flange thickness b.. For height H → 46.

	Flange [1]							Boltholes			
Version	**Material**	**Nominal diameter**	**Class/ Nominal pressure**	**Diameter**	**Thickness**	**Diameter of raised face**	**Width of the raised face**	**Quantity**	**Diameter**	**Hole circle**	**Flange weight [2]**
				D	**b**	**g**	**(m)**		**g_2**	**k**	
		[in]		[in] / [mm]	[in] / [mm]	[in] / [mm]	[in] / [mm]		[in] / [mm]	[in] / [mm]	[kg]
ANSI flanges											
ANJ	AISI 316/316L [3]	1	300 lb./sq.in	4.88 / 124	0.69 / 17.5	2.76 [4] / 50.8	0.2 / 5	4	0.75 / 19.1	3.5 / 88.9	1.3
AEJ	AISI 316/316L [3]	1 1/2	150 lb./sq.in	5 / 127	0.69 / 17.5	2.88 [4] / 73.2	0.52 / 6.6	4	0.62 / 15.7	3.88 / 98.6	1.5
AQJ	AISI 316/316L [3]	1 1/2	300 lb./sq.in	6.12 / 155.4	0.81 / 20.6	2.88 [4] / 73.2	0.52 / 6.6	4	0.88 / 22.4	4.5 / 114.3	2.6
AFJ	AISI 316/316L [3]	2	150 lb./sq.in	6 / 152.4	0.75 / 19.1	3.62 / 91.9	-	4	0.75 / 19.1	4.75 / 120.7	2.4
ARJ	AISI 316/316L [3]	2	300 lb./sq.in	7.5 / 190.5	0.88 / 22.3	3.62 / 91.9	-	8	0.75 / 19.1	5 / 127	3.2
AGJ	AISI 316/316L [3]	3	150 lb./sq.in	7.5 / 190.5	0.94 / 23.9	5 / 127	-	4	0.75 / 19.1	6 / 152.4	4.9
ASJ	AISI 316/316L [3]	3	300 lb./sq.in	8.25 / 209.5	1.12 / 28.6	5 / 127	-	8	0.88 / 22.4	6.62 / 168.1	6.7
AHJ	AISI 316/316L [3]	4	150 lb./sq.in	9 / 228.6	0.94 / 23.9	6.19 / 157.2	-	8	0.75 / 19.1	7.5 / 190.5	7.1
ATJ	AISI 316/316L [3]	4	300 lb./sq.in	10 / 254	1.25 / 31.8	6.19 / 157.2	-	8	0.88 / 22.4	7.88 / 200.2	11.6

1) The roughness of the surface in contact with the medium is R_a 0.8 µm (31.5 µin). Lower surface roughness available on request.

2) Housing weight → 66

3) Combination of AISI 316 for required pressure resistance and AISI 316L for required chemical resistance (dual rated)

4) With these process connections the sealing surface is smaller than described in the standard. Due to a smaller sealing surface a special seal must be used. Contact a seal manufacturer or your local Endress+Hauser Sales Center.

Process connections PMP51 (with metallic process isolating diaphragm) - continued

Height H for devices with flange

	F31 housing	F15 housing
Height H	165 mm (6.5 in)	150 mm (5.91 in)

Process connections PMP51 (with metallic process isolating diaphragm) - continued

Hygienic process connection, flush-mounted process isolating diaphragm

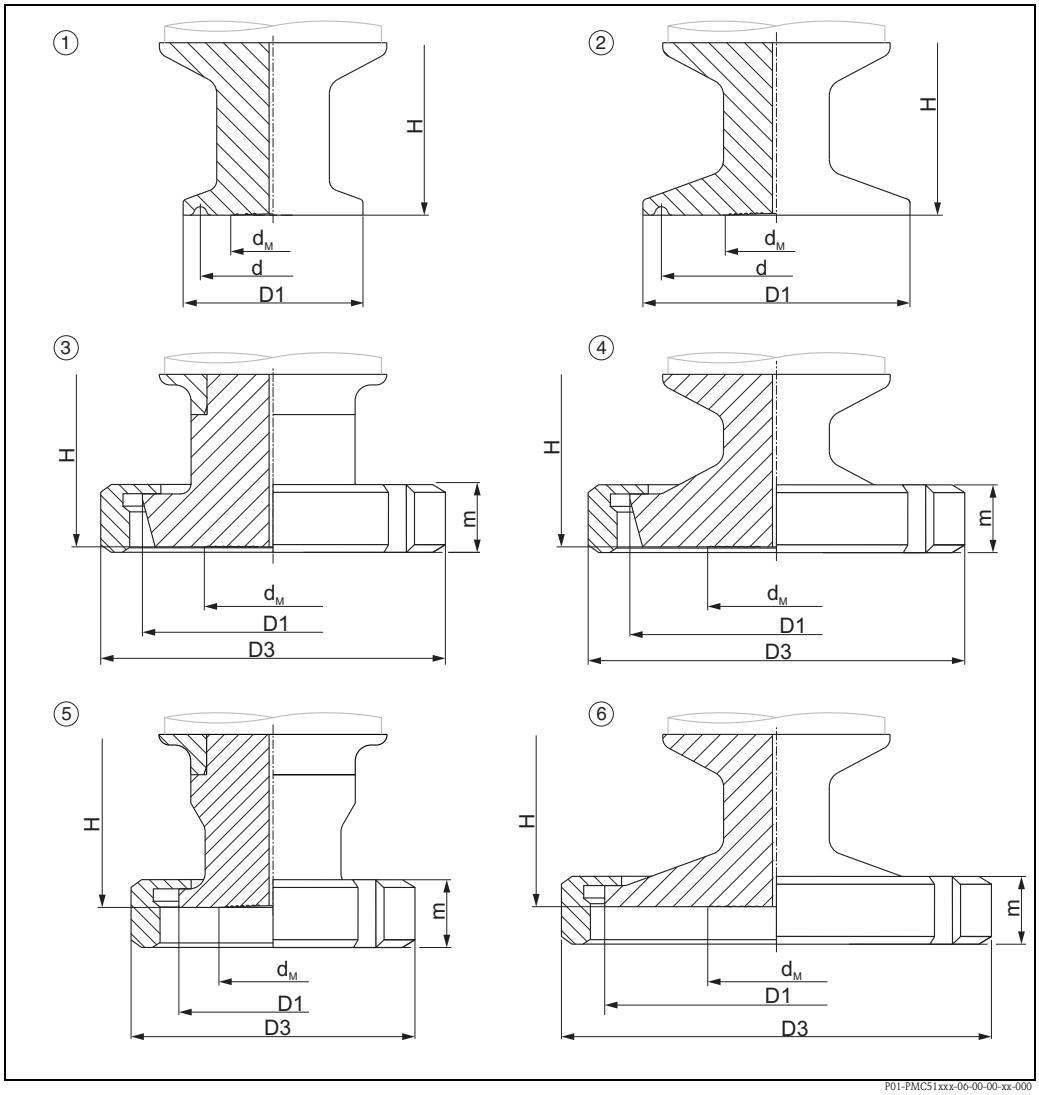

Hygienic process connections, material: AISI 316L (1.4435)
Surface roughness of the surfaces in contact with the medium R_a 0.76 µm (30 µin). Diaphragm seal versions optionally in conformity with ASME-BPE for use in biochemical processes, wetted surfaces R_a 0.38 µm (15 µin), electropolished; to be ordered using feature 570 "Service", version "HK" in the order code.

Pos.		Version	Nominal pressure PN	Outer-Ø D1	Outer-Ø D3	Seal-Ø d	Membrane-Ø d_M	Height H	Height m	Weight kg (lbs)
1	Clamp DN18-22	TBJ	40	34 (1.34)	-	27.5 (1.08)	17.2 (0.68)	max. 165 (6.5)	-	0.5 (1.10)
2	Clamp 1"	TCJ	40	50.5 (1.99)	-	43.5 (1.71)	21.65 (0.85)		-	0.6 (1.32)
	Clamp 1½"	TJJ	40	50.5 (1.99)	-	43.5 (1.71)	28 (1.10)		-	0.6 (1.32)
	Clamp 2"	TDJ	40	64 (2.52)	-	56.5 (2.22)	28 (1.10)		-	0.7 (1.54)
3	DIN11851 B25	MXJ	40	43.4 (1.71)	63 (2.48)	-	28 (1.10)		21 (0.83)	0.7 (1.54)
	DIN11851 B32	MIJ	40	49.4 (1.94)	70 (2.76)	-	28 (1.10)		21 (0.83)	0.8 (1.76)
4	DIN11851 B40	MZJ	40	55.4 (2.18)	78 (3.07)	-	28 (1.10)		21 (0.83)	0.9 (1.98)
	DIN11851 B50	MRJ	25	67.4 (2.65)	92 (3.62)	-	28 (1.10)		22 (0.87)	1.1 (2.43)
5	SMS 1"	T6J	25	35.5 (1.4)	51 (2.01)	-	21.65 (0.85)		20 (0.79)	0.7 (1.54)
6	SMS 1½"	T7J	25	55 (2.17)	74 (2.91)	-	28 (1.10)		25 (0.98)	0.8 (1.76)
	SMS 2"	TXJ	25	65 (2.56)	84 (3.31)	-	28 (1.10)		26 (1.02)	0.9 (1.98)

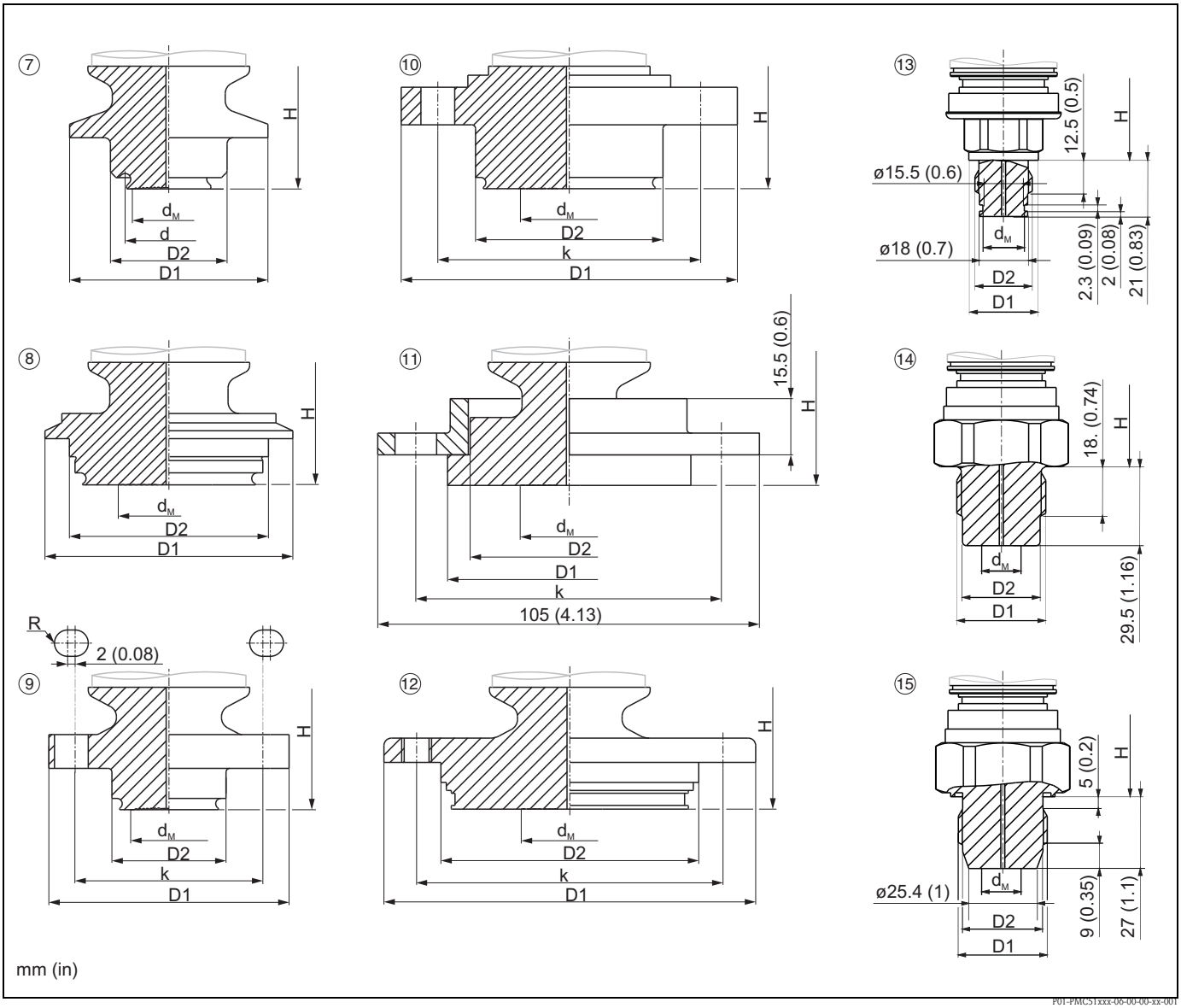

Hygienic process connections, material: AISI 316L (1.4435)
Surface roughness of the surfaces in contact with the medium R_a 0.76 µm (30 µin). Diaphragm seal versions optionally in conformity with ASME-BPE for use in biochemical processes, wetted surfaces R_a 0.38 µm (15 µin), electropolished; to be ordered using feature 570 "Service", version "HK" in the order code.

Pos.		Version	Nominal pressure PN	Outer-Ø D1	Outer-Ø D2	Hole circle-Ø k	Membran-Ø d_M	Height H	Weight kg (lbs)
7	Varivent B	TPJ	40	52.7 (2.07)	31 (1.22)	-	21.65 (0.85)	max. 165 (6.5)	0.7 (1.54)
8	Varivent F	TQJ	40	66 (2.6)	53 (2.09)	-	28 (1.10)		0.9 (1.98)
	Varivent N	TRJ	40	84 (3.31)	68 (2.68)	-	28 (1.10)		1.1 (2.43)
9	Neumo D25	S1J	16	64 (2.52)	30.4 (1.2)	50 (1.97); 4 x, R 3,5 mm (0.14 in)	21.65 (0.85)		0.8 (1.76)
10	Neumo D50	S4J	16	89.5 (3.52)	49.9 (1.96)	70 (2.76); 4 x ø 9 mm (0.35 in)	28 (1.10)		1.2 (2.65)
11	DRD	TIJ	25	64.5 (2.54)	52.5 (2.07)	84 (3.31); 4 x ø 11.5 mm (0.45 in)	28 (1.10)		1.0 (2.21)
12	APV Inline	TMJ	10	99.5 (3.92)	69 (2.72)	82 (3.23); 6 x ø 8.6 mm (0.34 in) + 2 x M8	28 (1.10)		1.2 (2.65)
13	G 1/2	G0J	40	26	G 1/2	-	17.5 (0.69)		0.5 (1.1)
14	G 1	GZJ	40	G 1	29	-	17.5 (0.69)		0.8 (1.76)
15	G 1	GXJ	100	G 1	30	-	17.5 (0.69)		0.8 (1.76)

Process connections PMP51 (with metallic process isolating diaphragm) – continued

Prepared for diaphragm seal mount

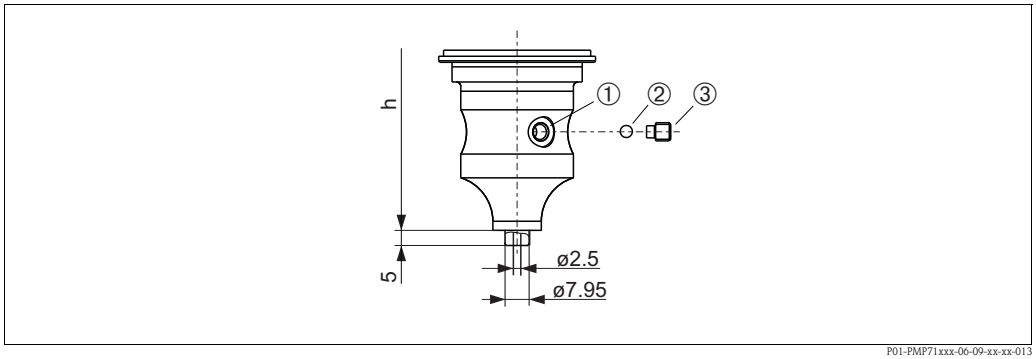

Version XSJ: prepared for diaphragm seal mount

1 Hole for fill fluid
2 Bearing
3 Setscrew with a hexagonal recess 4 mm (0.16 in)

	F31 housing	F15 housing
Height H	190 mm (7.48 in)	175 mm (6.89 in)

PMP55 basic device

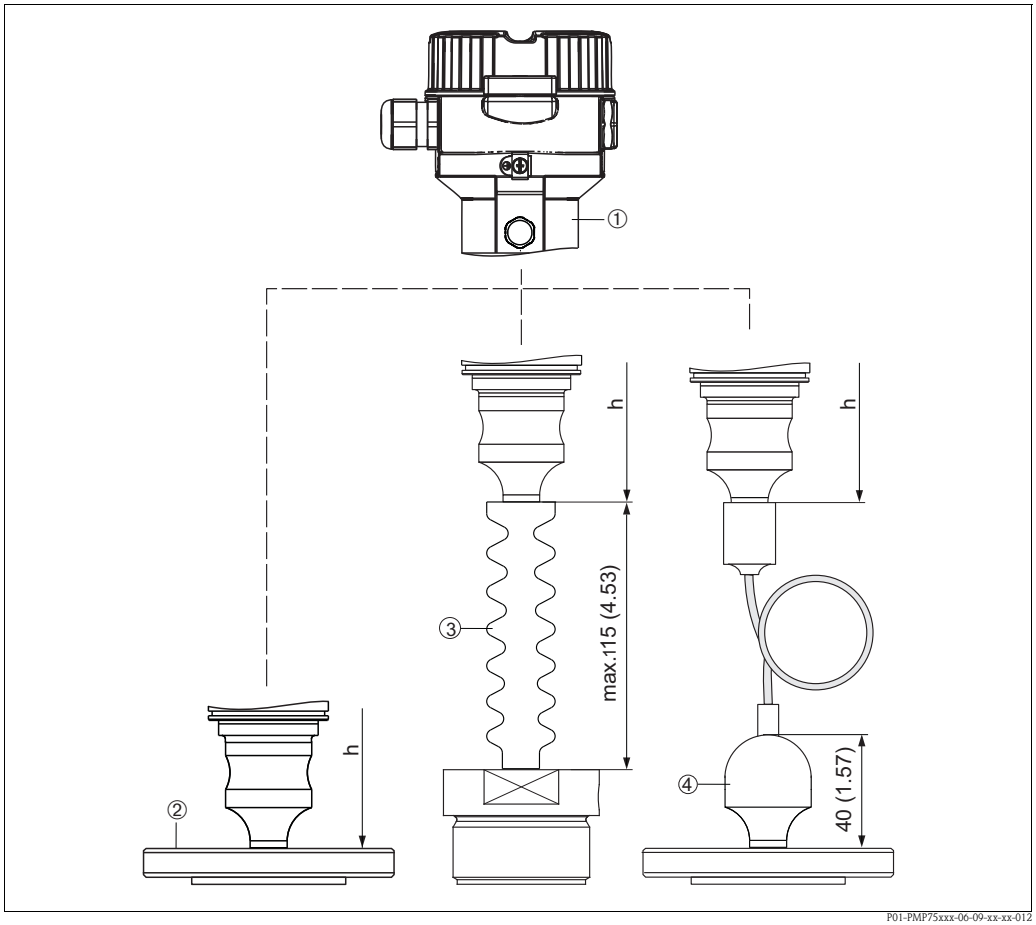

PMP55 basic device with diaphragm seal

1 PMP55 basic device
2 Diaphragm seal, here e.g. flange diaphragm seal
3 Diaphragm seal with temperature isolator
4 Process connections with capillary tubes are 40 mm (1,57 in) higher than process connections without capillary tubes

	F31 housing	F15 housing
Height H	190 mm (7.48 in)	175 mm (6.89 in)

Note!
- The weights of the diaphragm seals are given in the following tables. See → 66 for the weight of the housing.
- The following drawings are schematic diagrams. In other words, the dimensions of a diaphragm seal supplied may deviate from the dimensions given in this document.
- When using high-temperature oils the design can deviate significantly.
- Observe the information in the "Planning instructions for diaphragm seal systems" section → 76 ff.
- For further information please contact your local Endress+Hauser Sales Center.

Process connections PMP55 (with diaphragm seal)

Diaphragm seal cell structure (Pancake)

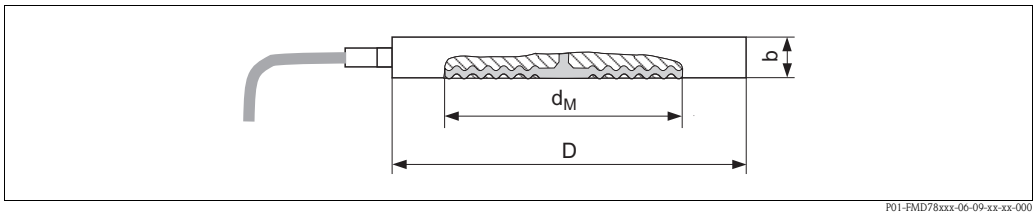

Process connection PMP55, material AISI 316L

	Flange				Diaphragm seal	
Version	**Nominal diameter**	**Nominal pressure** [1]	**Max. diameter D** [mm]	**Thickness b** [mm]	**Max. diameter of the process isolating diaphragm d_M** [mm]	**Weight of two diaphragm seals** [kg]
UIJ	DN 50	PN 16-400	102	20	59	2.6
UJJ	DN 80	PN 16-400	138	20	89	4.6
UKJ	DN 100	PN 16-400	162	20	89	6.2
	[in]	[lb/sq.in]	[in (mm)]	[in (mm)]	[in (mm)]	[kg]
ULJ	2	150-2500	4.01 (102)	0.79 (20)	2.32 (59)	2.6
UMJ	3	150-2500	5.35 (136)	0.79 (20)	3.50 (89)	4.6
URJ	4	150-2500	6.22 (158)	0.79 (20)	3.50 (89)	6.2

1) The specified nominal pressure applies to the diaphragm seal. The maximum pressure for the measuring device is dependent on the lowest-rated element, with regard to pressure, of the selected components. See also → 32, "Pressure specifications" section.

Process connections PMP55 (with diaphragm seal) – continued

Thread, flush-mounted process isolating diaphragm

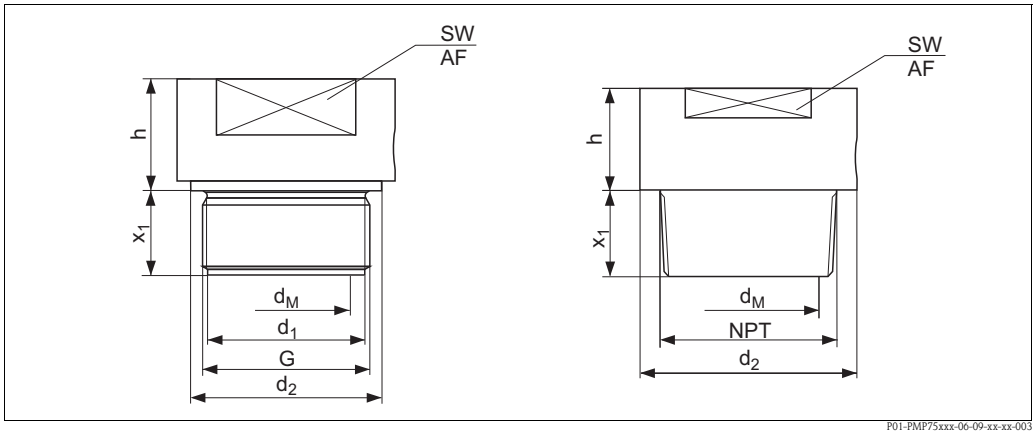

Process connections PMP55, left: thread ISO 228, right: thread ANSI

Threaded connection								Diaphragm seal		
Version	**Material**	**Thread**	**Nominal pressure** **PN**	**Diameter** **d_1** [mm]	**Diameter** **d_2** [mm]	**Screw-in length** **x_1** [mm]	**Across flats** **SW/AF**	**Max. diaphragm diameter** **d_M** [mm]	**Height** **h** [mm]	**Diaphragm seal weight** [kg]
GTJ	316L	G1	400	30	39	21[1)]	41	30	19	0.4
GTC	Alloy C276									0.5
GVJ	316L	G1 1/2 A	400	44	55	30	50	42	20	0.9
GVC	Alloy C276									1.0
GWJ	316L	G2	400	56	68	30	65	50	20	1.9
GWC	Alloy C276									2.1
U5J	316L	1 MNPT	400	-	48	28	41	24	37	0.6
U7J	316L	1 1/2 MNPT	400	-	60	30	41	36	20	0.9
U8J	316L	2 MNPT	400	-	78	30	65	38	35	1.8

1) 28 mm (1.1 in) in conjunction with high-temperature oil

Process connections PMP55 (with diaphragm seal) - continued

Pipe diaphragm seal (RDM) as per ISO2852

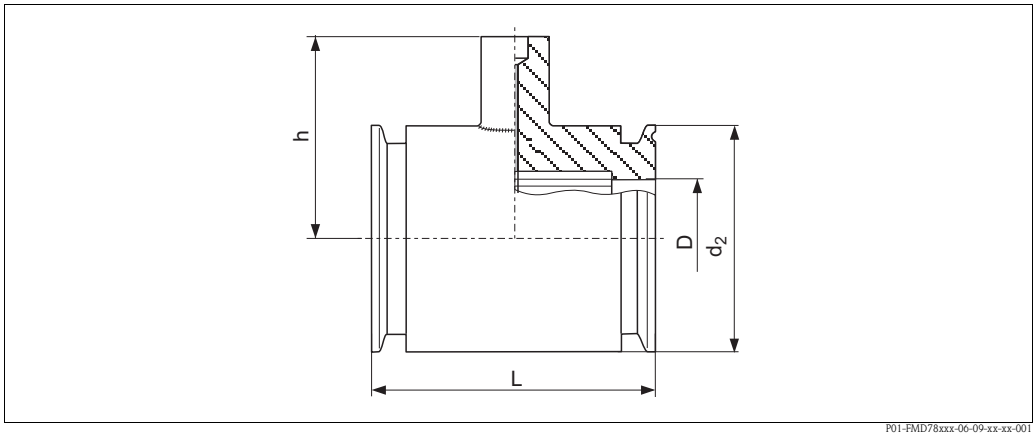

Process connection PMP55, material AISI 316L, surface roughness of the surfaces in contact with the medium $R_a \leq 0.8$ µm (31.5 µin) as standard. Lower surface roughness, see feature 570 "Service" version HK.

Version	Nominal diameter ISO2852	Nominal pressure	Nominal diameter	Diameter D [in]	Diameter d_2 [mm]	Height h [mm]	Face-to-face length L [mm]	Diaphragm seal weight [kg]
SBJ	DN 25	PN40	1"	22.5	50.5	67	126	1.7
SCJ	DN 38	PN40	1 1/2"	35.5	50.5	67	126	1.0
SDJ	DN 51	PN40	2"	48.6	64	79	100	1.7
SIJ	DN 10	PN40	3/4"	10.3	25	42	138.5	0.6
SJJ	DN 16	PN40	3/4"	15.7	25	67	116	0.9

Process connections PMP55 (with diaphragm seal) - continued

Aseptic screwed union, threaded connection, DIN 11864-1 Form A; pipe DIN 11866-A

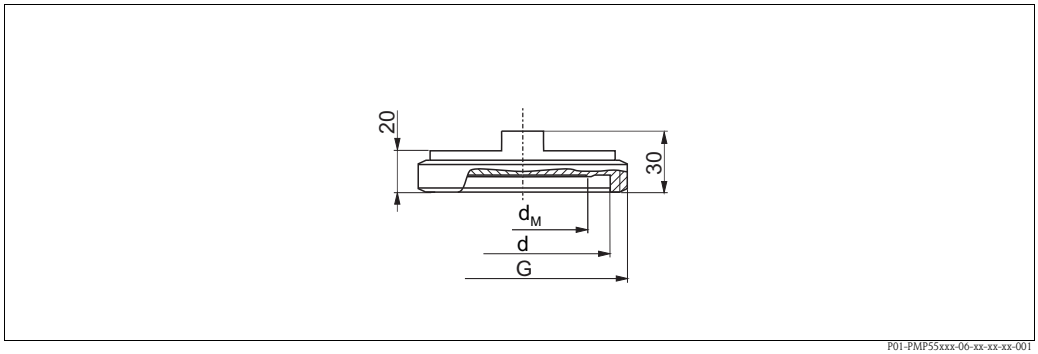

Process connection PMP55, material AISI 316L, surface roughness of the surfaces in contact with the medium Ra ≤ 0.8 µm (31.5 µin) as standard. Lower surface roughness, see feature 570 "Service" version HK.

	Threaded adapter				Diaphragm seal	
Version	Nominal diameter	Nominal pressure	Diameter d [mm]	Thread G	Max. diaphragm diameter d_M [mm]	Weight Diaphragm seal [kg]
NCJ	DN 40	PN 16	55	Rd 65 x 1/6	35	1.5
NDJ	DN 50		67	Rd 78 x 1/6	45	2.3

Aseptic flange connection, DIN 11864-2 Form A; pipe DIN 11866-1

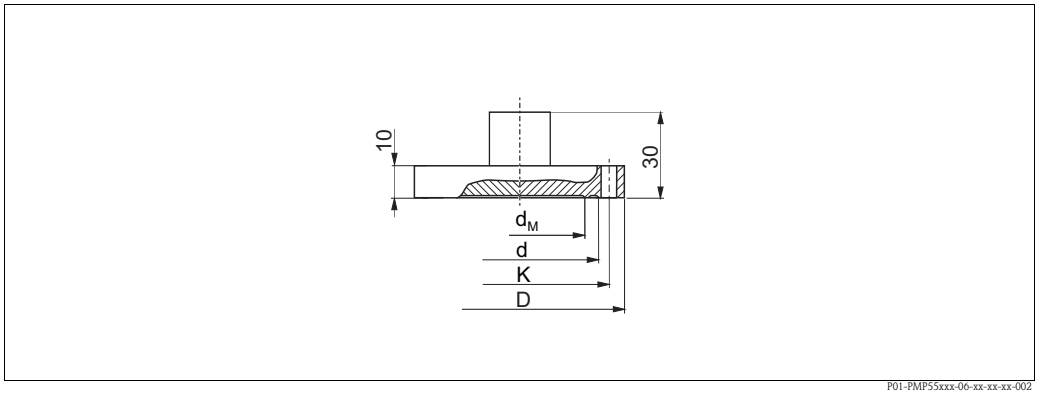

Process connection PMP55, material AISI 316L, surface roughness of the surfaces in contact with the medium Ra≤ 0.8 µm (31.5 µin) as standard. Lower surface roughness, see feature 570 "Service" version HK.

	Collar flange					Diaphragm seal	
Version	**Nominal diameter**	**Nominal pressure**	**Hole circle diameter** **K** [mm]	**Seal diameter** **d** [mm]	**Outer diameter** **D** [mm]	**Max. diaphragm diameter** **d_M** [mm]	**Diaphragm seal weight** [kg]
NFJ	DN 32	PN 16	59	47.7	76	25	1.5
NXJ	DN 40		65	53.7	82	35	1.7
NZJ	DN 50		77	65.7	94	45	2.2

Tri-Clamp ISO 2852

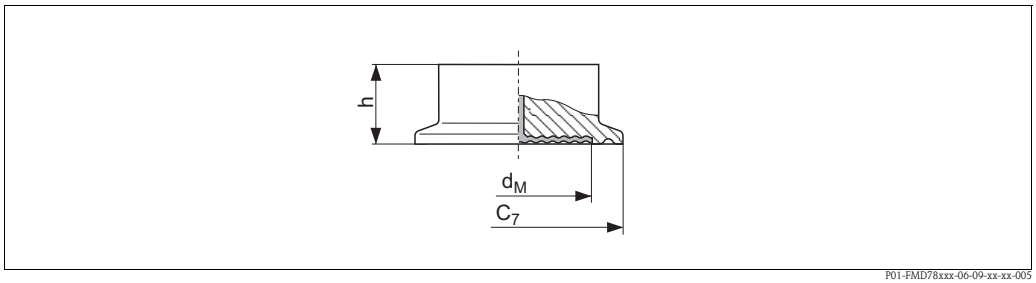

Process connection PMP55, material: AISI 316L, surface roughness of the surfaces in contact with the medium R_a≤ 0.8 µm (31.5 µin) as standard. Lower surface roughness, see feature 570 "Service" version HK.

Version	**Nominal diameter ISO 2852**	**Nominal diameter DIN 32676**	**Nominal diameter** **[in]**	**Diameter** **C_7 [mm]**	**Max. diaphragm diameter** **d_M [mm]**	**Height** **h [mm]**	**Diaphragm seal weight** **[kg]**
TCJ	DN 25	DN 25	1	50.5	24	37	0.32
TJJ [1)]	DN 38	DN 40	1 1/2	50.5	34	30	1.0
TDJ [1)]	DN 51	DN 50	2	64	48	30	1.1
TFJ	DN 76.1	–	3	91	73	30	1.2

1) Diaphragm seal versions optionally in conformity with ASME-BPE for use in biochemical processes, wetted surfaces R_a ≤ 0.38 µm (15 µin), electropolished; to be ordered using feature 570 "Service", version "HK" in the order code. In combination with the order version "electropolished", the wetted parts of the 1-½" and 2" Tri-Clamp connections are made of 316L (1.4435) with a delta-ferrite content of < 1% (welding seams excluded).

Varivent N for pipes

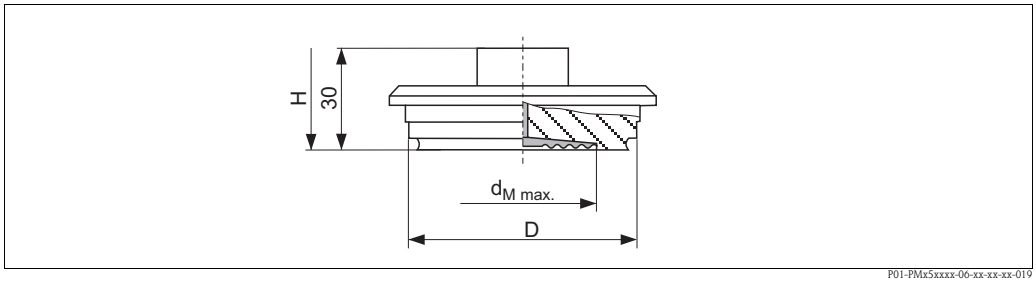

Process connection PMP55, material AISI 316, 3A, surface roughness of the surfaces in contact with the medium $R_a \leq$ 0.8 µm (31.5 µin) as standard. Lower surface roughness, see feature 570 "Service" version HK.

Version	Description	Nominal pressure [bar]	Diameter D [mm]	Max. diaphragm diameter d_M [mm]	Max. installation height H [mm]	Diaphragm seal weight [kg]
TQJ	Type F for tubes DN 25 - DN 32	PN 40	50	30	250	0.6
TRJ [1]	Type N for tubes DN 40 - DN 162		68	64		0.8

1) Diaphragm seal versions optionally in conformity with ASME-BPE for use in biochemical processes, wetted surfaces $R_a \leq$ 0.38 µm (15 µin), electropolished; to be ordered using feature 570 "Service", version "HK" in the order code. In combination with the order version "electropolished", the wetted parts of the Varivent connection are made of 316L (1.4435) with a delta-ferrite content of < 1% (welding seams excluded).

DRD DN50 (65 mm)

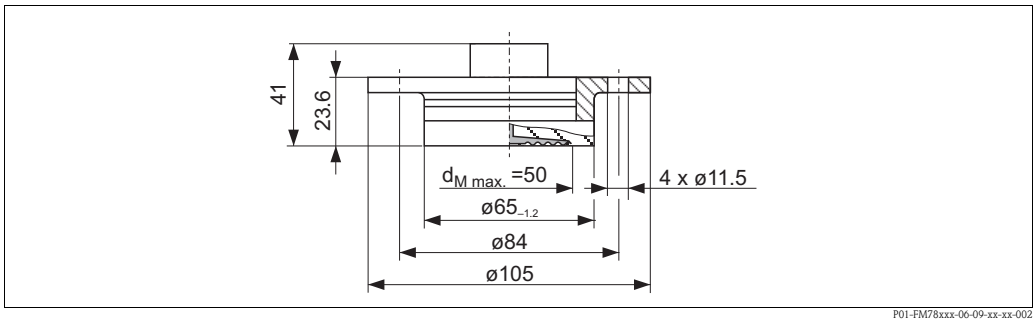

Process connection PMP55, surface roughness of the surfaces in contact with the medium $R_a \leq$ 0.8 µm (31.5 µin) as standard. Lower surface roughness, see feature 570 "Service" version HK.

Version	Material	Nominal pressure	Diaphragm seal weight [kg]
TIJ	AISI 316L	PN 25	0.75

SMS nozzles with coupling nut

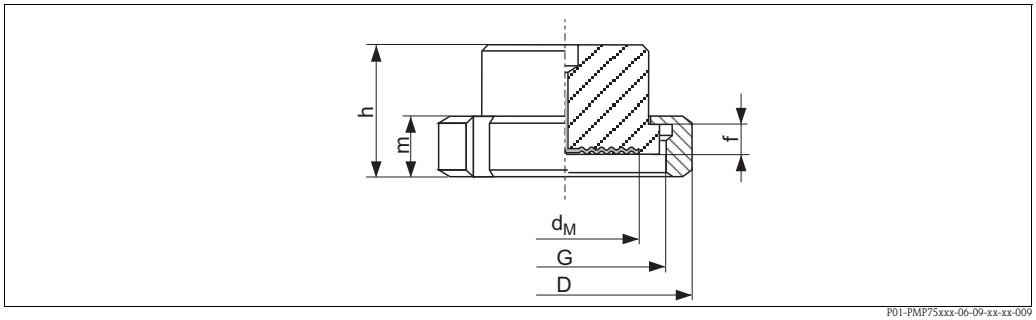

Process connection PMP55, material AISI 316L, surface roughness of the surfaces in contact with the medium Ra≤ 0.8 µm (31.5 µin) as standard. Lower surface roughness, see feature 570 "Service" version HK.

Version	Nominal diameter	Nominal pressure	Diameter	Adapter height	Thread	Height	Height	Max. diaphragm diameter	Diaphragm seal weight
			D	f	G	m	h	d_M	
	[in]	[bar]	[mm]	[mm]		[mm]	[mm]	[mm]	[kg]
T6J	1	PN 25	54	3.5	Rd 40 – 1/6	20	42.5	24	0.25
T7J	1 1/2	PN 25	74	4	Rd 60 – 1/6	25	57	36	0.65
TXJ	2	PN 25	84	4	Rd 70 – 1/6	26	62	48	1.05

APV-RJT nozzles with coupling nut

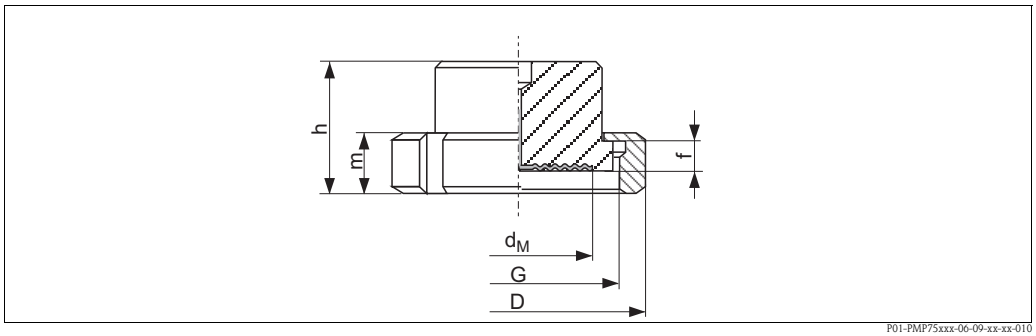

Process connection PMP55, material AISI 316L, surface roughness of the surfaces in contact with the medium Ra≤ 0.8 µm (31.5 µin) as standard. Lower surface roughness, see feature 570 "Service" version HK.

Version	Nominal diameter	Nominal pressure	Diameter	Adapter height	Thread	Height	Height	Max. diaphragm diameter	Diaphragm seal weight
		PN	D	f	G	m	h	d_M	
	[in]	[bar]	[mm]	[mm]		[mm]	[mm]	[mm]	[kg]
T0J	1	PN 40	77	6.5	1 13/16 – 1/8"	22	42.6	21	0.45
T1J	1 1/2	PN 40	72	6.4	2 5/16 – 1/8"	22	42.6	28	0.75
T2J	2	PN 40	86	6.4	2 7/8 – 1/8"	22	42.6	38	1.2

APV-ISS nozzles with coupling nut

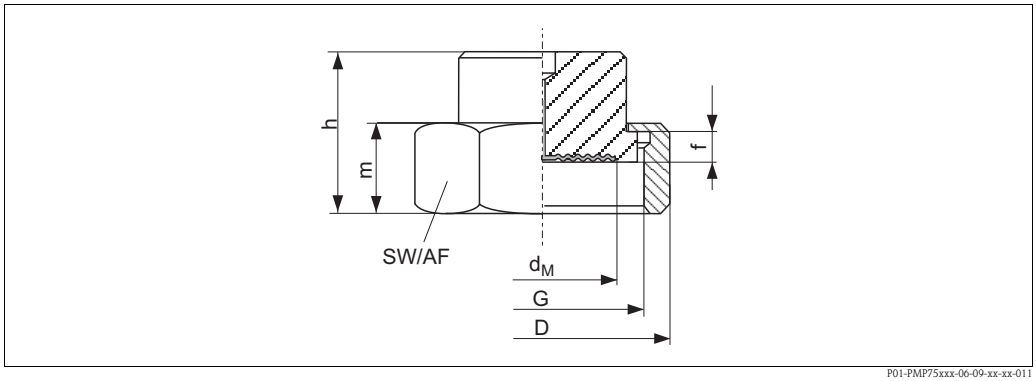

P01-PMP75xxx-06-09-xx-xx-011

Process connection PMP55, material AISI 316L, surface roughness of the surfaces in contact with the medium Ra≤ 0.8 µm (31.5 µin) as standard. Lower surface roughness, see feature 570 "Service" version HK.

Version	Nominal diameter	Nominal pressure	Diameter	Adapter height	Thread	Height	Across flats	Height	Max. diaphragm seal	Diaphragm seal weight
			D	f	G	m	AF	h	d_M	
	[in]	[bar]	[mm]	[mm]		[mm]		[mm]	[mm]	[kg]
T3J	1	PN 40	54.1	4	1 1/2" – 1/8"	30	46.8	50	24	0.4
T4J	1 1/2	PN 40	72	4	2" – 1/8"	30	62	50	34	0.6
T5J	2	PN 40	89	4	2 1/2" – 1/8"	30	77	50	45	1.1

Taper adapter with coupling nut, DIN 11851

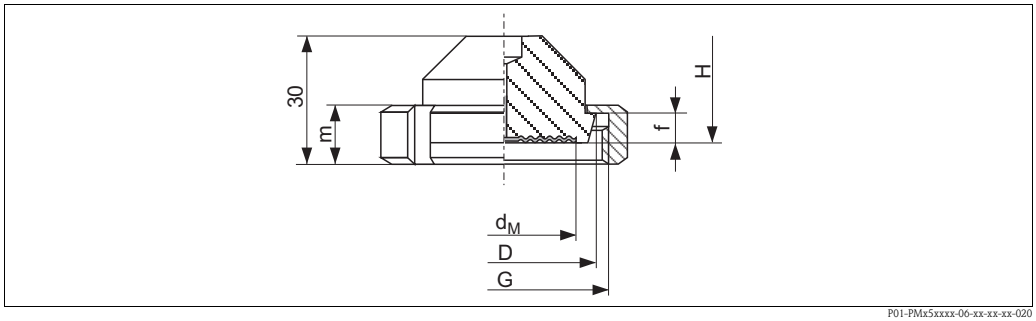

P01-PMx5xxxx-06-xx-xx-xx-020

Process connection PMP55, material AISI 316L, 3A, surface roughness of the surfaces in contact with the medium R_a ≤ 0.8 µm (31.5 µin) as standard. Lower surface roughness, see feature 570 "Service" version HK.

	Taper adapter				Slotted nut		Diaphragm seal		
Version	Nominal diameter	Nominal pressure	Diameter	Adapter height	Thread	Height	Max. diaphragm diameter	Max. installation height	Diaphragm seal weight
			D	f	G	m	d_M	H	
			[mm]	[mm]		[mm]	[mm]	[mm]	[kg]
MIJ	DN 32	PN 40	50	10	Rd 58 x 1/6"	21	32	250	1.9
MZJ	DN 40	PN 40	56	10	Rd 65 x 1/6"	21	38		2.0
MRJ	DN 50	PN 25	68.5	11	Rd 78 x 1/6"	22	52		1.1
MSJ	DN 65	PN 25	86	12	Rd 95 x 1/6"	35	66		2.0
MTJ	DN 80	PN 25	100	12	Rd 110 x 1/4"	30	81		2.55

NEUMO BioControl

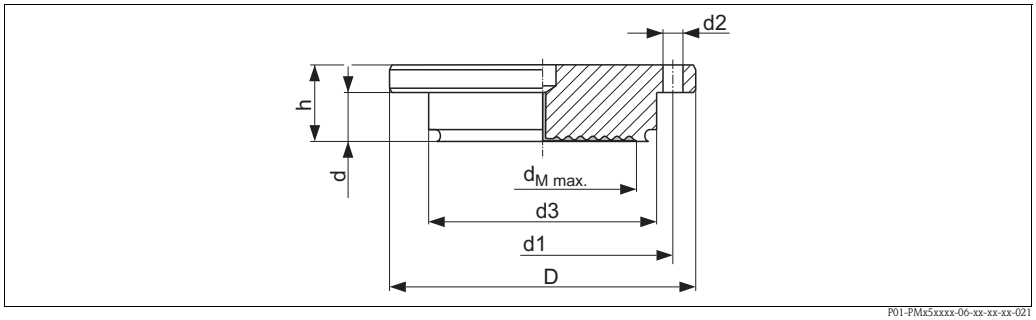

Process connection PMP55, material AISI 316L, surface roughness of the surfaces in contact with the medium Ra≤ 0.8 µm (31.5 µin) as standard. Lower surface roughness, see feature 570 "Service" version HK.

	Threaded adapter							Diaphragm seal	
Version	**Nominal diameter**	**Nominal pressure**	**Diameter diameter**	**Hole circle**	**Diameter**	**Diameter**	**Height**	**Max. diaphragm diameter**	**Diaphragm seal weight**
			D	**d_1**	**d_2**	**d_3**	**h**	**d_M**	
			[mm]	[mm]	[mm]	[mm]	[mm]	[mm]	[kg]
S4J	DN 50	PN 16	90	70	4 x ∅ 9	50	27	40	1.1

Process connections PMP55 (with diaphragm seal) - continued

EN/DIN flanges, connection dimensions as per EN 1092-1/DIN 2527 and DIN 2501-1

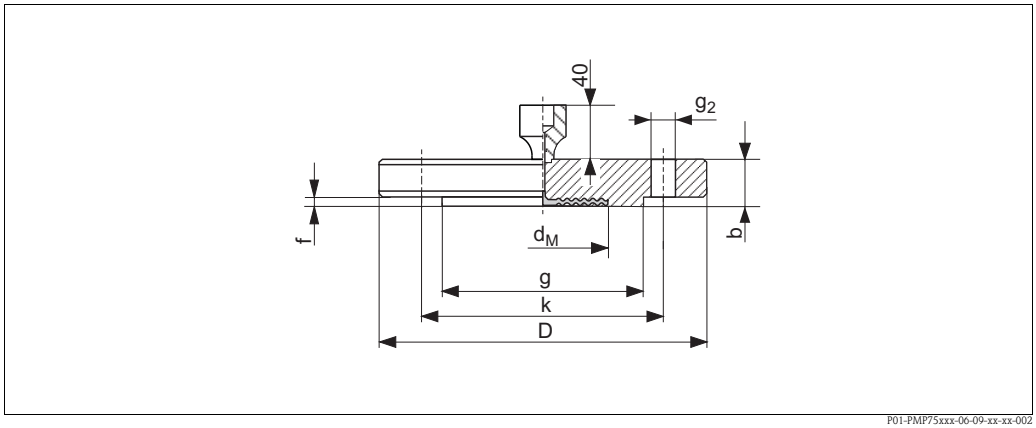

Process connection PMP55, EN/DIN flange with flush-mounted process isolating diaphragm, material AISI 316L

	Flanges							Boltholes			Diaphragm seal	
Version	**Nominal diameter**	**Nominal pressure**	**Shape** [1]	**Diameter**	**Thickness**	**Raised face**		**Quantity**	**Diameter**	**Hole circle**	**Max. diaphragm diameter**	**Diaphragm seal weight**
				D	**b**	**g**	**f**		**g_2**	**k**	**d_M**	
				[mm]	[mm]	[mm]	[mm]		[mm]	[mm]	[mm]	[kg]
CNJ	DN 25	PN 10-40	B1 (D)	115	18	66	3	4	14	85	32	2.1
QIJ	DN 25	PN 63-160	B2 (E)	140	24	68	2	4	18	100	28	2.5
QJJ	DN 25	PN 250	B2 (E)	150	28	68	2	4	22	105	28	3.7
QSJ	DN 25	PN 400	B2 (E)	180	38	68	2	4	26	130	28	7.0
CPJ	DN 32	PN 10-40	B1 (D)	140	18	77	2.6	4	18	100	34	1.9
CQJ	DN 40	PN 10-40	B1 (D)	150	18	87	2.6	4	18	110	48	2.2
CXJ	DN 50	PN 10-40	B1 (D)	165	20	102	3	4	18	125	59	3.0
PDJ	DN 50	PN 63	B2 (E)	180	26	102	3	4	22	135	59	4.6
QOJ	DN 50	PN 100-160	B2 (E)	195	30	102	3	4	26	145	59	6.2
QMJ	DN 50	PN 250	B2 (E)	200	38	102	3	8	26	150	59	7.7
QVJ	DN 50	PN 400	B2 (E)	235	52	102	3	8	30	180	59	14.7
CZJ	DN 80	PN 10-40	B1 (D)	200	24	138	3.5	8	18	160	89	5.3
PPJ	DN 80	PN 100	B2 (E)	230	32	138	4	8	24	180	89	8.9
PQJ	DN 100	PN 100	B2 (E)	265	36	175	5	8	30	210	89	13.7

1) Designation as per DIN 2527 in brackets

EN/DIN flanges with extended diaphragm seal, connection dimensions as per EN 1092-1/DIN 2527 and DIN 2501-1

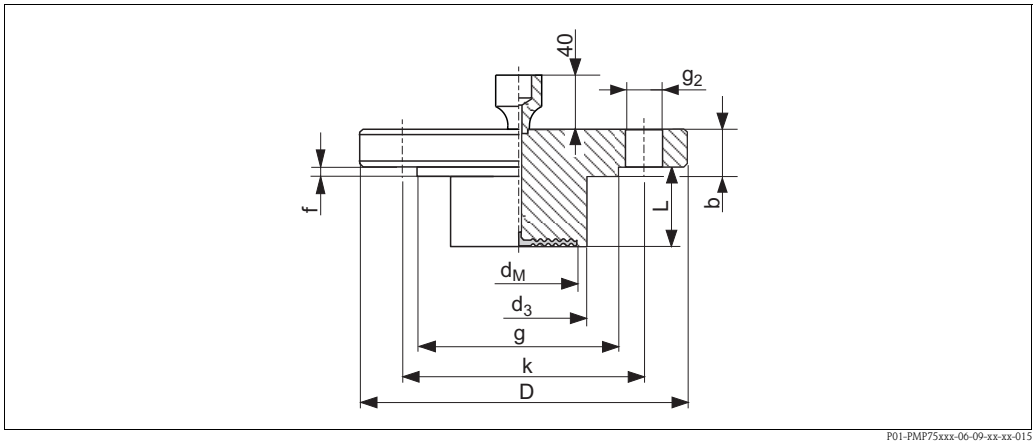

Process connection PMP55, EN/DIN flange with flush-mounted process isolating diaphragm, material AISI 316L

	Flanges							Boltholes			Diaphragm seal	
Version	**Nominal diameter**	**Nominal pressure**	**Shape** [1]	**Diameter**	**Thickness**	**Raised face**		**Quantity**	**Diameter**	**Hole circle**	**Max. diaphragm diameter**	**Diaphragm seal weight**
				D	**b**	**g**	**f**		**g_2**	**k**	**d_M**	
				[mm]	[mm]	[mm]	[mm]		[mm]	[mm]	[mm]	[kg]
FDJ [2]	DN 50	PN 10-40	B1 (D)	165	20	102	3	4	18	125	47	[2]
FEJ [2]	DN 80	PN 10-40	B1 (D)	200	24	138	3.5	8	18	160	72	[2]

1) Designation as per DIN 2527 in brackets

2) Available with 50 mm (1.97 in), 100 mm (3.94 in) or 200 mm (7.87 in) extended diaphragm seal, for extended diaphragm seal diameter and weight see the following table

Version	**Nominal diameter**	**Nominal pressure**	**Extended diaphragm seal length (L)**	**Extended diaphragm seal diameter d_3**	**Diaphragm seal weight**
			[mm]	[mm]	[kg]
FDJ	DN 50	PN 10-40	50 / 100 / 200	48.3	3.2 / 3.8 / 4.4
FEJ	DN 80	PN 10-40	50 /100 / 200	76	6.2 / 6.7 / 7.8

Process connections PMP55 (with diaphragm seal) – continued

ANSI flanges, connection dimensions as per ANSI B 16.5, raised face RF

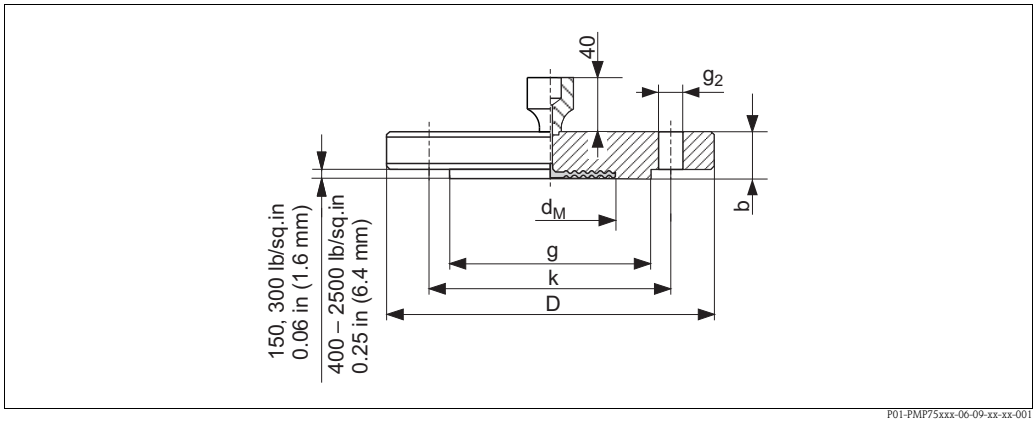

Process connection PMP55, ANSI flange, material AISI 316/316L (Combination of AISI 316 for required pressure resistance and AISI 316L for required chemical resistance (dual rated))

	Flange					Boltholes			Diaphragm seal	
Version	**Nominal diameter**	**Class**	**Diameter**	**Thickness**	**Raised face**	**Quantity**	**Diameter**	**Hole circle**	**Max. diaphragm diameter**	**Diaphragm seal weight**
			D	**b**	**g**		**g_2**	**k**	**d_M**	
	[in]	[lb./sq.in]	[in] / [mm]	[in] / [mm]	[in] / [mm]		[in] / [mm]	[in] / [mm]	[in] / [mm]	[kg]
ACJ	1	150	4.25 /108	0.56 / 14.2	2 / 50.8	4	0.62 / 15.7	3.12 / 79.2	1.26 / 32	1.2
ANJ	1	300	4.88 / 124	0.69 / 17.5	2 / 50.8	4	0.75 / 19.1	3.5 / 88.9	1.26 / 32	1.3
A0J	1	400/600	4.88 / 124	0.69 / 17.5	2 / 50.8	4	0.75 / 19.1	3.5 / 88.9	1.26 / 32	1.4
A2J	1	900/1500	5.88 / 149.4	1.12 / 28.6	2 / 50.8	4	1 / 25.4	4 / 101.6	1.26 / 32	3.2
A4J	1	2500	6.25 / 158.8	1.38 / 35.1	2 / 50.8	4	1 / 25.4	4.25 / 108	1.26 / 32	4.6
AEJ	1 1/2	150	5 / 127	0.69 / 17.5	2.88 / 73.2	4	0.62 / 15.7	3.88 / 98.6	1.89 / 48	1.5
AQJ	1 1/2	300	6.12 / 155.4	0.81 / 20.6	2.88 / 73.2	4	0.88 / 22.4	4.5 / 114.3	1.89 / 48	2.6
AFJ	2	150	6 / 152.4	0.75 / 19.1	3.62 / 91.9	4	0.75 / 19.1	4.75 / 120.7	2.32 / 59	2.2
ARJ	2	300	6.5 / 165.1	0.88 / 22.4	3.62 / 91.9	8	0.75 / 19.1	5 / 127	2.32 / 59	3.4
A1J	2	400/600	6.5 / 165.1	1 / 25.4	3.62 / 91.9	8	0.75 / 19.1	5 / 127	2.32 / 59	4.3
A3J	2	900/1500	8.5 / 215.9	1.5 / 38.1	3.62 / 91.9	8	1 / 25.4	6.5 / 165.1	2.32 / 59	10.3
A5J	2	2500	9.25 / 235	2 / 50.8	3.62 / 91.9	8	1.12 / 28.6	6.75 / 171.5	2.32 / 59	15.8
AGJ	3	150	7.5 / 190.5	0.94 / 23.9	5 / 127	4	0.75 / 19.1	6 / 152.4	3.50 / 89	5.1
ASJ	3	300	8.25 / 209.5	1.12 / 28.6	5 / 127	8	0.75 / 19.1	6 / 152.4	3.50 / 89	7.0
AHJ	4	150	9 / 228.6	0.94 / 23.9	6.19 / 157.2	8	0.75 / 19.1	7.5 / 190.5	3.50 / 89	7.2
ATJ	4	300	10 / 254	1.25 / 31.8	6.19 / 157.2	8	0.88 / 22.4	7.88 / 200.2	3.50 / 89	11.7

ANSI flanges with extended diaphragm seal, connection dimensions as per ANSI B 16.5, raised face RF

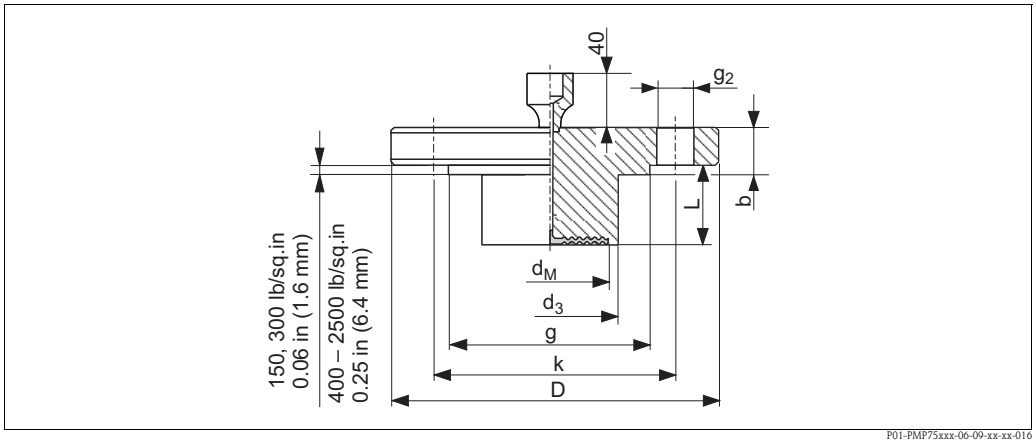

Process connection PMP55, ANSI flange with extended diaphragm seal, material AISI 316/316L (Combination of AISI 316 for required pressure resistance and AISI 316L for required chemical resistance (dual rated))

	Flange					Boltholes			Diaphragm seal	
Version	**Nominal diameter**	**Class**	**Diameter**	**Thickness**	**Raised face**	**Quantity**	**Diameter**	**Hole circle**	**Max. diaphragm diameter**	**Diaphragm seal weight**
			D	**b**	**g**		**g_2**	**k**	**d_M**	
	[in]	[lb./ sq.in]	[in] / [mm]	[in] / [mm]	[in] / [mm]		[in] / [mm]	[in] / [mm]	[in] / [mm]	[kg]
FMJ [1]	2	150	6 / 152.4	0.75 / 19.1	3.62 / 91.9	4	0.75 / 19.1	4.75 / 120.7	1.85 / 47	[1]
FNJ [1]	3	150	7.5 / 190.5	0.94 / 23.9	5 / 127	4	0.75 / 19.1	6 / 152.4	2.83 / 72	[1]
FWJ [1]	3	300	8.25 / 209.5	1.12 / 28.6	5 / 127	8	0.88 / 22.4	6.62 / 168.1	2.83 / 72	[1]
FOJ [1]	4	150	9 / 228.6	0.94 / 23.9	6.19 / 157.2	8	0.75 / 19.1	7.5 / 190.5	3.50 / 89	[1]
FXJ [1]	4	300	10 / 254	1.25 / 31.8	6.19 / 157.2	8	0.88 / 22.4	7.88 / 200.2	3.50 / 89	[1]

1) Available with 2 in, 4 in, 6 in or 8 in extended diaphragm seal, for extended diaphragm seal diameter and weight see the following table

Version	**Nominal diameter**	**Class**	**Extended diaphragm seal length (L)**	**Extended diaphragm seal diameter d_3**	**Diaphragm seal weight**
	[in]	[lb./sq.in]	in (mm)	in (mm)	[kg]
FMJ	2	150	2 (50.8) / 4 (101.6) / 6 (152.4) / 8 (203.2)	1.9 (48.3)	3.0 / 3.4 / 3.9 / 4.4
FNJ	3	150	2 (50.8) / 4 (101.6) / 6 (152.4) / 8 (203.2)	2.99 (75.9)	6.0 / 6.6 / 7.1 / 7.8
FWJ	3	300	2 (50.8) / 4 (101.6) / 6 (152.4) / 8 (203.2)	2.99 (75.9)	7.9 / 8.5 / 9.0 / 9.6
FOJ	4	150	2 (50.8) / 4 (101.6) / 6 (152.4) / 8 (203.2)	3.7 (94)	8.6 / 9.9 / 11.2 / 12.4
FXJ	4	300	2 (50.8) / 4 (101.6) / 6 (152.4) / 8 (203.2)	3.7 (94)	13.1 / 14.4 / 15.7 / 16.9

Process connections PMP55 (with diaphragm seal) – continued

JIS flanges, connection dimensions as per JIS B 2220 BL, raised face RF

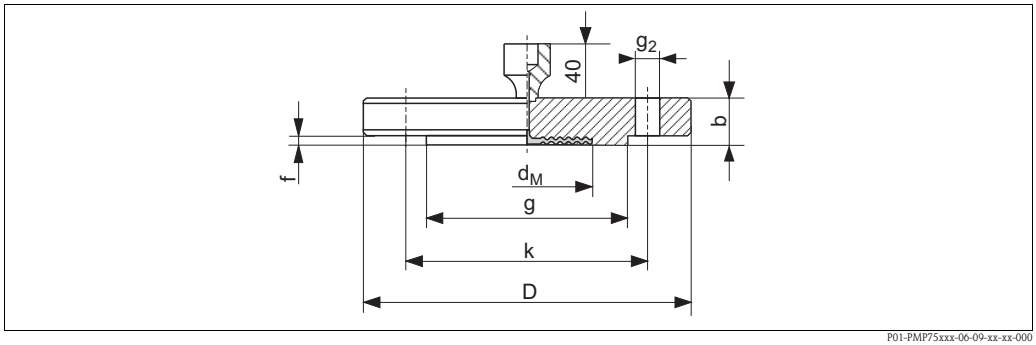

Process connection PMP55, JIS flange with raised face RF, material AISI 316L

	Flange [1]						Boltholes			Diaphragm seal	
Version	**Nominal diameter**	**Nominal pressure**	**Diameter** **D** [mm]	**Thickness** **b** [mm]	**Diameter of raised face** **g** [mm]	**Height of raised face** **f** [mm]	**Quantity**	**Diameter** g_2 [mm]	**Hole circle** **k** [mm]	**Max. diaphragm diameter** d_M [mm]	**Diaphragm seal weight**[2] [kg]
KCJ	25 A	10 K	125	14	67	1	4	19	90	32	1.5
KEJ	40 A	10 K	140	16	81	2	4	19	105	48	2.0
KFJ	50 A	10 K	155	16	96	2	4	19	120	59	2.3
KGJ	80 A	10 K	185	18	127	2	8	19	150	89	3.3
KHJ	100 A	10 K	210	18	151	2	8	19	175	89	4.4

1) The roughness of the surface in contact with the medium, including the raised face of the flanges (all standards) made of Hastelloy C, Monel or tantalum, is Ra 0.8 µm. Lower surface roughness available on request.

2) Housing weight → 66

Process connections PMP55 (with diaphragm seal) – continued

Thread 1/2 NPT and 1 NPT, separator

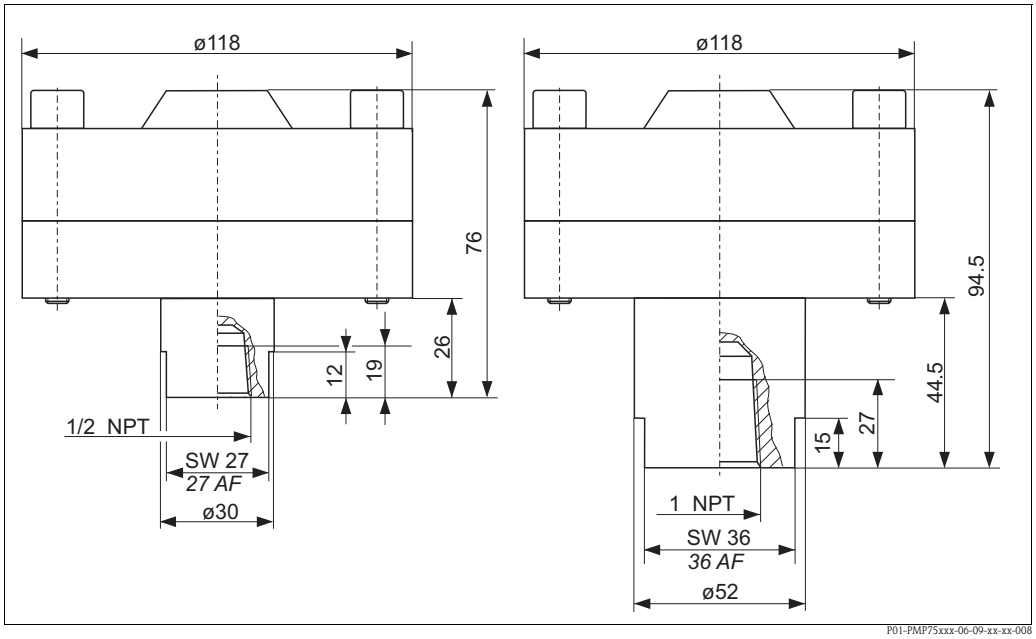

Process connection PMP55, version "UGJ" and "UHJ", threaded, material AISI 316L, seal Viton

Version	Measuring range	Description	Nominal pressure	Diaphragm seal weight [kg]
UGJ	≤ 250 bar	1/2 NPT	PN 250	4.75
UHJ	≤ 250 bar	1 NPT	PN 250	5.0

Thread ISO 228 G 1/2 A and ANSI 1/2 MNPT, separator

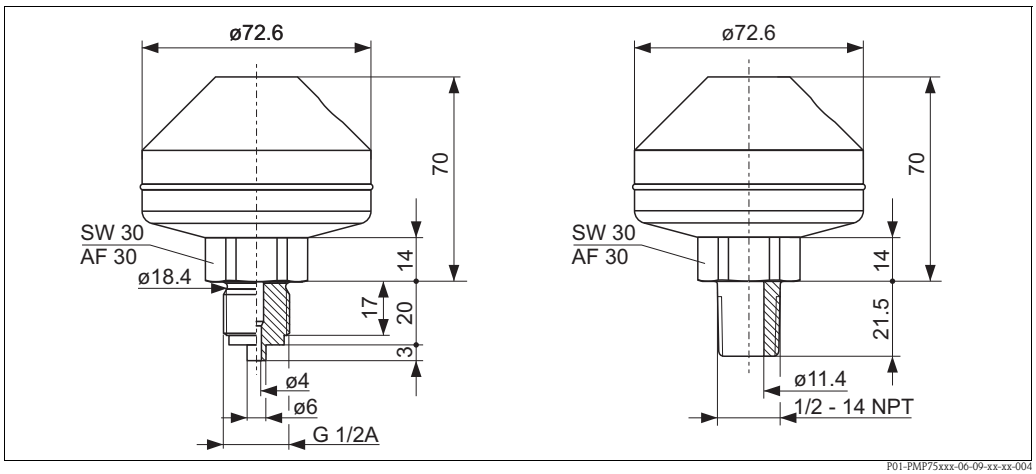

Process connection PMP55, version "UBJ" and "UCJ", welded, material AISI 316L

Version	Measuring range	Description	Nominal pressure	Diaphragm seal weight [kg]
UBJ	≤ 160 bar	ISO 228 G 1/2 A	PN 160	1.43
UCJ	≤ 160 bar	ANSI 1/2 MNPT	PN 160	1.43

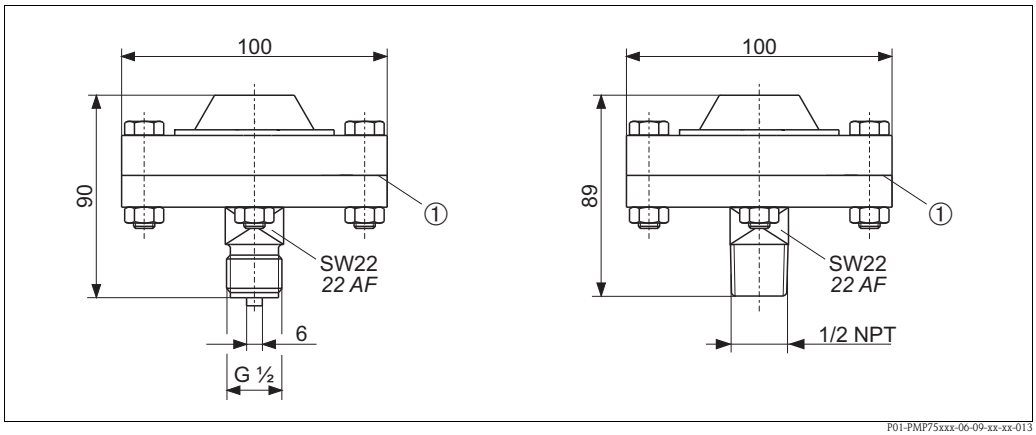

Process connection PMP55, left version "UDJ" threaded, with threaded connection ISO 228 G 1/2 B, right version "UEJ" with threaded connection ANSI 1/2 MNPT

1 PTFE seal as standard max. 260°C (500°F) (higher temperatures on request)

Version	Measuring range	Description	Nominal pressure	Diaphragm seal weight [kg]
UDJ	≤ 40 bar	ISO 228 G 1/2 B	PN 40	1.43
UEJ	≤ 40 bar	ANSI 1/2 MNPT	PN 40	1.43

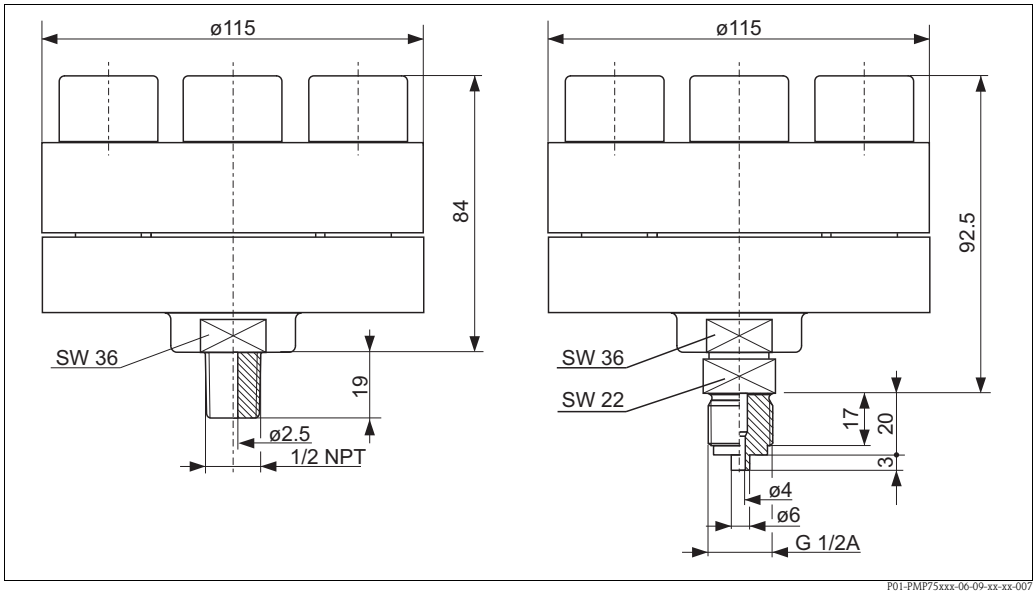

Process connection PMP55, version "UDJ" and "UEJ", threaded, with integrated seal lip, material AISI 316L

Version	Measuring range	Description	Nominal pressure	Diaphragm seal weight [kg]
UDJ	> 40 bar	ISO 228 G 1/2 A	PN 400	4.75
UEJ	> 40 bar	ANSI 1/2 MNPT	PN 400	4.75

Process connections PMP55 (with diaphragm seal) – continued

Universal adapter

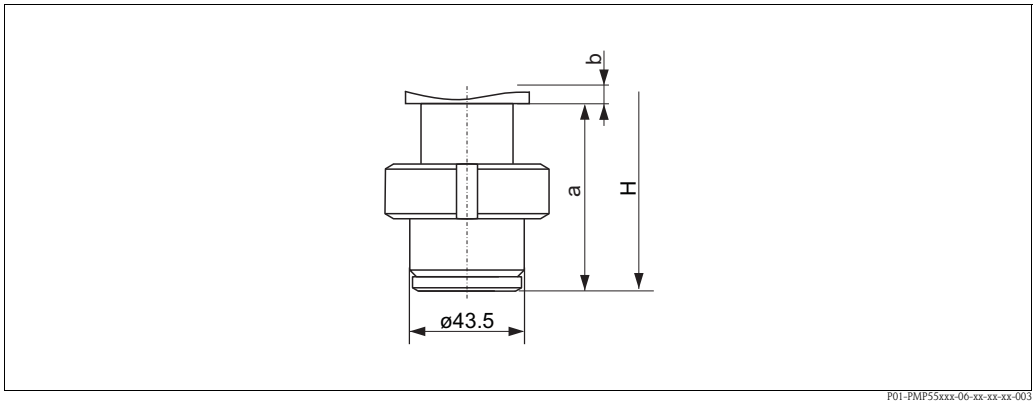

Material: b = top section AISI 316L (1.4404), a = bottom section AISI 316L (1.4435);
Surface roughness of the surfaces in contact with the medium $R_a \leq 0.76$ µm (30 µin) as standard. Lower surface roughness available on request.

Process connection PMP55, version UPJ [1]: universal adapter incl. silicone molded seal, EHEDG, 3A Class I, FDA 21 CFR 177.2600, USP Plastic Class VI-70C; Order no.: 52023572

Installation height H, devices with universal adapter

	F31 housing	**F15 housing**
Universal adapter	196 mm (7.72 in)	189 mm (7.44 in)

1) Endress+Hauser supplies these slotted nuts in stainless steel AISI 304 (DIN/EN material number 1.4301) or in AISI 304L (DIN/EN material number 1.4307).

Wall and pipe mounting with mounting bracket

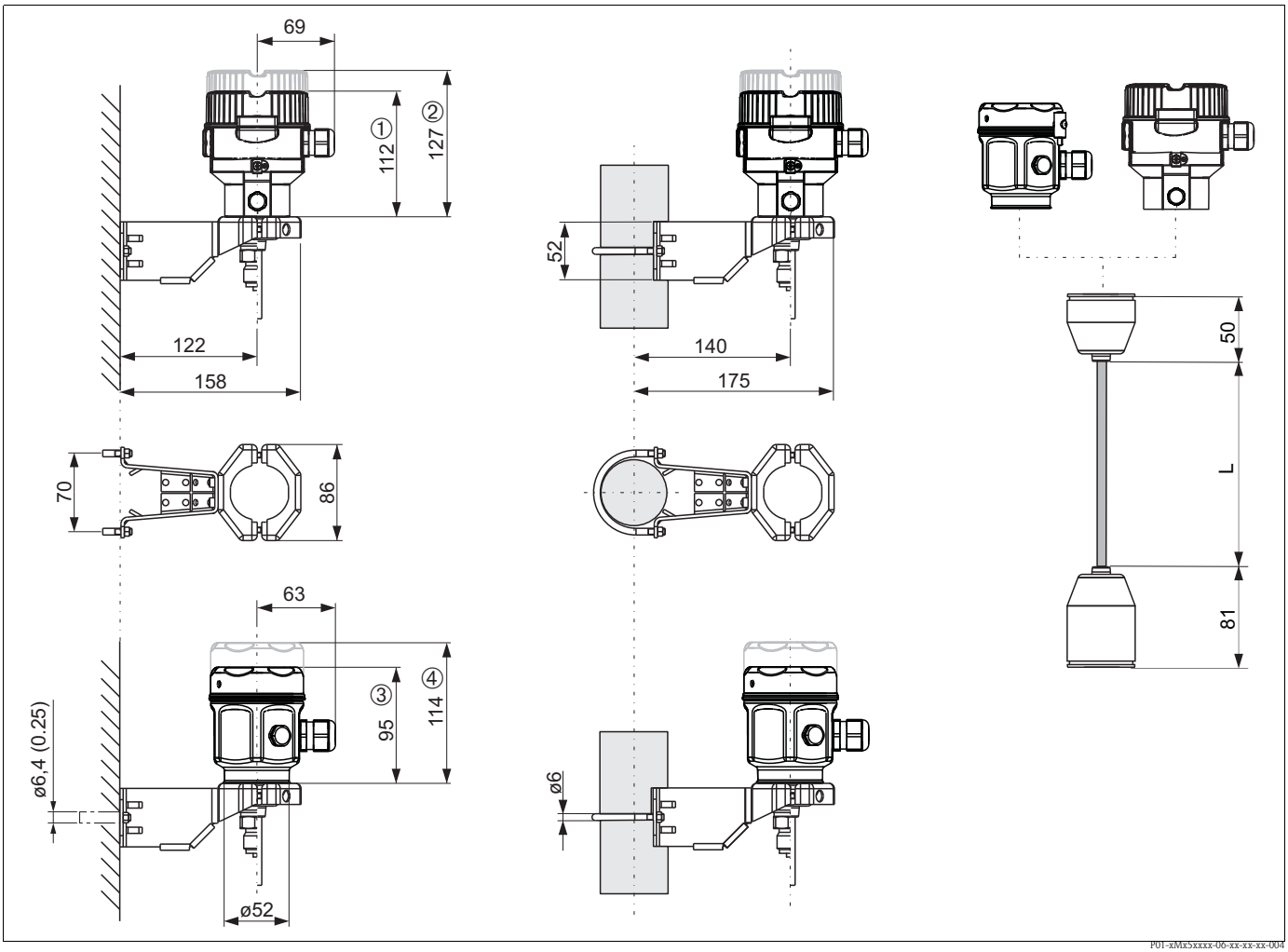

L: PE-cable 2 m (6.6 ft), 5 m (16 ft) or 10 m (33 ft). FEP-cable 5m (16 ft).

F31 housing dimensions. Housing weight → 66. ① Cover without viewing window. ② Cover with viewing window.

F15 housing dimensions. Housing weight → 66. ③ Cover without viewing window. ④ Cover with viewing window.

Weight

Housing

	F31 (aluminum)	F15 (stainless steel)	Separate housing
With electronic insert and local display	1.1 kg (2.43 lbs)	0.8 kg (1.76 lbs)	Weight of housing + 0.5 kg (1.10 lbs). Weight of sensor + 0.5 kg (1.10 lbs).
With electronic insert without local display	1.0 kg (2.21 lbs)	0.7 kg (1.54 lbs)	

Process connections

- Process connections PMC51 (with ceramic process isolating diaphragm): → 33 ff
- Process connections PMP51 (with metallic process isolating diaphragm): → 42 ff
- Process connections PMP55 (with diaphragm seal): → 50 ff

Material (not wetted)

Housing

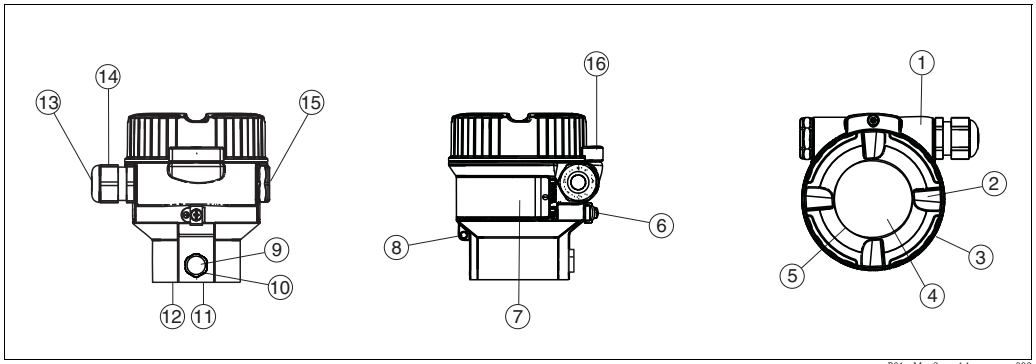

P01-xMxx3xxx-14-xx-xx-xx-002

Front view, left-hand side view, top view

Item number	Component part	Material
1	F31 housing, RAL 5012 (blue)	Die-cast aluminum with protective powder-coating on polyester base
2	Cover, RAL 7035 (gray)	Die-cast aluminum with protective powder-coating on polyester base
3	Cover seal	EPDM
4	Sight glass	Mineral glass
5	Sight glass seal	Silicone (VMQ)
6	External ground terminal	AISI 304 (1.4301)
7	Nameplates	Plastic film
8	Attachement for tie-on label	AISI 304 (1.4301)/ AISI 316 (1.4401)
9	Pressure compensation filter	PA6 GF10
10	Pressure compensation filter, O-ring	Silicone (VMQ)
11	Sealing ring	EPDM
12	Snap ring	PC Plastic
13	Seal of cable gland and blind plug	EPDM/NBR
14	Cable gland	Polyamide (PA) or CuZn nickel-plated
15	Blind plug	PBT-GF30 FR
		for dust ignition-proof, Ex d, FM XP and CSA XP: AISI 316L (1.4435)
16	Cover clamp	Clamp AISI 316L (1.4435), screw A4

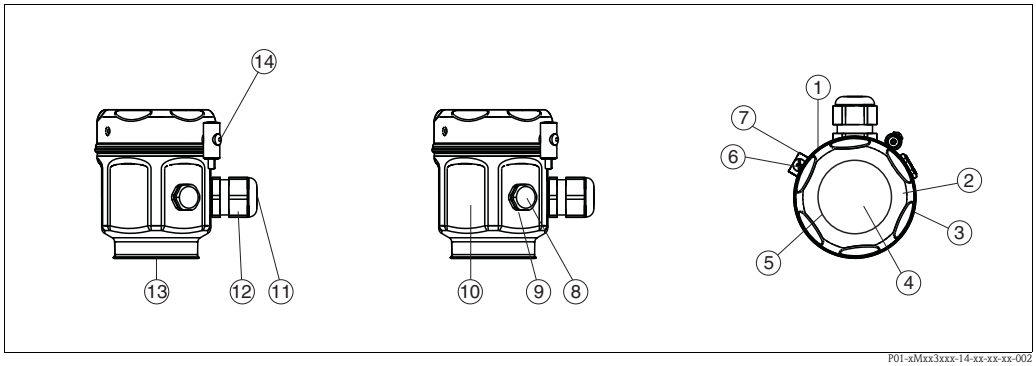

Front view, left-hand side view, top view

Item number	Component part	Material
1	F15 housing	AISI 316L (1.4404)
2	Cover	
3	Cover seal	Silicone with PTFE coating
4	Sight glass for non-hazardous area, ATEX Ex ia, NEPSI Zone 0/1 Ex ia, IECEx Zone 0/1 Ex ia, FM NI, FM IS, CSA IS	Polycarbonate (PC)
4	Sight glass for ATEX 1/2 D, ATEX 1/3 D, ATEX 1 GD, ATEX 1/2 GD, ATEX 3 G, FM DIP, CSA dust ignition-proof	Mineral glass
5	Sight glass seal	Silicone (VMQ)
6	External ground terminal	AISI 304 (1.4301)
7	Attachement for tie-on label	AISI 304 (1.4301)/ AISI 316 (1.4401)
8	Pressure compensation filter	PA6 GF10
9	Pressure compensation filter, O-ring	Silicone (VMQ)
10	Nameplates	lasered
11	Cable gland	Polyamide (PA), for dust ignition-proof: CuZn nickel-plated
12	Seal of cable gland and blind plug	NBR/Silicone/EPDM
13	Sealing ring	EPDM
14	Screw	A4-50

Connecting parts

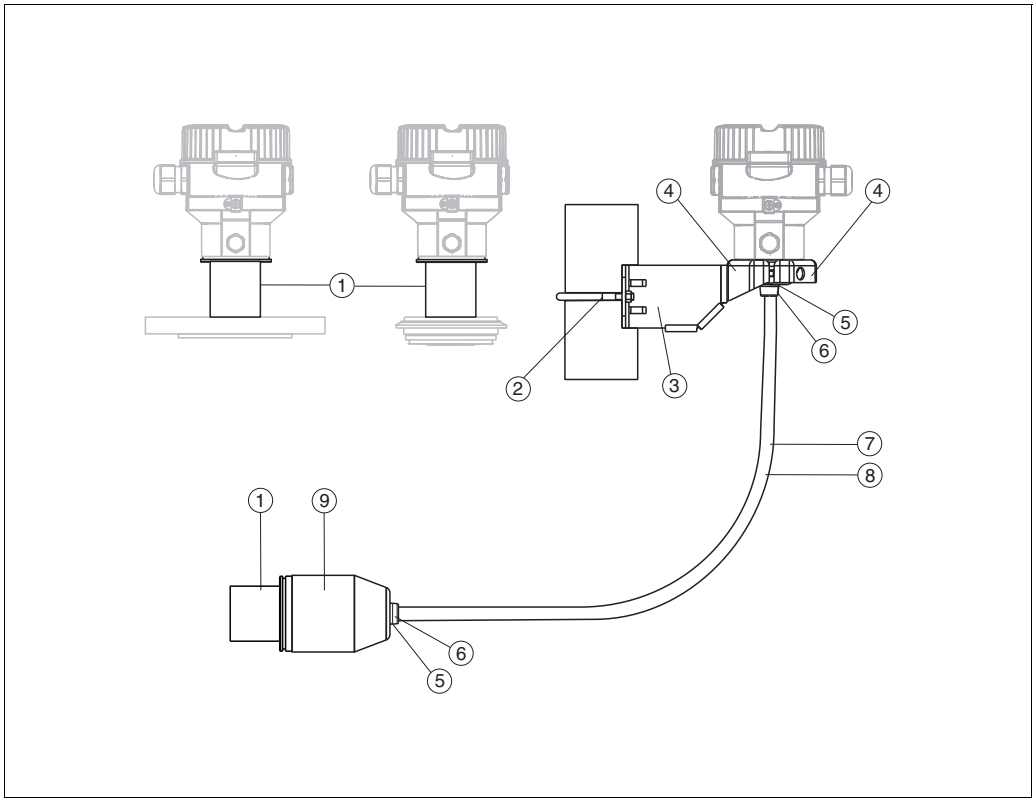

P01-PMx5xxxx-06-xx-xx-xx-026

Item number	Component part	Material
1	Connection between the housing and process connection	AISI 316L (1.4404)
2	Mounting bracket	Bracket AISI 304 (1.4301), AISI 304L (1.4306)
3		Screw and nuts A2-70
4		Half-shells: AISI 304L (1.4306)
5	Seal for cable from separate housing	FKM, EPDM
6	Gland for cable from separate housing: Screws:	AISI 316L (1.4404) A2 or A4
7	PE cable for separate housing	Abrasion-proof cable with strain-relief Dynema members; shielded using aluminum-coated film; insulated with polyethylene (PE-LD), black; copper wires, twisted, UV-resistant
8	FEP cable for separate housing	Abrasion-proof cable; shielded using galvanized steel wire netting; insulated with fluorinated ethylene propylene (FEP), black; copper wires, twisted, UV-resistant
9	Process connection adapter for separate housing	AISI 316L (1.4404)

Filling oil

See "Ordering information" (→ 82)

Miscellaneous:

- Diaphragm seal capillary: AISI 316 Ti (1.4571)
- Protective hose for diaphragm seal capillary: AISI 304 (1.4301)

Material (wetted)

Note!
The wetted device components are listed in the "Mechanical construction" (→ 33 ff) and "Ordering information" (→ 82 ff) sections.

TSE Certificate of Suitability (Transmissible Spongiform Encephalopathy)

The following applies to all process wetted device components:
- They do not contain any materials derived from animals.
- No auxiliaries or operating materials derived from animals are used in production or processing.

Process connections

- "Clamp connections" and "Hygienic process connections" (see also "Ordering information" section): AISI 316L (DIN/EN material number 1.4435)
- Endress+Hauser supplies process connections with threaded connections and DIN/ EN flanges made of stainless steel as per AISI 316L (DIN/EN material number 1.4404 (AISI 316) or 14435). With regard to their stability-temperature property, the materials 1.4404 and 1.4435 are grouped together under 13E0 in EN 1092-1 Tab.18. The chemical composition of the two materials can be identical.
- Some process connections are also available in the material Alloy C276 (DIN/EN material number 2.4819). See the information in the "Mechanical construction" section.

Process isolating diaphragm

- PMC51: Al_2O_3 aluminum-oxide ceramic, Ceraphire® (FDA 21 CFR 186.1256, USP Class VI), ultrapure 99.9 % (→ see also www.endress.com/ceraphire)
- PMP51:
  - AISI 316L (DIN/EN material number 1.4435)
  - AISI 316L with gold-rhodium coating
  - Alloy C276 (DIN/EN material number 2.4819)
- PMP55:
  - AISI 316L (DIN/EN material number 1.4435)
  - AISI 316L with gold-rhodium coating
  - AISI 316L with 0.09 mm PTFE foil (not for vacuum applications)
  - AISI 316L with 0.25 mm PTFE foil (not for vacuum applications)
  - Alloy C276 (DIN/EN material number 2.4819)
  - Monel
  - Tantalum

Seals

See ordering information, → 82 ff

Human interface

Operating elements

Local display (optional) for devices with HART, PROFIBUS PA or FOUNDATION Fieldbus electronics

A 4-line liquid crystal display (LCD) is used for display and operation. The local display shows measured values, dialog texts as well as fault and notice messages in plain text, thereby supporting the user at every stage of operation. The liquid crystal display of the device can be turned in 90° stages.
Depending on the orientation of the device, this makes it easy to operate the device and read the measured values.

Functions:
- 8-digit measured value display including sign and decimal point, bar graph for 4 to 20 mA HART as current display; or for PROFIBUS PA as graphic display of the standardized value of the AI Block; for FOUNDATION Fieldbus as graphic display of the transducer output in relation to the set pressure range.
- Three keys for operation
- Simple and complete menu guidance as parameters are split into several levels and groups
- Each parameter is given a 3-digit ID number for easy navigation
- Possibility of configuring the display to suit individual requirements and preferences, such as language, alternating display, contrast setting, display of other measured values such as sensor temperature etc.
- Comprehensive diagnostic functions (fault and warning message etc.)

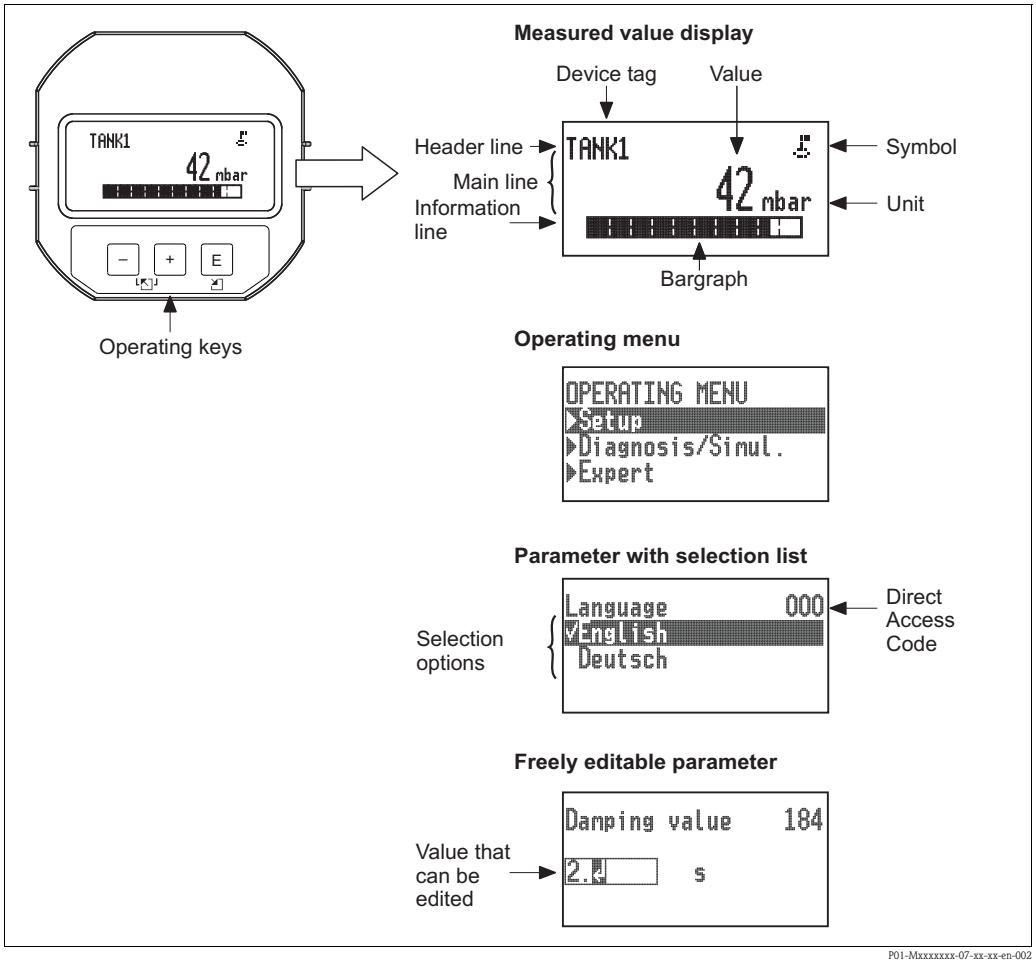

Local display (optional) for devices with analog electronics

A 4-line liquid crystal display (LCD) is used. The local display shows measured values, fault messages and notice messages. The liquid crystal display of the device can be turned in 90° stages.
Depending on the orientation of the device, this makes it easy to operate the device and read the measured values.

Functions:
- 8-digit measured value display including sign and decimal point, bar graph for 4 to 20 mA as current display.
- Diagnostic functions (fault and warning message etc.)

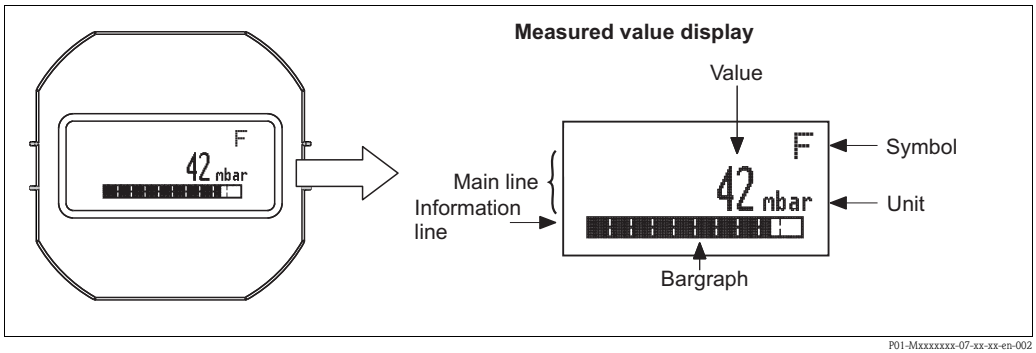

P01-Mxxxxxxx-07-xx-xx-en-002

Operating keys and elements located on the electronic insert

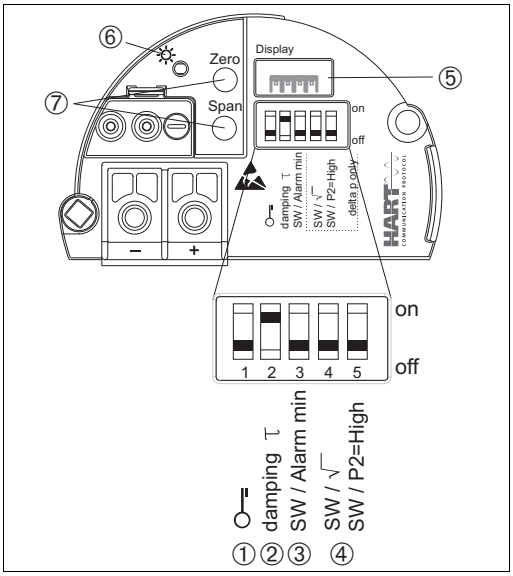

P01-Mxxxxxxx-19-xx-xx-xx-001

HART electronic insert

1 *DIP switch for locking/unlocking parameters relevant to the measured value*
2 *DIP switch for switching damping on/off*
3 *DIP switch for alarm current SW / Alarm Min (3.6 mA)*
4 *DIP switch only for Deltabar M*
5 *Slot for optional local display*
6 *Green LED to indicate successful operation*
7 *Operating keys for lower range value (zero), upper range value (span), position zero adjustment or reset*

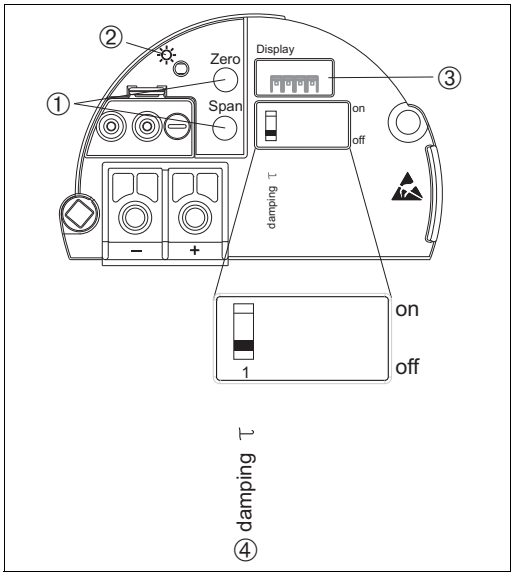

P01-Mxxxxxxx-19-xx-xx-xx-010

Analog electronic insert

1 *Operating keys for lower range value (zero), upper range value (span), position zero adjustment or reset*
2 *Green LED to indicate successful operation*
3 *Slot for optional local display*
4 *DIP switch for switching damping on/off*

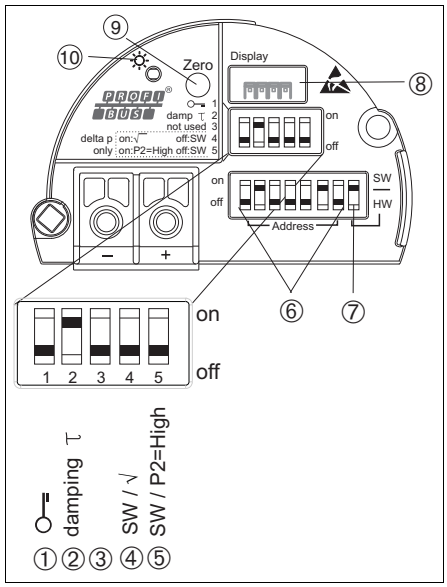

P01-Mxxxxxxx-19-xx-xx-xx-013

PROFIBUS PA electronic insert

1 DIP switch for locking/unlocking parameters relevant to the measured value
2 DIP switch for switching damping on/off
3/4/5 Not used
6 DIP-switch for hardware address
7 DIP-switch for bus address SW / HW
8 Slot for optional local display
9 Operating key for position zero adjustment (Zero) or reset
10 Green LED to indicate successful operation

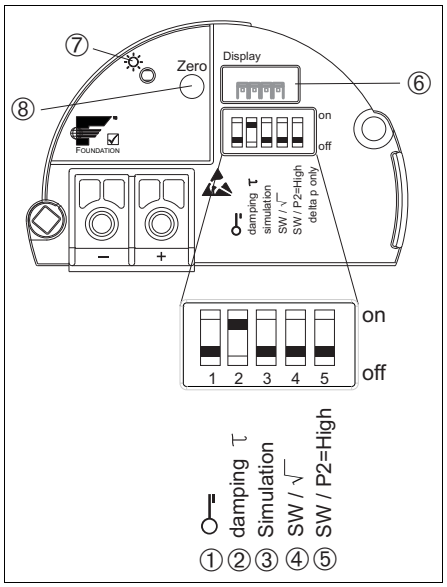

P01-Mxxxxxxx-19-xx-xx-xx-014

FOUNDATION Fieldbus electronic insert

1 DIP switch for locking/unlocking parameters relevant to the measured value
2 DIP switch for switching damping on/off
3 DIP-switch for simulation mode
4/5 Not used
6 Slot for optional local display
7 Green LED to indicate successful operation
8 Operating key for position zero adjustment (Zero) or reset

Onsite operation

Function	Operation without display with operating keys and DIP-switches on the electronic insert			
	Analog electronics	HART	PROFIBUS PA	FOUNDATION Fieldbus
Position adjustment (zero point correction)	X	X	X	X
Setting lower range value and upper range value – reference pressure present at the device	X	X	–	–
Device reset	X	X	X	X
Locking and unlocking parameters relevant to the measured value	–	X	X	X
Value acceptance indicated by the green LED	X	X	X	X
Switching damping on and off	X	X	X	X

Function	Operation via display (option)			
	Analog electronics	HART	PROFIBUS PA	FOUNDATION Fieldbus
Position adjustment (zero point correction)	–	X	X	X
Setting lower range value and upper range value – reference pressure present at the device	–	X	X	X
Device reset	–	X	X	X
Locking and unlocking parameters relevant to the measured value	–	X	X	X
Value acceptance indicated by the green LED	–	–	–	–
Switching damping on and off	–	X	X	X

Remote operation

All software parameters are accessible depending on the position of the write protection switch on the device.

HART

Remote operation via:
- FieldCare (see "Hardware and software for onsite and remote operation" section → 📄 75 ff) with Commubox FXA195 (see "Hardware and software for onsite and remote operation" section → 📄 75 ff)
- Field Xpert SFX100. Field Xpert is an industrial PDA with integrated 3.5" touchscreen from Endress+Hauser based on Windows Mobile. It communicates via wireless with the optional VIATOR Bluetooth modem connected to a HART device point-to-point or wireless via WiFi and Endress+Hauser's Fieldgate FXA520. Field Xpert also works as a stand-alone device for asset management applications. For details refer to BA00060S/00/EN.

PROFIBUS PA

Remote operation via:
- FieldCare (see "Hardware and software for onsite and remote operation" section → 📄 75 ff)
  - Profiboard: For connecting a PC to PROFIBUS
  - Proficard: For connecting a laptop to PROFIBUS

FOUNDATION Fieldbus

Remote operation via:
- FieldCare (see "Hardware and software for onsite and remote operation" → 📄 75 ff)
  - NI PCMCIA-FBUS series 2 to connect a laptop to FF.
- Use an FF-configuration program for example NI-FBUS Configurator, to
  - connect devices with "FOUNDATION Fieldbus signal" into an FF-network
  - set FF-specific parameters

  Operation with NI-FBUS Configurator:
  The NI-FBUS Configurator is an easy-to-use graphical environment for creating linkages, loops, and a schedule based on the fieldbus concepts.
  You can use the NI-FBUS Configurator to configure a fieldbus network as follows:
  - Set block and device tags
  - Set device addresses
  - Create and edit function block control strategies (function block applications)
  - Configure vendor-defined function and transducer blocks
  - Create and edit schedules
  - Read and write to function block control strategies (function block applications)
  - Invoke Device Description (DD) methods
  - Display DD menus
  - Download a configuration
  - Verify a configuration and compare it to a saved configuration
  - Monitor a downloaded configuration
  - Replace a virtual device by a real device
  - Save and print a configuration

Note!
For further information please contact your local Endress+Hauser Sales Center.

Hardware and software for onsite and remote operation

Commubox FXA195

For intrinsically safe HART communication with FieldCare via the USB interface. For details refer to TI00404F/00/EN.

Field Xpert SFX100

Compact, flexible and robust industry handheld terminal for remote parametrization and measured value inspection via the HART current output (4-20mA).
For details refer to Operating Instructions BA00060S/04/EN.

FieldCare

FieldCare is an Endress+Hauser asset management tool based on FDT technology. With FieldCare, you can configure all Endress+Hauser devices as well as devices from other manufacturers that support the FDT standard.

FieldCare supports the following functions:
- Configuration of transmitters in offline and online mode
- Loading and saving device data (upload/download)
- Documentation of the measuring point

Connection options:
- HART via Commubox FXA195 and the USB port on a computer
- PROFIBUS PA via segment coupler and PROFIBUS interface card
- FOUNDATION Fieldbus via NI interface card

For further information → www.endress.com

Planning instructions for diaphragm seal systems

Note!
The performance and the permitted applications for a diaphragm seal system depend on the process isolating diaphragm used, the filling oil, the coupling, the design and the process and ambient conditions at the place of operation.
To help you select suitable diaphragm seal systems for your individual application,
Endress+Hauser provides a free "Applicator Sizing Diaphragm Seal" selection tool. This tool is available online at "www.endress.com/applicator", or is available offline on a CD.

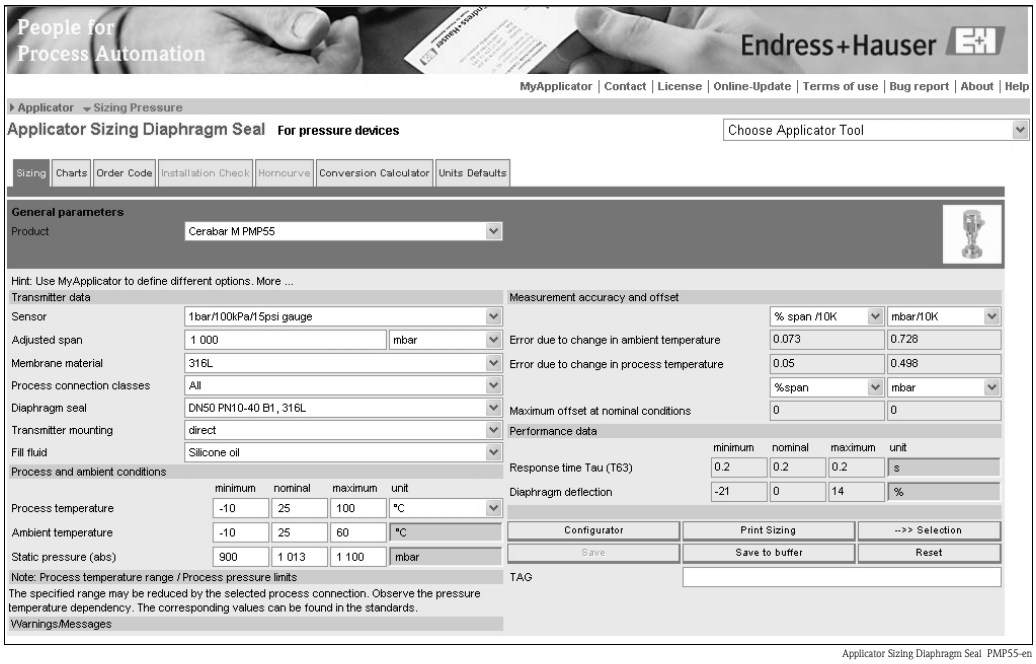

Applicator Sizing Diaphragm Seal PMP55-en

For further details, or for information on an optimum diaphragm seal solution, please contact your local Endress+Hauser Sales Center.

Applications

Diaphragm seal systems should be used if the process and the device need to be separated. Diaphragm seal systems offer clear advantages in the following instances:
- In the case of extreme process temperatures
- For aggressive media
- If extreme measuring point cleaning is necessary, or in the event of very damp mounting locations
- If the measuring point is exposed to severe vibrations
- For mounting locations that are difficult to access

Function and design

Diaphragm seals separate the measuring system from the process.

A diaphragm seal system consists of:
- A diaphragm seal
- A capillary tube or a temperature isolator if necessary
- Fill fluid
- A pressure transmitter

The process pressure acts via the process isolating diaphragm of a diaphragm seal on the liquid-filled system, which transfers the process pressure to the sensor of the pressure transmitter.
Endress+Hauser delivers all diaphragm seal systems as welded versions. The system is hermetically sealed, which ensures greater reliability.

The diaphragm seal determines the application range of the system on the basis of
- The diameter of the process isolating diaphragm
- The process isolating diaphragm: stiffness and material
- The design (oil volume)

Diameter of the process isolating diaphragm

The greater the diameter of the process isolating diaphragm (less stiff), the smaller the temperature effect on the measurement result.

Stiffness of the process isolating diaphragm

The stiffness depends on the diameter of the process isolating diaphragm, the material, any existing coating, the thickness of the process isolating diaphragm and the shape. The thickness of the process isolating diaphragm and the shape are determined by the design. The stiffness of a process isolating diaphragm of a diaphragm seal influences the temperature application range and the measuring error caused by temperature effects.

Capillary

Capillaries with an internal diameter of 1 mm (0.04 in) are used as standard.
As a result of its length and internal diameter, the capillary tube influences the thermal change, the ambient temperature application range and the response time of a diaphragm seal system.

Filling oil

When selecting the filling oil, the medium temperature and ambient temperature, as well as the process pressure, are of crucial importance. Observe the temperatures and pressures during commissioning and cleaning. A further selection criterion is the compatibility of the filling oil with the requirements of the medium. For example, only filling oils that do not present a health hazard are used in the food industry, e.g. vegetable oil or silicone oil. → See also the following section "Diaphragm seal filling oils".
The filling oil used influences the thermal change, the temperature application range of a diaphragm seal system and the response time. A temperature change results in a volume change in the filling oil. The volume change depends on the thermal expansion coefficient of the filling oil and on the volume of the fill fluid at calibration temperature (constant in the range: +21 to +33°C (+70 to 91°F)).
For example, the filling oil expands in the event of a temperature increase. The additional volume presses against the process isolating diaphragm of a diaphragm seal. The stiffer a process isolating diaphragm is, the greater its return force, which counteracts a volume change and acts together with the process pressure on the measuring cell, thus shifting the zero point.

Pressure transmitter

The pressure transmitter influences the temperature application range, the thermal change and the response time as a result of its volume change. The volume change is the volume that has to be shifted in order to pass through the complete measuring range.
Pressure transmitters from Endress+Hauser are optimized with regard to minimum volume change.

Diaphragm seal filling oils

Version[1]	Filling oil	Permissible temperature range [2] at 0.05 bar (0.725 psi) ≤ p_{abs} ≤ 1 bar (14.5 psi)	Permissible temperature range [2] at p_{abs} ≥ 1 bar (14.5 psi)	Density [g/cm³] / [SGU]	Viscosity [mm²/s] / [cSt] at 25°C (77°F)	Thermal expansion coefficient [3] [1/K]	Note
1	Silicone oil	–40 to +180°C (–40 to +356°F)	–40 to +250°C (–40 to +482°F)	0.96	100	0.00096	Suitable for foods FDA 21 CFR 175.105
2	Inert oil	–40 to +80°C (–40 to +176°F)	–40 to +175°C (–40 to +347°F)	1.87	27	0.000876	For ultrapure gas and oxygen applications
4	Vegetable oil	–10 to +120°C (+14 to +248°F)	–10 to +200°C (+14 to +392°F)	0.94	9.5	0.00101	Suitable for foods FDA 21 CFR 172.856
5	High-temperature oil [4]	–10 to +200°C (+14 to +392°F)	–10 to +400°C (+14 to +752°F)	1.07	37	0.0007	High temperatures
6	Low-temperature oil	–70 to +80°C (–94 to +176°F)	–70 to +180°C (–94 to +356°F)	0.92	4.4	0.00108	Low temperatures

1) Version for feature 180 in the order code (→ 92 ff)

2) Observe temperature limits of the device (→ 31) and of the system (→ 76).

3) Please refer to the "Applicator Sizing Diaphragm Seal" tool for the thermal change of the diaphragm seal and other important technical features.

4) When simultaneously applying the diaphragms seal at high process temperatures and low absolute pressures, Endress+Hauser recommends the vacuum service (Feature 570 "Service" version "HG").

Operating temperature range

The operating temperature range of a diaphragm seal system depends on the fill fluid, capillary length and internal diameter, process temperature and oil volume of the diaphragm seal.
The range of application can be extended by using a fill fluid with a smaller expansion coefficient and a shorter capillary.

Installation instructions

Diaphragm seal systems

- Endress+Hauser offer flushing rings as accessory to clean process isolating diaphragms without taking the transmitters out of process.
  For further information please contact your local Endress+Hauser Sales Center.
- A diaphragm seal together with the transmitter form a closed, calibrated system, which is filled through openings in the diaphragm seal and in the transmitter's measurement system. These openings are sealed and must not be opened.
- In the case of devices with diaphragm seals and capillaries, the zero point shift caused by the hydrostatic pressure of the filling liquid column in the capillaries must be taken into account when selecting the measuring cell. If a measuring cell with a small measuring range is selected, a position adjustment can cause range violation.
- For devices with a temperature isolator or capillary, a suitable fastening device (mounting bracket) is recommended.
- When using diaphragm seal systems with a capillary, sufficient strain relief must be ensured in order to prevent the capillary bending down (bending radius ≥ 100 mm (3.94 in)).

Capillary

In order to obtain more precise measurement results and to avoid a defect in the device, mount the capillaries as follows:
- Vibration-free (in order to avoid additional pressure fluctuations)
- Not in the vicinity of heating or cooling lines
- Insulate if the ambient temperature is below or above the reference temperature
- With a bending radius of ≥ 100 mm (3.94 in).

Vacuum applications

For applications under vacuum, Endress+Hauser recommends mounting the pressure transmitter below the diaphragm seal. This prevents vacuum loading of the diaphragm seal caused by the presence of fill fluid in the capillary.

When the pressure transmitter is mounted above the diaphragm seal, the maximum height difference H1 in accordance with the illustration below must not be exceeded. The maximum height difference depends on the density of the filling oil and the smallest ever pressure that is permitted to occur at the diaphragm seal (empty container), see illustration below right.
When simultaneously applying the diaphragm seal systems at high process temperatures and low absolute pressures, Endress+Hauser recommends the vacuum service (Feature 570 "Service" version "HG").

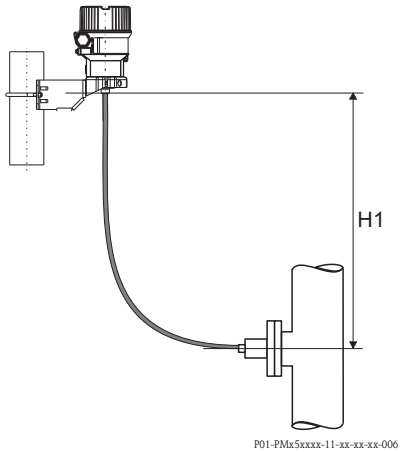

Installation above the diaphragm seal

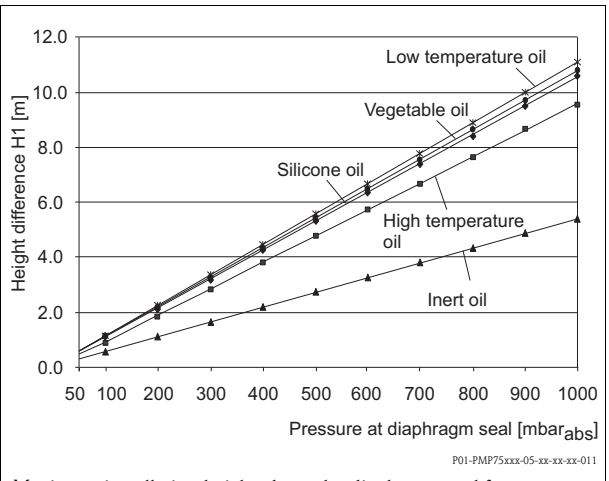

Maximum installation height above the diaphragm seal for vacuum applications

Thermal insulation

The PMP55 may only be insulated up to a certain height. The maximum permitted insulation height is indicated on the devices and applies to an insulation material with a heat conductivity ≤ 0.04 W/(m x K) and to the maximum permitted ambient and process temperature. The data were determined under the most critical application "quiescent air".

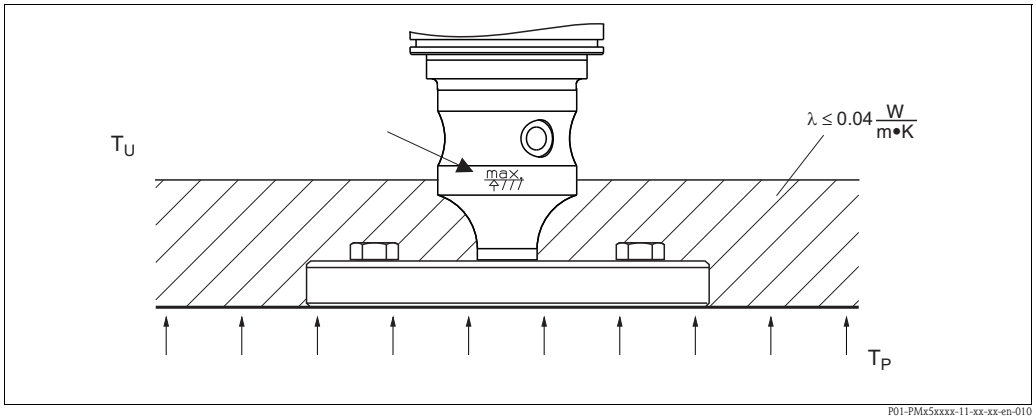

Maximum permitted insulation height, here indicated on a PMP55 with a flange

Mounting with temperature isolator

Endress+Hauser recommends the use of temperature isolators in the event of constant extreme medium temperatures which lead to the maximum permissible electronics temperature of +85°C (+185°F) being exceeded.
Depending on the filling oil used, diaphragm seal systems with temperature isolators can be used for maximum temperatures of up to 260 °C (+500 °F). → For the temperature application limits, see → 📄 77, "Diaphragm seal filling oils" section.
To minimize the influence of rising heat, Endress+Hauser recommends the device be mounted horizontally or with the housing pointing downwards.
The additional installation height also brings about a maximum zero point shift of 21 mbar (0.315 psi) due to the hydrostatic column in the temperature isolator. You can correct this zero point shift at the device.

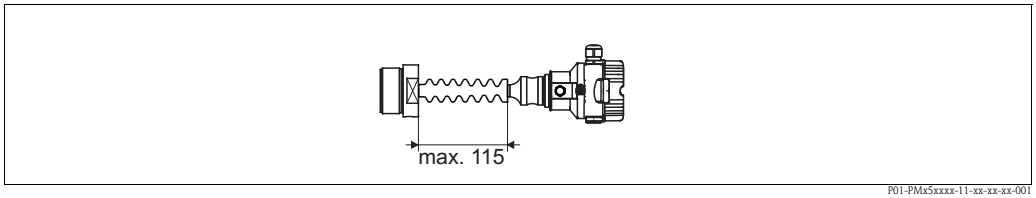

PMP55 with temperature isolator

Certificates and approvals

CE mark

The device meets the legal requirements of the relevant EC directives.
Endress+Hauser confirms that the device has been successfully tested by applying the CE mark.

Ex approvals

- ATEX
- IECEx
- FM
- CSA
- Also combinations of different approvals

All explosion protection data are given in separate documentation which is available upon request. The Ex documentation is supplied as standard with all devices approved for use in explosion hazardous areas.
→ 98 ff, "Safety Instructions" and "Installation/Control Drawings" sections.

Suitability for hygienic processes

The Cerabar M is suitable for use in hygienic processes.
Overview of suitable process connections → 33 ff.
Many versions meet the requirements of 3A-Sanitary Standard No. 74 and are certified by the EHEDG.
Suitable fittings and seals must be used for hygienic design in accordance with 3A and EHEDG specifications.
Note!
Gap-free connections can be cleaned without residue using the usual cleaning methods.

CERTIFIED HYGIENIC ENGINEERING & DESIGN EUROPEAN GROUP EHEDG TYPE EL February 2010

3A 74-

Pharma (CoC)

Certificate of Compliance (CoC) (according to ASME BPE-2007)

See "Ordering information", → 82 ff, feature 590 "Additional Option:", option"LW".

Functional safety SIL

The Cerabar M with 4 to 20 mA output signal has been developed to assessed and certified by TÜV NORD CERT as per IEC 61508 Edition 2.0 and IEC 61511. These devices can be used to monitor the process level and pressure up to SIL 2. For a detailed description of the safety functions with Cerabar M, settings and functional safety data, see the "Functional safety manual - Cerabar M" SD00347P. Ordering Information → 82 ff, feature 590 "Additional Approval:" version LA "SIL".

Marine approval

- DNV (Det Norske Veritas)
- GL (German Lloyd)

CRN approvals

Some device versions have CRN approval. For a CRN-approved device, a CRN-approved process connection (→ 33 ff, "Process connection") has to be ordered with a CSA approval (→ 82 ff, feature 10 "Approval"). PMP55 devices with a capillary are not CRN-approved. These devices are fitted with a separate plate bearing the registration number 0F10525.5C.

Pressure Equipment Directive (PED)

The devices PMC51, PMP51 and PMP55 correspond to Article 3 (3) of the EC directive 97/23/EC (Pressure Equipment Directive) and have been designed and manufactured according to good engineering practice.

The following also applies:
– PMP51/PMP55 with threaded connection and internal process isolating diaphragm PN > 200:
  Suitable for stable gases in group 1, category I
– PMP55 with pipe diaphragm seal ≥ 1.5"/PN40:
  Suitable for stable gases in group 1, category II
– PMP55 with separators PN400:
  Suitable for stable gases in group 1, category I

Drinking water approval

NSF 61 approval

Standards and guidelines

DIN EN 60770 (IEC 60770):
Transmitters for use in industrial process control systems
Part 1: Methods for inspection and routine testing

DIN 16086:
Electrical pressure measuring instruments, pressure sensors, pressure transmitters, pressure measuring instruments, concepts, specifications on data sheets

EN 61326 series:
EMC product family standard for electrical equipment for measurement, control and laboratory use.

North-American practice for installation of process seals

Endress+Hauser instruments are designed according to ANSI/ISA 12.27.01 either as single seal or dual seal devices with annunciation, allowing the user to waive the use and save the cost of installing external secondary process seals in the conduit as required by the process sealing sections of ANSI/NFPA 70 (NEC) and CSA 22.1 (CEC). These instruments comply with the North-American installation practice and provide a very safe and cost-saving installation for pressurized applications with hazardous fluids.
Further information can be found in the control drawings of the relevant devices.

Ordering information

PMC51

This overview does not mark options which are mutually exclusive.

10	**Approval:**	
	AA	For non-hazardous areas
	BA	ATEX II 1/2G Ex ia IIC T6
	BB	ATEX II 1/2D Ex t IIIC
	BD	ATEX II 3G Ex nA IIC T6
	BE	ATEX II 2G Ex ia IIC T6
	BF	ATEX II 1/2D Ex ia IIIC
	BG	ATEX II 3G Ex ic IIC T6
	B1	ATEX II 1/2G Ex ia IIC T6 + ATEX II 1/2D Ex iaD
	8C	ATEX II Ex ia + FM/CSA IS ATEX II 1/2G Ex ia IIC T6+ FM/CSA IS Cl.I Div. 1 Gr. A-D FM/CSA: zone0,1,2
	IA	IEC Ex ia IIC T6 Ga/Gb
	IE	IEC Ex ic IIC T6 Gc
	IF	IEC Ex ia IIIC Da/ Db
	I1	IEC Ex ia IIC T6 Ga/Gb+Ex ia IIIC Da/Db
	NA	NEPSI Ex ia IIC T6
	TA	TIIS Ex ia IIC T4
	CA	CSA C/US IS Cl.I,II,III Div.1 Gr. A-G, CSA C/US IS Cl.I Div.2 Gr. A-D, Ex ia, C: Zone 0, 1, 2/US: Zone 0, 1, 2, 20, 21, 22
	CD	CSA General Purpose
	FA	FM IS Cl.I,II,III Div.1 Gr.A-G, AEx ia FM NI Cl.I Div.2 Gr.A-D FM IS: Zone 0,1,2,20,21,22/FM NI: Zone 2
	FD	FM NI Cl.I Div.2 Gr.A-D
	99	Special version
20	**Output:**	
	1	4-20mA Analog
	2	4-20mA HART
	3	PROFIBUS PA
	4	FOUNDATION Fieldbus
	9	Special version
30	**Display, operation:**	
	1	LCD, push buttons on display electronics
	2	W/o LCD, push buttons on electronics
	9	Special version
40	**Housing:**	
	I	F31 aluminum
	J	F31 aluminum, glass window
	Q	F15 Stainless Steel Hygiene
	R	F15 Stainless Steel Hygiene, glass window
	S	F15 Stainless Steel Hygiene, plastic window
	Y	Special version
50	**Electrical connection:**	
	A	Gland M20, IP66/68 NEMA4X/6P
	B	Thread M20, IP66/68 NEMA4X/6P
	C	Thread G1/2, IP66/68 NEMA4X/6P
	D	Thread NPT1/2, IP66/68 NEMA4X/6P
	I	Connector M12, IP66/67, NEMA4X/6P
	M	Connector 7/8", IP66/68, NEMA4X/6P
	P	Connector Han7D, 90deg, IP65
	S	PE Cable 5m, IP66/68 NEMA4X/6P + pressure compensation via cable
	V	Valve connector ISO4400 M16, IP64
	Y	Special version

PMC51 (continued)

70	Sensor range:	
	1C	100mbar/10kPa/1.5psi relative, 1mH2O/3ftH2O/40inH2O Overload: 4bar/400kPa/60psi
	1E	250mbar/25kPa/3.75psi relative, 2.5mH2O/7.5ftH2O/100inH2O Overload: 5bar/500kPa/75psi
	1F	400mbar/40kPa/6psi relative, 4mH2O/13ftH2O/160inH2O Overload: 8bar/800kPa/120psi
	1H	1bar/100kPa/15psi relative, 10mH2O/33ftH2O/400inH2O Overload: 10bar/1MPa/150psi
	1K	2bar/200kPa/30psi relative, 20mH2O/67ftH2O/800inH2O Overload: 18bar/1.8MPa/270psi
	1M	4bar/400kPa/60psi relative, 40mH2O/133ftH2O/1600inH2O Overload: 25bar/2.5MPa/375psi
	1P	10bar/1MPa/150psi relative, 100mH2O/333ftH2O/4000inH2O Overload: 40bar/4MPa/600psi
	1S	40bar/4MPa/600psi relative, 400mH2O/1334ftH2O/16000inH2O Overload: 60bar/6MPa/900psi
	2C	100mbar/10kPa/1.5psi abs, 1mH2O/3ftH2O/40inH2O Overload: 4bar/400kPa/60psi
	2E	250mbar/25kPa/3.75psi abs, 2.5mH2O/7.5ftH2O/100inH2O Overload: 5bar/500kPa/75psi
	2F	400mbar/40kPa/6psi abs, 4mH2O/13ftH2O/160inH2O Overload: 8bar/800kPa/120psi
	2H	1bar/100kPa/15psi abs, 10mH2O/33ftH2O/400inH2O Overload: 10bar/1MPa/150psi
	2K	2bar/200kPa/30psi abs, 20mH2O/67ftH2O/800inH2O abs Overload: 18bar/1.8MPa/270psi
	2M	4bar/400kPa/60psi abs, 40mH2O/133ftH2O/1600inH2O abs Overload: 25bar/2.5MPa/375psi
	2P	10bar/1MPa/150psi abs, 100mH2O/333ftH2O/4000inH2O abs Overload: 40bar/4MPa/600psi
	2S	40bar/4MPa/600psi abs, 400mH2O/1334ftH2O/16000inH2O abs Overload: 60bar/6MPa/900psi
	99	Special version

80	Reference accuracy:	
	D	Platinum
	G	Standard
	Y	Special version

90	Calibration; Unit:	
	A	Sensor range; %
	B	Sensor range; mbar/bar
	C	Sensor range; kPa/MPa
	D	Sensor range; mm/mH2O
	E	Sensor range; inH2O/ftH2O
	F	Sensor range; psi
	J	Customized pressure; see additional spec.
	K	Customized level; see additional spec.
	Y	Special version

PMC51 (continued)

110	Process connection:
	ANSI flanges
ACJ	1" 150lbs RF, 316/316L, flange ANSI B16.5 (CRN)
AEJ	1-1/2" 150lbs RF, 316/316L, flange ANSI B16.5 (CRN)
AFF	2" 150lbs RF, PVDF, flange ANSI B16.5
AFJ	2" 150lbs RF, 316/316L, flange ANSI B16.5 (CRN)
AFN	2" 150lbs, ECTFE>316/316L, flange ANSI B16.5
AGF	3" 150lbs RF, PVDF, flange ANSI B16.5 (CRN)
AGJ	3" 150lbs RF, 316/316L, flange ANSI B16.5
AGN	3" 150lbs, ECTFE>316/316L, flange ANSI B16.5
AHJ	4" 150lbs RF, 316/316L, flange ANSI B16.5 (CRN)
AHN	4" 150lbs, ECTFE>316/316L, flange ANSI B16.5
ANJ	1" 300lbs RF, 316/316L, flange ANSI B16.5 (CRN)
AQJ	1-1/2" 300lbs RF, 316/316L, flange ANSI B16.5 (CRN)
ARJ	2" 300lbs RF, 316/316L, flange ANSI B16.5 (CRN)
ASJ	3" 300lbs RF, 316/316L, flange ANSI B16.5 (CRN)
ATJ	4" 300lbs RF, 316/316L, flange ANSI B16.5 (CRN)
	EN flanges
CNJ	DN25 PN10-40 B1, 316L, flange EN1092-1
CPJ	DN32 PN10-40 B1, 316L, flange EN1092-1
CQJ	DN40 PN10-40 B1, 316L, flange EN1092-1
CXJ	DN50 PN10-40 B1, 316L, flange EN1092-1
CFF	DN50 PN10/16 B1, PVDF, flange EN1092-1
CEF	DN40 PN10/16 B1, PVDF, flange EN1092-1
CRP	DN50 PN25/40, ECTFE>316L, flange EN1092-1
CZJ	DN80 PN10-40 B1, 316L, flange EN1092-1
CSP	DN80 PN25/40, ECTFE>316L, flange EN1092-1
	JIS flanges
KFJ	10K 50 RF, 316L, flange JIS B2220
KGJ	10K 80 RF, 316L, flange JIS B2220
KHJ	10K 100 RF, 316L, flange JIS B2220
	Threaded connection
GCC	Thread ISO228 G1/2, AlloyC (CRN)
GCF	Thread ISO228 G1/2, PVDF
GCJ	Thread ISO228 G1/2, 316L (CRN)
GLC	Thread ISO228 G1/2 G1/4 female, AlloyC (CRN)
GLJ	Thread ISO228 G1/2 G1/4 female, 316L (CRN)
GMC	Thread ISO228 G1/2 hole 11.4mm, AlloyC (CRN)
GMJ	Thread ISO228 G1/2 hole 11.4mm, 316L (CRN)
GOJ	Thread JIS B0203 R1/2 male, 316L
GNJ	Thread JIS B0202 G1/2 male, 316L
GVJ	Thread ISO228 G1-1/2, 316L, flush-mounted (CRN)
GWJ	Thread ISO228 G2, 316L, flush-mounted (CRN)
G4J	Thread DIN13 M44x1.25, 316L, flush-mounted
	Threaded connection as per ANSI
RJF	Thread ANSI MNPT1/2 hole 3mm, PVDF (CRN)
RKC	Thread ANSI MNPT 1/2 hole, 11.4mm, Alloy C (CRN)
RKJ	Thread ANSI MNPT1/2 hole 11.4mm, 316L (CRN)
RLC	Thread ANSI MNPT1/2 FNPT1/4, AlloyC (CRN)
RLJ	Thread ANSI MNPT1/2 FNPT1/4, 316L (CRN)
R1C	Thread ANSI FNPT 1/2, Alloy C (CRN)
R1J	Thread ANSI FNPT 1/2, 316L (CRN)
U7J	Thread ANSI MNPT1-1/2, 316L, flush-mounted (CRN)
U8J	Thread ANSI MNPT2, 316L, flush-mounted (CRN)
	Hygienic process connections
MRJ	DIN11851 DN50 PN25 slotted-nut, 316L, EHEDG, 3A with seal FDA (CRN)
MZJ	DIN11851 DN40 PN25 slotted-nut, 316L, EHEDG, 3A with seal FDA (CRN)
NCJ	DIN11864-1 A DN40 PN16 pipe DIN11866-A, slotted-nut, 316L, EHEDG, 3A with seal FDA
NDJ	DIN11864-1 A DN50 PN16 pipe DIN11866-A, slotted-nut, 316L, EHEDG, 3A with seal FDA
TQJ	Varivent F pipe DN25-32 PN40, 316L, EHEDG, 3A with seal FDA
TRJ	Varivent N pipe DN40-162 PN40, 316L, EHEDG, 3A with seal FDA
S4J	NEUMO BioControl D50 PN16, 316L, EHEDG, 3A with seal FDA
TIJ	DRD DN50 65mm PN25, 316L
TMJ	APV Inline DN50 PN40, 316L, 3A with seal FDA
UPJ	Universaladapter 44mm 316L, incl. silicone molded seal, EHEDG, 3A with seal FDA
UNJ	Universaladapter 44mm 316L, EPDM molded seal, EHEDG
TDJ	Tri-Clamp ISO2852 DN40-51 (2"), 316L, DIN32676 DN50, EHEDG, 3A with seal FDA (CRN)
TFJ	Tri-Clamp ISO2852 DN76.1 (3"), 316L, EHEDG, 3A with seal FDA (CRN)

110	Process connection:	
	YYY	Special version

PMC51 (continued)

190	Seal:	
	A	FKM Viton
	B	FKM Viton, FDA, 3A Class I, USP Class VI
	G	HNBR, FDA, 3A Class I, KTW, AFNOR, BAM
	F	NBR
	H	NBR, Low temperature
	J	EPDM, FDA
	K	EPDM, FDA, 3A Class II, USP Class VI, DVGW, KTW, W270, WRAS, ACS, NSF61
	L	FFKM Kalrez 6375
	M	FFKM Kalrez 7075
	N	FFKM Kalrez 6221, FDA, USP Class VI
	P	Fluoroprene XP40, FDA, USP Class VI, 3A Class I
	S	VMQ Silicone, FDA
	Y	Special version

Additional ordering information (optional)

500	Additional Operating language:	
	AA	English
	AB	German
	AC	French
	AD	Spanish
	AE	Italian
	AF	Dutch
	AK	Chinese simplified
	AL	Japanese

550	Calibration:	
	F1	Factory calibration certificate, 5-point
	F2	DKD/DAkkS calibration certificate 10-point

570	Service:	
	HA	Oil and grease removed [1]
	HB	Cleaned for oxygen service [1]
	HC	Cleaned from PWIS (PWIS = paint wetting impairment substances) [1]
	IA	Configured min alarm current
	IB	Configured HART Burst Mode PV
	I9	Special version
		1) Only device, not accessory or enclosed accessory

580	Test, certificate:	
	JA	EN10204-3.1 process connection material, inspection certificate
	JB	NACE MR0175 process connection
	KB	EN10204-3.1 material process conn. +Ra, Ra= surface roughness, dimensional check, inspection certificate
	KD	EN10204-3.1 helium leak test, inspection certificate
	KE	EN10204-3.1 pressure test, inspection certificate
	K9	Special version,

590	Other approvals:	
	LW	CoC-ASME BPE (CoC = Certificate of Compliance)
	LI	DNV marine certificate
	LE	GL marine certificate
	LA	SIL

600	Separate housing:	
	MA	Cable PE, 2m/80in + housing mounting bracket, wall/pipe, 304
	MB	Cable PE, 5m/200in + housing mounting bracket, wall/pipe, 304
	MC	Cable PE, 10m/400in + housing mounting bracket, wall/pipe, 304
	MH	Cable FEP, 5m/200in IP69K + housing mounting bracket, wall/pipe, 304

610	Accessory mounted:	
	NA	Overvoltage protection

620	Accessory enclosed		
	PA	Mounting bracket, wall/pipe, 304	
	P2	Shutoff valve (PZAV), see additional spec	
		-R1A1	PZAV-R1A1 Shutoff valve, G1/2, C22.8
		-R1A2	PZAV-R1A2 Shutoff valve, G1/2, 316Ti
		-R1D1	PZAV-R1D1 Shutoff valve, NPT1/2, C22.8

620	Accessory enclosed		
		-R1D2	PZAV-R1D2 Shutoff valve, NPT1/2, 316Ti
		-B1A2	PZAV-B1A2 Shutoff valve, G1/2, 316Ti, 3.1
		-B1D2	PZAV-B1D2 Shutoff valve, NPT1/2, 316Ti, 3.1
	P4	Siphon (PZW), see additional spec	
		-RA21	PZW-RA21 Siphon G1/2 vertical, C22.8 (O-shape)
		-RA22	PZW-RA22 Siphon G1/2 vertical, 316Ti (O-shape)
		-RC11	PZW-RC11 Siphon G1/2 x weld. horiz. C22.8 (U-shape)
		-RD11	PZW-RD11 Siphon NPT1/2 x weld. horiz. C22.8 (U-shape)
		-BB22	PZW-BB22 Siphon NPT1/2 vertical, 316Ti, 3.1 (O-shape)
		-BA22	PZW-BA22 Siphon NPT1/2x weld.vert.316Ti 3.1 (O-shape)
	QJ	Welding neck G1-1/2, 316L	
	QK	Welding neck G1-1/2, 316L, 3.1, EN10204-3.1 material, inspection certificate	
	QL	Weld-in tool adapter G1-1/2, brass	
	QP	Weld-in flange DRD DN50 65mm, 316L	
	QR	Weld-in fl. DRD DN50 65mm, 316L 3.1 EN10204-3.1 material, inspection certificate	
	QS	Weld-in tool flange DRD DN50 65mm, Brass	
	QT	Weld-in adapter Uni D65, 316L	
	QU	Weld-in adapter Uni D65, 316L, 3.1 EN10204-3.1 material, inspection certificate	
	Q1	Weld-in tool adapter Uni D65/D85, Brass	
	Q2	Weld-in adapter Uni D85, 316L	
	Q3	Weld-in adapter Uni D85, 316L, 3.1 EN10204-3.1 material, inspection certificate	
	RA	Adapter Uni > DIN11851 DN40, 316L, slotted-nut	
	RB	Adapter Uni > DIN11851 DN50, 316L, slotted-nut	
	RC	Adapter Uni > DRD DN50 65mm, 316L	
	RD	Adapter Uni > Clamp 2", 316L	
	RE	Adapter Uni > Clamp 3", 316L	
	RF	Adapter Uni > Varivent N, 316L	
	RH	Adapter Uni > Cherry Burell 2", 316L	
	R1	Adapter Uni > DIN11851 DN40, 316L, 3.1, slotted-nut, EN10204-3.1 material, inspection certificate	
	R2	Adapter Uni > DIN11851 DN50, 316L, 3.1, slotted-nut, EN10204-3.1 material, inspection certificate	
	R3	Adapter Uni > DRD DN50 65mm, 316L, 3.1 EN10204-3.1 material, inspection certificate	
	R4	Adapter Uni > Clamp 2", 316L, 3.1 EN10204-3.1 material, inspection certificate	
	R5	Adapter Uni > Clamp 3", 316L, 3.1 EN10204-3.1 material, inspection certificate	
	R6	Adapter Uni > Varivent, 316L, 3.1 EN10204-3.1 material, inspection certificate	
	R7	Adapter Uni > Cherry Burell, 316L, 3.1 EN10204-3.1 material, inspection certificate	
	RL	Plug-in jack M12	
	RM	Plug-in jack M12, 90deg	
	RN	Plug-in jack M12, 90deg+5m cable	
	R9	Special version, TSP-no. to be spec.	

850	Firmware version:	
	78	01.00.zz, HART, DevRev01

895	Identification:	
	Z1	Measuring point (TAG), see additional spec.
	Z2	Bus address, see additional spec.

PMP51

This overview does not mark options which are mutually exclusive.

10	Approval:	
	AA	For non-hazardous areas
	BA	ATEX II 1/2G Ex ia IIC T6
	BB	ATEX II 1/2D Ex t IIIC
	BC	ATEX II 2G Ex d IIC T6
	BD	ATEX II 3G Ex nA IIC T6
	BE	ATEX II 2G Ex ia IIC T6
	BG	ATEX II 3G Ex ic IIC T6
	B1	ATEX II 1/2G Ex ia IIC T6 + ATEX II 1/2D Ex iaD
	B2	ATEX II 1/2G Ex ia IIC T6 + ATEX II 2G Ex d IIC T6
	8A	ATEX II Ex ia/Ex d + FM/CSA IS + XP ATEX II 1/2G Ex ia IIC T6+ ATEX II 2G Ex d IIC T6+ FM/CSA IS + XP Cl.I, II Div.1 Gr. A-G/B-G, zone 1,2
	8B	FM/CSA IS + XP Cl.I, II Div.1 Gr.A-D/B-G FM IS/FM XP Cl.I, II Div.1 Gr.A-G+ CSA IS/XP Cl.I, II Div.1 Gr.A-G, zone 1,2
	IA	IEC Ex ia IIC T6 Ga/Gb
	IB	IEC Ex d IIC T6 Gb
	ID	IEC Ex t IIIC Da/Db
	IE	IEC Ex ic IIC T6 Gc
	I1	IEC Ex ia IIC T6 Ga/Gb+Ex ia IIIC Da/Db
	NA	NEPSI Ex ia IIC T6
	NB	NEPSI Ex d IIC T6
	TA	TIIS Ex ia IIC T4
	CA	CSA C/US IS Cl.I,II,III Div.1 Gr.A-G, CSA C/US IS Cl.I Div.2 Gr.2 Gr.A-D, Ex ia, zone 0,1,2,20,21,22
	CB	CSA C/US XP Cl.I, II Div.1 Gr.B-G, Ex d (Conduit seal not required), zone 1,2
	CC	CSA C/US Cl.II, III Div.1 Gr.E-G, US: Zone 21,22
	CD	CSA General Purpose
	C1	CSA C/US IS/XP Cl.I, II Div.1 Gr.A-G/B-G, Zone 1,2
	FA	FM IS Cl.I,II,III Div.1 Gr.A-G, AEx ia FM NI Cl.I Div.2 Gr.A-D FM IS: Zone 0,1,2,20,21,22/FM NI: Zone 2
	FB	FM XP Cl.I, II Div.1 Gr.A-D, AEx d (Factory sealed) zone 1,2
	FC	FM DIP Cl.II, III Div.1 Gr.A-D Zone 21,22
	FD	FM NI Cl.I Div.2 Gr.A-D, Zone 2
	F1	FM IS/XP Cl.I, II Div.1 Gr.A-G, Zone 1,2
	99	Special version

20	Output:	
	1	4-20mA Analog
	2	4-20mA HART
	3	PROFIBUS PA
	4	FOUNDATION Fieldbus
	9	Special version

30	Display, operation:	
	1	LCD, keys on display/electronics
	2	Without LCD, keys on electronics
	9	Special version

40	Housing:	
	I	F31 aluminum
	J	F31 aluminum, glass window
	Q	F15 Stainless Steel Hygiene
	R	F15 Stainless Steel Hygiene, glass window
	S	F15 Stainless Steel Hygiene, plastic window
	Y	Special version

50	Electrical connection:	
	A	Gland M20, IP66/68 NEMA4X/6P
	B	Thread M20, IP66/68 NEMA4X/6P
	C	Thread G1/2, IP66/68 NEMA4X/6P
	D	Thread NPT1/2, IP66/68 NEMA4X/6P
	I	Connector M12, IP66/67, NEMA4X/6P
	M	Connector 7/8", IP66/68, NEMA4X/6P
	P	Connector Han7D, 90deg, IP65
	S	PE Cable 5m, IP66/68 NEMA4X/6P + pressure compensation via cable
	V	Valve connector ISO4400 M16, IP64

50	Electrical connection:	
	Y	Special version

PMP51 (continued)

70	Sensor range:	
	1F	400mbar/40kPa/6psi relative, 4mH2O/13ftH2O/160inH2O Overload: 6bar/600kPa/90psi
	1H	1bar/100kPa/15psi relative, 10mH2O/33ftH2O/400inH2O Overload: 10bar/1MPa/150psi
	1K	2bar/200kPa/30psi relative, 20mH2O/67ftH2O/800inH2O Overload: 20bar/2MPa/300psi
	1M	4bar/400kPa/60psi relative, 40mH2O/133ftH2O/1600inH2O Overload: 28bar/2.8MPa/420psi
	1P	10bar/1MPa/150psi relative, 100mH2O/333ftH2O/4000inH2O Overload: 40bar/4MPa/600psi
	1S	40bar/4MPa/600psi relative, 400mH2O/1334ftH2O/16000inH2O Overload: 160bar/16MPa/2400psi
	1U	100bar/10MPa/1500psi relative, 1000mH2O/3330ftH2O/40000inH2O Overload: 400bar/40MPa/6000psi
	1W	400bar/40MPa/6000psi relative, 4000mH2O/13340ftH2O/160000inH2O Overload: 600bar/60MPa/9000psi
	2F	400mbar/40kPa/6psi abs, 4mH2O/13ftH2O/160inH2O Overload: 6bar/600kPa/90psi
	2H	1bar/100kPa/15psi abs, 10mH2O/33ftH2O/400inH2O Overload: 10bar/1MPa/150psi
	2K	2bar/200kPa/30psi abs, 20mH2O/67ftH2O/800inH2O Overload: 10bar/1MPa/150psi
	2M	4bar/400kPa/60psi abs, 40mH2O/133ftH2O/1600inH2O abs Overload: 28bar/2.8MPa/420psi
	2P	10bar/1MPa/150psi abs, 100mH2O/333ftH2O/4000inH2O abs Overload: 40bar/4MPa/600psi
	2S	40bar/4MPa/600psi abs, 400mH2O/1334ftH2O/16000inH2O abs Overload: 160bar/16MPa/2400psi
	2U	100bar/10MPa/1500psi abs, 1000mH2O/3330ftH2O/40000inH2O abs Overload: 400bar/40MPa/6000psi
	2W	400bar/40MPa/6000psi abs, 4000mH2O/13340ftH2O/160000inH2O abs Overload: 600bar/60MPa/9000psi
	99	Special version

80	Reference accuracy:	
	D	Platinum
	G	Standard
	Y	Special version

90	Calibration; Unit:	
	A	Sensor range; %
	B	Sensor range; mbar/bar
	C	Sensor range; kPa/MPa
	D	Sensor range; mm/mH2O
	E	Sensor range; inH2O/ftH2O
	F	Sensor range; psi
	J	Customized pressure; see additional spec.
	K	Customized level; see additional spec.
	Y	Special version

PMP51 (continued)

110	**Process connection:**	
	ANSI flanges	
	AEJ	1-1/2" 150lbs RF, 316/316L, flange ANSI B16.5 (CRN)
	AFJ	2" 150lbs RF, 316/316L, flange ANSI B16.5 (CRN)
	AGJ	3" 150lbs RF, 316/316L, flange ANSI B16.5 (CRN)
	AHJ	4" 150lbs RF, 316/316L, flange ANSI B16.5 (CRN)
	ANJ	1" 300lbs RF, 316/316L, flange ANSI B16.5 (CRN)
	AQJ	1-1/2" 300lbs RF, 316/316L, flange ANSI B16.5 (CRN)
	ARJ	2" 300lbs RF, 316/316L, flange ANSI B16.5 (CRN)
	ASJ	3" 300lbs RF, 316/316L, flange ANSI B16.5 (CRN)
	ATJ	4" 300lbs RF, 316/316L, flange ANSI B16.5 (CRN)
	EN flanges	
	CNJ	DN25 PN10-40 B1, 316L, flange EN1092-1
	CPJ	DN32 PN10-40 B1, 316L, flange EN1092-1
	CQJ	DN40 PN10-40 B1, 316L, flange EN1092-1
	CXJ	DN50 PN25/40 B1, 316L flange EN1092-1
	CZJ	DN80 PN25/40 B1, 316L, flange EN1092-1
	Threaded connection	
	GCC	Thread ISO228 G1/2, AlloyC
	GCJ	Thread ISO228 G1/2, 316L
	GLC	Thread ISO228 G1/2 G1/4 female, AlloyC
	GLJ	Thread ISO228 G1/2 G1/4 female, 316L
	GMC	Thread ISO228 G1/2 hole 11.4mm, AlloyC
	GMJ	Thread ISO228 G1/2 hole 11.4mm, 316L
	GRC	Thread ISO228 G1/2, AlloyC, flush-mounted
	GRJ	Thread ISO228 G1/2, 316L, flush-mounted
	GTJ	Thread ISO228 G1, 316L, flush-mounted
	GVJ	Thread ISO228 G1-1/2, 316L, flush-mounted
	GWJ	Thread ISO228 G2, 316L, flush-mounted
	G0J	Thread ISO228 G1/2 seal O-ring, fm= flush-mounted, 316L, adapter 52002643
	G1J	Thread DIN13 M20x1.5, 316L
	Threaded connection as per ANSI	
	RKC	Thread ANSI MNPT1/2 hole 11.4mm, AlloyC (CRN)
	RKJ	Thread ANSI MNPT1/2 hole 11.4mm, 316L (CRN)
	RLC	Thread ANSI MNPT1/2 FNPT1/4, AlloyC (CRN)
	RLJ	Thread ANSI MNPT1/2 FNPT1/4, 316L (CRN)
	R1C	Thread ANSI FNPT 1/2, Alloy C (CRN)
	R1J	Thread ANSI FNPT 1/2, 316L (CRN)
	U5J	Thread ANSI MNPT1, 316L, flush-mounted (CRN)
	U7J	Thread ANSI MNPT1-1/2, 316L, flush-mounted (CRN)
	U8J	Thread ANSI MNPT2, 316L, flush-mounted (CRN)
	XSJ	Prepared for diaphragm seal mount, 316L (CRN)
	Hygienic connections	
	MXJ	DIN11851 DN25 PN25 coupling nut, 316L, EHEDG, 3A
	MIJ	DIN11851 DN32 PN25 coupling nut, 316L, EHEDG, 3A
	MZJ	DIN11851 DN40 PN25 coupling nut, 316L, EHEDG, 3A
	MRJ	DIN11851 DN50 PN25 coupling nut, 316L, EHEDG, 3A
	S1J	NEUMO BioControl D25 PN16, 316L, EHEDG, 3A
	S4J	NEUMO BioControl D50 PN16, 316L, EHEDG, 3A
	TBJ	Clamp ISO2852 DN18-22, 316L DIN32676 DN15-20, EHEDG, 3A, ASME-BPE
	TCJ	Tri-Clamp ISO2852 DN25 (1"), 316L, DIN32676 DN25, EHEDG, 3A, ASME-BPE
	TJJ	Tri-Clamp ISO2852 DN38 (1-1/2"), 316L, DIN32676 DN40, EHEDG, 3A, ASME-BPE
	TDJ	Tri-Clamp ISO2852 DN40-51 (2"), 316L, DIN32676 DN50, EHEDG, 3A
	TIJ	DRD DN50 65mm PN25, 316L
	TMJ	APV Inline DN50 PN40, 316L, 3A
	TPJ	Varivent B pipe DN10-15 PN40, 316L, EHEDG, 3A
	TQJ	Varivent F pipe DN25-32 PN40, 316L, EHEDG, 3A
	TRJ	Varivent N pipe DN40-162 PN40, 316L, EHEDG, 3A
	T6J	SMS 1" PN25, 316L, EHEDG, 3A
	T7J	SMS 1-1/2" PN25, 316L, EHEDG, 3A
	TXJ	SMS 2" PN25, 316L, EHEDG, 3A
	YYY	Special version

170	**Material of the process isolating diaphragm:**	
	A	316L
	B	AlloyC
	M	Rhodium>gold>316L
	Y	Special version

180	Fill fluid:	
	1	Silicone oil
	2	Inert oil
	3	Synthetic oil, FDA
	9	Special version

Additional ordering information (optional)

500	Additional Operating language:	
	AA	English
	AB	German
	AC	French
	AD	Spanish
	AE	Italian
	AF	Dutch
	AK	Chinese simplified
	AL	Japanese

PMP51 (continued)

550	Calibration:	
	F1	Factory calibration certificate, 5-point
	F2	DKD/DAkkS calibration certificate 10-point

570	Service:	
	HA	Oil and grease removed [1]
	HB	Cleaned for oxygen service [1]
	HC	Cleaned from PWIS (PWIS = paint wetting impairment substances) [1]
	IA	Configured min alarm current
	IB	Configured HART Burst Mode PV
	I9	Special version
		1) Only device, not accessory or enclosed accessory

580	Test, certificate:	
	JA	EN10204-3.1 wetted material, inspection certificate
	JB	NACE MR0175 wetted
	JF	EN10204-3.1 AD2000 material wetted parts, excepting process membrane inspection certificate
	KB	EN10204-3.1 wetted material + Ra, Ra= surface roughness, dimensional check, inspection certificate
	KD	EN10204-3.1 helium leak test, inspection certificate
	KE	EN10204-3.1 pressure test, inspection certificate
	KG	EN10204-3.1 PMI test* (PMI = positive material identification), inspection certificate
		* Meter body and process isolating diaphragm not included.
	K9	Special version

590	Other approvals:	
	LW	CoC-ASME BPE (CoC = Certificate of Compliance)
	LI	DNV marine certificate
	LE	GL marine certificate
	LA	SIL
	LR	NSF potable water approval

600	Separate housing:	
	MA	Cable PE, 2m/80in + housing mounting bracket, wall/pipe, 304
	MB	Cable PE, 5m/200in + housing mounting bracket, wall/pipe, 304
	MC	Cable PE, 10m/400in + housing mounting bracket, wall/pipe, 304
	MH	Cable FEP, 5m/200in IP69K + housing mounting bracket, wall/pipe, 304

610	Accessory mounted:	
	NA	Overvoltage protection

620	Accessory enclosed		
	PA	Mounting bracket, wall/pipe, 304	
	P2	Shutoff valve (PZAV), see additional spec	
		-R1A1	PZAV-R1A1 Shutoff valve, G1/2, C22.8 (O-shape)
		-R1A2	PZAV-R1A2 Shutoff valve, G1/2, 316Ti (O-shape)
		-R1D1	PZAV-R1D1 Shutoff valve, NPT1/2, C22.8 (U-shape)
		-R1D2	PZAV-R1D2 Shutoff valve, NPT1/2, 316Ti (U-shape)
		-B1A2	PZAV-B1A2 Shutoff valve, G1/2, 316Ti, 3.1 (O-shape)
		-B1D2	PZAV-B1D2 Shutoff valve, NPT1/2, 316Ti, 3.1 (O-shape)
	P4	Siphon (PZW), see additional spec	
		-RA21	PZW-RA21 Siphon G1/2 vertical, C22.8
		-RA22	PZW-RA22 Siphon G1/2 vertical, 316Ti
		-RC11	PZW-RC11 Siphon G1/2 x weld. horiz. C22.8

620	**Accessory enclosed**		
		-RD11	PZW-RD11 Siphon NPT1/2 x weld. horiz. C22.8
		-BB22	PZW-BB22 Siphon NPT1/2 vertical, 316Ti, 3.1
		-BA22	PZW-BA22 Siphon NPT1/2x weld.vert.316Ti 3.1
	QA	Welding neck G1/2, 316L,	
	QB	Welding neck G1/2, 316L, 3.1, EN10204-3.1 material, inspection certificate	
	QC	Weld-in tool adapter G1/2, brass	
	QG	Weld-in tool adapter G1, brass, metallic sealing taper	
	QJ	Welding neck G1-1/2, 316L	
	QK	Welding neck G1-1/2, 316L, 3.1, EN10204-3.1 material, inspection certificate	
	QL	Weld-in tool adapter G1-1/2, brass	
	RL	Plug-in jack M12	
	RM	Plug-in jack M12, 90deg	
	RN	Plug-in jack M12, 90deg+5m cable	
850	**Firmware version:**		
	78	01.00.zz, HART, DevRev01	
895	**Identification:**		
	Z1	Measuring point (TAG), see additional spec.	
	Z2	Bus address, see additional spec.	

PMP55

This overview does not mark options which are mutually exclusive.

10	**Approval:**	
	AA	For non-hazardous areas
	BA	ATEX II 1/2G Ex ia IIC T6
	BB	ATEX II 1/2D Ex t IIIC
	BC	ATEX II 2G Ex d IIC T6
	BD	ATEX II 3G Ex nA IIC T6
	BE	ATEX II 2G Ex ia IIC T6
	BG	ATEX II 3G Ex ic IIC T6
	B1	ATEX II 1/2G Ex ia IIC T6 + ATEX II 1/2D Ex iaD
	B2	ATEX II 1/2G Ex ia IIC T6 + ATEX II 2G Ex d IIC T6
	8A	ATEX II Ex ia/Ex d + FM/CSA IS + XP ATEX II 1/2G Ex ia IIC T6+ ATEX II 2G Ex d IIC T6+ FM/CSA IS + XP Cl.I, II Div.1 Gr. A-G/B-G, zone 1,2
	8B	FM/CSA IS + XP Cl.I, II Div.1 Gr.A-D/B-G FM IS/FM XP Cl.I, II Div.1 Gr.A-G+ CSA IS/XP Cl.I, II Div.1 Gr.A-G, Zone 1,2
	IA	IEC Ex ia IIC T6 Ga/Gb
	IB	IEC Ex d IIC T6 Gb
	ID	IEC Ex t IIIC Da/Db
	IE	IEC Ex ic IIC T6 Gc
	I1	IEC Ex ia IIC T6 Ga/Gb+Ex ia IIIC Da/Db
	NA	NEPSI Ex ia IIC T6
	NB	NEPSI Ex d IIC T6
	TA	TIIS Ex ia IIC T4
	CA	CSA C/US IS Cl.I,II,III Div.1 Gr.A-G, CSA C/US IS Cl.I Div.2 Gr.2 Gr.A-D, Ex ia, zone 0,1,2,20,21,22
	CB	CSA C/US CP Cl.I, II Div.1 Gr.B-G, Ex d (factory sealed) zone 1,2
	CC	CSA C/US Cl.II, III Div.1 Gr.E-G, Zone 21,22
	CD	CSA General Purpose
	C1	CSA C/US IS/XP CL.I, II Div.1 Gr.A-G/B-G, Zone 1,2
	FA	FM IS Cl.I,II,III Div.1 Gr.A-G, AEx ia FM NI Cl.I Div.2 Gr.A-D FM IS: Zone 0,1,2,20,21,22/FM NI: Zone 2
	FB	FM XP Cl.I, II Div.1 Gr.A-G, AEx d (factory sealed) zone 1,2
	FC	FM DIP Cl.II, III Div.1 Gr.A-G, zone 21,22
	FD	FM NI Cl.I Div.2 Gr.A-D, Zone 2
	F1	FM IS/XP Cl.I, II Div.1 Gr.A-G, Zone 1,2
	99	Special version
20	**Output:**	
	1	4-20mA Analog
	2	4-20mA HART
	3	PROFIBUS PA
	4	FOUNDATION Fieldbus
	9	Special version
30	**Display, operation:**	
	1	LCD, keys on display/electronics
	2	Without LCD, keys on electronics
	9	Special version
40	**Housing:**	
	I	F31 aluminum
	J	F31 aluminum, glass window
	Q	F15 Stainless Steel Hygiene
	R	F15 Stainless Steel Hygiene, glass window
	S	F15 Stainless Steel Hygiene, plastic window
	Y	Special version
50	**Electrical connection:**	
	A	Gland M20, IP66/68 NEMA4X/6P
	B	Thread M20, IP66/68 NEMA4X/6P
	C	Thread G1/2, IP66/68 NEMA4X/6P
	D	Thread NPT1/2, IP66/68 NEMA4X/6P
	I	Connector M12, IP66/67, NEMA4X/6P
	M	Connector 7/8", IP66/68, NEMA4X/6P
	P	Connector Han7D, 90deg, IP65
	S	PE Cable 5m, IP66/68 NEMA4X/6P + pressure compensation via cable
	V	Valve connector ISO4400 M16, IP64

50	Electrical connection:	
	Y	Special version

PMP55 (continued)

70	Sensor range:	
	1F	400mbar/40kPa/6psi relative, 4mH2O/13ftH2O/160inH2O Overload: 6bar/600kPa/90psi
	1H	1bar/100kPa/15psi relative, 10mH2O/33ftH2O/400inH2O Overload: 10bar/1MPa/150psi
	1K	2bar/200kPa/30psi relative, 20mH2O/67ftH2O/800inH2O Overload: 20bar/2MPa/300psi
	1M	4bar/400kPa/60psi relative, 40mH2O/133ftH2O/1600inH2O Overload: 28bar/2.8MPa/420psi
	1P	10bar/1MPa/150psi relative, 100mH2O/333ftH2O/4000inH2O Overload: 40bar/4MPa/600psi
	1S	40bar/4MPa/600psi relative, 400mH2O/1334ftH2O/16000inH2O Overload: 160bar/16MPa/2400psi
	1U	100bar/10MPa/1500psi relative, 1000mH2O/3330ftH2O/40000inH2O Overload: 400bar/40MPa/6000psi
	1W	400bar/40MPa/6000psi relative, 4000mH2O/13340ftH2O/160000inH2O Overload: 600bar/60MPa/9000psi
	2F	400mbar/40kPa/6psi abs, 4mH2O/13ftH2O/160inH2O Overload: 6bar/600kPa/90psi
	2H	1bar/100kPa/15psi abs, 10mH2O/33ftH2O/400inH2O Overload: 10bar/1MPa/150psi
	2K	2bar/200kPa/30psi abs, 20mH2O/67ftH2O/800inH2O abs Overload: 20bar/2MPa/300psi
	2M	4bar/400kPa/60psi abs, 40mH2O/133ftH2O/1600inH2O abs Overload: 28bar/2.8MPa/420psi
	2P	10bar/1MPa/150psi abs, 100mH2O/333ftH2O/4000inH2O abs Overload: 40bar/4MPa/600psi
	2S	40bar/4MPa/600psi abs, 400mH2O/1334ftH2O/16000inH2O abs Overload: 160bar/16MPa/2400psi
	2U	100bar/10MPa/1500psi abs, 1000mH2O/3330ftH2O/40000inH2O abs Overload: 400bar/40MPa/6000psi
	2W	400bar/40MPa/6000psi abs, 4000mH2O/13340ftH2O/160000inH2O abs Overload: 600bar/60MPa/9000psi
	99	Special version

80	Reference accuracy:	
	D	Platinum
	G	Standard
	Y	Special version

90	Calibration; Unit:	
	A	Sensor range; %
	B	Sensor range; mbar/bar
	C	Sensor range; kPa/MPa
	D	Sensor range; mm/mH2O
	E	Sensor range; inH2O/ftH2O
	F	Sensor range; psi
	J	Customized pressure; see additional spec.
	K	Customized level; see additional spec.
	Y	Special version

PMP55 (continued)

110	Process connection:
	ANSI flanges
ACJ	1" 150lbs RF, 316/316L, flange ANSI B16.5 (CRN)
AEJ	1-1/2" 150lbs RF, 316/316L, flange ANSI B16.5 (CRN)
AFJ	2" 150lbs RF, 316/316L, flange ANSI B16.5 (CRN)
AGJ	3" 150lbs RF, 316/316L, flange ANSI B16.5 (CRN)
AHJ	4" 150lbs RF, 316/316L, flange ANSI B16.5 (CRN)
ANJ	1" 300lbs RF, 316/316L, flange ANSI B16.5 (CRN)
AQJ	1-1/2" 300lbs RF, 316/316L, flange ANSI B16.5 (CRN)
ARJ	2" 300lbs RF, 316/316L, flange ANSI B16.5 (CRN)
ASJ	3" 300lbs RF, 316/316L, flange ANSI B16.5 (CRN)
ATJ	4" 300lbs RF, 316/316L, flange ANSI B16.5 (CRN)
A0J	1" 400/600lbs RF, 316/316L, flange ANSI B16.5 (CRN)
A1J	2" 400/600lbs RF, 316/316L, flange ANSI B16.5 (CRN)
A2J	1" 900/1500lbs RF, 316/316L, flange ANSI B16.5 (CRN)
A3J	2" 900/1500lbs RF, 316/316L, flange ANSI B16.5 (CRN)
A4J	1" 2500lbs RF, 316/316L, flange ANSI B16.5 (CRN)
A5J	2" 2500lbs RF, 316/316L, flange ANSI B16.5 (CRN)
FMJ	2" 150lbs RF, 316/316L, 2/4/6/8" extended diaphragm seal, flange ANSI B16.5, see additional spec. (CRN)
FNJ	3" 150lbs RF, 316/316L, 2/4/6/8" extended diaphragm seal, flange ANSI B16.5, see additional spec. (CRN)
FOJ	4" 150lbs RF, 316/316L, 2/4/6/8" extended diaphragm seal, flange ANSI B16.5, see additional spec. (CRN)
FWJ	3" 300lbs RF, 316/316L, 2/4/6/8" extended diaphragm seal, flange ANSI B16.5, see additional spec. (CRN)
FXJ	4" 300lbs RF, 316/316L, 2/4/6/8" extended diaphragm seal, flange ANSI B16.5, see additional spec. (CRN)
	EN flanges
CNJ	DN25 PN10-40 B1, 316L, flange EN1092-1
CPJ	DN32 PN10-40 B1, 316L, flange EN1092-1
CQJ	DN40 PN10-40 B1, 316L, flange EN1092-1
CXJ	DN50 PN10-40 B1, 316L, flange EN1092-1
CZJ	DN80 PN10-40 B1, 316L, flange EN1092-1
	JIS flanges
KCJ	10K 25 RF, 316L, flange JIS B2220
KEJ	10K 40 RF, 316L, flange JIS B2220
KFJ	10K 50 RF, 316L, flange JIS B2220
KGJ	10K 80 RF, 316L, flange JIS B2220
KHJ	10K 100 RF, 316L, flange JIS B2220
	DIN flanges
QIJ	DN25 PN63-160 E, 316L, flange DIN2501
QJJ	DN25 PN250 E, 316L, flange DIN2501
QMJ	DN50 PN250 E, 316L, flange DIN2501
QOJ	DN50 PN100-160 E, 316L, flange DIN2501
QSJ	DN25 PN400 E, 316L, flange DIN2501
QVJ	DN50 PN400 E, 316L, flange DIN2501
FDJ	DN50 PN10-40 B1, 316L, 50/100/200mm extended diaphragm seal, flange EN1092-1, see additional spec.
FEJ	DN80 PN10-40 B1, 316L, 50/100/200mm extended diaphragm seal, flange EN1092-1, see additional spec.
PDJ	DN50 PN63 B2, 316L, flange EN1092-1
PPJ	DN80 PN100 B2, 316L, flange EN1092-1
PQJ	DN100 PN100 B2, 316L, flange EN1092-1
	Threaded connection
GTC	Thread ISO228 G1, AlloyC, flush-mounted
GTJ	Thread ISO228 G1, 316L, flush-mounted
GVC	Thread ISO228 G1-1/2, AlloyC, fm= flush-mounted
GVJ	Thread ISO228 G1-1/2, 316L, flush-mounted
GWC	Thread ISO228 G2, AlloyC, flush-mounted
GWJ	Thread ISO228 G2, 316L, flush-mounted
UBJ	Thread ISO228 G1/2, PN160.316L, separator, EN837, welded
UCJ	Thread ANSI MNPT1/2,PN160.316L,separator, welded (CRN)
UDJ	Thread ISO228 G1/2, 316L, separator, EN837, threaded
UEJ	Thread ANSI MNPT1/2, 316L, separator, threaded
UGJ	Thread FNPT1/2, PN250, 316L, separator, threaded
UHJ	Thread FNPT1, PN250, 316L, separator, threaded
U5C	Thread ANSI MNPT1, AlloyC, flush-mounted (CRN)
U5J	Thread ANSI MNPT1, 316L, flush-mounted (CRN)
U7C	Thread ANSI MNPT1-1/2, AlloyC, fm=flush-mounted (CRN)
U7J	Thread ANSI MNPT1-1/2, 316L, flush-mounted (CRN)
U8C	Thread ANSI MNPT2, AlloyC, flush-mounted (CRN)
U8J	Thread ANSI MNPT2, 316L, flush-mounted (CRN)

PMP55 (continued)

110	Process connection:
	Diaphragm seal cell structure
UIJ	Pancake (Cell) DN 50 PN 16-400, AISI 316L
UJJ	Pancake (Cell) DN 80 PN 16-400, AISI 316L
UKJ	Pancake (Cell) DN 100 PN 16-400, AISI 316L
ULJ	Pancake (Cell) 2" 150-2500 lbs, AISI 316L
UMJ	Pancake (Cell) 3" 150-2500 lbs, AISI 316L
URJ	Pancake (Cell) 4" 150-2500 lbs, AISI 316L
	Pipe diaphragm seal
SIJ	Tri-Clamp ISO2852 DN10 (3/4") RDM, 316L, RDM = pipe diaphragm seal
SJJ	Tri-Clamp ISO2852 DN16 (3/4") RDM, 316L, RDM = pipe diaphragm seal
SBJ	Tri-Clamp ISO2852 DN25 (1") RDM, 316L, RDM = pipe diaphragm seal
SCJ	Tri-Clamp ISO2852 DN38 (1-1/2") RDM, 316L, PED Cat.II, RDM = pipe diaphragm seal 3.1 material + pressure test PED Cat.II
SDJ	Tri-Clamp ISO2852 DN51 (2") RDM, 316L, PED Cat.II, RDM = pipe diaphragm seal 3.1 material + pressure test PED Cat.II
	Hygienic process connections
MIJ	DIN11851 DN32 PN40 cap-nut, 316L, EHEDG, 3A
MRJ	DIN11851 DN50 PN25 cap-nut, 316L, EHEDG, 3A
MSJ	DIN11851 DN65 PN25 cap-nut, 316L, EHEDG, 3A
MTJ	DIN11851 DN80 PN25 cap-nut, 316L, EHEDG, 3A
MZJ	DIN11851 DN40 PN40 cap-nut, 316L, EHEDG, 3A
NCJ	DIN11864-1 A DN40 PN16 tube DIN11866-A, threaded connection, 316L, EHEDG, 3A
NDJ	DIN11864-1 A DN50 PN16 tube DIN11866-A, threaded connection, 316L, EHEDG, 3A
NFJ	DIN11864-2 A DN32 PN16 tube DIN11866-A, 316L, EHEDG, 3A
NXJ	DIN11864-2 A DN40 PN16 tube DIN11866-A, 316L, EHEDG, 3A
NZJ	DIN11864-2 A DN50 PN16 tube DIN11866-A, 316L, EHEDG, 3A
S4J	NEUMO BioControl D50 PN16, 316L, EHEDG
TCJ	Tri-Clamp ISO2852 DN25 (1"), 316L, DIN32676 DN25, EHEDG, 3A, ASME-BPE (CRN)
TJJ	Tri-Clamp ISO2852 DN38 (1-1/2"), 316L, DIN32676 DN40, EHEDG, 3A, ASME-BPE (CRN)
TDJ	Tri-Clamp ISO2852 DN51 (2"), 316L, DIN32676 DN50, EHEDG, 3A, ASME-BPE (CRN)
TFJ	Tri-Clamp ISO2852 DN76.1 (3"), 316L, EHEDG, 3A, ASME-BPE (CRN)
TIJ	DRD DN50 65mm PN25, 316L
TQJ	Varivent F pipe DN25-32 PN40, 316L, EHEDG, 3A
TRJ	Varivent N pipe DN40-162 PN40, 316L, EHEDG, 3A
UPJ	Universal adapter 44mm 316L, 3A, EHEDG, incl. silicone molded seal
T0J	APV-RJT 1" PN40, 316L
T1J	APV-RJT 1-1/2" PN40, 316L
T2J	APV-RJT 2" PN40, 316L
T3J	APV-ISS 1" PN40, 316L
T4J	APV-ISS 1-1/2" PN40, 316L
T5J	APV-ISS 2" PN40, 316L
T6J	SMS 1" PN25, 316L, EHEDG, 3A
T7J	SMS 1-1/2" PN25, 316L, EHEDG, 3A
TXJ	SMS 2" PN25, 316L, EHEDG, 3A
YYY	Special version

170	Material of the process isolating diaphragm:
A	316L
B	AlloyC
C	Monel
D	Tantalum
M	Rhodium>gold>316L
R	0.09mm PTFE>316L, not for vacuum
S	0.25mm PTFE>316L, not for vacuum
Y	Special version

PMP55 (continued)

180	Fill fluid:
1	Silicone oil
2	Inert oil
4	Vegetable oil, FDA
5	High-temperature oil
6	Low-temperature oil
9	Special version

200	Diaphragm seal connection:
A	Direct
B	Temperature isolator
D	..... m capillary
E	..... ft capillary
Y	Special version

Additional ordering information (optional)

500	Additional Operating language:
AA	English
AB	German
AC	French
AD	Spanish
AE	Italian
AF	Dutch
AK	Chinese simplified
AL	Japanese

550	Calibration:
F1	Factory calibration certificate, 5-point
F2	DKD/DAkkS calibration certificate 10-point

570	Service:
HA	Oil and grease removed [1]
HB	Cleaned for oxygen service [1]
HC	Cleaned from PWIS (PWIS = paint wetting impairment substances) [1]
HG	Diaphragm seal vacuum service
HK	Surface quality Ra<0.38um electropolished (wetted)
IA	Configured min alarm current
IB	Configured HART Burst Mode PV
I9	Special version
	1) Only device, not accessory or enclosed accessory

580	Test, certificate:
JA	EN10204-3.1 wetted material, inspection certificate
JB	NACE MR0175 wetted
JF	EN10204-3.1 AD2000 material wetted parts, excepting process membrane inspection certificate
KB	EN10204-3.1 wetted material + Ra, (Ra= surface roughness), dimensional check, inspection certificate
KD	EN10204-3.1 helium leak test, inspection certificate
KE	EN10204-3.1 pressure test, inspection certificate
KF	EN10204-3.1 measurement Delta ferrite content, inspection certificate
KG	EN10204-3.1 PMI test* (PMI = positive material identification), inspection certificate
	* Meter body and process isolating diaphragm not included.
K9	Special version

590	Other approvals:
LW	CoC-ASME BPE (CoC = Certificate of Compliance)
LI	DNV marine certificate
LE	GL marine certificate
LA	SIL

600	Separate housing:
MA	Cable PE, 2m/80in + housing mounting bracket, wall/pipe, 304
MB	Cable PE, 5m/200in + housing mounting bracket, wall/pipe, 304
MC	Cable PE, 10m/400in + housing mounting bracket, wall/pipe, 304
MH	Cable FEP, 5m/200in IP69K + housing mounting bracket, wall/pipe, 304

610	Accessory mounted:
NA	Overvoltage protection

PMP55 (continued)

620	**Accessory enclosed**		
	PA	Mounting bracket, wall/pipe, 304	
	P2	Shutoff valve (PZAV), see additional spec	
		-R1A1	PZAV-R1A1 Shutoff valve, G1/2, C22.8 (O-shape)
		-R1A2	PZAV-R1A2 Shutoff valve, G1/2, 316Ti (O-shape)
		-R1D1	PZAV-R1D1 Shutoff valve, NPT1/2, C22.8 (U-shape)
		-R1D2	PZAV-R1D2 Shutoff valve, NPT1/2, 316Ti (U-shape)
		-B1A2	PZAV-B1A2 Shutoff valve, G1/2, 316Ti, 3.1 (O-shape)
		-B1D2	PZAV-B1D2 Shutoff valve, NPT1/2, 316Ti, 3.1 (O-shape)
	P4	Siphon (PZW), see additional spec	
		-RA21	PZW-RA21 Siphon G1/2 vertical, C22.8
		-RA22	PZW-RA22 Siphon G1/2 vertical, 316Ti
		-RC11	PZW-RC11 Siphon G1/2 x weld. horiz. C22.8
		-RD11	PZW-RD11 Siphon NPT1/2 x weld. horiz. C22.8
		-BB22	PZW-BB22 Siphon NPT1/2 vertical, 316Ti, 3.1
		-BA22	PZW-BA22 Siphon NPT1/2x weld.vert.316Ti 3.1
	QA	Welding neck G1/2, 316L,	
	QB	Welding neck G1/2, 316L, 3.1, EN10204-3.1 material, inspection certificate	
	QC	Weld-in tool adapter G1/2, brass	
	QJ	Welding neck G1-1/2, 316L	
	QK	Welding neck G1-1/2, 316L, 3.1, EN10204-3.1 material, inspection certificate	
	QL	Weld-in tool adapter G1-1/2, brass	
	QP	Welding flange DRD DN50 65mm, 316L	
	QR	Welding fl. DRD DN50 65mm, 316L 3.1, EN10204-3.1 material, inspection certificate	
	QS	Weld-in tool flange DRD DN50 65mm, brass	
	RL	Plug-in jack M12	
	RM	Plug-in jack M12, 90deg	
	RN	Plug-in jack M12, 90deg+5m cable	
850	**Firmware version:**		
	78	01.00.zz, HART, DevRev01	
895	**Identification:**		
	Z1	Measuring point (TAG), see additional spec.	
	Z2	Bus address, see additional spec.	

Documentation

Technical Information

- EMC test procedures TI00241F/00/EN
- Deltabar M: TI00434P/00/EN
- Deltapilot M: TI00437P/00/EN

Operating Instructions

- 4 to 20 mA Analog: BA00385P/00/EN
- 4 to 20 mA HART: BA00382P/00/EN
- PROFIBUS PA: BA00383P/00/EN
- FOUNDATION Fieldbus: BA00384P/00/EN

Brief Operating Instructions

- 4 to 20 mA Analog: KA01036P/00/EN
- 4 to 20 mA HART: KA01030P/00/EN
- PROFIBUS PA: KA01031P/00/EN
- FOUNDATION Fieldbus: KA01032P/00/EN

Functional safety manual (SIL) Cerabar M (4 to 20 mA): SD00347P/00/EN

Safety Instructions

Authorities	Version in the order code	Approval	Category	Type	Housing		Electronics	Documentation
					F31	F15		
ATEX	BA	Ex ia IIC	II 1/2 G	PMC51, PMP51, PMP55	X	X	– 4 to 20 mA HART	– XA00464P/00
	BB	Ex t IIC	II 1/2 D	PMC51, PMP51, PMP55	X	X	– 4 to 20 mA HART	– XA00466P/00
	BC	Ex d	II 2 G	PMP51, PMP55	X	—	– 4 to 20 mA HART – PROFIBUS PA – FOUNDATION Fieldbus	– XA00467P/00
	BD	Ex nA	II 3 G	PMC51, PMP51, PMP55	X	X	– 4 to 20 mA HART – PROFIBUS PA – FOUNDATION Fieldbus	– XA00469P/00
	BE	Ex ia IIC	II 2 G	PMC51, PMP51, PMP55	X	X	– 4 to 20 mA HART	– XA00464P/00
	BF	Ex ia IIC	II 1/2 D	PMC51	X	X	– 4 to 20 mA HART	– XA00465P/00
	BG	Ex ic IIC	II 3 G	PMC51, PMP51, PMP55	X	X	– 4 to 20 mA HART	– XA00489P/00
	B1	Ex ia Ex ia IIIC	II 1/2 G II 1/2 D	PMC51, PMP51, PMP55	X	X	– 4 to 20 mA HART	– XA00468P/00
	B2	Ex ia IIC	II 2 G II 1/2 G	PMP51, PMP55	X	X	– 4 to 20 mA HART	– XA00468P/00
	8A	Ex d IIC Ex ia IIC	II 2 G II 1/2 G	PMP51, PMP55	X	—	– 4...20 mA HART	– XA00504P/00

Authorities	Version in the order code	Approval	EPL	Type	Housing		Electronics	Documentation
					F31	F15		
IECEx	IA	Ex ia IIC	Ga/Gb	PMC51, PMP51, PMP55	X	X	– 4 to 20 mA HART	– XA00470P/00
	IB	Ex d IIC	Gb	PMP51, PMP55	X	—	– 4 to 20 mA HART – PROFIBUS PA – FOUNDATION Fieldbus	– XA00471P/00
	ID	Ex t IIIC	Da/Db	PMP51, PMP55	X	X	– 4 to 20 mA HART	– XA00472P/00
	IE	Ex ic	Gc	PMC51, PMP51, PMP55	X	X	– 4 to 20 mA HART	– XA00488P/00
	IF	Ex ia IIIC	Da/Db	PMC51	X	X	– 4 to 20 mA HART	– XA00487P/00
	I1	Ex ia IIC Ex ia IIIC	Ga/Gb Da/Db	PMC51, PMP51, PMP55	X	X	– 4 to 20 mA HART	– XA00473P/00

Authorities	Version in the order code	Approval	Housing		Electronics	Documentation
			F31	F15		
NEPSI	NA	Ex ia IIC	X	X	– 4 to 20 mA HART	– XA00533P/00
NEPSI	NB	Ex d IIC	X	—	– 4 to 20 mA HART	– XA00515P/00

Installation/Control Drawings

Authorities	Version in the order code	Approval	Type	Housing		Electronics	Documentation
				F31	F15		
FM	FA	FM IS Cl.I,II,III Div.1 Gr.A-G, AEx ia FM NI Cl.I Div.2 Gr.A-D FM IS: Zone 0,1,2,20,21,22/FM NI: Zone 2	PMC51, PMP51, PMP55	X	X	– 4...20 mA HART – PROFIBUS PA, FOUNDATION Fieldbus	– XA00563P/00 – XA00564P/00
	FB	FM XP Cl.I, II Div.1 Gr.A-D, AEx d (Factory sealed) Zone 1,2	PMP51, PMP55	X	—	– 4...20 mA HART – PROFIBUS PA – FOUNDATION Fieldbus	–
	FC	FM DIP Cl.II, III Div.1 Gr.A-D Zone 21,22	PMP51, PMP55	X	X	– 4 to 20 mA HART	– In preparation
	F1	FM IS/XP Cl.I, II Div.1 Gr.A-G, Zone 1,2	PMP51, PMP55	X		– 4 to 20 mA HART	– XA00567P/00
CSA	CA	C/US IS Cl.I,II,III Div.1 Gr.A-G, C/US IS Cl.I Div.2 Gr.A-D, Ex ia	PMC51, PMP51, PMP55	X	X	– 4...20 mA HART – PROFIBUS PA, FOUNDATION Fieldbus	– XA00556P/00 – XA00558P/00
	CB	CSA C/US CP Cl.I, II Div.1 Gr.B-G, Ex d (factory sealed) Zone 1,2	PMP51, PMP55	X	—	– 4 to 20 mA HART	– ZD00249P/00
	CC	CSA C/US Cl.II, III Div.1 Gr.E-G, Zone 21,22	PMP51, PMP55	X	X	– 4 to 20 mA HART	– In preparation
	C1	CSA C/US IS/XP CL.I, II Div.1 Gr.A-G/B-G, Zone 1,2	PMP51, PMP55	X	—	– 4...20 mA HART – PROFIBUS PA, FOUNDATION Fieldbus	– XA00577P/00 – XA00561P/00
FM CSA	8B	FM/CSA IS + XP Cl.I, II Div.1 Gr.A-D/B-G FM IS/FM XP Cl.I, II Div.1 Gr.A-G+ CSA IS/XP Cl.I, II Div.1 Gr.A-G, Zone 1,2	PMP55	X	—	– 4 to 20 mA HART	– In preparation

Accessories

Shutoff valve

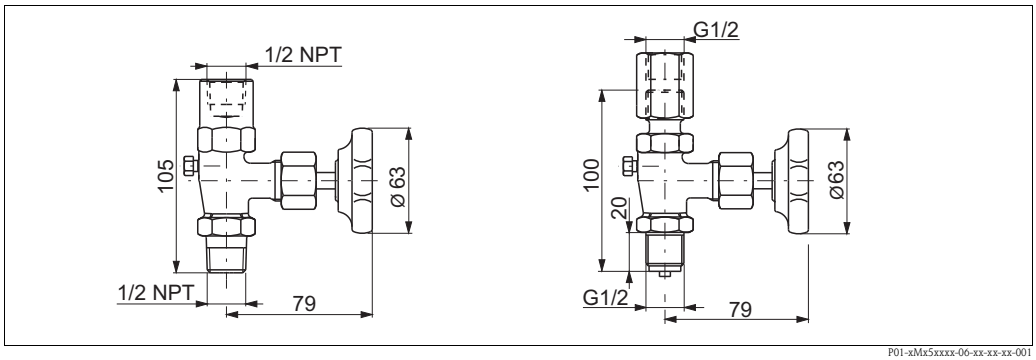

Max. working pressure [bar (psi)]	Connection thread [d]	Material	Version in the order code [1]
400 (5800)	G1/2	C22.8 (1.0460)	R1A1
		316Ti (1.4571)	R1A2, B1A2
	NPT1/2	C22.8 (1.0460)	R1D1
		316Ti (1.4571)	R1D2, B1D2

1) See also → 🖹 82 ff, feature 620, "Accessory enclosed", version "P2".

Siphon

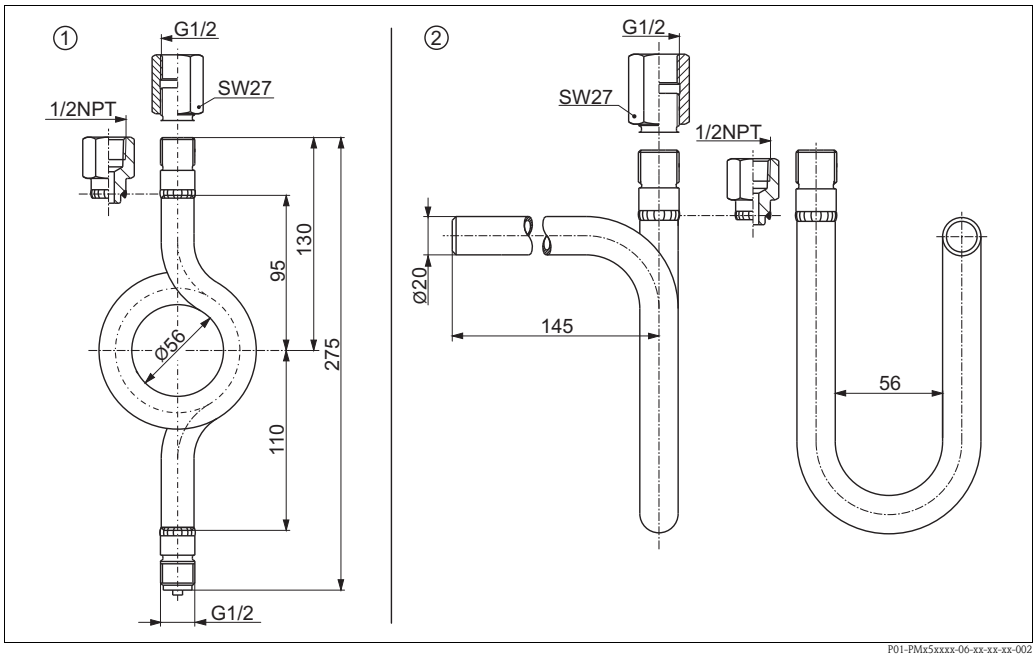

Nr	Max. Betriebsdruck [bar (psi)]	Max. operating temperature °C (°F) in front of the siphon (process side)	Connection thread [d]	Material	Version in the order code [1]
1	■ 104 (1508) ■ 120 (1740) ■ 160 (2320)	■ 400 (752) ■ 300 (572) ■ 120 (248)	G1/2	1.0345	RA21
				316Ti (1.4571)	RA22, BA22
			NPT1/2	316Ti (1.4571)	BB22
2			G1/2	1.0345	RC11
			NPT1/2	1.0345	RD11

1) See also → 🖹 82 ff, feature 620, "Accessory enclosed", version "P4".

Welding necks and Weld-in tool flanges	See technical Information TI00426F/00.
Mounting bracket for wall and pipe mounting	→ 26 ff
M12 connector	→ 18 ff

Configuration data sheet (HART, PROFIBUS PA, FOUNDATION Fieldbus electronics)

Level

The following configuration data sheet has to be filled in and included with the order if the version "K – Customized level" has been selected in feature 90 "Calibration; Unit" in the product structure.

Pressure Engineering Unit

❏ mbar ❏ mmH_2O ❏ mmHg ❏ Pa
❏ bar ❏ mH_2O ❏ kPa
❏ ftH_2O ❏ kgf/cm^2 ❏ MPa
❏ psi ❏ inH_2O

Output Unit (Scaled unit)

Mass	Length	Volume	Volume	Percent
❏ kg	❏ m	❏ l	❏ gal	❏ %
❏ t	❏ dm	❏ hl	❏ Igal	
❏ lb	❏ cm			
	❏ mm	❏ m^3		
		❏ ft^3		
	❏ ft	❏ in^3		
	❏ inch			

Empty pressure [a]:
Low pressure value (empty) _____ [pres. eng. unit]

Empty calibration [a]:
Low level value (empty) _____ [Scaled Unit]

Full pressure [b]:
High pressure value (full) _____ [pres. eng. unit]

Full calibration [b]:
High level value (full) _____ [Scaled Unit]

Example

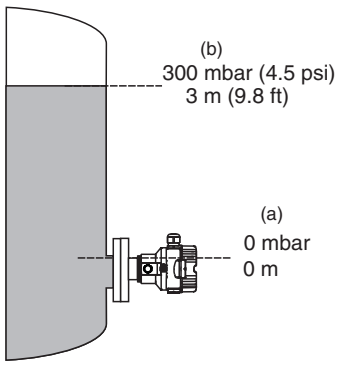

Display Information

1st Value Display [1]
❏ Main Value

2nd Value Display [1]
❏ none (Default)
❏ Main Value [%]
❏ Pressure
❏ Current [mA] (HART only)
❏ Temperature

[1] Depending on sensor and comunication variant

Damping

Damping: _____ sec (Default 2 sec)

Pressure

The following configuration data sheet has to be filled in and included with the order if the version "J – Customized pressure" has been selected in feature 90 "Calibration; Unit" in the product structure.

Pressure Engineering Unit

❏ mbar ❏ mmH_2O ❏ mmHg ❏ Pa
❏ bar ❏ mH_2O ❏ kPa
❏ ftH_2O ❏ kgf/cm^2 ❏ MPa
❏ psi ❏ inH_2O

Calibration Range / Output

Low range value (LRV): _____ [pressure engineering unit]
Upper range value (URV): _____ [pressure engineering unit]

Display Information

1st Value Display [1]
❏ Main Value

2nd Value Display [1]
❏ none (Default)
❏ Main Value [%]
❏ Pressure
❏ Current [mA] (HART only)
❏ Temperature

[1] Depending on sensor and comunication variant

Damping

Damping: _____ sec (Default 2 sec)

Note!
Smallest calibratable span (preset at the factory) → 🖹 8 ff.

Configuration data sheet (analog electronics)

Pressure

The following configuration data sheet has to be filled in and included with the order if the version "J - Customized pressure" has been selected in feature 90 "Calibration; Unit" in the product structure.

Pressure Engineering Unit

❏ mbar ❏ mmH_2O ❏ mmHg ❏ Pa
❏ bar ❏ mH_2O ❏ kPa
❏ ftH_2O ❏ kgf/cm^2 ❏ MPa
❏ psi ❏ inH_2O

Calibration Range / Output

Low range value (LRV): _____ [pressure engineering unit]
Upper range value (URV): _____ [pressure engineering unit]

Display

1st Value Display [1)]
❏ Main Value

2nd Value Display [1)]
❏ none (Default)

[1)] Depending on sensor and comunication variant

Damping

Damping: _____ sec (Default 2 sec)

Note!
Smallest calibratable span (preset at the factory) → 🖹 8 ff.

Instruments International

Endress+Hauser
Instruments International AG
Kaegenstrasse 2
4153 Reinach
Switzerland

Tel.+41 61 715 81 00
Fax+41 61 715 25 00
www.endress.com
info@ii.endress.com

Endress+Hauser

People for Process Automation

TI00436P/00/EN/17.12
No. 71190907
CCS/FM+SGML 9.0

71190907

CS-999-014 : Identification sheet

VWTC PROJECT NUMBER:	Iqaluit WWTP	REV:	02
PROJECT NAME:	5000218036	SUBMITTED TO (COMPANY):	
ENGINEER:	F.VINCI	SUBMITTED TO (RESPONSIBLE)	
PROJECT MANAGER:	C. BEKAERT	PROJECT NUM REFERENCE.:	
PHONE NUMBER:		LOT NUMBER:	

SUPPLIER	EQPT CODE	EQPT TAG NO	DIA	DESCRIPTION	INFO 1	INFO 2	INFO 3	APPLIC.	NOTE	REV
ENDRESS & HAUSER	ST-999-014	FM-02-317 FM-02-327	3"	FLOWMETER	Electromagnetic flowmeter// Manuf: E&H // Promag 400 Model : 5W4C80-C6ALHP2DUA1K0A+AAL4Z1// DN80 (3")// Liner: Polyurethane	C6: Approval: CSA C/ US NI Cl.I Div.2 Gr. ABCD A: Design: **Insertion length short ISO/ DVGW until DN400, DN450-2000 1:1 L: Power Supply: 100-240VAC/24VAC/ DC H: Output; Input: 4-20mA HART, pulse/ freq., switch output P: Housing: Remote, alu, coated 2: Cable, Remote Version: 10m/30ft coil + signal cable D: Electrical Connection: Thread NPT1/2 U: Liner: Polyurethane	A1K: Process Connection: Cl.150, carbon steel, flange ASME B16.5 0: Electrodes: 1.4435/316L A: Calibration Flow: 0.5% AA: Operation Language Display: English L4: Additional Approval: NSF 61 Drinking water approval Z1: Marking: Tagging (TAG), see additional spec.			2

TI01046D/06/EN/08.19
71424608
2019-02-01

Technical Information
Proline Promag W 400

Electromagnetic flowmeter



Versatile standard flowmeter for the water and wastewater industry

Anwendungsbereich

- The bidirectional measuring principle is virtually independent of pressure, density, temperature and viscosity
- Ideal for water measurement, e.g. drinking water, utility water and industrial/municipal wastewater

Device properties

- International drinking water approvals
- Degree of protection IP68 (Type 6P enclosure)
- Approved for custody transfer to MI-001/OIML R49
- Transmitter housing made of durable polycarbonate or aluminum
- WLAN access
- Integrated data logger: measured values monitoring

Your benefits

- With EN ISO 12944 corrosion protection for underground installation or permanent underwater use
- Flexible engineering – sensor with welded or lap-joint process connections
- Reliable measurement – accurate measured values even with 0 DN inlet run
- Improved plant availability – sensor compliant with industry-specific requirements
- Safe operation – no need to open the device due to display with touch control, background lighting
- Time-saving local operation without additional software and hardware – integrated web server
- Integrated verification – Heartbeat Technology

Endress+Hauser
People for Process Automation

Table of contents

About this document 4
Symbols used 4

Function and system design 5
Measuring principle 5
Measuring system 6
Equipment architecture 7
Safety 7

Input 8
Measured variable 8
Measuring range 9
Operable flow range 12
Input signal 12

Output 13
Output signal 13
Signal on alarm 14
Low flow cut off 16
Galvanic isolation 16
Protocol-specific data 16

Power supply 21
Terminal assignment 21
Pin assignment, device plug 23
Supply voltage 24
Power consumption 24
Current consumption 24
Power supply failure 24
Electrical connection 25
Potential equalization 29
terminals 30
Cable entries 31
Cable specification 31

Performance characteristics 33
Reference operating conditions 33
Maximum measured error 33
Repeatability 35
Influence of ambient temperature 35

Installation 35
Mounting location 35
Orientation 36
Inlet and outlet runs 37
Adapters 38
Length of connecting cable 38
Mounting the transmitter housing 39
Special mounting instructions 40

Environment 41
Ambient temperature range 41
Storage temperature 41
Atmosphere 41
Degree of protection 42
Vibration resistance 42
Shock resistance 42
Shock resistance 42
Mechanical load 42
Electromagnetic compatibility (EMC) 42

Process 42
Medium temperature range 42
Conductivity 43
Pressure-temperature ratings 43
Pressure tightness 46
Flow limit 47
Pressure loss 47
System pressure 48
Thermal insulation 48
Vibrations 49

Custody transfer mode 50

Mechanical construction 50
Dimensions in SI units 50
Dimensions in US units 68
Weight 78
Measuring tube specification 81
Materials 83
Fitted electrodes 85
Process connections 86
Surface roughness 86

Operability 86
Operating concept 86
Languages 86
Local display 87
Remote operation 87
Service interface 89
Supported operating tools 90
HistoROM data management 92

Certificates and approvals 93
CE mark 93
RCM-Tick mark 93
Ex approval 93
Drinking water approval 93
HART certification 93
Certification PROFIBUS 93
Modbus RS485 certification 93
EtherNet/IP certification 93
Radio approval 93
Measuring instrument approval 93
Other standards and guidelines 94

Ordering information 94
Product generation index 94

Application packages 95
Cleaning 95
Diagnostics functions 95
Heartbeat Technology 95

Accessories 95
Device-specific accessories 96
Communication-specific accessories 96
Service-specific accessories 97
System components 97

Supplementary documentation 98
Standard documentation 98
Supplementary device-dependent documentation 98

Registered trademarks 99

About this document

Symbols used

Electrical symbols

Symbol	Meaning
	Direct current
	Alternating current
	Direct current and alternating current
	**Ground connection** A grounded terminal which, as far as the operator is concerned, is grounded via a grounding system.
	**Protective Earth (PE)** A terminal which must be connected to ground prior to establishing any other connections. The ground terminals are situated inside and outside the device: ▪ Inner ground terminal: Connects the protectiv earth to the mains supply. ▪ Outer ground terminal: Connects the device to the plant grounding system.

Communication symbols

Symbol	Meaning
	**Wireless Local Area Network (WLAN)** Communication via a wireless, local network.
	**Bluetooth** Wireless data transmission between devices over a short distance.
	**LED** Light emitting diode is off.
	**LED** Light emitting diode is on.
	**LED** Light emitting diode is flashing.

Symbols for certain types of information

Symbol	Meaning
	**Permitted** Procedures, processes or actions that are permitted.
	**Preferred** Procedures, processes or actions that are preferred.
	**Forbidden** Procedures, processes or actions that are forbidden.
	**Tip** Indicates additional information.
	Reference to documentation.
	Reference to page.
	Reference to graphic.
	Visual inspection.

Symbols in graphics

Symbol	Meaning
1, 2, 3, ...	Item numbers
1., 2., 3., ...	Series of steps
A, B, C, ...	Views
A-A, B-B, C-C, ...	Sections
	Hazardous area
	Safe area (non-hazardous area)
	Flow direction

Function and system design

Measuring principle

Following *Faraday's law of magnetic induction*, a voltage is induced in a conductor moving through a magnetic field.

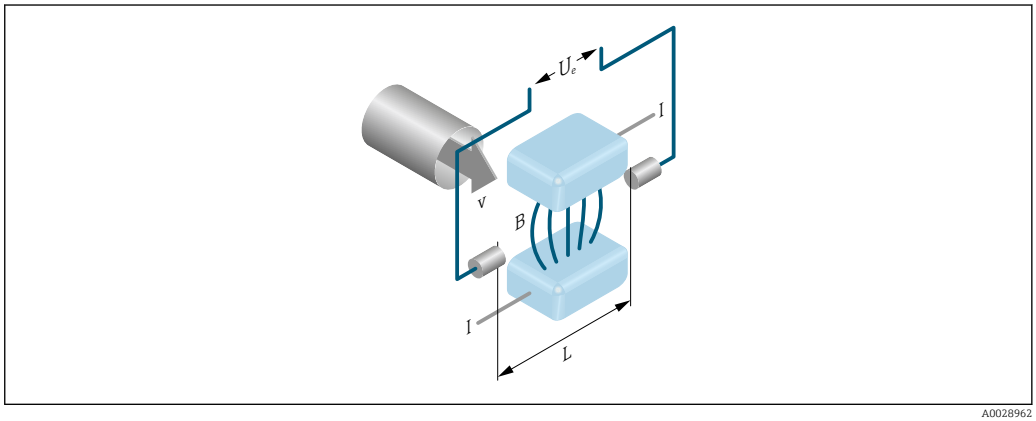

A0028962

Ue Induced voltage
B Magnetic induction (magnetic field)
L Electrode spacing
I Current
v Flow velocity

In the electromagnetic measuring principle, the flowing medium is the moving conductor. The voltage induced (U_e) is proportional to the flow velocity (v) and is supplied to the amplifier by means of two measuring electrodes. The flow volume (Q) is calculated via the pipe cross-section (A). The DC magnetic field is created through a switched direct current of alternating polarity.

Formulae for calculation

- Induced voltage $U_e = B \cdot L \cdot v$
- Volume flow $Q = A \cdot v$

Measuring system

The device consists of a transmitter and a sensor.

Two device versions are available:
- Compact version – transmitter and sensor form a mechanical unit.
- Remote version - transmitter and sensor are mounted in separate locations.

Transmitter

Promag 400 A0017117	Device versions and materials ▪ Compact version: compact housing – Polycarbonate plastic – Aluminum, AlSi10Mg, coated ▪ Remote version: wall-mount housing – Polycarbonate plastic – Aluminum, AlSi10Mg, coated Configuration: ▪ External operation via four-line, illuminated local display with touch control and guided menus ("Make-it-run" wizards) for applications ▪ Via operating tools (e.g. FieldCare) ▪ Via Web browser (e.g. Microsoft Internet Explorer) ▪ Also for device version with EtherNet/IP output: – Via Add-on Profile Level 3 for automation system from Rockwell Automation – Via Electronic Data Sheet (EDS) ▪ Also for device version with PROFIBUS DP output: Via PDM driver for Siemens automation system

Sensor

Promag W *Lap joint flange, lap joint flange, stamped plate or fixed flange with aluminum half-shell housing: DN 25 to 300 (1 to 12")* A0017040	▪ Nominal diameter range: DN 25 to 2400 (1 to 90") ▪ Materials→ 🖹 83
Fixed flange with fully welded housing made of carbon steel: DN 25 to 300 (1 to 12") A0022673	

Fixed flange with fully welded housing made of carbon steel: DN 350 to 2400 (14 to 90")

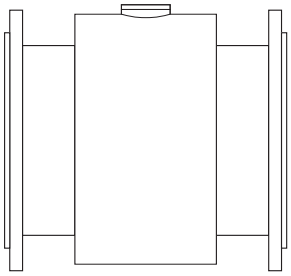

A0017041

Equipment architecture

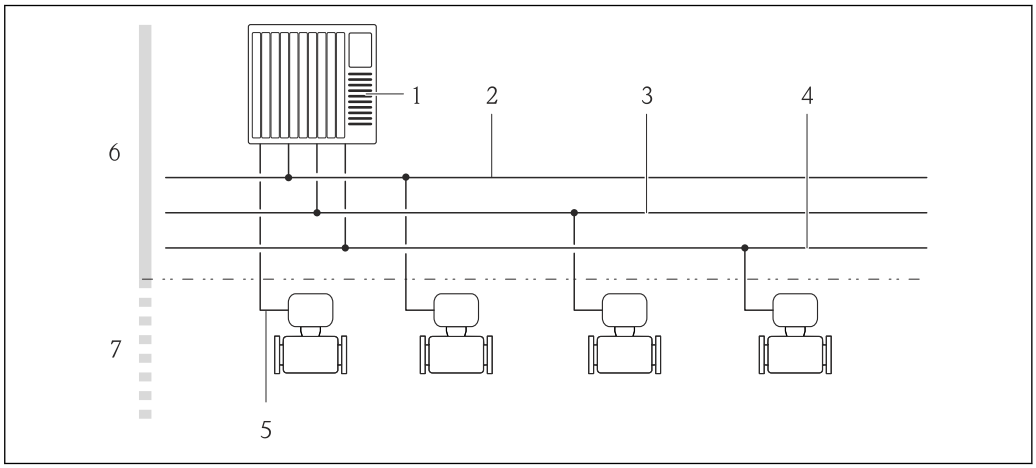

A0037833

1 *Possibilities for integrating measuring devices into a system*

1 *Control system (e.g. PLC)*
2 *EtherNet/IP*
3 *PROFIBUS DP*
4 *Modbus RS485*
5 *4-20 mA HART, pulse/frequency/switch output*
6 *Non-hazardous area*
7 *Non-hazardous area and Zone 2/Div. 2*

Safety

IT security

Our warranty is valid only if the device is installed and used as described in the Operating Instructions. The device is equipped with security mechanisms to protect it against any inadvertent changes to the settings.

IT security measures, which provide additional protection for the device and associated data transfer, must be implemented by the operators themselves in line with their security standards.

Device-specific IT security

The device offers a range of specific functions to support protective measures on the operator's side. These functions can be configured by the user and guarantee greater in-operation safety if used correctly. An overview of the most important functions is provided in the following section.

Protecting access via hardware write protection

Write access to the device parameters via the local display or operating tool (e.g. FieldCare, DeviceCare) can be disabled via a write protection switch (DIP switch on the motherboard). When hardware write protection is enabled, only read access to the parameters is possible.

Hardware write protection is disabled when the device is delivered.

Protecting access via a password

Different passwords are available to protect write access to the device parameters or access to the device via the WLAN interface.

- User-specific access code
  Protect write access to the device parameters via the local display, Web browser or operating tool (e.g. FieldCare, DeviceCare). Access authorization is clearly regulated through the use of a user-specific access code.
- WLAN passphrase
  The network key protects a connection between an operating unit (e.g. notebook or tablet) and the device via the WLAN interface which can be ordered as an option.
- Infrastructure mode
  When the device is operated in infrastructure mode, the WLAN passphrase corresponds to the WLAN passphrase configured on the operator side.

User-specific access code

Write access to the device parameters via the local display or operating tool (e.g. FieldCare, DeviceCare) can be protected by the modifiable, user-specific access code.

WLAN passphrase: Operation as WLAN access point

A connection between an operating unit (e.g. notebook or tablet) and the device via the WLAN interface, which can be ordered as an optional extra, is protected by the network key. The WLAN authentication of the network key complies with the IEEE 802.11 standard.

When the device is delivered, the network key is pre-defined depending on the device. It can be changed via the **WLAN settings** submenu in the **WLAN passphrase** parameter.

Infrastructure mode

A connection between the device and WLAN access point is protected by means of an SSID and passphrase on the system side. Please contact the relevant system administrator for access.

General notes on the use of passwords

- The access code and network key supplied with the device should be changed during commissioning.
- Follow the general rules for generating a secure password when defining and managing the access code or network key.
- The user is responsible for the management and careful handling of the access code and network key.

Access via Web server

The device can be operated and configured via a Web browser with the integrated Web server. The connection is via the service interface (CDI-RJ45) or the WLAN interface. For device versions with the EtherNet/IP and PROFINET communication protocols, the connection can also be established via the terminal connection for signal transmission with EtherNet/IP or PROFINET (RJ45 connector).

The Web server is enabled when the device is delivered. The Web server can be disabled if necessary (e.g. after commissioning) via the **Web server functionality** parameter.

The device and status information can be hidden on the login page. This prevents unauthorized access to the information.

For detailed information on device parameters, see:
The "Description of Device Parameters" document → 98

Input

Measured variable

Direct measured variables

- Volume flow (proportional to induced voltage)
- Electrical conductivity

In custody transfer: only volume flow

Calculated measured variables

Mass flow

Measuring range

Typically v = 0.01 to 10 m/s (0.03 to 33 ft/s) with the specified accuracy

Electrical conductivity: ≥ 5 µS/cm for liquids in general

Flow characteristic values in SI units: DN 25 to 125 (1 to 4")

Nominal diameter		Recommended flow	Factory settings		
		min./max. full scale value (v ~ 0.3/10 m/s)	Full scale value current output (v ~ 2.5 m/s)	Pulse value (~ 2 pulse/s)	Low flow cut off (v ~ 0.04 m/s)
[mm]	[in]	[dm³/min]	[dm³/min]	[dm³]	[dm³/min]
25	1	9 to 300	75	0.5	1
32	–	15 to 500	125	1	2
40	1 ½	25 to 700	200	1.5	3
50	2	35 to 1 100	300	2.5	5
65	–	60 to 2 000	500	5	8
80	3	90 to 3 000	750	5	12
100	4	145 to 4 700	1200	10	20
125	–	220 to 7 500	1850	15	30

Flow characteristic values in SI units: DN 150 to 2400 (6 to 90")

Nominal diameter		Recommended flow	Factory settings		
		min./max. full scale value (v ~ 0.3/10 m/s)	Full scale value current output (v ~ 2.5 m/s)	Pulse value (~ 2 pulse/s)	Low flow cut off (v ~ 0.04 m/s)
[mm]	[in]	[m³/h]	[m³/h]	[m³]	[m³/h]
150	6	20 to 600	150	0.025	2.5
200	8	35 to 1 100	300	0.05	5
250	10	55 to 1 700	500	0.05	7.5
300	12	80 to 2 400	750	0.1	10
350	14	110 to 3 300	1000	0.1	15
375	15	140 to 4 200	1200	0.15	20
400	16	140 to 4 200	1200	0.15	20
450	18	180 to 5 400	1500	0.25	25
500	20	220 to 6 600	2000	0.25	30
600	24	310 to 9 600	2500	0.3	40
700	28	420 to 13 500	3500	0.5	50
750	30	480 to 15 000	4000	0.5	60
800	32	550 to 18 000	4500	0.75	75
900	36	690 to 22 500	6000	0.75	100
1000	40	850 to 28 000	7000	1	125
–	42	950 to 30 000	8000	1	125
1200	48	1 250 to 40 000	10000	1.5	150
–	54	1 550 to 50 000	13000	1.5	200
1400	–	1 700 to 55 000	14000	2	225
–	60	1 950 to 60 000	16000	2	250

Nominal diameter		Recommended flow	Factory settings		
		min./max. full scale value (v ~ 0.3/10 m/s)	Full scale value current output (v ~ 2.5 m/s)	Pulse value (~ 2 pulse/s)	Low flow cut off (v ~ 0.04 m/s)
[mm]	[in]	[m³/h]	[m³/h]	[m³]	[m³/h]
1600	–	2 200 to 70 000	18000	2.5	300
–	66	2 500 to 80 000	20500	2.5	325
1800	72	2 800 to 90 000	23000	3	350
–	78	3 300 to 100 000	28500	3.5	450
2000	–	3 400 to 110 000	28500	3.5	450
–	84	3 700 to 125 000	31000	4.5	500
2200	–	4 100 to 136 000	34000	4.5	540
–	90	4 300 to 143 000	36000	5	570
2400	–	4 800 to 162 000	40000	5.5	650

Flow characteristic values in SI units: DN 50 to 300 (2 to 12") for order code for "Design", option C "Fixed flange, without inlet/outlet runs"

Nominal diameter		Recommended flow	Factory settings		
		min./max. full scale value (v ~ 0.12/5 m/s)	Full scale value current output (v ~ 2.5 m/s)	Pulse value (~ 4 pulse/s)	Low flow cut off (v ~ 0.01 m/s)
[mm]	[in]	[m³/h]	[m³/h]	[m³]	[m³/h]
50	2	15 to 600 dm³/min	300 dm³/min	1.25 dm³	1.25 dm³/min
65	–	25 to 1 000 dm³/min	500 dm³/min	2 dm³	2 dm³/min
80	3	35 to 1 500 dm³/min	750 dm³/min	3 dm³	3.25 dm³/min
100	4	60 to 2 400 dm³/min	1 200 dm³/min	5 dm³	4.75 dm³/min
125	–	90 to 3 700 dm³/min	1 850 dm³/min	8 dm³	7.5 dm³/min
150	6	145 to 5 400 dm³/min	2 500 dm³/min	10 dm³	11 dm³/min
200	8	220 to 9 400 dm³/min	5 000 dm³/min	20 dm³	19 dm³/min
250	10	20 to 850	500	0.03	1.75
300	12	35 to 1 300	750	0.05	2.75

Flow characteristic values in US units: 1 to 48" (DN 25 to 1200)

Nominal diameter		Recommended flow	Factory settings		
		min./max. full scale value (v ~ 0.3/10 m/s)	Full scale value current output (v ~ 2.5 m/s)	Pulse value (~ 2 pulse/s)	Low flow cut off (v ~ 0.04 m/s)
[in]	[mm]	[gal/min]	[gal/min]	[gal]	[gal/min]
1	25	2.5 to 80	18	0.2	0.25
–	32	4 to 130	30	0.2	0.5
1 ½	40	7 to 185	50	0.5	0.75
2	50	10 to 300	75	0.5	1.25
–	65	16 to 500	130	1	2
3	80	24 to 800	200	2	2.5

Nominal diameter		Recommended flow	Factory settings		
		min./max. full scale value (v ~ 0.3/10 m/s)	Full scale value current output (v ~ 2.5 m/s)	Pulse value (~ 2 pulse/s)	Low flow cut off (v ~ 0.04 m/s)
[in]	[mm]	[gal/min]	[gal/min]	[gal]	[gal/min]
4	100	40 to 1250	300	2	4
–	125	60 to 1950	450	5	7
6	150	90 to 2650	600	5	12
8	200	155 to 4850	1200	10	15
10	250	250 to 7500	1500	15	30
12	300	350 to 10600	2400	25	45
14	350	500 to 15000	3600	30	60
15	375	600 to 19000	4800	50	60
16	400	600 to 19000	4800	50	60
18	450	800 to 24000	6000	50	90
20	500	1000 to 30000	7500	75	120
24	600	1400 to 44000	10500	100	180
28	700	1900 to 60000	13500	125	210
30	750	2150 to 67000	16500	150	270
32	800	2450 to 80000	19500	200	300
36	900	3100 to 100000	24000	225	360
40	1000	3800 to 125000	30000	250	480
42	–	4200 to 135000	33000	250	600
48	1200	5500 to 175000	42000	400	600

Flow characteristic values in US units: 54 to 90" (DN 1400 to 2400)

Nominal diameter		Recommended flow	Factory settings		
		min./max. full scale value (v ~ 0.3/10 m/s)	Full scale value current output (v ~ 2.5 m/s)	Pulse value (~ 2 pulse/s)	Low flow cut off (v ~ 0.04 m/s)
[in]	[mm]	[Mgal/d]	[Mgal/d]	[Mgal]	[Mgal/d]
54	–	9 to 300	75	0.0005	1.3
–	1400	10 to 340	85	0.0005	1.3
60	–	12 to 380	95	0.0005	1.3
–	1600	13 to 450	110	0.0008	1.7
66	–	14 to 500	120	0.0008	2.2
72	1800	16 to 570	140	0.0008	2.6
78	–	18 to 650	175	0.0010	3.0
–	2000	20 to 700	175	0.0010	2.9
84	–	24 to 800	190	0.0011	3.2
–	2200	26 to 870	210	0.0012	3.4
90	–	27 to 910	220	0.0013	3.6
–	2400	31 to 1030	245	0.0014	4.1

Flow characteristic values in US units: 2 to 12" (DN 50 to 300) for order code for "Design", option C "Fixed flange, without inlet/outlet runs"

Nominal diameter		Recommended flow	Factory settings		
		min./max. full scale value (v ~ 0.12/5 m/s)	Full scale value current output (v ~ 2.5 m/s)	Pulse value (~ 4 pulse/s)	Low flow cut off (v ~ 0.01 m/s)
[in]	[mm]	[gal/min]	[gal/min]	[gal]	[gal/min]
2	50	4 to 160	75	0.3	0.35
–	65	7 to 260	130	0.5	0.6
3	80	10 to 400	200	0.8	0.8
4	100	16 to 650	300	1.2	1.25
–	125	24 to 1 000	450	1.8	2
6	150	40 to 1 400	600	2.5	3
8	200	60 to 2 500	1 200	5	5
10	250	90 to 3 700	1 500	6	8
12	300	155 to 5 700	2 400	9	12

Recommended measuring range

Flow limit → 47

For custody transfer, the applicable approval determines the permitted measuring range, the pulse value and the low flow cut off.

Operable flow range

Over 1000 : 1

For custody transfer, the operable flow range is 100 : 1 to 630 : 1, depending on the nominal diameter. Further details are specified by the applicable approval.

Input signal

External measured values

Various pressure transmitters and temperature measuring devices can be ordered from Endress +Hauser: see "Accessories" section → 97

It is recommended to read in external measured values to calculate the following measured variables: Mass flow

HART protocol

The measured values are written from the automation system to the measuring device via the HART protocol. The pressure transmitter must support the following protocol-specific functions:
- HART protocol
- Burst mode

Digital communication

The measured values can be written from the automation system to the measuring via:
- PROFIBUS DP
- Modbus RS485
- EtherNet/IP

Status input

Maximum input values	▪ DC 30 V ▪ 6 mA
Response time	Adjustable: 5 to 200 ms

Input signal level	▪ Low signal: DC −3 to +5 V ▪ High signal: DC 12 to 30 V
Assignable functions	▪ Off ▪ Reset totalizers 1-3 separately ▪ Reset all totalizers ▪ Flow override

Output

Output signal

Current output

Current output	Can be set as: ▪ 4-20 mA NAMUR ▪ 4-20 mA US ▪ 4-20 mA HART ▪ 0-20 mA
Maximum output values	▪ DC 24 V (no flow) ▪ 22.5 mA
Load	0 to 700 Ω
Resolution	0.5 µA
Damping	Adjustable: 0.07 to 999 s
Assignable measured variables	▪ Volume flow ▪ Mass flow ▪ Flow velocity ▪ Conductivity ▪ Electronic temperature

Pulse/frequency/switch output

Function	▪ With the order code for "Output; Input", option **H**: output 2 can be set as a pulse or frequency output ▪ With the order code for "Output; Input", option **I**: output 2 and 3 can be set as a pulse, frequency or switch output ▪ With the order code for "Output; Input", option **J**: output 2 firmly assigned as certified pulse output
Version	Passive, open collector
Maximum input values	▪ DC 30 V ▪ 250 mA
Voltage drop	For 25 mA: ≤ DC 2 V
Pulse output	
Pulse width	Adjustable: 0.05 to 2 000 ms
Maximum pulse rate	10 000 Impulse/s
Pulse value	Adjustable
Assignable measured variables	▪ Volume flow ▪ Mass flow
Frequency output	
Output frequency	Adjustable: 0 to 12 500 Hz
Damping	Adjustable: 0 to 999 s
Pulse/pause ratio	1:1

Assignable measured variables	▪ Volume flow ▪ Mass flow ▪ Conductivity ▪ Flow velocity ▪ Electronic temperature
Switch output	
Switching behavior	Binary, conductive or non-conductive
Switching delay	Adjustable: 0 to 100 s
Number of switching cycles	Unlimited
Assignable functions	▪ Off ▪ On ▪ Diagnostic behavior ▪ Limit value: – Off – Volume flow – Mass flow – Conductivity – Flow velocity – Totalizer 1-3 – Electronic temperature ▪ Flow direction monitoring ▪ Status – Empty pipe detection – Low flow cut off

PROFIBUS DP

Signal encoding	NRZ code
Data transfer	9.6 kBaud...12 MBaud

Modbus RS485

Physical interface	In accordance with EIA/TIA-485-A standard
Terminating resistor	Integrated, can be activated via DIP switch on the transmitter electronics module

EtherNet/IP

Standards	In accordance with IEEE 802.3

Signal on alarm

Depending on the interface, failure information is displayed as follows:

Current output 4 to 20 mA

4 to 20 mA

Failure mode	Choose from: ▪ 4 to 20 mA in accordance with NAMUR recommendation NE 43 ▪ 4 to 20 mA in accordance with US ▪ Min. value: 3.59 mA ▪ Max. value: 22.5 mA ▪ Freely definable value between: 3.59 to 22.5 mA ▪ Actual value ▪ Last valid value

0 to 20 mA

Failure mode	Choose from: ▪ Maximum alarm: 22 mA ▪ Freely definable value between: 0 to 22.5 mA

HART current output

Device diagnostics	Device condition can be read out via HART Command 48

Pulse/frequency/switch output

Pulse output	
Failure mode	Choose from: ▪ Actual value ▪ No pulses
Frequency output	
Failure mode	Choose from: ▪ Actual value ▪ 0 Hz ▪ Defined value: 0 to 12 500 Hz
Switch output	
Failure mode	Choose from: ▪ Current status ▪ Open ▪ Closed

PROFIBUS DP

Status and alarm messages	Diagnostics in accordance with PROFIBUS PA Profile 3.02

Modbus RS485

Failure mode	Choose from: ▪ NaN value instead of current value ▪ Last valid value

EtherNet/IP

Device diagnostics	Device condition can be read out in Input Assembly

Local display

Plain text display	With information on cause and remedial measures
Backlight	Red backlighting indicates a device error.

Status signal as per NAMUR recommendation NE 107

Interface/protocol

- Via digital communication:
  - HART protocol
  - PROFIBUS DP
  - Modbus RS485
  - EtherNet/IP
- Via service interface
  - CDI-RJ45 service interface
  - WLAN interface

Plain text display	With information on cause and remedial measures

Additional information on remote operation → 📄 87

Web server

Plain text display	With information on cause and remedial measures

Light emitting diodes (LED)

Status information	Status indicated by various light emitting diodes The following information is displayed depending on the device version: ▪ Supply voltage active ▪ Data transmission active ▪ Device alarm/error has occurred ▪ EtherNet/IP network available ▪ EtherNet/IP connection established

Low flow cut off

The switch points for low flow cut off are user-selectable.

Galvanic isolation

The following connections are galvanically isolated from each other:
- Inputs
- Outputs
- Power supply

Protocol-specific data

HART

Manufacturer ID	0x11
Device type ID	0x69
HART protocol revision	7
Device description files (DTM, DD)	Information and files under: www.endress.com
HART load	Min. 250 Ω

Dynamic variables	Read out the dynamic variables: HART command 3 The measured variables can be freely assigned to the dynamic variables. **Measured variables for PV (primary dynamic variable)** ▪ Off ▪ Volume flow ▪ Mass flow ▪ Conductivity ▪ Flow velocity ▪ Electronic temperature **Measured variables for SV, TV, QV (secondary, tertiary and quaternary dynamic variable)** ▪ Volume flow ▪ Mass flow ▪ Conductivity ▪ Flow velocity ▪ Electronic temperature ▪ Totalizer 1 ▪ Totalizer 2 ▪ Totalizer 3
Device variables	Read out the device variables: HART command 9 The device variables are permanently assigned. A maximum of 8 device variables can be transmitted: ▪ 0 = volume flow ▪ 1 = mass flow ▪ 2 = conductivity ▪ 3 = flow velocity ▪ 4 = electronic temperature ▪ 5 = totalizer 1 ▪ 6 = totalizer 2 ▪ 7 = totalizer 3

PROFIBUS DP

Manufacturer ID	0x11
Ident number	0x1562
Profile version	3.02
Device description files (GSD, DTM, DD)	Information and files under: ▪ www.endress.com ▪ www.profibus.org
Output values (from measuring device to automation system)	**Analog input 1 to 4** ▪ Mass flow ▪ Volume flow ▪ Flow velocity ▪ Conductivity ▪ Electronic temperature **Digital input 1 to 2** ▪ Empty pipe detection ▪ Low flow cut off ▪ Verification status **Totalizer 1 to 3** ▪ Mass flow ▪ Volume flow

Input values (from automation system to measuring device)	**Analog output 1 (fixed assignment)** External density **Digital output 1 to 2 (fixed assignment)** ▪ Digital output 1: switch positive zero return on/off ▪ Digital output 2: start verification **Totalizer 1 to 3** ▪ Totalize ▪ Reset and hold ▪ Preset and hold ▪ Stop ▪ Operating mode configuration: – Net flow total – Forward flow total – Reverse flow total
Supported functions	▪ Identification & Maintenance Simplest device identification on the part of the control system and nameplate ▪ PROFIBUS upload/download Reading and writing parameters is up to ten times faster with PROFIBUS upload/download ▪ Condensed status Simplest and self-explanatory diagnostic information by categorizing diagnostic messages that occur
Configuration of the device address	▪ DIP switches on the I/O electronics module ▪ Via operating tools (e.g. FieldCare)

Modbus RS485

Protocol	Modbus Applications Protocol Specification V1.1
Device type	Slave
Slave address range	1 to 247
Broadcast address range	0
Function codes	▪ 03: Read holding register ▪ 04: Read input register ▪ 06: Write single registers ▪ 08: Diagnostics ▪ 16: Write multiple registers ▪ 23: Read/write multiple registers
Broadcast messages	Supported by the following function codes: ▪ 06: Write single registers ▪ 16: Write multiple registers ▪ 23: Read/write multiple registers
Supported baud rate	▪ 1 200 BAUD ▪ 2 400 BAUD ▪ 4 800 BAUD ▪ 9 600 BAUD ▪ 19 200 BAUD ▪ 38 400 BAUD ▪ 57 600 BAUD ▪ 115 200 BAUD
Data transfer mode	▪ ASCII ▪ RTU
Data access	Each device parameter can be accessed via Modbus RS485. For detailed information on "Modbus RS485 register information", see the Description of Device Parameters → 🖹 98

EtherNet/IP

Protocol	▪ The CIP Networks Library Volume 1: Common Industrial Protocol ▪ The CIP Networks Library Volume 2: EtherNet/IP Adaptation of CIP		
Communication type	▪ 10Base-T ▪ 100Base-TX		
Device profile	Generic device (product type: 0x2B)		
Manufacturer ID	0x49E		
Device type ID	0x1067		
Baud rates	Automatic $^{10}/_{100}$ Mbit with half-duplex and full-duplex detection		
Polarity	Auto-polarity for automatic correction of crossed TxD and RxD pairs		
Supported CIP connections	Max. 3 connections		
Explicit connections	Max. 6 connections		
I/O connections	Max. 6 connections (scanner)		
Configuration options for measuring device	▪ DIP switches on the electronics module for IP addressing ▪ Manufacturer-specific software (FieldCare) ▪ Custom Add-on Profile for Rockwell Automation control systems ▪ Web browser ▪ Electronic Data Sheet (EDS) integrated in the measuring device		
Configuration of the EtherNet interface	▪ Speed: 10 MBit, 100 MBit, auto (factory setting) ▪ Duplex: half-duplex, full-duplex, auto (factory setting)		
Configuration of the device address	▪ DIP switches on the electronics module for IP addressing (last octet) ▪ DHCP ▪ Manufacturer-specific software (FieldCare) ▪ Custom Add-on Profile for Rockwell Automation control systems ▪ Web browser ▪ EtherNet/IP tools, e.g. RSLinx (Rockwell Automation)		
Device Level Ring (DLR)	No		
Fix Input			
RPI	5 ms to 10 s (factory setting: 20 ms)		
Exclusive Owner Multicast		Instance	Size [byte]
	Instance configuration:	0x68	398
	O → T configuration:	0x66	56
	T → O configuration:	0x64	32
Exclusive Owner Multicast		Instance	Size [byte]
	Instance configuration:	0x69	-
	O → T configuration:	0x66	56
	T → O configuration:	0x64	32
Input only Multicast		Instance	Size [byte]
	Instance configuration:	0x68	398
	O → T configuration:	0xC7	-
	T → O configuration:	0x64	32
Input only Multicast		Instance	Size [byte]
	Instance configuration:	0x69	-
	O → T configuration:	0xC7	-
	T → O configuration:	0x64	32

Input Assembly	▪ Current device diagnostics ▪ Volume flow ▪ Mass flow ▪ Conductivity ▪ Totalizer 1 ▪ Totalizer 2 ▪ Totalizer 3		
Configurable Input			
RPI	5 ms to 10 s (factory setting: 20 ms)		
Exclusive Owner Multicast		Instance	Size [byte]
	Instance configuration:	0x68	398
	O → T configuration:	0x66	56
	T → O configuration:	0x65	88
Exclusive Owner Multicast		Instance	Size [byte]
	Instance configuration:	0x69	-
	O → T configuration:	0x66	56
	T → O configuration:	0x65	88
Input only Multicast		Instance	Size [byte]
	Instance configuration:	0x68	398
	O → T configuration:	0xC7	-
	T → O configuration:	0x65	88
Input only Multicast		Instance	Size [byte]
	Instance configuration:	0x69	-
	O → T configuration:	0xC7	-
	T → O configuration:	0x65	88
Configurable Input Assembly	▪ Volume flow ▪ Mass flow ▪ Electronic temperature ▪ Conductivity ▪ Totalizer 1 to 3 ▪ Flow velocity ▪ Volume flow unit ▪ Mass flow unit ▪ Temperature unit ▪ Conductivity unit ▪ Unit totalizer 1-3 ▪ Flow velocity unit ▪ Verification result ▪ Verification status The range of options increases if the measuring device has one or more application packages.		
Fix Output			
Output Assembly	▪ Activation of reset totalizers 1-3 ▪ Activation of reference density compensation ▪ Reset totalizers 1-3 ▪ External density ▪ Density unit ▪ Activation verification ▪ Start verification		

Configuration	
Configuration Assembly	Only the most common configurations are listed below. ▪ Software write protection ▪ Mass flow unit ▪ Mass unit ▪ Volume flow unit ▪ Volume unit ▪ Density unit ▪ Conductivity ▪ Temperature unit ▪ Totalizer 1-3: – Assignment – Unit – Operating mode – Failure mode ▪ Alarm delay

Power supply

Terminal assignment

Transmitter: 0-20 mA/4-20 mA HART

The sensor can be ordered with terminals.

Connection methods available		Possible options for order code "Electrical connection"
Outputs	Power supply	
Terminals	Terminals	▪ Option **A**: coupling M20x1 ▪ Option **B**: thread M20x1 ▪ Option **C**: thread G ½" ▪ Option **D**: thread NPT ½"

Supply voltage

Order code "Power supply"	Terminal numbers	terminal voltage		Frequency range
Option **L** (wide range power unit)	1 (L+/L), 2 (L-/N)	DC 24 V	±25%	–
		AC 24 V	±25%	50/60 Hz, ±4 Hz
		AC 100 to 240 V	−15 to +10%	50/60 Hz, ±4 Hz

Signal transmission 0-20 mA/4-20 mA HART and additional outputs and inputs

Order code for "Output" and "Input"	Terminal numbers							
	Output 1		Output 2		Output 3		Input	
	26 (+)	27 (-)	24 (+)	25 (-)	22 (+)	23 (-)	20 (+)	21 (-)
Option **H**	▪ 4-20 mA HART (active) ▪ 0-20 mA (active)		Pulse/frequency output (passive)		Switch output (passive)		-	
Option **I**	▪ 4-20 mA HART (active) ▪ 0-20 mA (active)		Pulse/frequency/ switch output (passive)		Pulse/frequency/ switch output (passive)		Status input	
Option **J**	▪ 4-20 mA HART (active) ▪ 0-20 mA (active)		Permanently assigned: Pulse output adjusted (passive)		Pulse/frequency/ switch output (passive)		Status input	

Transmitter: PROFIBUS DP

The sensor can be ordered with terminals.

Connection methods available		Possible options for order code "Electrical connection"
Outputs	**Power supply**	
Terminals	Terminals	▪ Option **A**: coupling M20x1 ▪ Option **B**: thread M20x1 ▪ Option **C**: thread G ½" ▪ Option **D**: thread NPT ½"

Supply voltage

Order code "Power supply"	Terminal numbers	terminal voltage		Frequency range
Option **L** (wide range power unit)	1 (L+/L), 2 (L-/N)	DC 24 V	±25%	–
		AC 24 V	±25%	50/60 Hz, ±4 Hz
		AC 100 to 240 V	−15 to +10%	50/60 Hz, ±4 Hz

PROFIBUS DP signal transmission

Order code for "Output" and "Input"	Terminal numbers	
	26 (RxD/TxD-P)	**27 (RxD/TxD-N)**
Option **L**	B	A
Order code for "Output": Option L: PROFIBUS DP, for use in non-hazardous areas and Zone 2/div. 2		

Transmitter: Modbus RS485

The sensor can be ordered with terminals.

Connection methods available		Possible options for order code "Electrical connection"
Outputs	**Power supply**	
Terminals	Terminals	▪ Option **A**: coupling M20x1 ▪ Option **B**: thread M20x1 ▪ Option **C**: thread G ½" ▪ Option **D**: thread NPT ½"

Supply voltage

Order code "Power supply"	Terminal numbers	terminal voltage		Frequency range
Option **L** (wide range power unit)	1 (L+/L), 2 (L-/N)	DC 24 V	±25%	–
		AC 24 V	±25%	50/60 Hz, ±4 Hz
		AC 100 to 240 V	−15 to +10%	50/60 Hz, ±4 Hz

Signal transmission Modbus RS485

Order code for "Output" and "Input"	Terminal numbers	
	26 (+)	**27 (-)**
Option **M**	B	A

Transmitter: EtherNet/IP

The transmitter can be ordered with terminals or a device plug.

Connection methods available		Possible options for order code "Electrical connection"
Outputs	**Power supply**	
EtherNet/IP (RJ45 connector)	Terminals	Option **D**: thread NPT ½"
Device plug → 🖹 23	Terminals	▪ Option **L**: plug M12x1 + thread NPT ½" ▪ Option **N**: plug M12x1 + coupling M20 ▪ Option **P**: plug M12x1 + thread G ½" ▪ Option **U**: plug M12x1 + thread M20

Supply voltage

Order code "Power supply"	Terminal numbers	terminal voltage		Frequency range
Option **L** (wide range power unit)	1 (L+/L), 2 (L-/N)	DC 24 V	±25%	–
		AC 24 V	±25%	50/60 Hz, ±4 Hz
		AC 100 to 240 V	−15 to +10%	50/60 Hz, ±4 Hz

EtherNet/IP signal transmission

Order code for "Output"	Connection via
Option **N**	EtherNet/IP: RJ45 or M12 connector

Remote version

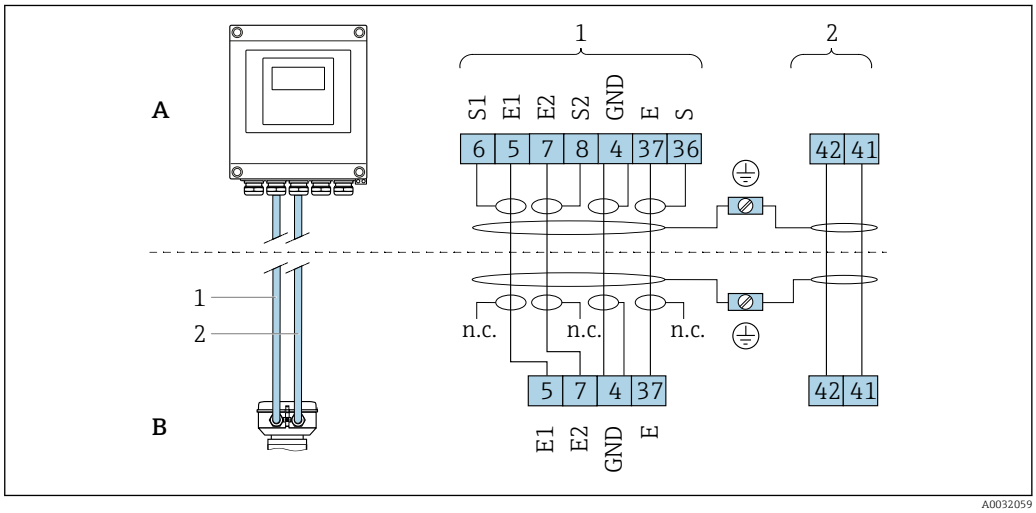

🖹 2 *Remote version terminal assignment*

A Transmitter wall-mount housing
B Sensor connection housing
1 Electrode cable
2 Coil current cable
n.c. Not connected, insulated cable shields

Terminal No. and cable colors: 6/5 = brown; 7/8 = white; 4 = green; 36/37 = yellow

Pin assignment, device plug

Order codes for the M12x1 connectors, see the "Order code for electrical connection" column: EtherNet/IP → 🖹 23

EtherNet/IP

Device plug for signal transmission (device side)

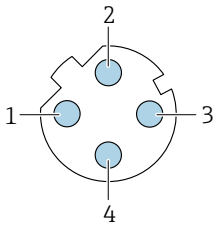

Pin	Assignment		Coding	Plug/socket
1	+	Tx	D	Socket
2	+	Rx		
3	-	Tx		
4	-	Rx		

Recommended plug:
- Binder, series 763, part no. 99 3729 810 04
- Phoenix, part no. 1543223 SACC-M12MSD-4Q
- The device plug is not permitted in the hazardous area, Class I Division 2. The device plug may only be used in the non-hazardous area (General Purpose).

Supply voltage

Transmitter

Order code for "Power supply"	terminal voltage		Frequency range
Option **L**	DC 24 V	±25%	–
	AC 24 V	±25%	50/60 Hz, ±4 Hz
	AC 100 to 240 V	−15 to +10%	50/60 Hz, ±4 Hz

Power consumption

Order code for "Output"	Maximum power consumption
Option **H**: 4-20mA HART, pulse/frequency/switch output, switch output	30 VA/8 W
Option **I**: 4-20mA HART, 2 x pulse/frequency/switch output, status input	30 VA/8 W
Option **J**: 4-20mA HART, certified pulse output, pulse/frequency/switch output, status input	30 VA/8 W
Option **L**: PROFIBUS DP	30 VA/8 W
Option **M**: Modbus RS485	30 VA/8 W
Option **N**: EtherNet/IP	30 VA/8 W

Current consumption

Transmitter

Order code for "Power supply"	Maximum Current consumption	Maximum switch-on current
Option **L**: AC 100 to 240 V	145 mA	25 A (< 5 ms)
Option **L**: AC/DC 24 V	350 mA	27 A (< 5 ms)

Power supply failure

- Totalizers stop at the last value measured.
- Depending on the device version, the configuration is retained in the device memoryor in the pluggable data memory (HistoROM DAT).
- Error messages (incl. total operated hours) are stored.

Electrical connection

Connecting the transmitter

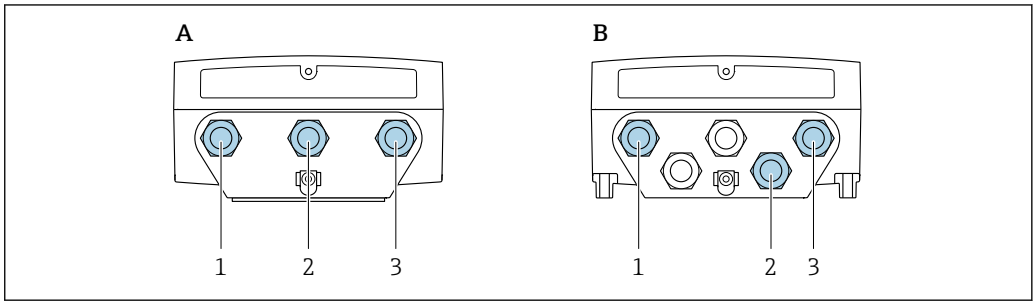

3 *Supply voltage and signal transmission connection*

A Compact version
B Remote version wall-mount housing
1 Cable entry for supply voltage
2 Cable entry for signal transmission
3 Cable entry for signal transmission

Remote version connection

Connecting cable

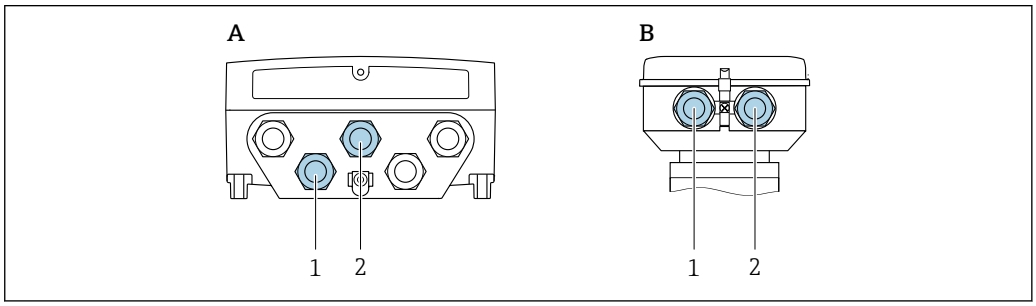

4 *Connecting cable connection: electrode and coil current cable*

A Transmitter wall-mount housing
B Sensor connection housing
1 Electrode cable
2 Coil current cable

- Fix the cable run or route it in an armored conduit.
  Cable movements can influence the measuring signal especially in the case of low fluid conductivities.
- Route the cable well clear of electrical machines and switching elements.
- Ensure potential equalization between sensor and transmitter .

Connection examples

Current output 4 to 20 mA HART

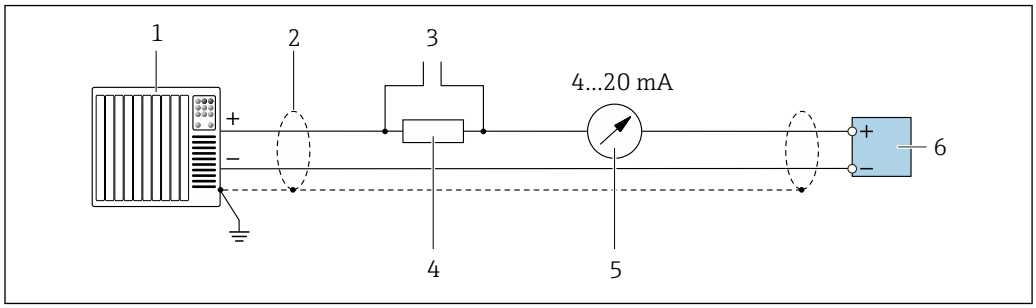

5 Connection example for 4 to 20 mA HART current output (active)

1 *Automation system with current input (e.g. PLC)*
2 *Cable shield: the cable shield must be grounded at both ends to comply with EMC requirements; observe cable specifications → 31*
3 *Connection for HART operating devices → 87*
4 *Resistor for HART communication (≥ 250 Ω): observe maximum load → 13*
5 *Analog display unit: observe maximum load → 13*
6 *Transmitter*

Current output 4-20 mA

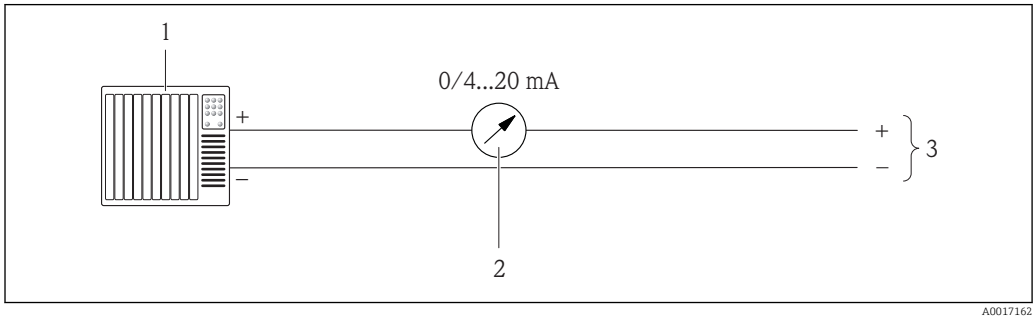

6 Connection example for 0-20 mA current output (active) and 4-20 mA current output (active)

1 *Automation system with current input (e.g. PLC)*
2 *Analog display unit: observe maximum load*
3 *Transmitter*

Pulse/frequency output

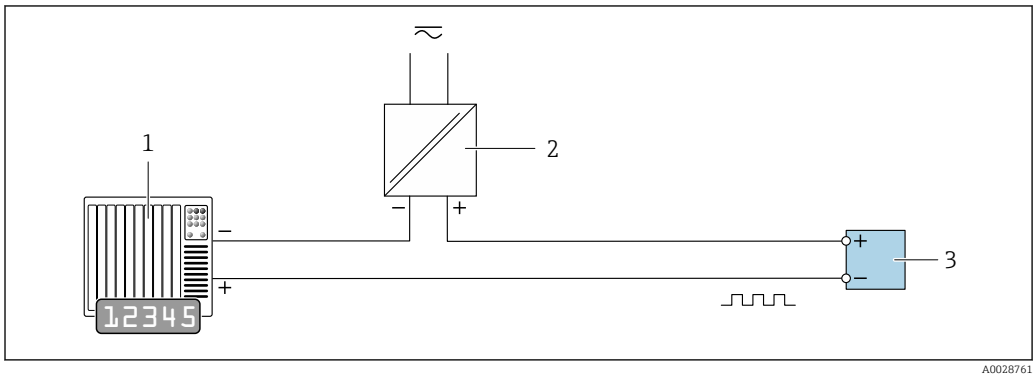

7 Connection example for pulse/frequency output (passive)

1 *Automation system with pulse/frequency input (e.g. PLC)*
2 *Power supply*
3 *Transmitter: Observe input values → 13*

Switch output

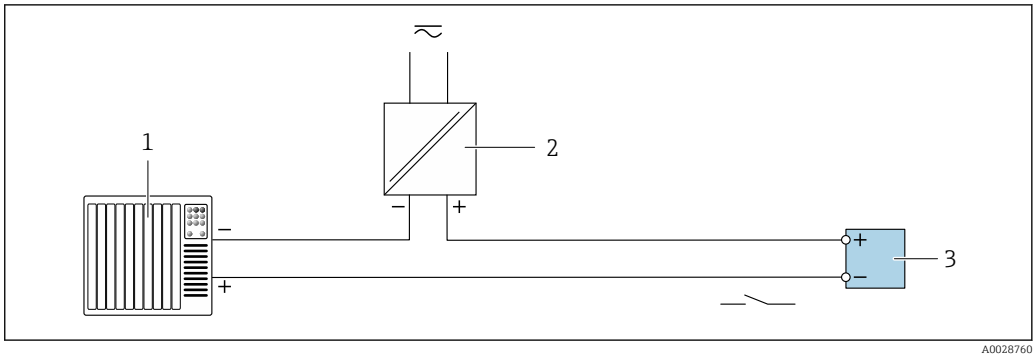

8 Connection example for switch output (passive)

1 Automation system with switch input (e.g. PLC)
2 Power supply
3 Transmitter: Observe input values → 13

PROFIBUS DP

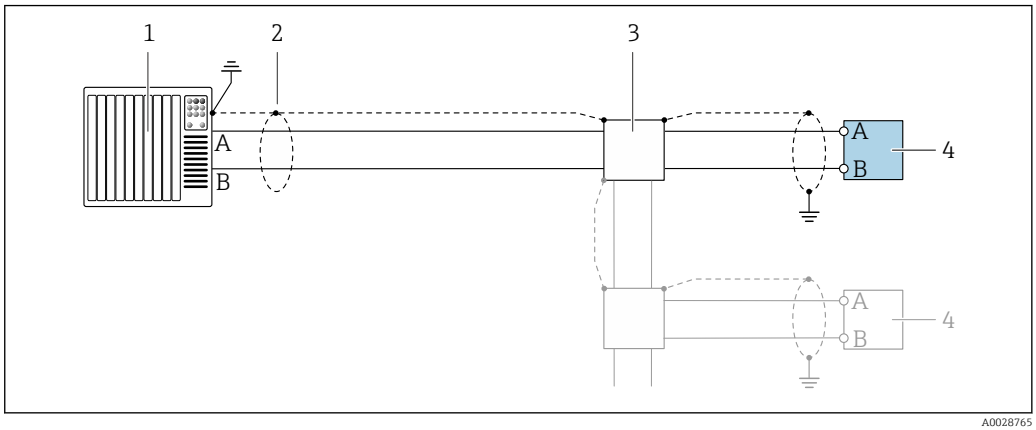

9 Connection example for PROFIBUS DP, non-hazardous area and Zone 2/Div. 2

1 Control system (e.g. PLC)
2 Cable shield: the cable shield must be grounded at both ends to comply with EMC requirements; observe cable specifications
3 Distribution box
4 Transmitter

If baud rates > 1.5 MBaud an EMC cable entry must be used and the cable shield must continue as far as the terminal wherever possible.

Modbus RS485

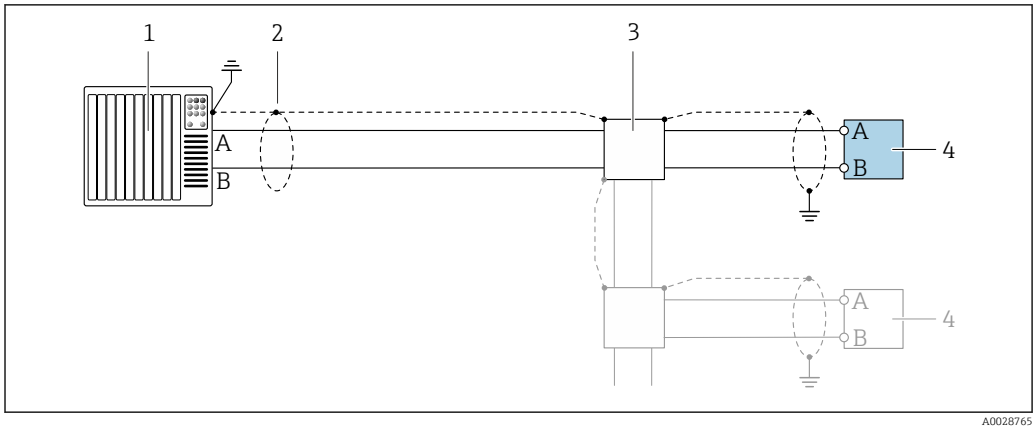

10 Connection example for Modbus RS485, non-hazardous area and Zone 2/Div. 2

1 *Control system (e.g. PLC)*
2 *Cable shield: the cable shield must be grounded at both ends to comply with EMC requirements; observe cable specifications*
3 *Distribution box*
4 *Transmitter*

EtherNet/IP

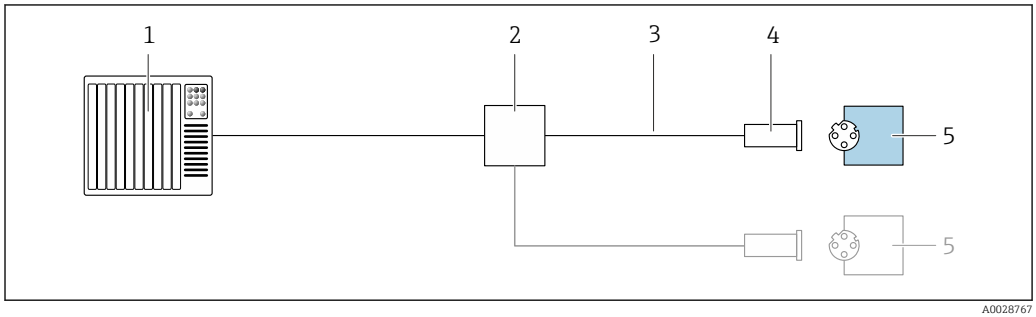

11 Connection example for EtherNet/IP

1 *Control system (e.g. PLC)*
2 *Ethernet switch*
3 *Observe cable specifications*
4 *Device plug*
5 *Transmitter*

Status input

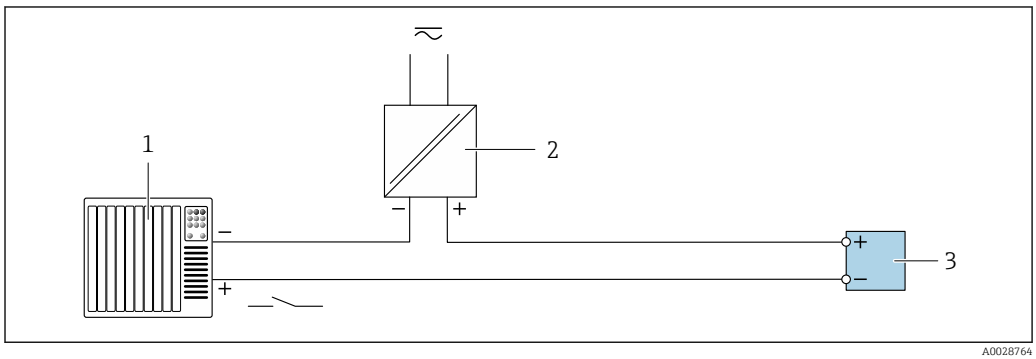

12 Connection example for status input

1 *Automation system with status output (e.g. PLC)*
2 *Power supply*
3 *Transmitter*

Potential equalization

Requirements

Please consider the following to ensure correct measurement:
- Same electrical potential for the fluid and sensor
- Remote version: same electrical potential for the sensor and transmitter
- Company-internal grounding concepts
- Pipe material and grounding

Connection example, standard scenario

Metal, grounded pipe

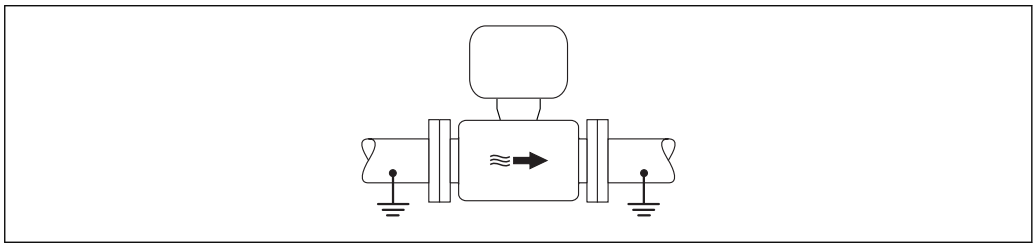

A0016315

13 *Potential equalization via measuring tube*

Connection example in special situations

Unlined and ungrounded metal pipe

This connection method also applies in situations where:
- The customary potential equalization is not used
- Equalizing currents are present

Ground cable	Copper wire, at least 6 mm² (0.0093 in²)

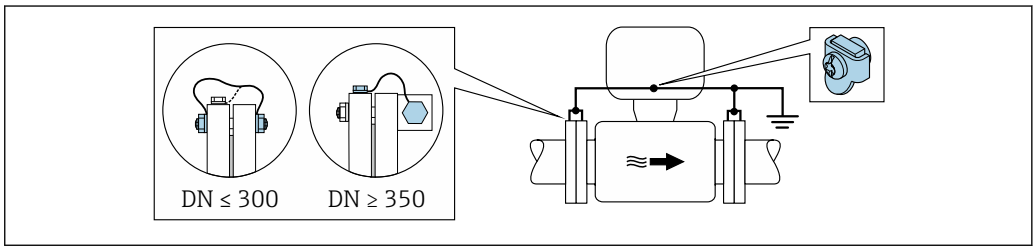

A0029338

14 *Potential equalization via ground terminal and pipe flanges*

Note the following when installing:
- Connect both sensor flanges to the pipe flange via a ground cable and ground them.
- Connect the connection housing of the transmitter or sensor to ground potential by means of the ground terminal provided for the purpose. To mount the ground cable:
  - If DN ≤ 300 (12"): Mount the ground cable directly on the conductive flange coating of the sensor with the flange screws.
  - If DN ≥ 350 (14"): Mount the ground cable directly on the metal transport bracket.

For remote device versions, the ground terminal in the example always refers to the sensor and **not** to the transmitter.

You can order the necessary ground cable from Endress+Hauser: .

Plastic pipe or pipe with insulating liner

This connection method also applies in situations where:
- The customary potential equalization is not used
- Equalizing currents are present

Ground cable	Copper wire, at least 6 mm² (0.0093 in²)

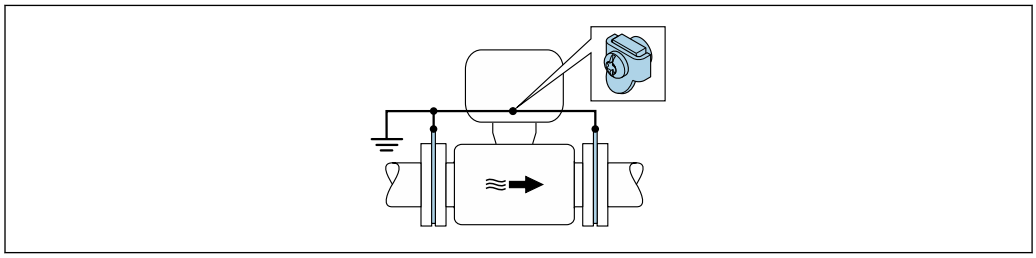

A0029339

15 *Potential equalization via ground terminal and ground disks*

Note the following when installing:
The ground disks must be connected to the ground terminal via the ground cable and be connected to ground potential.

For remote device versions, the ground terminal in the example always refers to the sensor and **not** to the transmitter.

The ground cable and ground disks can be ordered from Endress+Hauser .

Pipe with a cathodic protection unit

This connection method is only used if the following two conditions are met:
- Metal pipe without liner or pipe with electrically conductive liner
- Cathodic protection is integrated in the personal protection equipment

Ground cable	Copper wire, at least 6 mm² (0.0093 in²)

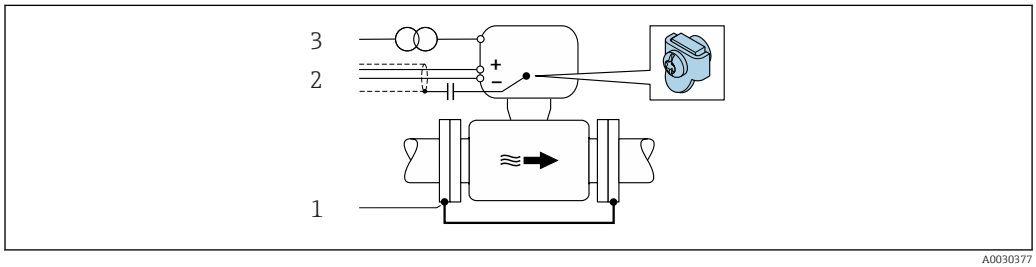

A0030377

1 *Connection of the two flanges of the pipe via a ground cable*
2 *Signal line shielding via a capacitor*
3 *Measuring device connected to power supply such that it is floating in relation to the protective ground (isolation transformer)*

Note the following when installing:
The sensor is installed in the pipe in a way that provides electrical insulation.

For remote device versions, the ground terminal in the example always refers to the sensor and **not** to the transmitter.

You can order the necessary ground cable from Endress+Hauser: .

terminals

Transmitter
- Supply voltage cable: plug-in spring terminals for wire cross-sections 0.5 to 2.5 mm² (20 to 14 AWG)
- Signal cable: plug-in spring terminals for wire cross-sections 0.5 to 2.5 mm² (20 to 14 AWG)
- Electrode cable: spring terminals for wire cross-sections 0.5 to 2.5 mm² (20 to 14 AWG)
- Coil current cable: spring terminals for wire cross-sections 0.5 to 2.5 mm² (20 to 14 AWG)

Sensor connection housing
Spring terminals for wire cross-sections0.5 to 2.5 mm² (20 to 14 AWG)

Cable entries

Cable entry thread
- M20 x 1.5
- Via adapter:
  - NPT ½"
  - G ½"

Cable gland
- For standard cable: M20 × 1.5 with cable ϕ6 to 12 mm (0.24 to 0.47 in)
- For reinforced cable: M20 × 1.5 with cable ϕ9.5 to 16 mm (0.37 to 0.63 in)

If metal cable entries are used, use a grounding plate.

Cable specification

Permitted temperature range
- The installation guidelines that apply in the country of installation must be observed.
- The cables must be suitable for the minimum and maximum temperatures to be expected.

Power supply cable

Standard installation cable is sufficient.

Signal cable

Current output 0/4 to 20 mA

Standard installation cable is sufficient.

Current output 4 to 20 mA HART

A shielded cable is recommended. Observe grounding concept of the plant.

Pulse/frequency/switch output

Standard installation cable is sufficient.

Status input

Standard installation cable is sufficient.

PROFIBUS DP

The IEC 61158 standard specifies two types of cable (A and B) for the bus line which can be used for every transmission rate. Cable type A is recommended.

Cable type	A
Characteristic impedance	135 to 165 Ω at a measuring frequency of 3 to 20 MHz
Cable capacitance	< 30 pF/m
Wire cross-section	> 0.34 mm² (22 AWG)
Cable type	Twisted pairs
Loop resistance	≤110 Ω/km
Signal damping	Max. 9 dB over the entire length of the cable cross-section
Shield	Copper braided shielding or braided shielding with foil shield. When grounding the cable shield, observe the grounding concept of the plant.

For further information on planning and installing PROFIBUS networks see:

Operating Instructions "PROFIBUS DP/PA: Guidelines for planning and commissioning" (BA00034S)

Modbus RS485

The EIA/TIA-485 standard specifies two types of cable (A and B) for the bus line which can be used for every transmission rate. Cable type A is recommended.

Cable type	A
Characteristic impedance	135 to 165 Ω at a measuring frequency of 3 to 20 MHz
Cable capacitance	< 30 pF/m
Wire cross-section	> 0.34 mm² (22 AWG)
Cable type	Twisted pairs
Loop resistance	≤110 Ω/km
Signal damping	Max. 9 dB over the entire length of the cable cross-section
Shield	Copper braided shielding or braided shielding with foil shield. When grounding the cable shield, observe the grounding concept of the plant.

EtherNet/IP

The standard ANSI/TIA/EIA-568-B.2 Annex specifies CAT 5 as the minimum category for a cable used for EtherNet/IP. CAT 5e and CAT 6 are recommended.

For more information on planning and installing EtherNet/IP networks, please refer to the "Media Planning and Installation Manual. EtherNet/IP" of ODVA Organization

Connecting cable for remote version

Electrode cable

Standard cable	3 ×0.38 mm² (20 AWG) with common, braided copper shield (ϕ ~9.5 mm (0.37 in)) and individual shielded cores
Cable for empty pipe detection (EPD)	4 ×0.38 mm² (20 AWG) with common, braided copper shield (ϕ ~9.5 mm (0.37 in)) and individual shielded cores
Conductor resistance	≤50 Ω/km (0.015 Ω/ft)
Capacitance: core/shield	≤420 pF/m (128 pF/ft)
Operating temperature	–20 to +80 °C (–68 to +176 °F)

Coil current cable

Standard cable	3 ×0.75 mm² (18 AWG) with common, braided copper shield (ϕ ~9 mm (0.35 in))
Conductor resistance	≤37 Ω/km (0.011 Ω/ft)
Capacitance: core/core, shield grounded	≤120 pF/m (37 pF/ft)
Operating temperature	–20 to +80 °C (–68 to +176 °F)
Test voltage for cable insulation	≤ AC 1433 V r.m.s. 50/60 Hz or ≥ DC 2026 V

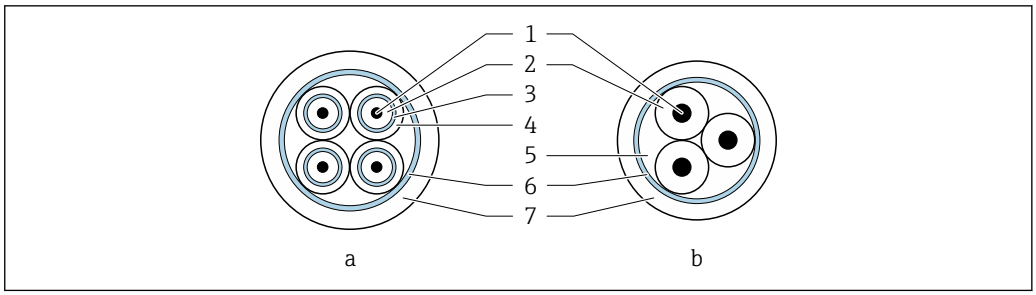

16 *Cable cross-section*

a *Electrode cable*
b *Coil current cable*
1 *Core*
2 *Core insulation*
3 *Core shield*
4 *Core jacket*
5 *Core reinforcement*
6 *Cable shield*
7 *Outer jacket*

A connecting cable can be ordered from Endress+Hauser for IP68:
- Pre-terminated cables that are already connected to the sensor.
- Pre-terminated cables, where the cables are connected by the customer onsite (incl. tools for sealing the connection compartment)

Reinforced connecting cables

Reinforced connecting cables with an additional, reinforcing metal braid should be used for:
- When laying the cable directly in the ground
- Where there is a risk of damage from rodents
- If using the device below IP68 degree of protection

Reinforced connecting cables with an additional, reinforcing metal braid can be ordered from Endress+Hauser .

Operation in zones of severe electrical interference

The measuring system meets the general safety requirements → 94 and EMC specifications → 42.

Grounding is by means of the ground terminal provided for the purpose inside the connection housing. The stripped and twisted lengths of cable shield to the ground terminal must be as short as possible.

Performance characteristics

Reference operating conditions

- Error limits following DIN EN 29104, in future ISO 20456
- Water, typically +15 to +45 °C (+59 to +113 °F); 0.5 to 7 bar (73 to 101 psi)
- Data as indicated in the calibration protocol
- Accuracy based on accredited calibration rigs according to ISO 17025

Maximum measured error

Error limits under reference operating conditions

o.r. = of reading

Volume flow
- ±0.5 % o.r. ± 1 mm/s (0.04 in/s)
- Optional: ±0.2 % o.r. ± 2 mm/s (0.08 in/s)

Fluctuations in the supply voltage do not have any effect within the specified range.

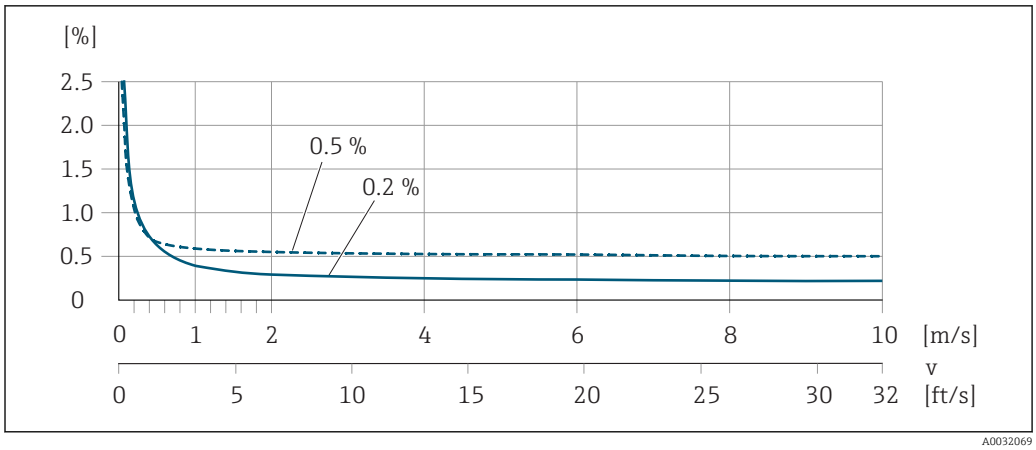

17 *Maximum measured error in % o.r.*

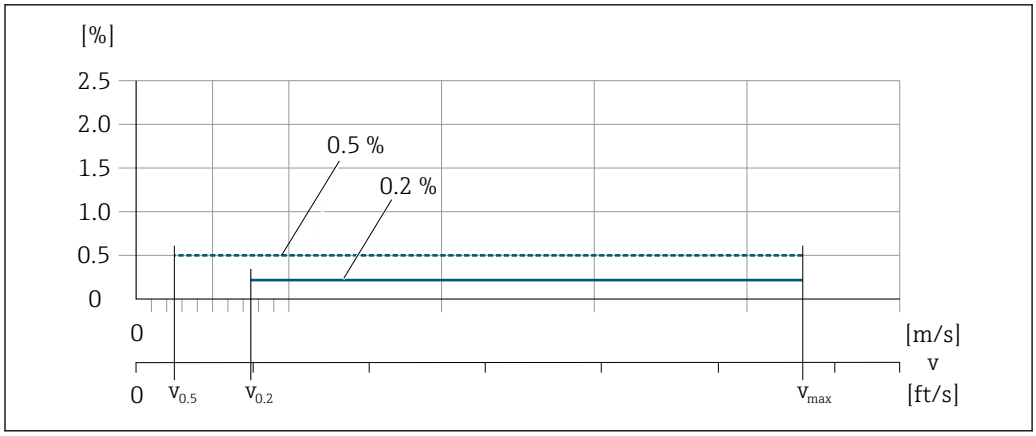

18 *Flat Spec in % o.r.*

For Flat Spec 0.5 %, the measured error is constant as of a flow velocity of $v_{0.5}$.

Flat Spec flow values0.5 %

Nominal diameter		$v_{0.5}$		v_{max}	
[mm]	[in]	[m/s]	[ft/s]	[m/s]	[ft/s]
25 to 600	1 to 24	0.5	1.64	10	32
50 to 300 [1)]	2 to 12	0.25	0.82	5	16

1) Order code for "Design", option C "Fixed flange, without inlet/outlet runs"

For Flat Spec 0.2 %, the measured error is constant as of a flow velocity of $v_{0.2}$.

Flat Spec flow values0.2 %

Nominal diameter		$v_{0.2}$		v_{max}	
[mm]	[in]	[m/s]	[ft/s]	[m/s]	[ft/s]
25 to 600	1 to 24	1.5	4.92	10	32
50 to 300 [1)]	2 to 12	0.6	1.97	4	13

1) Order code for "Design", option C "Fixed flange, without inlet/outlet runs"

Electrical conductivity
Max. measured error not specified.

Accuracy of outputs

The outputs have the following base accuracy specifications.

Current output

Accuracy	Max. ±5 µA

Pulse/frequency output

o.r. = of reading

Accuracy	Max. ±50 ppm o.r. (over the entire ambient temperature range)

Repeatability

o.r. = of reading

Volume flow
max. ±0.1 % o.r. ± 0.5 mm/s (0.02 in/s)

Electrical conductivity
Max. ±5 % o.r.

Influence of ambient temperature

Current output

o.r. = of reading

Temperature coefficient	Max. ±0.005 % o.r./°C

Pulse/frequency output

Temperature coefficient	No additional effect. Included in accuracy.

Installation

No special measures such as supports etc. are necessary. External forces are absorbed by the construction of the device.

Mounting location

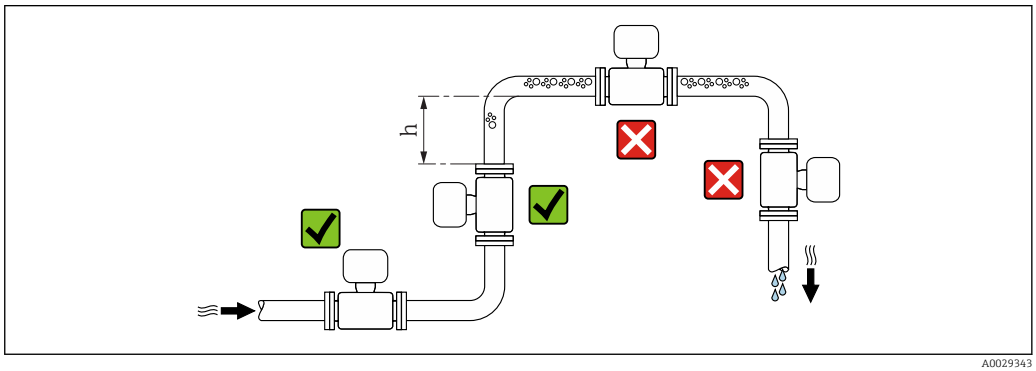

Preferably install the sensor in an ascending pipe, and ensure a sufficient distance to the next pipe elbow: h ≥ 2 × DN

Not necessary for the order code for "Design", option C

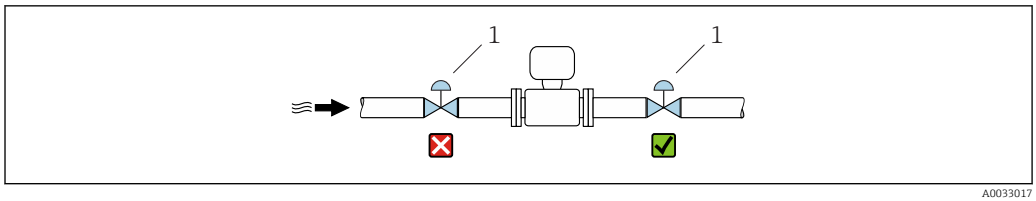

19 *Installation of the sensor after a control valve is not recommended*

1 Control valve

Installation in down pipes

Install a siphon with a vent valve downstream of the sensor in down pipes whose length h ≥ 5 m (16.4 ft). This precaution is to avoid low pressure and the consequent risk of damage to the measuring tube. This measure also prevents the system losing prime.

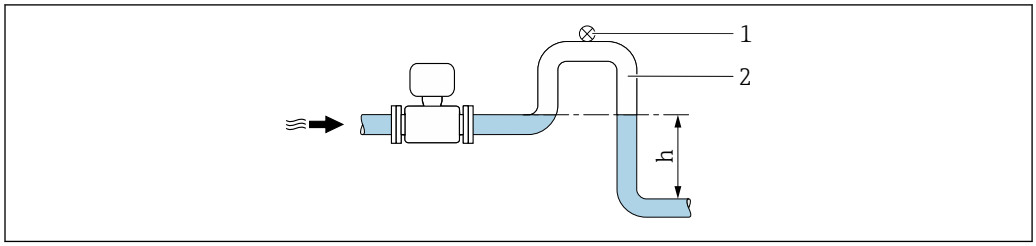

20 *Installation in a down pipe*

1 Vent valve
2 Pipe siphon
h Length of down pipe

Installation in partially filled pipes

A partially filled pipe with a gradient necessitates a drain-type configuration.

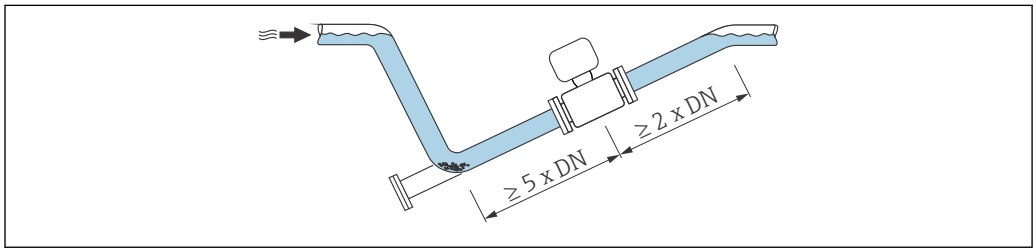

For heavy sensors DN ≥ 350 (14")

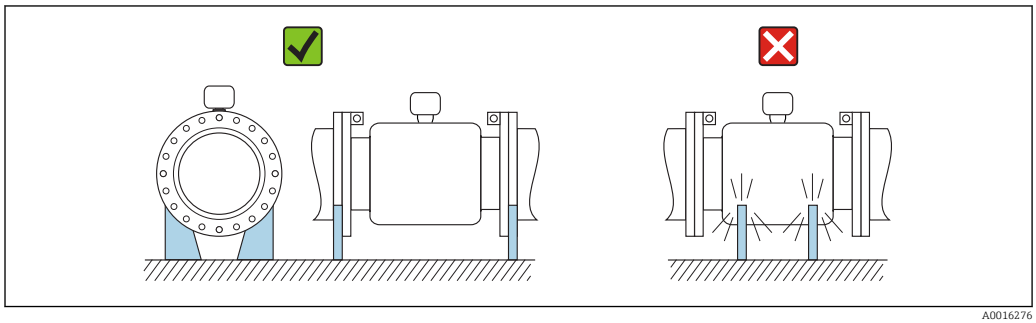

Orientation

The direction of the arrow on the sensor nameplate helps you to install the sensor according to the flow direction (direction of medium flow through the piping).

Orientation			Recommendation
A	Vertical orientation	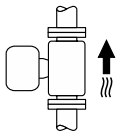 A0015591	✓✓
B	Horizontal orientation, transmitter at top	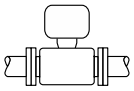 A0015589	✓✓ 1)
C	Horizontal orientation, transmitter at bottom	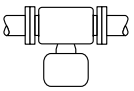 A0015590	✓✓ 2) 3) ✗ 4)
D	Horizontal orientation, transmitter at side	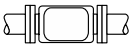 A0015592	✗

1) Applications with low process temperatures may decrease the ambient temperature. To maintain the minimum ambient temperature for the transmitter, this orientation is recommended.
2) Applications with high process temperatures may increase the ambient temperature. To maintain the maximum ambient temperature for the transmitter, this orientation is recommended.
3) To prevent the electronics module from overheating in the case of a sharp rise in temperature (e.g. CIP or SIP processes), install the device with the transmitter component pointing downwards.
4) With the empty pipe detection function switched on: empty pipe detection only works if the transmitter housing is pointing upwards.

Horizontal

- Ideally, the measuring electrode plane should be horizontal. This prevents brief insulation of the two measuring electrodes by entrained air bubbles.
- Empty pipe detection only works if the transmitter housing is pointing upwards as otherwise there is no guarantee that the empty pipe detection function will actually respond to a partially filled or empty measuring tube.

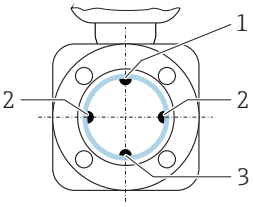

A0029344

1 EPD electrode for empty pipe detection
2 Measuring electrodes for signal detection
3 Reference electrode for potential equalization

Inlet and outlet runs

If possible, install the sensor upstream from fittings such as valves, T-pieces or elbows.

Observe the following inlet and outlet runs to comply with accuracy specifications:

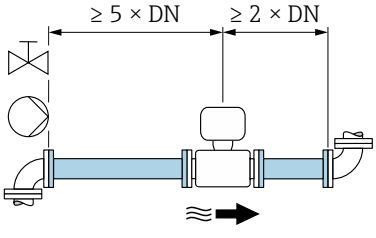

A0028997

For sensors with the order code for "Design", option C "fixed flange", no inlet and outlet runs must be taken into account.

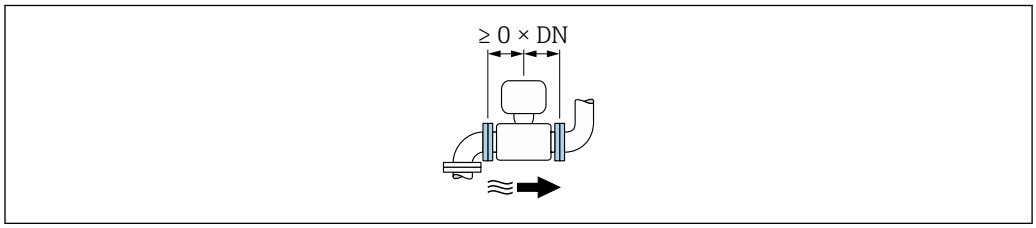

A0032859

To keep within the in-service maximum permissible errors for custody transfer no additional requirements apply with regard to the graphic illustrated above.

Adapters

Suitable adapters to DIN EN 545 (double-flange reducers) can be used to install the sensor in larger-diameter pipes. The resultant increase in the rate of flow improves measuring accuracy with very slow-moving fluids.

The nomogram shown here can be used to calculate the pressure loss caused by reducers and expanders:

- Calculate the ratio of the diameters d/D.
- From the nomogram read off the pressure loss as a function of flow velocity (downstream from the reduction) and the d/D ratio.

The nomogram only applies to liquids with a viscosity similar to that of water.

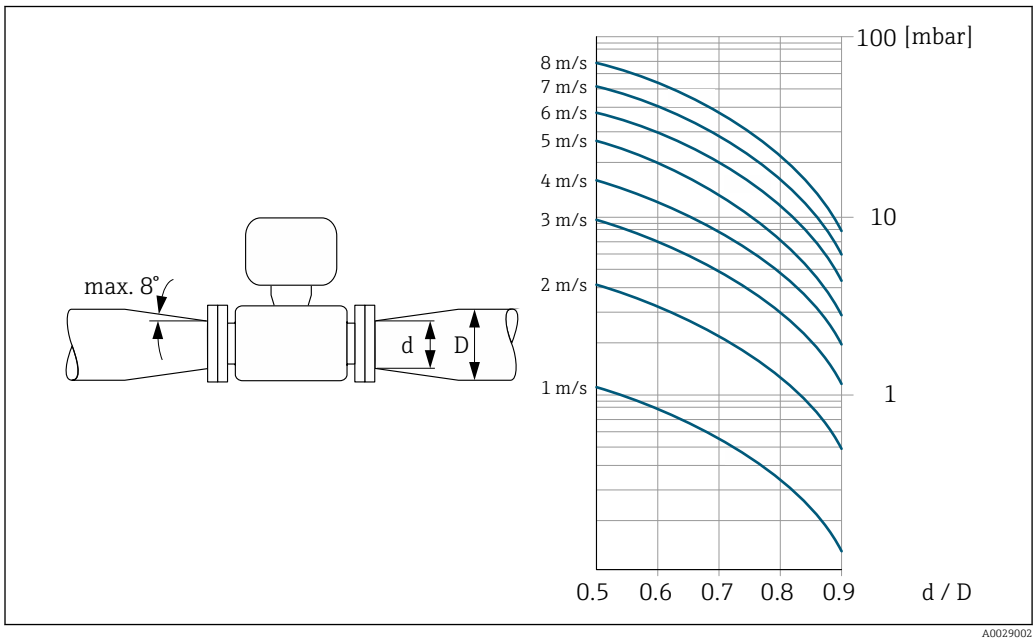

A0029002

Length of connecting cable

To obtain correct measurement results, observe the permitted connecting cable length of L_{max}. This length is determined by the conductivity of the fluid. If measuring liquids in general: 5 µS/cm

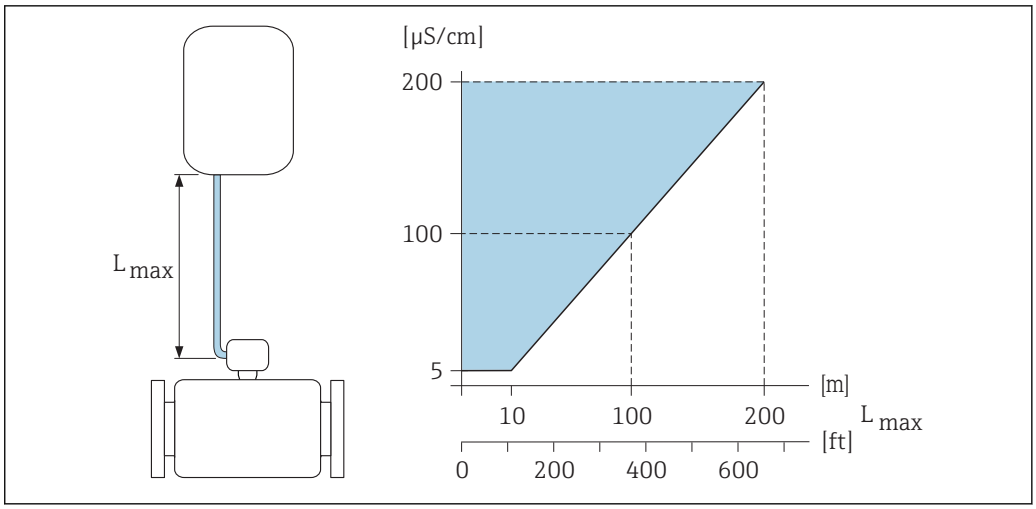

21 *Permitted length of connecting cable*

Colored area = permitted range
L_{max} = length of connecting cable in [m] ([ft])
[µS/cm] = fluid conductivity

Mounting the transmitter housing

Wall mounting

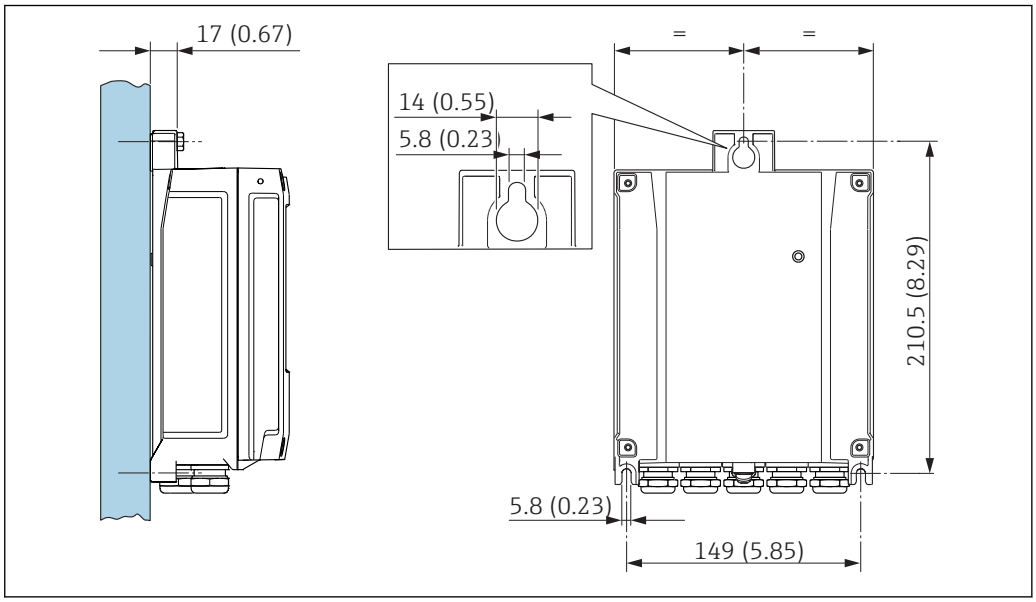

22 *Engineering unit mm (in)*

Post mounting

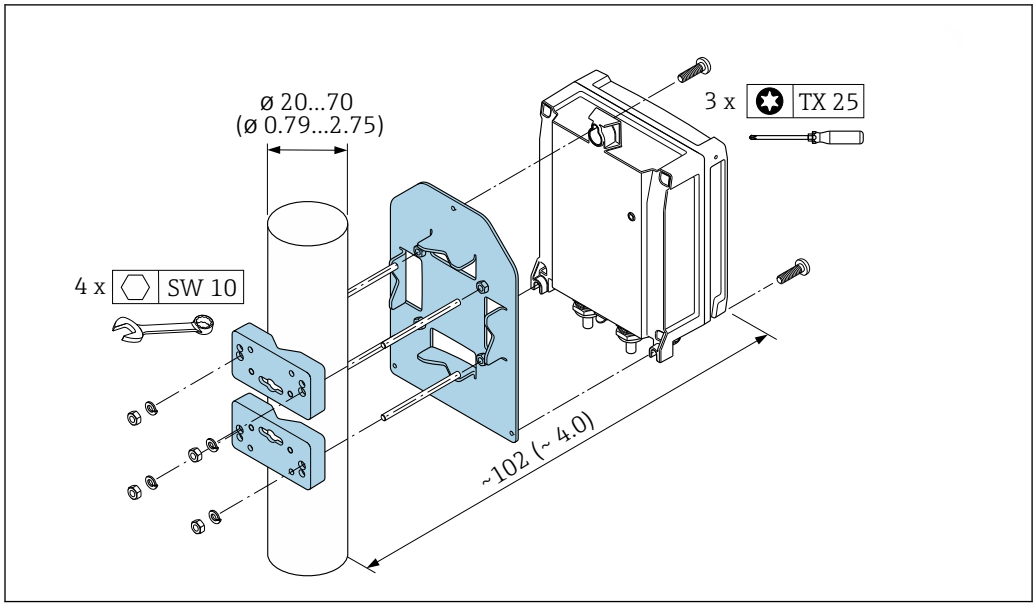

23 Engineering unit mm (in)

Special mounting instructions

Display guard

To ensure that the optional display guard can be easily opened, maintain the following minimum head clearance: 350 mm (13.8 in)

Permanent immersion in water

A fully welded remote version with IP68 protection is optionally available for permanent immersion in water ≤ 3 m (10 ft) or in exceptional cases for use for up to 48 hours at ≤ 10 m (30 ft). The measuring device meets the requirements of corrosion categories C5-M and Im1/Im2/Im3. The fully welded design along with the connection compartment sealing system ensure that moisture cannot enter the measuring device.

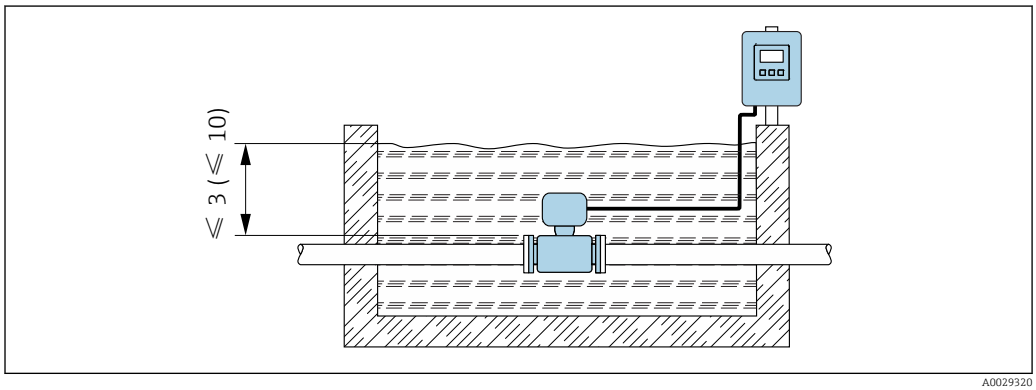

24 Engineering unit in m(ft)

Replacement of cable gland on connection housing

Buried applications

A remote version with IP68 protection is optionally available for buried applications. The measuring device satisfies the certified corrosion protection Im1/Im2/Im3 in accordance with EN ISO 12944. It can be used directly underground without the need for additional protective measures. The device is mounted in accordance with the usual regional installation regulations (e.g. EN DIN 1610).

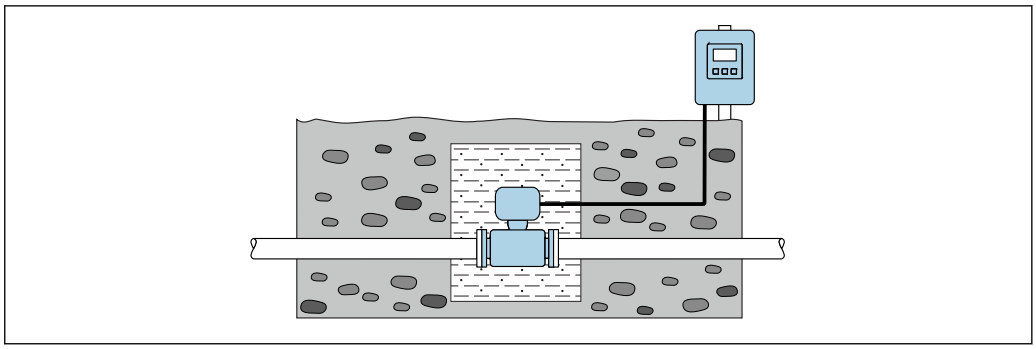

A0029321

Environment

Ambient temperature range

Transmitter	−40 to +60 °C (−40 to +140 °F)
Local display	−20 to +60 °C (−4 to +140 °F), the readability of the display may be impaired at temperatures outside the temperature range.
Sensor	▪ Process connection material, carbon steel: −10 to +60 °C (+14 to +140 °F) ▪ Process connection material, stainless steel: −40 to +60 °C (−40 to +140 °F) Mount the transmitter separately from the sensor if both the ambient and fluid temperatures are high.
Liner	Do not exceed or fall below the permitted temperature range of the liner .

If operating outdoors:
- Install the measuring device in a shady location.
- Avoid direct sunlight, particularly in warm climatic regions.
- Avoid direct exposure to weather conditions.
- If the compact version of the device is insulated at low temperatures, the insulation must also include the device neck.
- Protect the display against impact.
- Protect the display from abrasion by sand in desert areas.

Display guard available as an accessory → 96.

Temperature tables

Observe the interdependencies between the permitted ambient and fluid temperatures when operating the device in hazardous areas.

For detailed information on the temperature tables, see the separate document entitled "Safety Instructions" (XA) for the device.

Storage temperature

The storage temperature corresponds to the operating temperature range of the transmitter and the sensor → 41.

- Protect the measuring device against direct sunlight during storage in order to avoid unacceptably high surface temperatures.
- Select a storage location where moisture cannot collect in the measuring device as fungus or bacteria infestation can damage the liner.
- If protection caps or protective covers are mounted these should never be removed before installing the measuring device.

Atmosphere

If a plastic transmitter housing is permanently exposed to certain steam and air mixtures, this can damage the housing.

In cases of doubt, please contact the Sales Center.

Degree of protection

Transmitter
- As standard: IP66/67, type 4X enclosure
- When housing is open: IP20, type 1 enclosure

Sensor
- As standard: IP66/67, type 4X enclosure
- Optionally available for remote version:
  - IP66/67, type 4X enclosure; fully welded, with protective varnish EN ISO 12944 C5-M. Suitable for use in corrosive atmospheres.
  - IP68, type 6P enclosure; fully welded, with protective varnish as per EN ISO 12944 C5-M. Suitable for permanent immersion in water ≤ 3 m (10 ft) or up to 48 hours at depths ≤ 10 m (30 ft).
  - IP68, type 6P enclosure; fully welded, with protective varnish as per EN ISO 12944 Im1/Im2/Im3. Suitable for permanent immersion in saline water ≤ 3 m (10 ft) or up to 48 hours at depths ≤ 10 m (30 ft) or in buried applications.

Vibration resistance

Compact version
- Oscillation, sinusoidal, following IEC 60068-2-6
  - 2 to 8.4 Hz, 3.5 mm peak
  - 8.4 to 2 000 Hz, 1 g peak
- Oscillation, broadband noise following IEC 60068-2-64
  - 10 to 200 Hz, 0.003 g^2/Hz
  - 200 to 2 000 Hz, 0.001 g^2/Hz
  - Total: 1.54 g rms

Remote version
- Vibration, sinusoidal according to IEC 60068-2-6
  - 2 to 8.4 Hz, 7.5 mm peak
  - 8.4 to 2 000 Hz, 2 g peak
- Vibration broad-band random, according to IEC 60068-2-64
  - 10 to 200 Hz, 0.01 g^2/Hz
  - 200 to 2 000 Hz, 0.003 g^2/Hz
  - Total: 2.70 g rms

Shock resistance

Shock, half-sine according to IEC 60068-2-27
6 ms 50 g

Shock resistance

Shock due to rough handling following IEC 60068-2-31

Mechanical load
- Protect the transmitter housing against mechanical effects, such as shock or impact; the use of the remote version is sometimes preferable.
- Never use the transmitter housing as a ladder or climbing aid.

Electromagnetic compatibility (EMC)
- As per IEC/EN 61326 and NAMUR Recommendation 21 (NE 21)
- Complies with emission limits for industry as per EN 55011 (Class A)
- Device version with PROFIBUS DP: Complies with emission limits for industry as per EN 50170 Volume 2, IEC 61784

The following applies for PROFIBUS DP: If baud rates > 1.5 MBaud, an EMC cable entry must be used and the cable shield must continue as far as the terminal wherever possible.

Details are provided in the Declaration of Conformity.

Process

Medium temperature range
- 0 to +80 °C (+32 to +176 °F) for hard rubber, DN 50 to 2400 (2 to 90")
- −20 to +50 °C (−4 to +122 °F) for polyurethane, DN 25 to 1200 (1 to 48")
- −20 to +90 °C (−4 to +194 °F) for PTFE, DN 25 to 300 (1 to 12")

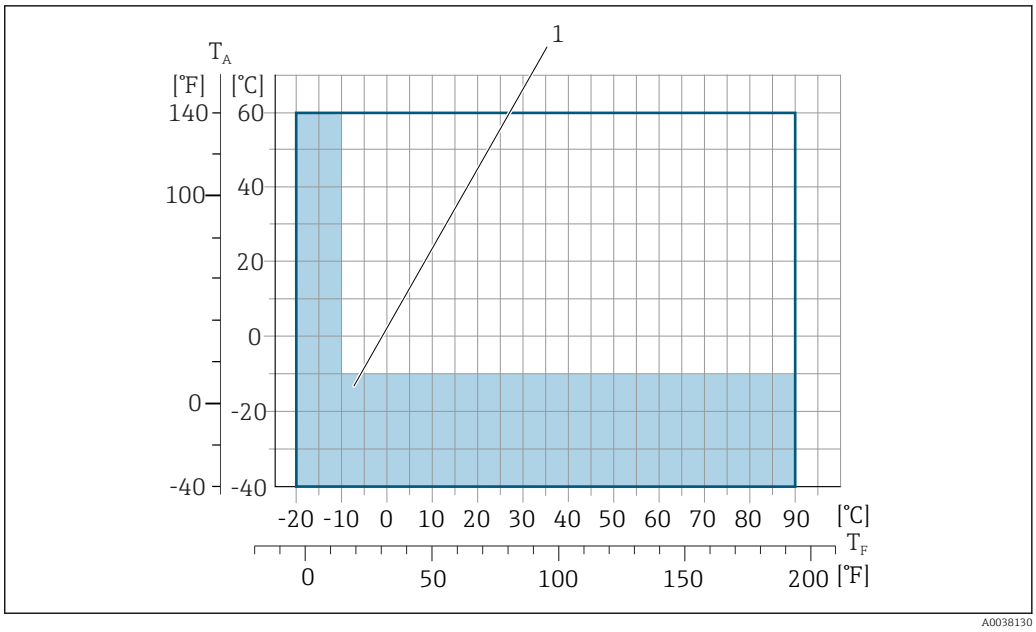

T_A *Ambient temperature range*
T_F *Fluid temperature*
1 *Colored area: the ambient temperature range of −10 to −40 °C (+14 to −40 °F) and the fluid temperature range of −10 to −20 °C (+14 to −4 °F) applies to stainless flanges only*

The permitted fluid temperature in custody transfer is 0 to +50 °C (+32 to +122 °F).

Conductivity

≥ 5 µS/cm for liquids in general.

Stronger filter damping is required for very low conductivity values.

Remote version
The necessary minimum conductivity also depends on the cable length → 38→ 38.

Pressure-temperature ratings

The following pressure/temperature diagrams apply to all pressure-bearing parts of the device and not just the process connection. The diagrams show the maximum permissible medium pressure depending on the specific medium temperature.

Process connection: fixed flange according to EN 1092-1 (DIN 2501)

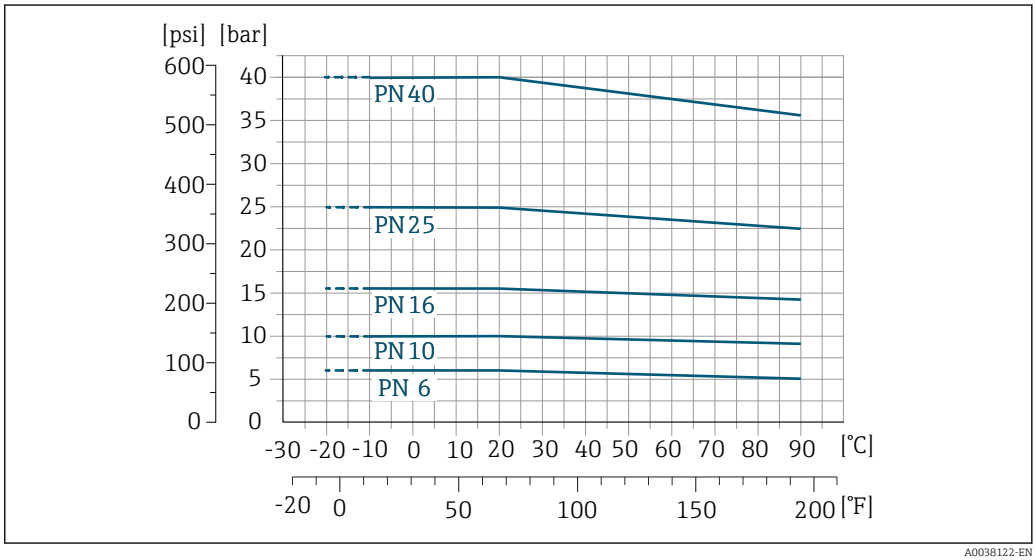

25 *Process connection material: stainless steel (−20 °C (−4 °F)); carbon steel (−10 °C (14 °F))*

Process connection: fixed flange according to ASME B16.5

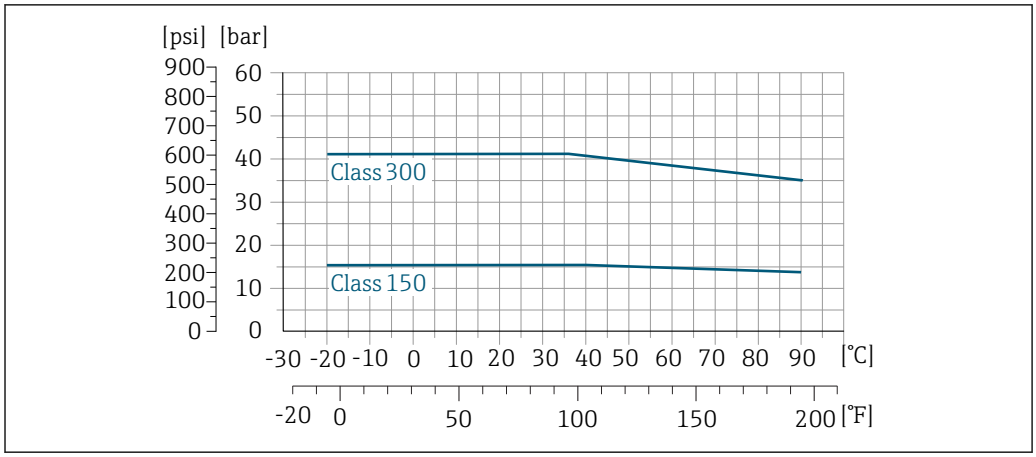

26 *Process connection material: stainless steel*

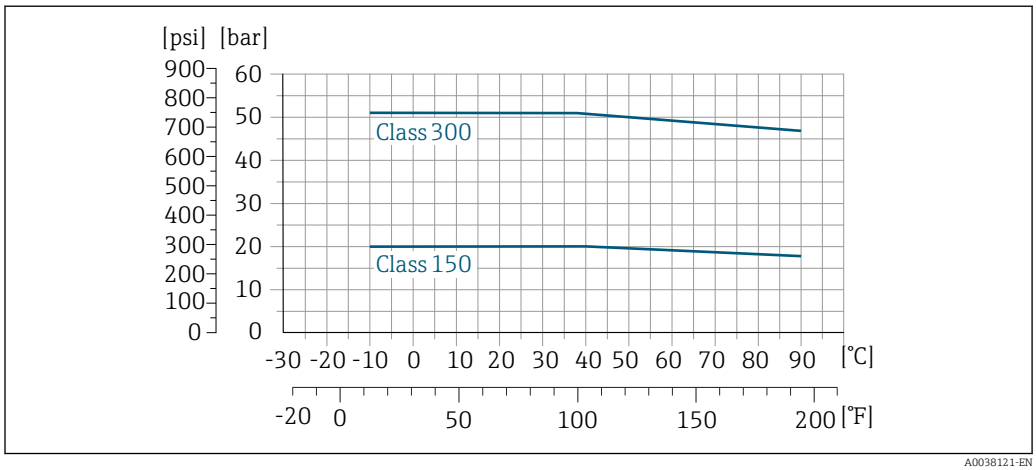

27 *Process connection material: carbon steel*

Process connection: fixed flange according to JIS B2220

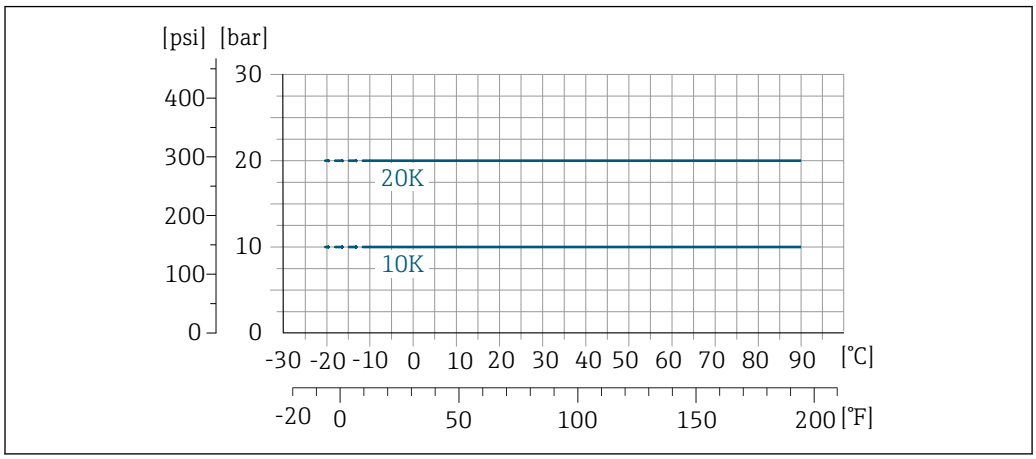

28 *Process connection material: stainless steel (−20 °C (−4 °F)); carbon steel (−10 °C (14 °F))*

Process connection: fixed flange according to AWWA C207

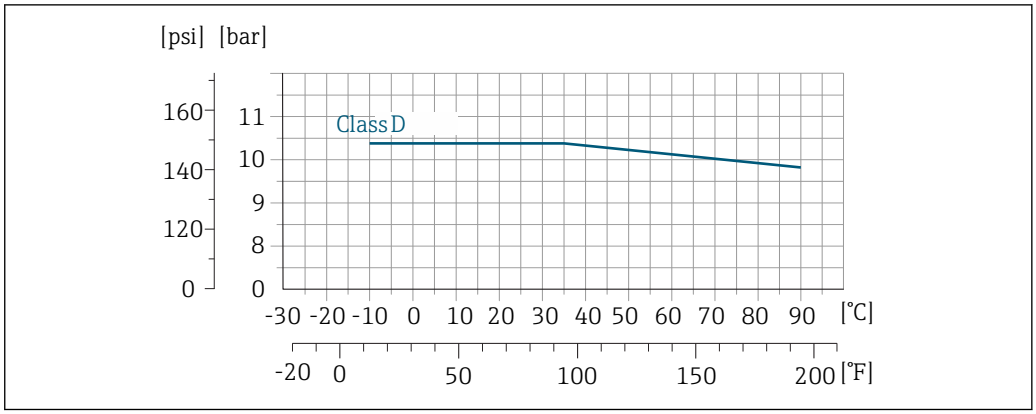

29 *Process connection material: carbon steel*

Process connection: fixed flange according to AS 2129

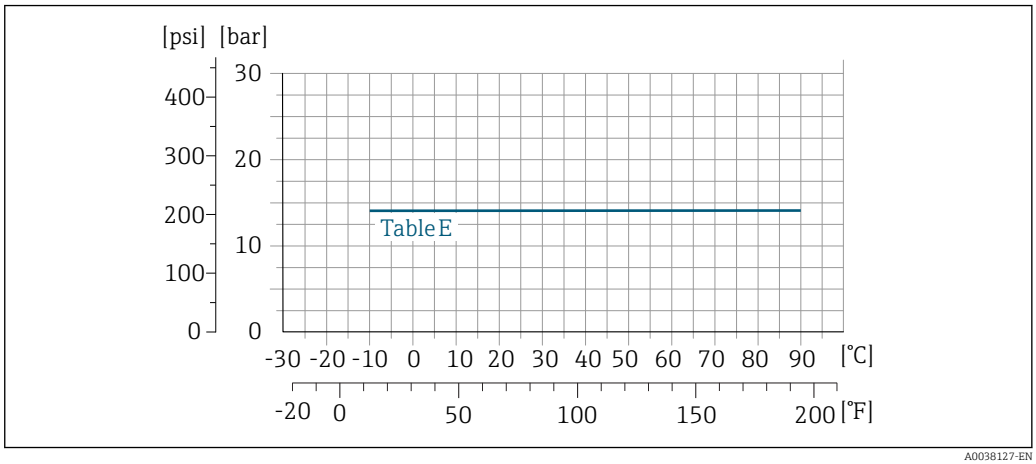

30 *Process connection material: carbon steel*

Process connection: fixed flange according to AS 4087

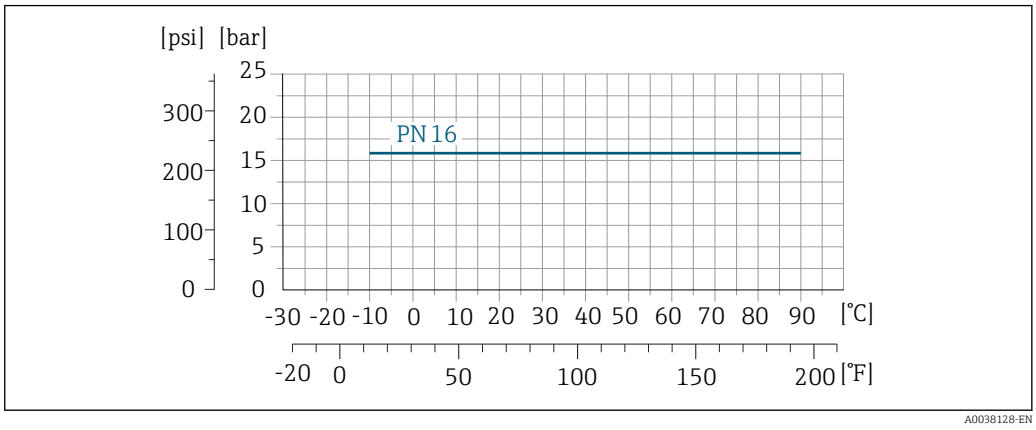

31 *Process connection material: carbon steel*

Process connection: lap joint flange/lap joint flange, stamped plate according to EN 1092-1 (DIN 2501) and ASME B16.5; DN 25 to 300 (1 to 12")

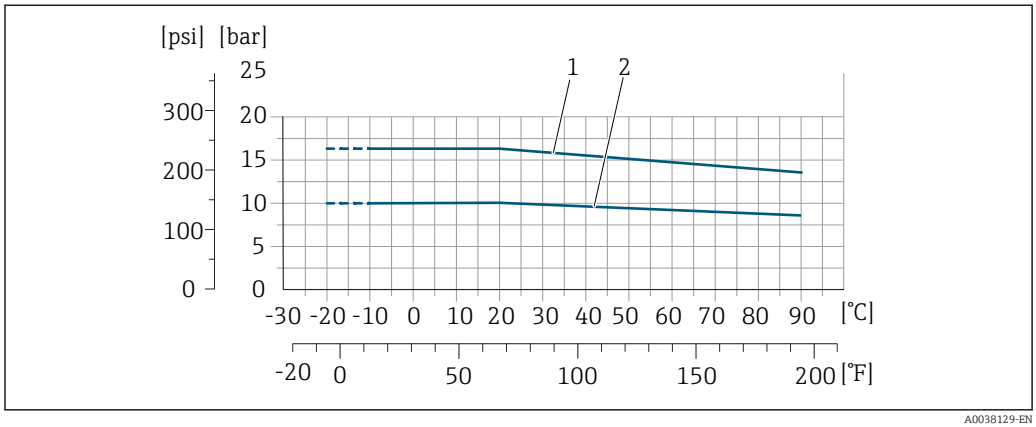

32 *Process connection material: stainless steel (−20 °C (−4 °F)); carbon steel (−10 °C (14 °F))*

1 Lap joint flange PN16/ Class150
2 Lap joint flange, stamped plate PN10, lap joint flange PN10

Pressure tightness

Liner: hard rubber

Nominal diameter		Limit values for absolute pressure in [mbar] ([psi]) for medium temperatures:		
[mm]	[in]	+25 °C (+77 °F)	+50 °C (+122 °F)	+80 °C (+176 °F)
50 … 2400	2 … 90	0 (0)	0 (0)	0 (0)

Liner: polyurethane

Nominal diameter		Limit values for absolute pressure in [mbar] ([psi]) for medium temperatures:	
[mm]	[in]	+25 °C (+77 °F)	+50 °C (+122 °F)
25 … 1200	1 … 48	0 (0)	0 (0)

Liner: PTFE

Nominal diameter		Limit values for absolute pressure in [mbar] ([psi]) for medium temperatures:	
[mm]	[in]	+25 °C (+77 °F)	+90 °C (+194 °F)
25	1	0 (0)	0 (0)
40	2	0 (0)	0 (0)
50	2	0 (0)	0 (0)
65	2 ½	0 (0)	40 (0.58)
80	3	0 (0)	40 (0.58)
100	4	0 (0)	135 (2.0)
125	5	135 (2.0)	240 (3.5)
150	6	135 (2.0)	240 (3.5)
200	8	200 (2.9)	290 (4.2)
250	10	330 (4.8)	400 (5.8)
300	12	400 (5.8)	500 (7.3)

Flow limit

The diameter of the pipe and the flow rate determine the nominal diameter of the sensor. The optimum velocity of flow is between 2 to 3 m/s (6.56 to 9.84 ft/s). Also match the velocity of flow (v) to the physical properties of the fluid:
- v < 2 m/s (6.56 ft/s): for abrasive fluids (e.g. potter's clay, lime milk, ore slurry)
- v > 2 m/s (6.56 ft/s): for fluids producing buildup (e.g. wastewater sludge)

A necessary increase in the flow velocity can be achieved by reducing the sensor nominal diameter.

For an overview of the full scale values for the measuring range, see the "Measuring range" section → 9

For custody transfer, the applicable approval determines the permitted measuring range.

Pressure loss

- No pressure loss occurs if the sensor is installed in a pipe with the same nominal diameter.
- Pressure losses for configurations incorporating adapters according to DIN EN 545 → 38

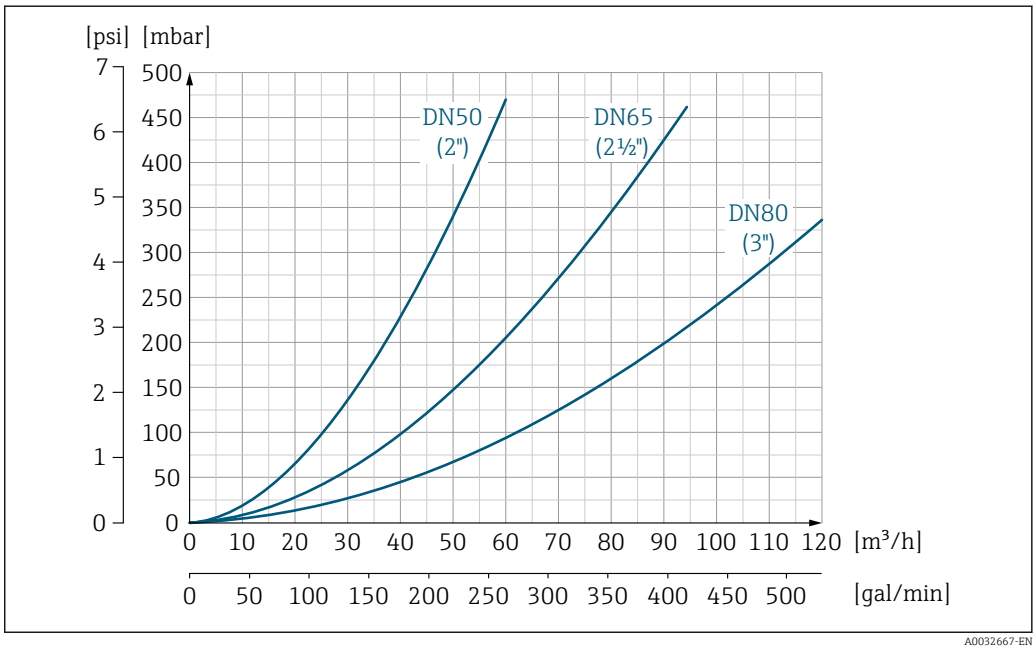

33 *Pressure loss DN 50 to 80 (2 to 3") for order code for "Design", option C "fixed flange, without inlet/outlet runs"*

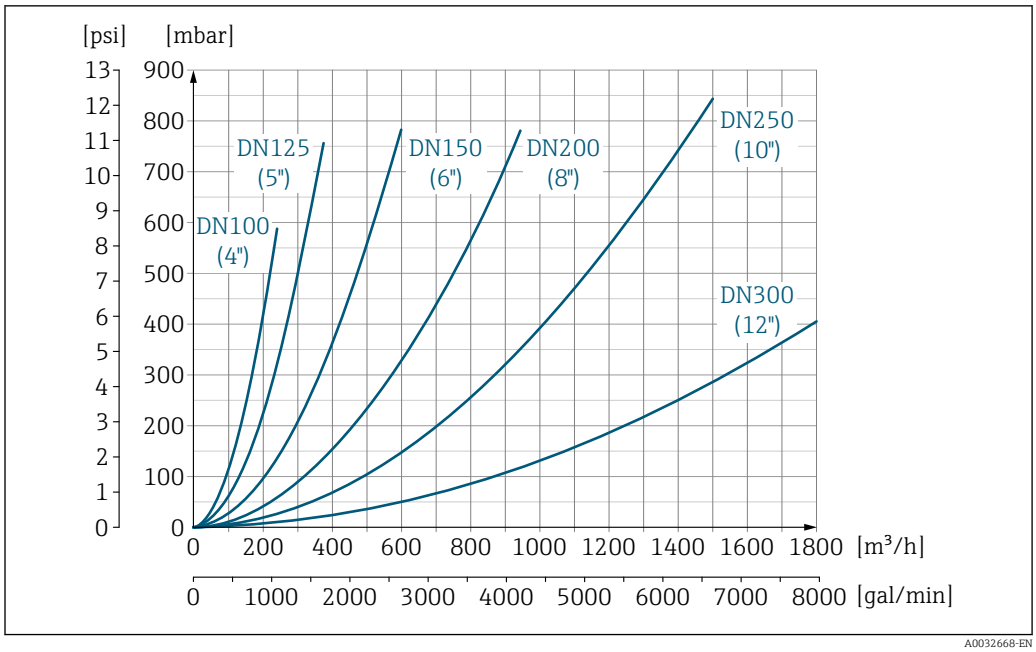

34 *Pressure loss DN 100 to 300 (4 to 12") for order code for "Design", option C "fixed flange, without inlet/ outlet runs"*

System pressure

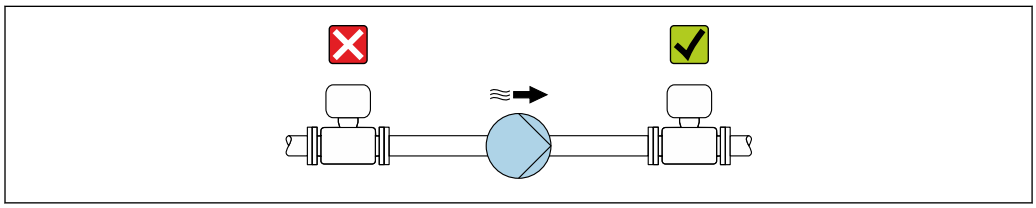

Never install the sensor on the pump suction side in order to avoid the risk of low pressure, and thus damage to the liner.

Furthermore, install pulse dampers if reciprocating, diaphragm or peristaltic pumps are used.

- Information on the liner's resistance to partial vacuum → 46
- Information on the shock resistance of the measuring system → 42
- Information on the vibration resistance of the measuring system → 42

Thermal insulation

If process fluids are very hot, it is necessary to insulate pipes in order to reduce energy loss and to prevent individuals from accidentally coming into contact with hot pipes. Please observe the applicable standards and guidelines for insulating pipes.

WARNING

Electronics overheating on account of thermal insulation!

- The housing support is used for heat dissipation and must be completely free (i.e. uncovered). At the very maximum, the sensor insulation may extend as far as the upper edge of the two sensor half-shells.

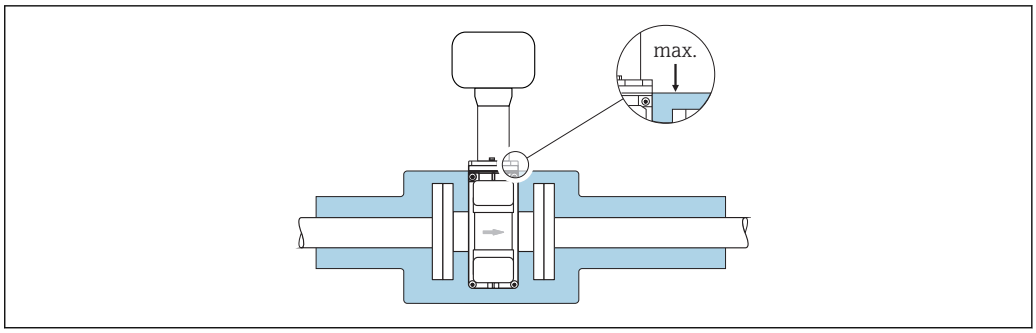

A0031216

Vibrations

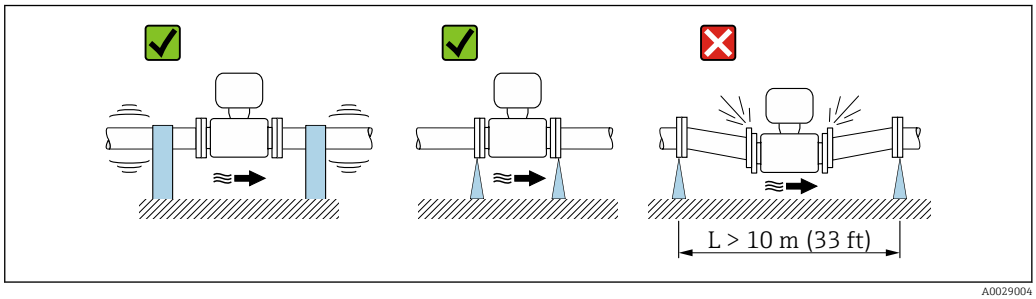

A0029004

35 *Measures to prevent vibration of the device*

In the event of very strong vibrations, the pipe and sensor must be supported and fixed.

It is also advisable to mount the sensor and transmitter separately.

- Information on the shock resistance of the measuring system → 42
- Information on the vibration resistance of the measuring system → 42

Custody transfer mode

The measuring device is optionally tested in accordance with OIML R137 and has an EU type-examination certificate according to Measuring Instruments Directive 2014/32/EU for service subject to legal metrological control ("custody transfer") for cold water (Annex III).

The permitted fluid temperature in these applications is 0 to +50 °C (+32 to +122 °F).

The device is used with a legally controlled totalizer on the local display and optionally with legally controlled outputs.

Measuring devices subject to legal metrological control totalize in both directions, i.e. all the outputs consider flow components in the positive (forward) and negative (reverse) flow direction.

Generally a measuring device subject to legal metrological control is secured against tampering by seals on the transmitter or sensor. These seals may normally only be opened by a representative of the competent authority for legal metrology controls.

After putting the device into circulation or after sealing the device, operation is only possible to a limited extent.

Detailed ordering information is available from your local Endress+Hauser sales center for national approvals (outside Europe) as cold water meters based on OIML R49.

Mechanical construction

Dimensions in SI units

Compact version

Order code for "Housing", option A "Compact, aluminum, coated" or option M "Compact, polycarbonate"

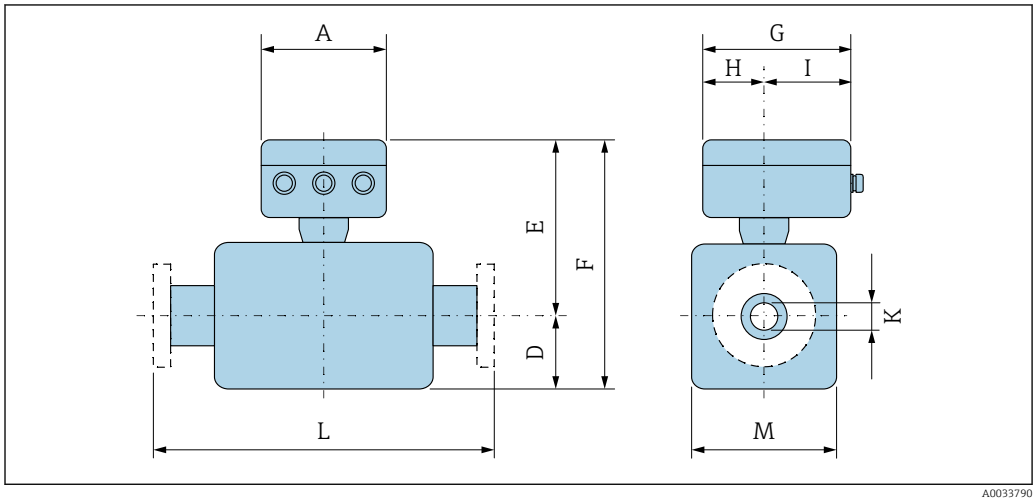

A0033790

A [mm]	G [1] [mm]	H [mm]	I [1] [mm]
167	193	90	103

1) Depending on the cable gland used: values up to + 30 mm

DN 25 to 300 (1 to 12"): sensor with aluminum half-shell housing

DN		Order code for "Design"								K	L
		Options A, D, E				Option C					
		D [1]	E [1) 2)]	F [1) 2)]	M [1)]	D [1)]	E [1) 2)]	F [1) 2)]	M [1)]		
[mm]	[in]	[mm]	[mm]	[mm]	[mm]	[mm]	[mm]	[mm]	[mm]	[mm]	[mm]
25	1	84	201	285	120	–	–	–	–	[3)]	200
32	–	84	201	285	120	–	–	–	–	[3)]	200
40	1 ½	84	201	285	120	–	–	–	–	[3)]	200
50	2	84	201	285	120	84	201	285	120	[3)]	200
65	–	109	226	335	180	84	201	285	120	[3)]	200
80	3	109	226	335	180	84	201	285	120	[3)]	200
100	4	109	226	335	180	109	226	335	180	[3)]	250
125	–	150	266	416	260	109	226	335	180	[3)]	250
150	6	150	266	416	260	109	226	335	180	[3)]	300
200	8	180	291	471	324	150	266	416	260	[3)]	350
250	10	205	316	521	400	150	266	416	260	[3)]	450
300	12	230	341	571	460	180	291	471	324	[3)]	500

1) The dimensions are reference values. They may be different than indicated, depending on the pressure rating, design and order code.
2) With order code for "Sensor option", option CG "Sensor extended neck for insulation": values + 110 mm
3) Depends on the liner→ 🖹 81

DN 350 to 900 (14 to 36")

DN		Order code for "Design"								K	L	
		Options A, E, F				Option B, G						
		D [1)]	E [1) 2)]	F [1) 2)]	M [1)]	D [1)]	E [1) 2)]	F [1) 2)]	M [1)]			
[mm]	[in]	[mm]	[mm]	[mm]	[mm]	[mm]	[mm]	[mm]	[mm]	[mm]	[mm]	
350	14	245	412	658	490	–	–	–	–	[3)]	550	
375	15	271	438	709	542	–	–	–	–	[3)]	550	
400	16	271	438	709	542	–	–	–	–	[3)]	600	
450	18	299	466	765	598	333	450	783	666	[3)]	600 [4)]	650 [5)]
500	20	324	491	815	648	359	475	834	717	[3)]	600 [4)]	650 [5)]
600	24	365	542	907	730	411	528	939	821	[3)]	600 [4)]	780 [5)]
700	28	430	603	1033	860	512	630	1142	1024	[3)]	700 [4)]	910 [5)]
750	30	467	641	1108	934	512	630	1142	1024	[3)]	700 [4)]	910 [5)]
800	32	486	660	1146	972	534	650	1184	1065	[3)]	800 [4)]	1040 [5)]
900	36	536	710	1246	1072	610	727	1337	1218	[3)]	900 [4)]	1170 [5)]

1) The dimensions are reference values. They may be different than indicated, depending on the pressure rating, design and order code.
2) With order code for "Sensor option", option CG "Sensor extended neck for insulation": values + 110 mm
3) Depends on the liner→ 🖹 81
4) Order code for "Design", option F "Fixed flange, short installation length"
5) Order code for "Design", option G "Fixed flange, long installation length"

DN 1000 to 2400 (40 to 90")

DN		D [1]	E [1) 2)]	F [1) 2)]	K	L		M [1]
[mm]	[in]	[mm]	[mm]	[mm]	[mm]	[mm]		[mm]
1000	40	686	803	1 489	[3]	1 000 [4]	1 300 [5]	1 370
–	42	712	828	1 540	[3]	1 050 [4]	1 365 [5]	1 420
1200	48	811	929	1 740	[3]	1 200 [4]	1 560 [5]	1 620
–	54	912	1 029	1 941	[3]	1 350 [4]	1 755 [5]	1 820
1400	–	987	1 104	2 091	[3]	1 400 [4]	1 820 [5]	1 970
–	60	1 011	1 128	2 139	[3]	1 500 [4]	1 950 [5]	2 018
1600	–	1 056	1 173	2 229	[3]	1 600 [4]	2 080 [5]	2 108
–	66	1 093	1 209	2 302	[3]	1 650 [4]	2 145 [5]	2 180
1800	72	1 188	1 304	2 492	[3]	1 800 [4]	2 340 [5]	2 370
–	78	1 238	1 354	2 592	[3]	2 000 [4]	2 600 [5]	2 470
2000	–	1 238	1 354	2 592	[3]	2 000 [4]	2 600 [5]	2 470
–	84	1 238	1 354	2 592	[3]	2 200 [4]		2 470
2200	–	1 227	1 346	2 573	[3]	2 200 [4]		2 454
–	90	1 227	1 346	2 573	[3]	2 400 [4]		2 454
2400	–	1 332	1 451	2 783	[3]	2 400 [4]		2 664

1) The dimensions are reference values. They may be different than indicated, depending on the pressure rating, design and order code.
2) With order code for "Sensor option", option CG "Sensor extended neck for insulation": values + 110 mm
3) Depends on the liner→ 🖹 81
4) Order code for "Design", option F "Fixed flange, short installation length"
5) Order code for "Design", option G "Fixed flange, long installation length"

Remote version

Transmitter remote version

Order code for "Housing", option N "Remote, polycarbonate" or option P "Remote, aluminum coated"

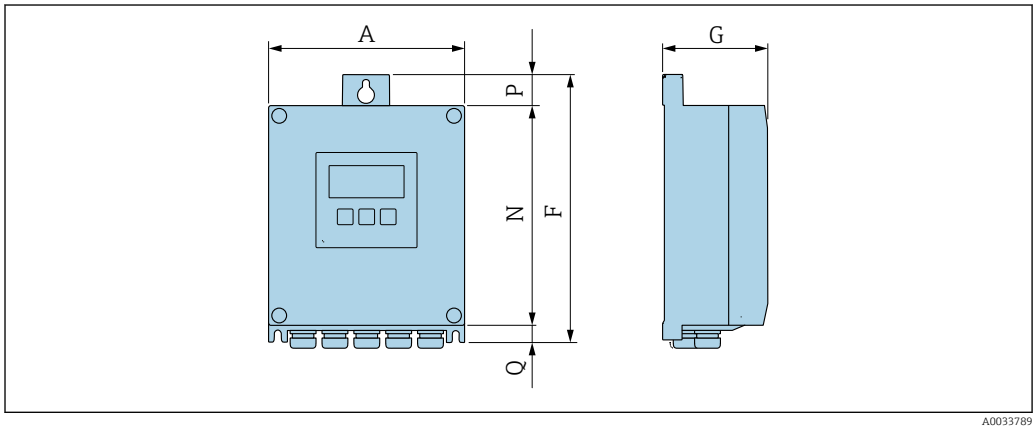

A0033789

A [mm]	F [mm]	G [mm]	N [mm]	P [mm]	Q [mm]
167	232	80	187	24	21

Sensor connection housing

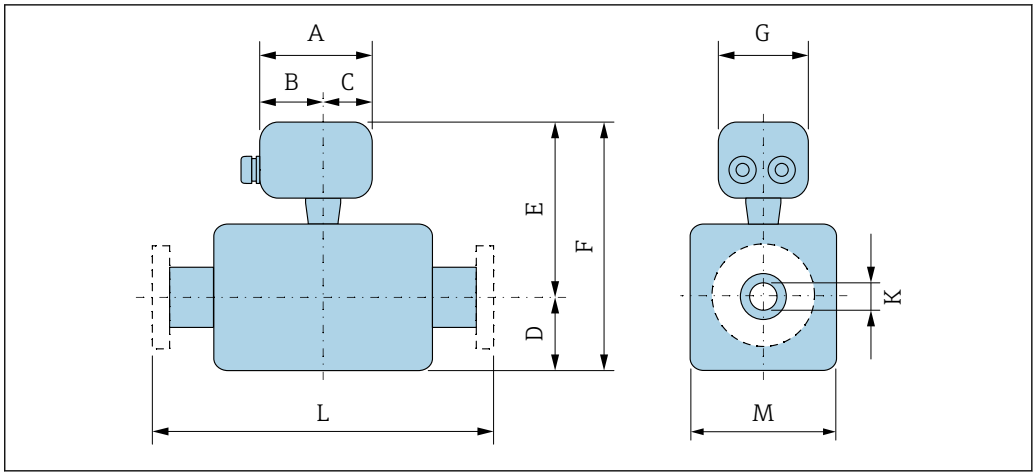

A0033784

Order code for "Sensor connection housing", option A "Aluminum, coated"

A [mm]	B [mm]	C [mm]	G [mm]
148	94	54	136

Order code for "Sensor connection housing", option D "Polycarbonate"

A [mm]	B [mm]	C [mm]	G [mm]
113	62	51	112

DN 25 to 300 (1 to 12"): sensor with aluminum half-shell housing

DN		Order code for "Design"								K	L
		Options A, D, E				Option C					
		D [1]	E [1]	F [1]	M [1]	D [1]	E [1]	F [1]	M [1]		
[mm]	[in]	[mm]	[mm]	[mm]	[mm]	[mm]	[mm]	[mm]	[mm]	[mm]	[mm]
25	1	84	200	284	120	–	–	–	–	[2]	200
32	–	84	200	284	120	–	–	–	–	[2]	200
40	1 ½	84	200	284	120	–	–	–	–	[2]	200
50	2	84	200	284	120	84	200	284	120	[2]	200
65	–	109	225	334	180	84	200	284	120	[2]	200
80	3	109	225	334	180	84	200	284	120	[2]	200
100	4	109	225	334	180	109	225	334	180	[2]	250
125	–	150	265	415	260	109	225	334	180	[2]	250
150	6	150	265	415	260	109	225	334	180	[2]	300
200	8	180	290	470	324	150	265	415	260	[2]	350
250	10	205	315	520	400	150	265	415	260	[2]	450
300	12	230	340	570	460	180	290	470	324	[2]	500

1) The dimensions are reference values. They may be different than indicated, depending on the pressure rating, design and order code.
2) Depends on the liner→ 🖹 81

DN 25 to 300 (1 to 12"): sensor with fully welded carbon steel housing

DN		Order code for "Design"								K	L
		Options A, E				Option C					
		D [1]	E [1]	F [1]	M [1]	D [1]	E [1]	F [1]	M [1]		
[mm]	[in]	[mm]	[mm]	[mm]	[mm]	[mm]	[mm]	[mm]	[mm]	[mm]	[mm]
25	1	70	200	270	140	–	–	–	–	[2]	200
32	–	70	200	270	140	–	–	–	–	[2]	200
40	1 ½	70	200	270	140	–	–	–	–	[2]	200
50	2	70	200	270	140	70	200	270	140	[2]	200
65	–	82	225	307	165	70	200	270	140	[2]	200
80	3	87	225	312	175	70	200	270	140	[2]	200
100	4	100	225	325	200	82	225	307	165	[2]	250
125	–	113	265	378	226	87	225	312	175	[2]	250
150	6	134	265	399	269	100	225	325	200	[2]	300
200	8	160	290	450	320	113	265	378	226	[2]	350
250	10	193	315	508	387	134	265	399	269	[2]	450
300	12	218	340	558	437	160	290	450	320	[2]	500

1) The dimensions are reference values. They may be different than indicated, depending on the pressure rating, design and order code.
2) Depends on the liner→ 🖹 81

DN 350 to 900 (14 to 36")

DN		Order code for "Design"								K	L	
		Options A, E, F				Option B, G						
		D [1]	E [1]	F [1]	M [1]	D [1]	E [1]	F [1]	M [1]			
[mm]	[in]	[mm]	[mm]	[mm]	[mm]	[mm]	[mm]	[mm]	[mm]	[mm]	[mm]	
350	14	245	350	595	490	–	–	–	–	[2]	550	
375	15	271	375	646	542	–	–	–	–	[2]	550	
400	16	271	375	646	542	–	–	–	–	[2]	600	
450	18	299	403	702	598	333	447	780	666	[2]	600 [3]	650 [4]
500	20	324	428	752	648	359	472	831	717	[2]	600 [3]	650 [4]
600	24	365	479	844	730	411	525	936	821	[2]	600 [3]	780 [4]
700	28	430	540	970	860	512	627	1139	1024	[2]	700 [3]	910 [4]
750	30	467	578	1045	934	512	627	1139	1024	[2]	700 [3]	910 [4]
800	32	486	597	1083	972	534	647	1181	1065	[2]	800 [3]	1040 [4]
900	36	536	647	1183	1072	610	724	1334	1218	[2]	900 [3]	1170 [4]

1) The dimensions are reference values. They may be different than indicated, depending on the pressure rating, design and order code.
2) Depends on the liner→ 🖹 81
3) Order code for "Design", option F "Fixed flange, short installation length"
4) Order code for "Design", option G "Fixed flange, long installation length"

1000 ... 2400 (40 ... 90")

DN		D [1]	E [1]	F [1]	K	L		M [1]
[mm]	[in]	[mm]	[mm]	[mm]	[mm]	[mm]		[mm]
1000	40	686	800	1486	[2]	1000 [3]	1300 [4]	1370
–	42	712	825	1537	[2]	1050 [3]	1365 [4]	1420
1200	48	811	926	1737	[2]	1200 [3]	1560 [4]	1620
–	54	912	1026	1938	[2]	1350 [3]	1755 [4]	1820
1400	–	987	1101	2088	[2]	1400 [3]	1820 [4]	1970
–	60	1011	1125	2136	[2]	1500 [3]	1950 [4]	2018
1600	–	1056	1170	2226	[2]	1600 [3]	2080 [4]	2108
–	66	1093	1206	2299	[2]	1650 [3]	2145 [4]	2180
1800	72	1188	1301	2489	[2]	1800 [3]	2340 [4]	2370
–	78	1238	1351	2589	[2]	2000 [3]	2600 [4]	2470
2000	–	1238	1351	2589	[2]	2000 [3]	2600 [4]	2470
–	84	1238	1351	2589	[2]	2200 [3]		2470
2200	–	1227	1343	2570	[2]	2200 [3]		2454
–	90	1227	1343	2570	[2]	2400 [3]		2454
2400	–	1332	1448	2780	[2]	2400 [3]		2664

1) The dimensions are reference values. They may be different than indicated, depending on the pressure rating, design and order code.
2) Internal diameter depends on liner, see measuring tube specification → 🖹 81
3) Order code for "Design", option F "Fixed flange, short installation length"
4) Order code for "Design", option G "Fixed flange, long installation length"

Flange connections

Fixed flange

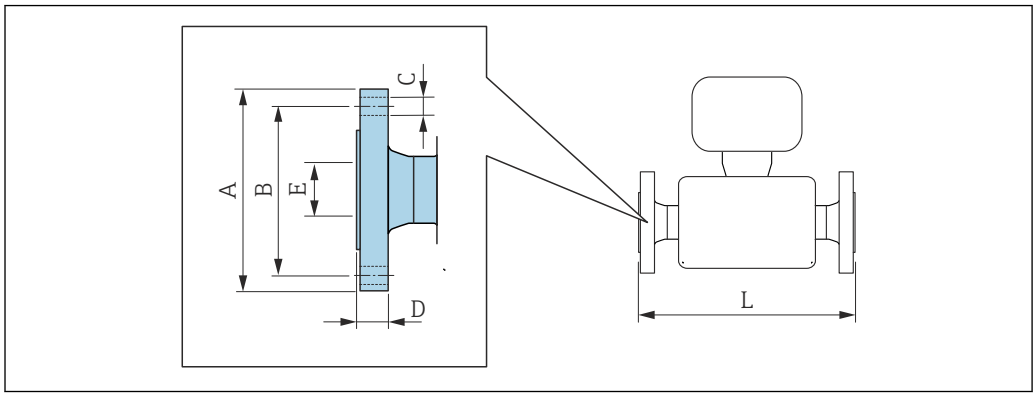

A0015621

Flange in accordance with EN 1092-1 (DIN 2501 / DIN 2512N): PN 6 **Carbon steel:** *order code for "Process connection", option* **D1K** **Stainless steel:** *order code for "Process connection", option* **D1S**						
DN **[mm]**	**A** **[mm]**	**B** **[mm]**	**C** **[mm]**	**D** **[mm]**	**E** **[mm]**	**L** **[mm]**
350	490	445	12 × Ø22	22	1)	2)
400	540	495	16 × Ø22	22		
450	595	565	20 × Ø26	26		
500	645	600	20 × Ø22	24		
600	755	705	20 × Ø26	30		
700	860	810	24 × Ø26	30		
800	975	920	24 × Ø30	30		
900	1075	1020	24 × Ø30	34		
1000	1175	1120	28 × Ø30	38		
1200	1405	1340	32 × Ø33	42		
1400	1630	1560	36 × Ø36	56		
1600	1830	1760	40 × Ø36	63		
1800	2045	1970	44 × Ø39	69		
2000	2265	2180	48 × Ø42	74		
2200	2475	2390	52 × Ø42	81		
2400	2685	2600	56 × Ø42	87		
Surface roughness (flange): EN 1092-1 Form B1 (DIN 2526 Form C), Ra 6.3 to 12.5 µm						

1) Depends on the liner→ 🖹 81
2) Total length is independent of the process connections. Length according to DVGW (German Technical and Scientific Association for Gas and Water) → 🖹 50 (compact version) → 🖹 53 (remote version)

Flange in accordance with EN 1092-1 (DIN 2501 / DIN 2512N): PN 10
Carbon steel: *order code for "Process connection", option* **D2K**
Stainless steel: *order code for "Process connection", option* **D2S**

DN [mm]	A [mm]	B [mm]	C [mm]	D [mm]	E [mm]	L [mm]
200	340	295	8 × Ø22	26	1)	2)
250	395	350	12 × Ø22	28		
300	445	400	12 × Ø22	28		
350	505	460	16 × Ø22	26		
400	565	515	16 × Ø26	26		
450	615	565	20 × Ø26	26		
500	670	620	20 × Ø26	28		
600	780	725	20 × Ø30	30		
700	895	840	24 × Ø30	35		
800	1015	950	24 × Ø33	38		
900	1115	1050	28 × Ø33	38		
1000	1230	1160	28 × Ø36	44		
1200	1455	1380	32 × Ø39	55		
1400	1675	1590	36 × Ø42	65		
1600	1915	1820	40 × Ø48	75		
1800	2115	2020	44 × Ø48	85		
2000	2325	2230	48 × Ø48	90		
2200	2550	2440	52 × Ø56	100		
2400	2760	2650	56 × Ø56	110		

Surface roughness (flange): EN 1092-1 Form B1 (DIN 2526 Form C), Ra 6.3 to 12.5 µm

1) Depends on the liner→ 🖹 81
2) Total length is independent of the process connections. Length according to DVGW (German Technical and Scientific Association for Gas and Water) → 🖹 50 (compact version) → 🖹 53 (remote version)

Flange in accordance with EN 1092-1 (DIN 2501 / DIN 2512N): PN 16
Carbon steel: *order code for "Process connection", option* **D3K**
Stainless steel: *order code for "Process connection", option* **D3S**

DN [mm]	A [mm]	B [mm]	C [mm]	D [mm]	E [mm]	L [mm]
65	185	145	8 × Ø18	20	1)	2)
80	200	160	8 × Ø18	20		
100	220	180	8 × Ø18	22		
125	250	210	8 × Ø18	24		
150	285	240	8 × Ø22	24		
200	340	295	12 × Ø22	26		
250	405	355	12 × Ø26	32		
300	460	410	12 × Ø26	32		
350	520	470	16 × Ø26	30		
400	580	525	16 × Ø30	32		
450	640	585	20 × Ø30	34		
500	715	650	20 × Ø33	36		

Flange in accordance with EN 1092-1 (DIN 2501 / DIN 2512N): PN 16 **Carbon steel:** *order code for "Process connection", option* **D3K** **Stainless steel:** *order code for "Process connection", option* **D3S**						
DN [mm]	**A [mm]**	**B [mm]**	**C [mm]**	**D [mm]**	**E [mm]**	**L [mm]**
600	840	770	20 × Ø36	40		
700	910	840	24 × Ø36	40		
800	1025	950	24 × Ø39	41		
900	1125	1050	28 × Ø39	48		
1000	1255	1170	28 × Ø42	59		
1200	1485	1390	32 × Ø48	78		
1400	1685	1590	36 × Ø48	84		
1600	1930	1820	40 × Ø56	102		
1800	2130	2020	44 × Ø56	110		
2000	2345	2230	48 × Ø62	124		
Surface roughness (flange): EN 1092-1 Form B1 (DIN 2526 Form C), Ra 6.3 to 12.5 µm						

1) Depends on the liner→ 🖹 81
2) Total length is independent of the process connections. Length according to DVGW (German Technical and Scientific Association for Gas and Water) → 🖹 50 (compact version) → 🖹 53 (remote version)

Flange in accordance with EN 1092-1 (DIN 2501 / DIN 2512N): PN 25 **Carbon steel:** *order code for "Process connection", option* **D4K** **Stainless steel:** *order code for "Process connection", option* **D4S**						
DN [mm]	**A [mm]**	**B [mm]**	**C [mm]**	**D [mm]**	**E [mm]**	**L [mm]**
200	360	310	12 × Ø26	32	1)	2)
250	425	370	12 × Ø30	36		
300	485	430	16 × Ø30	40		
350	555	490	16 × Ø33	38		
400	620	550	16 × Ø36	40		
450	670	600	20 × Ø36	46		
500	730	660	20 × Ø36	48		
600	845	770	20 × Ø39	48		
700	960	875	24 × Ø42	50		
800	1085	990	24 × Ø48	53		
900	1185	1090	28 × Ø48	57		
1000	1320	1210	28 × Ø56	63		
Surface roughness (flange): EN 1092-1 Form B1 (DIN 2526 Form C), Ra 6.3 to 12.5 µm						

1) Depends on the liner→ 🖹 81
2) Total length is independent of the process connections. Length according to DVGW (German Technical and Scientific Association for Gas and Water) → 🖹 50 (compact version) → 🖹 53 (remote version)

Flange in accordance with EN 1092-1 (DIN 2501 / DIN 2512N): PN 40
Carbon steel: *order code for "Process connection", option* **D5K**
Stainless steel: *order code for "Process connection", option* **D5S**

DN [mm]	A [mm]	B [mm]	C [mm]	D [mm]	E [mm]	L [mm]
25	115	85	4 × Ø14	16	1)	2)
32	140	100	4 × Ø18	18		
40	150	110	4 × Ø18	18		
50	165	125	4 × Ø18	20		
65	185	145	8 × Ø18	24		
80	200	160	8 × Ø18	26		
100	235	190	8 × Ø22	26		
125	270	220	8 × Ø26	28		
150	300	250	8 × Ø26	30		
Surface roughness (flange): EN 1092-1 Form B1 (DIN 2526 Form C), Ra 6.3 to 12.5 µm						

1) Depends on the liner→ 🖹 81
2) Total length is independent of the process connections. Length according to DVGW (German Technical and Scientific Association for Gas and Water) → 🖹 50 (compact version) → 🖹 53 (remote version)

Flange according to ASME B16.5, Class 150
Carbon steel: *order code for "Process connection", option* **A1K**
Stainless steel: *order code for "Process connection", option* **A1S**

DN		A	B	C	D	E	L
[mm]	[in]	[mm]	[mm]	[mm]	[mm]	[mm]	[mm]
25	1	108	79.2	4 × Ø16	12.6	1)	2)
40	1 ½	127	98.6	4 × Ø16	15.9		
50	2	152.4	120.7	4 × Ø19.1	17.5		
80	3	190.5	152.4	4 × Ø19.1	22.3		
100	4	228.6	190.5	8 × Ø19.1	22.3		
150	6	279.4	241.3	8 × Ø22.4	23.8		
200	8	342.9	298.5	8 × Ø22.4	26.8		
250	10	406.4	362	12 × Ø25.4	29.6		
300	12	482.6	431.8	12 × Ø25.4	30.2		
350	14	535	476.3	12 × Ø28.6	35.4		
400	16	595	539.8	16 × Ø28.6	37		
450	18	635	577.9	16 × Ø31.8	40.1		
500	20	700	635	20 × Ø31.8	43.3		
600	24	815	749.3	20 × Ø34.9	48.1		
Surface roughness (flange): Ra 6.3 to 12.5 µm							

1) Depends on the liner→ 🖹 81
2) Total length is independent of the process connections. Length according to DVGW (German Technical and Scientific Association for Gas and Water) → 🖹 50 (compact version) → 🖹 53 (remote version)

Flange according to ASME B16.5, Class 300
Carbon steel: *order code for "Process connection", option* **A2K**
Stainless steel: *order code for "Process connection", option* **A2S**

DN		A	B	C	D	E	L
[mm]	[in]	[mm]	[mm]	[mm]	[mm]	[mm]	[mm]
25	1	123.9	88.9	4 × Ø19.1	15.9	1)	2)
40	1 ½	155.4	114.3	4 × Ø22.4	19		
50	2	165.1	127	8 × Ø19.1	20.8		
80	3	209.6	168.1	8 × Ø22.4	26.8		
100	4	254	200.2	8 × Ø22.4	30.2		
150	6	317.5	269.7	12 × Ø22.4	35		
Surface roughness (flange): Ra 6.3 to 12.5 µm							

1) Depends on the liner→ 🖹 81
2) Total length is independent of the process connections. Length according to DVGW (German Technical and Scientific Association for Gas and Water) → 🖹 50 (compact version) → 🖹 53 (remote version)

Flange according to JIS B2220, 10K
Carbon steel: *order code for "Process connection", option* **N3K**
Stainless steel: *order code for "Process connection", option* **N3S**

DN [mm]	A [mm]	B [mm]	C [mm]	D [mm]	E [mm]	L [mm]
50	155	120	4 × Ø19	16	1)	2)
65	175	140	4 × Ø19	18		
80	185	150	8 × Ø19	18		
100	210	175	8 × Ø19	18		
125	250	210	8 × Ø23	20		
150	280	240	8 × Ø23	22		
200	330	290	12 × Ø23	22		
250	400	355	12 × Ø25	24		
300	445	400	16 × Ø25	24		
Surface roughness (flange): Ra 6.3 to 12.5 µm						

1) Depends on the liner→ 🖹 81
2) Total length is independent of the process connections. Length according to DVGW (German Technical and Scientific Association for Gas and Water) → 🖹 50 (compact version) → 🖹 53 (remote version)

Flange according to JIS B2220, 20K
Carbon steel: *order code for "Process connection", option* **N4K**
Stainless steel: *order code for "Process connection", option* **N4S**

DN [mm]	A [mm]	B [mm]	C [mm]	D [mm]	E [mm]	L [mm]
25	125	90	4 × Ø19	16	1)	2)
32	135	100	4 × Ø19	18		
40	140	105	4 × Ø19	18		
50	155	120	8 × Ø19	18		
65	175	140	8 × Ø19	20		
80	200	160	8 × Ø23	22		
100	225	185	8 × Ø23	24		

Flange according to JIS B2220, 20K
Carbon steel: *order code for "Process connection", option* **N4K**
Stainless steel: *order code for "Process connection", option* **N4S**

DN [mm]	A [mm]	B [mm]	C [mm]	D [mm]	E [mm]	L [mm]
125	270	225	8 × Ø25	26		
150	305	260	12 × Ø25	28		
200	350	305	12 × Ø25	30		
250	430	380	12 × Ø27	34		
300	480	430	16 × Ø27	36		
Surface roughness (flange): Ra 6.3 to 12.5 µm						

1) Depends on the liner→ 🖹 81
2) Total length is independent of the process connections. Length according to DVGW (German Technical and Scientific Association for Gas and Water) → 🖹 50 (compact version) → 🖹 53 (remote version)

Flange according to AWWA, Class D
Order code for "Process connection", option **W1K**

DN		A	B	C	D	E	L
[mm]	[in]	[mm]	[mm]	[mm]	[mm]	[mm]	[mm]
700	28	927	863.6	28 × Ø35	33.4	1)	2)
750	30	984	914.4	28 × Ø35	35		
800	32	1060	977.9	28 × Ø42	38.1		
900	36	1168	1085.9	32 × Ø42	41.3		
1000	40	1289	1200.2	36 × Ø42	41.3		
–	42	1346	1257.3	36 × Ø42	44.5		
1200	48	1511	1422.4	44 × Ø42	47.7		
–	54	1683	1593.9	44 × Ø48	54		
–	60	1855	1759	52 × Ø48	57.2		
–	66	2032	1930.4	52 × Ø48	63.5		
1800	72	2197	2095.5	60 × Ø48	66.7		
–	78	2362	2260.6	64 × Ø54	69.9		
–	84	2535	2425.7	64 × Ø54	73.1		
–	90	2705	2717.8	68 × Ø60	76.2		
Surface roughness (flange): Ra 6.3 to 12.5 µm							

1) Depends on the liner→ 🖹 81
2) Total length is independent of the process connections. Length according to DVGW (German Technical and Scientific Association for Gas and Water) → 🖹 50 (compact version) → 🖹 53 (remote version)

Flange according to AS 2129, Tab. E
Order code for "Process connection", option **M2K**

DN [mm]	A [mm]	B [mm]	C [mm]	D [mm]	E [mm]	L [mm]
80	185	146	4 × Ø18	12	1)	2)
100	215	178	8 × Ø18	13		
150	280	235	8 × Ø22	17		
200	335	292	8 × Ø22	19		
250	405	356	12 × Ø22	22		

Flange according to AS 2129, Tab. E *Order code for "Process connection", option* **M2K**						
DN [mm]	**A [mm]**	**B [mm]**	**C [mm]**	**D [mm]**	**E [mm]**	**L [mm]**
300	455	406	12 × Ø26	25		
350	525	470	12 × Ø26	30		
400	580	521	12 × Ø26	32		
450	640	584	16 × Ø26	35		
500	705	641	16 × Ø26	38		
600	825	756	16 × Ø33	48		
700	910	845	20 × Ø33	51		
750	995	927	20 × Ø36	54		
800	1060	984	20 × Ø36	54		
900	1175	1092	24 × Ø36	64		
1000	1255	1175	24 × Ø39	67		
1200	1490	1410	32 × Ø39	79		
Surface roughness (flange): Ra 6.3 to 12.5 µm						

1) Depends on the liner→ 🖹 81
2) Total length is independent of the process connections. Length according to DVGW (German Technical and Scientific Association for Gas and Water) → 🖹 50 (compact version) → 🖹 53 (remote version)

Flange according to AS 4087, PN 16 *Order code for "Process connection", option* **M3K**						
DN [mm]	**A [mm]**	**B [mm]**	**C [mm]**	**D [mm]**	**E [mm]**	**L [mm]**
80	185	146	4 × Ø18	12	1)	2)
100	215	178	4 × Ø18	13		
150	280	235	8 × Ø18	13		
200	335	292	8 × Ø18	19		
250	405	356	8 × Ø22	19		
300	455	406	12 × Ø22	23		
350	525	470	12 × Ø26	30		
375	550	495	12 × Ø26	30		
400	580	521	12 × Ø26	32		
450	640	584	12 × Ø26	30		
500	705	641	16 × Ø26	38		
600	825	756	16 × Ø30	48		
700	910	845	20 × Ø30	56		
750	995	927	20 × Ø33	56		
800	1060	984	20 × Ø36	56		
900	1175	1092	24 × Ø36	66		
1000	1255	1175	24 × Ø36	66		

Flange according to AS 4087, PN 16
Order code for "Process connection", option **M3K**

DN [mm]	A [mm]	B [mm]	C [mm]	D [mm]	E [mm]	L [mm]
1200	1490	1410	32 × Ø36	76		
Surface roughness (flange): Ra 6.3 to 12.5 µm						

1) Depends on the liner→ 🖹 81
2) Total length is independent of the process connections. Length according to DVGW (German Technical and Scientific Association for Gas and Water) → 🖹 50 (compact version) → 🖹 53 (remote version)

Lap joint flange

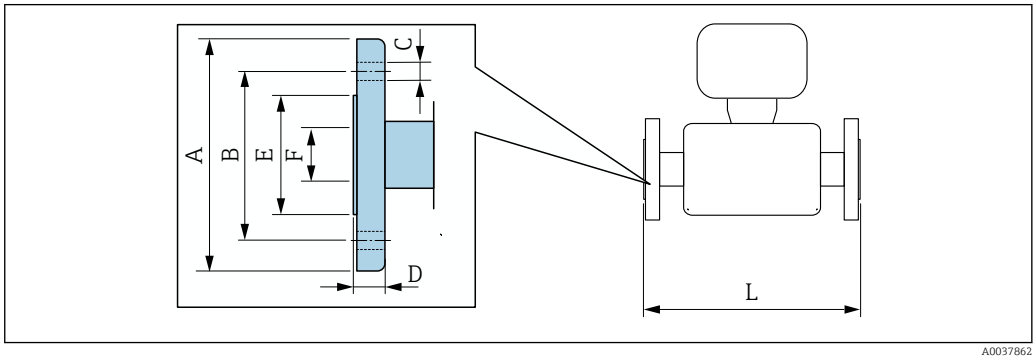

A0037862

Lap joint flange in accordance with EN 1092-1 (DIN 2501 / DIN 2512N): PN 10
Carbon steel: *order code for "Process connection", option* **D22**
Stainless steel: *order code for "Process connection", option* **D24**

DN		A	B	C	D	E	F	L
[mm]	[in]	[mm]	[mm]	[mm]	[mm]	[mm]	[mm]	[mm]
200	8	340	295	8 × Ø22	24	264	1)	2)
250	10	395	350	12 × Ø22	26	317		
300	12	445	400	12 × Ø22	26	367		
Surface roughness (flange): Ra 6.3 to 12.5 µm								

1) Depends on the liner→ 🖹 81
2) Total length is independent of the process connections. Length according to DVGW (German Technical and Scientific Association for Gas and Water) → 🖹 50 (compact version) → 🖹 53 (remote version)

Lap joint flange in accordance with EN 1092-1 (DIN 2501 / DIN 2512N): PN 16
Carbon steel: *order code for "Process connection", option* **D32**
Stainless steel: *order code for "Process connection", option* **D34**

DN		A	B	C	D	E	F	L
[mm]	[in]	[mm]	[mm]	[mm]	[mm]	[mm]	[mm]	[mm]
25	1	115	85	4 × Ø14	16	49	1)	2)
32	-	140	100	4 × Ø18	18	65		
40	1 ½	150	110	4 × Ø18	18	71		
50	2	165	125	4 × Ø18	20	88		
65	-	185	145	8 × Ø18	20	103		
80	3	200	160	8 × Ø18	20	120		
100	4	220	180	8 × Ø18	22	148		
125	-	250	210	8 × Ø18	22	177		

Lap joint flange in accordance with EN 1092-1 (DIN 2501 / DIN 2512N): PN 16
Carbon steel: *order code for "Process connection", option* **D32**
Stainless steel: *order code for "Process connection", option* **D34**

DN		A	B	C	D	E	F	L
[mm]	[in]	[mm]	[mm]	[mm]	[mm]	[mm]	[mm]	[mm]
150	6	285	240	8 × Ø22	24	209		
200	8	340	295	12 × Ø22	26	264		
250	10	405	355	12 × Ø26	29	317		
300	12	460	410	12 × Ø26	32	367		
Surface roughness (flange): Ra 6.3 to 12.5 µm								

1) Depends on the liner→ 🖹 81
2) Total length is independent of the process connections. Length according to DVGW (German Technical and Scientific Association for Gas and Water) → 🖹 50 (compact version) → 🖹 53 (remote version)

Lap joint flange according to ASME B16.5, Class 150
Carbon steel: *order code for "Process connection", option* **A12**
Stainless steel: *order code for "Process connection", option* **A14**

DN		A	B	C	D	E	F	L
[mm]	[in]	[mm]	[mm]	[mm]	[mm]	[mm]	[mm]	[mm]
25	1	110	80	4 × Ø16	14	49	1)	2)
40	1 ½	125	98	4 × Ø16	17.5	71		
50	2	150	121	4 × Ø19	19	88		
80	3	190	152	4 × Ø19	24	120		
100	4	230	190	8 × Ø19	24	148		
150	6	280	241	8 × Ø23	25	209		
200	8	345	298	8 × Ø23	29	264		
250	10	405	362	12 × Ø25	30	317		
300	12	485	432	12 × Ø25	32	378		
Surface roughness (flange): Ra 6.3 to 12.5 µm								

1) Depends on the liner→ 🖹 81
2) Total length is independent of the process connections. Length according to DVGW (German Technical and Scientific Association for Gas and Water) → 🖹 50 (compact version) → 🖹 53 (remote version)

Lap joint flange, stamped plate

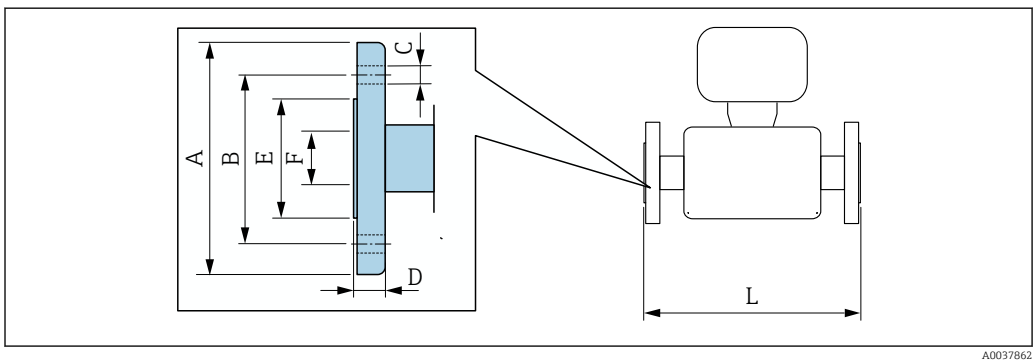

A0037862

Lap joint flange, stamped plate in accordance with EN 1092-1 (DIN 2501 / DIN 2512N): PN 10 **Carbon steel:** *order code for "Process connection", option* **D21** **Stainless steel:** *order code for "Process connection", option* **D23**							
DN **[mm]**	**A** **[mm]**	**B** **[mm]**	**C** **[mm]**	**D** **[mm]**	**E** **[mm]**	**F** **[mm]**	**L** **[mm]**
25	115	85	4 x Ø13.5	16.5	49	1)	2)
32	140	100	4 x Ø17.5	17	65		
40	150	110	4 x Ø17.5	16.5	71		
50	165	125	4 x Ø17.5	18.5	88		
65	185	145	4 x Ø17.5	20	103		
80	200	160	8 x Ø17.5	23.5	120		
100	220	180	8 x Ø17.5	24.5	148		
125	250	210	8 x Ø17.5	24	177		
150	285	240	8 x Ø21.5	25	209		
200	340	295	8 x Ø21.5	27.5	264		
250	405	350	12 x Ø21.5	30.5	317		
300	445	400	12 x Ø21.5	34.5	367		
Surface roughness (flange): Ra 6.3 to 12.5 µm							

1) Depends on the liner→ 🖹 81
2) Total length is independent of the process connections. Length according to DVGW (German Technical and Scientific Association for Gas and Water) → 🖹 50 (compact version) → 🖹 53 (remote version)

Accessories

Ground disks for flange connections

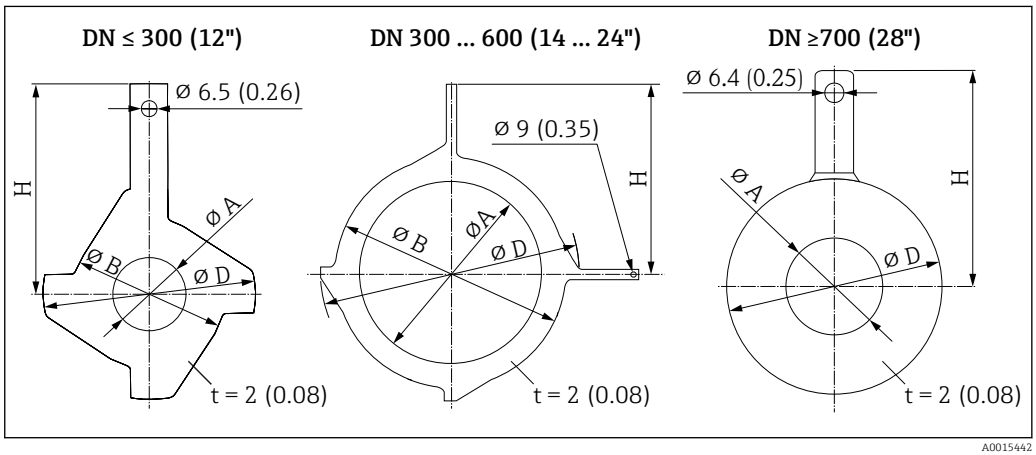

DN		**Pressure rating**	**A**		**B**		**D**		**H**	
[mm]	**[inch]**		**[mm]**	**[inch]**	**[mm]**	**[inch]**	**[mm]**	**[inch]**	**[mm]**	**[inch]**
25	1"	1)	26	1.02	62	2.44	77.5	3.05	87.5	3.44
32	1 ¼"	1)	35	1.38	80	3.15	87.5	3.44	94.5	3.72
40	1 ½"	1)	41	1.61	82	3.23	101	3.98	103	4.06
50	2"	1)	52	2.05	101	3.98	115.5	4.55	108	4.25
65	2 ½"	1)	68	2.68	121	4.76	131.5	5.18	118	4.65
80	3"	1)	80	3.15	131	5.16	154.5	6.08	135	5.31

DN		Pressure rating	A		B		D		H	
[mm]	[inch]		[mm]	[inch]	[mm]	[inch]	[mm]	[inch]	[mm]	[inch]
100	4"	1)	104	4.09	156	6.14	186.5	7.34	153	6.02
125	5"	1)	130	5.12	187	7.36	206.5	8.13	160	6.30
150	6"	1)	158	6.22	217	8.54	256	10.08	184	7.24
200	8"	1)	206	8.11	267	10.51	288	11.34	205	8.07
250	10"	1)	260	10.24	328	12.91	359	14.13	240	9.45
300	12"	PN 10 PN 16 Cl. 150	312	12.28	375	14.76	413	16.26	273	10.75
		PN 25 JIS 10K JIS 20K	310	12.20	375	14.76	404	15.91	268	10.55
350	14"	PN 6	343	13.50	420	16.54	479	18.86	365	14.37
		PN 10								
		PN 16								
375	15"	PN 16	393	15.5	461	18.2	523	20.6	395	15.6
400	16"	PN 6	393	15.5	470	18.50	542	21.34	395	15.55
		PN 10								
		PN 16								
450	18"	PN 6	439	17.28	525	20.67	583	22.95	417	16.42
		PN 10								
		PN 16								
500	20"	PN 6	493	19.41	575	22.64	650	25.59	460	18.11
		PN 10								
		PN 16								
600	24"	PN 6	593	23.35	676	26.61	766	30.16	522	20.55
		PN 10								
		PN 16								
700	28"	PN 6	697	27.44	–	–	786	30.94	460	18.11
		PN10	693	27.28	–	–	813	32.01	480	18.9
		PN16	687	27.05	–	–	807	31.77	490	19.29
		Cl, D	693	27.28	–	–	832	32.76	494	19.45
750	30"	Cl, D	743	29.25	–	–	833	32.8	523	20.59
800	32"	PN 6	799	31.46	–	–	893	35.16	520	20.47
		PN 10	795	31.3	–	–	920	36.22	540	21.26
		PN 16	789	31.06	–	–	914	35.98	550	21.65
		Cl, D	795	31.3	–	–	940	37.01	561	22.09
900	36"	PN 6	897	35.31	–	–	993	39.09	570	22.44
		PN 10	893	35.16	–	–	1020	40.16	590	23.23
		PN 16	886	34.88	–	–	1014	39.92	595	23.43
		Cl, D	893	35.16	–	–	1048	41.26	615	24.21
1000	40"	PN 6	999	39.33	–	–	1093	43.03	620	24.41
		PN 10	995	39.17	–	–	1127	44.37	650	25.59
		PN 16	988	38.9	–	–	1131	44.53	660	25.98

DN		Pressure rating	A		B		D		H	
[mm]	[inch]		[mm]	[inch]	[mm]	[inch]	[mm]	[inch]	[mm]	[inch]
		Cl, D	995	39.17	–	–	1163	45.79	675	26.57
–	42"	PN 6	1044	41.1	–	–	1220	48.03	704	27.72
1200	48"	PN 6	1203	47.36	–	–	1310	51.57	733	28.86
		PN 10	1196	47.09	–	–	1344	52.91	760	29.92
		PN 16	1196	47.09	–	–	1385	54.53	786	30.94
		Cl, D	1188	46.77	–	–	1345	52.95	775	30.51

1) In the case of DN 25 to 250, ground disks can be used for all the flange standards/pressure ratings which can be supplied in the standard version

Dimensions in US units

Compact version

Order code for "Housing", option A "Compact, aluminum, coated" or option M "Compact, polycarbonate"

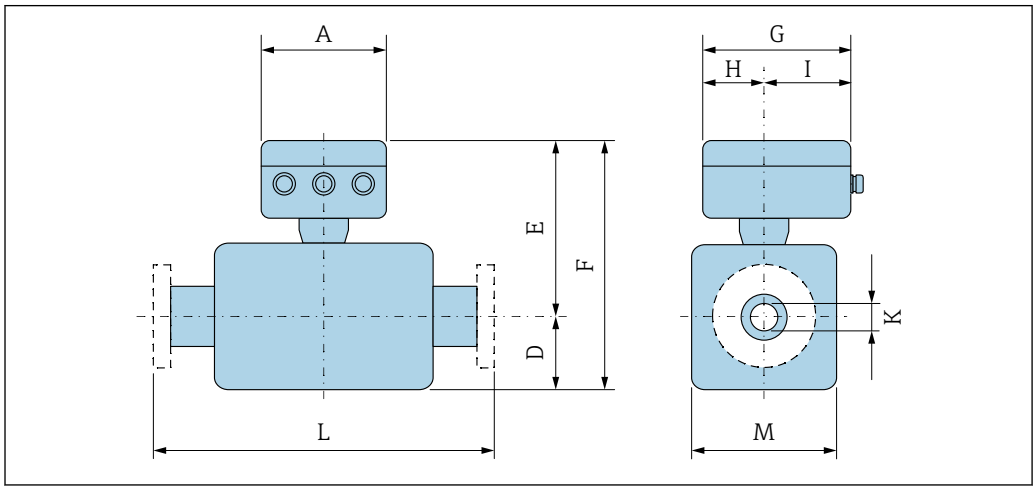

A [in]	G [1] [in]	H [in]	I [1] [in]
6.57	7.60	3.54	4.06

1) Depending on the cable gland used: values up to + 1.18 in

DN 25 to 300 (1 to 12"): sensor with aluminum half-shell housing

DN		Order code for "Design"								K	L
		Options A, D, E				Option C					
		D [1]	E [1] [2]	F [1] [2]	M [1]	D [1]	E [1] [2]	F [1] [2]	M [1]		
[mm]	[in]	[in]	[in]	[in]	[in]	[in]	[in]	[in]	[in]	[in]	[in]
25	1	3.31	7.91	11.22	4.72	–	–	–	–	[3]	7.87
32	–	3.31	7.91	11.22	4.72	–	–	–	–	[3]	7.87
40	1 ½	3.31	7.91	11.22	4.72	–	–	–	–	[3]	7.87
50	2	3.31	7.91	11.22	4.72	3.31	7.91	11.22	4.72	[3]	7.87
65	–	4.29	8.9	13.19	7.09	3.31	7.91	11.22	4.72	[3]	7.87
80	3	4.29	8.9	13.19	7.09	3.31	7.91	11.22	4.72	[3]	7.87
100	4	4.29	8.9	13.19	7.09	4.29	8.9	13.19	7.09	[3]	9.84
125	–	5.91	10.47	16.38	10.24	4.29	8.9	13.19	7.09	[3]	9.84
150	6	5.91	10.47	16.38	10.24	4.29	8.9	13.19	7.09	[3]	11.81
200	8	7.09	11.46	18.54	12.76	5.91	10.47	16.38	10.24	[3]	13.78
250	10	8.07	12.44	20.51	15.75	5.91	10.47	16.38	10.24	[3]	17.72
300	12	9.06	13.43	22.48	18.11	7.09	11.46	18.54	12.76	[3]	19.69

1) The dimensions are reference values. They may be different than indicated, depending on the pressure rating, design and order code.
2) With order code for "Sensor option", option CG "Sensor extended neck for insulation": values + 4.33 in
3) Depends on the liner→ 🖹 81

DN 350 to 900 (14 to 36")

DN		Order code for "Design"								K	L	
		Options A, E, F				Option B, G						
		D [1]	E [1) 2)]	F [1) 2)]	M [1)]	D [1)]	E [1) 2)]	F [1) 2)]	M [1)]			
[mm]	[in]	[mm]	[mm]	[mm]	[mm]	[mm]	[mm]	[mm]	[mm]	[mm]	[mm]	
350	14	9.65	16.2	25.91	19.29	–	–	–	–	[3)]	21.65	
375	15	10.67	17.24	27.91	21.34	–	–	–	–	[3)]	21.65	
400	16	10.67	17.24	27.91	21.34	–	–	–	–	[3)]	23.62	
450	18	11.77	18.35	30.12	23.54	13.11	17.72	30.83	26.22	[3)]	23.62 [4)]	25.59 [5)]
500	20	12.76	19.33	32.09	25.51	14.13	18.7	32.83	28.23	[3)]	23.62 [4)]	25.59 [5)]
600	24	14.37	21.34	35.71	28.74	16.18	20.79	36.97	32.32	[3)]	23.62 [4)]	30.71 [5)]
700	28	16.93	23.74	40.67	33.86	20.16	24.8	44.96	40.31	[3)]	27.56 [4)]	35.83 [5)]
750	30	18.39	25.24	43.62	36.77	20.16	24.8	44.96	40.31	[3)]	27.56 [4)]	35.83 [5)]
800	32	19.13	25.98	45.12	38.27	21.02	25.59	46.61	41.93	[3)]	31.5 [4)]	40.94 [5)]
900	36	21.1	27.95	49.06	42.2	24.02	28.62	52.64	47.95	[3)]	35.43 [4)]	46.06 [5)]

1) The dimensions are reference values. They may be different than indicated, depending on the pressure rating, design and order code.
2) With order code for "Sensor option", option CG "Sensor extended neck for insulation": values + 110 mm
3) Depends on the liner→ 🖹 81
4) Order code for "Design", option F "Fixed flange, short installation length"
5) Order code for "Design", option G "Fixed flange, long installation length"

DN 1000 to 2400 (40 to 90")

DN		D [1)]	E [1) 2)]	F [1) 2)]	K	L		M [1)]
[mm]	[in]	[in]	[in]	[in]	[in]	[in]		[in]
1000	40	27.01	31.61	58.62	[3)]	39.37 [4)]	51.18 [5)]	53.94
–	42	28.03	32.6	60.63	[3)]	41.34 [4)]	53.74 [5)]	55.91
1200	48	31.93	36.57	68.5	[3)]	47.24 [4)]	61.42 [5)]	63.78
–	54	35.91	40.51	76.42	[3)]	53.15 [4)]	69.09 [5)]	71.65
1400	–	38.86	43.46	82.32	[3)]	55.12 [4)]	71.65 [5)]	77.56
–	60	39.8	44.41	84.21	[3)]	59.06 [4)]	76.77 [5)]	79.45
1600	–	41.57	46.18	87.76	[3)]	62.99 [4)]	81.89 [5)]	82.99
–	66	43.03	47.6	90.63	[3)]	64.96 [4)]	84.45 [5)]	85.83
1800	72	46.77	51.34	98.11	[3)]	70.87 [4)]	92.13 [5)]	93.31
–	78	48.74	53.31	102.05	[3)]	78.74 [4)]	102.36 [5)]	97.24
2000	–	48.74	53.31	102.05	[3)]	78.74 [4)]	102.36 [5)]	97.24
–	84	48.74	53.31	102.05	[3)]	86.61 [4)]		97.24
2200	–	48.31	52.99	101.3	[3)]	86.61 [4)]		96.61
–	90	48.31	52.99	101.3	[3)]	94.49 [4)]		96.61
2400	–	52.44	57.13	109.57	[3)]	94.49 [4)]		104.88

1) The dimensions are reference values. They may be different than indicated, depending on the pressure rating, design and order code.
2) With order code for "Sensor option", option CG "Sensor extended neck for insulation": values + 4.33 in
3) Depends on the liner→ 🖹 81
4) Order code for "Design", option F "Fixed flange, short installation length"
5) Order code for "Design", option G "Fixed flange, long installation length"

Remote version

Transmitter remote version

Order code for "Housing", option N "Remote, polycarbonate" or option P "Remote, aluminum coated"

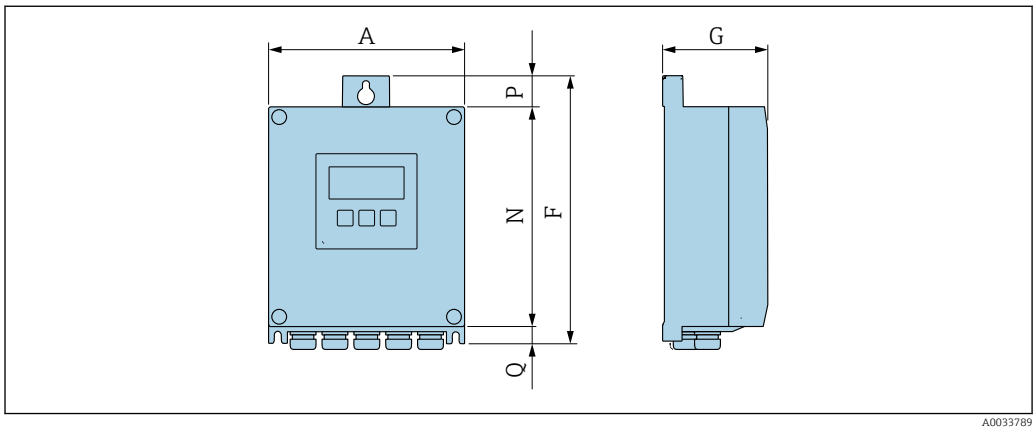

A [in]	F [in]	G [in]	N [in]	P [in]	Q [in]
6.57	9.13	3.15	7.36	0.94	0.83

Sensor connection housing

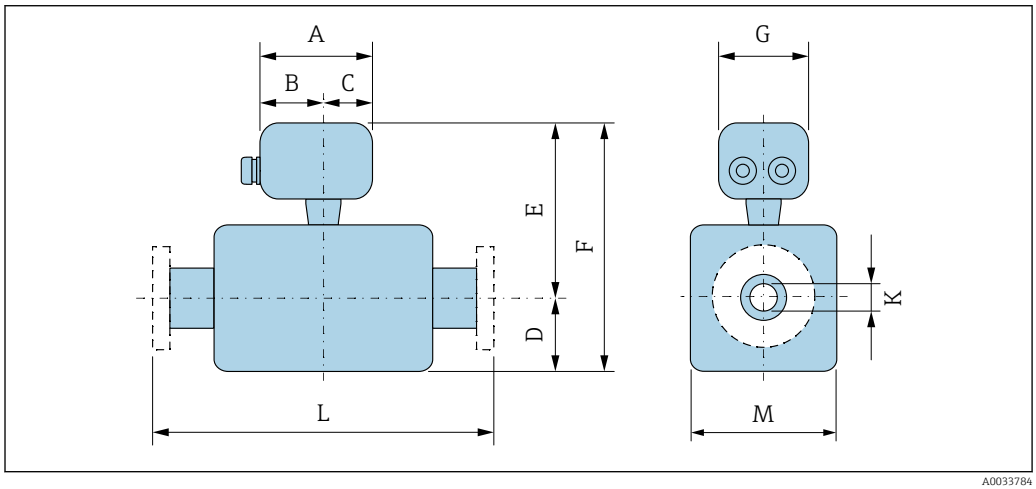

Order code for "Sensor connection housing", option A "Aluminum, coated"

A [in]	B [in]	C [in]	G [in]
5.83	3.7	2.13	5.35

Order code for "Sensor connection housing", option D "Polycarbonate"

A [in]	B [in]	C [in]	G [in]
4.45	2.44	2.01	4.41

DN 25 to 300 (1 to 12"): sensor with aluminum half-shell housing

DN		Order code for "Design"								K	L
		Options A, D, E				Option C					
		D [1]	E [1]	F [1]	M [1]	D [1]	E [1]	F [1]	M [1]		
[mm]	[in]	[in]	[in]	[in]	[in]	[in]	[in]	[in]	[in]	[in]	[in]
25	1	3.31	7.87	11.18	4.72	–	–	–	–	[2]	7.87
32	–	3.31	7.87	11.18	4.72	–	–	–	–	[2]	7.87
40	1 ½	3.31	7.87	11.18	4.72	–	–	–	–	[2]	7.87
50	2	3.31	7.87	11.18	4.72	3.31	7.87	11.18	4.72	[2]	7.87
65	–	4.29	8.86	13.15	7.09	3.31	7.87	11.18	4.72	[2]	7.87
80	3	4.29	8.86	13.15	7.09	3.31	7.87	11.18	4.72	[2]	7.87
100	4	4.29	8.86	13.15	7.09	4.29	8.86	13.15	7.09	[2]	9.84
125	–	5.91	10.43	16.34	10.24	4.29	8.86	13.15	7.09	[2]	9.84
150	6	5.91	10.43	16.34	10.24	4.29	8.86	13.15	7.09	[2]	11.81
200	8	7.09	11.42	18.5	12.76	5.91	10.43	16.34	10.24	[2]	13.78
250	10	8.07	12.4	20.47	15.75	5.91	10.43	16.34	10.24	[2]	17.72
300	12	9.06	13.39	22.44	18.11	7.09	11.42	18.5	12.76	[2]	19.69

1) The dimensions are reference values. They may be different than indicated, depending on the pressure rating, design and order code.
2) Depends on the liner→ 🖹 81

DN 25 to 300 (1 to 12"): sensor with fully welded carbon steel housing

DN		Order code for "Design"								K	L
		Options A, E				Option C					
		D [1]	E [1]	F [1]	M [1]	D [1]	E [1]	F [1]	M [1]		
[mm]	[in]	[mm]	[in]	[in]	[in]	[in]	[in]	[in]	[in]	[in]	[in]
25	1	2.76	7.87	10.63	5.51	–	–	–	–	[2]	7.87
32	–	2.76	7.87	10.63	5.51	–	–	–	–	[2]	7.87
40	1 ½	2.76	7.87	10.63	5.51	–	–	–	–	[2]	7.87
50	2	2.76	7.87	10.63	5.51	2.76	7.87	10.63	5.51	[2]	7.87
65	–	3.23	8.86	12.09	6.5	2.76	7.87	10.63	5.51	[2]	7.87
80	3	3.43	8.86	12.28	6.89	2.76	7.87	10.63	5.51	[2]	7.87
100	4	3.94	8.86	12.8	7.87	3.23	8.86	12.09	6.5	[2]	9.84
125	–	4.45	10.43	14.88	8.9	3.43	8.86	12.28	6.89	[2]	9.84
150	6	5.28	10.43	15.71	10.59	3.94	8.86	12.8	7.87	[2]	11.81
200	8	6.3	11.42	17.72	12.6	4.45	10.43	14.88	8.9	[2]	13.78
250	10	7.6	12.4	20	15.24	5.28	10.43	15.71	10.59	[2]	17.72
300	12	8.58	13.39	21.97	17.2	6.3	11.42	17.72	12.6	[2]	19.69

1) The dimensions are reference values. They may be different than indicated, depending on the pressure rating, design and order code.
2) Depends on the liner→ 🖹 81

DN 350 to 900 (14 to 36")

DN		Order code for "Design"								K	L	
		Options A, E, F				Option B, G						
		D [1]	E [1]	F [1]	M [1]	D [1]	E [1]	F [1]	M [1]			
[mm]	[in]	[in]	[in]	[in]	[in]	[in]	[in]	[in]	[in]	[in]	[in]	
350	14	9.65	13.78	23.43	19.29	–	–	–	–	[2]	21.65	
375	15	10.67	14.76	25.43	21.34	–	–	–	–	[2]	21.65	
400	16	10.67	14.76	25.43	21.34	–	–	–	–	[2]	23.62	
450	18	11.77	15.87	27.64	23.54	13.11	17.6	30.71	26.22	[2]	23.62 [3]	25.59 [4]
500	20	12.76	16.85	29.61	25.51	14.13	18.58	32.72	28.23	[2]	23.62 [3]	25.59 [4]
600	24	14.37	18.86	33.23	28.74	16.18	20.67	36.85	32.32	[2]	23.62 [3]	30.71 [4]
700	28	16.93	21.26	38.19	33.86	20.16	24.69	44.84	40.31	[2]	27.56 [3]	35.83 [4]
750	30	18.39	22.76	41.14	36.77	20.16	24.69	44.84	40.31	[2]	27.56 [3]	35.83 [4]
800	32	19.13	23.5	42.64	38.27	21.02	25.47	46.5	41.93	[2]	31.5 [3]	40.94 [4]
900	36	21.1	25.47	46.57	42.2	24.02	28.5	52.52	47.95	[2]	35.43 [3]	46.06 [4]

1) The dimensions are reference values. They may be different than indicated, depending on the pressure rating, design and order code.
2) Depends on the liner→ 🖹 81
3) Order code for "Design", option F "Fixed flange, short installation length"
4) Order code for "Design", option G "Fixed flange, long installation length"

1000 ... 2400 (40 ... 90")

DN		D [1]	E [1]	F [1]	K	L		M [1]
[mm]	[in]	[in]	[in]	[in]	[in]	[in]		[in]
1000	40	27.01	31.5	58.5	[2]	39.37 [3]	51.18 [4]	53.94
–	42	28.03	32.48	60.51	[2]	41.34 [3]	53.74 [4]	55.91
1200	48	31.93	36.46	68.39	[2]	47.24 [3]	61.42 [4]	63.78
–	54	35.91	40.39	76.3	[2]	53.15 [3]	69.09 [4]	71.65
1400	–	38.86	43.35	82.2	[2]	55.12 [3]	71.65 [4]	77.56
–	60	39.8	44.29	84.09	[2]	59.06 [3]	76.77 [4]	79.45
1600	–	41.57	46.06	87.64	[2]	62.99 [3]	81.89 [4]	82.99
–	66	43.03	47.48	90.51	[2]	64.96 [3]	84.45 [4]	85.83
1800	72	46.77	51.22	97.99	[2]	70.87 [3]	92.13 [4]	93.31
–	78	48.74	53.19	101.93	[2]	78.74 [3]	102.36 [4]	97.24
2000	–	48.74	53.19	101.93	[2]	78.74 [3]	102.36 [4]	97.24
–	84	48.74	53.19	101.93	[2]	86.61 [3]		97.24
2200	–	48.31	52.87	101.18	[2]	86.61 [3]		96.61
–	90	48.31	52.87	101.18	[2]	94.49 [3]		96.61
2400	–	52.44	57.01	109.45	[2]	94.49 [3]		104.88

1) The dimensions are reference values. They may be different than indicated, depending on the pressure rating, design and order code.
2) Internal diameter depends on liner, see measuring tube specification → 🖹 81
3) Order code for "Design", option F "Fixed flange, short installation length"
4) Order code for "Design", option G "Fixed flange, long installation length"

Flange connections

Fixed flange

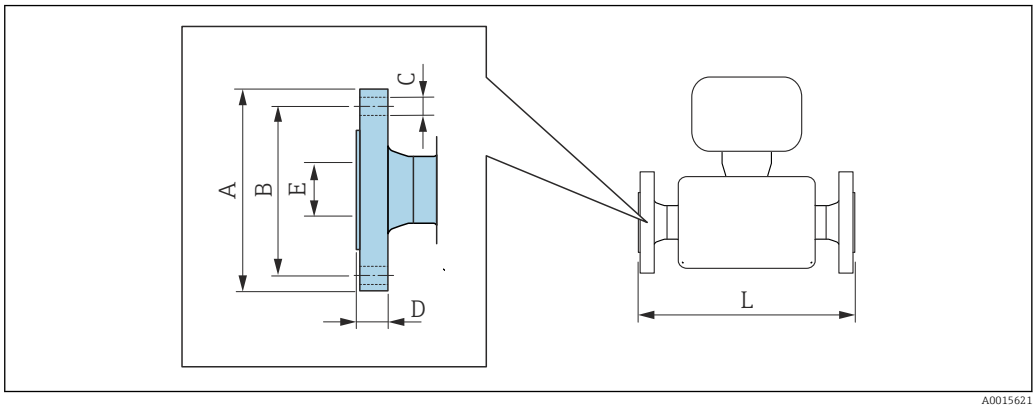

A0015621

Flange according to ASME B16.5, Class 150 **Carbon steel:** *order code for "Process connection", option* **A1K** **Stainless steel:** *order code for "Process connection", option* **A1S**							
DN		**A**	**B**	**C**	**D**	**E**	**L**
[mm]	**[in]**	**[in]**	**[in]**	**[in]**	**[in]**	**[in]**	**[in]**
25	1	4.25	3.12	4 × Ø0.63	0.5	1)	2)
40	1 ½	5	3.88	4 × Ø0.63	0.63		
50	2	6	4.75	4 × Ø0.75	0.69		
80	3	7.5	6	4 × Ø0.75	0.88		
100	4	9	7.5	8 × Ø0.75	0.88		
150	6	11	9.5	8 × Ø0.88	0.94		
200	8	13.5	11.75	8 × Ø0.88	1.06		
250	10	16	14.25	12 × Ø1	1.17		
300	12	19	17	12 × Ø1	1.19		
350	14	21.06	18.75	12 × Ø1.13	1.39		
400	16	23.43	21.25	16 × Ø1.13	1.46		
450	18	25	22.75	16 × Ø1.25	1.58		
500	20	27.56	25	20 × Ø1.25	1.7		
600	24	32.09	29.5	20 × Ø1.37	1.89		
Surface roughness (flange): Ra 250 to 492 µm							

1) Depends on the liner→ 🖹 81
2) Total length is independent of the process connections. Length according to DVGW (German Technical and Scientific Association for Gas and Water) → 🖹 68 (compact version) → 🖹 70 (remote version)

Flange according to ASME B16.5, Class 300 **Carbon steel:** *order code for "Process connection", option* **A2K** **Stainless steel:** *order code for "Process connection", option* **A2S**							
DN		**A**	**B**	**C**	**D**	**E**	**L**
[in]	**[mm]**	**[in]**	**[in]**	**[in]**	**[in]**	**[in]**	**[in]**
1	25	4.88	3.5	4 × Ø0.75	0.63	1)	2)
1 ½	40	6.12	4.5	4 × Ø0.88	0.75		
2	50	6.5	5	8 × Ø0.75	0.82		

Flange according to ASME B16.5, Class 300
Carbon steel: *order code for "Process connection", option* **A2K**
Stainless steel: *order code for "Process connection", option* **A2S**

DN		A	B	C	D	E	L
[in]	[mm]	[in]	[in]	[in]	[in]	[in]	[in]
3	80	8.25	6.62	8 × Ø0.88	1.06		
4	100	10	7.88	8 × Ø0.88	1.19		
6	150	12.5	10.62	12 × Ø0.88	1.38		
Surface roughness (flange): Ra 250 to 492 µm							

1) Depends on the liner→ 🖹 81
2) Total length is independent of the process connections. Length according to DVGW (German Technical and Scientific Association for Gas and Water) → 🖹 68 (compact version) → 🖹 70 (remote version)

Flange according to AWWA, Cl. D
Order code for "Process connection", option **W1K**

DN		A	B	C	D	E	L
[in]	[mm]	[in]	[in]	[in]	[in]	[in]	[in]
28	700	36.5	34	28 × Ø1.38	1.31	1)	2)
30	–	38.74	36	28 × Ø1.38	1.38		
32	800	41.73	38.5	28 × Ø1.65	1.5		
36	900	45.98	42.75	32 × Ø1.65	1.63		
40	1000	50.75	47.25	36 × Ø1.65	1.63		
42	–	52.99	49.5	36 × Ø1.65	1.75		
48	1200	59.49	56	44 × Ø1.65	1.88		
54	–	66.26	62.75	44 × Ø1.89	2.13		
60	–	73.03	69.25	52 × Ø1.89	2.25		
66	–	80	76	52 × Ø48	2.5		
72	1800	86.5	82.5	60 × Ø48	2.63		
78	–	92.99	89	64 × Ø54	2.75		
84	–	99.8	95.5	64 × Ø54	2.88		
90	–	106.5	107	68 × Ø60	3		
Surface roughness (flange): Ra 250 to 492 µin							

1) Depends on the liner→ 🖹 81
2) Total length is independent of the process connections. Length according to DVGW (German Technical and Scientific Association for Gas and Water) → 🖹 68 (compact version) → 🖹 70 (remote version)

Lap joint flange

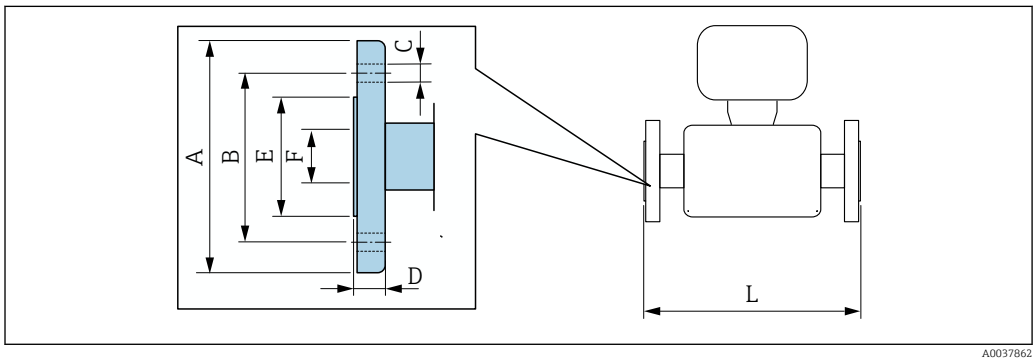

A0037862

Lap joint flange according to ASME B16.5, Class 150
Carbon steel: *order code for "Process connection", option* **A12**
Stainless steel: *order code for "Process connection", option* **A14**

DN		A	B	C	D	E	F	L
[mm]	[in]	[in]	[in]	[in]	[in]	[in]	[in]	[in]
25	1	4.33	3.15	4 × Ø0.63	0.55	1.93	1)	2)
40	1 ½	4.92	3.86	4 × Ø0.63	0.69	2.8		
50	2	5.91	4.76	4 × Ø0.75	0.75	3.46		
80	3	7.48	5.98	4 × Ø0.75	0.94	4.72		
100	4	9.06	7.48	8 × Ø0.75	0.94	5.83		
150	6	11.02	9.49	8 × Ø0.91	0.98	8.23		
200	8	13.58	11.73	8 × Ø0.91	1.14	10.39		
250	10	15.94	14.25	12 × Ø0.98	1.18	12.48		
300	12	19.09	17.01	12 × Ø0.98	1.26	14.88		
Surface roughness (flange): Ra 248 to 492 µin								

1) Depends on the liner→ 🖹 81
2) Total length is independent of the process connections. Length according to DVGW (German Technical and Scientific Association for Gas and Water) → 🖹 68 (compact version) → 🖹 70 (remote version)

Accessories

Ground disks for flange connections

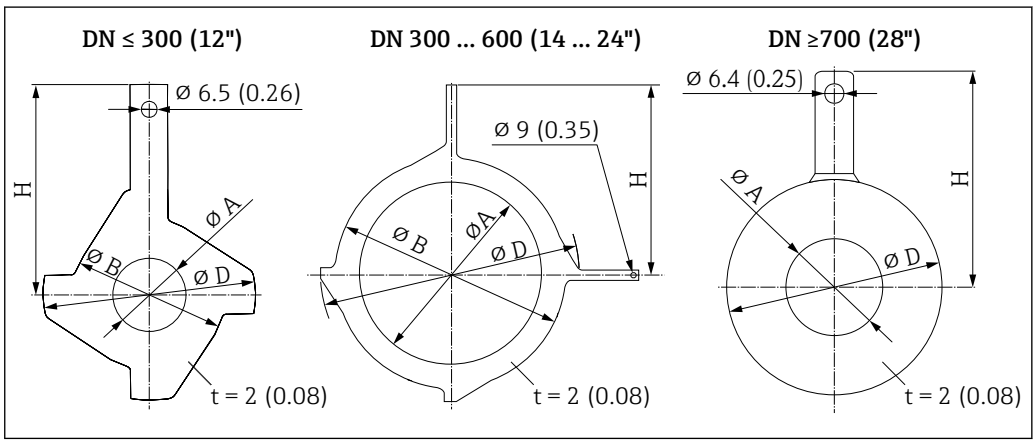

DN		Pressure rating	A		B		D		H	
[mm]	[inch]		[mm]	[inch]	[mm]	[inch]	[mm]	[inch]	[mm]	[inch]
25	1"	1)	26	1.02	62	2.44	77.5	3.05	87.5	3.44
32	1 ¼"	1)	35	1.38	80	3.15	87.5	3.44	94.5	3.72
40	1 ½"	1)	41	1.61	82	3.23	101	3.98	103	4.06
50	2"	1)	52	2.05	101	3.98	115.5	4.55	108	4.25
65	2 ½"	1)	68	2.68	121	4.76	131.5	5.18	118	4.65
80	3"	1)	80	3.15	131	5.16	154.5	6.08	135	5.31
100	4"	1)	104	4.09	156	6.14	186.5	7.34	153	6.02
125	5"	1)	130	5.12	187	7.36	206.5	8.13	160	6.30

DN		Pressure rating	A		B		D		H	
[mm]	[inch]		[mm]	[inch]	[mm]	[inch]	[mm]	[inch]	[mm]	[inch]
150	6"	1)	158	6.22	217	8.54	256	10.08	184	7.24
200	8"	1)	206	8.11	267	10.51	288	11.34	205	8.07
250	10"	1)	260	10.24	328	12.91	359	14.13	240	9.45
300	12"	PN 10 PN 16 Cl. 150	312	12.28	375	14.76	413	16.26	273	10.75
		PN 25 JIS 10K JIS 20K	310	12.20	375	14.76	404	15.91	268	10.55
350	14"	PN 6	343	13.50	420	16.54	479	18.86	365	14.37
		PN 10								
		PN 16								
375	15"	PN 16	393	15.5	461	18.2	523	20.6	395	15.6
400	16"	PN 6	393	15.5	470	18.50	542	21.34	395	15.55
		PN 10								
		PN 16								
450	18"	PN 6	439	17.28	525	20.67	583	22.95	417	16.42
		PN 10								
		PN 16								
500	20"	PN 6	493	19.41	575	22.64	650	25.59	460	18.11
		PN 10								
		PN 16								
600	24"	PN 6	593	23.35	676	26.61	766	30.16	522	20.55
		PN 10								
		PN 16								
700	28"	PN 6	697	27.44	–	–	786	30.94	460	18.11
		PN10	693	27.28	–	–	813	32.01	480	18.9
		PN16	687	27.05	–	–	807	31.77	490	19.29
		Cl, D	693	27.28	–	–	832	32.76	494	19.45
750	30"	Cl, D	743	29.25	–	–	833	32.8	523	20.59
800	32"	PN 6	799	31.46	–	–	893	35.16	520	20.47
		PN 10	795	31.3	–	–	920	36.22	540	21.26
		PN 16	789	31.06	–	–	914	35.98	550	21.65
		Cl, D	795	31.3	–	–	940	37.01	561	22.09
900	36"	PN 6	897	35.31	–	–	993	39.09	570	22.44
		PN 10	893	35.16	–	–	1020	40.16	590	23.23
		PN 16	886	34.88	–	–	1014	39.92	595	23.43
		Cl, D	893	35.16	–	–	1048	41.26	615	24.21
1000	40"	PN 6	999	39.33	–	–	1093	43.03	620	24.41
		PN 10	995	39.17	–	–	1127	44.37	650	25.59
		PN 16	988	38.9	–	–	1131	44.53	660	25.98
		Cl, D	995	39.17	–	–	1163	45.79	675	26.57
–	42"	PN 6	1044	41.1	–	–	1220	48.03	704	27.72

DN		Pressure rating	A		B		D		H	
[mm]	[inch]		[mm]	[inch]	[mm]	[inch]	[mm]	[inch]	[mm]	[inch]
1200	48"	PN 6	1203	47.36	–	–	1310	51.57	733	28.86
		PN 10	1196	47.09	–	–	1344	52.91	760	29.92
		PN 16	1196	47.09	–	–	1385	54.53	786	30.94
		Cl, D	1188	46.77	–	–	1345	52.95	775	30.51

1) In the case of DN 25 to 250, ground disks can be used for all the flange standards/pressure ratings which can be supplied in the standard version

Weight

All values (weight exclusive of packaging material) refer to devices with flanges of the standard pressure rating.
The weight may be lower than indicated depending on the pressure rating and design.

Weight in SI units

Order code for "Design", options A, B, C, D, E DN 25 to 400, DN 1" to 16"				
Nominal diameter		Reference values		
		EN (DIN), AS, JIS		ASME (Class 150)
[mm]	[in]	Pressure rating	[kg]	[kg]
25	1	PN 40	10	5
32	–	PN 40	11	–
40	1 ½	PN 40	12	7
50	2	PN 40	13	9
65	–	PN 16	13	–
80	3	PN 16	15	14
100	4	PN 16	18	19
125	–	PN 16	25	–
150	6	PN 16	31	33
200	8	PN 10	52	52
250	10	PN 10	81	90
300	12	PN 10	95	129
350	14	PN 6	106	172
375	15	PN 6	121	–
400	16	PN 6	121	203

Order code for "Design", options A, F ≥ DN 450 (18")				
Nominal diameter		Reference values		
		EN (DIN) (PN16)	AS (PN 16)	ASME (Class 150), AWWA (Class D)
[mm]	[in]	[kg]	[kg]	[kg]
450	18	142	138	191
500	20	182	186	228
600	24	227	266	302
700	28	291	369	266
–	30	–	447	318
800	32	353	524	383
900	36	444	704	470
1000	40	566	785	587
–	42	–	–	670
1200	48	843	1229	901
–	54	–	–	1273
1400	–	1204	–	–
–	60	–	–	1594

Order code for "Design", options A, F ≥ DN 450 (18")				
Nominal diameter		Reference values		
		EN (DIN) (PN16)	AS (PN 16)	ASME (Class 150), AWWA (Class D)
[mm]	[in]	[kg]	[kg]	[kg]
1600	–	1845	–	–
–	66	–	–	2131
1800	72	2357	–	2568
–	78	2929	–	3113
2000	–	2929	–	3113
–	84	–	–	3755
2200	–	3422	–	–
–	90	–	–	4797
2400	–	4094	–	–

Order code for "Design", options B, G ≥ DN 450 (18")			
Nominal diameter		Reference values	
		EN (DIN) (PN 6)	ASME (Class 150), AWWA (Class D)
[mm]	[in]	[kg]	[kg]
450	18	161	255
500	20	156	285
600	24	208	405
700	28	304	400
–	30	–	460
800	32	357	550
900	36	485	800
1000	40	589	900
–	42	–	1100
1200	48	850	1400
–	54	850	2200
1400	–	1300	–
–	60	–	2700
1600	–	1845	–
–	66	–	3700
1800	72	2357	4100
–	78	2929	4600
2000	–	2929	–

Weight in US units

Order code for "Design", options A, B, C, D, E DN 25 to 400, DN 1" to 16"		
Nominal diameter		Reference values ASME (Class 150)
[mm]	[in]	[lb]
25	1	11
32	–	–
40	1 ½	15
50	2	20
65	–	–
80	3	31
100	4	42
125	–	–
150	6	73
200	8	115
250	10	198
300	12	284
350	14	379
375	15	–
400	16	448

Order code for "Design", options A, F ≥ DN 450 (18")		
Nominal diameter		Reference values ASME (Class 150), AWWA (Class D)
[mm]	[in]	[lb]
450	18	421
500	20	503
600	24	666
700	28	587
–	30	701
800	32	845
900	36	1036
1000	40	1294
–	42	1477
1200	48	1987
–	54	2807
1400	–	–
–	60	3515
1600	–	–
–	66	4699
1800	72	5662
–	78	6864
2000	–	6864

Order code for "Design", options A, F ≥ DN 450 (18")		
Nominal diameter		Reference values ASME (Class 150), AWWA (Class D)
[mm]	[in]	[lb]
–	84	8280
2200	–	–
–	90	10577
2400	–	–

Order code for "Design", options B, G ≥ DN 450 (18")		
Nominal diameter		Reference values ASME (Class 150), AWWA (Class D)
[mm]	[in]	[lb]
450	18	562
500	20	628
600	24	893
700	28	882
–	30	1014
800	32	1213
900	36	1764
1000	40	1984
–	42	2426
1200	48	3087
–	54	4851
1400	–	–
–	60	5954
1600	–	–
–	66	8158
1800	72	9040
–	78	10143
2000	–	–

Measuring tube specification

Nominal diameter		Pressure rating				Measuring tube internal diameter					
		EN (DIN)	ASME AWWA	AS 2129 AS 4087	JIS	Hard rubber		Polyurethane		PTFE	
[mm]	[in]					[mm]	[in]	[mm]	[in]	[mm]	[in]
25	1	PN 40	Class 150	–	20K	–	–	24	0.94	25	0.98
32	–	PN 40	–	–	20K	–	–	32	1.26	34	1.34
40	1 ½	PN 40	Class 150	–	20K	–	–	38	1.50	40	1.57
50	2	PN 40	Class 150	Table E, PN 16	10K	50	1.97	50	1.97	52	2.05
50 [1)]	2	PN 40	Class 150	Table E, PN 16	10K	32	1.26	–	–	–	–
65	–	PN 16	–	–	10K	66	2.60	66	2.60	68	2.68

Nominal diameter		Pressure rating				Measuring tube internal diameter					
		EN (DIN)	ASME AWWA	AS 2129 AS 4087	JIS	Hard rubber		Polyurethane		PTFE	
[mm]	[in]					[mm]	[in]	[mm]	[in]	[mm]	[in]
65 [1]	–	PN 16	–	–	10K	38	1.50	–	–	–	–
80	3	PN 16	Class 150	Table E, PN 16	10K	79	3.11	79	3.11	80	3.15
80 [1]	3	PN 16	Class 150	Table E, PN 16	10K	50	1.97	–	–	–	–
100	4	PN 16	Class 150	Table E, PN 16	10K	102	4.02	102	4.02	104	4.09
100 [1]	4	PN 16	Class 150	Table E, PN 16	10K	66	2.60	–	–	–	–
125	–	PN 16	–	–	10K	127	5.00	127	5.00	130	5.12
125 [1]	–	PN 16	–	–	10K	79	3.11	–	–	–	–
150	6	PN 16	Class 150	Table E, PN 16	10K	156	6.14	156	6.14	156	6.14
150 [1]	6	PN 16	Class 150	Table E, PN 16	10K	102	4.02	–	–	–	–
200	8	PN 10	Class 150	Table E, PN 16	10K	204	8.03	204	8.03	202	7.95
200 [1]	8	PN 16	Class 150	Table E, PN 16	10K	127	5.00	–	–	–	–
250	10	PN 10	Class 150	Table E, PN 16	10K	258	10.2	258	10.2	256	10.08
250 [1]	10	PN 16	Class 150	Table E, PN 16	10K	156	6.14	–	–	–	–
300	12	PN 10	Class 150	Table E, PN 16	10K	309	12.2	309	12.2	306	12.05
300 [1]	12	PN 16	Class 150	Table E, PN 16	10K	204	8.03	–	–	–	–
350	14	PN 6	Class 150	Table E, PN 16	10K	337	13.3	342	13.5	–	–
375	15	–	–	PN 16	10K	389	15.3	–	–	–	–
400	16	PN 6	Class 150	Table E, PN 16	10K	387	15.2	392	15.4	–	–
450	18	PN 6	Class 150	–	10K	436	17.1	437	17.2	–	–
500	20	PN 6	Class 150	Table E, PN 16	10K	487	19.1	492	19.4	–	–
600	24	PN 6	Class 150	Table E, PN 16	10K	589	23.0	594	23.4	–	–
700	28	PN 6	Class D	Table E, PN 16	10K	688	27.1	692	27.2	–	–
750	30	–	Class D	Table E, PN 16	10K	737	29.1	742	29.2	–	–
800	32	PN 6	Class D	Table E, PN 16	–	788	31.0	794	31.3	–	–
900	36	PN 6	Class D	Table E, PN 16	–	889	35.0	891	35.1	–	–
1000	40	PN 6	Class D	Table E, PN 16	–	991	39.0	994	39.1	–	–
–	42	–	Class D	–	–	1043	41.1	1043	41.1	–	–
1200	48	PN 6	Class D	Table E, PN 16	–	1191	46.9	1197	47.1	–	–
–	54	–	Class D	–	–	1339	52.7	–	–	–	–
1400	–	PN 6	–	–	–	1402	55.2	–	–	–	–
–	60	–	Class D	–	–	1492	58.7	–	–	–	–
1600	–	PN 6	–	–	–	1600	63.0	–	–	–	–
–	66	–	Class D	–	–	1638	64.5	–	–	–	–
1800	72	PN 6	–	–	–	1786	70.3	–	–	–	–
–	78	–	Class D	–	–	1989	78.3	–	–	–	–
2000	–	PN 6	–	–	–	1989	78.3	–	–	–	–
–	84	–	Class D	–	–	2099	84.0	–	–	–	–
2200	–	PN 6	–	–	–	2194	87.8	–	–	–	–

Nominal diameter		Pressure rating				Measuring tube internal diameter					
		EN (DIN)	ASME AWWA	AS 2129 AS 4087	JIS	Hard rubber		Polyurethane		PTFE	
[mm]	[in]					[mm]	[in]	[mm]	[in]	[mm]	[in]
–	90	–	Class D	–	–	2 246	89.8	–	–	–	–
2400	–	PN 6	–	–	–	2 391	94.1	–	–	–	–

1) Order code for "Design", option C

Materials

Transmitter housing

Compact version

- Order code for "Housing", option **A** "Compact, alu, coated": Aluminum, AlSi10Mg, coated
- Order code for "Housing", option **M**: polycarbonate plastic
- Window material:
  - For order code for "Housing", option **A**: glass
  - For order code for "Housing", option **M**: plastic

Remote version (wall-mount housing)

- Order code for "Housing", option **P** "Remote, alu, coated": Aluminum, AlSi10Mg, coated
- Order code for "Housing", option **N**: polycarbonate plastic
- Window material:
  - For order code for "Housing", option **P**: glass
  - For order code for "Housing", option **N**: plastic

Sensor connection housing

- Order code for "Housing", option **P** "Remote, alu, coated": Aluminum, AlSi10Mg, coated
- Order code for "Housing", option **N**: polycarbonate plastic

Cable entries/cable glands

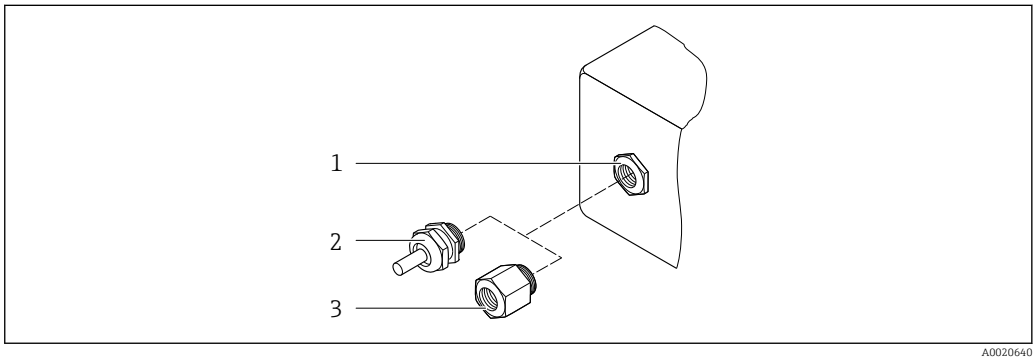

36 Possible cable entries/cable glands

1 Female thread M20 × 1.5
2 Cable gland M20 × 1.5
3 Adapter for cable entry with internal thread G ½" or NPT ½"

Compact and remote versions and sensor connection housing

Cable entry/cable gland	Material
Cable gland M20 × 1.5	Plastic
Remote version: cable gland M20 × 1.5 Option of reinforced connecting cable	▪ Sensor connection housing: Nickel-plated brass ▪ Transmitter wall-mount housing: Plastic
Adapter for cable entry with internal thread G ½" or NPT ½"	Nickel-plated brass

Device plug

Electrical connection	Material
Plug M12x1	▪ Socket: Stainless steel, 1.4404 (316L) ▪ Contact housing: Polyamide ▪ Contacts: Gold-plated brass

Connecting cable for remote version

Electrode and coil current cable
- Standard cable: PVC cable with copper shield
- Reinforced cable: PVC cable with copper shield and additional steel wire braided jacket

Sensor housing

- DN 25 to 300 (1 to 12")
  - Aluminum half-shell housing, aluminum, AlSi10Mg, coated
  - Fully welded carbon steel housing with protective varnish
- DN 350 to 2400 (14 to 90")
  Fully welded carbon steel housing with protective varnish

Measuring tubes

- DN 25 to 600 (1 to 24")
  Stainless steel: 1.4301, 1.4306, 304, 304L
- DN 700 to 2400 (28 to 90")
  Stainless steel: 1.4301, 304

Liner

- DN 25 to 300 (1 to 12"): PTFE
- DN 25 to 1200 (1 to 48"): polyurethane
- DN 50 to 2400 (2 to 90"): hard rubber

Electrodes

- Stainless steel, 1.4435 (316L)
- Alloy C22, 2.4602 (UNS N06022)
- Tantalum

Process connections

For flanges made of carbon steel:
- DN ≤ 300 (12"): with Al/Zn protective coating or protective varnish
- DN ≥ 350 (14"): protective varnish

All carbon steel lap joint flanges are supplied with a hot-dip galvanized finish.

EN 1092-1 (DIN 2501)

Fixed flange
- Carbon steel:
  - DN ≤ 300: S235JRG2, S235JR+N, P245GH, A105, E250C
  - DN 350 to 2400: P245GH, S235JRG2, A105, E250C
- Stainless steel:
  - DN ≤ 300: 1.4404, 1.4571, F316L
  - DN 350 to 600: 1.4571, F316L, 1.4404
  - DN 700 to 1000: 1.4404, F316L

Lap joint flange
- Carbon steel DN ≤ 300: S235JRG2, A105, E250C
- Stainless steel DN ≤ 300: 1.4306,1.4404, 1.4571, F316L

Lap joint flange, stamped plate
- Carbon steel DN ≤ 300: S235JRG2 similar to S235JR+AR or 1.0038
- Stainless steel DN ≤ 300: 1.4301 similar to 304

ASME B16.5

Fixed flange, lap joint flange
- Carbon steel: A105
- Stainless steel: F316L

JIS B2220

- Carbon steel: A105, A350 LF2
- Stainless steel: F316L

AWWA C207

Carbon steel: A105, P265GH, A181 Class 70, E250C, S275JR

AS 2129

Carbon steel: A105, E250C, P235GH, P265GH, S235JRG2

AS 4087

Carbon steel: A105, P265GH, S275JR

Seals

As per DIN EN 1514-1, form IBC

Accessories

Display guard

Stainless steel, 1.4301 (304L)

Ground disks

- Stainless steel, 1.4435 (316L)
- Alloy C22, 2.4602 (UNS N06022)
- Tantalum

Fitted electrodes

Measurement, reference and empty pipe detection electrodes available as standard with:
- 1.4435 (316L)
- Alloy C22, 2.4602 (UNS N06022)
- Tantalum

Process connections

- EN 1092-1 (DIN 2501)
  - DN ≤ 300: fixed flange (PN 10/16/25/40) = Form A, lap joint flange (PN 10/16), lap joint flange, stamped plate (PN 10) = Form A
  - DN ≥ 350: fixed flange (PN 6/10/16/25) = flat face (Form B)
  - DN 450 to 2400: fixed flange (PN 6/10/16) = flat face (Form B)
- ASME B16.5
  - DN 350 to 2400 (14 to 90"): fixed flange (Class 150)
  - DN 25 to 600 (1 to 24"): lap joint flange (Class 150)
  - DN 25 to 150 (1 to 6"): fixed flange (Class 300)
- JIS B2220
  - DN 50 to 750: fixed flange (10K)
  - DN 25 to 600: fixed flange (20K)
- AWWA C207
  - DN 48 to 72": fixed flange (Class D)
  - DN 48 to 90": fixed flange (Class D)
- AS 2129
  - DN 50 to 1200: fixed flange (Table E)
  - DN 350 to 1200: fixed flange (Table E)
- AS 4087
  - DN 50 to 1200): fixed flange (PN 16)
  - DN 350 to 1200: fixed flange (PN 16)

For information on the different materials used in the process connections → 84

Surface roughness

Electrodes with 1.4435 (316L); Alloy C22, 2.4602 (UNS N06022); tantalum:
≤ 0.3 to 0.5 µm (11.8 to 19.7 µin)
(All data relate to parts in contact with fluid)

Operability

Operating concept

Operator-oriented menu structure for user-specific tasks

- Commissioning
- Operation
- Diagnostics
- Expert level

Fast and safe commissioning

- Guided menus ("Make-it-run" wizards) for applications
- Menu guidance with brief descriptions of the individual parameter functions
- Device access via Web server or SmartBlue app → 97
- WLAN access to the device via mobile handheld terminal, tablet or smart phone

Reliable operation

- Operation in local language
- Uniform operating philosophy applied to device and operating tools
- If replacing electronic modules, transfer the device configuration via the integrated memory (HistoROM backup) which contains the process and measuring device data and the event logbook. No need to reconfigure.

Efficient diagnostics increase measurement availability

- Troubleshooting measures can be called up via the device and in the operating tools
- Diverse simulation options, logbook for events that occur and optional line recorder functions

Languages

Can be operated in the following languages:

- Via local operation:
  English, German, French, Spanish, Italian, Dutch, Portuguese, Polish, Russian, Turkish, Chinese, Japanese, Bahasa (Indonesian), Vietnamese, Czech, Swedish
- Via "FieldCare", "DeviceCare" operating tool:
  English, German, French, Spanish, Italian, Chinese, Japanese
- Via Web browser (only available for device versions with HART, PROFIBUS DP and EtherNet/IP):
  English, German, French, Spanish, Italian, Dutch, Portuguese, Polish, Russian, Turkish, Chinese, Japanese, Bahasa (Indonesian), Vietnamese, Czech, Swedish

Local display

Via display module

Features:
- Standard features 4-line, illuminated, graphic display; touch control
- Order code for "Display; operation", option BA "WLAN" = standard features plus access via Web browser

Information about WLAN interface → 89

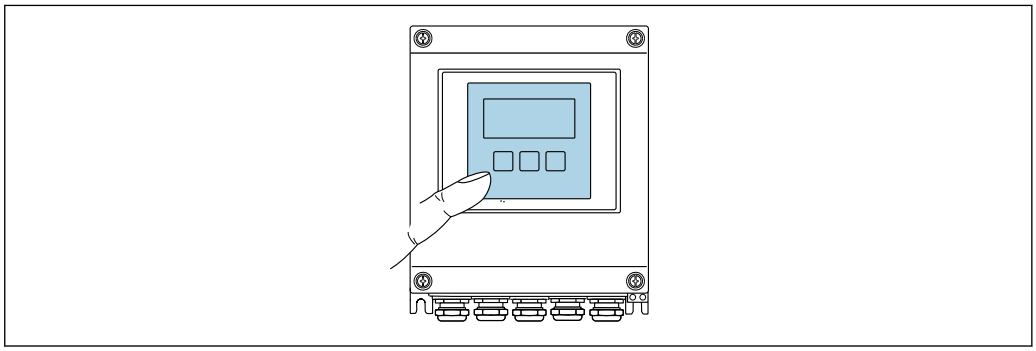

A0032074

37 *Operation with touch control*

Display elements

- 4-line, illuminated, graphic display
- White background lighting; switches to red in event of device errors
- Format for displaying measured variables and status variables can be individually configured
- Permitted ambient temperature for the display: −20 to +60 °C (−4 to +140 °F)
  The readability of the display may be impaired at temperatures outside the temperature range.

Operating elements

- External operation via touch control (3 optical keys) without opening the housing: ⊞, ⊟, Ⓔ
- Operating elements also accessible in the various zones of the hazardous area

Remote operation

Via HART protocol

This communication interface is available in device versions with a HART output.

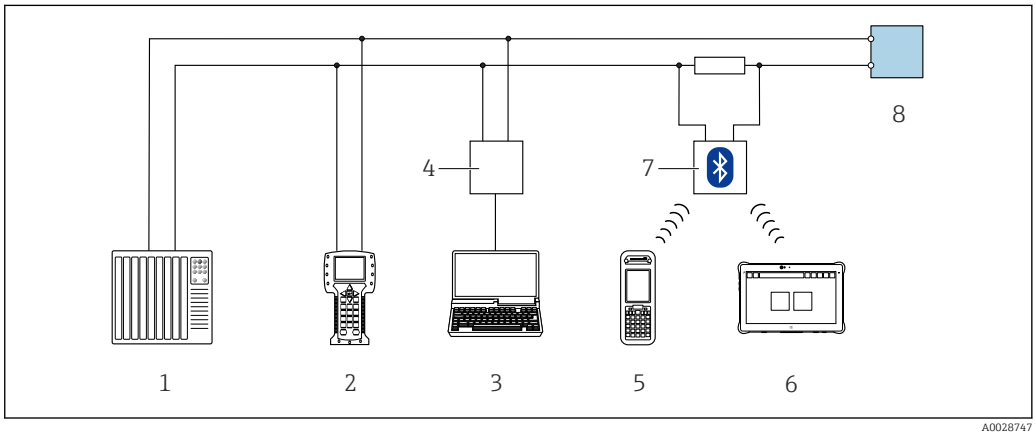

A0028747

38 *Options for remote operation via HART protocol*

1 *Control system (e.g. PLC)*
2 *Field Communicator 475*
3 *Computer with operating tool (e.g. FieldCare, AMS Device Manager, SIMATIC PDM)*
4 *Commubox FXA195 (USB)*
5 *Field Xpert SFX350 or SFX370*
6 *Field Xpert SMT70*
7 *VIATOR Bluetooth modem with connecting cable*
8 *Transmitter*

Via PROFIBUS DP network

This communication interface is available in device versions with PROFIBUS DP.

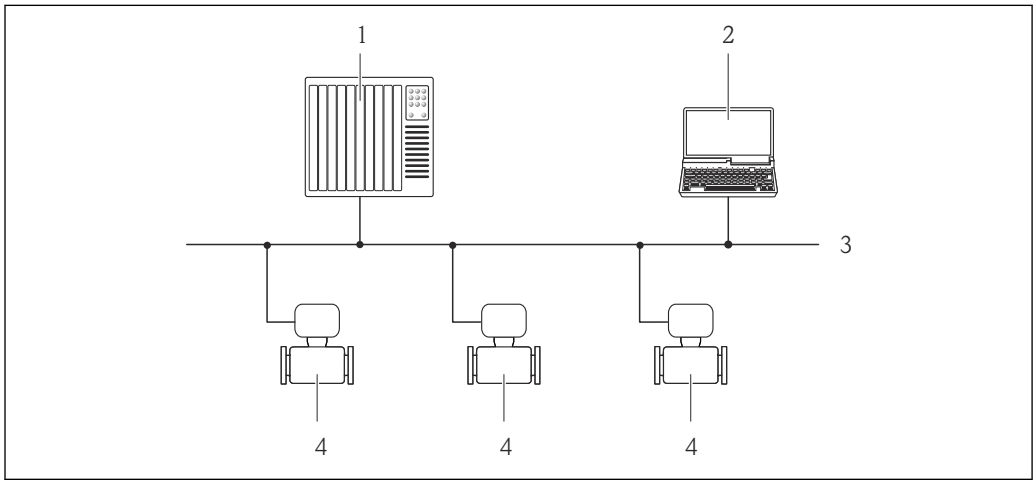

39 Options for remote operation via PROFIBUS DP network

1 Automation system
2 Computer with PROFIBUS network card
3 PROFIBUS DP network
4 Measuring device

Via Modbus RS485 protocol

This communication interface is available in device versions with a Modbus-RS485 output.

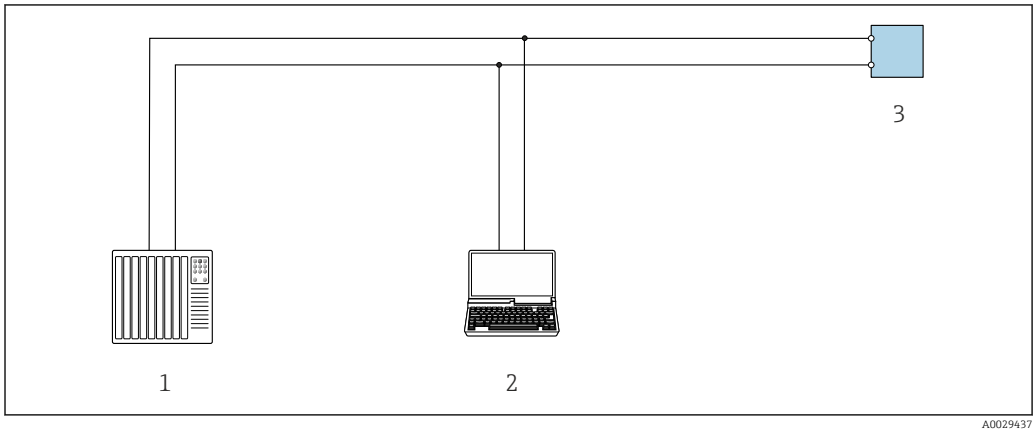

40 Options for remote operation via Modbus-RS485 protocol (active)

1 Control system (e.g. PLC)
2 Computer with Web browser (e.g. Internet Explorer) for accessing the integrated device Web server or with operating tool (e.g. FieldCare, DeviceCare) with COM DTM "CDI Communication TCP/IP" or Modbus DTM
3 Transmitter

Via EtherNet/IP network

This communication interface is available in device versions with EtherNet/IP.

Star topology

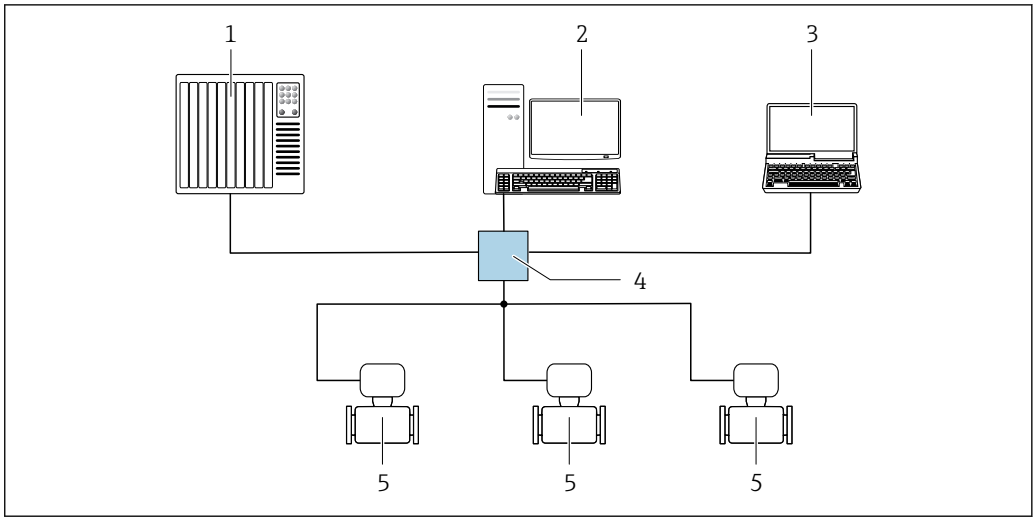

41 Options for remote operation via EtherNet/IP network: star topology

1 Automation system, e.g. "RSLogix" (Rockwell Automation)
2 Workstation for measuring device operation: with Custom Add-On Profile for "RSLogix 5000" (Rockwell Automation) or with Electronic Data Sheet (EDS)
3 Computer with Web browser (e.g. Internet Explorer) for accessing the integrated device Web server or computer with operating tool (e.g. FieldCare, DeviceCare) with COM DTM "CDI Communication TCP/IP"
4 Ethernet switch
5 Measuring device

Service interface

Via service interface (CDI-RJ45)

This communication interface is present in the following device version:
- Order code for "Output", option **H**: 4-20/0-20 mA HART, pulse/frequency/switch output
- Order code for "Output", option **I**: 4-20/0-20 mA HART, pulse/frequency/switch output, status input
- Order code for "Output", option **L**: PROFIBUS DP
- Order code for "Output", option **N**: EtherNet/IP
- Order code for "Output", option **M**: Modbus RS485

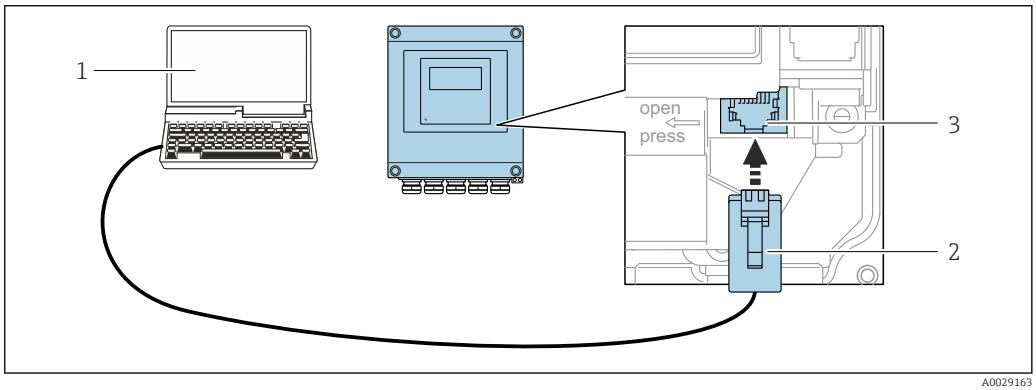

42 Connection via service interface (CDI-RJ45)

1 Computer with Web browser (e.g. Microsoft Internet Explorer, Microsoft Edge) for accessing the integrated device Web server or with "FieldCare", "DeviceCare" operating tool with COM DTM "CDI Communication TCP/IP" or Modbus DTM
2 Standard Ethernet connecting cable with RJ45 plug
3 Service interface (CDI-RJ45) of the measuring device with access to the integrated Web server

Via WLAN interface

The optional WLAN interface is available on the following device version:
Order code for "Display", option BA "WLAN":
4-line, illuminated, graphic display; touch control + WLAN

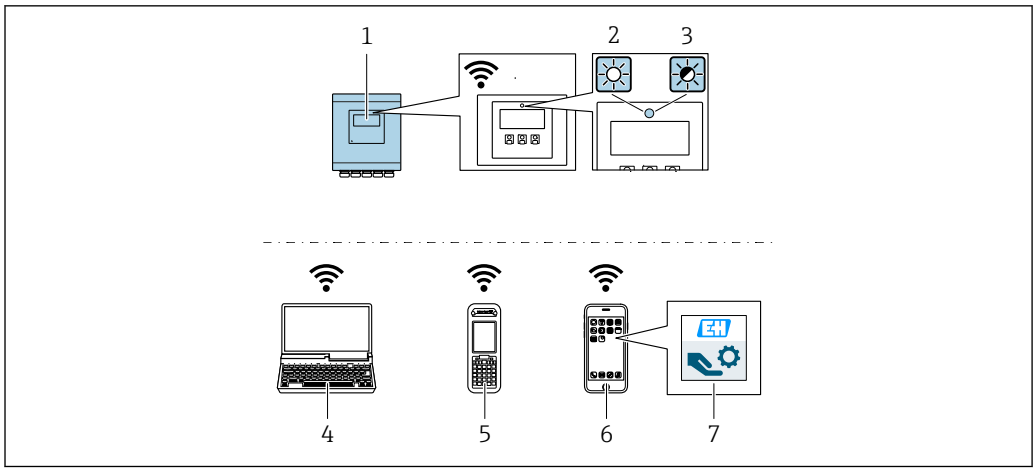

A0032079

1 *Transmitter with integrated WLAN antenna*
2 *LED lit constantly: WLAN reception is enabled on measuring device*
3 *LED flashing: WLAN connection established between operating unit and measuring device*
4 *Computer with WLAN interface and Web browser (e.g. Microsoft Internet Explorer, Microsoft Edge) for accessing the integrated device Web server or with operating tool (e.g. FieldCare, DeviceCare)*
5 *Mobile handheld terminal with WLAN interface and Web browser (e.g. Microsoft Internet Explorer, Microsoft Edge) for accessing the integrated device Web server or operating tool (e.g. FieldCare, DeviceCare)*
6 *Smart phone or tablet (e.g. Field Xpert SMT70)*
7 *SmartBlue App*

Function	WLAN: IEEE 802.11 b/g (2.4 GHz) ▪ Access point with DHCP server (default setting) ▪ Network
Encryption	WPA2-PSK AES-128 (in accordance with IEEE 802.11i)
Configurable WLAN channels	1 to 11
Degree of protection	IP67
Available antennas	▪ Internal antenna ▪ External antenna (optional) In the event of poor transmission/reception conditions at the place of installation. Available as an accessory . Only one antenna active in each case!
Range	▪ Internal antenna: typically 10 m (32 ft) ▪ External antenna: typically 50 m (164 ft)
Materials (external antenna)	▪ Antenna: ASA plastic (acrylic ester-styrene-acrylonitrile) and nickel-plated brass ▪ Adapter: Stainless steel and nickel-plated brass ▪ Cable: Polyethylene ▪ Connector: Nickel-plated brass ▪ Angle bracket: Stainless steel

Supported operating tools

Different operating tools can be used for local or remote access to the measuring device. Depending on the operating tool used, access is possible with different operating units and via a variety of interfaces.

Supported operating tools	Operating unit	Interface	Additional information
Web browser	Notebook, PC or tablet with Web browser	▪ CDI-RJ45 service interface ▪ WLAN interface ▪ Ethernet-based fieldbus (EtherNet/IP)	Special Documentation for device
DeviceCare SFE100	Notebook, PC or tablet with Microsoft Windows system	▪ CDI-RJ45 service interface ▪ WLAN interface ▪ Fieldbus protocol	→ 🖹 97
FieldCare SFE500	Notebook, PC or tablet with Microsoft Windows system	▪ CDI-RJ45 service interface ▪ WLAN interface ▪ Fieldbus protocol	→ 🖹 97
Device Xpert	Field Xpert SFX 100/350/370	HART and FOUNDATION Fieldbus fieldbus protocol	Operating Instructions BA01202S Device description files: Use update function of handheld terminal

Other operating tools based on FDT technology with a device driver such as DTM/iDTM or DD/EDD can be used for device operation. These operating tools are available from the individual manufacturers. Integration into the following operating tools, among others, is supported:

- FactoryTalk AssetCentre (FTAC) by Rockwell Automation → www.rockwellautomation.com
- Process Device Manager (PDM) by Siemens → www.siemens.com
- Asset Management Solutions (AMS) by Emerson → www.emersonprocess.com
- FieldCommunicator 375/475 by Emerson → www.emersonprocess.com
- Field Device Manager (FDM) by Honeywell → www.honeywellprocess.com
- FieldMate by Yokogawa → www.yokogawa.com
- PACTWare → www.pactware.com

The associated device description files are available at: www.endress.com → Downloads

Web server

Thanks to the integrated Web server, the device can be operated and configured via a Web browser and via a service interface (CDI-RJ45) or via a WLAN interface. The structure of the operating menu is the same as for the local display. In addition to the measured values, status information on the device is also displayed and allows the user to monitor the status of the device. Furthermore the device data can be managed and the network parameters can be configured.

A device that has a WLAN interface (can be ordered as an option) is required for the WLAN connection: order code for "Display", option BA "WLAN": 4-line, illuminated; touch control + WLAN. The device acts as an Access Point and enables communication by computer or a mobile handheld terminal.

Supported functions
Data exchange between the operating unit (such as a notebook for example) and the measuring device:
- Upload the configuration from the measuring device (XML format, configuration backup)
- Save the configuration to the measuring device (XML format, restore configuration)
- Export event list (.csv file)
- Export parameter settings (.csv file or PDF file, document the measuring point configuration)
- Export the Heartbeat verification log (PDF file, only available with the "Heartbeat Verification" application package)
- Flash firmware version for device firmware upgrade, for instance
- Download driver for system integration
- Visualize up to 1000 saved measured values (only available with the **Extended HistoROM** application package → 🖹 95)

Web server special documentation → 🖹 98

HistoROM data management

The measuring device features HistoROM data management. HistoROM data management comprises both the storage and import/export of key device and process data, making operation and servicing far more reliable, secure and efficient.

Additional information on the data storage concept

There are different types of data storage units in which device data are stored and used by the device:

	Device memory	T-DAT	S-DAT
Available data	▪ Device firmware package ▪ Driver for system integration e.g.: – GSD for PROFIBUS DP – EDS for EtherNet/IP	▪ Event history, such as diagnostic events ▪ Measured value memory ("Extended HistoROM" order option) ▪ Current parameter data record (used by firmware at run time) ▪ Maximum indicators (min/max values) ▪ Totalizer values	▪ Sensor data: diameter etc. ▪ Serial number ▪ User-specific access code (to use the "Maintenance" user role) ▪ Calibration data ▪ Device configuration (e.g. SW options, fixed I/O or multi I/O)
Storage location	Fixed on the user interface board in the connection compartment	Can be plugged into the user interface board in the connection compartment	In the sensor plug in the transmitter neck part

Data backup

Automatic
- The most important device data (sensor and transmitter) are automatically saved in the DAT modules
- If the transmitter or measuring device is replaced: once the T-DAT containing the previous device data has been exchanged, the new measuring device is ready for operation again immediately without any errors
- If the sensor is replaced: once the sensor has been replaced, new sensor data are transferred from the S-DAT in the measuring device and the measuring device is ready for operation again immediately without any errors

Data transfer

Manual
- Transfer of a device configuration to another device using the export function of the specific operating tool, e.g. with FieldCare, DeviceCare or Web server: to duplicate the configuration or to store in an archive (e.g. for backup purposes)
- Transmission of the drivers for system integration via Web server, e.g.:
  – GSD for PROFIBUS DP
  – EDS for EtherNet/IP

Event list

Automatic
- Chronological display of up to 20 event messages in the events list
- If the **Extended HistoROM** application package (order option) is enabled: up to 100 event messages are displayed in the events list along with a time stamp, plain text description and remedial measures
- The events list can be exported and displayed via a variety of interfaces and operating tools e.g. DeviceCare, FieldCare or Web server

Data logging

Manual

If the **Extended HistoROM** application package (order option) is enabled:
- Record up to 1 000 measured values via 1 to 4 channels
- User configurable recording interval
- Record up to 250 measured values via each of the 4 memory channels
- Export the measured value log via a variety of interfaces and operating tools e.g. FieldCare, DeviceCare or web server

Certificates and approvals

Currently available certificates and approvals can be called up via the product configurator.

CE mark

The device meets the legal requirements of the applicable EU Directives. These are listed in the corresponding EU Declaration of Conformity along with the standards applied.

Endress+Hauser confirms successful testing of the device by affixing to it the CE mark.

RCM-Tick mark

The measuring system meets the EMC requirements of the "Australian Communications and Media Authority (ACMA)".

Ex approval

The devices are certified for use in hazardous areas and the relevant safety instructions are provided in the separate "Control Drawing" document. Reference is made to this document on the nameplate.

Drinking water approval

- ACS
- KTW/W270
- NSF 61
- WRAS BS 6920

HART certification

HART interface

The measuring device is certified and registered by the FieldComm Group. The measuring system meets all the requirements of the following specifications:
- Certified according to HART 7
- The device can also be operated with certified devices of other manufacturers (interoperability)

Certification PROFIBUS

PROFIBUS interface

The measuring device is certified and registered by the PNO (PROFIBUS User Organization Organization). The measuring system meets all the requirements of the following specifications:
- Certified in accordance with PROFIBUS PA Profile 3.02
- The device can also be operated with certified devices of other manufacturers (interoperability)

Modbus RS485 certification

The measuring device meets all the requirements of the MODBUS/TCP conformity test and has the "MODBUS/TCP Conformance Test Policy, Version 2.0". The measuring device has successfully passed all the test procedures carried out.

EtherNet/IP certification

The measuring device is certified and registered by the ODVA (Open Device Vendor Association). The measuring system meets all the requirements of the following specifications:
- Certified in accordance with the ODVA Conformance Test
- EtherNet/IP Performance Test
- EtherNet/IP PlugFest compliance
- The device can also be operated with certified devices of other manufacturers (interoperability)

Radio approval

The measuring device has radio approval.

For detailed information regarding radio approval, see Special Documentation → 98

Measuring instrument approval

The measuring device is (optionally) approved as a cold water meter (MI-001) for volume measurement in service subject to legal metrological control in accordance with the European Measuring Instruments Directive 2014/32/EU (MID).

The measuring device is qualified to OIML R49: 2013 and has an OIML Certificate of Conformity (optional).

Other standards and guidelines

- EN 60529
  Degrees of protection provided by enclosures (IP code)
- EN 61010-1
  Safety requirements for electrical equipment for measurement, control and laboratory use - general requirements
- IEC/EN 61326
  Emission in accordance with Class A requirements. Electromagnetic compatibility (EMC requirements).
- ANSI/ISA-61010-1 (82.02.01): 2004
  Safety Requirements for Electrical Equipment for Measurement, Control and Laboratory Use - Part 1 General Requirements
- CAN/CSA-C22.2 No. 61010-1-04
  Safety Requirements for Electrical Equipment for Measurement, Control and Laboratory Use - Part 1 General Requirements
- NAMUR NE 21
  Electromagnetic compatibility (EMC) of industrial process and laboratory control equipment
- NAMUR NE 32
  Data retention in the event of a power failure in field and control instruments with microprocessors
- NAMUR NE 43
  Standardization of the signal level for the breakdown information of digital transmitters with analog output signal.
- NAMUR NE 53
  Software of field devices and signal-processing devices with digital electronics
- NAMUR NE 105
  Specifications for integrating fieldbus devices in engineering tools for field devices
- NAMUR NE 107
  Self-monitoring and diagnosis of field devices
- NAMUR NE 131
  Requirements for field devices for standard applications

Ordering information

Detailed ordering information is available from the following sources:
- In the Product Configurator on the Endress+Hauser website: www.endress.com -> Click "Corporate" -> Select your country -> Click "Products" -> Select the product using the filters and search field -> Open product page -> The "Configure" button to the right of the product image opens the Product Configurator.
- From your Endress+Hauser Sales Center: www.addresses.endress.com

Product Configurator - the tool for individual product configuration
- Up-to-the-minute configuration data
- Depending on the device: Direct input of measuring point-specific information such as measuring range or operating language
- Automatic verification of exclusion criteria
- Automatic creation of the order code and its breakdown in PDF or Excel output format
- Ability to order directly in the Endress+Hauser Online Shop

Product generation index

Release date	Product root	Modification
01.07.2012	5W4B	Original
01.11.2016	5W4C	▪ Web server: current version ▪ Logbook: current concept, including Parameter Change ▪ Upload/download: current concept ▪ Heartbeat Technology: new hardware, diagnostics, events ▪ Security concept: encrypted password transmission ▪ WLAN ▪ Custody transfer mode

More information is available from your Sales Center or at:
www.service.endress.com → Downloads

Application packages

Many different application packages are available to enhance the functionality of the device. Such packages might be needed to address safety aspects or specific application requirements.

The application packages can be ordered with the device or subsequently from Endress+Hauser. Detailed information on the order code in question is available from your local Endress+Hauser sales center or on the product page of the Endress+Hauser website: www.endress.com.

Cleaning

Package	Description
Electrode cleaning circuit (ECC)	The electrode cleaning circuit (ECC) function has been developed to have a solution for applications where magnetite (Fe_3O_4) deposits frequently occur (e.g. hot water). Since magnetite is highly conductive this build up leads to measuring errors and ultimately to the loss of signal. The application package is designed to AVOID build up of highly conductive matter and thin layers (typical of magnetite).

Diagnostics functions

Package	Description
Extended HistoROM	Comprises extended functions concerning the event log and the activation of the measured value memory. Event log: Memory volume is extended from 20 message entries (standard version) to up to 100 entries. Data logging (line recorder): ▪ Memory capacity for up to 1000 measured values is activated. ▪ 250 measured values can be output via each of the 4 memory channels. The recording interval can be defined and configured by the user. ▪ Measured value logs can be accessed via the local display or operating tool e.g. FieldCare, DeviceCare or Web server.

Heartbeat Technology

Package	Description
Heartbeat Verification +Monitoring	**Heartbeat Verification** Meets the requirement for traceable verification to DIN ISO 9001:2008 Chapter 7.6 a) "Control of monitoring and measuring equipment". ▪ Functional testing in the installed state without interrupting the process. ▪ Traceable verification results on request, including a report. ▪ Simple testing process via local operation or other operating interfaces. ▪ Clear measuring point assessment (pass/fail) with high test coverage within the framework of manufacturer specifications. ▪ Extension of calibration intervals according to operator's risk assessment. **Heartbeat Monitoring** Continuously supplies data, which are characteristic of the measuring principle, to an external condition monitoring system for the purpose of preventive maintenance or process analysis. These data enable the operator to: ▪ Draw conclusions - using these data and other information - about the impact process influences (such as corrosion, abrasion, buildup etc.) have on the measuring performance over time. ▪ Schedule servicing in time. ▪ Monitor the process or product quality, e.g. gas pockets.

Accessories

Various accessories, which can be ordered with the device or subsequently from Endress+Hauser, are available for the device. Detailed information on the order code in question is available from your local Endress+Hauser sales center or on the product page of the Endress+Hauser website: www.endress.com.

Device-specific accessories

For the transmitter

Accessories	Description
Promag 400 transmitter	Transmitter for replacement or storage. Use the order code to define the following specifications: ▪ Approvals ▪ Output / input ▪ Display/operation ▪ Housing ▪ Software For details, see Installation Instructions EA00104D
Display guard	Is used to protect the display against impact or scoring from sand in desert areas. Order number: 71228792 Installation Instructions EA01093D
Connecting cable for remote version	Coil current and electrode cables, various lengths, reinforced cables available on request.
Ground cable	Set, consisting of two ground cables for potential equalization.
Post mounting kit	Post mounting kit for transmitter.
Compact → Remote conversion kit	For converting a compact device version to a remote device version.
Conversion kit Promag 50/53 → Promag 400	For converting a Promag with transmitter 50/53 to a Promag 400.

For the sensor

Accessories	Description
Ground disks	Are used to ground the medium in lined measuring tubes to ensure proper measurement. For details, see Installation Instructions EA00070D

Communication-specific accessories

Accessories	Description
Commubox FXA195 HART	For intrinsically safe HART communication with FieldCare via the USB interface. Technical Information TI00404F
Commubox FXA291	Connects Endress+Hauser field devices with a CDI interface (= Endress+Hauser Common Data Interface) and the USB port of a computer or laptop. Technical Information TI405C/07
HART Loop Converter HMX50	Is used to evaluate and convert dynamic HART process variables to analog current signals or limit values. ▪ Technical Information TI00429F ▪ Operating Instructions BA00371F
Wireless HART adapter SWA70	Is used for the wireless connection of field devices. The WirelessHART adapter can be easily integrated into field devices and existing infrastructures, offers data protection and transmission safety and can be operated in parallel with other wireless networks with minimum cabling complexity. Operating Instructions BA00061S
Fieldgate FXA320	Gateway for the remote monitoring of connected 4-20 mA measuring devices via a Web browser. Technical Information TI00025S Operating Instructions BA00053S

Fieldgate FXA520	Gateway for the remote diagnostics and remote configuration of connected HART measuring devices via a Web browser. Technical Information TI00025S Operating Instructions BA00051S
Field Xpert SFX350	Field Xpert SFX350 is a mobile computer for commissioning and maintenance. It enables efficient device configuration and diagnostics for HART and FOUNDATION Fieldbus devices and can be used in non-hazardous areas. Operating Instructions BA01202S
Field Xpert SFX370	Field Xpert SFX370 is a mobile computer for commissioning and maintenance. It enables efficient device configuration and diagnostics for HART and FOUNDATION Fieldbus devices and can be used in the non-hazardous area and in the hazardous area. Operating Instructions BA01202S

Service-specific accessories

Accessories	Description
Applicator	Software for selecting and sizing Endress+Hauser measuring devices: ▪ Choice of measuring devices for industrial requirements ▪ Calculation of all the necessary data for identifying the optimum flowmeter: e.g. nominal diameter, pressure loss, flow velocity and accuracy. ▪ Graphic illustration of the calculation results ▪ Determination of the partial order code, administration, documentation and access to all project-related data and parameters over the entire life cycle of a project. Applicator is available: ▪ Via the Internet: https://portal.endress.com/webapp/applicator ▪ As a downloadable DVD for local PC installation.
W@M	W@M Life Cycle Management Improved productivity with information at your fingertips. Data relevant to a plant and its components is generated from the first stages of planning and during the asset's complete life cycle. W@M Life Cycle Management is an open and flexible information platform with online and on-site tools. Instant access for your staff to current, in-depth data shortens your plant's engineering time, speeds up procurement processes and increases plant uptime. Combined with the right services, W@M Life Cycle Management boosts productivity in every phase. For more information, visit www.endress.com/lifecyclemanagement
FieldCare	FDT-based plant asset management tool from Endress+Hauser. It can configure all smart field units in your system and helps you manage them. By using the status information, it is also a simple but effective way of checking their status and condition. Operating Instructions BA00027S and BA00059S
DeviceCare	Tool to connect and configure Endress+Hauser field devices. Innovation brochure IN01047S
Commubox FXA291	Connects Endress+Hauser field devices with a CDI interface (= Endress+Hauser Common Data Interface) and the USB port of a computer or laptop. Technical Information TI00405C

System components

Accessories	Description
Memograph M graphic data manager	The Memograph M graphic data manager provides information on all the relevant measured variables. Measured values are recorded correctly, limit values are monitored and measuring points analyzed. The data are stored in the 256 MB internal memory and also on a SD card or USB stick. ▪ Technical Information TI00133R ▪ Operating Instructions BA00247R

Supplementary documentation

For an overview of the scope of the associated Technical Documentation, refer to the following:
- *W@M Device Viewer* (www.endress.com/deviceviewer): Enter the serial number from nameplate
- *Endress+Hauser Operations App*: Enter the serial number from the nameplate or scan the 2D matrix code (QR code) on the nameplate

Standard documentation

Brief Operating Instructions

Brief Operating Instructions for the sensor

Measuring device	Documentation code
Proline Promag W	KA01266D

Transmitter Brief Operating Instructions

Measuring device	Documentation code			
	HART	PROFIBUS DP	Modbus RS485	EtherNet/IP
Proline 400	KA01263D	KA01420D	KA01419D	KA01418D

Operating Instructions

Measuring device	Documentation code			
	HART	PROFIBUS DP	Modbus RS485	EtherNet/IP
Promag W 400	BA01063D	BA01234D	BA01231D	BA01214D

Description of device parameters

Measuring device	Documentation code			
	HART	PROFIBUS DP	Modbus RS485	EtherNet/IP
Promag 400	GP01043D	GP01044D	GP01045D	GP01046D

Supplementary device-dependent documentation

Special Documentation

Content	Documentation code
Heartbeat Technology	SD01847D
Display modules A309/A310	SD01793D
Information on Custody Transfer Measurement	SD02038D

Content	Documentation code			
	HART	PROFIBUS DP	Modbus RS485	EtherNet/IP
Web server	SD01811D	SD01813D	SD01812D	SD01814D

Installation Instructions

Contents	Comment
Installation instructions for spare part sets and accessories	Documentation code: specified for each individual accessory → 96.

Registered trademarks

HART®
Registered trademark of the FieldComm Group, Austin, Texas, USA

PROFIBUS®
Registered trademark of the PROFIBUS User Organization, Karlsruhe, Germany

Modbus®
Registered trademark of SCHNEIDER AUTOMATION, INC.

EtherNet/IP™
Trademark of ODVA, Inc.

Microsoft®
Registered trademark of the Microsoft Corporation, Redmond, Washington, USA

www.addresses.endress.com

Endress+Hauser

People for Process Automation

CS-413-300 : Identification sheet

VWTC PROJECT NUMBER:	Iqaluit WWTP	REV:	01
PROJECT NAME:	5000218036	SUBMITTED TO (COMPANY):	
ENGINEER:	G. HÉBERT	SUBMITTED TO (RESPONSIBLE)	
PROJECT MANAGER:	C. BEKAERT	PROJECT NUM REFERENCE.:	
PHONE NUMBER:		LOT NUMBER:	

SUPPLIER	EQPT CODE	EQPT TAG NO	DIA	DESCRIPTION	INFO 1	INFO 2	INFO 3	APPLIC.	NOTE	REV
CONVAL	ST-413-370	PI-02-409	2.5"	PRESSURE GAUGE	PRESSURE GAUGE C/W ISOLATOR // MANFUACTURER : ASHCROFT // MODEL : 25-1009-SW-L-02L-160# + 02-310SS-02T-CG // RANGE : 0/160 PSI	CRN # REQUIRED	N/A			1
CONVAL	ST-413-370	PI-02-424	2.5"	PRESSURE GAUGE	PRESSURE GAUGE C/W ISOLATOR // MANFUACTURER : ASHCROFT // MODEL : 25-1009-SW-L-02L-160# + 02-310SS-02T-CG // RANGE : 0/160 PSI	CRN # REQUIRED	N/A			1
CONVAL	ST-413-370	PI-02-439	2.5"	PRESSURE GAUGE	PRESSURE GAUGE C/W ISOLATOR // MANFUACTURER : ASHCROFT // MODEL : 25-1009-SW-L-02L-160# + 02-310SS-02T-CG // RANGE : 0/160 PSI	CRN # REQUIRED	N/A			1
CONVAL	ST-413-370	PI-02-459	2.5"	PRESSURE GAUGE	PRESSURE GAUGE C/W ISOLATOR // MANFUACTURER : ASHCROFT // MODEL : 25-1009-SW-L-02L-160# + 02-310SS-02T-CG // RANGE : 0/160 PSI	CRN # REQUIRED	N/A			1

SUPPLIER	EQPT CODE	EQPT TAG NO	DIA	DESCRIPTION	INFO 1	INFO 2	INFO 3	APPLIC.	NOTE	REV
CONVAL	ST-413-370	PI-02-474	2.5"	PRESSURE GAUGE	PRESSURE GAUGE C/W ISOLATOR // MANFUACTURER : ASHCROFT // MODEL : 25-1009-SW-L-02L-160# + 02-310SS-02T-CG // RANGE : 0/160 PSI	CRN # REQUIRED	N/A			1
CONVAL	ST-413-370	PI-02-489	2.5"	PRESSURE GAUGE	PRESSURE GAUGE C/W ISOLATOR // MANFUACTURER : ASHCROFT // MODEL : 25-1009-SW-L-02L-160# + 02-310SS-02T-CG // RANGE : 0/160 PSI	CRN # REQUIRED	N/A			1
CONVAL	ST-413-370	PI-02-510	2.5"	PRESSURE GAUGE	PRESSURE GAUGE C/W ISOLATOR // MANFUACTURER : ASHCROFT // MODEL : 25-1009-SW-L-02L-160# + 02-310SS-02T-CG // RANGE : 0/160 PSI	CRN # REQUIRED	N/A			1
CONVAL	ST-413-370	PI-02-520	2.5"	PRESSURE GAUGE	PRESSURE GAUGE C/W ISOLATOR // MANFUACTURER : ASHCROFT // MODEL : 25-1009-SW-L-02L-160# + 02-310SS-02T-CG // RANGE : 0/160 PSI	CRN # REQUIRED	N/A			1
CONVAL	ST-413-370	PI-02-530	2.5"	PRESSURE GAUGE	PRESSURE GAUGE C/W ISOLATOR // MANFUACTURER : ASHCROFT // MODEL : 25-1009-SW-L-02L-160# + 02-310SS-02T-CG // RANGE : 0/160 PSI	CRN # REQUIRED	N/A			1

SUPPLIER	EQPT CODE	EQPT TAG NO	DIA	DESCRIPTION	INFO 1	INFO 2	INFO 3	APPLIC.	NOTE	REV
CONVAL	ST-413-370	PI-02-540	2.5"	PRESSURE GAUGE	PRESSURE GAUGE C/W ISOLATOR // MANFUACTURER : ASHCROFT // MODEL : 25-1009-SW-L-02L-160# + 02-310SS-02T-CG // RANGE : 0/160 PSI	CRN # REQUIRED	N/A			1

ASHCROFT®

Duralife® Pressure Gauge Type 1009, ASME B 40.1 Grade 1A (±1% of span)

DESIGNED FOR SAFETY AND LONGER LIFE

- ***5-year limited warranty***
- ***Patented PowerFlex™ movement isolates movement from shock and vibration for longer life***
- ***All stainless, all-welded construction for long life***
- ***ASME Grade 1A, 1% accuracy full scale***
- ***True Zero™ pointer indication – no stop pin to mask false zero reading – ensures safety and process control***

The following Table is *not* for conversion purposes.

STANDARD RANGES [3][4][5]

Pressure psi	kg/cm² - bar	kPa
0/15	0/1	0/100
0/30	0/1.6	0/160
0/60	0/2.5	0/250
0/100	0/4	0/400
0/160	0/6	0/600
0/200	0/10	0/1000
0/300	0/16	0/1600
0/400	0/25	0/2500
0/600	0/40	0/4000
0/800	0/60	0/6000
0/1000	0/100	0/10,000
0/1500	0/160	0/16,000
0/2000	0/250	0/25,000
0/3000	0/400	0/40,000
0/4000	0/600	0/60,000
0/5000	0/1000	0/100,000
0/6000		
0/7500		
0/10,000		
0/15,000		
Vacuum		
30 in./0 in.Hg	–1/0	–100/0
Compound		
30 in.Hg/15 psi	–1/0/1.5	–100/0/150
30 in.Hg /30 psi	–1/0/3	–100/0/300
30 in.Hg /60 psi	–1/0/5	–100/0/500
30 in.Hg /100 psi	–1/0/9	–100/0/900
30 in.Hg /150 psi	–1/0/15	–100/0/1500
30 in.Hg /300 psi	–1/0/24	–100/0/2400

- ***New PLUS!™ Performance Option:***
  - ***Liquid-filled performance in a dry gauge***
  - ***Fights vibration and pulsations without liquid-fill headaches***
  - ***See pages 6-7 for details***
  - ***Order as option XLL***

OTHER FEATURES:

Available in 2½″ and 3½″ dial sizes, Duralife® pressure gauges are liquid fillable and field convertible for panel mounting. Both zero and span adjustments are standard.

The gauge is available dry, liquid-filled weatherproof or hermetically sealed and *now* with *PLUS!™* performance option. A five year limited warranty is standard with the Duralife® 1009.



BOURDON SYSTEM SELECTION[1]

Ordering Code	Bourdon Tube & Tip Material[1]	Socket Material	Tube Type	Range Selection Limits (psi)	NPT Conn.[6]
AW	316 stainless steel	Bronze	C-Tube	Vac/600	¼
AW	316 stainless steel	Bronze	Helical	1000	¼
SW	316 stainless steel	316 stainless steel	C-Tube	Vac/600	¼ & ½[2]
SW	316 stainless steel	316 stainless steel	Helical	800/15,000	¼ & ½[2]

(1) For selection of the correct Bourdon system material, see the media application table on page 243.
(2) ½ NPT available 3½″ lower SW system only.
(3) Type 1009 gauges may be ordered with metric single-scale dial: kPa,bar or kg/cm².
(4) Dual-scale dials will be supplied with standard metric inner scale and equivalent psi outer scale or with standard psi inner scale and equivalent metric outer scale–please specify.
(5) Special logos and scales available upon request.
(6) ¼″ JIS, BSP or DIN threads available on SW systems.

TO ORDER THIS 1009 DURALIFE PRESSURE GAUGE:

Select: 35 1009 SW (L) 02L XXX 1000#

1. Dial size–2½″, 3½″
2. Case type–1009
3. Tube and socket material
4. Liquid filled (glycerin), leave blank if dry
5. Connection size–⅛ (01), ¼ (02), ½ (04)
6. Connection location–Lower (L), Back (B)
7. Optional Features–see page 176
8. Standard pressure range–1000 psi

Accessories: see pages 233-238

ASHCROFT®
Trust the shield.™

Type 310, 315 All-Welded "Mini" Diaphragm Seal



PRODUCT FEATURES

- Compact size to fit space-restricted areas
- Designed to protect transducers, mini-switches and 3½″ or smaller pressure gauges from corrosion, plugging or freeze-up
- All-welded metal construction prevents leakage of process media
- Rated for 2500 psi at 100°F
- Fill/bleed connection is standard
- Available with male process connection (Type 310)

The compact size of the Ashcroft® 310 mini-seal allows it to fit into space-restricted areas and is designed to protect transducers, mini-switches, and 3½" or smaller dial size pressure gauges from corrosion, plugging or freeze- up. All welded metal construction prevents leakage of process media. It is rated for 2500 psi at 100°F and has a 316L stainless steel top housing standard. Lower housing materials include 316L stainless steel or Hastelloy C. Diaphragm materials include 316L stainless, Hastelloy C or Tantalum. ¼ NPT or ½ NPT process connection sizes are available.

PRODUCT SPECIFICATIONS

Model Number:	Type 310, 315
Process Connection Size:	¼″, ½″ (⅛″, ¾″, 1″- 310 only) (see table A)
Instrument Connection Size:	⅛, ¼ NPT
Diaphragm Material:	316L SS, Hastelloy C276, Tantalum, Monel
Bottom Housing Materials:	316L SS, Hastelloy C276, Monel, Hastelloy B
Filling Fluid:	Glycerin, Silicone, Halocarbon, Syltherm

All specifications are subject to change without notice.
All sales subject to standard terms and conditions.
© Ashcroft Inc. 2015 09/15

Ashcroft Inc., 250 East Main Street, Stratford, CT 06614 USA
Tel: 203-378-8281 • Fax: 203-385-0408
email: info@ashcroft.com • www.ashcroft.com

Type 310, 315 All-Welded "Mini" Diaphragm Seal

Table A – Process Connection

Process Connection	Size	Code
Threaded – male NPT*	⅛	01
Threaded – male NPT*	¼	02
Threaded – male NPT*	½	04
Threaded – male NPT*	¾	06
Threaded – male NPT*	1	08
Threaded – female NPT†	¼	25
Threaded – female NPT†	½	50

*Available in Type 310 only.
†Available in Types 310 & 315.

Pressure Ratings – All 2500 psi except flanged seals are per ASME B 16.5, temperature limit determined by diaphragm, bottom housing and/or filling fluid.

Table B – Type

Description	Code
All-welded mini-seal	310
All-welded midi-seal w/flushing connection	315

Table C – Diaphragm Materials

Materials	Code
316L stainless steel	S
Hastelloy C-276	H
Tantalum	U
Monel	P

Table D – Housing Materials

Bottom(1)	Code	Top(2)
316L SS	S	316L SS
Hastelloy C-276	H	316L SS
Monel	M	Monel

(1) Other bottom housing materials on application.
(2) Top housing material is 316L SS (standard). Monel mini-seal standard with monel top housing.

Table E – Instrument Connection

Instrument Connection	Size	Code
Threaded – female NPT	¼	02T
Threaded – female NPT	⅛	01T

NOTES:
(1) For use with most 3½″ and smaller gauges. Movementless gauge 4½″ (exception).
(2) Other bottom housing materials on application.
(3) Top housing material is 316L SS (standard). Monel mini-seal standard with monel top housing.
(4) Not available with monel bottom housing.

Table F – Filling Fluid

Fill	Service	Connection to Instrument	Temperature Range °F	Code
Glycerin	Pressure	Direct Only	0/400	CG
Silicone	Pressure/Vacuum	Direct or Flexible Line	–40/600	CK
Halocarbon	Pressure/Vacuum in presence of strong oxidizing agent	Direct or Flexible Line	–70/300	CF
Syltherm	Pressure	Direct or Flexible Line	–40/750	HA

Monel is a registered trademark of Huntington Alloys, Inc.
Hastelloy is a registered trademark of Cabot Corp.
Halocarbon is a registered trademark of Halocarbon Products
GYLON 3510 is a registered trademark of Garlock Inc.

HOW TO ORDER:

1. **From Table A...** select PROCESS CONNECTION (e.g., 1/4″ process code 25)
2. **From Table B...** select TYPE (310)
3. **From Table B...** select DIAPHRAGM MATERIAL. (e.g., 316L stainless steel–code S)
4. **From Table C...** select BOTTOM HOUSING MATERIAL. (e.g., 316 stainless steel–code S)
5. **From Table D...** select INSTRUMENT CONNECTION size. (e.g., 1/4 NPT–code 02T)
6. **From Table E...** select FILLING FLUID, if diaphragm seal will be attached to instrument. (e.g., Glycerin–code CG)

Coded order: **25-310SS-02T-CG**

Dimension

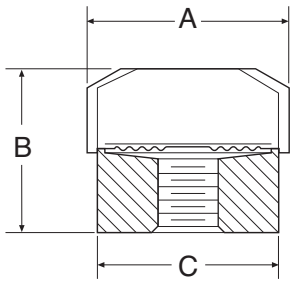

Types 310 mini-seal – Threaded ¼, ½, ¾, NPT

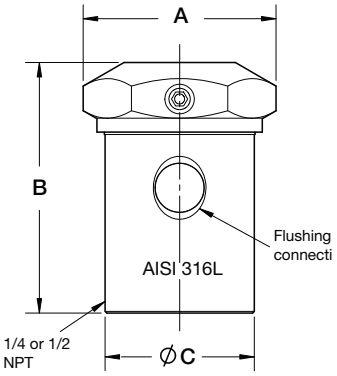

Types 315 mini-seal – Threaded ¼, ½, ¾, NPT

	A		B		C	
	in	mm	in	mm	in	mm
Type 310	1.75	(38)	.81	(30)	1.34	(34)
Type 315	1.73	(44)	2.25	(57.2)	1.34	(34)

All specifications are subject to change without notice.
All sales subject to standard terms and conditions.
© Ashcroft Inc. 2015 09/15

Ashcroft Inc., 250 East Main Street, Stratford, CT 06614 USA
Tel: 203-378-8281 • Fax: 203-385-0408
email: info@ashcroft.com • www.ashcroft.com

CS-999-013 : Identification sheet

VWTC PROJECT NUMBER:	Iqaluit WWTP	REV:	02
PROJECT NAME:	5000218036	SUBMITTED TO (COMPANY):	
ENGINEER:	F.VINCI	SUBMITTED TO (RESPONSIBLE)	
PROJECT MANAGER:	C. BEKAERT	PROJECT NUM REFERENCE.:	
PHONE NUMBER:		LOT NUMBER:	

SUPPLIER	EQPT CODE	EQPT TAG NO	DIA	DESCRIPTION	INFO 1	INFO 2	INFO 3	APPLIC.	NOTE	REV
CONVAL	ST-999-013	PI-02-404 PI-02-419 PI-02-434 PI-02-454 PI-02-469 PI-02-484		PRESSURE GAUGE	PRESSURE GAUGE/ MANUFACTURER: ASHCROFT// MODEL: 25-1009SWL-02L-30IMV&60 # WITH 02-310SS-02T-XCK					2

ASHCROFT®

Duralife® Pressure Gauge Type 1009, ASME B 40.1 Grade 1A (±1% of span)

DESIGNED FOR SAFETY AND LONGER LIFE

- ***5-year limited warranty***
- ***Patented PowerFlex™ movement isolates movement from shock and vibration for longer life***
- ***All stainless, all-welded construction for long life***
- ***ASME Grade 1A, 1% accuracy full scale***
- ***True Zero™ pointer indication – no stop pin to mask false zero reading – ensures safety and process control***

The following Table is *not* for conversion purposes.

STANDARD RANGES [3][4][5]

Pressure psi	kg/cm² - bar	kPa
0/15	0/1	0/100
0/30	0/1.6	0/160
0/60	0/2.5	0/250
0/100	0/4	0/400
0/160	0/6	0/600
0/200	0/10	0/1000
0/300	0/16	0/1600
0/400	0/25	0/2500
0/600	0/40	0/4000
0/800	0/60	0/6000
0/1000	0/100	0/10,000
0/1500	0/160	0/16,000
0/2000	0/250	0/25,000
0/3000	0/400	0/40,000
0/4000	0/600	0/60,000
0/5000	0/1000	0/100,000
0/6000		
0/7500		
0/10,000		
0/15,000		
Vacuum		
30 in./0 in.Hg	–1/0	–100/0
Compound		
30 in.Hg/15 psi	–1/0/1.5	–100/0/150
30 in.Hg /30 psi	–1/0/3	–100/0/300
30 in.Hg /60 psi	–1/0/5	–100/0/500
30 in.Hg /100 psi	–1/0/9	–100/0/900
30 in.Hg /150 psi	–1/0/15	–100/0/1500
30 in.Hg /300 psi	–1/0/24	–100/0/2400

- ***New PLUS!™ Performance Option:***
  - ***Liquid-filled performance in a dry gauge***
  - ***Fights vibration and pulsations without liquid-fill headaches***
  - ***See pages 6-7 for details***
  - ***Order as option XLL***

OTHER FEATURES:

Available in 2½″ and 3½″ dial sizes, Duralife® pressure gauges are liquid fillable and field convertible for panel mounting. Both zero and span adjustments are standard.

The gauge is available dry, liquid-filled weatherproof or hermetically sealed and *now* with *PLUS!™* performance option. A five year limited warranty is standard with the Duralife® 1009.



BOURDON SYSTEM SELECTION[1]

Ordering Code	Bourdon Tube & Tip Material[1]	Socket Material	Tube Type	Range Selection Limits (psi)	NPT Conn.[6]
AW	316 stainless steel	Bronze	C-Tube	Vac/600	¼
AW	316 stainless steel	Bronze	Helical	1000	¼
SW	316 stainless steel	316 stainless steel	C-Tube	Vac/600	¼ & ½[2]
SW	316 stainless steel	316 stainless steel	Helical	800/15,000	¼ & ½[2]

(1) For selection of the correct Bourdon system material, see the media application table on page 243.
(2) ½ NPT available 3½″ lower SW system only.
(3) Type 1009 gauges may be ordered with metric single-scale dial: kPa,bar or kg/cm².
(4) Dual-scale dials will be supplied with standard metric inner scale and equivalent psi outer scale or with standard psi inner scale and equivalent metric outer scale–please specify.
(5) Special logos and scales available upon request.
(6) ¼″ JIS, BSP or DIN threads available on SW systems.

TO ORDER THIS 1009 DURALIFE PRESSURE GAUGE:

Select: 35 1009 SW (L) 02L XXX 1000#

1. Dial size–2½″, 3½″
2. Case type–1009
3. Tube and socket material
4. Liquid filled (glycerin), leave blank if dry
5. Connection size–⅛ (01) ¼ (02) ½ (04)
6. Connection location–Lower (L), Back (B)
7. Optional Features–see page 176
8. Standard pressure range–1000 psi

Accessories: see pages 233-238

ASHCROFT®
Trust the shield.™

Type 310, 315 All-Welded "Mini" Diaphragm Seal



PRODUCT FEATURES

- Compact size to fit space-restricted areas
- Designed to protect transducers, mini-switches and 3½″ or smaller pressure gauges from corrosion, plugging or freeze-up
- All-welded metal construction prevents leakage of process media
- Rated for 2500 psi at 100°F
- Fill/bleed connection is standard
- Available with male process connection (Type 310)

The compact size of the Ashcroft® 310 mini-seal allows it to fit into space-restricted areas and is designed to protect transducers, mini-switches, and 3½" or smaller dial size pressure gauges from corrosion, plugging or freeze- up. All welded metal construction prevents leakage of process media. It is rated for 2500 psi at 100°F and has a 316L stainless steel top housing standard. Lower housing materials include 316L stainless steel or Hastelloy C. Diaphragm materials include 316L stainless, Hastelloy C or Tantalum. ¼ NPT or ½ NPT process connection sizes are available.

PRODUCT SPECIFICATIONS

Model Number:	Type 310, 315
Process Connection Size:	¼″, ½″ (⅛″, ¾″, 1″- 310 only) (see table A)
Instrument Connection Size:	⅛, ¼ NPT
Diaphragm Material:	316L SS, Hastelloy C276, Tantalum, Monel
Bottom Housing Materials:	316L SS, Hastelloy C276, Monel, Hastelloy B
Filling Fluid:	Glycerin, Silicone, Halocarbon, Syltherm

All specifications are subject to change without notice.
All sales subject to standard terms and conditions.
© Ashcroft Inc. 2015 09/15

Ashcroft Inc., 250 East Main Street, Stratford, CT 06614 USA
Tel: 203-378-8281 • Fax: 203-385-0408
email: info@ashcroft.com • www.ashcroft.com

Type 310, 315 All-Welded "Mini" Diaphragm Seal

Table A – Process Connection

Process Connection	Size	Code
Threaded – male NPT*	⅛	01
Threaded – male NPT*	¼	02
Threaded – male NPT*	½	04
Threaded – male NPT*	¾	06
Threaded – male NPT*	1	08
Threaded – female NPT†	¼	25
Threaded – female NPT†	½	50

*Available in Type 310 only.
†Available in Types 310 & 315.

Pressure Ratings – All 2500 psi except flanged seals are per ASME B 16.5, temperature limit determined by diaphragm, bottom housing and/or filling fluid.

Table B – Type

Description	Code
All-welded mini-seal	310
All-welded midi-seal w/flushing connection	315

Table C – Diaphragm Materials

Materials	Code
316L stainless steel	S
Hastelloy C-276	H
Tantalum	U
Monel	P

Table D – Housing Materials

Bottom(1)	Code	Top(2)
316L SS	S	316L SS
Hastelloy C-276	H	316L SS
Monel	M	Monel

(1) Other bottom housing materials on application.
(2) Top housing material is 316L SS (standard). Monel mini-seal standard with monel top housing.

Table E – Instrument Connection

Instrument Connection	Size	Code
Threaded – female NPT	¼	02T
Threaded – female NPT	⅛	01T

NOTES:
(1) For use with most 3½″ and smaller gauges. Movementless gauge 4½″ (exception).
(2) Other bottom housing materials on application.
(3) Top housing material is 316L SS (standard). Monel mini-seal standard with monel top housing.
(4) Not available with monel bottom housing.

Table F – Filling Fluid

Fill	Service	Connection to Instrument	Temperature Range °F	Code
Glycerin	Pressure	Direct Only	0/400	CG
Silicone	Pressure/Vacuum	Direct or Flexible Line	–40/600	CK
Halocarbon	Pressure/Vacuum in presence of strong oxidizing agent	Direct or Flexible Line	–70/300	CF
Syltherm	Pressure	Direct or Flexible Line	–40/750	HA

Monel is a registered trademark of Huntington Alloys, Inc.
Hastelloy is a registered trademark of Cabot Corp.
Halocarbon is a registered trademark of Halocarbon Products
GYLON 3510 is a registered trademark of Garlock Inc.

HOW TO ORDER:

1. **From Table A...** select PROCESS CONNECTION (e.g., 1/4″ process code 25)
2. **From Table B...** select TYPE (310)
3. **From Table B...** select DIAPHRAGM MATERIAL. (e.g., 316L stainless steel–code S)
4. **From Table C...** select BOTTOM HOUSING MATERIAL. (e.g., 316 stainless steel–code S)
5. **From Table D...** select INSTRUMENT CONNECTION size. (e.g., 1/4 NPT–code 02T)
6. **From Table E...** select FILLING FLUID, if diaphragm seal will be attached to instrument. (e.g., Glycerin–code CG)

Coded order: **25-310SS-02T-CG**

Dimension

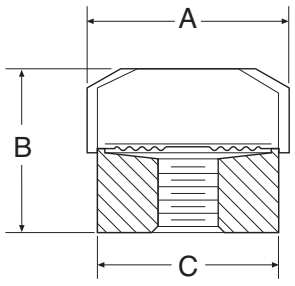

Types 310 mini-seal – Threaded ¼, ½, ¾, NPT

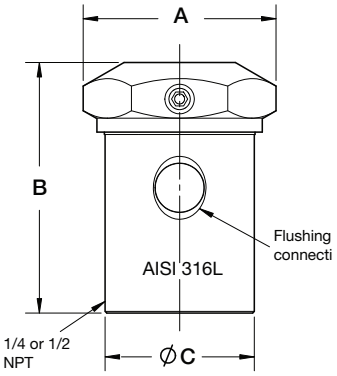

Types 315 mini-seal – Threaded ¼, ½, ¾, NPT

	A		B		C	
	in	mm	in	mm	in	mm
Type 310	1.75	(38)	.81	(30)	1.34	(34)
Type 315	1.73	(44)	2.25	(57.2)	1.34	(34)

All specifications are subject to change without notice.
All sales subject to standard terms and conditions.
© Ashcroft Inc. 2015 09/15

Ashcroft Inc., 250 East Main Street, Stratford, CT 06614 USA
Tel: 203-378-8281 • Fax: 203-385-0408
email: info@ashcroft.com • www.ashcroft.com

CS-451-100 : Identification sheet

VWTC PROJECT NUMBER:	Iqaluit WWTP	REV:	01
PROJECT NAME:	5000218036	SUBMITTED TO (COMPANY):	
ENGINEER:	G. HÉBERT	SUBMITTED TO (RESPONSIBLE)	
PROJECT MANAGER:	C. BEKAERT	PROJECT NUM REFERENCE.:	
PHONE NUMBER:		LOT NUMBER:	

SUPPLIER	EQPT CODE	EQPT TAG NO	DIA	DESCRIPTION	INFO 1	INFO 2	INFO 3	APPLIC.	NOTE	REV
XYLEM	ST-451-103	LSH-02-330	100	HIGH LEVEL FOAT	LEVEL SWITCH/MANUFACTURER:FLYGT// MODEL: ENM-10 (20m)	N/A	N/A			1
XYLEM	ST-451-103	LSH-02-340	100	HIGH LEVEL FOAT	LEVEL SWITCH/MANUFACTURER:FLYGT// MODEL: ENM-10 (20m)	N/A	N/A			1

Technical
specification

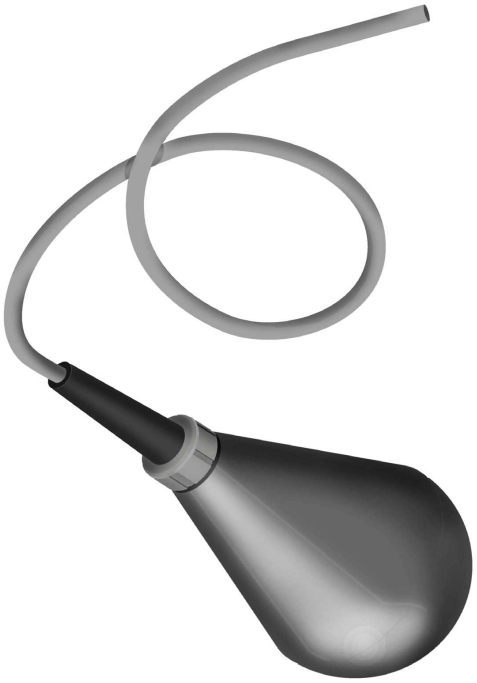

ENM-10 Level regulator

FLYGT
a xylem brand

Table of Contents

PRODUCT DESCRIPTION....2
Product description....2

CHEMICAL RESISTANCE LIST....6
Chemical resistance list....6

PRODUCT RANGE....8
Product range....8

PRODUCT DESCRIPTION

Product description

The simplest possible method for level control! A mechanical switch in a plastic casing, freely suspended at the desired height from its own cable. When the liquid level reaches the regulator, the casing will tilt and the mechanical switch will close or break the circuit, thereby starting or stopping a pump or actuating an alarm device. No wear, no maintenance! In sewage pumping stations, for ground water and drainage pumping – in fact, for most level control applications – the ENM-10 is the ideal solution.

The regulator casing is made of polypropylene and the cable is sheathed with a special PVC or Nitrile/PVC rubber compound. The plastic components are welded and screwed together. Adhesive is never used. Impurities and deposits will not adhere to the smooth casing.

This level regulator is available in different versions, depending upon the medium in which it is to be used. As standard, the regulator can be obtained with 6, 13, 20, 30 or 50 metres (20, 42, 65, 100 or 167 feet) of cable for liquids with specific density between 0.95 and 1.10 g/cm3; for other specific densities and for the Ex-version, the regulator is only available with 20 metres (65 ft) of cable. The regulator can withstand up to 60°C (140°F).

Technical data

Liquid temperature:	min. 0°C (32°F) max. 60°C (140°F)
Liquid density:	min. 0.65 g/cm^3 max. 1.5 g/cm^3
Degree of protection:	IP68, 20 m (65 ft)
Interrupting capacity of micro switch:	AC, resistive load, 250V 10A AC, inductive load, 250V 3A cos ϕ = 0.5 DC, 30V 5A
With gold plated micro switch:	same as above, except: DC, 24V 10mA

Note that local regulations may limit the voltage.

Materials

Body:	Body:
Bending relief:	EPDM rubber
Cable:	special compound PVC or NBR/PVC nitrile/PVC rubber

Dimensions

Table 1

For density g/cm^3	Regulator length mm (in.)	Diameter mm (in.)
0.65–0.80	194 (7 10/16)	100 (4)
0.80–0.95	177 (7)	100 (4)
0.95–1.10	162 (6 3/8)	100 (4)
1.05–1.20	142 (5 9/16)	100 (4)
1.20–1.30	133 (5 1/4)	100 (4)

For density g/cm^3	Regulator length mm (in.)	Diameter mm (in.)
1.30–1.40	130 (5 2/16)	100 (4)
1.40–1.50	126 (5)	100 (4)

Weight: approx. 2 kg (4.5 lb) for a standard density regulator with 20 m cable.

Approvals: CE, CSA, SEMKO, NEMKO, DEMKO

LVD approval according to EN61058

CSA approval: Cert no. 1330172

Cl.I Zone 0, Gr. IIC;

CL.I Div.1 Gr A, B, C&D;

Cl.II Gr. E, F&G;

Cl.III when installed to the certified Intrinsically Safe relay, Ex ia, rated for the locations per submitter controll drawing and installation manual.

Intrincically safe circuits are required for the automatic control system. - Use a EX-safety barrier (e.g. Prod. no. 84 01 07).

0080

Figure 1

Wiring alternative

To conform to local regulations, the level regulators are normally connected through a transformer to a low-tension control circuit.

Two regulators are used; one for starting and one for stopping. A third regulator can be connected if an alarm is required at a given level.

Identical regulators can be used for all functions.

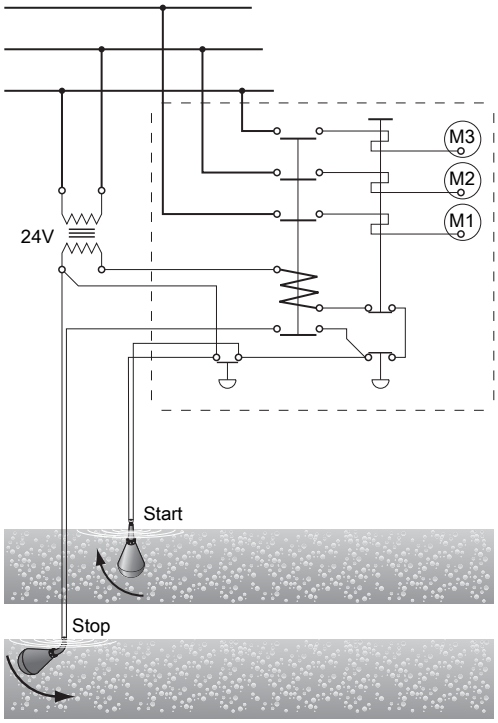

Connect the gray and black leads.

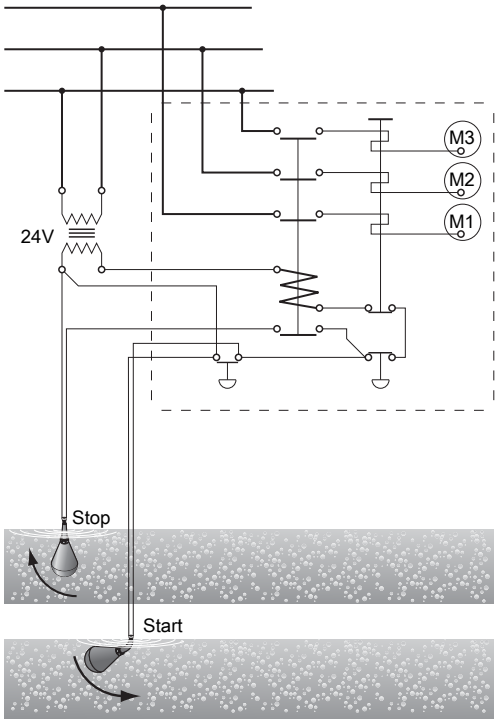

Connect the gray and brown leads.

Insulate the brown lead.
Figure 2: Connected for emptying

Insulate the black lead.
Figure 3: Connected for emptying

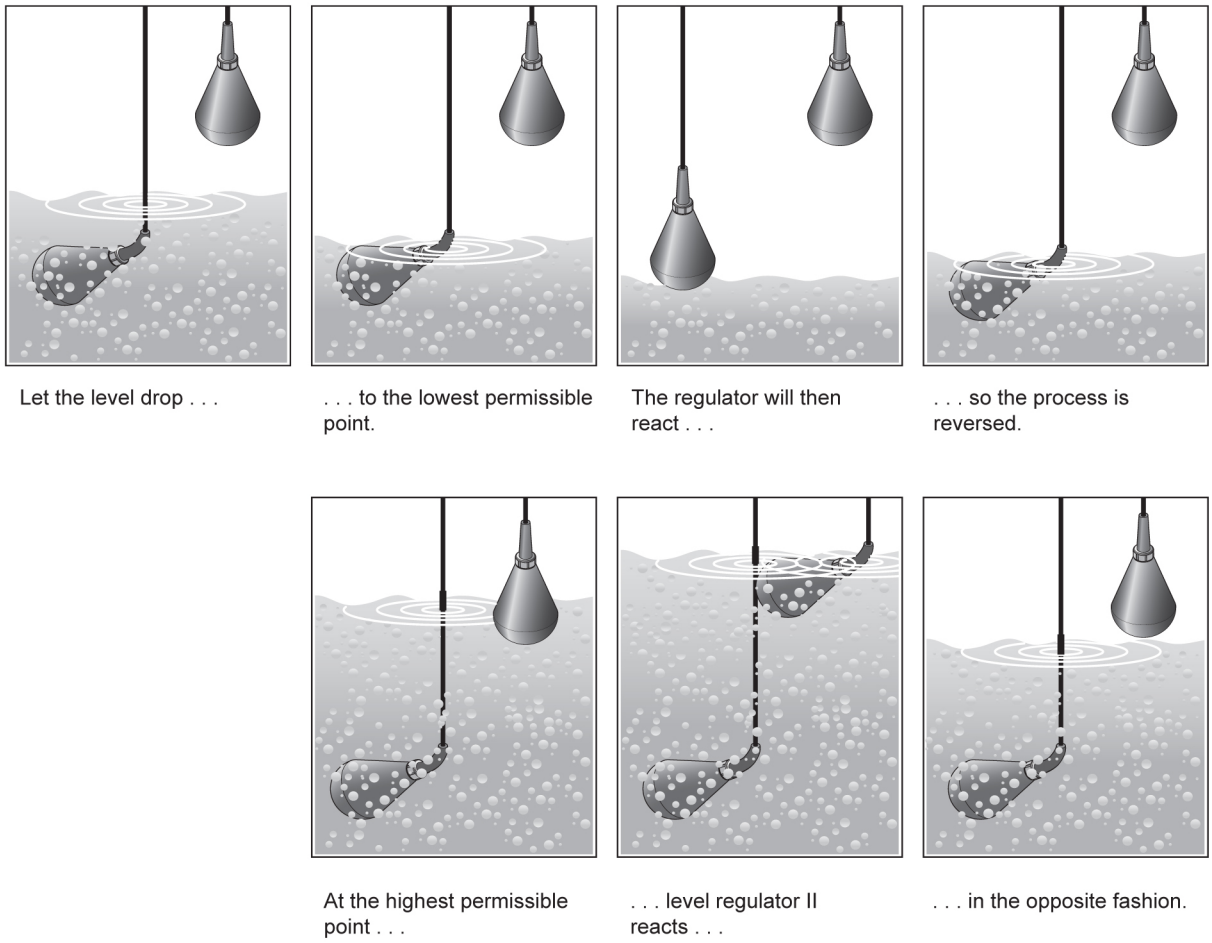

Figure 4

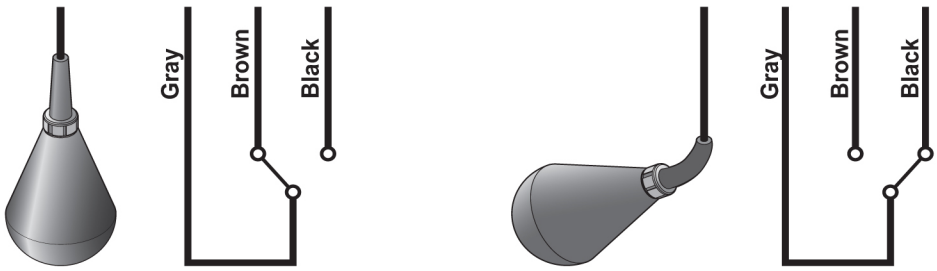

Figure 5: Colour code

Maintenance and repair

ENM-10 is very durable and practically maintenance free. You only have to check on it occasionally, to ensure its continual operation.

- It is recommended to occasionally clean ENM-10, and especially when fat/grease covers the plastic surface.
- At the same time, make an occular inspection of the regulator to make sure neither cable, protective sleeve or plastic casing show any signs of damage.

- A damaged ENM-10 cannot be repaired in any way, due to the hermetic encapsulation. If the unit is found to be damaged, replace it with a new one.
- For Ex-installations, also make absolutely sure that the Ex-barrier (e.g. Prod. no. 84 01 07) is operating correctly - The LED changes when the switch is toggled.

The manufacturers reserve the right to alter performance specification or design without notice.

CHEMICAL RESISTANCE LIST

Chemical resistance list

The liquid in which level regulation is practiced most frequently is, of course, water. Of the millions of regulators in use all over the world today, it is estimated that nine out of ten work in water.

However, with a float body of polypropylene, a cable of PVC or NBR/PVC nitrile/PVC rubber and a bending relief of EPDM rubber, the ENM-10 is virtually insensitive to many aggressive liquids.

The table shows how resistant the ENM-10 equipped with either PVC or NBR/PVC nitrile/PVC rubber cable, is to different chemicals at two different temperatures.

The classification is broken down into the following categories:

0 = No effect, 1 = Minor to moderate and 2 = Severe effect. The sign – means that information is not available.

Keep in mind also that the density of the liquid determines the bouyancy of the regulator. The ENM-10 is made for seven different densities. See *Product description* (page 2).

Always observe local regulations:

Take particular note of:

- risk of fire/explosion
- hygiene requirements

Acids	PVC cable		NBR/PVC nitrile/PVC rubber cable	
	20°C (68°F)	60°C (140°F)	20°C (68°F)	60°C (140°F)
Acetic Acid 50%	1	2	0	0
Acetic Acid 75%	2	2	0	0
Benzoic Acid	2	2	0	0
Boric Acid 5%	0	—	0	0
Butyric Acid	2	2	2	2
Chromic Acid 10%	0	2	2	2
Citric Acid	0	1	0	0
Hydrobromic Acid 5%	1	2	0	0
Hydrochloric Acid 10%	0	1	0	1
Hydrochloric Acid 37%	1	2	0	2
Hydrocyanic Acid 10%	0	0	1	2
Hydrofluoric Acid 5%	0	2	0	1
Hypochloric Acid	1	2	2	2
Maleic Acid	2	2	2	2
Nitric Acid 5%	1	1	1	1
Nitric Acid 65%	2	2	2	2
Oleic Acid	1	2	2	2
Oxalic Acid 50%	1	1	1	2
Phosphoric Acid 25%	0	0	1	2
Phosphoric Acid 85%	0	0	1	2
Sulphuric Acid 10%	1	2	1	2
Sulphuric Acid 78%	2	2	2	2
Tannic Acid	0	0	0	0
Tartaric Acid	1	1	1	1
Bases				
Ammonium Hydroxide	0	—	0	0
Calcium Hydroxide	0	0	0	0
Potassium Hydroxide	1	2	0	0
Sodium Hydroxide	1	2	0	0

Salts	PVC cable		NBR/PVC nitrile/PVC rubber cable	
	20°C (68°F)	60°C (140°F)	20°C (68°F)	60°C (140°F)
Aluminium Chloride	0	0	0	0
Calcium Sulphate	0	0	0	0
Calcium Chloride	0	0	0	0
Calcium Nitrate	0	0	0	0
Copper Chloride	0	0	0	0
Copper Sulphate	0	0	0	0
Ferric Chloride	0	0	0	0
Ferrous Sulphate	0	0	0	0
Magnesium Chloride	0	0	0	0
Potassium Sulphate	0	0	0	0
Potassium Nitrate	0	0	0	0
Potassium Carbonate	1	1	1	1
Potassium Bicarbonate	0	0	0	0
Sodium Sulphate	0	0	0	0
Sodium Chloride	0	0	0	0
Sodium Nitrate	0	0	0	0
Sodium Bicarbonate	0	0	0	0
Sodium Carbonate	0	0	0	0
Tin Chloride	1	1	1	1
Zinc Sulphate	0	0	0	0
Zinc Chloride	0	0	0	0
Oils				
Castor Oil	1	1	1	1
Cocoanut Oil	0	—	0	2
Corn Oil	2	2	2	2
Diesel Oil	2	2	2	2
Linseed Oil	2	2	2	2
Mineral Oils	2	2	2	2
Olive Oil	1	1	1	1
Silicone Oils	0	0	0	0

Solvents and miscellaneous	PVC cable		NBR/PVC nitrile/PVC rubber cable	
	20°C (68°F)	60°C (140°F)	20°C (68°F)	60°C (140°F)
Aceton	2	2	2	2
Aniline	2	2	1	2
Benzene	2	2	2	2
Butyl Alcohol	2	2	0	1
Carbon Tetrachloride	2	2	2	2
Chlorobenzene	2	2	2	2
Chloroform	2	2	2	2
Ethyl Alcohol	2	2	0	1
Ethyl Ether	2	2	2	2
Ethyl Acetate	2	2	2	2
Ethylene Dichloride	2	2	2	2
Ethylene Chloride	2	2	2	2
Formaldehyde 37%	1	2	0	0
Gasoline	2	2	2	2
Kerosene	2	2	2	2
Methyl Alcohol	2	2	0	0
Methyl Ethyl Ketone	2	2	2	2
Methylene Chloride	2	2	2	2
Nitrobenzene	2	2	2	2
Phenol	2	2	2	2
Toluene	2	2	2	2
Trichlorethylene	2	2	2	2
Turpentine	2	2	2	2
Xylene	2	2	2	2
Gases				
Carbon Dioxide	0	0	0	0
Carbon Monoxide	0	0	0	0
Chlorine (wet)	2	2	2	2
Hydrogen Sulphide	0	0	1	1
Sulphur Dioxide (wet)	1	1	2	2

0 = No effect, 1 = Minor to moderate, 2 = Severe effect. – = No information available.

Figure 6

PRODUCT RANGE

Product range

Part no.	For density [g/cm³]	Color of level switch	Type of cable	Cable length [m]	Approvals	For market	Notes
5828800	0,65-0,80	Blue	1	20	CE		
5828801	0,80-0,95	Blue	1	20	CE		
5828802	0,95-1,10	Blue	1	6	CE		
5828803	0,95-1,10	Blue	1	13	CE		
5828804	0,95-1,10	Blue	1	20	CE		
5828805	1,05-1,20	Blue	1	20	CE		
5828806	1,2-1,3	Blue	1	20	CE		
5828807	1,3-1,4	Blue	1	20	CE		
5828808	1,4-1,5	Blue	1	20	CE		
5828809	0,65-0,80	Grey	5	20	CSA/CE	Canada	
5828810	0,80-0,95	Grey	5	20	CSA/CE	Canada	
5828811	0,95-1,10	Grey	5	6	CSA/CE	Canada	
5828812	0,95-1,10	Grey	5	13	CSA/CE	Canada	
5828813	0,95-1,10	Grey	5	20	CSA/CE	Canada	
5828814	1,05-1,20	Grey	5	20	CSA/CE	Canada	
5828815	1,2-1,3	Grey	5	20	CSA/CE	Canada	
5828816	1,3-1,4	Grey	5	20	CSA/CE	Canada	
5828817	1,4-1,5	Grey	5	20	CSA/CE	Canada	
5828818	0,65-0,80	Grey	1	20	CSA/CE	Canada	
5828819	0,80-0,95	Grey	1	20	CSA/CE	Canada	
5828820	0,95-1,10	Grey	1	6	CSA/CE	Canada	
5828821	0,95-1,10	Grey	1	13	CSA/CE	Canada	
5828822	0,95-1,10	Grey	1	20	CSA/CE	Canada	
5828823	1,05-1,20	Grey	1	20	CSA/CE	Canada	
5828824	1,2-1,3	Grey	1	20	CSA/CE	Canada	
5828825	1,3-1,4	Grey	1	20	CSA/CE	Canada	
5828826	1,4-1,5	Grey	1	20	CSA/CE	Canada	
5828827	0,65-0,80	Blue	2	20	CE	USA	
5828828	0,80-0,95	Blue	2	20	CE	USA	
5828829	0,95-1,10	Blue	2	6	CE	USA	
5828830	0,95-1,10	Blue	2	13	CE	USA	
5828831	0,95-1,10	Blue	2	20	CE	USA	
5828832	1,05-1,20	Blue	2	20	CE	USA	
5828833	1,2-1,3	Blue	2	20	CE	USA	
5828834	1,3-1,4	Blue	2	20	CE	USA	
5828835	1,4-1,5	Blue	2	20	CE	USA	
5828836	0,95-1,10	Grey	5	30	CSA/CE	Canada	
5828837	0,95-1,10	Grey	5	50	CSA/CE	Canada	
5828838	0,95-1,10	Grey	5	100	CSA/CE	Canada	
5828839	0,95-1,10	Grey	5	150	CSA/CE	Canada	
5828851	0,95-1,10	Red	3	65	CE		
5828852	0,95-1,10	Red	3	6	CE		
5828853	0,95-1,10	Red	3	13	CE		
5828854	0,95-1,10	Red	3	20	CE		
5828855	0,95-1,10	Red	3	6	CSA/CE	Canada	
5828856	0,95-1,10	Red	3	13	CSA/CE	Canada	
5828857	0,95-1,10	Red	3	20	CSA/CE	Canada	

Cont. →

Figure 7

5828858	0,95-1,10	Red	4	6	CE	USA	
5828859	0,95-1,10	Red	4	13	CE	USA	
5828860	0,95-1,10	Red	4	20	CE	USA	
5828870	0,65-0,80	Blue	5	20	CE		
5828871	0,80-0,95	Blue	5	20	CE		
5828872	0,95-1,10	Blue	5	6	CE		
5828873	0,95-1,10	Blue	5	13	CE		
5828874	0,95-1,10	Blue	5	20	CE		
5828875	1,05-1,20	Blue	5	20	CE		
5828876	1,2-1,3	Blue	5	20	CE		
5828877	1,3-1,4	Blue	5	20	CE		
5828878	1,4-1,5	Blue	5	20	CE		
5828879	0,95-1,10	Blue	1	65	CE		
5828880	0,95-1,10	Blue	1	30	CE		
5828881	0,95-1,10	Blue	1	50	CE		
5828882	0,95-1,10	Grey	1	30	CSA/CE	Canada	
5828883	0,95-1,10	Grey	1	50	CSA/CE	Canada	
5828884	0,95-1,10	Blue	2	30	CE	USA	
5828885	0,95-1,10	Blue	2	50	CE	USA	
5828886	0,95-1,10	Red	3	30	CE		
5828887	0,95-1,10	Red	3	50	CE		
5828890	0,95-1,10	Blue	5	30	CE		
5828891	0,95-1,10	Blue	5	50	CE		
5828892	0,95-1,10	Red	3	6	CE	Japan	
5828893	0,95-1,10	Red	3	13	CE	Japan	
5828894	0,95-1,10	Red	3	20	CE	Japan	
5828895	0,95-1,10	Blue	1	6	CE	Japan	
5828896	0,95-1,10	Blue	1	13	CE	Japan	
5828897	0,95-1,10	Blue	1	20	CE	Japan	
5828898	0,95-1,10	Blue	1	50	CE	Japan	
5947919	0,95-1,10	Blue	5	20	CE		Designed for low current and slow movements
5947920	0,95-1,10	Grey	5	20	CSA/CE		Designed for low current and slow movements

Type of cable:

1. Blue PVC jacket with color coding of wires: Grey/Brown/Black
2. Blue PVC jacket with color coding of wires: Red/White/Black
3. Red PVC jacket with color coding of wires: Grey/Brown/Black
4. Red PVC jacket with color coding of wires: Red/White/Black
5. BLACK NBR/PVC jacket with color coding of wires: Grey/Brown/Black (NBR=Nitrile rubber)

Xylem |ˈzīləm|

1) The tissue in plants that brings water upward from the roots
2) A leading global water technology company

We're 12,000 people unified in a common purpose: creating innovative solutions to meet our world's water needs. Developing new technologies that will improve the way water is used, conserved, and re-used in the future is central to our work. We move, treat, analyze, and return water to the environment, and we help people use water efficiently, in their homes, buildings, factories and farms. In more than 150 countries, we have strong, long-standing relationships with customers who know us for our powerful combination of leading product brands and applications expertise, backed by a legacy of innovation.

For more information on how Xylem can help you, go to xyleminc.com

xylem
Let's Solve Water

Xylem Water Solutions AB
Gesällvägen 33
174 87 Sundbyberg
Sweden
Tel. +46-8-475 60 00
Fax +46-8-475 69 00
http://tpi.xyleminc.com

Visit our Web site for the latest version of this document and more information

The original instruction is in English. All non-English instructions are translations of the original instruction.

© 2011 Xylem Inc

891480_11.1_en.GB_2012-01_TS_ENM-10

CS-912-008 : Identification sheet

VWTC PROJECT NUMBER:	Iqaluit WWTP	REV:	01
PROJECT NAME:	5000218036	SUBMITTED TO (COMPANY):	
ENGINEER:	G. HÉBERT	SUBMITTED TO (RESPONSIBLE)	
PROJECT MANAGER:	C. BEKAERT	PROJECT NUM REFERENCE.:	
PHONE NUMBER:		LOT NUMBER:	

SUPPLIER	EQPT CODE	EQPT TAG NO	DIA	DESCRIPTION	INFO 1	INFO 2	INFO 3	APPLIC.	NOTE	REV
HACH	ST-912-008	AE-02-334		TURBIDIMETER PROBE	IMMERSION TSS SOLITAX IN OPEN TANKS APPLICATIONS MODEL# LXV328.99.10002 // TSS EX1 SC // TURBIDITY AND SUSPENDED SOLIDS FOR CLASS1 DIV2 // MEASURING RANGE TSS: 0.001 - 500 G/L // MEASURING RANGE TURBIDITY: 0.001 - 4000 FNU	CLASS I, DIV. 2 (GROUPS. A, B, C, AND D)				1
HACH	ST-912-008	AE-02-344		TURBIDIMETER PROBE	IMMERSION TSS SOLITAX IN OPEN TANKS APPLICATIONS MODEL# LXV328.99.10002 // TSS EX1 SC // TURBIDITY AND SUSPENDED SOLIDS FOR CLASS1 DIV2 // MEASURING RANGE TSS: 0.001 - 500 G/L // MEASURING RANGE TURBIDITY: 0.001 - 4000 FNU	CLASS I, DIV. 2 (GROUPS. A, B, C, AND D)				1

TSS sc Suspended Solids Family of Sensors



TSS sc probes measure online suspended solids from spring water to corrosive chemicals under the strictest regulatory conditions. With twelve different versions, it is possible to measure Suspended Solids over a wide range of concentrations with just one sensor.

Features and Benefits

One Family for All Applications

With twelve instrument versions and thirty different mounting styles, the Hach TSS sc probes can measure on-line Suspended Solids in virtually all applications under the strictest regulatory conditions.

TSS sc and TSS W sc probes are made of polished stainless steel with a scratch resistant and easy to clean sapphire window design to withstand harsh environments and keep particles from sticking to the surface. For high solids environments, the Hach TSS W sc is equipped with a wiper to maintain accuracy.

TSS HT sc optics and electrical systems are coated with a special material to withstand operating temperatures of 90°C and pressures of up to 10 Bar. The ability to withstand these conditions without the hassle of flow-through cells or cooling lines makes it the probe of choice for process control.

TSS XL sc and TSS VARI sc probes have been specially designed for measurement of Suspended Solids under the high hygienic requirements of the food, beverage, and pharmaceutical industry. An aseptic process connection is achieved with the installation of the Varivent® or XL in-line-housing and the acid, alkali-proof, and high temperature stable materials facilitate the use of the probe under CIP conditions.

TSS TITANIUM sc is the only titanium suspended solids probe in the market designed to provide process control in the most difficult environments. While offering the same high quality measuring properties as the TSS sc, its special titanium body enables it to perform in the most extreme applications.

TSS EX1 sc probes have been designed for measurement in hazardous locations with Class I Div 2 requirements. Depending on the application, it is possible to select either an immersion style or insertion style probe.

Two Parameters in One Instrument

The Hach TSS sc probes can measure both on-line Suspended Solids and Turbidity in one instrument. This flexibility enables the measurement of both parameters under the same application.

Method of Detection

The Hach TSS sc probes have a double optical system with two pulsating infrared LEDs and four receivers. As the transmitted light is scattered, the receivers pick up the incident light at 90° and 120° angles effectively doubling the accuracy of the instrument. This eight channel measurement system, with an integrated bubble and temperature compensating software, enables the instrument to have a wide measuring range that effectively covers most applications, from the darkest pre-treated water to the freshest of spring waters, with one instrument.

IW

FB

DW = drinking water *WW = wastewater municipal* *PW = pure water / power*
IW = industrial water *E = environmental* *C = collections* *FB = food and beverage*

HACH®

Be Right™

Stainless Steel

	Description	Type of Mounting
TSS sc	All purpose standard probe for Suspended Solids measurement.	Tank-side mounting - 5
TSS sc TriClamp	All purpose probe with TriClamp.	Weld-on fitting - 3
TSS sc In-line	All purpose probe for simple in-line installation.	Ball valve fitting - 1
TSS W sc	Same performance and functionality as the TSS sc but with a wiper for use in high solids environments.	Tank-side mounting - 5
TSS W sc TriClamp	TSS W probe with TriClamp.	Weld-on fitting - 3
TSS W sc In-line	Standard probe with wiper for simple in-line installation.	Ball valve fitting - 1
TSS HT sc	Suspended Solids probe for use in high temperature environments of up to 90 °C and 95 °C for short intervals.	Tank-side mounting - 5
TSS HT sc TriClamp	High temperature probe with TriClamp.	Weld-on fitting - 3
TSS HT sc In-line	High temperature probe for simple in-line installation.	Ball valve fitting - 1
TSS VARI sc	Suspended Solids probe with flush installation for use in food, pharmaceutical sectors, or in any VARIVENT industrial environment.	VARIVENT measuring tube - 4
TSS XL sc	Suspended Solids probe designed for use in the beverage and food industries.	XL measuring tube - 2
TSS EX1 sc	Suspended Solids and Turbidity probe designed for use in hazardous locations (Class I Div 2).	Tank-side mounting - 5
TSS EX1 sc TriClamp	Suspended Solids and Turbidity probe designed for use in hazardous locations (Class I Div 2).	Weld-on fitting - 3
TSS EX1 sc In-line	Class I Div 2 certified probe for simple in-line installation.	Ball valve fitting - 1

Titanium

	Description	Type of Mounting
TSS TITANIUM2 sc	Suspended Solids probe for use in aggressive or corrosive environments.	User defined
TSS TITANIUM2 sc TriClamp	Titanium2 probe with TriClamp for simple inline installation and quick access for maintenance.	User defined
TSS TITANIUM7 sc	Suspended Solids probe for use brine, seawater, or high salinity environments.	User defined
TSS TITANIUM7 sc TriClamp	Titanium7 probe with TriClamp for simple inline installation and quick access for maintenance	User defined

Types of Mounting

Whether tank-side mounting, inline installation, or hygienic fittings are required, the TSS sc family of probes has suitable mounting solution for any situation.

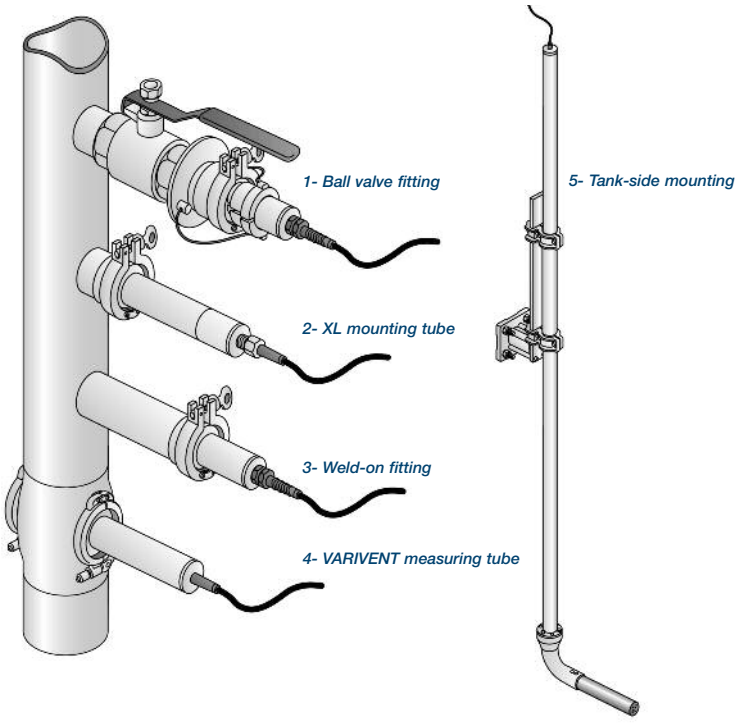

Specifications*

Measurement Method
Combined multiple beam alternating light method with infrared diode system and beam focusing
Turbidity (TRB): 2-channel 90° scattered light measurement in accordance with DIN/EN 27027/ISO 7027, wavelength = 860 nm
Solids (TS): 90° and 120° scattered light measurement, wavelength = 860 nm

Hazardous Locations
TSS EX1 sc Class I Div 2 certified

Measuring Range
Turbidity (TRB): 0.001 to 4,000 FNU
Solids (TS): 0.001 to 500 g/L
With SiO_2 standard solution

Measurement Accuracy
Turbidity (TRB): Up to 1,000 FNU/NTU: <5% of measured value ±0.01 FNU/NTU

Reproducibility
Turbidity (TRB): <3%
Solids (TS): <4%

Response Time
1 s < T90 < 300 s (adjustable)

Calibration
Turbidity (TRB): Factory calibrated
Solids (TS): To be calibrated by customer on site
Zero point: Permanently calibrated in the factory

Pressure Range
<6 bar: TSS W sc
<10 bar: TSS sc, TSS HT sc, TSS TITANIUM2 sc, TSS TITANIUM2 sc
<16 bar: TSS VARI sc, TSS XL sc
<=10 bar: TSS EX1 sc

Flow rate
3 m/s maximum

Ambient Temperature
0 to 50°C: TSS W sc
0 to 60°C: TSS sc, TSS TITANIUM2 sc, TSS TITANIUM7 sc
0 to 80°C: TSS VARI sc, TSS XL sc
0 to 90°C: TSS HT sc
0 to 50°C: TSS EX1 sc

Dimensions
Basin Sensor: D×L 40 × 330 mm
TSS EX1 sc: D×L 48.5 mm × 385 mm
Inline Sensor (TriClamp):
D×L 40 × 332 mm
TSS VARI sc, TSS XL sc:
D×L 40 × 232 mm

Weight
Tank Sensor, Inline Sensor (TriClamp):
Approx. 1.6 kg
TSS EX1 sc: Approx. 2.7 kg
TSS VARI sc, TSS XL sc:
Approx. 1.5 kg

**Specifications subject to change without notice.*

Engineering Specifications

1. The suspended solids and/or turbidity sensor shall consist of a digital sensor designed to connect to a universal controller.
2. The suspended solids and/or turbidity sensor shall use a double optical system with two pulsating infrared LEDs and four receivers effectively doubling the accuracy of the instrument.
3. As the transmitted light is scattered, the receivers pick up the incident light at 90° and 120° angles for suspended solids and at 90° for turbidity in accordance with DIN/EN 27027/ISO 7027. The wavelength for both parameters is 860nm.
4. The eight channel measurement system, with a integrated bubble and temperature compensating software enables the instrument to have a wide measuring range that effectively cover most applications, from the darkest pre-treated water to the freshest of spring waters, with one instrument.
5. All versions have a high polished head to use the self cleaning effect and scratch-resistant sapphire window to withstand harsh environments
6. All sensors shall be capable of immersion in a tank or insertion into a pipe depending on the sensor selection.
7. The materials of construction shall be stainless steel or titanium, depending on the sensor selection.
8. The sensor shall have an operating range of 0.001 to 400 g/L for suspended solids and 0.001 to 4000 NTU for turbidity depending.
9. The sensor shall have an operating temperature from >0–50°C–90°C depending on the model.
10. The initial response time shall be 1 second and user-adjustable up to 300 seconds.
11. Up to 1000 FNU/NTU the accuracy shall be less than 5% of measurement value reading or ±0.01 FNU/NTU, whichever is greater for turbidity.

Ordering Information

TSSsc Turbidity and Suspended Solids Sensors

Immersion in Open Tanks Applications

LXV323.99.10002	TSS sc	Turbidity and Suspended Solids (0.001-4,000 FNU & 0.001-500 g/L) without wiper
LXV324.99.10002	TSS W sc	Turbidity and Suspended Solids (0.001-4,000 FNU & 0.001-500 g/L) with wiper
LXV325.99.10002	TSS HT sc	Turbidity and Suspended Solids (0.001-4,000 FNU & 0.001-500 g/L) without wiper
LXV329.99.10002	TSS TITANIUM2 sc	Turbidity and Suspended Solids (0.001-4,000 FNU & 0.001-500 g/L) without wiper
LXV330.99.10002	TSS TITANIUM7 sc	Turbidity and Suspended Solids (0.001-4,000 FNU & 0.001-500 g/L) without wiper
LXV328.99.10002	TSS EX1 sc	Turbidity and Suspended Solids for hazardous locations (Class I Div 2)

TriClamp Applications

LXV323.99.20002	TSS sc TriClamp	Turbidity and Suspended Solids (0.001-4,000 FNU & 0.001-500 g/L) without wiper
LXV324.99.20002	TSS W sc TriClamp	Turbidity and Suspended Solids (0.001-4,000 FNU & 0.001-500 g/L) with wiper
LXV325.99.20002	TSS HT sc TriClamp	Turbidity and Suspended Solids (0.001-4,000 FNU & 0.001-500 g/L) without wiper
LXV329.99.20002	TSS TITANIUM2 sc TriClamp	Turbidity and Suspended Solids (0.001-4,000 FNU & 0.001-500 g/L) without wiper
LXV330.99.20002	TSS TITANIUM7 sc TriClamp	Turbidity and Suspended Solids (0.001-4,000 FNU & 0.001-500 g/L) without wiper
LXV328.99.20002	TSS EX1 sc TriClamp	Turbidity and Suspended Solids for hazardous locations (Class I Div 2)
LXV326.99.10002	TSS VARI sc	Turbidity and Suspended Solids (0.001-4,000 FNU & 0.001-500 g/L) without wiper
LXV327.99.10002	TSS XL sc TriClamp	Turbidity and Suspended Solids (0.001-4,000 FNU & 0.001-500 g/L) without wiper

Inline Applications

LXV323.99.30002	TSS sc Inline	Turbidity and Suspended Solids (0.001-4,000 FNU & 0.001-500 g/L) without wiper
LXV324.99.30002	TSS W sc Inline	Turbidity and Suspended Solids (0.001-4,000 FNU & 0.001-500 g/L) with wiper
LXV325.99.30002	TSS HT sc Inline	Turbidity and Suspended Solids (0.001-4,000 FNU & 0.001-500 g/L) without wiper
LXV328.99.30002	TSS EX1 sc Inline	Turbidity and Suspended Solids for hazardous locations (Class I Div 2) without wiper

Continued on next page.

Ordering Information *continued*

Accessories

LZY634	Wiper set TSS sc (for 5 changes with screws and screwdriver)
LZY635	Maintenance set wiper (consisting of wiper, wiper axis 2-parts and gaskets)
LZY653	Gasket Silicon for TriClamp mounting
LZY654	Gasket PTFE for TriClamp mounting
LZY655	Gasket FPM for TriClamp mounting
LZY656	Clamp 2-parts, with screw type clamp for TriClamp mounting
LZY657	Clamp 3-parts, with screw type clamp for TriClamp mounting (to use with PTFE gasket)

Mounting Hardware for All TSS sc InSitu Probes

LZX414.00.10000	Standard mounting hardware for all TSS sc InSitu probes

Mounting Hardware for All TSS sc InLine Probes

*Ball Valves**

LZY630.00.10000	Ball valve armature for TSS sc, TSS W sc and TSS HT sc Inline probes including non-coped stainless steel welding flange LZX660
LZY630.00.11000	Ball valve armature for TSS sc, TSS W sc and TSS HT sc Inline probes including non-coped carbon steel welding flange LZX661
LZY630.00.12000	Ball valve armature for TSS sc, TSS W sc and TSS HT sc Inline probes without welding flange
LZY630.00.20000	Ball valve armature for TSS EX1 sc Inline probe including non-coped stainless steel welding flange LZX660
LZY630.00.21000	Ball valve armature for TSS EX1 sc Inline probe including non-coped carbon steel welding flange LZX661
LZY630.00.22000	Ball valve armature for TSS EX1 sc Inline probe without welding flange
LZX660	Non-coped stainless steel welding flange for ball valve in-line armature
LZX661	Non-coped carbon steel welding flange for ball valve in-line armature
LZY441	Hand wheel for ball valve in-line armature
LZY462	Gasket for mounting flange of ball valve in-line armature

Measuring Tubes

LZU304.99.00010	Measuring tube DN65 for TSS VARI sc
LZU304.99.00020	Measuring tube DN80 for TSS VARI sc
LZU304.99.00030	Measuring tube DN100 for TSS VARI sc
LZU304.99.00040	Measuring tube DN125 for TSS VARI sc
LZU304.99.10010	Measuring tube DN65 for TSS XL sc
LZU304.99.10020	Measuring tube DN80 for TSS XL sc
LZU304.99.10030	Measuring tube DN100 for TSS XL sc
LZU304.99.10040	Measuring tube DN125 for TSS XL sc
LZU304.99.10050	Measuring tube DN150 for TSS XL sc
LZU304.99.10060	Measuring tube DN200 for TSS XL sc
LZU304.99.10070	Measuring tube DN250 for TSS XL sc

Welded Branch Pieces

LZU302.99.00000	Welded branch piece raw for all TSS sc TriClamp probes**
LZU302.99.00010	Welded branch piece DN65 for all TSS sc TriClamp probes**
LZU302.99.00020	Welded branch piece DN80 for all TSS sc TriClamp probes**
LZU302.99.00030	Welded branch piece DN100 for all TSS sc TriClamp probes**
LZU302.99.00040	Welded branch piece DN125 for all TSS sc TriClamp probes**
LZU302.99.00050	Welded branch piece DN150 for all TSS sc TriClamp probes**
LZU302.99.00060	Welded branch piece DN200 for all TSS sc TriClamp probes**
LZU302.99.00070	Welded branch piece DN250 for all TSS sc TriClamp probes**
LZU302.99.10000	Welded branch piece raw for TSS XL sc
LZU302.99.10010	Welded branch piece DN65 for TSS XL sc
LZU302.99.10020	Welded branch piece DN80 for TSS XL sc
LZU302.99.10030	Welded branch piece DN100 for TSS XL sc
LZU302.99.10040	Welded branch piece DN125 for TSS XL sc
LZU302.99.10050	Welded branch piece DN150 for TSS XL sc
LZU302.99.10060	Welded branch piece DN200 for TSS XL sc
LZU302.99.10070	Welded branch piece DN250 for TSS XL sc
LZU303.99.00000	Screwed branch piece for all TSS sc TriClamp probes**

** Maximum operating pressure: 6 bar. ** Beside VARI & XL.*

Lit. No. 2657 Rev 3
L11 Printed in U.S.A.
©Hach Company, 2011. All rights reserved.
In the interest of improving and updating its equipment, Hach Company reserves the right to alter specifications to equipment at any time.

At Hach, it's about learning from our customers and providing the right answers. It's more than ensuring the quality of water—it's about ensuring the quality of life. When it comes to the things that touch our lives...

Keep it pure.

Make it simple.

Be right.

For current price information, technical support, and ordering assistance, contact the Hach office or distributor serving your area.

In the United States, contact:

HACH COMPANY World Headquarters
P.O. Box 389
Loveland, Colorado 80539-0389
U.S.A.
Telephone: 800-227-4224
Fax: 970-669-2932
E-mail: orders@hach.com
www.hach.com

U.S. exporters and customers in Canada, Latin America, sub-Saharan Africa, Asia, and Australia/New Zealand, contact:

HACH COMPANY World Headquarters
P.O. Box 389
Loveland, Colorado 80539-0389
U.S.A.
Telephone: 970-669-3050
Fax: 970-461-3939
E-mail: intl@hach.com
www.hach.com

In Europe, the Middle East, and Mediterranean Africa, contact:

HACH LANGE GmbH
Willstätterstraße 11
D-40549 Düsseldorf
GERMANY
Tel: +49 (0) 211 5288-0
Fax: +49 (0) 211 5288-143
E-mail: info@hach-lange.de
www.hach-lange.com

HACH®

Be Right™

To complete your turbidity and suspended solids measurement system, choose from these Hach controllers...

Model sc200 Controller

(see Lit. #2665)



The sc200 Universal Controller is the most versatile controller on the market. The new sc200 controller is the only controller that allows the use of digital and analog sensors, either alone or in combination, to provide compatibility with the broadest range of sensors. It replaces the Hach sc100 digital and GLI53 analog controllers with advanced features for easier operator use.

Model sc1000 Controller

(see Lit. #2403)



Get the same great features as the sc200 Controller above—"plug and play", all digital operation and communication—but with the Hach sc1000 Controller, up to eight Hach sensors can be used with one controller in any combination. The sc1000 Controller is also expandable and upgradeable to easily adapt to your needs.

At Hach, it's about learning from our customers and providing the right answers. It's more than ensuring the quality of water—it's about ensuring the quality of life. When it comes to the things that touch our lives...

Keep it pure.

Make it simple.

Be right.

For current price information, technical support, and ordering assistance, contact the Hach office or distributor serving your area.

In the United States, contact:

HACH COMPANY World Headquarters
P.O. Box 389
Loveland, Colorado 80539-0389
U.S.A.
Telephone: 800-227-4224
Fax: 970-669-2932
E-mail: orders@hach.com
www.hach.com

U.S. exporters and customers in Canada, Latin America, sub-Saharan Africa, Asia, and Australia/New Zealand, contact:

HACH COMPANY World Headquarters
P.O. Box 389
Loveland, Colorado 80539-0389
U.S.A.
Telephone: 970-669-3050
Fax: 970-461-3939
E-mail: intl@hach.com
www.hach.com

In Europe, the Middle East, and Mediterranean Africa, contact:

HACH LANGE GmbH
Willstätterstraße 11
D-40549 Düsseldorf
GERMANY
Tel: +49 (0) 211 5288-0
Fax: +49 (0) 211 5288-143
E-mail: info@hach-lange.de
www.hach-lange.com

Lit. No. 2472 Rev 4
C11 Printed in U.S.A.
©Hach Company, 2011. All rights reserved.
In the interest of improving and updating its equipment, Hach Company reserves the right to alter specifications to equipment at any time.

HACH®
Be Right™

Hach sc200™ Universal Controller

Product Overview

One Controller for the Broadest Range of Sensors

The sc200 Universal Controller is the most versatile controller on the market. The new sc200 controller is the only controller that allows the use of digital and analog sensors, either alone or in combination, to provide compatibility with the broadest range of sensors. It replaces the Hach sc100 digital and GLI53 analog controllers with advanced features for easier operator use.

The sc200 controller platform can be configured to operate either 2 Digital Sensor Inputs, or 1 or 2 Analog Sensor Inputs, or a combination of Digital and Analog Sensor Inputs. Customers may choose their communication options from a variety of offerings ranging from MODBUS RTU to Profibus DPV1.



Choose from up to 29 digital or analog sensors for up to 15 different parameters.

DW
WW
PW
IW

Features and Benefits

Maximum Versatility

- *Standardized controller eliminates the need for a variety of dedicated controllers*
- *Multi-channel controller operates either 1 or 2 sensors reducing inventory holding costs and providing an inexpensive option to add a second sensor at a later time*
- *"Plug and Play" operation with all Hach digital sensors*
- *True dual sensor controller provides 4-20 mA outputs to transmit primary and secondary measurement values*

Ease of Use and Confidence in Results

- *New display and guided calibration procedures reduce operator error*
- *Password protected SD card reader offers a simple solution for data download and transfer*
- *Visual warning system provides critical alerts*

Communication Options

- *MODBUS RS232/RS485 or Profibus DPV1*



Controller Configuration	Functionality
2 Channel Digital Controller	Maximum versatility and flexibility: • Plug and play with all Hach digital sensors • Mix and match with Hach digital and GLI analog sensors
2 Channel Controller with 1 Analog and 1 Digital Sensor Input	• Plug and play with any one Hach digital sensor • Mix and match with any one GLI analog sensor
1 or 2 Channel Analog Controller	• Mix and match up to two GLI analog sensors

DW = drinking water *WW = wastewater municipal* ***PW = pure water / power***
IW = industrial water ***E = environmental*** *C = collections* ***FB = food and beverage***

Controller Comparison







Features	Current sc100™ Controller	GLI53 Controller	NEW! sc200™ Controller	Benefits
Display	64 x 128 pixels 33 x 66 mm (1.3 x 2.6 in.)	64 x 128 pixels 33 x 66 mm (1.3 x 2.6 in.)	160 x 240 pixels 48 x 68 mm (1.89 x 2.67 in.) Transreflective	• Improved user interface—50% bigger • Easier to read in daylight and sunlight
Data Management	irDA Port/PDA Service Cable	N/A	SD Card Service Cable	• Simplifies data transfer • Standardized accessories/ max compatibility
Sensor Inputs	2 Max Direct Digital Analog via External Gateway	2 Max Analog Depending on Parameter	2 Max Digital and/or Analog with Sensor Card	• Simplifies analog sensor connections • Works with GLI and Hach's digital sensors
Analog Inputs	N/A	N/A	1 Analog Input Signal Analog 4-20mA Card	• Enables non-sc analyzer monitoring • Accepts mA signals from other analyzers for local display • Consolidates analog mA signals to a digital output
4-20 mA Outputs	2 Standard	2 Standard	2 Standard Optional 4 Additional	• Total of six (6) 4-20 mA outputs enables up to 3 mA outputs per sensor input
Digital Communication	MODBUS 232/485 Profibus DP V1.0	N/A	MODBUS 232/485 Profibus DP V1.0	• Unprecedented combination of sensor breadth and digital communication options

To complete your measurement system, choose from Hach's portfolio of controller and sensor products...



Choose from Hach's Broad Range of Digital and Analog Sensors

Parameter	Sensor	Digital or Analog
Ammonia	AMTAX™ sc, NH4D sc	●
Chlorine	CLF10 sc, CLT10 sc, 9184 sc	●
Chlorine Dioxide	9185 sc	●
Conductivity	3400, 3700	△
Dissolved Oxygen	LDO™, 5740 sc	●
Dissolved Oxygen	5500	△
Flow	U53, F53 Sensors	△
Nitrate	NITRATAX™ sc, NO3D sc	●
Oil in Water	FP360 sc	●
Organics	UVAS sc	●
Ozone	9187 sc	●
pH/ORP	pHD	●
pH/ORP	pHD, pH Combination, LCP	△
Phosphate	PHOSPHAX™ sc	●
Sludge Level	SONATAX™ sc	●
Suspended Solids	SOLITAX™ sc, TSS sc	●
Turbidity	1720E, FT660 sc, SS7 sc, ULTRATURB sc, SOLITAX sc	●

● = Digital △ = Analog

The diagrams below demonstrate the versatility and flexibility for the base controller units. Connect any of the appropriate sensors listed above to meet your measurement needs. Operation of analog sensors require the controller to be equipped with the appropriate sensor card.

2 Channel Digital Controller Configurations

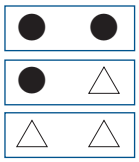

2 Channel Controller with 1 Analog and 1 Digital Sensor Input Configurations

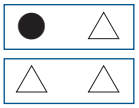

2 Channel Analog Controller Configurations



Engineering Specifications

The controller shall be a microprocessor based instrument.

2. The enclosure shall be 1/2 DIN format, NEMA4X rated for wall, pole and panel mounting.
3. The controller shall offer both 100–240 Vac 50/60 Hz and 24 Vdc power options.
4. The controller shall offer two analog 0/4-20 mA output signals with independent PID control functions and optional four additional 4-20 mA outputs.
5. The controller shall accept either Digital Sensors or Sensor Modules for pH, Conductivity, DO, Paddle Wheel Flow, and Ultra Sonic Flow sensors.
6. The controller shall have single channel and dual channel options.
7. The controller shall have options for MODBUS RS232, MODBUS RS485 and Profibus DPV1 communication.
8. The display contrast shall be adjustable.
9. The Menu shall be available in at least 19 different languages.
10. The controller shall have 2 Data logs, 128 kb each. The logged data shall be downloadable on a SD card in XML format.
11. The controller shall be Hach Company sc200 Universal Controller.

Specifications*

sc200 General Specifications

Display
Graphic dot matrix LCD with LED backlighting
Transreflective

Display Size
48 x 68 mm (1.89 x 2.67 in.)

Display Resolution
240 x 160 pixels

Height x Width x Depth
144 x 144 x 181 mm (5.7 x 5.7 x 7.1 in.)

Weight
1.70 kg (3.75 lb)

Power Requirements
100 – 240 Vac ±10%, 50/60 Hz
24 Vdc -15% + 20%

Operating Temperature
-20 to 60°C (-4 to 140°F), 0 to 95% RH non-condensing

Storage Temperature
-20 to 70°C (-4 to 158°F), 0 to 95% RH non-condensing

Analog Output Signal
Two 0/4 to 20 mA isolated current outputs, max 500Ω

Operational Mode
Primary or secondary measurement or calculated value (dual channel only)

Functional Mode
Linear, Logarithmic, Bi-linear, PID

Optional 4 additional 4/20 mA isolated current outputs, max 500Ω @ 18-24 Vdc (customer-supplied power source)

Security Levels
Two password protected levels

Enclosure Materials
Polycarbonate, Aluminum (powder coated), Stainless Steel

Mounting Configurations
Wall, pole and panel mounting

Enclosure Rating
NEMA4X / IP66

Conduit Openings
1/2" NPT Conduit

Relays
Four electromechanical SPDT (Form C) contacts, 1200W, 5 A, 250 Vac

Operational Mode
Primary or secondary measurement, calculated value (dual channel only) or timer

Functional Mode
Alarm, Timer, Feeder Control, PWM or FM Control, System Alarm

Digital Communication
MODBUS RS232/RS485, Profibus DPV1 optional

Memory Backup
Flash memory

Electrical Certifications
EMC: CE compliant for conducted and radiated emissions CISPR 11 (Class A limits), EMC Immunity EN 61326-1 (Industrial limits)

Safety: General Purpose UL/CSA 61010-1 with cETLus safety mark

sc200 for Hach Analog pH/ORP Sensors

Measuring Range
-2.0 to 14.0 pH or -2.00 to 14.00 pH
- 2,100 to 2,100 mV

Repeatability
±0.1% of range

Response Time
0.5 s

Temperature Range
PT100/PT1000: -20 to 200°C (-4 to 392°F)
NTC300: -20 to 110°C (-4 to 230°F)
Manual: -25 to 400°C (-13 to 752°F)

Temperature Accuracy
±0.5°C (0.9°F)

Temperature Drift
±0.03% of reading /°C

Temperature Compensation
Automatic from -20 to 110°C (-4 to 230°F) or manual

Temperature Sensors
PT100/PT1000/NTC300

Temperature Compensation Curves
Nernst, for Pure Water: Ammonia, Morpholine, User Defined (linear)

Sensor-to-Controller Distance (maximum)
pHD or LCP sensor: 914 m (3000 ft.)
pH Combination electrode w/ preamplifier: 300 m (958 ft.)
pH Combination electrode w/o preamplifier: 30 m (100 ft.), depending on environment this distance is shorter

Calibration Methods
2-point buffer (pH only)
1-point buffer (pH only)
2-point sample (pH only)
1-point sample (pH or ORP)

Specifications *continued*

sc200 for Hach Analog Contacting Conductivity Sensors

Measuring Range

Conductivity
µS/cm: 0-2.000, 0-20.00, 0-200.0 or 0-2,000
mS/cm: 0-2.000, 0-20.00 or 0-200.0

Resistivity
0-19.99 MΩ•cm or 0-999.9 kΩ•cm

TDS
0-9999 ppm or 0-9999 ppb

Repeatability, Precision (0-20 µS/cm, K=1)
±0.02 mS/cm

Repeatability (20-200,000 µS/cm, K=1)
±0.1% of reading

Response Time
0.5 s

Temperature Range
-20 to 200°C (-4 to 392°F)

Temperature Accuracy
±0.5°C (0.9°F)

Temperature Drift
> 20 µS/cm: ±0.02% of reading / °C
< 20 µS/cm: ±0.004 µS/cm

Temperature Compensation
Automatic from -20 to 200°C (-4 to 392°F) or manual

Temperature Sensor
PT100/PT1000

Temperature Compensation Curves
Linear, Ammonia, Natural water, User Defined, none

Sensor-to-Controller Distance (max)
91m (300 ft.)

Calibration Methods
Zero
GLI DRY-CAL
1-point sample

sc200 for Hach Analog Inductive Conductivity Sensors

Measuring Range

Conductivity
µS/cm: 0-200.0 or 0-2,000
mS/cm: 0-2.000, 0-20.00, 0-200.0 or 0-2,000
S/cm: 0-2.000

% Concentration
0-99.99% or 0-200.0%

TDS
0-9999 ppm repeatability

Repeatability > 500 µS/cm
±0.5% of reading

Repeatability < 500 µS/cm
±2.5 µS/cm

Response Time
1 s

Temperature Range
-20 to 200°C (-4 to 392°F)

Temperature Accuracy
±0.5°C (0.9°F)

Temperature Drift
> 500 µS/cm: ±0.02% of reading / °C
< 500 µS/cm: ±0.1 µS/cm

Temperature Compensation
Automatic from -20 to 200°C (-4 to 392°F) or manual

Temperature Sensors
PT1000

Temperature Compensation Curves
Linear, Natural water, User Defined, none**

Concentration Curves
H_3PO_4: 0-40%; HCl: 0-18%; HCl: 22-36%; NaOH: 0-16%; $CaCl_2$: 0-22%; HNO_3: 0-28%; HNO_3: 36-96%; H_2SO_4: 0-30%; H_2SO_4: 40-80%

Sensor-to-Controller Distance

Full-scale value	*Maximum length*
200 to 2,000 µS/cm	61m (200 ft.)
2,000–2,000,000 µS/cm	91m (300 ft.)

Calibration Methods
1-point Cond (or Concentration or TDS)
Zero

***Available curves depend on the selected type of measurement (Conductivity, Concentration or TDS).*

Continued on next page.

Specifications *continued*

Linearity 3700 Inductive Conductivity Sensors

1.5 mS/cm – 2 S/cm
1% or reading

< 1.5 mS/cm
±15 µS/cm

Linearity 3700 Inductive Conductivity Sensors with Multiple Point Calibration

1.5 mS/cm – 2 S/cm
0.5% or reading

< 1.5 mS/cm
±5 µS/cm

sc200 for Hach Analog Dissolved Oxygen Sensors

Measuring Range
0 to 40 ppm
200% saturation

Repeatability
±0.05% of range

Response Time
0.5 s

Temperature Range
0 to 50°C (32 to 122°F)

Temperature Accuracy
±0.5°C (0.9°F)

Temperature Drift
±0.02% of reading / °C

Temperature Compensation
Automatic from 0 to 40 ppm or manual

Temperature Sensor
NTC30K / Manual

Sensor-to-Controller Distance (max)
305 m (1000 ft.)

Calibration Methods
Sample
Air
Saturation

sc200 for Hach UltraSonic Flow Sensor

Flow Rate
0-9999, 0-999.9, 0-99.99 with selectable flow rate units and multiplier

Volume
0-9,999,999 with selectable volume units

Depth
0-1200.0 inches, 0-100.0 feet, 0-30,000 mm, or 0-30.00 meters

Input Filter
999 sec

Totalizers
8-digit resettable LCD software totalizer

Totalized Flow
Gal., $ft.^3$, acre-ft., lit., m^3

Repeatability
±0.1% of span

Sensor-to-Controller Distance (max)
100 m (328 ft.)

Calibration Methods
Cal Depth 1 point
Cal Depth 2 point

sc200 for Hach Paddle Wheel Flow Sensor

Flow Rate
Function of Structure Type: 0-9999, 0-999.9, 0-99.99 with selectable flow rate units and multiplier

Volume
0-9,999,999 with selectable volume units

Input Filter
999 sec

Totalizers
8-digit resettable LCD software totalizer

Totalized Flow
Gal., $ft.^3$, acre-ft., lit., m^3

Sensor-to-Controller Distance (max)
GLI impeller Sensors: 610m (2000 ft.)
Non-GLI Sensors: 91m (300 ft.)

**Specifications subject to change without notice.*

Dimensions

The sc200 controller unit can be installed on a surface, panel, or pipe (horizontally or vertically). No tools are needed to connect the controller unit to any Hach digital sensor. NOTE: Dimensions are in inches [millimeters].

Minimum Spacing Dimensions for Group Mounting

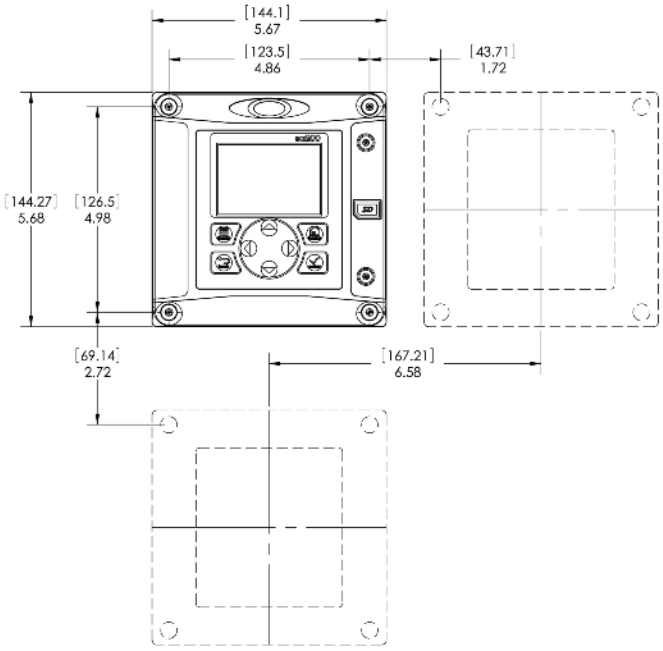

Mounting Dimensions

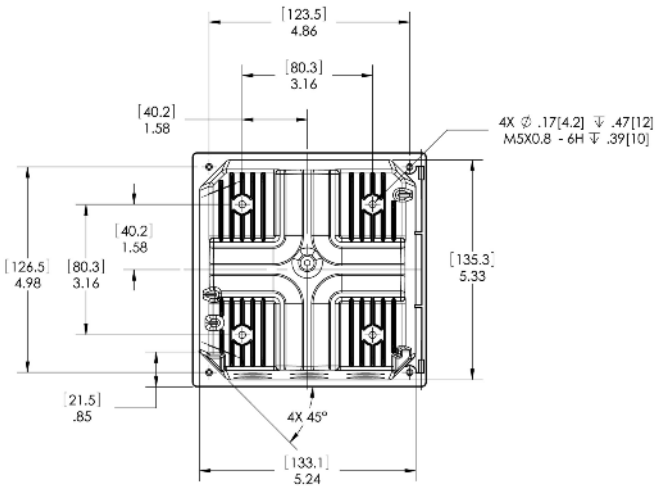

Bottom View

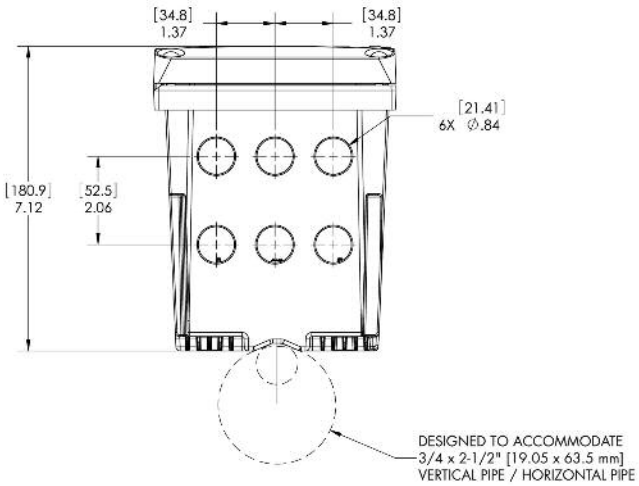

Ordering Information

sc200 for Hach Digital Sensors

LXV404.99.00552	sc200 controller, 2 channel, digital
LXV404.99.00502	sc200 controller, 1 channel, digital
LXV404.99.00542	sc200 controller, 2 channel, digital & mA input
LXV404.99.00512	sc200 controller, 2 channel, digital & pH/DO
LXV404.99.00522	sc200 controller, 2 channel, digital & Conductivity
LXV404.99.00532	sc200 controller, 2 channel, digital & Flow

sc200 for Hach Analog Sensors

LXV404.99.00102	sc200 controller, 1 channel, pH/DO
LXV404.99.00112	sc200 controller, 2 channel, pH/DO
LXV404.99.00202	sc200 controller, 1 channel, Conductivity
LXV404.99.00222	sc200 controller, 2 channel, Conductivity
LXV404.99.00212	sc200 controller, 2 channel, pH/DO & Conductivity
LXV404.99.00302	sc200 controller, 1 channel, Flow
LXV404.99.00332	sc200 controller, 2 channel, Flow
LXV404.99.00312	sc200 controller, 2 channel, Flow & pH/DO
LXV404.99.00322	sc200 controller, 2 channel, Flow & Conductivity

Note: Other Sensor combinations are available. Please contact Hach Technical Support or your Hach representative.

Note: Communication options (MODBUS and Profibus DPV1) are available. Please contact Hach Technical Support or your Hach representative.

Power Cords

9202900	sc200 power cord with strain relief, 125 Vac
9203000	sc200 power cord with strain relief, 230 Vac, European-style plug

Accessories

9220600	sc200 Weather and Sun Shield with UV Protection Screen
8809200	sc200 UV Protection Screen
1000G3088-001	Weather Protection Cover
9218200	SD card reader (USB) for connection to PC
9218100	4 GB SD card

At Hach, it's about learning from our customers and providing the right answers. It's more than ensuring the quality of water—it's about ensuring the quality of life. When it comes to the things that touch our lives...

Keep it pure.

Make it simple.

Be right.

For current price information, technical support, and ordering assistance, contact the Hach office or distributor serving your area.

In the United States, contact:

HACH COMPANY World Headquarters
P.O. Box 389
Loveland, Colorado 80539-0389
U.S.A.
Telephone: 800-227-4224
Fax: 970-669-2932
E-mail: orders@hach.com
www.hach.com

U.S. exporters and customers in Canada, Latin America, sub-Saharan Africa, Asia, and Australia/New Zealand, contact:

HACH COMPANY World Headquarters
P.O. Box 389
Loveland, Colorado 80539-0389
U.S.A.
Telephone: 970-669-3050
Fax: 970-461-3939
E-mail: intl@hach.com
www.hach.com

In Europe, the Middle East, and Mediterranean Africa, contact:

HACH LANGE GmbH
Willstätterstraße 11
D-40549 Düsseldorf
GERMANY
Tel: +49 (0) 211 5288-0
Fax: +49 (0) 211 5288-143
E-mail: info@hach-lange.de
www.hach-lange.com

Lit. No. 2665 Rev 3
K10 Printed in U.S.A.
©Hach Company, 2010. All rights reserved.
In the interest of improving and updating its equipment, Hach Company reserves the right to alter specifications to equipment at any time.

HACH®
Be Right™

CS-912-007 : Identification sheet

VWTC PROJECT NUMBER:	Iqaluit WWTP	REV:	01
PROJECT NAME:	5000218036	SUBMITTED TO (COMPANY):	
ENGINEER:	G. HÉBERT	SUBMITTED TO (RESPONSIBLE)	
PROJECT MANAGER:	C. BEKAERT	PROJECT NUM REFERENCE.:	
PHONE NUMBER:		LOT NUMBER:	

SUPPLIER	EQPT CODE	EQPT TAG NO	DIA	DESCRIPTION	INFO 1	INFO 2	INFO 3	APPLIC.	NOTE	REV
HACH	ST-912-007	AIT-02-334		TURBIDIMETER CONTROLLER	SC200 UNIVERSAL CONTROLLER: 100-240 V AC WITH TWO DIGITAL SENSOR INPUTS AND TWO 4-20 MA OUTPUTS // MODEL # LXV404.99.00552 // OPERATING TEMPERATURE RANGE: -20 - 60 °C AT 0 - 95% RH (NON-CONDENSING) //	POWER REQUIREMENTS (HZ): 50 - 60 HZ POWER REQUIREMENTS (VOLTAGE): 100 - 240 VAC // SENSOR INPUT #1: DIGITAL // SENSOR INPUT #2: DIGITAL //				1
HACH	ST-912-007	AIT-02-344		TURBIDIMETER CONTROLLER	SC200 UNIVERSAL CONTROLLER: 100-240 V AC WITH TWO DIGITAL SENSOR INPUTS AND TWO 4-20 MA OUTPUTS // MODEL # LXV404.99.00552 // OPERATING TEMPERATURE RANGE: -20 - 60 °C AT 0 - 95% RH (NON-CONDENSING) //	POWER REQUIREMENTS (HZ): 50 - 60 HZ POWER REQUIREMENTS (VOLTAGE): 100 - 240 VAC // SENSOR INPUT #1: DIGITAL // SENSOR INPUT #2: DIGITAL //				1

sc200™ UNIVERSAL CONTROLLER

Applications
- Drinking Water
- Wastewater
- Industrial Water
- Power



One Controller for the Broadest Range of Sensors.

Choose from 30 digital and analog sensor families for up to 17 different parameters.

Maximum Versatility

The sc200 controller allows the use of digital and analog sensors, either alone or in combination, to provide compatibility with Hach's broad range of sensors, eliminating the need for dedicated, parameter-specific controllers.

Ease of Use and Confidence in Results

Large, high-resolution, transreflective display provides optimal viewing resolution in any lighting condition. Guided calibration procedures in 19 languages minimize complexity and reduce operator error. Password-protected SD card reader offers a simple solution for data download and transfer. Visual warning system provides critical alerts.

Wide Variety of Communication Options

Utilize two to five analog outputs to transmit primary and secondary values for each sensor, or integrate Hach sensors and analyzers into MODBUS RS232/RS485, Profibus® DP, and HART networks.



Password protected SD card reader offers a simple solution for data download and transfer, and sc200 and digital sensor configuration file duplication and backup.

HACH®
Be Right™

Controller Comparison







Features	Previous Models sc100™ Controller	Previous Models GLI53 Controller	sc200™ Controller	Benefits
Display	64 x 128 pixels 33 x 66 mm (1.3 x 2.6 in.)	64 x 128 pixels 33 x 66 mm (1.3 x 2.6 in.)	160 x 240 pixels 48 x 68 mm (1.89 x 2.67 in.) Transreflective	• Improved user interface—50% bigger • Easier to read in daylight and sunlight
Data Management	irDA Port/PDA Service Cable	N/A	SD Card Service Cable	• Simplifies data transfer • Standardized accessories/max compatibility
Sensor Inputs	2 Max Direct Digital Analog via External Gateway	2 Max Analog Depending on Parameter	2 Max Digital and/or Analog with Sensor Card	• Simplifies analog sensor connections • Works with analog and digital sensors
Analog Inputs	N/A	N/A	1 Analog Input Signal Analog 4-20mA Card	• Enables non-sc analyzer monitoring • Accepts mA signals from other analyzers for local display • Consolidates analog mA signals to a digital output
4-20 mA Outputs	2 Standard	2 Standard	2 Standard Optional 3 Additional	• Total of five (5) 4-20 mA outputs allows multiple mA outputs per sensor input
Digital Communication	MODBUS RS232/RS485 Profibus DP V1.0	HART	MODBUS RS232/RS485 Profibus DP V1.0 HART 7.2	• Unprecedented combination of sensor breadth and digital communication options

Choose from Hach's Broad Range of Digital and Analog Sensors

Parameter	Sensor	Digital or Analog
Ammonia	AMTAX™ sc, NH4D sc, AISE sc, AN-ISE sc	●
Chlorine	CLF10 sc, CLT10 sc, 9184 sc	●
Chlorine Dioxide	9185 sc	●
Conductivity	GLI 3400 Contacting, GLI 3700 Inductive	△
Dissolved Oxygen	LDO® Model 2, 5740 sc	●
Dissolved Oxygen	5500	△
Flow	U53, F53 Sensors	△
Nitrate	NITRATAX™ sc, NO3D sc, NISE sc, AN-ISE sc	●
Oil in Water	FP360 sc	●
Organics	UVAS sc	●
Ozone	9187 sc	●
pH/ORP	pHD	●
pH/ORP	pHD, pH Combination, LCP	△
Phosphate	PHOSPHAX™ sc	●
Sludge Level	SONATAX™ sc	●
Suspended Solids	SOLITAX™ sc, TSS sc	●
Turbidity	1720E, FT660 sc, SS7 sc, ULTRATURB sc, SOLITAX sc, TSS sc	●
Ultra Pure Conductivity	8310, 8311, 8312, 8315, 8316, 8317 Contacting	△
Ultra Pure pH/ORP	8362	△

● = Digital △ = Analog

Connect up to two of any of the sensors listed above, in any combination, to meet your application needs. The diagrams below demonstrate the potential configurations. Operation of analog sensors requires the controller to be equipped with the appropriate sensor module. Contact Hach Technical Support for help with selecting the appropriate module.

2 Channel Configurations

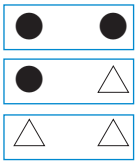

1 Channel Configurations

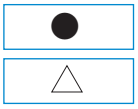

Specifications*

Dimensions (H x W x D)	5.7 in x 5.7 in x 7.1 in (144 mm x 144 mm x 181 mm)
Display	Graphic dot matrix LCD with LED backlighting, transreflective
Display Size	1.9 x 2.7 in. (48 mm x 68 mm)
Display Resolution	240 x 160 pixels
Weight	3.75 lbs. (1.70 kg)
Power Requirements (Voltage)	100 - 240 V AC, 24 V DC
Power Requirements (Hz)	50/60 Hz
Operating Temperature Range	-20 to 60 °C , 0 to 95% RH non-condensing
Analog Outputs	Two (Five with optional expansion module) to isolated current outputs, max 550 Ω , Accuracy: ± 0.1% of FS (20mA) at 25 °C, ± 0.5% of FS over -20 °C to 60 °C range Operational Mode: measurement or calculated value
Analog Output Functional Mode	Linear, Logarithmic, Bi-linear, PID
Security Levels	2 password-protected levels
Mounting Configurations	Wall, pole, and panel mounting
Enclosure Rating	NEMA 4X/IP66
Conduit Openings	1/2 in NPT Conduit
Relay: Operational Mode	Primary or secondary measurement, calculated value (dual channel only) or timer
Relay Functions	Scheduler (Timer), Alarm, Feeder Control, Event Control, Pulse Width Modulation, Frequency Control, and Warning
Relays	Four electromechanical SPDT (Form C) contacts, 1200 W, 5 A
Communication	MODBUS RS232/RS485, PROFIBUS DPV1, or HART 7.2 optional
Memory Backup	Flash memory
Electrical Certifications	EMC CE compliant for conducted and radiated emissions: - CISPR 11 (Class A limits) - EMC Immunity EN 61326-1 (Industrial limits) Safety cETLus safety mark for: - General Locations per ANSI/UL 61010-1 & CAN/CSA C22.2. No. 61010-1 - Hazardous Location Class I, Division 2, Groups A,B,C & D (Zone 2, Group IIC) per FM 3600 / FM 3611 & CSA C22.2 No. 213 M1987 with approved options and appropriately rated Class I, Division 2 or Zone 2 sensors cULus safety mark - General Locations per UL 61010-1 & CAN/CSA C22.2. No. 61010-1

Subject to change without notice.

Dimensions

Surface Mounting Dimensions

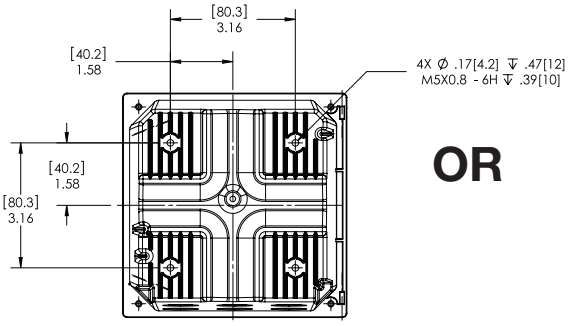

Mounting Dimensions
(Rear View)

OR

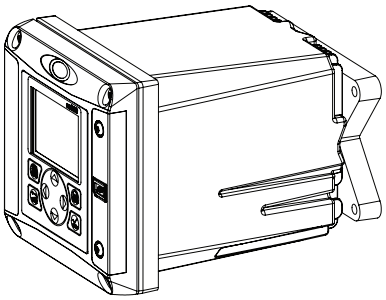

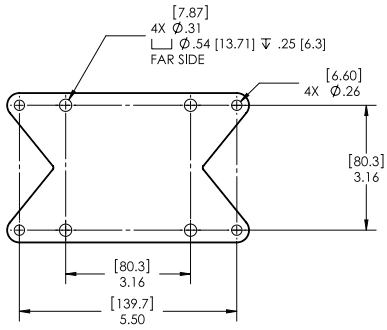

Bracket (supplied) for Surface Mounting
(Not compatible with Weather and Sun Shield p/n 9220600 when surface mounting.)

Panel Mounting Dimensions

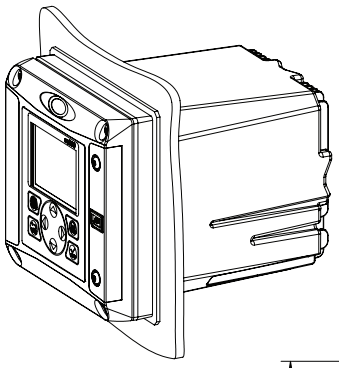

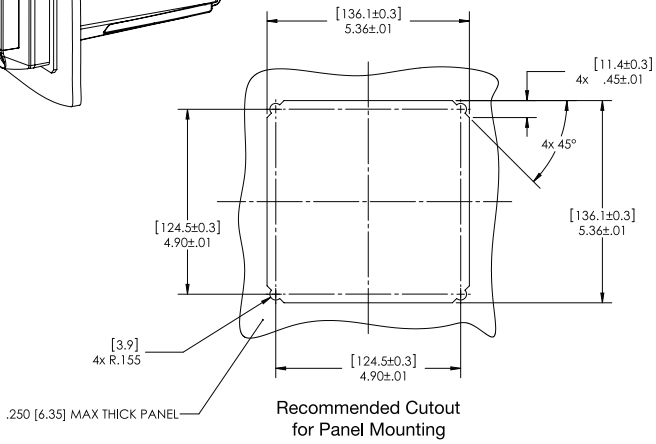

Recommended Cutout
for Panel Mounting

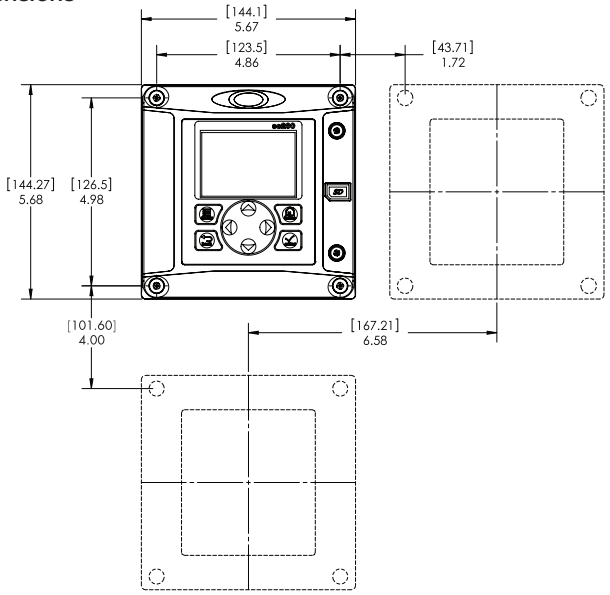

Minimum Spacing Dimensions
for Group Mounting

Top and Bottom Views

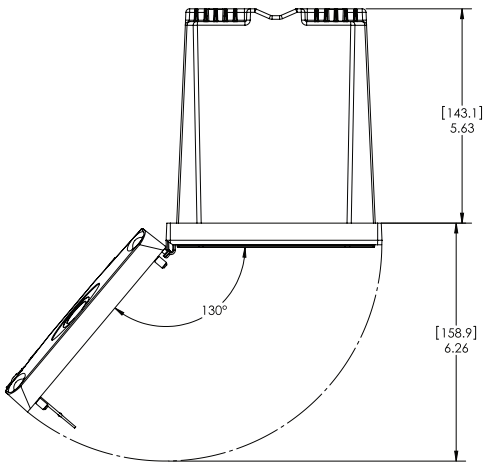

Door Opening Details

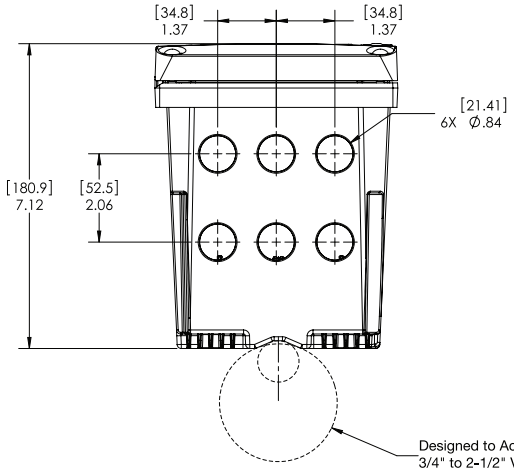

Ordering Information

sc200 for Hach Digital and Analog Sensors

LXV404.99.00552	sc200 controller, 2 channels, digital
LXV404.99.00502	sc200 controller, 1 channel, digital
LXV404.99.00102	sc200 controller, 1 channel, pH/DO
LXV404.99.00202	sc200 controller, 1 channel, Conductivity
LXV404.99.01552	sc200 controller, 2 channels, digital, Modbus RS232/RS485
LXV404.99.00112	sc200 controller, 2 channel, pH/DO

Note: Other Sensor combinations are available. Please contact Hach Technical Support or your Hach representative.

Note: Communication options (MODBUS, Profibus DPV1, and HART) are available. Please contact Hach Technical Support or your Hach representative.



sc200 for Ultrapure Sensors

9500.99.00602	sc200 controller, 1 channel, ultrapure conductivity
9500.99.00702	sc200 controller, 1 channel, ultrapure pH
9500.99.00662	sc200 controller, 2 channel, ultrapure conductivity
9500.99.00772	sc200 controller, 2 channel, ultrapure pH



Sensor and Communication Modules

9012900	Analog pH/ORP and DO module for GLI Sensors
9013000	Analog Conductivity module for GLI Sensors
9012700	Flow module
9012800	4-20 mA Input Module
9525700	Analog pH/ORP Module for Polymetron Sensors
9525800	Analog Conductivity Module for Polymetron Sensors
9013200	Modbus 232/485 Module
9173900	Profibus DP Module
9328100	HART Module
9334600	4-20 mA Output Module (Provides 3 additional mA Outputs)

Accessories

9220600	sc200 Weather and Sun Shield with UV Protection Screen
8809200	sc200 UV Protection Screen
9218200	SD card reader (USB) for connection to PC
9218100	4 GB SD card

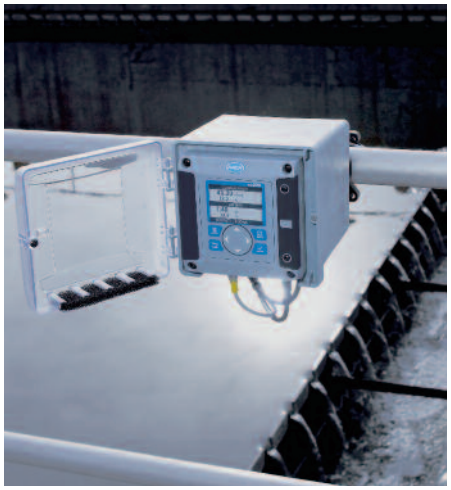

HACH COMPANY World Headquarters: Loveland, Colorado USA

United States: 800-227-4224 tel 970-669-2932 fax orders@hach.com
Outside United States: 970-669-3050 tel 970-461-3939 fax int@hach.com
hach.com

LIT2665 Rev 7
K13 Printed in U.S.A.
©Hach Company, 2013. All rights reserved.
In the interest of improving and updating its equipment,
Hach Company reserves the right to alter specifications to equipment at any time.

HACH®
Be Right™

CS-912-006 : Identification sheet

VWTC PROJECT NUMBER:	Iqaluit WWTP	REV:	02
PROJECT NAME:	5000218036	SUBMITTED TO (COMPANY):	
ENGINEER:	F.VINCI	SUBMITTED TO (RESPONSIBLE)	
PROJECT MANAGER:	C. BEKAERT	PROJECT NUM REFERENCE.:	
PHONE NUMBER:		LOT NUMBER:	

SUPPLIER	EQPT CODE	EQPT TAG NO	DIA	DESCRIPTION	INFO 1	INFO 2	INFO 3	APPLIC.	NOTE	REV
CONTROLES DAVIS QUEBEC	ST-912-006	LSH-02-332		HIGH LEVEL SLUDGE	SLUDGE LEVEL // 2 X INTRINSICALLY SAFE CONTROL SPST ISOLATED CONTACT # 27A1E0 // 1 X ELECTRICAL FITTING SUPPORT // 1X 2 FT SS316 ELECTRODE # 3R2C0 // 2 X 7 FT SS316 ELECTRODE #3R7C0					1
CONTROLES DAVIS QUEBEC	ST-912-006	LSH-02-342		HIGH LEVEL SLUDGE	SLUDGE LEVEL // 2 X INTRINSICALLY SAFE CONTROL SPST ISOLATED CONTACT # 27A1E0 // 1 X ELECTRICAL FITTING SUPPORT // 1X 2 FT SS316 ELECTRODE # 3R2C0 // 2 X 7 FT SS316 ELECTRODE #3R7C0					1
CONTROLES DAVIS QUEBEC	Included in ST-912-006	LSL-02-333		LOW LEVEL SLUDGE	SLUDGE LEVEL // 2 X INTRINSICALLY SAFE CONTROL SPST ISOLATED CONTACT # 27A1E0 // 1 X ELECTRICAL FITTING SUPPORT // 1X 2 FT SS316 ELECTRODE # 3R2C0 // 2 X 7 FT SS316 ELECTRODE #3R7C0					2
CONTROLES DAVIS QUEBEC	Included in ST-912-006	LSL-02-343		LOW LEVEL SLUDGE	SLUDGE LEVEL // 2 X INTRINSICALLY SAFE CONTROL SPST ISOLATED CONTACT # 27A1E0 // 1 X ELECTRICAL FITTING SUPPORT // 1X 2 FT SS316 ELECTRODE # 3R2C0 // 2 X 7 FT SS316 ELECTRODE #3R7C0					2

Top Mounting Fixtures – General Purpose

Series	3F	3G
	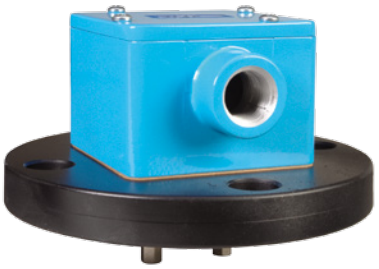	
Mounting Connection	Flange — 4.5" to 7.5" Dia.	NPT, Flange, Bracket (Plate)
Probe Quantity	1 thru 7	1 thru 7
Description	Designed for general purpose service, Series 3F flanged, pressure-tight fittings can handle up to 7 probes. They mate with standard pipe flanges coupled to the top of the vessel. Available in a variety of materials.	Series 3G fittings are designed for general purpose use, and are made of PVC to withstand corrosive conditions. The flanged assemblies are sized to accommodate up to 7 probes and to mate with standard flanges on the tops of vessels.
Materials		
Terminal Housing	Die-cast aluminum, epoxy coated	Polycarbonate
Body	Forged steel, red brass, 316 S.S., 1018 C.S, PVC	PVC
Probe Insulation	Teflon®	Teflon®
Pressure/Temperature	125 psig @ 323°F (cast iron) 225 psig @ 150°F (brass) 230 psig @ 100°F (316 S.S.) 275 psig @ 100°F (1018 C.S.) PVC – not rated	0 psig @ 150°F (PVC)
Approvals	CSA	—

Dimensions

No. of Probes	Nominal Pipe Flange Size	Diameter of Flange	Conduit Boss Thread Size	Terminal Housing Size (W" x D" x H")
1	1	4-1/2"	1/2" NPT	2-1/4 x 2-1/4 x 2-1/4
2-3	2	6"	1/2" NPT	3-1/4 x 3-1/4 x 2-3/8
4	2-1/2	7"	1/2" NPT	3-1/4 x 3-1/4 x 2-3/8
5-7	3	7-1/2"	3/4" NPT	4 x 4 x 2-1/2

How to Order

Use the **Bold** characters from the chart at right to construct a product code.

Electrode Probes are ordered separately.

3F X X

Series
3F

Number of Probes
1 thru **7**

Body Material
A – Forged Steel (Raised Face)
B – Red Brass (Flat Face)
C – 316 S.S. (Raised Face)
D – 1018 C.S. (Raised Face)
E – PVC (Flat Face)

3G X X X

Series
3G

Number of Probes
1 thru **7**

Base Size and Style
A – 2" Flange (6" O.D.)[3]
B – 3" Flange (7-1/2" O.D.)
C – 3-1/4" x 6" x 3/4" PVC Plate
E – 2" NPT[3]
H – 3" NPT

Probe Type
1 – 316 S.S. Inserts for Use with 1/4" Rod Extensions[4]
2 – Tapered Probe Assembly[5]
3 – Wire-Suspended Probes[6]

Compatible Electrode Probes (order separately)	3R, 3W[1], 3Y[2]	3R, 3T, 3W[1], 3Y[2]

Notes:
1. Requires 3Z1B Adapter and 3Z1A Wire.
2. Requires 3Z1B Adapter.
3. Maximum 4 probes.
4. Order 3R rods separately. See page E-21.
5. Order 3T rods separately. See page E-21.
6. Order 3W/3Y probes separately. See page E-22.

Custom options available. Consult factory.

3E	3N	3B
		
1" to 3" NPT	#10 Machine Screws from Underside	3/8" - 18NPT, 5/8" - 18UNF, 5/8" - 24UNEF
1 thru 7	1 thru 3	1
Series 3E fittings are cast metal, pressure-tight assemblies capable of handling 1-7 probes. Attachment to vessels is accomplished with external pipe threading. 3E Fittings require the use of 3R rigid or 3W wire suspended electrodes.	Series 3N fittings accommodate 1-3 probes operating at atmospheric pressure. The assembly mounts on a flat surface atop open tanks or closed vessels. 3N Fittings require the use of 3R rigid or 3W wire suspended electrodes.	Series 3B fittings are compact pressure tight assemblies that hold a single electrode probe for use in water and chemicals. These fittings incorporate a 1/4-20 female thread that must be combined with a Series 3R (rigid rod electrode) or Series 3W/3Y (wire suspended electrode) to make a complete assembly.
Die-cast aluminum, epoxy coated	Die-cast aluminum, epoxy coated	—
Cast iron, red brass, 316 stainless steel	PVC, red brass, 316 stainless steel	316 stainless steel
Teflon®	Teflon®	Teflon®
125 psig @ 353°F (cast iron) 250 psig @ 406°F (brass, 316 S.S.)	0 psig @ 150°F (PVC) 0 psig @ 500°F (brass, 316 S.S.)	250 psig @ 406°F 500 psig @ 75°F
U.L. File #MP2489, Vol. 1 Sec. 1; CSA	CSA File #LR11644	U.L. File #MP2489, Vol. 1 Sec. 1; CSA

	No. of Probes	Attachment to Vessel	Conduit Boss Thread Size	Terminal Housing Size (W" x D" x H")
3E	1	1" NPT	1/2" NPT	2-1/4 x 2-1/4 x 2-1/4
	2-3	2" NPT	1/2" NPT	3-1/4 x 3-1/4 x 2-3/8
	4	2-1/2" NPT	1/2" NPT	3-1/4 x 3-1/4 x 2-3/8
	5-7	3" NPT	3/4" NPT	4 x 4 x 2-1/2
3N	1-3	2-1/4" square flat pad, 1-1/2" dia. hole in top of vessel secured with #10 machine screws at the corners of a 1-1/2" square	1/2" NPT	2-1/4 x 2-1/4 x 2-1/4

3E X X

Series
3E

Number of Probes
1 thru **7**

Body Material
A – Cast Iron
B – Red Brass
C – 316 Stainless Steel

3N X X

Series
3N

Number of Probes
1 thru **3**

Body Material
A – PVC
B – Red Brass
C – 316 Stainless Steel

3B X B

Series
3B

Thread
1 – 3/8" - 18 NPT
2 – 5/8" - 18 UNF
3 – 5/8" - 24 UNEF

Metal Parts
B – 316 Stainless Steel

3R, 3W[1]	3R, 3W[1]	3R solid rod (up to 4') 3W[1] or 3Y[2] (greater than 4')

Custom options available. Consult factory.

Series 17 and 27
Intrinsically Safe Controls

- Cannot Ignite Flammable Materials
- Solid State Reliability
- Up to 470K Ohm/cm Sensitivity (Series 17)
- Internal Surge Suppression
- SPST Contacts (Series 17)
- SPDT Contacts (Series 27)
- Can Be Used for Single Level or Differential Service



Series 17



Series 27

Series 17 – FM Approved

Series 17 is FM Approved for use in Class I or II, Division 1, Groups A-G hazardous atmospheres. SPST isolated contacts. Field adjustable sensitivity by use of external resistors.

Series 27 – UL-CSA Approved

Series 27 is UL approved for use in Class I, Groups A, B, C, D; Class II, Groups E, F, G; and Class III hazardous locations. SPDT output contacts. UL Pilot Duty rated.

CSA Certified for Class 1, Groups A, B, C and D; Class II, Groups E, F and G; Class III

Specifications

Contact Design	
Series 17	1 N.O. & 1 N.C. Isolated Contacts
Series 27	1 N.O. & 1 N.C. (1 form C)
Contact Rating (24/120/240VAC)	8 amp Resistive
Mode of Operation	Direct/Inverse, factory set
Sensitivity	
Series 17	0-470K ohm, field adjustable
Series 27	0-100K ohm, factory set
Primary Voltage	
Series 17	24 VAC, 120 VAC, 240 VAC (+10%/-15%) 50/60 Hz
Series 27	120 VAC, 240 VAC (+10%/-15%) 50/60Hz
Secondary Voltage	
Series 17	13 VAC, 4 mA
Series 27	11 VAC, 2.3 mA
Temperature	-40°F to +150°F (-40°C to +65°C)
Approvals	
Series 17	FM File # 1G9A1.AX
Series 27	U.L. 913 File # E44570; CSA #2174246
Connections	All screw type connections

How to Order

Use the **Bold** characters from the chart below to construct a product code.

17 X X X X

Series
17– FM Approved **27**– UL/CSA Approved

Mode of Operation
A – Direct **B** – Inverse

Supply Voltage
1 – 120 VAC **2** – 240 VAC[1] **3** – 24 VAC[2]

Sensitivity (ohms)[3]
D – 3K **E** – 10K **G** – 100K **X** – (17 only)[3]

Enclosure
0 – None **1** – NEMA 1 **4** – NEMA 4

Notes:
1. 240V standard in Series 17. Non-standard, but available in Series 27.
2. 24V available only in Series 17.
3. Series 27 only. Series 17 includes a full set of resistors (3.3K, 4.7K, 10K, 47K, 100K, 220K, 470K ohms) to allow modification of sensitivity in the field. Product code symbol in this position for Series 17 is "X."

Applications

- Hazardous Atmospheres
- Pumps
- Waste Treatment
- Alarms
- Sewage
- CP Industry

Dimensions

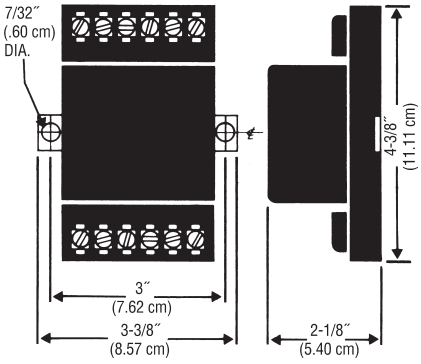

Projet	IQALUIT
Projet#:	5000218036
Document #:	5000218036_DS_0001_PM_VWT
Par:	BB
Verif.:	GH
approb.:	CB

SPIDFLOW

PAINT SPECIFICATION

Section Manuel OM: 4.3.1.7

CS-912-000 : Identification sheet

VWTC PROJECT NUMBER:	Iqaluit WWTP	REV:	01
PROJECT NAME:	5000218036	SUBMITTED TO (COMPANY):	
ENGINEER:	G. HÉBERT	SUBMITTED TO (RESPONSIBLE)	
PROJECT MANAGER:	C. BEKAERT	PROJECT NUM REFERENCE.:	
PHONE NUMBER:		LOT NUMBER:	

SUPPLIER	EQPT CODE	EQPT TAG NO	DIA	DESCRIPTION	INFO 1	INFO 2	INFO 3	APPLIC.	NOTE	REV
VEOLIA	ST-912-000	T-02-310		SPIDFLOW TANK	SPIDFLOW SFP-650 CABON STEEL PAINTED TANK // CARBON STEEL MUST CONFORM TO CSA G40.21 GRADE 44W, G40.21M-300W, G40.21M-350W AS A MINIMUM // STAINLESS STEEL AISI 304L // WELDS CSA W59 STANDARD	INTERNAL TREATMENT SSPC-SP-10 // ONE (1) COAT OF DURA-PLATE-UHS 18 to 28 DRY MILS PER COAT // EXTERNAL TREATMENT SSPC-SP-6 // ONE (1) COAT OF ENVIROLASTIC 940 6.0				1
VEOLIA	ST-912-000	T-02-320		SPIDFLOW TANK	SPIDFLOW SFP-650 CABON STEEL PAINTED TANK // CARBON STEEL MUST CONFORM TO CSA G40.21 GRADE 44W, G40.21M-300W, G40.21M-350W AS A MINIMUM // STAINLESS STEEL AISI 304L // WELDS CSA W59 STANDARD	INTERNAL TREATMENT SSPC-SP-10 // ONE (1) COAT OF DURA-PLATE-UHS 18 to 28 DRY MILS PER COAT // EXTERNAL TREATMENT SSPC-SP-6 // ONE (1) COAT OF ENVIROLASTIC 940 6.0				1

Protective & Marine Coatings

NSF Certified to NSF/ANSI 61

DURA-PLATE® UHS

WITH OPTI-CHECK OAP TECHNOLOGY

PART A	B62-210	SERIES
PART A	B62W211	WHITE OAP (NSF)
PART B	B62V210	STANDARD HARDENER (NSF)
PART B	B62V211	LOW TEMP HARDENER (NSF)

Revised: December 3, 2014

PRODUCT INFORMATION

TRM.35

PRODUCT DESCRIPTION

DURA-PLATE UHS is an ultra high solids epoxy amine engineered specifically for immersion service in ballast tanks, oil tanks, and refined fuel storage tanks. The high build, edge-retentive properties of Dura-Plate UHS provide superior protection compared to conventional epoxies.

- Airless Spray
- One coat protection
- Low VOC
- Low odor
- High flash point, >200°F (93°C)
- Can be used with 1½ oz. fiberglass mat
- Low Temperature Hardener for applications down to 40°F (4.5°C).
- NSF approved to Standard 61 for potable water (tanks of 1000 gallons or greater and pipes of 30" diameter or greater.)

RECOMMENDED USES

For use over prepared steel or concrete surfaces in industrial and marine exposures such as:

- Meets MIL-PRF-23236, Type VII, Class 5, 7, 9 and 11, Grade C (standard hardener only)
- Ballast tank interiors, Oil storage tank interiors, Refined fuel storage tank and potable water tanks interiors and pipe.
- NSF approved for one coat application up to 50.0 mils (1250 microns) dft if required
- Water and waste treatment plants
- Buried Pipe Applications
- Primary and secondary containment areas
- Where edge protection film build properties are required
- Suitable for use with cathodic protection systems
- White B62W211 Contains OAP fluorescent pigment (NSF Approved)
- Suitable for use in the Mining & Minerals Industry

PRODUCT CHARACTERISTICS

Finish	Gloss
Color:	White OAP (NSF), White (NSF), Light Gray (NSF), Light Green (NSF), Black, Haze Gray
Volume Solids:	98% ± 2%, mixed
Weight Solids:	98% ± 2%, mixed
VOC (EPA Method 24):	
(with B62-V210 Hardeners)	<100 g/L; 0.83 lb/gal, mixed
(with B62V211 Hardener)	<100 g/L; 0.84 lb/gal, mixed
Mix Ratio:	4:1 by volume

Recommended Spreading Rate per coat*:

	1 coat system Min.		1 coat system Max.		2 coat system Min.		2 coat system Max.	
Wet mils (microns)	**18.0**	450	**22.0**	550	**10.0**	250	**12.0**	300
Dry mils (microns)	**18.0**	450	**22.0**	550	**10.0**	250	**12.0**	300
Total mils (microns)	**18.0**	450	**22.0**	550	**20.0**	500	**24.0**	600
~Coverage sq ft/gal (m^2/L)	**72**	1.76	**90**	2.2	**130**	3.18	**160**	3.9

Theoretical coverage **sq ft/gal** (m^2/L) @ 1 mil/25 micron dft: **1568** (38.4)

* See NSF Systems on next page.

NOTE: Brush or roll application recommended for stripe coating and repair only. Standard hardener preferred for brush & roll due to pot life.

Drying Schedule @ 10.0-22.0 mils wet (250-550 microns):

With B62-V210	@ 55°F/13°C *50% RH*	@ 77°F/25°C	@ 100°F/38°C
To touch:	12 hours	5 hours	3 hours
To handle:	48 hours	14 hours	8 hours
To recoat:			
minimum:	48 hours	14 hours	8 hours
maximum:	21 days	14 days	14 days
Cure to service:	10 days	4 days	24 hours
Heat Cure:	8 hours @ ambient, then 16 hrs @ 140°F (60°C)*		

*Not NSF Approved. See Tips Section.

Pot Life*:	30-45 minutes	30-45 minutes	20-30 minutes
*Dependent upon temperature and mass			
Sweat-in-time:	15 minutes	None	None

PRODUCT CHARACTERISTICS (CONT'D)

With B62V211	@ 40°F/4.5°C	@ 55°F/13°C *50% RH*	@ 77°F/25°C
To touch:	24 hours	5 hours	3 hours
To handle:	48 hours	24 hours	8 hours
To recoat:			
minimum:	48 hours	24 hours	8 hours
maximum:	30 days	21 days	14 days
Cure to service:	7 days	5 days	3 days
Heat Cure:	8 hours @ ambient, then 16 hrs @ 140°F (60°C)*		

Material should be at least 50°F (10°C) for optimal performance.

If maximum recoat time is exceeded, abrade surface before recoating.

Drying time is temperature, humidity, and film thickness dependent.

Sterilize and rinse per AWWA C652.

*Not NSF Approved. See Tips Section.

Pot Life*:	20 minutes	20 minutes	10 minutes
*Dependent upon temperature and mass			
Sweat-in-Time:	5 minutes	None	None

Shelf Life:	36 months Store indoors at 40°F (4.5°C) to 100°F (38°C).
Flash Point:	>200°F (93°C), PMCC, mixed
Reduction:	Not recommended
Clean Up:	MEK, R6K10 or R7K104 Reducer

PERFORMANCE CHARACTERISTICS

Substrate*: Steel

Surface Preparation*: SSPC-SP10/NACE 2

System Tested*:

1 ct. Dura-Plate UHS @ 18.0 mils (450 microns) dft with B62GV210 Hardener

*unless otherwise noted below

Test Name	Test Method	Results
Abrasion Resistance	ASTM D4060, CS17 wheel, 1000 cycles, 1 kg load	20.8 mg loss
Adhesion	ASTM D4541; ASTM D3359	800 psi, minimum (ASTM D4541); 5A (ASTM D3359)
Corrosion Weathering	ASTM D5894, 6 cycles, 2016 hours	Rating 10 per ASTM D610 for rusting and Rating 10 per ASTM D714 for blistering
Direct Impact Resistance	ASTM D2794; ASTM G14	30 in. lb. (ASTM D2794); 168 in. lb. (ASTM G14)
Dry Heat Resistance	ASTM D2485	250°F (121°C)
Flexibility	ASTM D522, 180° bend, 1/2" mandrel	Passes, 9.7% elongation
Immersion (Galvapac/1 ct Dura Plate UHS)	5 year potable water	Rating 10 per ASTM D610 for rusting and Rating 10 per ASTM D714 for blistering
Pencil Hardness	ASTM D3363	3H

IMMERSION (Ambient temperature):

- Ballast Tank mix ..... Recommended
- Crude oil ..... Recommended
- Diesel fuel ..... Recommended
- Ethanol or Gasohol ..... Recommended
- Fresh water/Potable Water ..... Recommended
- Fuel oil ..... Recommended
- Methanol or methanol blends ..... Not Recommended
- MTBE, TAME, ETBE ..... Recommended
- Refined petroleum products ..... Recommended
- Sea water ..... Recommended
- Hi-Aromatic Gasolines ..... Recommended

continued on back

Protective & Marine Coatings

NSF Certified to NSF/ANSI 61

DURA-PLATE® UHS

WITH OPTI-CHECK OAP TECHNOLOGY

PART A	B62-210	SERIES
PART A	B62W211	WHITE OAP (NSF)
PART B	B62V210	STANDARD HARDENER (NSF)
PART B	B62V211	LOW TEMP HARDENER (NSF)

Revised: December 3, 2014

PRODUCT INFORMATION

TRM.35

RECOMMENDED SYSTEMS

		Dry Film Thickness / ct. Mils	(Microns)
Steel, NSF Systems:			
1 ct.	Dura-Plate UHS Primer	4.0-8.0*	(100-200)
1 ct.	Dura-Plate UHS	10.0-12.0*	(250-300)
or			
1 ct.	Dura-Plate UHS	16.0-50.0	(400-1250)
or			
2 cts.	Dura-Plate UHS	8.0-25.0	(200-625)
or			
3 cts.	Dura-Plate UHS	8.0-16.0	(200-400)
Steel, OAP Fluorescent Pigment System			
1 ct.	Dura-Plate UHS (B62W211)	12.0-14.0	(300-350)
Steel:			
1 ct.	Dura-Plate UHS Primer	4.0-8.0**	(100-200)
1 ct.	Dura-Plate UHS	10.0-12.0	(250-300)
or			
2 cts.	Dura-Plate UHS	6.0-7.0	(150-175)
or			
1 ct.	Dura-Plate UHS	18.0-22.0	(450-550)
or			
2 cts.	Dura-Plate UHS	10.0-12.0	(250-300)
Steel, with hold primer:			
1 ct.	Macropoxy 5500 Primer (as required for blast hold primer)	1.0-1.5**	(25-40)
2 cts.	Dura-Plate UHS	10.0-12.0	(250-300)
Steel, Laminate System:			
1 ct.	Copoxy Shop Primer (as required for blast hold primer)	1.0-1.5	(25-40)
or			
1 ct.	Dura-Plate UHS Primer	4.0-8.0**	(100-200)
1 ct.	Steel-Seam FT910 as required for filling pits, and transitioning sharp edges, weld seams, etc.		
1 ct.	Dura-Plate UHS Clear Laminate Resin with 1½ oz. glass mat	40.0-45.0	(1000-1125)
1 ct.	Dura-Plate UHS as required to seal fiberglass mat	10.0-12.0	(250-300)
Concrete/Masonry:			
1 ct.	Corobond 100 Epoxy Primer/Sealer	4.0-6.0	(100-150)
	(or 1 ct Dura- Plate UHS Primer (as required for NSF)	4.0-8.0**	(100-200)
1 ct.	Dura-Plate UHS (as required for NSF)	10.0-12.0	(250-300)

* If primer is used, 10 mils (250 microns) dft maximum for primer and 14 mils (350 microns) dft maximum for topcoat.

** When using the B62L210 Primer containing the OAP fluorescent pigment, make sure a non-containing OAP fluorescent pigment Topcoat is used.

Refer to Application Bulletin for treatment of pitted tank bottoms.

The systems listed above are representative of the product's use, other systems may be appropriate.

DISCLAIMER

The information and recommendations set forth in this Product Data Sheet are based upon tests conducted by or on behalf of The Sherwin-Williams Company. Such information and recommendations set forth herein are subject to change and pertain to the product offered at the time of publication. Consult your Sherwin-Williams representative to obtain the most recent Product Data Information and Application Bulletin.

SURFACE PREPARATION

Surface must be clean, dry, and in sound condition. Remove all oil, dust, grease, dirt, loose rust, and other foreign material to ensure adequate adhesion.

Refer to product Application Bulletin for detailed surface preparation information.

Minimum recommended surface preparation:

Iron & Steel:
- Atmospheric: SSPC-SP6/NACE 3, 2 mil (50 micron) profile or SSPC-SP12/NACE No. 5, WJ-3/NV-2
- Immersion: SSPC-SP10/NACE2, 2-3 mil (50-75 micron)profile or SSPC- SP12/NACE No. 5, WJ-2/NV-2

Concrete & Masonry:
- Atmospheric: SSPC-SP13/NACE 6, or ICRI No. 310.2R CSP 2-3
- Immersion: SSPC-SP13/NACE 6-4.3.1 or 4.3.2, or ICRI No. 310.2R CSP 2-3

Surface Preparation Standards

Condition of Surface		ISO 8501-1 BS7079:A1	Swedish Std. SIS055900	SSPC	NACE
White Metal		Sa 3	Sa 3	SP 5	1
Near White Metal		Sa 2.5	Sa 2.5	SP 10	2
Commercial Blast		Sa 2	Sa 2	SP 6	3
Brush-Off Blast		Sa 1	Sa 1	SP 7	4
Hand Tool Cleaning	Rusted	C St 2	C St 2	SP 2	-
	Pitted & Rusted	D St 2	D St 2	SP 2	-
Power Tool Cleaning	Rusted	C St 3	C St 3	SP 3	-
	Pitted & Rusted	D St 3	D St 3	SP 3	-

TINTING

Do not tint Part A.

Clear Hardeners B62V210 and B62V211 may be tinted with up to 1½ oz. per gallon with Maxitoner Colorant, Phthalo Green or Black (both NSF approved) **ONLY**.

APPLICATION CONDITIONS

Temperature (air, surface):
- B62-V210 Hardeners: 50°F (10°C) minimum, 110°F (43°C) maximum
- B62V211 Hardener: 40°F (4.5°C) minimum, 77°F (25°C) maximum

At least 5°F (2.8°C) above dew point

Material should be 70°F (21°C) to 85°F (29°C) or optimal performance.

Relative humidity: 85% maximum

Refer to product Application Bulletin for detailed application information.

ORDERING INFORMATION

Packaging:
- Part A: 4 gallon (15.1L) container
- Part B: 1 gallon (3.78L) container

Weight: 10.52 ± 0.2 lb/gal ; 1.26 Kg/L, mixed

SAFETY PRECAUTIONS

Refer to the MSDS sheet before use.

Published technical data and instructions are subject to change without notice. Contact your Sherwin-Williams representative for additional technical data and instructions.

WARRANTY

The Sherwin-Williams Company warrants our products to be free of manufacturing defects in accord with applicable Sherwin-Williams quality control procedures. Liability for products proven defective, if any, is limited to replacement of the defective product or the refund of the purchase price paid for the defective product as determined by Sherwin-Williams. NO OTHER WARRANTY OR GUARANTEE OF ANY KIND IS MADE BY SHERWIN-WILLIAMS, EXPRESSED OR IMPLIED, STATUTORY, BY OPERATION OF LAW OR OTHERWISE, INCLUDING MERCHANTABILITY AND FITNESS FOR A PARTICULAR PURPOSE.

Protective & Marine Coatings

NSF Certified to NSF/ANSI 61

DURA-PLATE® UHS

WITH OPTI-CHECK OAP TECHNOLOGY

PART A	B62-210	SERIES
PART A	B62W211	WHITE OAP (NSF)
PART B	B62V210	STANDARD HARDENER (NSF)
PART B	B62V211	LOW TEMP HARDENER (NSF)

Revised: December 3, 2014

APPLICATION BULLETIN

TRM.35

SURFACE PREPARATIONS

Surface must be clean, dry, and in sound condition. Remove all oil, dust, grease, dirt, loose rust, and other foreign material to ensure adequate adhesion.

Iron & Steel (atmospheric service)
Minimum surface preparation is Commercial Blast Cleaning per SSPC-SP6/NACE 3 or SSPC-SP12/NACE No. 5. For surfaces prepared by SSPC SP6/NACE 3, first remove all oil and grease from surface by Solvent Cleaning per SSPC-SP1. For better performance, use Near White Metal Blast Cleaning per SSPC-SP10/NACE 2. Blast clean all surfaces using a sharp, angular abrasive for optimum surface profile (2-3 mils / 50-75 microns). For surfaces prepared by SSPC-SP12/NACE No. 5, all surfaces shall be cleaned in accordance with WJ-3/NV2. Pre-existing profile should be approximately 2 mils (50 microns). Prime any bare steel the same day as it is cleaned or before flash rusting occurs.

Iron & Steel (immersion service)
Remove all oil and grease from surface by Solvent Cleaning per SSPC-SP1. Minimum surface preparation is Near White Metal Blast Cleaning per SSPC-SP10/NACE 2, or SSPC-SP12/NACE No. 5. For SSPC-SP10/NACE 2 blast clean all surfaces using a sharp, angular abrasive for optimum surface profile (2-3 mils / 50-75 microns). For SSPC-SP12/NACE No.5, all surfaces to be coated shall be cleaned in accordance with WJ-2/NV2 standards. Pre-existing profile should be approximately 2 mils (50 microns). Remove all weld spatter. Prime any bare steel the same day as it is cleaned or before flash rusting occurs.

Concrete and Masonry
For surface preparation, refer to SSPC-SP13/NACE 6, or ICRI No. 310.2R, CSP 2-3. Surfaces should be thoroughly clean and dry. Concrete and mortar must be cured at least 28 days @ 75°F (24°C). Remove all loose mortar and foreign material. Surface must be free of laitance, concrete dust, dirt, form release agents, moisture curing membranes, loose cement and hardeners. Fill bug holes, air pockets and other voids with Steel-Seam FT910. Primer required.

Follow the standard methods listed below when applicable:
ASTM D4258 Standard Practice for Cleaning Concrete.
ASTM D4259 Standard Practice for Abrading Concrete.
ASTM D4260 Standard Practice for Etching Concrete.
ASTM F1869 Standard Test Method for Measuring Moisture Vapor Emission Rate of Concrete.
SSPC-SP 13/Nace 6 Surface Preparation of Concrete.
ICRI No. 310.2R Concrete Surface Preparation.

Concrete, Immersion Service:
For surface preparation, refer to SSPC-SP13/NACE 6, Section 4.3.1 or 1.3.2 or ICRI No. 310.2R, CSP 2-3.

Surface Preparation Standards

Condition of Surface		ISO 8501-1 BS7079:A1	Swedish Std. SIS055900	SSPC	NACE
White Metal		Sa 3	Sa 3	SP 5	1
Near White Metal		Sa 2.5	Sa 2.5	SP 10	2
Commercial Blast		Sa 2	Sa 2	SP 6	3
Brush-Off Blast		Sa 1	Sa 1	SP 7	4
Hand Tool Cleaning	Rusted	C St 2	C St 2	SP 2	-
	Pitted & Rusted	D St 2	D St 2	SP 2	-
Power Tool Cleaning	Rusted	C St 3	C St 3	SP 3	-
	Pitted & Rusted	D St 3	D St 3	SP 3	-

APPLICATION CONDITIONS

Temperature (air, surface):

B62-V210 Hardeners	50°F (10°C) minimum, 110°F (43°C) maximum
B62V211 Hardener	40°F (4.5°C) minimum, 77°F (25°C) maximum
	At least 5°F (2.8°C) above dew point

Material should be 70°F (21°C) to 85°F (29°C) or optimal performance.

Relative humidity: 85% maximum

APPLICATION EQUIPMENT

The following is a guide. Changes in pressures and tip sizes may be needed for proper spray characteristics. Always purge spray equipment before use with listed reducer. Any reduction must be compliant with existing VOC regulations and compatible with the existing environmental and application conditions.

Reduction .....Not recommended

Clean Up .....MEK, R6K10 or R7K104 Reducer

Airless Spray
Unit.....74:1 Pump, minimum
Pressure.....6000 psi minimum
Hose.....3/8" ID
Tip .....019" - .021"
Filter.....30 mesh

In order to avoid blockage of spray equipment and hose, flush equipment with MEK, R6K10 or R7K104 Reducer at least once every 30 minutes when using the B62V210 Hardener and after each kit when using the Low Temperature Hardener, and before periods of extended downtime.

Plural Component Equipment .....Acceptable

Brush .....For stripe coating and repair only
Brush.....Nylon/Polyester or Natural Bristle

Roller .....For stripe coating and repair only
Cover .....3/8" woven with solvent resistant core

If specific application equipment is not listed above, equivalent equipment may be substituted.

continued on back

Protective & Marine Coatings

Certified to NSF/ANSI 61

DURA-PLATE® UHS

WITH OPTI-CHECK OAP TECHNOLOGY

PART A	B62-210	SERIES
PART A	B62W211	WHITE OAP (NSF)
PART B	B62V210	STANDARD HARDENER (NSF)
PART B	B62V211	LOW TEMP HARDENER (NSF)

Revised: December 3, 2014

APPLICATION BULLETIN

TRM.35

APPLICATION PROCEDURES

Surface preparation must be completed as indicated.

Mixing Instructions: Mix contents of each component thoroughly using low speed power agitation. Make certain no pigment remains on the bottom or the sides of the can. Then combine four parts by volume of Part A with one part by volume of Part B. Thoroughly agitate the mixture with power agitation.

To ensure that no unmixed material remains on the sides or bottom of the cans after mixing, visually observe the container by pouring the material into a separate container.

Apply paint at the recommended film thickness and spreading rate as indicated below:

Recommended Spreading Rate per coat*:

	1 coat system Min.	1 coat system Max.	2 coat system Min.	2 coat system Max.
Wet mils (microns)	**18.0** 450	**22.0** 550	**10.0** 250	**12.0** 300
Dry mils (microns)	**18.0** 450	**22.0** 550	**10.0** 250	**12.0** 300
Total mils (microns)	**18.0** 450	**22.0** 550	**20.0** 500	**24.0** 600
~Coverage sq ft/gal (m^2/L)	**72** 1.76	**90** 2.2	**130** 3.18	**160** 3.9
Theoretical coverage **sq ft/gal** (m^2/L) @ 1 mil/25 micron dft	**1568** (38.4)			

* See NSF Systems on next page.

NOTE: Brush or roll application recommended for stripe coating and repair only. Standard hardener preferred for brush & roll due to pot life.

Drying Schedule @ 10.0-22.0 mils wet (250-550 microns):

With B62-V210	@ 55°F/13°C *50% RH*	@ 77°F/25°C	@ 100°F/38°C
To touch:	12 hours	5 hours	3 hours
To handle:	48 hours	14 hours	8 hours
To recoat:			
minimum:	48 hours	14 hours	8 hours
maximum:	21 days	14 days	14 days
Cure to service:	10 days	4 days	24 hours
Heat Cure:	8 hours @ ambient, then 16 hrs @ 140°F (60°C)*		

*Not NSF Approved. See Tips Section.

Pot Life*:	30-45 minutes	30-45 minutes	20-30 minutes

*Dependent upon temperature and mass

Sweat-in-time:	15 minutes	None	None

With B62V211	@ 40°F/4.5°C	@ 55°F/13°C *50% RH*	@ 77°F/25°C
To touch:	24 hours	5 hours	3 hours
To handle:	48 hours	24 hours	8 hours
To recoat:			
minimum:	48 hours	24 hours	8 hours
maximum:	30 days	21 days	14 days
Cure to service:	7 days	5 days	3 days
Heat Cure:	8 hours @ ambient, then 16 hrs @ 140°F (60°C)*		

Material should be at least 50°F (10°C) for optimal performance.

If maximum recoat time is exceeded, abrade surface before recoating.

Drying time is temperature, humidity, and film thickness dependent.

Sterilize and rinse per AWWA C652.

*Not NSF Approved. See Tips Section.

Pot Life*:	20 minutes	20 minutes	10 minutes

*Dependent upon temperature and mass

Sweat-in-Time:	5 minutes	None	None

Note: Recommended application procedure direct to steel: Apply a 5.0-6.0 mil (125-150 micron) coat to the substrate. Allow material to "wet" the surface. Then apply additional material, to bring total film thickness to the recommended range.

Application of coating above maximum or below minimum recommended spreading rate may adversely affect coating performance.

CLEAN UP INSTRUCTIONS

Clean spills and spatters immediately with MEK, R6K10. Clean tools immediately after use with MEK, R6K10. Follow manufacturer's safety recommendations when using any solvent.

PERFORMANCE TIPS

Repair of Pitted Tank Bottoms
Extensive, deep pitting:
Options:
Option 1 ....Apply a full wet coat, by spray application, of Dura-Plate UHS Primer. Follow with rubber squeegee to work material into and fill the pitted areas. After recommended drying time, apply a full coat of Dura-Plate UHS at recommended film thickness.
Option 2 ....Apply Dura-Plate Laminant Resin with 1½ oz fiberglass mat over the pitted areas. After recommended drying time, apply a full coat of Dura-Plate UHS at recommended film thickness.
Option 3 ....Weld new steel plates, or use puddle welds, as required to repair pitted areas. Coat areas as recommended.
Shallow pitting, isolated areas:
Options:
Option 1 ....Same as number 1 above.
Option 2 ....Apply Steel-Seam FT910 as required to fill the pitted areas. Coat areas as recommended.

When using spray application, use a 50% overlap with each pass of the gun to avoid holidays, bare areas, and pinholes. If necessary, cross-coat spray at a right angle.

Spreading rates are calculated on volume solids and do not include an application loss factor due to surface profile, roughness or porosity of the surface, skill and technique of the applicator, method of application, various surface irregularities, material lost during mixing, spillage, overthinning, climatic conditions, and excessive film build.
No reduction of material is recommended as this can affect film build, appearance, and adhesion.

Do not mix previously catalyzed material with new.

Do not apply the material beyond recommended pot life.

In order to avoid blockage of spray equipment and hose, flush equipment with MEK, R6K10 or R7K104 Reducer at least once every 30 minutes when using the B62V210 Hardener and after each kit when using the Low Temperature Hardener, and before periods of extended downtime.

For Immersion Service: (if required) Holiday test in accordance with ASTM D5162 for steel, or ASTM D4787 for concrete.

May be applied up to 50.0-60.0 mils (1250-1500 microns) dft in one coat if required.

When using the B62L210 Primer containing the OAP fluorescent pigment, make sure a non-containing OAP fluorescent pigment Topcoat is used.

Stripe coat all crevices, welds, and sharp angles to prevent early failure in these areas.

Heat curing is not acceptable for NSF approval.

Guidance on techniques and required equipment to inspect a coating system incorporating Opti-Check OAP Technology can be found in SSPC-TU 11.

Refer to Product Information sheet for additional performance characteristics and properties.

SAFETY PRECAUTIONS

Refer to the MSDS sheet before use.

Published technical data and instructions are subject to change without notice. Contact your Sherwin-Williams representative for additional technical data and instructions.

WARRANTY

The Sherwin-Williams Company warrants our products to be free of manufacturing defects in accord with applicable Sherwin-Williams quality control procedures. Liability for products proven defective, if any, is limited to replacement of the defective product or the refund of the purchase price paid for the defective product as determined by Sherwin-Williams. NO OTHER WARRANTY OR GUARANTEE OF ANY KIND IS MADE BY SHERWIN-WILLIAMS, EXPRESSED OR IMPLIED, STATUTORY, BY OPERATION OF LAW OR OTHERWISE, INCLUDING MERCHANTABILITY AND FITNESS FOR A PARTICULAR PURPOSE.

DISCLAIMER

The information and recommendations set forth in this Product Data Sheet are based upon tests conducted by or on behalf of The Sherwin-Williams Company. Such information and recommendations set forth herein are subject to change and pertain to the product offered at the time of publication. Consult your Sherwin-Williams representative to obtain the most recent Product Data Information and Application Bulletin.

MATERIAL SAFETY DATA SHEET

B62W210
23 00

DATE OF PREPARATION
May 29, 2014

SECTION 1 — PRODUCT AND COMPANY IDENTIFICATION

PRODUCT NUMBER
B62W210
PRODUCT NAME
DURA-PLATE® UHS Ultra High Solids Epoxy (Part A), White Base
MANUFACTURER'S NAME
THE SHERWIN-WILLIAMS COMPANY
101 Prospect Avenue N.W.
Cleveland, OH 44115

Telephone Numbers and Websites

Product Information	(800) 524-5979 www.sherwin-williams.com
Regulatory Information	(216) 566-2902 www.paintdocs.com
Medical Emergency	(216) 566-2917
Transportation Emergency*	(800) 424-9300
**for Chemical Emergency ONLY (spill, leak, fire, exposure, or accident)*	

SECTION 2 — COMPOSITION/INFORMATION ON INGREDIENTS

% by Weight	CAS Number	Ingredient	Units	Vapor Pressure
9	**100-51-6**	**Phenylmethanol**		
		ACGIH TLV	Not Available	0.15 mm
		OSHA PEL	Not Available	
10	**17557-23-2**	**Alkyl Glycidyl Ether**		
		ACGIH TLV	Not Available	
		OSHA PEL	Not Available	
52	**25068-38-6**	**Epoxy Polymer**		
		ACGIH TLV	Not Available	
		OSHA PEL	Not Available	
4	**14807-96-6**	**Talc**		
		ACGIH TLV	2 mg/m3 as Resp. Dust	
		OSHA PEL	2 mg/m3 as Resp. Dust	
4	**13463-67-7**	**Titanium Dioxide**		
		ACGIH TLV	10 mg/m3 as Dust	
		OSHA PEL	10 mg/m3 Total Dust	
		OSHA PEL	5 mg/m3 Respirable Fraction	

SECTION 3 — HAZARDS IDENTIFICATION

ROUTES OF EXPOSURE
INHALATION of vapor or spray mist.
EYE or SKIN contact with the product, vapor or spray mist.

HMIS Codes

Health	2*
Flammability	1
Reactivity	0

EFFECTS OF OVEREXPOSURE
EYES: Irritation.
SKIN: Prolonged or repeated exposure may cause irritation.
INHALATION: Irritation of the upper respiratory system.

In a confined area vapors in high concentration may cause headache, nausea or dizziness.
Prolonged overexposure to hazardous ingredients in Section 2 may cause adverse chronic effects to the following organs or systems:
- the nervous system

SIGNS AND SYMPTOMS OF OVEREXPOSURE
Redness and itching or burning sensation may indicate eye or excessive skin exposure.
MEDICAL CONDITIONS AGGRAVATED BY EXPOSURE
May cause allergic skin reaction in susceptible persons or skin sensitization.

Protective & Marine Coatings

ENVIROLASTIC® 940 DTM
POLYASPARTIC URETHANE

PART A	B65-940	SERIES
PART B	B65V940	HARDENER

Revised: February 6, 2014

PRODUCT INFORMATION

5.52

PRODUCT DESCRIPTION

ENVIROLASTIC 940 DTM is a single coat, direct-to-metal urethane finish. It is a fast dry, polyaspartic urethane formulated to provide high build, high performance protection and gloss and color retention through airless spray.

- Single coat application
- Direct to metal
- Corrosion resistant
- High film build in one coat
- Cures quickly to improve productivity
- No gassing
- Outstanding application properties

PRODUCT CHARACTERISTICS

Finish: Gloss

Color: Wide range of colors possible

Volume Solids: 68% ± 2%, mixed, may vary by color

Weight Solids: 80% ± 2%, mixed, may vary by color

VOC (EPA Method 24): 265 g/L; 2.21 lb/gal, mixed, may vary by color

Mix Ratio: 2:1 by volume

Recommended Spreading Rate per coat:

	Minimum	Maximum
Wet mils (microns)	**9.0** (225)	**13.0** (325)
Dry mils (microns)	**6.0** (150)	**9.0** (225)
~Coverage sq ft/gal (m^2/L)	**121** (3.0)	**182** (4.5)
Theoretical coverage **sq ft/gal** (m^2/L) @ 1 mil / 25 microns dft	**1089** (26.7)	

NOTE: Brush or roll application may require multiple coats to achieve maximum film thickness and uniformity of appearance.

Drying Schedule @ 9.0 mils wet (225 microns):

	@ 35°F/1.6°C	@ 50°F/10°C	@ 77°F/25°C 50% RH	@ 120°F/49°C
To touch:	5 hours	3 hours	1 hour	30 minutes
To handle:	16 hours	7 hours	2 hours	1 hour
To recoat:				
minimum:	16 hours	7 hours	2 hours	1 hour
maximum:	3 months	3 months	3 months	45 days
To cure:	7 days	7 days	4 days	2 days
Pot Life:	4 hours	3 hours	2 hours	30 minutes
Sweat-in-Time:	None required			

If maximum recoat time is exceeded, abrade surface before recoating. Drying time is temperature, humidity, and film thickness dependent.

Shelf Life:	Part A - 24 months, unopened Part B - 24 months, unopened Store indoors at 40°F (4.5°C) to 100°F (38°C).
Flash Point:	57°F (14°C), mixed (Seta Flash)
Reducer/Clean Up:	
Below 80°F (27°C):	MEK, R6K10
Above 80°F (27°C):	Reducer R7K216
Brush / Roll:	Reducer R7K216

RECOMMENDED USES

- Direct to properly prepared steel and galvanizing in industrial environments
- Replaces conventional epoxy/urethane systems
- Ideal for maintenance or new construction applications
- Suitable for use in USDA inspected facilities
- Acceptable for use in high performance architectural applications
- Suitable for use in the Mining & Minerals Industry
- Not recommended for electrostatic spray or air-assisted airless spray

PERFORMANCE CHARACTERISTICS

Substrate*: Steel

Surface Preparation*: SSPC-SP10/NACE 2

System Tested*:

1 ct. Envirolastic 940 DTM @ 6.0-9.0 mils (150-225 microns) dft

*unless otherwise noted below

Test Name	Test Method	Results
Abrasion Resistance	ASTM D4060, CS17 wheel, 1000 cycles, 1 kg load	120 mg loss
Adhesion	ASTM D4541	1400 psi
Direct Impact Resistance	ASTM G14	60 in lb
Dry Heat Resistance	ASTM D2485	200°F (93°C)
Flexibility	ASTM D522, 180° bend, 3/4" mandrel	Passes
Pencil Hardness	ASTM D3363	H

continued on back

Protective & Marine Coatings

ENVIROLASTIC® 940 DTM
POLYASPARTIC URETHANE

PART A	B65-940	SERIES
PART B	B65V940	HARDENER

Revised: February 6, 2014

PRODUCT INFORMATION

5.52

RECOMMENDED SYSTEMS

	Dry Film Thickness / ct. Mils	(Microns)
Steel:		
1 ct. Envirolastic 940 DTM	6.0-9.0	(150-225)
Galvanizing:		
1 ct. DTM Wash Primer	0.7-1.3	(18-32)
1 ct. Envirolastic 940 DTM	6.0-9.0	(150-225)
Galvanizing:		
1 ct. Envirolastic 940 DTM	6.0-9.0	(150-225)
Steel, if primer is required:		
1 ct. Corothane I GalvaPac Zinc Primer	3.0-4.0*	(75-100)
1 ct. Envirolastic 940 DTM	6.0-9.0	(150-225)
Previously Painted Surfaces:		
1 ct. Envirolastic 940	4.0-7.0	(100-200)
Check Compatibility		

* other acceptable primers
- Fast Clad Zinc HS
- Macropoxy 646 Epoxy
- Steel Spec Epoxy Primer
- Zinc Clad III HS
- Zinc Clad IV

SURFACE PREPARATION

Surface must be clean, dry, and in sound condition. Remove all oil, dust, grease, dirt, loose rust, and other foreign material to ensure adequate adhesion.

Refer to product Application Bulletin for detailed surface preparation information.

The systems listed above are representative of the product's use, other systems may be appropriate.

DISCLAIMER

The information and recommendations set forth in this Product Data Sheet are based upon tests conducted by or on behalf of The Sherwin-Williams Company. Such information and recommendations set forth herein are subject to change and pertain to the product offered at the time of publication. Consult your Sherwin-Williams representative to obtain the most recent Product Data Information and Application Bulletin.

Minimum recommended surface preparation:

Iron & Steel: SSPC-SP6/NACE 3, 2 mil (50 micron) profile

Galvanizing: SSPC-SP16, 2 mil (50 micron) profile

Surface Preparation Standards

Condition of Surface	ISO 8501-1 BS7079:A1	Swedish Std. SIS055900	SSPC	NACE
White Metal	Sa 3	Sa 3	SP 5	1
Near White Metal	Sa 2.5	Sa 2.5	SP 10	2
Commercial Blast	Sa 2	Sa 2	SP 6	3
Brush-Off Blast	Sa 1	Sa 1	SP 7	4
Hand Tool Cleaning Rusted	C St 2	C St 2	SP 2	-
Hand Tool Cleaning Pitted & Rusted	D St 2	D St 2	SP 2	-
Power Tool Cleaning Rusted	C St 3	C St 3	SP 3	-
Power Tool Cleaning Pitted & Rusted	D St 3	D St 3	SP 3	-

TINTING

Tint with Maxitoner colorants only into Part A Ultra Deep at 100% tint strength and 150% tint strength for Extra White. Five minutes minimum mixing on a mechanical shaker is required for complete mixing of color.

APPLICATION CONDITIONS

Temperature: 35°F (1.6°C) minimum, 120°F (49°C) maximum
(air, surface, and material)
At least 5°F (2.8°C) above dew point

Relative humidity: 85% maximum

Refer to product Application Bulletin for detailed application information.

ORDERING INFORMATION

Packaging:

Part A: 2 qts. (1.9L) gallon can
Part B: 1 qt. (0.95L) quart can

Part A: 3 gallon (12.04L) pail
Part B: short filled 2 gallon (6.28L) pail

Weight: 11.4 ± 0.2 lb/gal ; 1.4 Kg/L
mixed, may vary with color

SAFETY PRECAUTIONS

Refer to the MSDS sheet before use.
Published technical data and instructions are subject to change without notice. Contact your Sherwin-Williams representative for additional technical data and instructions.

WARRANTY

The Sherwin-Williams Company warrants our products to be free of manufacturing defects in accord with applicable Sherwin-Williams quality control procedures. Liability for products proven defective, if any, is limited to replacement of the defective product or the refund of the purchase price paid for the defective product as determined by Sherwin-Williams. NO OTHER WARRANTY OR GUARANTEE OF ANY KIND IS MADE BY SHERWIN-WILLIAMS, EXPRESSED OR IMPLIED, STATUTORY, BY OPERATION OF LAW OR OTHERWISE, INCLUDING MERCHANTABILITY AND FITNESS FOR A PARTICULAR PURPOSE.

Protective & Marine Coatings

ENVIROLASTIC® 940 DTM
POLYASPARTIC URETHANE

PART A	B65-940	SERIES
PART B	B65V940	HARDENER

Revised: February 6, 2014

APPLICATION BULLETIN

5.52

SURFACE PREPARATIONS

Surface must be clean, dry, and in sound condition. Remove all oil, dust, grease, dirt, loose rust, and other foreign material to ensure adequate adhesion.

Iron & Steel
Remove all oil and grease from surface by Solvent Cleaning per SSPC-SP1. Minimum surface preparation is Commercial Blast Cleaning per SSPC-SP6/NACE 3. For better performance, use Near White Metal Blast Cleaning per SSPC-SP10/NACE 2. Blast clean all surfaces using a sharp, angular abrasive for optimum surface profile (2 mils / 50 microns). Prime any bare steel the same day as it is cleaned or before flash rusting occurs.

Aluminum
Remove all oil, grease, dirt, oxide and other foreign material by Solvent Cleaning per SSPC-SP1. Primer required.

Galvanized Steel
Surface Preparation Specification SSPC-SP 16 must be followed obtaining a surface profile of minimum 2.0 mils (50 microns).

Previously Painted Surfaces
If in sound condition, clean the surface of all foreign material. Smooth, hard or glossy coatings and surfaces should be dulled by abrading the surface. Apply a test area, allowing paint to dry one week before testing adhesion. If adhesion is poor, or if this product attacks the previous finish, removal of the previous coating may be necessary. If paint is peeling or badly weathered, clean surface to sound substrate and treat as a new surface as above.

Surface Preparation Standards

	Condition of Surface	ISO 8501-1 BS7079:A1	Swedish Std. SIS055900	SSPC	NACE
White Metal		Sa 3	Sa 3	SP 5	1
Near White Metal		Sa 2.5	Sa 2.5	SP 10	2
Commercial Blast		Sa 2	Sa 2	SP 6	3
Brush-Off Blast		Sa 1	Sa 1	SP 7	4
Hand Tool Cleaning	Rusted	C St 2	C St 2	SP 2	-
	Pitted & Rusted	D St 2	D St 2	SP 2	-
Power Tool Cleaning	Rusted	C St 3	C St 3	SP 3	-
	Pitted & Rusted	D St 3	D St 3	SP 3	-

APPLICATION CONDITIONS

Temperature:	35°F (1.6°C) minimum, 120°F (49°C) maximum (air, surface, and material) At least 5°F (2.8°C) above dew point
Relative humidity:	85% maximum

APPLICATION EQUIPMENT

The following is a guide. Changes in pressures and tip sizes may be needed for proper spray characteristics. Always purge spray equipment before use with listed reducer. Any reduction must be compliant with existing VOC regulations and compatible with the existing environmental and application conditions.

Reducer/Clean Up
Above 80°F .....Reducer R7K216
Below 80°F .....MEK, R6K10
Brush and roll.....Reducer R7K216

Airless Spray
Pump.....30:1
Pressure.....2800 - 3000 psi
Hose.....3/8" ID
Tip .....017" - .021"
Filter.....60 mesh
Reduction.....As needed up to 5% by volume

Conventional Spray
Gun .....Binks 95
Cap 63P
Fluid Tip 67
Atomization Pressure.....50-70 psi
Fluid Pressure.....20-25 psi
Reduction.....As needed, up to 10% by volume

Brush (small areas only)
Brush.....Natural bristle
Reduction.....As needed up to 5% by volume

Roller (small areas only)
Cover .....1/4" woven with solvent resistant core
Reduction.....As needed up to 5% by volume

If specific application equipment is not listed above, equivalent equipment may be substituted.

continued on back

Protective & Marine Coatings

ENVIROLASTIC® 940 DTM
POLYASPARTIC URETHANE

PART A	B65-940	SERIES
PART B	B65V940	HARDENER

Revised: February 6, 2014

APPLICATION BULLETIN

5.52

APPLICATION PROCEDURES

Surface preparation must be completed as indicated.

Mix contents of each component thoroughly with low speed power agitation. Make certain no pigment remains on the bottom of the can. Then combine 2 parts by volume of Part A with 1 part by volume of Part B. Thoroughly agitate the mixture with power agitation.

If reducer solvent is used, add only after both components have been thoroughly mixed.

Apply paint at the recommended film thickness and spreading rate as indicated below:

Recommended Spreading Rate per coat:

	Minimum	Maximum
Wet mils (microns)	**9.0** (225)	**13.0** (325)
Dry mils (microns)	**6.0** (150)	**9.0** (225)
~Coverage sq ft/gal (m^2/L)	**121** (3.0)	**182** (4.5)
Theoretical coverage **sq ft/gal** (m^2/L) @ 1 mil / 25 microns dft	**1089** (26.7)	

NOTE: Brush or roll application may require multiple coats to achieve maximum film thickness and uniformity of appearance.

Drying Schedule @ 9.0 mils wet (225 microns):

	@ 35°F/1.6°C	@ 50°F/10°C	@ 77°F/25°C *50% RH*	@ 120°F/49°C
To touch:	5 hours	3 hours	1 hour	30 minutes
To handle:	16 hours	7 hours	2 hours	1 hour
To recoat:				
minimum:	16 hours	7 hours	2 hours	1 hour
maximum:	3 months	3 months	3 months	45 days
To cure:	7 days	7 days	4 days	2 days
Pot Life:	4 hours	3 hours	2 hours	30 minutes
Sweat-in-Time:	None required			

If maximum recoat time is exceeded, abrade surface before recoating. Drying time is temperature, humidity, and film thickness dependent.

Application of coating above maximum or below minimum recommended spreading rate may adversely affect coating performance.

CLEAN UP INSTRUCTIONS

Clean spills and spatters immediately with MEK, R6K10. Clean tools immediately after use with MEK, R6K10. Follow manufacturer's safety recommendations when using any solvent.

DISCLAIMER

The information and recommendations set forth in this Product Data Sheet are based upon tests conducted by or on behalf of The Sherwin-Williams Company. Such information and recommendations set forth herein are subject to change and pertain to the product offered at the time of publication. Consult your Sherwin-Williams representative to obtain the most recent Product Data Information and Application Bulletin.

PERFORMANCE TIPS

Stripe coat all crevices, welds, and sharp angles to prevent early failure in these areas.

When using spray application, use a 50% overlap with each pass of the gun to avoid holidays, bare areas, and pinholes. If necessary, cross spray at a right angle.

Spreading rates are calculated on volume solids and do not include an application loss factor due to surface profile, roughness or porosity of the surface, skill and technique of the applicator, method of application, various surface irregularities, material lost during mixing, spillage, overthinning, climatic conditions, and excessive film build.

Excessive reduction of material can affect film build, appearance, and adhesion.

Do not use Quik-Thane Urethane Accelerator.

Do not apply the material beyond recommended pot life.

Do not mix previously catalyzed material with new.

In order to avoid blockage of spray equipment, clean equipment before use or before periods of extended downtime with MEK, R6K10.

Mixed coating is sensitive to water. Use water traps in all air lines. Moisture contact can reduce pot life and affect gloss and color.

Refer to Product Information sheet for additional performance characteristics and properties.

SAFETY PRECAUTIONS

Refer to the MSDS sheet before use.

Published technical data and instructions are subject to change without notice. Contact your Sherwin-Williams representative for additional technical data and instructions.

WARRANTY

The Sherwin-Williams Company warrants our products to be free of manufacturing defects in accord with applicable Sherwin-Williams quality control procedures. Liability for products proven defective, if any, is limited to replacement of the defective product or the refund of the purchase price paid for the defective product as determined by Sherwin-Williams. NO OTHER WARRANTY OR GUARANTEE OF ANY KIND IS MADE BY SHERWIN-WILLIAMS, EXPRESSED OR IMPLIED, STATUTORY, BY OPERATION OF LAW OR OTHERWISE, INCLUDING MERCHANTABILITY AND FITNESS FOR A PARTICULAR PURPOSE.

CANCER INFORMATION
For complete discussion of toxicology data refer to Section 11.

SECTION 4 — FIRST AID MEASURES

EYES: Flush eyes with large amounts of water for 15 minutes. Get medical attention.
SKIN: Wash affected area thoroughly with soap and water.
If irritation persists or occurs later, get medical attention.
Remove contaminated clothing and launder before re-use.
INHALATION: If affected, remove from exposure. Restore breathing. Keep warm and quiet.
INGESTION: Do not induce vomiting. Get medical attention immediately.

SECTION 5 — FIRE FIGHTING MEASURES

FLASH POINT	LEL	UEL	FLAMMABILITY CLASSIFICATION
> 200 °F PMCC	Not Applicable	Not Applicable	Not Applicable

EXTINGUISHING MEDIA
Carbon Dioxide, Dry Chemical, Foam
UNUSUAL FIRE AND EXPLOSION HAZARDS
Closed containers may explode (due to the build-up of pressure) when exposed to extreme heat.
During emergency conditions overexposure to decomposition products may cause a health hazard. Symptoms may not be immediately apparent. Obtain medical attention.
SPECIAL FIRE FIGHTING PROCEDURES
Full protective equipment including self-contained breathing apparatus should be used.
Water spray may be ineffective. If water is used, fog nozzles are preferable. Water may be used to cool closed containers to prevent pressure build-up and possible autoignition or explosion when exposed to extreme heat.

SECTION 6 — ACCIDENTAL RELEASE MEASURES

STEPS TO BE TAKEN IN CASE MATERIAL IS RELEASED OR SPILLED
Remove all sources of ignition. Ventilate the area.
Remove with inert absorbent.

SECTION 7 — HANDLING AND STORAGE

STORAGE CATEGORY
DOL Storage Class IIIB
PRECAUTIONS TO BE TAKEN IN HANDLING AND STORAGE
Keep container closed when not in use. Transfer only to approved containers with complete and appropriate labeling. Do not take internally. Keep out of the reach of children.

SECTION 8 — EXPOSURE CONTROLS/PERSONAL PROTECTION

PRECAUTIONS TO BE TAKEN IN USE
Use only with adequate ventilation.
Avoid contact with skin and eyes. Avoid breathing vapor and spray mist.
Wash hands after using.
This coating may contain materials classified as nuisance particulates (listed "as Dust" in Section 2) which may be present at hazardous levels only during sanding or abrading of the dried film. If no specific dusts are listed in Section 2, the applicable limits for nuisance dusts are ACGIH TLV 10 mg/m3 (total dust), 3 mg/m3 (respirable fraction), OSHA PEL 15 mg/m3 (total dust), 5 mg/m3 (respirable fraction).
VENTILATION
Local exhaust preferable. General exhaust acceptable if the exposure to materials in Section 2 is maintained below applicable exposure limits. Refer to OSHA Standards 1910.94, 1910.107, 1910.108.
RESPIRATORY PROTECTION
If personal exposure cannot be controlled below applicable limits by ventilation, wear a properly fitted organic vapor/particulate respirator approved by NIOSH/MSHA for protection against materials in Section 2.
When sanding or abrading the dried film, wear a dust/mist respirator approved by NIOSH/MSHA for dust which may be generated from this product, underlying paint, or the abrasive.
PROTECTIVE GLOVES
Wear gloves which are recommended by glove supplier for protection against materials in Section 2.
EYE PROTECTION
Wear safety spectacles with unperforated sideshields.
OTHER PROTECTIVE EQUIPMENT
Use of barrier cream on exposed skin is recommended.
OTHER PRECAUTIONS
This product must be mixed with other components before use. Before opening the packages, READ AND FOLLOW WARNING LABELS ON ALL COMPONENTS.

SECTION 9 — PHYSICAL AND CHEMICAL PROPERTIES

PRODUCT WEIGHT	11.20 lb/gal	1341 g/l
SPECIFIC GRAVITY	1.35	
BOILING POINT	396 - 405 °F	202 - 207 °C
MELTING POINT	Not Available	
VOLATILE VOLUME	11%	
EVAPORATION RATE	Slower than ether	
VAPOR DENSITY	Heavier than air	
SOLUBILITY IN WATER	Not Available	

VOLATILE ORGANIC COMPOUNDS (VOC Theoretical - As Packaged)

0.97 lb/gal	117 g/l	Less Water and Federally Exempt Solvents
0.97 lb/gal	117 g/l	Emitted VOC

SECTION 10 — STABILITY AND REACTIVITY

STABILITY — Stable

CONDITIONS TO AVOID

None known.

INCOMPATIBILITY

None known.

HAZARDOUS DECOMPOSITION PRODUCTS

By fire: Carbon Dioxide, Carbon Monoxide

HAZARDOUS POLYMERIZATION

Will not occur

SECTION 11 — TOXICOLOGICAL INFORMATION

CHRONIC HEALTH HAZARDS

IARC's Monograph No. 93 reports there is sufficient evidence of carcinogenicity in experimental rats exposed to titanium dioxide but inadequate evidence for carcinogenicity in humans and has assigned a Group 2B rating. In addition, the IARC summary concludes, "No significant exposure to titanium dioxide is thought to occur during the use of products in which titanium is bound to other materials, such as paint."

TOXICOLOGY DATA

CAS No.	Ingredient Name			
100-51-6	**Phenylmethanol**			
		LC50 RAT	4HR	Not Available
		LD50 RAT		Not Available
17557-23-2	**Alkyl Glycidyl Ether**			
		LC50 RAT	4HR	Not Available
		LD50 RAT		8870 mg/kg
25068-38-6	**Epoxy Polymer**			
		LC50 RAT	4HR	Not Available
		LD50 RAT		Not Available
14807-96-6	**Talc**			
		LC50 RAT	4HR	Not Available
		LD50 RAT		Not Available
13463-67-7	**Titanium Dioxide**			
		LC50 RAT	4HR	Not Available
		LD50 RAT		Not Available

SECTION 12 — ECOLOGICAL INFORMATION

ECOTOXICOLOGICAL INFORMATION

No data available.

SECTION 13 — DISPOSAL CONSIDERATIONS

WASTE DISPOSAL METHOD

Waste from this product is not hazardous as defined under the Resource Conservation and Recovery Act (RCRA) 40 CFR 261.

Incinerate in approved facility. Do not incinerate closed container. Dispose of in accordance with Federal, State/Provincial, and Local regulations regarding pollution.

SECTION 14 — TRANSPORT INFORMATION

Multi-modal shipping descriptions are provided for informational purposes and do not consider container sizes. The presence of a shipping description for a particular mode of transport (ocean, air, etc.), does not indicate that the product is packaged suitably for that mode of transport. All packaging must be reviewed for suitability prior to shipment, and compliance with the applicable regulations is the sole responsibility of the person offering the product for transport.

US Ground (DOT)

Not Regulated for Transportation.

Canada (TDG)

Not Regulated for Transportation.

IMO

Not Regulated for Transportation.

IATA/ICAO

Not Regulated for Transportation.

SECTION 15 — REGULATORY INFORMATION

SARA 313 *(40 CFR 372.65C)* SUPPLIER NOTIFICATION

CAS No.	CHEMICAL/COMPOUND	% by WT	% Element

No ingredients in this product are subject to SARA 313 (40 CFR 372.65C) Supplier Notification.

CALIFORNIA PROPOSITION 65

WARNING: This product contains chemicals known to the State of California to cause cancer and birth defects or other reproductive harm.

TSCA CERTIFICATION

All chemicals in this product are listed, or are exempt from listing, on the TSCA Inventory.

SECTION 16 — OTHER INFORMATION

This product has been classified in accordance with the hazard criteria of the Canadian Controlled Products Regulations (CPR) and the MSDS contains all of the information required by the CPR.

The above information pertains to this product as currently formulated, and is based on the information available at this time. Addition of reducers or other additives to this product may substantially alter the composition and hazards of the product. Since conditions of use are outside our control, we make no warranties, express or implied, and assume no liability in connection with any use of this information.

MATERIAL SAFETY DATA SHEET

B65V940
05 00

DATE OF PREPARATION
Jan 7, 2015

SECTION 1 — PRODUCT AND COMPANY IDENTIFICATION

PRODUCT NUMBER
B65V940
PRODUCT NAME
ENVIROLASTIC® 940 DTM (Part B), Hardener
MANUFACTURER'S NAME
THE SHERWIN-WILLIAMS COMPANY
101 Prospect Avenue N.W.
Cleveland, OH 44115

Telephone Numbers and Websites

Product Information	(800) 524-5979 www.sherwin-williams.com
Regulatory Information	(216) 566-2902 www.paintdocs.com
Medical Emergency	(216) 566-2917
Transportation Emergency*	(800) 424-9300
**for Chemical Emergency ONLY (spill, leak, fire, exposure, or accident)*	

SECTION 2 — COMPOSITION/INFORMATION ON INGREDIENTS

% by Weight	CAS Number	Ingredient	Units	Vapor Pressure
15	**123-86-4**	**n-Butyl Acetate**		
		ACGIH TLV	150 PPM	10 mm
		ACGIH TLV	200 PPM STEL	
		OSHA PEL	150 PPM	
		OSHA PEL	200 PPM STEL	
0.1	**822-06-0**	**Hexamethylene Diisocyanate (max.)**		
		ACGIH TLV	0.005 PPM	0.05 mm
		OSHA PEL	Not Available	
0.3	**4098-71-9**	**Isophorone Diisocyanate (max.)**		
		ACGIH TLV	0.005 ppm (Skin)	
		OSHA PEL	0.005 ppm (Skin)	
		OSHA PEL	0.02 ppm (Skin) STEL	
30	**Proprietary**	**Hexamethylene Diisocyanate Polymer**		
		ACGIH TLV	Not Available	
		OSHA PEL	Not Available	
55	**Proprietary**	**Isophorone Diisocyanate Polymer**		
		ACGIH TLV	Not Available	
		OSHA PEL	Not Available	

SECTION 3 — HAZARDS IDENTIFICATION

ROUTES OF EXPOSURE
INHALATION of vapor or spray mist.
EYE or SKIN contact with the product, vapor or spray mist.

HMIS Codes

Health	3*
Flammability	2
Reactivity	0

EFFECTS OF OVEREXPOSURE
EYES: Irritation.
SKIN: Prolonged or repeated exposure may cause irritation.
INHALATION: Irritation of the upper respiratory system.

May cause nervous system depression. Extreme overexposure may result in unconsciousness and possibly death.
Prolonged overexposure to hazardous ingredients in Section 2 may cause adverse chronic effects to the following organs or systems:
- the hematopoietic (blood-forming) system

SIGNS AND SYMPTOMS OF OVEREXPOSURE
Headache, dizziness, nausea, and loss of coordination are indications of excessive exposure to vapors or spray mists.
Redness and itching or burning sensation may indicate eye or excessive skin exposure.

MEDICAL CONDITIONS AGGRAVATED BY EXPOSURE

May cause allergic respiratory and/or skin reaction in susceptible persons or sensitization. This effect may be delayed several hours after exposure.

Persons sensitive to isocyanates will experience increased allergic reaction on repeated exposure.

CANCER INFORMATION

For complete discussion of toxicology data refer to Section 11.

SECTION 4 — FIRST AID MEASURES

EYES: Flush eyes with large amounts of water for 15 minutes. Get medical attention.

SKIN: Wash affected area thoroughly with soap and water.
Remove contaminated clothing and launder before re-use.

INHALATION: If any breathing problems occur during use, **LEAVE THE AREA** and get fresh air. If problems remain or occur later, **IMMEDIATELY** get medical attention.

INGESTION: Do not induce vomiting. Get medical attention immediately.

SECTION 5 — FIRE FIGHTING MEASURES

FLASH POINT	LEL	UEL	FLAMMABILITY CLASSIFICATION
113 °F PMCC	1.4	7.6	Combustible, Flash above 99 and below 200 °F

EXTINGUISHING MEDIA

Carbon Dioxide, Dry Chemical, Foam

UNUSUAL FIRE AND EXPLOSION HAZARDS

Closed containers may explode when exposed to extreme heat.

Application to hot surfaces requires special precautions.

During emergency conditions overexposure to decomposition products may cause a health hazard. Symptoms may not be immediately apparent. Obtain medical attention.

SPECIAL FIRE FIGHTING PROCEDURES

Full protective equipment including self-contained breathing apparatus should be used.

Water spray may be ineffective. If water is used, fog nozzles are preferable. Water may be used to cool closed containers to prevent pressure build-up and possible autoignition or explosion when exposed to extreme heat.

SECTION 6 — ACCIDENTAL RELEASE MEASURES

STEPS TO BE TAKEN IN CASE MATERIAL IS RELEASED OR SPILLED

Remove all sources of ignition. Ventilate the area.

All personnel in the area should be protected as in Section 8.

Cover spill with absorbent material. Deactivate spilled material with a 10% ammonium hydroxide solution (household ammonia). After 10 minutes, collect in open containers and add more ammonia. Cover loosely. Wash spill area with soap and water.

SECTION 7 — HANDLING AND STORAGE

STORAGE CATEGORY

DOL Storage Class II

PRECAUTIONS TO BE TAKEN IN HANDLING AND STORAGE

Contents are COMBUSTIBLE. Keep away from heat and open flame.

Consult NFPA Code. Use approved Bonding and Grounding procedures.

Keep container closed when not in use. Transfer only to approved containers with complete and appropriate labeling. Do not take internally. Keep out of the reach of children.

SECTION 8 — EXPOSURE CONTROLS/PERSONAL PROTECTION

PRECAUTIONS TO BE TAKEN IN USE

NO PERSON SHOULD USE THIS PRODUCT, OR BE IN THE AREA WHERE IT IS BEING USED, IF THEY HAVE CHRONIC (LONG-TERM) LUNG OR BREATHING PROBLEMS OR IF THEY EVER HAD A REACTION TO ISOCYANATES.

Use only with adequate ventilation.

Avoid contact with skin and eyes. Avoid breathing vapor and spray mist.

Wash hands after using.

This coating may contain materials classified as nuisance particulates (listed "as Dust" in Section 2) which may be present at hazardous levels only during sanding or abrading of the dried film. If no specific dusts are listed in Section 2, the applicable limits for nuisance dusts are ACGIH TLV 10 mg/m3 (total dust), 3 mg/m3 (respirable fraction), OSHA PEL 15 mg/m3 (total dust), 5 mg/m3 (respirable fraction).

VENTILATION

Local exhaust preferable. General exhaust acceptable if the exposure to materials in Section 2 is maintained below applicable exposure limits. Refer to OSHA Standards 1910.94, 1910.107, 1910.108.

RESPIRATORY PROTECTION

Where overspray is present, a positive pressure air supplied respirator (TC19C NIOSH/MSHA approved) should be worn. If unavailable, a properly fitted organic vapor/particulate respirator approved by NIOSH/MSHA for protection against materials in Section 2 may be effective. Follow respirator manufacturers directions for use. Wear the respirator for the whole time of spraying and until all vapors and mists are gone. **NO PERSONS SHOULD BE ALLOWED IN THE AREA WHERE THIS PRODUCT IS BEING USED UNLESS EQUIPPED WITH THE SAME RESPIRATOR PROTECTION RECOMMENDED FOR THE PAINTERS.**

When sanding or abrading the dried film, wear a dust/mist respirator approved by NIOSH/MSHA for dust which may be generated from this product, underlying paint, or the abrasive.

PROTECTIVE GLOVES

To prevent skin contact, wear gloves which are recommended by glove supplier for protection against materials in Section 2.

EYE PROTECTION

Wear safety spectacles with unperforated sideshields.

OTHER PROTECTIVE EQUIPMENT

Use barrier cream on exposed skin.

OTHER PRECAUTIONS

This product must be mixed with other components before use. Before opening the packages, READ AND FOLLOW WARNING LABELS ON ALL COMPONENTS.

Intentional misuse by deliberately concentrating and inhaling the contents can be harmful or fatal.

SECTION 9 — PHYSICAL AND CHEMICAL PROPERTIES

PRODUCT WEIGHT	8.80 lb/gal	1054 g/l
SPECIFIC GRAVITY	1.06	
BOILING POINT	255 - 264 °F	123 - 128 °C
MELTING POINT	Not Available	
VOLATILE VOLUME	18%	
EVAPORATION RATE	Slower than ether	
VAPOR DENSITY	Heavier than air	
SOLUBILITY IN WATER	Not Available	

VOLATILE ORGANIC COMPOUNDS (VOC Theoretical - As Packaged)

1.32 lb/gal	158 g/l	Less Water and Federally Exempt Solvents
1.32 lb/gal	158 g/l	Emitted VOC

SECTION 10 — STABILITY AND REACTIVITY

STABILITY — Stable

CONDITIONS TO AVOID

None known.

INCOMPATIBILITY

Contamination with Water, Alcohols, Amines and other compounds which react with isocyanates, may result in dangerous pressure in, and possible bursting of, closed containers.

HAZARDOUS DECOMPOSITION PRODUCTS

By fire: Carbon Dioxide, Carbon Monoxide , Oxides of Nitrogen, possibility of Hydrogen Cyanide

HAZARDOUS POLYMERIZATION

Will not occur

SECTION 11 — TOXICOLOGICAL INFORMATION

CHRONIC HEALTH HAZARDS

No ingredient in this product is an IARC, NTP or OSHA listed carcinogen.

Reports have associated repeated and prolonged overexposure to solvents with permanent brain and nervous system damage.

TOXICOLOGY DATA

CAS No.	Ingredient Name			
123-86-4	**n-Butyl Acetate**			
		LC50 RAT	4HR	2000 ppm
		LD50 RAT		13100 mg/kg
822-06-0	**Hexamethylene Diisocyanate (max.)**			
		LC50 RAT	4HR	Not Available
		LD50 RAT		738 mg/kg
4098-71-9	**Isophorone Diisocyanate (max.)**			
		LC50 RAT	4HR	Not Available
		LD50 RAT		2500. mg/kg
Proprietary	**Hexamethylene Diisocyanate Polymer**			
		LC50 RAT	4HR	Not Available
		LD50 RAT		Not Available
Proprietary	**Isophorone Diisocyanate Polymer**			
		LC50 RAT	4HR	Not Available
		LD50 RAT		5000 mg/kg

SECTION 12 — ECOLOGICAL INFORMATION

ECOTOXICOLOGICAL INFORMATION

No data available.

SECTION 13 — DISPOSAL CONSIDERATIONS

WASTE DISPOSAL METHOD

Waste from this product may be hazardous as defined under the Resource Conservation and Recovery Act (RCRA) 40 CFR 261.
Waste must be tested for ignitability to determine the applicable EPA hazardous waste numbers.
Incinerate in approved facility. Do not incinerate closed container. Dispose of in accordance with Federal, State/Provincial, and Local regulations regarding pollution.

SECTION 14 — TRANSPORT INFORMATION

Multi-modal shipping descriptions are provided for informational purposes and do not consider container sizes. The presence of a shipping description for a particular mode of transport (ocean, air, etc.), does not indicate that the product is packaged suitably for that mode of transport. All packaging must be reviewed for suitability prior to shipment, and compliance with the applicable regulations is the sole responsibility of the person offering the product for transport.

US Ground (DOT)

May be Classed as a Combustible Liquid for U.S. Ground.
UN1263, PAINT RELATED MATERIAL, 3, PG III, (ERG#128)

DOT (Dept of Transportation) Hazardous Substances & Reportable Quantities

n-Butyl acetate 5000 lb RQ

Bulk Containers may be Shipped as (check reportable quantities):

UN1263, PAINT RELATED MATERIAL, COMBUSTIBLE LIQUID, PG III, (ERG#128)

Canada (TDG)

May be Classed as a Combustible Liquid for Canadian Ground.
UN1263, PAINT RELATED MATERIAL, CLASS 3, PG III, (ERG#128)

IMO

5 Liters (1.3 Gallons) and Less may be Shipped as Limited Quantity.
UN1263, PAINT RELATED MATERIAL, CLASS 3, PG III, (45 C c.c.), EmS F-E, S-E

IATA/ICAO

UN1263, PAINT RELATED MATERIAL, 3, PG III

SECTION 15 — REGULATORY INFORMATION

SARA 313 *(40 CFR 372.65C)* SUPPLIER NOTIFICATION

CAS No.	CHEMICAL/COMPOUND	% by WT	% Element

No ingredients in this product are subject to SARA 313 (40 CFR 372.65C) Supplier Notification.

TSCA CERTIFICATION

All chemicals in this product are listed, or are exempt from listing, on the TSCA Inventory.

SECTION 16 — OTHER INFORMATION

This product has been classified in accordance with the hazard criteria of the Canadian Controlled Products Regulations (CPR) and the MSDS contains all of the information required by the CPR.

The above information pertains to this product as currently formulated, and is based on the information available at this time. Addition of reducers or other additives to this product may substantially alter the composition and hazards of the product. Since conditions of use are outside our control, we make no warranties, express or implied, and assume no liability in connection with any use of this information.

REVIEWED BY CONTRACTOR

Kudlik Construction Ltd.

NAME: Sandra Rousseau P.Eng

DATE: Mai 27, 2019

VEOLIA

SHOP DRAWINGS

MBBR Submittal package Date : 2019-05-24

General Information			
Project	**WWTP UPGRADE - IQALUIT**		
Client:	Kudlik Construction Ltd.	Project Number	2018-062
To:	Sandra Rousseau P.Eng., Project Manger	E-mail:	srousseau@kudlik.biz
Contractor	Veolia Water Technologies Canad Inc.	Project Number	5000218036
Address	4105 Sartelon, Ville St. Laurent PQ, H4S 2B3		
Project Manger:	Clément Bekaert	E-mail:	clement.bekaert@veolia.com
Phone:	514-334-7230 x 3243	Cell:	514-246-6232

Information on the Equipment		
Specialty:	Process	
Equipment:	MBBR	
Drawing Reference:		
Specification reference:	46 53 33	
Article:		
Revision:	Rev02	
Titre:	MBBR submittal package	
Numero client:	DA-Veolia-DS-02-MBBR	
Numero Veolia	5000218036_DS_0002_GEN_VWT	
Envoyer pour:	Approbation/Information:	Approbation

Consultant Approval

STANTEC PROJECT #: 110126045

SUBMITTAL # DA-Veolia-DS-02-MBBR. Rev2

This review by Stantec is for general conformance with the design concept of Stantec's design of the:

☑ Process ☐ Electrical
☐ Structural ☐ Other
☐ Mechanical

Stantec

☑ REVIEWED

☐ REVIEWED, AS NOTED

☐ REVISE AND RESUBMIT

☐ NOT REVIEWED

component(s) only and does not mean that Stantec has verified or approves the shop drawing(s). The Contractor remains solely responsible for the shop drawing(s) and this review by Stantec does not relieve the Contractor of the Contractor's responsibility for errors or omissions in the shop drawing(s) or for meeting all requirements of the contract documents. This review does not mean that Stantec approves the detailed design inherent in the shop drawing, responsibility for which shall remain with the Contractor submitting same, nor does this review mean that Stantec accepts any deviation of the shop drawing(s) from the contract documents. The Contractor is responsible for confirming all dimensions and correlating them at the job site, for all construction means, methods and techniques, and for coordination of construction work of all trades, including coordination of all shop drawings.

DATE May 29, 2019

BY Alejandro Rojas, P.Eng

4105 Sartelon
Ville St. Laurent, P
H4S-2B3

4-334-7230
4-334-5070
www.veoliawatertechnologies.ca

VEOLIA

TECHNICAL DOCUMENTATION



- Include the following in O&M manual submission:
  - Dissolved oxygen probe CSA approvals
  - Biomedia CSA approvals
  - Spare parts list
  - Drawing showing aeration grid coverage
  - Calculations of air requirements of each cell
- Ensure that MBBR tank minimum temp rating meets spec requirements

Project name:	IQALUIT
Project#:	5000218036
Document #:	5000218036_DS_0002_GEN_VWT
by:	BB
chkd:	GH
appvd:	CB

SUBMITTAL PACKAGE

MBBR - REV 2

Project name: IQALUIT

Project#: 5000218036

Document #: 5000218036_DS_0002_GEN_VWT

by: BB

chkd: GH

appvd: CB

PROCESS DATASHEET

OIM manual section: 4.3.2.1

	VEOLIA				VWT DOC#	PDS_0002_MBBR		
					Project #	5000218036		
					Date	2019-05-24		
					MBBR			
CLIENT	REV	DESCRIPTION			DATE	By	Chkd	PAR	App
	1	FOR APPROVAL			2018-09-26	G.H.	G.P.		C.B.
CITY OF IQALUIT	2	FOR APPROVAL			2019-05-24	F.V.	G.P.		C.B.
	3								
Project	4								
	5								
WWTP IQALUIT	6								
	7								
	TAG:	MBBR#1 / MBBR#2					P&ID:		REV
GENERAL	Technology				-	MBBR			
	Number of Trains				-	2			
	Number of units				-	4			
	Number of units per train				-	2			
ENVIRONNMENT CONDITIONS	Equipment Location					Indoor			
	Min. Temperature				°C	5			
	Max . Temperature				°C	45			
	Max. Humidity				%	95			
	Corrosive Atmosphere					Non corrosif			
	Freeze					N/A			
	Comments					N/A			
SAFETY	Electrical Classification					Unclassified			
PERFORMANCE	Application					BOD Removal			
	Design Temperature				deg C	5			
	Nominal Capacity per unit				m3/d	2993			
	Max Capacity per unit (Hydraulic Design)				m3/d	6523			
	Hydraulic Retention time (at nominal flowrate)				hrs	2.1 AAF & 1.8 MMF			
	Effluent quality					Refer to Offer			
TECHNICAL DESCRIPTION	MBBR #1	Tank Dimensions	Type		-	Concrete / On site poured			
			Manufacturer		-	Tank connection			
			Model		-	N/A			
			Internal Length/Width (indicative)		mm	4930 /4845			2
			Total Height		mm	4725			
			Water depth		mm	4 100			
			Free board		mm	625			
		Media	Type		-	K5 AnoxKaldnes			
			Diameter / Thickness		mm	25 x4			
			Material		-	Polyethylene			
			Volume		m3	86			2
			Initial filling rate		%	45			
			Max. future filling rate		%	60			
		Aeration Grids	Number of grids per tank		-	2			
			Number of branches per grid		-	7			
			Holes size / Bubbles Type		mm	4 / Coarse bubbles			
			Number of holes per branch		-	20			
			Grids Header size		mm	100			
			Branches size		mm	32			
			Material		-	304L SS (sh10)			
		Sieve	Type		-	Perforated Basket			
			Total number of sieves per tank		-	4			
			Number of sieves per tank -inlet		-	0			
			Number of sieves per tank - outlet		-	4			
			Model		-	PRSNGU204034			
			Length		mm	1 000			
			Diameter		mm	450			
			Material		-	304L SS			
			Openings size		-	15 mm (R15T20)			

	VEOLIA				VWT DOC#		PDS_0002_MBBR		
					Project #		5000218036		
					Date		2019-05-24		
					MBBR				
CLIENT	REV	DESCRIPTION			DATE	By	Chkd	PAR	App
	1	FOR APPROVAL			2018-09-26	G.H.	G.P.		C.B.
CITY OF IQALUIT	2	FOR APPROVAL			2019-05-24	F.V.	G.P.		C.B.
	3								
Project	4								
	5								
WWTP IQALUIT	6								
	7								
	TAG:	MBBR#1 / MBBR#2					P&ID:		REV
TECHNICAL DESCRIPTION	MBBR #2	Tank Dimensions	Type		-		Concrete / On site poured		
			Manufacturer		-		Tank connection		
			Model		-		N/A		
			Internal Length/Width (indicative)		mm		4930 /4845		2
			Total Height		mm		4725		2
			Water depth		mm		4 100		
			Free board		mm		625		
		Media	Type		-		K5 AnoxKaldnes		
			Diameter / Thickness		mm		25 x4		
			Material		-		Polyethylene		
			Volume		m3		86		2
			Initial filling rate		%		45		
			Max. future filling rate		%		60		
		Aeration Grids	Number of grids per tank		-		2		
			Number of branches per grid		-		7		
			Holes size / Bubbles Type		mm		4 / Coarse bubbles		
			Number of holes per branch		-		20		
			Grids Header size		mm		100		
			Branches size		mm		32		
			Material		-		304L SS (sh10)		
		Sieve	Type		-		Perforated Basket		
			Total number of sieves per tank		-		4		
			Number of sieves per tank -inlet		-		0		
			Number of sieves per tank - outlet		-		4		
			Model		-		PRSNGU204034		
			Length		mm		1 000		
			Diameter		mm		450		
			Material		-		304L SS		
			Openings size		-		15 mm (R15T20)		
TECHNICAL DESCRIPTION	REQUIRED AERATION	Blower	Brand/Model		-		AERZEN		
			Number		-		3		
			Flow		SCFM		460		
			Power		-		25 HP		
		Distribution	Diameter		mm		100 (By-others)		
			Number		-		2 (By-others)		
CHEMICALS	NA	Antimousse	Flowrate (@max. flowrate)		lph		NA		
			Flowrate (@avg. flowrate)		lph		NA		
			Note				NA		
			Recommend Product (municiapl MBBR)				NA		
UTILITIES	Service Air for probe cleaning		Flowrate		L/min		NA		
			Pressure		PSIG		NA		
OTHER MATERIALS OF CONSTRUCTION	Tank						Concrete / On site poured		
	Wall						N/A		
	Sieves supports						N/A		
	Piping						SS 304L		

	VEOLIA				VWT DOC#	PDS_0002_MBBR			
					Project #	5000218036			
					Date	2019-05-24			
					MBBR				
CLIENT	REV	DESCRIPTION		DATE	By	Chkd		PAR	App
	1	FOR APPROVAL		2018-09-26	G.H.	G.P.			C.B.
CITY OF IQALUIT	2	FOR APPROVAL		2019-05-24	F.V.	G.P.			C.B.
	3								
Project	4								
	5								
WWTP IQALUIT	6								
	7								
	TAG:	MBBR#1 / MBBR#2				P&ID:			REV
INSTRUMENTATIONS	X	High High Level Switch	Manufacturer	-	XYLEM				
			Diam. | Model	-	ENM10 (13m)				
			Quantity	-	4				
		Flowmeter (Influent Line)	Manufacturer	-	NA				
			Diam. | Model	-	NA	N/A			
			Quantity	-	NA				
	X	DO	Manufacturer	-	HACH				
			Diam. | Model	-	DO Probe/7,7 Cable/Air Blast Cap				
			Quantity	-	4				
	NA	Foam Detector	Manufacturer	-					
			Diam. | Model	-					
			Quantity	-					
	NA	Ammonia	Manufacturer	-					
			Diam. | Model	-					
			Quantity	-	0				
	NA	pH meter	Manufacturer	-					
			Diam. | Model	-					
			Quantity	-	0				
	NA	Level meter	Manufacturer	-					
			Diam. | Model	-					
			Quantity	-	0				
VALVES	NA	Influent Line Isolation Valve	Manufacturer	-					
			Diam. | Model	-					
			Quantity	-					
	NA	Influent Line Modulating Valve	Manufacturer	-					
			Diam. | Model	-					
			Quantity	-					
	NA	Blower Isolation Valve	Manufacturer	-					
			Diam. | Model	-					
			Quantity	-					
	NA	Reactor Inlet Isolation Valve	Manufacturer	-					
			Diam. | Model	-					
			Quantity						
	NA	Reactor Air Inlet Isolation Valve	Manufacturer	-					
			Diam. | Model	-					
			Quantity						
	NA	Chemical Cleaning Valve	Manufacturer	-					
			Diam. | Model	-					
			Quantity						
	NA	DO Sensor Solenoid valve	Manufacturer	-					
			Diam. | Model	-					
			Quantity						
	NA	Air DO Sensor Isolation valve	Manufacturer	-					
			Diam. | Model	-					
			Quantity						

	VEOLIA				VWT DOC#		PDS_0002_MBBR		
					Project #		5000218036		
					Date		2019-05-24		
					MBBR				
	CLIENT	REV	DESCRIPTION		DATE	By	Chkd	PAR	App
		1	FOR APPROVAL		2018-09-26	G.H.	G.P.		C.B.
	CITY OF IQALUIT	2	FOR APPROVAL		2019-05-24	F.V.	G.P.		C.B.
		3							
	Project	4							
	WWTP IQALUIT	5							
		6							
		7							
		TAG:	MBBR#1 / MBBR#2				P&ID:		REV
	METALWORKS	NA	Grating	Dimensions		N/A			
				Material		N/A			
		NA	Guardrails	Dimensions		N/A			
				Material		N/A			
		NA	Access Hatches	Dimensions		N/A			
				Material		N/A			
		NA		Dimensions		N/A			
				Material		N/A			
	ACCESSORIES	Lifting Lugs				N/A			
		Anchors				N/A			
	APPROVAL & CERTIFICATIONS	Control Panel				N/A			2
		Precast concrete				CSA			
		Specification				N/A			

Project name:	IQALUIT
Project#:	5000218036
Document #:	5000218036_DS_0002_GEN_VWT
by:	BB
chkd:	GH
appvd:	CB

SUPPLIER TECHNICAL DATASHEETS

OIM manual section: 4.3.2.2

CS-418-000 : Identification sheet

VWTC PROJECT NUMBER:	Iqaluit WWTP	REV:	01
PROJECT NAME:	5000218036	SUBMITTED TO (COMPANY):	
ENGINEER:	G. HÉBERT	SUBMITTED TO (RESPONSIBLE)	
PROJECT MANAGER:	C. BEKAERT	PROJECT NUM REFERENCE.:	
PHONE NUMBER:		LOT NUMBER:	

SUPPLIER	EQPT CODE	EQPT TAG NO	DIA	DESCRIPTION	INFO 1	INFO 2	INFO 3	APPLIC.	NOTE	REV
HACH	ST-418-107	AIT-02-211 / AE-02-211	N/A	DO ANALYSER	MANUFACTURER: HACH// MODEL: 9020000/LXV404.99.00552/5796000/9253500/6860000 //NOTES: C/W CONTROLLER (2 inputs) /DIGITAL EXTENSION CABLE, 7.7m/AIR BLAST HARDWARE COMPONENTS/ADD. OUTPUT FOR TEMP./High Output Air Blast Cleaning System, 115 Vac	N/A	N/A			1
HACH	ST-418-107	AIT-02-212 / AE-02-212	N/A	DO ANALYSER	MANUFACTURER: HACH// MODEL: 9020000/LXV404.99.00552/5796000/9253500/6860000 //NOTES: C/W CONTROLLER (2 inputs) /DIGITAL EXTENSION CABLE, 7.7m/AIR BLAST HARDWARE COMPONENTS/ADD. OUTPUT FOR TEMP./High Output Air Blast Cleaning System, 115 Vac	N/A	N/A			1

SUPPLIER	EQPT CODE	EQPT TAG NO	DIA	DESCRIPTION	INFO 1	INFO 2	INFO 3	APPLIC.	NOTE	REV
HACH	ST-418-107	AIT-02-221 / AE-02-221	N/A	DO ANALYSER	MANUFACTURER: HACH// MODEL: 9020000/LXV404.99.00552/5796000/9253500/6860000 //NOTES: C/W CONTROLLER (2 inputs) /DIGITAL EXTENSION CABLE, 7.7m/AIR BLAST HARDWARE COMPONENTS/ADD. OUTPUT FOR TEMP./High Output Air Blast Cleaning System, 115 Vac	N/A	N/A			1
HACH	ST-418-107	AIT-02-222 / AE-02-222	N/A	DO ANALYSER	MANUFACTURER: HACH// MODEL: 9020000/LXV404.99.00552/5796000/9253500/6860000 //NOTES: C/W CONTROLLER (2 inputs) /DIGITAL EXTENSION CABLE, 7.7m/AIR BLAST HARDWARE COMPONENTS/ADD. OUTPUT FOR TEMP./High Output Air Blast Cleaning System, 115 Vac	N/A	N/A			1

Dissolved Oxygen: Hach LDO® Probe, Model 2

Applications

- Wastewater
- Industrial Water
- Drinking Water



Take "No" for an answer when measuring dissolved oxygen with the next generation Hach LDO probe.

No Calibration Required

The Hach LDO probe is ready to work in your process right out of the box with no calibration required for the entire 2 year life of the sensor cap.

No Membranes to Replace

There is virtually no maintenance with Hach's breakthrough luminescent technology, as there are no membranes to replace, no electrolyte solution to replenish, and no anode or cathode to clean.

No Missed Cleaning Cycles

Customizable service indicators trigger a service message so that a cleaning cycle is never missed.

No Drift

A cutting-edge 3D calibration procedure at the factory makes oxygen measurement with the Hach LDO probe more accurate than ever before.

No Complications

A robust new design gives the Hach LDO enhanced durability and reduced size for easier handling.

*Specifications**

Measuring Range	0 - 20.00 ppm 0 - 20.0 mg/L 0 - 200% saturation
Accuracy	±0.1 ppm Below 5 ppm ±0.2 ppm Above 5 ppm Temperature: ±0.2°C
Response Time	at 20ºC: To 95% in less than 60 seconds To 90% in less than 40 seconds
Resolution	0.01 ppm (mg/L) / 0.1% saturation
Repeatability	±0.1 ppm (mg/L)
Operating Temperature	0 to 50°C (32 to 122°F)
Flow Rate	None required
Sensor Immersion Depth	Pressure Limits at 34 m 345 kPa (112 ft.), 345 kPa (50 psi), maximum; accuracy may not be maintained at this depth
Transmission Distance	1000 m (3280 ft.) maximum when used with a termination box
Cable Length	10 m
Wetted Materials	Sensor Cap: Acrylic; Probe Body: CPVC, Polyurethane, Viton, Noryl, 316 Stainless Steel
Dimensions (D x L)	1.95 in x 10.05 in (49.53 mm x 255.27 mm)
Weight	2.2 lbs. (1 kg)

**Subject to change without notice.*

Principal of Operation

The HACH LDO sensor is coated with a luminescent material. Blue light from an LED is transmitted to the sensor surface. The blue light excites the luminescent material. As the material relaxes it emits red light. The time for the red light to be emitted is measured. Between the flashes of blue light, a red LED is flashed on the sensor and used as an internal reference.

Increased oxygen in the sample decreases the time it takes for the red light to be emitted. The time measurements correlate to the oxygen concentration.

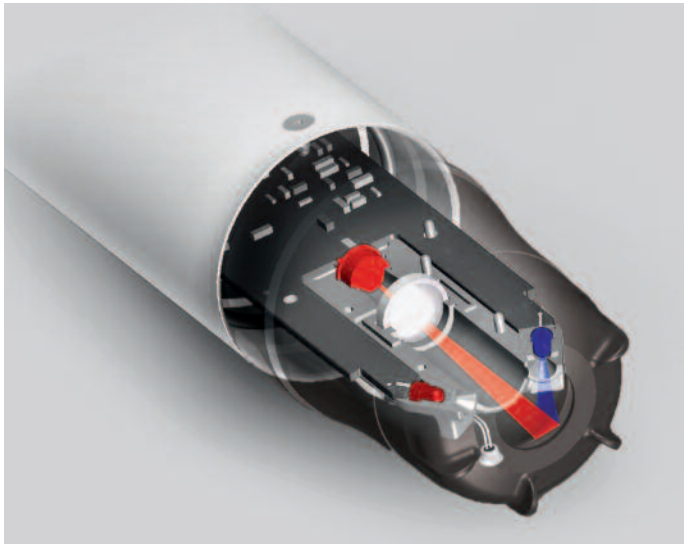

Dimensions

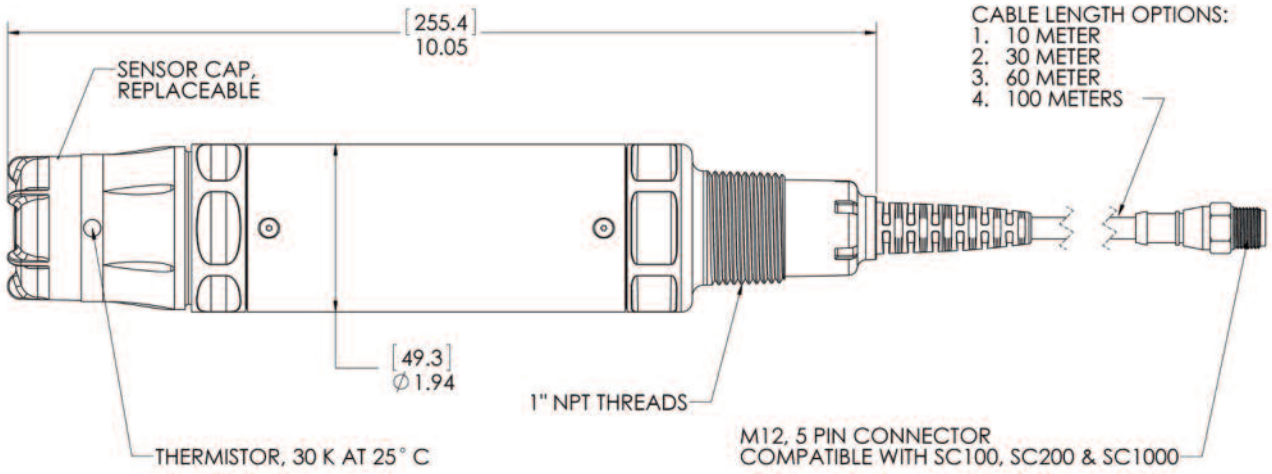

Installation / Mounting

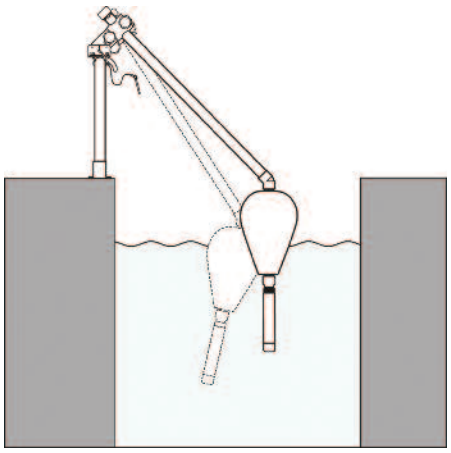

Float Mount Kit

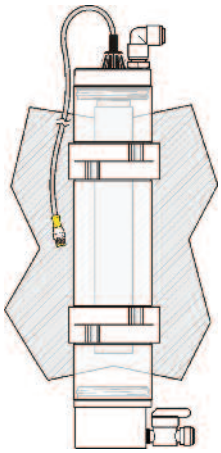

Flow Cell

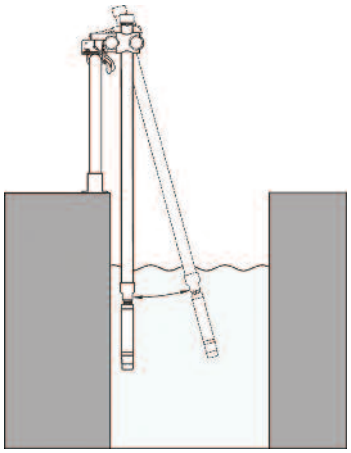

Pole Mount Kit

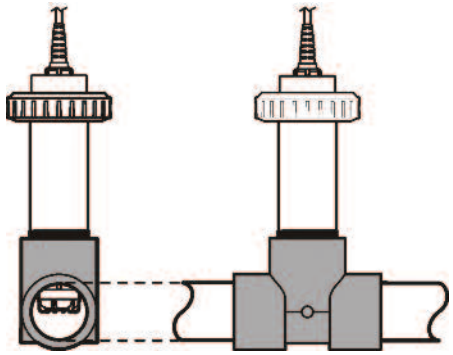

Union Mount Kit

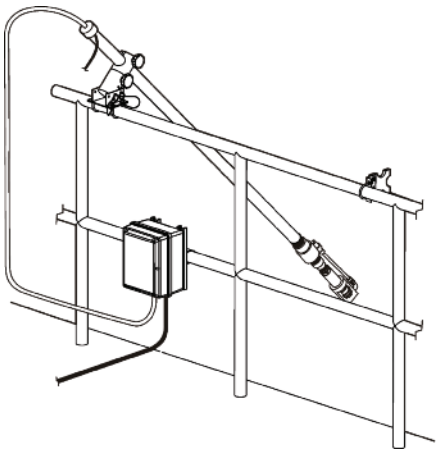

Air Blast Cleaning System

Ordering Information

9020000	Dissolved Oxygen: Hach LDO® Probe
9020000-UPGRADE	LDO Probe, Mounting Conversion Adapter
9020000-SC200	LDO Probe, Mounting Conversion Adapter, sc200 controller with 2 channels

Accessories

5867000	Digital Termination Box
5796000	Digital Extension Cable, 7.7 m (25 ft.)
5796100	Digital Extension Cable, 15 m (50 ft.)
5796200	Digital Extension Cable, 31 m (100 ft.)
6860000	High Output Air Blast Cleaning System, 115 Vac
6860100	High Output Air Blast Cleaning System, 230 Vac
9253500	Air Blast Hardware Components

Replacement Parts

9021100	LDO Model 2 Sensor Cap Replacement Kit

Mounting Kits

9253000	Pole Mount Kit, PVC
9253100	Ball Float Mount Kit, PVC
9257000	Union Mount Kit, PVC
9253400	Mounting Conversion Adapter, LDO Model 1 to LDO Model 2
7300800	1 NPT sc Sensors Flow Cell

Controllers

sc200 Digital Controllers

LXV404.99.00552	sc200 controllers, 2 channels, digital
LXV404.99.00542	sc200 controller, 2 channel, digital & mA input
LXV404.99.00502	sc200 controller, 1 channel, digital
LXV404.99.00512	sc200 controller, 2 channel, digital & pH/DO
LXV404.99.00522	sc200 controller, 2 channel, digital & Conductivity
LXV404.99.00532	sc200 controller, 2 channel, digital & Flow

sc1000 Digital Controllers

LXV402.99.00002	sc1000 Display Module
LXV400.99.1R572	sc1000 Probe Module, 4 sensors, 4 mA Out, 4 mA In, 4 Relays, 110-230V
LXV400.99.1B572	sc1000 Probe Module, 4 sensors, 4 mA Out, 4 mA In, 4 Relays, RS-485 (MODBUS), 110-230V
LXV400.99.1F572	sc1000 Probe Module, 4 sensors, 4 mA Out, 4 mA In, 4 Relays, PROFIBUS DP, 110-230V
LXV400.99.1R582	sc1000 Probe Module, 6 sensors, 4 mA Out, 4 mA In, 4 Relays, 110-230V







HACH COMPANY World Headquarters: Loveland, Colorado USA

United States:	800-227-4224 tel	970-669-2932 fax	orders@hach.com
Outside United States:	970-669-3050 tel	970-461-3939 fax	int@hach.com

www.hach.com

LIT2455 Rev 2
F12 Printed in U.S.A.
©Hach Company, 2012. All rights reserved.
In the interest of improving and updating its equipment, Hach Company reserves the right to alter specifications to equipment at any time.

HACH® Be Right™

sc200™ UNIVERSAL CONTROLLER

Applications
- Drinking Water
- Wastewater
- Industrial Water
- Power



One Controller for the Broadest Range of Sensors.

Choose from 30 digital and analog sensor families for up to 17 different parameters.

Maximum Versatility

The sc200 controller allows the use of digital and analog sensors, either alone or in combination, to provide compatibility with Hach's broad range of sensors, eliminating the need for dedicated, parameter-specific controllers.

Ease of Use and Confidence in Results

Large, high-resolution, transreflective display provides optimal viewing resolution in any lighting condition. Guided calibration procedures in 19 languages minimize complexity and reduce operator error. Password-protected SD card reader offers a simple solution for data download and transfer. Visual warning system provides critical alerts.

Wide Variety of Communication Options

Utilize two to five analog outputs to transmit primary and secondary values for each sensor, or integrate Hach sensors and analyzers into MODBUS RS232/RS485, Profibus® DP, and HART networks.



Password protected SD card reader offers a simple solution for data download and transfer, and sc200 and digital sensor configuration file duplication and backup.

HACH®
Be Right™

Controller Comparison







Features	Previous Models sc100™ Controller	Previous Models GLI53 Controller	sc200™ Controller	Benefits
Display	64 x 128 pixels 33 x 66 mm (1.3 x 2.6 in.)	64 x 128 pixels 33 x 66 mm (1.3 x 2.6 in.)	160 x 240 pixels 48 x 68 mm (1.89 x 2.67 in.) Transreflective	• Improved user interface—50% bigger • Easier to read in daylight and sunlight
Data Management	irDA Port/PDA Service Cable	N/A	SD Card Service Cable	• Simplifies data transfer • Standardized accessories/max compatibility
Sensor Inputs	2 Max Direct Digital Analog via External Gateway	2 Max Analog Depending on Parameter	2 Max Digital and/or Analog with Sensor Card	• Simplifies analog sensor connections • Works with analog and digital sensors
Analog Inputs	N/A	N/A	1 Analog Input Signal Analog 4-20mA Card	• Enables non-sc analyzer monitoring • Accepts mA signals from other analyzers for local display • Consolidates analog mA signals to a digital output
4-20 mA Outputs	2 Standard	2 Standard	2 Standard Optional 3 Additional	• Total of five (5) 4-20 mA outputs allows multiple mA outputs per sensor input
Digital Communication	MODBUS RS232/RS485 Profibus DP V1.0	HART	MODBUS RS232/RS485 Profibus DP V1.0 HART 7.2	• Unprecedented combination of sensor breadth and digital communication options

Choose from Hach's Broad Range of Digital and Analog Sensors

Parameter	Sensor	Digital or Analog
Ammonia	AMTAX™ sc, NH4D sc, AISE sc, AN-ISE sc	●
Chlorine	CLF10 sc, CLT10 sc, 9184 sc	●
Chlorine Dioxide	9185 sc	●
Conductivity	GLI 3400 Contacting, GLI 3700 Inductive	△
Dissolved Oxygen	LDO® Model 2, 5740 sc	●
Dissolved Oxygen	5500	△
Flow	U53, F53 Sensors	△
Nitrate	NITRATAX™ sc, NO3D sc, NISE sc, AN-ISE sc	●
Oil in Water	FP360 sc	●
Organics	UVAS sc	●
Ozone	9187 sc	●
pH/ORP	pHD	●
pH/ORP	pHD, pH Combination, LCP	△
Phosphate	PHOSPHAX™ sc	●
Sludge Level	SONATAX™ sc	●
Suspended Solids	SOLITAX™ sc, TSS sc	●
Turbidity	1720E, FT660 sc, SS7 sc, ULTRATURB sc, SOLITAX sc, TSS sc	●
Ultra Pure Conductivity	8310, 8311, 8312, 8315, 8316, 8317 Contacting	△
Ultra Pure pH/ORP	8362	△

● = Digital △ = Analog

Connect up to two of any of the sensors listed above, in any combination, to meet your application needs. The diagrams below demonstrate the potential configurations. Operation of analog sensors requires the controller to be equipped with the appropriate sensor module. Contact Hach Technical Support for help with selecting the appropriate module.

2 Channel Configurations

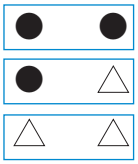

1 Channel Configurations

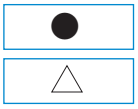

Specifications*

Dimensions (H x W x D)	5.7 in x 5.7 in x 7.1 in (144 mm x 144 mm x 181 mm)
Display	Graphic dot matrix LCD with LED backlighting, transreflective
Display Size	1.9 x 2.7 in. (48 mm x 68 mm)
Display Resolution	240 x 160 pixels
Weight	3.75 lbs. (1.70 kg)
Power Requirements (Voltage)	100 - 240 V AC, 24 V DC
Power Requirements (Hz)	50/60 Hz
Operating Temperature Range	-20 to 60 °C , 0 to 95% RH non-condensing
Analog Outputs	Two (Five with optional expansion module) to isolated current outputs, max 550 Ω , Accuracy: ± 0.1% of FS (20mA) at 25 °C, ± 0.5% of FS over -20 °C to 60 °C range Operational Mode: measurement or calculated value
Analog Output Functional Mode	Linear, Logarithmic, Bi-linear, PID
Security Levels	2 password-protected levels
Mounting Configurations	Wall, pole, and panel mounting
Enclosure Rating	NEMA 4X/IP66
Conduit Openings	1/2 in NPT Conduit
Relay: Operational Mode	Primary or secondary measurement, calculated value (dual channel only) or timer
Relay Functions	Scheduler (Timer), Alarm, Feeder Control, Event Control, Pulse Width Modulation, Frequency Control, and Warning
Relays	Four electromechanical SPDT (Form C) contacts, 1200 W, 5 A
Communication	MODBUS RS232/RS485, PROFIBUS DPV1, or HART 7.2 optional
Memory Backup	Flash memory
Electrical Certifications	EMC CE compliant for conducted and radiated emissions: - CISPR 11 (Class A limits) - EMC Immunity EN 61326-1 (Industrial limits) Safety cETLus safety mark for: - General Locations per ANSI/UL 61010-1 & CAN/CSA C22.2. No. 61010-1 - Hazardous Location Class I, Division 2, Groups A,B,C & D (Zone 2, Group IIC) per FM 3600 / FM 3611 & CSA C22.2 No. 213 M1987 with approved options and appropriately rated Class I, Division 2 or Zone 2 sensors cULus safety mark - General Locations per UL 61010-1 & CAN/CSA C22.2. No. 61010-1

Subject to change without notice.

Dimensions

Surface Mounting Dimensions

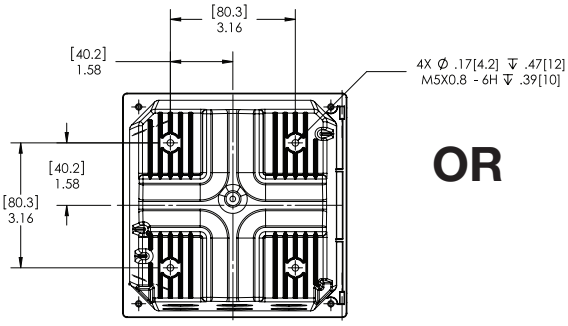

Mounting Dimensions
(Rear View)

OR

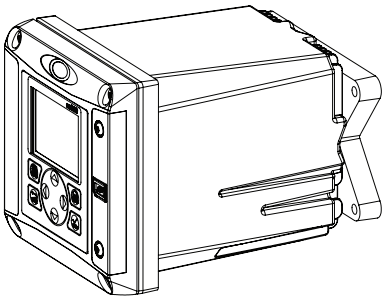

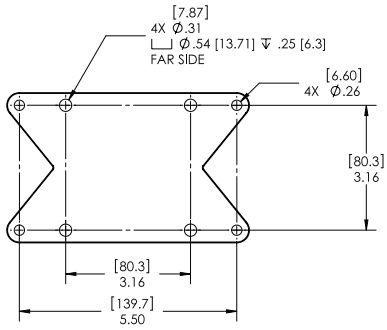

Bracket (supplied) for Surface Mounting
(Not compatible with Weather and Sun Shield
p/n 9220600 when surface mounting.)

Panel Mounting Dimensions

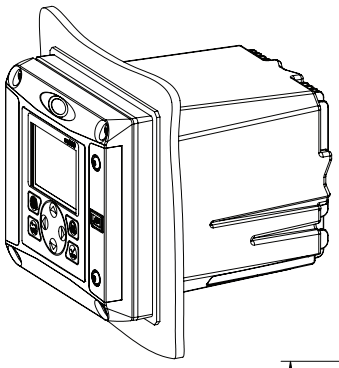

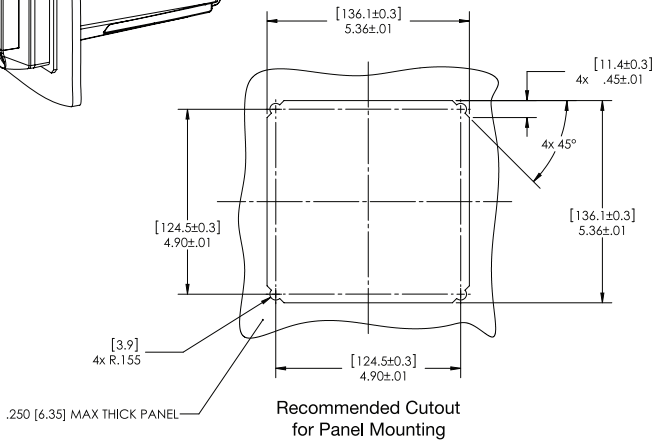

Recommended Cutout
for Panel Mounting

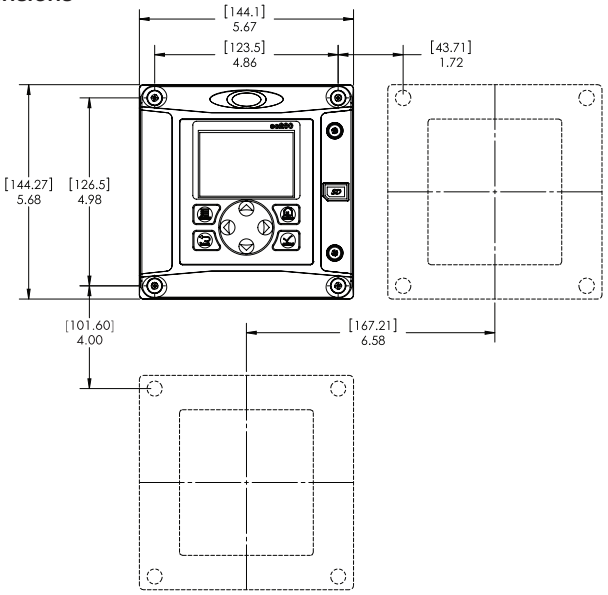

Minimum Spacing Dimensions
for Group Mounting

Top and Bottom Views

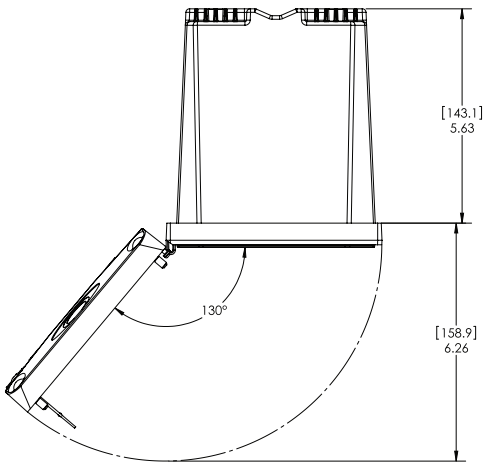

Door Opening Details

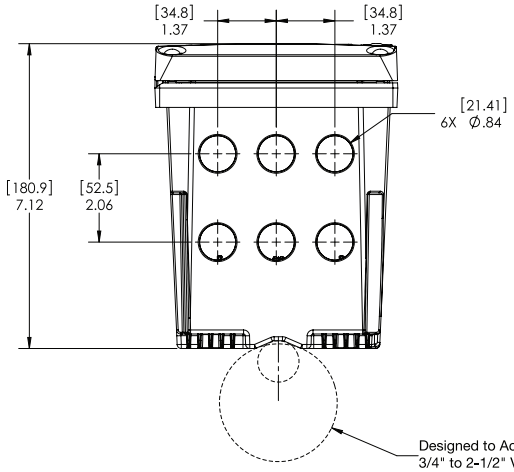

Ordering Information

sc200 for Hach Digital and Analog Sensors

LXV404.99.00552	sc200 controller, 2 channels, digital
LXV404.99.00502	sc200 controller, 1 channel, digital
LXV404.99.00102	sc200 controller, 1 channel, pH/DO
LXV404.99.00202	sc200 controller, 1 channel, Conductivity
LXV404.99.01552	sc200 controller, 2 channels, digital, Modbus RS232/RS485
LXV404.99.00112	sc200 controller, 2 channel, pH/DO

Note: Other Sensor combinations are available. Please contact Hach Technical Support or your Hach representative.

Note: Communication options (MODBUS, Profibus DPV1, and HART) are available. Please contact Hach Technical Support or your Hach representative.



sc200 for Ultrapure Sensors

9500.99.00602	sc200 controller, 1 channel, ultrapure conductivity
9500.99.00702	sc200 controller, 1 channel, ultrapure pH
9500.99.00662	sc200 controller, 2 channel, ultrapure conductivity
9500.99.00772	sc200 controller, 2 channel, ultrapure pH



Sensor and Communication Modules

9012900	Analog pH/ORP and DO module for GLI Sensors
9013000	Analog Conductivity module for GLI Sensors
9012700	Flow module
9012800	4-20 mA Input Module
9525700	Analog pH/ORP Module for Polymetron Sensors
9525800	Analog Conductivity Module for Polymetron Sensors
9013200	Modbus 232/485 Module
9173900	Profibus DP Module
9328100	HART Module
9334600	4-20 mA Output Module (Provides 3 additional mA Outputs)

Accessories

9220600	sc200 Weather and Sun Shield with UV Protection Screen
8809200	sc200 UV Protection Screen
9218200	SD card reader (USB) for connection to PC
9218100	4 GB SD card

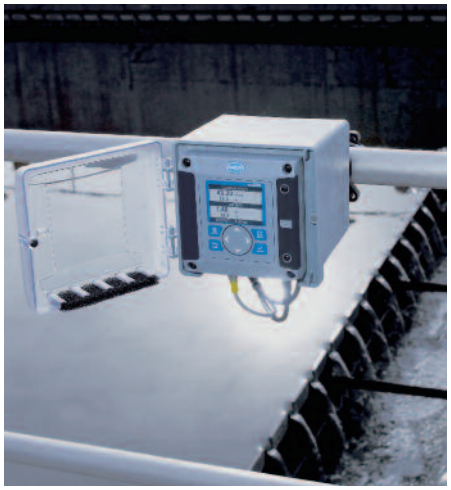

HACH COMPANY World Headquarters: Loveland, Colorado USA

United States: 800-227-4224 tel 970-669-2932 fax orders@hach.com
Outside United States: 970-669-3050 tel 970-461-3939 fax int@hach.com
hach.com

LIT2665 Rev 7
K13 Printed in U.S.A.
©Hach Company, 2013. All rights reserved.
In the interest of improving and updating its equipment,
Hach Company reserves the right to alter specifications to equipment at any time.

HACH®
Be Right™

CS-451-100 : Identification sheet

VWTC PROJECT NUMBER:	Iqaluit WWTP	REV:	01
PROJECT NAME:	5000218036	SUBMITTED TO (COMPANY):	
ENGINEER:	G. HÉBERT	SUBMITTED TO (RESPONSIBLE)	
PROJECT MANAGER:	C. BEKAERT	PROJECT NUM REFERENCE.:	
PHONE NUMBER:		LOT NUMBER:	

SUPPLIER	EQPT CODE	EQPT TAG NO	DIA	DESCRIPTION	INFO 1	INFO 2	INFO 3	APPLIC.	NOTE	REV
FLYGT	ST-451-102	LSH-02-213	Diameter: 100 mm, Cable: 13m, Tow	FLOAT INSTRUMENT	LEVEL SWITCH/MANUFACTURER:FLYGT// MODEL: ENM-10 (13m)	N/A	N/A			1
FLYGT	ST-451-102	LSH-02-214	Diameter: 100 mm, Cable: 13m, Tow	FLOAT INSTRUMENT	LEVEL SWITCH/MANUFACTURER:FLYGT// MODEL: ENM-10 (13m)	N/A	N/A			1
FLYGT	ST-451-102	LSH-02-223	Diameter: 100 mm, Cable: 13m, Tow	FLOAT INSTRUMENT	LEVEL SWITCH/MANUFACTURER:FLYGT// MODEL: ENM-10 (13m)	N/A	N/A			1
FLYGT	ST-451-102	LSH-02-224	Diameter: 100 mm, Cable: 13m, Tow	FLOAT INSTRUMENT	LEVEL SWITCH/MANUFACTURER:FLYGT// MODEL: ENM-10 (13m)	N/A	N/A			1

Technical
specification

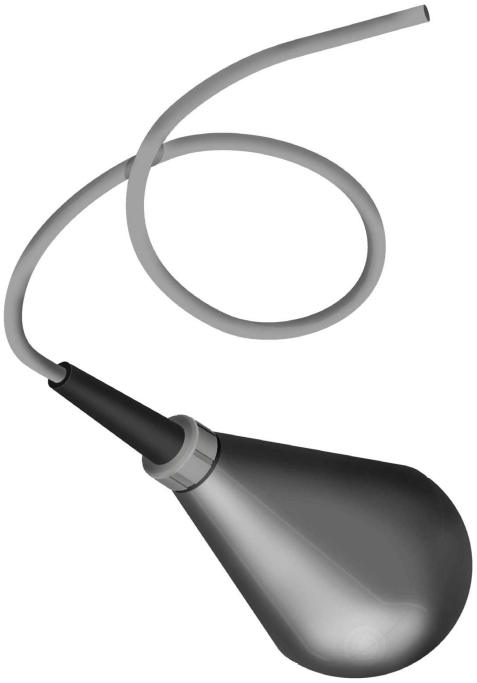

ENM-10 Level regulator

FLYGT
a xylem brand

Table of Contents

PRODUCT DESCRIPTION....2
Product description....2

CHEMICAL RESISTANCE LIST....6
Chemical resistance list....6

PRODUCT RANGE....8
Product range....8

PRODUCT DESCRIPTION

Product description

The simplest possible method for level control! A mechanical switch in a plastic casing, freely suspended at the desired height from its own cable. When the liquid level reaches the regulator, the casing will tilt and the mechanical switch will close or break the circuit, thereby starting or stopping a pump or actuating an alarm device. No wear, no maintenance! In sewage pumping stations, for ground water and drainage pumping – in fact, for most level control applications – the ENM-10 is the ideal solution.

The regulator casing is made of polypropylene and the cable is sheathed with a special PVC or Nitrile/PVC rubber compound. The plastic components are welded and screwed together. Adhesive is never used. Impurities and deposits will not adhere to the smooth casing.

This level regulator is available in different versions, depending upon the medium in which it is to be used. As standard, the regulator can be obtained with 6, 13, 20, 30 or 50 metres (20, 42, 65, 100 or 167 feet) of cable for liquids with specific density between 0.95 and 1.10 g/cm3; for other specific densities and for the Ex-version, the regulator is only available with 20 metres (65 ft) of cable. The regulator can withstand up to 60°C (140°F).

Technical data

Liquid temperature:	min. 0°C (32°F) max. 60°C (140°F)
Liquid density:	min. 0.65 g/cm^3 max. 1.5 g/cm^3
Degree of protection:	IP68, 20 m (65 ft)
Interrupting capacity of micro switch:	AC, resistive load, 250V 10A AC, inductive load, 250V 3A cos ϕ = 0.5 DC, 30V 5A
With gold plated micro switch:	same as above, except: DC, 24V 10mA

Note that local regulations may limit the voltage.

Materials

Body:	Body:
Bending relief:	EPDM rubber
Cable:	special compound PVC or NBR/PVC nitrile/PVC rubber

Dimensions

Table 1

For density g/cm^3	Regulator length mm (in.)	Diameter mm (in.)
0.65–0.80	194 (7 10/16)	100 (4)
0.80–0.95	177 (7)	100 (4)
0.95–1.10	162 (6 3/8)	100 (4)
1.05–1.20	142 (5 9/16)	100 (4)
1.20–1.30	133 (5 1/4)	100 (4)

For density g/cm^3	Regulator length mm (in.)	Diameter mm (in.)
1.30–1.40	130 (5 2/16)	100 (4)
1.40–1.50	126 (5)	100 (4)

Weight: approx. 2 kg (4.5 lb) for a standard density regulator with 20 m cable.

Approvals: CE, CSA, SEMKO, NEMKO, DEMKO

LVD approval according to EN61058

CSA approval: Cert no. 1330172

Cl.I Zone 0, Gr. IIC;

CL.I Div.1 Gr A, B, C&D;

Cl.II Gr. E, F&G;

Cl.III when installed to the certified Intrinsically Safe relay, Ex ia, rated for the locations per submitter controll drawing and installation manual.

Intrincically safe circuits are required for the automatic control system. - Use a EX-safety barrier (e.g. Prod. no. 84 01 07).

0080

Figure 1

Wiring alternative

To conform to local regulations, the level regulators are normally connected through a transformer to a low-tension control circuit.

Two regulators are used; one for starting and one for stopping. A third regulator can be connected if an alarm is required at a given level.

Identical regulators can be used for all functions.

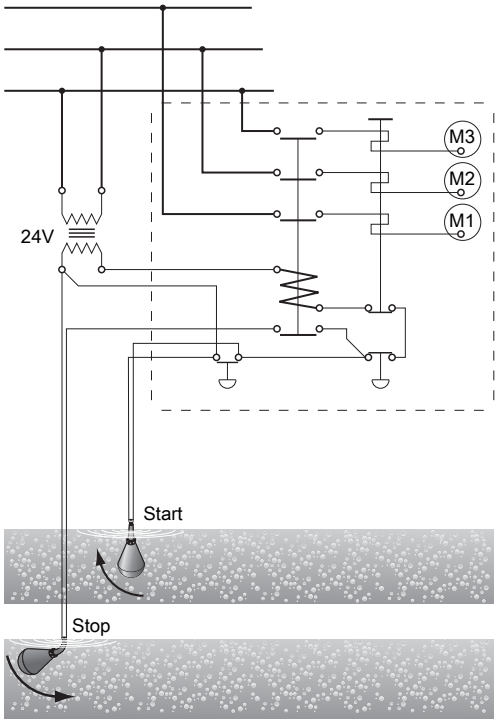

Connect the gray and black leads.

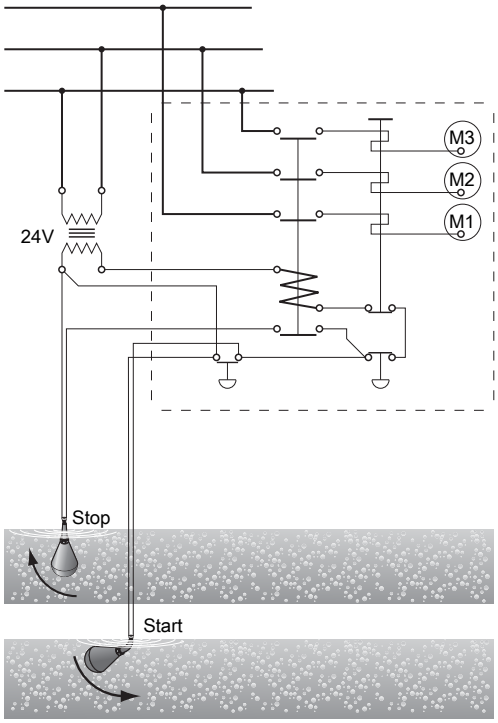

Connect the gray and brown leads.

Insulate the brown lead.
Figure 2: Connected for emptying

Insulate the black lead.
Figure 3: Connected for emptying

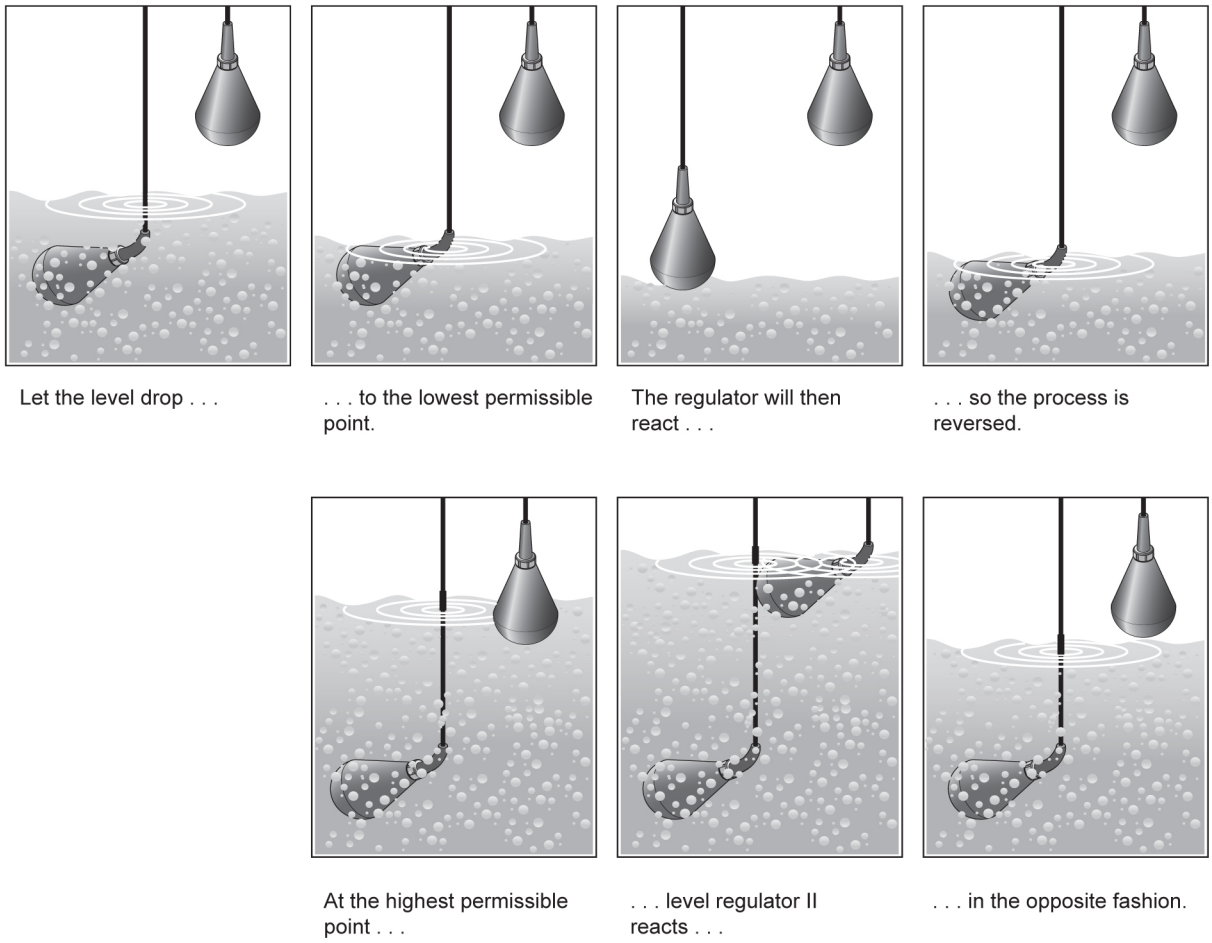

Figure 4

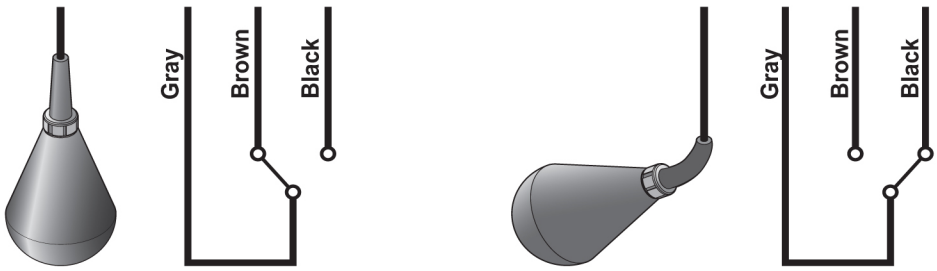

Figure 5: Colour code

Maintenance and repair

ENM-10 is very durable and practically maintenance free. You only have to check on it occasionally, to ensure its continual operation.

- It is recommended to occasionally clean ENM-10, and especially when fat/grease covers the plastic surface.
- At the same time, make an occular inspection of the regulator to make sure neither cable, protective sleeve or plastic casing show any signs of damage.

- A damaged ENM-10 cannot be repaired in any way, due to the hermetic encapsulation. If the unit is found to be damaged, replace it with a new one.
- For Ex-installations, also make absolutely sure that the Ex-barrier (e.g. Prod. no. 84 01 07) is operating correctly - The LED changes when the switch is toggled.

The manufacturers reserve the right to alter performance specification or design without notice.

CHEMICAL RESISTANCE LIST

Chemical resistance list

The liquid in which level regulation is practiced most frequently is, of course, water. Of the millions of regulators in use all over the world today, it is estimated that nine out of ten work in water.

However, with a float body of polypropylene, a cable of PVC or NBR/PVC nitrile/PVC rubber and a bending relief of EPDM rubber, the ENM-10 is virtually insensitive to many aggressive liquids.

The table shows how resistant the ENM-10 equipped with either PVC or NBR/PVC nitrile/PVC rubber cable, is to different chemicals at two different temperatures.

The classification is broken down into the following categories:

0 = No effect, 1 = Minor to moderate and 2 = Severe effect. The sign – means that information is not available.

Keep in mind also that the density of the liquid determines the bouyancy of the regulator. The ENM-10 is made for seven different densities. See *Product description* (page 2).

Always observe local regulations:

Take particular note of:

- risk of fire/explosion
- hygiene requirements

Acids	PVC cable		NBR/PVC nitrile/PVC rubber cable	
	20°C (68°F)	60°C (140°F)	20°C (68°F)	60°C (140°F)
Acetic Acid 50%	1	2	0	0
Acetic Acid 75%	2	2	0	0
Benzoic Acid	2	2	0	0
Boric Acid 5%	0	—	0	0
Butyric Acid	2	2	2	2
Chromic Acid 10%	0	2	2	2
Citric Acid	0	1	0	0
Hydrobromic Acid 5%	1	2	0	0
Hydrochloric Acid 10%	0	1	0	1
Hydrochloric Acid 37%	1	2	0	2
Hydrocyanic Acid 10%	0	0	1	2
Hydrofluoric Acid 5%	0	2	0	1
Hypochloric Acid	1	2	2	2
Maleic Acid	2	2	2	2
Nitric Acid 5%	1	1	1	1
Nitric Acid 65%	2	2	2	2
Oleic Acid	1	2	2	2
Oxalic Acid 50%	1	1	1	2
Phosphoric Acid 25%	0	0	1	2
Phosphoric Acid 85%	0	0	1	2
Sulphuric Acid 10%	1	2	1	2
Sulphuric Acid 78%	2	2	2	2
Tannic Acid	0	0	0	0
Tartaric Acid	1	1	1	1
Bases				
Ammonium Hydroxide	0	—	0	0
Calcium Hydroxide	0	0	0	0
Potassium Hydroxide	1	2	0	0
Sodium Hydroxide	1	2	0	0

Salts	PVC cable		NBR/PVC nitrile/PVC rubber cable	
	20°C (68°F)	60°C (140°F)	20°C (68°F)	60°C (140°F)
Aluminium Chloride	0	0	0	0
Calcium Sulphate	0	0	0	0
Calcium Chloride	0	0	0	0
Calcium Nitrate	0	0	0	0
Copper Chloride	0	0	0	0
Copper Sulphate	0	0	0	0
Ferric Chloride	0	0	0	0
Ferrous Sulphate	0	0	0	0
Magnesium Chloride	0	0	0	0
Potassium Sulphate	0	0	0	0
Potassium Nitrate	0	0	0	0
Potassium Carbonate	1	1	1	1
Potassium Bicarbonate	0	0	0	0
Sodium Sulphate	0	0	0	0
Sodium Chloride	0	0	0	0
Sodium Nitrate	0	0	0	0
Sodium Bicarbonate	0	0	0	0
Sodium Carbonate	0	0	0	0
Tin Chloride	1	1	1	1
Zinc Sulphate	0	0	0	0
Zinc Chloride	0	0	0	0
Oils				
Castor Oil	1	1	1	1
Cocoanut Oil	0	—	0	2
Corn Oil	2	2	2	2
Diesel Oil	2	2	2	2
Linseed Oil	2	2	2	2
Mineral Oils	2	2	2	2
Olive Oil	1	1	1	1
Silicone Oils	0	0	0	0

Solvents and miscellaneous	PVC cable		NBR/PVC nitrile/PVC rubber cable	
	20°C (68°F)	60°C (140°F)	20°C (68°F)	60°C (140°F)
Aceton	2	2	2	2
Aniline	2	2	1	2
Benzene	2	2	2	2
Butyl Alcohol	2	2	0	1
Carbon Tetrachloride	2	2	2	2
Chlorobenzene	2	2	2	2
Chloroform	2	2	2	2
Ethyl Alcohol	2	2	0	1
Ethyl Ether	2	2	2	2
Ethyl Acetate	2	2	2	2
Ethylene Dichloride	2	2	2	2
Ethylene Chloride	2	2	2	2
Formaldehyde 37%	1	2	0	0
Gasoline	2	2	2	2
Kerosene	2	2	2	2
Methyl Alcohol	2	2	0	0
Methyl Ethyl Ketone	2	2	2	2
Methylene Chloride	2	2	2	2
Nitrobenzene	2	2	2	2
Phenol	2	2	2	2
Toluene	2	2	2	2
Trichlorethylene	2	2	2	2
Turpentine	2	2	2	2
Xylene	2	2	2	2
Gases				
Carbon Dioxide	0	0	0	0
Carbon Monoxide	0	0	0	0
Chlorine (wet)	2	2	2	2
Hydrogen Sulphide	0	0	1	1
Sulphur Dioxide (wet)	1	1	2	2

0 = No effect, 1 = Minor to moderate, 2 = Severe effect. – = No information available.

Figure 6

PRODUCT RANGE

Product range

Part no.	For density [g/cm³]	Color of level switch	Type of cable	Cable length [m]	Approvals	For market	Notes
5828800	0,65-0,80	Blue	1	20	CE		
5828801	0,80-0,95	Blue	1	20	CE		
5828802	0,95-1,10	Blue	1	6	CE		
5828803	0,95-1,10	Blue	1	13	CE		
5828804	0,95-1,10	Blue	1	20	CE		
5828805	1,05-1,20	Blue	1	20	CE		
5828806	1,2-1,3	Blue	1	20	CE		
5828807	1,3-1,4	Blue	1	20	CE		
5828808	1,4-1,5	Blue	1	20	CE		
5828809	0,65-0,80	Grey	5	20	CSA/CE	Canada	
5828810	0,80-0,95	Grey	5	20	CSA/CE	Canada	
5828811	0,95-1,10	Grey	5	6	CSA/CE	Canada	
5828812	0,95-1,10	Grey	5	13	CSA/CE	Canada	
5828813	0,95-1,10	Grey	5	20	CSA/CE	Canada	
5828814	1,05-1,20	Grey	5	20	CSA/CE	Canada	
5828815	1,2-1,3	Grey	5	20	CSA/CE	Canada	
5828816	1,3-1,4	Grey	5	20	CSA/CE	Canada	
5828817	1,4-1,5	Grey	5	20	CSA/CE	Canada	
5828818	0,65-0,80	Grey	1	20	CSA/CE	Canada	
5828819	0,80-0,95	Grey	1	20	CSA/CE	Canada	
5828820	0,95-1,10	Grey	1	6	CSA/CE	Canada	
5828821	0,95-1,10	Grey	1	13	CSA/CE	Canada	
5828822	0,95-1,10	Grey	1	20	CSA/CE	Canada	
5828823	1,05-1,20	Grey	1	20	CSA/CE	Canada	
5828824	1,2-1,3	Grey	1	20	CSA/CE	Canada	
5828825	1,3-1,4	Grey	1	20	CSA/CE	Canada	
5828826	1,4-1,5	Grey	1	20	CSA/CE	Canada	
5828827	0,65-0,80	Blue	2	20	CE	USA	
5828828	0,80-0,95	Blue	2	20	CE	USA	
5828829	0,95-1,10	Blue	2	6	CE	USA	
5828830	0,95-1,10	Blue	2	13	CE	USA	
5828831	0,95-1,10	Blue	2	20	CE	USA	
5828832	1,05-1,20	Blue	2	20	CE	USA	
5828833	1,2-1,3	Blue	2	20	CE	USA	
5828834	1,3-1,4	Blue	2	20	CE	USA	
5828835	1,4-1,5	Blue	2	20	CE	USA	
5828836	0,95-1,10	Grey	5	30	CSA/CE	Canada	
5828837	0,95-1,10	Grey	5	50	CSA/CE	Canada	
5828838	0,95-1,10	Grey	5	100	CSA/CE	Canada	
5828839	0,95-1,10	Grey	5	150	CSA/CE	Canada	
5828851	0,95-1,10	Red	3	65	CE		
5828852	0,95-1,10	Red	3	6	CE		
5828853	0,95-1,10	Red	3	13	CE		
5828854	0,95-1,10	Red	3	20	CE		
5828855	0,95-1,10	Red	3	6	CSA/CE	Canada	
5828856	0,95-1,10	Red	3	13	CSA/CE	Canada	
5828857	0,95-1,10	Red	3	20	CSA/CE	Canada	

Cont. →

Figure 7

5828858	0,95-1,10	Red	4	6	CE	USA	
5828859	0,95-1,10	Red	4	13	CE	USA	
5828860	0,95-1,10	Red	4	20	CE	USA	
5828870	0,65-0,80	Blue	5	20	CE		
5828871	0,80-0,95	Blue	5	20	CE		
5828872	0,95-1,10	Blue	5	6	CE		
5828873	0,95-1,10	Blue	5	13	CE		
5828874	0,95-1,10	Blue	5	20	CE		
5828875	1,05-1,20	Blue	5	20	CE		
5828876	1,2-1,3	Blue	5	20	CE		
5828877	1,3-1,4	Blue	5	20	CE		
5828878	1,4-1,5	Blue	5	20	CE		
5828879	0,95-1,10	Blue	1	65	CE		
5828880	0,95-1,10	Blue	1	30	CE		
5828881	0,95-1,10	Blue	1	50	CE		
5828882	0,95-1,10	Grey	1	30	CSA/CE	Canada	
5828883	0,95-1,10	Grey	1	50	CSA/CE	Canada	
5828884	0,95-1,10	Blue	2	30	CE	USA	
5828885	0,95-1,10	Blue	2	50	CE	USA	
5828886	0,95-1,10	Red	3	30	CE		
5828887	0,95-1,10	Red	3	50	CE		
5828890	0,95-1,10	Blue	5	30	CE		
5828891	0,95-1,10	Blue	5	50	CE		
5828892	0,95-1,10	Red	3	6	CE	Japan	
5828893	0,95-1,10	Red	3	13	CE	Japan	
5828894	0,95-1,10	Red	3	20	CE	Japan	
5828895	0,95-1,10	Blue	1	6	CE	Japan	
5828896	0,95-1,10	Blue	1	13	CE	Japan	
5828897	0,95-1,10	Blue	1	20	CE	Japan	
5828898	0,95-1,10	Blue	1	50	CE	Japan	
5947919	0,95-1,10	Blue	5	20	CE		Designed for low current and slow movements
5947920	0,95-1,10	Grey	5	20	CSA/CE		Designed for low current and slow movements

Type of cable:

1. Blue PVC jacket with color coding of wires: Grey/Brown/Black
2. Blue PVC jacket with color coding of wires: Red/White/Black
3. Red PVC jacket with color coding of wires: Grey/Brown/Black
4. Red PVC jacket with color coding of wires: Red/White/Black
5. BLACK NBR/PVC jacket with color coding of wires: Grey/Brown/Black (NBR=Nitrile rubber)

Xylem |ˈzīləm|

1) The tissue in plants that brings water upward from the roots
2) A leading global water technology company

We're 12,000 people unified in a common purpose: creating innovative solutions to meet our world's water needs. Developing new technologies that will improve the way water is used, conserved, and re-used in the future is central to our work. We move, treat, analyze, and return water to the environment, and we help people use water efficiently, in their homes, buildings, factories and farms. In more than 150 countries, we have strong, long-standing relationships with customers who know us for our powerful combination of leading product brands and applications expertise, backed by a legacy of innovation.

For more information on how Xylem can help you, go to xyleminc.com

xylem
Let's Solve Water

Xylem Water Solutions AB
Gesällvägen 33
174 87 Sundbyberg
Sweden
Tel. +46-8-475 60 00
Fax +46-8-475 69 00
http://tpi.xyleminc.com

Visit our Web site for the latest version of this document and more information

The original instruction is in English. All non-English instructions are translations of the original instruction.

© 2011 Xylem Inc

891480_11.1_en.GB_2012-01_TS_ENM-10

CS-304-100 : Identification sheet

VWTC PROJECT NUMBER:	Iqaluit WWTP	REV:	01
PROJECT NAME:	5000218036	SUBMITTED TO (COMPANY):	
ENGINEER:	F.VINCI	SUBMITTED TO (RESPONSIBLE)	
PROJECT MANAGER:	C. BEKAERT	PROJECT NUM REFERENCE.:	
PHONE NUMBER:		LOT NUMBER:	

SUPPLIER	EQPT CODE	EQPT TAG NO	DIA	DESCRIPTION	INFO 1	INFO 2	INFO 3	APPLIC.	NOTE	REV
ASCO	VASDBR303370	SV-02-211 SV-02-212 SV-02-221 SV-02-222		SOLENOID VALVE	TYPE: SOLENOID VALVE// MANUFACTURER : ASCO//MODEL : 8210G094//120VAC// CONNECTION TYPE : THREADED | 13 mm (1/2") | 13 mm (1/2")//BODY : BRASS					1

Features

- Wide range of pressure ratings, sizes, and resilient materials provide long service life and low internal leakage
- High flow valves for liquid, corrosive, and air/inert gas service
- Industrial applications include:
  - Car wash
  - Laundry equipment
  - Air compressors
  - Industrial water control
  - Pumps

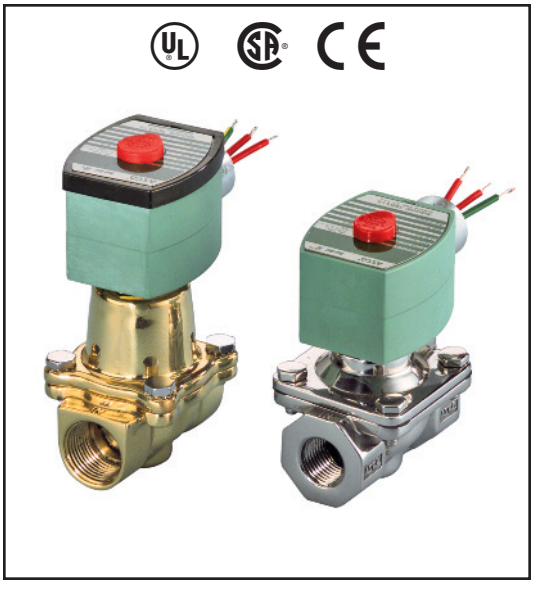

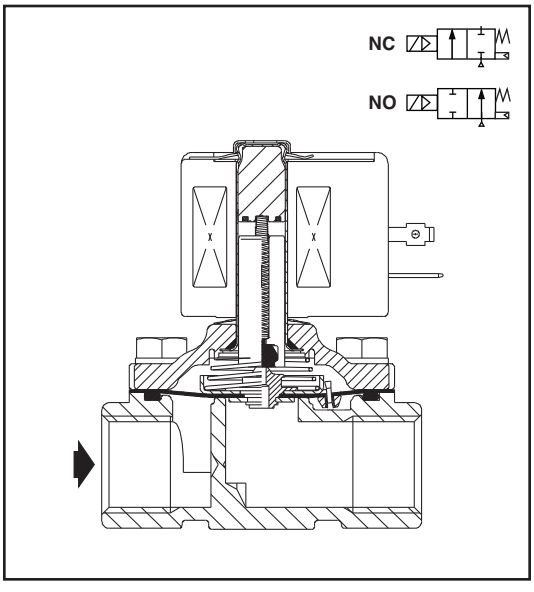

Construction

Valve Parts in Contact with Fluids		
Body	Brass	304 Stainless Steel*
Seals and Discs	NBR or PTFE	
Disc-Holder	PA	
Core Tube	305 Stainless Steel	
Core and Plugnut	430F Stainless Steel	
Springs	302 Stainless Steel	
Shading Coil	Copper	Silver

*Catalog Numbers 8210G127, 8210G129, 8210G132, 8210G133 have 316L Stainless Steel bodies.

Electrical

Standard Coil and Class of Insulation	Watt Rating and Power Consumption				Spare Coil Part Number			
		AC			General Purpose		Explosionproof	
	DC Watts	Watts	VA Holding	VA Inrush	AC	DC	AC	DC
F	-	6.1	16	40	238210	-	238214	-
F	11.6	10.1	25	70	238610	238710	238614	238714
F	16.8	16.1	35	180	272610	97617	272614	97617
F	-	17.1	40	93	238610	-	238614	-
F	-	20	43	240	99257	-	99257	-
F	-	20.1	48	240	272610	-	272614	-
F	30.8	-	-	-	-	501695	-	501696
H	40.6	-	-	-	-	238910	-	238914

Standard Voltages: 24, 120, 240, 480 volts AC, 60 Hz (or 110, 220 volts AC, 50 Hz). 6, 12, 24, 120, 240 volts DC. Must be specified when ordering.
Other voltages available when required.

Solenoid Enclosures

Standard: RedHat II - Watertight, Types 1, 2, 3, 3S, 4, and 4X; RedHat - Type I.

Optional: RedHat II - Explosionproof and Watertight, Types 3, 3S, 4, 4X, 6, 6P, 7, and 9; Red-Hat - Explosionproof and Watertight, Types 3, 4, 4X, 7, and 9.

(To order, add prefix "EF" to catalog number, except Catalog Numbers 8210B057, 8210B058, and 8210B059, which are not available with Explosionproof enclosures.)
See Optional Features Section for other available options.

Nominal Ambient Temp. Ranges

RedHat II/RedHat AC: 32°F to 125°F (0°C to 52°C)
RedHat II DC: 32°F to 104°F (0°C to 40°C)
RedHat DC: 32°F to 77°F (0°C to 25°C)
(104°F/40°C occasionally)
8210G227 AC: 32°F to 130°F (0°C to 54°C)
DC: 32°F to 90°F (0°C to 32°C)
Refer to Engineering Section for details.

Approvals

UL listed as indicated. CSA certified.
RedHat II meets applicable CE directives.
Refer to Engineering Section for details.

ATEX/IECEx certified with prefix "EV" as listed. *Refer to Optional Features Electrical Section for details.*

2/2 SERIES 8210

ASCO®

Specifications (English units)

Pipe Size (in)	Orifice Size (in)	Cv Flow Factor	Operating Pressure Differential (psi)							Max. Fluid Temp. °F		Brass Body			Stainless Steel Body			Watt Rating/ Class of Coil Insulation ⑦	
				Max. AC			Max. DC												
			Min.	Air-Inert Gas	Water	Light Oil @ 300 SSU	Air-Inert Gas	Water	Light Oil @ 300 SSU	AC	DC	Catalog Number	Const. Ref. ④	UL ⑤ Listing	Catalog Number	Const. Ref. ④	UL ⑤ Listing	AC	DC
NORMALLY CLOSED (Closed when de-energized), NBR or PTFE ② Seating																			
3/8	3/8	1.5	①	150	125	-	40	40	-	180	150	8210G073 ③	1P	●	8210G036 ③	1P	●	6.1/F	11.6/F
3/8	5/8	3	0	150	150	-	40	40	-	180	150	8210G093	5D	❍	-	-	-	10.1/F	11.6/F
3/8	5/8	3	5	200	150	135	125	100	100	180	150	8210G001 ▼	6D	❍	-	-	-	6.1/F	11.6/F
3/8	5/8	3	5	300	300	300	-	-	-	175	-	8210G006 ✓	5D	❍	-	-	-	17.1/F	-
1/2	7/16	2.2	①	150	125	-	40	40	-	180	150	8210G015 ③	2P	●	8210G037 ③	2P	●	6.1/F	11.6/F
1/2	5/8	4	0	150	150	-	40	40	-	180	150	8210G094 ✓	5D	❍	-	-	-	10.1/F	11.6/F
1/2	5/8	4	0	150	150	125	40	40	-	175	150	-	-	-	8210G087 ✓	7D	●	17.1/F	11.6/F
1/2	5/8	4	5	200	150	135	125	100	100	180	150	8210G002 ▼	6D	❍	-	-	-	6.1/F	11.6/F
1/2	5/8	4	5	300	300	300	-	-	-	175	-	8210G007	5D	❍	-	-	-	17.1/F	-
1/2	3/4	4	5	-	300	-	-	300	-	130	90	8210G227	5D	❍ †	-	-	-	17.1/F	40.6/H
3/4	5/8	4.5	0	150	150	125	40	40	-	175	150	-	-	-	8210G088 ✓	7D	●	17.1/F	11.6/F
3/4	3/4	5	5	125	125	125	100	90	75	180	150	8210G009 ▼	9D	❍	-	-	-	6.1/F	11.6/F
3/4	3/4	5	0	150	150	-	40	40	-	180	150	8210G095 ✓	8D	❍	-	-	-	10.1/F	11.6/F
3/4	3/4	6.5	5	250	150	100	125	125	125	180	150	8210G003 ▼	11D	❍	-	-	-	6.1/F	11.6/F
3/4	3/4	6	0	350	300	200	200	200	200	200	180	8210G026 ② ‡ ◆	40P/10D	●	-	-	-	16.1F	30.8/F
1	1	13	0	150	125	125	135	120	120	180	180	8210G054 ‡ ◆	41D/31D	●	8210G089 ‡ ◆	45D/15D	●	16.1/F	30.8/F
1	1	13	5	150	150	100	125	125	125	180	150	8210G004 ▼	12D	❍	-	-	-	6.1/F	11.6/F
1	1	13.5	0	300	225	115	-	-	-	200	-	8210G027 ‡	42P	●	-	-	-	20.1/F	-
1	1	13.5	10	300	300	300	-	-	-	175	-	8210G078 ②	13P	-	-	-	-	17.1/F	-
1 1/4	1 1/8	15	0	150	125	125	135	120	120	180	180	8210G055 ‡ ◆	43D/32D	●	-	-	-	16.1/F	30.8/F
1 1/4	1 1/8	15	5	150	150	100	125	125	125	180	150	8210G008 ▼	16D	❍	-	-	-	6.1/F	11.6/F
1 1/2	1 1/4	22.5	0	150	125	125	135	120	120	180	180	8210G056 ‡ ◆	44D/33D	●	-	-	-	16.1/F	30.8/F
1 1/2	1 1/4	22.5	5	150	150	100	125	125	125	180	150	8210G022 ▼	18D	●	8210G127	-	-	6.1/F	11.6/F
2	1 3/4	43	5	150	125	90	50	50	50	180	150	8210G100	20P	●	8210G129	-	-	6.1/F	11.6/F
2 1/2	1 3/4	45	5	150	125	90	50	50	50	180	150	8210G101	21P	●	-	-	-	6.1/F	11.6/F
NORMALLY OPEN (Open when de-energized), NBR Seating (PA Disc-Holder, except as noted)																			
3/8	5/8	3	0	150	150	125	125	125	80	180	150	8210G033	23D	●	-	-	-	10.1/F	11.6/F
3/8	5/8	3	5	250	200	200	250	200	200	180	180	8210G011 ⑧ ⑨	39D	●	-	-	-	10.1/F	11.6/F
1/2	5/8	4	0	150	150	125	125	125	80	180	150	8210G034 ✓	23D	●	-	-	-	10.1/F	11.6/F
1/2	5/8	3	0	150	150	100	125	125	80	180	150	-	-	-	8210G030 ✓	37D	●	10.1/F	11.6/F
1/2	5/8	4	5	250	200	200	250	200	200	180	180	8210G012 ⑧ ⑨	39D	●	-	-	-	10.1/F	11.6/F
3/4	3/4	5.5	0	150	150	125	125	125	80	180	150	8210G035 ✓	25D	●	-	-	-	10.1/F	11.6/F
3/4	5/8	3	0	150	150	100	125	125	80	180	150	-	-	-	8210G038 ✓	38D	●	10.1/F	11.6/F
3/4	3/4	6.5	5	-	-	-	250	200	200	-	180	8210C013	24D	●	-	-	-	-	16.8/F
3/4	3/4	6.5	5	250	200	200	-	-	-	180	-	8210G013	46D	●	-	-	-	16.1/F	-
1	1	13	0	125	125	125	-	-	-	180	-	8210B057 ⑥ ⑩	34D	●	-	-	-	20/F	-
1	1	13	5	-	-	-	125	125	125	-	180	8210D014	26D	●	-	-	-	-	16.8/F
1	1	13	5	150	150	125	-	-	-	180	-	8210G014	47D	●	-	-	-	16.1/F	-
1 1/4	1 1/8	15	0	125	125	125	-	-	-	180	-	8210B058 ⑥ ⑩	35D	●	-	-	-	20/F	-
1 1/4	1 1/8	15	5	-	-	-	125	125	125	-	180	8210D018	28D	●	-	-	-	-	16.8/F
1 1/4	1 1/8	15	5	150	150	125	-	-	-	180	-	8210G018	48D	●	-	-	-	16.1/F	-
1 1/2	1 1/4	22.5	0	125	125	125	-	-	-	180	-	8210B059 ⑥ ⑩	36D	●	-	-	-	20/F	-
1 1/2	1 1/4	22.5	5	-	-	-	125	125	125	-	180	8210D032	29D	●	-	-	-	-	16.8/F
1 1/2	1 1/4	22.5	5	150	150	125	-	-	-	180	-	8210G032	49D	●	8210G132	-	-	16.1/F	-
2	1 3/4	43	5	-	-	-	125	125	125	-	150	8210 103	30P	●	-	-	-	-	16.8/F
2	1 3/4	43	5	125	125	125	-	-	-	180	-	8210G103	50P	●	8210G133	-	-	16.1/F	-
2 1/2	1 3/4	45	5	-	-	-	125	125	125	-	150	8210 104	27P	●	-	-	-	-	16.8/F
2 1/2	1 3/4	45	5	125	125	125	-	-	-	180	-	8210G104	51P	●	-			16.1/F	-

① 5 psi on Air; 1 psi on Water.
② Valve provided with PTFE main disc.
③ Valve includes Ultem (G.E. trademark) piston.
④ Letter "D" denotes diaphragm construction; "P" denotes piston construction.
⑤ ❍ Safety Shutoff Valve; ● General Purpose Valve.
Refer to Engineering Section (Approvals) for details.
⑥ Valves not available with Explosionproof enclosures.
⑦ On 50 hertz service, the watt rating for the 6.1/F solenoid is 8.1 watts.
⑧ AC construction also has PA seating.
⑨ No disc-holder.
⑩ Stainless steel disc-holder.
† UL listed for fire protection systems per UL429A.
‡ DC constructions must have solenoid mounted vertical and upright.
✓ ATEX/IECEx certified with prefix "EV".
▼ ATEX/IECEx certified for DC only with prefix "EV".
◆ Not available in 6 Volt DC. EF and HB prefix only.

Specifications (Metric units)

Pipe Size (in)	Orifice Size (mm)	Kv Flow Factor (m^3/hr)	Operating Pressure Differential (bar)							Max. Fluid Temp. °C		Brass Body			Stainless Steel Body			Watt Rating/ Class of Coil Insulation ⑦	
				Max. AC			Max. DC												
			Min.	Air-Inert Gas	Water	Light Oil @ 300 SSU	Air-Inert Gas	Water	Light Oil @ 300 SSU	AC	DC	Catalog Number	Const. Ref. ④	UL ⑤ Listing	Catalog Number	Const. Ref. ④	UL ⑤ Listing	AC	DC
NORMALLY CLOSED (Closed when de-energized), NBR or PTFE ② Seating																			
3/8	10	1.3	①	10	9	-	3	3	-	82	65	8210G073 ③	1P	●	8210G036 ③	1P	●	6.1/F	11.6/F
3/8	16	2.6	0	10	10	-	3	3	-	82	65	8210G093	5D	❍	-	-	-	10.1/F	11.6/F
3/8	16	2.6	0.3	14	10	9	9	7	7	82	65	8210G001 ▼	6D	❍	-	-	-	6.1/F	11.6/F
3/8	16	2.6	0.3	21	21	21	-	-	-	79	-	8210G006 ✓	5D	❍	-	-	-	17.1/F	-
1/2	11	1.9	①	10	9	-	3	3	-	82	65	8210G015 ③	2P	●	8210G037 ③	2P	●	6.1/F	11.6/F
1/2	16	3.4	0	10	10	-	3	3	-	82	65	8210G094 ✓	5D	❍	-	-	-	10.1/F	11.6/F
1/2	16	3.4	0	10	10	9	3	3	-	79	65	-	-	-	8210G087 ✓	7D	●	17.1/F	11.6/F
1/2	16	3.4	0.3	14	10	9	9	7	7	82	65	8210G002 ▼	6D	❍	-	-	-	6.1/F	11.6/F
1/2	16	3.4	0.3	21	21	21	-	-	-	79	-	8210G007	5D	❍	-	-	-	17.1/F	-
1/2	19	3.4	0.3	-	21	-	-	21	-	54	32	8210G227	5D	❍ †	-	-	-	17.1/F	40.6H
3/4	16	3.9	0	10	10	9	3	3	-	79	65	-	-	-	8210G088 ✓	7D	●	17.1/F	11.6/F
3/4	19	4.3	0.3	9	9	9	7	6	5	82	65	8210G009 ▼	9D	❍	-	-	-	6.1/F	11.6/F
3/4	19	4.3	0	10	10	-	3	3	-	82	65	8210G095 ✓	8D	❍	-	-	-	10.1/F	11.6/F
3/4	19	5.6	0.3	17	10	7	9	9	9	82	65	8210G003 ▼	11D	❍	-	-	-	6.1/F	11.6/F
3/4	19	5.1	0	24	21	14	14	14	14	93	82	8210G026 ② ‡ ◆	40P/10D	●	-	-	-	16.1F	30.8/F
1	25	11	0	10	9	9	9	8	8	82	82	8210G054 ‡ ◆	41D/31D	●	8210G089 ‡ ◆	45D/15D	●	16.1/F	30.8/F
1	25	11	0.3	10	10	7	9	9	9	82	65	8210G004 ▼	12D	❍	-	-	-	6.1/F	11.6/F
1	25	11.5	0	21	16	8	-	-	-	93	-	8210G027 ‡	42P	●	-	-	-	20.1/F	-
1	25	11.5	0.7	21	21	21	-	-	-	79	-	8210G078 ②	13P	-	-	-	-	17.1/F	-
1 1/4	29	13	0	10	9	9	9	8	8	82	82	8210G055 ‡ ◆	43D/32D	●	-	-	-	16.1/F	30.8/F
1 1/4	29	13	0.3	10	10	7	9	9	9	82	65	8210G008 ▼	16D	❍	-	-	-	6.1/F	11.6/F
1 1/2	32	19.5	0	10	9	9	9	8	8	82	82	8210G056 ‡ ◆	44D/33D	●	-	-	-	16.1/F	30.8/F
1 1/2	32	19.5	0.3	10	10	7	9	9	9	82	65	8210G022 ▼	18D	●	8210G127	-	-	6.1/F	11.6/F
2	44	37	0.3	10	9	6	3	3	3	82	65	8210G100	20P	●	8210G129	-	-	6.1/F	11.6/F
2 1/2	44	39	0.3	10	9	6	3	3	3	82	65	8210G101	21P	●	-	-	-	6.1/F	11.6/F
NORMALLY OPEN (Open when de-energized), NBR Seating (PA Disc-Holder, except as noted)																			
3/8	16	2.6	0.0	10	10	9	9	9	6	82	65	8210G033	23D	●	-	-	-	10.1/F	11.6/F
3/8	16	2.6	0.3	17	14	14	17	14	14	82	82	8210G011 ⑧ ⑨	39D	●	-	-	-	10.1/F	11.6/F
1/2	16	3.4	0	10	10	9	9	9	6	82	65	8210G087 ✓	7D	●	-	-	-	10.1/F	11.6/F
1/2	16	2.6	0	10	10	7	9	9	6	82	65	-	-	-	8210G087 ✓	7D	●	10.1/F	11.6/F
1/2	16	3.4	0.3	17	14	14	17	14	14	82	82	8210G012 ⑧ ⑨	39D	●	-	-	-	10.1/F	11.6/F
3/4	19	4.7	0	10	10	9	9	9	6	82	65	8210G087 ✓	7D	●	-	-	-	10.1/F	11.6/F
3/4	16	2.6	0	10	10	7	9	9	6	82	65	-	-	-	8210G087 ✓	7D	●	10.1/F	11.6/F
3/4	19	5.6	0.3	-	-	-	17	14	14	-	82	8210C013	24D	●	-	-	-	-	16.8/F
3/4	19	5.6	0.3	17	14	14	-	-	-	82	-	8210G013	46D	●	-	-	-	16.1/F	-
1	25	11	0	9	9	9	-	-	-	82	-	8210B057 ⑥ ⑩	34D	●	-	-	-	20/F	-
1	25	11	0.3	-	-	-	9	9	9	-	82	8210D014	26D	●	-	-	-	-	16.8/F
1	25	11	0.3	10	10	9	-	-	-	82	-	8210G014	47D	●	-	-	-	16.1/F	-
1 1/4	29	13	0	9	9	9	-	-	-	82	-	8210B058 ⑥ ⑩	35D	●	-	-	-	20/F	-
1 1/4	29	13	0.3	-	-	-	9	9	9	-	82	8210D018	28D	●	-	-	-	-	16.8/F
1 1/4	29	13	0.3	10	10	9	-	-	-	82	-	8210G018	48D	●	-	-	-	16.1/F	-
1 1/2	32	19.5	0	9	9	9	-	-	-	82	-	8210B059 ⑥ ⑩	36D	●	-	-	-	20/F	-
1 1/2	32	19.5	0.3	-	-	-	9	9	9	-	82	8210D032	29D	●	-	-	-	-	16.8/F
1 1/2	32	19.5	0.3	10	10	9	-	-	-	82	-	8210G032	49D	●	8210G132	-	-	16.1/F	-
2	44	37	0.3	-	-	-	9	9	9	-	65	8210 103	30P	●	-	-	-	-	16.8/F
2	44	37	0.3	9	9	9	-	-	-	82	-	8210G103	50P	●	8210G133	-	-	16.1/F	-
2 1/2	44	39	0.3	-	-	-	9	9	9	-	65	8210 104	27P	●	-	-	-	-	16.8/F
2 1/2	44	39	0.3	9	9	9	-	-	-	82	-	8210G104	51P	●	-	-	-	16.1/F	-

① 0.3 bar on Air; 0.0 bar on Water.
② Valve provided with PTFE main disc.
③ Valve includes ULtem (G.E. trademark) piston.
④ Letter "D" denotes diaphragm construction; "P" denotes piston construction.
⑤ ❍ Safety Shutoff Valve; ● General Purpose Valve.
Refer to Engineering Section (Approvals) for details.
⑥ Valves not available with Explosionproof enclosures.
⑦ On 50 hertz service, the watt rating for the 6.1/F solenoid is 8.1 watts.
⑧ AC construction also has PA seating.
⑨ No disc-holder.
⑩ Stainless steel disc-holder.
† UL listed for fire protection systems per UL429A.
‡ DC constructions must have solenoid mounted vertical and upright.
✓ ATEX/IECEx certified with prefix "EV".
▼ ATEX/IECEx certified for DC only with prefix "EV".
◆ Not available in 6 Volt DC. EF and HB prefix only.

Dimensions: inches (mm)

Const. Ref.		H	K	L	P	W
1*	in	3.85	3.00	1.91	3.41	1.69
	mm	98	76	49	87	43
2*	in	4.17	3.25	2.28	3.63	1.69
	mm	106	83	58	92	43
5	in	3.84	2.31	2.75	3.28	2.28
	mm	98	59	70	83	58
6*	in	3.38	1.94	2.75	2.80	2.28
	mm	86	49	70	71	58
7	in	4.19	2.50	2.81	3.47	2.39
	mm	106	64	71	88	61
8	in	4.13	2.47	2.81	3.44	2.29
	mm	105	63	71	87	58
9*	in	3.66	2.10	2.81	2.96	2.28
	mm	93	53	71	75	58
10*	in	5.20	3.40	2.80	4.50	2.50
	mm	131	86	71	114	62
11*	in	4.16	2.66	3.84	3.52	2.75
	mm	106	68	98	89	70
12	in	5.64	3.15	3.75	4.01	3.36
	mm	143	80	95	102	85
13	in	4.44	3.22	3.75	4.19	5.81
	mm	113	82	95	106	147
15*	in	5.20	3.30	3.80	4.40	3.80
	mm	133	83	98	111	98
16	in	5.64	3.15	3.66	4.01	3.56
	mm	143	80	93	102	90
18*	in	6.11	3.30	4.38	4.16	3.92
	mm	155	84	111	106	100
20*	in	7.33	3.71	5.06	4.57	4.87
	mm	186	94	129	116	124
21*	in	7.33	3.71	5.50	4.57	4.87
	mm	186	94	140	116	124
23	in	4.35	2.65	2.75	3.79	2.28
	mm	110	67	70	96	58
24	in	5.06	X	3.78	4.44	2.75
	mm	129	X	96	113	70
25	in	4.64	2.81	2.81	3.94	2.28
	mm	118	71	71	100	58
26	in	6.53	X	3.75	4.91	3.19
	mm	166	X	95	125	81
27	in	8.22	X	5.50	5.47	4.87
	mm	209	X	140	139	124
28	in	6.53	X	3.66	4.91	3.19
	mm	166	X	93	125	81
29	in	7.03	X	4.38	5.06	4.40
	mm	179	X	111	129	112

* DC dimensions slightly larger.
IMPORTANT: Valves may be mounted in any position, except as noted in specifications table.

Const. Ref. 1, 2

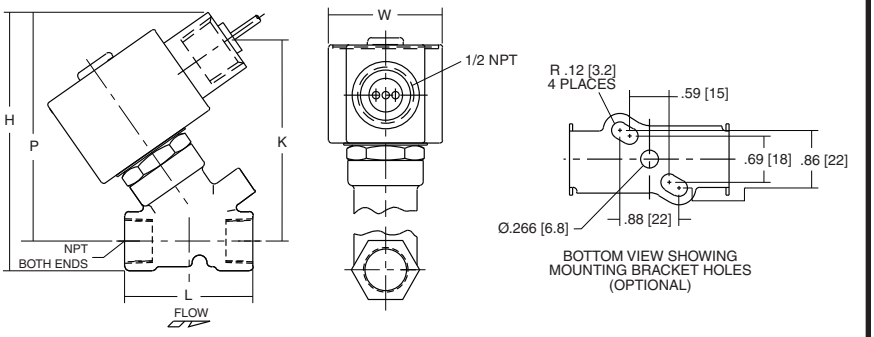

Const. Ref. 13

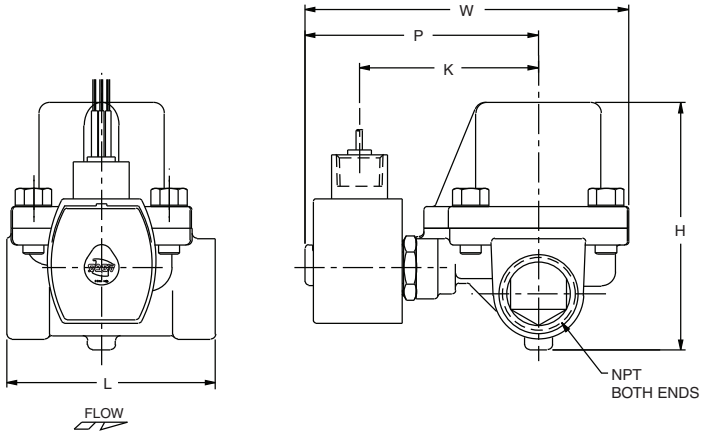

Const. Ref. 5-9, 11, 23 , 25, 37,38, 40-46

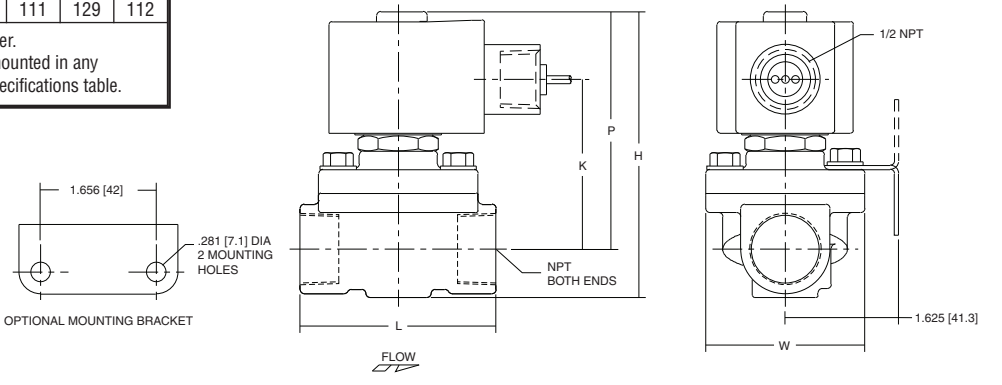

Dimensions: inches (mm)

Const. Ref.		H	K	L	P	W
30	in	8.22	X	5.06	5.47	4.87
	mm	209	X	129	139	124
31	in	5.13	3.19	3.76	4.32	3.27
	mm	130	81	95	110	83
32	in	5.60	3.44	3.66	4.57	3.27
	mm	142	87	93	116	83
33	in	5.92	3.66	4.51	4.80	3.89
	mm	150	93	115	122	99
34	in	6.91	X	3.75	6.09	3.25
	mm	176	X	95	155	83
35	in	7.34	X	3.66	6.34	3.25
	mm	186	X	93	161	83
36	in	7.66	X	4.38	6.56	3.91
	mm	1.95	X	111	167	99
37	in	4.61	2.75	2.81	3.89	2.39
	mm	117	70	71	99	61
38	in	4.61	2.75	2.81	3.89	2.39
	mm	117	70	71	99	61
39	in	5.42	2.31	2.75	4.86	3.80
	mm	138	59	70	123	97
40	in	5.20	3.29	2.81	4.50	2.28
	mm	132	83	71	114	58
41	in	5.13	3.10	3.75	4.32	3.25
	mm	130	79	95	110	83
42	in	6.43	4.40	3.93	5.62	3.25
	mm	163	112	100	143	83
43	in	5.57	3.35	3.66	4.57	3.25
	mm	142	85	93	116	83
44	in	5.90	3.57	4.38	4.79	3.91
	mm	150	91	111	122	99
45	in	5.26	3.17	3.75	4.38	3.84
	mm	134	81	95	111	98
46	in	4.95	3.10	3.84	4.31	2.75
	mm	126	79	98	110	70
47	in	6.43	3.59	3.75	4.81	3.52
	mm	163	91	95	122	90
48	in	6.43	3.59	3.66	4.81	3.73
	mm	163	91	93	122	95
49	in	6.91	3.75	4.38	4.96	4.40
	mm	176	95	111	126	112
50	in	8.13	4.15	5.06	5.37	4.87
	mm	207	105	129	136	124
51	in	8.13	4.15	5.50	5.37	5.18
	mm	207	105	140	136	132

IMPORTANT: Valves may be mounted in any position, except as noted in specifications table.

Const. Ref. 10, 15, 31, 32, 33

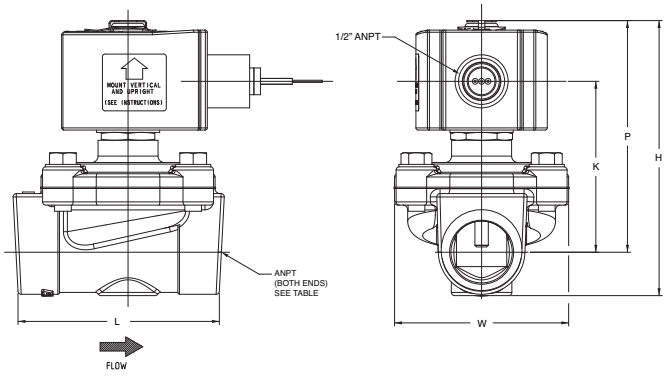

Const. Ref. 24, 34, 35, 36

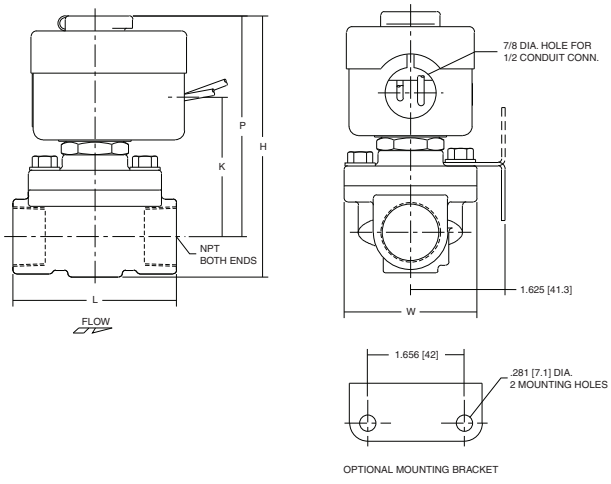

Const. Ref. 12, 16, 26, 28, 47, 48

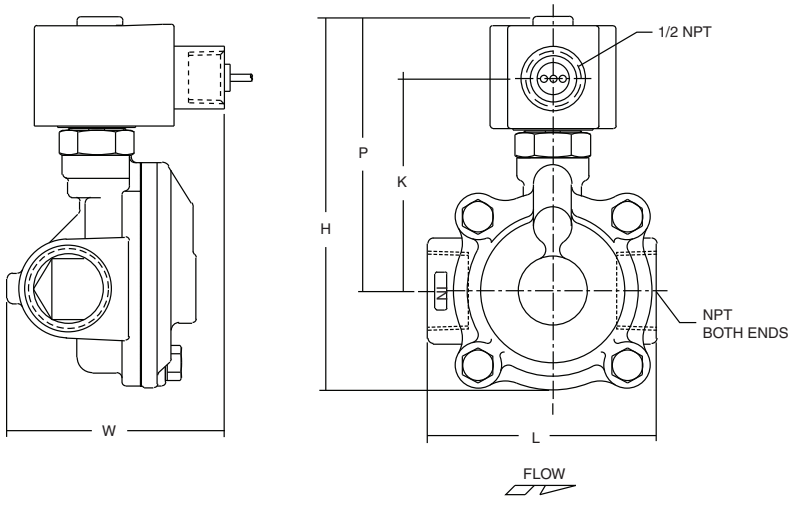

Dimensions: inches (mm)

Const. Ref. 39

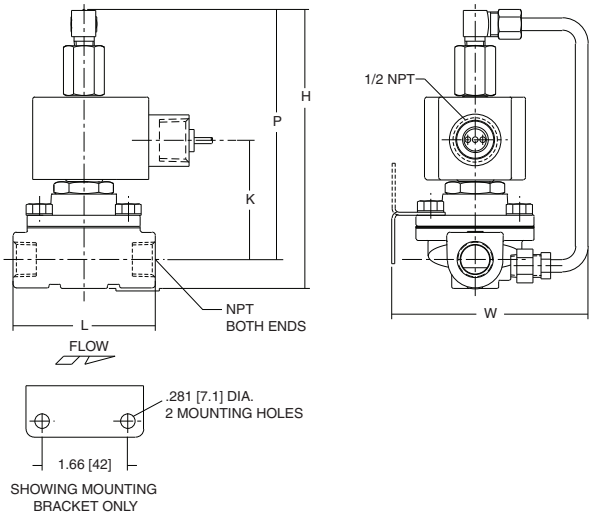

Const. Ref. 18, 29, 49

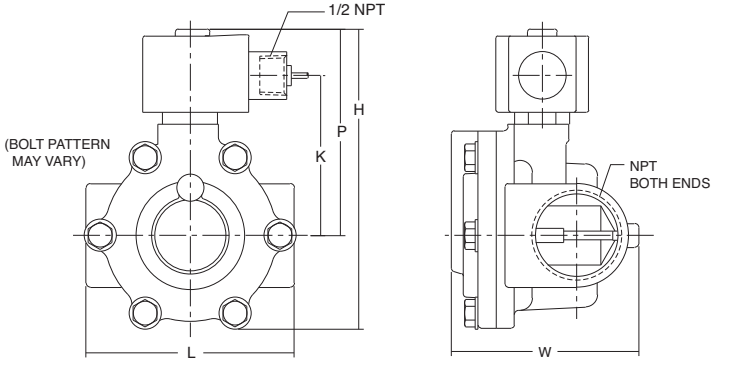

Const. Ref. 20, 21, 27, 30, 50, 51

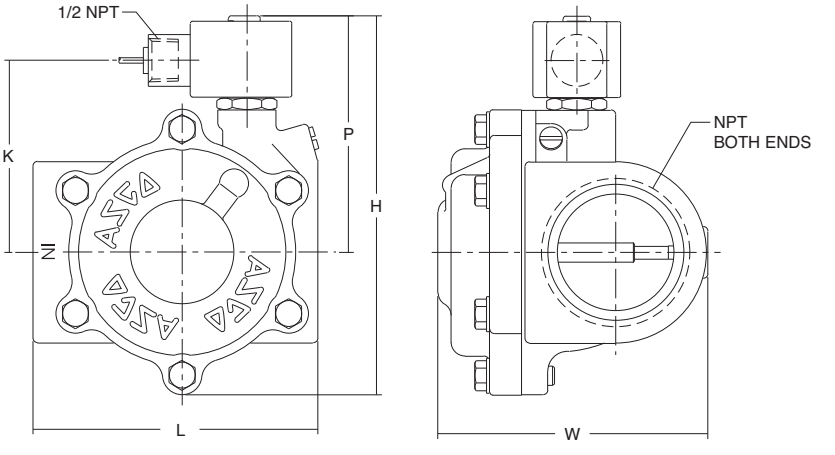

CS-999-130 : Identification sheet

VWTC PROJECT NUMBER:	Iqaluit WWTP	REV:	01
PROJECT NAME:	5000218036	SUBMITTED TO (COMPANY):	
ENGINEER:	G. HÉBERT	SUBMITTED TO (RESPONSIBLE)	
PROJECT MANAGER:	C. BEKAERT	PROJECT NUM REFERENCE.:	
PHONE NUMBER:		LOT NUMBER:	

SUPPLIER	EQPT CODE	EQPT TAG NO	DIA	DESCRIPTION	INFO 1	INFO 2	INFO 3	APPLIC.	NOTE	REV
K5	ST-999-130	BM-02-210		BIOMEDIA	BIOMEDIA K5 / 232 m3					1

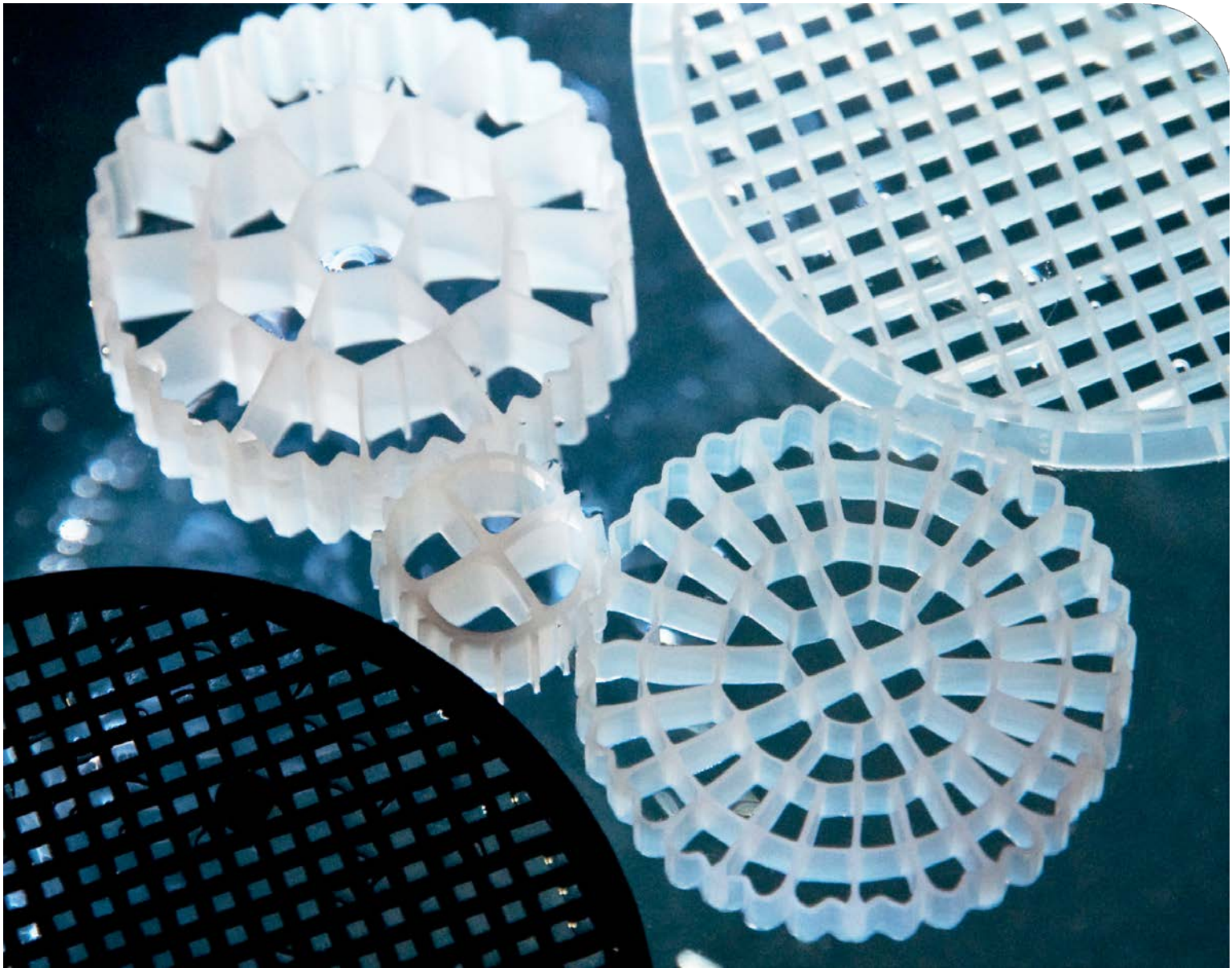

VEOLIA

AnoxKaldnes™

Anox™ K5

WATER TECHNOLOGIES

Anox™ K5

Product specification

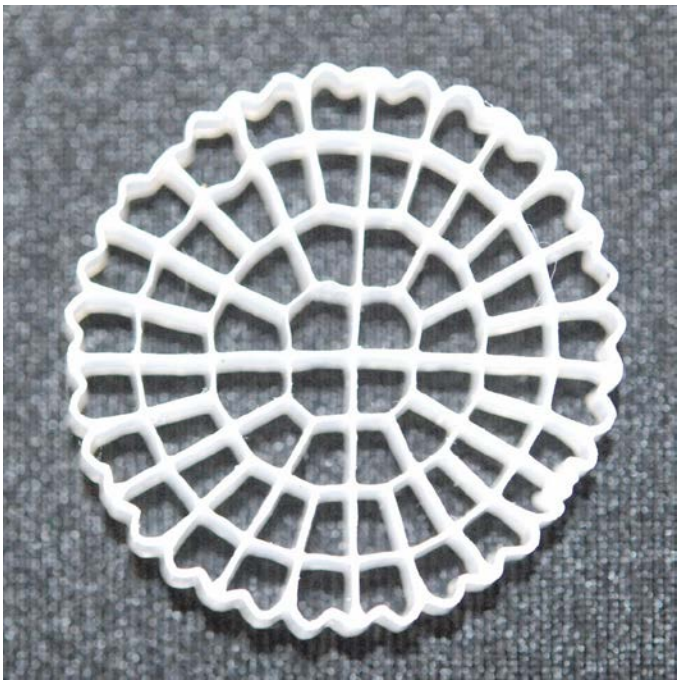

Use

Carrier media for biofilm in biological wastewater treatment. For use in MBBR reactors, with tank and reactor equipment designed for carrier media.

Production

Extrusion. The carriers are produced in several extrusion machines. A combination of phenolic antioxidant and phosphite is added to the material to improve stabilization for the extruding process. Minor differences can be seen between individual pieces but this does not influence performance.

Form and size

Disk shaped carrier with a nominal diameter of 25 mm and a thickness between 3.5 to 4 mm. Minor differences in the measures can be seen between individual pieces but this does not influence performance.

Protected surface area for biofilm growth

Approximately 800 m^2/m^3 ± 1 %

Number per m^3

Approximately 331,000

Composition

High-density polyethylene.

Density

Adjustable. For most applications the carrier exists in density 0.95. The density tolerance is ±0.02 kg/dm^3.

Weight per m^3

118 kg at a density of 0.95 kg/dm^3.

Handling

The carriers are packed and shipped in bags containing 1 m^3 carrier volume. When the carriers are emptied into the reactor, the reactor must already be filled with water and the aeration or mixing system must be running in order to avoid any impact damage to the carriers. Impact damages can be caused by a free fall of several meters and collisions with hard surfaces or other carriers. When filling, the suspended bags are usually simply cut open from the bottom with a knife.

The carriers should be stored in the bags and the bags must not be stacked on one and another as the underlying carriers may be damaged by the extra weight. If the bags are stored, it is important that they are protected against sun light (UV light) and high temperatures.

If the carriers have to be moved from one reactor to another, centrifugal pumps or pneumatic conveyors are not suitable and will cause carrier breakage. The carriers can be safely moved using an air lift pump or a belt conveyor.

Service Life

The service life with normal use in a steel tank is more than 20 years and more than 15 years in a concrete tank with smooth walls. A rough concrete tank will wear the carriers and shorten the life expectancy. In concrete tanks, the rate of wear will depend on the aeration intensity and the roughness of the concrete. It is important that there are no sharp edges on the grid or other equipment in the reactor in order to avoid impact damage that can reduce service life.

Resourcing the world

Veolia Water Technologies

2000 Argentia Road, Plaza IV, suite 430 • Mississauga, Ontario •
L5N 1W1 Canada tel: 905-286-4846 • fax: 905-286-0488
salescanada@veolia.com •

Veolia Water Technologies Communications - 08/2014 - © Veolia Photo Library

REVIEWED BY CONTRACTOR

Kudlik Construction Ltd.

NAME: Sandra Rousseau P.Eng

DATE: Fév 07, 2019

SHOP DRAWINGS

Blower Submittal package Date : 2019-02-07

General Information			
Project	**WWTP UPGRADE - IQALUIT**		
Client:	Kudlik Construction Ltd.	Project Number	2018-062
To:	Sandra Rousseau P.Eng., Project Manger	E-mail:	srousseau@kudlik.biz
Contractor	Veolia Water Technologies Canad Inc.	Project Number	5000218036
Address	4105 Sartelon, Ville St. Laurent PQ, H4S 2B3		
Project Manger:	Clément Bekaert	E-mail:	clement.bekaert@veolia.com
Phone:	514-334-7230 x 3243	Cell:	514-246-6232

Information on the Equipment			
Specialty:	Process		
Equipment:	Blower		
Drawing Reference:			
Specification reference:	43 11 33		
Article:			
Revision:	Rev02		
Titre:	Blower submittal package		
Numero client:	DA-Veolia-DS-03-Blower		
Numero Veolia	5000218036_DS_0003_GEN_VWT		
Envoyer pour:	Approbation/Information:	Approbation	

STANTEC PROJECT #: 110126045

SUBMITTAL # DA-Veolia-DS-03-Blower Rev02

This review by Stantec is for general conformance with the design concept of Stantec's design of the:

☐ Architectural ☐ Structural ☐ Mechanical ☑ Electrical ☐ Other

Stantec

component(s) only and does not mean that Stantec has verified or approves the shop drawing(s). The Contractor remains solely responsible for the shop drawing(s) and this review by Stantec does not relieve the Contractor of the Contractor's responsibility for errors or omissions in the shop drawing(s) or for meeting all requirements of the contract documents. This review does not mean that Stantec approves the detailed design inherent in the shop drawing, responsibility for which shall remain with the Contractor submitting same, nor does this review mean that Stantec accepts any deviation of the shop drawing(s) from the contract documents. The Contractor is responsible for confirming all dimensions and correlating them at the job site, for all construction means, methods and techniques, and for coordination of construction work of all trades, including coordination of all shop drawings.

☑ REVIEWED

☐ REVIEWED, AS NOTED

☐ REVISE AND RESUBMIT

☐ NOT REVIEWED

DATE 2019-02-07

BY Konrad Goluch

Consultant Approval

STANTEC PROJECT #: 110126045

SUBMITTAL # DA-Veolia-DS-03-BlowerRev02

This review by Stantec is for general conformance with the design concept of Stantec's design of the:

☑ Process ☐ Structural ☐ Mechanical ☐ Electrical ☐ Other

Stantec

component(s) only and does not mean that Stantec has verified or approves the shop drawing(s). The Contractor remains solely responsible for the shop drawing(s) and this review by Stantec does not relieve the Contractor of the Contractor's responsibility for errors or omissions in the shop drawing(s) or for meeting all requirements of the contract documents. This review does not mean that Stantec approves the detailed design inherent in the shop drawing, responsibility for which shall remain with the Contractor submitting same, nor does this review mean that Stantec accepts any deviation of the shop drawing(s) from the contract documents. The Contractor is responsible for confirming all dimensions and correlating them at the job site, for all construction means, methods and techniques, and for coordination of construction work of all trades, including coordination of all shop drawings.

☑ REVIEWED

☐ REVIEWED, AS NOTED

☐ REVISE AND RESUBMIT

☐ NOT REVIEWED

DATE Feb 8, 2019

BY Alejandro Rojas, P.Eng

4105 Sartelon
Ville St. Laurent, PQ
H4S-2B3

Phone: 514-334-7230
Fax: 514-334-5070
www.veoliawatertechnologies.ca

TECHNICAL DOCUMENTATION

Project name:	IQALUIT
Project#:	5000218036
Document #:	5000218036_DS_0003_GEN_VWT
by:	BB
chkd:	GH
appvd:	CB

SUBMITTAL PACKAGE

BLOWER(S)

5000218036_DS_0003_GEN_VWT Rev 2

Project name:	IQALUIT
Project#:	5000218036
Document #:	5000218036_DS_0003_GEN_VWT
by:	BB
chkd:	GH
appvd:	CB

SUPPLIER TECHNICAL DATASHEETS

OIM manual section: 4.3.3.1

CS-999-100 : Identification sheet

VWTC PROJECT NUMBER:	Iqaluit WWTP	REV:	02
PROJECT NAME:	5000218036	SUBMITTED TO (COMPANY):	
ENGINEER:	F.Vinci	SUBMITTED TO (RESPONSIBLE)	
PROJECT MANAGER:	C. BEKAERT	PROJECT NUM REFERENCE.:	
PHONE NUMBER:		LOT NUMBER:	

SUPPLIER	EQPT CODE	EQPT TAG NO	DIA	DESCRIPTION	INFO 1	INFO 2	INFO 3	APPLIC.	NOTE	REV
AERZEN	ST-999-100	B02-110		MBBR ROTARY BLOWER	AERZEN - GM 15L DN 100 BLOWER // TECO MODEL # PDH02545, PREMIUM EFFICIENCY, 25HP, 1800RPM, TEFC, 575V/60HZ // BASE WITH INTEGRATED REACTIVE TYPE DISCHARGE SILENCER // INTAKE FILTER SILENCER // HINGED MOTOR SUPPORT AS AUTOMATIC BELT TENSIONING DEVICE //	SET OF VIBRATION ISOLATION MOUNTS // NARROW V-BELT DRIVE WITH GUARD - 1 SET SPRING LOADED RELIEF VALVE PRESET TO: 750 MBAR DISCHARGE MANIFOLD WITH EXTERNALLY ACCESSIBLE INTEGRATED CHECK VALVE // FLANGE ANSI CLASS 125 // ACOUSTIC ENCLOSURE			// CW PRESSURE GAUGE, ISOLATION BALL VALVE, VACUUM GAUGE, TEMPERATURE SWITCH C/W THERMOWELL, DIRTY FILTER INDICATOR, PRESSURE SWITCH, VACUUM SWITCH, NEMA 4X, THERMOMETER 4 1/2" // 2 YEARS SPARE KIT	2
AERZEN	ST-999-100	B02-120		MBBR ROTARY BLOWER	AERZEN - GM 15L DN 100 BLOWER // TECO MODEL # PDH02545, PREMIUM EFFICIENCY, 25HP, 1800RPM, TEFC, 575V/60HZ // BASE WITH INTEGRATED REACTIVE TYPE DISCHARGE SILENCER // INTAKE FILTER SILENCER // HINGED MOTOR SUPPORT AS AUTOMATIC BELT TENSIONING DEVICE //	SET OF VIBRATION ISOLATION MOUNTS // NARROW V-BELT DRIVE WITH GUARD - 1 SET SPRING LOADED RELIEF VALVE PRESET TO: 750 MBAR DISCHARGE MANIFOLD WITH EXTERNALLY ACCESSIBLE INTEGRATED CHECK VALVE // FLANGE ANSI CLASS 125 // ACOUSTIC ENCLOSURE			// CW PRESSURE GAUGE, ISOLATION BALL VALVE, VACUUM GAUGE, TEMPERATURE SWITCH C/W THERMOWELL, DIRTY FILTER INDICATOR, PRESSURE SWITCH, VACUUM SWITCH, NEMA 4X, THERMOMETER 4 1/2" // 2 YEARS SPARE KIT	2

SUPPLIER	EQPT CODE	EQPT TAG NO	DIA	DESCRIPTION	INFO 1	INFO 2	INFO 3	APPLIC.	NOTE	REV
AERZEN	ST-999-100	B02-130		MBBR ROTARY BLOWER	AERZEN - GM 15L DN 100 BLOWER // TECO MODEL # PDH02545, PREMIUM EFFICIENCY, 25HP, 1800RPM, TEFC, 575V/60HZ // BASE WITH INTEGRATED REACTIVE TYPE DISCHARGE SILENCER // INTAKE FILTER SILENCER // HINGED MOTOR SUPPORT AS AUTOMATIC BELT TENSIONING DEVICE //	SET OF VIBRATION ISOLATION MOUNTS // NARROW V-BELT DRIVE WITH GUARD - 1 SET SPRING LOADED RELIEF VALVE PRESET TO: 750 MBAR DISCHARGE MANIFOLD WITH EXTERNALLY ACCESSIBLE INTEGRATED CHECK VALVE // FLANGE ANSI CLASS 125 // ACOUSTIC ENCLOSURE	// CW PRESSURE GAUGE, ISOLATION BALL VALVE, VACUUM GAUGE, TEMPERATURE SWITCH C/W THERMOWELL, DIRTY FILTER INDICATOR, PRESSURE SWITCH, VACUUM SWITCH, NEMA 4X, THERMOMETER 4 1/2" // 2 YEARS SPARE KIT			2

Aerzen Canada
1995 Montée Labossière, Vaudreuil-Dorion, Québec J7V 8P2

Customer Reference: Iqaluit blowers

SCOPE OF SUPPLY

3 Aerzen Generation 5 Blower Package - GM 15L DN 100 - Pressure - including:

Aerzen GM 15L Blower
Drive Motor: 25hp, 1800rpm, TEFC, 575V/60Hz

Base with integrated reactive type discharge silencer
Intake filter silencer
Hinged motor support as automatic belt tensioning device
Set of vibration isolation mounts
Narrow v-belt drive with guard - 1 set
Spring loaded relief valve preset to: 750 mbar
Discharge manifold with externally accessible integrated check valve
Flanged connections to ANSI Class 125 Standard - inlet and discharge
Acoustic Enclosure - Indoor/Outdoor

Instruments
Pressure gauge c/w isolation ball valve (3x)
Vacuum gauge c/w isolation ball valve (3x)
Temperature switch c/w thermowell - Nema 4x (3x)
Dirty filter indicator (3x)
Pressure switch - Nema 4x (3x)
Vacuum switch - Nema 4x (3x)
Thermometer 4 1/2" (Panel mount) (3x)
Flanged connections (3x)

Aerzen recommended spare parts :

2 Year Spare Kit includes :
2 sets of filters
1 set of V-belts
1 oil change

Connection Points:
Intake Connection: Flanged connections 4” to ANSI Class 125 Standard
Discharge Connection: Flanged connections 4” to ANSI Class 125 Standard

Exclusions: See page 2

Aerzen Canada
1995 Montée Labossière, Vaudreuil-Dorion, Québec J7V 8P2

Customer Reference: Iqaluit blowers
Aerzen Reference: SQ-17-019191d

PERFORMANCE DATA

Aerzen Blower Package - GM 15L DN 100 - Pressure

Configuration: **G5**

Conditions:		**Design**	**min flow**	
Flow at inlet conditions	m³/min	13.1	1.62	12.9
	Icfm	463	57	455
Inlet pressure (abs.)	bar	1.01	1.01	1.010
	Psi	14.6	14.6	14.6
Pressure differential	mbar(g)	460	460	470
	Psig	**6.67**	**6.67**	**6.8**
Inlet temperature	°C	15	15	15
Discharge temperature	°C	60	109	61
Blower speed	RPM	3770	980	3724
Blower maximum speed	RPM	4800	4800	4800
% of maximum blower speed		79%	20%	78%
Power required at shaft (with accessories) **	kW	13.6	3.2	13.6
	HP	18.3	4.3	18.3
Total Power (Wire to Air):	HP	20.0	4.9	20.0
Motor rating	HP	25		
Motor speed	RPM	1765	459	1744
Motor frequency	Hz	60	16	59

Noise level without acoustic hood dB(A) 89
Noise level with acoustic hood dB(A) 70

Tolerances as per EN 10204, in accordance with standard ISO 1217:
Flow at inlet conditions / Power required at shaft +/- 5%

Blower package noise level:
Free field measurement at 1m from the complete blower package (tolerance +/- 2 dB(A))

Tests and measurements:
Blower stage: 1.5 hour flow test at the factory (Germany) on a calibrated test bed, at maximum operating conditions and according to DIN 1945. acceptance tolerance: +/- 5%.
A complete test report is available upon request.

On Site Commissioning
Available upon request, charges to be advised.
- Any commissioning activity is subject to two weeks prior notice and completion of commissioning checklist.
- Any on-site activity outside the time indicated will be billed according to the Aerzen Standard Rate Sheet

Exclusions
Control Panels, Motor Starters, Piping and Electrical Connections
* Unloading valves are required for reduced voltage starters

Warranty
Blowers including accessories are warranted for a period of 12mo / max 18mo after delivery and after provisional acceptance of the work against defects in workmanship and design. This warranty does not cover wearing parts unless such parts are defective during shipping / commissioning.
As per Aerzen standard warranty terms.

** Power at shaft excludes drive motor and belt drive

ROTARY LOBE BLOWERS
DELTA BLOWER GENERATION 5

Intake volume streams from 30 m^3/h to 15,000 m^3/h



AERZEN

THE DELTA BLOWERS. ROBUST, DURABLE MACHINES FOR COUNTLESS COMPRESSOR PROCESSES.



Delta Blower Generation 5

They are the driving force behind countless processes, the heart of a powerful machine assembly: the Delta Generation 5 rotary lobe blowers. They represent the distillation of almost 150 years of AERZEN experience and development work, but are more innovative than ever. AERZEN has packed a number of new features into its latest generation of delta blowers: oil-free conveyance of air and neutral gases; a broad control range for volume streams of from 30 m^3/h to 15,000 m^3/h; reduced life-cycle costs; easy handling; quieter operation. What hasn't changed: the extremely robust, extremely reliable, and extremely durable nature of this global success story. No wonder that their owners are so enthusiastic about putting them into continuous service – year in and year out, decade after decade.


AERZEN
Delta Blower



Applications
- Water and waste water treatment
- Aeration
- Filter backwashing
- Pneumatic conveyance of bulk materials
- Gas conveyance
- Degassing
- Dust removal
- Vacuum production
- Biogas treatment

and many others

Industries
- Sewage treatment
- Chemical and process technology
- Power plants
- Cement and lime
- Foodstuffs
- Paper

and many others

THE UNIVERSAL GENIUS FOR EVERY APPLICATION.

The versatile and compact Delta Blower units can be deployed in any climate zone on Earth. In the most challenging outdoor environments just as safely as in covered indoor spaces. They can be used as both standalone units or in complex assemblies. They are as reliable in earthquake zones as they are aboard ships or in other mobile applications.

Versatility in Detail.
Delta Blowers are powerful all-round geniuses. Miniature units can be mounted on silo vehicles, the largest machines can be used in lifting units. They are used to unload ships – at up to 1,000 tons an hour.

Control range from 25% to 100%	Intake volumes streams from 30 m^3/h to 15,000 m^3/h	Positive pressure up to 1,000 mbar	Nominal widths from DN 50 to DN 400



Indispensable for power plant



Powerful performer for loading and unloading ships

MACHINES AND SERVICES FROM AERZEN. HIGHLY ACCESSIBLE AND AVAILABLE AROUND THE WORLD.

The durability of Delta Blower units is legendary. Just like their proverbial reliability, lifespan, and intelligent operating and maintenance design. Why bring up AERZEN services at all, then? Because service is necessary. And because the service teams we have on call across the globe are an important decision criterion for plant operators: a decision for blowers "made by AERZEN".



The heart of the Delta unit: the triple-lobed AERZEN blower stage

High availability.
The best blower units are the ones you don't notice. Because they do their work reliably, year in and year out. The Delta Blowers from AERZEN are just this kind of unit. There's a reason they have a reputation for robust nature and long service life: AERZEN makes all the components itself. Right down to the control system. From the initial idea through engineering to configuration. Which is how we can guarantee the productivity of our machines. Our contribution to the "made in Germany" quality designation.



A reliable partner – the world over

There for you – the world over.
Typically AERZEN: that our solutions should be so reliably available. That means our machines, of course, but also our services. Our teams will take care of your units throughout their entire operational life, thus helping to protect the value of your investment. And the fact that we have a network of over 40 affiliates and service representatives in more than 100 countries around the world means we're never far away. We can be there for you quickly – when you need us.

AERZEN: always the right choice.
- Commissioning done by qualified personnel
- Individualized training for customer's specialists
- Customer-specific service and maintenance contracts
- Delta-real time monitoring for your unit
- On-site machine modifications (if needed)

Intelligently made.
What do they mean, the terms "compact, easy handling, maintenance-friendly"? These are our promises to you for the day-to-day operation of our products, and they're worth their weight in gold. Some concrete examples:

- Small footprint
- Flexible machine mounts
- Easy to move with a fork lift or pallet truck
- Space-saving side-by-side setup
- Plug and play installation and commissioning
- Easy access to all parts subject to wear
- Oil levels can be checked while machine is in operation
- Maintenance work such as changing oil and filters done from the front of the machine
- Low noise levels
- Belt-driven for optimal volume streams; retrofitting is fast and easy

100% clean.
How can we offer machines that can be used for handling foodstuffs, without the need for extensive cleaning that would interrupt production? By eliminating absorption material in the muffler. AERZEN designed the base support to function as a discharge muffler, reducing noise by air deflection alone. 100% free of absorption material that would otherwise cause wear and contaminate downstream systems. The base supports, by the way, are AERZEN patents and are also certified as spark arresters for use in ATEX applications.

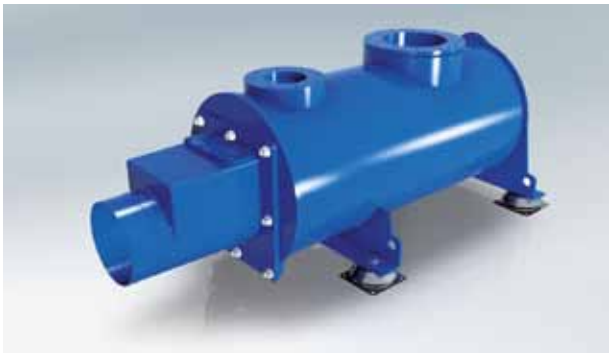

Intelligent noise reduction: the AERZEN discharge muffler with no absorption material

BLOWERS ARE BLOWERS, RIGHT? AN END TO PRECONCEPTIONS.

AERZEN is one of the world's most innovative providers of compressor technology. For over 150 years. And it was almost 150 years ago – 1868, to be exact – that we produced Europe's first rotary lobe blower. Since then we have raised the bar for each generation of this technology. Let yourself be surprised. Discover the extraordinary blowers: the Delta Blower Generation 5.

Extremely robust
- For a broad range of applications in control ranges from 25 to 100%
- Many types of possible modifications

Compact design
- Space-saving side-by-side setup
- Smaller engine rooms

Operation-friendly, low-maintenance design
- High availability in continuous operation under difficult environmental conditions
- Control and maintenance from the front of the machine

Plug&play
- Pre-configured, parameterized, ready to run
- Integrated service package with funnel and initial oil fill

Oil-free per Class 0
- Per ISO 8573-1, TÜV certified

No absorption material
- For use in the pneumatic conveyance of bulk food items (no contamination).
- Secure, energy-efficient water treatment (no deposits of absorption material on aeration plates, no clogging of filter media, no pressure losses)

Integrated power component (optional)
- Frequency inverter, delta-star, direct/soft start
- Intelligent AERtronic control

Smart oil system
- Oil levels can be checked with the machine running
- Readable from outside the machine
- Oil instead of grease: bearings lubricated with oil last longer





A plus for the environment
- Energy-efficient Class IE3 motors as standard equipment
- Intake on the cold side of the unit
- Basic unit integrated into a highly efficient machine network with rotary lobe compressors and turbo blowers from AERZEN
- Retrofitting is fast and easy

Belt-tensioning hinged motor mounting plate
- Fully automatic and maintenance-free belt tensioning
- No need to monitor V-belt tension
- Very easy to mount or replace V-belts

Multifunctional hinged motor mounting plate and lifting jack
- Safer transport
- Easy, secure V-belt installation
- Mobile installation (e.g. aboard ship/ in earthquake zones)
- Hinged motor mounting plate as support for heavy motors

Low noise levels
- For easy compliance with noise level regulations near populated areas and production facilities
- Minimal noise levels with optimized acoustic hood
- Integrated pulsation reduction process (patented AERZEN blower stage)

Approval per PDE guidelines (pressure valve)

ATEX compliant
- AERZEN base plates certified as spark extinguishers for ATEX applications

TÜV-certified zone separation filter

WANT TO KNOW MORE ABOUT WHAT'S INSIDE? DESIGN AND CONSTRUCTION.

It's good to know what all is inside each and every AERZEN Delta blower unit: The wealth of experience of a global market leader. The quality expected of a family firm with a long history of excellence. The goal of providing the best solutions for our customers. And a principle that underlies thousands and thousands of successful applications: Roots.

Innovative pulsation reduction.
AERZEN has developed a unique process especially for the Delta Blower series and integrated it into all its models: pulsation reduction. This patented AERZEN process prevents disruptions in the machine even before they arise. The triple-lobed rotors in the Delta blowers have two channels cast in the cylinder. These channels control backflow into the conveyance chamber to eliminate the blowback and crimping impulses that were typical of double-lobed blowers. A patented interference process that means an end to pulsation.

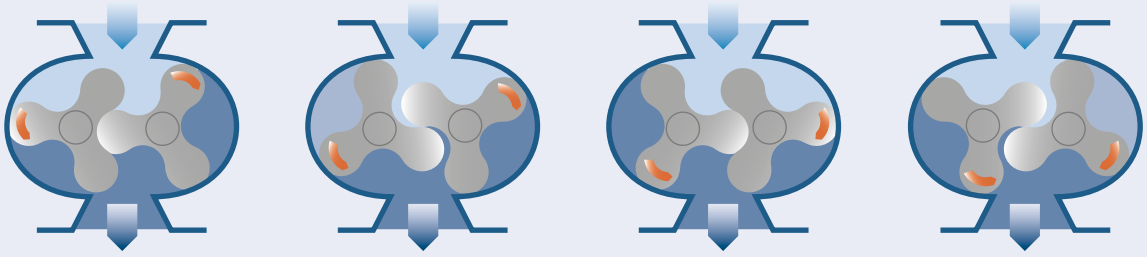

Conveyance process in AERZEN blowers

Intelligent technical details are your guarantee for the lasting value of the Delta blowers. One example from among many: the patented pulsation reduction process, an AERZEN innovation that increases the lifespan of the bearings.

The inner values are what count: a view into an AERZEN blower

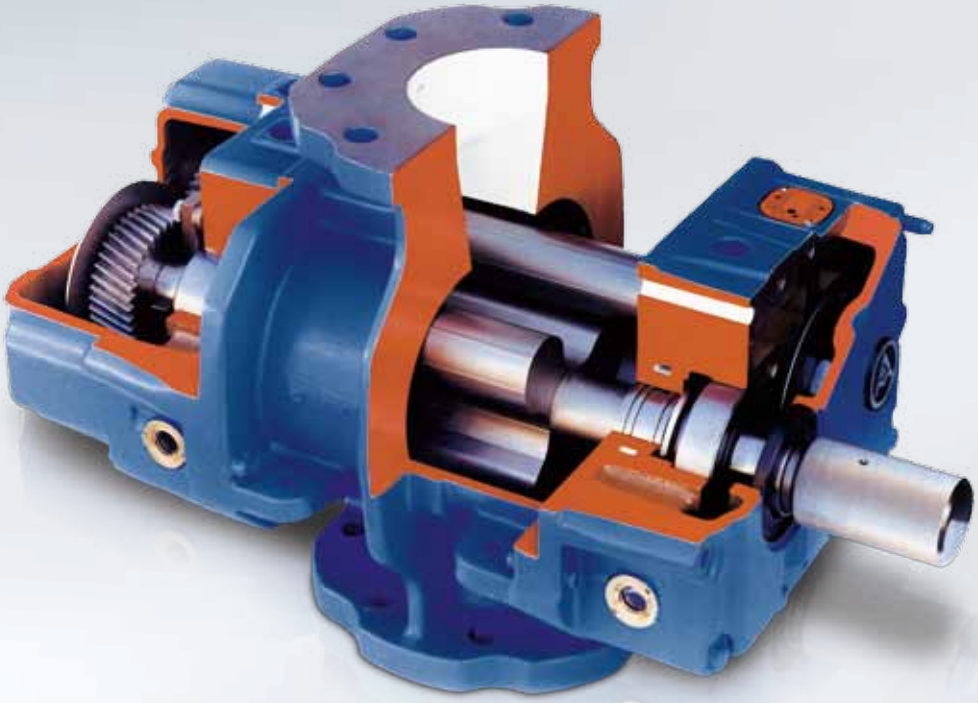

Blower stage
- Triple-lobed blower with integrated pulsation reduction
- Housing: cylinder (with two integrated, pressure-side pre-inlet channels to reduce noise through pulsation reduction), wheel well, housing lid, and side plates
- Made of EN-GJL-200
- Ribbed surface

Rotors

Models GM 3 S to GM 80 L:
- Rotors and shafts drop forged from C45N

Models GM 90 S and GM 30 L:
- Rotors and shaft drop forged from EN-GJS-500-7

Models GM 150 S to GM 240 S:
- Rotors made of EN-GJS-400-18-LT, shafts of C45N

Drive type
- Overhung via narrow V-belt
- Direct drive (option)

Cooling
- Convection cooling

Lubrication
- Oil bath for bearings and timing gears

Oil-free conveyance
- Oil-free operation per ISO 8573-1 Class 0 is guaranteed by using proven piston ring labyrinth seals combined with neutral chambers (open to the atmosphere)

Timing gears
- Made of case-hardening steel, hardened and ground, with helical gears
- Attached to the shaft via taper interference fit
- Extremely smooth running, very long operational life

Refer to Technical Datasheet on page 34/41 for materials

EXCEEDING STANDARDS. AERZEN DELIVERABLES.

Some do comfortable. Others do efficient. We do both. When your Delta Blower unit is delivered, it comes completely configured, parameterized, ready to plug and run. Designed especially for your processes, of course. And including all the standardized accessories and components you'll need for flawless operation at the push of a button.

The AERZEN "All-in" concept: Standard deliverables.



1 **Triple-lobe blower stage**
- With integrated pulsation reduction (see page 10/11)

2 **Base plate with integrated discharge muffler**
- Certified as ATEX spark arrester per EU guideline 1999/92/EC
- Muffler free of absorption material



3 **Intake muffler with integrated air filter**
- Normal intake from the surrounding area
- Conduit intake optional

4 **Flexible rubber bushing**
- With clamps

5 **Flexible machine mounts**
- To decouple machine-borne noise



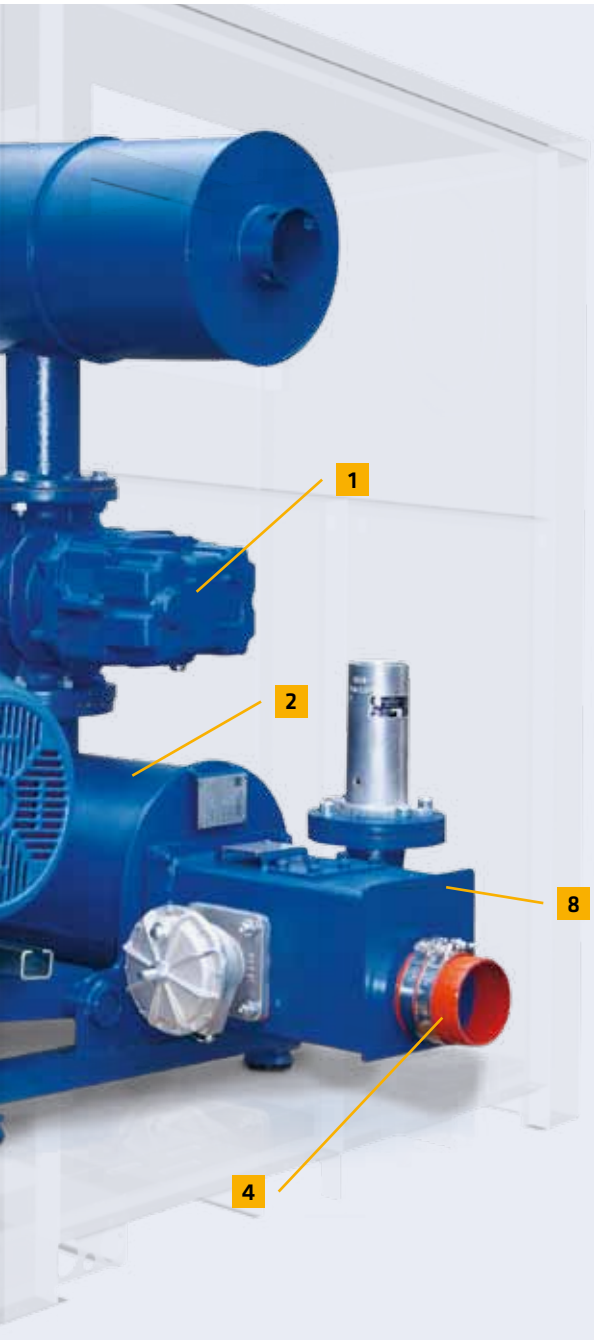



6 **Motor**

- High-performance narrow V-belt drive with three-phase AC motor
- Energy-efficient Class IE3 motors (up to motor size 315) as standard equipment



7 **Hinged motor mounting plate**

- Automatic V-belt tensioning
- Multifunctional hinged motor mounting plate and lifting jack

8 **Terminal box**

- With pressure valve (8) per PED guideline 97/23/EC
- Built-in non-return flap

9 **Instrumentation**

- Pressure gauge for displaying conveying pressure
- Maintenance indicator for monitoring intake filter

Added value: Accessory components.

- Acoustic hood for indoor and outdoor installation, force-air ventilated via mechanical fan
- Startup load relief (10), needed with delta-star motor startup
- Pressure-side axial compensator in place of flexible rubber bushing
- Control cabinet: delta-star, frequency inverter, soft-starter
- AERZEN AERtronic blower control
- Additional accessories on demand



AERZEN startup load relief

Modifications.

- Special motors
- Special finishes
- ATEX-compliant design
- Acoustic hood with special sand collector for use in desert locations
- Acoustic hood for low temperatures (to -40° C) with heater and gravity-activated blinds
- Acoustic hood for earthquake safety and increased wind resistance
- For use aboard ships and in motor vehicles
- For conveying specialty gases by using specialized materials
- Customer-specific documentation



Always a safe choice: ATEX-compliant AERZEN design

Efficient control.

AERtonic is easy to use. But above all, AERZEN's control system is an important part of the unit's safety design: it guarantees that your facility will be operating at optimal efficiency levels at all times. The AERtronic offers a broad spectrum of functions. It can visualize operational data, run the operating hours counter, provide early notifications of operational events, and save all this information in memory. AERtronic will also keep you informed about upcoming maintenance and service cycles, meaning that service calls can be planned for more efficiently, helping to increase the lifespan of your machine's components significantly.



WEIGHTY ADVANTAGES. IN A LEAN MACHINE.

Dimensions and weights (Technical data subject to change – Products subject to technical alteration).

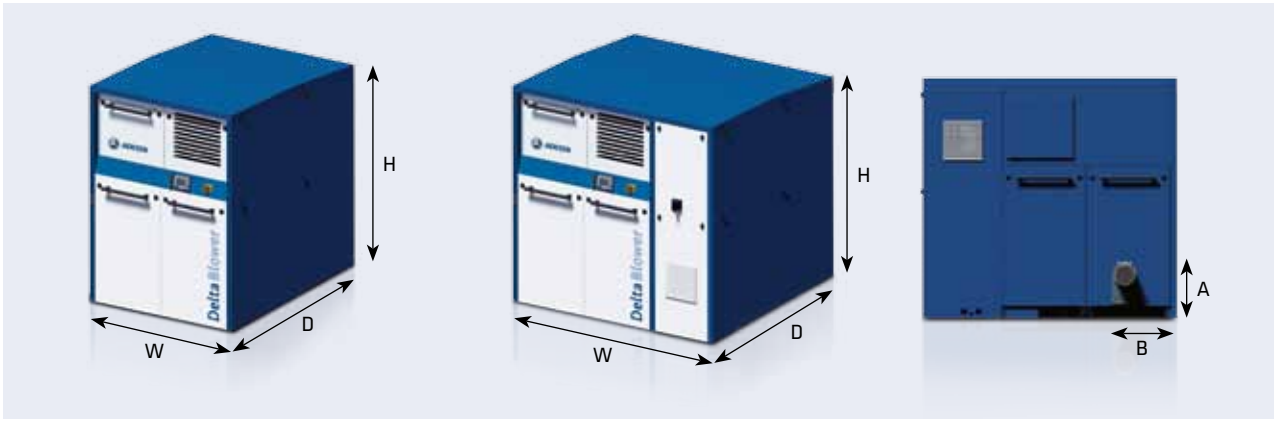

Delta Blower.

Model	H	D	W	A	B	Nozzle size DN	Weight without acoustic hood	Weight with acoustic hood
3 S	1055	800	800	228	245	50	148 kg	212 kg
4 S	1280	1135	925	258	258	80	207 kg	299 kg
7 L	1280	1135	925	258	258	80	212 kg	304 kg
10 S	1280	1135	925	258	258	80	236 kg	328 kg
10 S	1500	1350	1250	294	375	100	336 kg	496 kg
15 L	1500	1350	1250	294	375	100	351 kg	511 kg
25 S	1500	1350	1250	294	375	125	407 kg	567 kg
30 L	1900	1800	1500	356	435	150	690 kg	1020 kg
35 S	1900	1800	1500	356	435	150	780 kg	1110 kg
50 L	1900	1800	1500	356	435	150	830 kg	1160 kg
50 L	2111	2055	1700	357	525	200	905 kg	1475 kg
60 S	2111	2055	1700	357	525	200	1035 kg	1605 kg
80 L	2308	2200	1900	456	600	250	1550 kg	2200 kg
90 S	2308	2200	1900	456	600	250	1620 kg	2270 kg
130 L	2345	2850	2100	410	635	300	2436 kg	3410 kg
150 S	2345	2850	2100	410	635	300	2796 kg	3750 kg
220 L *	3500	4304	2800	410	800	400	4981 kg	8240 kg
240 S *	3500	4304	2800	410	800	400	5371 kg	8630 kg

** Implementation in Kompakt IV*

Weights without motor and belt drive

15L blower total weight (blower package + acoustic hood + motor): 764 kg

Delta Blower with integrated power supply.

Model	H	D	W	A	B	Nozzle size DN	Weight with acoustic hood
10 S	1500	1350	1850	294	375	100	619 kg
15 L	1500	1350	1850	294	375	100	661 kg
25 S	1500	1350	1850	294	375	125	717 kg
30 L	1900	1800	2100	356	435	150	1322 kg
35 S	1900	1800	2100	356	435	150	1412 kg
50 L	1900	1800	2100	356	435	150	1462 kg
50 L	2111	2055	2300	357	525	200	1825 kg
60 S	2111	2055	2300	357	525	200	1955 kg

Weights without motor, electrical equipment, and belt drive

BLOWER POWER IN DETAIL. THE PERFORMANCE TABLES.

The Delta rotary lobe blowers are high-performance products. They were designed for use in many different areas of application: 16 models in 9 nominal widths from DN 50 to DN 400, intake volume streams from about 30 to 15,000 m^3/h, positive pressures up to 1,000 mbar, negative pressures down to -500 mbar.

Noise values.
The sound pressure levels from machine noise (Lp(A)) per individual unit are based measurements taken outdoors at a distance of 1 M from the exterior of the machine (tolerance of ± 2 dB). Noise measurement per DIN 45 635, DIN ISO 3744 and DIN EN ISO 2151.

Using the performance tables.
You will find all the important performance data for the Delta series in the performance tables: intake volume stream ($\dot{V}1$), required coupling power (Pk), motor size and noise level (Lp(A)). The intake volumes shown are based on commonly available belt drive ratios in increments of about 12%. Lower drive speeds are also possible, depending on the final temperature.

Parameters.

$\dot{V}1$	[m^3/min]	Intake volume stream (t1 = 20 °C, p1 = 1 bar, RH = 0 %)
p1	[bar abs]	Intake pressure
Δp	[mbar]	Pressure differential
t_1	[°C]	Intake temperature
t_2	[°C]	Final temperature
nG	[rpm]	Blower rotational speed
nM	[rpm]	Motor rotational speed
Pk	[kW]	Shaft power
P_{mot}	[kW]	Nominal motor power
Lp(A) o. H.	[dB]	Noise pressure level for blower unit without hood
Lp(A) m. H.	[dB]	Noise pressure level for blower unit with hood

Delta Blower is the driving force in countless processes. There is a good reason for the exceptional range of applications: the robust power units from AERZEN can be configured for just about any requirement, even in standard implementations.

Δp mbar	Blower size		GM 3 S / DN 50										GM 4 S / DN 80								
300	$\dot{V}_1$	[m³/min]	**0.66**	**1.1**	**1.61**	**2.13**	**2.48**	**2.94**	**3.18**	**3.66**	**3.87**	**4.12**	**1.01**	**1.66**	**2.17**	**3**	**3.54**	**4.16**	**4.78**	**5.41**	**5.7**
	t_2	[°C]	74	62	57	54	53	52	51	50	50	50	68	59	56	53	52	51	50	49	49
	nG	[rpm]	1400	1830	2330	2840	3190	3640	3880	4350	4560	4800	1400	1870	2240	2840	3230	3680	4130	4590	4800
	nM	[rpm]	2800	2800	2800	2840	2840	2840	2870	2870	2870	2890	2800	2800	2840	2840	2870	2870	2890	2890	2890
	Pk	[kW]	0.89	1.14	1.43	1.76	2.01	2.34	2.54	2.94	3.13	3.37	1.14	1.49	1.78	2.29	2.64	3.06	3.52	4.01	4.25
	P_{mot}	[kW]	1.5	1.5	2.2	3	3	3	4	4	4	5.5	1.5	2.2	3	3	4	4	5.5	5.5	5.5
	Motor size		90 S	90 S	90 L	100 L	100 L	100 L	112 M	112 M	112 M	132 S	90 S	90 L	100 L	100 L	112 M	112 M	132 S	132 S	132 S
	Lp(A)[dB]	w/o.H./w.H.	78/<65	80/<65	83/66	87/66	87/66	89/66	90/67	92/67	93/67	93/66	77/<65	78/<65	79/<65	79/<65	84/<65	86/<65	87/<65	88/<65	89/<65
400	$\dot{V}_1$	[m³/min]	**0.55**	**0.98**	**1.53**	**2.01**	**2.4**	**2.86**	**3.07**	**3.57**	**3.79**	**4**	**0.87**	**1.5**	**2.21**	**2.9**	**3.42**	**4.06**	**4.64**	**5.27**	**5.56**
	t_2	[°C]	107	83	73	68	66	64	63	62	61	61	94	77	70	66	64	62	61	60	60
	nG	[rpm]	1400	1830	2370	2840	3220	3680	3880	4380	4590	4800	1400	1860	2370	2870	3250	3710	4130	4590	4800
	nM	[rpm]	2800	2800	2840	2840	2870	2870	2870	2890	2890	2890	2800	2840	2840	2870	2890	2890	2890	2890	2890
	Pk	[kW]	1.13	1.45	1.86	2.24	2.57	3	3.19	3.71	3.94	4.18	1.46	1.91	2.43	2.97	3.4	3.94	4.47	5.07	5.35
	P_{mot}	[kW]	1.5	2.2	3	3	4	4	4	5.5	5.5	5.5	2.2	3	3	4	5.5	5.5	5.5	7.5	7.5
	Motor size		90 S	90 L	100 L	100 L	112 M	112 M	112 M	132 S	132 S	132 S	90 L	100 L	100 L	112 M	132 S	132 S	132 S	132 S	132 S
	Lp(A)[dB]	w/o.H./w.H.	80/<65	81/<65	84/66	87/66	87/67	90/67	91/67	93/67	94/67	94/67	77/<65	79/<65	81/<65	83/<65	85/<65	87/<65	88/<65	89/<65	89/<65
500	$\dot{V}_1$	[m³/min]		**0.91**	**1.43**	**1.94**	**2.29**	**2.78**	**3.04**	**3.47**	**3.68**	**3.9**	**0.77**	**1.42**	**2.11**	**2.8**	**3.3**	**3.93**	**4.51**	**5.14**	**5.43**
	t_2	[°C]		107	91	83	80	77	75	74	73	72	126	97	85	80	77	75	73	72	71
	nG	[rpm]		1860	2370	2870	3220	3700	3960	4380	4590	4800	1420	1890	2390	2890	3250	3710	4130	4590	4800
	nM	[rpm]		2840	2840	2870	2870	2890	2890	2890	2890	2890	2840	2840	2870	2890	2890	2890	2890	2890	2890
	Pk	[kW]		1.78	2.26	2.76	3.12	3.64	3.94	4.45	4.72	4.99	1.81	2.38	3	3.66	4.15	4.8	5.42	6.12	6.45
	P_{mot}	[kW]		3	3	4	4	5.5	5.5	5.5	7.5	7.5	3	3	4	5.5	5.5	7.5	7.5	7.5	7.5
	Motor size			100 L	100 L	112 M	112 M	132 S	132 S	132 S	132 S	132 S	100 L	100 L	112 M	132 S	132 S	132 S	132 S	132 S	132 S
	Lp(A)[dB]	w/o.H./w.H.		83/65	85/66	88/67	88/67	91/68	93/68	95/67	95/67	95/68	77/<65	80/<65	82/<65	85/66	87/65	88/<65	90/<65	89/<65	89/66
600	$\dot{V}_1$	[m³/min]			**1.36**	**1.84**	**2.26**	**2.69**	**2.95**	**3.38**	**3.59**	**3.8**		**1.33**	**2.02**	**2.69**	**3.39**	**3.82**	**4.4**	**5.11**	**5.32**
	t_2	[°C]			110	99	94	90	88	86	85	84		119	103	95	90	87	85	83	83
	nG	[rpm]			2390	2870	3280	3700	3960	4380	4590	4800		1910	2410	2890	3400	3710	4130	4650	4800
	nM	[rpm]			2870	2870	2890	2890	2890	2890	2890	2890		2870	2890	2890	2890	2890	2890	2930	2930
	Pk	[kW]			2.69	3.24	3.74	4.27	4.61	5.19	5.49	5.8		2.84	3.58	4.32	5.14	5.65	6.37	7.29	7.56
	P_{mot}	[kW]			4	4	5.5	5.5	7.5	7.5	7.5	7.5		4	5.5	5.5	7.5	7.5	7.5	11	11
	Motor size				112 M	112 M	132 S	132 S	132 S	132 S	132 S	132 S		112 M	132 S	132 S	132 S	132 S	132 S	160 M	160 M
	Lp(A)[dB]	w/o.H./w.H.			87/66	89/67	89/68	92/68	95/68	96/68	96/68	96/68		81/<65	84/<65	87/68	87/67	88/66	91/66	89/66	89/67
700	$\dot{V}_1$	[m³/min]			**1.27**	**1.78**	**2.17**	**2.6**	**2.86**	**3.29**	**3.5**	**3.72**			**1.92**	**2.58**	**3.28**	**3.71**	**4.37**	**5.01**	**5.22**
	t_2	[°C]			132	117	110	105	102	99	98	97			122	111	104	101	97	95	94
	nG	[rpm]			2390	2890	3280	3700	3960	4380	4590	4800			2410	2890	3400	3710	4190	4650	4800
	nM	[rpm]			2870	2890	2890	2890	2890	2890	2890	2890			2890	2890	2890	2890	2930	2930	2930
	Pk	[kW]			3.09	3.76	4.29	4.9	5.28	5.93	6.27	6.62			4.14	4.99	5.92	6.5	7.43	8.35	8.66
	P_{mot}	[kW]			4	5.5	5.5	7.5	7.5	7.5	7.5	7.5			5.5	7.5	7.5	7.5	11	11	11
	Motor size				112 M	132 S	132 S	132 S	132 S	132 S	132 S	132 S			132 S	132 S	132 S	132 S	160 M	160 M	160 M
	Lp(A)[dB]	w/o.H./w.H.			87/67	90/67	90/68	93/69	94/69	95/69	95/69	96/68			85/<6	89/68	86/68	89/67	93/67	90/68	89/69
800	$\dot{V}_1$	[m³/min]					**2.1**	**2.52**	**2.78**	**3.21**						**2.48**	**3.26**	**3.68**	**4.28**	**4.91**	**5.12**
	t_2	[°C]					126	120	117	113						128	118	114	111	107	107
	nG	[rpm]					3290	3700	3960	4380						2890	3450	3760	4190	4650	4800
	nM	[rpm]					2890	2890	2890	2890						2890	2930	2930	2930	2930	2930
	Pk	[kW]					4.86	5.52	5.95	6.68						5.65	6.81	7.46	8.4	9.42	9.77
	P_{mot}	[kW]					7.5	7.5	7.5	7.5						7.5	11	11	11	11	11
	Motor size						132 S	132 S	132 S	132 S						132 S	160 M	160 M	160 M	160 M	160 M
	Lp(A)[dB]	w/o.H./w.H.					91/68	94/69	93/69	94/70							87/68	91/68	95/68	91/70	90/70
900	$\dot{V}_1$	[m³/min]							**2.71**								**3.17**	**3.59**	**4.19**	**4.82**	**5.03**
	t_2	[°C]							132								133	129	124	120	119
	nG	[rpm]							3960								3450	3760	4190	4650	4800
	nM	[rpm]							2890								2930	2930	2930	2930	2930
	Pk	[kW]							6.63								7.6	8.33	9.36	10.5	10.9
	P_{mot}	[kW]							7.5								11	11	11	15	15
	Motor size								132 S								160 M	160 M	160 M	160 M	160 M
	Lp(A)[dB]	w/o.H./w.H.							94/70								88/69	92/69	96/69	92/70	92/70
1000	$\dot{V}_1$	[m³/min]																		**4.74**	**4.94**
	t_2	[°C]																		133	132
	nG	[rpm]																		4650	4800
	nM	[rpm]																		2930	2930
	Pk	[kW]																		11.6	12
	P_{mot}	[kW]																		15	15
	Motor size																			160 M	160 M
	Lp(A)[dB]	w/o.H./w.H.																		94/70	94/70

Lower differential pressures on request. Performance data are non-binding examples only.

Δp mbar	Blower size		GM 7 L / DN 80									GM 10 S / DN 80						GM 10 S / DN 100		
300	$\dot{V}_1$	[m³/min]	1.54	2.56	3.59	4.63	5.35	6.35	7.19	7.71	8.21	2.59	3.96	5.36	6.7	7.68	9.03	10.3	11	11.6
	t_2	[°C]	67	58	55	52	51	50	50	50	49	59	54	52	50	50	49	48	48	48
	nG	[rpm]	1400	1890	2390	2890	3240	3720	4130	4380	4620	1420	1910	2410	2890	3240	3720	4190	4440	4650
	nM	[rpm]	2800	2840	2870	2890	2890	2890	2890	2890	2890	2840	2870	2890	2890	2890	2890	2930	2930	2930
	Pk	[kW]	1.64	2.19	2.78	3.42	3.89	4.59	5.25	5.67	6.1	2.29	3.06	3.88	4.72	5.37	6.36	7.43	8.05	8.61
	P_{mot}	[kW]	2.2	3	4	5.5	5.5	7.5	7.5	7.5	7.5	3	4	5.5	7.5	7.5	7.5	11	11	11
	Motor size		90 L	100 L	112 M	132 S	132 S	132 S	132 S	132 S	132 S	100 L	112 M	132 S	132 S	132 S	132 S	160 M	160 M	160 M
	Lp(A)[dB]	w/o.H./w.H.	80/<65	82/<65	83/<65	85/68	85/67	88/66	89/66	89/<65	89/66	76/<65	78/69	80/66	82/65	84/65	86/66	91/71	91/71	92/71
400	$\dot{V}_1$	[m³/min]	1.38	2.39	3.42	4.42	5.14	6.14	7.11	7.63	8.14	2.41	3.8	5.14	6.49	7.58	8.95	10.1	10.8	11.4
	t_2	[°C]	92	75	69	65	64	62	61	60	60	76	68	64	62	61	59	59	58	58
	nG	[rpm]	1420	1910	2410	2890	3240	3720	4190	4440	4690	1435	1930	2410	2890	3280	3770	4190	4440	4650
	nM	[rpm]	2840	2870	2890	2890	2890	2890	2930	2930	2930	2870	2890	2890	2890	2930	2930	2930	2930	2930
	Pk	[kW]	2.16	2.87	3.64	4.41	5.01	5.88	6.79	7.31	7.85	2.99	3.99	5	6.07	6.98	8.23	9.39	10.1	10.8
	P_{mot}	[kW]	3	4	5.5	5.5	7.5	7.5	11	11	11	4	5.5	7.5	7.5	11	11	11	15	15
	Motor size		100 L	112 M	132 S	132 S	132 S	132 S	160M	160M	160M	112 M	132 S	132 S	132 S	160 M	160 M	160 M	160 M	160 M
	Lp(A)[dB]	w/o.H./w.H.	80/<65	82/<65	84/<65	86/68	86/68	89/67	90/67	90/67	91/68	77/<65	78/70	80/67	83/66	84/66	87/67	91/70	92/71	93/70
500	$\dot{V}_1$	[m³/min]	1.22	2.18	3.24	4.23	5.31	6.05	6.92	7.44	7.96	2.25	3.61	4.95	6.41	7.39	8.76	9.94	10.6	11.2
	t_2	[°C]	122	95	84	79	76	74	72	72	71	95	83	77	74	72	70	69	69	69
	nG	[rpm]	1435	1900	2410	2890	3410	3770	4190	4440	4690	1445	1930	2410	2930	3280	3770	4190	4440	4650
	nM	[rpm]	2870	2890	2890	2890	2890	2930	2930	2930	2930	2890	2890	2890	2930	2930	2930	2930	2930	2930
	Pk	[kW]	2.67	3.51	4.47	5.41	6.49	7.27	8.24	8.84	9.46	3.68	4.89	6.13	7.52	8.51	9.99	11.3	12.2	12.9
	P_{mot}	[kW]	4	5.5	5.5	7.5	7.5	11	11	11	11	5.5	7.5	7.5	11	11	15	15	15	15
	Motor size		112 M	132 S	132 S	132 S	132 S	160M	160M	160M	160M	132 S	132 S	132 S	160 M	160 M	160 M	160 M	160 M	160 M
	Lp(A)[dB]	w/o.H./w.H.	80/<65	82/<65	84/<65	87/68	89/68	90/68	91/68	91/69	92/70	77/<65	78/70	80/67	83/66	84/67	87/68	88/67	92/70	93/70
600	$\dot{V}_1$	[m³/min]		2.08	3.07	4.07	4.87	5.89	6.76	7.27	7.79	2.08	3.44	4.5	6.24	7.22	8.59	9.76	10.5	11.1
	t_2	[°C]		116	102	94	90	87	84	83	83	118	99	92	86	84	82	80	80	79
	nG	[rpm]		1930	2410	2890	3280	3770	4190	4440	4690	1445	1930	2310	2930	3280	3770	4190	4440	4650
	nM	[rpm]		2890	2890	2890	2930	2930	2930	2930	2930	2890	2890	2930	2930	2930	2930	2930	2930	2930
	Pk	[kW]		4.24	5.3	6.41	7.34	8.57	9.68	10.4	11.1	4.35	5.8	6.94	8.89	10	11.7	13.3	14.3	15.1
	P_{mot}	[kW]		5.5	7.5	7.5	11	11	11	15	15	5.5	7.5	11	11	15	15	15	18.5	18.5
	Motor size			132 S	132 S	132 S	160M	160M	160M	160 M	160 M	132 S	132 S	160 M	160 M	160 M	160 M	160 M	160 L	160 L
	Lp(A)[dB]	w/o.H./w.H.		84/<65	86/66	88/68	89/68	91/68	91/69	92/69	92/70	77/<65	78/71	80/68	84/67	85/68	87/69	88/68	92/70	94/70
700	$\dot{V}_1$	[m³/min]			2.92	4.00	4.72	5.71	6.60	7.12	7.64		3.28	4.34	6.08	7.06	8.43	9.61	10.3	10.9
	t_2	[°C]			120	109	104	100	97	96	94		117	107	99	96	93	92	91	90
	nG	[rpm]			2410	2930	3280	3760	4190	4440	4690		1930	2310	2930	3280	3770	4190	4440	4650
	nM	[rpm]			2890	2930	2930	2930	2930	2930	2930		2890	2930	2930	2930	2930	2930	2930	2930
	Pk	[kW]			6.13	7.51	8.47	9.84	11.1	11.9	12.7		6.7	8.02	10.3	11.6	13.5	15.3	16.3	17.3
	P_{mot}	[kW]			7.5	11	11	11	15	15	15		7.5	11	15	15	18.5	18.5	18.5	22
	Motor size				132 S	160M	160M	160M	160 M	160 M	160 M		132 S	160 M	160 M	160 M	160 L	160 L	160 L	180 M
	Lp(A)[dB]	w/o.H./w.H.			88/67	89/68	90/68	92/69	92/70	92/70	92/70		79/71	80/69	84/67	84/68	88/69	89/69	92/68	94/69
800	$\dot{V}_1$	[m³/min]												4.2	5.93	6.91	7.98	9.46	10.2	10.7
	t_2	[°C]												123	113	109	106	103	102	101
	nG	[rpm]												2310	2930	3280	3660	4190	4440	4650
	nM	[rpm]												2930	2930	2930	2930	2930	2930	2930
	Pk	[kW]												9.1	11.6	13.1	14.8	17.2	18.4	19.5
	P_{mot}	[kW]												11	15	15	18.5	22	22	22
	Motor size													160 M	160 M	160 M	160 L	180 M	180 M	180 M
	Lp(A)[dB]	w/o.H./w.H.												81/69	84/67	85/69	87/60	90/70	92/67	93/68
900	$\dot{V}_1$	[m³/min]														6.77	7.84	9.32	10.1	10.7
	t_2	[°C]														122	118	115	113	112
	nG	[rpm]														3280	3660	4190	4460	4680
	nM	[rpm]														2930	2930	2930	2945	2945
	Pk	[kW]														14.6	16.5	19.2	20.6	21.8
	P_{mot}	[kW]														18.5	18.5	22	30	30
	Motor size															160 L	160 L	180 M	200 L	200 L
	Lp(A)[dB]	w/o.H./w.H.														85/69	88/70	89/70	92/69	93/69
1000	$\dot{V}_1$	[m³/min]															7.71	8.72	9.95	10.6
	t_2	[°C]															131	128	125	124
	nG	[rpm]															3660	4020	4460	4680
	nM	[rpm]															2930	2945	2945	2945
	Pk	[kW]															18.2	20.2	22.7	24
	P_{mot}	[kW]															22	30	30	30
	Motor size																180 M	200 L	200 L	200 L
	Lp(A)[dB]	w/o.H./w.H.															89/70	89/70	92/70	93/72

Lower differential pressures on request. GM 10 S from 10 m³/min - accessories DN 100. Performance data are non-binding examples only.

Δp mbar	Blower size		GM 15 L / DN 100									GM 25 S / DN 125								
300	$\dot{V}_1$	[m³/min]	3.95	5.84	7.99	10.1	11.6	13.6	15.4	16.4	17.3	6.18	8.69	11.1	14.5	16.6	18.7	20.6	22.7	24.2
	t_2	[°C]	58	54	51	50	49	49	48	48	48	53	51	50	48	48	48	47	47	47
	nG	[rpm]	1435	1890	2410	2930	3290	3760	4190	4440	4650	1445	1890	2310	2930	3290	3660	4010	4370	4650
	nM	[rpm]	2870	2890	2890	2930	2930	2930	2930	2930	2930	2890	2890	2930	2930	2930	2930	2930	2930	2930
	Pk	[kW]	3.26	4.34	5.64	7.04	8.07	9.52	10.9	11.8	12.6	4.46	5.86	7.3	9.64	11.1	12.8	14.4	16.2	17.7
	P_{mot}	[kW]	4	5.5	7.5	11	11	11	15	15	15	5.5	7.5	11	11	15	15	18.5	18.5	22
	Motor size							160 M	160 M	160 M	160 M	132 S	132 S	160 M	160 M	160 M	160 M	160 L	160 L	180 M
	Lp(A)[dB]	w/o.H./w.H.						89/66	91/67	91/68	91/69	81/66	85/66	87/70	92/69	92/69	93/69	92/69	94/71	96/72
400	$\dot{V}_1$	[m³/min]	3.69	5.53	7.27	9.84	11.3	13.3	15.1	16.1	17	5.88	8.56	10.8	14.2	16.3	18.4	20.3	22.5	24.1
	t_2	[°C]	74	67	64	61	60	59	59	58	58	66	62	60	59	58	58	57	57	57
	nG	[rpm]	1445	1890	2310	2930	3290	3760	4190	4440	4650	1445	1920	2310	2930	3290	3660	4010	4400	4680
	nM	[rpm]	2890	2890	2930	2930	2930	2930	2930	2930	2930	2890	2930	2930	2930	2930	2930	2930	2945	2950
	Pk	[kW]	4.28	5.64	6.97	9.06	10.3	12.1	13.8	14.9	15.8	5.82	7.76	9.47	12.4	14.2	16.2	18.2	20.5	22.2
	P_{mot}	[kW]	5.5	7.5	11	11	15	15	18.5	18.5	18.5	7.5	11	11	15	18.5	18.5	22	30	30
	Motor size		132 S	132 S	160 M	160 M	160 M	160 M	160 L	160 L	160 L	132 S	160 M	160 M	160 M	160 L	160 L	180 M	200 L	200 L
	Lp(A)[dB]	w/o.H./w.H.	83/68	85/<65	86/<65	88/<65	87/<65	88/67	92/67	92/69	94/71	83/67	86/67	87/71	92/69	93/69	93/70	93/70	95/71	98/72
500	$\dot{V}_1$	[m³/min]	3.42	5.38	7	9.57	11.1	12.6	14	15.8	16.7	5.73	8.29	10.5	14	16	18.1	20.2	22.3	23.8
	t_2	[°C]	93	82	77	73	72	70	69	69	68	80	75	72	69	68	68	67	67	66
	nG	[rpm]	1445	1920	2310	2930	3290	3660	4010	4440	4650	1465	1920	2310	2930	3290	3660	4030	4400	4680
	nM	[rpm]	2890	2930	2930	2930	2930	2930	2930	2930	2930	2930	2930	2930	2930	2930	2930	2945	2945	2950
	Pk	[kW]	5.28	7.06	8.57	11.1	12.6	14.3	15.9	18	19	7.27	9.56	11.6	15.1	17.3	19.6	22.1	24.6	26.6
	P_{mot}	[kW]	7.5	11	11	15	15	18.5	18.5	22	22	11	11	15	18.5	22	22	30	30	30
	Motor size		132 S	160 M	160 M	160 M	160 M	160 L	160 L	180 M	180 M	160 M	160 M	160 M	160 L	180 M	180 M	200 L	200 L	200 L
	Lp(A)[dB]	w/o.H./w.H.	84/67	87/<65	88/<65	90/<65	88/<65	88/67	91/68	94/70	96/72	85/67	88/68	88/71	93/69	93/70	94/71	94/71	97/72	99/72
600	$\dot{V}_1$	[m³/min]	3.17	5.14	6.75	9.32	10.8	12.3	14.5	15.7	16.6	5.49	8.05	10.2	13.7	15.9	18	19.9	22	23.6
	t_2	[°C]	115	98	91	85	83	82	80	79	79	95	87	84	80	79	78	77	77	76
	nG	[rpm]	1445	1920	2310	2930	3290	3660	4190	4460	4680	1465	1920	2310	2930	3310	3680	4030	4400	4680
	nM	[rpm]	2890	2930	2930	2930	2930	2930	2930	2945	2945	2930	2930	2930	2930	2945	2945	2945	2950	2950
	Pk	[kW]	6.28	8.38	10.2	13.1	14.9	16.8	19.6	21.1	22.4	8.65	11.4	13.8	17.9	20.5	23.2	25.8	28.7	31
	P_{mot}	[kW]	7.5	11	15	15	18.5	22	22	30	30	11	15	18.5	22	30	30	30	37	37
	Motor size		132 S	160 M	160 M	160 M	160 L	180 M	180 M	200 L	200 L	160 M	160 M	160 L	180 M	200 L	200 L	200 L	200 L	200 L
	Lp(A)[dB]	w/o.H./w.H.	86/68	88/<65	88/<65	89/<65	88/66	88/68	92/68	95/70	97/72	86/69	89/69	89/71	93/70	94/71	95/72	96/72	98/72	100/73
700	$\dot{V}_1$	[m³/min]		4.91	6.53	9.1	10.6	12.1	13.6	15.4	16.3	5.27	7.83	10	13.6	15.7	17.7	20.1	21.8	23.3
	t_2	[°C]		115	106	98	95	93	92	90	89	112	101	96	91	90	88	87	87	86
	nG	[rpm]		1920	2310	2930	3290	3660	4030	4460	4680	1465	1920	2310	2945	3310	3680	4100	4400	4670
	nM	[rpm]		2930	2930	2930	2930	2930	2945	2945	2945	2930	2930	2930	2945	2945	2945	2950	2950	2940
	Pk	[kW]		9.71	11.8	15.1	17.2	19.3	21.5	24.2	25.6	10	13.2	16	20.8	23.6	26.7	30.2	32.9	35.3
	P_{mot}	[kW]		11	15	18.5	22	22	30	30	30	15	15	18.5	30	30	30	37	37	45
	Motor size			160 M	160 M	160 L	180 M	180 M	200 L	200 L	200 L	160 M	160 M	160 L	200 L	200 L	200 L	200 L	200 L	225 M
	Lp(A)[dB]	w/o.H./w.H.		88/<65	88/<65	89/<65	89/67	89/70	90/68	96/70	99/72	87/69	90/69	91/72	93/70	94/70	96/71	97/71	98/72	100/73
800	$\dot{V}_1$	[m³/min]										5.06	7.68	9.8	13.4	15.4	17.6	19.8	21.5	23.1
	t_2	[°C]										129	115	109	103	101	99	98	97	96
	nG	[rpm]										1465	1930	2310	2945	3310	3690	4080	4390	4670
	nM	[rpm]										2930	2930	2930	2945	2945	2950	2940	2940	2940
	Pk	[kW]										11.4	15	18.1	23.5	26.7	30.2	33.9	36.9	39.7
	P_{mot}	[kW]										15	18.5	22	30	30	37	45	45	45
	Motor size											160 M	160 L	180 M	200 L	200 L	200 L	225 M	225 M	225 M
	Lp(A)[dB]	w/o.H./w.H.										88/70	91/70	92/73	94/71	95/70	96/70	97/70	99/71	101/73
900	$\dot{V}_1$	[m³/min]											7.49	9.68	13.2	15.3	17.3	19.6	21.4	23
	t_2	[°C]											129	122	115	112	110	108	107	106
	nG	[rpm]											1930	2320	2945	3320	3680	4080	4410	4690
	nM	[rpm]											2930	2945	2945	2950	2950	2940	2960	2960
	Pk	[kW]											16.9	20.4	26.3	30	33.6	37.7	41.2	44.3
	P_{mot}	[kW]											22	30	30	37	37	45	55	55
	Motor size												180 M	200 L	200 L	200 L	200 L	225 M	250 M	250 M
	Lp(A)[dB]	w/o.H./w.H.											92/70	94/73	95/71	96/71	97/71	97/72	99/72	101/73
1000	$\dot{V}_1$	[m³/min]													13	15.1	17.2	19.5	21.3	22.8
	t_2	[°C]													127	123	121	119	118	117
	nG	[rpm]													2950	3320	3680	4100	4410	4690
	nM	[rpm]													2950	2950	2940	2960	2960	2960
	Pk	[kW]													29.1	33.1	37	41.8	45.4	48.7
	P_{mot}	[kW]													37	37	45	55	55	55
	Motor size														200 L	200 L	225 M	250 M	250 M	250 M
	Lp(A)[dB]	w/o.H./w.H.													97/71	97/71	98/72	98/73	100/73	102/73

Operating Pressure differential 460 mbar

Lower differential pressures on request. Performance data are non-binding examples only.

Δp mbar	Blower size		GM 30 L / DN 150									GM 35 S / DN 150							
300	$\dot{V}_1$	[m³/min]	**8.68**	**11.7**	**15.6**	**20.5**	**23.3**	**26.3**	**29.2**	**32.7**	**34.7**	**14**	**18.2**	**23.6**	**27.1**	**30.6**	**34.6**	**38.8**	**40.3**
	t_2	[°C]	53	51	50	49	48	48	48	47	47	50	49	48	48	47	47	47	47
	nG	[rpm]	1445	1830	2310	2930	3280	3660	4020	4460	4710	1490	1860	2330	2640	2945	3300	3670	3800
	nM	[rpm]	2890	2930	2930	2930	2930	2930	2945	2945	2945	2930	2930	2930	2930	2945	2945	2950	2950
	Pk	[kW]	6.38	8.13	10.5	13.7	15.7	17.9	20.2	23.1	24.8	9.56	12.2	15.8	18.4	21.2	24.9	29.1	30.7
	P_{mot}	[kW]	7.5	11	15	18.5	18.5	22	30	30	30	11	15	18.5	22	30	30	37	37
	Motor size		132 S	160 M	160 M	160 M	160 L	180 M	200 L	200 L	200 L	160 M	160 M	160 L	180 M	200 L	200 L	200 L	200 L
	Lp(A)[dB]	w/o.H./w.H.	84/71	86/70	88/73	91/72	93/73	95/74	96/74	97/74	97/75	86/67	90/68	92/72	92/71	91/71	92/71	96/71	99/71
400	$\dot{V}_1$	[m³/min]	**8.41**	**12**	**15.1**	**20.1**	**23**	**26**	**28.7**	**32.3**	**34.3**	**13.6**	**17.8**	**23.2**	**26.4**	**30.1**	**34.2**	**38.2**	**39.8**
	t_2	[°C]	66	63	61	59	58	58	57	57	57	62	60	58	58	57	57	56	56
	nG	[rpm]	1465	1920	2310	2930	3300	3680	4020	4470	4720	1490	1860	2340	2620	2945	3300	3660	3800
	nM	[rpm]	2930	2930	2930	2930	2945	2945	2945	2950	2950	2930	2930	2945	2945	2945	2950	2940	2940
	Pk	[kW]	8.41	11.1	13.5	17.6	20.2	22.9	25.5	29.1	31.2	12.4	15.7	20.3	23.2	26.8	31.1	35.9	37.9
	P_{mot}	[kW]	11	15	18.5	22	30	30	30	37	37	15	18.5	30	30	30	37	45	45
	Motor size		160 M	160 M	160 L	180 M	200 L	200 L	200 L	200 L	200 L	160 M	160 L	200 L	200 L	200 L	200 L	225 M	225 M
	Lp(A)[dB]	w/o.H./w.H.	85/71	88/71	89/74	91/72	93/72	95/73	96/73	98/74	99/75	87/68	90/69	93/73	92/72	92/71	94/71	97/72	99/72
500	$\dot{V}_1$	[m³/min]	**8.02**	**11.7**	**14.7**	**19.8**	**22.6**	**25.7**	**28.4**	**31.3**	**33.8**	**12.9**	**17.4**	**22.9**	**26**	**29.8**	**33.6**	**38.1**	**39.4**
	t_2	[°C]	81	75	72	70	69	68	67	67	66	74	71	69	68	67	66	66	66
	nG	[rpm]	1465	1930	2310	2945	3300	3690	4020	4390	4700	1465	1860	2340	2620	2950	3290	3680	3800
	nM	[rpm]	2930	2930	2930	2945	2945	2950	2950	2940	2940	2930	2930	2945	2950	2950	2940	2955	2955
	Pk	[kW]	10.4	13.7	16.6	21.6	24.6	27.9	30.9	34.3	37.2	14.9	19.2	24.7	28.2	32.5	37.2	43.2	45.1
	P_{mot}	[kW]	15	18.5	22	30	30	37	37	45	45	18.5	22	30	37	37	45	55	55
	Motor size		160 M	160 L	180 M	200 L	200 L	200 L	200 L	225 M	225 M	160 L	180 M	200 L	200 L	200 L	225 M	250 M	250 M
	Lp(A)[dB]	w/o.H./w.H.	86/72	90/72	90/75	91/73	93/72	95/72	97/72	99/73	100/75	87/69	91/70	94/73	93/72	93/72	97/72	98/73	100/73
600	$\dot{V}_1$	[m³/min]	**7.68**	**10.6**	**14.6**	**19.5**	**22.3**	**25.4**	**28.5**	**31**	**33.7**	**12.6**	**16.8**	**22.5**	**25.7**	**29.3**	**33.5**	**37.9**	**39.1**
	t_2	[°C]	96	89	84	81	79	78	77	77	76	87	82	79	78	77	76	76	75
	nG	[rpm]	1465	1830	2330	2945	3300	3690	4080	4390	4730	1465	1840	2340	2620	2940	3310	3700	3800
	nM	[rpm]	2930	2930	2950	2945	2950	2950	2940	2940	2960	2930	2945	2950	2950	2940	2955	2970	2970
	Pk	[kW]	12.3	15.4	19.8	25.5	28.9	32.8	36.8	40.1	43.8	17.7	22.5	29.2	33.1	37.9	43.8	50.5	52.3
	P_{mot}	[kW]	15	18.5	30	30	37	37	45	45	55	22	30	37	37	45	55	75	75
	Motor size		160 M	160 L	200 L	200 L	200 L	200 L	225 M	225 M	250 M	180 M	200 L	200 L	200 L	225 M	250 M	280 S	280 S
	Lp(A)[dB]	w/o.H./w.H.	86/72	88/72	90/75	92/73	94/73	97/73	99/74	99/74	100/75	88/71	91/70	95/73	94/72	93/72	99/73	99/74	100/74
700	$\dot{V}_1$	[m³/min]	**7.36**	**10.3**	**14.2**	**19.2**	**22**	**24.8**	**28.3**	**30.8**	**33.6**	**12.3**	**16.5**	**22.2**	**25.7**	**29.2**	**33.4**	**37.6**	**38.8**
	t_2	[°C]	113	103	96	92	90	89	87	87	86	100	94	90	89	87	86	85	85
	nG	[rpm]	1465	1830	2330	2950	3300	3660	4100	4410	4760	1475	1840	2340	2650	2955	3330	3700	3800
	nM	[rpm]	2930	2930	2945	2950	2950	2940	2955	2960	2970	2945	2945	2950	2940	2955	2970	2970	2970
	Pk	[kW]	14.2	17.8	22.9	29.5	33.3	37.4	42.5	46.2	50.5	20.6	26	33.6	38.6	43.7	50.4	57.5	59.5
	P_{mot}	[kW]	18.5	22	30	37	37	45	55	55	75	30	30	37	45	55	75	75	75
	Motor size		160 L	180 M	200 L	200 L	200 L	225 M	250 M	250 M	280 S	200 L	200 L	200 L	225 M	250 M	280 S	280 S	280 S
	Lp(A)[dB]	w/o.H./w.H.	86/73	89/72	90/75	94/73	96/73	101/74	102/75	99/75	100/75	88/71	91/71	94/74	95/73	96/72	100/72	100/73	101/73
800	$\dot{V}_1$	[m³/min]										**12**	**16.2**	**21.7**	**25.5**	**28.8**	**33.1**	**35.3**	**38.4**
	t_2	[°C]										113	106	101	99	98	97	96	95
	nG	[rpm]										1475	1840	2330	2660	2955	3330	3520	3800
	nM	[rpm]										2945	2950	2940	2960	2955	2970	2970	2970
	Pk	[kW]										23.4	29.4	37.8	43.8	49.3	56.7	60.7	66.7
	P_{mot}	[kW]										30	37	45	55	55	75	75	75
	Motor size											200 L	200 L	225 M	250 M	250 M	280 S	280 S	280 S
	Lp(A)[dB]	w/o.H./w.H.										89/72	91/72	94/75	96/73	99/73	101/72	101/72	102/72
900	$\dot{V}_1$	[m³/min]										**11.8**	**15.9**	**21.7**	**24.9**	**28.7**	**32.8**	**37**	**38.2**
	t_2	[°C]										127	119	113	110	108	107	106	105
	nG	[rpm]										1475	1840	2350	2630	2970	3330	3700	3800
	nM	[rpm]										2945	2950	2955	2955	2970	2970	2970	2970
	Pk	[kW]										26.2	32.9	42.6	48.2	55.2	63	71.5	73.9
	P_{mot}	[kW]										30	37	55	55	75	75	90	90
	Motor size											200 L	200 L	250 M	250 M	280 S	280 S	280 M2	280 M2
	Lp(A)[dB]	w/o.H./w.H.										89/72	92/72	95/75	96/73	99/73	101/73	102/73	103/73
1000	$\dot{V}_1$	[m³/min]											**15.6**	**21.4**	**24.7**	**28.5**	**30.3**	**36.8**	**37.9**
	t_2	[°C]											132	124	122	119	118	116	115
	nG	[rpm]											1840	2350	2640	2970	3130	3700	3800
	nM	[rpm]											2940	2955	2970	2970	2970	2970	2970
	Pk	[kW]											36.4	47.1	53.4	60.9	64.6	78.5	81.1
	P_{mot}	[kW]											45	55	75	75	75	90	90
	Motor size												225 M	250 M	280 S	280 S	280 S	280 M2	280 M2
	Lp(A)[dB]	w/o.H./w.H.											92/72	95/75	97/74	100/73	101/73	102/74	104/75

Lower differential pressures on request. Performance data are non-binding examples only.

Δp mbar	Blower size		GM 50 L / DN 150							GM 50 L / DN 200			GM 60 S / DN 200								
300	$\dot{V}_1$	[m³/min]	19.7	22.5	26	33.7	38.2	41.1	43.5	49.1	52.2	55.1	20.1	26.9	30.9	35.7	40.1	45.9	52.4	55.7	59
	t_2	[°C]	50	49	49	48	48	47	47	47	47	47	51	50	49	49	48	48	47	47	47
	nG	[rpm]	1465	1640	1860	2340	2620	2800	2950	3300	3490	3670	1150	1465	1650	1870	2070	2340	2640	2790	2940
	nM	[rpm]	2930	2930	2930	2945	2945	2950	2950	2950	2940	2940	2930	2930	2945	2945	2945	2950	2940	2940	2940
	Pk	[kW]	13.2	15	17.5	23.4	27.2	29.8	32.1	32.8	35.4	38	13.4	17.4	19.9	23	26	30.1	34.9	37.4	40
	P_{mot}	[kW]	15	18.5	22	30	30	37	37	37	45	45	15	22	30	30	30	37	45	45	45
	Motor size		160 M	160 L	180 M	200 L	200 L	200 L	200 L	200 L	225 M	225 M	160 M	180 M	200 L	200 L	200 L	200 L	225 M	225 M	225 M
	Lp(A)[dB]	w/o.H./w.H.	87/71	87/70	90/70	92/70	91/70	92/69	92/70	98/71	98/72	100/74	86/73	89/73	93/73	97/74	96/74	97/75	98/75	99/76	99/76
400	$\dot{V}_1$	[m³/min]	19.1	21.9	25.1	33.2	38.1	40.4	42.8	48.7	51.4	54.8	19.3	26.4	30.2	35	39.7	45	52.1	55.2	58.8
	t_2	[°C]	61	60	59	58	57	57	57	56	56	56	63	61	60	59	58	58	57	57	57
	nG	[rpm]	1465	1640	1840	2340	2650	2790	2940	3310	3480	3690	1150	1475	1650	1870	2090	2330	2660	2800	2970
	nM	[rpm]	2930	2930	2945	2950	2940	2940	2940	2955	2955	2960	2930	2945	2945	2950	2940	2940	2955	2955	2970
	Pk	[kW]	17.1	19.4	22.2	29.6	34.7	37.2	39.8	41.8	44.6	48.1	17.5	22.9	25.9	29.8	33.9	38.4	44.9	47.7	51.2
	P_{mot}	[kW]	22	22	30	37	45	45	45	55	55	55	22	30	30	37	45	45	55	55	75
	Motor size		180 M	180 M	200 L	200 L	225 M	225 M	225 M	250 M	250 M	250 M	180 M	200 L	200 L	200 L	225 M	225 M	250 M	250 M	280 S
	Lp(A)[dB]	w/o.H./w.H.	87/69	88/69	91/70	92/71	92/71	92/71	92/70	98/71	99/73	100/75	87/74	90/73	93/73	97/74	97/74	97/75	99/76	99/76	101/76
500	$\dot{V}_1$	[m³/min]	18.8	21.6	24.6	32.5	37.8	40	42.5	48.4	51.2	54.6	18.9	25.7	29.5	34.3	39.3	44.5	51.5	54.9	58.2
	t_2	[°C]	73	71	70	68	67	67	67	66	66	66	76	72	71	70	69	68	67	67	66
	nG	[rpm]	1475	1650	1840	2330	2660	2800	2955	3320	3500	3710	1160	1475	1650	1870	2100	2340	2660	2820	2970
	nM	[rpm]	2945	2945	2945	2940	2955	2955	2955	2970	2970	2970	2945	2950	2950	2940	2955	2955	2970	2970	2970
	Pk	[kW]	21.2	24	27.1	35.7	42	44.8	48	50.9	54.3	58.4	21.9	28.2	31.9	36.6	41.6	47.1	54.5	58.3	62
	P_{mot}	[kW]	30	30	30	45	55	55	55	75	75	75	30	37	37	45	55	55	75	75	75
	Motor size		200 L	200 L	200 L	225 M	250 M	250 M	250 M	280 S	280 S	280 S	200 L	200 L	200 L	225 M	250 M	250 M	280 S	280 S	280 S
	Lp(A)[dB]	w/o.H./w.H.	88/68	90/69	92/70	93/74	92/74	92/72	93/71	99/72	99/73	101/76	88/74	91/74	93/74	97/74	97/74	97/75	100/76	100/76	102/77
600	$\dot{V}_1$	[m³/min]	18.3	21.1	24.1	32.3	37.3	39.9	42.3	47.9	50.8	54.1	18.3	25.1	28.9	33.7	38.7	44.3	50.9	53.2	57.4
	t_2	[°C]	85	83	81	79	77	77	77	76	76	75	89	84	82	80	79	78	77	77	76
	nG	[rpm]	1475	1650	1840	2350	2660	2820	2970	3320	3500	3710	1160	1475	1650	1870	2100	2360	2660	2770	2960
	nM	[rpm]	2945	2950	2950	2955	2955	2970	2970	2970	2970	2970	2945	2950	2940	2955	2955	2970	2970	2970	1480
	Pk	[kW]	25.2	28.4	32	42.3	49.1	52.8	56.3	59.7	63.6	68.3	26.1	33.6	37.8	43.3	49.2	56.1	64.1	67.2	72.5
	P_{mot}	[kW]	30	37	37	55	55	75	75	75	75	90	30	37	45	55	55	75	75	75	90
	Motor size		200 L	200 L	200 L	250 M	250 M	280 S	280 S	280 S	280 S	280 M	200 L	200 L	225 M	250 M	250 M	280 S	280 S	280 S	280 M
	Lp(A)[dB]	w/o.H./w.H.	88/69	90/69	92/70	94/75	93/74	94/74	95/73	100/72	101/74	103/76	90/75	92/75	94/74	97/74	97/75	98/75	100/76	101/77	103/78
700	$\dot{V}_1$	[m³/min]	17.9	20.7	23.7	31.7	36.6	39.4	41.8	44.7	50.3	53.7	17.7	24.5	28.2	33.4	38.4	43.8	49.9	52.5	57.2
	t_2	[°C]	98	95	93	89	88	87	87	86	85	85	103	96	94	92	90	89	87	87	86
	nG	[rpm]	1475	1650	1840	2340	2640	2820	2970	3150	3500	3710	1160	1470	1640	1880	2110	2360	2640	2760	2980
	nM	[rpm]	2950	2950	2940	2955	2970	2970	2970	2970	2970	2970	2950	2940	2955	2970	2970	2970	1480	1480	1485
	Pk	[kW]	29.1	32.8	36.9	48.4	55.7	60.3	64.2	64.6	73	78.2	30.3	38.8	43.5	50.4	57.1	64.6	73.2	76.9	83.8
	P_{mot}	[kW]	37	37	45	55	75	75	75	75	90	90	37	45	55	75	75	75	90	90	110
	Motor size		200 L	200 L	225 M	250 M	280 S	280 S	280 S	280 S	280 M	280 M	200 L	225 M	250 M	280 S	280 S	280 S	280 M	280 M	315 S
	Lp(A)[dB]	w/o.H./w.H.	89/69	91/69	92/70	95/75	95/75	95/75	97/75	99/75	102/74	105/76	91/75	94/74	95/74	98/75	98/75	99/77	100/77	102/77	103/78
800	$\dot{V}_1$	[m³/min]											17.2	24.1	27.6	32.9	37.8	43.1	49.6	52.2	56.7
	t_2	[°C]											118	109	106	103	101	99	98	97	96
	nG	[rpm]											1160	1475	1640	1880	2110	2350	2650	2770	2980
	nM	[rpm]											2940	2955	2955	2970	2970	1480	1485	1485	1485
	Pk	[kW]											34.5	44.2	49.5	57.2	64.8	72.8	83.1	87.2	94.6
	P_{mot}	[kW]											45	55	55	75	75	90	110	110	110
	Motor size												225 M	250 M	250 M	280 S	280 S	280 M	315 S	315 S	315 S
	Lp(A)[dB]	w/o.H./w.H.											92/75	98/74	98/74	101/75	100/76	101/78	102/78	103/78	104/78
900	$\dot{V}_1$	[m³/min]											16.7	23.6	27.4	32.4	37.4	42.4	49.1	51.7	56.2
	t_2	[°C]											133	122	119	115	112	110	108	108	107
	nG	[rpm]											1160	1475	1650	1880	2110	2340	2650	2770	2980
	nM	[rpm]											2940	2955	2970	2970	1480	1480	1485	1485	1485
	Pk	[kW]											38.7	49.6	55.8	64	72.4	80.9	92.6	97.2	105
	P_{mot}	[kW]											45	55	75	75	90	90	110	110	132
	Motor size												225 M	250 M	280 S	280 S	280 M	280 M	315 S	315 S	315 M
	Lp(A)[dB]	w/o.H./w.H.											92/75	97/74	99/75	101/75	101/76	100/77	102/78	103/78	104/78
1000	$\dot{V}_1$	[m³/min]												23.3	26.9	31.9	36.3	42.1	48.6	51.2	55.8
	t_2	[°C]												135	131	127	124	121	119	118	117
	nG	[rpm]												1485	1650	1880	2080	2350	2650	2770	2980
	nM	[rpm]												2970	2970	1480	1480	1485	1485	1485	1485
	Pk	[kW]												55.3	61.7	70.8	78.8	89.8	102	107	116
	P_{mot}	[kW]												75	75	90	90	110	132	132	132
	Motor size													280 S	280 S	280 M	280 M	315 S	315 M	315 M	315 M
	Lp(A)[dB]	w/o.H./w.H.												98/75	100/76	102/76	101/77	100/78	102/78	103/78	105/78

Lower differential pressures on request. GM 50 L from 45 m³/min - accessories DN 200. Performance data are non-binding examples only.

Δp mbar	Blower size		GM 80 L / DN 250									GM 90 S / DN 250								
300	$\dot{V}_1$	[m³/min]	**22.8**	**33.1**	**37.9**	**46.4**	**56.2**	**64.2**	**73.5**	**78.7**	**83.9**	**33.7**	**43.8**	**54.2**	**58.7**	**66.6**	**70.8**	**80.3**	**85.7**	**90.3**
	t_2	[°C]	53	51	50	49	48	48	48	47	47	50	49	48	48	48	48	47	47	47
	nG	[rpm]	975	1310	1465	1740	2060	2320	2620	2790	2960	978	1220	1470	1580	1770	1870	2100	2230	2340
	nM	[rpm]	1460	1465	1465	1470	1470	1475	1480	1480	1480	1465	1465	1470	1470	1475	1475	1480	1480	1480
	Pk	[kW]	15.8	21.7	24.5	29.9	36.7	42.8	50.5	55.2	60.3	21.3	27.1	33.7	36.8	42.6	45.8	53.7	58.4	62.7
	P_{mot}	[kW]	18.5	30	30	37	45	55	75	75	75	30	30	45	45	55	55	75	75	75
	Motor size		180 M	200 L	200 L	225 S	225 M	250 M	280 S	280 S	280 S	200 L	200 L	225 M	225 M	250 M	250 M	280 S	280 S	280 S
	Lp(A)[dB]	w/o.H./w.H.	86/73	89/75	90/75	94/73	97/75	96/76	97/78	98/78	101/79	88/73	91/74	94/75	94/74	100/75	101/76	100/79	99/78	100/78
400	$\dot{V}_1$	[m³/min]	**21.7**	**32.0**	**36.9**	**45.2**	**56.0**	**63.4**	**72.7**	**77.6**	**82.8**	**32.8**	**43.1**	**53.3**	**57.7**	**64.7**	**70.1**	**79.3**	**84.7**	**89.2**
	t_2	[°C]	66	62	61	60	58	58	57	57	57	62	60	58	58	58	57	57	57	56
	nG	[rpm]	975	1310	1470	1740	2090	2330	2630	2790	2960	980	1230	1475	1580	1750	1880	2100	2230	2340
	nM	[rpm]	1465	1470	1470	1470	1475	1480	1480	1480	1480	1470	1470	1475	1475	1480	1480	1480	1480	1480
	Pk	[kW]	20.8	28.4	32.2	38.8	48.1	55.0	64.3	69.6	75.5	28.1	35.9	44.1	47.8	54.1	59.1	68.2	73.9	78.9
	P_{mot}	[kW]	30	37	37	45	55	75	75	90	90	37	45	55	55	75	75	90	90	90
	Motor size		200 L	225 S	225 S	225 M	250 M	280 S	280 S	280 M	280 M	225 S	225 M	250 M	250 M	280 S	280 S	280 M	280 M	280 M
	Lp(A)[dB]	w/o.H./w.H.	86/73	90/75	92/75	95/74	96/75	96/77	98/78	99/79	102/80	89/74	92/75	95/76	97/75	100/76	101/76	100/79	100/78	100/77
500	$\dot{V}_1$	[m³/min]	**20.7**	**31.0**	**35.9**	**44.3**	**55.4**	**62.4**	**72.0**	**76.6**	**82.1**	**31.8**	**42.2**	**52.6**	**56.3**	**63.8**	**69.2**	**79.2**	**83.7**	**90.0**
	t_2	[°C]	81	74	73	71	69	68	67	67	67	74	71	69	68	68	67	67	66	66
	nG	[rpm]	975	1310	1470	1740	2100	2330	2640	2790	2970	980	1230	1480	1570	1750	1880	2120	2230	2380
	nM	[rpm]	1465	1470	1470	1475	1480	1480	1480	1485	1485	1470	1475	1480	1480	1480	1480	1485	1485	1485
	Pk	[kW]	25.8	35.1	39.7	47.8	59.2	67.0	78.2	83.9	91.1	34.9	44.4	54.5	58.3	66.2	72.1	83.7	89.3	97.2
	P_{mot}	[kW]	30	45	45	55	75	75	90	110	110	45	55	75	75	75	90	110	110	110
	Motor size		200 L	225 M	225 M	250 M	280 S	280 S	280 M	315 S	315 S	225 M	250 M	280 S	280 S	280 S	280 M	315 S	315 S	315 S
	Lp(A)[dB]	w/o.H./w.H.	87/74	92/75	93/75	95/74	95/76	96/77	99/78	101/79	103/80	89/74	92/76	96/77	97/76	101/76	102/76	101/79	100/78	101/77
600	$\dot{V}_1$	[m³/min]	**20.0**	**30.1**	**35.2**	**43.7**	**54.5**	**61.9**	**72.0**	**75.7**	**81.3**	**31.1**	**41.4**	**51.7**	**55.5**	**63.0**	**68.4**	**78.3**	**82.9**	**89.5**
	t_2	[°C]	96	87	85	82	80	79	77	77	77	86	82	80	79	78	77	76	76	76
	nG	[rpm]	980	1310	1475	1750	2100	2340	2670	2790	2970	982	1230	1480	1570	1750	1880	2120	2230	2390
	nM	[rpm]	1470	1475	1475	1480	1480	1480	1485	1485	1485	1475	1480	1480	1480	1480	1485	1485	1485	1485
	Pk	[kW]	31.0	41.8	47.4	57.1	70.0	79.3	93.0	98.2	106	41.8	52.9	64.7	69.1	78.3	85.1	98.4	105	114
	P_{mot}	[kW]	37	55	55	75	90	90	110	110	132	55	75	75	90	90	110	110	132	132
	Motor size		225 S	250 M	250 M	280 S	280 M	280 M	315 S	315 S	315 M	250 M	280 S	280 S	280 M	280 M	315 S	315 S	315 M	315 M
	Lp(A)[dB]	w/o.H./w.H.	89/74	91/75	93/75	95/75	95/76	96/78	99/78	101/79	103/80	90/74	93/77	97/78	98/77	102/76	103/76	101/79	101/78	102/77
700	$\dot{V}_1$	[m³/min]	**19.1**	**29.3**	**34.5**	**42.9**	**53.6**	**61.0**	**71.2**	**74.9**	**80.1**	**30.3**	**40.6**	**51.0**	**54.7**	**62.6**	**67.6**	**77.5**	**82.1**	**87.5**
	t_2	[°C]	112	101	97	94	91	89	88	87	87	99	94	91	90	88	88	87	86	86
	nG	[rpm]	980	1310	1480	1750	2100	2340	2670	2790	2960	982	1230	1480	1570	1760	1880	2120	2230	2360
	nM	[rpm]	1470	1475	1480	1480	1480	1485	1485	1485	1480	1475	1480	1480	1480	1485	1485	1485	1480	1480
	Pk	[kW]	36.0	48.6	55.2	66.1	80.8	91.4	107	113	121	48.6	61.4	75.0	80.0	91.0	98.2	113	120	129
	P_{mot}	[kW]	45	55	75	75	90	110	132	132	160	55	75	90	90	110	110	132	160	160
	Motor size		225 M	250 M	280 S	280 S	280 M	315 S	315 M	315 M	315 M	250 M	280 S	280 M	280 M	315 S	315 S	315 M	315 M	315 M
	Lp(A)[dB]	w/o.H./w.H.	88/75	91/75	93/75	95/76	95/77	97/78	101/79	102/79	104/80	91/75	94/77	98/78	99/77	103/77	104/76	102/78	102/78	103/79
800	$\dot{V}_1$	[m³/min]										**29.7**	**39.9**	**50.4**	**54.0**	**61.9**	**67.3**	**76.8**	**81.0**	**86.8**
	t_2	[°C]										112	106	102	101	99	98	97	96	96
	nG	[rpm]										985	1230	1485	1570	1760	1890	2120	2220	2360
	nM	[rpm]										1480	1480	1485	1485	1485	1485	1480	1480	1480
	Pk	[kW]										55.6	69.9	85.5	90.9	103	112	128	135	145
	P_{mot}	[kW]										75	90	110	110	132	132	160	160	160
	Motor size											280 S	280 M	315 S	315 S	315 M	315 M	315 M	315 M	315 M
	Lp(A)[dB]	w/o.H./w.H.										91/75	95/77	99/78	100/77	104/77	105/77	104/78	103/79	104/81
900	$\dot{V}_1$	[m³/min]										**29.0**	**39.2**	**49.8**	**53.3**	**61.2**	**66.6**	**76.1**	**80.3**	**86.1**
	t_2	[°C]										126	118	113	112	110	109	107	106	106
	nG	[rpm]										985	1230	1485	1570	1760	1890	2120	2220	2360
	nM	[rpm]										1480	1480	1485	1485	1485	1480	1480	1485	1485
	Pk	[kW]										62.4	78.4	95.8	102	115	125	142	150	161
	P_{mot}	[kW]										75	90	110	132	132	160	160	200	200
	Motor size											280 S	280 M	315 S	315 M	315 M	315 M	315 M	315 M	315 M
	Lp(A)[dB]	w/o.H./w.H.										91/75	95/77	98/79	100/78	104/79	105/78	104/78	103/80	104/81
1000	$\dot{V}_1$	[m³/min]											**38.5**	**49.1**	**52.7**	**60.5**	**65.9**	**75.5**	**79.6**	**85.5**
	t_2	[°C]											131	125	124	121	120	118	117	116
	nG	[rpm]											1230	1485	1570	1760	1890	2120	2220	2360
	nM	[rpm]											1485	1485	1485	1480	1480	1485	1485	1485
	Pk	[kW]											86.9	106	113	128	138	157	166	178
	P_{mot}	[kW]											110	132	132	160	160	200	200	200
	Motor size												315 S	315 M	315 M	315 M	315 M	315 M	315 M	315 M
	Lp(A)[dB]	w/o.H./w.H.											95/78	98/79	100/79	104/80	105/80	104/80	104/81	104/81

Lower differential pressures on request. Performance data are non-binding examples only.

Δp mbar	Blower size		GM 130 L / DN 300									GM 150 S / DN 300							
300	$\dot{V}_1$	[m³/min]	**47.8**	**62.9**	**78.0**	**82.2**	**94.3**	**102**	**115**	**131**	**134**	**77.3**	**94.4**	**102**	**116**	**122**	**132**	**147**	**152**
	t_2	[°C]	51	50	49	49	48	48	48	47	47	49	48	48	48	48	47	47	47
	nG	[rpm]	980	1230	1480	1550	1750	1880	2100	2350	2400	982	1170	1250	1410	1480	1580	1750	1800
	nM	[rpm]	1470	1470	1480	1480	1480	1480	1480	1485	1485	1475	1480	1480	1480	1480	1485	1485	1485
	Pk	[kW]	32.0	40.8	50.5	53.3	61.9	67.9	78.7	92.1	95.0	48.4	59.4	64.5	75.3	80.3	87.8	102	106
	P_{mot}	[kW]	37	45	75	75	75	75	90	110	110	55	75	75	90	90	110	132	132
	Motor size		225 S	225 M	280 S	280 S	280 S	280 S	280 M	315 S	315 S	250 M	280 S	280 S	280 M	280 M	315 S	315 M	315 M
	Lp(A)[dB]	w/o.H./w.H.	93/75	95/77	101/79	100/79	101/80	101/80	103/81	104/82	104/82	95/79	97/79	97/79	97/80	98/80	99/80	101/81	101/81
400	$\dot{V}_1$	[m³/min]	**46.2**	**61.2**	**76.3**	**80.5**	**93.2**	**100**	**115**	**130**	**132**	**75.8**	**92.6**	**101**	**114**	**121**	**130**	**146**	**150**
	t_2	[°C]	63	61	59	59	58	58	57	57	57	59	58	58	57	57	57	57	57
	nG	[rpm]	982	1230	1480	1550	1760	1880	2120	2370	2400	985	1170	1260	1410	1485	1580	1760	1800
	nM	[rpm]	1475	1480	1480	1480	1480	1485	1485	1485	1485	1480	1480	1485	1485	1485	1485	1480	1480
	Pk	[kW]	41.9	53.2	65.4	68.9	80.1	86.8	101	117	119	63.4	77.1	84.2	96.6	103	112	129	133
	P_{mot}	[kW]	55	75	75	90	90	110	132	132	132	75	90	110	110	132	132	160	160
	Motor size		250 M	280 S	280 S	280 M	280 M	315 S	315 M	315 M	315 M	280 S	280 M	315 S	315 S	315 M	315 M	315 M	315 M
	Lp(A)[dB]	w/o.H./w.H.	93/76	96/78	102/80	101/79	102/80	103/81	103/81	105/83	106/83	96/79	97/79	98/79	98/80	98/80	99/80	101/81	102/82
500	$\dot{V}_1$	[m³/min]	**44.8**	**60.8**	**74.7**	**86.2**	**91.6**	**98.9**	**113**	**128**	**130**	**74.2**	**91**	**100**	**113**	**120**	**127**	**144**	**148**
	t_2	[°C]	76	72	70	69	69	68	67	67	67	70	69	68	67	67	67	66	66
	nG	[rpm]	985	1250	1480	1670	1760	1880	2120	2370	2400	985	1170	1270	1410	1485	1570	1760	1800
	nM	[rpm]	1480	1480	1480	1485	1485	1485	1480	1480	1480	1480	1485	1485	1485	1480	1480	1485	1485
	Pk	[kW]	52.0	66.8	80.3	92.0	97.8	106	122	141	143	78.3	94.8	104	118	126	135	156	160
	P_{mot}	[kW]	75	75	90	110	110	132	160	160	160	90	110	132	132	160	160	200	200
	Motor size		280 S	280 S	280 M	315 S	315 S	315 M	315 M	315 M	315 M	280 M	315 S	315 M	315 M	315 M	315 M	315 M	315 M
	Lp(A)[dB]	w/o.H./w.H.	92/77	97/79	102/80	101/80	103/81	104/81	104/81	107/83	107/83	97/79	97/79	98/79	98/79	98/80	99/81	101/82	102/82
600	$\dot{V}_1$	[m³/min]	**43.4**	**59.4**	**73.6**	**84.8**	**90.2**	**97.5**	**112**	**119**	**126**	**72.7**	**89.5**	**101**	**110**	**118**	**126**	**143**	**147**
	t_2	[°C]	89	84	81	80	79	79	77	77	77	82	80	78	78	77	77	76	76
	nG	[rpm]	985	1250	1485	1670	1760	1880	2120	2230	2360	985	1170	1300	1400	1485	1570	1760	1800
	nM	[rpm]	1480	1480	1485	1485	1485	1480	1480	1485	1485	1485	1485	1480	1480	1485	1485	1485	1485
	Pk	[kW]	61.9	79.3	95.5	109	116	125	144	153	164	93.2	113	127	138	148	158	182	188
	P_{mot}	[kW]	75	90	110	132	132	160	160	200	200	110	132	160	160	200	200	250	250
	Motor size		280 S	280 M	315 S	315 M	315 M	315 M	315 M	315 M	315 M	315 S	315 M	315 M	315 M	315 M	315 M	315 L	315 L
	Lp(A)[dB]	w/o.H./w.H.	94/78	97/80	104/82	102/82	104/83	105/83	107/83	107/83	107/84	99/79	99/79	99/79	99/80	100/80	100/82	102/83	102/83
700	$\dot{V}_1$	[m³/min]										**71.4**	**88.2**	**96.3**	**109**	**117**	**125**	**142**	**145**
	t_2	[°C]										93	91	89	88	88	87	86	86
	nG	[rpm]										985	1170	1260	1400	1485	1580	1760	1800
	nM	[rpm]										1485	1480	1480	1485	1485	1485	1485	1485
	Pk	[kW]										108	130	141	159	170	183	209	215
	P_{mot}	[kW]										132	160	160	200	200	250	250	250
	Motor size											315 M	315 M	315 M	315 M	315 M	315 L	315 L	315 L
	Lp(A)[dB]	w/o.H./w.H.										100/80	100/80	100/80	100/80	101/81	101/82	102/83	102/83
800	$\dot{V}_1$	[m³/min]										**70.2**	**88.8**	**96.0**	**108**	**116**	**124**	**140**	**144**
	t_2	[°C]										105	101	100	99	98	97	96	96
	nG	[rpm]										985	1190	1270	1400	1488	1580	1760	1800
	nM	[rpm]										1480	1485	1485	1485	1485	1485	1490	1490
	Pk	[kW]										123	151	162	180	193	207	235	242
	P_{mot}	[kW]										160	200	200	200	250	250	315	315
	Motor size											315 M	315 M	315 M	315 M	315 L	315 L	315 L	315 L
	Lp(A)[dB]	w/o.H./w.H.										101/80	100/80	100/80	100/80	102/82	102/83	102/83	103/84
900	$\dot{V}_1$	[m³/min]										**69**	**87.6**	**94.9**	**107**	**115**	**123**	**139**	**143**
	t_2	[°C]										118	113	111	110	109	108	106	106
	nG	[rpm]										985	1190	1270	1400	1488	1580	1760	1800
	nM	[rpm]										1480	1485	1485	1485	1485	1490	1490	1490
	Pk	[kW]										138	169	181	202	216	231	262	269
	P_{mot}	[kW]										160	200	200	250	250	315	315	315
	Motor size											315 M	315 M	315 M	315 L	315 L	315 L	315 L	315 L
	Lp(A)[dB]	w/o.H./w.H.										102/81	101/80	101/80	101/81	102/83	103/84	103/84	103/84
1000	$\dot{V}_1$	[m³/min]										**68.4**	**86.5**	**93.8**	**106**	**114**	**122**	**138**	**142**
	t_2	[°C]										130	124	123	121	120	118	117	116
	nG	[rpm]										990	1190	1270	1400	1488	1580	1760	1800
	nM	[rpm]										1485	1485	1485	1485	1490	1490	1490	1490
	Pk	[kW]										154	187	200	223	238	255	289	296
	P_{mot}	[kW]										200	250	250	250	315	315	355	355
	Motor size											315 M	315 L	315 L	315 L	315 L	315 L	355 M	355 M
	Lp(A)[dB]	w/o.H./w.H.										103/82	102/81	102/80	102/81	103/84	104/84	103/84	104/84

Lower differential pressures on request. Higher intake volume flows on request. Performance data are non-binding examples only.



AERZEN. Compression as success factor.

AERZEN was founded in 1864 as Aerzener Maschinenfabrik. In 1868 we built Europe's first rotary lobe blower. The first turbo blowers followed in 1911, the first screw compressors in 1943, and in 2010 the world's first rotary lobe compressor unit. AERZEN innovations are a driving force behind the development of compressor technology. Today AERZEN is one of the world's oldest and most important manufacturers of rotary lobe blowers, rotary lobe compressors, rotary lobe gas meters, screw compressors, and turbo blowers. And in many areas of application, AERZEN is among the undisputed leaders.

There are more than 2,000 experienced AERZEN employees in over 40 affiliates worldwide working hard to advance compressor technology. Their technological expertise, our international network of experts, and the constant feedback from our customers are what make us successful. AERZEN products and services have become standards in the industry for reliability, lasting value, and efficiency. Go ahead: challenge us!

Aerzener Maschinenfabrik GmbH
Reherweg 28 – 31855 Aerzen / Germany
Telephone: +49 5154 81-0 – Fax: +49 5154 81-9191
info@aerzener.de – www.aerzen.com

AERZEN
EXPECT PERFORMANCE

G1-068 – 04 – EN – 1000 – 03.2015

NOTICE: THIS DRAWING AND ALL INFORMATION HEREIN IS THE PROPERTY OF AERZEN CANADA AND ITS SUBSIDIARIES AND SHALL NOT BE REPRODUCED BY ANY MEANS IN WHOLE OR IN PART OR USED AS THE BASIS FOR MANUFACTURE WITHOUT WRITTEN PERMISSION.

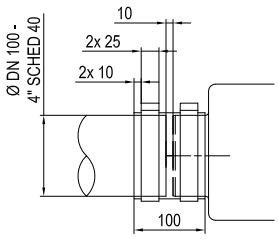

CONNECTION DETAILS

for straddling dowels A/B 12/15 - Liebig - dowel
(not included in Aerzen's scope of supply)

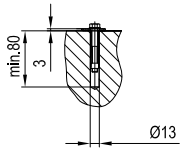

ANCHORING BY OTHER

ANCHORING DETAILS

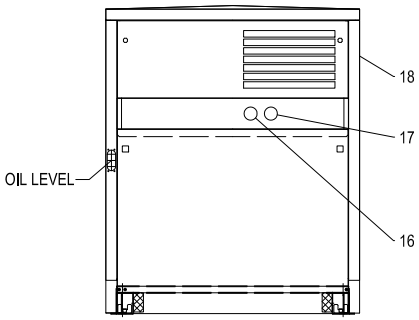

VIEW 'A-A' - FRONT OF UNIT

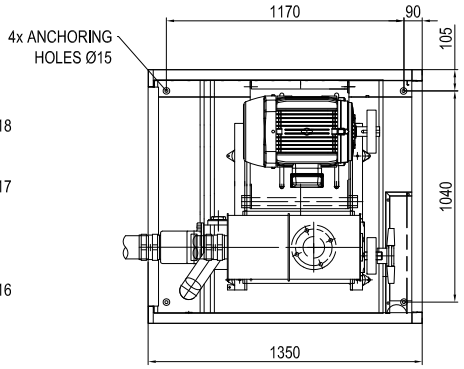

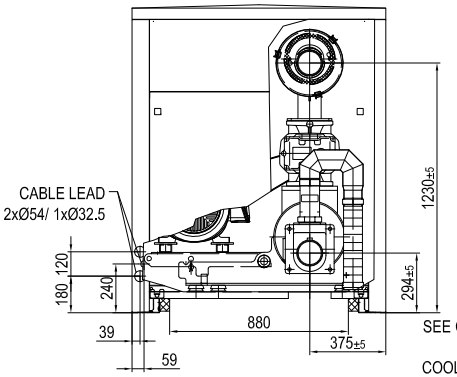

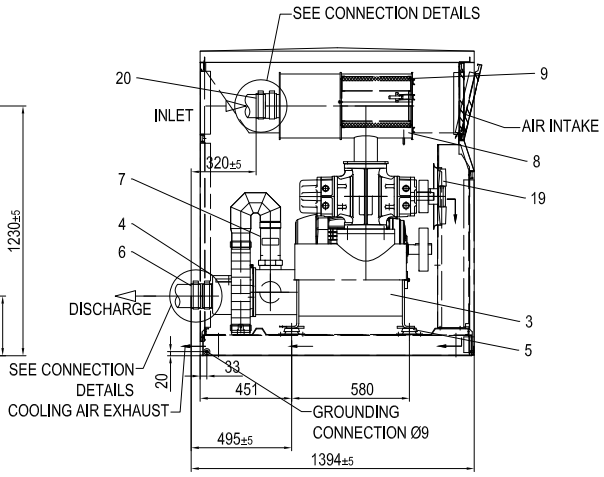

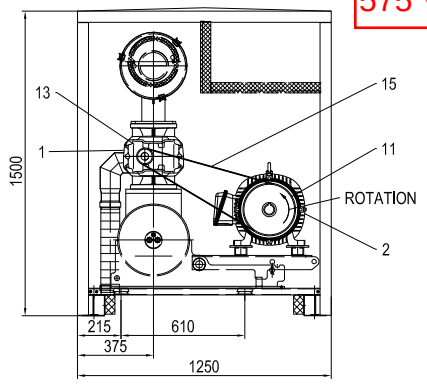

NOTE	QTY.	POS	DESCRIPTION
	2	1	BLOWER - GM 15L - 120 KG
D	2	2	MOTOR - WEG REPRESENTED, FRAME 284T
	2	3	BASE FRAME / DISCHARGE SILENCER - DN 100
	2	4	CONNECTION HOUSING WITH CHECK VALVE - DN 100
	2	5	4 SET OF VIBRATION ISOLATORS - DN 100
	2	6	DISCHARGE FLEXIBLE SLEEVE - DN 100 / 4" SCHED. 40
	2	7	PRESSURE RELIEF VALVE - DN 80 - SET TO 750 mbar
	2	8	INLET FILTER / SILENCER ASSEMBLY - DN 100
	2	9	INLET FILTER ELEMENT - G5 DN 100
E	2	10	BELT GUARD
	2	11	DRIVER SHEAVE
E	2	12	DRIVER BUSHING
	2	13	DRIVEN SHEAVE
E	2	14	DRIVEN BUSHING
	2	15	V-BELT SET
	2	16	FILTER MAINTENANCE INDICATOR - WIKA
	2	17	DISCHARGE PRESSURE GAUGE W/ ISOLATION BALL VALVE - WIKA
	2	18	ACOUSTIC ENCLOSURE - G5 DN 100 - INDOOR INSTALLATION
	2	19	FAN - MOUNTED ON BLOWER SHAFT - GM 15L
G	2	20	INLET FLEXIBLE SLEEVE - DN 100 / 4" SCHED. 40

NOTES:

A. ASSEMBLY WEIGHT: 725 KG
B. PAINT: AERZEN STANDARD BLUE
C. 1M OF FREE SPACE AT THE FRONT AND BACK OF THE PACKAGE IS RECOMMENDED FOR MAINTENANCE ACCESS
D. ELECTRIC MOTOR: WEG W22 REPRESENTED, 25HP, 1765 RPM, ~~460/3/60~~ 575 V, TEFC, NEMA PREMIUM EFFICIENCY, SF=1.25, INVERTER DUTY RATED
E. NOT SHOWN ON DRAWING
F. FOR VARIABLE SPEED APPLICATIONS, CONSTANT TORQUE VFD ARE REQUIRED

REVISION DETAILS						
REV	DRAWN BY	DATE	REVIEWED	DATE	DETAILS	AREA
A	CV	DEC.10, 2013	CV	DEC.19, 2013	RELEASE	-

AERZEN
AERZEN CANADA
1995 MONTEE LABOSSIERE, VAUDREUIL QC J7V 8P2
(450) 424-3966 PH, (450) 424-3985 FX

THIRD ANGLE PROJECTION

TITLE: G5 - GM 15L DN 100 - PRESSURE

DWG NO. ZG-00813

DRAWN BY: C.VAILLANCOURT
REVIEWED BY: C.VAILLANCOURT

DATE: DECEMBER 19, 2013
REV: A

SCALE: NONE | SIZE: A | SHEET: 1 OF 1

Aerzener Maschinenfabrik GmbH
Reherweg 28 - D-31855 Aerzen - Telefon (0 51 54) 81 0 - info@aerzener.de - www.aerzener.com

4000323911 | ZTD | 00

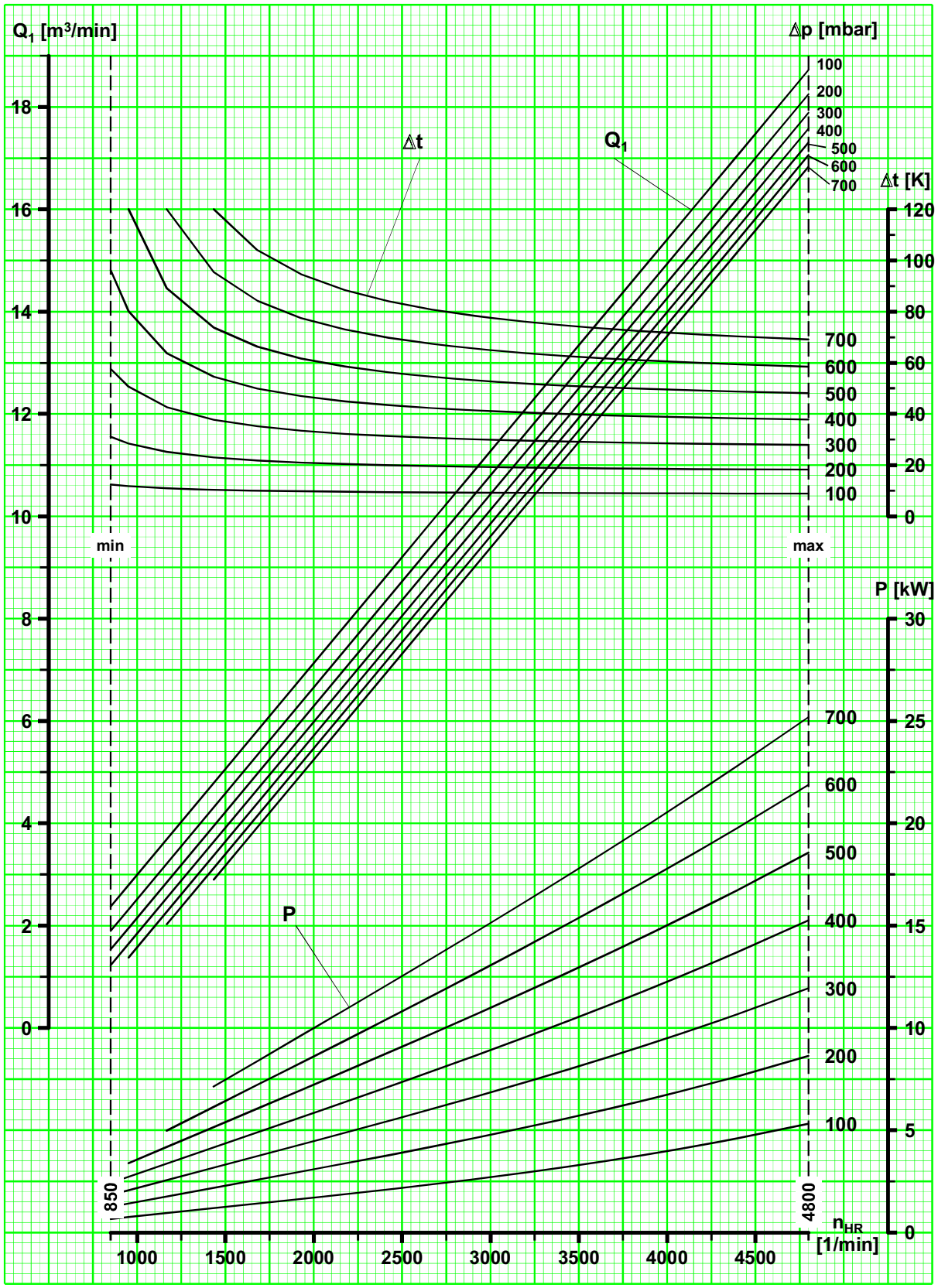

Q_1 : Ansaugvolumenstrom (Luft) bei p_1 = 1,0 bar und t_1 = 20°C	intake volume flow (air) at p_1 = 1.0 bar and t_1 = 20°C	débit aspiré (air) pour p_1 = 1,0 bar et t_1 = 20°C
n_{HR} : Hauptrotordrehzahl	main rotor speed	vitesse du rotor principal
n_V : Antriebswellendrehzahl	drive shaft speed	vitesse de l'arbre d'entraînement
P : Leistungsbedarf an der Kupplung	power required at the coupling	puissance absorbée à l'accouplement
t : Temperaturerhöhung	temperature rise	élévation de température
p : Druckerhöhung	pressure difference	pression différentielle

Leistungsdiagramm - Überdruck - für Drehkolbengebläsestufe
performance diagram - overpressure - for stage of rotary piston blower
courbes de fonctionnement - fonctionnement en pression - pour étage de surpresseur à pistons rotatifs

GM 15 L

n_V / n_{HR} = 1	04/2016 TRD - Hallemann	G2 - 410 - XL SAP - 4000323911 - 00

Technical data sheet Aerzen Positive Displacement Blower GM 15 L

Aerzener Maschinenfabrik GmbH

AERZEN

1	**Design and function**	
1.1	Manufacturer	Aerzener Maschinenfabrik GmbH / Germany
1.2	Type	3-lobe positive displacement blower with integrated pulsation cancellation
1.3	Working principle	Positive Displacement Blower
1.4	Applicable standards	DIN / EN
1.5	Direction of flow	from top to bottom (vertical)
1.6	Position of the driving shaft	left (viewed onto shaft)
1.7	Direction of rotation	counter clockwise (ccw, viewed onto shaft)
1.8	Possible driving types	belt drive, coupling, gearbox
1.9	ESNR air pressure- / exhaust service	032795000 / 032795000
1.10	ESNR gastight	033511000
1.11	Moment of inertia	0.049 kgm²
1.12	Weight (bare blower)	126 kg
2	**Design details and materials**	
2.1	**Housing**	
2.1.1	Components	cylinder, 2 side plates, gear case cover, housing cover
2.1.2	Division of housing	vertical
2.1.3	Design cylinder	Pre-inlet chamber in cylinder part discharge side for pulsation cancellation
2.1.4	Material	EN-GJL-200 (GG-20) equivalent to ASTM A48 class 30
2.1.5	Design temperature	-10 / +150 °C
2.1.6	Admissible operating pressure	0,7 bar
2.1.7	Leakage test	0.77 bar
2.1.8	Hydrostatic pressure test	1.4 bar
2.2	**Rotors and shafts**	
2.2.1	Type of rotors	3-lobe
2.2.2	Material rotors	C45N equivalent to AISI 1043
2.2.3	Material shafts	C45N equivalent to AISI 1043
2.2.4	Type of connection rotors / shafts	One piece
2.2.5	Balancing quality	Q 6.3 acc. to DIN ISO 1940
2.2.6	Ratio of length-diameter (L/D)	2.42
2.2.7	Diameter rotor	128 mm
2.2.8	Shaft distance	85.33 mm
2.2.9	Diameter driving shaft	38 mm
2.3	**Sealings**	
2.3.1	Conveying chamber	Labyrinth sealing with 4 piston rings and oil thrower
2.3.2	Driving shaft	2 radial seal rings
2.3.3	Material shaft sealing	Viton
2.3.4	Shaft sleeve	100Cr6 equivalent to AISI 52100
2.4	**Bearings**	
2.4.1	Design	Roller bearing axial / radial
2.4.2	Bearing type	Cyl. roller bearing, deep groove ball bearing, ang. contact ball bearing
2.4.3	Place of installation	Side plate
2.5	**Gearbox**	
2.5.1	Type	Helically geared synchronization gearbox
2.5.2	Material	16MnCr5E comparable with AISI 5115
2.5.3	Type of fastening	Conical press on taper with shaft nut
2.5.4	Diameter gear wheels	84.893 mm
2.6	**Lubrication**	
2.6.1	Design	Oil splash lubrication
2.6.2	Filling quantity	0.86 l
2.7	**Cooling**	
2.7.1	Design	Aircooled by considerably ribbed housing surface
3	**Connections**	
3.1	Piping suction- / discharge side	DN 100
3.2	Measuring points suction- / discharge side	G 1/4"
3.3	Condensate drain at neutral chamber of the labyrinth seal	G 1/2"
4	**Finish**	
4.1	Manufacturer standard	QH00402 and QH00408
4.2	Primer	Alkyd resin, 40µm, RAL 6006
4.3	Coating	Alkyd resin, 40µm, RAL 5001
5	**Admissible operating data**	
5.1	qo	4.14 l / U
5.2	Qv100	1.1 m³/min
5.3	Max. differential pressure, pressure service	700 mbar
5.4	Max. differential pressure, exhaust service	-500 mbar
5.5	Intake temperature min./max.	-10 / +50 °C
5.6	Speed min./max.	850 / 4800 1/min
5.7	Performance test	Simplified inspection test acc. to DIN 1945 part 1 (ISO 1217)
6	**Documentation**	
6.1	Performance diagram, pressure- /exhaust service	G2-410 / G2-510
6.2	Dimensional sheet	3ZG-7584
6.3	Sectional drawing	1ZG-3585
6.4	Bill of materials	032795
6.5	Operating manual	G4-001

issued by: F.Schneider Dept.: VI 02.10.2007 Rev.:

Acoustic Hood

Mechanical cooling fan mounted directly on the shaft end of the blower stage.

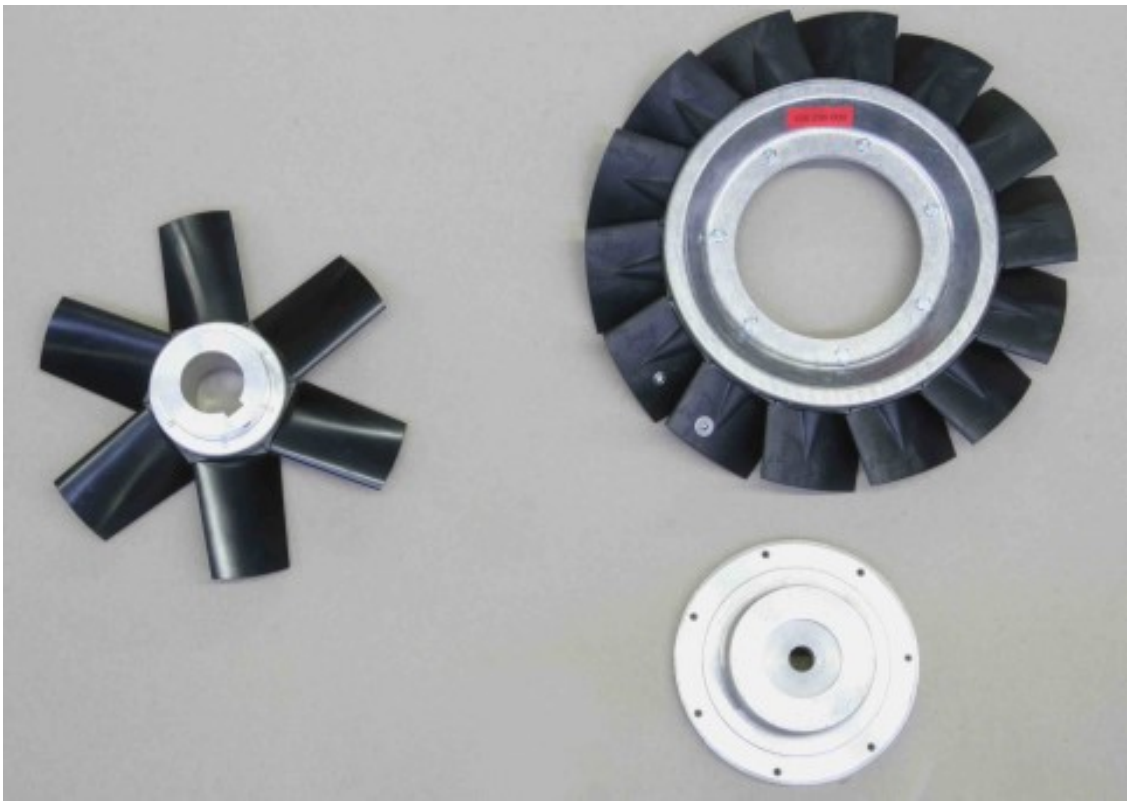

Fan Wheel: Mounted directly on the drive shaft of the blower, no additional accessory drive necessary. Ventilating air is sucked on the “cold” side of the unit (inlet-air opening), directed by diagonal air flow across the driving motor through to the acoustic hood and across the exhaust-air opening.

Selection of fan wheels is subject to blower speed.

Selection Sheets: 4TVs-1924

Admissible Pressing: 150- 250 Pa.

Amount of air and input: 3862-4TG

Material: hub aluminium, blades plastic

TECO Westinghouse MOTORS (CANADA) INC.	
	Date: October 19, 2015

Technical Documentation

PDH02545

Optim TEFC | AEHH8N

Date: October 19, 2015

TECO Westinghouse
MOTORS (CANADA) INC.

Date: October 19, 2015

Dimensional Drawing

Catalogue	Model	HP	Pole	kW	Rating	Voltage	Hz	RPM
PDH02545	AEHH8N	25	4	19	Continuous	575 V	60	1800

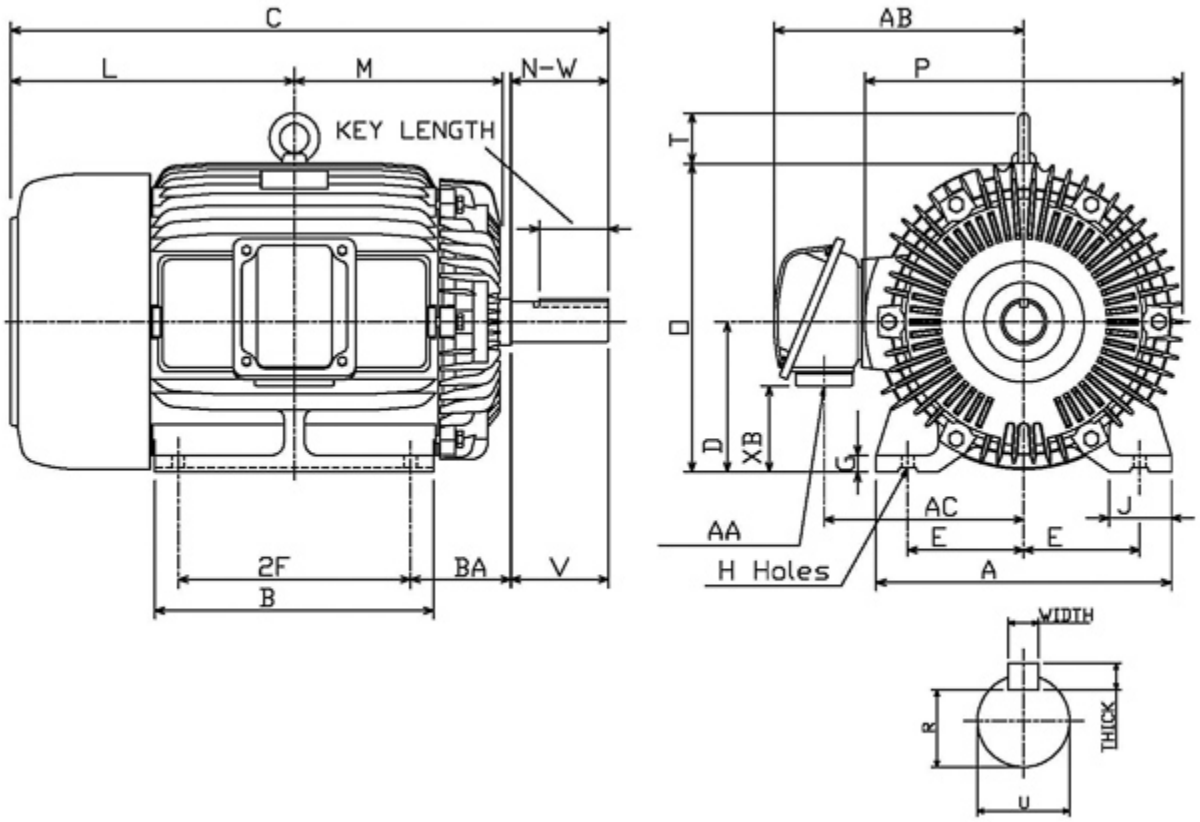

Frame Size	Mounting					A	B	C	CD	D
	E	2F	2F2	H	BA					
284T	5.5	9.5		0.53	4.75	14	11.7	26.8		7

G	J	K	L	M	O	P	T	Key			Keyseat
								Width	Thick	Length	R
0.7	2.95		12.68	9.23	14.52	15.04	1.97	0.5	0.5	3.28	1.591

Terminal Housing				Aux Box		C/D Flange					
AA	AB	AC	XB	AE	AX	BB	AH	AK	BD	AJ	BF
1.25 NPT	12.28	9.84	3.97								

Shaft Extension			Bearings		Approx. Weight Lbs	SPL dBA/3ft	Ins. Class	S.F.	Drive Method	Dimensions
N-W	U	V	DE	NDE						
4.62	1.875	4.5	6311ZZ	6310ZZ	464	68	F	1.15	Direct Coupling / Belt Drive	Inches

TECO Westinghouse
MOTORS (CANADA) INC.

Date: October 19, 2015

Technical Data Sheet

Motor Type: AEHH8N	Catalogue No: PDH02545

Nameplate Information

HP	Pole	RPM	Frame	Voltage	Hz	Phase
25	4	1765	284T	575	60	3
Enclosure	Ins. Class	Service Factor	Time Rating	NEMA Design	Rated Amb.	Rated Altitude
TEFC	F	1.15	Continuous	C	-40 to 40 °C	<3300 ft

Typical Performance

Efficiency (%)				Power Factor (%)		
Full Load		3/4 Load	1/2 Load	Full Load	3/4 Load	1/2 Load
Nom.	Min.					
93.6	92.4	93.6	93.6	86.0	83.0	77.0

Torque				Current (A)		
Full Load (lb-ft)	Locked Rotor (% FLT)	Pull Up (% FLT)	Break Down (% FLT)	No Load	Full Load	Locked Rotor
74.37	205	165	240	5.7	23.3	146

NEMA KVA Code	Inertia (WR^2)			Safe Stall Time (s)		Noise Level Sound Press. dB(A)
	Rotor ($lb\text{-}ft^2$)	NEMA Load ($lb\text{-}ft^2$)	Max. Allowable ($lb\text{-}ft^2$)	Cold	Hot	
G	4.586	122.0	255.0	28	20	68

VFD Duty Information

Speed Range			VFD		S.F.
Constant Torque	Variable Torque	Constant Power	Carrier	Type	
6-60Hz	3-60Hz	60-120Hz	≤ 5 kHz	VPWM or CPWM	1.0 Only

Additional Information

Bearings		Approx. Weight
DE	NDE	lbs
6311ZZ	6310ZZ	464

Hazardous Locations Information

CSA Certified	
Class I, Div 2, Groups B, C & D Class I, Zone 2, Groups IIB+H2, IIB & IIA	
Temp Code (Sinewave / VFD)	T3C / T3B

Connection Diagram

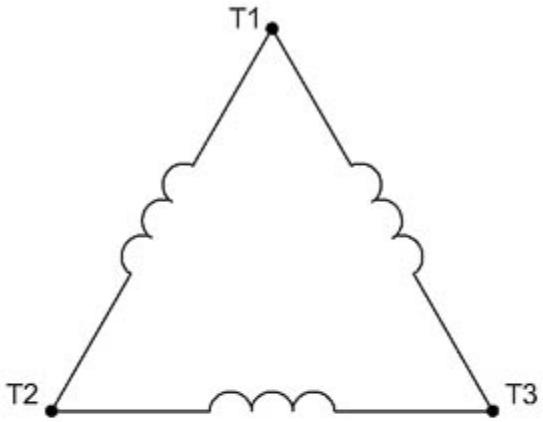

3 LEAD SINGLE VOLTAGE DELTA					
VOLTAGE	CONN.	L1	L2	L3	
-	DELTA	1	2	3	

WD_3D

TECO Westinghouse MOTORS (CANADA) INC.	
	Date: October 19, 2015

Thermal Limit Curves

Motor Type: AEHH8N		Catalogue No: PDH02545		Family: Optim TEFC	
HP	25	Safe Stall Time		Full Load A	0.0 / 23.3 A
Voltage	0 / 575V 60Hz	Hot	20 s	Locked Rotor A	628 %
RPM	1800	Cold	28 s	Locked Rotor A	0.0 / 146 A

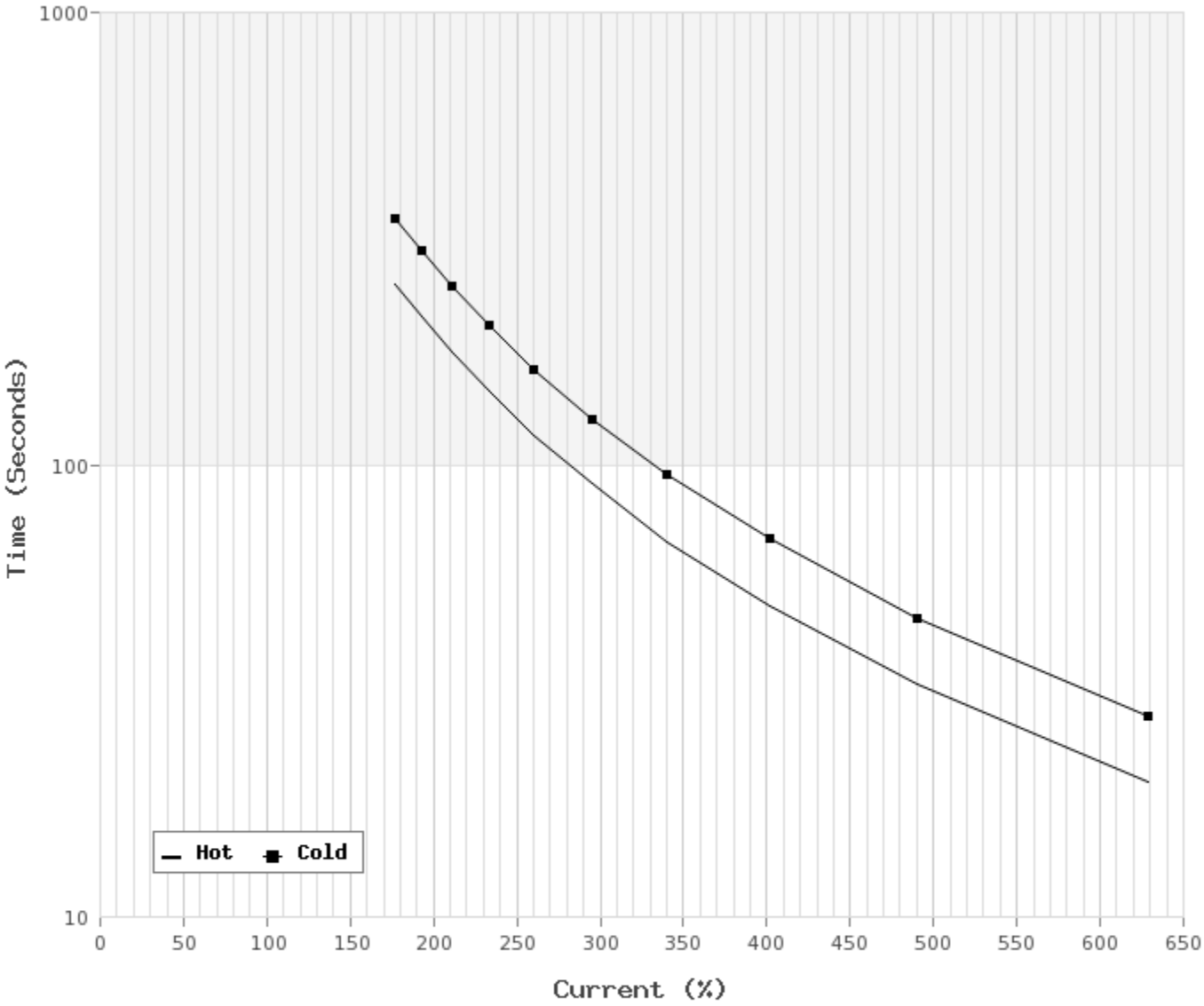

TECO Westinghouse MOTORS (CANADA) INC.	
	Date: October 19, 2015

T-N and I-N Curves

Motor Type: AEHH8N		Catalogue No: PDH02545		Family: Optim TEFC	
HP	25	Full Load T	74.37 lb-ft	Full Load A	23.3 A
Voltage	575V 60Hz	Locked Rotor T	205 %	Locked Rotor A	146.0 A
RPM	1800	Pull Up T	165 %	Break Down T	240 %

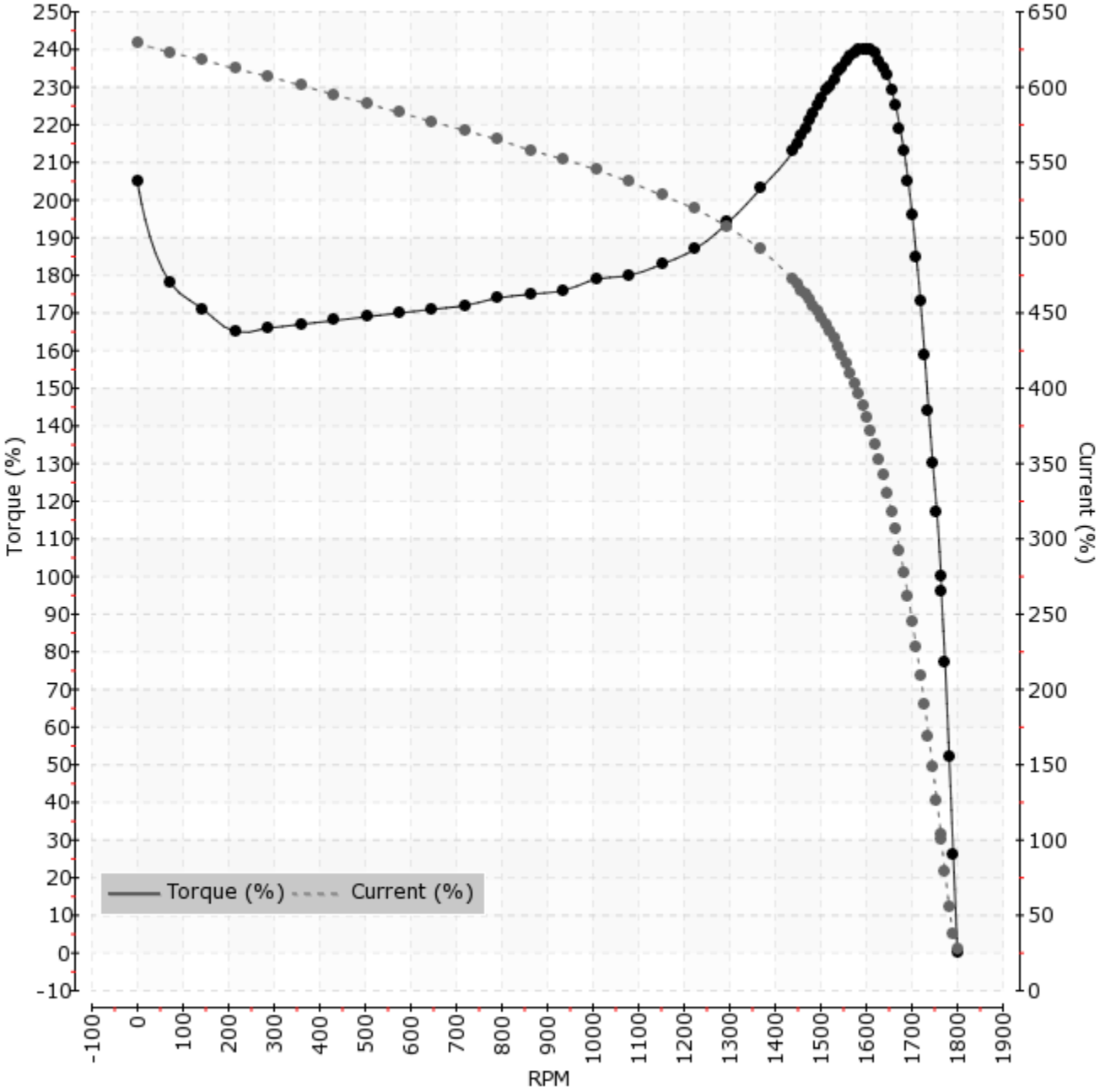

REVIEWED BY CONTRACTOR

Kudlik Construction Ltd.

NAME: Sandra Rousseau P.Eng

DATE: Jan 28, 2019

SHOP DRAWINGS

Hydrapol 500 Submittal package Date : 2019-01-24

General Information			
Project	**WWTP UPGRADE - IQALUIT**		
Client:	Kudlik Construction Ltd.	Project Number	2018-062
To:	Sandra Rousseau P.Eng., Project Manger	E-mail:	srousseau@kudlik.biz
Contractor	Veolia Water Technologies Canad Inc.	Project Number	5000218036
Address	4105 Sartelon, Ville St. Laurent PQ, H4S 2B3		
Project Manger:	Clément Bekaert	E-mail:	clement.bekaert@veolia.com
Phone:	514-334-7230 x 3243	Cell:	514-246-6232

Information on the Equipment		
Specialty:	Process	
Equipment:	Hydrapol 500	
Drawing Reference:		
Specification reference:	46 36 11	
Article:		
Revision:	Rev02	
Titre:	HP 500 submittal package	
Numero client:	DA-Veolia-DS-04-Hydrapol 500	
Numero Veolia	5000218036_DS_0004_PM_VWT	
Envoyer pour:	Approbation/Information:	Approbation

Consultant Approval

STANTEC PROJECT #: 110126045
This review by Stantec is for general conformance with the design concept of Stantec's design of the:
☐ Architectural ☑ Electrical
☐ Structural ☐ Other
☐ Mechanical

component(s) only and does not mean that Stantec has verified or approves the shop drawing(s). The Contractor remains solely responsible for the shop drawing(s) and this review by Stantec does not relieve the Contractor of the Contractor's responsibility for errors or omissions in the shop drawing(s) or for meeting all requirements of the contract documents. This review does not mean that Stantec approves the detailed design inherent in the shop drawing, responsibility for which shall remain with the Contractor submitting same, nor does this review mean that Stantec accepts any deviation of the shop drawing(s) from the contract documents. The Contractor is responsible for confirming all dimensions and correlating them at the job site, for all construction means, methods and techniques, and for coordination of construction work of all trades, including coordination of all shop drawings.

SUBMITTAL # DA-Veolia-DS-04 Hydrapol 500 rev2

Stantec

☑ REVIEWED
☐ REVIEWED, AS NOTED
☐ REVISE AND RESUBMIT
☐ NOT REVIEWED

DATE 2019-02-01

BY Konrad Goluch

STANTEC PROJECT #: 110126045
This review by Stantec is for general conformance with the design concept of Stantec's design of the:
☐ Process ☐ Electrical
☐ Structural ☑ Other instumentation
☐ Mechanical

component(s) only and does not mean that Stantec has verified or approves the shop drawing(s). The Contractor remains solely responsible for the shop drawing(s) and this review by Stantec does not relieve the Contractor of the Contractor's responsibility for errors or omissions in the shop drawing(s) or for meeting all requirements of the contract documents. This review does not mean that Stantec approves the detailed design inherent in the shop drawing, responsibility for which shall remain with the Contractor submitting same, nor does this review mean that Stantec accepts any deviation of the shop drawing(s) from the contract documents. The Contractor is responsible for confirming all dimensions and correlating them at the job site, for all construction means, methods and techniques, and for coordination of construction work of all trades, including coordination of all shop drawings.

SUBMITTAL # DA-Veolia-DS-04-Hydrapol 500_Rev2

Stantec

☑ REVIEWED
☐ REVIEWED, AS NOTED
☐ REVISE AND RESUBMIT
☐ NOT REVIEWED

DATE March 6, 2019

BY Ellie Bron

STANTEC PROJECT #: 110126045
This review by Stantec is for general conformance with the design concept of Stantec's design of the:
☑ Process ☐ Electrical
☐ Structural ☐ Other
☐ Mechanical

component(s) only and does not mean that Stantec has verified or approves the shop drawing(s). The Contractor remains solely responsible for the shop drawing(s) and this review by Stantec does not relieve the Contractor of the Contractor's responsibility for errors or omissions in the shop drawing(s) or for meeting all requirements of the contract documents. This review does not mean that Stantec approves the detailed design inherent in the shop drawing, responsibility for which shall remain with the Contractor submitting same, nor does this review mean that Stantec accepts any deviation of the shop drawing(s) from the contract documents. The Contractor is responsible for confirming all dimensions and correlating them at the job site, for all construction means, methods and techniques, and for coordination of construction work of all trades, including coordination of all shop drawings.

SUBMITTAL # DA-Veolia-DS-04-Hydrapol 500_Rev02

Stantec

☑ REVIEWED
☐ REVIEWED, AS NOTED
☐ REVISE AND RESUBMIT
☐ NOT REVIEWED

DATE January 28, 2019

BY Alejandro Rojas, P.Eng

4105 Sartelon
Ville St. Laurent, PQ
H4S-2B3

Phone: 514-334-7230
Fax: 514-334-5070
www.veoliawatertechnologies.ca

Project name:	IQALUIT
Project#:	5000218036
Document #:	5000218036_DS_0004_PM_VWT
by:	BB
chkd:	GH
appvd:	CB

SUBMITTAL PACKAGE REV2

HYDRAPOL 500

Project name:	IQALUIT
Project#:	5000218036
Document #:	5000218036_DS_0004_PM_VWT
by:	BB
chkd:	GH
appvd:	CB

HYDRAPOL 500

PROCESS DATASHEET

OIM manual section: 4.3.4.1

1	VEOLIA					VWT CANADA #	PDS_0004_HYDP-500		
2						Project #	5000218036		
3						Date	2018-09-11		
4						HYDRA-POL			
5	CLIENT	REV	DESCRIPTION		DATE	By	Chkd	App.	
6		1	FOR APPROVAL		2018-09-11	G.H.	C.B.	G.P.	
7	CITY OF IQALUIT	2	FOR APPROVAL		2019-01-24	F.V.	C.B.	G.P.	
8		3							
9	PROJECT	4							
10	IQALUIT WATER TREATMENT PLANT	5							
11		6							
12		7							
13		TAG:	APPLICATION :						REV
14	GENERAL	Manufacturer				VEOLIA WATER TECHNOLOGIES CANADA			
15		Model Serie				HP500			
16		VEOLIA Model Number				HP500S-CT-MBF-VC100F-AB575T-S2W-AAS-SSCEP-AC44			
17	PROCESS REQUIREMENT	Powder Type			-	Anionic Polymer			
18		Solution Concentration			%	0,50%			
19		Powder Density			kg/L	0,8			
20		Recommended Maturation Time			min	60			
21		Min Flowrate			lph	6			
22		Avg Flowrate			lph	25			
23		Max Flowrate			lph	40,8			
24	ENVIRONMENT	Equipment Location				Indoor			
25		Min. Temperature			°C	2			
26		Max . Temperature			°C	38			
27		Max. Humidity			%	95			
28		Corrosive Atmosphere				Non Corrosif			
29		Freeze				N/A			
30		Comments							
31	SAFETY	Electrical Classification				Non Hazardous Area			
32		Province				Nunavut			2
33	OPERATING CONDITIONS	Batch size			L	*453*			
34		Kg / batch			Kg	*2,26*			
35		Theoretical feeder cap/rev			Kg/rev	*0,09867*			
36		Feeder rpm			rpm	*24,8*			
37		Effective mass flowrate			kg/min	*1,83*			
38		Pre-rinsing time			min	*2,6*			
39		Dosing time			sec	*74,1*			
40		Maturing time (incl transf)			min	60			
41		Emptying time			min	0,69			
42		Total time			min	63,1			
43	TECHNICAL DESCRIPTION	Mechanical Components	Skid Frame	Manufacturer | Model	- | -	VWTC	LATIS#		
44				Material	-	SS304			
45				Color	-	N/A			
46				Dry Polymer Storage Type	-	Vacuum Conveyor & Hopper			
47			Vacuum Conveyor	Manufacturer | Model	- | -	Tiger-Vac			
48			-	Manufacturer | Model	- | -		Motor Head EC-12 (210951)		
49			Dry Feeder	Manufacturer | Model	- | -	WAM	MBF 073 I:70 4-5-D-E//575V//NEMA		
50				Motor's Manufacturer |Type	-	BALDOR	NEMA		2
51				Horsepower	HP	0.75	0.5		
52			Eductor	Manufacturer | Model	- | -	SCHUTTE&KOERTING	1,5"- Fig264 PVC Eductor		
53				Material		PVC			
54			Maturation Mixer	Manufacturer | Model	- | -	ENVIREQUIP / NORD	HP500-EVG01-0.5		
55				Motor's Manufacturer |Type	-	NORD			
56				Horsepower	HP	0.5			
57			Maturation Tank	Manufacturer | Model	- | -	VWTC			
58				Material |Nominal Capacity	- | L	304L S.S.	508		
59				Transfer Type		Stacked Maturation Tank			
60			Storage Tank	Manufacturer | Model	- | -	VWTC			
61				Material |Nominal Capacity	- | L	304L S.S.	508		
62			Tanks Location / Feeder			Right (Standard)			
63			Isolation Valve - Driving Water	Manufacturer | Model	-	CHEMLINE	21A010EC		
64				Diameter | Quantity	-	1"	1		
65			Solenoid Valve - Driving Valve	Manufacturer | Model	120VAC	ASCO	8210G004-120VAC		
66				Diameter | Quantity	-	1"	1		
67			Metering Valve- Wetting Cone	Manufacturer | Model	-	CHEMLINE	SM2A005ES		
68				Diameter | Quantity	-	1/2"	1		
69			Solenoid Valve - Feeder	Manufacturer | Model	120VAC	ASCO	8345G001-120VAC		
70				Diameter | Quantity	-	1/4"	1		
71			Actuated Transfer Valve	Manufacturer | Model	120VAC	CHEMLINE	57A020AEL-A/ER20.12		
72				Diameter | Quantity	-	2"	1		
73			Check Valve- Liquid Polymer	Manufacturer | Model	-	CHEMLINE	BTA015EC		
74				Diameter | Quantity	-	11/2"	1		
75			Isolation Valve- Tank Outlet	Manufacturer | Model	-	CHEMLINE	21A015EC		
76				Diameter | Quantity	-	11/2"	1		
77			Isolation Valves- Tanks Drains	Manufacturer | Model	-	CHEMLINE	21A015EC		
78				Diameter | Quantity	-	1 1/2"	2		
79			Static Mixer	Manufacturer | Model	-	KOFLO	1,5-40C-4-6-2		
80				Diameter | Quantity	-	1.5"	1		
81			Tuyauterie	VWTC Piping Class Code	-	A050C			
82				Pipe Material	-	PVC sh80			
83				Design Pressure	psig	80			2
84				Design Temperature	°C	38			
85				Operating Pressure	psig	65			
86				Test Pressure	psig	120			2
87				Test duration	min	60			
88				Test Fluid	-	Eau			

1	VEOLIA						VWT CANADA #		PDS_0004_HYDP-500		
2							Project #		5000218036		
3							Date		2018-09-11		
4							HYDRA-POL				
5	CLIENT	REV	DESCRIPTION				DATE	By	Chkd	App.	
6		1	FOR APPROVAL				2018-09-11	G.H.	C.B.	G.P.	
7	CITY OF IQALUIT	2	FOR APPROVAL				2019-01-24	F.V.	C.B.	G.P.	
8		3									
9	PROJECT	4									
10		5									
11	IQALUIT WATER TREATMENT PLANT	6									
12		7									
13		TAG:	APPLICATION :								REV
89	TECHNICAL DESCRIPTION	ELECTRICITY, INSTRUMENTATION & CONTROLS	INSTRUMENTS	Hopper Low Level Switch	Manufacturer | Model		24 VDC	Endress&Hauser	FTE31-C6DB11-A		
90					Diameter | Quantity			MNPT 1-1/2	1		
91				Service Water Pressure Switch	Manufacturer | Model			Allen-Bradley	836T-T253J		
92					Diameter | Quantity			1/4" MNPT	1		
93				Service Water Pressure Gauge	Manufacturer | Model			Ashcroft 2.5"	25-1009SWL-02L-0/160PSIG + Glycerine		
94					Diameter | Quantity			N/A	1		
95				Tanks Level Transmitter	Manufacturer | Model		24 VDC	Endress&Hauser (Pressure)	PMC21-CA1V1ECVXJJ		
96					Diameter | Quantity			1/2" MNPT	2		
97				HYDRASTAT	Manufacturer | Model			Hach	D3725E2T		
				HYDRASTAT controller	Manufacturer | Model		120 VAC	Hach	LXV404.99.00552		
98			CONTROL PANEL	PLC	Manufacturer | Model			Allen-Bradley	CompactLogix L16 (1769L16ERBB1B)		
99				HMI	Manufacturer | Model			Allen-Bradley	PanelView Plus 7 400 (2711PT4W21D8S)		
100					HMI Screen Size			4"			
101				Panel Enclosure	Material | Enclosure Rating			Painted steel	NEMA-4		
102			ELECTRICITY	Power Supply	Voltage | Amps			575V/3Ph/60Hz	30 Amps		
103				Frame Grounding				By others			
104				Wiring	Pre wired (Yes/No)			Yes			
105					Cable Type			TECK 90-Armoured Cable			
106	UTILITIES	Service Water for Chemical Transport		Required Driving Water Flowrate			m^3/h	5.2			
107				Min. Pressure (in operation at Qmax)			psig	70			
108				Residual Chlorine Concentration			mg Cl_2/L	<0.5 mg Cl2/L			
109				Driving Water Temperature Range			Deg C	10 deg C <T<25 deg C			
110	CONNECTIONS	Driving Water Inlet			Diameter (NPS)		in	1"			
111					Type			Socket Union			
112		Storage Tank Outlet			Diameter (NPS)		in	1-1/2"			
113					Type			Socket Union			
114		Drain			Diameter (NPS)		in	1-1/2"			
115					Type			Socket Union			
116		Overflow			Diameter (NPS)		in	2"			
117					Type			By others			
118		Anchors			Qty			See General Arrangement DWG			
119					Supply			By others			
120	CODE, APPROVAL & TESTS	Piping Design Code						ASME B31.3 Non Certified			
121		Control Panel Approval						CSA/cUL			
122											
123	OVERALL DIMENSIONS AND WEIGTH	Weight (dry)					kg	See General Arrangement DWG			
124		Overall Length					mm				
125		Overall Width					mm				
126		Overall Heigth					mm				

Project name:	IQALUIT
Project#:	5000218036
Document #:	5000218036_DS_0004_PM_VWT
by:	GH
chkd:	GP
appvd:	CB

HYDRAPOL 500

SUPPLIER TECHNICAL DATASHEETS

OIM manual section: 4.3.4.2

CS-300-2003 : Identification sheet

VWTC PROJECT NUMBER:	Iqaluit WWTP	REV:	01
PROJECT NAME:	5000218036	SUBMITTED TO (COMPANY):	
ENGINEER:	G. HÉBERT	SUBMITTED TO (RESPONSIBLE)	
PROJECT MANAGER:	C. BEKAERT	PROJECT NUM REFERENCE.:	
PHONE NUMBER:		LOT NUMBER:	

SUPPLIER	EQPT CODE	EQPT TAG NO	DIA	DESCRIPTION	INFO 1	INFO 2	INFO 3	APPLIC.	NOTE	REV
CHEMLINE	VABFPV352256	BV-04-943	50 mm (2")	HP-500 VALVE	TYPE: BUTTERFLY | 150 PSI//MANUFACTURER : CHEMLINE//MODEL : 57A020AEL-A / ER20.12//CONNECTION TYPE : WAFER | //BODY : PVC// SEAL | SEAT :EPDM | EPDM// STEM : 403 SS	ACTUATOR TYPE : ELECTRIC// MANUFACTURER : CHEMLINE// MODEL # :ER20.12// 115/220 VAC		HP-500		1

PDF Published December 13, 2017

Type 57α/56/75 Wafer Elastomer Seated Butterfly Valves

CHEMLINE PLASTICS
SUPERIOR FLOW SOLUTIONS

Chemline elastomer seated butterfly valves have a successful history of over 40 years and have replaced metal valves in many difficult process applications. Type 57α body, disc and seat are designed to offer excellent flow characteristics and low closing torques. Stem torques are unaffected by excessive flange bolt torques. Valves up to 16" have corrosion resistant FRP gear operators. Top flange and shaft dimensions are to ISO 5211 standard for easy mounting of actuators. A large selection of body, disc and seat materials permit these valves into a wide range of on/off and throttling control applications in lines up to 24" size.

PVC PP PVDF PDCPD[1]

CRN Registered Consult Chemline

NSF[3] Certified to NSF/ANSI 61

BODY TYPE: Type 57α: 1-1/2" – 14"
Type 56: 16"
Type 75: 18" – 24"

MATERIALS: Body: PVC, PP, PVDF, PDCPD[1]
Disc: PP (standard), PVC, PVDF

SEAT & O-RINGS: EPDM, FKM (Viton®)[2]



Gear Operated
- 8" to 24"

Lever Operated
- 1-1/2" to 8"

features

Compact and Light Weight

High Corrosion Resistance
- Solid plastic body and disc
- Polypropylene hand levers up to 8"
- FRP gear operators up to 16"

Abrasion Resistant
- Solid plastic disc
- PVDF disc available for high abrasion resistance

Easy Actuator Mounting
- Valves up to 16" have standard ISO 5211 top flange and shaft dimensions

Easily Installed
- Full bolt hole circle makes installation and alignment easy

Better Sealing
- Spherical disc/seat seal design offers effective sealing at lower stem torques, and long life for the seat

Better Flow
- Streamlined disc offers higher C_V values

Protection against Flange Bolt Over Tightening
- Body gussets and new seat design prevent excessive flange bolt torques from affecting valve stem torques

CRN Registration numbers by province
- Ontario: OC11045.5
- Newfoundland: OC11045.50
- Saskatchewan/Manitoba/Quebec: OC11045.56
- New Brunswick: OC11045.57
- Nova Scotia: OC11045.58
- P.E.I.: OC11045.59
- British Columbia: not required
- Alberta: not required[4]

[1] PDCPD=Polydicyclopenthadiene.
[2] Other materials are available.
[3] Type 57α PVC valves are certified under NSF/ANSI Standard 61 for contact with drinking water.
[4] Not required for non-expandable fluids.

12/17 ©Chemline Plastics Limited 2017
Chemline is a registered trade mark of Chemline Plastics Limited

Type 57α Butterfly Valves 1-1/4" to 14"

engineered for superior performance

Polypropylene Hand Lever
- Lockable

Sturdy PPG Position Lock
- 19 stops for fine flow control
- Resists high torque loads

Full Bolt Circle
- For easy installation

Gussets on Body
- Prevent excessive compression of seat



Deluxe FRP Gear Operator
- Yellow position indicator is NAMUR design for easy mounting of a limit switch box
- IP 67 enclosure resists short term immersion



Moulded Elastomer Seat
- Easily replaceable
- Flange face has raised "o-ring" profile
  – *Low flange bolt torques to seal*

Special Sealing Design
- Seals and disc have spherical sealing surfaces
  – *Lower stem torques to seal*
  – *Longer seat life compared to conventional designs*

PP Bushing with Double O-Rings
- Proven superior shaft seal design

Streamlined Disc
- High C_V values
- Good flow characteristics, important for control applications

Shaft O-Ring
- For vacuum resistance

Stainless Steel Shaft
- Not wetted
- Engagement over full length of the disc



Type 57α Butterfly Valves 1-1/4" to 14"

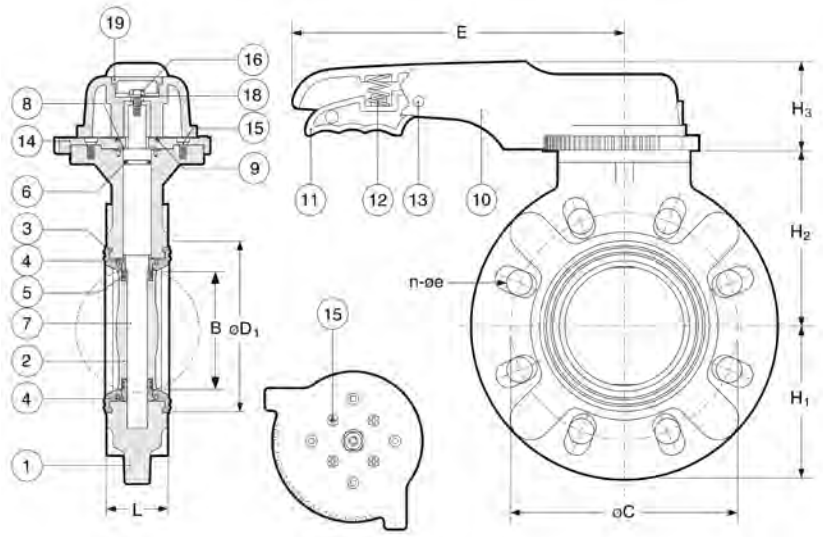

1-1/2" – 8" Lever Operated

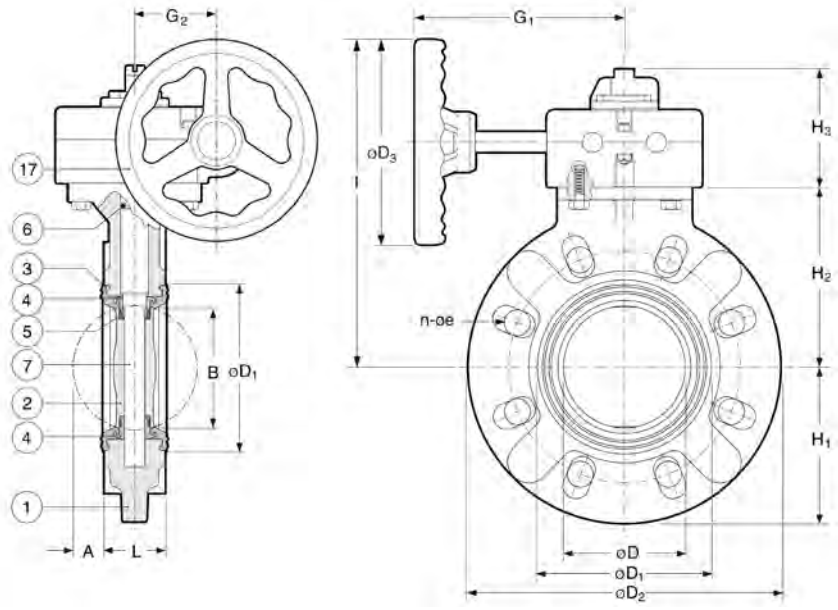

8" to 14" Gear Operated

PARTS

▲ Recommended Spare Parts

No.	Part	Pcs.	Materials
1	Body	1	PVC, PP PVDF, PDCPD[1]
2	Disc	1	PP, PVC, PVDF
3▲	Seat	1	EPDM, FKM (Viton®)
4	Seat Bushing	2	PP, PVC, PVDF
5▲	Bushing O-Ring	4	EPDM, FKM (Viton®)
6▲	Shaft O-Ring	1	EPDM, FKM (Viton®)
7	Shaft	1	403 SS
8	Shaft Retainer	1	PP
9▲	Plate O-Ring	1	EPDM, FKM (Viton®)
10	Hand Lever	1	PP
11	Trigger	1	PPG
12	Spring	1	304 SS
13	Pin	1	PPG
14	Position Lock Plate	1	PPG
15	Plate Screw	4	304 SS
16	Hand Lever Bolt	1	304 SS
17	Gear Operator	1	FRP housing, PP handwheel & 304 SS shaft
18	Handle Lever Washer	1	304 SS
19	Hand Lever Cap	1	PPG

[1] PDCPD=Polydicyclopenthadiene.

DIMENSIONS INCHES

Size	L	A	B*	C	n	e	D	D_1	D_2	D_3	E/G_1	G_2	H_1	H_2	H_3	I
1-1/2"	1.54	0.12	0.87	3.88	4	0.62	1.77	2.80	5.91	–	8.7	–	3.0	3.9	2.2	–
2"	1.65	0.28	1.46	4.75	4	0.75	2.20	3.19	6.50	–	8.7	–	3.3	4.3	2.2	–
2-1/2"	1.81	0.46	2.03	5.50	4	0.75	2.72	3.74	7.28	–	8.7	–	3.6	4.7	2.2	–
3"	1.81	0.61	2.43	6.00	4	0.75	3.03	4.13	8.31	–	9.8	–	4.2	5.3	2.2	–
4"	2.20	0.91	3.36	7.50	8	0.75	4.02	5.28	9.37	–	9.8	–	4.7	5.9	2.2	–
5"	2.60	1.24	4.36	8.50	8	0.88	5.08	6.65	10.35	–	12.6	–	5.2	6.6	2.7	–
6"	2.80	1.56	5.20	9.51	8	0.88	5.91	7.48	11.22	–	12.6	–	5.6	7.2	2.7	–
8" Lever	3.43	2.13	6.87	11.75	8	0.88	7.68	9.53	13.39	–	15.8	–	6.7	8.4	2.7	–
8" Gear	3.43	2.13	6.87	11.75	8	0.88	7.68	9.53	13.39	6.3	6.6	2.5	6.7	8.1	3.6	12.64
10"	4.41	2.72	8.80	14.25	12	1.00	9.84	11.89	16.57	6.3	6.6	2.5	8.3	9.5	3.6	14.02
12"	5.08	3.43	10.79	17.00	12	1.00	11.93	14.17	19.21	11.8	9.5	3.9	9.6	11.7	4.3	19.29
14"	5.08	4.37	12.85	18.75	12	1.12	13.82	15.47	21.22	11.8	9.5	3.9	10.6	12.8	4.3	20.35

* **B**=Minimum inside diameter (I.D.) of mating pipe. If I.D. of pipe is **B** dimension or less, the inside of pipe and must be chamfered or spacers provided. Consult Chemline.

Type 56/75 Series Butterfly Valves 16" to 24"

New PDCPD bodies have full thickness design

- Prevents excessive compression of seat if flange bolts are over torqued

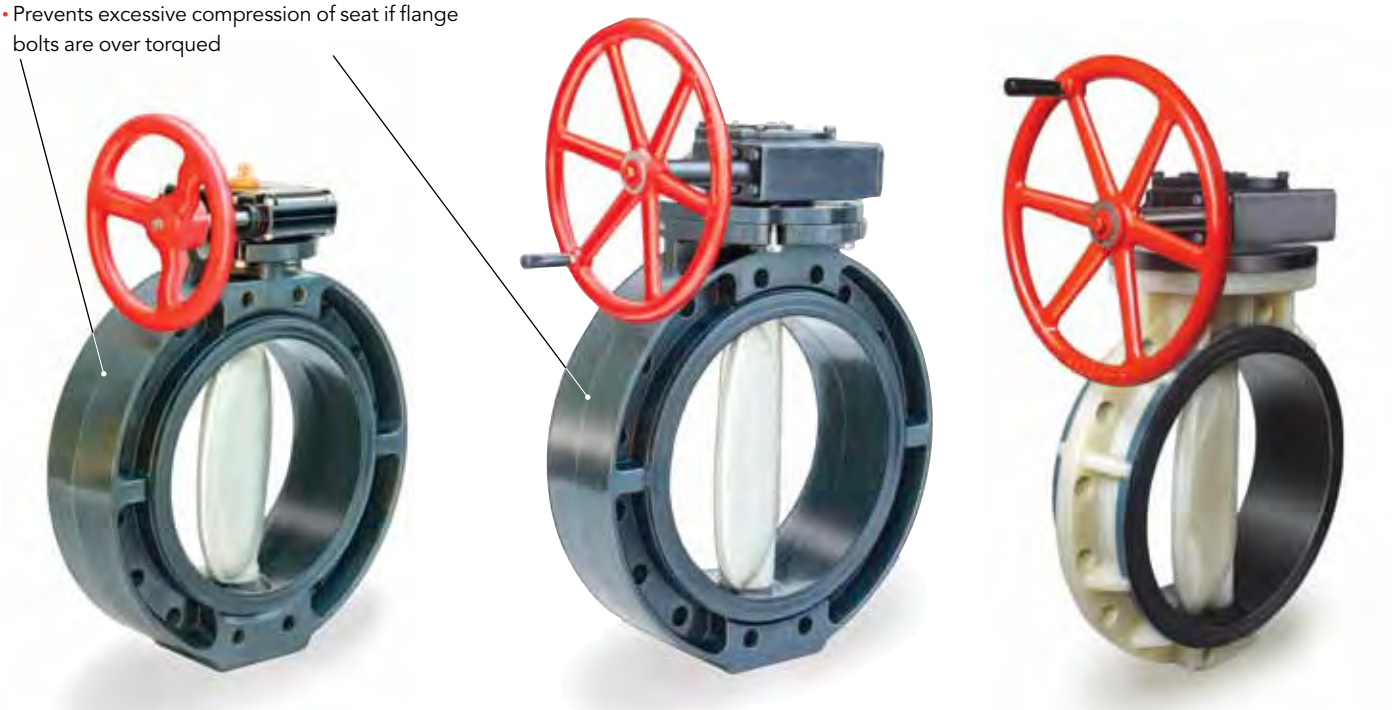

16" Type 56 with PDCPD body, PP disc

18" to 24" Type 75 with PDCPD body, PP disc

18" to 24" Type 75 with PVDF body, PVDF disc

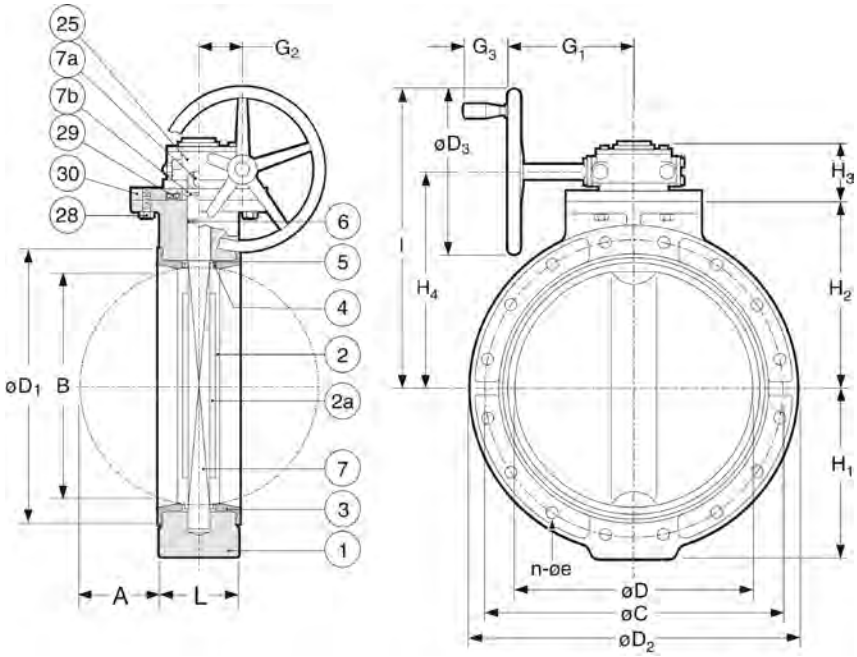

Drawing body detail is for PDCPD version. Detail for PP and PVDF body versions are slightly different. Consult Chemline.

PARTS

▲ Recommended Spare Parts

No.	Part	Pcs.	Materials
1	Body	1	PDCPD[1], PP, PVDF
2	Disc	1	PP, PVDF
2a	Disc Insert	1	Carbon Steel
3▲	Seat	1	EPDM, FKM (Viton®)
4▲	Large Disc O-Ring	2	EPDM, FKM (Viton®)
5▲	Small Disc O-Ring	2	EPDM, FKM (Viton®)
6▲	Shaft O-Ring	1	EPDM, FKM (Viton®)
7	Shaft	1	403 SS
7a	Shaft Key	1	Carbon Steel
7b	Snap Ring	1	304 SS
17	Gear Operator[2]	1	Cast Aluminum Epoxy Coated
28	Bolt	4	304 SS
29	Bolt	4	304 SS
30	Gear Operator Stand	1	400 SS

[1] PDCPD=Polydicyclopenthadiene.

[2] Gear Operator for 16" only is FRP with PP hand wheel and 304 SS shaft.

DIMENSIONS INCHES

Size	Type	L	A	B*	C	n	e	D	D_1	D_2	D_3	G_1	G_2	G_3	H_1	H_2	H_3	H_4	I
16"	56	6.65	4.67	14.53	21.25	16	1.12	15.98	18.50	24.41	11.81	10.7	3.9	–	12.4	13.8	4.3	15.35	21.3
18"	75	7.05	5.38	16.34	22.75	16	1.26	17.80	20.67	26.18	16.14	12.6	4.3	3.4	13.2	14.6	5.5	17.44	25.6
20"	75	7.48	6.15	18.29	25.00	20	1.26	19.76	22.64	28.35	16.14	12.6	4.3	3.4	14.4	15.8	5.5	18.62	26.8
24"	75	8.23	7.76	22.27	29.50	20	1.38	23.74	27.01	32.01	16.14	12.6	4.3	3.4	16.7	18.3	5.5	21.18	29.3

* **B**=Minimum inside diameter (I.D.) of mating pipe. If I.D. of pipe is **B** dimension or less, the inside of pipe and must be chamfered or spacers provided. Consult Chemline. **Note:** Type 75 was formerly referred to as TB Series.

Elastomer Seated Butterfly Valves

WORKING PRESSURES PSI

NET WEIGHTS LB.

Size	Valve Type	PVC Body/PP Disc			PP Body/PP Disc		PVDF Body/PVDF Disc/FKM(Viton®)				Body/Disc		
		0-50°C 32-122°F	60°C 140°F	83°C 181°F	–20-60°C –4-140°F	80°C 176°F	–20-60°C –4-140°F	79°C 175°F	100°C 212°F	121°C 250°F	PVC/ PP	PP/ PP	PVDF/ PVDF
1-1/2″	57α	150	70	30	150	105	150	105	90	75	2.9	2.4	3.1
2″	57α	150	70	30	150	105	150	105	90	75	3.3	2.6	3.7
2-1/2″	57α	150	70	30	150	105	150	105	90	75	3.7	3.1	4.2
3″	57α	150	70	30	150	105	150	105	90	75	4.2	3.5	4.9
4″	57α	150	45	30	150	105	150	105	90	75	5.5	4.4	6.4
5″	57α	150	45	30	150	105	150	105	90	75	10.8	8.8	12.6
6″	57α	150	45	30	150	105	150	105	90	75	12.8	10.1	15.2
8″ Lever	57α	150	40	20	150	90	150	90	75	60	20.5	16.3	24.3
8″ Gear	57α	150	40	20	150	90	150	90	75	60	23.6	19.6	27.6
10″	57α	150	40	20	150	90	150	90	75	60	32.4	26.9	41.0
12″	57α	112	30	15	112	60	112	60	45	30	61.7	52.9	76.1
14″	57α	112	30	7	112	60	112	60	45	30	66.6	58.0	81.1

WORKING PRESSURES PSI

NET WEIGHTS[1] LB.

Size	Valve Type	PDCPD Body/ PP Disc			PDCPD Body/ PVDF Disc/FKM(Viton®)				PP Body/ PP Disc		PVDF Body/ PVDF Disc/FKM(Viton®)				Body/Disc		
		0-50°C 32-122°F	60°C 140°F	83°C 181°F	0-30°C 32-86°F	60°C 140°F	80°C 176°F	100°C 212°F	–20-60°C –4-140°F	80°C 176°F	–20-60°C –4-140°F	79°C 175°F	100°C 212°F	121°C 250°F	PDCPD/ PP	PDCPD/ PVDF	PVDF/ PVDF
16″	56	110	90	15	110	90	45	30	90	45	90	45	30	15	79.4	103	101
18″	75	110	90	15	110	90	45	30	75	45	70	45	30	15	140.	221	227
20″	75	110	90	15	110	90	45	30	50	45	50	30	20	15	170.	252	273
24″	75	110	90	15	110	90	45	30	50	45	50	30	20	15	251.	309	346

Note: Type 75 was formerly referred to as TB Series.

[1] Weights are for valves excluding lugs.

Cv VALUES VS. DISC ANGLE

BOLT TORQUES

Size	15°	30°	45°	60°	75°	90°	Recommended Flange Bolt Torques Foot-Lbs.
1-1/2″	0	3.6	14.2	30.5	49.7	71.	15
2″	0	6.0	24.	51.6	84.	120.	17
2-1/2″	0	12.5	50.	108.	175.	250.	17
3″	0	15.0	60.	129.	210.	300.	22
4″	0	23.5	94.	202.	329.	470.	22
5″	0	41.5	166.	357.	581.	830.	30
6″	0	55.	220.	473.	770.	1,100.	30
8″	0	125.	500.	1,075.	1,750.	2,500.	41
10″	0	193.	772.	1,660.	2,702.	3,860.	41
12″	0	285.	1,140.	2,451.	3,990.	5,700.	44
14″	0	322.	1,288.	2,769.	4,508.	6,440.	44
16″	0	300.	2,277.	4929.	6,822.	8,340.	58
18″	0	392.	2,973.	6436.	8,908.	10,890.	58
20″	0	506.	3,838.	8309.	11,501.	14,060.	72
24″	0	666.	5,051.	10,934.	15,133.	18,500.	72

options + accessories



Shaft Extensions

- Different materials and lengths are available
- Several designs:
  - with no housing for indoors
  - with waterproofed PVC housing for indoors or outdoors
  - with stainless steel housing for buried services

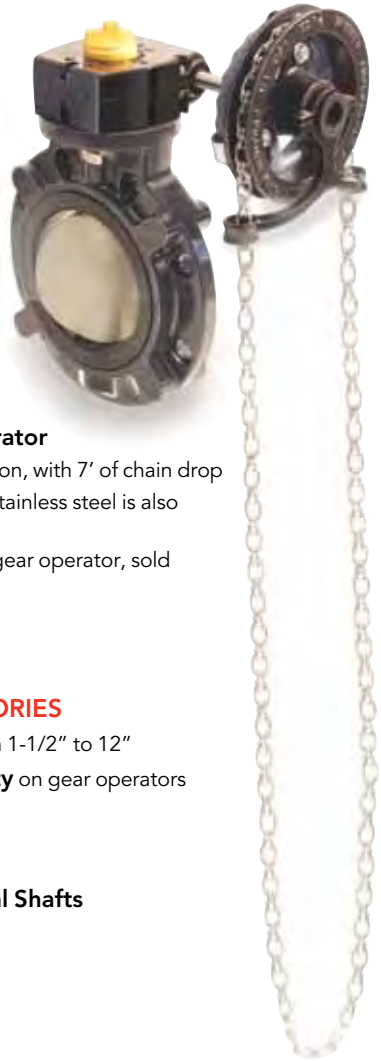

Chain Wheel Operator

- For overhead opeation, with 7' of chain drop
- Cast iron standard, stainless steel is also available
- Requires the use of gear operator, sold separately

OTHER ACCESSORIES

- **Gear Operator** on 1-1/2" to 12"
- **Locking Capability** on gear operators

OPTIONS

- **Different Seats**
- **Different Material Shafts**



Optional Lock-out Handle & Hasp

- To prevent unauthorized operation of the valve during maintenance shut-downs
- Padlocks go through holes in hasp



Limit Switches

- Available for lever and gear operated valves
- Electrical feedback of manual valve position
- NEMA 4X enclosure, position indicator beacon, 2x SPDT switches, stainless steel hardware



Municipal Operating Nut

- For buried service

Elastomer Seated Butterfly Valves

electric + pneumatic actuation

Pneumatic and Electric Actuators

- A complete range of actuators and control accessories are available, mounted to valves using PPG plastic brackets and 304 stainless steel couplings. Refer to separate data sheets.
- All actuators are CSA approved, have NEMA 4S enclosures, stainless steel hardware and permanently lubricated gear train



A Series Electric

- butterfly valves up to 6"
- up to 2000 in-lbs torque
- On-Off (3 wire) adjustable travel, optional On-Off (2 wire), failsafe multi-turn, 3 position modulating, BUS
- Visual feedback, optional 2 feedback switches, feedback potentiometer and feedback transmitter



Q Series Electric

- butterfly valves up to 3"
- 300 in-lbs torque
- On-Off (3 wire) adjustable travel, optional On-Off (2 wire), failsafe 3-position, modulating
- Visual feedback, optional 2 feedback switches, feedback potentiometer and feedback transmitter



V Series Electric

- butterfly valves up to 20"
- up to 8850 in-lbs torque
- On-Off (2/3 wire) adjustable travel, optional failsafe, modulating, BUS
- Visual feedback, 2 feedback switches, optional 2 extra feedback switches, feedback potentiometer and feedback transmitter



Pneumatic Actuators

PA Series

- butterfly valves up to 24"
- up to 40,660 in-lbs torque
- industrial process, submerged
- bleach/water washdown
- Rilsan-coated aluminum

PP Series

- butterfly valves up to 6"
- up to 1,335 in-lbs torque
- industrial process with minimal use of metal
- Glass-filled Polyamide

P3 Series

- butterfly valves up to 10"
- up to 8,850 in-lbs torque
- corrosive, submerged and off-shore applications
- 316 stainless steel

ORDERING EXAMPLE

| Chemline Butterfly Valves | | |

PDF Published January 10, 2018

E Series Electric Actuators

CHEMLINE PLASTICS
SUPERIOR FLOW SOLUTIONS

The Chemline E Series Electric Actuator is a reversible rotary unit with output torques up to 880 in.-lb. These units are ideal for all Chemline ball and butterfly valves up to 4". The E Series is compact, light weight and has a plastic housing. A large black handle provides manual override and position indicator.

Chemline also offers complete actuated ball, butterfly and diaphragm valves, assembled and bench tested. Actuation service is also available for all quarter-turn metal valves.

for Chemline ball & butterfly valves up to 4"

SERIES: ER10 – 90 in.lb.
ER20 – 180 in.lb.
ER35 – 310 in.lb.
ER60 – 530 in.lb.
ER100 – 880 in.lb.

VOLTAGES: 115/220 VAC, 12/24 VDC, 24 VAC

ENCLOSURE: Polyamide 6.6
NEMA 4X



E Series on SM2 Series True Union Ball Valve

features

Multiple Operation/Control Options
- 2 & 3-wire (standard)
- Adjustable Travel (standard)
- Manual Override (standard)
- Bus communication (optional)
- Digital Positioner (optional)
- Failsafe (optional)
- Cold Weather Heater/Thermostat (standard)

Multiple Feedback Options
- Visual (standard)
- Feedback Switches (standard)
- Extra Feedback Switches (optional)
- Feedback Potentiometer (optional)
- Feedback Transmitter (optional)

Special Inspection Labelled by CSA
(Canadian Standards Association)

NEMA 4X Enclosure
- Waterproof, corrosion proof with high impact Polyamide 6.6 housing and stainless steel fasteners

No Maintenance
- Permanently lubricated gear train
- Designed for 250,000 + cycles

Thermal Overload Protection
- Thermal switch embedded onto control board

Extended Operating Temperature Range
- –10 to 60C (15 to 140°F) (standard)

Standard Mounting Dimensions
- ISO-5211 mounting bolt circle and drive

technical

Operating Voltage
- 115/220 VAC (standard)
- 12/24 VDC or 12 VAC (optional)

Electrical Conduit Entry
- 2 x 1/2" NPT

Motor Direction
- Reversing

Motor Cycle Time
- Fixed (standard)

01/18 ©Chemline Plastics Limited 2018
Chemline is a registered trade mark of Chemline Plastics Limited

DIMENSIONS INCHES

Port View

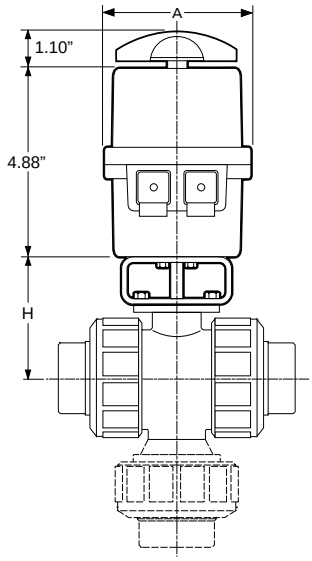

Type 21 True Union and Type 23 Multi Port Ball Valves

Port View

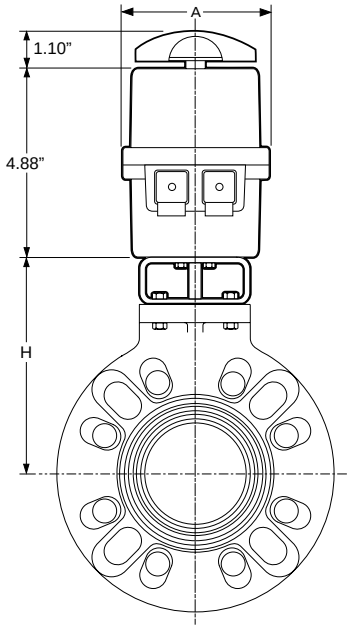

Type 57 Butterfly Valves

Side View / Port View

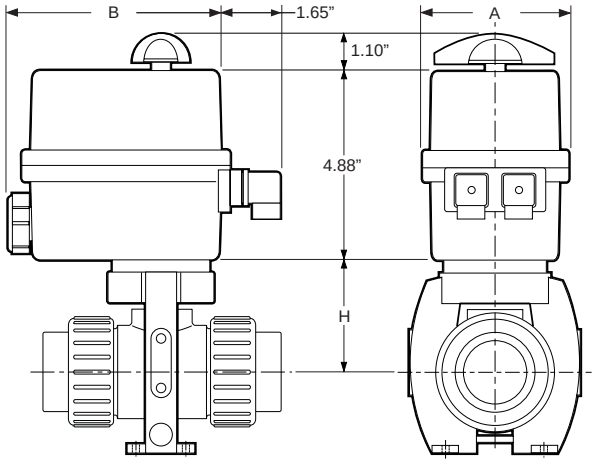

SM Metering and SP Proportional True Union Ball Valves

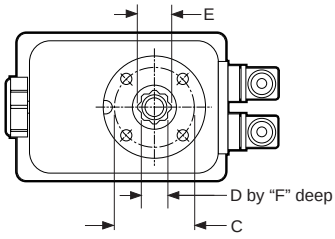

Bottom View

DIMENSION INCHES

Model	A	B	C/Thread	D	E Inches (ISO)	F
ER10	3.62	5.35	1.42 (F03) M5	0.55	0.551" 14mm	0.640
ER20	3.62	5.35	1.65 (F04) M5	0.55	0.551" 14mm	0.640
ER35	5.04	5.94	1.97 (F05) M6	0.87	0.551" 14mm	0.945
ER60	5.04	5.94	1.97 (F05) M6	0.87	0.866" 22mm	0.945
ER100	5.04	5.94	2.76 (F07) M8	0.87	0.866" 22mm	0.945

DIMENSION "H" INCHES

Valve Size	Valve Type				
	Type 21 Ball	Type 23 Multiport Ball	SM Metering/SP Proportional Ball	Type 57 Butterfly	ChemValve Butterfly
1/2"	2.76	2.76	1.97	–	–
3/4"	3.01	3.01	2.36	–	–
1"	3.29	3.29	2.60	–	–
1-1/4"	3.64	3.98	2.91	–	–
1-1/2"	3.98	3.98	3.76	5.65	–
2"	4.43	4.43	4.90	5.95	6.89
2-1/2"	5.12	5.47	–	6.35	7.52
3"	5.47	5.47	–	6.65	8.27
4"	–	–	–	7.35	9.05

Valves not to scale. For valve dimensions and parts refer to separate valve data sheets.

E Series Electric Actuators

SPECIFICATIONS

Model	Running Torques (in.-lbs.)	Nm	115 VAC / 220 VAC (x=12) Power Draw (Watts)[1]	115 VAC / 220 VAC (x=12) Duty Cycle	12 to 24 VDC & 24 VAC (x=346) Power Draw (Watts)[1]	12 to 24 VDC & 24 VAC (x=346) Duty Cycle	Cycle Time/90° (sec.)	Weight (lbs.)
ER10	90	10	15W	80%	15W	80%	11	3.0
ER20	180	20	15W	80%	15W	80%	12	3.0
ER35	310	35	15W	80%	15W	80%	7	6.2
ER60	530	60	45W	80%	45W	80%	12	6.9
ER100	880	100	45W	80%	45W	80%	23	6.9

[1] Power draw values are for actuators with locked rotors.

AC WIRING 115 VAC/220 VAC

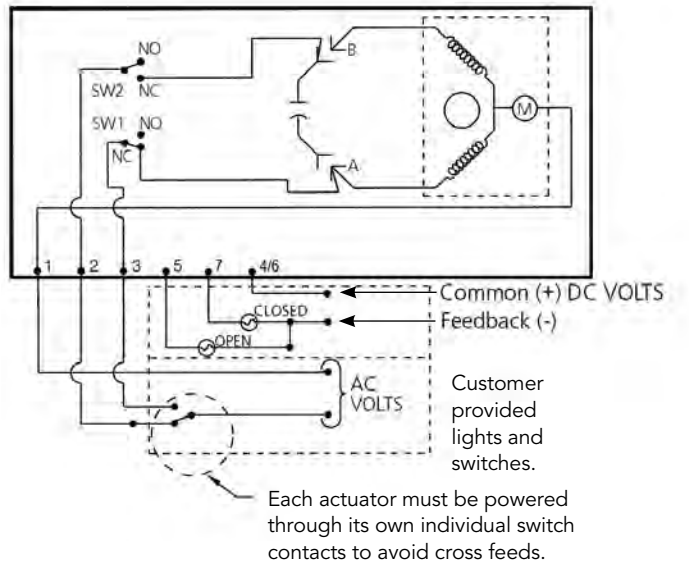

VALVE OPERATION

Neutral – To Terminal 1
To Open – Power to Terminal 2
To Close – Power to Terminal 3

NOTES:

1. Actuator shown in counter clockwise extreme of travel, or 'open' position.
2. Motor has a thermal protector as shown by (M) in the diagram.

OPERATION/CONTROL OPTIONS

- **Bus Communication** – Proprietary bus communication/operation capability
- **Digital Positioner** – Onboard digital position controller accepts 4 to 20 mA, 0 to 20 mA, 0 to 10 VDC or other inputs. These units are easier to calibrate, have faster response and provide more precise proportional control.
- **Failsafe Capability** – Onboard backup battery pack powers actuator in case of power failure

FEEDBACK OPTIONS

- **Extra Feedback Switches** – For extra end-of-travel position feedback
- **Feedback Potentiometer** – To feedback the precise valve position to a remote location, or to allow "jogging" control
- **Feedback Transmitter** – A circuit board coupled with a feedback potentiometer provides 4 to 20 mA output used by other equipment (PLC, data logger, etc.)

55 Guardsman Road, Thornhill, ON, L3T 6L2, Canada | ISO 9001:2008 Certified
1.800.930.2436 (CHEM) | fax.905.889.8553 | request@chemline.com | chemline.com

CS-301-100 : Identification sheet

VWTC PROJECT NUMBER:	Iqaluit WWTP	REV:	01
PROJECT NAME:	5000218036	SUBMITTED TO (COMPANY):	
ENGINEER:	G. HÉBERT	SUBMITTED TO (RESPONSIBLE)	
PROJECT MANAGER:	C. BEKAERT	PROJECT NUM REFERENCE.:	
PHONE NUMBER:		LOT NUMBER:	

SUPPLIER	EQPT CODE	EQPT TAG NO	DIA	DESCRIPTION	INFO 1	INFO 2	INFO 3	APPLIC.	NOTE	REV
CHEMLINE	VABLPV200251	BV-04-910	DIA: 25 mm (1")	HP-500 VALVE	TYPE: BALL VALVE//MANUFACTURER : CHEMLINE//MODEL : Type21-A-010-E-C//CONNECTION TYPE : COMBO | 25 mm (1")//BODY : PVC (ASTM D1784)// SEAL | SEAT :PTFE | EPDM// STEM : PVC			HP-500		1
CHEMLINE	VABLPV200253	BV-04-944	DIA: 38 mm (1-1/2")	HP-500 VALVE	TYPE: BALL VALVE//MANUFACTURER : CHEMLINE//MODEL : Type21-A-015-E-C//CONNECTION TYPE : COMBO | 38 mm (1-1/2")//BODY : PVC (ASTM D1784)// SEAL | SEAT :PTFE | EPDM// STEM : PVC			HP-500		1
CHEMLINE	VABLPV200253	BV-04-947	DIA: 38 mm (1-1/2")	HP-500 VALVE	TYPE: BALL VALVE//MANUFACTURER : CHEMLINE//MODEL : Type21-A-015-E-C//CONNECTION TYPE : COMBO | 38 mm (1-1/2")//BODY : PVC (ASTM D1784)// SEAL | SEAT :PTFE | EPDM// STEM : PVC			HP-500		1

SUPPLIER	EQPT CODE	EQPT TAG NO	DIA	DESCRIPTION	INFO 1	INFO 2	INFO 3	APPLIC.	NOTE	REV
CHEMLINE	VABLPV200253	BV-04-950	DIA: 38 mm (1-1/2")	HP-500 VALVE	TYPE: BALL VALVE//MANUFACTURER : CHEMLINE//MODEL : Type21-A-015-E-C//CONNECTION TYPE : COMBO | 38 mm (1-1/2")//BODY : PVC (ASTM D1784)// SEAL | SEAT :PTFE | EPDM// STEM : PVC			HP-500		1

PDF Published March 1, 2013

Type 21 Ball Valves

CHEMLINE PLASTICS
SUPERIOR FLOW SOLUTIONS

The Chemline Type 21 True Union Ball valve incorporates state of the art features for long term performance. This is a full port, full blocking True Union valve pressure rated at 16 bar (230 psi)[4]. Double stem o-rings and Safety Shear stem design provide for a high degree of safety on hazardous fluid applications. All sizes have an ISO standard actuator mounting platform integral to the valve body. This provides for sturdy and secure mounting of pneumatic or electric actuators.

PVC | CPVC | PP | PVDF

CRN Registered Consult Chemline

NSF[5] Certified to NSF/ANSI 61

SERIES: Type 21

SIZES: 3/8" – 4"

ENDS: Socket, Threaded, Flanged, Butt[1] or ChemFlare™

SEATS: PTFE

SEALS[2]: EPDM, FKM (Viton®), CPE[3]



features

Pressure rated to 230 psi[4]
- Provides a high factor of safety

Integral Actuator Mounting Platform
- Actuation is easy. Electric or pneumatic actuators may be mounted in the field.

Full Port
- High capacity and low pressure drops

Fully Blocking
- Downstream union nut may be safely disassembled for piping maintenance while valve is closed off under full system pressure

Built-In Spanner Wrench
- Top of the handle is designed to be used as a tool for accessing internal parts

Safety Shear Stem Design
- Stem has double o-rings
- Designed to hold full pressure even if stem breaks due to excessive torque

High Chemical Resistant Material
- PVC and CPVC compounds have an "A" chemical resistance rating as per ASTM D-1784. They have outperformed other PVC and CPVC compounds on aggressive chemicals.

[1] Butt ends for fusion to Chemline metric PP, PVDF or ECTFE (Halar®) piping.
[2] Other materials are available.
[3] CPE=Chlorinated Polyethylene.
[4] PVC, CPVC and PVDF 1/2" to 2" are rated at 230 psi; 2-1/2" to 4" and all size PP valves are rated at 150 psi at 20°C.
[5] PVC valves with EPDM or FKM (Viton®) seals are certified under NSF/ANSI Standard 61 for contact with drinking water.

03/13 ©Chemline Plastics Limited 2013
Chemline is a registered trade mark of Chemline Plastics Limited

Type 21 Ball Valves

features

Double Stem O-Rings – Safety Shear Design

- Upper o-ring groove is deeper than lower. In case of excessive stem torque, stem will shear at the upper groove, leaving the inner o-ring intact to seal against full line pressure.

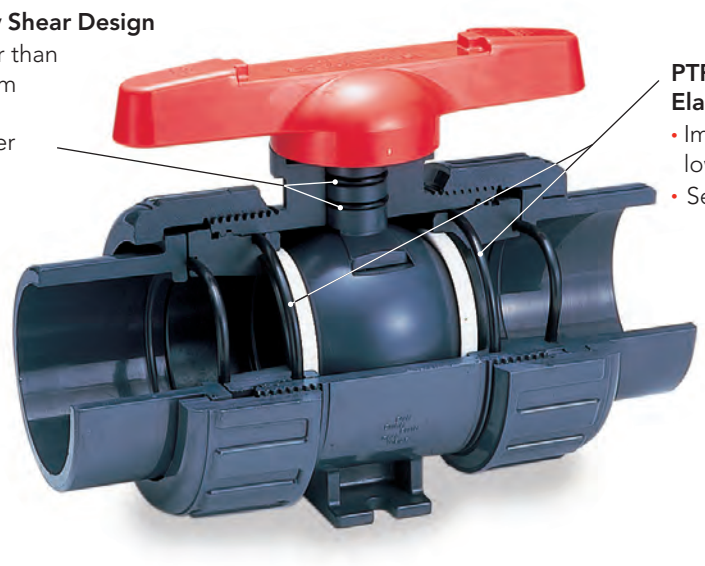

PTFE Seats have Elastomer Cushions

- Improved sealing while lowering stem torques
- Self adjusts for seat wear

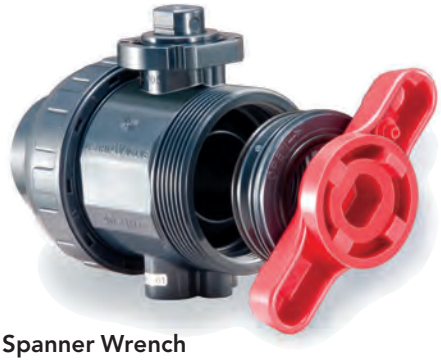

Built in Spanner Wrench

- For removing or tightening the seat carrier
- All parts are replaceable



Integral Actuator Mounting Platform

- Actuation is easy. Electric or pneumatic actuators may be mounted in the field. Simply pull off the handle to reveal a standard ISO 5211 mounting platform which accepts bolt-on hardware.



Fully Blocking

- Downstream pipe may be removed while upstream side is still pressurized. This may be done with valve installed in either direction.



Base Mounting Pad

- Optional threaded inserts allow valves to be securely anchored
- Supplied standard with actuated valves

Type 21 Ball Valves

options + accessories



ChemFlare™ Ends

- For connection to PFA tube. Leak-free connections for difficult services such as sodium hypochlorite

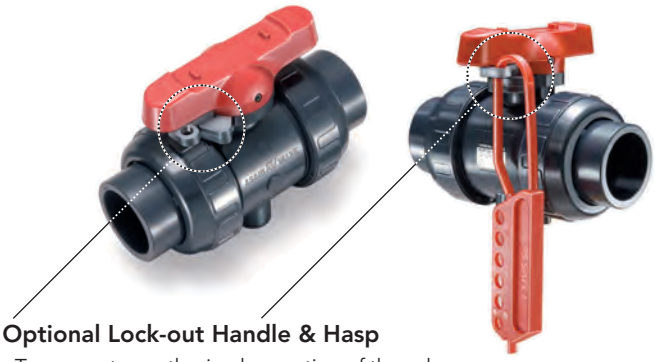

Optional Lock-out Handle & Hasp

- To prevent unauthorized operation of the valve
- Used during maintenance shut-downs



One-piece moulded PVC and CPVC 6" socket ends

- Allows installation of 4" valve in 6" line
- Factory moulded, not fabricated with couplings and reducers cemented together
- Fixed to valve mechanically just like the one-piece moulded factory flanges



Different Colour Handles

- Choose a handle colour other than standard red for colour coding different services

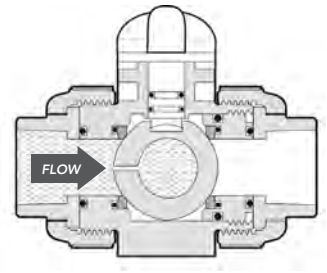

Vented Ball

- For sodium hypochlorite services at any concentration
- Valve shown in closed position

electric + pneumatic actuation

Pneumatic and Electric Actuators

- A complete range of actuators and control accessories are available, mounted to valves using PPG plastic brackets and stainless steel couplings. Refer to separate data sheets.



Electromni® Electric



Q Series Electric



A Series Electric



V Series Electric
with Local Control Station



PA Series Pneumatic

Type 21 Ball Valves

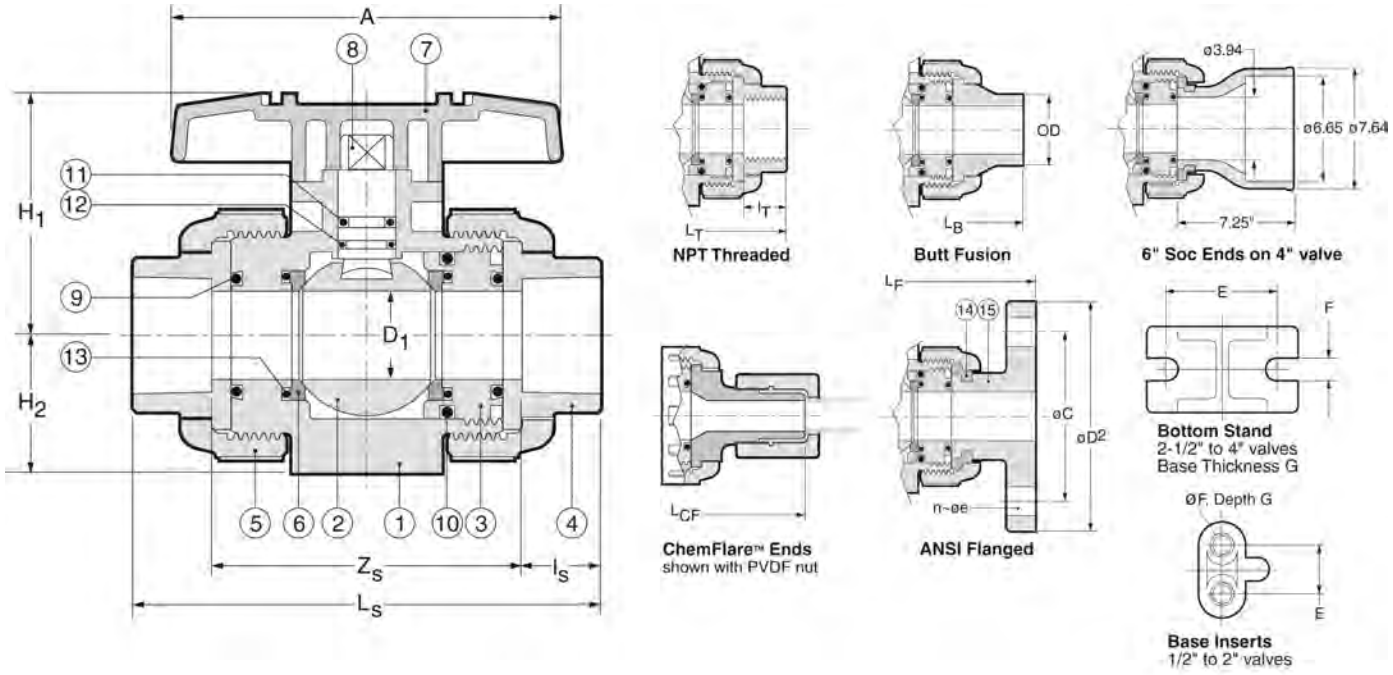

PARTS

▲ Recommended Spare Parts

No.	Part	Pcs.	Materials
1	Body	1	PVC, CPVC, PP, PVDF
2	Ball	1	PVC, CPVC, PP, PVDF
3	Carrier[1]	1/2	PVC, CPVC, PP, PVDF
4	End Connector	2	PVC, CPVC, PP, PVDF
5	Union Nut	2	PVC, CPVC, PP, PVDF
6▲	Ball Seat	2	PTFE
7	Handle	1	ABS

[1] 1 carrier for sizes 1/2" to 2", 2 carriers for sizes 2-1/2" to 4"
[2] EPDM seals standard with PVC, CPVC, PP; FKM (Viton®) with PVDF valves
[3] 2 pcs 1/2" to 2", 6 pcs 2-1/2" to 4"

PARTS

▲ Recommended Spare Parts

No.	Part	Pcs.	Materials
8	Stem	1	PVC, CPVC, PP, PVDF
9▲	Face O-Ring[2]	2	EPDM, FKM (Viton®)
10▲	Carrier O-Ring[2]	2	EPDM, FKM (Viton®)
11▲	Upper Thicker Stem O-Ring[2]	1	EPDM, FKM (Viton®)
12▲	Lower Thinner Stem O-Ring[2]	1	EPDM, FKM (Viton®)
13	Seat Cushion[2]	2	EPDM, FKM (Viton®)
14	Flange Retainer[3]	2/6	PVDF
15	Flange	2	PVC, CPVC, PP, PVDF

DIMENSIONS INCHES

					End Connections																
	D				Socket			Threaded		Factory Flanged					Butt		ChemFlare™		Valve Base		
Size	Bore	A	H_1	H_2	L_S	Z_S	l_S	l_T	L_T	L_F	D_2	C	n	e	L_B	OD	L_{CF}	Tube[4]	E	F[5]	G
1/2"	.59	3.6	2.03	1.14	4.45	2.70	.875	.64	4.02	5.63	3.50	2.38	4	.62	4.88	.79	6.12	1/2"	.75	.29	.43
3/4"	.79	3.9	2.34	1.38	5.08	3.08	1.00	.65	4.72	6.77	3.88	2.75	4	.62	5.67	.98	6.52	3/4"	.75	.29	.43
1"	.98	4.3	2.68	1.54	5.75	3.50	1.13	.81	5.16	7.36	4.25	3.12	4	.62	6.06	1.26	7.26	1"	.75	.29	.43
1-1/4"	1.22	4.8	3.17	1.85	6.46	5.21	1.25	.85	5.91	7.48	4.62	3.50	4	.62	6.85	1.57	9.58	1-1/4"	1.18	.35	.59
1-1/2"	1.57	5.2	3.50	2.17	7.24	4.49	1.38	.85	6.42	8.35	5.00	3.88	4	.62	7.64	1.97	–	–	1.18	.35	.59
2"	2.01	6.3	4.02	2.60	8.23	5.23	1.50	1.90	7.76	9.21	6.00	4.75	4	.75	8.82	2.48	–	–	1.18	.35	.59
2-1/2"	2.28	7.87	4.96	2.83	9.45	5.95	1.75	1.21	8.46	10.20	7.00	5.49	4	.75	9.72	2.95	–	–	1.89	.35	.23
3"	2.70	9.45	5.51	3.35	11.10	7.35	1.88	1.30	10.39	11.97	7.50	6.00	4	.75	11.61	3.54	–	–	2.17	.43	.28
4"	3.54	11.81	7.01	4.33	13.88	9.87	2.00	1.38	14.17	14.65	9.00	7.50	8	.75	14.76	4.33	–	–	2.56	.43	.32

[4] ChemFlare™ ends are available for reduced tube sizes down to 1/4".
[5] Optional threaded inserts: 1/2" to 1" valves – UNC 1/4"-20; 1-1/4" to 2" valves – UNC 5/16"-18. 'Recoil' brand inserts require drilling before insertion.

Type 21 Ball Valves

WORKING PRESSURES PSI, Water, Non-Shock

VACUUM RATING • 29.9 inches mercury

Size	PVC			CPVC						PP			PVDF				
	20°C 68°F	40°C 104°F	50°C 122°F	20°C 68°F	40°C 104°F	50°C 122°F	60°C 140°F	80°C 176°F	90°C 194°F	20°C 68°F	60°C 140°F	80°C 176°F	20°C 68°F	40°C 104°F	60°C 140°F	80°C 176°F	100°C 212°F
1/2"– 2"	230	165	150	230	165	150	120	75	55	150	85	55	230	185	150	110	85
2-1/2"– 4"	150	150	150	150	150	150	120	75	55	150	70	40	150	150	150	110	85

Temperature Ranges: PVC 0 to 60°C (32 to 140°F), **CPVC** 0 to 95°C (32 to 203°F), **PP** –20 to 80°C (–4 to 176°F), **PVDF** –40 to 100°C (–40 to 212°F)

WEIGHTS LB. THREADED or SOCKET

WEIGHTS LB. FLANGED

Size	PVC	CPVC	PP	PVDF	PVC	CPVC	PP	PVDF
1/2"	0.4	0.4	0.4	0.4	0.9	0.9	0.7	1.1
3/4"	0.7	0.7	0.7	0.9	1.3	1.5	1.1	1.5
1"	0.9	1.1	0.9	1.1	1.8	2.0	1.5	2.2
1-1/4"	1.5	1.5	1.3	1.8	2.6	2.9	2.0	3.3
1-1/2"	2.4	2.6	1.5	2.9	3.7	4.0	2.6	4.4
2"	4.0	4.4	2.6	4.9	5.5	6.0	4.0	8.2
2-1/2"	5.1	5.5	3.7	6.2	7.3	7.7	5.3	8.8
3"	8.2	8.8	5.5	9.9	10.1	11.0	7.5	12.6
4"	19.4	21.8	13.2	24.9	21.6	23.4	15.4	26.7

Cv VALUES VS. BALL ANGLE

Size	0%	25%	50%	75%	100%
1/2"	0	0.35	1.3	5.5	14.
3/4"	0	0.73	2.8	11.5	29.
1"	0	1.2	4.5	18.6	47.
1-1/4"	0	1.8	6.8	28.4	72.
1-1/2"	0	3.9	14.7	61.2	155.
2"	0	4.8	18.0	75.0	190.
2-1/2"	0	9.1	34.7	144.0	365.
3"	0	10.2	39.0	162.0	410.
4"	0	17.0	64.6	269.0	680.

SAMPLE SPECIFICATION

1. All True Union Ball Valves in PVC, CPVC, PP or PVDF shall be Chemline Type 21 or equal sizes 1/2" to 2" in PVC, CPVC, and PVDF rated at 230 psi and in PP 150 psi maximum working pressure. Sizes 2-1/2", 3" and 4" rated at 150 psi maximum working pressure with EPDM, FKM (Viton®) or CPE seals. Ball seats shall be PTFE with elastomer cushions for closure with minimum stem torques.
2. All valves will have Safety Shear stem design, blowout-proof with double o-rings for safety. The top o-ring groove shall be deeper so that if the stem breaks off under excessive torque the lower o-ring will remain intact and the valve will hold pressure.
3. All valves shall be full port and two-way blocking design.
4. All valves will be CRN (Canadian Registration Number) registered with TSSA.
5. PVC valves with EPDM or FKM (Viton®) seals shall be certified under NSF/ANSI Standard 61 for contact with drinking water.
6. All valves shall have chemical resistant labels permanently marked with manufacturing number to provide production level traceability.
7. PVC compound shall have an ASTM cell classification 12454-A with a minimum suffix "A" designation for chemical resistance as per ASTM D-1784 (CSA report LO 4000-172).
8. CPVC compound shall have an ASTM cell classification 23567-A with a minimum suffix "A" designation for chemical resistance as per ASTM D-1784.
9. PP material will conform to ASTM D-4101 PP 021 B 67272 material requirements.
10. PVDF material shall be unpigmented conforming to ASTM D-3222 material requirements and to be USDA Title 21 Chapter 1 Part 177. 2510 requirements for contact with food.
11. Socket ends in PVC and CPVC shall be Schedule 80 and conform to ASTM D-2467.
12. Threaded ends shall be Schedule 80 and conform to ASTM D-2464.
13. Butt fusion ends in PP or PVDF will be compatible with Chemline PP or PVDF metric piping systems.
14. Flanged ends shall be ANSI Class 150 one-piece factory moulded (not fabricated) to ensure maximum strength and close tolerance end to end dimensions.

ORDERING EXAMPLE

Chemline True Union Ball Valves	21	A	020	E	S
Body Material	**A** – PVC **B** – PP	**C** – CPVC **K** – PVDF			
Size[1]	**002** – 1/4" **010** – 1" **025** – 2-1/2"	**003** – 3/8" **012** – 1-1/4" **030** – 3"	**005** – 1/2" **015** – 1-1/2" **040** – 4"	**007** – 3/4" **020** – 2" **060** – 6"	
Seals	**E** – EPDM	**V** – FKM (Viton®)	**C** – CPE	**B** – Nitrile	**A** – Aflas®
Ends	**S** – Socket	**T** – Threaded	**F** – Flanged	**B** – Butt[2]	**CF** – ChemFlare™

Example: Chemline Type 21 True Union Ball Valve, PVC, 2", with EPDM seals, socket ends.

[1] 1/4" is normally the 3/8" valve reduced. 6" is 4" valve with 6" end connections.

[2] PP, PVDF and ECTFE (Halar®) metric butt fusion ends (1/2" to 4") connect to Chemline PP, PVDF and ECTFE (Halar®) piping systems.

OTHER OPTIONS & ACCESSORIES

- **Alternate O-Ring Seals**
- **Stem Extensions** made to any length
- **Limit Switches** – For open and/or closed position indication
- **Municipal Operating Nut**
- **Lubrication-free Valves** – Factory clean room assembled
- **Vented Ball** – For sodium hypochlorite applications

CHEMLINE PLASTICS
SUPERIOR FLOW SOLUTIONS

55 Guardsman Road, Thornhill, ON, L3T 6L2, Canada | ISO 9001:2008 Certified
tel.905.889.7890 | fax.905.889.8553 | request@chemline.com | chemline.com

CS-301-501 : Identification sheet

VWTC PROJECT NUMBER:	Iqaluit WWTP	REV:	01
PROJECT NAME:	5000218036	SUBMITTED TO (COMPANY):	
ENGINEER:	G. HÉBERT	SUBMITTED TO (RESPONSIBLE)	
PROJECT MANAGER:	C. BEKAERT	PROJECT NUM REFERENCE.:	
PHONE NUMBER:		LOT NUMBER:	

SUPPLIER	EQPT CODE	EQPT TAG NO	DIA	DESCRIPTION	INFO 1	INFO 2	INFO 3	APPLIC.	NOTE	REV
CHEMLINE	VABLPV346917	BV-04-916	DIA: 13 mm (1/2")	HP-500 VALVE	TYPE: BALL VALVE//MANUFACTURER : CHEMLINE//MODEL : SM2-A-005-E-S//CONNECTION TYPE : SOCKET | 13 mm (1/2")//BODY : PVC (ASTM D1784)// SEAL | SEAT : | EPDM// STEM : N/A			HP-500		1
CHEMLINE	VABLPV346917	BV-04-917	DIA: 13 mm (1/2")	HP-500 VALVE	TYPE: BALL VALVE//MANUFACTURER : CHEMLINE//MODEL : SM2-A-005-E-S//CONNECTION TYPE : SOCKET | 13 mm (1/2")//BODY : PVC (ASTM D1784)// SEAL | SEAT : | EPDM// STEM : N/A			HP-500		1

PDF Published October 18, 2017

Metering Ball Valves

CHEMLINE PLASTICS
SUPERIOR FLOW SOLUTIONS

Chemline SM Series Metering Ball Valve is designed for fine linear flow control of chemicals or clean fluids. The ball is solid with graduated V-groove cut on the outside surface. Precise linear flow control is accomplished through 180° rotation of the handle. With a positioning electric actuator, this becomes an inexpensive control valve. If higher C_V values are required, refer to SP Series Proportional ball valves.

PVC PP

SERIES: SM2
SIZES: 1/2" – 1"
ENDS: Threaded, Socket, Butt[1] or ChemFlare™ [2]
SEATS: PTFE
O-RINGS: EPDM, FPM (Viton®)





Integral 180° Scale with 5° Increments
- Linear flow control and settable flow rates

features

Precise Linear Flow Control
- Provided by a special V-groove ball and wide handle travel (0° to 180°)

Full Size Range
- 6 valves sizes 1/2" to 2" offers a large selection of C_V values

High End Ball Valve Features
- Full Blocking design
- Double Stem O-Rings for safety
- PTFE seats with elastomer cushion
  - Automatically compensates for seat wear or expansion
- 230 psi pressure rated (PVC)

Low Stem Torques
- Due to floating ball design and cushioned PTFE seats

Bidirectional
- Works with flow in either direction

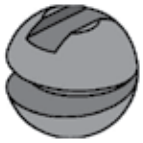

Ball Detail



[1]Butt ends for fusion to Chemline metric PP piping.
[2]For ChemFlare™ end connectors, consult Chemline.

10/17 ©Chemline Plastics Limited 2017
Chemline is a registered trade mark of Chemline Plastics Limited

Metering Ball Valves

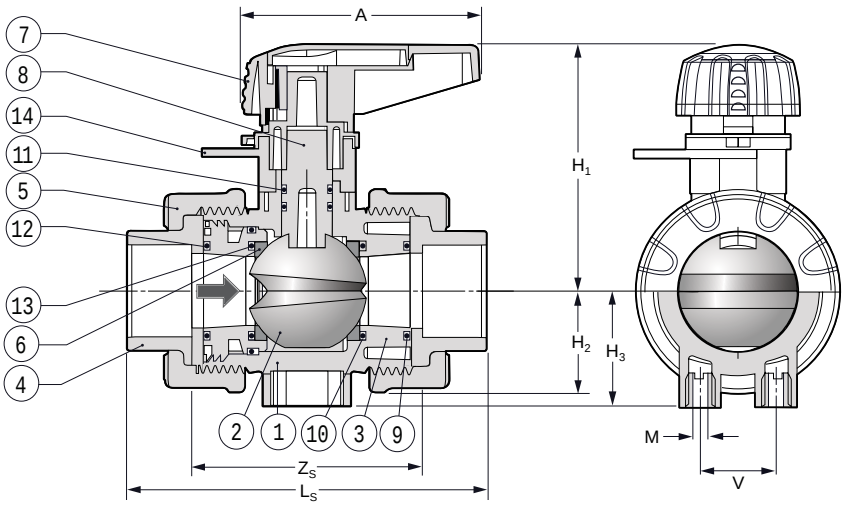

PARTS

No.	Part	Pcs.	Materials
1	Body	1	PVC, PP, PVDF
2	Ball	1	PVC, PP, PVDF
3	Carrier	1	PVC, PP, PVDF
4	End Connector	2	PVC, PP, PVDF
5	Union Nut	5	PVC, PP, PVDF
6	Ball Seat	2	PTFE
7	Handle	1	PVC
8	Stem	1	PVC, PP, PVDF
9	Carrier Face O-Ring	1	EPDM, FPM(Viton®)
10	Carrier O-Ring	1	EPDM, FPM(Viton®)
11	Stem O-Ring[1]	2	EPDM, FPM(Viton®)
12	Face O-Ring	1	EPDM, FPM(Viton®)
13	Seat Cushion[1]	2	EPDM, FPM(Viton®)
14	Position Indicator Scale	1	PVC

DIMENSIONS INCHES

							PVC			PP		
Size	A	H_1	H_3	H	M	V	Z_S	L_S	H_2	Z_S	L_S	H_2
1/2"	2.62	2.48	1.10	2.50	M5	0.98	2.48	3.74	0.99	2.64	3.74	1.06
3/4"	3.21	3.03	1.20	2.70	M5	0.98	2.83	4.33	1.16	3.03	4.29	1.18
1"	3.21	3.39	1.60	3.00	M6	1.02	3.11	4.84	1.39	3.27	4.69	1.57

ELECTRICALLY OR PNEUMATICALLY ACTUATED

The metering ball valve becomes a proportional control valve with the addition of a Q or E Series electric or P Series pneumatic actuator with 4-20 mA positioner

- Thermoplastic housing and mounting bracket
- Manual override
- Position indication
- Mechanical travel stops
- Different voltages are available



Q Series Electric



E Series Electric



P Series Pneumatic

E Series Electric Actuator on a SM2 Valve

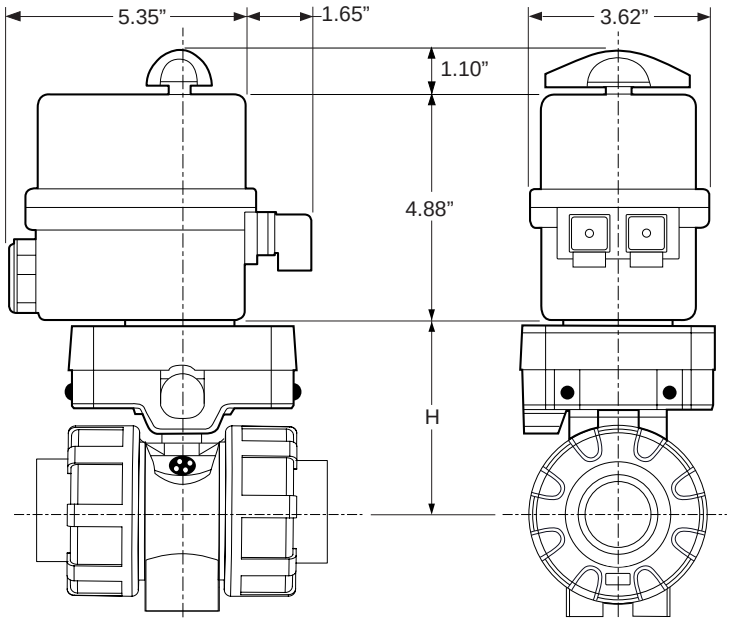

Side View

Port View

Metering Ball Valves

WORKING PRESSURES PSI — NET WEIGHTS LB. — Cv VALUES

Size	PVC 20°C 68°F	PVC 40°C 104°F	PVC 60°C 140°F	PP 20°C 68°F	PP 40°C 104°F	PP 60°C 140°F	PP 80°C 176°F	PVC	PP	USGPM Flow at 1 psi △P
1/2″	230	130	30	150	100	65	20	0.35	0.29	1.4
3/4″	230	130	30	150	100	65	20	0.60	0.44	1.9
1″	230	130	30	150	100	65	20	0.84	0.64	2.3

Temperature Ranges: PVC 0 to 60°C (32 to 140°F), PP 0 to 95°C (32 to 203°F)

Cv VALUE vs. VALVE OPENING

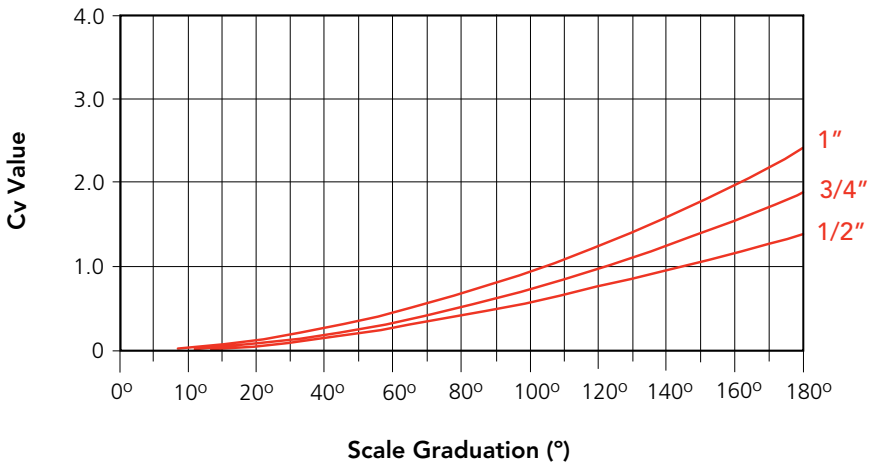

SAMPLE SPECIFICATION

1. All low flow control valves, 1/2″ to 1″, will be Chemline SM Series metering ball valves.
2. Body material will be PVC or PP, and o-rings will be EPDM or FPM (Viton®).
3. Body will be full blocking design with double stem o-rings for safety, rated at 230 psi maximum working pressure for PVC and 150 psi for PP material.
4. Ball will be floating design, molded solid with a V-groove for linear flow control over a 180° range of handle rotation.
5. Seats will be PTFE with elastomer cushions for positive closure with minimum stem torques and automatic compensation for seat wear and expansion.
6. Position indicating scale will be 0° to 180° with 5° increments for fine flow control and settable flow rates.
7. End connections will be 1/2″ to 1″ ANSI socket or FNPT threaded or 150 lb flanged or butt fusion for Chemline metric PP pipe or ChemFlare™ for PFA tubing.

ORDERING EXAMPLE

Chemline Metering Ball Valves	SM2	A	010	E	S
Valve Material	**A** – PVC	**B** – PP			
Size	**005** – 1/2″	**007** – 3/4″	**010** – 1″		
Seals	**E** – EPDM	**V** – FPM (Viton®)			
Ends	**S** – Socket	**T** – Threaded	**B** – Butt[1]	**CF** – ChemFlare™	

Example: SM2 Series Ball Valve, PVC, 1″, EPDM seals, socket ends.

[1] PP metric butt fusion ends (1/2″ to 2″) connect to Chemline PP piping systems.

VACUUM RATING

- 29.9 inches mercury

OPTIONS & ACCESSORIES

- **Reduced Ends**
- **Electric or Pneumatic Actuator with Positioner**
  – Operates as a linear control valve

55 Guardsman Road, Thornhill, ON, L3T 6L2, Canada | ISO 9001:2008 Certified
1.800.930.2436 (CHEM) | fax.905.889.8553 | request@chemline.com | chemline.com

CS-302-100 : Identification sheet

VWTC PROJECT NUMBER:	Iqaluit WWTP	REV:	01
PROJECT NAME:	5000218036	SUBMITTED TO (COMPANY):	
ENGINEER:	G. HÉBERT	SUBMITTED TO (RESPONSIBLE)	
PROJECT MANAGER:	C. BEKAERT	PROJECT NUM REFERENCE.:	
PHONE NUMBER:		LOT NUMBER:	

SUPPLIER	EQPT CODE	EQPT TAG NO	DIA	DESCRIPTION	INFO 1	INFO 2	INFO 3	APPLIC.	NOTE	REV
CHEMLINE	VANRPV200667	CV-04-918	DIA: 38 mm (1-1/2")	HP-500 VALVE	TYPE: CHECK | 150 PSI//MANUFACTURER : CHEMLINE//MODEL : BTA015EC//CONNECTION TYPE : COMBO | 1-1/2"//BODY : PVC// SEAL | SEAT :EPDM | // STEM : N/A			HP-500		1

PDF Published March 1, 2013

Ball Check & Foot Valves

CHEMLINE PLASTICS
SUPERIOR FLOW SOLUTIONS

The economical and versatile Chemline Ball Check Valve is the most popular type of non-return valves for pipe sizes under 6". A wide selection of body and seat materials, and end connections are available for many different applications. It has good flow capacity and will handle many slurry and suspended solid services. This valve works in both horizontal and vertical lines. The Foot Valve is for end of line services such as sumps.

PVC | CPVC | PP | PVDF

CRN Registered Consult Chemline

NSF[3] Certified to NSF/ANSI 61

SERIES: BT: True Union Check
BC: Single Union Check
FT: True Union Check
FV: Single Union Check

SIZES: 1/2" – 4"

ENDS: Threaded, Socket, Flanged, Butt[1] or ChemFlare™[2]

SEAT/SEALS: EPDM, FKM (Viton®), PTFE coated FKM (Viton®)

features

- **True Union to 2"**
- **Full Port to 4"**
- **NSF Certified[3]**
- **Built-in Union Design** – For easy installation and maintenance
- **Free Floating Ball** – The only moving part
- **Uniseat/Seal** – Easily removable
- **May be used either horizontally or vertically**
- **Excellent flow characteristics**
- **Low seating and opening pressures**



True Union Check
1/2" to 2" in all materials



Single Union Check
1/2" to 4" in PVC
2-1/2" to 4" in CPVC, PP and PVDF



Foot Valve is light weight and has a low profile basket

[1] PP and PVDF Butt fusion ends (available 1/2" to 2") connect to Chemline PP and PVDF piping systems.
[2] For ChemFlare™ end connectors, consult Chemline.
[3] PVC valves with EPDM or FKM (Viton®) seals are certified under NSF/ANSI Standard 61 for contact with drinking water.

03/13 ©Chemline Plastics Limited 2013
Chemline is a registered trade mark of Chemline Plastics Limited

Ball Check Valves

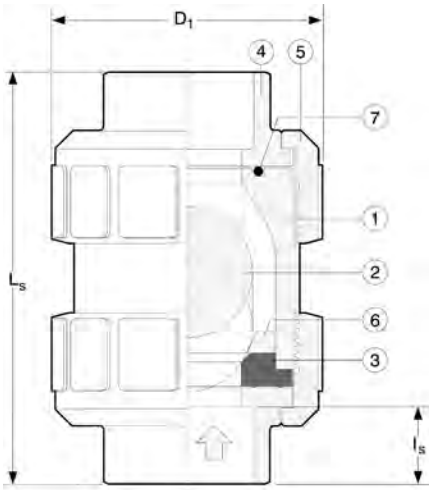

True Union Valve

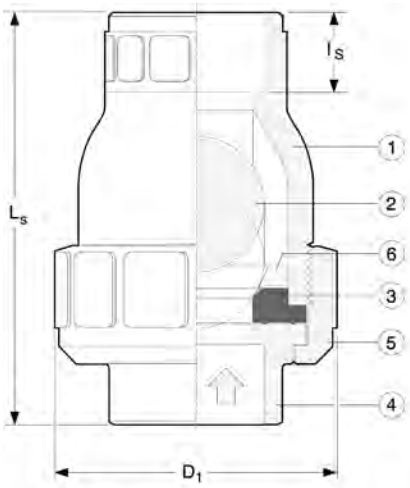

Single Union Valve

PARTS

▲ Recommended Spare Parts

No.	Part	Pcs. T/U	Pcs. S/U	Materials
1	Body	1	1	PVC, CPVC, PP, PVDF
2	Ball	1	1	PVC, CPVC, PP, PVDF
3▲	Uniseat/Seal[1]	1	1	EPDM, FKM(Viton®), PTFE coated FKM (Viton®)
4	End Connector	2	1	PVC, CPVC, PP, PVDF
5	Union Nut	2	1	PVC, CPVC, PP, PVDF
6	Stop Ring	1	1	PVC, CPVC, PP, PVDF
7	Face O-Ring	1	1	EPDM, FKM(Viton®)
9	Flange Retainer[2]	2	1	PVDF
10	Factory Flange[3]	2	1	PVC, CPVC, PP, PVDF

[1] Standard seals are EPDM in PVC, CPVC and PP valves, PTFE coated FKM (Viton®) in PVDF valves. Coating is .002" thick.

[2] True Union: 2 pcs 1/2" to 2", 6 pcs 1-1/2" to 4" Single Union: 1 pcs 1/2" to 2", 3 pcs 2-1/2" to 4".

[3] True Union flanged valves have two factory flanges. Single Union valves have one factory flange and one fabricated flange. Consult Chemline for details on fabricated type.

UNION END CONNECTIONS



NPT Threaded



Butt Fusion PP and PVDF

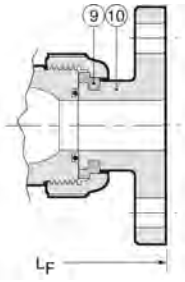

Factory Flanged

DIMENSIONS INCHES

WEIGHTS LB.

Size	D_1	I_s	I_T	True Union PVC & CPVC L_T	True Union PVC & CPVC L_S	True Union PVC & CPVC L_F	True Union PP & PVDF L_T	True Union PP & PVDF L_B	True Union PP & PVDF L_F	Single Union PVC L_T	Single Union PVC L_S	Single Union PVC L_F	True Union Socket or Butt PVC	True Union Socket or Butt CPVC	True Union Socket or Butt PP	True Union Socket or Butt PVDF	Single Union PVC
1/2"	1.9	0.69	0.59	3.4	3.4	5.1	3.4	4.0	5.1	3.2	3.4	5.6	0.3	0.3	0.2	0.3	0.2
3/4"	2.4	0.72	0.67	4.1	3.9	6.1	4.1	4.4	6.1	3.8	3.7	6.6	0.5	0.5	0.3	0.6	0.4
1"	2.8	0.88	0.79	4.5	4.4	6.5	4.5	4.8	6.5	4.2	4.3	7.3	0.7	0.8	0.4	0.9	0.6
1-1/4"	3.1	0.94	0.87	5.0	4.9	6.6	5.0	5.9	6.6	6.2	6.3	12.3	1.1	1.2	0.7	1.5	1.5
1-1/2"	3.7	1.09	0.98	5.9	5.9	7.6	5.9	5.8	7.6	5.6	5.7	9.1	1.6	1.7	1.0	2.0	1.3
2"	4.2	1.16	1.10	7.0	6.8	8.4	7.0	6.5	8.4	6.5	6.5	10.5	2.2	2.4	1.4	2.7	1.8

DIMENSIONS INCHES

WEIGHTS LB.

Size	D_1	I_s[4]	I_T	Single Union PVC & CPVC L_T	Single Union PVC & CPVC L_S	Single Union PVC & CPVC L_F	Single Union PP & PVDF L_T	Single Union PP & PVDF L_B	Single Union PP & PVDF L_F	Single Union PVC	Single Union CPVC	Single Union PP	Single Union PVDF
2-1/2"	6.0	2.10	2.17	10.0	10.4	14.3	8.7	*	*	5.7	6.2	*	*
3"	6.0	1.88	1.38	8.7	9.6	12.2	8.7	*	*	5.1	5.5	3.3	6.3
4"	8.3	2.00	1.77	12.1	12.2	15.0	12.1	*	*	12.7	13.9	8.1	15.7

[4] Consult Chemline.

Foot Valves

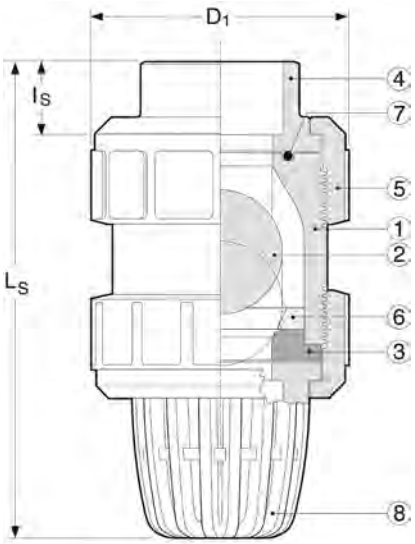

True Union Valve

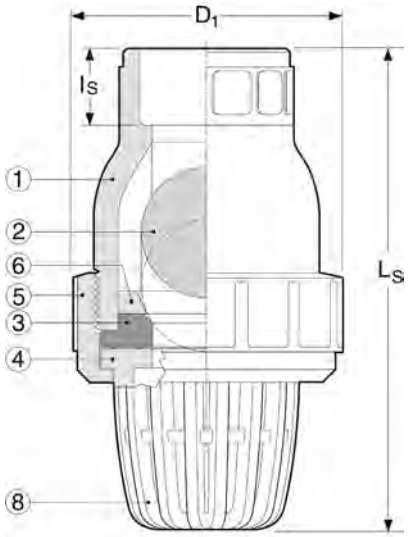

Single Union Valve

PARTS

▲ Recommended Spare Parts

No.	Part	Pcs. T/U	Pcs. S/U	Materials
1	Body	1	1	PVC, CPVC, PP, PVDF
2	Ball	1	1	PVC, CPVC, PP, PVDF
3▲	Uniseat/Seal[1]	1	1	EPDM, FKM(Viton®), PTFE coated FKM (Viton®)
4	End Connector	2	1	PVC, CPVC, PP, PVDF
5	Union Nut	2	1	PVC, CPVC, PP, PVDF
6	Stop Ring	1	1	PVC, CPVC, PP, PVDF
7	Face O-Ring	1	1	EPDM, FKM(Viton®)
8	Foot Valve Basket	1	1	PVC, CPVC, PP, PVDF
9	Flange Retainer[2]	3	0	PVDF
10	Factory Flange[3]	1	0	PVC, CPVC, PP, PVDF

[1] Standard seals are EPDM in PVC, CPVC and PP valves, PTFE coated FKM (Viton®) in PVDF valves. Coating is .002" thick.

[2] True Union: 1 pc 1/2" to 2", 3 pcs 2-1/2" to 4".

[3] True Union valves have factory flanges. Single Union have fabricated flanges. Consult Chemline for details on fabricated type.

END CONNECTIONS FOR TRUE UNION VALVE

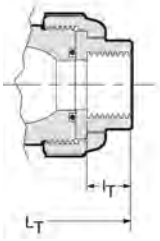

NPT Threaded



Butt Fusion
PP and PVDF

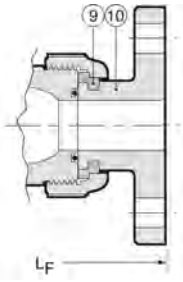

Factory Flanged

DIMENSIONS INCHES

WEIGHTS LB.

Size	D_1	I_s Soc	I_T Thd	True Union PVC & CPVC L_T	True Union PVC & CPVC L_S	True Union PVC & CPVC L_F	Single Union PVC L_T	Single Union PVC L_S	Single Union PVC L_F	Single Union PVC Socket
1/2"	1.9	0.69	0.59	2.8	2.9	3.7	3.5	3.7	4.7	0.3
3/4"	2.4	0.72	0.67	3.3	3.3	4.4	4.1	4.2	5.4	0.4
1"	2.8	0.88	0.79	3.7	3.7	4.8	4.5	4.8	6.1	0.8
1-1/4"	3.7	0.94	0.87	*	*	*	*	*	*	1.8
1-1/2"	3.7	1.09	0.98	5.4	5.4	6.3	6.8	7.0	8.5	1.7
2"	4.2	1.16	1.10	6.4	6.4	7.2	7.4	7.6	9.3	2.1
2-1/2"	6.0	2.10	2.17	–	–	–	*	*	*	7.4
3"	6.0	1.88	1.38	–	–	–	11.6	12.1	14.2	7.1
4"	8.3	2.00	1.77	–	–	–	14.7	15.0	17.4	15.7

* Consult Chemline for dimensions.

For CPVC (2-1/2" to 4"), PP and PVDF Foot Valve lengths, consult Chemline.

Ball Check & Foot Valves

WORKING PRESSURES PSI

Size	PVC	CPVC				Polypropylene			PVDF			
	0-50°C 32-122°F	0-50°C 32-122°F	60°C 140°F	80°C 176°F	90°C 194°F	–20-30°C –4-90°F	60°C 140°F	80°C 176°F	–20-60°C –4-140°F	80°C 176°F	90°C 194°F	100°C 212°F
1/2″	150	150	115	85	60	150	90	60	150	120	110	85
3/4″	150	150	115	85	60	150	90	60	150	120	110	85
1″	150	150	115	85	60	150	90	60	150	120	110	85
1-1/4″	150	150	115	85	60	150	90	60	150	120	110	85
1-1/2″	150	150	115	85	60	150	90	60	150	120	110	85
2″	150	150	115	85	60	150	90	60	150	120	110	85
2-1/2″	100	100	90	60	45	100	60	45	100	90	60	45
3″	100	100	90	60	45	100	60	45	100	90	60	45
4″	100	100	90	60	45	100	60	45	100	90	60	45

Maximum Temperatures: PVC 0 to 60°C (32 to 140°F), **CPVC** 0 to 95°C (32 to 203°F), **PP** –20 to 90°C (–4 to194°F), **PVDF** –40 to 100°C (–40 to 212°F)

MINIMUM SEATING AND OPENING PRESSURE PSI

Size	Vertical Piping		Horizontal Piping		Cv VALVES
	Open	Seating	Open	Seating	Check Valves
1/2″	0.7	2.8	0.1	2.8	6.5
3/4″	0.7	4.3	0.1	4.3	17.
1″	0.7	4.3	0.1	4.3	25.
1-1/4″	1.4	4.3	0.3	4.3	86.
1-1/2″	1.4	4.3	0.3	4.3	86.
2″	1.4	4.3	0.3	4.3	130.
2-1/2″	1.4	2.8	0.3	2.8	280.
3″	1.4	2.8	0.3	2.8	280.
4″	1.4	2.8	0.3	2.8	500.

VACUUM RATING

- 29.9 inches mercury
- Maximum recommended velocity 5 m/s

SAMPLE SPECIFICATION

All Ball Check valves in PVC, CPVC, PP or PVDF shall be Chemline BT or BC Series or equal with EPDM [FKM (Viton®) or PTFE coated FKM (Viton®)] seats and union ends. Sizes 1/2″ to 2″ shall be slip-out True Union style, sizes 2-1/2″ to 4″ shall be single union. The elastomer uniseat/seal shall function as both the ball seat and the union seal. Ball Check valves shall be rated 150 psi up to 2″ and 100 psi for sizes 2-1/2″ to 4″.

ORDERING EXAMPLE

Chemline Ball Check/Foot Valves	BT	A	020	E	S
Valve Type	**BT** – True Union Ball Check **BC** – Single Union Ball Check **FV** – Single Union Foot Valve **FT** – True Union Foot Valve				
Body Material	**A** – PVC **C** – CPVC **B** – PP **K** – PVDF				
Size	**005** – 1/2″ **007** – 3/4″ **010** – 1″ **012** – 1-1/4″ **015** – 1-1/2″ **020** – 2″ **025** – 2-1/2″ **030** – 3″ **040** – 4″				
Seals	**E** – EPDM **V** – FKM (Viton®) **T** – PTFE coated FKM (Viton®)				
Ends	**S** – Socket **T** – Threaded **F** – Flanged **B** – Butt[1] **CF** – ChemFlare™				

Example: Ball Check Valve, PVC, 2″, with EPDM seat, socket ends.

[1] PP and PVDF metric butt fusion ends (1/2″ to 2″) connect to Chemline PP and PVDF piping systems.

OPTIONS & ACCESSORIES

- **PTFE coated Uniseat/Seal**
- **Spring Loaded Ball** – Assists ball to seat faster

55 Guardsman Road, Thornhill, ON, L3T 6L2, Canada | ISO 9001:2008 Certified
tel.905.889.7890 | fax.905.889.8553 | request@chemline.com | chemline.com

CS-304-100 : Identification sheet

VWTC PROJECT NUMBER:	Iqaluit WWTP	REV:	01
PROJECT NAME:	5000218036	SUBMITTED TO (COMPANY):	
ENGINEER:	G. HÉBERT	SUBMITTED TO (RESPONSIBLE)	
PROJECT MANAGER:	C. BEKAERT	PROJECT NUM REFERENCE.:	
PHONE NUMBER:		LOT NUMBER:	

SUPPLIER	EQPT CODE	EQPT TAG NO	DIA	DESCRIPTION	INFO 1	INFO 2	INFO 3	APPLIC.	NOTE	REV
TEKNO VALVE	VASDBR308797	SV-04-914	DIA: 1"	HP-500 VALVE	TYPE: SOLENOID VALVE//MANUFACTURER : ASCO//MODEL : 8210G004-120VAC//CONNECTION TYPE : THREADED | 25 mm (1") | 25 mm (1")//BODY : BRASS// SEAL | SEAT :NBR | PA// STEM : N/A	ACTING : PILOT	NORMALLY : FERMÉ/CLOSED	HP-500		1

Features

- Wide range of pressure ratings, sizes, and resilient materials provide long service life and low internal leakage
- High flow valves for liquid, corrosive, and air/inert gas service
- Industrial applications include:
  - Car wash
  - Laundry equipment
  - Air compressors
  - Industrial water control
  - Pumps

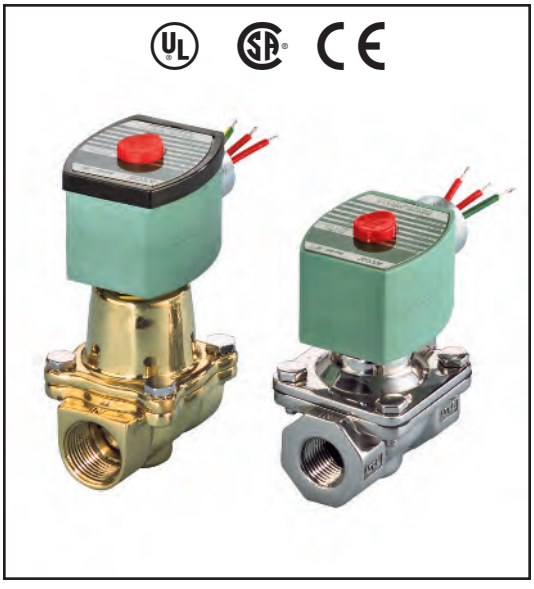

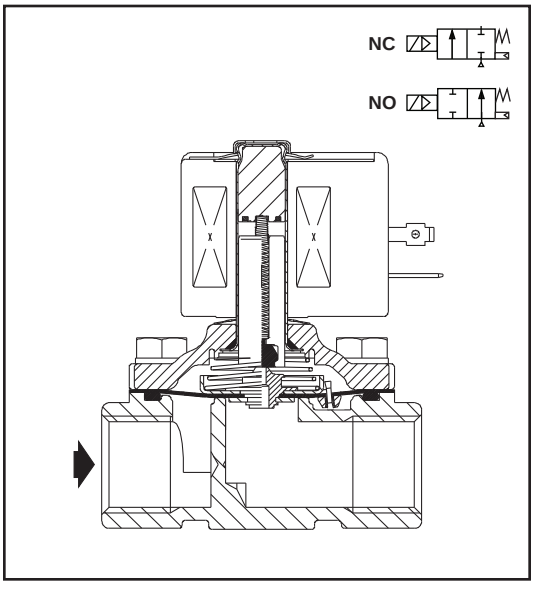

Construction

Valve Parts in Contact with Fluids		
Body	Brass	304 Stainless Steel*
Seals and Discs	NBR or PTFE	
Disc-Holder	PA	
Core Tube	305 Stainless Steel	
Core and Plugnut	430F Stainless Steel	
Springs	302 Stainless Steel	
Shading Coil	Copper	Silver

*Catalog Numbers 8210G127, 8210G129, 8210G132, 8210G133 have 316L Stainless Steel bodies.

Electrical

Standard Coil and Class of Insulation	Watt Rating and Power Consumption				Spare Coil Part Number			
		AC			General Purpose		Explosionproof	
	DC Watts	Watts	VA Holding	VA Inrush	AC	DC	AC	DC
F	-	6.1	16	40	238210	-	238214	-
F	11.6	10.1	25	70	238610	238710	238614	238714
F	16.8	16.1	35	180	272610	97617	272614	97617
F	-	17.1	40	93	238610	-	238614	-
F	-	20	43	240	99257	-	99257	-
F	-	20.1	48	240	272610	-	272614	-
F	30.8	-	-	-	-	501695	-	501696
H	40.6	-	-	-	-	238910	-	238914

Standard Voltages: 24, 120, 240, 480 volts AC, 60 Hz (or 110, 220 volts AC, 50 Hz). 6, 12, 24, 120, 240 volts DC. Must be specified when ordering.
Other voltages available when required.

Solenoid Enclosures

Standard: RedHat II - Watertight, Types 1, 2, 3, 3S, 4, and 4X; RedHat - Type I.

Optional: RedHat II - Explosionproof and Watertight, Types 3, 3S, 4, 4X, 6, 6P, 7, and 9; Red-Hat - Explosionproof and Watertight, Types 3, 4, 4X, 7, and 9.

(To order, add prefix "EF" to catalog number, except Catalog Numbers 8210B057, 8210B058, and 8210B059, which are not available with Explosionproof enclosures.)
See Optional Features Section for other available options.

Nominal Ambient Temp. Ranges

RedHat II/RedHat AC: 32°F to 125°F (0°C to 52°C)
RedHat II DC: 32°F to 104°F (0°C to 40°C)
RedHat DC: 32°F to 77°F (0°C to 25°C)
(104°F/40°C occasionally)
8210G227 AC: 32°F to 130°F (0°C to 54°C)
DC: 32°F to 90°F (0°C to 32°C)
Refer to Engineering Section for details.

Approvals

UL listed as indicated. CSA certified.
RedHat II meets applicable CE directives.
Refer to Engineering Section for details.

ATEX/IECEx certified with prefix "EV" as listed. *Refer to Optional Features Electrical Section for details.*

2/2 SERIES 8210

ASCO®

Specifications (English units)

Pipe Size (in)	Orifice Size (in)	Cv Flow Factor	Operating Pressure Differential (psi)							Max. Fluid Temp. °F		Brass Body			Stainless Steel Body			Watt Rating/ Class of Coil Insulation ⑦	
				Max. AC			Max. DC												
			Min.	Air-Inert Gas	Water	Light Oil @ 300 SSU	Air-Inert Gas	Water	Light Oil @ 300 SSU	AC	DC	Catalog Number	Const. Ref. ④	UL ⑤ Listing	Catalog Number	Const. Ref. ④	UL ⑤ Listing	AC	DC
NORMALLY CLOSED (Closed when de-energized), NBR or PTFE ② Seating																			
3/8	3/8	1.5	①	150	125	-	40	40	-	180	150	8210G073 ③	1P	●	8210G036 ③	1P	●	6.1/F	11.6/F
3/8	5/8	3	0	150	150	-	40	40	-	180	150	8210G093	5D	❍	-	-	-	10.1/F	11.6/F
3/8	5/8	3	5	200	150	135	125	100	100	180	150	8210G001 ▼	6D	❍	-	-	-	6.1/F	11.6/F
3/8	5/8	3	5	300	300	300	-	-	-	175	-	8210G006 ✓	5D	❍	-	-	-	17.1/F	-
1/2	7/16	2.2	①	150	125	-	40	40	-	180	150	8210G015 ③	2P	●	8210G037 ③	2P	●	6.1/F	11.6/F
1/2	5/8	4	0	150	150	-	40	40	-	180	150	8210G094 ✓	5D	❍	-	-	-	10.1/F	11.6/F
1/2	5/8	4	0	150	150	125	40	40	-	175	150	-	-	-	8210G087 ✓	7D	●	17.1/F	11.6/F
1/2	5/8	4	5	200	150	135	125	100	100	180	150	8210G002 ▼	6D	❍	-	-	-	6.1/F	11.6/F
1/2	5/8	4	5	300	300	300	-	-	-	175	-	8210G007	5D	❍	-	-	-	17.1/F	-
1/2	3/4	4	5	-	300	-	-	300	-	130	90	8210G227	5D	❍ †	-	-	-	17.1/F	40.6/H
3/4	5/8	4.5	0	150	150	125	40	40	-	175	150	-	-	-	8210G088 ✓	7D	●	17.1/F	11.6/F
3/4	3/4	5	5	125	125	125	100	90	75	180	150	8210G009 ▼	9D	❍	-	-	-	6.1/F	11.6/F
3/4	3/4	5	0	150	150	-	40	40	-	180	150	8210G095 ✓	8D	❍	-	-	-	10.1/F	11.6/F
3/4	3/4	6.5	5	250	150	100	125	125	125	180	150	8210G003 ▼	11D	❍	-	-	-	6.1/F	11.6/F
3/4	3/4	6	0	350	300	200	200	200	200	200	180	8210G026 ② ‡ ◆	40P/10D	●	-	-	-	16.1F	30.8/F
1	1	13	0	150	125	125	135	120	120	180	180	8210G054 ‡ ◆	41D/31D	●	8210G089 ‡ ◆	45D/15D	●	16.1/F	30.8/F
1	1	13	5	150	150	100	125	125	125	180	150	8210G004 ▼	12D	❍	-	-	-	6.1/F	11.6/F
1	1	13.5	0	300	225	115	-	-	-	200	-	8210G027 ‡	42P	●	-	-	-	20.1/F	-
1	1	13.5	10	300	300	300	-	-	-	175	-	8210G078 ②	13P	-	-	-	-	17.1/F	-
1 1/4	1 1/8	15	0	150	125	125	135	120	120	180	180	8210G055 ‡ ◆	43D/32D	●	-	-	-	16.1/F	30.8/F
1 1/4	1 1/8	15	5	150	150	100	125	125	125	180	150	8210G008 ▼	16D	❍	-	-	-	6.1/F	11.6/F
1 1/2	1 1/4	22.5	0	150	125	125	135	120	120	180	180	8210G056 ‡ ◆	44D/33D	●	-	-	-	16.1/F	30.8/F
1 1/2	1 1/4	22.5	5	150	150	100	125	125	125	180	150	8210G022 ▼	18D	●	8210G127	-	-	6.1/F	11.6/F
2	1 3/4	43	5	150	125	90	50	50	50	180	150	8210G100	20P	●	8210G129	-	-	6.1/F	11.6/F
2 1/2	1 3/4	45	5	150	125	90	50	50	50	180	150	8210G101	21P	●	-	-	-	6.1/F	11.6/F
NORMALLY OPEN (Open when de-energized), NBR Seating (PA Disc-Holder, except as noted)																			
3/8	5/8	3	0	150	150	125	125	125	80	180	150	8210G033	23D	●	-	-	-	10.1/F	11.6/F
3/8	5/8	3	5	250	200	200	250	200	200	180	180	8210G011 ⑧ ⑨	39D	●	-	-	-	10.1/F	11.6/F
1/2	5/8	4	0	150	150	125	125	125	80	180	150	8210G034 ✓	23D	●	-	-	-	10.1/F	11.6/F
1/2	5/8	3	0	150	150	100	125	125	80	180	150	-	-	-	8210G030 ✓	37D	●	10.1/F	11.6/F
1/2	5/8	4	5	250	200	200	250	200	200	180	180	8210G012 ⑧ ⑨	39D	●	-	-	-	10.1/F	11.6/F
3/4	3/4	5.5	0	150	150	125	125	125	80	180	150	8210G035 ✓	25D	●	-	-	-	10.1/F	11.6/F
3/4	5/8	3	0	150	150	100	125	125	80	180	150	-	-	-	8210G038 ✓	38D	●	10.1/F	11.6/F
3/4	3/4	6.5	5	-	-	-	250	200	200	-	180	8210C013	24D	●	-	-	-	-	16.8/F
3/4	3/4	6.5	5	250	200	200	-	-	-	180	-	8210G013	46D	●	-	-	-	16.1/F	-
1	1	13	0	125	125	125	-	-	-	180	-	8210B057 ⑥ ⑩	34D	●	-	-	-	20/F	-
1	1	13	5	-	-	-	125	125	125	-	180	8210D014	26D	●	-	-	-	-	16.8/F
1	1	13	5	150	150	125	-	-	-	180	-	8210G014	47D	●	-	-	-	16.1/F	-
1 1/4	1 1/8	15	0	125	125	125	-	-	-	180	-	8210B058 ⑥ ⑩	35D	●	-	-	-	20/F	-
1 1/4	1 1/8	15	5	-	-	-	125	125	125	-	180	8210D018	28D	●	-	-	-	-	16.8/F
1 1/4	1 1/8	15	5	150	150	125	-	-	-	180	-	8210G018	48D	●	-	-	-	16.1/F	-
1 1/2	1 1/4	22.5	0	125	125	125	-	-	-	180	-	8210B059 ⑥ ⑩	36D	●	-	-	-	20/F	-
1 1/2	1 1/4	22.5	5	-	-	-	125	125	125	-	180	8210D032	29D	●	-	-	-	-	16.8/F
1 1/2	1 1/4	22.5	5	150	150	125	-	-	-	180	-	8210G032	49D	●	8210G132	-	-	16.1/F	-
2	1 3/4	43	5	-	-	-	125	125	125	-	150	8210 103	30P	●	-	-	-	-	16.8/F
2	1 3/4	43	5	125	125	125	-	-	-	180	-	8210G103	50P	●	8210G133	-	-	16.1/F	-
2 1/2	1 3/4	45	5	-	-	-	125	125	125	-	150	8210 104	27P	●	-	-	-	-	16.8/F
2 1/2	1 3/4	45	5	125	125	125	-	-	-	180	-	8210G104	51P	●	-			16.1/F	-

① 5 psi on Air; 1 psi on Water.
② Valve provided with PTFE main disc.
③ Valve includes Ultem (G.E. trademark) piston.
④ Letter "D" denotes diaphragm construction; "P" denotes piston construction.
⑤ ❍ Safety Shutoff Valve; ● General Purpose Valve.
Refer to Engineering Section (Approvals) for details.
⑥ Valves not available with Explosionproof enclosures.
⑦ On 50 hertz service, the watt rating for the 6.1/F solenoid is 8.1 watts.
⑧ AC construction also has PA seating.
⑨ No disc-holder.
⑩ Stainless steel disc-holder.
† UL listed for fire protection systems per UL429A.
‡ DC constructions must have solenoid mounted vertical and upright.
✓ ATEX/IECEx certified with prefix "EV".
▼ ATEX/IECEx certified for DC only with prefix "EV".
◆ Not available in 6 Volt DC. EF and HB prefix only.

Specifications (Metric units)

Pipe Size (in)	Orifice Size (mm)	Kv Flow Factor (m^3/hr)	Operating Pressure Differential (bar)							Max. Fluid Temp. °C		Brass Body			Stainless Steel Body			Watt Rating/ Class of Coil Insulation ⑦	
				Max. AC			Max. DC												
			Min.	Air-Inert Gas	Water	Light Oil @ 300 SSU	Air-Inert Gas	Water	Light Oil @ 300 SSU	AC	DC	Catalog Number	Const. Ref. ④	UL ⑤ Listing	Catalog Number	Const. Ref. ④	UL ⑤ Listing	AC	DC
NORMALLY CLOSED (Closed when de-energized), NBR or PTFE ② Seating																			
3/8	10	1.3	①	10	9	-	3	3	-	82	65	8210G073 ③	1P	●	8210G036 ③	1P	●	6.1/F	11.6/F
3/8	16	2.6	0	10	10	-	3	3	-	82	65	8210G093	5D	❍	-	-	-	10.1/F	11.6/F
3/8	16	2.6	0.3	14	10	9	9	7	7	82	65	8210G001 ▼	6D	❍	-	-	-	6.1/F	11.6/F
3/8	16	2.6	0.3	21	21	21	-	-	-	79	-	8210G006 ✓	5D	❍	-	-	-	17.1/F	-
1/2	11	1.9	①	10	9	-	3	3	-	82	65	8210G015 ③	2P	●	8210G037 ③	2P	●	6.1/F	11.6/F
1/2	16	3.4	0	10	10	-	3	3	-	82	65	8210G094 ✓	5D	❍	-	-	-	10.1/F	11.6/F
1/2	16	3.4	0	10	10	9	3	3	-	79	65	-	-	-	8210G087 ✓	7D	●	17.1/F	11.6/F
1/2	16	3.4	0.3	14	10	9	9	7	7	82	65	8210G002 ▼	6D	❍	-	-	-	6.1/F	11.6/F
1/2	16	3.4	0.3	21	21	21	-	-	-	79	-	8210G007	5D	❍	-	-	-	17.1/F	-
1/2	19	3.4	0.3	-	21	-	-	21	-	54	32	8210G227	5D	❍ †	-	-	-	17.1/F	40.6H
3/4	16	3.9	0	10	10	9	3	3	-	79	65	-	-	-	8210G088 ✓	7D	●	17.1/F	11.6/F
3/4	19	4.3	0.3	9	9	9	7	6	5	82	65	8210G009 ▼	9D	❍	-	-	-	6.1/F	11.6/F
3/4	19	4.3	0	10	10	-	3	3	-	82	65	8210G095 ✓	8D	❍	-	-	-	10.1/F	11.6/F
3/4	19	5.6	0.3	17	10	7	9	9	9	82	65	8210G003 ▼	11D	❍	-	-	-	6.1/F	11.6/F
3/4	19	5.1	0	24	21	14	14	14	14	93	82	8210G026 ② ‡ ◆	40P/10D	●	-	-	-	16.1F	30.8/F
1	25	11	0	10	9	9	9	8	8	82	82	8210G054 ‡ ◆	41D/31D	●	8210G089 ‡ ◆	45D/15D	●	16.1/F	30.8/F
1	25	11	0.3	10	10	7	9	9	9	82	65	8210G004 ▼	12D	❍	-	-	-	6.1/F	11.6/F
1	25	11.5	0	21	16	8	-	-	-	93	-	8210G027 ‡	42P	●	-	-	-	20.1/F	-
1	25	11.5	0.7	21	21	21	-	-	-	79	-	8210G078 ②	13P	-	-	-	-	17.1/F	-
1 1/4	29	13	0	10	9	9	9	8	8	82	82	8210G055 ‡ ◆	43D/32D	●	-	-	-	16.1/F	30.8/F
1 1/4	29	13	0.3	10	10	7	9	9	9	82	65	8210G008 ▼	16D	❍	-	-	-	6.1/F	11.6/F
1 1/2	32	19.5	0	10	9	9	9	8	8	82	82	8210G056 ‡ ◆	44D/33D	●	-	-	-	16.1/F	30.8/F
1 1/2	32	19.5	0.3	10	10	7	9	9	9	82	65	8210G022 ▼	18D	●	8210G127	-	-	6.1/F	11.6/F
2	44	37	0.3	10	9	6	3	3	3	82	65	8210G100	20P	●	8210G129	-	-	6.1/F	11.6/F
2 1/2	44	39	0.3	10	9	6	3	3	3	82	65	8210G101	21P	●	-	-	-	6.1/F	11.6/F
NORMALLY OPEN (Open when de-energized), NBR Seating (PA Disc-Holder, except as noted)																			
3/8	16	2.6	0.0	10	10	9	9	9	6	82	65	8210G033	23D	●	-	-	-	10.1/F	11.6/F
3/8	16	2.6	0.3	17	14	14	17	14	14	82	82	8210G011 ⑧ ⑨	39D	●	-	-	-	10.1/F	11.6/F
1/2	16	3.4	0	10	10	9	9	9	6	82	65	8210G087 ✓	7D	●	-	-	-	10.1/F	11.6/F
1/2	16	2.6	0	10	10	7	9	9	6	82	65	-	-	-	8210G087 ✓	7D	●	10.1/F	11.6/F
1/2	16	3.4	0.3	17	14	14	17	14	14	82	82	8210G012 ⑧ ⑨	39D	●	-	-	-	10.1/F	11.6/F
3/4	19	4.7	0	10	10	9	9	9	6	82	65	8210G087 ✓	7D	●	-	-	-	10.1/F	11.6/F
3/4	16	2.6	0	10	10	7	9	9	6	82	65	-	-	-	8210G087 ✓	7D	●	10.1/F	11.6/F
3/4	19	5.6	0.3	-	-	-	17	14	14	-	82	8210C013	24D	●	-	-	-	-	16.8/F
3/4	19	5.6	0.3	17	14	14	-	-	-	82	-	8210G013	46D	●	-	-	-	16.1/F	-
1	25	11	0	9	9	9	-	-	-	82	-	8210B057 ⑥ ⑩	34D	●	-	-	-	20/F	-
1	25	11	0.3	-	-	-	9	9	9	-	82	8210D014	26D	●	-	-	-	-	16.8/F
1	25	11	0.3	10	10	9	-	-	-	82	-	8210G014	47D	●	-	-	-	16.1/F	-
1 1/4	29	13	0	9	9	9	-	-	-	82	-	8210B058 ⑥ ⑩	35D	●	-	-	-	20/F	-
1 1/4	29	13	0.3	-	-	-	9	9	9	-	82	8210D018	28D	●	-	-	-	-	16.8/F
1 1/4	29	13	0.3	10	10	9	-	-	-	82	-	8210G018	48D	●	-	-	-	16.1/F	-
1 1/2	32	19.5	0	9	9	9	-	-	-	82	-	8210B059 ⑥ ⑩	36D	●	-	-	-	20/F	-
1 1/2	32	19.5	0.3	-	-	-	9	9	9	-	82	8210D032	29D	●	-	-	-	-	16.8/F
1 1/2	32	19.5	0.3	10	10	9	-	-	-	82	-	8210G032	49D	●	8210G132	-	-	16.1/F	-
2	44	37	0.3	-	-	-	9	9	9	-	65	8210 103	30P	●	-	-	-	-	16.8/F
2	44	37	0.3	9	9	9	-	-	-	82	-	8210G103	50P	●	8210G133	-	-	16.1/F	-
2 1/2	44	39	0.3	-	-	-	9	9	9	-	65	8210 104	27P	●	-	-	-	-	16.8/F
2 1/2	44	39	0.3	9	9	9	-	-	-	82	-	8210G104	51P	●	-	-	-	16.1/F	-

① 0.3 bar on Air; 0.0 bar on Water.
② Valve provided with PTFE main disc.
③ Valve includes ULtem (G.E. trademark) piston.
④ Letter "D" denotes diaphragm construction; "P" denotes piston construction.
⑤ ❍ Safety Shutoff Valve; ● General Purpose Valve.
Refer to Engineering Section (Approvals) for details.
⑥ Valves not available with Explosionproof enclosures.
⑦ On 50 hertz service, the watt rating for the 6.1/F solenoid is 8.1 watts.
⑧ AC construction also has PA seating.
⑨ No disc-holder.
⑩ Stainless steel disc-holder.
† UL listed for fire protection systems per UL429A.
‡ DC constructions must have solenoid mounted vertical and upright.
✓ ATEX/IECEx certified with prefix "EV".
▼ ATEX/IECEx certified for DC only with prefix "EV".
◆ Not available in 6 Volt DC. EF and HB prefix only.

Dimensions: inches (mm)

Const. Ref.		H	K	L	P	W
1*	in	3.85	3.00	1.91	3.41	1.69
	mm	98	76	49	87	43
2*	in	4.17	3.25	2.28	3.63	1.69
	mm	106	83	58	92	43
5	in	3.84	2.31	2.75	3.28	2.28
	mm	98	59	70	83	58
6*	in	3.38	1.94	2.75	2.80	2.28
	mm	86	49	70	71	58
7	in	4.19	2.50	2.81	3.47	2.39
	mm	106	64	71	88	61
8	in	4.13	2.47	2.81	3.44	2.29
	mm	105	63	71	87	58
9*	in	3.66	2.10	2.81	2.96	2.28
	mm	93	53	71	75	58
10*	in	5.20	3.40	2.80	4.50	2.50
	mm	131	86	71	114	62
11*	in	4.16	2.66	3.84	3.52	2.75
	mm	106	68	98	89	70
12	in	5.64	3.15	3.75	4.01	3.36
	mm	143	80	95	102	85
13	in	4.44	3.22	3.75	4.19	5.81
	mm	113	82	95	106	147
15*	in	5.20	3.30	3.80	4.40	3.80
	mm	133	83	98	111	98
16	in	5.64	3.15	3.66	4.01	3.56
	mm	143	80	93	102	90
18*	in	6.11	3.30	4.38	4.16	3.92
	mm	155	84	111	106	100
20*	in	7.33	3.71	5.06	4.57	4.87
	mm	186	94	129	116	124
21*	in	7.33	3.71	5.50	4.57	4.87
	mm	186	94	140	116	124
23	in	4.35	2.65	2.75	3.79	2.28
	mm	110	67	70	96	58
24	in	5.06	X	3.78	4.44	2.75
	mm	129	X	96	113	70
25	in	4.64	2.81	2.81	3.94	2.28
	mm	118	71	71	100	58
26	in	6.53	X	3.75	4.91	3.19
	mm	166	X	95	125	81
27	in	8.22	X	5.50	5.47	4.87
	mm	209	X	140	139	124
28	in	6.53	X	3.66	4.91	3.19
	mm	166	X	93	125	81
29	in	7.03	X	4.38	5.06	4.40
	mm	179	X	111	129	112

* DC dimensions slightly larger.
IMPORTANT: Valves may be mounted in any position, except as noted in specifications table.

Const. Ref. 1, 2

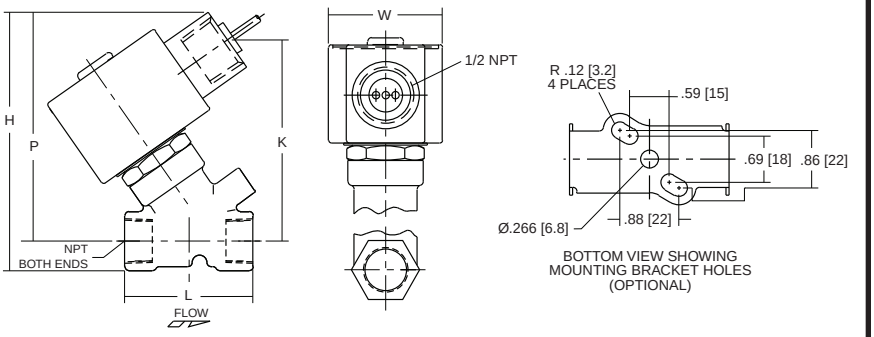

Const. Ref. 13

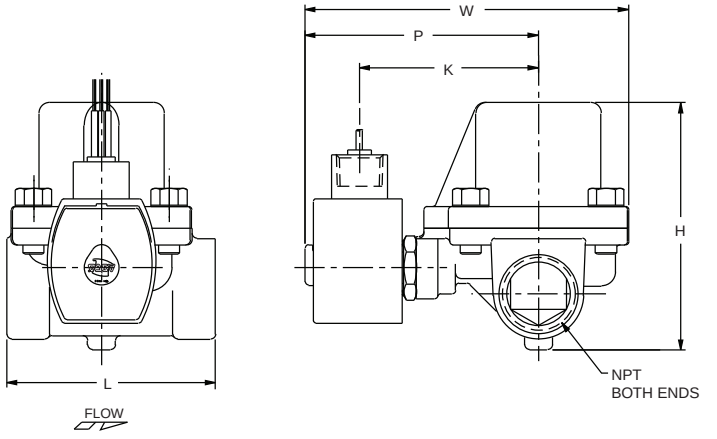

Const. Ref. 5-9, 11, 23 , 25, 37,38, 40-46

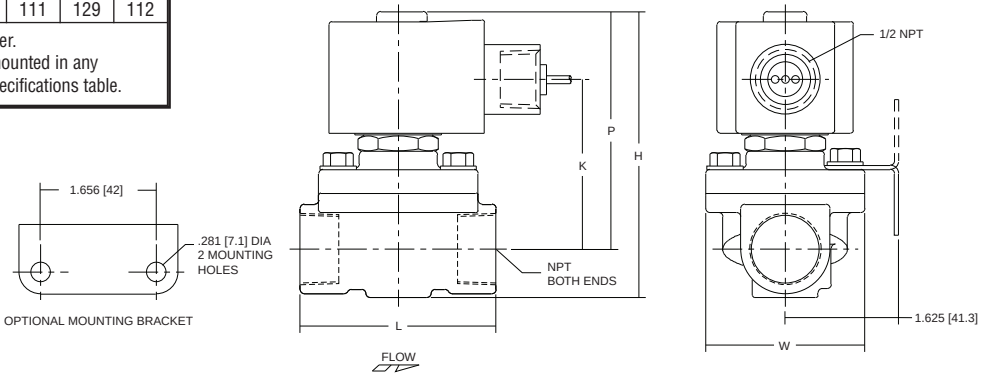

Dimensions: inches (mm)

Const. Ref.		H	K	L	P	W
30	in	8.22	X	5.06	5.47	4.87
	mm	209	X	129	139	124
31	in	5.13	3.19	3.76	4.32	3.27
	mm	130	81	95	110	83
32	in	5.60	3.44	3.66	4.57	3.27
	mm	142	87	93	116	83
33	in	5.92	3.66	4.51	4.80	3.89
	mm	150	93	115	122	99
34	in	6.91	X	3.75	6.09	3.25
	mm	176	X	95	155	83
35	in	7.34	X	3.66	6.34	3.25
	mm	186	X	93	161	83
36	in	7.66	X	4.38	6.56	3.91
	mm	1.95	X	111	167	99
37	in	4.61	2.75	2.81	3.89	2.39
	mm	117	70	71	99	61
38	in	4.61	2.75	2.81	3.89	2.39
	mm	117	70	71	99	61
39	in	5.42	2.31	2.75	4.86	3.80
	mm	138	59	70	123	97
40	in	5.20	3.29	2.81	4.50	2.28
	mm	132	83	71	114	58
41	in	5.13	3.10	3.75	4.32	3.25
	mm	130	79	95	110	83
42	in	6.43	4.40	3.93	5.62	3.25
	mm	163	112	100	143	83
43	in	5.57	3.35	3.66	4.57	3.25
	mm	142	85	93	116	83
44	in	5.90	3.57	4.38	4.79	3.91
	mm	150	91	111	122	99
45	in	5.26	3.17	3.75	4.38	3.84
	mm	134	81	95	111	98
46	in	4.95	3.10	3.84	4.31	2.75
	mm	126	79	98	110	70
47	in	6.43	3.59	3.75	4.81	3.52
	mm	163	91	95	122	90
48	in	6.43	3.59	3.66	4.81	3.73
	mm	163	91	93	122	95
49	in	6.91	3.75	4.38	4.96	4.40
	mm	176	95	111	126	112
50	in	8.13	4.15	5.06	5.37	4.87
	mm	207	105	129	136	124
51	in	8.13	4.15	5.50	5.37	5.18
	mm	207	105	140	136	132

IMPORTANT: Valves may be mounted in any position, except as noted in specifications table.

Const. Ref. 10, 15, 31, 32, 33

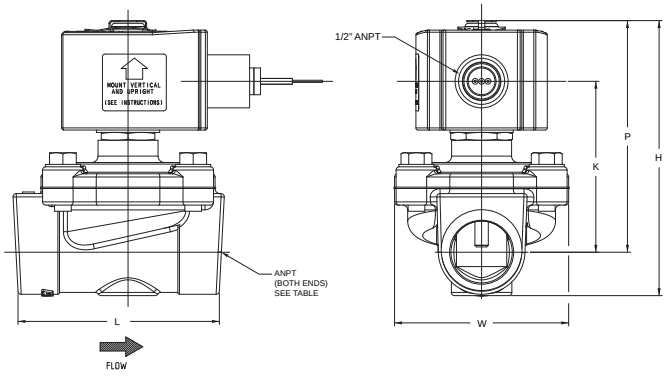

Const. Ref. 24, 34, 35, 36

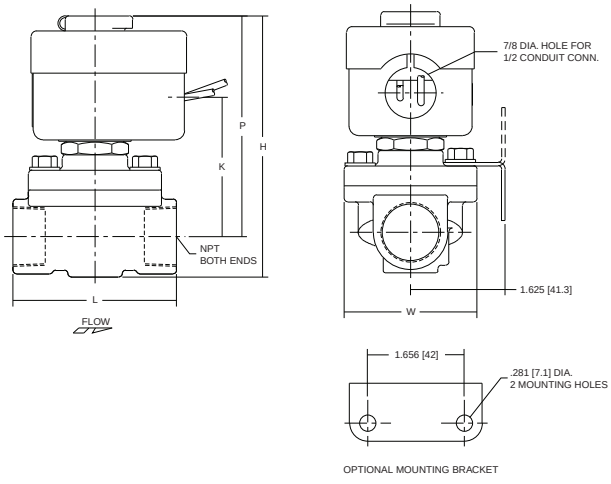

Const. Ref. 12, 16, 26, 28, 47, 48

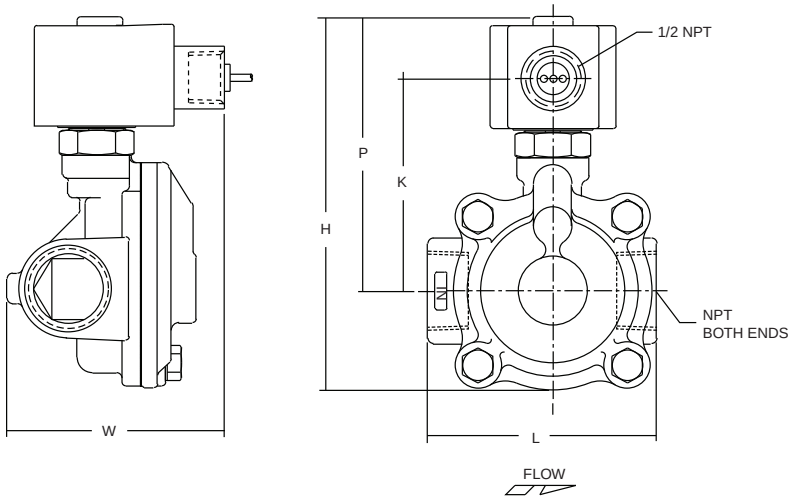

Dimensions: inches (mm)

Const. Ref. 39

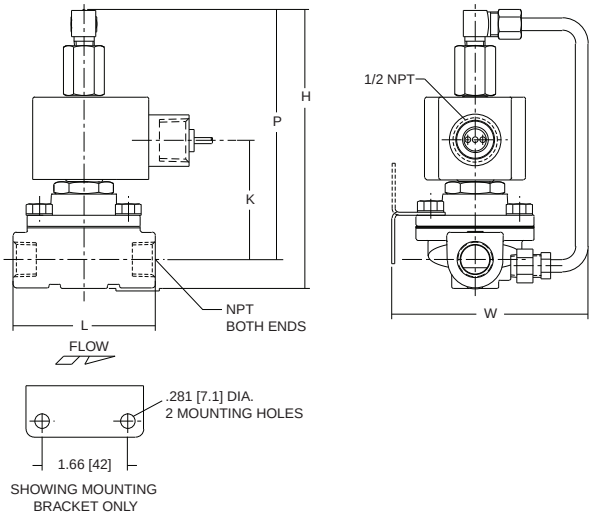

Const. Ref. 18, 29, 49

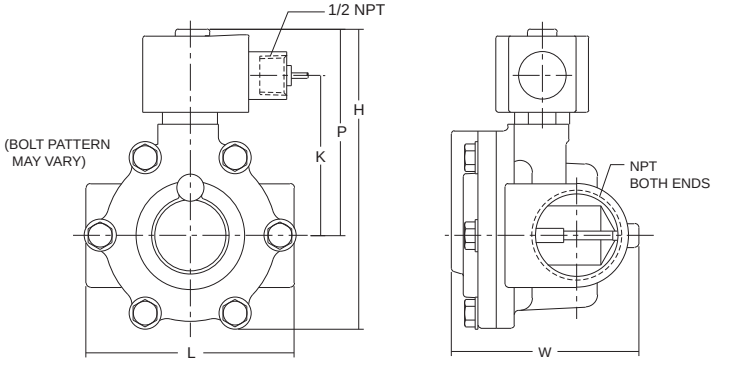

Const. Ref. 20, 21, 27, 30, 50, 51

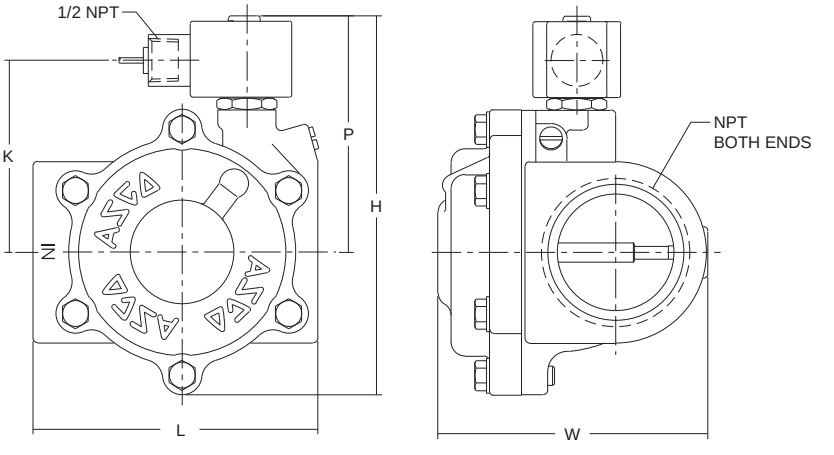

CS-304-500 : Identification sheet

VWTC PROJECT NUMBER:	Iqaluit WWTP	REV:	01
PROJECT NAME:	5000218036	SUBMITTED TO (COMPANY):	
ENGINEER:	G. HÉBERT	SUBMITTED TO (RESPONSIBLE)	
PROJECT MANAGER:	C. BEKAERT	PROJECT NUM REFERENCE.:	
PHONE NUMBER:		LOT NUMBER:	

SUPPLIER	EQPT CODE	EQPT TAG NO	DIA	DESCRIPTION	INFO 1	INFO 2	INFO 3	APPLIC.	NOTE	REV
TEKNO VALVE	VASDBR330455	SV-04-913	N/A	HP-500 VALVE	TYPE: SOLENOID VALVE//MANUFACTURER : ASCO//MODEL : 8345G001-120VAC//CONNECTION TYPE : THREADED | 6 mm (1/4") | 6 mm (1/4")//BODY : BRASS// SEAL | SEAT :NBR | // STEM : N/A	ACTING : PILOT	NORMALLY : CLOSED	HP-500		1

Features

- Compact valves for general service applications
- Low-cost, 4-way valve when low flow is sufficient
- Mountable in any position

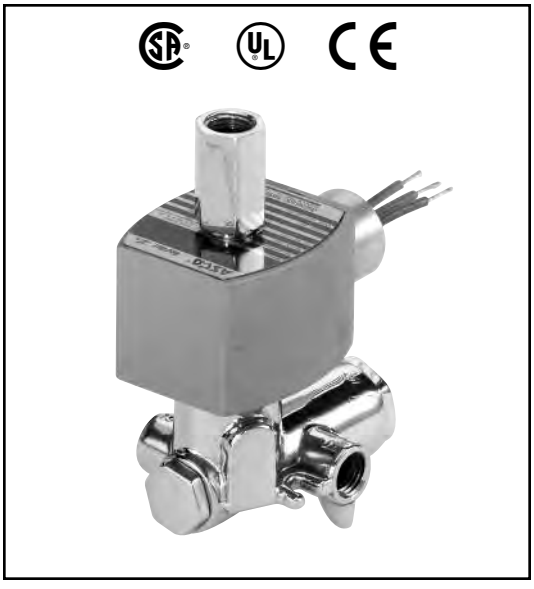

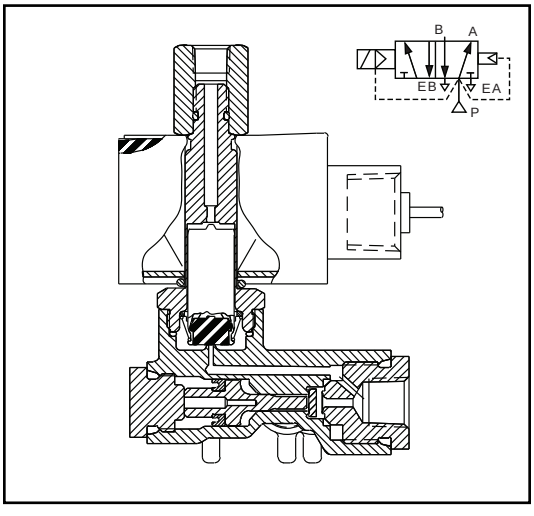

Construction

Valve Parts in Contact with Fluids		
Body	Brass	316 Stainless Steel
Seals and Disc	NBR and PA	
Core Tube	305 Stainless Steel	
Core and Plugnut	430F Stainless Steel	
Springs	302 Stainless Steel	
Shading Coil	Copper	Silver
Piston	PA	

Electrical

Standard Coil and Class of Insulation	Watt Rating and Power Consumption				Spare Coil Part Number					
		AC			General Purpose		Explosionproof (EF)		Explosionproof (EV)	
	DC Watts	Watts	VA Holding	VA Inrush	AC	DC	AC	DC	AC	DC
F	11.6	10.1	25	50	238610	238710	238614	238714	274614	274714

Standard Voltages: 24, 120, 240, 480 volts AC, 60 Hz (or 110, 220 volts AC, 50 Hz). 6, 12, 24, 120, 240 volts DC. Must be specified when ordering.
Other voltages are available when required.

Solenoid Enclosures

Standard: Watertight, Types 1, 2, 3, 3S, 4, and 4X.

Optional: Explosionproof and Watertight, Types 3, 3S, 4, 4X, 6, 6P, 7, and 9. (To order, add prefix "EF" or, for Explosionproof Stainless Steel trim and hub on Brass-Bodied valves, add "EV" to catalog number.)

See Optional Features Section for other available options.

Nominal Ambient Temp. Ranges

AC: 32˚F to 125˚F (0˚C to 52˚C)
DC: 32˚F to 104˚F (0˚C to 40˚C)

Refer to Engineering Section for details.

Approvals

CSA certified. UL listed as General Purpose Valve.
EV8345G081 solenoid only UL approved.
Meets applicable CE directives.
Refer to Engineering Section for details.

ATEX/IECEx certified with prefix "EV" as listed.
Refer to Optional Features Electrical Section for details.

Important

A Minimum Operating Pressure Differential must be maintained between the pressure and exhaust ports. Supply and exhaust piping must be full area, unrestricted. ASCO flow controls and other similar components must be installed in the cylinder lines only.

Refer to Engineering Section for details.

Specifications (English units)

Pipe Size (in)	Orifice Size (in)		Cv Flow Factor		Operating Pressure Differential (psi)							Max. Fluid Temp. ˚F		Brass Body	Stainless Steel Body		Watt Rating/ Class of Coil Insulation	
					Max. AC				Max. DC									
	Press.	Exh.	Inlet	Exh.	Min.	Air-Inert Gas	Water	Lt. Oil @ 50 SSU	Air-Inert Gas	Water	Lt. Oil @ 50 SSU	AC	DC	Catalog Number	Catalog Number	Const. Ref.	AC	DC
SINGLE SOLENOID																		
1/4	1/16	3/32	.09	.09	10	150	150	150	100	100	100	180	104	8345G001 ①	EV8345G081 ①	1	10.1/F	11.6/F
SINGLE SOLENOID AIR-ONLY CONSTRUCTION - Exhaust to Atmosphere																		
1/4	1/16	3/32	.09	.09	10	150	-	-	100	-	-	180	104	8345H003	-	1	10.1/F	11.6/F

① ATEX/IECEx certified with prefix "EV".

Specifications (Metric units)

Pipe Size (in)	Orifice Size (mm)		Kv Flow Factor (m^3/h)		Operating Pressure Differential (bar)							Max. Fluid Temp. ˚C		Brass Body	Stainless Steel Body		Watt Rating/ Class of Coil Insulation	
					Max. AC				Max. DC									
	Press.	Exh.	Inlet	Exh.	Min.	Air-Inert Gas	Water	Lt. Oil @ 50 SSU	Air-Inert Gas	Water	Lt. Oil @ 50 SSU	AC	DC	Catalog Number	Catalog Number	Const. Ref.	AC	DC
SINGLE SOLENOID																		
1/4	2	2	.08	.08	0.7	10	10	10	7	7	7	82	40	8345G001 ①	EV8345G081 ①	1	10.1/F	11.6/F
SINGLE SOLENOID AIR-ONLY CONSTRUCTION - Exhaust to Atmosphere																		
1/4	2	2	.08	.08	0.7	10	-	-	7	-	-	82	40	8345H003	-	1	10.1/F	11.6/F

① ATEX/IECEx certified with prefix "EV".

Dimensions inches (mm)

Const. Ref. 1

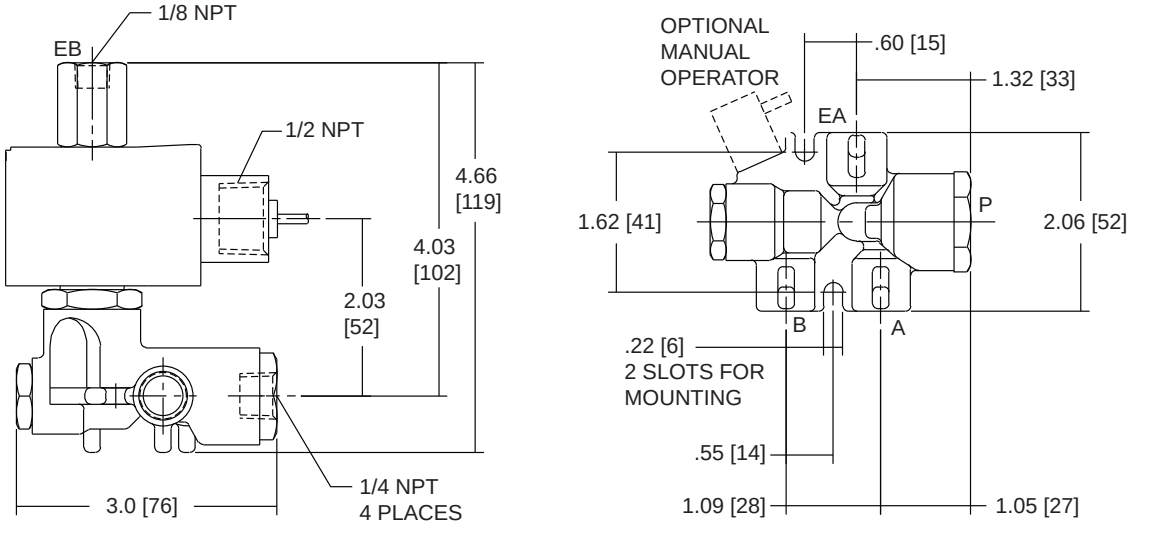

CS-405-112 : Identification sheet

VWTC PROJECT NUMBER:	Iqaluit WWTP	REV:	01
PROJECT NAME:	5000218036	SUBMITTED TO (COMPANY):	
ENGINEER:	G. HÉBERT	SUBMITTED TO (RESPONSIBLE)	
PROJECT MANAGER:	C. BEKAERT	PROJECT NUM REFERENCE.:	
PHONE NUMBER:		LOT NUMBER:	

SUPPLIER	EQPT CODE	EQPT TAG NO	DIA	DESCRIPTION	INFO 1	INFO 2	INFO 3	APPLIC.	NOTE	REV
ENDRESS & HAUSER	IEMRLE344048	LIT-04-942		HP-500 INSTRUMENT	LEVEL TRANSMITTER/MANUFACTURER : ENDRESS AND HAUSER/MODEL: PMC21-CA1V1ECVXJJ/ CA: Approval CSA GU / 1: Output 4-20mA / V: Electrical Connection Valve plug ISO4400 NPT1/2 / 1E: Sensor range 250mbar / C: Sensor range; kPa/Mpa	VXJ: Process connection: MNPT1/2 FNPT 1/4, 316L / J: Seal EPDM		HP-500		1
ENDRESS & HAUSER	IEMRLE344048	LIT-04-946		HP-500 INSTRUMENT	LEVEL TRANSMITTER/MANUFACTURER : ENDRESS AND HAUSER/MODEL: PMC21-CA1V1ECVXJJ/ CA: Approval CSA GU / 1: Output 4-20mA / V: Electrical Connection Valve plug ISO4400 NPT1/2 / 1E: Sensor range 250mbar / C: Sensor range; kPa/Mpa	VXJ: Process connection: MNPT1/2 FNPT 1/4, 316L / J: Seal EPDM		HP-500		1

Technical Information
Cerabar PMC11, PMC21, PMP11, PMP21

Process pressure measurement



Pressure transducer with ceramic and metal sensors

Application

The Cerabar is a pressure transducer for the measurement of absolute and gauge pressure in gases, vapors, liquids and dust. The Cerabar can be used internationally thanks to a wide range of approvals and process connections.

Your benefits

- High reproducibility and long-term stability
- Reference accuracy: up to 0.3%
- Customized measuring ranges
  - Turn down up to 5:1
  - Sensor for measuring ranges up to 400 bar (6 000 psi)
- Housing and process isolating diaphragm made of 316L

Endress+Hauser
People for Process Automation

Table of contents

Document information 4
Document function 4
Symbols used 4
Documentation 5
Terms and abbreviations 6
Turn down calculation 7

Function and system design 8
Measuring principle - process pressure measurement 8
Measuring system 8
Device features 9
Product design 11
System integration 11

Input 12
Measured variable 12
Measuring range 12

Output 15
Output signal 15
Signal range 4 to 20 mA 15
Load (for 4 to 20 mA devices) 15
Load resistance (for 0 to 10 V devices) 15
Signal on alarm 4 to 20 mA 15
Dead time, time constant 15
Dynamic behavior 16

Power supply 17
Terminal assignment 17
Supply voltage 17
Current consumption and alarm signal 17
Power supply fault 18
Electrical connection 18
Cable specification 18
Residual ripple 18
Influence of power supply 18
Overvoltage protection 18

Performance characteristics of ceramic process isolating diaphragm 19
Reference operating conditions 19
Measuring uncertainty for small absolute pressure measuring ranges 19
Influence of the installation position 19
Resolution 19
Reference accuracy 19
Thermal change of the zero output and the output span . . . 19
Long-term stability 20
Switch-on time 20

Performance characteristics of metallic process isolating diaphragm 21
Reference operating conditions 21
Measuring uncertainty for small absolute pressure measuring ranges 21
Influence of the installation position 21
Resolution 21
Reference accuracy 21
Thermal change of the zero output and the output span . . . 21
Long-term stability 21
Switch-on time 21

Installation 22
Installation conditions 22
Influence of the installation position 22
Mounting location 22
Mounting instructions for oxygen applications 23

Environment 25
Ambient temperature range 25
Storage temperature range 25
Climate class 25
Degree of protection 25
Vibration resistance 25
Electromagnetic compatibility 25

Process 26
Process temperature range for devices with ceramic process isolating diaphragm 26
Process temperature range for devices with metallic process isolating diaphragm 26
Pressure specifications 27

Mechanical construction 28
Design, dimensions 28
Electrical connection 28
Housing 29
Process connections with internal, ceramic process isolating diaphragm 30
Process connections with internal, ceramic process isolating diaphragm 31
Process connections with internal, ceramic process isolating diaphragm 32
Process connections with internal, ceramic process isolating diaphragm 32
Process connections with internal, metal process isolating diaphragm 33
Process connections with internal, metal process isolating diaphragm 34
Process connections with internal, metal process isolating diaphragm 35
Process connections with internal, metal process isolating diaphragm 35
Process connections with flush-mounted, metal process isolating diaphragm 36
Materials in contact with process 37
Materials not in contact with process 38
Cleaning 39

Operability 40
Plug-on display PHX20 (optional) 40

Certificates and approvals 41
CE mark 41

RoHS 41
RCM-Tick marking 41
EAC conformity 41
Approval 41
Safety Instructions (XA) 41
Marine approval (pending) 42
Pressure Equipment Directive 2014/68/EU (PED) 42
Other standards and guidelines 42
CRN approval 43
Calibration unit 43
Calibration 43
Inspection certificates 43

Ordering information 44
Scope of delivery 44

Accessories 45
Weld-in adapter 45
Plug-on display PHX20 45
M12 plug connectors 45

Documentation 46
Field of Activities 46
Technical Information 46
Operating Instructions 46
Brief Operating Instructions 46
Safety Instructions (XA) 46

Document information

Document function

The document contains all the technical data on the device and provides an overview of the accessories and other products that can be ordered for the device.

Symbols used

Safety symbols

Symbol	Meaning
DANGER	**DANGER!** This symbol alerts you to a dangerous situation. Failure to avoid this situation will result in serious or fatal injury.
WARNING	**WARNING!** This symbol alerts you to a dangerous situation. Failure to avoid this situation can result in serious or fatal injury.
CAUTION	**CAUTION!** This symbol alerts you to a dangerous situation. Failure to avoid this situation can result in minor or medium injury.
NOTICE	**NOTE!** This symbol contains information on procedures and other facts which do not result in personal injury.

Electrical symbols

Symbol	Meaning	Symbol	Meaning
	**Protective ground connection** A terminal which must be connected to ground prior to establishing any other connections.		**Ground connection** A grounded terminal which, as far as the operator is concerned, is grounded via a grounding system.

Symbols for certain types of information

Symbol	Meaning
	**Permitted** Procedures, processes or actions that are permitted.
	**Forbidden** Procedures, processes or actions that are forbidden.
	**Tip** Indicates additional information.
	Reference to documentation
	Reference to page
	Reference to graphic
	Visual inspection

Symbols in graphics

Symbol	Meaning
1, 2, 3 ...	Item numbers
1. , 2. , 3. ...	Series of steps
A, B, C, ...	Views

Documentation

The document types listed are available:
In the Download Area of the Endress+Hauser Internet site: www.endress.com → Download

Brief Operating Instructions (KA): getting the 1st measured value quickly

The Brief Operating Instructions contain all the essential information from incoming acceptance to initial commissioning.

Operating Instructions (BA): your comprehensive reference

These Operating Instructions contain all the information that is required in various phases of the life cycle of the device: from product identification, incoming acceptance and storage, to mounting, connection, operation and commissioning through to troubleshooting, maintenance and disposal.

Safety Instructions (XA)

Safety Instructions (XA) are supplied with the device depending on the approval. These instructions are an integral part of the Operating Instructions.

Device	Directive	Documentation	Option [1]
PMP21	ATEX II 1/2G Ex ia IIC T4 Ga/Gb	XA01271P	BA
PMC21	ATEX II 2G Ex ia IIC T4 Gb	XA01271P	BB
PMC21 PMP21	ATEX II 3G Ex ec IIC T4 Gc	XA01533P	BC
PMC21 PMP21	FM IS Cl. I, Div.1 Gr. A-D T4	XA01321P	FA
PMC21 PMP21	CSA C/US IS Cl. I Div. 1 Gr. A-D	XA01322P	CB
PMC21 PMP21	EAC Ex ia IIC T4 Ga/Gb	XA01540P	GA
PMC21 PMP21	IEC Ex ia IIC T4 Ga/Gb	XA01271P	IA
PMC21 PMP21	NEPSI Ex ia IIC T4	XA01363P	NA
PMC21 PMP21	TIIS Ex ia IIC T4	In preparation	TA

1) Product Configurator, order code for "Approval"

The nameplate provides information on the Safety Instructions (XA) that are relevant for the device.

Terms and abbreviations

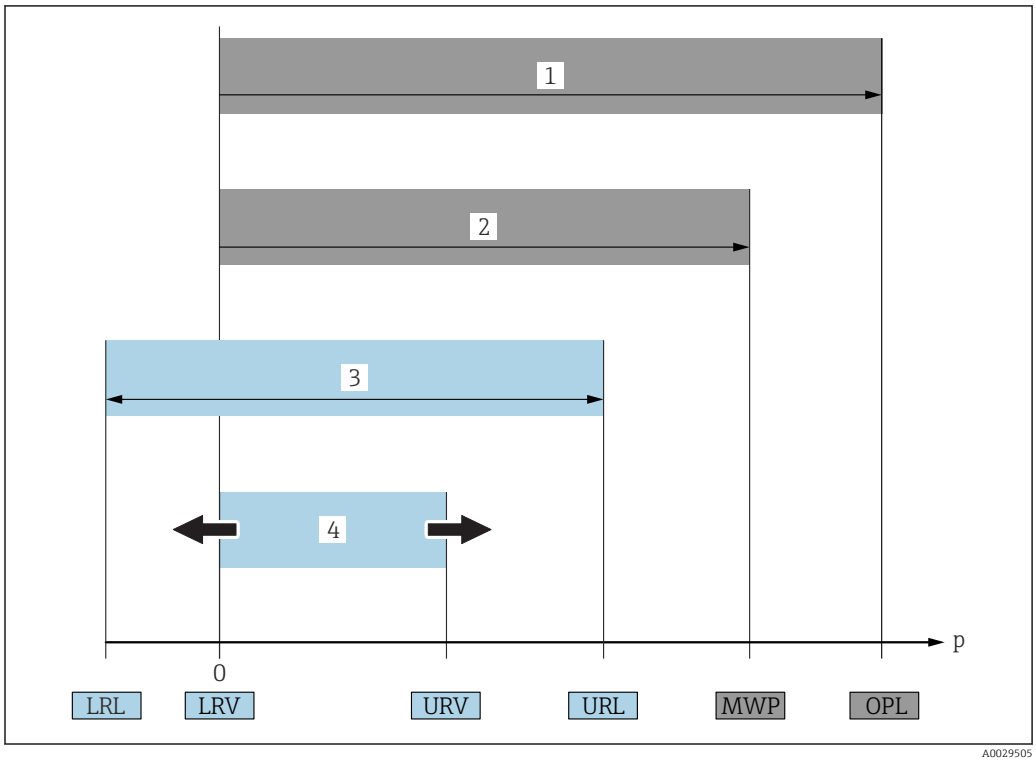

Item	Term/ abbreviation	Explanation
1	OPL	The OPL (over pressure limit = sensor overload limit) for the measuring device depends on the lowest-rated element, with regard to pressure, of the selected components, i.e. the process connection has to be taken into consideration in addition to the measuring cell. Also observe pressure-temperature dependency. For the relevant standards and additional notes, see the "Pressure specifications" section → 27 . The OPL may only be applied for a limited period of time.
2	MWP	The MWP (maximum working pressure) for the sensors depends on the lowest-rated element, with regard to pressure, of the selected components, i.e. the process connection has to be taken into consideration in addition to the measuring cell. Also observe pressure-temperature dependency. For the relevant standards and additional notes, see the "Pressure specifications" section → 27 . The MWP may be applied at the device for an unlimited period. The MWP can also be found on the nameplate.
3	Maximum sensor measuring range	Span between LRL and URL This sensor measuring range is equivalent to the maximum calibratable/adjustable span.
4	Calibrated/ adjusted span	Span between LRV and URV Factory setting: 0 to URL Other calibrated spans can be ordered as customized spans.
p	-	Pressure
-	LRL	Lower range limit
-	URL	Upper range limit
-	LRV	Lower range value
-	URV	Upper range value
-	TD (turn down)	Turn down The turn down is preset at the factory and cannot be changed. Example - see the following section.

Turn down calculation

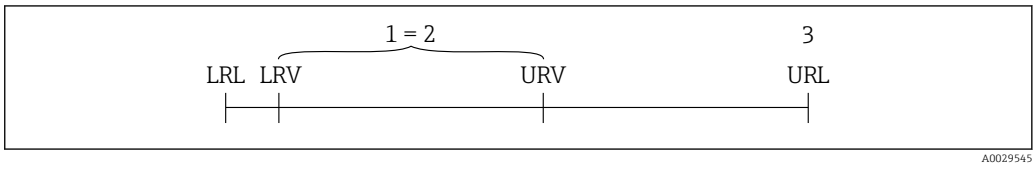

1 Calibrated/adjusted span
2 Zero point-based span
3 URL sensor

Example

- Sensor:10 bar (150 psi)
- Upper range value (URL) = 10 bar (150 psi)

Turn down (TD):

$$TD = \frac{URL}{|URV - LRV|}$$

$$TD = \frac{10\ bar\ (150\ psi)}{|5\ bar\ (75\ psi) - 0\ bar\ (0\ psi)|} = 2$$

In this example, the TD is 2:1.
This span is based on the zero point.

- Calibrated/adjusted span: 0 to 5 bar (0 to 75 psi)
- Lower range value (LRV) = 0 bar (0 psi)
- Upper range value (URV) = 5 bar (75 psi)

Function and system design

Measuring principle - process pressure measurement

Devices with ceramic process isolating diaphragm (Ceraphire®)

The ceramic sensor is an oil-free sensor, i.e. the process pressure acts directly on the robust ceramic process isolating diaphragm and causes it to deflect. A pressure-dependent change in capacitance is measured at the electrodes of the ceramic substrate and the process isolating diaphragm. The measuring range is determined by the thickness of the ceramic process isolating diaphragm.

Advantages:
- Guaranteed overload resistance up to 40 times the nominal pressure
- The ultrapure 99.9% ceramic (Ceraphire®, see also "www.endress.com/ceraphire") ensures:
  - Extremely high chemical durability
  - High mechanical durability
- Can be used in absolute vacuum
- Small measuring ranges

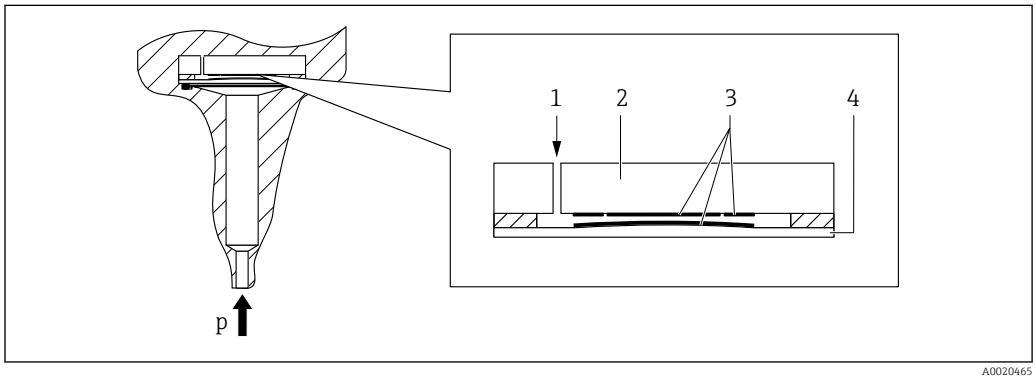

A0020465

1 Air pressure (gauge pressure sensors)
2 Ceramic substrate
3 Electrodes
4 Ceramic process isolating diaphragm

Devices with metallic process isolating diaphragm

The process pressure deflects the metal process isolating diaphragm of the sensor and a fill fluid transfers the pressure to a Wheatstone bridge (semiconductor technology). The pressure-dependent change in the bridge output voltage is measured and evaluated.

Advantages:
- Can be used for high process pressures
- Fully welded sensor
- Slim, flush-mounted process connections available

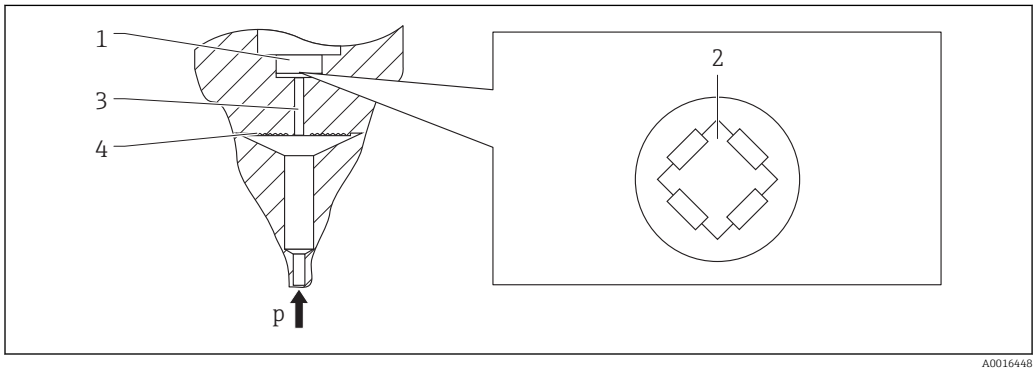

A0016448

1 Silicon measuring element, substrate
2 Wheatstone bridge
3 Channel with fill fluid
4 Metal process isolating diaphragm

Measuring system

A complete measuring system comprises:

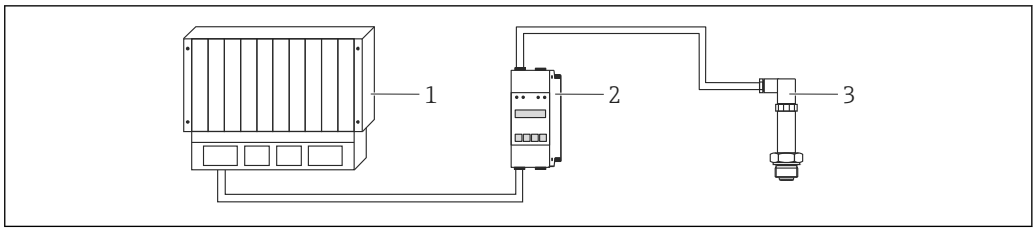

1 PLC (programmable logic control)
2 e.g. RN221N / RMA42 (if required)
3 Pressure transducer

Device features

	PMC11
Field of application	Gauge pressure
Process connections	▪ Thread ISO 228 ▪ Thread ASME ▪ DIN 13
Measuring ranges	From −400 to +400 mbar (−6 to +6 psi) to −1 to +40 bar (−15 to +600 psi).
OPL (depends on the measuring range)	Max. 0 to +60 bar (0 to +900 psi)
Process temperature range	−25 to +85 °C (−13 to +185 °F)
Ambient temperature range	−40 to +70 °C (−40 to +158 °F)
Reference accuracy	Up to 0.5 %, TD 5:1, for details see the "Reference accuracy" section.
Supply voltage	▪ 4 to 20 mA output: 10 to 30V DC ▪ 0 to 10 V output: 12 to 30V DC
Output	▪ 4 to 20 mA ▪ 0 to 10 V
Material	▪ Housing made from 316L (1.4404) ▪ Process connections made from 316L ▪ Process isolating diaphragm made from Al_2O_3 aluminum-oxide ceramic, (Ceraphire®), ultrapure 99.9 %
Options	▪ Certificate of calibration ▪ Cleaned from oil+grease

	PMP11
Field of application	Gauge pressure
Process connections	▪ Thread ISO 228, also flush-mount ▪ Thread ASME ▪ DIN 13
Measuring ranges	From −400 to +400 mbar (−6 to +6 psi) to −1 to +40 bar (−15 to +600 psi).
OPL (depends on the measuring range)	Max. 0 to +160 bar (0 to +2 400 psi)
Process temperature range	−25 to +85 °C (−13 to +185 °F)
Ambient temperature range	−40 to +70 °C (−40 to +158 °F)
Reference accuracy	Up to 0.5 %, TD 5:1, for details see the "Reference accuracy" section.
Supply voltage	▪ 4 to 20 mA output: 10 to 30V DC ▪ 0 to 10 V output: 12 to 30V DC
Output	▪ 4 to 20 mA ▪ 0 to 10 V

	PMP11
Material	▪ Housing made from 316L (1.4404) ▪ Process connections made from 316L (1.4404) ▪ Process isolating diaphragm made from 316L (1.4435)
Options	▪ Certificate of calibration ▪ Cleaned from oil+grease

	PMC21
Field of application	Gauge pressure and absolute pressure
Process connections	▪ Thread ISO 228 ▪ Thread DIN 13 ▪ Thread ASME ▪ Thread JIS
Measuring ranges	From −100 to +100 mbar (−1.5 to +1.5 psi) to −1 to +40 bar (−15 to +600 psi).
OPL (depends on the measuring range)	Max. 0 to +60 bar (0 to +900 psi)
Process temperature range	−25 to +100 °C (−13 to +212 °F)
Ambient temperature range	▪ −40 to +85 °C (−40 to +185 °F) ▪ Devices for hazardous areas: −40 to +70 °C (−40 to +158 °F)
Reference accuracy	Up to 0.3 %, TD 5:1, for details see the "Reference accuracy" section.
Supply voltage	10 to 30 V DC
Output	4 to 20 mA
Material	▪ Housing made from 316L (1.4404) ▪ Process connections made from 316L ▪ Process isolating diaphragm made from Al_2O_3 aluminum-oxide ceramic, (Ceraphire®), ultrapure 99.9 %
Options	▪ Ex approvals ▪ Marine certificate ▪ Min. alarm current setting ▪ 3.1 Material certificates ▪ Certificate of calibration ▪ Cleaned from oil+grease ▪ Cleaned for O_2 service

	PMP21
Field of application	Gauge pressure and absolute pressure
Process connections	▪ Thread ISO 228, also flush-mount ▪ Thread DIN 13 ▪ Thread ASME ▪ Thread JIS
Measuring ranges	From −400 to +400 mbar (−6 to +6 psi) to −1 to +400 bar (−15 to +6 000 psi).
OPL (depends on the measuring range)	Max. 0 to +600 bar (0 to +9 000 psi)
Process temperature range	−40 to +100 °C (−40 to +212 °F)
Ambient temperature range	−40 to +85 °C (−40 to +185 °F)
Reference accuracy	Up to 0.3 %, TD 5:1, for details see the "Reference accuracy" section.
Supply voltage	10 to 30 V DC
Output	4 to 20 mA

	PMP21
Material	▪ Housing made from 316L (1.4404) ▪ Process connections made from 316L (1.4404) ▪ Process isolating diaphragm made from 316L (1.4435)
Options	▪ Ex approvals ▪ Marine certificate ▪ Min. alarm current setting ▪ 3.1 Material certificates ▪ Certificate of calibration ▪ Cleaned from oil+grease

Product design

Overview	Position	Description
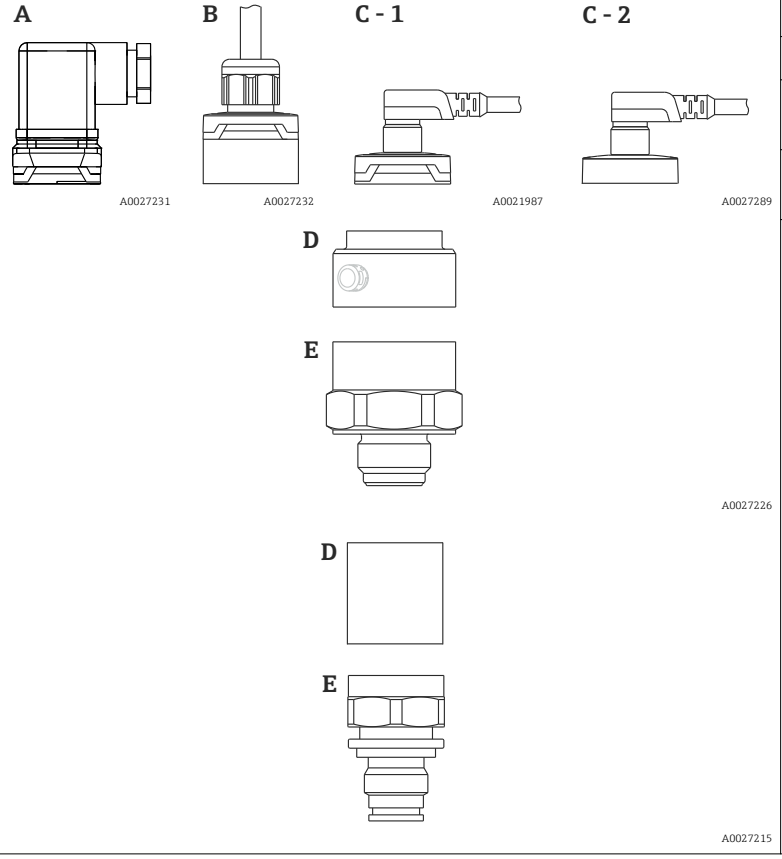	A	Valve plug
	B	Cable
	C- 1	M12 plug Housing cap made of plastic
	C- 2	M12 plug For Ex ec and IP69: metal housing cap
	D E	Housing Process connection (sample illustration)

System integration

The device can be given a tag name (max. 8 alphanumeric characters).

Description	Option [1]
Measuring point (TAG), see additional specifications	Z1

1) Product Configurator, order code for "Identification"

Input

Measured variable

Measured process variable

- PMC11: gauge pressure
- PMP11: gauge pressure
- PMC21: gauge pressure or absolute pressure
- PMP21: gauge pressure or absolute pressure

Calculated process variable

Pressure

Measuring range

Ceramic process isolating diaphragm

Sensor	Device	Maximum Sensor measuring range		Lowest calibratable span [1]	MWP	OPL	Factory settings [2]	Option [3]
		lower (LRL)	upper (URL)					
		[bar (psi)]	[bar (psi)]	[bar (psi)]	[bar (psi)]	[bar (psi)]		
Devices for gauge pressure measurement								
100 mbar (1.5 psi) [4]	PMC21	−0.1 (−1.5)	+0.1 (+1.5)	0.02 (0.3)	2.7 (40.5)	4 (60)	0 to 100 mbar (0 to 1.5 psi)	1C
250 mbar (4 psi) [5]	PMC21	−0.25 (−4)	+0.25 (+4)	0.05 (1)	3.3 (49.5)	5 (75)	0 to 250 mbar (0 to 4 psi)	1E
400 mbar (6 psi) [6]	PMC11 PMC21	−0.4 (−6)	+0.4 (+6)	0.08 (1.2)	5.3 (79.5)	8 (120)	0 to 400 mbar (0 to 6 psi)	1F
1 bar (15 psi) [6]	PMC11 PMC21	−1 (−15)	+1 (+15)	0.2 (3)	6.7 (100.5)	10 (150)	0 to 1 bar (0 to 15 psi)	1H
2 bar (30 psi) [6]	PMC11 PMC21	−1 (−15)	+2 (+30)	0.4 (0.6)	12 (180)	18 (270)	0 to 2 bar (0 to 30 psi)	1K
4 bar (60 psi) [6]	PMC11 PMC21	−1 (−15)	+4 (+60)	0.8 (1.2)	16.7 (250.5)	25 (375)	0 to 4 bar (0 to 60 psi)	1M
6 bar (90 psi) [6]	PMC11 PMC21	−1 (−15)	+6 (+90)	2.4 (36)	26.7 (400.5)	40 (600)	0 to 6 bar (0 to 90 psi)	1N
10 bar (150 psi) [6]	PMC11 PMC21	−1 (−15)	+10 (+150)	2 (30)	26.7 (400.5)	40 (600)	0 to 10 bar (0 to 150 psi)	1P
16 bar (240 psi) [6]	PMC11 PMC21	−1 (−15)	+16 (+240)	6.4 (96)	40 (600)	60 (900)	0 to 16 bar (0 to 240 psi)	1Q
25 bar (375 psi) [6]	PMC11 PMC21	−1 (−15)	+25 (+375)	10 (150)	40 (600)	60 (900)	0 to 25 bar (0 to 375 psi)	1R
40 bar (600 psi) [6]	PMC11 PMC21	−1 (−15)	+40 (+600)	8 (120)	40 (600)	60 (900)	0 to 40 bar (0 to 600 psi)	1S

Sensor	Device	Maximum Sensor measuring range		Lowest calibratable span [1]	MWP	OPL	Factory settings [2]	Option [3]
		lower (LRL)	upper (URL)					
		[bar (psi)]	[bar (psi)]	[bar (psi)]	[bar (psi)]	[bar (psi)]		
Devices for absolute pressure measurement								
100 mbar (1.5 psi) [6]	PMC21	0	+0.1 (+1.5)	0.1 (1.5)	2.7 (40.5)	4 (60)	0 to 100 mbar (0 to 1.5 psi)	2C
250 mbar (4 psi) [6]	PMC21	0	+0.25 (+4)	0.25 (4)	3.3 (49.5)	5 (75)	0 to 250 mbar (0 to 4 psi)	2E
400 mbar (6 psi) [6]	PMC21	0	+0.4 (+6)	0.4 (6)	5.3 (79.5)	8 (120)	0 to 400 mbar (0 to 6 psi)	2F
1 bar (15 psi) [6]	PMC21	0	+1 (+15)	0.4 (6)	6.7 (100.5)	10 (150)	0 to 1 bar (0 to 15 psi)	2H
2 bar (30 psi) [6]	PMC21	0	+2 (+30)	0.4 (0.6)	12 (180)	18 (270)	0 to 2 bar (0 to 30 psi)	2K
4 bar (60 psi) [6]	PMC21	0	+4 (+60)	0.8 (1.2)	16.7 (250.5)	25 (375)	0 to 4 bar (0 to 60 psi)	2M
10 bar (150 psi) [6]	PMC21	0	+10 (+150)	2 (30)	26.7 (400.5)	40 (600)	0 to 10 bar (0 to 150 psi)	2P
40 bar (600 psi) [6]	PMC21	0	+40 (+600)	8 (120)	40 (600)	60 (900)	0 to 40 bar (0 to 600 psi)	2S

1) Highest turn down that can be set at the factory: 5:1. The turn down is preset and cannot be changed.
2) Other measuring ranges (e.g. −1 to +5 bar (−15 to 75 psi)) can be ordered with customer-specific settings (see the Product Configurator, order code for "Calibration; Unit" option "J"). It is possible to invert the output signal (LRV = 20 mA; URV = 4 mA). Prerequisite: URV < LRV
3) Product Configurator, order code for "Sensor range"
4) Vacuum resistance: 0.7 bar (10.5 psi) abs
5) Vacuum resistance: 0.5 bar (7.5 psi) abs
6) Vacuum resistance: 0 bar (0 psi) abs

Maximum turn down which can be ordered for absolute pressure and gauge pressure sensors

Devices for gauge pressure measurement
- 6 bar (90 psi), 16 bar (240 psi), 25 bar (375 psi): TD 1:1 to TD 2.5:1
- All other measuring ranges: TD 1:1 to TD 5:1

Devices for absolute pressure measurement
- 100 mbar (1.5 psi), 250 mbar (4 psi), 400 mbar (6 psi): TD 1:1
- 1 bar (15 psi): TD 1:1 to TD 2.5:1
- All other measuring ranges: TD 1:1 to TD 5:1

Metal process isolating diaphragm

Sensor	Device	Maximum Sensor measuring range		Lowest calibratable span [1]	MWP	OPL	Factory settings [2]	Option [3]
		lower (LRL)	upper (URL)					
		[bar (psi)]	[bar (psi)]	[bar (psi)]	[bar (psi)]	[bar (psi)]		
Devices for gauge pressure measurement								
400 mbar (6 psi) [4]	PMP11 PMP21	−0.4 (−6)	+0.4 (+6)	0.4 (6)	1 (15)	1.6 (24)	0 to 400 mbar (0 to 6 psi)	1F
1 bar (15 psi) [4]	PMP11 PMP21	−1 (−15)	+1 (+15)	0.4 (6)	2.7 (40.5)	4 (60)	0 to 1 bar (0 to 15 psi)	1H
2 bar (30 psi) [4]	PMP11 PMP21	−1 (−15)	+2 (+30)	0.4 (6)	6.7 (100.5)	10 (150)	0 to 2 bar (0 to 30 psi)	1K
4 bar (60 psi) [4]	PMP11 PMP21	−1 (−15)	+4 (+60)	0.8 (12)	10.7 (160.5)	16 (240)	0 to 4 bar (0 to 60 psi)	1M
6 bar (90 psi) [4]	PMP11 PMP21	−1 (−15)	+6 (+90)	2.4 (36)	16 (240)	24 (360)	0 to 6 bar (0 to 90 psi)	1N
10 bar (150 psi) [4]	PMP11 PMP21	−1 (−15)	+10 (+150)	2 (30)	25 (375)	40 (600)	0 to 10 bar (0 to 150 psi)	1P
16 bar (240 psi) [4]	PMP11 PMP21	−1 (−15)	+16 (+240)	5 (75)	25 (375)	64 (960)	0 to 16 bar (0 to 240 psi)	1Q
25 bar (375 psi) [4]	PMP11 PMP21	−1 (−15)	+25 (+375)	5 (75)	25 (375)	100 (1500)	0 to 25 bar (0 to 375 psi)	1R
40 bar (600 psi) [4]	PMP11 PMP21	−1 (−15)	+40 (+600)	8 (120)	100 (1500)	160 (2400)	0 to 40 bar (0 to 600 psi)	1S
100 bar (1 500 psi) [4]	PMP21	−1 (−15)	+100 (+1500)	20 (300)	100 (1500)	160 (2400)	0 to 100 bar (0 to 1 500 psi)	1U
400 bar (6 000 psi) [4]	PMP21	−1 (−15)	+400 (+6000)	80 (1200)	400 (6000)	600 (9000)	0 to 400 bar (0 to 6 000 psi)	1W
Devices for absolute pressure measurement								
400 mbar (6 psi) [4]	PMP21	0 (0)	0.4 (+6)	0.4 (6)	1 (15)	1.6 (24)	0 to 400 mbar (0 to 6 psi)	2F
1 bar (15 psi) [4]	PMP21	0 (0)	1 (+15)	0.4 (6)	2.7 (40.5)	4 (60)	0 to 1 bar (0 to 15 psi)	2H
2 bar (30 psi) [4]	PMP21	0 (0)	2 (+30)	0.4 (6)	6.7 (100.5)	10 (150)	0 to 2 bar (0 to 30 psi)	2K
4 bar (60 psi) [4]	PMP21	0 (0)	4 (+60)	0.8 (12)	10.7 (160.5)	16 (240)	0 to 4 bar (0 to 60 psi)	2M
10 bar (150 psi) [4]	PMP21	0 (0)	10 (+150)	2 (30)	25 (375)	40 (600)	0 to 10 bar (0 to 150 psi)	2P
40 bar (600 psi) [4]	PMP21	0 (0)	+40 (+600)	8 (120)	100 (1500)	160 (2400)	0 to 40 bar (0 to 600 psi)	2S
100 bar (1 500 psi) [4]	PMP21	0 (0)	+100 (+1500)	20 (300)	100 (1500)	160 (2400)	0 to 100 bar (0 to 1 500 psi)	2U
400 bar (6 000 psi) [4]	PMP21	0 (0)	+400 (+6000)	80 (1200)	400 (6000)	600 (9000)	0 to 400 bar (0 to 6 000 psi)	2W

1) Highest turn down that can be set at the factory: 5:1. The turn down is preset and cannot be changed.
2) Other measuring ranges (e.g. −1 to +5 bar (−15 to 75 psi)) can be ordered with customer-specific settings (see the Product Configurator, order code for "Calibration; Unit" option "J"). It is possible to invert the output signal (LRV = 20 mA; URV = 4 mA). Prerequisite: URV < LRV
3) Product Configurator, order code for "Sensor range"
4) Vacuum resistance: 0.01 bar (0.145 psi) abs

Maximum turn down which can be ordered for absolute pressure and gauge pressure sensors

Device	Range	400 mbar (6 psi)	1 bar (15 psi) 6 bar (90 psi) 16 bar (240 psi)	2 bar (30 psi) 4 bar (60 psi) 10 bar (150 psi) 25 to 400 bar (375 to 6 000 psi)
PMP11	0.5%	TD 1:1	TD 1:1 to TD 2.5:1	TD 1:1 to TD 5:1
PMP21	0.3%	TD 1:1	TD 1:1 to TD 2.5:1	TD 1:1 to TD 5:1

Output

Output signal

Description	Option [1]
4 to 20 mA (2-wire)	1
PMC11: 0 to 10 V output (3-wire) PMP11: 0 to 10 V output (3-wire)	2

1) Product Configurator, order code for "Output"

Signal range 4 to 20 mA

3.8 mA to 20.5 mA

Load (for 4 to 20 mA devices)

In order to guarantee sufficient terminal voltage in two-wire devices, a maximum load resistance R_L (including line resistance) must not be exceeded, depending on the supply voltage U_B of the supply unit.

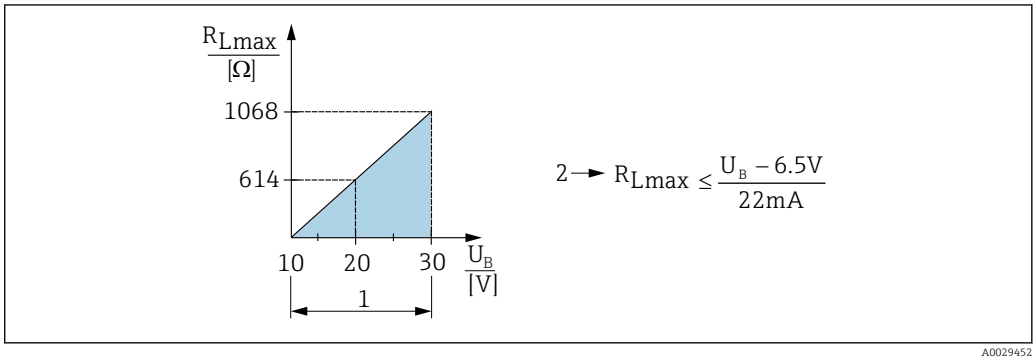

1 Power supply 10 to 30 V DC
2 R_{Lmax} maximum load resistance
U_B Supply voltage

Load resistance (for 0 to 10 V devices)

The load resistance must be ≥ 5 [kΩ].

Signal on alarm 4 to 20 mA

The response of the output to error is regulated in accordance with NAMUR NE43.

Factory setting MAX alarm: >21 mA

alarm current

Device	Description	Option
PMC21 PMP21	Adjusted min. alarm current	IA [1]

1) Product Configurator order code for "Service"

Dead time, time constant

Presentation of the dead time and the time constant:

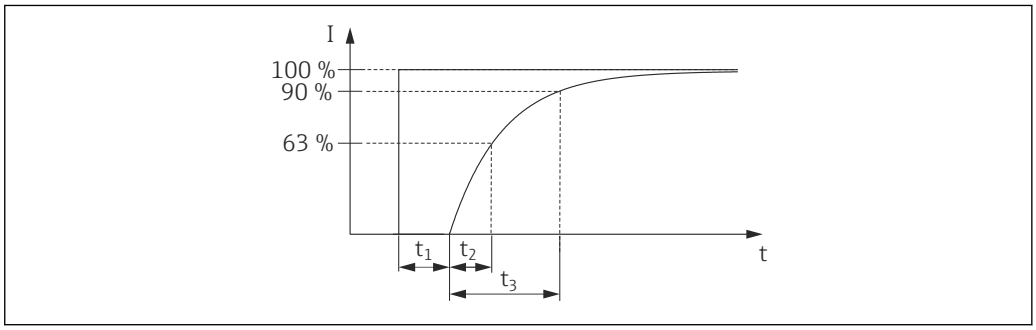

Dynamic behavior

Analog electronics

Dead time (t_1) [ms]	Time constant (T63), t_2 [ms]	Time constant (T90), t_3 [ms]
6 ms	10 ms	15 ms

Power supply

WARNING

Limitation of electrical safety due to incorrect connection!

- In accordance with IEC/EN61010 a separate circuit breaker must be provided for the device .
- When using the measuring device in hazardous areas, installation must comply with the corresponding national standards and regulations and the Safety Instructions or Installation or Control Drawings.
- All explosion protection data are given in separate documentation which is available upon request. The Ex documentation is supplied as standard with all devices approved for use in explosion hazardous areas.
- Protective circuits against reverse polarity, HF influences and overvoltage peaks are integrated.
- The device must be operated with a 500 mA fine-wire fuse (slow-blow).

Terminal assignment

4 to 20 mA output

Device	M12 plug	Valve plug	Cable
PMC11 PMP11 PMC21 PMP21	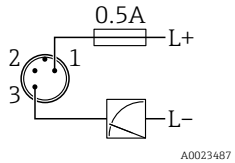	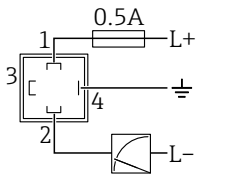	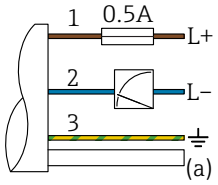 *1 brown = L+* *2 blue = L-* *3 green/yellow = ground connection* *(a) reference air hose*

0 to 10 V output

Device	M12 plug	Valve plug	Cable
PMC11 PMP11	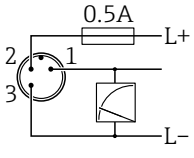	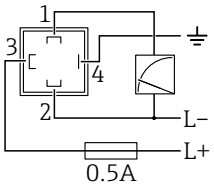	-

Supply voltage

Electronic version	Device	Supply voltage
4 to 20 mA output	PMC11 PMP11 PMC21 PMP21	10 to 30 V DC
0 to 10 V output	PMC11 PMP11	12 to 30 V DC

Current consumption and alarm signal

Number of wires	Device	Normal operation	Alarm signal [1]
2	PMC11 PMP11 PMC21 PMP21	≤ 26 mA	> 21 mA
3	PMC11 PMP11	< 12 mA	11 V

1) For MAX alarm (factory setting)

Power supply fault

- Behavior in the event of overvoltage (>30 V):
  The device works continuously up to 34 V DC without damage. If the supply voltage is exceeded, the specified characteristics are no longer guaranteed.
- Behavior in the event of undervoltage:
  If the supply voltage falls below the minimum value, the device switches off in a defined manner (status same as for no power supply).

Electrical connection

Degree of protection

Device	Connection	Climate class	Option [1]
PMP21 PMP21	Cable5 m (16 ft)	IP66/68 [2] NEMA type 4X/6P enclosure	A
PMP21 PMP21	Cable10 m (33 ft)	IP66/68 [2] NEMA type 4X/6P enclosure	B
PMP21 PMP21	Cable25 m (82 ft)	IP66/68 [2] NEMA type 4X/6P enclosure	C
PMC11 PMP11	M12 plug	IP65 NEMA type 4X enclosure	L
PMC21 PMP21	M12 plug	IP65/67 NEMA type 4X enclosure	M
PMC11 PMP11 PMC21 PMP21	Valve plug ISO4400 M16	IP65 NEMA type 4X enclosure	U
PMC11 PMP11 PMC21 PMP21	Valve plug ISO4400 NPT ½	IP65 NEMA type 4X enclosure	V

1) Product Configurator, order code for "Electrical connection"
2) IP 68 (1.83m H2O for 24 h)

Cable specification

For valve plug: < 1.5 mm^2 (16 AWG) and Ø3.5 to 6.5 mm (0.14 to 0.26 in)

Residual ripple

The device operates within the reference accuracy up to ±5 % of the residual ripple of the supply voltage, within the permitted voltage range.

Influence of power supply

≤0.005 % of the URL/1 V

Overvoltage protection

The device does not contain any special elements to protect against overvoltage ("wire to ground"). Nevertheless the requirements of the applicable EMC standard EN 61000-4-5 (testing voltage 1kV EMC wire/ground) are met.

Performance characteristics of ceramic process isolating diaphragm

Reference operating conditions

- As per IEC 60770
- Ambient temperature T_A = constant, in the range of:+21 to +33 °C (+70 to +91 °F)
- Humidity φ = constant, in the range of 5 to 80 % rH
- Ambient pressure p_A = constant, in the range of:860 to 1060 mbar (12.47 to 15.37 psi)
- Position of measuring cell = constant, in range: horizontal ±1° (see also "Influence of the installation position" section → 🖹 22)
- Zero based span
- Material of process isolating diaphragm: Al_2O_3 (aluminum-oxide ceramic, Ceraphire®)
- Supply voltage: 24 V DC ±3 V DC
- Load: 320 Ω (at 4 to 20 mA output)

Measuring uncertainty for small absolute pressure measuring ranges

The smallest extended uncertainty of measurement that can delivered by our standards is:

- in range 1 to 30 mbar (0.0145 to 0.435 psi): 0.4 % of reading
- in range < 1 mbar (0.0145 psi): 1 % of reading.

Influence of the installation position

→ 🖹 22

Resolution

Current output: min. 1.6 µA

Reference accuracy

The reference accuracy contains the non-linearity [DIN EN 61298-2 3.11] including the pressure hysteresis [DIN EN 61298-23.13] and non-repeatability [DIN EN 61298-2 3.11] in accordance with the limit point method as per [DIN EN 60770].

Device	% of the calibrated span to the maximum turn down		
	Reference accuracy	Non-linearity [1]	Non-repeatability
PMC11 [2]	±0.5	±0.1	±0.1
PMC21	±0.3	±0.1	±0.1

1) The non-linearity for the 40 bar (600 psi) sensor can be up to ± 0.15% of the calibrated span up to the maximum turn down.
2) For devices with 0 to 10 V output, a non-linearity of up to max. 0.3 V can occur for signal values below 0.03 V.

Overview of the turn down ranges → 🖹 13

Measuring ranges	Turn down	Device	% of URL
100 mbar (1.5 psi)to 40 bar (600 psi)	1:1 to TD 5:1	PMC11	±0.5
		PMC21	±0.3 [1]

1) For the 100 mbar (1.5 psi) and 250 mbar (4 psi) measuring ranges, the following applies: In the event of heat effects on the initial reference conditions, an additional deviation of max. 0.3 mbar (4.5 psi) from the zero point or the output span is possible.

Thermal change of the zero output and the output span

Measuring cell	−20 to +85 °C (−4 to +185 °F)	−40 to −20 °C (−40 to −4 °F) +85 to +100 °C (+185 to +212 °F)
	% of URL for TD 1:1	
<1 bar (15 psi)	<1	<1.2
≥ 1 bar (15 psi)	<0.8	<1

Long-term stability

1 year	5 years	8 years
% of URL		
±0.2	±0.4	±0.45

Switch-on time

≤2 s (For small measuring ranges, pay attention to the thermal compensation effects.)

Performance characteristics of metallic process isolating diaphragm

Reference operating conditions

- As per IEC 60770
- Ambient temperature T_A = constant, in the range of:+21 to +33 °C (+70 to +91 °F)
- Humidity φ = constant, in the range of 5 to 80 % rH
- Ambient pressure p_A = constant, in the range of:860 to 1060 mbar (12.47 to 15.37 psi)
- Position of measuring cell = constant, in range: horizontal ±1° (see also "Influence of the installation position" section → 🖹 22)
- Zero based span
- Process isolating diaphragm material: AISI 316L (1.4435)
- Filling oil: NSF-H1 synthetic oil in accordance with FDA 21 CFR 178.3570
- Supply voltage: 24 V DC ±3 V DC
- Load: 320 Ω (at 4 to 20 mA output)

Measuring uncertainty for small absolute pressure measuring ranges

The smallest extended uncertainty of measurement that can delivered by our standards is:

- in range 1 to 30 mbar (0.0145 to 0.435 psi): 0.4 % of reading
- in range < 1 mbar (0.0145 psi): 1 % of reading.

Influence of the installation position

→ 🖹 22

Resolution

Current output: min. 1.6 µA

Reference accuracy

The reference accuracy contains the non-linearity [DIN EN 61298-2 3.11] including the pressure hysteresis [DIN EN 61298-23.13] and non-repeatability [DIN EN 61298-2 3.11] in accordance with the limit point method as per [DIN EN 60770].

Device	% of the calibrated span to the maximum turn down		
	Reference accuracy	Non-linearity	Non-repeatability
PMP11 [1)]	±0.5	±0.1	±0.1
PMP21	±0.3	±0.1	±0.1

1) For devices with 0 to 10 V output, a non-linearity of up to max. 0.3 V can occur for signal values below 0.015 V.

Overview of the turn down ranges → 🖹 14

Thermal change of the zero output and the output span

Measuring cell	−20 to +85 °C (−4 to +185 °F)	−20 to −40 °C (−4 to −40 °F) +85 to +100 °C (+185 to +212 °F)
	% of the calibrated span for TD 1:1	
<1 bar (15 psi)	<1	<1.2
≥ 1 bar (15 psi)	<0.8	<1

Long-term stability

1 year	5 years	8 years
% of URL		
±0.2	±0.4	±0.45

Switch-on time

≤2 s

Installation

Installation conditions

- No moisture may enter the housing when installing or operating the device, or when establishing the electrical connection.
- Point the cable and connector downwards where possible to prevent moisture from entering (e.g. rain or condensation water).

Influence of the installation position

Any orientation is possible. However, the orientation may cause a zero point shift i.e. the measured value does not show zero when the vessel is empty or partially full.

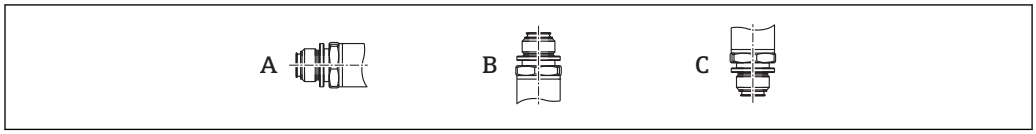

A0024708

Type	Process isolating diaphragm axis is horizontal (A)	Process isolating diaphragm pointing upwards (B)	Process isolating diaphragm pointing downwards (C)
PMP11 PMP21	Calibration position, no effect	Up to +4 mbar (+0.058 psi)	Up to −4 mbar (−0.058 psi)
PMC11, PMC21 < 1 bar (15 psi)	Calibration position, no effect	Up to +0.3 mbar (+0.0044 psi)	Up to −0.3 mbar (−0.0044 psi)
PMC11, PMC21 ≥1 bar (15 psi)	Calibration position, no effect	Up to +3 mbar (+0.0435 psi)	Up to −3 mbar (−0.0435 psi)

Mounting location

Pressure measurement

Pressure measurement in gases

Mount the device with shutoff device above the tapping point so that any condensate can flow into the process.

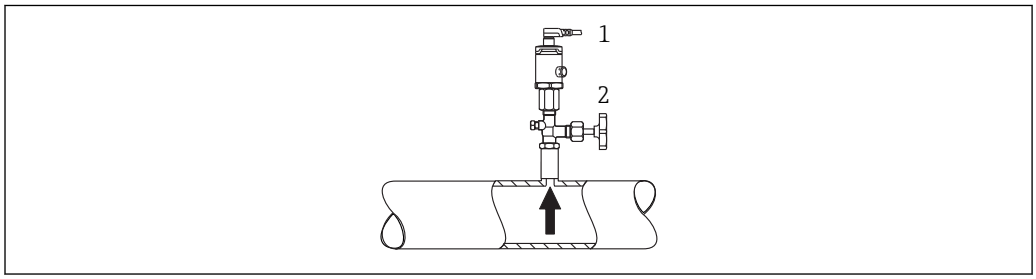

A0021904

1 Device
2 Shutoff device

Pressure measurement in vapors

For pressure measurement in vapors, use a siphon. The siphon reduces the temperature to almost ambient temperature. Mount the device with a shutoff device at the same height as the tapping point.

Advantage:
only minor/negligible heat effects on the device.

Note the max. permitted ambient temperature of the transmitter!

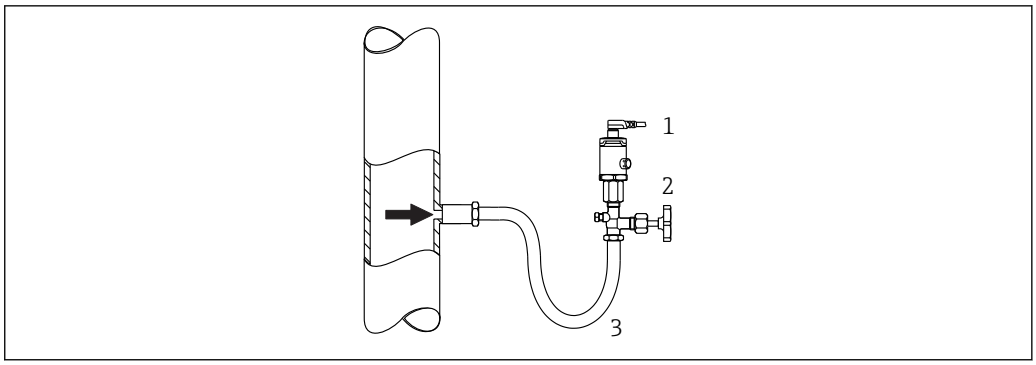

A0024395

1 *Device*
2 *Shutoff device*
3 *Siphon*

Pressure measurement in liquids

Mount the device with a shutoff device at the same height as the tapping point.

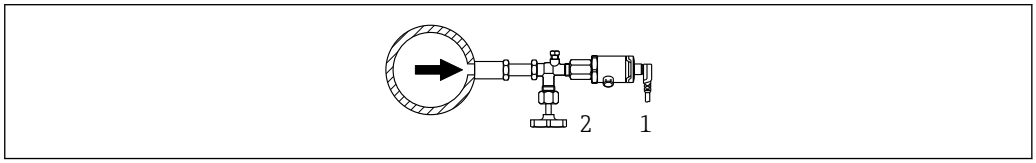

A0024399

1 *Device*
2 *Shutoff device*

Level measurement

- Always install the device below the lowest measuring point.
- Do not install the device at the following positions:
  - In the filling curtain
  - In the tank outlet
  - In the suction area of a pump
  - Or at a point in the tank which could be affected by pressure pulses from the agitator.

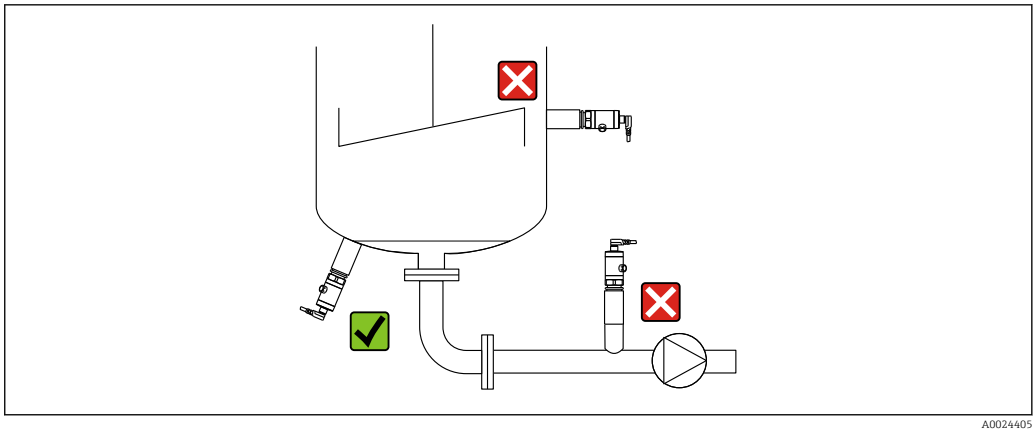

A0024405

Mounting instructions for oxygen applications

Oxygen and other gases can react explosively to oils, grease and plastics, such that, among other things, the following precautions must be taken:

- All components of the system, such as measuring devices, must be cleaned in accordance with the BAM requirements.
- Dependent on the materials used, a certain maximum temperature and a maximum pressure for oxygen applications must not be exceeded.
- The following table lists devices (devices only, not accessories or enclosed accessories), which are suitable for gaseous oxygen applications.

Device	p_{max} for oxygen applications	T_{max} for oxygen applications	Option [1]
PMC21	40 bar (600 psi)	−10 to +60 °C (+14 to +140 °F)	HB

1) Product Configurator, order code for "Service"

Environment

Ambient temperature range

Device	Ambient temperature range [1]
PMC11 PMP11	−40 to +70 °C (−40 to +158 °F)
PMC21 PMP21	−40 to +85 °C (−40 to +185 °F)
PMC21 PMP21	Devices for hazardous areas: −40 to +70 °C (−40 to +158 °F)

1) Exception: the following cable is designed for an operating temperature range of −25 to +70 °C (−13 to +158 °F): Product Configurator order code for "Accessory enclosed", option "RZ".

Storage temperature range

−40 to +85 °C (−40 to +185 °F)

Climate class

Device	Climate class	Note
PMC11 PMP11 PMC21 PMP21	Class 3K5	Air temperature: −5 to +45 °C (+23 to +113 °F), relative humidity: 4 to 95 % satisfied according to IEC 721-3-3 (condensation not possible)

Degree of protection

Device	Connection	Climate class	Option [1]
PMP21 PMP21	Cable5 m (16 ft)	IP66/68 [2] NEMA type 4X/6P enclosure	A
PMP21 PMP21	Cable10 m (33 ft)	IP66/68 [2] NEMA type 4X/6P enclosure	B
PMP21 PMP21	Cable25 m (82 ft)	IP66/68 [2] NEMA type 4X/6P enclosure	C
PMC11 PMP11	M12 plug	IP65 NEMA type 4X enclosure	L
PMC21 PMP21	M12 plug	IP65/67 NEMA type 4X enclosure	M
PMC11 PMP11 PMC21 PMP21	Valve plug ISO4400 M16	IP65 NEMA type 4X enclosure	U
PMC11 PMP11 PMC21 PMP21	Valve plug ISO4400 NPT ½	IP65 NEMA type 4X enclosure	V

1) Product Configurator, order code for "Electrical connection"
2) IP 68 (1.83m H2O for 24 h)

Vibration resistance

Test standard	Vibration resistance
IEC 60068-2-64:2008	Guaranteed for 5 to 2000Hz: 0.05 g^2/Hz

Electromagnetic compatibility

- Interference emission as per EN 61326-1 equipment B
- Interference immunity as per EN 61326-1 (industrial environment)
- NAMUR recommendation EMC (NE21)
- Maximum deviation: 1.5% for TD 1:1

For more details, refer to the Declaration of Conformity.

Process

Process temperature range for devices with ceramic process isolating diaphragm

Device	Process temperature range
PMC11	−25 to +85 °C (−13 to +185 °F)
PMC21	−25 to +100 °C (−13 to +212 °F)
PMC21 for oxygen applications	−10 to +60 °C (+14 to +140 °F)

- For saturated steam applications, use a device with a metal process isolating diaphragm, or provide a siphon for temperature isolation when installing.
- Pay attention to the process temperature range of the seal. See also the following table.

Seal	Notes	Process temperature range	Option
FKM	-	−20 to +100 °C (−4 to +212 °F)	A [1]
FKM	Cleaned for oxygen service	−10 to +60 °C (+14 to +140 °F)	A [1] and HB [2]
EPDM 70	-	−25 to +100 °C (−13 to +212 °F)	J [1]

1) Product Configurator, order code for "Seal"
2) Product Configurator, order code for "Service"

Applications with changes in temperature

Frequent extreme changes in temperatures can temporarily cause measuring errors. Temperature compensation takes place after a few minutes. Internal temperature compensation is faster the smaller the change in temperature and the longer the time interval.

For further information please contact your local Endress+Hauser Sales Center.

Process temperature range for devices with metallic process isolating diaphragm

Device	Process temperature range
PMP11	−25 to +85 °C (−13 to +185 °F)
PMP21	−40 to +100 °C (−40 to +212 °F)

Applications with changes in temperature

Frequent extreme changes in temperatures can temporarily cause measuring errors. Internal temperature compensation is faster the smaller the change in temperature and the longer the time interval.

For further information please contact your local Endress+Hauser Sales Center.

Pressure specifications

WARNING

The maximum pressure for the measuring device depends on the lowest-rated element with regard to pressure.

- For pressure specifications, see the "Measuring range" section and the "Mechanical construction" section.
- The Pressure Equipment Directive (2014/68/EU) uses the abbreviation "PS". The abbreviation "PS" corresponds to the MWP (maximum working pressure) of the measuring device.
- MWP (maximum working pressure): The MWP (maximum working pressure) is specified on the nameplate. This value is based on a reference temperature of +20 °C (+68 °F) and may be applied to the device for an unlimited period of time. Observe the temperature dependency of the MWP.
- OPL (over pressure limit): The test pressure corresponds to the over pressure limit of the sensor and may only be applied temporarily to ensure that the measurement is within the specifications and no permanent damage develops. In the case of sensor range and process connections where the over pressure limit (OPL) of the process connection is smaller than the nominal value of the sensor, the device is set at the factory, at the very maximum, to the OPL value of the process connection. If you want to use the entire sensor range, select a process connection with a higher OPL value.
- Oxygen applications: In oxygen applications, the values for "p_{max} and T_{max} for oxygen applications may not be exceeded .
- Devices with ceramic process isolating diaphragm: avoid steam hammering! Steam hammering can cause zero point drifts. Recommendation: Residue (water droplets or condensation) may remain on the process isolating diaphragm following CIP cleaning and can result in local steam hammering the next time steam cleaning takes place. In practice, drying the process isolating diaphragm (e.g. by blowing) has proved to prevent steam hammering.

Mechanical construction

Design, dimensions

Device height

The device height is calculated from
- the height of the electrical connection
- the height of the housing and
- the height of the individual process connection.

The individual heights of the components are listed in the following sections. To calculate the device height simply add up the individual heights of the components. Where applicable also take into consideration the installation distance (space that is used to install the device). You can use the following table for this purpose:

Section	Page	Height	Example
Electrical connection	→ 28	(A)	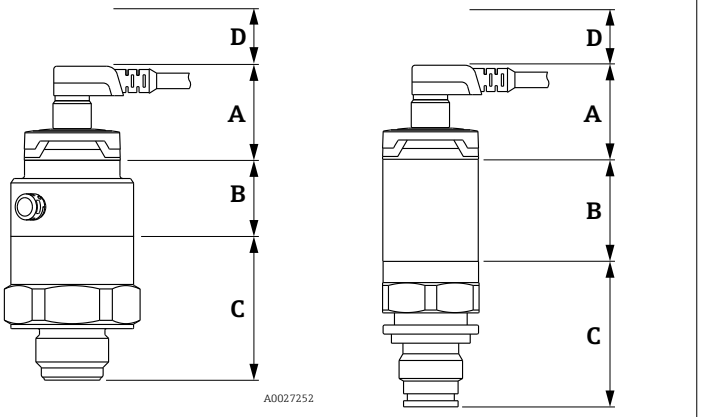
Housing height	→ 29	(B)	
Process connection height	→ 30 → 33	(C)	
Installation distance	-	(D)	

Electrical connection

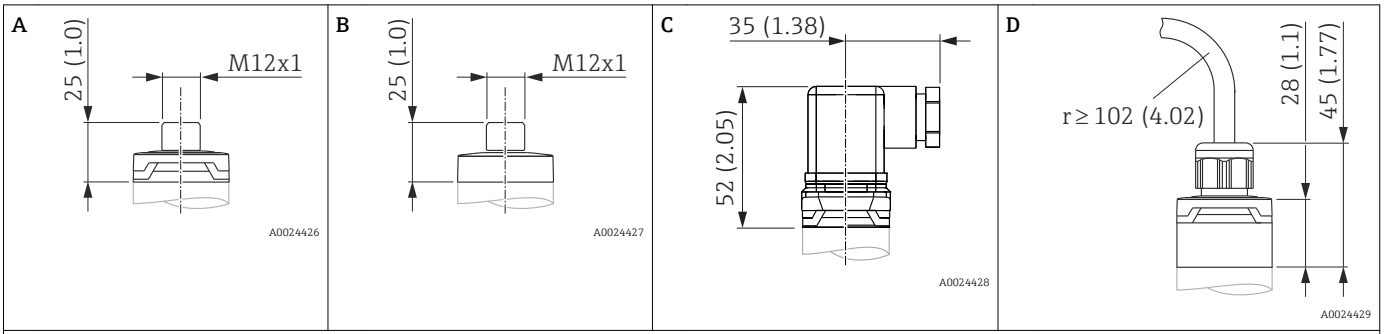

Engineering unit mm (in)

Position	Description	Material	Weight kg (lbs)	Device	Option [1]
A	M12 plug IP65 (Additional dimensions → 45)	Housing cap made of plastic	0.012 (0.03)	PMC11 PMP11	L
A	M12 plug IP65/67 (Additional dimensions → 45)	Housing cap made of plastic	0.012 (0.03)	PMC21 PMP21	M Plug connector with cable can be ordered as an accessory → 45
B	M12 plug IP66/67	Housing cap made of metal	0.030 (0.07)	PMC21 PMP21	In the case of Ex ec type of protection, the housing cap is made of metal.
C	M16 valve plug	Plastic PPSU	0.060 (0.14)	PMC11 PMP11 PMC21 PMP21	U

Position	Description	Material	Weight kg (lbs)	Device	Option [1]
C	NPT ½ valve plug	Plastic PPSU	0.060 (0.14)	PMC11 PMP11 PMC21 PMP21	V
D	Cable5 m (16 ft)	PUR (UL94V0)	0.280 (0.62)	PMC21 PMP21	A
D	Cable10 m (33 ft)	PUR (UL94V0)	0.570 (1.26)	PMC21 PMP21	B
D	Cable25 m (82 ft)	PUR (UL94V0)	1.400 (3.09)	PMC21 PMP21	C

1) Product Configurator, order code for "Electrical connection"

Housing

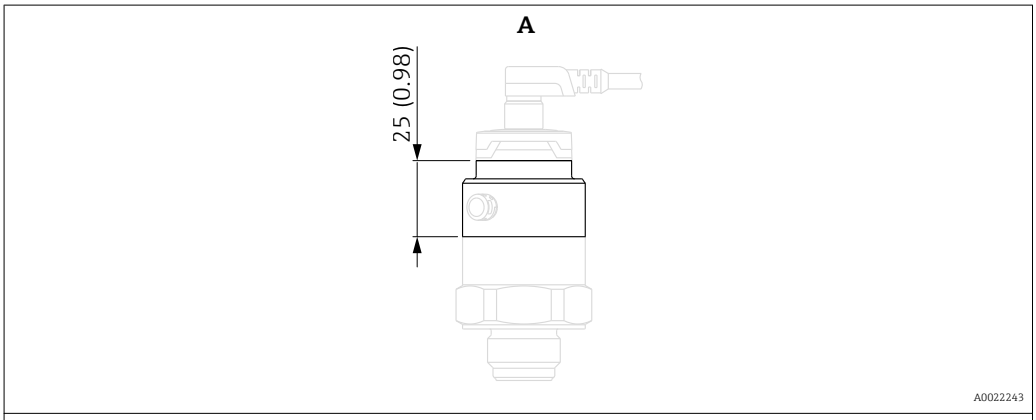

Engineering unit mm (in)

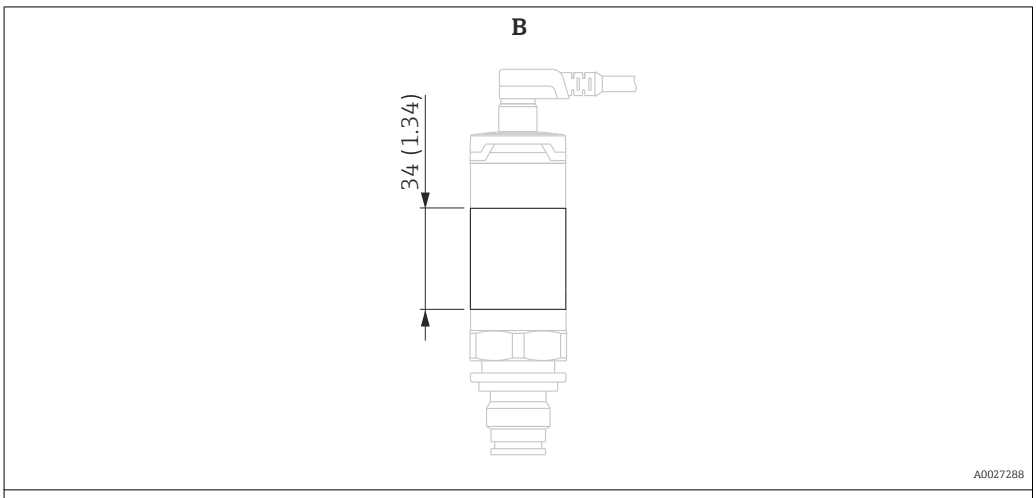

Engineering unit mm (in)

Item	Device	Material	Weight kg (lbs)
A	PMC11 PMC21	Stainless steel 316L	0.150 (0.33)
B	PMP11 PMP21	Stainless steel 316L	0.090 (0.20)

Process connections with internal, ceramic process isolating diaphragm

Thread ISO 228 G

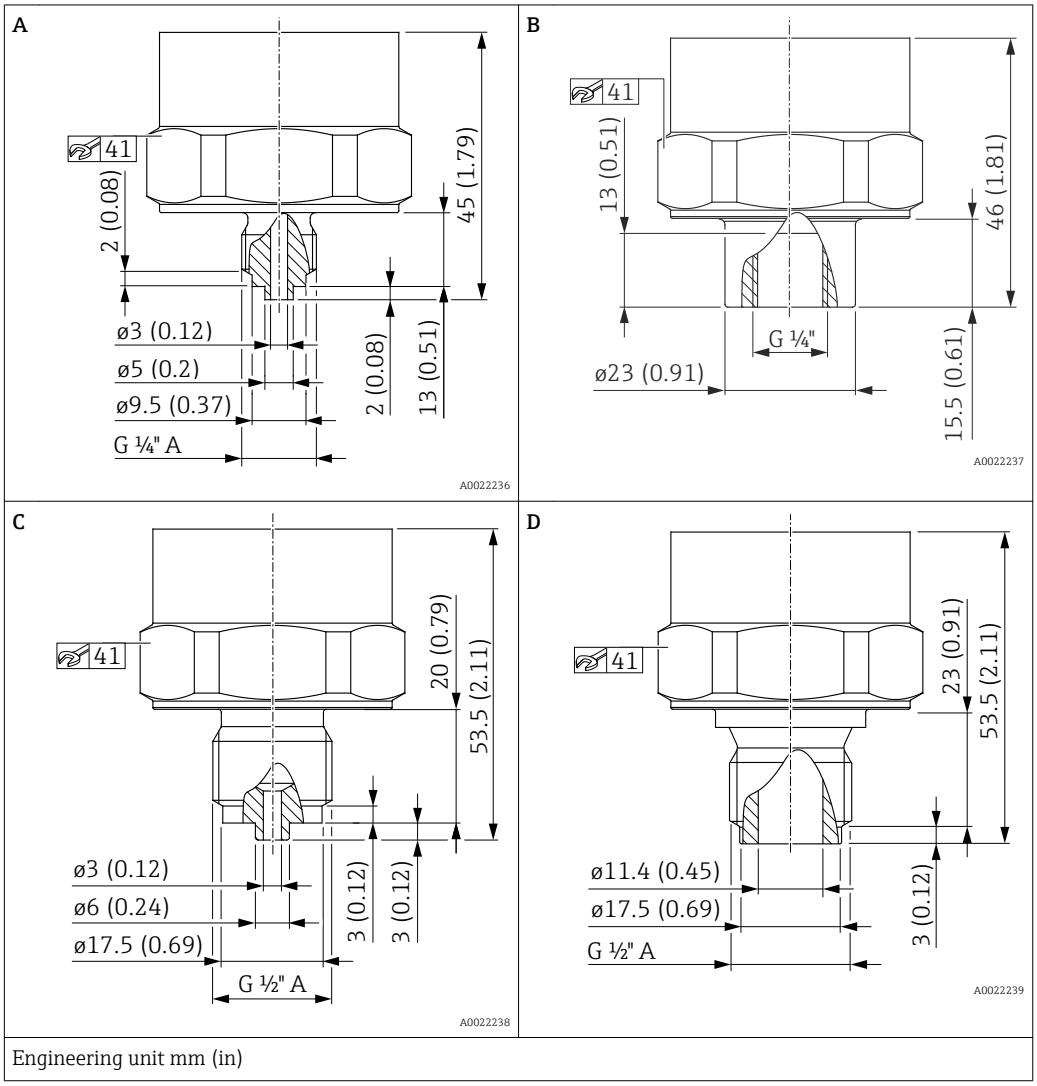

Engineering unit mm (in)

Device	Item	Description	Material	Weight	Option [1]
				kg (lbs)	
▪ PMC11 ▪ PMC21	A	Thread ISO 228 G ¼" A, EN 837	316L	0.160 (0.35)	WTJ
▪ PMC11 ▪ PMC21	B	Thread ISO 228 G ¼" (female)	316L	0.180 (0.40)	WAJ
▪ PMC11 ▪ PMC21	C	Thread ISO 228 G ½" A, EN 837	316L	0.180 (0.40)	WBJ
▪ PMC11 ▪ PMC21	D	Thread ISO 228 G ½" A, bore11.4 mm (0.45 in)	316L	0.180 (0.40)	WWJ

1) Product Configurator, order code for "Process connection"

Process connections with internal, ceramic process isolating diaphragm

Thread ASME

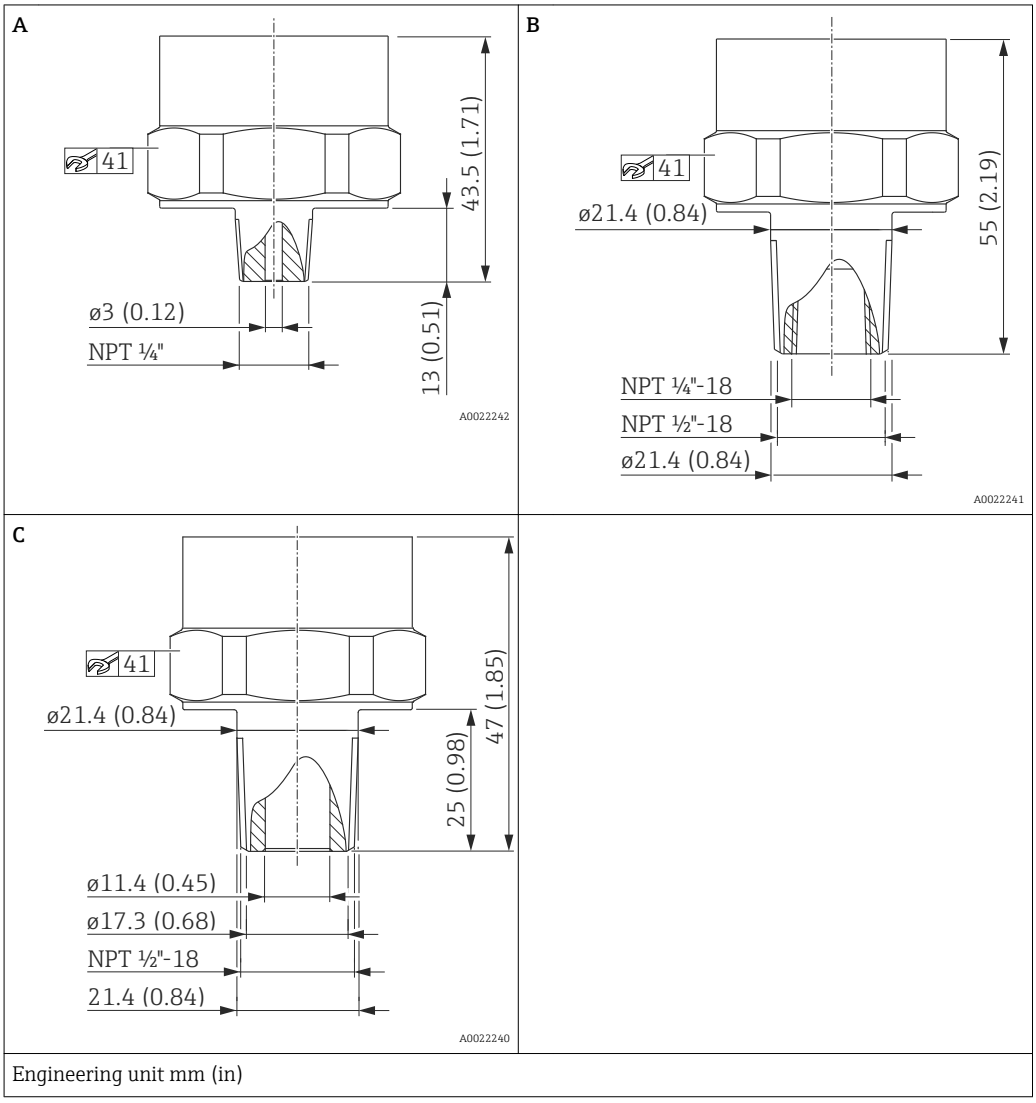

Engineering unit mm (in)

Device	Item	Description	Material	Weight	Approval	Option [1]
				kg (lbs)		
▪ PMC11 ▪ PMC21	A	ASME ¼" MNPT, bore3 mm (0.12 in)	316L	0.160 (0.35)	CRN	VUJ
▪ PMC11 ▪ PMC21	B	ASME ½" MNPT, ¼" FNPT (female)	316L	0.190 (0.42)	CRN	VXJ
▪ PMC11 ▪ PMC21	C	ASME ½" MNPT, bore11.4 mm (0.45 in)	316L	0.190 (0.42)	CRN	VWJ

1) Product Configurator, order code for "Process connection"

Process connections with internal, ceramic process isolating diaphragm

Thread DIN13

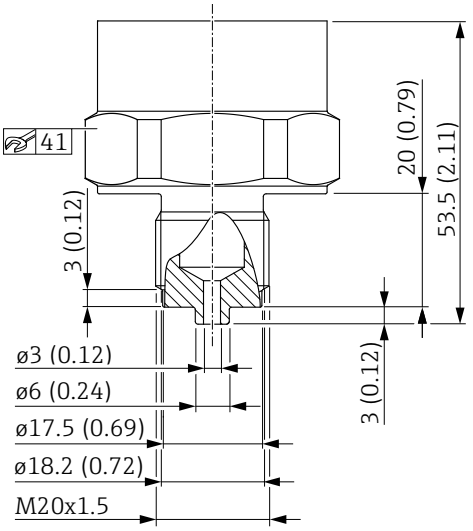

Engineering unit mm (in)

Device	Description	Material	Weight	Option [1]
			kg (lbs)	
▪ PMC11 ▪ PMC21	DIN 13 M20 x 1.5, EN 837, bore 3 mm (0.12 in)	316L	0.180 (0.40)	X4J

1) Product Configurator, order code for "Process connection"

Process connections with internal, ceramic process isolating diaphragm

Thread JIS B0203

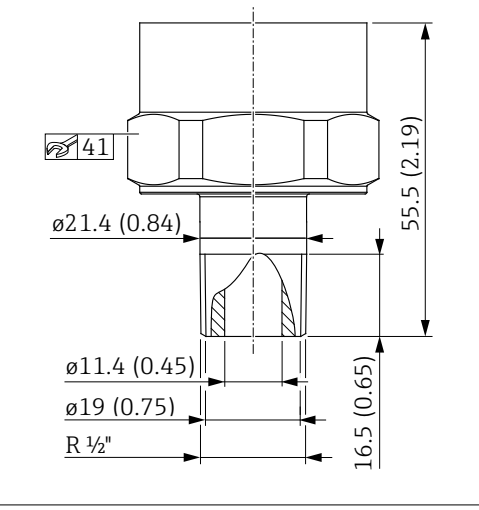

Engineering unit mm (in)

Device	Description	Material	Weight	Option [1]
			kg (lbs)	
PMC21	JIS B0203 R 1/2 (male)	316L	0.180 (0.40)	ZJJ

1) Product Configurator, order code for "Process connection"

Process connections with internal, metal process isolating diaphragm

Thread ISO 228 G

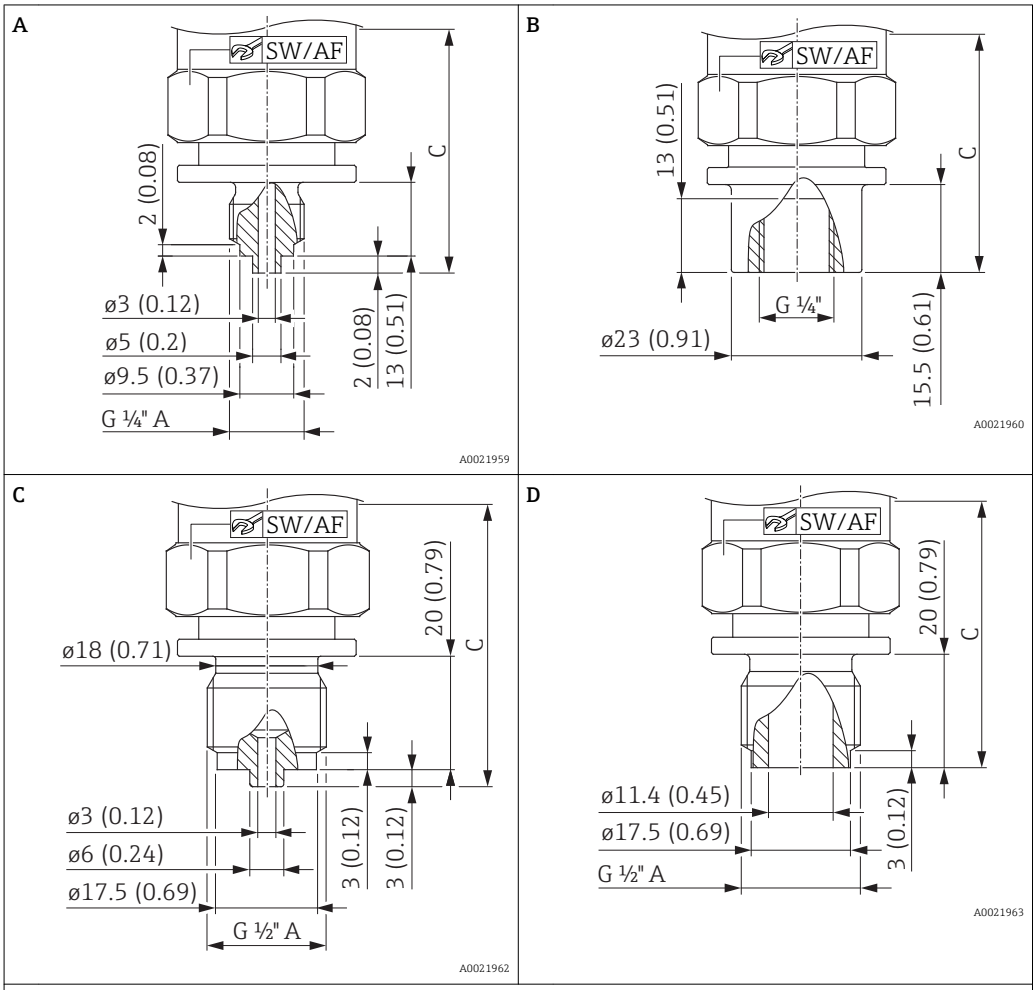

Engineering unit mm (in)

Position	Device	Description	Material	Nominal value to 100 bar (1 500 psi)			Nominal value 400 bar (6 000 psi)			Option [1]
				Weight kg (lbs)	Height C	SW/ AF	Weight kg (lbs)	Height C	SW/ AF	
A	PMP11 PMP21	Thread ISO 228 G ¼" A, EN 837	316L	0.200 (0.44)	57 (2.24)	32	0.240 (0.53)	69 (2.72)	27	WTJ
B	PMP11 PMP21	Thread ISO 228 G ¼" (female)	316L	0.220 (0.49)	57 (2.24)	32	0.260 (0.57)	69 (2.72)	27	WAJ
C	PMP11 PMP21	Thread ISO 228 G ½" A, EN 837	316L	0.220 (0.49)	65 (2.56)	32	0.270 (0.60)	77 (3.03)	27	WBJ
D	PMP11 PMP21	Thread ISO 228 G ½" A, bore11.4 mm (0.45 in)	316L	0.220 (0.49)	62 (2.44)	32	0.260 (0.57)	74 (2.91)	27	WWJ

1) Product Configurator, order code for "Process connection"

Process connections with internal, metal process isolating diaphragm

Thread ASME

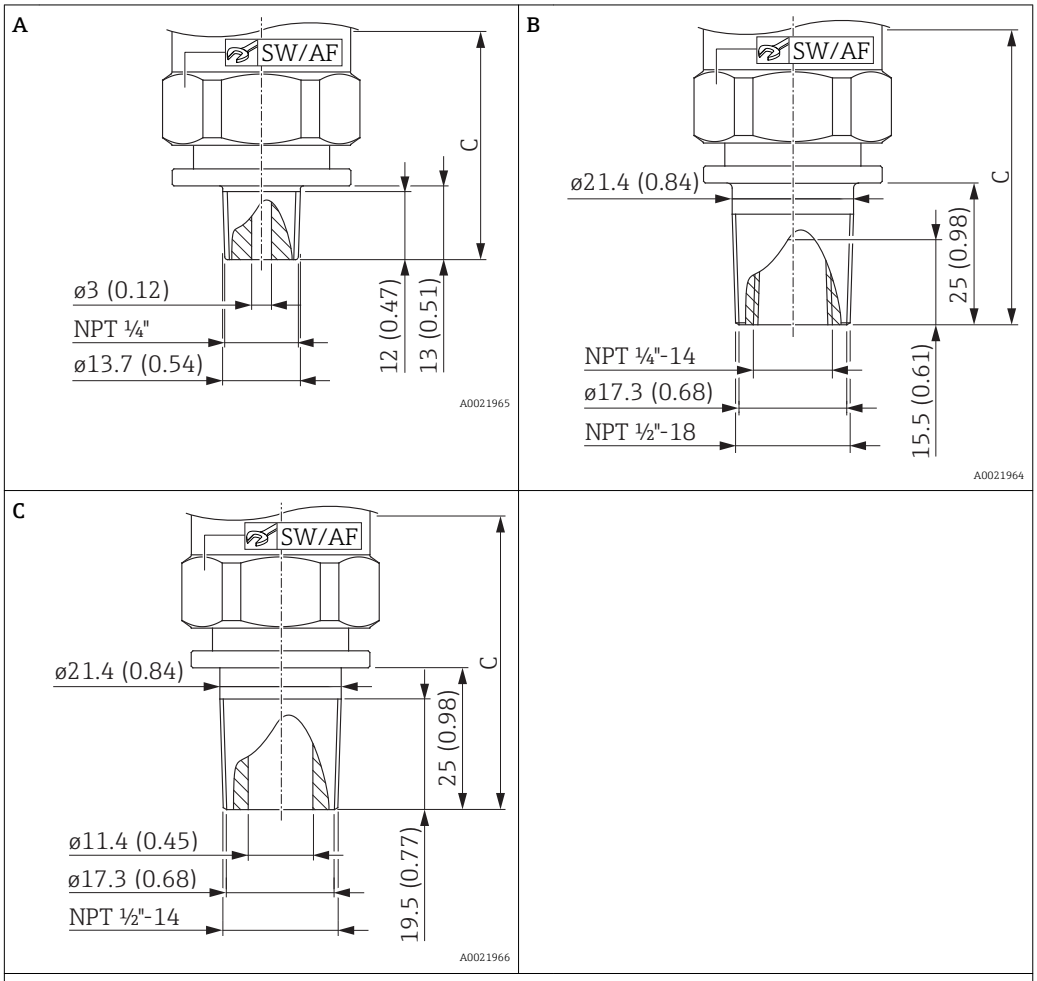

Engineering unit mm (in)

Position	Device	Description	Material	Nominal value to 100 bar (1 500 psi)			Nominal value 400 bar (6 000 psi)			Approval	Option [1]
				Weight kg (lbs)	Height C	SW/ AF	Weight kg (lbs)	Height C	SW/ AF		
A	PMP11 PMP21	ASME ¼" MNPT, bore3 mm (0.12 in)	316L	0.200 (0.44)	55 (2.17)	32	0.240 (0.53)	67 (2.64)	27	CRN	VUJ
B	PMP11 PMP21	ASME ½" MNPT, ¼" FNPT (female)	316L	0.230 (0.51)	67 (2.64)	32	0.260 (0.57)	79 (3.11)	27	CRN	VXJ
C	PMP11 PMP21	ASME ½" MNPT, bore11.4 mm (0.45 in)	316L	0.230 (0.51)	67 (2.67)	32	0.270 (0.60)	79 (3.11)	27	CRN	VWJ

1) Product Configurator, order code for "Process connection"

Process connections with internal, metal process isolating diaphragm

Thread DIN13

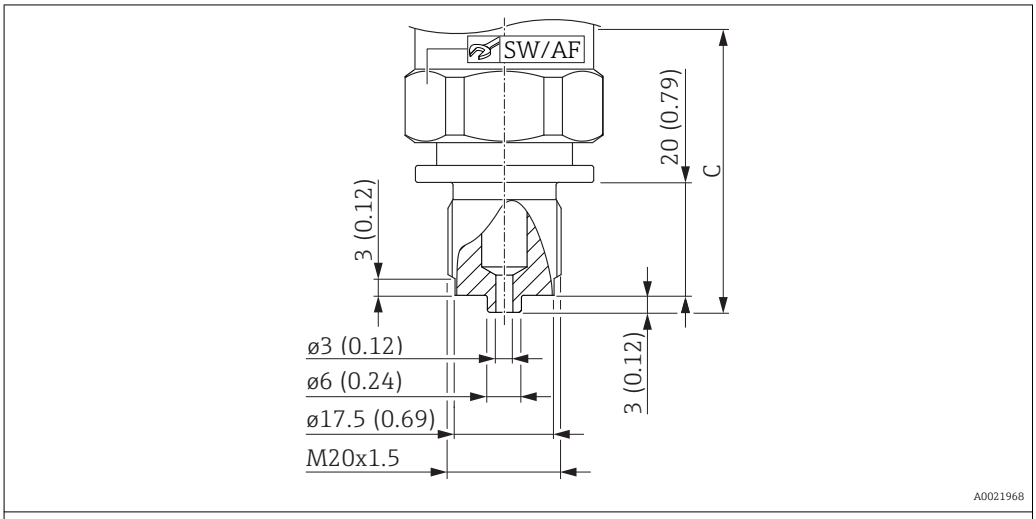

Engineering unit mm (in)

Description	Device	Material	Nominal value to 100 bar (1500 psi)			Nominal value 400 bar (6000 psi)			Option [1]
			Weight kg (lbs)	Height C	SW/ AF	Weight kg (lbs)	Height C	SW/ AF	
DIN 13 M20 x 1.5, EN 837, bore 3 mm (0.12 in)	PMP11 PMP21	316L	0.220 (0.49)	65 (2.56)	32	0.260 (0.57)	77 (3.03)	27	X4J

1) Product Configurator, order code for "Process connection"

Process connections with internal, metal process isolating diaphragm

Thread JIS B0203

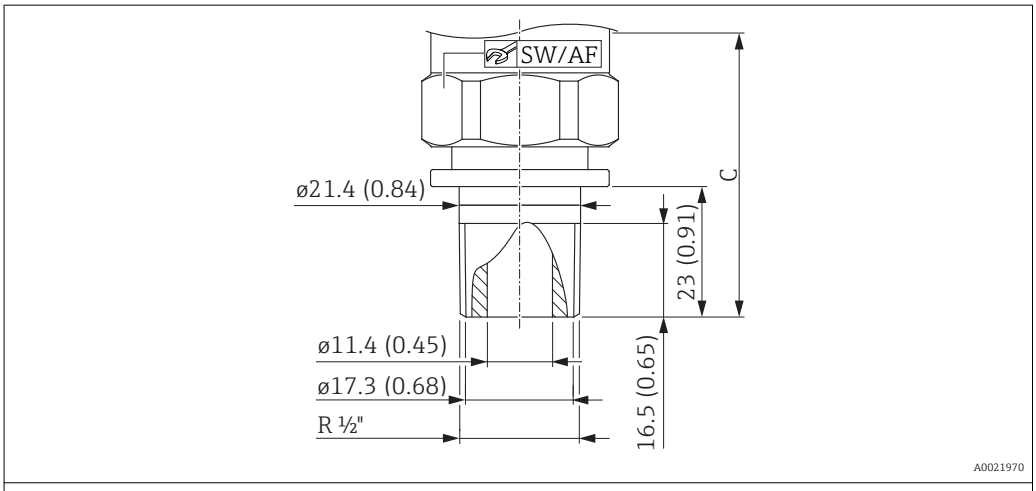

Engineering unit mm (in). Diameter of process isolating diaphragm: 17.2 mm (0.68 in)

Description	Device	Material	Nominal value to 100 bar (1500 psi)			Nominal value 400 bar (6000 psi)			Option [1]
			Weight kg (lbs)	Height C	SW/ AF	Weight kg (lbs)	Height C	SW/ AF	
JIS B0203 R ½" (male)	PMP21	316L	0.230 (0.51)	65 (2.56)	32	0.260 (0.57)	77 (3.03)	27	ZJJ

1) Product Configurator, order code for "Process connection"

Process connections with flush-mounted, metal process isolating diaphragm

Thread ISO 228 G

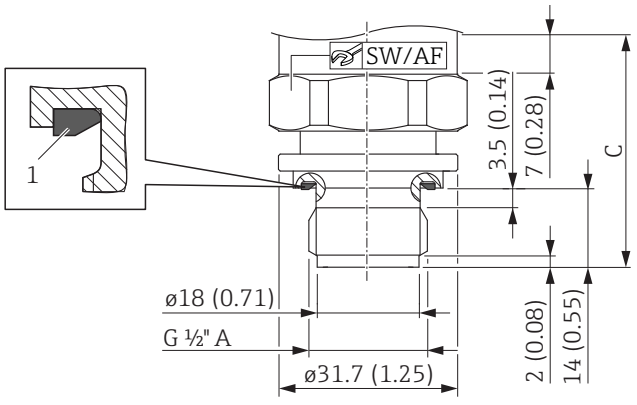

1 FKM form seal, pre-mounted

Engineering unit mm (in). Diameter of process isolating diaphragm: 17.2 mm (0.68 in)

Device	Description	Material	Nominal value to 100 bar (1500 psi)			Nominal value 400 bar (6000 psi)			Option [1]
			Weight	Height C	SW/ AF	Weight	Height C	SW/ AF	
			kg (lbs)			kg (lbs)			
PMP11 PMP21	Thread ISO 228 G ½" A DIN3852	316L	0.140 (0.31)	41 (1.61)	32	0.120 (0.26)	35 (1.38)	32	WJJ

1) Product Configurator, order code for "Process connection"

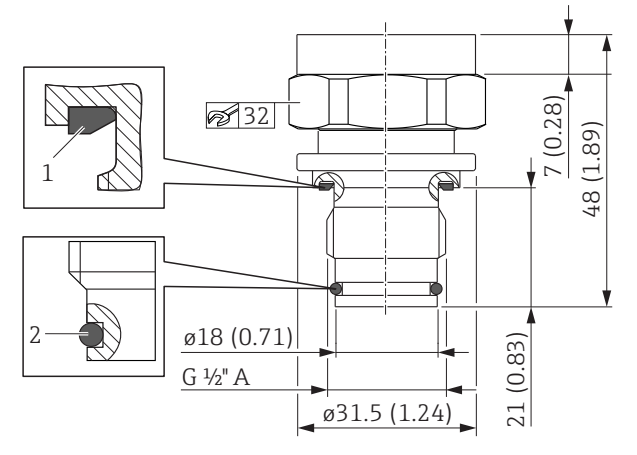

1 FKM form seal, pre-mounted
2 FKM O-ring, pre-mounted

Engineering unit mm (in). Diameter of process isolating diaphragm: 17.2 mm (0.68 in)

Device [1]	Description	Material	Weight	Option [2]
			kg (lbs)	
PMP11 PMP21	Thread ISO 228 G ½" A O-ring seal, flush-mounted	316L	0.150 (0.33)	WUJ

1) Suitable for weld-in adapter 52002643 and 52010172
2) Product Configurator, order code for "Process connection"

Materials in contact with process

NOTICE

- Device components in contact with the process are listed in the "Mechanical construction" and "Ordering information" sections.

TSE Certificate of Suitability

The following applies to all device components in contact with the process:

- They do not contain any materials derived from animals.
- No additives or operating materials derived from animals are used in production or processing.

Process connections

Endress+Hauser supplies a threaded connection made of stainless steel in accordance with AISI 316L (DIN/ EN material number 1.4404 or 1.4435). With regard to their stability-temperature property, the materials 1.4404 and 1.4435 are grouped together under 13E0 in EN 1092-1: 2001 Tab. 18. The chemical composition of the two materials can be identical.

Process isolating diaphragm

Description	Material
Ceramic process isolating diaphragm	Al_2O_3 aluminum-oxide ceramic, Ceraphire® FDA, ultrapure 99.9 % (see also www.endress.com/ceraphire) The US Food & Drug Administration (FDA) has no objections to the use of ceramics made from aluminum oxide as a surface material in contact with foodstuffs. This declaration is based on the FDA certificates of our ceramic suppliers.
Metal process isolating diaphragm	AISI 316L (DIN/EN material number 1.4435)

Seals

See the specific process connection.

Materials not in contact with process

Housing

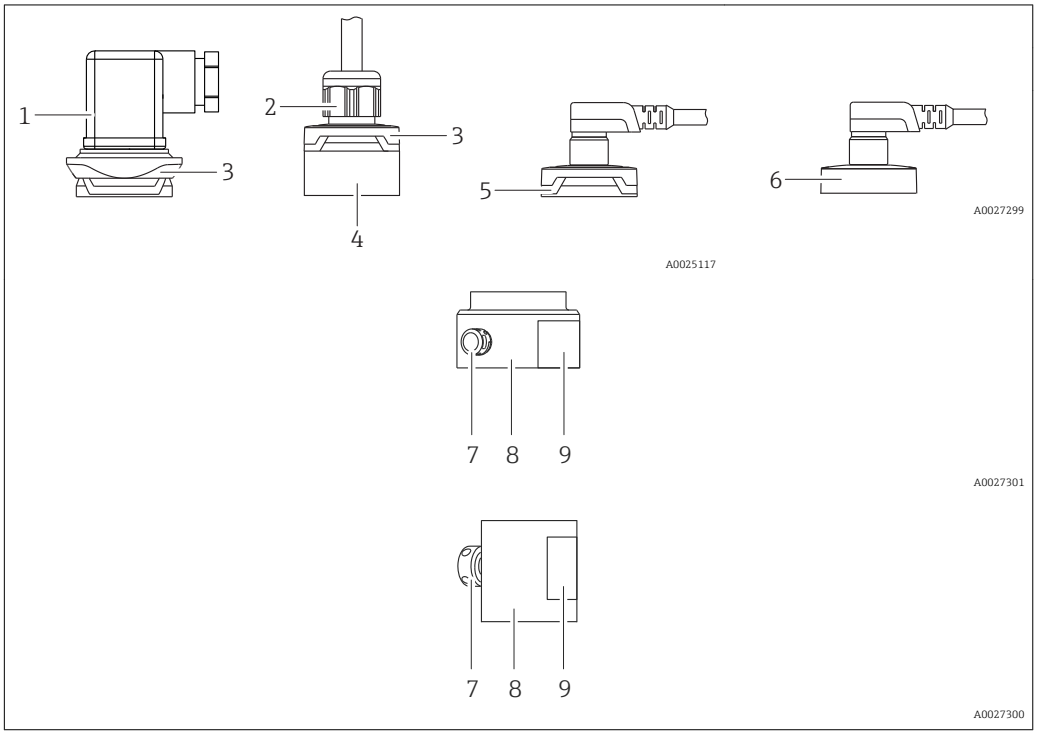

Item number	Component part	Material
1	Valve plug	▪ Seal: NBR ▪ Plug: PA ▪ Screw: V2A
2	Cable	▪ Pressure screw: PVDF ▪ Seal: TPE-V ▪ Cable: PUR (UL 94 V0)
3	Design element	PBT/PC
4	Connection	PPSU
5	M12 plug	Plastic: PPSU
6	M12 plug	Metal 316L (1.4404) For Ex ec: metal housing cap
7	Pressure compensation element	PMP11: PBT/PC PMP21 standard: PBT/PC PMP21 with Ex ec approval: 1.4404
8	Housing	316L (1.4404)
9	Nameplates	Plastic foil (attached to housing) or directly lasered onto the housing

Filling oil

Device	Filling oil
PMP11 PMP21	NSF-H1 synthetic oil in accordance with FDA 21 CFR 178.3570

Cleaning

Device	Description	Option [1]
PMC11 PMP11 PMC21 PMP21	Cleaned from oil+grease	HA
PMC21	Cleaned for oxygen service	HB

1) Product Configurator, order code for "Service"

Operability

Plug-on display PHX20 (optional)

No display or other operation facility is required to operate the device. However, devices with a valve plug can be fitted with the optional local display PHX20.

Description	Option [1]
Plug-on display PHX20, IP65	RU

1) Product Configurator, order code for "Accessories"

A 1-line liquid crystal display (LCD) is used. The local display shows measured values, fault messages and information messages. The device display can be turned in 90° steps. Depending on the orientation of the device, it is therefore easy to read the measured values.

Technical data

Display:	4-digit, red LED display
Digit height:	7.62 mm; programmable decimal point setting
Display range:	-1999 to 9999
Accuracy:	0.2% of the span ±1 digit
Electrical connection:	To transmitter with 4 to 20 mA output and elbow plug DIN 43 650, reverse polarity protection
Display power supply:	Not required, powered automatically from the power loop
Voltage drop:	≤ 5 V (corresponds to load: max. 250 Ω)
Rate of conversion:	3 measurements per second
Damping:	0.3 to 20 s (configurable)
Data backup:	Non-volatile EEPROM
Error message:	▪ HI: overrange ▪ LO: below range
Programming:	Via 2 keys, menu-guided, display range scaling, decimal point, damping, error message
Degree of protection:	IP 65
Influence of temperature on the display:	0.1% / 10 K
Electromagnetic compatibility (EMC):	Interference emission as per EN 50081, interference immunity as per EN 50082
Permitted current load:	Max. 60 mA
Ambient temperature:	0 to +60 °C (+32 to +140 °F)
Housing material:	Pa6 GF30 plastic, blue Front screen made from red PMMA
Order number:	52022914

Certificates and approvals

CE mark

The device meets the legal requirements of the relevant EC directives. Endress+Hauser confirms that the device has been successfully tested by applying the CE mark.

RoHS

The measuring system complies with the substance restrictions of the Restriction on Hazardous Substances Directive 2011/65/EU (RoHS 2).

RCM-Tick marking

The supplied product or measuring system meets the ACMA (Australian Communications and Media Authority) requirements for network integrity, interoperability, performance characteristics as well as health and safety regulations. Here, especially the regulatory arrangements for electromagnetic compatibility are met. The products are labelled with the RCM- Tick marking on the name plate.



A0029561

EAC conformity

The PMC21, PMP21 and PMP23 devices meet the legal requirements of the applicable EAC directives. These are listed in the corresponding EAC Declaration of Conformity along with the standards applied.

Endress+Hauser confirms successful testing of the device by affixing to it the EAC mark.

Approval

CSA C/US General Purpose

Safety Instructions (XA)

Safety Instructions (XA) are supplied with the device depending on the approval. These instructions are an integral part of the Operating Instructions.

Device	Directive	Documentation	Option [1]
PMP21	ATEX II 1/2G Ex ia IIC T4 Ga/Gb	XA01271P	BA
PMC21	ATEX II 2G Ex ia IIC T4 Gb	XA01271P	BB
PMC21 PMP21	ATEX II 3G Ex ec IIC T4 Gc	XA01533P	BC
PMC21 PMP21	FM IS Cl. I, Div.1 Gr. A-D T4	XA01321P	FA
PMC21 PMP21	CSA C/US IS Cl. I Div. 1 Gr. A-D	XA01322P	CB
PMC21 PMP21	EAC Ex ia IIC T4 Ga/Gb	XA01540P	GA
PMC21 PMP21	IEC Ex ia IIC T4 Ga/Gb	XA01271P	IA
PMC21 PMP21	NEPSI Ex ia IIC T4	XA01363P	NA
PMC21 PMP21	TIIS Ex ia IIC T4	In preparation	TA

1) Product Configurator, order code for "Approval"

The nameplate provides information on the Safety Instructions (XA) that are relevant for the device.

Marine approval (pending)

Device	Description	Option [1]
PMC21 PMP21	DNV GL	LE
PMC21 PMP21	ABS	LF

1) Product Configurator, order code for "Additional approval"

Pressure Equipment Directive 2014/68/EU (PED)

Pressure equipment with allowable pressure ≤ 200 bar (2 900 psi)

Pressure equipment (with a maximum allowable pressure PS ≤ 200 bar (2 900 psi)) can be classified as pressure accessories in accordance with Pressure Equipment Directive 2014/68/EU. If the maximum allowable pressure is ≤ 200 bar (2 900 psi) and the pressurized volume of the pressure equipment is ≤ 0.1 l, the pressure equipment is subject to the Pressure Equipment Directive (cf. Pressure Equipment Directive 2014/68/EU, Article 4, point 3). The Pressure Equipment Directive only requires that the pressure equipment shall be designed and manufactured in accordance with the "sound engineering practice of a Member State".

Reasons:

- Pressure Equipment Directive (PED) 2014/68/EU Article 4, point 3
- Pressure equipment directive 2014/68/EU, Commission's Working Group "Pressure", Guideline A-05 + A-06

Note:

A partial examination shall be performed for pressure instruments that are part of safety equipment for the protection of a pipe or vessel from exceeding allowable limits (safety accessory in accordance with Pressure Equipment Directive 2014/68/EU, Article 2, point 4).

Pressure equipment with allowable pressure > 200 bar (2 900 psi)

Pressure equipment designated for application in every process fluid having a pressurized volume of <0.1 l and a max. allowable pressure PS > 200 bar (2 900 psi) shall satisfy the essential safety requirements set out in Annex I of the Pressure Equipment Directive 2014/68/EU. According to Article 13 pressure equipment shall be classified by category in accordance with Annex II. The conformity assessment of the pressure equipment shall be determined by the category I under consideration of the above-mentioned low pressurized volume. These devices shall be provided with CE marking.

Reasons:

- Pressure Equipment Directive 2014/68/EU, Article 13, Annex II
- Pressure equipment directive 2014/68/EU, Commission's Working Group "Pressure", Guideline A-05

Note:

A partial examination shall be performed for pressure instruments that are part of safety equipment for the protection of a pipe or vessel from exceeding allowable limits (safety accessory in accordance with Pressure Equipment Directive 2014/68/EU, Article 2, point 4).

The following also applies:

PMP21 with threaded connection and internal process isolating diaphragm PN > 200 :

Suitable for stable gases in group 1, category I, module A

Other standards and guidelines

The applicable European guidelines and standards can be found in the relevant EU Declarations of Conformity. The following were also applied:

DIN EN 60770 (IEC 60770):

Transmitters for use in industrial process control systems Part 1: Methods for performance evaluation

Methods for evaluating the performance of transmitters for control and regulation in industrial process control systems.

DIN 16086:

Electrical pressure measuring instruments, pressure sensors, pressure transmitters, pressure measuring instruments, concepts, specifications on data sheets

Procedure for writing specifications in data sheets for electrical pressure measuring instruments, pressure sensors and pressure transmitters.

EN 61326-X:

EMC product family standard for electrical equipment for measurement, control and laboratory use.

EN 60529:

Degrees of protection provided by enclosures (IP code)

NAMUR - User association of automation technology in process industries.

NE21 - Electromagnetic Compatibility (EMC) of Industrial Process and Laboratory Control Equipment.

NE43 - Standardization of the Signal Level for the Failure Information of Digital Transmitters.

NE44 - Standardization of Status Indicators on PCT Instruments with the Help of Light Emitting Diodes

NE53 - Software of Field Devices and Signal-processing Devices with Digital Electronics

CRN approval

A CRN approval is available for some device versions. A CRN-approved process connection with a CSA approval must be ordered for a CRN-approved device. The CRN-approved devices are assigned the registration number 0F18141.5C.

Ordering information: Product Configurator, order code for "Process connection" (the CRN process connections are indicated appropriately in the "Mechanical construction" section.)

Calibration unit

Description	Option [1]
Sensor range; %	A
Sensor range; mbar/bar	B
Sensor range; kPa/MPa	C
Sensor range; psi	F
Customer-specific; see additional spec.	J

1) Product Configurator, order code for "Calibration; unit"

Calibration

Description	Option [1]
3-point certificate of calibration	F3

1) Product Configurator order code for "Calibration"

Inspection certificates

Device	Description	Option [1]
PMC21 PMP21	3.1 Material documentation, wetted metal parts, EN10204-3.1 inspection certificate	JA

1) Product Configurator, order code for "Test, Certificate"

Ordering information

Detailed ordering information is available from the following sources:
- In the Product Configurator on the Endress+Hauser website: www.endress.com -> Click "Corporate" -> Select your country -> Click "Products" -> Select the product using the filters and search field -> Open product page -> The "Configure" button to the right of the product image opens the Product Configurator.
- From your Endress+Hauser Sales Center: www.addresses.endress.com

Product Configurator - the tool for individual product configuration
- Up-to-the-minute configuration data
- Depending on the device: Direct input of measuring point-specific information such as measuring range or operating language
- Automatic verification of exclusion criteria
- Automatic creation of the order code and its breakdown in PDF or Excel output format
- Ability to order directly in the Endress+Hauser Online Shop

Scope of delivery
- Measuring device
- Optional accessories
- Brief Operating Instructions
- Certificates

Accessories

Weld-in adapter

Various weld-in adapters are available for installation in vessels or pipes.

Device	Description	Option [1]	Order number
PMP21	Weld-in adapter G½, 316L	QA	52002643
PMP21	Weld-in adapter G½, 316L 3.1 EN10204-3.1 material, inspection certificate	QB	52010172
PMP21	Weld-in tool adapter G½, brass	QC	52005082

1) Product Configurator, order code for "Enclosed accessories"

If installed horizontally and weld-in adapters with a leakage hole are used, ensure that the leakage hole is pointing down. This allows leaks to be detected as quickly as possible.

Plug-on display PHX20

→ 🖹 40

M12 plug connectors

Connector	Degree of protection	Material	Option [1]	Order number
M12 (self-terminated connection at M12 plug) 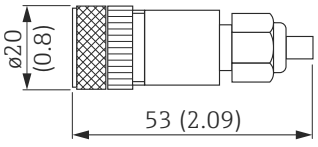	IP67	▪ Union nut: Cu Sn/Ni ▪ Body: PBT ▪ Seal: NBR	R1	52006263
M12 90 degrees with 5m (16 ft) cable 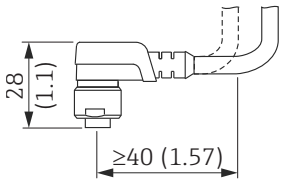	IP67	▪ Union nut: GD Zn/Ni ▪ Body: PUR ▪ Cable: PVC	RZ	52010285
M12 90 degrees (self-terminated connection at M12 plug) 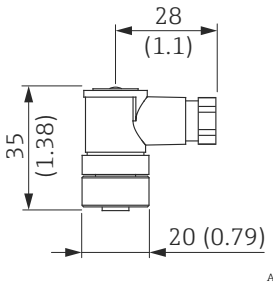	IP67	▪ Union nut: GD Zn/Ni ▪ Body: PBT ▪ Seal: NBR	RM	71114212

1) Product Configurator, order code for "Enclosed accessories"

Documentation

Field of Activities

Pressure measurement, powerful instruments for process pressure, differential pressure, level and flow:

FA00004P/00/EN

Technical Information

- TI00241F/00/EN: EMC test procedures
- TI00426F/00/EN: Weld-in adapters, process adapters and flanges (overview)

Operating Instructions

BA01271P/00/EN

Brief Operating Instructions

KA01164P/00/EN

Safety Instructions (XA)

Safety Instructions (XA) are supplied with the device depending on the approval. These instructions are an integral part of the Operating Instructions.

Device	Directive	Documentation	Option [1]
PMP21	ATEX II 1/2G Ex ia IIC T4 Ga/Gb	XA01271P	BA
PMC21	ATEX II 2G Ex ia IIC T4 Gb	XA01271P	BB
PMC21 PMP21	ATEX II 3G Ex ec IIC T4 Gc	XA01533P	BC
PMC21 PMP21	FM IS Cl. I, Div.1 Gr. A-D T4	XA01321P	FA
PMC21 PMP21	CSA C/US IS Cl. I Div. 1 Gr. A-D	XA01322P	CB
PMC21 PMP21	EAC Ex ia IIC T4 Ga/Gb	XA01540P	GA
PMC21 PMP21	IEC Ex ia IIC T4 Ga/Gb	XA01271P	IA
PMC21 PMP21	NEPSI Ex ia IIC T4	XA01363P	NA
PMC21 PMP21	TIIS Ex ia IIC T4	In preparation	TA

1) Product Configurator, order code for "Approval"

The nameplate provides information on the Safety Instructions (XA) that are relevant for the device.



www.addresses.endress.com

Endress+Hauser

People for Process Automation

CS-407-100 : Identification sheet

VWTC PROJECT NUMBER:	Iqaluit WWTP	REV:	02
PROJECT NAME:	5000218036	SUBMITTED TO (COMPANY):	
ENGINEER:	F.VINCI	SUBMITTED TO (RESPONSIBLE)	
PROJECT MANAGER:	C. BEKAERT	PROJECT NUM REFERENCE.:	
PHONE NUMBER:		LOT NUMBER:	

SUPPLIER	EQPT CODE	EQPT TAG NO	DIA	DESCRIPTION	INFO 1	INFO 2	INFO 3	APPLIC.	NOTE	REV
HACH	IEPOCY201499	AE-04-941	N/A	HP-500 INSTRUMENT	CONDUCTIVITY SENSOR/MANUFACTURER: HACH// MODEL: D3725E2T // SENSOR CABLE: 22FT // CALIBRATED RANGE: 200 - 2,000,000 uS/cm // BODY: PP	N/A	N/A	HP-500		1
HACH	IEPOCY201499	AE-04-945	N/A	HP-500 INSTRUMENT	CONDUCTIVITY SENSOR/MANUFACTURER: HACH// MODEL: D3725E2T // SENSOR CABLE: 22FT // CALIBRATED RANGE: 200 - 2,000,000 uS/cm // BODY: PP	N/A	N/A	HP-500		2

Inductive Conductivity Sensors



The innovative technology of Hach's Inductive Conductivity Sensors eliminates polarization and electrode coating problems in harsh environments. Available in sanitary (CIP) flange style and convertible styles in PFA Teflon®, polypropylene, PEEK®, and PVDF.

Features and Benefits

Wide Measuring Range

Hach's Inductive Conductivity Sensors measure 200 up to 2,000,000 microSiemens/cm. A built-in Pt 1000 RTD compensates the measured conductivity for changes in process temperature.

Low-maintenance Design

The inductive sensor design eliminates polarization and electrode coating problems that commonly affect conventional contacting electrode-type conductivity sensors.

Complete Digital System

All 3700 sc sensors come complete with a Digital Gateway for use with a Hach sc Digital Controller.

Principal of Operation

Inductive conductivity sensors induce a low current in a closed loop of solution, then measure the magnitude of this current to determine the solution's conductivity. The conductivity analyzer drives Torroid A, inducing an alternating current in the solution. This current signal flows in a closed loop through the sensor bore and surrounding solution. Torroid B senses the magnitude of the induced current which is proportional to the conductance of the solution. The analyzer processes this signal and displays the corresponding reading.

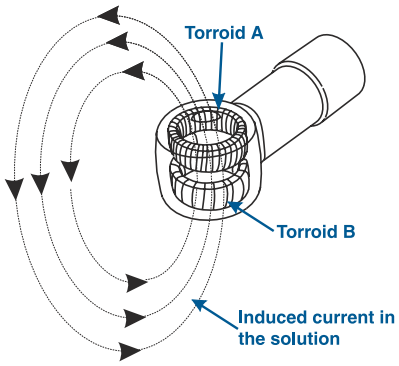

Versatile Mounting Styles

Sensors can be installed using a choice of four mounting styles—immersion, insertion, union, and sanitary. Please turn to page 6 for more information.

Full-Featured "Plug and Play" Hach sc Digital Controllers

There are no complicated wiring or set up procedures with any Hach sc controller. Just plug in any combination of Hach digital sensors and it's ready to use—it's "plug and play."

One or multiple sensors—The sc controller family allows you to receive data from up to eight Hach digital sensors in any combination using a single controller.

Communications—Multiple alarm/control schemes are available using the relays and PID control outputs. Available communications include analog 4-20 mA, digital MODBUS® (RS485 and RS232) or Profibus DP protocols. (Other digital protocols are available. Contact your Hach representative for details.)

Data logger—A built-in data logger collects measurement data, calibration, verification points, and alarm history.

Specifications*

Measuring Range
From 200 microSiemens/cm up to 2,000,000 microSiemens/cm

Operating Temperature Range
-10 to 200°C (14 to 392°F); limited only by sensor body material and mounting hardware; see below

Flow Rate
3 m (10 ft.) per second, maximum

Temperature Compensator
Pt 1000 RTD

Sensor Cable
Polypropylene and PVDF Sensors:
5 conductor (plus two isolated shields) cable with XLPE (cross-linked polyethylene) jacket; rated to 150°C (302°F); 6 m (20 ft.) long

PEEK® and PFA Teflon® Sensors:
5 conductor (plus two isolated shields) cable with Teflon-coated jacket; rated to 200°C (392°F); 6 m (20 ft.) long

Wetted Materials
Polypropylene, PVDF, PEEK® or PFA Teflon®

Model 3700 sc-series Material Compatibility

	Polypropylene	PVDF	PEEK®	Teflon®
Calcium Chloride		•	•	•
Hydrochloric Acid		•		•
Hydrofluoric Acid		•		•
Nitric Acid				•
Phosphoric Acid		•	•	•
Potassium Hydroxide	•		•	•
Seawater	•	•	•	•
Sodium Hydroxide	•		•	•
Sulfuric Acid				•
Water	•	•	•	•

NOTE: Compatibilities are valid for temperatures up to 115°C. For other applications or conditions, please contact Hach Technical Support.

Temperature/Pressure Limits
Sensor Only (no hardware):

Polypropylene
6.9 bar at 100°C (100 psi at 212°F)
PVDF
6.9 bar at 120°C (100 psi at 248°F)
PEEK®
13.8 bar at 200°C (200 psi at 392°F)
PFA Teflon®
13.8 bar at 200°C (200 psi at 392°F)

Temperature/Pressure Limits (continued)
Sensor with Hardware:

Immersion and Union†
See graphs below for specific Hach sensor and mounting hardware combinations

CPVC Mounting Hardware
(All Sensor Materials)

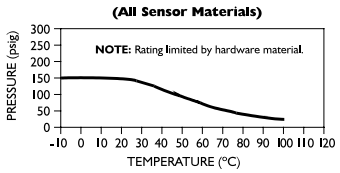

PVDF Mounting Hardware
(All Sensor Materials)

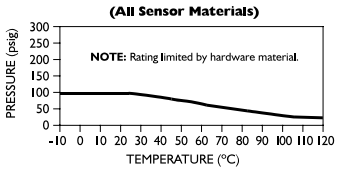

316 Stainless Steel Mounting Hardware

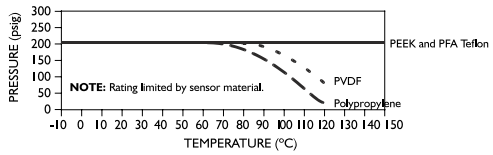

304 Stainless Steel Sanitary Mounting Hardware††
With Polypropylene Sensor

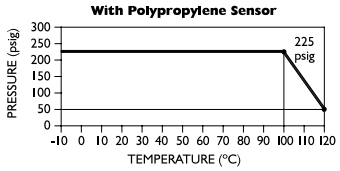

With PVDF Sensor

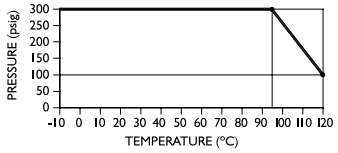

With PFA Teflon Sensor

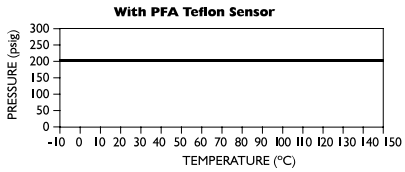

†Ratings for the above Hach sensor and mounting hardware combinations are based upon water service. More severe service may require a correction factor.

††Sanitary hardware ratings are for MH018S8SZ hardware. Other hardware and clamp combinations may reduce the listed ratings.

Insertion Hardware only:	MH118M9NZ	MH138M9NZ
Temperature Range**	-5 to 95°C (23 to 203°F) supported or unsupported	-5 to 80°C (23 to 176°F) unsupported if installed vertically; -5 to 95°C (23 to 203°F) when supported with bracket
Maximum Pressure**	5.5 bar at 95°C (80 psig at 203°F)	3.5 bar at 90°C (50 psig at 194°F)
Wetted Materials	316 stainless steel, Teflon® valve seats, and Viton® O-rings	CPVC, brass, Teflon® valve seats, and Viton® O-ring seals

***These sensor/hardware temperature and pressure ratings are limited by the hardware material, maximum pressure, and whether the assembly is supported or unsupported.*

**Specifications subject to change without notice.*

PEEK® is a registered Trademark of ICI Americas, Inc.; Teflon® is a registered Trademark of DuPont Co.; Viton® is a registered trademark of E.I. DuPont de Nemours + Co.

Engineering Specifications

1. The electrodeless conductivity sensor shall measure from 0-200 to 0-2,000,000 microSiemens/cm, and shall have a built-in Pt 1000 RTD element to compensate measured conductivity for changes in process temperature.

2. The sensor shall be constructed of only one wetted body material which shall be polypropylene, PVDF, PEEK® or PFA Teflon®.

3. The sensor cable shall be water resistant and rated to 150ºC (302ºF) for polypropylene and PVDF sensors or 200ºC (392ºF) for PEEK® and PFA Teflon® sensors.

4. The sensor shall have a 1/2-inch nominal diameter bore for operation in slurries.

5. The sensor shall be a:

   a) Convertible style that can be directly fastened onto the end of a pipe for immersion mounting or, by using a special Hach union-mount adapter, mounted into any 2-inch NPT fitting (tee, weldolet, pipe saddle, etc.). The convertible style sensor can also be insertion mounted into a 2-inch ball valve assembly.

   b) Sanitary style with materials that conform to the provisions of 3-A Sanitary Standards to withstand CIP cleaning, and with an integral 2-inch sanitary-mount flange to mount into a standard 2-inch sanitary tee.

6. An optional sensor module or Digital Gateway shall be available for connecting to a Hach sc Digital Controller.

7. The sensor shall be Hach Company 3700 sc or 3700 Inductive Conductivity Sensor.

Dimensions

Convertible Style

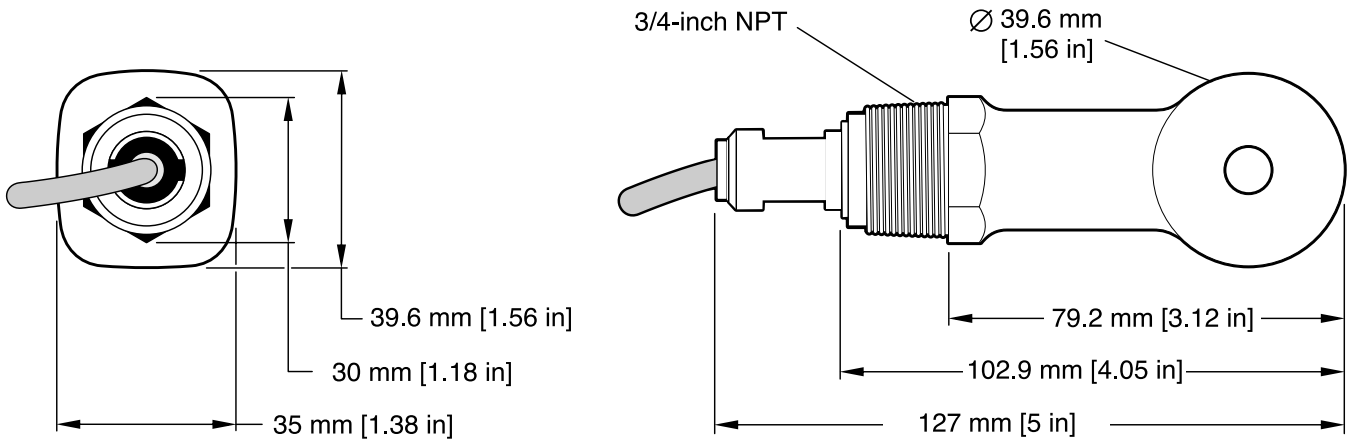

Sanitary Style

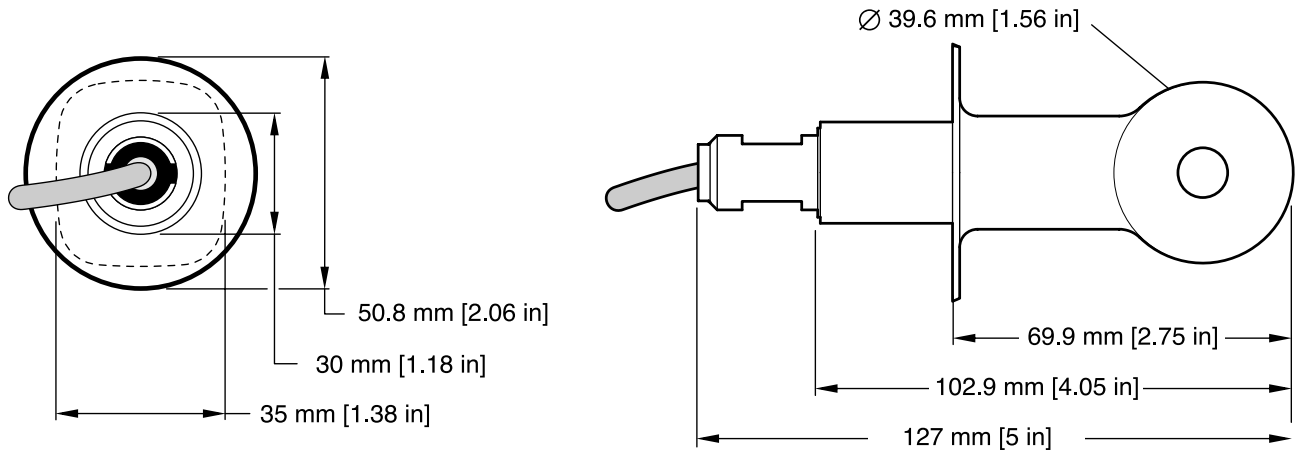

Ordering Information

3700 sc Digital Inductive Conductivity Sensors

All digital inductive sensors come complete with standard sensor cable length of 6 m (20 ft.), digital gateway, and a 1 m (3.3 ft.) digital extension cable.

Choice of body styles:

- *Convertible – 2-inch NPT, designed for tee, other flow through, insertion, and pipe mountings for immersion.*
- *Sanitary (CIP) –2-inch flange, special cap, and EPDM compound gasket. Conforms to provisions of 3-A Sanitary Standards.*

Product Number	Body Style	Body Material
D3705E2T	Sanitary	Polypropylene
D3706E2T	Sanitary	PVDF
D3708E2T	Sanitary	PFA Teflon
D3725E2T	Convertible	Polypropylene
D3726E2T	Convertible	PVDF
D3727E2T	Convertible	PEEK
D3728E2T	Convertible	PFA Teflon

Digital Gateway

6120800 Use the Digital Gateway to connect analog Hach 3700 inductive conductivity sensors to the Hach sc1000 digital controller

3700 Analog Inductive Conductivity Sensors

All Analog sensors come complete with standard sensor cable length of 6 m (20 ft.).

Choice of body styles:

- *Convertible – 2-inch NPT, designed for tee, other flow through, insertion, and pipe mountings for immersion.*
- *Sanitary (CIP) –2-inch flange, special cap, and EPDM compound gasket. Conforms to provisions of 3-A Sanitary Standards.*

Product Number	Body Style	Body Material
3705E2T	Sanitary	Polypropylene
3706E2T	Sanitary	PVDF
3708E2T	Sanitary	PFA Teflon
3725E2T	Convertible	Polypropylene
3726E2T	Convertible	PVDF
3727E2T	Convertible	PEEK
3728E2T	Convertible	PFA Teflon

Accessories

Cables

Digital cables are used only with digital sensors or gateways when connecting to a Hach sc Digital Controller.

6122400 Digital Extension Cable, 1 m (3.2 ft.)

5796000 Digital Extension Cable, 7.7 m (25 ft.)

5796100 Digital Extension Cable, 15 m (50 ft.)

5796200 Digital Extension Cable, 31 m (100 ft.)

Analog cables are used only with analog sensors, junction box, and controller.

1W1100 Analog Interconnect Cable (order per foot)

Digital Termination Box

Used with digital extension cables when the desired cable length between the digital sensor/digital gateway and sc Digital Controller is between 100 m (328 ft) and 1000 m (3280 ft).

5867000 Digital Termination Box

Analog Junction Box

Used with analog interconnect cable when the desired cable length between analog sensor and analog controller is greater than the standard length of sensor cable. Each junction box includes terminal strip and gasket.

60A2053 Junction Box, Surface-mount, aluminum (includes mounting hardware)

60A9944 Junction Box, Pipe-mount, PVC for 1/2-inch diameter pipe (includes mounting hardware)

60G2052 Junction Box, Pipe-mount, PVC for 1-inch diameter pipe (includes mounting hardware)

76A4010-001 Junction Box, NEMA 4X (no mounting hardware included)

Conductivity Reference Solutions

Please specify the desired conductivity value when placing your order.

Product Number	Description	Volume
25M3A2000-119	100-1000 µS/cm	1 liter
25M3A2050-119	1000-2000 µS/cm	1 liter
25M3A2100-119	2000-150,000 µS/cm	1 liter
25M3A2200-119	200,000-300,000 µS/cm	1 liter

Ordering Information *continued*

Mounting Hardware

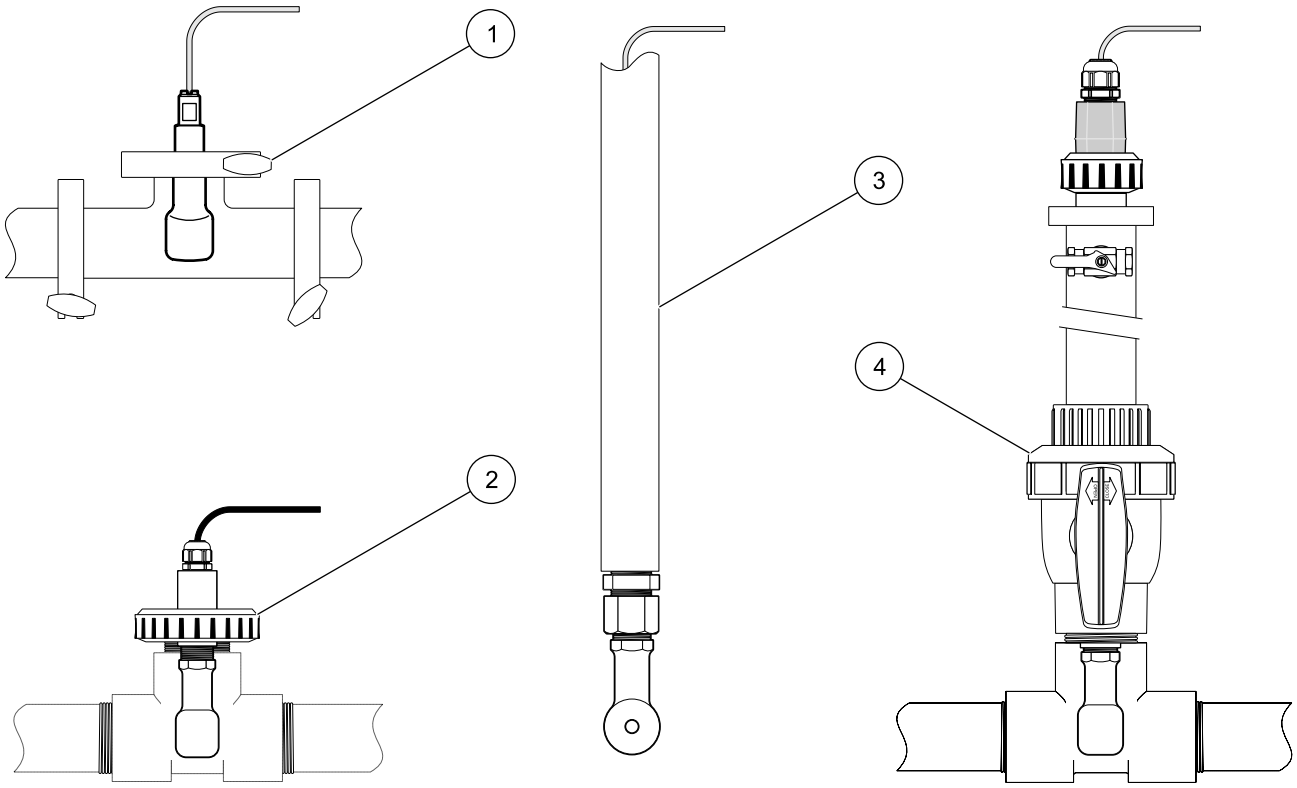

1. Sanitary Style sensor sanitary clamp mounting

2. Convertible Style sensor union mounting

3. Convertible Style sensor immersion mounting

4. Convertible Style sensor ball valve mounting

Sanitary Mount

MH018S8SZ 316SS
Includes 316 SS sanitary 2-inch tee, heavy-duty clamp, special cap, and EPDM compound gasket.

Union Mount

MH518N3NZ 316 SS
MH538N3NZ CPVC
MH568N3NZ PVDF
Includes adapter and a 2-inch pipe tee. Union adapters are used with convertible style sensors that are to be union or flange mounted into a standard 2-inch NPT pipe tee or insertion mounted into a 2-inch ball valve assembly.

Immersion Mount

MH432G CPVC Pipe
Includes 1/2-inch diameter x 4-foot pipe, 1/2- x 3/4-inch NPT coupling, and plastic pipe-mount junction box with terminal strip.

Insertion Mount

MH138M9NZ CPVC
MH118M9NZ 316 SS
Includes 2-inch NPT insertion assembly with ball valve.

Common Applications

Refer to page 2 for sensor temperature and pressure limits.

Industry	Application	Recommended Sensor Style (and Material)
Metals Finishing and Mining	Plating bath monitoring	Convertible (polypropylene)
	Alkaline/caustic wash	Convertible (polypropylene)
	Rinse water	Convertible (polypropylene)
	Pickling processes	Convertible (PVDF)
	Metals recovery	Convertible (PEEK)
	Copper floatation	Convertible (PEEK)
	Scrubbers	Convertible (polypropylene)
Chemicals and Refining	Acid production	Convertible (PFA Teflon)
	Caustic production	Convertible (PFA Teflon
	Phosphates	Convertible (PFA Teflon)
	Fertilizers	Convertible (PFA Teflon)
	Detergents	Convertible (PFA Teflon)
	Glycerin	Convertible (PVDF)
	Moisture detection	Convertible (PVDF or PFA Teflon)
	Scrubbers	Convertible (PVDF)
	Wastewater	Convertible (PVDF)
	Oil well drilling mud	Convertible (PEEK)
	Leak detection	Convertible (PEEK)
	Alkylation	Convertible (PFA Teflon)
	Spill detection	Convertible (PEEK)
Food and Beverage	Brine concentration	Convertible (polypropylene)
	Desalting	Convertible (polypropylene)
	Cheese production	Sanitary (PFA Teflon)
	Caustic peeling	Convertible (PFA Teflon)
	Pickle making	Sanitary (polypropylene)
	CIP applications	Sanitary (PFA Teflon)
	Rinse water control	Convertible (polypropylene)
	Sugar carbonation	Convertible (PFA Teflon)
Pulp and Paper	White, black and green liquor	Convertible (PEEK)
	Stock washing	Convertible (PEEK)
	Wash and cooking liquor control	Convertible (PEEK)
	Scrubbers	Convertible (PEEK)
	Spill detection	Convertible (PEEK)
Textile Manufacturing	Rinse water	Convertible (polypropylene)
	Dye baths	Convertible (polypropylene)
	Bleaching	Convertible (polypropylene)
	Mercerizing	Convertible (polypropylene)
	Acid washing	Convertible (polypropylene)
	Carbonizing and scouring baths	Convertible (polypropylene)
Natural Waters, Lakes, Streams, and Sea Water	Water pollution monitoring	Convertible (polypropylene)
	Salt intrusion	Convertible (polypropylene)
	Salinity	Convertible (polypropylene)
Clean Water Treatment	Ion exchange regeneration	Convertible (polypropylene)
	Reverse osmosis concentrate monitoring	Convertible (polypropylene)
	Softener regeneration	Convertible (polypropylene)
	Acid/caustic concentration control	Convertible (PVDF)
Wastewater Treatment	Acid/caustic concentration control	Convertible (PEEK)
	Spill detection	Convertible (PEEK)
Steam Generation	Boiler blowdown	Convertible (polypropylene)
	Flue gas scrubbers	Convertible (polypropylene)

To complete your conductivity measurement system, choose from these Hach controllers...

Model sc200 Controller

(see Lit. #2665)

The sc200 controller platform can be configured to operate either 2 Digital Sensor Inputs, or 1 or 2 Analog Sensor Inputs, or a combination of Digital and Analog Sensor Inputs. Customers may choose their communication options from a variety of offerings ranging from MODBUS RTU to Profibus DPV1.

sc200 for Hach Digital Sensors

LXV404.99.00552 sc200 controller, 2 channel, digital
LXV404.99.00502 sc200 controller, 1 channel, digital
LXV404.99.00542 sc200 controller, 2 channel, digital & mA input
LXV404.99.00512 sc200 controller, 2 channel, digital & pH/DO
LXV404.99.00522 sc200 controller, 2 channel, digital & Conductivity
LXV404.99.00532 sc200 controller, 2 channel, digital & Flow

sc200 for Hach Analog Sensors

LXV404.99.00102 sc200 controller, 1 channel, pH/DO
LXV404.99.00112 sc200 controller, 2 channel, pH/DO
LXV404.99.00202 sc200 controller, 1 channel, Conductivity
LXV404.99.00222 sc200 controller, 2 channel, Conductivity
LXV404.99.00212 sc200 controller, 2 channel, pH/DO & Conductivity
LXV404.99.00302 sc200 controller, 1 channel, Flow
LXV404.99.00332 sc200 controller, 2 channel, Flow
LXV404.99.00312 sc200 controller, 2 channel, Flow & pH/DO
LXV404.99.00322 sc200 controller, 2 channel, Flow & Conductivity

Note: Other sensor combinations are available. Please contact Hach Technical Support or your Hach representative.
Note: Communication options (MODBUS and Profibus DPV1) are available.

Model sc1000 Controller

(see Lit. #2403)

Each sc1000 Probe Module provides power to the system and can accept up to 8 digital sensors/expansion boards. Probe Modules can be networked together to accommodate up to 32 digital sensors/expansion boards attached to the same network.

LXV402.99.00002 sc1000 Display Module
LXV400.99.1R572 sc1000 Probe Module, 4 sensors, 4 mA Out, 4 mA In, 4 Relays, 110-230V
LXV400.99.1B572 sc1000 Probe Module, 4 sensors, 4 mA Out, 4 mA In, 4 Relays, RS-485 (MODBUS), 110-230V
LXV400.99.1F572 sc1000 Probe Module, 4 sensors, 4 mA Out, 4 mA In, 4 Relays, PROFIBUS DP, 110-230V
LXV400.99.1R582 sc1000 Probe Module, 6 sensors, 4 mA Out, 4 mA In, 4 Relays, 110-230V

si792 2-wire Transmitter (for 3700 Analog Inductive Conductivity Sensors)

(see Lit. #2605)

The Hach si792 2-wire electrochemistry transmitters are full-featured, intuitive to operate, and work with Hach's world-class water quality sensors. Rugged construction is designed for Class I, Division 2 (C1, D2) respectively Class I, Division 1 (C1, D1) application. Digital communication capabilities are available.

LXV503.99.70002 si792 E; Class 1 Division 2; HART
LXV503.99.70102 si792x E; Class 1 Division 1; HART
LXV503.99.76102 si792x E-PA; Class 1 Division 1; PROFIBUS PA
LXV503.99.77102 si792x E-FF; Class 1 Division 1; FOUNDATION FIELDBUS

Lit. No. 2465 Rev 2
J10 Printed in U.S.A.
©Hach Company, 2010. All rights reserved.
In the interest of improving and updating its equipment, Hach Company reserves the right to alter specifications to equipment at any time.

At Hach, it's about learning from our customers and providing the right answers. It's more than ensuring the quality of water—it's about ensuring the quality of life. When it comes to the things that touch our lives...

Keep it pure.

Make it simple.

Be right.

For current price information, technical support, and ordering assistance, contact the Hach office or distributor serving your area.

In the United States, contact:

HACH COMPANY World Headquarters
P.O. Box 389
Loveland, Colorado 80539-0389
U.S.A.
Telephone: 800-227-4224
Fax: 970-669-2932
E-mail: orders@hach.com
www.hach.com

U.S. exporters and customers in Canada, Latin America, sub-Saharan Africa, Asia, and Australia/New Zealand, contact:

HACH COMPANY World Headquarters
P.O. Box 389
Loveland, Colorado 80539-0389
U.S.A.
Telephone: 970-669-3050
Fax: 970-461-3939
E-mail: intl@hach.com
www.hach.com

In Europe, the Middle East, and Mediterranean Africa, contact:

HACH LANGE GmbH
Willstätterstraße 11
D-40549 Düsseldorf
GERMANY
Tel: +49 (0) 211 5288-0
Fax: +49 (0) 211 5288-143
E-mail: info@hach-lange.de
www.hach-lange.com

HACH®

Be Right™

sc200™ UNIVERSAL CONTROLLER

Applications
- Drinking Water
- Wastewater
- Industrial Water
- Power



One Controller for the Broadest Range of Sensors.

Choose from 30 digital and analog sensor families for up to 17 different parameters.

Maximum Versatility

The sc200 controller allows the use of digital and analog sensors, either alone or in combination, to provide compatibility with Hach's broad range of sensors, eliminating the need for dedicated, parameter-specific controllers.

Ease of Use and Confidence in Results

Large, high-resolution, transreflective display provides optimal viewing resolution in any lighting condition. Guided calibration procedures in 19 languages minimize complexity and reduce operator error. Password-protected SD card reader offers a simple solution for data download and transfer. Visual warning system provides critical alerts.

Wide Variety of Communication Options

Utilize two to five analog outputs to transmit primary and secondary values for each sensor, or integrate Hach sensors and analyzers into MODBUS RS232/RS485, Profibus® DP, and HART networks.



Password protected SD card reader offers a simple solution for data download and transfer, and sc200 and digital sensor configuration file duplication and backup.

HACH®
Be Right™

Controller Comparison







Features	Previous Models sc100™ Controller	Previous Models GLI53 Controller	sc200™ Controller	Benefits
Display	64 x 128 pixels 33 x 66 mm (1.3 x 2.6 in.)	64 x 128 pixels 33 x 66 mm (1.3 x 2.6 in.)	160 x 240 pixels 48 x 68 mm (1.89 x 2.67 in.) Transreflective	• Improved user interface—50% bigger • Easier to read in daylight and sunlight
Data Management	irDA Port/PDA Service Cable	N/A	SD Card Service Cable	• Simplifies data transfer • Standardized accessories/max compatibility
Sensor Inputs	2 Max Direct Digital Analog via External Gateway	2 Max Analog Depending on Parameter	2 Max Digital and/or Analog with Sensor Card	• Simplifies analog sensor connections • Works with analog and digital sensors
Analog Inputs	N/A	N/A	1 Analog Input Signal Analog 4-20mA Card	• Enables non-sc analyzer monitoring • Accepts mA signals from other analyzers for local display • Consolidates analog mA signals to a digital output
4-20 mA Outputs	2 Standard	2 Standard	2 Standard Optional 3 Additional	• Total of five (5) 4-20 mA outputs allows multiple mA outputs per sensor input
Digital Communication	MODBUS RS232/RS485 Profibus DP V1.0	HART	MODBUS RS232/RS485 Profibus DP V1.0 HART 7.2	• Unprecedented combination of sensor breadth and digital communication options

Choose from Hach's Broad Range of Digital and Analog Sensors

Parameter	Sensor	Digital or Analog
Ammonia	AMTAX™ sc, NH4D sc, AISE sc, AN-ISE sc	●
Chlorine	CLF10 sc, CLT10 sc, 9184 sc	●
Chlorine Dioxide	9185 sc	●
Conductivity	GLI 3400 Contacting, GLI 3700 Inductive	△
Dissolved Oxygen	LDO® Model 2, 5740 sc	●
Dissolved Oxygen	5500	△
Flow	U53, F53 Sensors	△
Nitrate	NITRATAX™ sc, NO3D sc, NISE sc, AN-ISE sc	●
Oil in Water	FP360 sc	●
Organics	UVAS sc	●
Ozone	9187 sc	●
pH/ORP	pHD	●
pH/ORP	pHD, pH Combination, LCP	△
Phosphate	PHOSPHAX™ sc	●
Sludge Level	SONATAX™ sc	●
Suspended Solids	SOLITAX™ sc, TSS sc	●
Turbidity	1720E, FT660 sc, SS7 sc, ULTRATURB sc, SOLITAX sc, TSS sc	●
Ultra Pure Conductivity	8310, 8311, 8312, 8315, 8316, 8317 Contacting	△
Ultra Pure pH/ORP	8362	△

● = Digital △ = Analog

Connect up to two of any of the sensors listed above, in any combination, to meet your application needs. The diagrams below demonstrate the potential configurations. Operation of analog sensors requires the controller to be equipped with the appropriate sensor module. Contact Hach Technical Support for help with selecting the appropriate module.

2 Channel Configurations

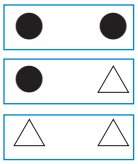

1 Channel Configurations

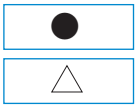

Specifications*

Dimensions (H x W x D)	5.7 in x 5.7 in x 7.1 in (144 mm x 144 mm x 181 mm)
Display	Graphic dot matrix LCD with LED backlighting, transreflective
Display Size	1.9 x 2.7 in. (48 mm x 68 mm)
Display Resolution	240 x 160 pixels
Weight	3.75 lbs. (1.70 kg)
Power Requirements (Voltage)	100 - 240 V AC, 24 V DC
Power Requirements (Hz)	50/60 Hz
Operating Temperature Range	-20 to 60 °C , 0 to 95% RH non-condensing
Analog Outputs	Two (Five with optional expansion module) to isolated current outputs, max 550 Ω , Accuracy: ± 0.1% of FS (20mA) at 25 °C, ± 0.5% of FS over -20 °C to 60 °C range Operational Mode: measurement or calculated value
Analog Output Functional Mode	Linear, Logarithmic, Bi-linear, PID
Security Levels	2 password-protected levels
Mounting Configurations	Wall, pole, and panel mounting
Enclosure Rating	NEMA 4X/IP66
Conduit Openings	1/2 in NPT Conduit
Relay: Operational Mode	Primary or secondary measurement, calculated value (dual channel only) or timer
Relay Functions	Scheduler (Timer), Alarm, Feeder Control, Event Control, Pulse Width Modulation, Frequency Control, and Warning
Relays	Four electromechanical SPDT (Form C) contacts, 1200 W, 5 A
Communication	MODBUS RS232/RS485, PROFIBUS DPV1, or HART 7.2 optional
Memory Backup	Flash memory
Electrical Certifications	EMC CE compliant for conducted and radiated emissions: - CISPR 11 (Class A limits) - EMC Immunity EN 61326-1 (Industrial limits) Safety cETLus safety mark for: - General Locations per ANSI/UL 61010-1 & CAN/CSA C22.2. No. 61010-1 - Hazardous Location Class I, Division 2, Groups A,B,C & D (Zone 2, Group IIC) per FM 3600 / FM 3611 & CSA C22.2 No. 213 M1987 with approved options and appropriately rated Class I, Division 2 or Zone 2 sensors cULus safety mark - General Locations per UL 61010-1 & CAN/CSA C22.2. No. 61010-1

Subject to change without notice.

Dimensions

Surface Mounting Dimensions

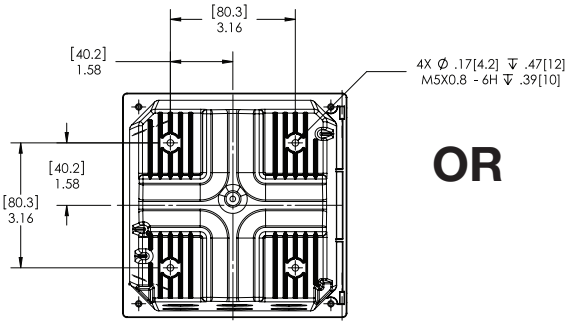

Mounting Dimensions
(Rear View)

OR

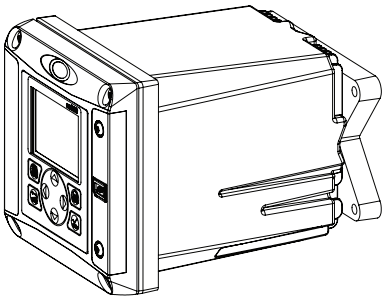

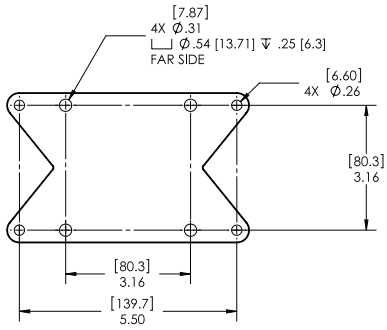

Bracket (supplied) for Surface Mounting
(Not compatible with Weather and Sun Shield p/n 9220600 when surface mounting.)

Panel Mounting Dimensions

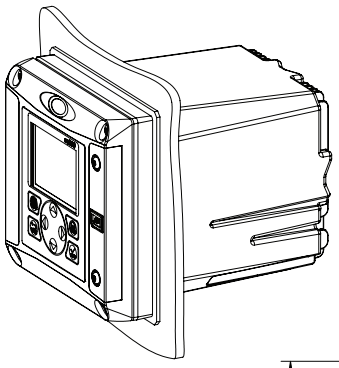

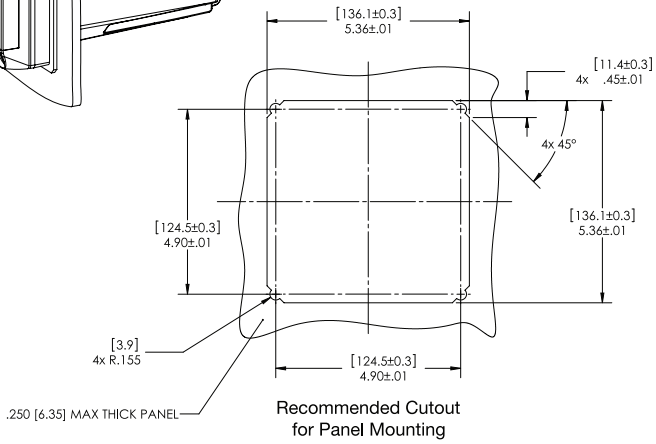

Recommended Cutout
for Panel Mounting

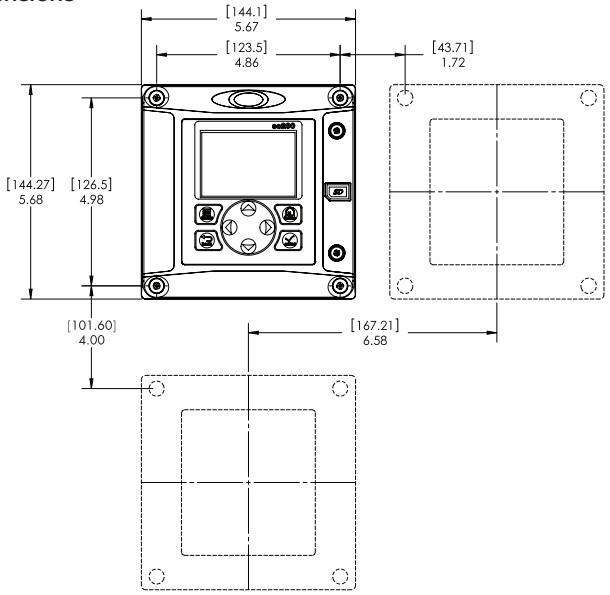

Minimum Spacing Dimensions
for Group Mounting

Top and Bottom Views

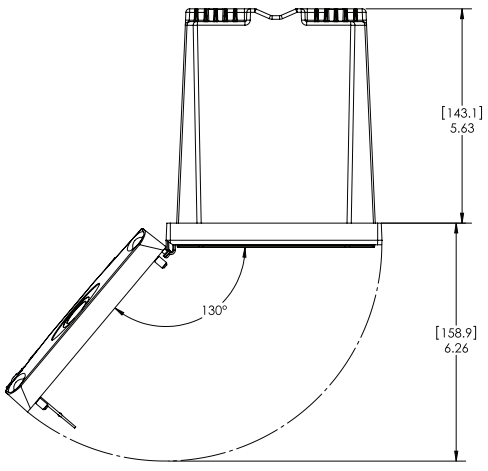

Door Opening Details

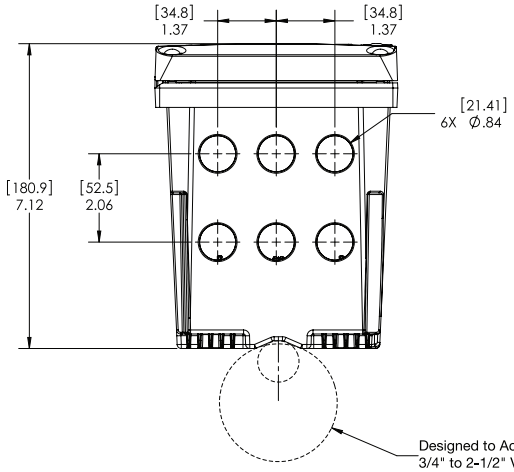

Ordering Information

sc200 for Hach Digital and Analog Sensors

LXV404.99.00552	sc200 controller, 2 channels, digital
LXV404.99.00502	sc200 controller, 1 channel, digital
LXV404.99.00102	sc200 controller, 1 channel, pH/DO
LXV404.99.00202	sc200 controller, 1 channel, Conductivity
LXV404.99.01552	sc200 controller, 2 channels, digital, Modbus RS232/RS485
LXV404.99.00112	sc200 controller, 2 channel, pH/DO

Note: Other Sensor combinations are available. Please contact Hach Technical Support or your Hach representative.

Note: Communication options (MODBUS, Profibus DPV1, and HART) are available. Please contact Hach Technical Support or your Hach representative.



sc200 for Ultrapure Sensors

9500.99.00602	sc200 controller, 1 channel, ultrapure conductivity
9500.99.00702	sc200 controller, 1 channel, ultrapure pH
9500.99.00662	sc200 controller, 2 channel, ultrapure conductivity
9500.99.00772	sc200 controller, 2 channel, ultrapure pH



Sensor and Communication Modules

9012900	Analog pH/ORP and DO module for GLI Sensors
9013000	Analog Conductivity module for GLI Sensors
9012700	Flow module
9012800	4-20 mA Input Module
9525700	Analog pH/ORP Module for Polymetron Sensors
9525800	Analog Conductivity Module for Polymetron Sensors
9013200	Modbus 232/485 Module
9173900	Profibus DP Module
9328100	HART Module
9334600	4-20 mA Output Module (Provides 3 additional mA Outputs)

Accessories

9220600	sc200 Weather and Sun Shield with UV Protection Screen
8809200	sc200 UV Protection Screen
9218200	SD card reader (USB) for connection to PC
9218100	4 GB SD card



HACH COMPANY World Headquarters: Loveland, Colorado USA

United States: 800-227-4224 tel 970-669-2932 fax orders@hach.com
Outside United States: 970-669-3050 tel 970-461-3939 fax int@hach.com
hach.com

LIT2665 Rev 7
K13 Printed in U.S.A.
©Hach Company, 2013. All rights reserved.
In the interest of improving and updating its equipment,
Hach Company reserves the right to alter specifications to equipment at any time.

HACH®
Be Right™

CS-407-108 : Identification sheet

VWTC PROJECT NUMBER:	Iqaluit WWTP	REV:	01
PROJECT NAME:	5000218036	SUBMITTED TO (COMPANY):	
ENGINEER:	G. HÉBERT	SUBMITTED TO (RESPONSIBLE)	
PROJECT MANAGER:	C. BEKAERT	PROJECT NUM REFERENCE.:	
PHONE NUMBER:		LOT NUMBER:	

SUPPLIER	EQPT CODE	EQPT TAG NO	DIA	DESCRIPTION	INFO 1	INFO 2	INFO 3	APPLIC.	NOTE	REV
HACH	IECNGU201988	AIT-04-941	144 mm x 144 mm x 181 mm	HP-500 INSTRUMENT	DIGITAL SC 200 TRANSMITTER / MANUF. : HACH / MODEL : LXV404.99.00552	100-240V AC, No Power Cord // 2x 4-20mA Out // 1x Digital input // 1x analog conductivity sensor input	N/A	HP-500		1

sc200™ UNIVERSAL CONTROLLER

Applications
- Drinking Water
- Wastewater
- Industrial Water
- Power



One Controller for the Broadest Range of Sensors.

Choose from 30 digital and analog sensor families for up to 17 different parameters.

Maximum Versatility

The sc200 controller allows the use of digital and analog sensors, either alone or in combination, to provide compatibility with Hach's broad range of sensors, eliminating the need for dedicated, parameter-specific controllers.

Ease of Use and Confidence in Results

Large, high-resolution, transreflective display provides optimal viewing resolution in any lighting condition. Guided calibration procedures in 19 languages minimize complexity and reduce operator error. Password-protected SD card reader offers a simple solution for data download and transfer. Visual warning system provides critical alerts.

Wide Variety of Communication Options

Utilize two to five analog outputs to transmit primary and secondary values for each sensor, or integrate Hach sensors and analyzers into MODBUS RS232/RS485, Profibus® DP, and HART networks.



Password protected SD card reader offers a simple solution for data download and transfer, and sc200 and digital sensor configuration file duplication and backup.

HACH®
Be Right™

Controller Comparison







Features	Previous Models sc100™ Controller	Previous Models GLI53 Controller	sc200™ Controller	Benefits
Display	64 x 128 pixels 33 x 66 mm (1.3 x 2.6 in.)	64 x 128 pixels 33 x 66 mm (1.3 x 2.6 in.)	160 x 240 pixels 48 x 68 mm (1.89 x 2.67 in.) Transreflective	• Improved user interface—50% bigger • Easier to read in daylight and sunlight
Data Management	irDA Port/PDA Service Cable	N/A	SD Card Service Cable	• Simplifies data transfer • Standardized accessories/max compatibility
Sensor Inputs	2 Max Direct Digital Analog via External Gateway	2 Max Analog Depending on Parameter	2 Max Digital and/or Analog with Sensor Card	• Simplifies analog sensor connections • Works with analog and digital sensors
Analog Inputs	N/A	N/A	1 Analog Input Signal Analog 4-20mA Card	• Enables non-sc analyzer monitoring • Accepts mA signals from other analyzers for local display • Consolidates analog mA signals to a digital output
4-20 mA Outputs	2 Standard	2 Standard	2 Standard Optional 3 Additional	• Total of five (5) 4-20 mA outputs allows multiple mA outputs per sensor input
Digital Communication	MODBUS RS232/RS485 Profibus DP V1.0	HART	MODBUS RS232/RS485 Profibus DP V1.0 HART 7.2	• Unprecedented combination of sensor breadth and digital communication options

Choose from Hach's Broad Range of Digital and Analog Sensors

Parameter	Sensor	Digital or Analog
Ammonia	AMTAX™ sc, NH4D sc, AISE sc, AN-ISE sc	●
Chlorine	CLF10 sc, CLT10 sc, 9184 sc	●
Chlorine Dioxide	9185 sc	●
Conductivity	GLI 3400 Contacting, GLI 3700 Inductive	△
Dissolved Oxygen	LDO® Model 2, 5740 sc	●
Dissolved Oxygen	5500	△
Flow	U53, F53 Sensors	△
Nitrate	NITRATAX™ sc, NO3D sc, NISE sc, AN-ISE sc	●
Oil in Water	FP360 sc	●
Organics	UVAS sc	●
Ozone	9187 sc	●
pH/ORP	pHD	●
pH/ORP	pHD, pH Combination, LCP	△
Phosphate	PHOSPHAX™ sc	●
Sludge Level	SONATAX™ sc	●
Suspended Solids	SOLITAX™ sc, TSS sc	●
Turbidity	1720E, FT660 sc, SS7 sc, ULTRATURB sc, SOLITAX sc, TSS sc	●
Ultra Pure Conductivity	8310, 8311, 8312, 8315, 8316, 8317 Contacting	△
Ultra Pure pH/ORP	8362	△

● = Digital △ = Analog

Connect up to two of any of the sensors listed above, in any combination, to meet your application needs. The diagrams below demonstrate the potential configurations. Operation of analog sensors requires the controller to be equipped with the appropriate sensor module. Contact Hach Technical Support for help with selecting the appropriate module.

2 Channel Configurations

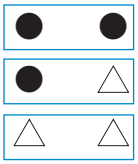

1 Channel Configurations

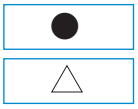

Specifications*

Dimensions (H x W x D)	5.7 in x 5.7 in x 7.1 in (144 mm x 144 mm x 181 mm)
Display	Graphic dot matrix LCD with LED backlighting, transreflective
Display Size	1.9 x 2.7 in. (48 mm x 68 mm)
Display Resolution	240 x 160 pixels
Weight	3.75 lbs. (1.70 kg)
Power Requirements (Voltage)	100 - 240 V AC, 24 V DC
Power Requirements (Hz)	50/60 Hz
Operating Temperature Range	-20 to 60 °C , 0 to 95% RH non-condensing
Analog Outputs	Two (Five with optional expansion module) to isolated current outputs, max 550 Ω , Accuracy: ± 0.1% of FS (20mA) at 25 °C, ± 0.5% of FS over -20 °C to 60 °C range Operational Mode: measurement or calculated value
Analog Output Functional Mode	Linear, Logarithmic, Bi-linear, PID
Security Levels	2 password-protected levels
Mounting Configurations	Wall, pole, and panel mounting
Enclosure Rating	NEMA 4X/IP66
Conduit Openings	1/2 in NPT Conduit
Relay: Operational Mode	Primary or secondary measurement, calculated value (dual channel only) or timer
Relay Functions	Scheduler (Timer), Alarm, Feeder Control, Event Control, Pulse Width Modulation, Frequency Control, and Warning
Relays	Four electromechanical SPDT (Form C) contacts, 1200 W, 5 A
Communication	MODBUS RS232/RS485, PROFIBUS DPV1, or HART 7.2 optional
Memory Backup	Flash memory
Electrical Certifications	EMC CE compliant for conducted and radiated emissions: - CISPR 11 (Class A limits) - EMC Immunity EN 61326-1 (Industrial limits) Safety cETLus safety mark for: - General Locations per ANSI/UL 61010-1 & CAN/CSA C22.2. No. 61010-1 - Hazardous Location Class I, Division 2, Groups A,B,C & D (Zone 2, Group IIC) per FM 3600 / FM 3611 & CSA C22.2 No. 213 M1987 with approved options and appropriately rated Class I, Division 2 or Zone 2 sensors cULus safety mark - General Locations per UL 61010-1 & CAN/CSA C22.2. No. 61010-1

Subject to change without notice.

Dimensions

Surface Mounting Dimensions

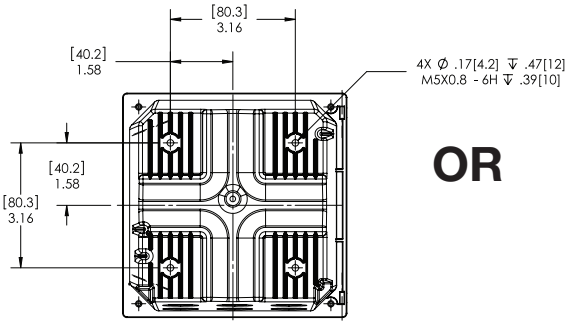

Mounting Dimensions
(Rear View)

OR

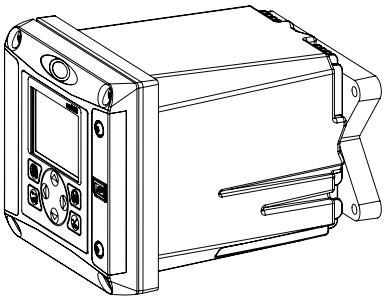

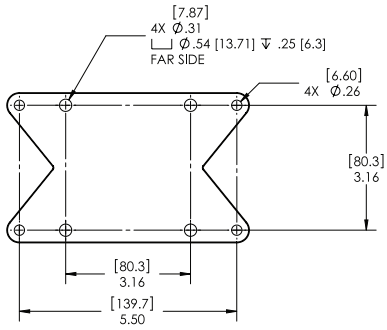

Bracket (supplied) for Surface Mounting
(Not compatible with Weather and Sun Shield p/n 9220600 when surface mounting.)

Panel Mounting Dimensions

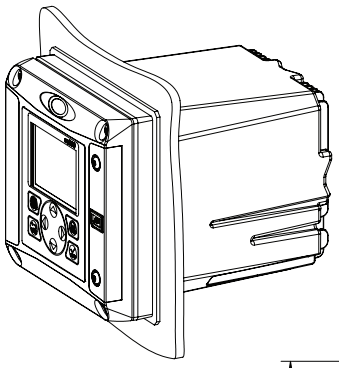

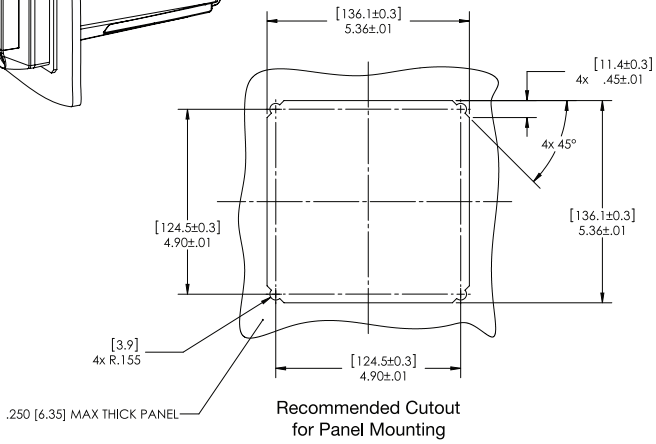

Recommended Cutout
for Panel Mounting

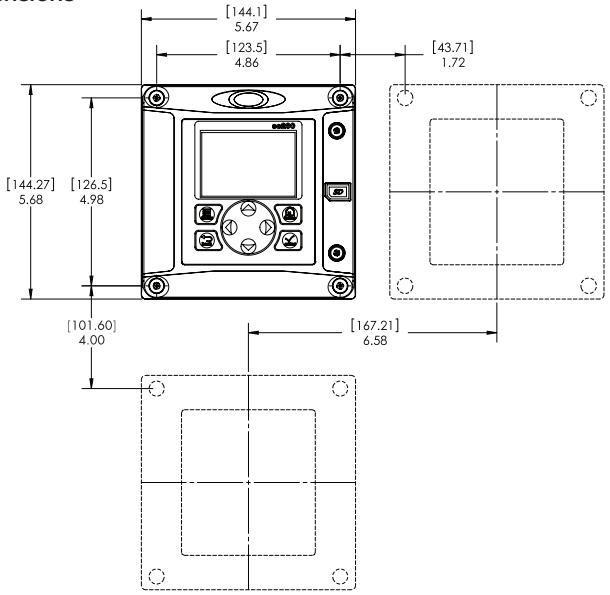

Minimum Spacing Dimensions
for Group Mounting

Top and Bottom Views

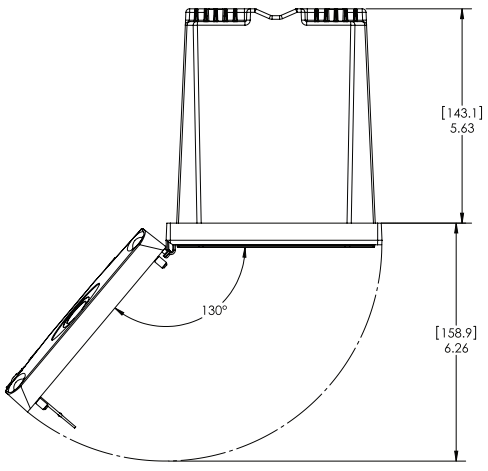

Door Opening Details

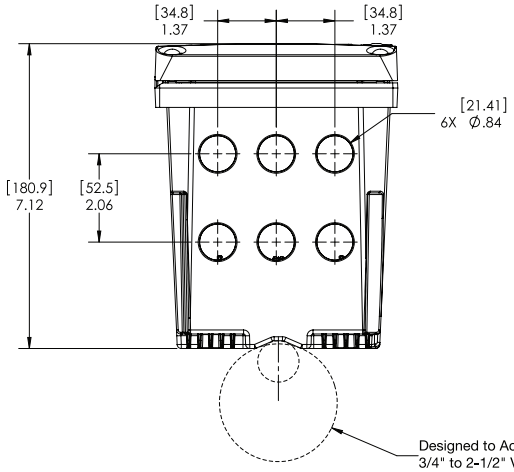

Ordering Information

sc200 for Hach Digital and Analog Sensors

LXV404.99.00552	sc200 controller, 2 channels, digital
LXV404.99.00502	sc200 controller, 1 channel, digital
LXV404.99.00102	sc200 controller, 1 channel, pH/DO
LXV404.99.00202	sc200 controller, 1 channel, Conductivity
LXV404.99.01552	sc200 controller, 2 channels, digital, Modbus RS232/RS485
LXV404.99.00112	sc200 controller, 2 channel, pH/DO

Note: Other Sensor combinations are available. Please contact Hach Technical Support or your Hach representative.

Note: Communication options (MODBUS, Profibus DPV1, and HART) are available. Please contact Hach Technical Support or your Hach representative.



sc200 for Ultrapure Sensors

9500.99.00602	sc200 controller, 1 channel, ultrapure conductivity
9500.99.00702	sc200 controller, 1 channel, ultrapure pH
9500.99.00662	sc200 controller, 2 channel, ultrapure conductivity
9500.99.00772	sc200 controller, 2 channel, ultrapure pH



Sensor and Communication Modules

9012900	Analog pH/ORP and DO module for GLI Sensors
9013000	Analog Conductivity module for GLI Sensors
9012700	Flow module
9012800	4-20 mA Input Module
9525700	Analog pH/ORP Module for Polymetron Sensors
9525800	Analog Conductivity Module for Polymetron Sensors
9013200	Modbus 232/485 Module
9173900	Profibus DP Module
9328100	HART Module
9334600	4-20 mA Output Module (Provides 3 additional mA Outputs)



Accessories

9220600	sc200 Weather and Sun Shield with UV Protection Screen
8809200	sc200 UV Protection Screen
9218200	SD card reader (USB) for connection to PC
9218100	4 GB SD card

HACH COMPANY World Headquarters: Loveland, Colorado USA

United States: 800-227-4224 tel 970-669-2932 fax orders@hach.com
Outside United States: 970-669-3050 tel 970-461-3939 fax int@hach.com
hach.com

LIT2665 Rev 7
K13 Printed in U.S.A.
©Hach Company, 2013. All rights reserved.
In the interest of improving and updating its equipment,
Hach Company reserves the right to alter specifications to equipment at any time.

HACH®
Be Right™

CS-413-300 : Identification sheet

VWTC PROJECT NUMBER:	Iqaluit WWTP	REV:	01
PROJECT NAME:	5000218036	SUBMITTED TO (COMPANY):	
ENGINEER:	G. HÉBERT	SUBMITTED TO (RESPONSIBLE)	
PROJECT MANAGER:	C. BEKAERT	PROJECT NUM REFERENCE.:	
PHONE NUMBER:		LOT NUMBER:	

SUPPLIER	EQPT CODE	EQPT TAG NO	DIA	DESCRIPTION	INFO 1	INFO 2	INFO 3	APPLIC.	NOTE	REV
ASHCROFT	IMPSGG300380	PI-04-911	DIA. CADRAN: 2.5"	HP-500 INSTRUMENT	PRESSURE GAUGE/MANUFACTURER: ASHCROFT// MODEL: 25-1009SWL-02L-160PSIG// 1/4''	N/A	N/A	HP-500		1

ASHCROFT®

Duralife® Pressure Gauge Type 1009, ASME B 40.1 Grade 1A (±1% of span)

DESIGNED FOR SAFETY AND LONGER LIFE

- ***5-year limited warranty***
- ***Patented PowerFlex™ movement isolates movement from shock and vibration for longer life***
- ***All stainless, all-welded construction for long life***
- ***ASME Grade 1A, 1% accuracy full scale***
- ***True Zero™ pointer indication – no stop pin to mask false zero reading – ensures safety and process control***

The following Table is *not* for conversion purposes.

STANDARD RANGES [3][4][5]

Pressure psi	kg/cm² - bar	kPa
0/15	0/1	0/100
0/30	0/1.6	0/160
0/60	0/2.5	0/250
0/100		
0/160	0/4	0/400
0/200	0/6	0/600
0/300	0/10	0/1000
0/400	0/16	0/1600
0/600	0/25	0/2500
0/800	0/40	0/4000
0/1000	0/60	0/6000
0/1500	0/100	0/10,000
0/2000	0/160	0/16,000
0/3000	0/250	0/25,000
0/4000	0/400	0/40,000
0/5000	0/600	0/60,000
0/6000	0/1000	0/100,000
0/7500		
0/10,000		
0/15,000		
Vacuum		
30 in./0 in.Hg	–1/0	–100/0
Compound		
30 in.Hg/15 psi	–1/0/1.5	–100/0/150
30 in.Hg /30 psi	–1/0/3	–100/0/300
30 in.Hg /60 psi	–1/0/5	–100/0/500
30 in.Hg /100 psi	–1/0/9	–100/0/900
30 in.Hg /150 psi	–1/0/15	–100/0/1500
30 in.Hg /300 psi	–1/0/24	–100/0/2400

- ***New PLUS!™ Performance Option:***
  - ***Liquid-filled performance in a dry gauge***
  - ***Fights vibration and pulsations without liquid-fill headaches***
  - ***See pages 6-7 for details***
  - ***Order as option XLL***

OTHER FEATURES:

Available in 2½″ and 3½″ dial sizes, Duralife® pressure gauges are liquid fillable and field convertible for panel mounting. Both zero and span adjustments are standard.

The gauge is available dry, liquid-filled weatherproof or hermetically sealed and *now* with *PLUS!™* performance option. A five year limited warranty is standard with the Duralife® 1009.



BOURDON SYSTEM SELECTION[1]

Ordering Code	Bourdon Tube & Tip Material[1]	Socket Material	Tube Type	Range Selection Limits (psi)	NPT Conn.[6]
AW	316 stainless steel	Bronze	C-Tube	Vac/600	¼
AW	316 stainless steel	Bronze	Helical	1000	¼
SW	316 stainless steel	316 stainless steel	C-Tube	Vac/600	¼ & ½[2]
SW	316 stainless steel	316 stainless steel	Helical	800/15,000	¼ & ½[2]

(1) For selection of the correct Bourdon system material, see the media application table on page 243.
(2) ½ NPT available 3½″ lower SW system only.
(3) Type 1009 gauges may be ordered with metric single-scale dial: kPa,bar or kg/cm².
(4) Dual-scale dials will be supplied with standard metric inner scale and equivalent psi outer scale or with standard psi inner scale and equivalent metric outer scale–please specify.
(5) Special logos and scales available upon request.
(6) ¼″ JIS, BSP or DIN threads available on SW systems.

TO ORDER THIS 1009 DURALIFE PRESSURE GAUGE:

Select: 35 1009 SW (L) 02L XXX 1000#

1. Dial size–2½″, 3½″
2. Case type–1009
3. Tube and socket material
4. Liquid filled (glycerin), leave blank if dry
5. Connection size–⅛ (01), ¼ (02) ½ (04)
6. Connection location–Lower (L), Back (B)
7. Optional Features–see page 176
8. Standard pressure range–1000 psi

Accessories: see pages 233-238

Consult factory for guidance in product selection
Phone (203) 385-0217, Fax (203) 385-0602 or
visit our web site at www.ashcroft.com

DRESSER Instruments

ASHCROFT®
Trust the shield.™

Type 310, 315 All-Welded "Mini" Diaphragm Seal



PRODUCT FEATURES

- Compact size to fit space-restricted areas
- Designed to protect transducers, mini-switches and 3½″ or smaller pressure gauges from corrosion, plugging or freeze-up
- All-welded metal construction prevents leakage of process media
- Rated for 2500 psi at 100°F
- Fill/bleed connection is standard
- Available with male process connection (Type 310)

The compact size of the Ashcroft® 310 mini-seal allows it to fit into space-restricted areas and is designed to protect transducers, mini-switches, and 3½" or smaller dial size pressure gauges from corrosion, plugging or freeze- up. All welded metal construction prevents leakage of process media. It is rated for 2500 psi at 100°F and has a 316L stainless steel top housing standard. Lower housing materials include 316L stainless steel or Hastelloy C. Diaphragm materials include 316L stainless, Hastelloy C or Tantalum. ¼ NPT or ½ NPT process connection sizes are available.

PRODUCT SPECIFICATIONS

Model Number:	Type 310, 315
Process Connection Size:	¼″, ½″ (⅛″, ¾″, 1″- 310 only) (see table A)
Instrument Connection Size:	⅛, ¼ NPT
Diaphragm Material:	316L SS, Hastelloy C276, Tantalum, Monel
Bottom Housing Materials:	316L SS, Hastelloy C276, Monel, Hastelloy B
Filling Fluid:	Glycerin, Silicone, Halocarbon, Syltherm

All specifications are subject to change without notice.
All sales subject to standard terms and conditions.
© Ashcroft Inc. 2015 09/15

Ashcroft Inc., 250 East Main Street, Stratford, CT 06614 USA
Tel: 203-378-8281 • Fax: 203-385-0408
email: info@ashcroft.com • www.ashcroft.com

Type 310, 315 All-Welded "Mini" Diaphragm Seal

Table A – Process Connection

Process Connection	Size	Code
Threaded – male NPT*	⅛	01
Threaded – male NPT*	¼	02
Threaded – male NPT*	½	04
Threaded – male NPT*	¾	06
Threaded – male NPT*	1	08
Threaded – female NPT†	¼	25
Threaded – female NPT†	½	50

*Available in Type 310 only.
†Available in Types 310 & 315.

Pressure Ratings – All 2500 psi except flanged seals are per ASME B 16.5, temperature limit determined by diaphragm, bottom housing and/or filling fluid.

Table B – Type

Description	Code
All-welded mini-seal	310
All-welded midi-seal w/flushing connection	315

Table C – Diaphragm Materials

Materials	Code
316L stainless steel	S
Hastelloy C-276	H
Tantalum	U
Monel	P

Table D – Housing Materials

Bottom(1)	Code	Top(2)
316L SS	S	316L SS
Hastelloy C-276	H	316L SS
Monel	M	Monel

(1) Other bottom housing materials on application.
(2) Top housing material is 316L SS (standard). Monel mini-seal standard with monel top housing.

Table E – Instrument Connection

Instrument Connection	Size	Code
Threaded – female NPT	¼	02T
Threaded – female NPT	⅛	01T

NOTES:
(1) For use with most 3½″ and smaller gauges. Movementless gauge 4½″ (exception).
(2) Other bottom housing materials on application.
(3) Top housing material is 316L SS (standard). Monel mini-seal standard with monel top housing.
(4) Not available with monel bottom housing.

Table F – Filling Fluid

Fill	Service	Connection to Instrument	Temperature Range °F	Code
Glycerin	Pressure	Direct Only	0/400	CG
Silicone	Pressure/Vacuum	Direct or Flexible Line	–40/600	CK
Halocarbon	Pressure/Vacuum in presence of strong oxidizing agent	Direct or Flexible Line	–70/300	CF
Syltherm	Pressure	Direct or Flexible Line	–40/750	HA

Monel is a registered trademark of Huntington Alloys, Inc.
Hastelloy is a registered trademark of Cabot Corp.
Halocarbon is a registered trademark of Halocarbon Products
GYLON 3510 is a registered trademark of Garlock Inc.

HOW TO ORDER:

1. **From Table A...** select PROCESS CONNECTION (e.g., 1/4″ process code 25)
2. **From Table B...** select TYPE (310)
3. **From Table B...** select DIAPHRAGM MATERIAL. (e.g., 316L stainless steel–code S)
4. **From Table C...** select BOTTOM HOUSING MATERIAL. (e.g., 316 stainless steel–code S)
5. **From Table D...** select INSTRUMENT CONNECTION size. (e.g., 1/4 NPT–code 02T)
6. **From Table E...** select FILLING FLUID, if diaphragm seal will be attached to instrument. (e.g., Glycerin–code CG)

Coded order: **25-310SS-02T-CG**

Dimension

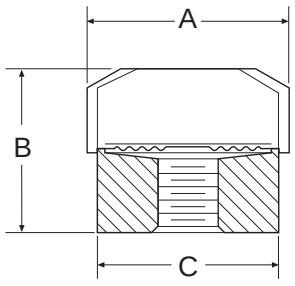

Types 310 mini-seal – Threaded ¼, ½, ¾, NPT

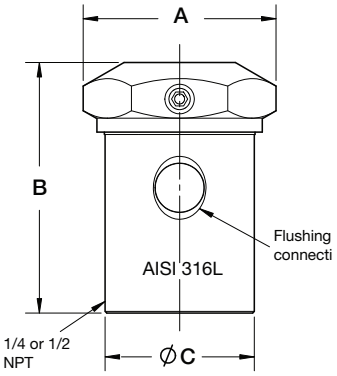

Types 315 mini-seal – Threaded ¼, ½, ¾, NPT

	A in	A mm	B in	B mm	C in	C mm
Type 310	1.75	(38)	.81	(30)	1.34	(34)
Type 315	1.73	(44)	2.25	(57.2)	1.34	(34)

All specifications are subject to change without notice.
All sales subject to standard terms and conditions.
© Ashcroft Inc. 2015 09/15

Ashcroft Inc., 250 East Main Street, Stratford, CT 06614 USA
Tel: 203-378-8281 • Fax: 203-385-0408
email: info@ashcroft.com • www.ashcroft.com

CS-434-100 : Identification sheet

VWTC PROJECT NUMBER:	Iqaluit WWTP	REV:	01
PROJECT NAME:	5000218036	SUBMITTED TO (COMPANY):	
ENGINEER:	G. HÉBERT	SUBMITTED TO (RESPONSIBLE)	
PROJECT MANAGER:	C. BEKAERT	PROJECT NUM REFERENCE.:	
PHONE NUMBER:		LOT NUMBER:	

SUPPLIER	EQPT CODE	EQPT TAG NO	DIA	DESCRIPTION	INFO 1	INFO 2	INFO 3	APPLIC.	NOTE	REV
ALLEN BRADLEY	IEPOPS201955	PSL-04-911	N/A	HP-500 INSTRUMENT	PRESSURE SWITCH/MANUFACTURER: ALLEN BRADLEY// MODEL: 836T-T253J	1/4" FNPT female pipe connection	Adjustable Range : 12-150 psi	HP-500		1



Bulletin 836T Pressure Controls

- Operating ranges from 30 in. Hg vacuum…5000 psi
- Independently adjustable range and differential
- Copper alloy and stainless steel bellows
- 2- and 4-Circuit contact block
- Pressure difference controls available
- 1/4 in. and 3/8 in. N.P.T. and O-ring straight thread connections
- Type 4 & 13 and Type 7 & 9 and 4 & 13 combination enclosures

Table of Contents

Product Overview ..... this page
Technical Data 13-26
Product Selection 13-34
Modifications 13-41
Accessories 13-42
Conversion Kits 13-43
Factory Options 13-44
Wiring Diagrams 13-45
Approximate Dimensions 13-48

Standards Compliance and Certification

(For file and guide numbers, see page 13-44)

Product Overview

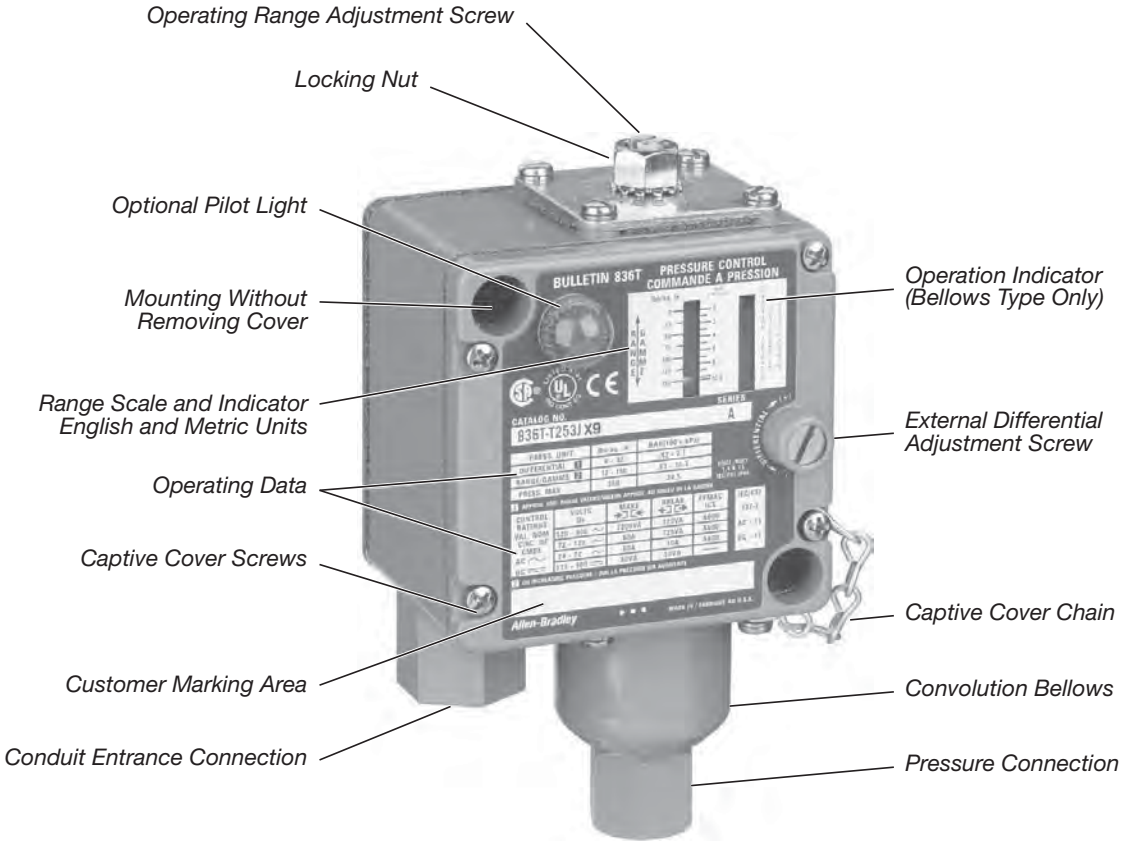

Bulletin 836T Style T Bellows Type Enclosure Type 1, 4 & 13, IEC IP66

Description

Bulletin 836T Pressure Controls are control circuit devices designed to meet the traditional requirements of the transportation, machine tool, and other heavy-duty industries. Allen-Bradley Bulletin 836T Pressure Controls can be used in pneumatic and hydraulic applications. The copper alloy bellows actuators can be used with air, water, oil, vapor, and other non-corrosive gases and liquids. Type 316 stainless steel bellows are available for more corrosive gases, vapors, and fluids.

A rugged stainless steel cylinder and stainless steel piston assembly is used for the higher-pressure coolant and hydraulic oil applications. May also be used with water and water-based fluids. The controls feature snap-action precision switches equipped with silver contacts. A relatively friction-free mechanism provides consistent operation regardless of mounting position. Devices are designed to allow easy adjustment of pressure settings.

Allen-Bradley Bulletin 836T Pressure Controls are used in many types of applications with adjustable ranges from 30 in. Hg vacuum…5000 psi. They can be used to control pneumatic systems and maintain a pressure tank within a preset and constant pressure range. They can be used to detect over-pressures of gases and liquids to prevent damage to valuable equipment. Pressure controls can also detect low pressure to protect equipment from loss of coolants and lubrication.

Bulletin 836T Pressure Controls are offered in a variety of styles to fit a wide range of applications. The devices are available with either a Type 1, 4 & 13, or 7 & 9 and 4 & 13 combined enclosure. They are available with two-circuit or four-circuit contact blocks. Accessories and modifications are available to tailor the devices to meet most application requirements.

Applications

- Machine tools
- Machine hydraulic pressures
- Material clamping fixtures
- Lubricant and coolant pressures
- Compactor ram pressures
- Air compressors

Style T — Pressure Control



Style T

- Independently adjustable operating range and differential
- Single bellows or piston operation

Copper Alloy Bellows

- 1/4 in. N.P.T. female pipe connection
- Adjustable operating range — 30 in. Hg vacuum…650 psi
- Maximum line pressure — up to 1300 psi
- Occasional surge pressure — up to 1600 psi

Type 316 Stainless Steel Bellows

- 1/4 in. N.P.T. female pipe connection
- Adjustable operating range — 30 in. Hg vacuum…375 psi
- Maximum line pressure — up to 600 psi
- Occasional surge pressure — up to 600 psi

Piston

- 3/8 in. N.P.T. female pipe connection
- SAE 7/16-20 UNF-2B thread O-ring boss seal
- SAE 9/16-18 UNF-2B thread O-ring boss seal
- Adjustable operating range — 40…5000 psi
- Occasional surge pressure — up to 15,000 psi

Style D — Pressure Difference Control



Style D

- Independently adjustable system difference range and differential
- Two-bellows operation, one bellows connected to each system

Copper Alloy Bellows

- 1/4 in. N.P.T. female pipe connection
- Adjustable system difference range — 1…70 psi
- Maximum line pressure — up to 600 psi
- Occasional surge pressure — up to 650 psi

Type 316 Stainless Steel Bellows

- 1/4 in. N.P.T. female pipe connection
- Adjustable system difference range — 1…70 psi
- Maximum line pressure — up to 500 psi
- Occasional surge pressure — up to 500 psi

Technical Terms

Adjustable operating range — Total span within which the contacts can be adjusted to trip and reset.

Trip setting — Higher pressure setting at which value the contacts transfer from their normal state to a change state.

Reset setting — Lower pressure setting at which value the contacts return to their normal state.

Adjustable differential — Difference between the trip and reset values

Minimum differential — When the differential is set to the lowest possible difference between trip and reset.

Maximum differential — When the differential is set to the highest possible difference between trip and reset.

Max. occasional surge pressure — Maximum surge pressure that can be applied to the actuator. Surges or ransients can occur during start-up and shut-down of a machine or system. Expressed in milliseconds, complex electronic instrumentation is required to measure the varying amplitude, frequency, and duration of this wave form. Extreme surges that occur approximately 8 times in a 24-hour period are negligible.

Maximum line pressure — Maximum sustained pressure that can be applied to the actuator without permanent damage. The control should not be cycled at this pressure. **Note:** Does not apply to piston type controls.

psi — Pounds per square inch gauge (positive pressure). Devices listed are in gauge pressure units which use atmospheric pressure as a reference. Atmospheric pressure at sea level is approximately 14.7 psi or 30 in. Hg.

Vacuum — Inches of mercury (in. Hg) vacuum (negative pressure).

Operating range adjustment screw — This screw is used to adjust the trip setting by varying the force of the main spring.

Differential adjustment screw — This screw is used to adjust reset setting by varying the force of the differential blade spring.

Pressure media — There are many types of pressure media that can be controlled. Examples include air, water, hydraulic fluids, and other types of gases and liquids. The type of media and the maximum system pressure will determine the type of actuator used for the pressure control application. See page 13-33.

Pressure connection — Common standard types of pressure connections used in control systems are 1/4 in. and 3/8 in. N.P.T. female pipe threads. SAE 7/16 and SAE 9/16 O-ring boss seals are also available (piston versions only).

Contact configuration — Bulletin 836T controls are available with either a 2-circuit or 4-circuit contact block. See page 13-31.

Style D

Style D — pressure difference controls adjustable system difference range — The adjustable operating range for a pressure difference control.

System difference pressure bushing — This bushing is used to adjust the trip setting by varying the force on the main spring.

Trip setting — Desired difference in pressure between the two bellows at which value the contacts transfer from their normal state to a changed state. This occurs in one of the following conditions:

- The pressure in the bottom bellows is higher than the pressure in the top bellows by a value equal to the trip setting.
- The pressure in the bottom bellows remains constant and the pressure in the top bellows decreases by a value equal to the trip setting.

Reset setting — Predetermined normal difference in pressure between the two bellows, at which value the contacts return to their normal state. This occurs in one of the following conditions:

- The pressure in the bottom bellows is lower than the top bellows.
- The pressure in the bottom bellows remains constant and the pressure in the top bellows increases.

Figure 1
Graphics to illustrate technical terms

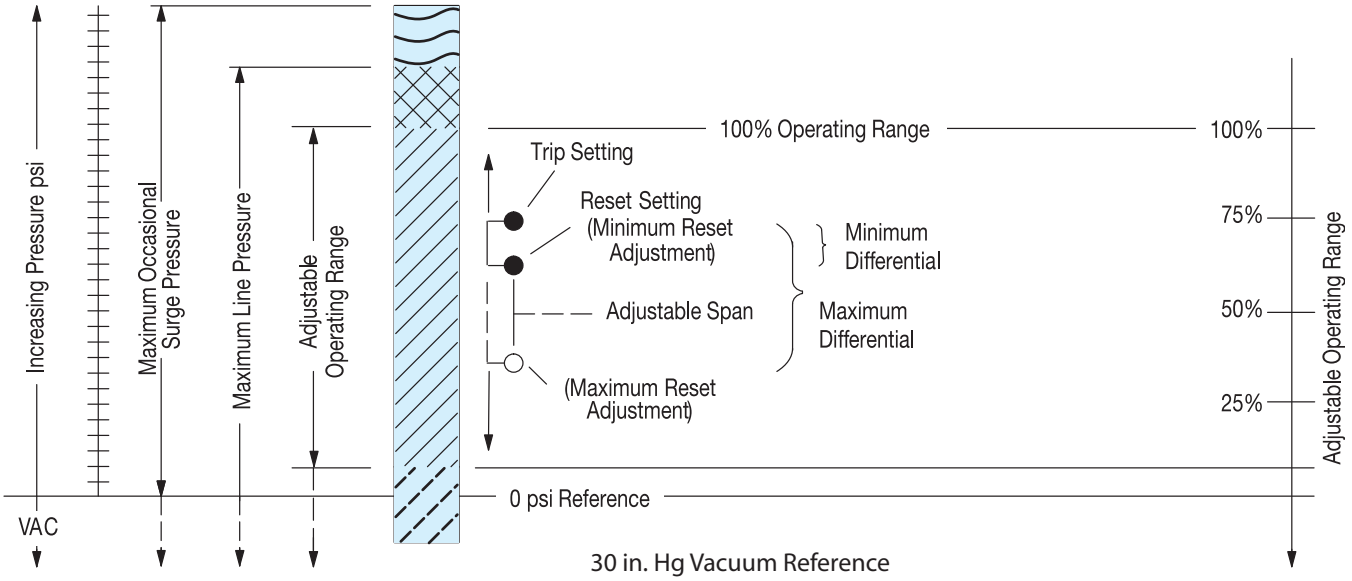

Visit our website: www.ab.com/catalogs
Preferred availability cat. nos. are printed in **bold**

Allen-Bradley

Theory of Operation

Bulletin 836T Pressure Controls are designed to open or close electrical circuits in response to changes in pneumatic (air or gas) or hydraulic (oil or non-corrosive liquids) pressure. Piston controls are not intended for use with air or water. Figure 2 shows the basic operating mechanism.

Pressure is applied to the actuator which can be either a bellows or piston type. As pressure rises, the actuator exerts force on the main spring. When the threshold force of the main spring is overcome, levers transfer the motion to the contact block, displacing the contacts — this is referred to as the trip setting. The unique lever design amplifies the actuator motion, providing shorter stroke, which results in maximizing bellows life.

The lever assembly also includes a virtually friction-free over-center toggle arrangement, providing positive snap action to the contact block for long contact life. As pressure falls, force on the differential spring increases and contacts return to their normal state — this is referred to as reset setting. Varying the force of the main spring (by turning the operating range adjustment screw) determines when the contacts will trip. Varying the force of the differential spring (by turning the differential adjustment screw) determines when the contacts will reset. Setting trip and reset values determines the operating parameters of the application.

Figure 2
Basic mechanical structure

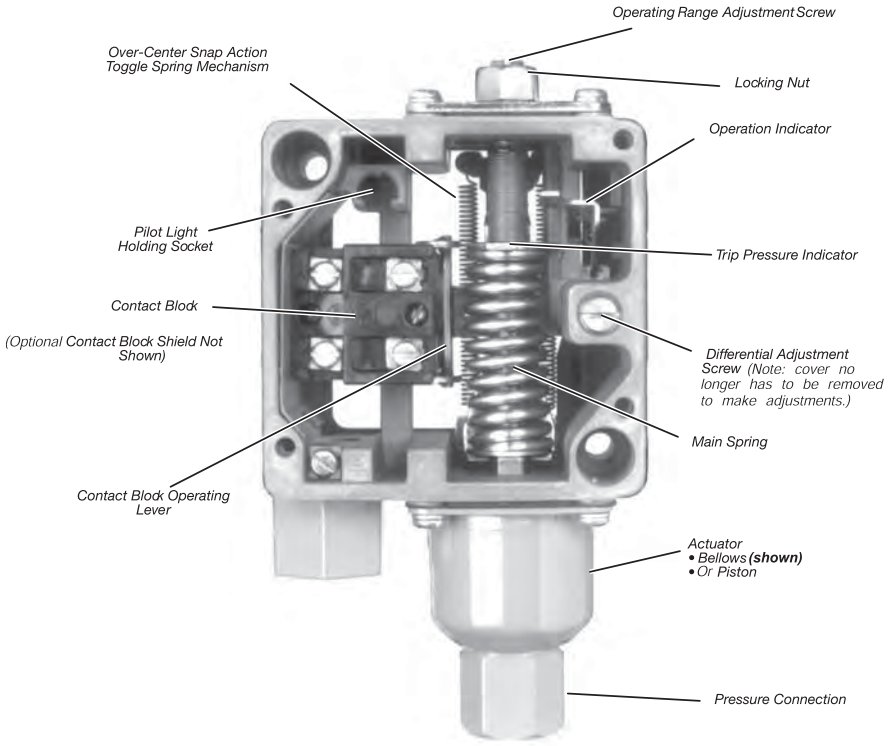

Applications for Control

Pressure controls can be used to either control or monitor a machine or process. Figure 3 shows a typical control application. Here, pressure is controlled within predetermined high and low values. Figure 4 shows a typical monitoring application. Here, pressure is monitored between a high and low value, signaling when a preset limit has been exceeded.

Figure 3
Typical control application

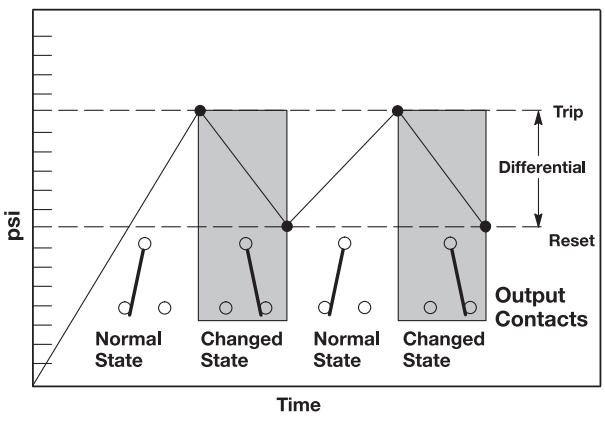

Figure 4
Typical monitoring application

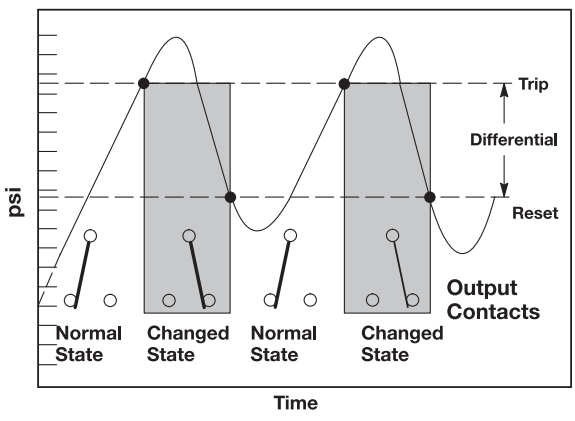

Control Setting — Style T Pressure Controls

Allen-Bradley controls are designed for ease of setting to help minimize installation time. Standard pressure controls shipped from the factory are set at the maximum operating range and minimum differential. By using a pressure gauge and following these simple directions, the control can be set to the specific requirements for each application. See Figure 5.

Step 1 — Adjust trip setting
The trip setting is controlled by the operating range adjustment screw and is adjusted externally. After loosening the lock nut, the trip setting is set by turning the operating range adjustment screw counterclockwise to lower the trip setting or clockwise to raise the trip setting. The approximate trip setting is shown on the indicating scale. When the proper setting is reached, simply tighten the lock nut.
Note: Turning the operating range adjustment screw will cause both the trip and reset settings to change in virtually equal increments.

Step 2 — Adjust reset setting
The reset setting is controlled by an external differential adjustment screw. The reset setting is set by turning the differential adjustment screw clockwise to increase the differential or counterclockwise to decrease the differential.
Note: Adjusting the differential has little or no affect on the trip setting.

Figure 5
Trip and reset adjustment for pressure controls

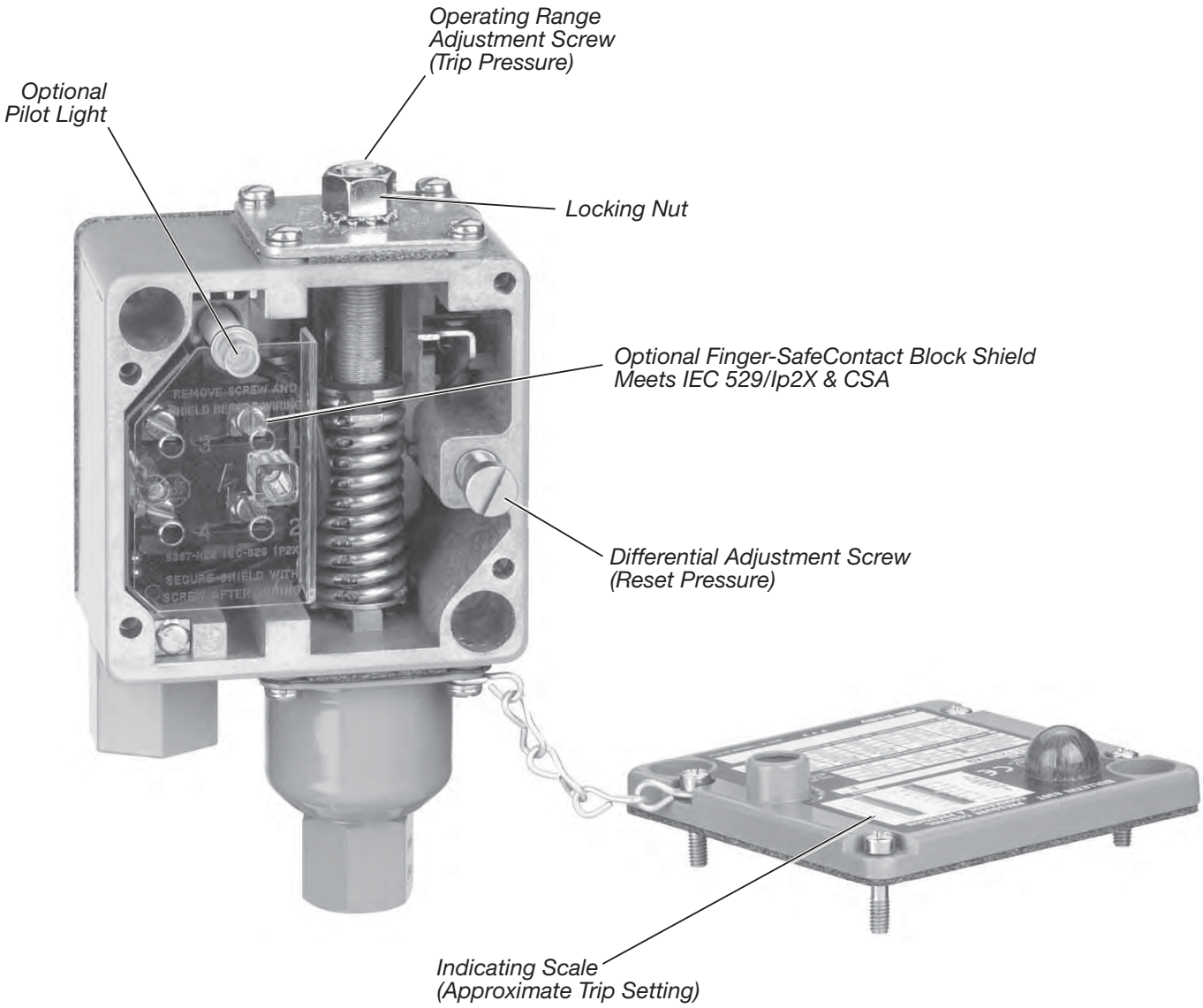

Control Setting — Style D Pressure Difference Controls

Standard pressure difference controls shipped from the factory are set at the maximum adjustable difference range and minimum differential. Remove the front cover and use a pressure gauge to make the following adjustments. See Figure 6.

Step 1 — Adjust trip setting (difference pressure)

The trip setting is controlled by the system difference pressure bushing and is adjusted internally. With no pressure (open to atmosphere) applied to top bellows, apply a constant pressure to bottom bellows equal to the desired difference in pressure at which the contacts are to trip. Insert a 1/8 in. diameter rod into a hole in the bushing and turn bushing to the left. Continue to turn bushing until the mechanism trips; circuit 1-2 will open. At this value, the trip setting is set at the pressure which is being applied to the bottom bellows.
Note: Turning the system difference pressure bushing will cause both the trip and reset settings to change in virtually equal increments.

Step 2 — Adjust reset setting (differential pressure)

The reset setting is controlled by differential adjustment screw (this adjustment can be made with the cover on). The reset setting is adjusted by turning the differential adjustment screw clockwise to increase the differential or counterclockwise to decrease the differential.
Note: Adjusting the differential has little or no affect upon the trip setting (difference pressure).

Figure 6
Trip and reset adjustment for pressure difference controls — 4-circuit contact block

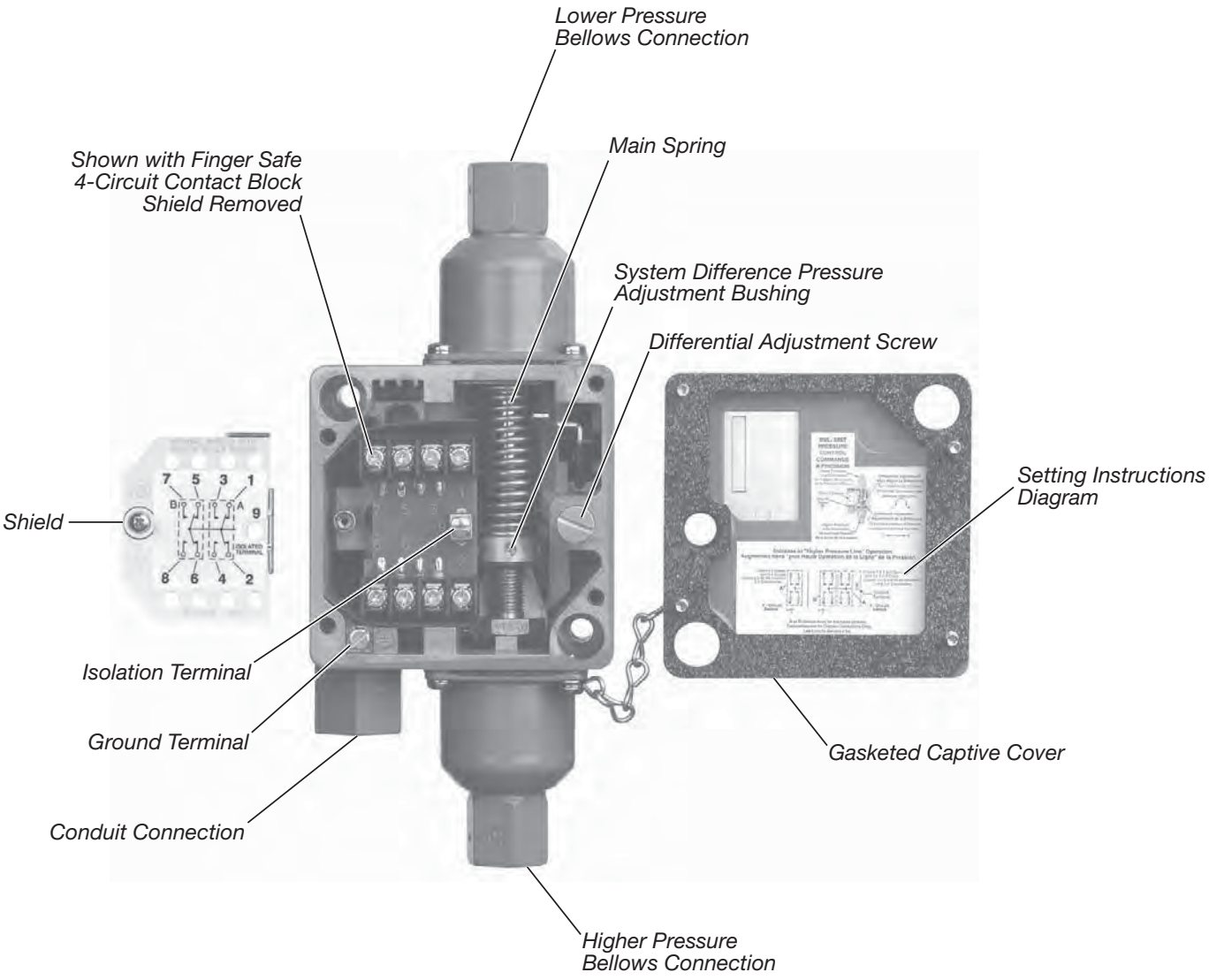

Repeat Accuracy and Mechanical Life

The design and construction of Bulletin 836T Pressure Controls provide a typical repeat accuracy equal to or better than the values shown in the repeat accuracy table below. Repeat accuracy is based on percent of maximum range, evaluated from test data and calculated using the formula per ICS 2-225 standards. Repeat accuracy and mechanical life of bellows type controls is graphically illustrated in Figure 7. The life curve does not apply to piston type controls.

For general applications, controls selected where the contacts operate between 30% and 80% of the operating range and where the maximum line and surge pressures do not exceed the specified values will provide excellent life and repeat accuracy. For more specific applications, it is important to note that the controls are designed to operate below or above these values. However, there may be a small trade-off between the factors of repeat accuracy and mechanical life.

Figure 7
Repeat accuracy versus mechanical life graph

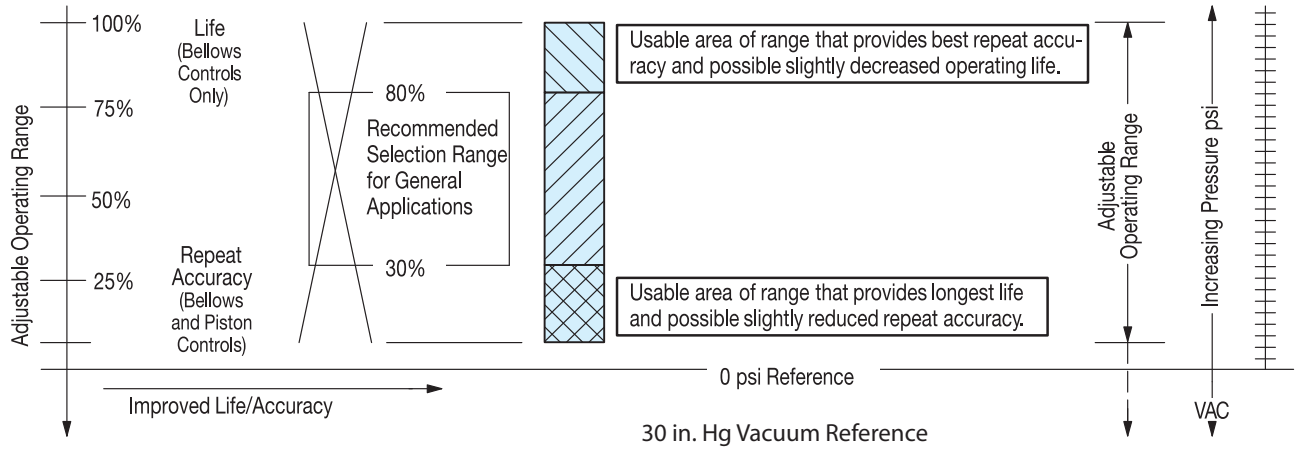

Repeat Accuracy

Type	Typical Characteristics (% of Maximum Range) ✶
Bellows	± 1%
Piston with seal	± 5% ❄
Piston without seal	± 3%

✶ Evaluation made from test data and calculated using formula per ICS 2-225 standards.

❄ Seal adds additional friction and value shown takes into consideration initial breakaway frictional force incurred during start-up or infrequent cycle operation. On continual cycle operation the repeat accuracy approaches ±3%.

Conversion Factors (Rounded)

psi x 703.1 = mmH_2O
psi x 27.68 = in. H_2O
psi x 51.71 = mm/Hg
psi x 2.036 = in. Hg
psi x 0.0703 = kg/cm^2
psi x 0.0689 = bar
psi x 68.95 = mbar
psi x 6895 = Pa
psi x 6.895 = kPa

Note: psi - pounds per square inch (gauge).
H_2O at 39.2 °F
Hg at 32 °F

Mounting without Removing Cover

Bulletin 836T controls can be mounted without removing the front cover. This helps prevent foreign materials from entering the opened enclosure during the interval between mounting and wiring of the control.

Factory Set Pressure Controls

Rockwell Automation will factory set pressure controls to customer specified values. Unspecified pressure controls shipped from the factory are set at the maximum operating range and minimum differential. See Factory-Set Pressure Controls, page 13-44.

Temperature Range

The temperature range at +32 °F (0 °C) or below is based on the absence of freezing moisture, water, or other fluids that may solidify and impede the operation of the control. Temperature ratings:

Operating: –22… +150 °F (–30…+66 °C)
Storage: –22…+200 °F (–30…+93 °C)

Contacts

Bulletin 836T controls feature 2- and 4-circuit contact blocks for added control circuit flexibility. Two-circuit contact blocks have one normally open contact and one normally closed contact and may be arranged for single-pole double-throw operation or separate circuit operation having the same polarity. Four-circuit contact blocks may be arranged for double-pole double-throw operation or separate circuit operation having the same polarity.

2-Circuit Contact Ratings — NEMA A600 (ICS 2-125)

AC						DC	
Maximum AC Voltage	A		Continuous Carrying Current	VA		Maximum Voltage	[A]
	Make	Break		Make	Break		
120	60	6.00	10	7200	720	115…125	0.4
240	30	3.00	10	7200	720	230…250	0.2
480	15	1.50	10	7200	720	550…600	0.1
600	12	1.20	10	7200	720	—	—

IEC 337-1					
Maximum Operational Voltage U_e	Utilization Category	Maximum Continuous Current I_{th}	Volts U_e	Rated Operational Current Make	Rated Operational Current Break
AC600	AC-11	10	120…600 AC	7200 VA	720 VA
		10	72…120 AC	60 A	720 VA
DC600	DC-11	10	24…72 AC	60 A	10 A
		—	115…600 DC	50 VA	50 VA

4-Circuit Contact Ratings — NEMA B150 (ICS 2-125)

AC						DC	
Maximum AC Voltage	A		Continuous Carrying Current	VA		Maximum Voltage	[A]
	Make	Break		Make	Break		
120	30	3.00	5	3600	360	115…120	0.33
240	27.5	2.80	5	6600	660	230…240	0.17

IEC 337-1					
Maximum Operational Voltage U_e	Utilization Category	Maximum Continuous Current I_{th}	Volts U_e	Rated Operational Current Make	Rated Operational Current Break
AC150	AC-11	5	72…120 AC	30 A	360 VA
		5	24…72 AC	30 A	3 A
DC150	DC-11	—	115…240 DC	40 VA	40 VA

Note: NEMA does not rate contacts to switch low voltage and current. Bulletin 836T Styles T and D Pressure Controls are supplied with silver contacts. The devices are designed to deliver high force snap action to the contacts. This provides exceptional contact fidelity at 24V DC I/O card current level entry when the integrity of the enclosure is maintained.

Contact Wiring Configurations

2-Circuit Contact Blocks

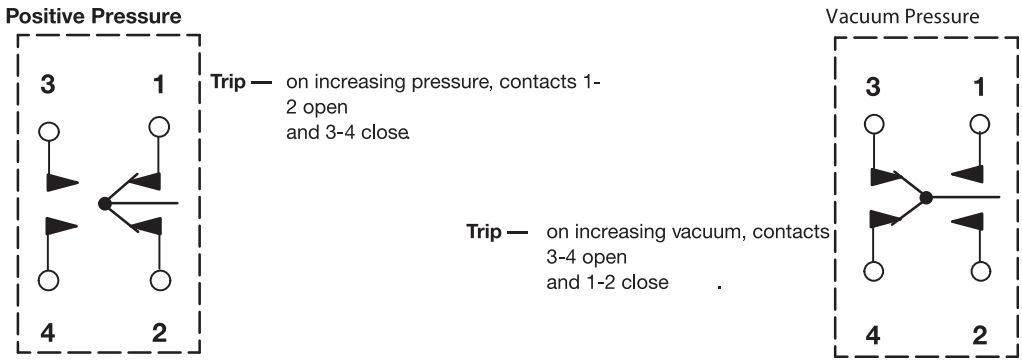

4-Circuit Contact Blocks

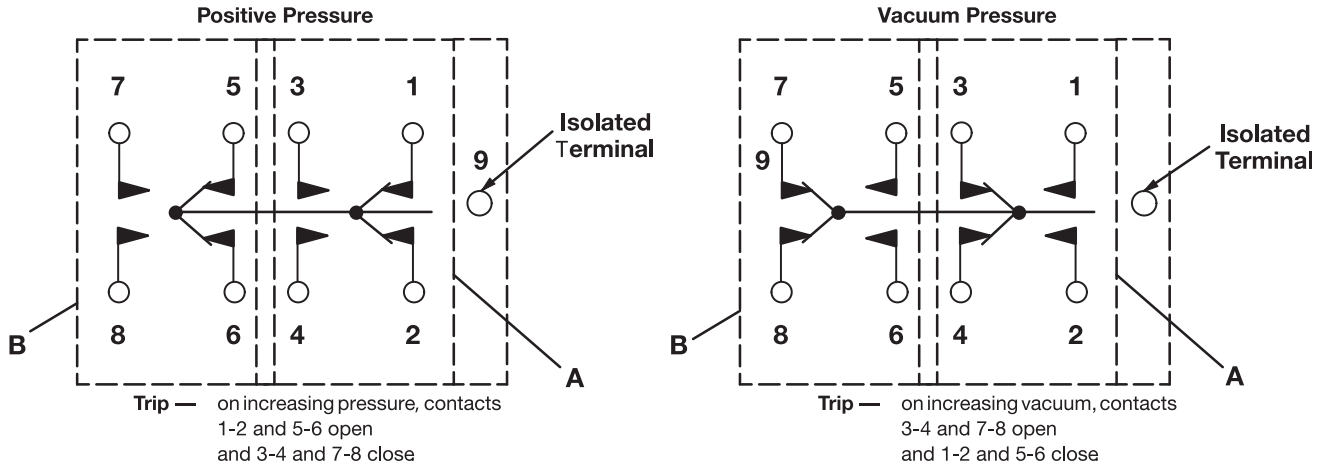

Note: Circuits A and B are electrically isolated from one another.
A or B circuits must be the same polarity.

Nameplate with Removable Paint Mask

The masks are convenient for the many users who repaint controls to match the machine or color code equipment. Saves costly time-consuming hand masking necessary so as not to conceal product functional specifications and approval listings. This feature is standard on most controls at no additional cost. The paint mask feature cannot be supplied on controls with pilot lights. They are also not available on those devices where it is necessary to remove the mask and add suffix modifications to the catalog number or specific customer identification in the space provided.

Figure 8
Removable paint mask



Cover with Transparent Mask and Instruction Label in Place



Cover with Mask Partially Removed

Pressure Control Selection

The selection table below is an overview of the five types of Bulletin 836T Pressure Controls Rockwell Automation offers. Each type of control is suitable for use on many types of applications. Pressure ranges, pressure connections, enclosure types, and the compatibility of the actulator with different types of pressure media are given to assist in the selection of which type of control to use.

836T				
Actuator Type	Copper Alloy Bellows	Type 316 Stainless Steel Bellows	Piston Type Without Seal	Piston Type With Seal
Adjustable operating ranges	30 in. Hg vacuum…650 psi	30 in. Hg vacuum…375 psi	40…5000 psi	80…5000 psi
Adjustable differentials	2…125 psi	2…90 psi	20…650 psi	40…650 psi
Maximum line pressures	up to 1300 psi	up to 600 psi	—	—
Occasional surge pressures	up to 1600 psi	up to 600 psi	up to 15,000 psi	up to 15,000 psi
Pressure Media				
Air	•	•		
Water	•	•	•	•
Hydraulic fluids	•	•	•	•
Corrosive liquids ∗		•		
Non-corrosive liquids	•	•	•	•
Corrosive gases ∗		•		
Non-corrosive gases	•	•		
Enclosures				
Type 1, 4 & 13	•	•	•	•
Type 7 & 9 and 4 & 13, IP66	•	•	•	•
Pipe Connections				
Standard pressure connection	1/4 in. N.P.T. female pipe thread	1/4 in. N.P.T. female pipe thread	3/8 in. N.P.T. female pipe thread SAE 7/16-20 UNF-2B thread O-ring boss seal SAE 9/16-18 UNF-2B thread O-ring boss seal	3/8 in. N.P.T. female pipe thread SAE 7/16-20 UNF-2B thread O-ring boss seal SAE 9/16-18 UNF-2B thread O-ring boss seal

∗ Corrosive liquids and gases must be compatible with Type 316 Stainless Steel Bellows.

Note: Pressure difference controls are supplied with either copper alloy or stainless steel bellows. See Product Selection on page 13-39 and page 13-40 for details.

Ordering Bulletin 836T Pressure Controls

When ordering Bulletin 836T Pressure Controls, consider the following:

- Device style
- Adjustable operating range
- Adjustable differential
- Maximum line pressure
- Occasional surge pressure
- Pressure media
- Enclosure type
- Pressure connection

How to Order

Step 1: Basic Device
Select a catalog number for the basic device.....**See pages 13-35…13-40.**

Step 2: Modifications
If required, add the appropriate modification suffix code(s) to the catalog number of the basic device.....**See page 13-41.**

Step 3: Accessories
If required, order accessories.....**See page 13-42.**

Step 4: Factory Options
Factory-set pressure controls.....**See page 13-44 .**

Catalog Number Explanation

Note: Catalog number must not include blank spaces.

836T –	T	25	1	J	X40	X15
	a	*b*	*c*	*d*	*e*	*f*

a

Style of Device	
Code	**Description**
T	Pressure control
D	Pressure difference control

b

Operator Type		
Code	**Style**	**Description**
25	T	Copper alloy bellows
26	T	Type 316 stainless steel bellows
30	T	Piston without seal
35	T	Piston with seal
40	T	Piston with seal (independent trip and reset adjustment)
45	D	Copper alloy bellows
46	D	Type 316 stainless steel bellows

c

Pressure Specifications
See “Pressure Specifications” on pages 13-35…13-40

d

Enclosure Type	
Code	**Description**
J	1, 4 & 13 Industrial use
E	7 & 9 and 4 & 13 Combined hazardous locations

e

Contact Block Type	
Code	**Description**
None	2-circuit contact block - standard
X40	4-circuit contact block

f

Modification 1
Add suffix codes in descending order whenever possible. (Optional. See page 13-41.)

Product Selection



Style T — Type 1, 4 & 13 with Pilot Light Option



Style T — Type 1, 4 & 13 with Pilot Light, Range Locking Cap, and 5-Pin Mini-Receptacle

Style T Pressure Controls with Copper Alloy Bellows∗ — S.P.D.T. 2-Circuit Contact Block

Standard Pressure Controls shipped from the factory are set at the maximum operating range and minimum differential.

Pressure Specifications				Enclosure Type	
	Adjustable Differential [psi] (Approximate Mid-Range Values)	Maximum psi		Type 1, 4 & 13	Type 7 & 9 and 4 & 13 ‡
Adjustable Operating Range [psi]		Line Pressure	Occasional Surge Pressure❄	Cat. No.	Cat. No.
30 in. Hg vacuum…35	2…7	80	90	**836T-T251J**	836T-T251E
6…75	3…15	200	220	**836T-T252J**	836T-T252E
12…150	6…30	350	450	**836T-T253J**	836T-T253E
20…300	10…55	600	750	**836T-T254J**	836T-T254E
40…450	20…90	900	1200	**836T-T255J**	836T-T255E
60…650	30…125	1300	1600	**836T-T256J**	836T-T256E

Style T Pressure Controls with Copper Alloy Bellows∗ — D.P.D.T. 4-Circuit Contact Block

Standard Pressure Controls shipped from the factory are set at the maximum operating range and minimum differential.

Pressure Specifications				Enclosure Type	
	Adjustable Differential [psi] (Approximate Mid-Range Values)	Maximum psi		Type 1, 4 & 13	Type 7 & 9 and 4 & 13 ‡
Adjustable Operating Range [psi]		Line Pressure	Occasional Surge Pressure❄	Cat. No.	Cat. No.
30 in. Hg vacuum…35	2.2…7	80	90	836T-T251JX40	836T-T251EX40
6…75	4.5…15	200	220	**836T-T252JX40**	836T-T252EX40
12…150	9…30	350	450	**836T-T253JX40**	836T-T253EX40
20…300	15…55	600	750	836T-T254JX40	836T-T254EX40
40…450	30…90	900	1200	836T-T255JX40	836T-T255EX40
60…650	45…125	1300	1600	836T-T256JX40	836T-T256EX40

∗ Copper alloy bellows may be used on water or air, and other liquids or gases not corrosive to this alloy.

❄ Transients (pulses) can occur in a system prior to reaching a steady-state condition. Surge pressures within published values generated during startup or shutdown of a machine or system, not exceeding eight times in a 24-hour period, are negligible.

‡ The combined Type 7 & 9 and 4 & 13 hazardous gas and dust service enclosure is supplied with special gasket and O-ring seal to diminish/exclude moisture, fluids, and dust from entering the enclosure. Enclosure is rated for the following environments:
CLASS I Groups C,D
CLASS II Groups E,F,G
CLASS III

Ordering Modifications

Modifications are ordered by adding the appropriate modification suffix code to the catalog number of the basic device. Add suffix codes to the catalog number in descending order.

Item	Description	Suffix Code
Oxygen/nitrous oxide service	Bellows and fittings specially prepared for oxygen and nitrous oxide service. Devices tested with pure oxygen, bellows plugged for protection from contamination and a tag warning against contamination is applied.	X2
External adjustment sealed	The 836T external adjustment is sealed, requiring cover removal to adjust differential (includes contact block shield)	X3
Tamper resistant setting	Range and differential adjustments are factory sealed. Price includes factory setting charge.∗	X4
SAE 7/16-20 UNF thread O-ring boss seal (piston type pressure control)	Female SAE straight thread O-ring seal designed to prevent leaks and minimize loss of hydraulic fluids.	X6
SAE 9/16-18 UNF thread O-ring boss seal (piston type pressure control)		X7
Neon pilot light 120V AC	A high-intensity neon pilot light for 120V AC, 60 Hz applications is available and can be wired for ON or OFF operation. The current rating is 1.0 mA.❄	X9
Red LED pilot light 24V DC	A high-intensity LED 24V DC pilot light is available to meet the requirements of the automotive, machine tool builders, and other industries. The current rating is 22 mA and can be wired for ON or OFF operation.❄	X15
Green LED pilot light 24V DC		X18
Special diaphragm assembly (piston type pressure control)	Diaphragm is made of Viton® and Nomex® fabric. Required when phosphate ester base and other adverse hydraulic fluids are present. Use on Catalog Numbers **836T-T300J** through **836T-T303J** series controls.	X25
Special diaphragm and O-ring assembly (piston type pressure control)	Diaphragm is made of Viton® and Nomex® fabric, O-ring is made of Viton® . Required when phosphate esterbase and other adverse hydraulic fluids are present. Use on Catalog Numbers **836T-T350J, -T351J, -T352J, -T353J** and **-T400J** series controls.	X26
Viton® enclosure gaskets	Special enclosure gaskets made of Viton® are available for applications where the standard gasket materials are not fluid compatible. Viton® is generally specified by the user for use with existing and newly developed coolants and hydraulic fluids to maintain enclosure integrity. These include cover, backplate, cover, and bellows or piston gaskets. **Note**: Viton® enclosure gaskets are often used with special diaphragm assemblies **(X25 or X26)**. See description above.	X29
5-Pin mini-type receptacle without pilot light❄	Select the desired pin wiring configuration from the diagrams on pages 13-45…13-47. Rated at 8 A, 600V.	See pages 13-45…13-47.
5-Pin mini-type receptacle with prewired pilot light❄	Select the desired pin wiring, pilot light wiring, and voltage from the diagrams on pages 13-45…13-47. Includes receptacle and pilot light. Rated at 8 A, 600V.	See pages 13-45…13-47.
5-Pin micro-connect receptacle without pilot light❄	Select the desired pin wiring configuration from the diagrams on pages 13-45…13-47. Add number "1" to the suffix number immediately following the letter "X." **Example: "X19" becomes "X119."** Rated at 3 A, 300V. Pin/Wiring Code: 1 – Red with white tracer, 2 – Red, 3 – Green (Gnd), 4 – Red with yellow tracer, 5 – Red with Black Tracer	See pages 13-45…13-47.
5-Pin micro-connect receptacle with prewired pilot light❄	Select the desired pin wiring configuration and pilot light (X9 or X15, see above for specifications) from the diagrams on pages 13-45…13-47. Add number "1" to the Suffix Number immediately following the letter "X." **Example: "X12X9" becomes "X121X9."** Rated at 3 A, 300V. Pin/Wiring Code: 1 – Red with white tracer, 2 – Red, 3 – Green (Gnd), 4 – Red with yellow tracer, 5 – Red with black tracer	See pages 13-45…13-47.
Additional optional receptacles and wiring❄	For assistance, please consult your local Rockwell Automation sales office or Allen-Bradley distributor.	

∗ See paragraph entitled “Factory-Set Pressure Controls” on page 13-44.
❄ Not available on the Type 7 & 9 and 4 & 13 combined enclosed devices.

Ordering Accessories

Accessories are ordered as separate catalog numbers. Select the required accessories from the accessories table below.

Item	Description	Type	Cat. No.
External fixed pulsation snubbers	Controls are supplied as standard with an internal pulsation snubber. However, a control properly selected and used within the adjustable range values, yet having a short bellows life, is a good indication of the presence of extreme surge pressures. External fixed pulsation snubbers are available to provide **additional** dampening when extreme pulsations or surges are present. Recommended if more than eight line surges occur in a 24-hour time period.	Snubber for bellows control 1/4-18 N.P.T. thread	**836-N7**
		Snubber for piston control 3/8-18 N.P.T. thread	**836T-N8**
Selectable element pulsation snubbers	Controls are supplied as standard with an internal pulsation snubber. However, a control properly selected and used within the adjustable range values, yet having a short bellows life, is a good indication of the presence of extreme surge pressures. Selectable element pulsation snubbers are supplied with five different elements to provide a selectable balance between maximizing pressure control life and minimizing control response time. Pulsation snubbers are supplied with the mid-range element already mounted and four other color-coded porosity elements included in the package. See "Selectable Pulsation Snubber Porosity Elements" table on this page for porosity specifications.	Snubber for bellows control 1/4-18 N.P.T. thread	**836-N40**
		Snubber for piston control 3/8-18 N.P.T. thread	**836T-N41**
	Female SAE straight thread O-ring seal designed to prevent leaks and minimize loss of hydraulic fluids. Use on applications with a pressure range of 550…5000 psi.	SAE 7/16-20 UNF-2B thread O-ring boss seal for piston controls	836T-N49
		SAE 9/16-18 UNF-2B thread O-ring boss seal for piston controls	**836T-N50**
Selectable pulsation snubber porosity elements	Package consists of five porosity elements and complete instructions. Elements are color-coded for easy identification. Elements are available in five different porosities for a wide range of applications. See selectable pulsation snubber porosity elements table.		See Table on this page
Locking cap	Deters unauthorized tampering of range setting. Once installed, the locking cap can be removed with a screwdriver to re-adjust the control.	—	**836T-N13**
Isolation trap with two 1/4 in. male pipe fittings	An isolation trap is available for high-temperature media applications from 150…600 °F or corrosive applications compatible with Type 316 stainless steel tubing and fittings. The isolation coil is inserted between the bellows of the pressure control and the elevated temperature line of the system. The isolation trap will fill with condensed water or can be filled with water or suitable fluid when installed. A silicone buffer fluid is available in a convenient dispenser. Copper alloy lower and higher pressure range bellows can be applied to many applications using the isolation trap. The silicone buffer fluid is used to isolate many corrosive substances from coming in contact with the bellows. The isolation trap is rated at 3000 psi working pressure. Not available for piston-type controls. See photo on this page.		836-N25
Isolation trap with one 1/4 in. male and one 1/4 in. female pipe fittings			836-N26
2 oz. of buffer fluid to fill bellows and tubing			836-N27
Metric electrical entry conduit adapters	BS 20 mm thread adapter		**836T-N36**
	Pg 13.5 thread adapter		836T-N37

Selectable Pulsation Snubber Porosity Elements

Recommended Type of Service	Color Code	Porosity	Cat. No.
Viscous fluids (over 500 SSU)*	None	Coarser	836-N43
Medium type oils (225…500 SSU)*	Black		**836-N44**
Water and light oils (30… 225 SSU)*	Brown		**836-N45**
Low viscosity fluids (under 30 SSU)*	Green		**836-N46**
Air and other gases	Red	Finer	**836-N47**
One of each of the above	—	Assorted	836-N48

* Saybolt Seconds Universal (SSU) — units of viscosity measurement.

Note: Color code is located on end of element.



Isolation Trap and Silicone Buffer Fluid

Fixed Pulsation Snubbers



Male/Female Pipe Threads

Selectable Element Pulsation Snubbers



Male/Female Pipe Threads

Pulsation Snubbers

Conversion Kits

Ordering Conversion Kits

Conversion Kits are ordered by adding the appropriate suffix code to the catalog number of the basic device. Select the required conversion kits from the table below.

Conversion Kits

Item	Description	Suffix Code
Neon pilot light conversion kit	Converts standard control to control with 120V AC neon pilot light. Not available on Type 7 & 9 devices. Kit includes pilot light and cover assembly.	N9
Red LED pilot light conversion kit	Converts standard control to control with 24V DC LED pilot light; has a 22 mA current rating. Not available on Type 7 & 9 devices. Kit includes pilot light and cover assembly.	N15
Green LED pilot light conversion kit	Converts standard control to control with 24V DC LED pilot light; has a 22 mA current rating. Not available on Type 7 & 9 devices. Kit includes pilot light and cover assembly.	N18

Example:
To convert a **Cat. No. 836T-T301J** to a **Cat. No. 836T-T301JX15**, order **Cat. No. 836T-T301JN15**.

Renewal Parts

Ordering Renewal Parts

Renewal Parts are ordered as separate catalog numbers. Select the required renewal parts from the table below.

Renewal Parts

Item	Description	Cat. No.
2-Circuit contact block renewal kit	Allows renewal of worn contacts for Bulletin 836T controls.	**836T-N1**
4-Circuit contact block renewal kit	Allows renewal of worn contacts for Bulletin 836T controls.	836T-N2
Renewal seals for piston-type controls	For use on Cat. No. 836T-T350J.	836T-N20
	For use on Cat. No. 836T-T351J.	836T-N21
	For use on Cat. No. 836T-T352J and 836T-T400J.	836T-N22
	For use on Cat. No. 836T-T353J.	836T-N23

Factory-Set Pressure Controls

Ordering factory-set pressure controls

- When a specific factory setting is requested, the specific terminal connections must be specified — e.g., N.O. or N.C. It must also be specified whether the contact operation is occurring on either increasing or decreasing pressure. For example:

Normally Closed (N.C.) contacts to open at∗ psi increasing pressure and close at∗ psi decreasing pressure.

—OR—

Normally Open (N.O.) contacts to close at∗ psi increasing pressure and open at∗ psi decreasing pressure.

- If minimum differential is not critical and the inherent minimum differential satisfies the application, specify the factory setting as follows:

Normally Closed (N.C.) contacts to open at∗ psi increasing pressure minimum differential.

—OR—

Normally Open (N.O.) contacts to close at∗ psi increasing pressure minimum differential.

Quality analog test gauges§ are used when applying requested factory settings to these rugged industrial grade pressure controls. (Gauges are calibrated and accuracy is traceable to the The National Institute of Standards and Technology.)

The actual requested setting is applied to the control by reading the set point directly from the test gauge being used. However, traceable gauge tolerance variance between source and user, and possible severe shock during shipping and installation, may contribute to the factory settings deviating slightly from the specified values. Slight recalibration can easily be accomplished upon final installation to meet specific requirements for the more demanding applications.

When installed, the controls will perform with a repeat accuracy as established in the paragraph entitled “Repeat Accuracy" (see page 13-54). Special service is available to factory-set controls on digital laboratory instruments, up to 600 psi, when required for more critical applications. An additional charge may be added for this service contingent upon setting tolerance and quantity. Please contact your local Rockwell Automation sales office or Allen-Bradley distributor.

∗ Specify psi (pounds per square inch) or, in. Hg vac (inches of mercury vacuum).

❄ Per ANSI B40.1 Grade 2A (0.5% accuracy full scale), Grade 3A (0.25% accuracy full scale).

If not specified, setting tolerances will be as shown in the table below.

Pressure Range	Tolerance
30 in. Hg Vac....0	+/- 1 in. Hg vac.
> 0...100 psi	+/- 1 psi
> 100...300 psi	+/- 2 psi
> 300...500 psi	+/- 5 psi
> 500...1000 psi	+/- 10 psi
> 1000...5000 psi	+/- 50 psi

Standards Compliance

- UL508
- CSA 22,2 No. 14
- UL698, 1604 (Haz. Loc.)
- NEMA ICS-2

Certifications

File and Guide Numbers

	UL		CSA	
	File Number	Guide Number	File Number	Class
Bulletin 836T	E14842	NKPZ	LR1234	3211-03
	E53048 (Haz. Loc.)	NOWT	LR11924 (Haz. Loc.)	3218-05
	Hazardous Location enclosure devices are not CE compliant. All other enclosed devices are CE compliant.			

Approximate Dimensions and Shipping Weights

Dimensions in inches (millimeters). Dimensions are not intended to be used for manufacturing purposes.

Type 4 & 13 (Bellows)

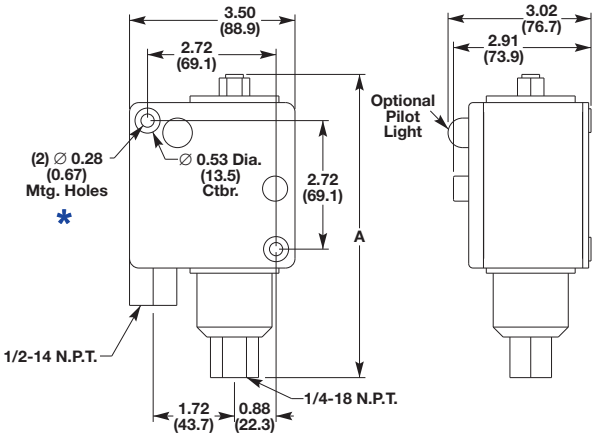

Approximate Shipping Weight 3-1/2 lbs. (1.6 kg)

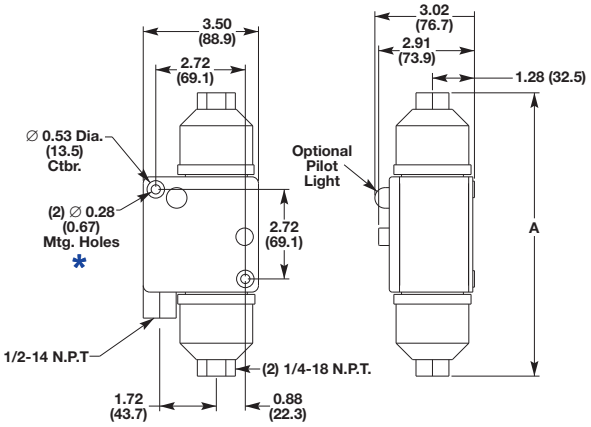

Approximate Shipping Weight 4 lbs. (1.8 kg)

Cat. No.	A Dimensions	Cat. No.	A Dimensions	Cat. No.	A Dimensions	Cat. No.	A Dimensions
836T-T251J	6.65 (169)	**836T-T254J**	6.95 (176)	**836T-D450J**	8.60 (218)	836T-D460J	8.60 (218)
836T-T260J		**836T-T255J**					
—	—	**836T-T256J**	7.09 (180)	**836T-D451J**	8.14 (207)		
836T-T252J	6.41(163)	**836T-T262J**	7.33 (186)	**836T-D452J**		**836T-T252J**	8.5 (216)
836T-T253J		**836T-T263J**	7.25 (184)			836T-D463J	10.06 (256)
836T-T261J				**836T-D453J**	9.5 (241)		

Type 4 & 13 (Piston)

(Does not include Dual Bellows Devices)

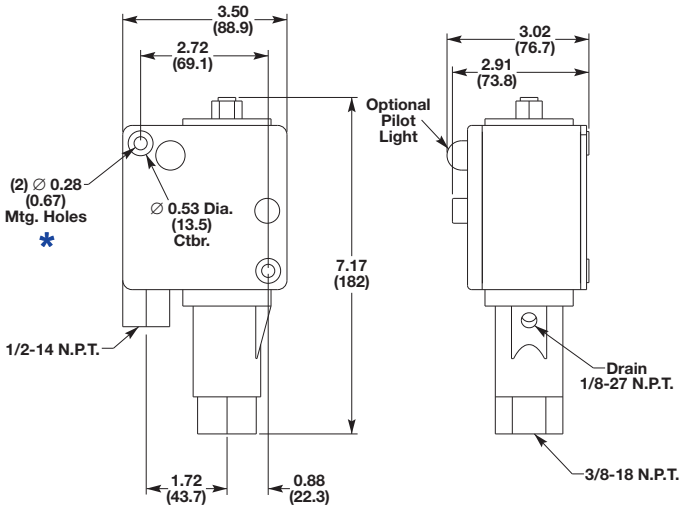

Approximate Shipping Weight 4.5 lbs. (2.0 kg)

Type 4 & 13 and 7 & 9 Bellows and Piston Type

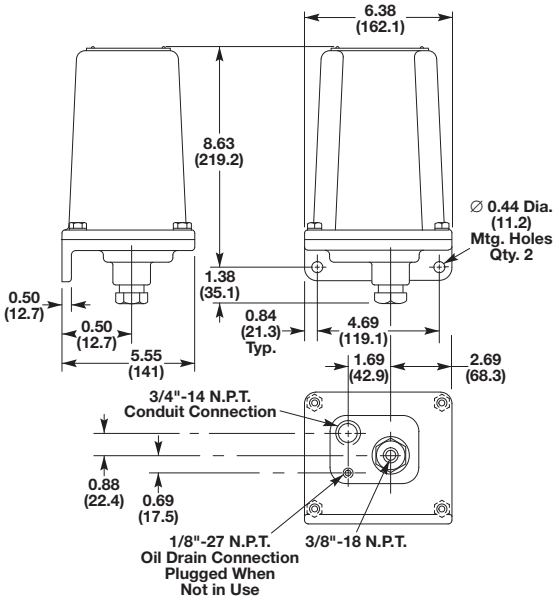

Approximate Shipping Weight 10 lbs. (4.5 kg)

* (2) mounting screws are required: 3/16 x 20 x 2 in. Counterbore depth is 1-1/8 in. Overall depth of mtg hole (front to back) is 2-1/4 in.

Cat. No.	
836T-T300J	836T-T350J
	836T-T351J
836T-T301J	836T-T352J
836T-T302J	836T-T353J
836T-T303J	836T-T400J

CS-451-200 : Identification sheet

VWTC PROJECT NUMBER:	Iqaluit WWTP	REV:	01
PROJECT NAME:	5000218036	SUBMITTED TO (COMPANY):	
ENGINEER:	G. HÉBERT	SUBMITTED TO (RESPONSIBLE)	
PROJECT MANAGER:	C. BEKAERT	PROJECT NUM REFERENCE.:	
PHONE NUMBER:		LOT NUMBER:	

SUPPLIER	EQPT CODE	EQPT TAG NO	DIA	DESCRIPTION	INFO 1	INFO 2	INFO 3	APPLIC.	NOTE	REV
ENDRESS & HAUSER	IESWLE5204819	LSL-04-910		HP-500 INSTRUMENT	LEVEL SWITCH // MANUF: E&H// MODEL :FTE31-C6DB11 Soliswitch FTE31, thread NPT Level limit switch, Paddel. Solid >= 100 g/dm3. 1x relay double pole change over switch.	Housing: Plastics PBT, IP65 NEMA4 Rod: steel 1.4305 (303). 1x Cable entry NPT 1/2. Appval:C CSA DIP Cl. II,III, Div.1, Gr.EFG Power : 24VDC, relay	Paddel; Additional Option:1 316Ti; basic version Version:1 Basic version B Marking: 71072711: TAG on device	HP-500		1

Level | Pressure | Flow | Temperature | Liquid Analysis | Registration | Systems Components | Services | Solutions

Technical Information

Soliswitch FTE31

Level Limit Switch
Economical paddle limit switch
For application in dust hazardous explosive areas



Application areas
The universal paddle level limit switch FTE 31 is used as a full, empty and demand alarm on silos containing solids. Its construction and materials make the unit suitable for use in the food industry.
The unit is suitable as a level limit switch in dust explosion hazardous areas.
Typical applications are level detection in:
- Cereals
- Sugar
- Cacao
- Animal feeds
- Washing powders
- Chalk
- Dry plaster
- Cement
- Granulates
- Wood chips

Features and benefits
- Simple operation
- Proven principle
- Slip clutch
- Ingress protection to IP 65 / NEMA 4x / Type 4x

TI068R/09/en
51002384

Endress+Hauser
People for Process Automation

Function and system construction

Measurement principle

The shaft and paddle are driven using a reduction gear and synchronous motor. If the paddle is stopped by material covering it, the hinged motor in the housing moves from the rest to the switch position. This movement operates two switch contacts, the first is for external level indication and the second switches the power off to the motor.
The paddle starts to rotate once the medium level falls below the paddle, the hinged motor returns to its rest position and the two contacts switch to normal operation. Intermittent loads that operate against or even in the same direction of rotation are evened out by using a slip clutch.

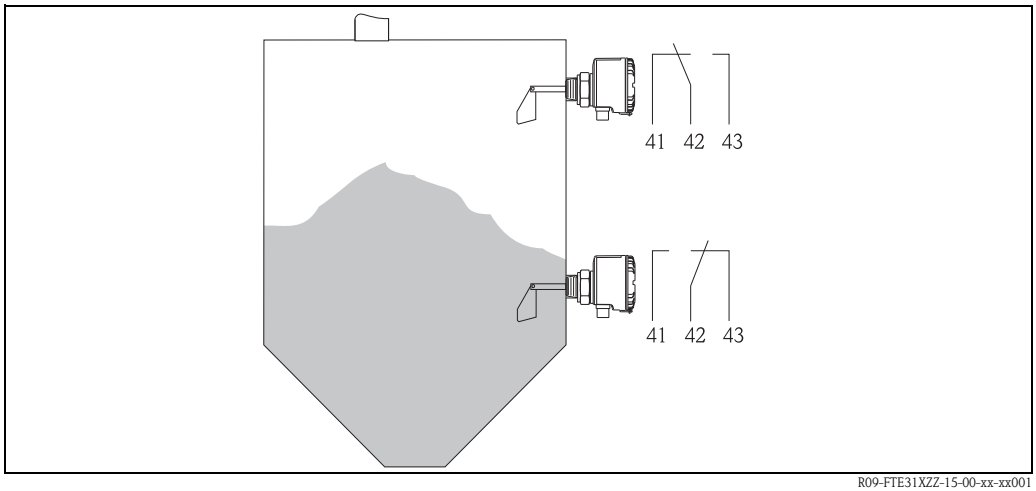

Level measurement changeover contact

System

Complete level measurement limit switch, paddle, shaft with synchronous motor and slip clutch, single pole double throw switch.

Input values

Measurement value

Level of solids

Range

Variable types dependent on:
- Installation point
- Length of shaft or rope

Output values

Output signal

Binary, once the set level is reached the micro switch contact changes.

Output circuit

Connectable load:
≤ 250 VAC, 10 A nominal current, 3 A on motor

Switch output

Potential free changeover contact (SPDT)

Switch delay

Approx. 2 seconds

Mechanical life time

min. 500 000 switch cycles

Power supply

Electrical connection

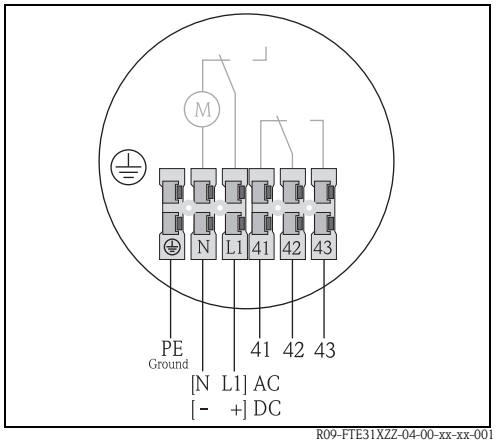

Terminal layout FTE31

AC	DC	
PE		Earth (ground) connection
N	-	Power connection
L	+	Power connection
41		Normally closed contact
42		Common contact
43		Normally open contact

Cable entry

Power supply and signal cable (in-/output):
- Thread for cable gland [½" NPT]

Power supply

Standard:
- 230 V AC, 50/60 Hz (±10%)

Option:
- 115 V AC, 50/60 Hz (±10%)
- 20...28 V DC

Power consumption

AC: P < 4,5 VA; DC: P < 3,5 W

Current requirement

DC: $I_{max} \leq 66$ mA

Installation conditions

Installation hints

Installation position:
- horizontal up to shaft length > 300 mm (11.8") or vertical (see diagram)
- side load on the shaft max. 60 N
- Load on the rope max. 1500 N

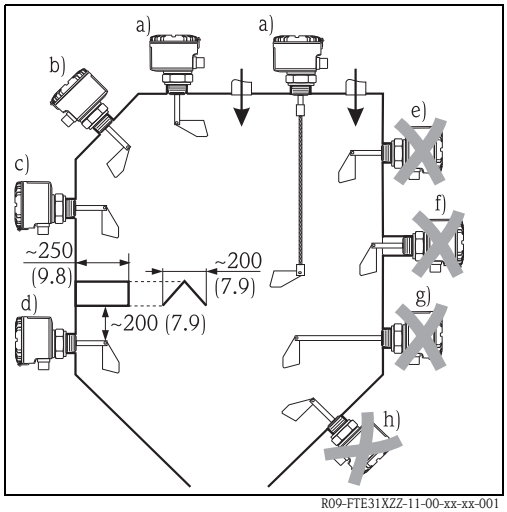

Installation of the FTE31 paddle level limit switch, dimensions in mm (inch).

Correct installation	Incorrect installation
a) Vertical from top of silo	e) In dierction of solids flow
b) Angled from the top	f) Installation coupling too long
c) From the side	g) Horizontal with shaft length > 300 mm
d) With protective cover against falling solids	h) Angled from below

The FTE31 paddle limit switch can be installed in solids silos as shown under points a, b, c and d.

Environment conditions

Ambient temperature	- 20 °C ... + 60 °C (-4 °F ... + 140 °F)
Storage temperature	- 20 °C ... + 60 °C (-4 °F ... + 140 °F)
Ingress protection	■ IP 65 / NEMA 4x / Type 4x with closed cover ■ IP 20 / NEMA 1 with open cover
Vibration protection	IEC 654-3, dimension V.S.1 (v<3 mm/s, 1<f<150 Hz)
EMC	To EN 61 326, Class B
Protection class	I
Over voltage protection category	II
Altitude	Up to 2000 m (6560 ft) above sea level.

Process conditions

Material temperature range	- 20 °C ... + 80 °C (-4 °F ... 176 °F)
Operating pressure range	0.5 bar ... 1.8 bar (7.25 PSI ... 26.1 PSI)
Material conditions	Solids - grain size ≤ 50 mm (1.97")
Product density (solids weight)	100 g/l

Mechanical construction

Model/dimensions

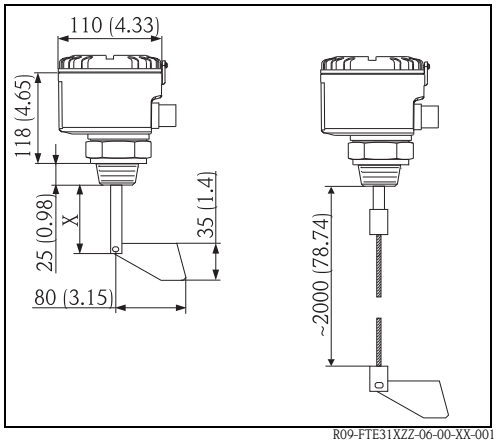

Construction of the compact unit - dimensions in mm (inch).

Shaft variations:

Standard shaft X = 75 mm (2.95")
Special length X:
100 mm (3.94"), 200 mm (7.87"), 300 mm (11.8"), 400 mm (15.75"), 500 mm (19.7"), 600 mm (23.6")

Rope version:

Rope length approx. 2000 mm (78.7"), can be shortened.

Caution!
If the shaft length is > 300 mm (11.8") the FTE31 can only be installed vertically downwards.

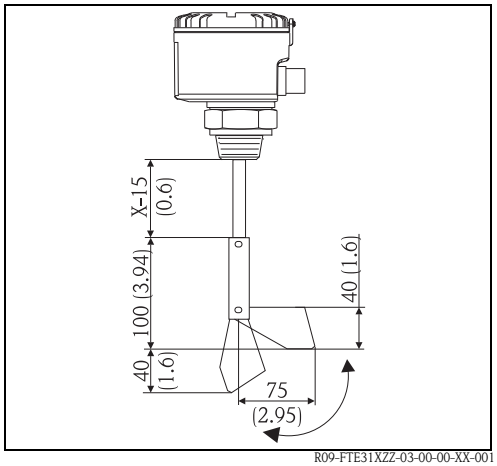

Hinged paddle - dimensions in mm (inch)

Option hinged paddle:

The paddle is hinged so that it can be easily mounted through a threaded mounting boss. Because it is spring loaded the paddle retuns to its normal operation once inside the vessel. Removal of the unit is always possible.

The hinged paddle can be mounted to both the solid shaft as well as the rope extension versions.

Weight	approx. 1 kg (2.2 lb)
Materials	Housing, cover and process connection: – VALOX 553 plastic with 30% fibre glass. Shaft: – Corrosion resistant steel 1.4435 Paddle: – Corrosion reseitant steel 1.4435 Option: – Process connection - corrosion resistant steel 1.4435 – Rope extension- corrosion resistant1.4571 with corrosion resistant steel 1.4305 weight – Hinged paddle - corrosion resistant steel 1.4435 O-ring seal: – NBR Shaft sealing ring: – NBR Perbunan Cable entries NPT ½": – Nickel plated brass
Shaft bearing	High performance friction bearing - maintenance free
Shaft revolution	approx. 1 revolution per minute
Process connection	Threaded boss - thread NPT 1¼" or NPT 1½"
Electrical connection	Plug-in terminals 2.5 mm^2 (14 AWG) solid core, 1.5 mm^2 (16 AWG) stranded with ferrule

Certification

CE approval	The measurement system fulfils the requirements demanded by the EU regulations. Endress+Hauser acknowledges successful unit testing by adding the CE mark.
FM	DIP Class II, Div. 1+2, Groups E, F, G and Class III
CSA	DIP Class II, Div. 1+2, Groups E, F, G and Class III

Ordering information

Soliswitch FTE31, Thread NPT

	Approval:
A	Non-hazardous area
B	FM DIP Cl. II, III, Div. 1, Gr. EFG
C	CSA DIP Cl. II, III, Div. 1, Gr. EFG

	Power supply:
1	230 V AC, relay 250 V AC, 100 mA-10 A
2	115 V AC, relay 250 V AC, 100 mA-10 A
3	20...28 V DC, relay 250 V AC, 100 mA-10 A
4	230 V AC, relay PLC 48 V DC, 10 mA-100 mA
5	115 V AC, relay PLC 48 V DC, 10 mA-100 mA
6	20...28 V DC, relay PLC 48 V DC, 10 mA-100 mA

	Process connection:
A	Thread NPT 1¼", Valox553 (PBT)
B	Thread NPT 1¼", 316L
C	Thread NPT 1½", Valox553 (PBT)
D	Thread NPT 1½", 316L

	Version:
A	Shaft 100 mm
B	Shaft 200 mm
C	Shaft 300 mm
D	Shaft 400 mm, vertical installation
E	Shaft 500 mm, vertical installation
F	Shaft 600 mm, vertical installation
Y	Other
1	Shaft 75 mm, compact
2	Rope 2 m, 316, shortable

	Paddle: Additionla option:
1	316Ti; basic version
2	316L; fold-away, w/o signal lamp

FTE31-	⇐ **Ordercode**

This ordering information can give an overview about the available order options. The Endress+Hauser sales organization can provide detailed ordering information and information on the order code.

Accessories

Hinged paddle for retro-fitting
Order no. 50089768

Further documentation

Short form operating manual KA094R/09/a3

Instruments International

Endress+Hauser
Instruments International AG
Kaegenstrasse 2
4153 Reinach
Switzerland

Tel. +41 61 715 81 00
Fax +41 61 715 25 00
www.endress.com
info@ii.endress.com

Endress+Hauser
People for Process Automation

CS-504-100 : Identification sheet

VWTC PROJECT NUMBER:	Iqaluit WWTP	REV:	01
PROJECT NAME:	5000218036	SUBMITTED TO (COMPANY):	
ENGINEER:	G. HÉBERT	SUBMITTED TO (RESPONSIBLE)	
PROJECT MANAGER:	C. BEKAERT	PROJECT NUM REFERENCE.:	
PHONE NUMBER:		LOT NUMBER:	

SUPPLIER	EQPT CODE	EQPT TAG NO	DIA	DESCRIPTION	INFO 1	INFO 2	INFO 3	APPLIC.	NOTE	REV
SCHUTTE&KOERTING	EJGUEJ200371	IJ-04-915	N/A	HP-500 EDUCTOR	MANUFACTURER: SHUTTE&KOERTING / MODEL: 1,5"- Fig264 PVC Eductor	N/A	N/A	HP-500		1

Schutte & Koerting

Water Jet Eductors

Introduction

The Water Jet Eductor is a type of ejector which utilizes the kinetic energy of a pressurized liquid to entrain another liquid, mix the two, and discharge the mixture against a counter pressure. Ejectors of this type are used throughout industry for pumping and mixing operations.

Application

Water jet eductors have numerous uses in the plant such as lifting, pumping, mixing and agitation of liquids, granular solids and slurries. Some specific applications are: draining flooded areas, emptying tanks and sumps, pumping and mixing operations in oil treating systems, dewatering sand and coal barges, introducing anti-knock agents and coloring additives into gasoline, continuous blending, acidifying, causticizing of oils, producing emulsions, pumping food products, pumping sand and filter clay, tank mixing, and various proportioning operations. As an example of eductor performance in a typical use, a jet eductor measuring 8½" in length will empty a 500 gallon water tank in less than half an hour, using water at 60 psig, as the sole source of motive power.

Features

Self Priming Eductors require no priming and can be used for either continuous or intermittent operation.
Simple and Reliable Since the basic eductor has no moving parts to wear or break, only periodic inspection is required.
Corrosion and Erosion Resistant Because they can be made from most materials, or coated with corrosion resistant materials, eductors can be made resistant to the corrosive effects of the liquids handled and the environment.
Automatic Control Units can be adapted for automatic operation by means of a regulating spindle or a snap valve and float arrangement.
Non-Electrical Eductors can be used in hazardous locations where electrically operated alternatives would require expensive explosion-proofing.
Easy to Install Either threaded or flanged connections are available. Units are compact, relatively light and can be adapted to a variety of piping configurations.
Low Cost Water eductors are inexpensive in relation to the work they do.

Construction

Water Jet Eductors consist of only three basic components: a converging nozzle, a diffuser (or venturi) and a body to hold these parts in their proper relative positions and provide a suction chamber.



Converging Nozzle | Diffuser (or Venturi) | Body - holds diffuser and nozzle in position

Jet ejectors can be made from most workable materials, such as: cast iron, bronze, stainless steel, aluminum, polyvinyl chloride, polyester fiberglass, Phenolic Fiberglass Reinforced Plastic (FRP), Teflon[2] and Hastelloy[3].

A variety of types and sizes are available as noted on the following pages. Certain variables such as pressure, temperature, viscosity, density, operating conditions of suction and discharge fluids, and desired results must be considered in determining the type of eductor best suited to your needs. S&K engineers will work with you to select the proper eductor for your application.

Request Performance Data Supplement 2M for operating characteristics of water jet eductors.

Index

Description	Page
Fig. 264 Water Jet Eductor	2
Fig. 266 Water Jet Eductor	2
Fig. 264 PVC and Kynar Water Jet Eductor	3
Fig. 2645 Automatic Eductor	4
Fig. 265 Liquid Jet Eductor	5
Fig. 242 Condensate and Mixing Eductor	6
Fig. 258 Tank Mixing Eductor	7
Fig. 268 Tank Mixing Eductor	7
Fig. 254 Hopper-Equipped Eductor	9
Fig. 267 Hopper-Equipped Eductor	9
Fig. 227 Hopper-Equipped Eductor	9
Fig. 224 Water Jet Sand and Mud Eductor	10
Fig. 235 Annular Multi-Nozzle Water Jet Eductor	11
Fig. 222 Portable Eductor	12
Fig. 212 Corrosion Resistant Eductor	12
Typical Applications of S&K Water Jet Eductors	12

Fig. 264 and Fig. 266 Water Jet Eductors

S&K Fig. 264 and Fig. 266 Water Jet Eductors are designed for liquid pumping and mixing operations and for the handling of some solids where requirements do not necessitate capacities greater than those obtained with sizes up to and including 6". They are considered the standard eductors within this size range. Typical applications begin on page 12.

In operation, pressure liquid enters the eductor through the pressure nozzle and produces a high velocity jet. This jet action creates a vacuum in the line which causes the suction liquid to flow up into the body of the eductor where it is entrained by the pressure liquid. Both liquids are thoroughly mixed in the throat of the eductor and are discharged against back pressure. The streamlined body with no pockets permits the pressure liquid to move straight through the eductor and reduces the possibility of solids in the suction material collecting and clogging. In addition, pressure drop in the suction chamber is held to a minimum.

Accompanying Bulletin 2M Supplement Performance Data provides performance information.

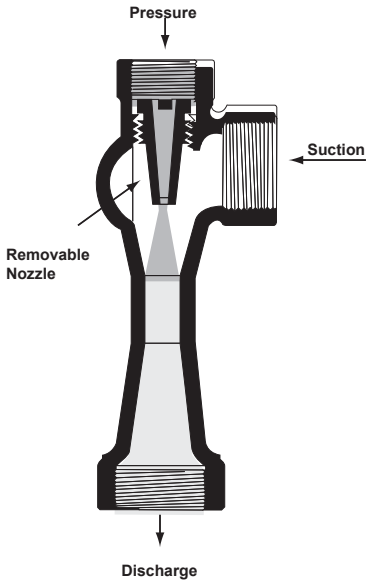

Fig 1. FIG. 264 EDUCTOR
Eductors of this type have streamlined bodies with threaded pipe connections. They are made in sizes ranging from 1/2" to 3" and are stocked in these sizes in ductile iron and bronze and Fig. 316 stainless steel. They are stocked in sizes from 1/2", 2", and 3" in PVC. Other materials are available on order.



Fig. 2. FIG. 264 EDUCTOR

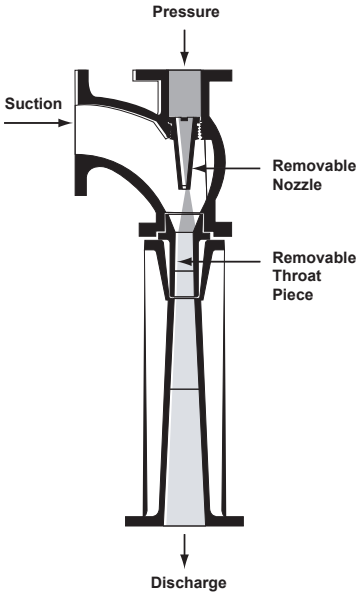

Fig. 3. FIG. 266 EDUCTOR.
These eductors are similar to Fig. 264 Eductors except that they have flanged connections and removable throat bushings along with removable nozzles. They are supplied in cast iron, bronze-mounted in 4" and 6" sizes. Other materials can be supplied on special order.

Table 1. Sizes and Dimensions, Fig. 264 and Fig. 266 Water Jet Eductors

Size In Inches	Connections In Inches		Wgt. In Lbs.	Working Pressures						Dimensions in Inches			Max. Round Particle Size In Inches
	Suction Disch.	Pressure		Cast Iron		Bronze		Stainless Steel		A	B	C	
				Motive psi	Body psi	Motive psi	Body psi	Motive psi	Body psi				
Fig. 264 Eductor													
1/2	1/2	3/8	3/4	150	125	125	100	600	500	1 1/16	2 9/16	1 1/8	1/16
3/4	3/4	1/2	1 1/4	125	125	100	100	500	500	1 3/8	3 3/8	1 1/4	1/8
1	1	3/4	2	150	150	150	125	600	600	1 1/2	4 3/16	1 5/8	5/32
1 1/2	1 1/2	1	4	150	100	125	90	600	400	2	6 1/2	2	5/16
2	2	1 1/4	6	150	100	125	85	600	400	2 1/4	7 5/8	2 1/4	3/8
2 1/2	2 1/2	1 1/2	11	200	150	200	125	600	300	2 11/16	9 1/4	3 1/8	3/8
3	3	2	20	250	150	225	125	600	400	3 1/8	11 1/4	3 1/2	13/16
Fig. 266 Eductor													
4	4	2 1/2	100	125	125	-	-	-	-	4 3/8	19 1/4	7 13/16	1
6	6	4	180	125	125	-	-	-	-	6 1/16	28 3/8	9 1/8	1 1/8

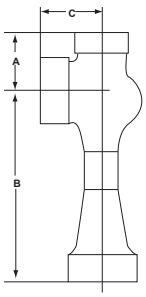

Fig. 264

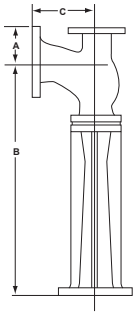

Fig. 266

Fig. 264 PVC and Kynar Water Jet Eductors

Fig. 264 PVC and Kynar Eductors offer resistance to many corrosive media. PVC Eductors are not recommended, however, for acetone, ketones, ether, esters, aromatic hydrocarbons or chlorinated hydrocarbons. A table of recommended uses is available on request. Maximum temperature rating is 150°F. Kynar Eductors will handle PVC applications including those mentioned above. Kynar's temperature limitation is 250°F. Pressure ratings are given in Table 2.

Fig. 264 PVC and Kynar Eductors operate on the same principle as do all other S&K Eductors. Performance characteristics with water are shown in Bulletin 2M Supplement Technical Data. For performance with other liquids, contact S&K.

Nozzles and diffusers are not removable on these eductors. Sizes 1" and smaller are of molded construction.

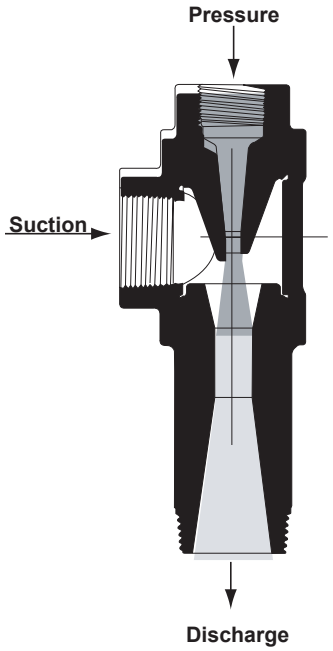

Fig. 4. FIG. 264 PVC EDUCTOR. Sizes from 1 1/2" up are designed as shown here and in Fig. 5. On these sizes, the pressure and suction connections are female and the discharge connection is male. All connections are threaded.



Fig. 5. FIG. 264 PVC EDUCTOR.

Table 2. Sizes, Dimensions, and Particle Size Data, Fig. 264 Water Jet Eductor

Size in Inches	Connections in Inches		Wgt. In Lbs.	Dimensions in Inches			Working Pressure (psig) at 75°F	Max. Round Particle Sizes (in inches) Eductors will Handle
	Suction Disch.	Pressure		A	B	C		
1/2s	1/2s	3/8s	1/2	1 7/16	3 1/4	1 7/16	325	1/16
1/2	1/2	3/8	1/2	1 7/16	3 1/4	1 7/16	325	1/16
3/4	3/4	1/2	1/2	1 11/16	3 1/2	1 11/16	275	1/8
1	1	3/4	1/2	1 7/8	3 11/16	1 7/8	250	5/32
1 1/2	1 1/2	1	1 1/2	2 9/16	5 11/32	2 1/16	200	5/16
2	2	1 1/4	2 1/2	3 1/32	6 21/32	2 5/32	185	3/8
3	3	2	6 3/4	4 1/8	9 1/2	3 7/8	165	13/16

s = denotes smaller internals.

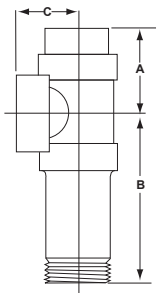



Fig. 6. FIG. 264 KYNAR EDUCTOR. 1/2" to 1" Design. Sizes 1/2", 3/4", and 1" look like this. All connections are female and are threaded.

Fig. 2645 Automatic Eductor

Fig. 2645 Automatic Water Jet Eductors are used to pump out sumps (pits, tanks, etc.) where liquid accumulates slowly but must be evacuated when it reaches a predetermined level.

As the liquid in the sump (basin, tank, cellar, bilge, etc.) accumulates, it raises the ball float until the upward action of the float opens the snap-acting valve, admitting motive fluid into the pressure connection of the eductor.

The jet action of the motive fluid creates a vacuum in the eductor and entrains the suction fluid, discharging both fluids under pressure. As the suction fluid is thus pumped out, the sump level drops to a point where the snap-acting valve shuts off. No further pumping action takes place until the sump again fills to the operating level.

Operation of the Fig. 2645 Eductor is completely automatic. It is self-operated, requires no electrical connections or any external power other than the motive fluid. The snap-acting valve and ball float are the only moving parts. The full assembly is so compact it can be installed in tanks as small as 13 1/2" diameter.

For performance information, see accompanying Bulletin 2M Supplement Performance Data.

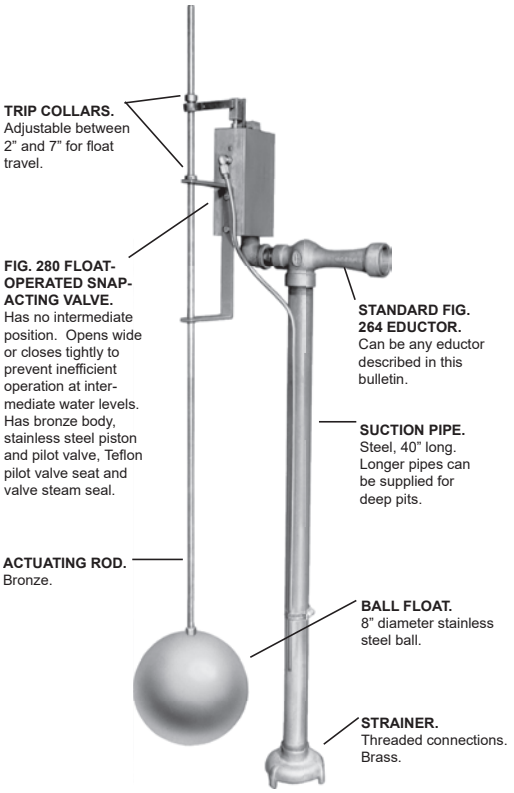

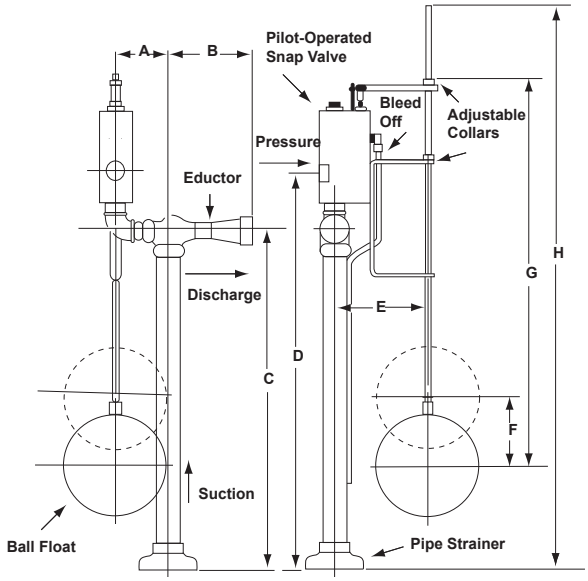

Table 3. Sizes and Dimensions, Fig. 2645 Automatic Eductor

Eductor Size In Inches	Connections In Inches N.P.T.		Wgt. In Lbs.	Working Pressure (Bronze)		Dimensions in Inches							
	Suc.-Disch.	Pressure (Snap-Valve)		Motive* (psig)	Body (psig)	A	B	C	D	E	F	G	H
3/4	3/4	1	24	100	100	3 11/16	3 3/8	41	44 7/8	7 5/6	5 3/8	47 1/8	60
1	1	1	26	150	125	4 5/16	4 3/16	41	44 7/8	7 5/6	5 3/8	47 1/8	60
1 1/2	1 1/2	1	32	125	90	4 1/8	6 1/2	41	44 7/8	7 5/6	5 3/8	47 1/8	60
2	2	2	43	125	85	6 1/4	7 5/8	38 3/8	43 15/16	7 7/16	5 3/8	47 1/8	60
2 1/2	2 1/2	2	65	200	125	6 11/16	9 1/4	38 3/8	43 15/16	7 7/16	5 3/8	47 1/8	60
3	3	2	81	200	125	6 3/8	11 1/4	38 3/8	43 15/16	7 7/16	5 3/8	47 1/8	60

*Minimum motive pressure for all Fig. 2645 Eductors: 40 psig

Fig. 265 Liquid Jet Eductor

Fig. 265 Liquid Jet Eductor is similar in design to the Fig. 264 Water Jet Eductor and is made for liquid pumping and mixing operations and for handling some solids where requirements do not necessitate capacities greater than those obtained with sizes up to and including 3". Typical applications begin on page 12.

The Fig. 265 Liquid Jet Eductor provides higher discharge pressures and higher suction flow capacities than other standard eductors.

In operation, pressure liquid enters the eductor through the pressure nozzle and produces a high velocity jet. This jet action creates a vacuum in the line which causes the suction liquid to flow up into the body of the eductor where it is entrained by the pressure liquid. Both liquids are thoroughly mixed in the throat of the eductor and are discharged against back pressure. The streamlined body with no pockets permits the pressure liquid to move straight through the eductor and reduces the possibility of solids in the suction material collecting and clogging. In addition, pressure drop in the suction chamber is held to a minimum.

Accompanying Bulletin 2M Supplement Performance Data provides performance information.

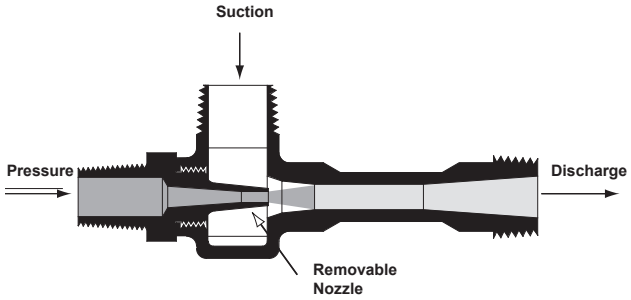

Fig 8. FIG. 265 LIQUID JET EDUCTOR
Eductors of this type have streamlined investment cast bodies with threaded NPT male pipe connections. They are made in sizes ranging from 3/4" to 3" and are stocked in these sizes in Fig. 316 stainless steel. Other materials are available on order.



Fig. 9. FIG. 265 EDUCTOR.

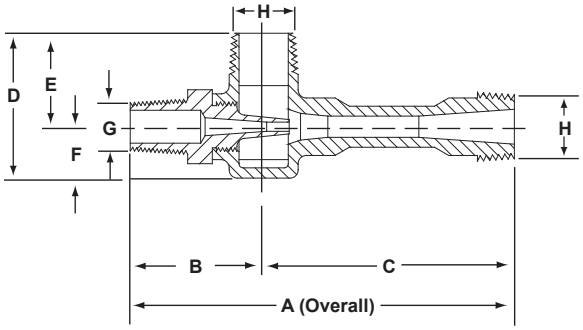

Table 265. Sizes and Dimensions, Fig. 265 Liquid Jet Eductor

Size (In Inches)	Wgt.	Dimensions						Connections	
		A	B	C	D	E	F	G	H
3/4	1	5 7/8	2	3 7/8	2 1/4	1 1/2	3/4	3/8	3/4
1	2	7 1/8	2 1/4	4 7/8	2 3/4	1 3/4	1	1/2	1
1 1/2	4	11	2 3/4	8 1/4	3 21/32	2 1/2	1 5/16	1	1 1/2
2	8	14 3/8	3 1/8	11 1/4	5	2 7/8	2 1/8	1 1/4	2
3	30	23 7/8	4	19 7/8	8	5	3	2	3

Fig. 242 Condensate and Mixing Eductor

Fig. 242 Water Jet Eductors are designed to mix two liquids intimately in various proportions in operations where the pressure liquid is the greater proportion of the mixture. Typical applications include: removal of condensate; mixing gasoline with acid; blending and proportioning chemical solutions; and diluting acids and alkali.

In operation, the pressure liquid issues from the nozzle at high velocity and entrains the suction liquid. The extreme turbulence in the throat of the eductor mixes the two liquids, blending and emulsifying thoroughly and completely. Colloidal suspensions can also be produced.

Entrainment ratio is dependent upon the eductor design. Close regulation within the design limits is usually obtained by a valve in the suction liquid line.

The pressure drop between the pressure liquid and the discharge should be at least 10 psi to give adequate mixing, and the difference between the discharge pressure and the suction pressure should not exceed 75% of the difference between the operating pressure and the suction pressure.

When used for removal of condensate, the eductor should be installed three feet below the condensate level at the drain of the condenser. For performance information, see Technical Data Supplement to Bulletin 2M.



Fig. 10. FIG. 242 EDUCTOR.

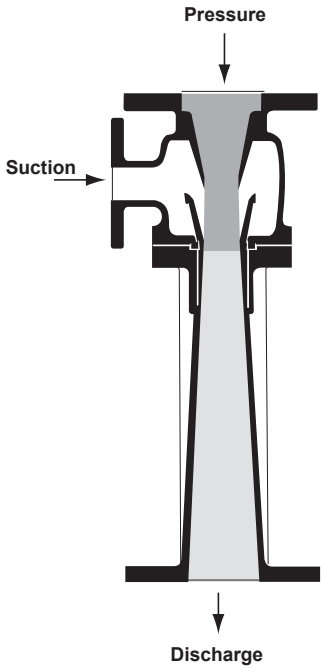

Fig. 11. FIG. 242 EDUCTOR.
The 242 is the flanged type Condensate and Mixing Eductor. This style, too, is made in bronze or cast iron, bronze mounted, but can be supplied in other materials. Nozzles and throat bushings are removable.

Table 4. Sizes and Dimensions, Fig. 242 Condensate and Mixing Eductor

Size No.	Connection in Inches			Dimensions in Inches			Weight in Lbs.
	Pressure	Suction*	Discharge	A	B	C	
2	2	1 - 2	2	4 3/4	11 3/4	3 3/4	50
2 1/2	2 1/2	1 1/4 - 2 1/2	2 1/2	3 1/2	15 1/4	4	60
3	3	2 - 3	3	4	17 15/16	4 5/8	70
4	4	2 - 4	4	5 9/16	20 3/8	5 1/2	80
6	6	3 - 6	6	6 1/4	29	6	270
8	8	4 - 8	8	14 1/16	35 1/2	7 13/16	450

*Note: Suction connection may vary to suit conditions.

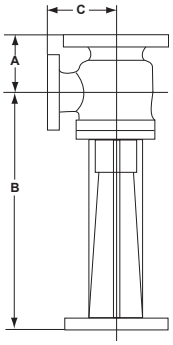

Fig. 258 and Fig. 268 Tank Mixing Eductors

Fig. 258 and Fig. 268 Tank Mixing Eductors are used to agitate liquid, dissolve powdered solids in liquid, and to mix two or more liquids intimately within a tank or other vessel without the use of baffles or moving parts inside the tank. These units take the place of mechanical agitators.

The 268 is used in preference to the 258 in operations where it is desirable to start mixing from a shallow level or where uniform local agitation is required over large, shallow tank area. Typical applications of each are shown in the application section beginning on page 12.

Fig. 258 and 268 Eductors are operated by a flow of pressure liquid through the nozzle. As shown in the sectional drawings, the motive liquid entrains suction liquid, the two are mixed intimately in the venturi, and the mixture is discharged into the tank. Pressure liquid can be taken from the tank by means of a pump or it can be a new liquid. Standard, stock units are designed to entrain 3 gallons of suction fluid for each gallon of motive fluid. (Special designs of the 258 Eductor can be made to give 1 to 1 ratio.)

Normally, the tank is filled by means of the eductors. Mixing occurs as soon as the level of liquid in the tank covers the suction of the eductor. In addition to the mixing obtained between suction and motive fluids in the eductor, the jet action of the discharge from the eductor serves to agitate the tank and prevents stratification.

If a drawing or sketch of the mixing tank is furnished, S&K will recommend and quote on the proper type of distribution system.

Performance information is given in accompanying Performance Data, Bulletin 2M Supplement. Similar units using steam as motive fluid for heating, circulating and mixing are described in Bulletin 3A as “Fig. 314” units.

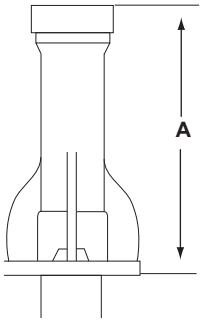

Table 5. Sizes and Dimensions, Fig. 258 Tank Mixing Eductor

Size in Inches	Connections in Inches		Wgt. in Lbs.	Dimensions in Inches
	Disch.	Pressure		A
1/2	1	1/2	2	5 1/2
3/4	1 1/2	3/4	6	8 1/2
1	2	1	22 1/2	12 5/16
1 1/4	2 1/2	1 1/4	29	11 1/8
1 1/2	3	1 1/2	36 1/2	15 7/8
2	4*	2	78	19 5/8
3	6*	3	ON APPL.	28 13/16
4	†	4*		†
5	†	5*		†
6	†	6*		†

*Flanged Connection
† Varies with performance and application
Note: A discharge flange is not supplied on large fabricated units unless required by the application.
(See Fig. 16 for dimensions of Fig. 268 Eductor).

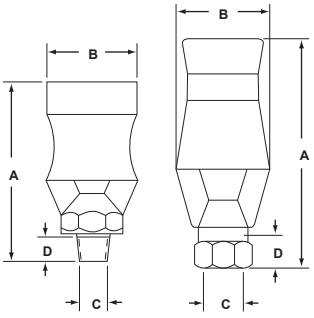

Sizes 3/8, 3/4 Sizes 1 1/2, 2, 3

Table 5-A. Sizes and Dimensions, Fig. 268 Tank Mixing Eductor

Size in Inches	A	B	C	D	Wgt. in Lbs.
3/8	3 3/4	1 3/4	3/8	7/16	3/4
3/4	5 1/4	2 3/8	3/4	9/16	2 1/2
1 1/2	8 13/16	4 1/16	1 1/2	13/16	6 1/4
2	12 1/4	5 13/16	2	45/64	22
3	17	8 1/8	3	15/16	48

Fig. 258 and Fig. 268 Tank Mixing Eductors



Fig. 12. FIG. 258 TANK MIXING EDUCTOR.

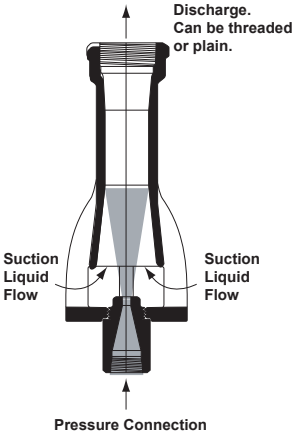

Fig. 13. FIG. 258 TANK MIXING EDUCTOR.
Standard units are made in cast iron and bronze but can be made in many other materials on special order. Large sizes can be fabricated instead of cast.



Fig. 14. FIG. 268 TANK MIXING EDUCTOR. 3/8" and 3/4" sizes.

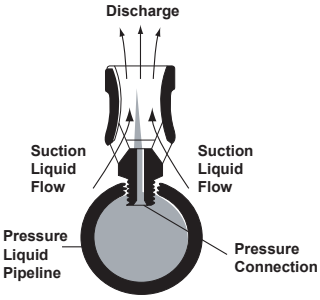

Fig. 15. FIG. 268 TANK MIXING EDUCTOR.
This design is used for 3/8" (3 3/4" overall length and 1 3/4" overall width), and 3/4" (5 1/4" overall length and 2 3/8" overall width) pressure connection sizes. It is threaded directly into threads tapped into the 1 1/2" diameter or larger pressure liquid pipeline. It is cast in one piece and is stocked in cast iron, bronze and 316 stainless steel. Other materials can be supplied on special order.



Fig. 17. FIG. 268 TANK MIXING EDUCTOR. 1 1/2" size and over.

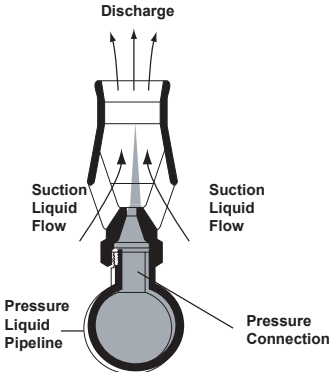

Fig. 16. FIG. 268 TANK MIXING EDUCTOR.
This design is used for 1 1/2" (8 7/8" overall length x 4 1/8" overall width), 2" (12 1/4" overall length x 5 7/8" overall width) and 3" (17" overall length x 8 1/8" overall width) pressure connection sizes. All are cast in one piece and have female thread connections for installation on nipples welded into the pressure liquid piping. The 1 1/2" and 2" sizes are stocked in cast iron, bronze, and 316 stainless steel. The 3" size is stocked in cast iron and stainless steel only. Other materials can be supplied on special order.

Fig. 254 and Fig. 267 and Fig. 227 Hopper-Equipped Eductors

Fig. 254 and Fig. 267 Hopper-Type Eductors are made for handling slurries or dry solids in granular form and are used extensively for ejecting sludges from tank bottoms, for pumping sand from filter beds and for washing and conveying granular materials. Typical materials handled include: borax, charcoal, diatomaceous earth, lime, mash, fly ash, rosin, rock and granulated salt, sand, dry sawdust, light soda ash, dry sodium nitrate, powdered sulphur, wheat and many others.

A typical application of Fig. 254 Eductor is shown in the application section of this bulletin, beginning on page 12. the material from adhering to the sides of the hopper and keep it moving down into the eductor. Pressure water, passing through the eductor nozzle, entrains the sand, sludge or other materials and discharges into the piping system.

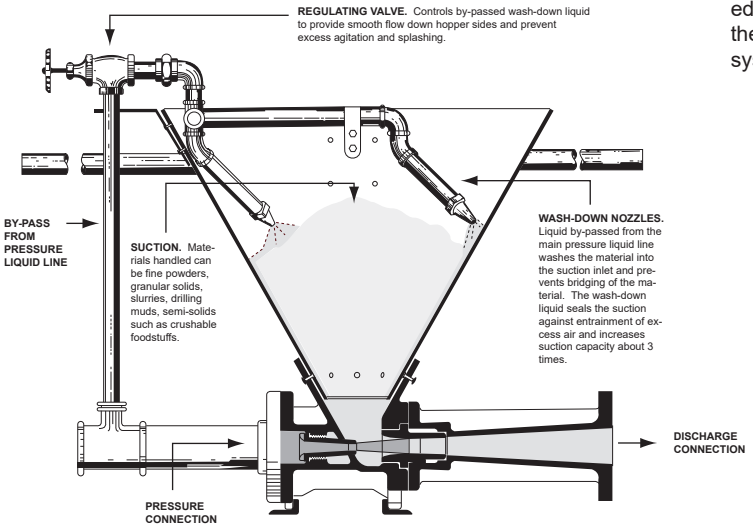

Fig. 18. FIG. 254 HOPPER-EQUIPPED EDUCTOR.
Standard units are made in cast iron and have hardened steel nozzles and throat bushings. Special materials are also available on special order. Both nozzles and throat pieces are removable and pressure and discharge connections can be fitted for hose where maximum portability is desired. Handles and supporting feet are optional.

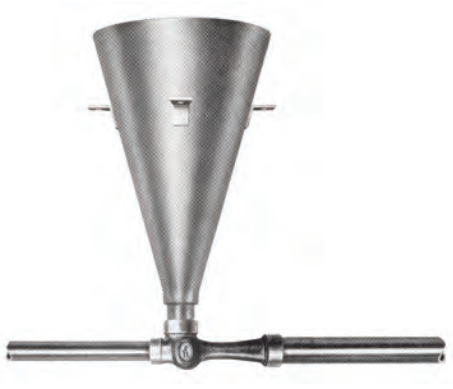

Fig. 19. FIG. 267 HOPPER-EQUIPPED EDUCTOR.
This economical unit is available from stock with body and nozzle in cast iron, bronze, 316 stainless steel, Kynar and PVC. Hoppers are stocked in Type 304 stainless steel (1, 1 1/2 & 2" sizes) and are also available in galvanized steel, brass, aluminum and PVC.

Table 6. Sizes and Dimensions, Fig. 254(1) and Fig. 267(2) Hopper-Equipped Eductors

Size in Inches	Connection (Inches)		Dimension (Inches)			
	Disch.	Press.	A	B	C	D
FIG. 254(1)						
1 1/2	1 1/2	1 1/2	13 1/4	11 1/2	18	15 1/4
2	2	2	14 1/2	13 3/4	21	17 3/4
3	3	2 1/2	17 3/4	17 1/2	23 3/8	19 3/4
4	4	4	19 5/8	24 3/16	27	22 1/2
6	6	6	28 1/16	36 7/16	38	28 5/16
FIG. 267(2)						
1	1	3/4	1 1/2	4 3/16	24	42
1 1/2	1 1/2	1	2	6 1/2	24	41 1/2
2	2	1 1/4	2 1/4	7 5/8	24	41
2 1/2	2 1/2	1 1/2	2 11/16	9 1/4	24	41 1/4
3	3	2	3 1/8	11 1/4	24	40 3/4

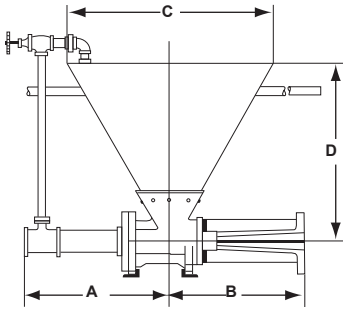

Fig. 254(1)

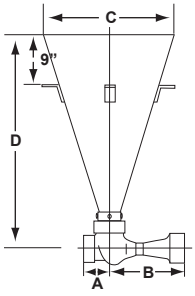

Fig. 267(2)

Fig. 227 Hopper-Equipped Eductor

Furnished with a stainless steel funnel, the eductor can be made of any machinable material. Bronze units up to and including 3" and cast iron units up to and including 4" sizes are available from stock. Prices, delivery or a sectional outline drawing 67-XS-081-J will be furnished on request. Stainless steel funnels are stocked in 1-1/4", 1-1/2" and 2" sizes.

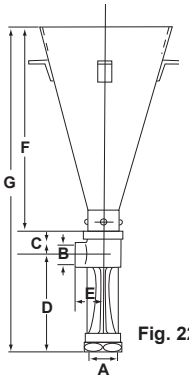

Fig. 227

Table 227. Sizes and Dimensions of Fig. 227 Hopper-Equipped Eductor

Dimensions in Inches							Wgt. (Lbs)
A	B	C	D	E	F	G	
1 1/4	3/4	1 9/16	6 7/16	1 13/16	39 5/8	47 5/8	31
1 1/2	3/4	2	8 13/16	2	39 1/4	50	36
2	1	2 1/2	9 1/8	2 1/4	38 1/2	49 7/8	45
2 1/2	1 1/4	2 3/4	11 1/4	2 3/8	37 7/8	51 7/8	51
3	1 1/2	3 1/16	13 5/16	2 3/4	37	53 3/8	58
4	2	3 5/8	17 1/16	3 3/16	35 1/2	56 3/16	70

Fig. 224 Water Jet Sand and Mud Eductor

Fig. 224 Water Jet Sand and Mud Eductors are used in pumping out wells, pits, tanks, or sumps where there is an accumulation of sand, mud, or other material not easily handled by the standard eductor. They are ideal for handling the heavy sludge residue from refining operations. A typical application of a Fig. 224 Eductor is shown in the application section beginning on page 12.

These eductors have an open suction and are designed to be submerged in the material being handled. The pressure liquid, passing through the nozzle, produces a high velocity jet which entrains the sludge or mud. This mixture is then discharged through a vertical pipe or hose. For performance information, see Bulletin 2M Supplement.

Similar units which use steam as the motive power are described in Bulletin 2A under “Fig. 225 Syphons”.

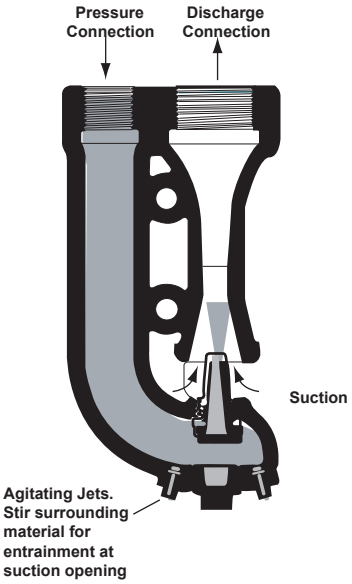

Fig. 20. FIG. 224 WATER JET SAND AND MUD EDUCTOR.
Standard units are made of cast iron with bronze pressure nozzles. Other corrosion-resistant materials are available on special order.



Fig. 21. FIG. 224 EDUCTOR.

Table 7. Sizes and Dimensions, Fig. 224 Sand and Mud Eductor

Size in Inches	Connections in Inches		Wgt in Lbs.	Dimensions in Inches	
	Disch.	Pressure		A	B
1 1/2	1 1/2	1	8	9 3/8	4 5/8
2 1/2	2 1/2	2	42	16 3/4	7 7/8
3	3	2 1/2	87	21 7/8	10 1/4
4	4	3	130	25 1/2	11
5*	5	4	-	30 1/4	17 3/8
6*	6	4	-	35 5/16	18

*Flanged Connections.

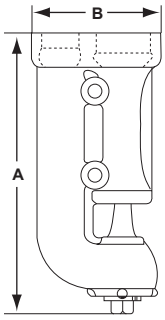

Fig. 235 Annular Multi-Nozzle Water Jet Eductor

Fig. 235 Annular Multi-Nozzle Water Jet Eductors are designed to handle solids and semi-solids. They operate at highest efficiency in large sizes and at low discharge heads. Because these eductors have high air handling capacities, they are particularly well suited for priming large pumps such as dredging pumps which frequently encounter air pockets.

Nozzles on the periphery of the throat introduce the pressure water. The pressure water creates a vacuum which draws in and entrains the material being handled and all flow discharges through the discharge connection. All suction flow is in a straight line through the eductor. For performance information, see Bulletin 2M Supplement.

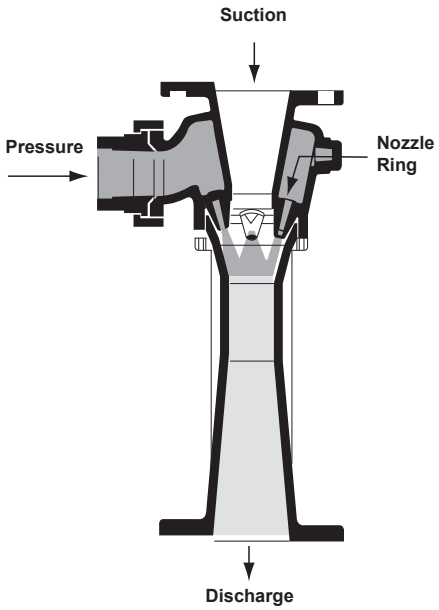

Fig. 22. FIG. 235 ANNULAR MULTI-NOzzLE WATER JET EDUCTOR.
These eductors are made to order from any workable material. Sizes from 1 1/2" to 6" are cast with flanged suction, discharge and pressure connections, except 2" size which has sil-brazed pressure connection. Sizes above 6" (to 28" and up) are generally fabricated.

Table 8. Sizes and Dimensions, Fig. 235 Annular Multi-Nozzle Water Jet Eductor

Size in Inches	Connections in Inches		Wgt. In Lbs.	Dimensions in Inches		
	Suction Disch.	Pressure		A	B	C
1 1/2	1 1/2	1	16	2 7/8	8 7/16	3 3/8
2	2	1 1/4	22	3 1/8	11 7/8	3 3/4
2 1/2	2 1/2	1 1/2	27	3 1/4	12 5/16	4
4	4	2 1/2	65	4 1/8	18 11/16	5 1/8
5	5	3	100	4 5/8	24 7/16	6
6	6	4	150	5 1/4	30	7 1/4

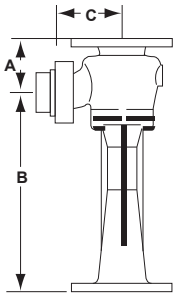



Fig. 23. FIG. 235 EDUCTOR.
(2" size with sil-brazed connection).

Special Purpose Eductors

The special-purpose eductors illustrated here are similar in operation to the basic Fig. 264 Eductor described on page 3.



Fig. 24. FIG. 222 PORTABLE EDUCTOR.
Is designed for use as an auxiliary with a pump where the suction lift is too great for the pump alone. Made of anodized aluminum, bronze or other materials as required.



Fig. 25. FIG. 212 CORROSION RESISTANT EDUCTOR.
Is made of Phenolic Fiberglass Reinforced Plastic (FRP). Body is of one-piece construction.

TYPICAL APPLICATIONS OF S&K WATER JET EDUCTORS

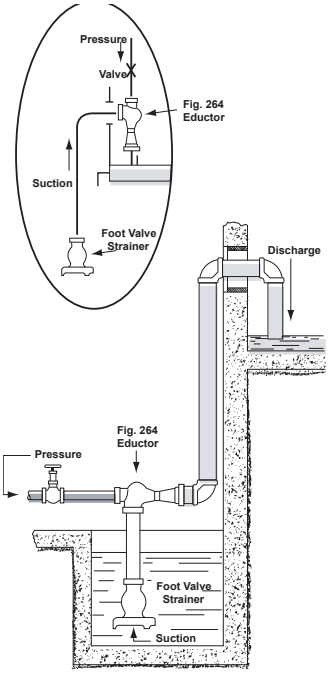

Fig. 26. FIG. 264 EDUCTOR USED TO EMPTY TANKS.
Water jet eductors are often used to empty tanks or to pump out sumps, penstocks, cellars, and the like. The pressure line should be fitted with a regulating stop valve and a pressure gauge while the suction line should be provided with an S&K Strainer. Discharge lines should be sealed for a positive pick-up of the liquid by turning the discharge line up or by submerging the end of the discharge line. It is recommended that the eductor be installed a short distance above the liquid to be handled and that short suction lines be used. Eductors will operate with long suction lines, as shown in the line drawing, however, with suction lifts greater than 15', capacities are reduced considerably. When handling hot liquid the eductor must be arranged with a short suction line or must be submerged.

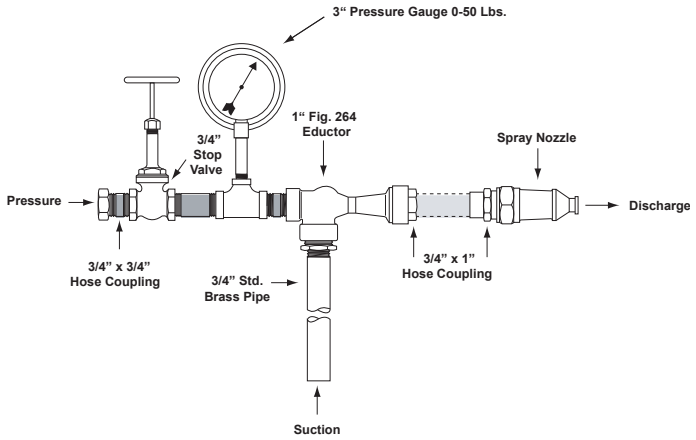

Fig. 27. FIG. 264 EDUCTOR USED IN MIXING LIQUIDS.
This illustration shows a typical arrangement used in mixing liquids such as chemicals or fertilizers in proportion for spraying. The solution to be applied is mixed in a container in approximately twice the strength at which it is to be used. The water jet proportioning apparatus is operated by a jet of high pressure water and is controlled by a 3/4" stop valve. A 3" pressure gauge indicates pressure. The jet action of the pressure water draws the solution from the container and the water and solution are mixed in the throat of the eductor and are discharged through a standard 3/4" hose to a spray nozzle. Solids can be handled and sprayed through a non-clogging type spray nozzle.

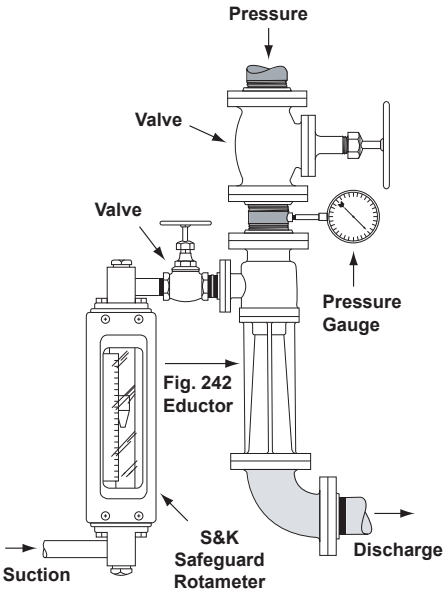

Fig. 28. FIG. 242 EDUCTOR USED IN TYPICAL PROPORTIONING SYSTEM.
This shows a typical proportioning system using a Fig. 242 Eductor. Rate of flow is measured by a Rotameter and is controlled by a valve in the line. A valve in the pressure line and orifice of the eductor nozzle control the flow of the pressure liquid. Fluids are thoroughly mixed in the desired proportions and are then discharged.

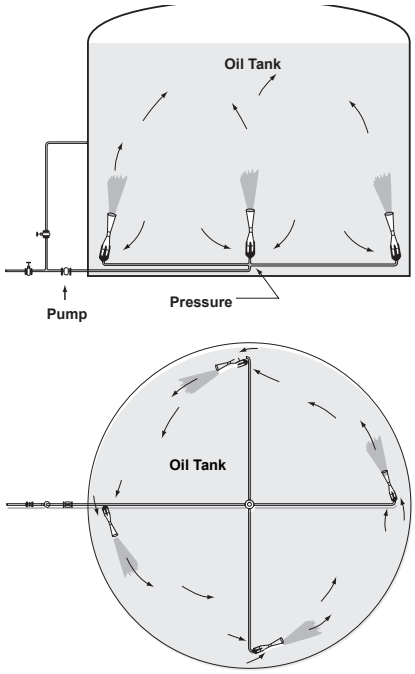

Fig. 29. FIG. 258 EDUCTORS FOR TANK BLENDING OF OILS.
For the tank blending of oils, the arrangement shown has proved highly satisfactory. In this particular installation five 8" Fig. 258 Eductors are used in a 100' tank. Initially, the eductors are used to fill the tank during which time they provide continuous agitation. After the tank is filled, the oil is drawn off and recirculated by means of the same pumps. Oil from the top of the tank issues through the eductor nozzle and entrains oil from the bottom of the tank. The two are mixed in the throat of the eductor and are discharged with sufficient force to maintain constant agitation and further blending in the tank.

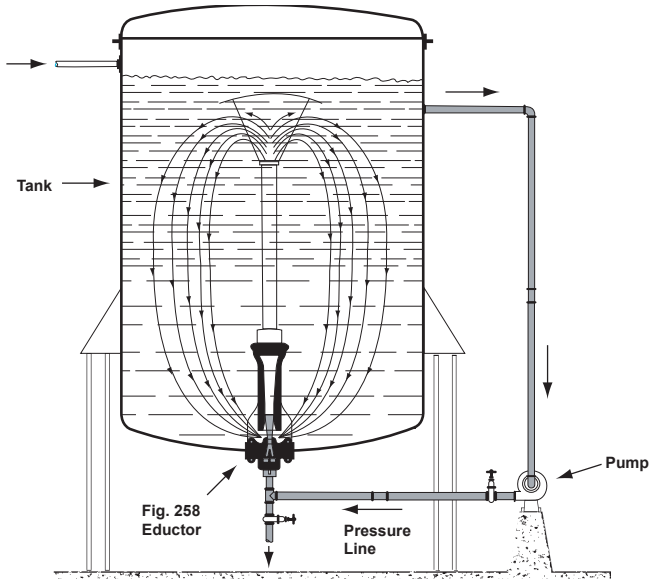

Fig. 30. FIG. 258 EDUCTOR IN BATCH MIXING APPLICATION.
This illustrates the batch mixing of two or more liquids with an S&K Fig. 258 Eductor. The pressure liquid, taken from the top of the tank is passed through a pump to the eductor. The jet action of this fluid entrains the liquid at the bottom of the tank and proper mixing results.

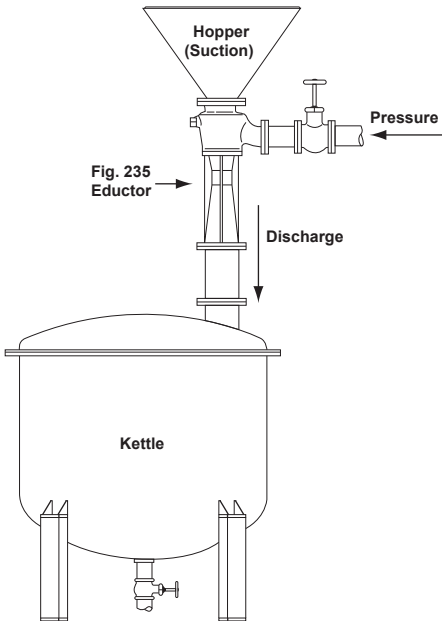

Fig. 31. FIG. 235 EDUCTOR USED IN MIXING DRY POWDER.
Mixing dry powder and a liquid prior to discharge into a tank is accomplished through the use of a Fig. 235 Eductor as shown here.
Pressure liquid enters the eductor, entrains the powder, mixes the two in the venturi of the eductor and discharges the mixture into a receptacle. The streamline eductor design provides maximum efficiency in this operation.

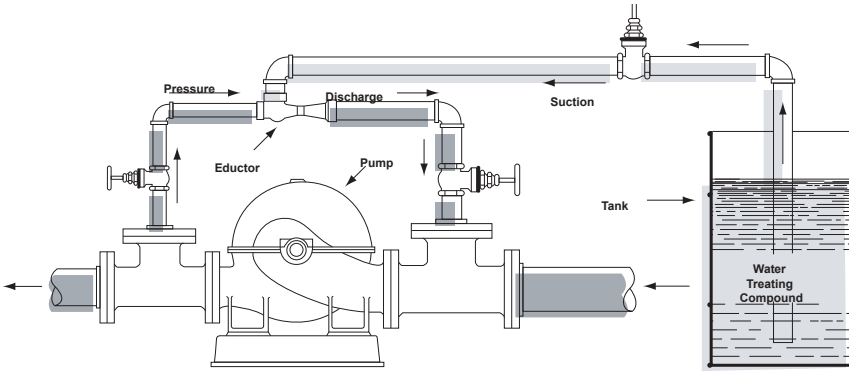

Fig. 32. FIG. 264 OR FIG. 265 WATER JET EDUCTORS USED TO ENTRAIN ANOTHER LIQUID.
This illustration shows a Fig. 264 or Fig. 265 Eductor being used to introduce a water treating compound into boiler feed water. A portion of the water issuing from the pump is bypassed into the eductor where it acts as the pressure medium to draw in and entrain the water treating compound.

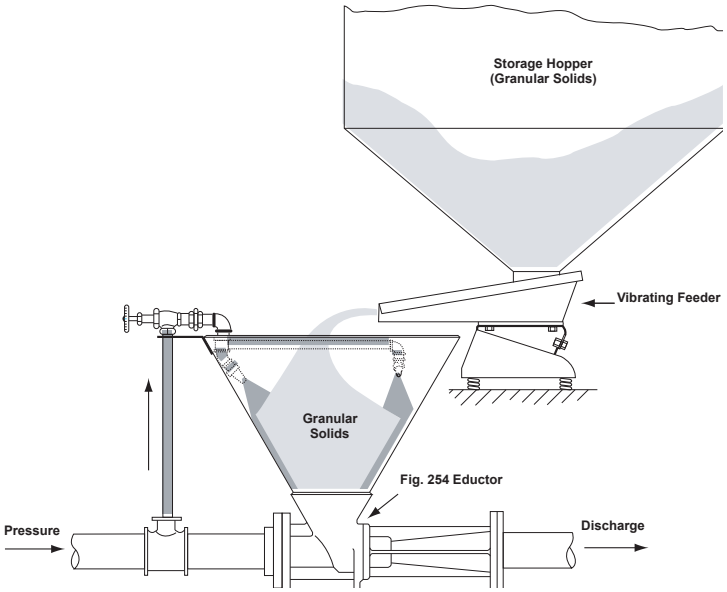

Fig. 33. APPLICATION OF FIG. 254 SOLIDS/LIQUID HOPPER EDUCTOR.
One arrangement for handling granular solids with the Fig. 254 Eductor is illustrated here. In this installation, granular solids drop from a storage hopper into a vibrating feeder which feeds the solids into the eductor hopper at a controlled rate. Water, bypassed from the pressure line, flows through nozzles located in the hopper and washes the solids into the eductor. There they are entrained by the jet action of the pressure water and are discharged. Although the material can be placed in the hopper manually, this system reduces handling and controls the flow of solids.

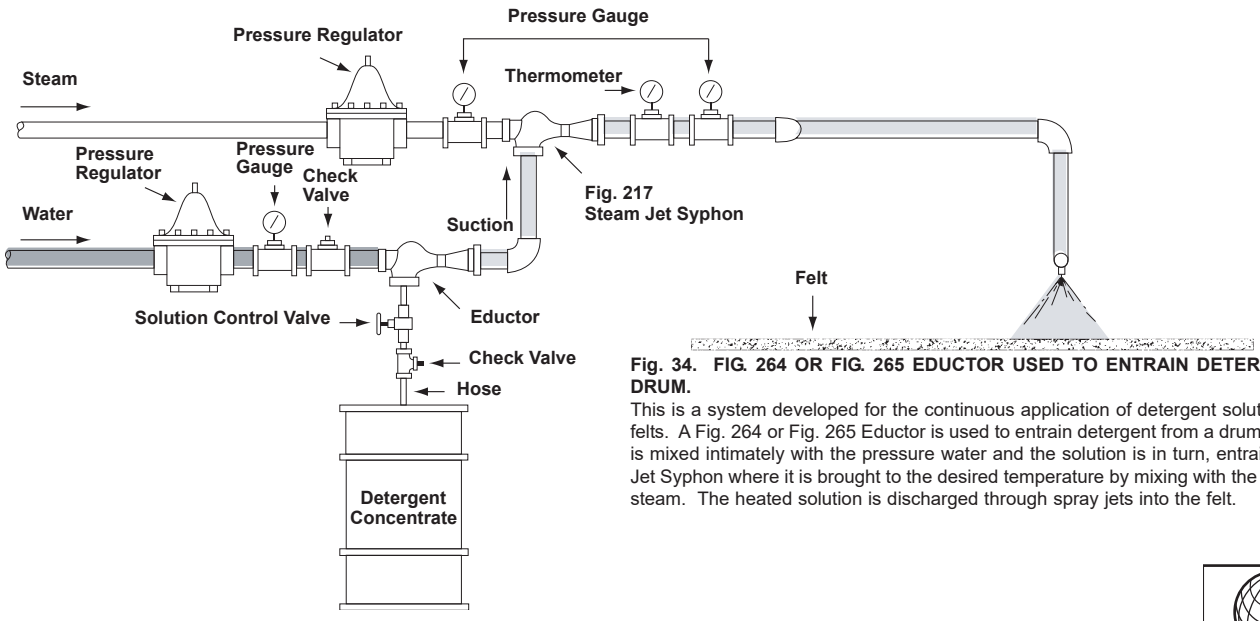

Fig. 34. FIG. 264 OR FIG. 265 EDUCTOR USED TO ENTRAIN DETERGENT FROM A DRUM.
This is a system developed for the continuous application of detergent solution to paper mill felts. A Fig. 264 or Fig. 265 Eductor is used to entrain detergent from a drum. This detergent is mixed intimately with the pressure water and the solution is in turn, entrained by a Steam Jet Syphon where it is brought to the desired temperature by mixing with the syphon's motive steam. The heated solution is discharged through spray jets into the felt.

ISO 9001 Certified

CS-650-600 : Identification sheet

VWTC PROJECT NUMBER:	Iqaluit WWTP	REV:	01
PROJECT NAME:	5000218036	SUBMITTED TO (COMPANY):	
ENGINEER:	G. HÉBERT	SUBMITTED TO (RESPONSIBLE)	
PROJECT MANAGER:	C. BEKAERT	PROJECT NUM REFERENCE.:	
PHONE NUMBER:		LOT NUMBER:	

SUPPLIER	EQPT CODE	EQPT TAG NO	DIA	DESCRIPTION	INFO 1	INFO 2	INFO 3	APPLIC.	NOTE	REV
KOFLO	FPMIPV202516	SM-04-919		HP-500 MIXER	STATIC MIXER / MANUFACTURER : KOFLO / MODEL : / 1.5-40C-4-6-21-1/2"	N/A	N/A	HP-500		1

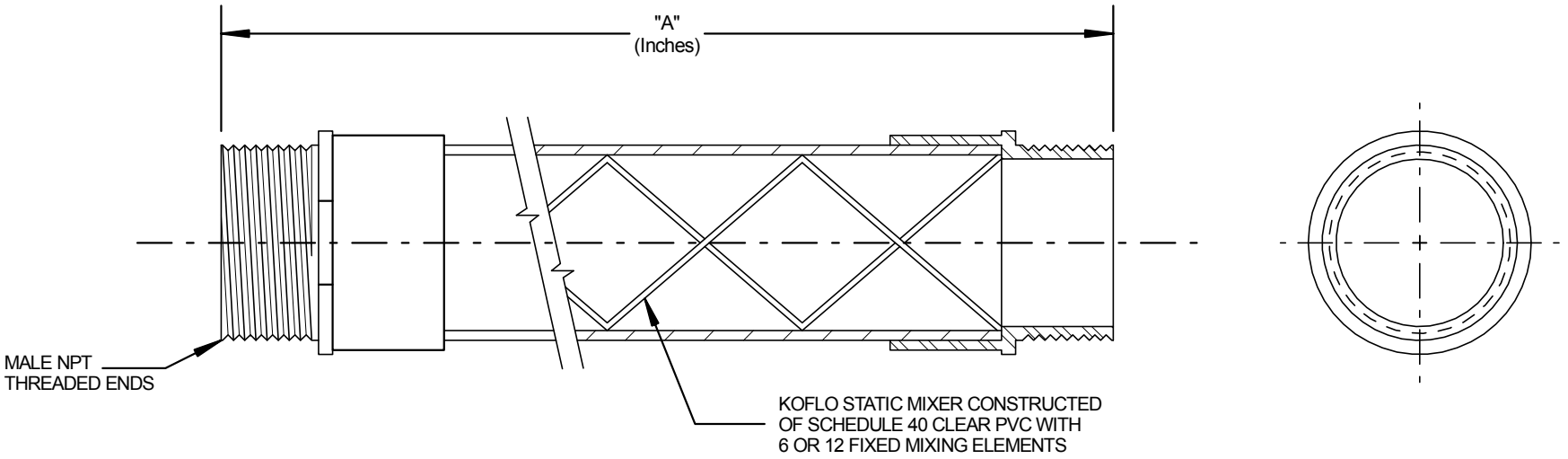

Size	6 Element Model Number	"A" 6 Element	12 Element Model Number	"A" 12 Element
3/8"	3/8-40C-4-6-2	6-1/2	3/8-40C-4-12-2	11
1/2"	1/2-40C-4-6-2	7	1/2-40C-4-12-2	12
3/4"	3/4-40C-4-6-2	9	3/4-40C-4-12-2	15
1"	1-40C-4-6-2	11	1-40C-4-12-2	18
1-1/4"	1.25-40C-4-6-2	14	1.25-40C-4-12-2	25
1-1/2"	1.5-40C-4-6-2	15	1.5-40C-4-12-2	28
2"	2-40C-4-6-2	19	2-40C-4-12-2	35

Koflo Corporation
309 CARY POINT DR.
CARY, IL 60013

SCALE: NONE	APPROVED BY JJT	DRAWN BY NJF
DATE: 1/18/94		REVISED 10/15/01
CUSTOMER:		REVISED 5/22/08
		REVISED 6/12/09
MODEL NO: CLEAR PVC SCHEDULE 40 MIXER		DRAWING NUMBER: KD-993

CS-910-502 : Identification sheet

VWTC PROJECT NUMBER:	Iqaluit WWTP	REV:	01
PROJECT NAME:	5000218036	SUBMITTED TO (COMPANY):	
ENGINEER:	G. HÉBERT	SUBMITTED TO (RESPONSIBLE)	
PROJECT MANAGER:	C. BEKAERT	PROJECT NUM REFERENCE.:	
PHONE NUMBER:		LOT NUMBER:	

SUPPLIER	EQPT CODE	EQPT TAG NO	DIA	DESCRIPTION	INFO 1	INFO 2	INFO 3	APPLIC.	NOTE	REV
ENVIREQUIP	CMSPMI319898	MXR-04-960	N/A	HP-500 MIXER	HP500 (2016) MIXER // Manuf : Envirequip // Model: EVG01-0.5 // Mtl : 304L SS	Impeller Dia : 13.5" // 181,24 RPM // Shaft lg : 29.25"	Nord Motor 0.5 HP / 575/3/60	HP-500		1

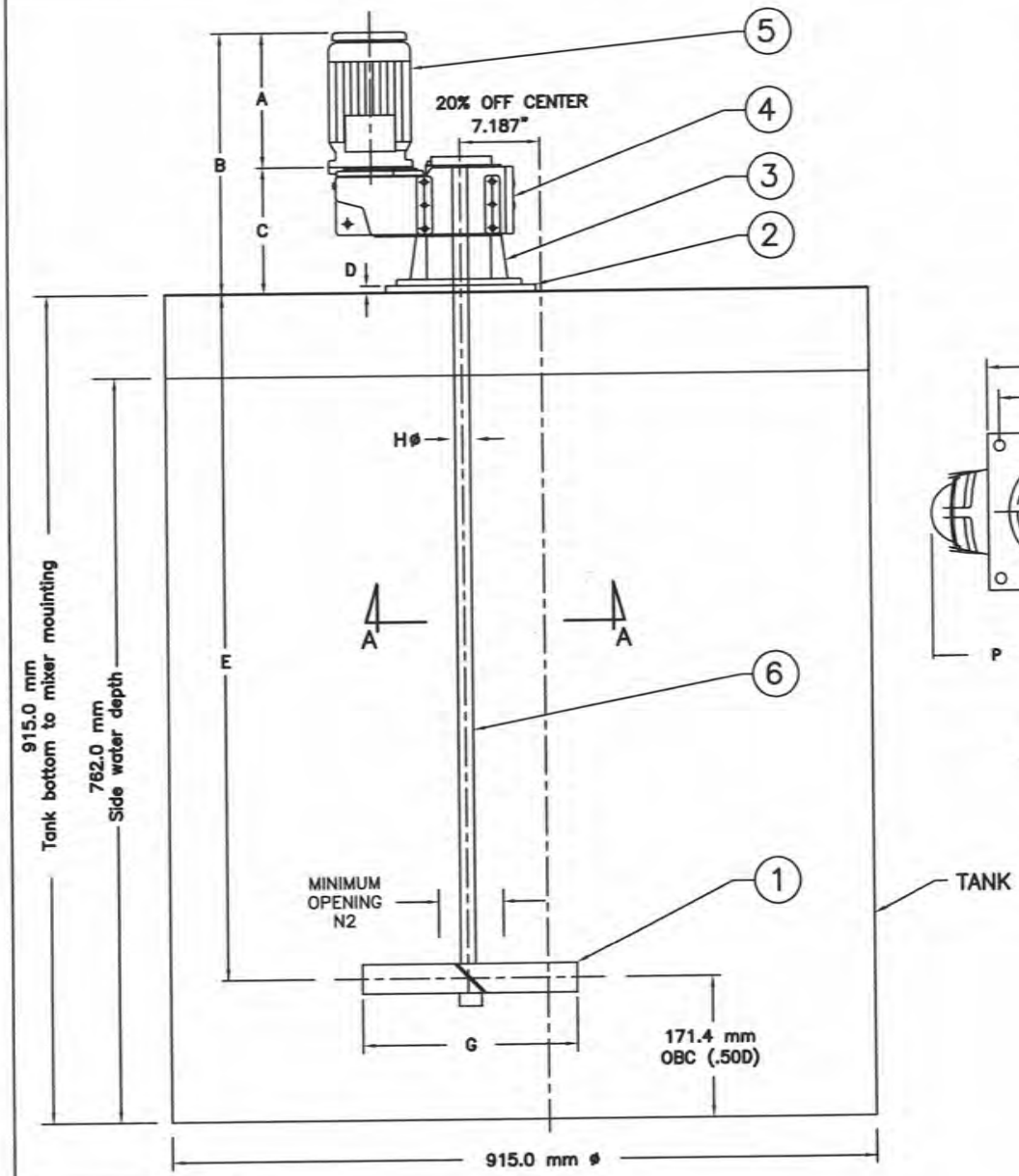

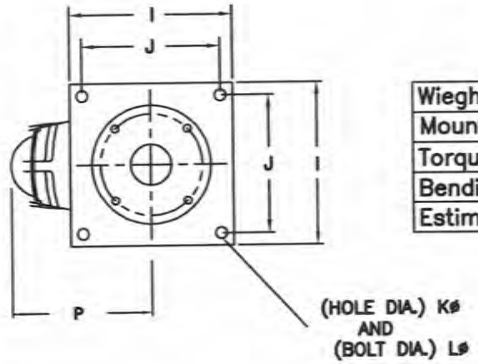

"A–A"

ITEM	DESCRIPTION	MATERIAL
1	Axial impeller (P–4) 342.9 mm (13.50") ø @ 45.0°	304L
2	Base 304.8 mm x 304.8 mm (12.0" X 12.0")	Steel
3	Pedestal <B5 Flange>	
4	NORD Reducer 180.24 RPM	
5	NORD Motor 0.5 Hp, 575/3/60, TEFC	
6	Shaft: (1) section 742.9 mm (29.25") @ 1.25"ø	304L

APPL'N: POLYMER (QTY 1)
MIX–TECH MIXERS
MODEL: EVG01–0.50
0.37 kW @ 180.24 RPM
S/N
Rotation: Clockwise
Thrust: Down
Tag #:

Wieght: 75 Lbs
Mounting loads
Torque reaction = 435 in lb
Bending moment= 490 in lb
Estimated beam: 7C @ 9.8 # up to 4 Ft.

ST #: 910–502
LATIS #: CMSPMI319898

HP 500

Dimensions: Inches																
MOD.:	A	B	C	D	E	E2	F	Gø	Hø SHAFT	I	J	Kø	Lø	M	N2	P
EVG01	8.12	13.98	5.36	.50	29.25	–	–	13.50	1.25	12.0	10.5	.562	.50	–	6.25	6.0

Dimensions: mm																
MOD.:	A	B	C	D	E	E2	F	Gø	Hø SHAFT	I	J	Kø	Lø	M	N2	P
EVG01	206.2	355.1	136.1	12.7	742.9	–	–	342.9	31.8	304.8	266.7	14.3	12.7	–	158.8	152.4

Ce dessin et l'information qu'il contient est la propriété de ENVIREQUIP WTEM inc. Il est interdit de le copier, le photographier, l'imprimer, le prêter ou de l'utiliser sans la permission de ENVIREQUIP WTEM inc.

This drawing and the information contained thereon is the property of ENVIREQUIP WTEM inc. It is not to be printed, photographed, copied, loaned or used without the permission of ENVIREQUIP WTEM inc.

NO	DATE	REVISION	P/B

PROJET/PROJECT
EVG01–0.5/304/575 (CIRT)

ENVIREQUIP
WTEM INC.
460 Boul. du Lac – Suite 2
Dorval, QC H9S 3J8
Montreal Tel: (514) 338–1043
891 (21484 Little Rivers Rd.)
Glen Robertson, Ont K0B 1H0
Ontario Tel: (613) 874–2618
Fax: (613) 874–2828
E–mail: envireqp@glen–net.ca

TITRE/TITLE
"MIX–TECH" Mixers
Veolia Water Technologies
EVG SERIES

DESSINE PAR: DRAWN BY: PJ	DATE: March 2016
DESS. NO: DWG NO: EVG	ECH./SCALE: N.T.S
VERIFIE PAR: CHECKED BY: PJ	PROJ.NO:
APPROUVE PAR: APPROVED BY: RJ	REV. 01

CS-910-400 : Identification sheet

VWTC PROJECT NUMBER:	Iqaluit WWTP	REV:	01
PROJECT NAME:	5000218036	SUBMITTED TO (COMPANY):	
ENGINEER:	G. HÉBERT	SUBMITTED TO (RESPONSIBLE)	
PROJECT MANAGER:	C. BEKAERT	PROJECT NUM REFERENCE.:	
PHONE NUMBER:		LOT NUMBER:	

SUPPLIER	EQPT CODE	EQPT TAG NO	DIA	DESCRIPTION	INFO 1	INFO 2	INFO 3	APPLIC.	NOTE	REV
WAM	CMSPGU320680	PAG-04-920, PSF-04-930	N/A	HP-500 FEEDER	SCREW FEEDER // Manuf : WAM // Model : MBF/073.A/TT/UD4.SST.UO2/F. 0.Q.+.++++.++++ Feeding rate: 2,3 Liter/min at 25 rpm For material: dry polymer powder, approx.. 0.8 Kg/Ltr Blending tool: nbr. 1, plowshare shape	Feeding screw: nbr. 4, full flighting on pipe, SS304 Drive blending tool: varvel gear box ratio 1:40 Drive feeding screw: varvel gear box ratio 1:70 Shaft sealing: SS with	Baldor 0.75 HP blending tool motor 1750rpm Baldor 0.5 HP feeding screw motor 1750rpm Nema 056, 575V-60Hz, Inverter duty Discharge tube :MDXSC24	HP-500		1

WAM®

WAMGROUP

1

TECHNICAL CATALOGUE

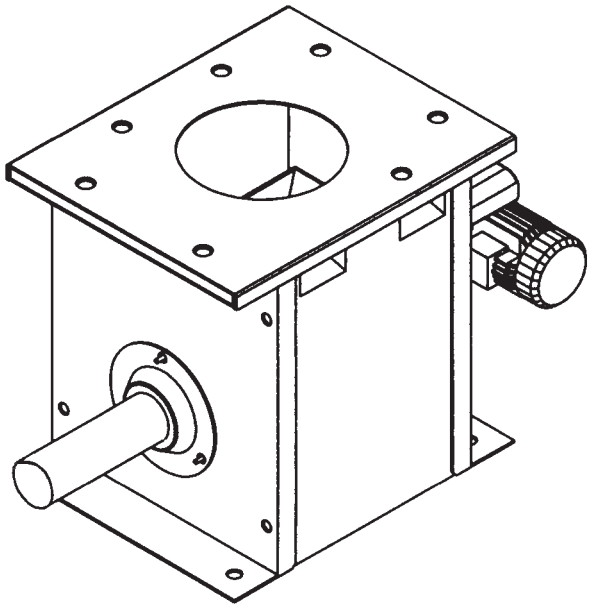

MBF

- **MICRO - BATCH FEEDERS**
  TECHNICAL CATALOGUE
- ***MIKRODOSIERER***
  TECHNISCHER KATALOG
- **MICRODOSEURS**
  CATALOGUE TECHNIQUE
- ***MICRODOSATORI***
  CATALOGO TECNICO

All rights reserved © WAMGROUP S.p.A.

CATALOGUE No.	VAL.062.-.T.4L		CREATION DATE
ISSUE	CIRCULATION	DATE OF LATEST UPDATE	03.00
A17	100	02.11	

All the products described in this catalogue are manufactured according to **WAMGROUP S.p.A. Quality System procedures**. The Company's Quality System, certified in July 1994 according to International Standards **UNI EN ISO 9002** and extended to the latest release of **UNI EN ISO 9001**, ensures that the entire production process, starting from the processing of the order to the technical service after delivery, is carried out in a controlled manner that guarantees the quality standard of the product.

*Alle in diesem Katalog beschriebenen Produkte werden gemäß dem **Qualitätssystem der WAMGROUP S.p.A.** hergestellt. Das im Juli 1994 gemäß der internationalen Norm **UNI EN ISO 9002** und auf die neueste Version der **UNI EN ISO 9001** erweiterte, zertifizierte Qualitätssystem der Firma gewährleistet, dass der gesamte Produktionsprozess von der Auftragsbearbeitung bis zum technischen Kundendienst nach Lieferung in kontrollierter Art und Weise erfolgt, so dass der Qualitätsstandard des Produkts gewährleistet ist.*

Tous les produits décrits dans ce catalogue sont fabriqués selon les procédures du **Système de Qualité de WAMGROUP S.p.A.**, certifié en Juillet 1994 selon les normes internationales **UNI EN ISO 9002** et étendu à la dernière version de la norme **UNI EN ISO 9001**. Cela garantit que le processus de production, à partir de la gestion de la commande au service technique après-vente, est effectué de manière contrôlée garantissant la norme de qualité du produit.

*Tutti i prodotti descritti nel catalogo sono stati realizzati secondo le **procedure del Sistema Qualità di WAMGROUP S.p.A.** Il Sistema Qualità aziendale, certificato dal luglio 1994 in conformità alle normative internazionali **UNI EN ISO 9002** e successivamente esteso all' ultima versione delle normative **UNI EN ISO 9001**, garantisce che l'intero processo produttivo, dalla formulazione dell'ordine fino all'assistenza tecnica dopo la consegna, si svolga secondo modalità controllate che garantiscono lo standard qualitativo del prodotto.*

This publication cancels and replaces any previous edition and revision.
We reserve the right to implement modifications without notice.
This catalogue cannot be reproduced, even partially, without prior written consent by the Manufacturer.

Diese Veröffentlichung storniert und ersetzt alle früheren Ausgaben und überarbeiteten Fassungen.
Wir behalten uns das Recht vor, Änderungen ohne vorherige Information durchzuführen.
Dieser Katalog darf selbst auszugsweise nicht ohne das schriftliche Einverständnis der Herstellers vervielfältigt werden.

Cette publication annule et remplace toute édition et révision antérieure.
Nous nous réservons le droit de mettre en place des modifications sans préavis
Aucune reproduction, partielle ou intégrale du catalogue, ne pourra être faite sans l'accord préalable et écrit du Fabricant.

Questa pubblicazione annulla e sostituisce le edizioni e revisioni precedenti.
Ci riserviamo la facoltà di apportare modifiche senza preavviso.
Il presente catalogo non può essere riprodotto, nemmeno parzialmente, senza previo consenso scritto del Costruttore.

1 TECHNICAL CATALOGUE — TECHNISCHER KATALOG

DESCRIPTION AND TECHNICAL CHARACTERISTICS	BESCHREIBUNG UND TECHNISCE MERKMALE T. 6 → .23
ORDER CODES	BESTELLCODES 24 → .27
ACCESSORIES	ZUBEHÖR 28 → .42
OPERATION AND MAINTENANCE	BETRIEBS- UND WARTUNGSANLEITUNG 43
INQUIRY AND ORDER FORM	ANFRAGE- UND BESTELLBLATT 44

1 CATALOGUE TECNIQUE — CATALOGO TECNICO

DESCRIPTION ET CARACTERISTIQUES TECHNIQUES	DESCRIZIONE E CARATTERISTICHE TECNICHE T. 6 → .23
CODES DE COMMANDE	CODICI DI ORDINAZIONE 24 → .27
ACCESSOIRES	ACCESSORI 28 → .42
UTILISATION ET ENTRETIEN	USO E MANUTENZIONE 43
QUESTIONNAIRE	MODULO DI RICHIESTA 44

2 MAINTENANCE CATALOGUE — WARTUNGSKATALOG

OPERATION AND MAINTENANCE	BETRIEBS- UND WARTUNGSANLEITUNG M. 4 → .24

2 CATALOGUE D'ENTRETIEN — CATALOGO DI MANUTENZIONE

UTILISATION ET ENTRETIEN	USO E MANUTENZIONE M. 4 → .24

3 SPARE PARTS CATALOGUE — ERSAITZTEILKATALOG

SPARE PARTS	ERSATZTEIL R. 4 → .12

3 CATALOGUE PIECES DE RECHANGE — CATALOGO RICAMBI

PIECES DE RECHANGE	PEZZI DI RICAMBIO R. 4 → .12

CODES - *CODEBEZEICHNUNGEN* - SIGLES - *SIGLE*

MBF	Micro batch feeder	Mikrodosierer	Microdoseur modulaire	Microdosatore per polveri
MDXCR	Round cover	Runde Abdeckung	Couvercle rond	Coperchio tondo
MDXGS	Cutter grille for square hopper	Quadratischer Aufreißgrill	Grille carré	Griglia quadrata
MDXSV	Vertical spout	Ablaufrohr	Sortie verticale	Scarico verticale
MDXTR	Round hopper	Runder Aufgabetrichter	Trémie ronde	Tramoggia verticale
MDXTS	Square hopper	Quadratischer Aufgabetricher	Trémie carrée	Tramoggia quadrata
UTD	Metering screw	Dosierwerkzeug	Outil dosage	Utensile dosaggio
UTO	Blending tool	Homogenisierwerkzeug	Homogénéisateur	Utensile omogenizzazione
MBT	Seal	Wellenabdichtung	Etanchéité	Tenuta
MBTP	Extendend pipe	Verlängert Innenrohr	Tube rallongé	Tubo prolungato
MBPR	Linerfeeder pipe	Dosierrohr mit innernaiskleidung	Tube de dosage avec revetement interieeur	Scarico rivestito internamente
MBPI	STD inspection hatch	STD inspektionstür	Trappe de visite	Portello di ispezione
MBPIP	Inspection hatch with extended tube	Inspektionstür mit länglichrohr	Trappe de visite avec tube prolonge	Portello di ispezione con tubo prolungato

MBF micro-batch feeders are used in gravimetric and volumetric dosing plants for powders and granular materials of various kinds. The body is made of WAM®'s engineering polymers SINT®ER ,SINT®AL or AISI 304L/316L, while all other feeder parts including nuts and bolts are made of staimless steel 304.

On request micro-batch feeders are supplied in a food-grade version.

Unless otherwise specified all the dimensions are given in millimetres.

MBF Mikrodosierer werden in gravimetrischen und volumetrischen Dosieranlagen von Pulvern und Granulaten aller Art eingesetzt. Das Gehäuse besteht aus den Polymeren SINT®ER, SINT®AL oder edelstahl 1.4301/1.4401. Alle anderen Komponenten einschließlich Schraubenmaterial sind aus Edelstahl 1.4301.

Auf Wunsch ist eine nahrungsmitteltaugliche Version lieferbar.

Wenn nicht anders angegeben, alle Maßangaben in Millimetern.

Les microdoseurs MBF sont utilisés dans toutes les installations de dosage à poids ou volumétriques pour les plus divers matériaux en poudre ou granulés. Le corps est construit en SINT®ER, SINT®AL ou AISI 304L/316L. Les autres composants sont en acier inox 304L, boulonnerie comprise.

Sur demande le microdoseur est fourni en version indiquée pour des produits alimentaires.

Sauf indication contraire, toutes les dimensions sont exprimées en millimètres.

I microdosatori MBF sono utilizzati in tutti gli impianti di dosaggio a peso o volumetrici per polveri e materiali granulari di vario tipo. Il corpo è costruito in SINT®ER, SINT®AL o AISI 304L/316L, mentre le altre parti sono in AISI 304L, bulloneria compresa.

Su richiesta, queste macchine possono essere fornite idonee per prodotti alimentari.

Se non specificato altrimenti, tutte le dimensioni sono in millimetri.

FINISHING - *FINISH* - FINITION - *FINITURE*

End plate	Endschild	Bride d'extremité	Frontale	**AISI 304L EDELSTAHL 1.4301**
Drive support	Antriebshaltung	Plaque de fixation	Piastra d'attacco	**ALUMINIUM ALLUMINIO**
Reducer	Getriebe	Reducteur	Riduttore	**ALUMINIUM ALLUMINIO**
Speed variator	Regelgetriebe	Variateur	Variatore	**RAL 5010**
Motor	Elektromotor	Moteur	Motore	**RAL7001**

SELECTION CRITERIA - *AUSWAHLKRITEREN* - CRITERES DE CHOIX - *CRITERI DI SCELTA*

CF = [dm³/ J] = theoretical capacity per hour at 1 RPM.
CE = [dm³/ h] = real capacity of MBF
CR = [dm³/ h] requested capacity.
CT = [dm³/ h] theoretical capacity
N = [RPM] = metering screw speed.
mvs = material efficienc

Given:
- the characteristics of the material to be handled, the application and the feeding system into the microbatch feeder;
- CR (=capacity requested by customer), in order to choose correct MBF type proceed as follows:
- Check from material table mvs and all other important characteristics (e.g. metering screw type, accessories, others)
- Calculate real capacity CE of standard MBF (with fixed or variable speed as required by customer)

CE = CT x mvs

where for CT refer to page T.10. If difference between CE and CT is too big (that is, if customer does not accept standard MBF) it is necessary to find correct MBF speed in order to obtain the requested capacity, using the following formula:

$$N = \frac{CR}{CF \times mvs}$$

Subsequently, select ratio nearest to specific requirements (see page T.11). In carrying out these calculations it has to be born in mind that mvs given in materials table is empirical. The real value depends on a number of factors which may be difficult to control, such as the condition of the material, atmospheric conditions, height of material column inside the hopper, speed of rotation etc. For material efficiency mvs see pag. T10.

CF = [dm³/J] = theoretische Stundenleistung bei 1 U/min
CE = [dm³/ h] =effektive Dosierleistung MBF
CR = [dm³/ h] = kundenseits geforderte Dosierleistung
CT = [dm³/ h] = theoretische Dosierleistung
N = [Upm] = Drehzahl des Dosierwerkzeugs
mvs = Material-Wirkungsgrad

Gegeben:
- Bezeichnung und Beschreibung des Dosierguts, zu erwartende Betriebs- und Beschickungsart
- CR (= kundenseits geforderte Dosierleistung). Um den MBF-Dosierer korrekt auszulegen, muß nun wie folgt vorgegangen werden:
- Eigenschaften des Dosierguts der Materialtabelle entnehmen z.B. mvs, Dosierwerkzeug, Zubehör etc.)
- Effektive Dosierleistung CE des Standard-Dosierers errechnen (mit fester oder variabler Drehzahl, je nach Kundenwunsch)

CE = CT x mvs

wobei CT wie auf Seite T.10 angegeben. Wenn Differenz zwischen GE und CT zu groß, bzw. Kunde MBF Standard-Dosierer nicht akzeptiert, muß jene Drehzahl gefunden werden, bei welcher der Dosierer die kundenseits geforderte Stundenleistung erbringt. Hierzu ist folgende Formel zu verwenden :

$$N = \frac{CR}{CF \times mvs}$$

Demzufolge wählt man eine Getriebeuntersetzung (siehe Seite T.11), die den Wünschen des Kunden am nächsten kommt. Bei der Ermittlung der vorgenannten Werte ist zu berücksichtigen, daß der in der Materialtabelle aufgeführte Parameter mvs ein rein empirischer Durchschnittswert aus der Summe der bisher gemachten Erfahrungen mit dem jeweiligen Medium ist, welcher im Einzelfall teilweise stark schwankt. In der Tat hängt mvs von mehreren, zum Teil schwer kontrollierbaren Variablen ab (z.B. Zustand des Dosierguts, Witterungseinflüsse, Materialsäule im Aufgabetrichter, Dosierer-Drehzahl etc.). Für Material-Wirkungsgrad siehe Seite T.10.

CF = [dm³/J] = débit horaire théorique pour 1 RPM
CE = [dm³/h] = débit effectif MBF
CR = [dm³/h] débit souhaité par le client
CT = [dm³/h] débit théorique MBF
N = [TPM] = vitesse de rotation de la spire doseuse.
mvs = coefficient du matéria

Donné:
- la description du matériau à doser, le fonctionnement prévu et le système d'alimentation du microdoseur,
- CR (= débit souhaité par le client), là succession correcte des opérations pour la choix d'un microdoseur est la suivante:
- Contrôler dans le tableau des matériaux mvs et toutes les autres caractéristiques impor-tantes (ex.; type de spire doseuse, accessoires, autres) - Calculer le débit effectif CE du MBF standard (vitesse fixe ou variable suivant la demande du client)

CE = CT x mvs

où CT est à la page T.10. Si la différence entre CE et CT est trop grande (c'est à dire, le client n'accepte pas le MBF standard), il est nécessaire de trouver à quelle vitesse de rotation devra tourner le MBF pour obtenir le débit souhaité par le client. On utilisera la formule:

$$N = \frac{CR}{CF \times mvs}$$

Ensuite il faut choisir (voir page T.11) le rapport qui se rapproche le plus de celui souhaité par le client. A ce point du calcul quoi qu'il en soit, il est nécessaire de tenir compte que mvs figuran dans le tableau matériaux est en realité une donnée empirique obtenue comme une moyenne des résultas de l'expérience passée. Cette donnée peut dépendre en fait de multiple facteurs difficiles à contrôler (ex. état du matériau, conditions atmosphériques, hauteur de la colonne du matériau dans la trémie, vitesse de rotation etc.).
Le coefficient du matériau mvs est indiqué a page T.10.

CF = [dm³/J] = portata teorica oraria per 1 RPM
CE = [dm³/h] = portata effettiva MBF
CR = [dm³/h] = portata richiesta dal cliente
CT = [dm³/h] = portata teorica MBF
N = [RPM] = velocità di rotazione dell'utensile di dosaggio
mvs= efficienza del material

Dati:
- la descrizione dei materiale da dosare, il funzionamento previsto e il sistema di alimentazione dei microdosatore,
- CR (= portata richiesta dal cliente), la successione corretta delle operazioni per la scelta dei MBF è la seguente:
- controllare mvs e tutte le altre caratteristiche importanti nella tabella materiali (es.: tipo di utensile di dosaggio, accessori, vari, etc.)
- calcolare la portata effettiva CE del MBF standard (a velocità fissa o variabile in base alla richiesta dei cliente)

CE = CT x mvs

dove CT è a pag. T.10. Se la differenza tra CE e CT è troppo grande (cioè il cliente non accetta il ns. MBF standard) è necessario trovare a quale velocità di rotazione deve ruotare l' MBF per ottenere la portata richiesta dal cliente. Si usa la formula:

$$N = \frac{CR}{CF \times mvs}$$

Poi si sceglie (vedi pag. T.11) il rapporto che più si avvicina ai desideri del cliente. In questi calcoli è comunque necessario tenere presente che mvs riportato nella tabella materiali, è in realtà un dato empirico ottenuto come media dei risultati delle esperienze fatte, risultati talvolta anche distanti tra di loro. Esso può dipendere infatti da molteplici variabili, alcuni delle quali di difficil controllo (es. stato del materiale, condizioni atmosferiche, altezza colonna materiale nella tramoggia, velocità di rotazione, etc.).
Il coefficien e mvs è indicato a pagina T.10.

DIMENSIONS - *EINBAUMASSE* - ENCOMBREMENT - *INGOMBRO*

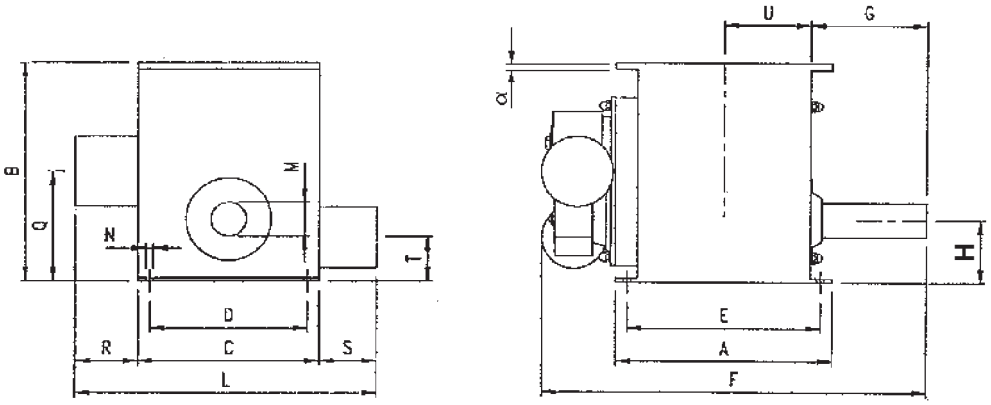

MBF	A	B	C	D	E	F	G	H	L*	M	N	Q	R*	S**	T	U	α	dm³	kg
042	310	295	250	200	253	595	200	100	535	42	12.5	235	160	125	100	105	12	5	20
073	464	486	390	305	410	855	250	135	600	76	12.5	240	135	75	95	185	15	28	60
114	464	486	390	305	410	855	250	135	600	114	12.5	259	135	75	95	185	15	35	65

* Without variable speed reducer
* *Ohne Regelgetriebe*
* Sans variateur
* *Senza variatore*

** According to IEC - Standards
** *Gemäß IEC - Norm*
** Selon normes IEC
** *Secondo norme IEC*

MBF 042

TOP FLANGE
FLANSCH OBEN
BRIDE SUPERIEURE
FLANGIATURA SUPERIORE

BOTTOM FLANGE
FLANSCH UNTEN
BRIDE INFERIEURE
FLANGIATURA INFERIORE

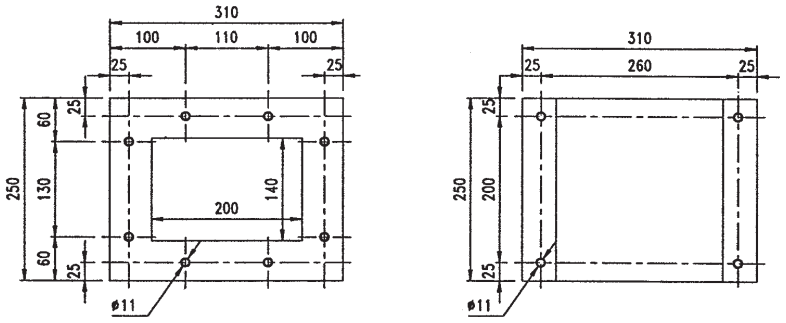

MBF 073

MBF 114

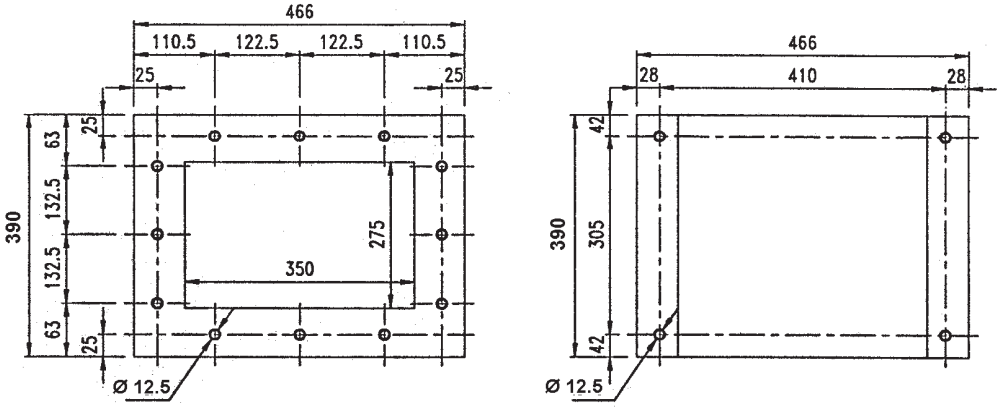

STANDARD SUPPLY - *STANDARD-LIEFERUMFANG* - FORNITURE STANDARD - *FORNITURE STANDARD*

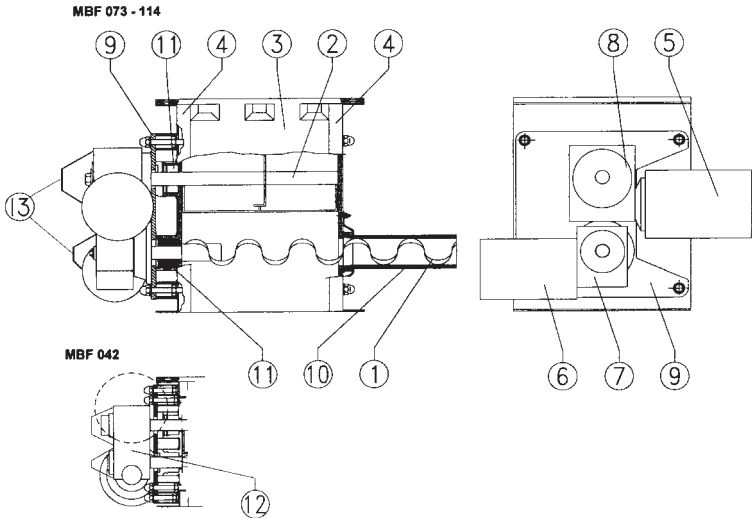

1	Metering screw	Dosierwerkzeug	Vis de dosage	Utensile dosaggio
2	Blending tool	Homogenisierwerkzeug	Homogénéisateur	Utensile omogeneiz.
3	Elastomer trough	Dosiertrog	Corps	Corpo
4	End plate	Endschild	Bride d'extremité	Frontale
5	Agitator motor	E- Motor Homogenisierer	Moteur electr. outil de homogé.	Motore elect. omogen.
6	Metering screw motor	E- Motor Dosierer	Moteur elect. outil de dosage	Motore elect. dosaggio
7	Metering screw reducer	Getriebe Dosierer	Réducteur outil de dosage	Riduttore dosaggio
8	Blending tool reducer	Getriebe Homogenisierer	Réducteur outil de homogén.	Riduttore omogeneiz.
9	Drive support	Antriebshalterung	Plaque de fixatio	Piastra d'attacco
10	Feeder pipe	Dosierrohr	Sortie	Uscita
11	Seals	Wellenabdichtungen	Etancheitées	Tenute
12	Reducer	Getriebe	Réducteur	Riduttore
13	Cover	Abdeckung	Couvercle	Coperchio

N.B. Item 4 in the stainless steel version, front panel can be opened for inspection.
N.B. Pos.4 in der Edelstahlversion mit abnehmbarer Frontplatte zu Inspektionszwecken.
N.B. Pos.4 dans la version en acier inox, plaque frontale peut être ouverte pour inspection.
N.B. Pos.4 nella versione in AISI, frontale apribile per ispezione.

The batch feeder must not be starded before the screw conveyor itself, as well as the plant it is going to be installed in, have been declared in conformity with the European Directive 14/06/1982 (89/392/EEC).

It is the plant designer's / plant fitte 's responsability to design and install all necessary protection in order to avoid that breaking and / or yielding of the equipment or of parts of it might damage people and / or parts of the plant (e.g. adequate protection against falling down of the motor etc.).
For dangerous materials, i.e. those that must not get in contact with the human body or be inhaled, for flammable, explosive and bacteriologically dangerous materials the plant manufacturer or fitter must provide for the required safety devices and measures.

Der Dosier darf nicht in Betrieb genommen werden, bevor sowohl sie selbst, als auch die Anlage, in die sie eingebaut wird, mit den Vorschriften der Direktive 14/06/1982 (89/392/ECC) für konform erklärt wurde.
Es liegt in der Verantwortung des Anlagenplaners bzw. -aufstellers, alle notwendigen Schutzvorrichtungen vorzusehen, welche es verhindern, daß durch einen Geräte- oder Teiledefekt Personen- und/oder Sachschäden verursacht werden (z.B. geeigneter Schutz gegen das Herunterfallen des Motors etc.).
Für Gefahrenprodukte, bzw. solche, die nicht mit dem menschlichen Körper in Kontakt geraten oder eingeatmet werden dürfen, für leicht entzündbare, explosive sowie bakteriologisch gefährliche Medien muß der Anlagenbauer bzw. –errichter die für die Sicherheit erforderlichen Vorrichtungen vorsehen und Maßnahmen treffen.

Il est interdit de mettre le doseur en fonction avant que la machine / l'installation dans laquelle elles doivent être montées a été déclarée conforme aux dispositions de la Directive 14/06/1982 (89/392/ECC).

Dans ce cadre il est la responsabilité du constructeur de l'installation ou de l'installateur de projeter et d'installer tout équipement de protection nécessaire afin d'eviter que des ruptures et / ou des parties d'elle puissent causer de dégâts à des personnes et / ou des choses (par ex.: des protections appropriées contre la chaute du moteur etc.).
Pour des produits dangereux, nuisibles au contact et/ou à l'inhalation, inflammables, explosifs et dangereux du point de vue bactériologique et/ou viral, le constructeur de l'installation ou l'installateur devront prévoir des dispositifs appropriés au besoin.

E' vietato mettere il dosatore in funzione prima che la macchina/ impianto, nel quale devono essere installate, sia dichiarato conforme alle disposizioni della direttiva 14/06/1982 (89/392/EEC).

In quest'ambito è cura dell'impiantista / installatore predisporre ed installare tutti gli accorgimenti / protezioni al fin di evitare danni a cose o persone in caso di rotture e conseguente caduta di pezzi della macchina (ad es.: rottura del motore).
Per prodotti pericolosi, nocivi al contatto e/o all'inalzione, infiammabili esplosivi e pericolosi dal punto di vista batteriologico e/o virale, l'impiantista e/o l'installatore, dovranno prevedere idonei dispositivi all'uopo.

THEORETICAL STANDARD FEED RATES - *THEORETISCHE STANDARD - DOSIERLEISTUNGEN*
DEBITS THEORIQUES STANDARD - *PORTATE TEORICHE STANDARD*

TAB. 1

MBF		THEORETICAL STANDARD FEED RATES *THEORETISCHE STANDARD-DOSIERLEISTUNGEN* DEBITS THEORIQUES STANDARD *PORTATE TEORICHE STANDARD*		CT
	Metering screws *Dosierwerkzeuge* Outils dosage *Utensili dosatori*	Hourly feed rate at *Dosierleistung pro Stunde bei* Débit horaïre à *Portata oraria a* 1 rpm	Fixed speed feed rate *Leistung bei Konstanter Drehzahl* Débit à vitesse fixe *Portata a velocità fissa* 93 rpm	Feed rate with variable speed *Leistung bei variabler Drehzahl* Débit à vitesse variable *Portata a velocità variabile* 13 - 67 rpm	Capacity whit diff. variator *Leist. bei var. Drehz. + Diff.* Débit à vites. var. avec différ. *Port.a vel. variab. con differ.* 4 - 60 rpm
	Type	**dm³ / h**	**dm³ / h**	**dm³ / h**	**dm³ / h**
042	1 - 4 - D - 2 - B	0.7	65	9 - 48	
	3	0.6	56	8 - 40	
	5	0.64	60	8 - 45	
	7	0.95	88	12 - 64	
073	1 - 2 - B	5.7	530	74 - 382	23 - 342
	3	4.4	410	57 - 295	18 - 264
	4 - 5 - D - E	7.4	688	96 - 496	31 - 421
114	1 - 2 - B	26	2418	338 - 1742	104 - 1560
	3	13.6	1265	177 - 911	55 - 816
	4 - 5 - D- E	29.7	2762	386 - 1990	130 - 1930

N.B. The theoretical feed rate has to be multiplied by the efficient factor which depends on the type of feeder screw and on the material fed
N.B. Die theoretische Dosierleistung ist dem Wirkungsfactor zu multiplizieren, der wierderum abhängig ist vom Dosierwendeltyp und vom dosierten Medium.
N.B. La débit théorique doit être multiplié pae le facteurs d'efficience qui est en fonction de la spire et du produit dosé
N.B. La portata teorica deve essere moltiplicata per il fattore di efficenza che è in funzione dell'elica e del prodotto trasportato.

General efficiency coefficient mvs depeneding on feeder screw us
Allgemeiner Wirkungsgrad mvs in Abhängigkeit von der eingesetzten Dosierwendel
Coefficient d'efficacité général en fonction du type de spire utilis
Coefficienti di efficienza generico mvs, in funzione del tipo di elica utilizzata

TAB. 3

UTD. 12 UTD. 32	UTD. 22 UTD. B2	UTD. 42 UTD. D2	UTD. 5 UTD. G UTD. E
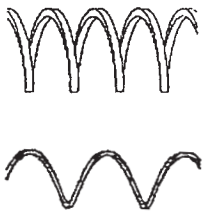	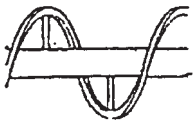		
Efficiency: 1.	**Wirkungsgrad: 0.6**	**Coefficient: 0.7**	**Efficienza: 0.**

The theoretical feeds rate (pag.T.11)has to be multiplied by the efficient factor which depends on the type of feeder screw fed.

Note:
The efficiency factor can vary due to grain size, bulk density, degree of humidity and all the other material properties that have an influence on handling the material.

Die theoretischen Dosierleistungen gem. Seite T.11 müssen mit diesem Faktor je nach eingestzter Dosierwendeltype multipliziert werden.

Anm.:
Der Wirkungsgrad kann sich aufgrund der Körnung, des Schüttgewichts, des Feuchtegrads sowie aller übrigen, sich auf das Handling auswirkenden Produkte.

Les débits théoriques comme à page T.11 doivent être multipliés par ce facteur en fonction des spires choisies.

Note:
Le facteur d'efficacité peut subir des variations à cause de la granulométrie, du poids spécifique, de l'humidité et de tous les composants imputables au matériau transporté.

Le portate teoriche come a pag. T.11 debbono essere moltiplicate per questo fattore in funzione delle eliche scelte.

Nota:
Il fattore di efficienza può subire delle variazioni dovute a granulometria, al peso specifico, umidità e a tutte quelle componenti imputabili al prodotto trasportato.

THEORETICAL CAPACITIES SPC - *THEORETISCHE DOSIERLEIST.SPEZ.*
DEBITS THEORIQUES SPC. - *PORTATE TEORICHE SPECIALI*

TAB. 2

MBF				THEORETICAL FEED RATES *THEORETISCHE DOSIERLEISTUNGEN* DEBITS THEORIQUES *PORTATE TEORICHE*			CT
	Metering screws *Dosierwerkzeuge* Outils dosage *Utensili dosatori*	Hourly feed rate at *Dosierleistung pro Stunde bei* Débit horaïre à *Portata oraria a* 1 rpm	Gear ratios *Getriebeuntersetzungen* Rapports réducteurs *Rapporti riduttori*	Fixed speed feed rate *Leistung bei Konstanter Drehzahl* Débit à vitesse fixe *Portata a velocità fissa*	Feed rate with variable speed *Leistung bei variabler Drehzahl* Débit à vitesse variable *Portata a velocità variabile*		Capacity with diff. variator *Leist. bei var. Drehz. + Diff.* Débit à vites. var. avec différ. *Port.a vel. variab. con differ.*
	Type	dm³ / h	1 / ..	dm³ / h	dm³ / h MIN	dm³ / h MAX	dm³ / h
42	1-2-4-B-D	0.70	10 15 28 40(std)	98 65 35 24	14 9 5 3	70 47 25 17	
	3	0.6	10 15 28 40 (std)	82 55 29 20	11 8 4 3	59 39 21 15	
	5-E	0.64	10 15 28 40(std)	90 60 32 22	12 8 4 3	64 43 23 16	
	7-G	0.95	10 15 28 40 (std)	133 89 48 33	19 12 7 5	95 63 34 24	
73	1-2-B	5.7	10 15 20 28 40 (std) 70	798 532 399 285 199 114	111 74 56 40 28 16	570 380 285 203 142 81	33-513 22-342 17-256 12-183 8-128 5-73
	3	4.4	10 15 20 28 40 (std) 70	616 411 308 220 154 88	86 57 43 31 21 12	440 293 220 157 110 63	26-396 17-264 13-198 9-141 6-99 4-57
	4-5-D-E	7.4	10 15 20 28 40(std) 70	1,036 691 518 370 259 148	144 96 72 52 36 21	740 493 370 264 185 106	43-66 29-444 21-333 15-238 11-167 6-95
114	1-2-B	26	10 15 20 28 40 (std) 70	3,640 2,427 1,820 1,300 910 520	507 338 254 181 127 72	2,600 1,733 1,300 929 650 371	151-2,340 101-1,560 75-1,170 54-836 38-585 22-334
	3	13.6	10 15 20 28 40 (std) 70	1,904 1,269 952 680 476 272	265 177 133 95 66 38	1,360 907 680 486 340 194	79-1,224 53-816 39-612 28-437 20-306 11-175
	4-5-D-E	29.7	10 15 20 28 40 (std) 70	4,158 2,772 2,079 1,485 1,040 594	579 386 290 207 145 83	2,970 1,980 1,485 1,061 743 424	172-2,673 115-1,782 86-1,337 62-955 43-668 25-382

N.B. The theoretical feed rate has to be multiplied by the efficient factor which depends on the type of feeder screw and on the material fed
(See tab. 3 pag. T.10)

N.B. Die theoretische Dosierleistung ist dem Wirkungsfactor zu multiplizieren, der wierderum abhängig ist vom Dosierwendeltyp und vom dosierten Medium.(Siehe Tabelle 3 Seite T.10)

N.B. La débit théorique doit être multiplié pae le facteurs d'efficience qui est en fonction de la spire et du produit dosé.(oir tab. 3 pag. T.10)

N.B. La portata teorica deve essere miltiplicata per il fattore di efficenza che è in funzione dell'elica e del prodotto trasportato.(vedi tab.3 pag. T.10)

FIXED SPEED DRIVES - *ANTRIEBE MIT KONSTANTER DREHZAHL*
MOTORISATIONS A VITESSE FIXE - *MOTORIZZAZIONI A VELOCITA' FISSA*

MBF 042	**METERING SCREW - *DOSIERWERKZEUG* - OUTIL DOSAGE - *UTENSILE DOSAGGIO***				
	RPM	**STANDARD**	**SPECIAL**		
		93	140	50	35
	Ratio - *Untersetzung* Rapport - *Rapporto*	1:15	1:10	1:28	1:40
	Gear red. - *Getriebe* Réduct. - *Riduttore*	RW BB ØØ	RW AA ØØ	RW DA ØØ	RW EA ØØ
	Motors - *E-Motoren* Moteurs - *Motori*	**0.12 kW 4P 50 Hz 63A B5 (std)** (0.18 kW/0.25 kW 4P 50 Hz 63b/63c B5)			
	BLENDING TOOL - *HOMOGENISIERWERKZEUG* - OUTIL DE HOMOGENEISATION - *OMOGENEIZZATORE*				
	RPM	35			
	Ratio - *Untersetzung* Rapport - *Rapporto*	1:40			
	Motors - *E-Motoren* Moteurs - *Motori*	**0.25 kW 4P 50 Hz 71A B5 (std)** (0.37 kW 4P 50 Hz 71B B5)			

MBF 073 114	**METERING SCREW - *DOSIERWERKZEUG* - OUTIL DOSAGE - *UTENSILE DOSAGGIO***						
	RPM	**STANDARD**	**SPECIAL**				
		93	140	70	50	35	20
	Ratio - *Untersetzung* Rapport - *Rapporto*	1:15	1:10	1:20	1:28	1:40	1:70
	Gear red. - *Getriebe* Réduct. - *Riduttore*	B5 PAM 71 Ø Flange = 160 mm Ø M* = 14 mm Ø U* = 24 mm					
	Motors - *E-Motoren* Moteurs - *Motori*	**0.25 kW 4P 50 Hz 71A B5 (std)** (0.37 kW 4P 50 Hz 71B B5)					
	BLENDING TOOL - *HOMOGENISIERWERKZEUG* - OUTIL DE HOMOGENEISATION - *OMOGENEIZZATORE*						
	RPM	**STANDARD**	**SPECIAL**				
		35	14				
	Ratio - *Untersetzung* Rapport - *Rapporto*	1:40	1:100				
	Gearbox - *Getriebe* Réduct. - *Riduttore*	B5bi PAM 80 Ø Flange = 200 mm Ø M* = 19 mm Ø U* = 25 mm					
	Motors - *E-Motoren* Moteurs - *Motori*	**0.55 kW 4P 50 Hz 80A B5 (std)** (0.75 kW 4P 50 Hz 80B B5)					

* **ØM** = Ø Electric motor shaft - *Welle elektromotore* - Arbre moteur electrique - *Albero motore elettrico*

* **ØU** = Ø Screw shaft - *Werkzeugwelle* - Arbre outil - *Albero utensile*

VARIABLE SPEED DRIVES - *ANTRIEBE MIT VARIABLER DREHZAHL*
MOTORISATIONS A VITESSE VARIABLE - *MOTORIZZAZIONI A VELOCITA' VARIABILE*

MBF 042	**METERING SCREW - *DOSIERWERKZEUG* - OUTIL DOSAGE - *UTENSILE DOSAGGIO***				
	RPM	**STANDARD**	**SPECIAL**		
		93	140	50	35
	Ratio - *Untersetzung* Rapport - *Rapporto*	1:15	1:10	1:28	1:40
	Gear red. - *Getriebe* Réduct. - *Riduttore*	RW NB ØØ	RW MA ØØ	RW QA ØØ	RW RA ØØ
	Variator - *Regelgetr.* Variateur - *Variatore*	B5/B5 PAM 63/63 n° 190-910 rpm Ø Flange 140/140 mm Ø M* = 11 mm Ø U* = 11 mm			
	Motors - *E-Motoren* Moteurs - *Motori*	**0.12 kW 4P 50 Hz 63C B5 (std)** **(0.18 kW/0.25 kW 4P 50 Hz 63b/63c B5)**			
	BLENDING TOOL - *HOMOGENISIERWERKZEUG* - OUTIL DE HOMOGENEISATION - *OMOGENEIZZATORE*				
	RPM	35			
	Ratio - *Untersetzung* Rapport - *Rapporto*	1:40			
	Motors - *E-Motoren* Moteurs - *Motori*	**0.25 kW 4P 50 Hz 71A B5 (std)** (0.37 kW 4P 50 Hz 71B B5)			

N.B.: the motors provided on the speed variator are special and can therefore be 0.22-0.25 kW, depending on the supplier
Anm.: Die auf dem Drehzahlregler vorhandenen Motoren sind Spezialausführungen und können je nach Hersteller 0,22 -0,25 kW haben
N.B.: Etant donnée que les moteurs prévus sur variateur sont spéciaux, ils peuvent être de 0.22-0.25 kW, en fonction du fournisseur
N.B.: i motori previsti su variatore, essendo speciali, potranno essere, 0.22-0.25 kW in funzione del fornitore

MBF 073 114	**METERING SCREW - *DOSIERWERKZEUG* - OUTIL DOSAGE - *UTENSILE DOSAGGIO***						
	RPM	**STANDARD**	**SPECIAL**				
		93	140	70	50	35	20
	Ratio - *Untersetzung* Rapport - *Rapporto*	1:15	1:10	1:20	1:28	1:40	1:70
	Gear red. - *Getriebe* Réduct. - *Riduttore*	B5/B5 PAM 71 Ø Flange = 160 mm Ø M* = 14 mm Ø U* = 24 mm					
	Variator - *Regelgetr.* Variateur - *Variatore*	B5/B5 PAM 71/71 n° 190-1000 rpm Ø Flange 160/160 mm Ø M* =14 mm Ø U* =14 mm					
	Differrent. - *Different.* Différént. - *Differenz.*	B5/B5 PAM 71/71 n° 0-1000 rpm Ø Flange 160/160 mm Ø M* =14 mm Ø U* =14 mm					
	Motors - *E-Motoren* Moteurs - *Motori*	**0.25 kW 4P 50 Hz 71A B5 (std)** (0.37 kW 4P 50 Hz 71B B5)					
	BLENDING TOOL - *HOMOGENISIERWERKZEUG* - OUTIL DE HOMOGENEISATION - *OMOGENEIZZATORE*						
	RPM	**STANDARD**	**SPECIAL**				
		35	14				
	Ratio - *Untersetzung* Rapport - *Rapporto*	1:40	1:100				
	Gear red. - *Getriebe* Réduct. - *Riduttore*	B5bi PAM 80 Ø Flange = 200 mm Ø M* = 19 mm Ø U* = 25 mm					
	Motors - *E-Motoren* Moteurs - *Motori*	**0.55 kW 4P 50 Hz 80A B5 (std)** (0.75 kW 4P 50 Hz 80B B5)					

*** ØM** = Ø Electric motor shaft - *Welle elektromotor* - Arbre moteur electrique - *Albero motore elettrico*
*** ØU** = Ø Screw shaft - *Werkzeugwelle* - Arbre outil - *Albero utensile*

FINISHING - *FINISH* - FINITION - *FINITURE*

End plate	Endschild	Bride d'extremité	Frontale	**St. St. 304 / EDELSTAHL 1.4301 / AISI 304**
Drive support	Antriebshalter.	Plaque de fixation	Piastra d'attacco	**ALUMINIUM / ALLUMINIO**
Reducer	Getriebe	Reducteur	Riduttore	**ALUMINIUM / ALLUMINIO**
Speed variator	Regelgetriebe	Variateur	Variatore	**RAL 5010**
Motor	Elektromotor	Moteur	Motore	**RAL 7001**

STANDARD METERING SCREWS - *STANDARD-DOSIERWERKZEUGE*
OUTILS DE DOSAGE STANDARD - *UTENSILI DOSAGGI STD*



UTD. 12	TYPE 1			
	RECTANGULAR SECTION SPIRAL WITHOUT CENTRE PIPE	**WENDEL MIT RECHTECKIGEM QUERSCHNITT OHNE INNENROHR**	**HELICE A SECTION RECTANGULAIRE SANS TUBE INTERIEUR**	**ELICHE A SEZIONE RETTANGOLARE PRIVE DI TUBO INTERNO**
	Light sticky materials: flou , sugar, cocoa, pellets, granular products, light and slightly sticky oxides.	Geeignet für Medien mit geringem Schüttgewicht und mit Tendenz zum Anbacken: Mehl, Zucker, Kakao, Pellets, Granulate, Oxyde mit geringem Schüttgewicht und gewisser Tendenz zum Anbacken.	Matériaux légers avec une tendance au tassement: farines, sucre, cacao, pellets, poduits granulaires, oxides légers.	Materiali leggeri con tendenza all'impaccamento: farine, zucchero, cacao, pellets, prodotti granulari, ossidi leggeri moderatamente impaccati.

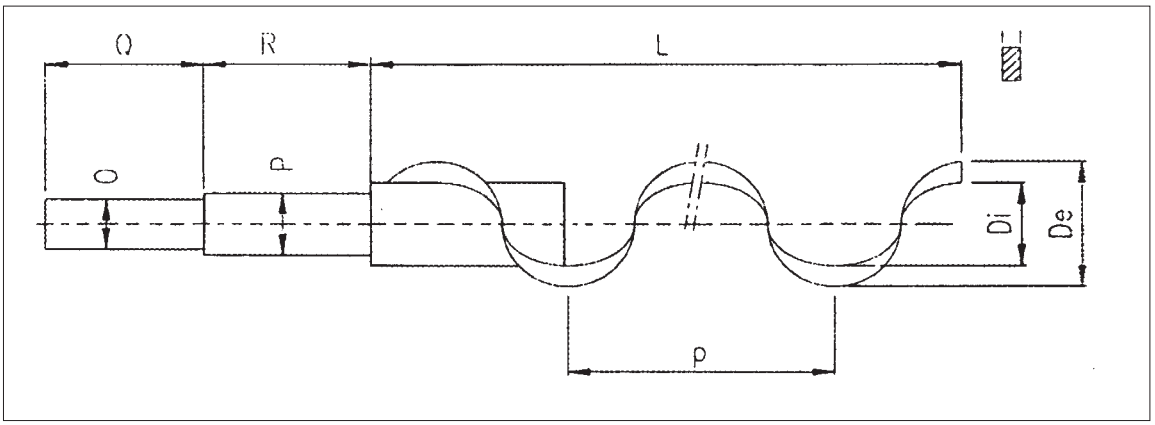

TYPE1 Rectangular section spiral withhout centre pipe
TYPE1 *Wendel mit rechteckigem Querschnitt ohne Innenrohr*
TYPE1 Hélice à section rectangulaire sans tube intérieur
TIPO 1 *Eliche a sezione rettangolare senza tubo interno*

MBF	Code	De	Di	p	S	L	Ø O	Ø P	Q	R	kg
042	**UTD 212**	26	16	30	5	403	14	25	58	81	0.5
073	**UTD 312**	60	40	60	5	607	24	29	96	119	3
114	**UTD 412**	100	67	100	5	607	24	29	96	119	5

STD BLENDING TOOLS - STD - *HOMOGENISIERWERKZEUGE*
HOMOGENEISATEURS STD - *UTENSILI OMOGENEIZZAZIONE STD*

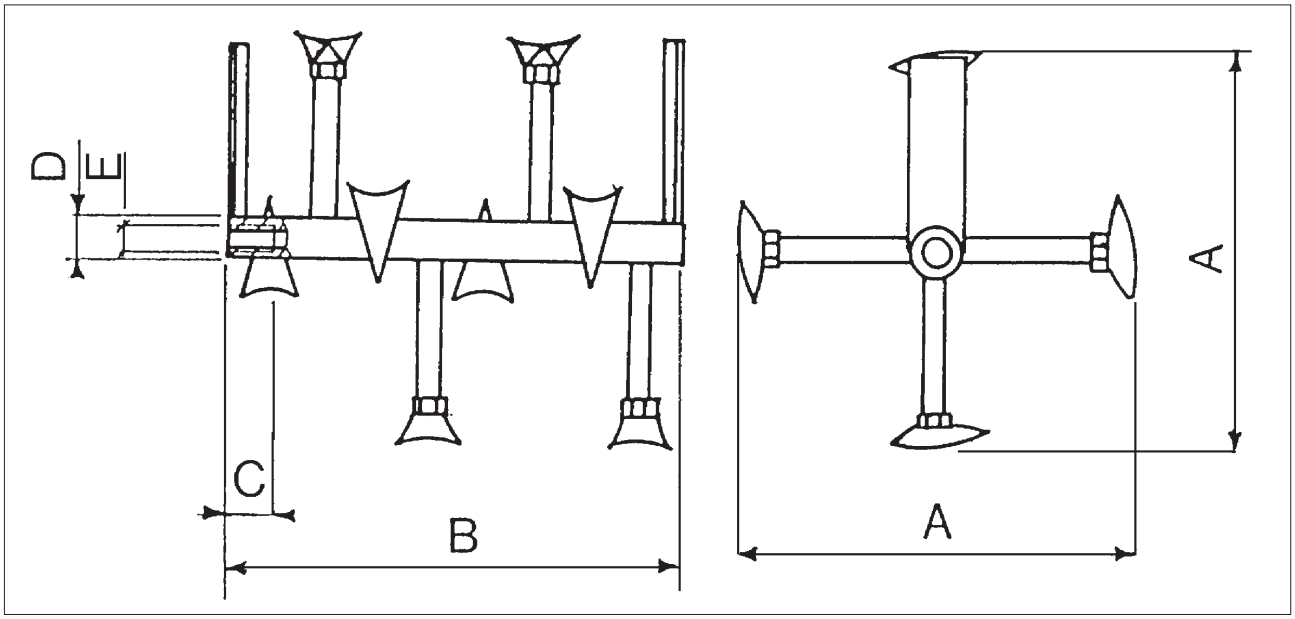

TYPE 2

MBF	Code	A	B	C	D	E	kg
042	**UTO 22**	130	199	25	25	M 12	1
073	**UTO 23**	269	349	35	35	M 16	3.5
114	**UTO 24**	269	349	35	35	M 16	3.5

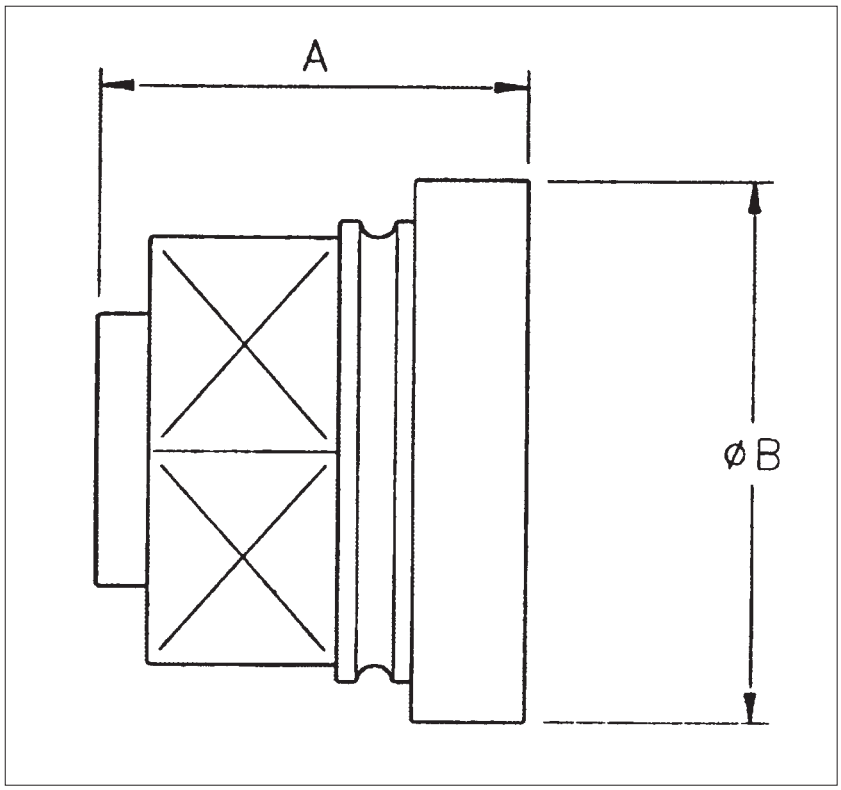

SINT®ER

MBF	Code	A	B
042	**MBT N2**	54	60
073	**MBT N3**	57	80
114	**MBT N4**	57	80

SINT®AL

MBF	Code	A	B
042	**MBT F2**	54	60
073	**MBT F3**	57	80
114	**MBT F4**	57	80

SPECIAL METERING SCREWS - *SPEZIALDOSIERWERKZEUGE* - OUTILS DOSAGE SPECIAUX - *UTENSILI DOSAGGIO SPECIALI*

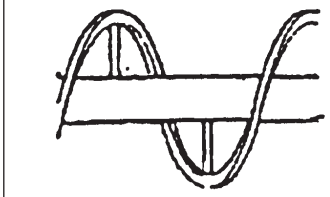

UTD. 22 — TYPE 2

RIBBON SPIRAL ON PIPE	BRANDWENDEL MIT INNENROHR	HELICE A RUBAN AVEC TUBE INTERIERUR	ELICHE A NASTRO CON TUBO INTERNO
Heavy sticky materials, heavy oxides, clay	Geeignet für Medien mit höherem Schüttgewicht und mit Tendenz zum Anbacken: Oxyde mit höherem Schüttgewicht, Ton	Matériaux lourds avec tendance au tassement, oxides lourdes, argiles	Materiali pesanti con tendenza all'impaccamento ossidi pesanti, argille



UTD. 32 — TYPE 3

ROUND SECTION SPIRAL WITHOUT CENTRE PIPE	WENDEL MIT RUNDEM QUERSCHNITT OHNE INNENROHR	HELICE A SECTION RONDE SANS TUBE INTERIEUR	ELICHE A SEZIONE TONDA PRIVE DI TUBO INTERNO
Light materials, granular products, pellets, PVC, polymers in pellets.	Geeignet für Medien mit geringem Schüttgewicht, ohne Tendenz zum Anbacken: Granulate, Pellets; PVC, Polymere in Pellets.	Matériaux légers, produits granulaires, pelets, PVC, polymers en pellets.	Materiali leggeri non impaccati, prodotti granulari, pellets, PVC, polimeri in pellets.

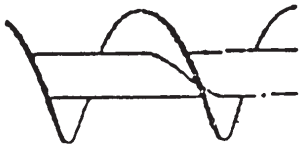

UTD.42 — TYPE 4

STANDARD SCREW	VOLLBLATTWENDEL MIT INNENROHR	HELICE AVEC TUBE INTERIEUR	ELICHE CONTINUE CON TUBO INTERNO
Heavy fluid materials metallic granules.	Geeignet für gut fließende Medien mit höherem Schüttgewicht: Schiefer gemahlen, Metallgranulate.	Matériaux lourds et fluides, grains de métal.	Materiali pesanti e scorrevoli, graniglia di metalli.



UTD. 5. — TYPE 5

HELICOID SCREW ON TAPERED PIPE MADE FROM SINT®ER OR SINT®AL	WENDEL MIT KONISCHER WELLE AUS SINT®ER ODER SINT®AL	HELICE AVEC TUBE CONIQUE EN SINT®ER OU SINT®AL	ELICA CON TUBO CONICO IN SINT®ER O SINT®AL
Whenever even metering on the entire surface along with mixing of materials with different particle size, bulk density and/or fluency is required.	Findet überall Verwendung, wo eine homogene Dosierung auf der gesamten Fläche in Verbindung mit einer Durchmischung von Medien mit unterschiedlicher Körnung, Fließfähigkeit und/ oder Schüttdichte erforderlich ist.	Où qu'une extraction homogéne sur toute la surface avec des mélanges de produits à granulométries différentes, à poids spécifiques différents et/ ou degrés différents de fluidité	Dovunque sia necessaria una estrazione omogenea su tutta la superficie con miscele di prodotti a diversa granulometria, diverso peso specifico, diverso grado di scorrevolezza.

SPECIAL METERING SCREWS - *SPEZIAL-DOSIERWERKZEUGE* - OUTILS DOSAGE SPECIAUX - *UTENSILI DOSAGGIO SPECIAL*

	**UTD. 7.**	**TYPE 7**		
	SAME AS TYPE 5 BUT WITH DIFFERENT PITCH	WIE TYP 5, JEDOCH MIT UNTERSCHIEDLICHER STEIGUNG	SIMILAIRE AU TYPE 5, MAIS AVEC PAS DIFFERENT	SIMILE AL TIPO 5, MA CON PASSO DIVERSO

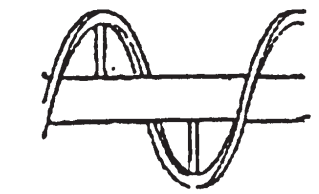	**UTD. B2**	**TYPE B**		
	SAME AS TYPE 2 BUT EXTENDED	WIE TYP 2, JEDOCH VERLÄNGERT	SIMILAIRE AU TYPE 2, MAIS PROLONGÉ	SIMILE AL TIPO 2, MA PROLUNGATO

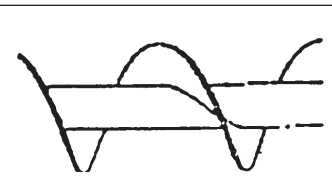	**UTD. D2**	**TYPE D**		
	SAME AS TYPE 4 BUT EXTENDED	WIE TYP 4, JEDOCH VERLÄNGERT	SIMILAIRE AU TYPE 4, MAIS PROLONGÉ	SIMILE AL TIPO 4, MA PROLUNGATO

	**UTD. E.**	**TYPE E**		
	SAME AS TYPE 5 BUT EXTENDED	WIE TYP 5, JEDOCH VERLÄNGERT	SIMILAIRE AU TYPE 5, MAIS PROLONGÉ	SIMILE AL TIPO 5, MA PROLUNGATO

	**UTD. G.**	**TYPE G**		
	SAME AS TYPE 7 BUT EXTENDED	WIE TYP 7, JEDOCH VERLÄNGERT	SIMILAIRE AU TYPE 7, MAIS PROLONGÉ	SIMILE AL TIPO 7, MA PROLUNGATO

SPECIAL METERING SCREWS - *SPEZIAL-DOSIERWERKZEUGE* - OUTILS DOSAGE SPECIAUX - *UTENSILI DOSAGGIO SPECIAL*

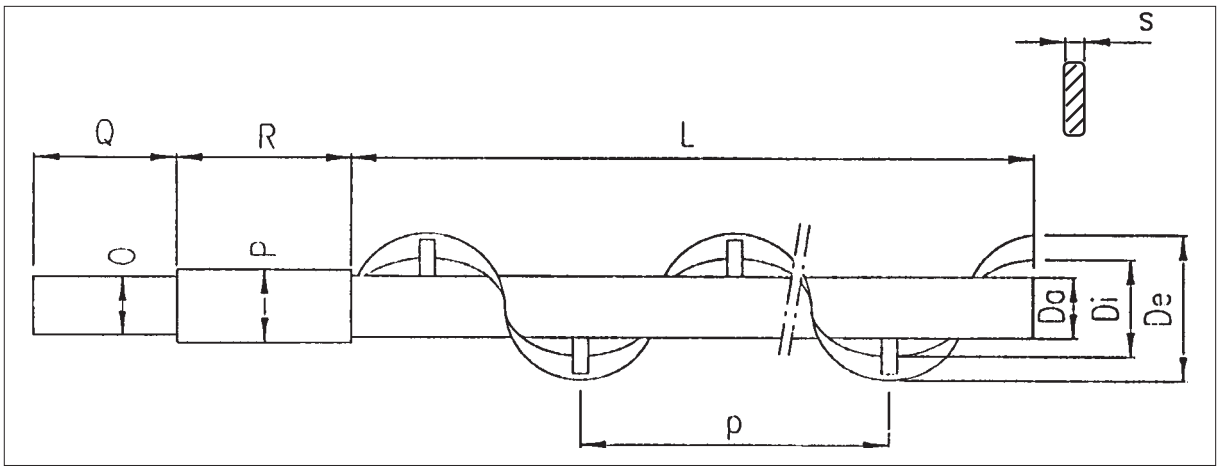

TYPE 2 **and** **TYPE B** Ribbon flight on pip
TYPE 2 ***und*** ***TYPE B*** *Bandwendel mit Innenrohr*
TYPE 2 **et** **TYPE B** à ruban avec tube interieur
TIPO 2 ***e*** ***TIPO B*** *a nastro con tubo interno*

Type	MBF	Code	De	Di	Da	p	S	L	Ø O	Ø P	Q	R	kg
2	**042**	**UTD222**	30	20	10	30	5	403	14	25	58	81	2
	073	**UTD322**	60	40	25	60	5	607	24	29	96	119	3
	114	**UTD422**	100	67	25	100	5	607	24	29	96	119	4
B	**042**	**UTD2B2**	30	20	10	30	5	573	14	25	58	81	3
	073	**UTD3B2**	60	40	25	60	5	857	24	29	96	119	4
	114	**UTD4B2**	100	67	25	100	5	857	24	29	96	119	4,5

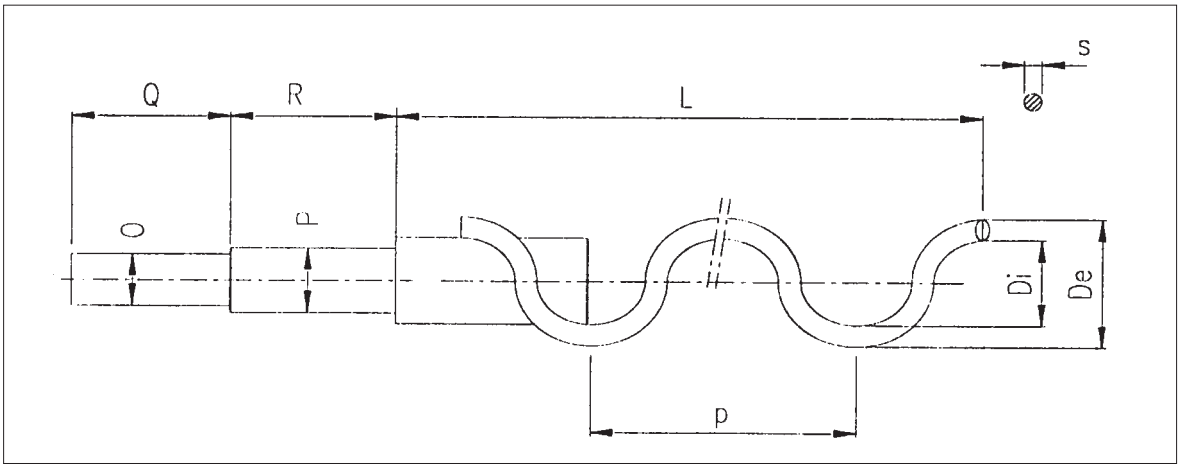

TYPE 3 Round section spiral without centre pipe
TYPE 3 *Wendel mit rundem Querschnitt ohne Innenrohr*
TYPE 3 Hélice à section rectangulaire sans tube intérieur
TIPO 3 *Eliche sezione tonda senza tubo interno*

Type	MBF	Code	De	Di	p	S	L	Ø O	Ø P	Q	R	kg
3	**042**	**UTD 232**	26	16	30	5	403	14	25	58	81	0.5
	073	**UTD 332**	57	40	60	8	607	24	29	96	119	3
	114	**UTD 432**	90	70	75	10	607	24	29	96	119	5

SPECIAL METERING SCREWS - *SPEZIAL-DOSIERWERKZEUGE* - OUTILS DOSAGE SPECIAUX - *UTENSILI DOSAGGIO SPECIAL*

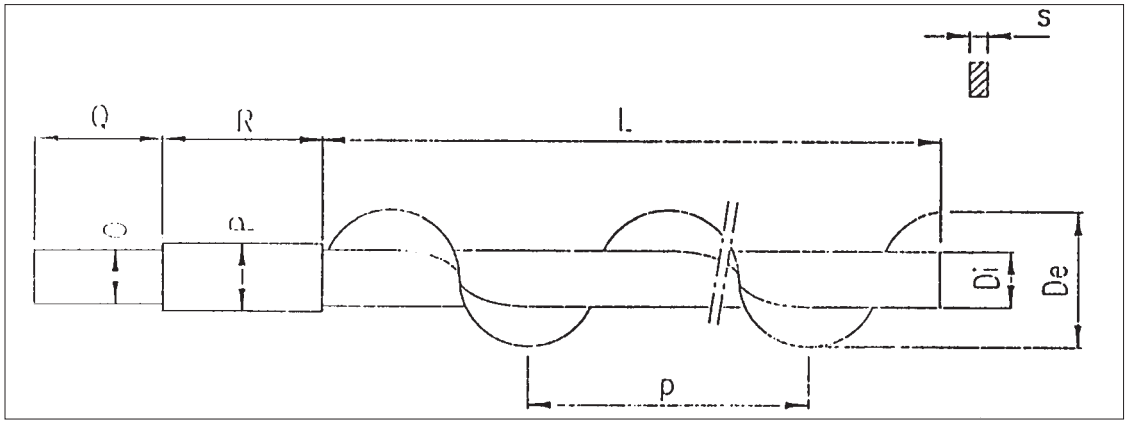

TYPE 4 and **TYPE D** standard screws
TYPE 4 *und* ***TYPE D*** *Vollblattwendeln mit Innenrohr*
TYPE 4 et **TYPE D** hélices continues avec tube interieur
TIPO 4 *e* ***TIPO D*** *eliche continue con tubo interno*

EXTENDED
VERLÄNGERT
RALLONGE
ALLUNGATO

Type	MBF	Code	De	Di	p	S	L	Ø O	Ø P	Q	R	kg
4	042	UTD 242	30	20	30	5	403	14	25	58	81	1.5
	073	UTD 342	57	25	60	5	607	24	29	96	119	3.5
	114	UTD 442	90	32	100	5	607	24	29	96	119	6
D	042	UTD 2D2	30	20	30	5	573	14	25	58	81	2
	073	UTD 3D2	57	25	60	5	857	24	29	96	118	5
	114	UTD 4D2	90	32	100	5	857	24	29	96	119	7.5

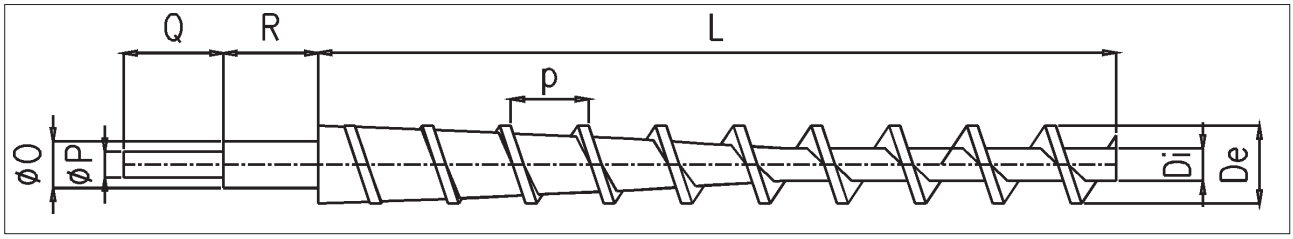

TYPE 5 and **TYPE E** screws made of SINT®ER or SINT®AL with tapered pipe
TYPE 5 *und* ***TYPE E*** *Wendeln aus SINT®ER oder SINT®AL mit konischem Innenrohr*
TYPE 5 et **TYPE E** Hélices en SINT®ER ou SINT®AL avec tube conique
TIPO 5 *e* ***TIPO E*** *Eliche in SINT®ER o SINT®AL con tubo conico*

EXTENDED
VERLÄNGERT
RALLONGE
ALLUNGATO

Type	MBF	Code	De	Di	p	L	Ø O	Ø P	Q	R	kg
5	042	UTD 25.	30	15	20	403	25	14	58	81	0.6
	073	UTD 35.	60	25	60	607	30	24	96	119	2
	114	UTD 45.	100	35	100	607	30	24	96	119	3
E	042	UTD 2E.	30	15	20	573	25	14	58	81	0.85
	073	UTD 3E.	60	25	60	857	30	24	96	119	2
	114	UTD 4E.	100	35	100	857	30	24	96	119	3.5

4	SINT®ER
5	SINT®AL

SPECIAL METERING SCREWS - *SPEZIAL-DOSIERWERKZEUGE* - OUTILS DOSAGE SPECIAUX - *UTENSILI DOSAGGIO SPECIAL*

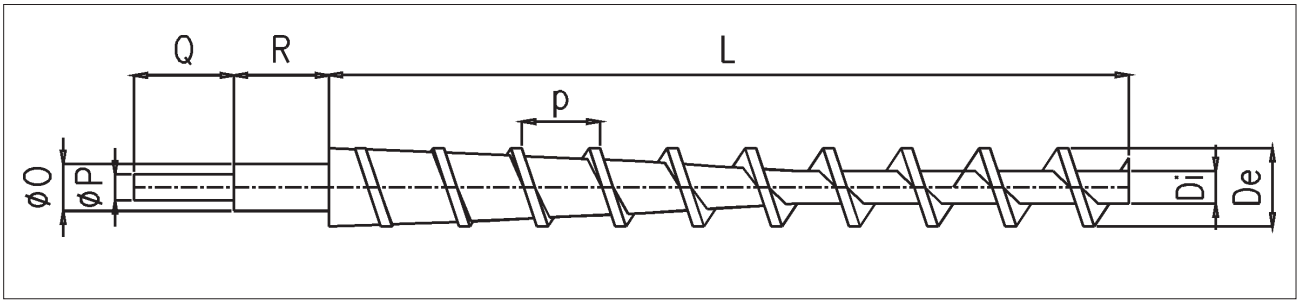

TYPE 7- G Screw with tapered centre pipe made of SINT®ER or SINT®AL
TYPE 7- G *Vollblattwendel mit konischem Innenrohr aus SINT®ER oder SINT®AL*
TYPE 7- G Hélice continue avec tube intérieur conique en SINT®ER ou SINT®AL
TIPO 7- G *Elica continua con yubo interno conico in SINT®ER o SINT®AL*

Type	MBF	Code	De	Di	p	L	Ø O	Ø P	Q	R	kg
7	**042**	**UTD 27 .**	30	20	30	403	25	14	58	81	0.6
G	**042**	**UTD 2G .**	30	20	30	573	25	14	58	81	0.7

4	SINT®ER
5	SINT®AL

SPECIAL SHAFT SEAL - *SONDER-WELLENABDICHTUNG* - ETANCHEITE SPECIALE - *TENUTA SPECIALE*

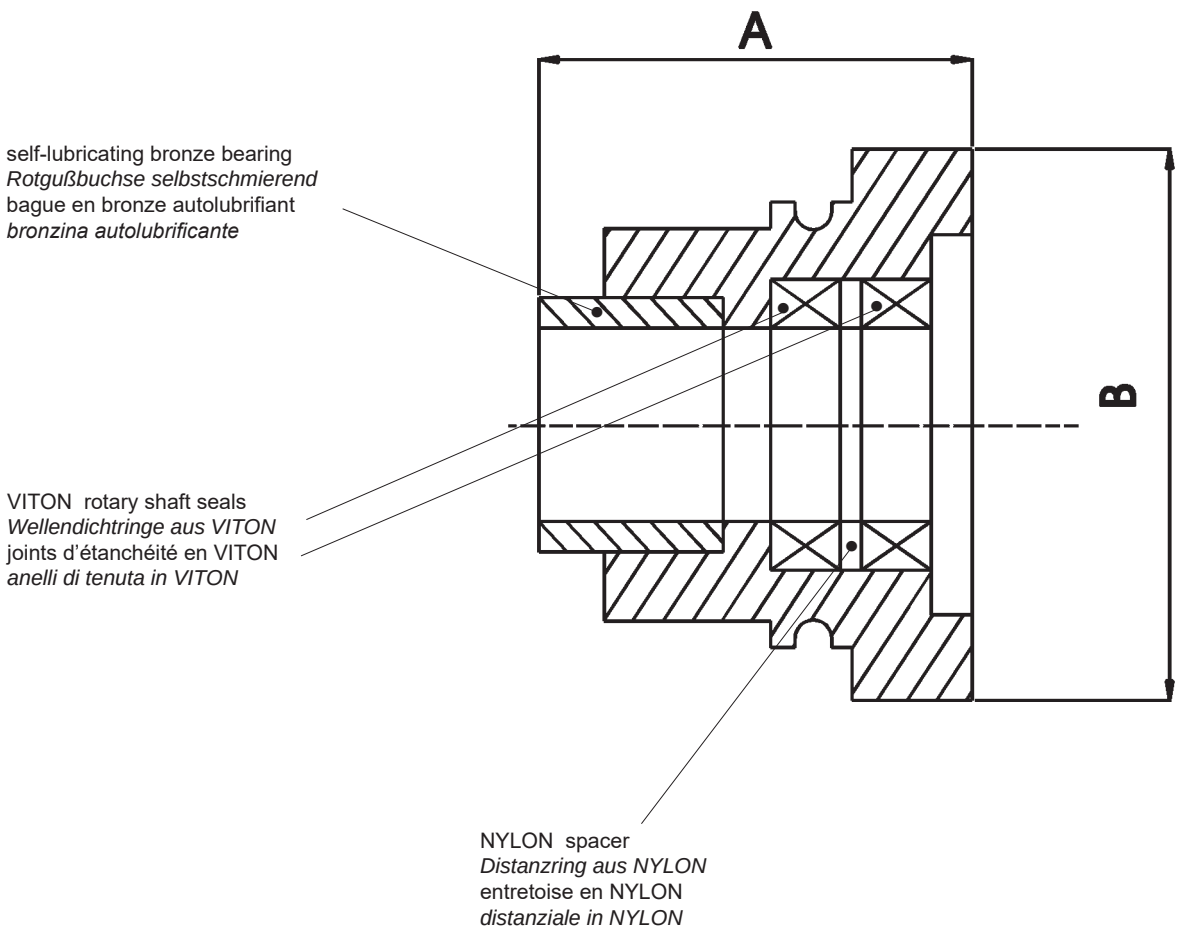

MBF	Code	A	B	kg
042	**MBTX2**	54	60	0.35
073	**MBTX3**	57	80	0.5
114	**MBTX4**	57	80	0.5

SPECIAL SHAFT SEAL WITH GREASING - *SONDER-WELLENABDICHTUNG MIT FETT*
ETANCHEITE SPECIALE AVEC GRAISSE - *TENUTA SPECIALE CON INGRASSAGGIO*

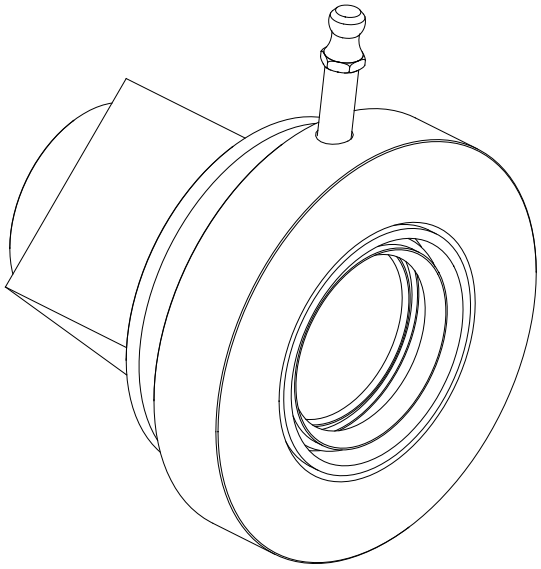

MBTT 2

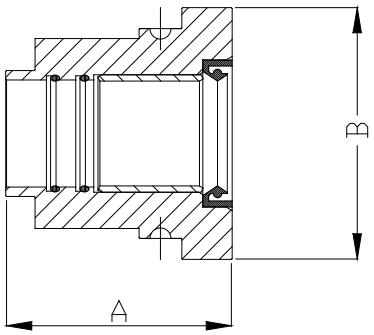

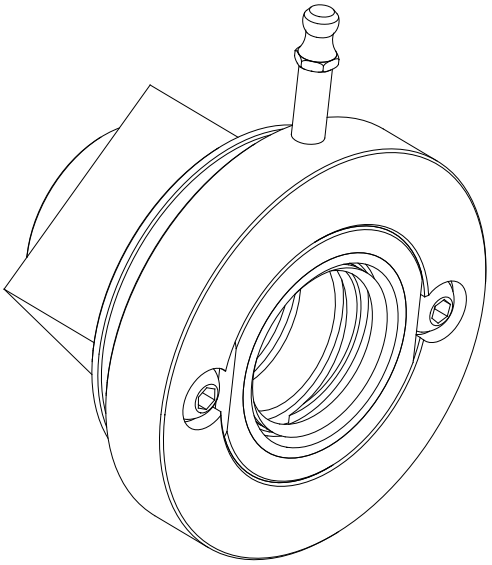

MBTT 3 - 4

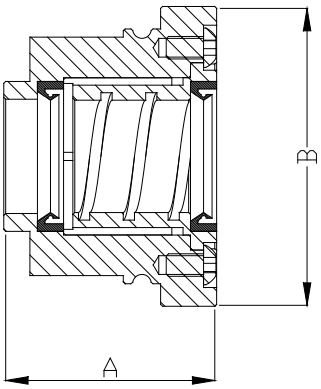

MBF	Code	A	B	kg
042	MBTT2	54	60	0.35
073	MBTT3	57	80	0.5
114	MBTT4	57	80	0.5

N.B. : The MBTT seal is standard with stainless steel version only
N.B. : MBTT-Wellenabdichtung ist nur für Edelstahlversion Standard
N.B. : L'étanchéité MBTT est standard seulement pour la version en acier inox
N.B. : La tenuta MBTT è STD solo sulla versione in AISI

①	②	③	④	⑤	⑥	⑦	⑧	⑨	⑩	⑪	⑫
MBF	073	N	TN	UD 1	SST	UO 2	B	0	Q	1	0025	0055

MICROBATCH FEEDER
TYPE “MBF”

DIAMETER
042 - 073 - 114

BODY MATERIAL
N =Standard SINT® polymer
F= Food SINT® polymer
A= St.Steel 304L
B= St.steel 316L

SEAL
TN= SINT®ER
TF= SINT®AL
TT= 304 ST.STEEL WITH GREASING
TA= 304 ST.STEEL WITH TEFLON
TX= 304 ST.STEEL WITH BRONZE

FEEDER SCREW
+++ - UD1 (©)- UD2- UD3- UD4- UD5- UD7(#)- UDB- UDD- UDE- UDG(#)

FEEDER PIPE
SST= STANDARD FEEDER PIPE
SPL= EXTENDED FEEDER PIPE
SSR= LINER FEEDER PIPE
SPR= EXTENDED LINER FEEDER PIPE

BLENDING TOOL
+++ = WITHOUT
UO1= SHAPED PADDLES
UO2= STANDARD PLOUGHSHARE

FEEDER DRIVE
+ = WITHOUT 0 rpm (§)
A = FIXED SPEED 1/10 -140 rpm
B = FIXED SPEED 1/15 -93 rpm (©)
C = FIXED SPEED 1/20 -70 rpm (§)
D = FIXED SPEED 1/28 -50 rpm
E = FIXED SPEED 1/40 -35 rpm
F = FIXED SPEED 1/70 -20 rpm (§)

VARIABLE SPEED
0 = WITHOUT (©)
1= VARIABLE SPEED 1000 rpm-190 rpm
2= VARIABLE SPEED WITH DIFFERENTIAL 900 rpm-10 rpm (§)

BLENDING DRIVE
+ = WITHOUT GEAR (§)
Q = STANDARD SPEED 35 rpm
S = SPECIAL SPEED 14 rpm (§)

VOLTAGE
+ = WITHOUT MOTOR
1 = 220-240 / 380-420 V 50 Hz; 440-480 V 60 Hz (©)
6 = 210-230 / 360-400 V 60 Hz
575V / 60 Hz

DRIVE POWER FEEDER SCREW
++++ = WITHOUT MOTOR
0012= 0,12 kW for D=042 (©)
0018 = 0,18 kW for D=042
0025= 0,25 kW for D= 042-073-114 (©)
0037= 0,37 kW for D= 042-073-114

DRIVE POWER FEEDER SCREW
++++ = WITHOUT MOTOR
0025= 0,25 kW for D=042 (©)
0037= 0,37 kW for D= 042
0055= 0,25 kW for D= 073-114 (©)
0075= 0,75 kW for D= 073-114

LEGENDA:
© STANDARD
§ NO MBF042
# ONLY MBF042

① MBF	② 073	③ N	④ TN	⑤ UD 1	⑥ SST	⑦ UO 2	⑧ B	⑨ 0	⑩ Q	⑪ 1	⑫ 0025	0055

MIKRODOSIERER
TYP “MBF”

DURCHMESSER
042 - 073 - 114

WERKSTOFF GEHÄUSE
N =Standard SINT®ER Technisches Polymer
F= SINT®AL Technisches Polymer
A= Edelstahl 1.4301
B= Edelstahl 1.4401

WELLENABDICHTUNG
TN= SINT®ER
TF= SINT®AL
TT= Edelstahl 1.4301 MIT FETT
TA= Edelstahl 1.4301 MIT TEFLON-BUCHSE
TX= Edelstahl 1.4301

DOSIERWERKZEUGE
+++ - UD1 (©)- UD2- UD3- UD4- UD5- UD7(#)- UDB-
UDD- UDE- UDG(#)

DOSIERROHR MIT INNENAUSKLEIDUNG
SST= STANDARD DOSIERROHR
SPL= VERLÄNGERTES DOSIERROHR
SSR= DOSIEROHR MIT INNENAUSKLEIDUG
SPR= VERLÄNGERTES DOSIERROHR MIT INNENAUSKLEIDUG

HOMOGENISIERWEKZEUG
+++ = OHNE HOMOGENISIERWEKZEUG
UO1= HOMOGENISIERWEKZEUG MIT PADDEL
UO2= STANDARD PFLUGSCHAR-HOMOGENISIERWEKZEUG

DREHZAHL DES DOSIERANTRIEBS
+ = OHNE GETRIEBE 0 rpm (§)
A = KOSTANTE DREHZAHL 1/10 -140 rpm
B = KOSTANTE DREHZAHL 1/15 -93 rpm (©)
C = KOSTANTE DREHZAHL 1/20 -70 rpm (§)
D = KOSTANTE DREHZAHL 1/28 -50 rpm
E = KOSTANTE DREHZAHL 1/40 -35 rpm
F = KOSTANTE DREHZAHL 1/70 -20 rpm (§)

REGELBARE DREHZAHL
0 = KOSTANTE DREHZAHL (©)
1 = REGELBARE DREHZAHL 1000 rpm-190 rpm
2 = REGELBARE DREHZAHL MIT DIFFERENTIAL 900 rpm-10 rpm (§)

ANTRIEB HOMOGENISIERWERKZEUG
+ = OHNE GETRIEBE (§)
Q = STANDARD-DREHZAHL 35 rpm
S = SONDER-DREHZAHL14 rpm (§)

SPANNUNG- FREQUENZ
+ = OHNE VERSORGUNG
1 = 220-240 / 380-420 V 50 Hz; 440-480 V 60 Hz (©)
6 = 210-230 / 360-400 V 60 Hz

ANTRIEBSLEISTUNG DOSIERWERKZEUG
++++ = OHNE ANTRIEB
0012= 0,12 kW mit D=042 (©)
0018 = 0,18 kW mit D=042
0025= 0,25 kW mit D= 042-073-114 (©)
0037= 0,37 kW mit D= 042-073-114

ANTRIEBSLEISTUNG HOMOGENISIERWERKZEUG
++++ = OHNE ANTRIEB
0025= 0,25 kW mit D=042 (©)
0037= 0,37 kW mit D= 042
0055= 0,25 kW mit D= 073-114 (©)
0075= 0,75 kW mit D= 073-114

LEGENDA:
© STANDARD
§ NO MBF042
# NUR MBF042

① MBF	② 073	③ N	④ TN	⑤ UD 1	⑥ SST	⑦ UO 2	⑧ B	⑨ 0	⑩ Q	⑪ 1	⑫ 0025	0055

MICRODOSEUR
TYPE “MBF”

DIAMETRE
042 - 073 - 114

MATERIAU CORPS
N =Standard SINT® Tecnopolmero
F= SINT® Tecnopolimero Alimentare
A= AISI 304L
B= AISI 316L

ETANCHEITES
TN= SINT®ER
TF= SINT®AL
TT= AISI 304 AVEC GRAISEE
TA= AISI 304 AVEC TEFLON
TX= AISI 304 SPECIALE

OUTIL DE DOSAGE
+++ - UD1 (©)- UD2- UD3- UD4- UD5- UD7(#)- UDB- UDD- UDE- UDG(#)

TUBE DE DOSAGE
SST= TUBE DE DOSAGE STANDAR
SPL= TUBE DE DOSAGE RALLONGEE
SSR= TUBE DE DOSAGE AVEC REVETEMENT INTERIEU
SPR= TUBE DE DOSAGE RALLONGE AVEC REVETEMENT INTERIEUR

OUTILS HOMOGENEISATEUR
+++ = AVEC HOMOGENEISATEUR
UO1= SPECIAL
UO2= STANDARD

MOTORISATION DE DOSAGE
+ = AVEC MOTORISATION 0 rpm (§)
A = VITESSE COSTANTE 1/10 -140 rpm
B = VITESSE COSTANTE 1/15 -93 rpm (©)
C = VITESSE COSTANTE 1/20 -70 rpm (§)
D = VITESSE COSTANTE 1/28 -50 rpm
E = VITESSE COSTANTE 1/40 -35 rpm
F = VITESSE COSTANTE 1/70 -20 rpm (§)

VITESSE VARIABLE
0 = VITESSE COSTANTE (©)
1= VITESSE VARIABLE 1000 rpm-190 rpm
2= VITESSE VARIABLE AVEC DIFFÉRENZIALE 900 rpm-10 rpm (§)

MOTORISATION DE HOMOGENEISATION
+ = AVEC MOTORISATION (§)
Q = STANDARD 35 rpm
S = SPECIAL 14 rpm (§)

VOLTAGE ET FREQUENCE D’ALIMENTATION
+ = SANS MOTEUR
1 = 220-240 / 380-420 V 50 Hz; 440-480 V 60 Hz (©)
6 = 210-230 / 360-400 V 60 Hz

PUISSANCE MOT. OUTIL DE DOSAGE
++++ = SANS MOTEUR
0012= 0,12 kW per D=042 (©)
0018 = 0,18 kW per D=042
0025= 0,25 kW per D= 042-073-114 (©)
0037= 0,37 kW per D= 042-073-114

PUISSANCE MOT. OUTIL DE HOMOGENEISATION
++++ = SANS MOTEUR
0025= 0,25 kW per D=042 (©)
0037= 0,37 kW per D= 042
0055= 0,25 kW per D= 073-114 (©)
0075= 0,75 kW per D= 073-114

LEGENDA:
© STANDARD
§ NO MBF042
# SEULEMENT POUR MBF042

MBF

- ORDER CODES
- BESTELLCODE
- CODES DE COMMANDE
- CODICI DI ORDINAZIONE

ITALIANO

①	②	③	④	⑤	⑥	⑦	⑧	⑨	⑩	⑪	⑫
MBF	073	N	TN	UD 1	SST	UO 2	B	0	Q	1	0025	0055

MICRODOSATORE
TIPO “MBF”

DIAMETRO
042 - 073 - 114

MATERIALE CORPO
N =Standard SINT® Tecnopolimero
F= SINT® Tecnopolimero Alimentare
A= AISI 304L
B= AISI 316L

TENUTE
TN= SINT®ER
TF= SINT®AL
TT= AISI 304 INGRASSATE
TA= AISI 304 CON TEFLON
TX= AISI 304 CON BRONZO

UTENSILE DI DOSAGGIO
+++ - UD1 (©)- UD2- UD3- UD4- UD5 - UD7(#) - UDB- UDD- UDE- UDG(#)

TUBO DI SCARICO
SST= SCARICO STANDARD
SPL= SCARICO PROLUNGATO
SSR= SCARICO INTERNAMENTE RIVESTITO
SPR= SCARICO PROLUNGATO INTERNAMENTE RIVESTITO

UTENSILE DI OMOGENIZZAZIONE
+++ = SENZA
UO1= SPECIALE
UO2= STANDARD A VOMERI

MOTORIZZAZIONE DOSAGGIO
+ = ASSENTE 0 rpm (§)
A = VELOCITA’ FISSA 1/10 -140 rpm
B = VELOCITA’ FISSA 1/15 -93 rpm (©)
C = VELOCITA’ FISSA 1/20 -70 rpm (§)
D = VELOCITA’ FISSA 1/28 -50 rpm
E = VELOCITA’ FISSA 1/40 -35 rpm
F = VELOCITA’ FISSA 1/70 -20 rpm (§)

VELOCITA’ VARIABILE
0 = VELOCITA’ COSTANTE (©)
1= VELOCITA’ VARIABILE 1000 rpm-190 rpm
2= VELOCITA’ VARIABILE DIFFERENZIALE 900 rpm-10 rpm (§)

MOTORIZZAZIONE OMOGENIZZATORE
+ = ASSENTE (§)
Q = STANDARD 35 rpm
S = SPECIALE 14 rpm (§)

TENSIONE E FREQUENZA
+ = SENZA MOTORE
1 = 220-240 / 380-420 V 50 Hz; 440-480 V 60 Hz (©)
6 = 210-230 / 360-400 V 60 Hz

MOTORIZZAZIONE UTENSILE DOSAGGIO
++++ = SENZA MOTORE
0012= 0,12 kW per D=042 (©)
0018 = 0,18 kW per D=042
0025= 0,25 kW per D= 042-073-114 (©)
0037= 0,37 kW per D= 042-073-114

MOTORIZZAZIONE UTENSILE OMOGENIZZAZIONE
++++ = SENZA MOTORE
0025= 0,25 kW per D=042 (©)
0037= 0,37 kW per D= 042
0055= 0,25 kW per D= 073-114 (©)
0075= 0,75 kW per D= 073-114

LEGENDA:
© STANDARD
§ NO MBF042
# SOLO MBF042

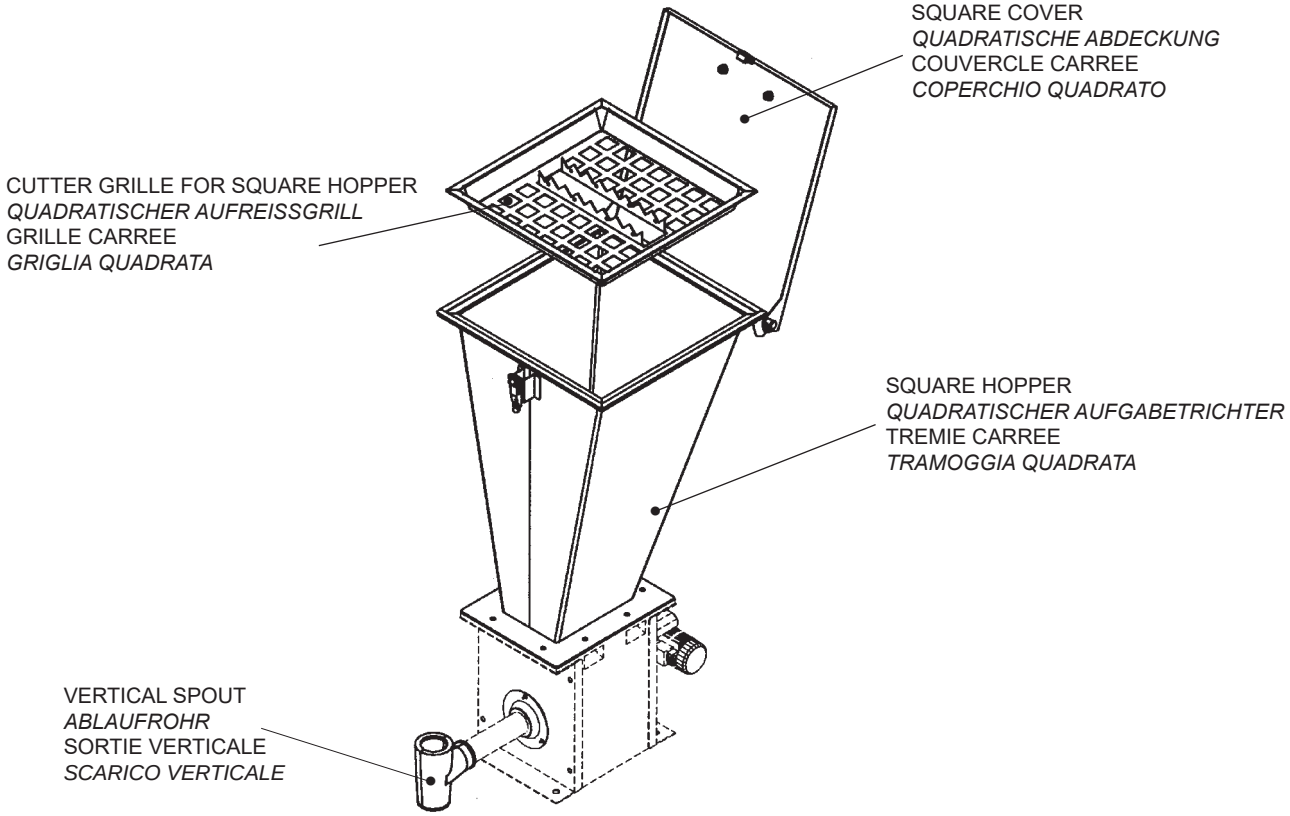
SQUARE COVER
QUADRATISCHE ABDECKUNG
COUVERCLE CARREE
COPERCHIO QUADRATO
CUTTER GRILLE FOR SQUARE HOPPER
QUADRATISCHER AUFREISSGRILL
GRILLE CARREE
GRIGLIA QUADRATA
SQUARE HOPPER
QUADRATISCHER AUFGABETRICHTER
TREMIE CARREE
TRAMOGGIA QUADRATA
VERTICAL SPOUT
ABLAUFROHR
SORTIE VERTICALE
SCARICO VERTICALE

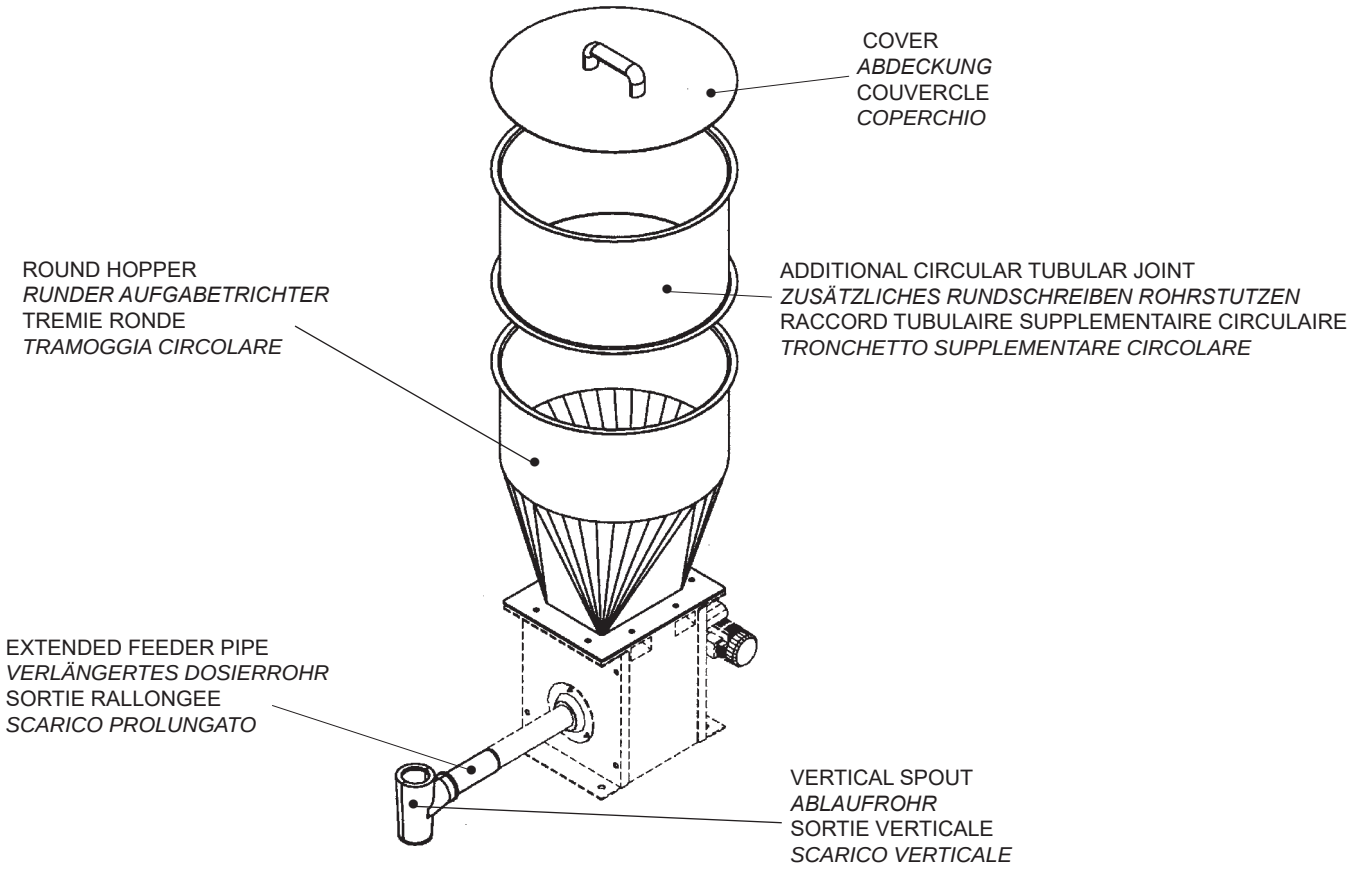
COVER
ABDECKUNG
COUVERCLE
COPERCHIO
ROUND HOPPER
RUNDER AUFGABETRICHTER
TREMIE RONDE
TRAMOGGIA CIRCOLARE
ADDITIONAL CIRCULAR TUBULAR JOINT
ZUSÄTZLICHES RUNDSCHREIBEN ROHRSTUTZEN
RACCORD TUBULAIRE SUPPLEMENTAIRE CIRCULAIRE
TRONCHETTO SUPPLEMENTARE CIRCOLARE
EXTENDED FEEDER PIPE
VERLÄNGERTES DOSIERROHR
SORTIE RALLONGEE
SCARICO PROLUNGATO
VERTICAL SPOUT
ABLAUFROHR
SORTIE VERTICALE
SCARICO VERTICALE

SQUARE HOPPER - *QUADRATISCER AUFGABETRICHTER* -TREMIE CARREE - *TRAMOGGIA QUADRATA*

M	D	X	T	S	1	2

2: Stainless steel - *Edelstahl 1.4301* - Inox 304 - *AISI 304*

Type hopper
Trichtergröße
Type de trémie
Grandezza tramoggia

1	MBF 042
2	MBF 073 -114

Square hopper
Quadratischer Aufgabetrichter
Trémie carrée
Tramoggia quadrata

Micro batch feeder accessories
Zubehör Mikrodosierer
Accessoires microdoseur
Accessori microdosatore

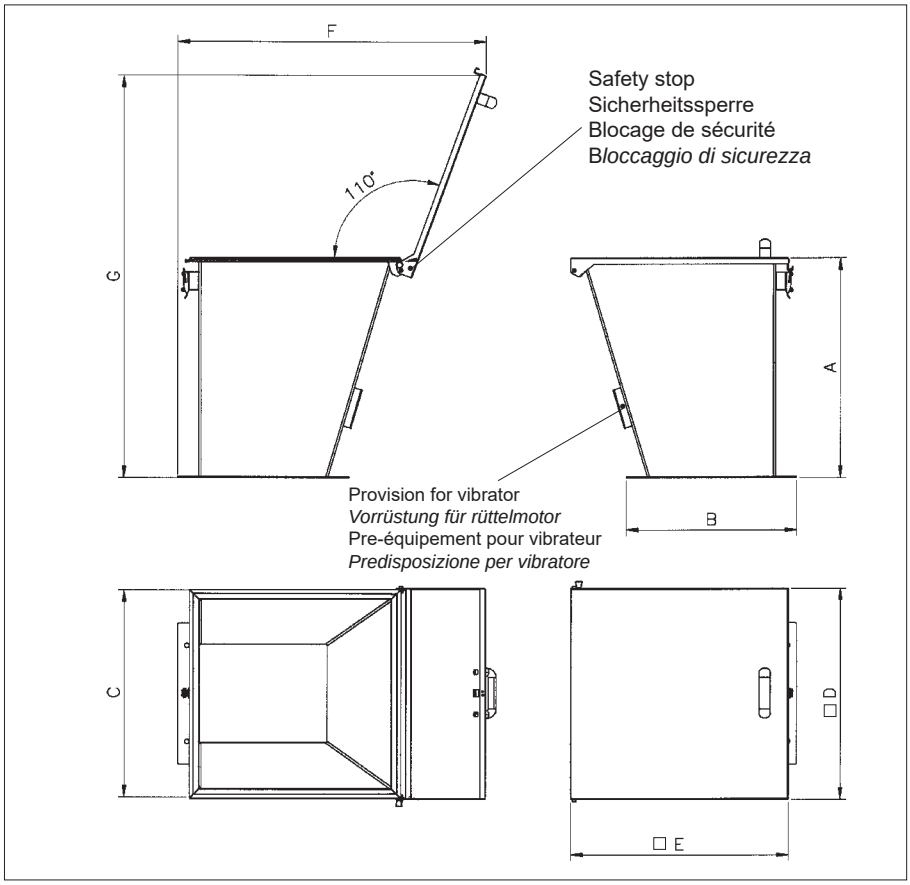

MDXTS	Suitable for - *Passend zu* Pour type - *Idoneo* MBF	A	B	C	□ D	□ E	F	G	dm³	kg
12	042	600	310	428	434	445	640	980	25	12
22	073 - 114	600	466	575	582	595	840	1120	75	19

ROUND HOPPER - *RUNDER AUFGABETRICHTER* - TREMIE RONDE - *TRAMOGGIA CIRCOLARE*

M	D	X	T	R	1	2

2: Stainless steel - *Edelstahl 1.4301* - Inox 304 - *AISI 304*

Type hopper
Trichtergröße
Type de trémie
Grandezza tramoggia

1	MBF 042
2	MBF 073 -114

Round hopper
Runder Aufgabetrichter
Trémie ronde
Tramoggia circolare

Micro batch feeder accessories
Zubehör zu Mikrodosierer
Accessoires microdoseur
Accessori microdosatore

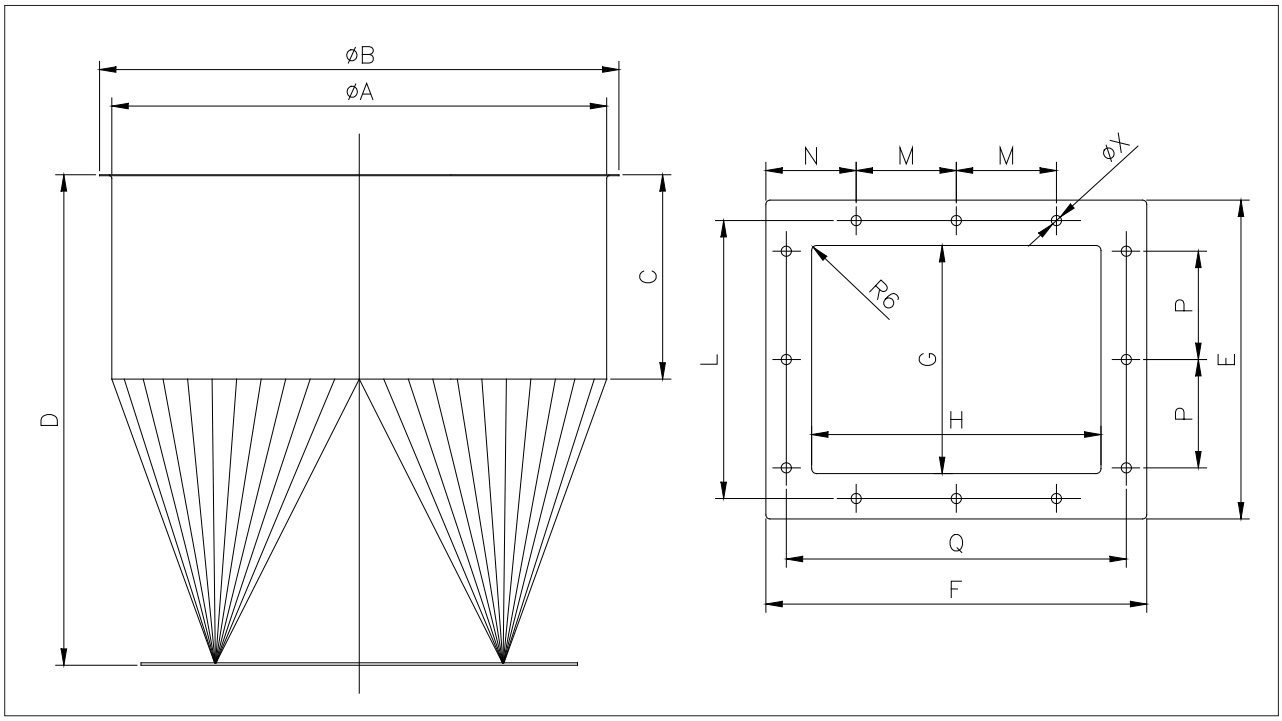

MDXTR	Suitable for - *Passend zu* Pour type - *Idoneo* MBF	Ø A	Ø B	C	D	E	F	G	H	L	M	N	P	Q	Holes - *Bohrungen* Trous - *Fori* X		dm³	kg
															Ø	n°		
12	042	408	436	200	500	250	310	140	200	200	110	100	130	260	9	8	52	12
22	073 - 114	630	636	250	600	390	466	279	354	340	122.5	110.5	132.5	416	12.5	12	120	20

ADDITIONAL CIRCULAR TUBULAR JOINT - *ZUSÄTZLICHES RUNDSCHREIBEN ROHRSTUTZEN*
RACCORD TUBULAIRE SUPPLEMENTAIRE CIRCULAIRE - *TRONCHETTO SUPPLEMENTARE CIRCOLARE*

M	D	X	A	R	1	2

2: Stainless steel - *Edelstahl 1.4301* - Inox 304 - *AISI 304*

Type hopper
Trichtergröße
Type de trémie
Grandezza tramoggia

1	MBF 042
2	MBF 073 -114

Additional circular tubular joint
Zusätzliches rundschreiben Rohrstutzen
Raccord tubulaire supplementaire circulaire
Tronchetto supplementare circolare

Micro batch feeder accessories
Zubehör zu Mikrodosierer
Accessoires microdoseur
Accessori microdosatore

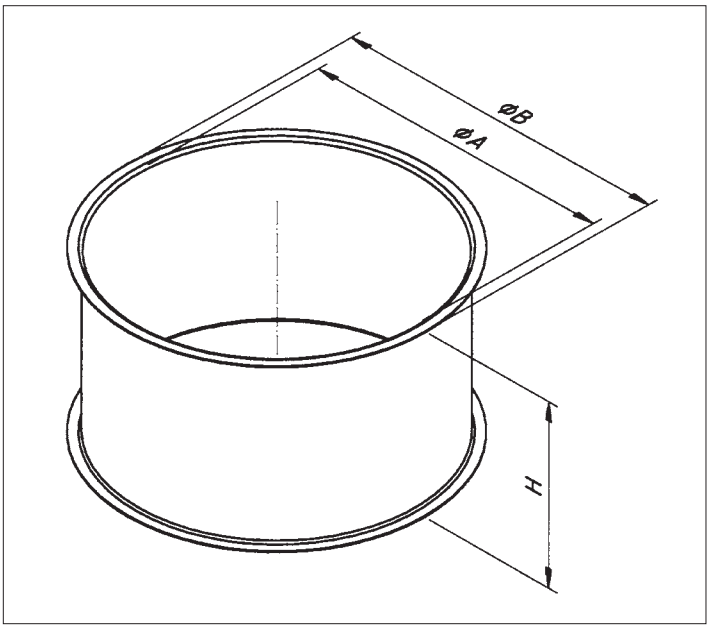

MDXAR	Suitable for - *Passend zu* Pour type - *Idoneo* MBF	Ø A	Ø B	H	dm^3
12	042	406	436	200	25
22	073-114	605	635	180	50

CUTTER GRILLE FOR SQUARE HOPPER - *QUADRATISCHER AUFREISSGRILL* - GRILLE CARREE - *GRIGLIA QUADRATA*

M	D	X	G	S	1	2

2: Stainless steel - *Edelstahl 1.4301* - Inox 304 - *AISI 304*

Type hopper
Trichtergröße
Type de trémie
Grandezza tramoggia

1	MBF 042
2	MBF 073 -114

Type hopper cutter grille
Grill
Type de grille
Griglia quadrata tagliasacchi

Micro batch feeder accessories
Zubehör Mikrodosierer
Accessoires microdoseur
Accessori per microdosatore

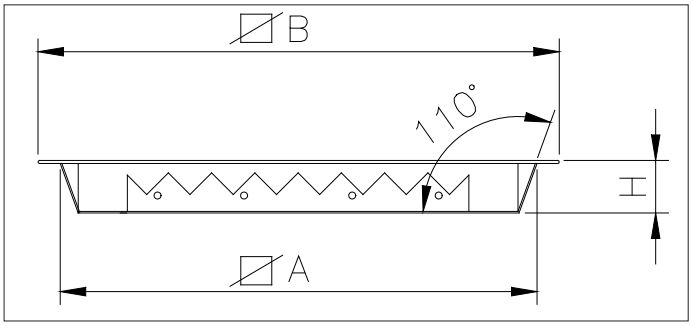

MDXGS	Suitable for - *Passend zu* Pour type - *Idoneo* MBF	□ A	□ B	H	kg
12	042	345	410	40	2
22	073 - 114	495	555	40	3

FLANGES - *FLANSCHE*
BRIDES - *FLANGIATURE*

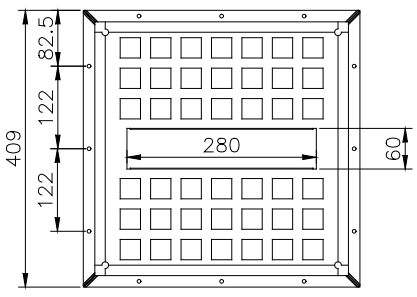

MDXGS12

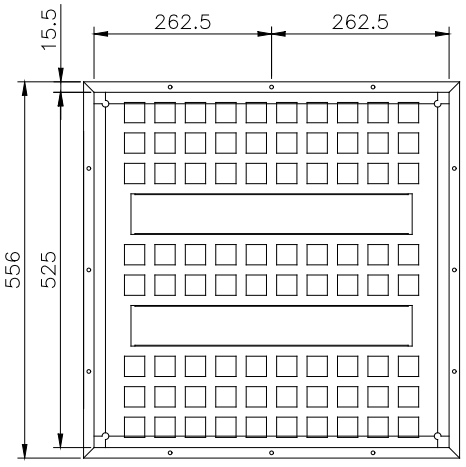

MDXGS22

ROUND COVER - *RUNDE ABDECKUNG* - COUVERCLE ROND - *COPERCHIO TONDO*

M	D	X	C	R	1	2

2: Stainless steel - *Edelstahl 1.4301* - Inox 304 - *AISI 304*

Type hopper
Trichtergröße
Type de trémie
Grandezza tramoggia

1	MBF 042
2	MBF 073 -114

Round cover
Runde Abdeckung
Couvercle rond
Coperchio tondo

Micro- batch fedeer accessories
Zubehör Mikrodosierer
Accessoires microdoseur
Accessori per microdosatore

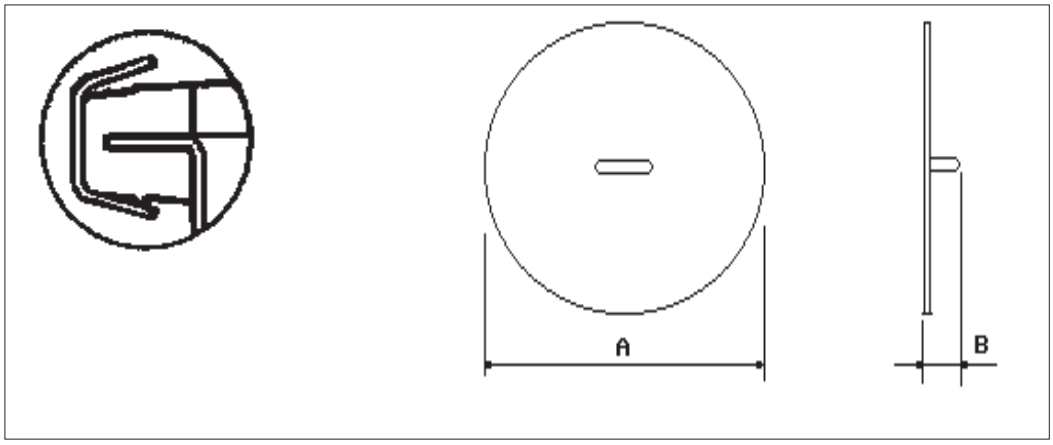

MDXCR	Suitable for - *Passend zu* Pour type - *Idoneo* MBF	A	B	kg
12	042	436	50	2
22	073 - 114	635	50	3

PNEUMATIC BALL VIBRATORS - *DRUCKLUFT-KUGELVIBRATOREN*
VIBRATEURS PNEUMATIQUES A BILLE - *VIBRATORI PNEUMATICI A SFERA*
"S"

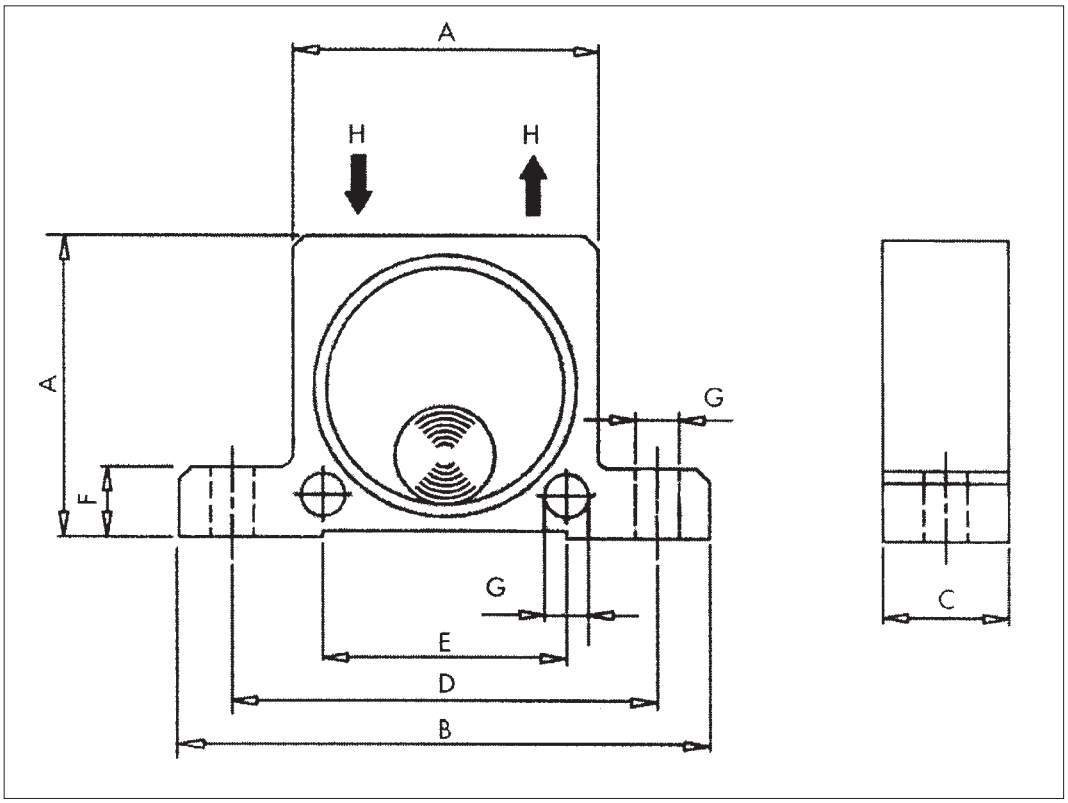

Dimensions - *Abmessungen* - Dimensions - *Dimensioni*

Type	A		B		C		D		E		F		G		H	kg	
	mm	in	mm	in	mm	in	mm	in	mm	in	mm	in	mm	in		kg	lbs
S 20	80	3.15	128	5.04	33	1.30	104	4.09	60	2.36	16	0.63	9	0.35	1/4¨	0.53	1.17
S 25					38	1.50										0.63	1.39

Performance data - *Leistungsdaten* - Performances - *Prestazioni*

Type	Vibrations - *Schwingungwen* Vibrations - *Vibrazioni* min			Fc max. kg						Air consumption - *Luftverbrauch* Consommation d'air - *Consumo d'aria* l/min					
	2 bar 29 psi	4 bar 58 psi	6 bar 87 psi	2 bar = 29 psi		4 bar = 58 psi		6 bar = 87 psi		2 bar = 29 psi		4 bar = 58 psi		62 bar = 87psi	
				kg	lbs	kg	lbs	kg	lbs	dm^3	cf	dm^3	cf	dm^3	cf
S 20	10.500	14.500	16.500	72	162	122	275	172	387	130	4.6	230	81	340	12.0
S 25	9.200	12.200	14.000	93	209	157	353	205	461	160	5.6	290	10.2	425	15.0

ELECTRIC EXTERNAL MOTOVIBRATORS - *ELEKTRISCHE VIBRATIONSMOTOREN*
MOTOVIBRATEURS EXTERNES ELECTRIQUES - *MOTOVIBRATORI ELETTRICI*
MVE

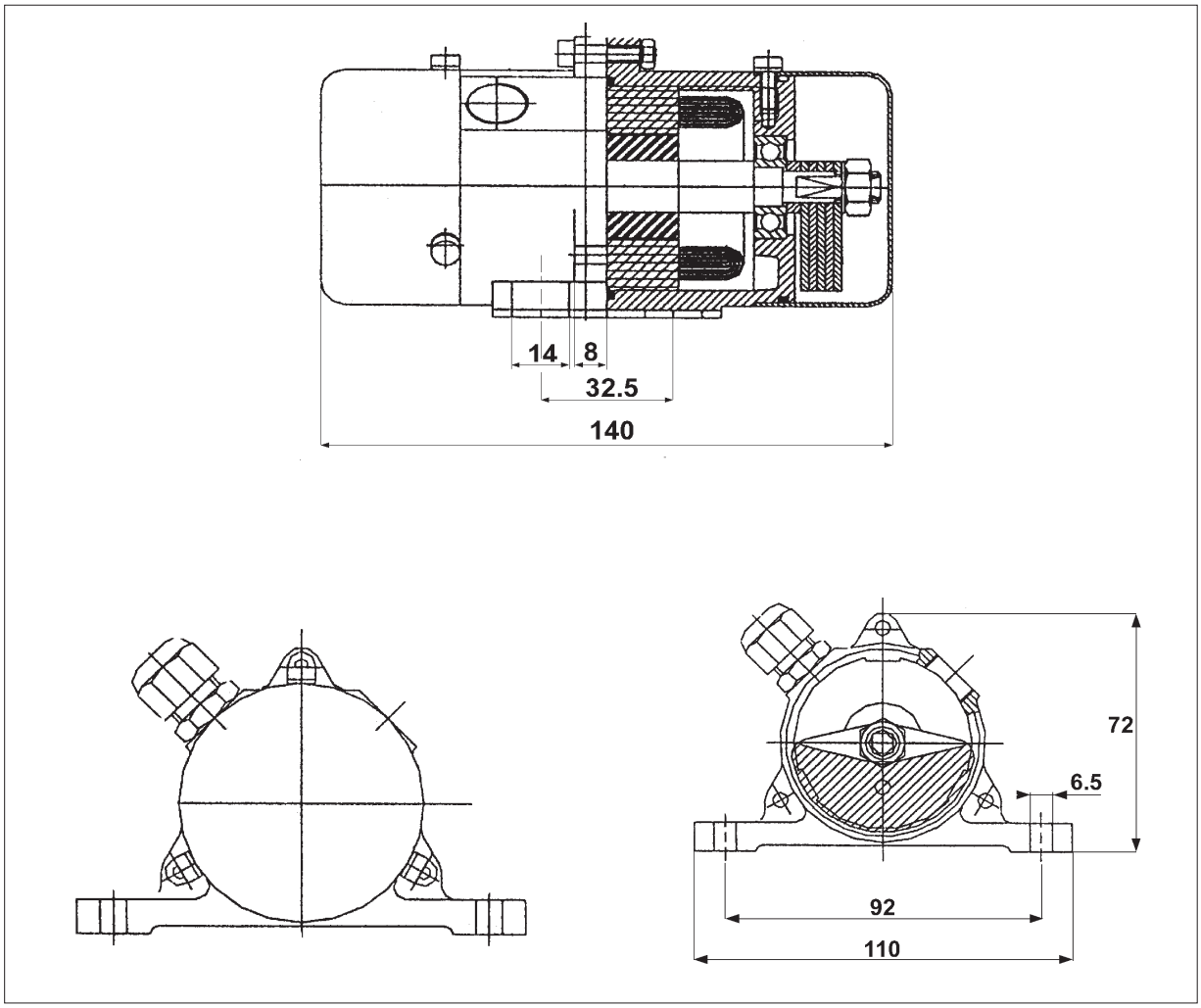

Type	Max. power *Max. Leistung* Puissance max. *Potenza max.* W		Max. current *Max. Stromaufnahme* Courant max. *Assorbimento max.* A		RPM *U/min* TPM *Giri/min*		Centrifugal force *Zentrifugalkraft* Force centrifuge *Forza centrifuga* kg		Weight *Gewicht* Poids *Peso*
	50 Hz	60 Hz	220 V 50 Hz	115 V 60 Hz	50 Hz	60 Hz	50 Hz	60 Hz	kg
MVE 20	32	36	0.10	0.23	2750	3300	0-22	0-32	1.5

TECNICAL FEATURES

- Adjustable Centrifugal Force
- Protection IP 65
- Insulation Class “F”
- Continuous Duty

TECHNISCHE MERKMALE

- Einstellbare Zentrifugalkraft
- Schutzart IP 65
- Iso-Klasse F
- 100% ED

CARACTERISTIQUES TECHNIQUES

- Force centrifuge réglable
- Protection IP 65
- Classe d’isolation F
- Service continu

CARATTERISTICHE TECNICHE

- Forza centrifuga regolabile
- Protezione IP 65
- Classe d’isolamento F
- Servizio continuo

SPECIAL BLENDING TOOLS - *SPEZIAL-HOMOGENISIERWERKZEUGE*
OUTILS DE HOMOGENEISATION SPECIAUX - *UTENSILI OMOGENEIZZAZIONE SPECIALI*

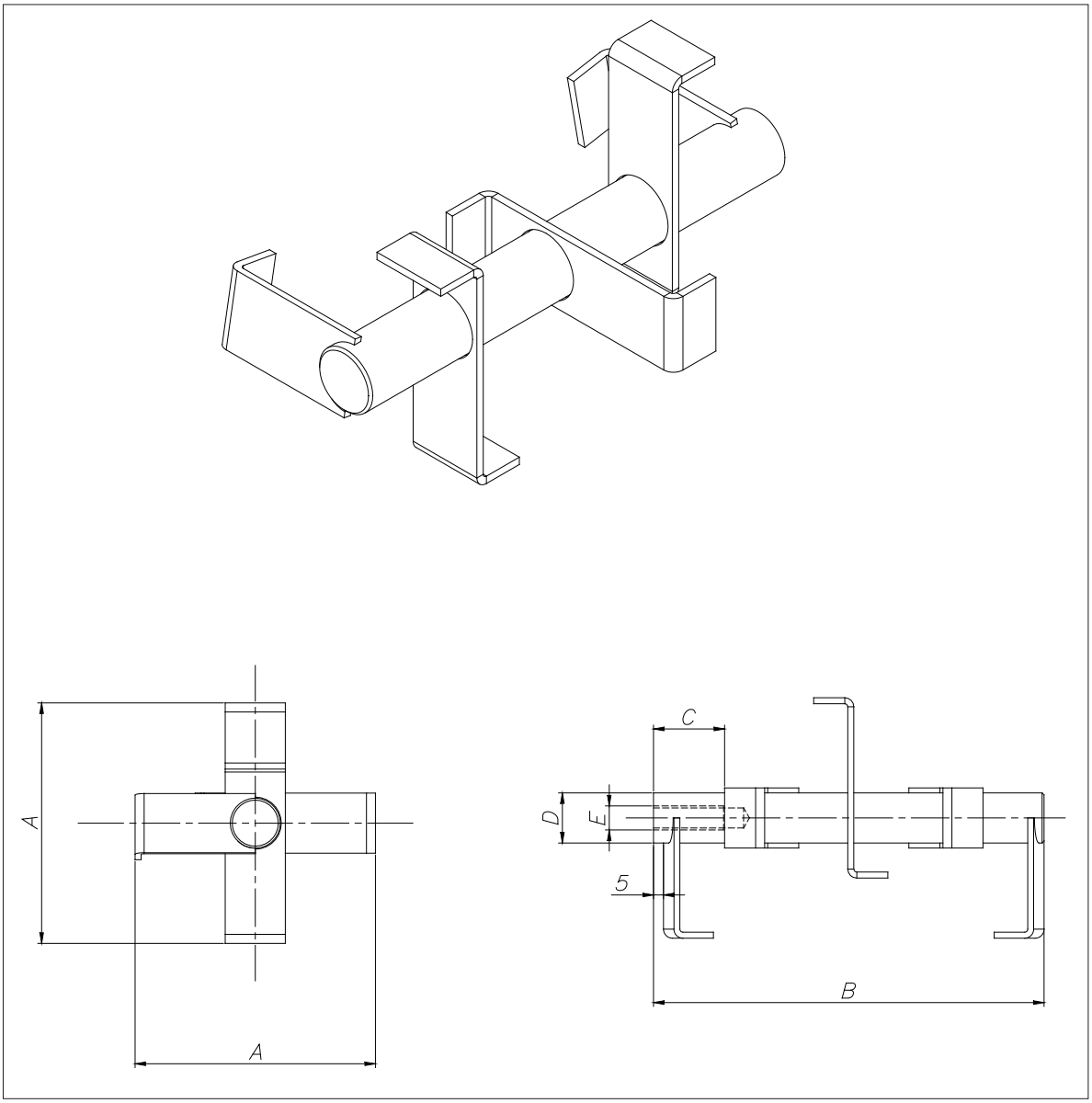

TYPE1

MBF	Code	A	B	D	E	kg
042	**UTO 12**	130	199	25	M 12	1
073	**UTO 13**	260	349	35	M 16	3.5
114	**UTO 13**	260	349	35	M 16	3.5

STD INSPECTION HATCH FOR AISI 304L MBF TYPE - ***STD INSPEKTIONSTÜR FÜR MBF IN EDELSTAHL 1.4301***
TRAPPE DE VISITE STD POUR MBF DANS AISI 304L - ***PORTELLO DI ISPEZIONE STD PER MBF IN AISI 304L***

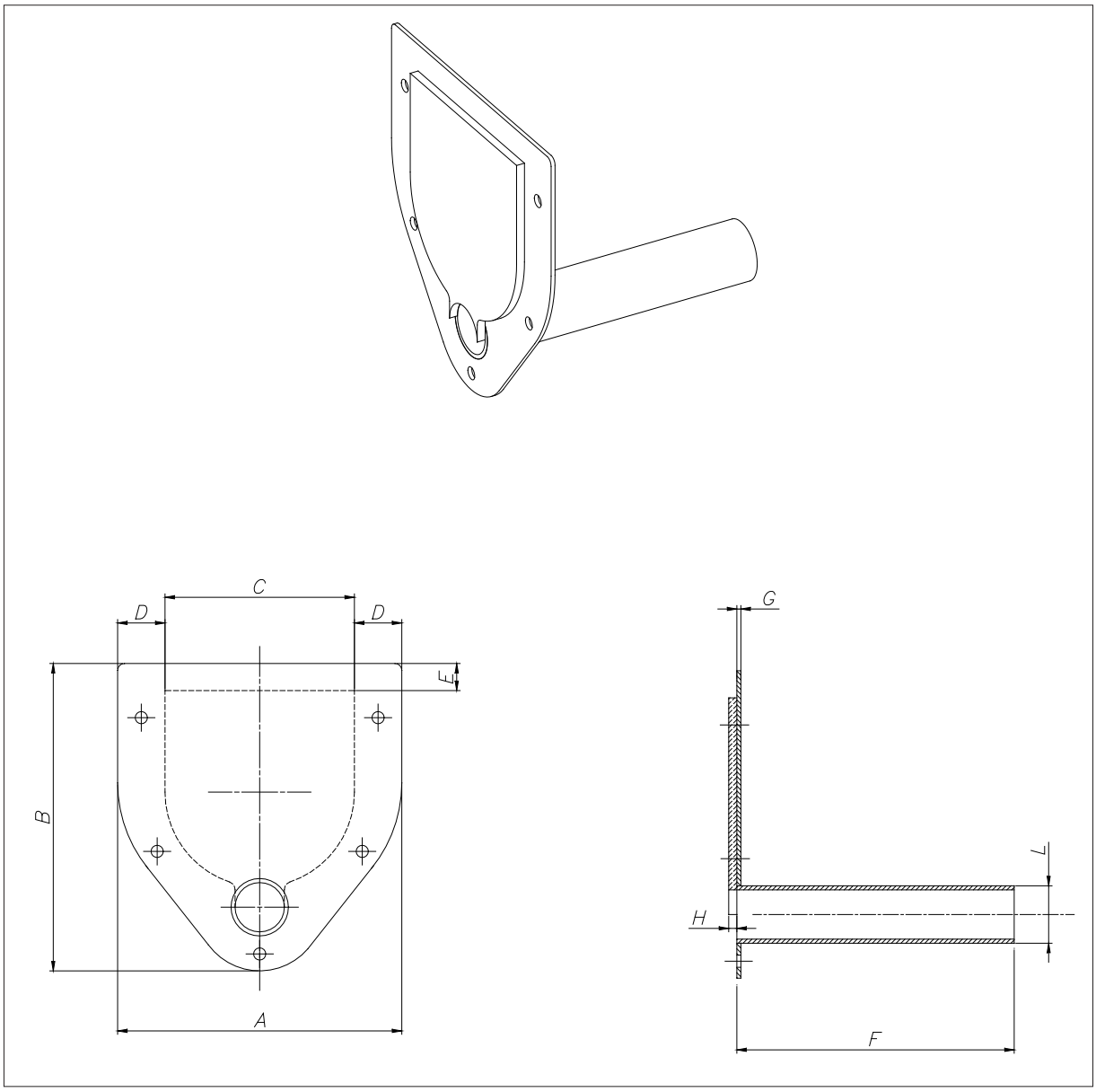

MBF	Code	A	B	C	D	E	F	G	H	Ø L	kg
042	**MBPI 2**	210	227	140	35	20	205	3	6	42	1.4
073	**MBPI 3**	345	395	275	35	20	255	3	6	76	5.6
114	**MBPI 4**	350	431	275	37	20	255	3	6	114	6.3

INSPECTION HATCH FOR AISI 304L MBF TYPE WITH EXTENDED TUBE
INSPEKTIONSTÜR FÜR MBF IN EDELSTAHL 1.4301 MIT* LÄNGLICH*ROHR
TRAPPE DE VISITE POUR MBF DANS AISI 304L AVEC TUBE PROLONGE
PORTELLO DI ISPEZIONE PER MBF IN AISI 304L CON TUBO PROLUNGATO

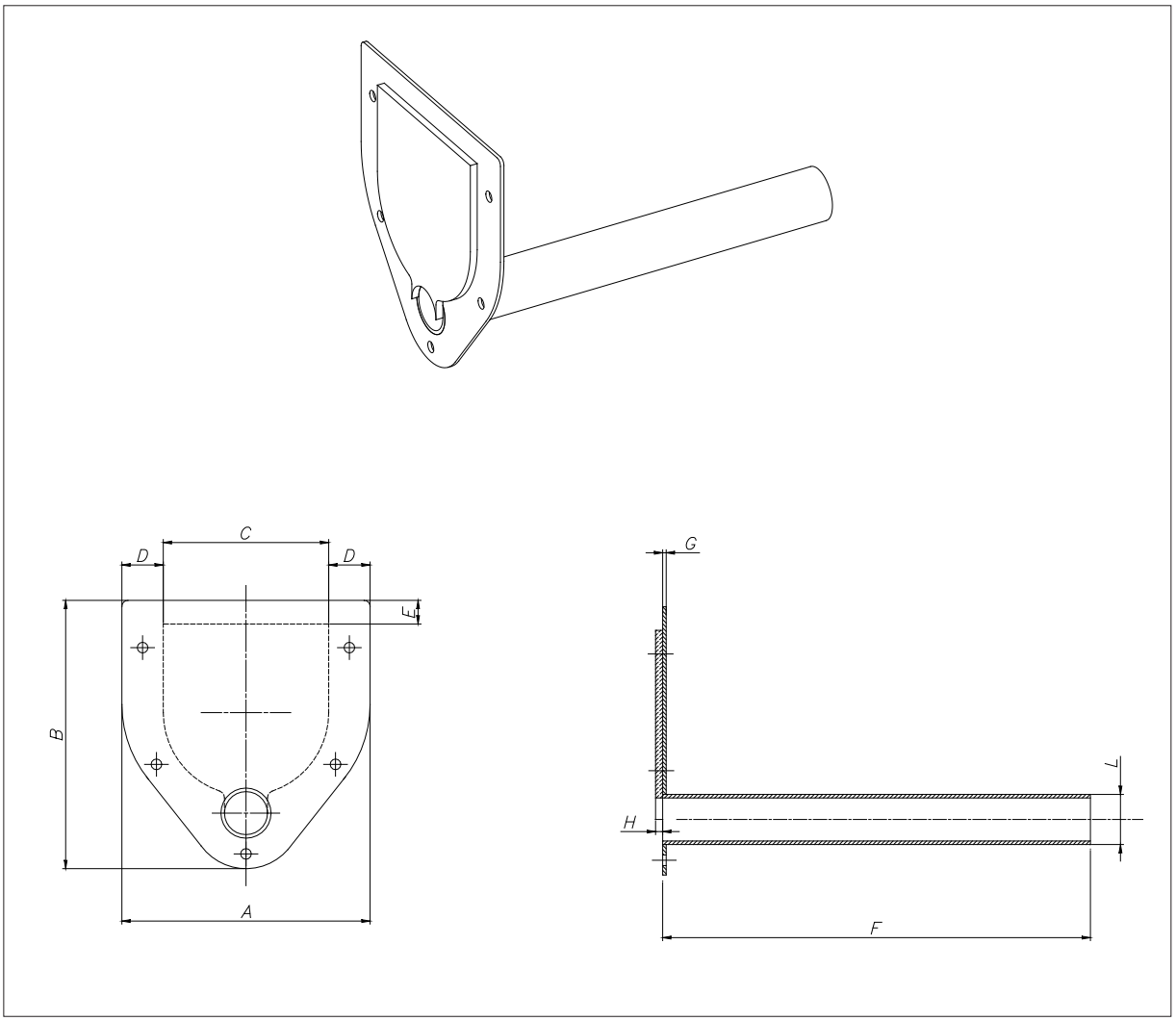

MBF	Code	A	B	C	D	E	F	G	H	Ø L	kg
042	**MBPIP 2**	210	227	140	35	20	362	3	6	42	1.8
073	**MBPIP 3**	345	395	275	35	20	505	3	6	76	6.8
114	**MBPIP 4**	350	431	275	37	20	505	3	6	114	7.4

FEEDER PIPE - *DOSIERROHR* - TUBE DE DOSAGE - *SCARICO*

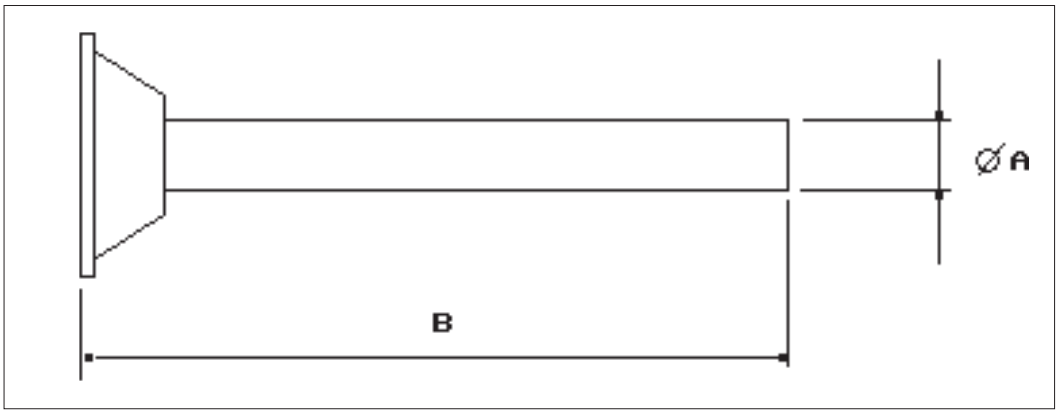

STANDARD FEEDER PIPE - *STANDARD DOSIERROHR* - TUBE DE DOSAGE STANDARD - *SCARICO STANDARD*				
Code	**Suitable for - *Passend zu* Pour type - *Idoneo per* MBF**	**Ø A**	**B**	**kg**
MBT 2	042	42	200	1.0
MBT 3	073	76	250	2.4
MBT 4	114	114	250	4.0

EXTENDED FEEDER PIPE - *VERLÄNGERTES DOSIERROHR* - SORTIE RALLONGEE - *SCARICO PROLUNGATO*				
Code	**Suitable for - *Passend zu* Pour type - *Idoneo per* MBF**	**Ø A**	**B**	**kg**
MBTP 2	042	42	370	1.2
MBTP 3	073	76	500	2.7
MBTP 4	114	114	500	4.4

LINERFEEDER PIPE - *DOSIERROHR MIT INNENAUSKLEIDUNG*
TUBE DE DOSAGE AVEC REVETEMENT INTERIEUR - *SCARICO INTERNAMENTE RIVESTITO*

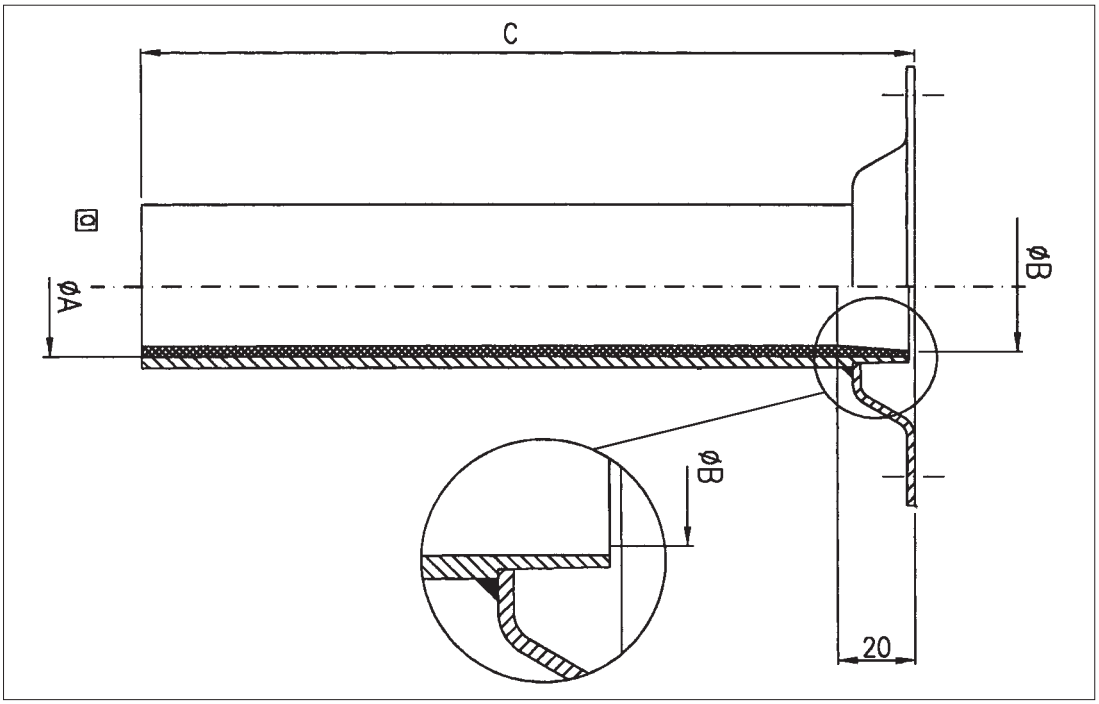

4 SINT®ER
5 SINT®AL

STANDARD LINED FEEDER PIPE - *STANDARD DOSIERROHR MIT INNENAUSKLEIDUNG* TUBE DE DOSAGE AVEC REVETEMENT INTERIEUR - *SCARICO STD INTERNAMENTE RIVESTITO*					
Code	**Suitable for - *Passend zu* Pour type - *Idoneo per* MBF**	**Ø A**	**Ø B**	**C**	**kg**
MBTR 2 .	042	31	34	200	1.2
MBTR 3 .	073	61	63	250	2.7
MBTR 4 .	114	101	104	250	4.4

4 SINT®ER
5 SINT®AL

EXTENDED LINED FEEDER PIPE - *VERLÄNGERTES DOSIERROHR MIT INNENAUSKLEIDUNG* TUBE DE DOSAGE RALLONGE AVEC REVETEMENT INTERIEUR - *SCARICO PROLUNGATO INTERNAMENTE RIVESTITO*					
Code	**Suitable for - *Passend zu* Pour type - *Idoneo per* MBF**	**Ø A**	**Ø B**	**C**	**kg**
MBTRP 2 .	042	31	34	370	1.6
MBTRP 3 .	073	61	63	500	3.2
MBTRP 4 .	114	101	104	500	5.2

VERTICAL SPOUT - *ABLAUFROHR* - SORTIE VERTICALE - *SCARICO VERTICALE*

M	D	X	S	V	2	4

4: SINT®ER
5: SINT®AL

2 = MBF 042
3 = MBF 073
4 = MBF 114

Vertical spout
Ablaufrohr
Sortie verticale
Scarico verticale

Micro-batch fedeer accessories
Zubehör Mikrodosierer
Accessoires microdoseur
Accessori microdosatore

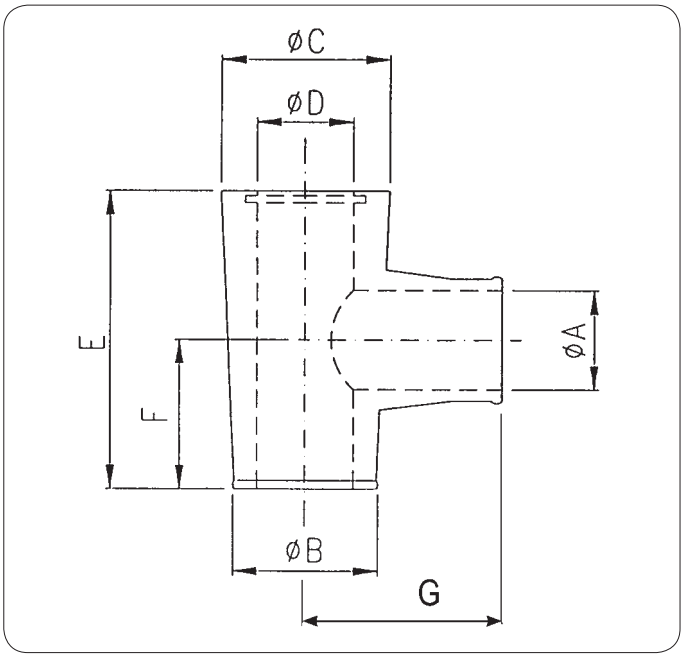

MDXSV	Suitable for - *Passend zu* Pour type - *Idoneo* MBF	Ø A	Ø B	Ø C	Ø D	E	F	G	kg
2.	042	42	60	70	50	126	63	81	0.27
3.	073	75	121	130	100	187.5	95	143.5	1.3
4.	114	114	175	190	150	230	115	191	3

4	SINT®ER
5	SINT®AL

VERTICAL SPOUT WITH PNEUMATIC CLOSURE - *ABLAUFROHR MIT PNEUMATISCHEM VERSCHLUSS*
SORTIE VERTICALE AVEC FERMETEURE PNEUMATIQUE - *SCARICO VERTICALE CON CHIUSURA PNEUMATICA*

M	D	X	S	C	2	4

4: SINT®ER
5: SINT®AL

2 = MBF 042
3 = MBF 073
4 = MBF 114

vertical spout with pneumatic cover
Ablaufrohr mit pneumatischem verschluss
Sortie verticale avec fermeteure pneumatique
Scarico verticale con chiusura pneumatica

Micro-batch fedeer accessories
Zubehör Mikrodosierer
Accessoires microdoseur
Accessori microdosatore

N.B.: Operation P_{max} 4 bar !
N.B.: Betrieb P_{max} 4 bar !
N.B.: P_{max} de travail 4 bar !
N.B.: P_{max} di lavoro 4 bar !

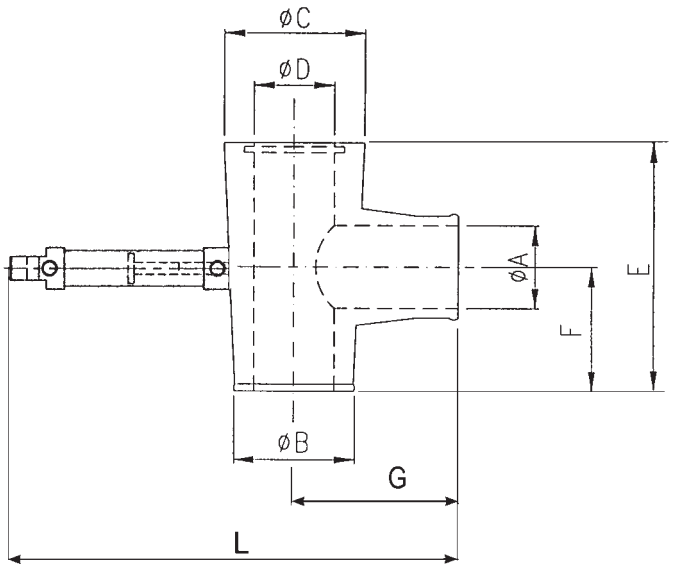

MDXSC	Suitable for - *Passend zu* Pour type - *Idoneo* MBF	Ø A	Ø B	Ø C	Ø D	E	F	G	L	kg
2.	042	42	60	70	50	126	63	81	214.5	0.5
3.	073	75	121	130	100	187.5	95	143.5	353.5	2.8
4.	114	114	175	190	150	230	115	191	472	4.5

4	SINT®ER
5	SINT®AL

Note: Microcylinder ISO 6432 - Anm.: Mikrozylinder ISO 6432
Remarque: Micro-cylindre ISO 6432 - *Nota: Microcilindro ISO 6432*

MAGENTIC SENSOR KIT FOR MICRO-CYLINDER - *MAGNETISCHES SENSORKIT FÜR MIKROZYLINDER*
KIT SENSEUR MEGNETIQUE POUR MICRO-CYLINDRE - *KIT SENSORE MAGNETICO RILEVAMENTO PER MICROCILINDRO*

KXM	Suitable for - *Passend zu* Pour type - *Idoneo* MBF
16	MDXSC2
20	MDXSC3
25	MDXSC4

AUTOMATIC LUBRICATOR | **AUTOMATISCHE SCHMIERVORRICHTUNG** | **GRAISSEUR AUTOMATIQUE** | **LUBRIFICATORE AUTOMATICO**

CARTRIDGE GREASE NIPPLE LIT - *SCHMIERPATRONENSATZ*
KIT GRAISSEUR CARTOUCHE - *KIT INGRASSATORE CARTUCCIA*

M D X I 125

- 125 — Capacity - *Kapazität* - Capacité - *Capacità*
- I — Grease nipple - *Schmiernippel* - Graisseur - *Ingrassatore*
- D — Micro-batch feeders accessories - *Mikrodosierer zubehör* Accessoires microdoseurs - *Accessori microdosatore*

TECHNICAL SPECIFICATIONS	
Capacity	125 ml
Operating period	Adjustable at 1-12 months
Operating temperature	-20°C a + 55°C°
Max. operating pressure	5 bar**
Activation mechanism	Hydrogen gas release battery (H2)
Threading	G 1/4
Recommended storage temperature	+20°C
Storage period	2 years***
Weight	Approx. 190g (including grease)
Appellative	LAGD 125/WA (filled with SKF LGWA 2 grease) LAGD 125/"lubricant"

TECHNISCHE DATEN	
Kapazität	125 ml
Betriebsdauer	Von 1 bis 12 Monate einstellbar
Betriebstemperatur	-20°C bis + 55°C°
Max. Betriebsdruck	5 bar**
Einschaltmechanismus	Wasserstoff freisetzende Batterie (H2)
Gewinde	G 1/4
Empfohlene Lagerhaltungstemperatur	+20°C
Lagerzeit	2 Jahre ***
Gewicht	circa 190 g (Fett inbegriffen)
Bezeichnung	LAGD 125/WA (mit Fett SKF LGWA 2 gefüllt) LAGD 125/"Schmierstoff"

CARACTÉRISTIQUES TECHNIQUES	
Capacité	125 ml
Période de fonctionnement	Réglable de 1 à 12 mois
Température de fonctionnement	-20°C a + 55°C°
Pression max. de fonctionnement	5 bar**
Mécanisme d'activation	Batterie à dégagement de gaz hydrogène (H2)
Filetage	G 1/4
Température conseillée pour le stockage	+20°C
Période de stockage	2 ans***
Poids	Env. 190jj (graisse incluse)
Désignation	LAGD 125/WA (avec le plein de graisse SKF LGWA 2 grease) LAGD 125/"lubrifiant"

DATI TECNICI	
Capacità	125 ml
Periodo di funzionamento	Regolabile da 1 a 12 mesi
Temperatura di funzionamento	-20°C a + 55°C°
Pressione max. di funzionamento	5 bar**
Meccanismo di attivazione	Batteria a sviluppo di gas idrogeno (H_2)
Filettatura	G 1/4
Temperatura consigliata per lo stoccaggio	+20°C
Periodo di stoccaggio	2 anni***
Peso	Circa 190g (grasso incluso)
Appellativo	LAGD 125/WA (riempito con grasso SKF LGWA 2) LAGD 125/"lubrificante"

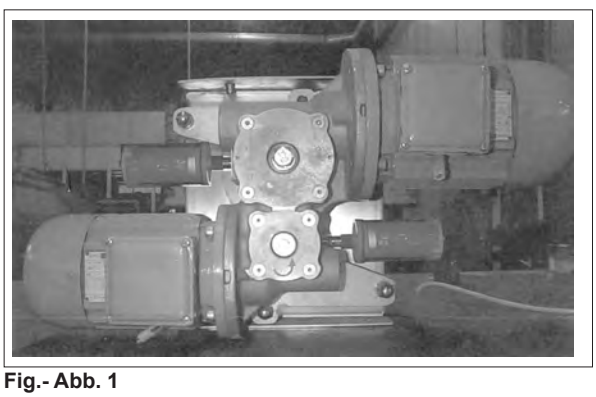

Fig.- Abb. 1
SKF assembly on Batch feeder - *Montage SKF auf Dosierer*
Montage SKF sur doseur - *Montaggio SKF su dosatore*

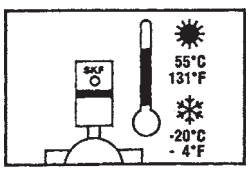

Operatin temperature - *Betriebstemperatur*
Température de fonctionnement
Temperatura di funzionamento

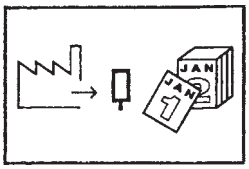

Production date - *Produktionsdatum*
Date de production - *Data di produzione*



MATERIAL TO DOSE
PHYSICAL AND CHEMICAL CHARACTERISTICS

- ☐☐ ☐☐ DENSITY
- ☐☐☐☐ GRANULOMETRY
- ☐ FLUIDITY
- ☐ ABRASIVITY
- ☐ BUILDS UP AND HARDENS
- ☐ STATIC ELECTRICITY GENERATOR
- ☐ DECOMPOSITION - DAMAGING
- ☐ FLAMMABILITY
- ☐ PLASTICITY - TENDENCY TO SOFTEN
- ☐ DUSTINESS
- ☐ AIRATED - FLUIDITY
- ☐ EXPLOSIVITY
- ☐ VISCOSITY - ADHESIVENENESS
- ☐ CONTAMINABILITY
- ☐ DEGRADABILITY
- ☐ PRESENCE OF TOXIC GAS
- ☐ HIGH CORROSIVITY
- ☐ MEDIUM CORROSIVITY
- ☐ HYGROSCOPICITY
- ☐ FORMATION OF GRANULES
- ☐ INTERLOCKS, AGGLOMERATES
- ☐ PRESENCE OF OILS AND GREASE
- ☐ TENDENCY TO COMPACT UNDER PRESSURE
- ☐ LIGHT AND SOFT
- ☐ HIGH TEMPERATURE

REQUEST CAPACITY (dm^3/h) ☐☐☐☐ (kg/h) ☐☐☐☐

TOLERANCE ☐ ☐

LOADING AND HOPPER CAPACITY

MBW MODEL

FEED SCREW AND AGITATOR ☐ ☐ R ☐

ACCESSORIES

MOTORS V Hz

NOTES

DOSIERMEDIUM
PHYSIKALISCHE UND CHEMISCHE EIGENSCHAFTEN

- ☐☐ ☐☐ SCHÜTTGEWICHT
- ☐☐☐☐ KÖRNUNG
- ☐ FLIESSFÄHIGKEIT
- ☐ ABRASIVITÄT
- ☐ HÄRTET LEICHT AUS
- ☐ LÄDT SICH STATICH AUF
- ☐ VERROTTET LEICHT
- ☐ LEICHT ENTZÜNDBAR
- ☐ PLASTIFIZIERT
- ☐ HOHE STAUBENTWICKLUNG
- ☐ HOHER LUFTANTEIL
- ☐ EXPLOSIV
- ☐ VISKOS, STARK HAFTEND
- ☐ LEICHT ZU VERUNREINIGEN
- ☐ ZERFALLT LEICHT
- ☐ ENTWICKELT GIFTIGE GASE ODER RAUCH
- ☐ SEHR KORROSIV
- ☐ HYGROSKOPISCH
- ☐ NEIGT ZUR KORN-ODER KLUMPENBILDUNG
- ☐ ÖL-ODER FETTHALTIG
- ☐ NEIGT ZUM ANBACKEN
- ☐ SEHR LEICHT
- ☐ HOHE TEMPERATUR

GEFORDERTE DURCHSATZLEISTUNG (dm^3/h) ☐☐☐☐ (kg/h) ☐☐☐☐

TOLERANZ %____*☐ ☐

ART DER BESCHICKUNG:
TRICHTERKAPAZITÄT:
BETRIEBSDAUER :(h/Tag)
EINSCHALTUNGEN PRO STUNDE:
WOHIN WIRD DOSIERT ?
WENN VARIABLE DURCHSATZLEISTUNG GEFORDERT, WARUM ?
DOSIERER TYPE:

DOSIER-/HOMOGENISIERWERKZEUG ☐ ☐ R ☐
ZUBEHÖR:

ELEKTROMOTOR (E) V Hz

BEMERKUNGEN :

MATERIAU A DOSER
CARACTERISTIQUES PHYSICO - CHIMIQUES

- ☐☐ ☐☐ POIDS SPECIFIQUE
- ☐☐☐☐ GRANULOMETRIE
- ☐ CORROSION
- ☐ ABRASIVITE
- ☐ DELATATION ET DURCISEMENT
- ☐ ENGENDRE DE L' ELECTRICITE STATIQUE
- ☐ DECOMPOSITION - DETERIOSATION
- ☐ IMFLAMABLE
- ☐ PLASTIQUE
- ☐ SOUPLE
- ☐ AERE - FLUIDE
- ☐ EXPLOSIF
- ☐ VISCOSITE
- ☐ CONTAMINABLE
- ☐ DEGRADABLE
- ☐ CREATION DE GAZ TOXIDE ET DE FUME NUISIBLE
- ☐ HAUTE CORROSION
- ☐ MOYEN CORROSION
- ☐ HYGROSCOPIQUE
- ☐ FORMATION DE GRANULE
- ☐ PRESENTE HUILE ET GRAISSE
- ☐ TASSEMENT SOUS PRESSION
- ☐ TRES LEGER
- ☐ TEMPERATURE ELEVEE
- ☐

DEBIT DEMANDE (dm^3/h) ☐☐☐☐ (kg/h) ☐☐☐☐

TOLERANCE ☐ ☐

SYSTEME DE CHARGEMENT ET CAPACITE DE LA TREMIE

MICRODOSEUR TYPE

VIS DOSAGE ET HO-MOGENEISATION ☐ ☐ R ☐

ACCESSOIRES

MOTEURS V Hz

NOTES

MATERIALE DA DOSARE
CARATTERISTICHE FISICO CHIMICHE

- ☐☐ ☐☐ PESO SPECIFICO
- ☐☐☐☐ GRANULOMETRIA
- ☐ SCORREVOLEZZA
- ☐ ABRASIVITA'
- ☐ ACCRESCIMENTO E INDURIMENTO
- ☐ GENERA ELETTRICITA' STATICA
- ☐ DECOMPOSIZIONE - DETERIORAMENTO
- ☐ INFIAMMABILITA'
- ☐ PLASTICITA ' - TENDENZA ALL'AMMORBIDIMENTO
- ☐ POLVEROSITA'
- ☐ AERAZIONE - FLUIDITA'
- ☐ ESPLOSIVITA'
- ☐ VISCOSITA' E ADESIONE
- ☐ CONTABILITA'
- ☐ DEGRADABILITA'
- ☐ CREAZIONE DI GAS TOSSICO DI FUMO NOCIVO
- ☐ ALTA CORROSIVITA'
- ☐ MEDIA CORROSIVITA'
- ☐ IGROSCOPICITA'
- ☐ FORMAZIONE DI GRANULI,INTRECCIAMENTI, E
- ☐ AGGLOMERATI
- ☐ PRESENZA DI OLII E GRASSI
- ☐ IMPACCAMENTO SOTTO PRESSIONE
- ☐ MOLTO LEGGERO E SOFFICE
- ☐ TEMPERATURA ELEVATA

PORTATA RICHIESTA(dm^3/h) ☐☐☐☐ (kg/h) ☐☐☐☐

TOLLERANZA ☐ ☐

SISTEMA DI CARICO E CAPACITA' TRAMOGGIA

MICRODOSATORE TIPO

UTENSILE DOSAGGIO E OMOG. ☐ ☐ R ☐

ACCESSORI

MOTORI V Hz

NOTE

N.B. Rights reserved to modify technical specifications
N.B. Angaben ohne Gewähr. Änderungen können ohne Vorankündigung vorgenommen werden.
N.B. Toutes données portées dans le présent catalogue n'engagent pas le fabricant. Elles peuvent être modifiéès à tout moment.
N.B. Tutti i dati riportati nel presente catalogo non sono impegnativi e possono subire variazioni in qualsiasi momento.

WAMGROUP S.p.A.
Via Cavour, 338
I - 41030 Ponte Motta
Cavezzo (MO) - ITALY

☎ +39 / 0535 / 618111
fax +39 / 0535 / 618226
e-mail info@wamgroup.it
internet www.wamgroup.com
videoconference + 39 / 0535 / 49032

CS-910-555 : Identification sheet

VWTC PROJECT NUMBER:	Iqaluit WWTP	REV:	02
PROJECT NAME:	5000218036	SUBMITTED TO (COMPANY):	
ENGINEER:	F.VINCI	SUBMITTED TO (RESPONSIBLE)	
PROJECT MANAGER:	C. BEKAERT	PROJECT NUM REFERENCE.:	
PHONE NUMBER:		LOT NUMBER:	

SUPPLIER	EQPT CODE	EQPT TAG NO	DIA	DESCRIPTION	INFO 1	INFO 2	INFO 3	APPLIC.	NOTE	REV
TIGER-VAC	TOIEGU317247	VAC-04-910		HP-500 HOISTING	POWERHEAD ASSEMBLY FOR EC-12 w/CLOTH FILTER // Manuf: Tiger-Vac // Model : EC-12 // Silencer 212440 // 240 Vac / 60Hz			HP-500		2

Model EC-12(G) HEPA electrically operated industrial vaccuum cleaner

With HEPA fi ltration for Wet & Dry recovery
Filtration effi ency of 99.99% on 0.3 microns

1



- Made of heavy-duty epoxy coated metal and mounted on a 4-wheel base
- Exhaust silencer for a quieter operation

Technical data	Performance	Recovery Capacity	Dimensions
220-240V/60Hz Watts: 1250 Amps: 5.5	Airflow: 110CFM Vacuum Pressure: 110" H_2O	12 gallons (46 litres)	Height: 32" (81 cm) Width: 22" (56 cm) Weight: 45 lbs (20.5 kg)

1. **Model EC-12** 220-240V
2. **Exhaust Silencer** (#212440)
3. **Complete tool kit:**

- HEPA Filter (#213146)
- Polyester main filter (#211311B)
- Floater shut-off mechanism (#211277)
- 10' crush-proof suction hose (#381137A)
- 2-piece wand (#381163)
- Floor tool for dry recovery (#381380)
- Floor tool for wet recovery (# 381381)
- Crevice tool (#381197)

2



Optional Exhaust Silencer

3



Optional

REVIEWED BY CONTRACTOR

Kudlik Construction Ltd.

NAME: Sandra Rousseau P.Eng

DATE: Jan 28, 2019

VEOLIA

SHOP DRAWINGS

Hydrapol 250 Submittal package Date : 2019-01-24

General Information			
Project	**WWTP UPGRADE - IQALUIT**		
Client:	Kudlik Construction Ltd.	Project Number	2018-062
To:	Sandra Rousseau P.Eng., Project Manger	E-mail:	srousseau@kudlik.biz
Contractor	Veolia Water Technologies Canad Inc.	Project Number	5000218036
Address	4105 Sartelon, Ville St. Laurent PQ, H4S 2B3		
Project Manger:	Clément Bekaert	E-mail:	clement.bekaert@veolia.com
Phone:	514-334-7230 x 3243	Cell:	514-246-6232

Information on the Equipment			
Specialty:	Process		
Equipment:	Hydrapol 250		
Drawing Reference:			
Specification reference:	46 36 11		
Article:			
Revision:	Rev02		
Titre:	HP 250 submittal package		
Numero client:	DA-Veolia-DS-05-Hydrapol 250		
Numero Veolia	5000218036_DS_0005_PM_VWT		
Envoyer pour:	Approbation/Information:	Approbation	

STANTEC PROJECT #: 110126045

SUBMITTAL # DA-Veolia-DS-05-Hydrapol 250_Rev02

This review by Stantec is for general conformance with the design concept of Stantec's design of the:

☑ Process ☐ Electrical
☐ Structural ☐ Other
☐ Mechanical

component(s) only and does not mean that Stantec has verified or approves the shop drawing(s). The Contractor remains solely responsible for the shop drawing(s) and this review by Stantec does not relieve the Contractor of the Contractor's responsibility for errors or omissions in the shop drawing(s) or for meeting all requirements of the contract documents. This review does not mean that Stantec approves the detailed design inherent in the shop drawing, responsibility for which shall remain with the Contractor submitting same, nor does this review mean that Stantec accepts any deviation of the shop drawing(s) from the contract documents. The Contractor is responsible for confirming all dimensions and correlating them at the job site, for all construction means, methods and techniques, and for coordination of construction work of all trades, including coordination of all shop drawings.

Stantec

☑ REVIEWED
☐ REVIEWED, AS NOTED
☐ REVISE AND RESUBMIT
☐ NOT REVIEWED

DATE January 28, 2019

BY Alejandro Rojas, P.Eng

Consultant Approval

SHOP DRAWINGS ARE REVIEWED UNLESS NOTED OTHERWISE

REVIEWED AS MODIFIED [X]

REVISE & RESUBMIT [ ]

SEAL & SIGNATURE REQUIRED [ ]

Stantec

DATE 02.28.2019

SIGNATURE

REVIEW BY STANTEC IS FOR THE SOLE PURPOSE OF ASCERTAINING GENERAL CONFORMITY WITH DESIGN. CONTRACTOR IS RESPONSIBLE FOR DIMENSIONS, FABRICATION AND CONSTRUCTION METHODS, COORDINATION OF SUB-TRADES, DETAIL DESIGN OF COMPONENTS, AND ERRORS OR OMISSIONS ON SHOP DRAWINGS.

Ensure that the correct voltage is specified when ordering Solenoid valves.

4105 Sartelon
Ville St. Laurent, PQ
H4S-2B3

Phone: 514-334-7230
Fax: 514-334-5070
www.veoliawatertechnologies.ca

Project:	IQALUIT
Project#:	5000218036
Document #:	5000218036_DS_0005_PM_VWT
by:	BB
chkd:	GH
appvd:	CB

SUBMITTAL PACKAGE - REV 2

HYDRAPOL 250

Project:	IQALUIT
Project#:	5000218036
Document #:	5000218036_DS_0005_PM_VWT
by:	BB
chkd:	GH
appvd:	CB

HYDRAPOL 250

PROCESS DATASHEET

OIM manual section: 4.3.5.1

1	VEOLIA					VWT CANADA #	PDS_0005_HYDP-250		
2						Project #	5000218036		
3						Date	2018-09-11		
4						HYDRA-POL			
5	CLIENT	REV	DESCRIPTION		DATE	By	Chkd	App.	
6		1	FOR APPROVAL		2018-09-11	G.H.	C.B.	G.P.	
7	CITY OF IQALUIT	2	FOR APPROVAL		2019-01-24	F.V.	C.B.	G.P.	
8		3							
9	PROJECT	4							
10	IQALUIT	5							
11		6							
12		7							
13		TAG:	APPLICATION :						REV
14	GENERAL	Manufacturer				VEOLIA WATER TECHNOLOGIES CANADA			
15		Model Serie				HP250			
16		VEOLIA Model Number				HP250S-CT-MBF-VC100F-AB575T-S2W-AAS-SSCEP-AC44			
17	PROCESS REQUIREMENT	Powder Type			-	Anionic Polymer			
18		Solution Concentration			%	0,25%			
19		Powder Density			kg/L	0,8			
20		Recommended Maturation Time			min	90			
21		Min Flowrate			lph	6			
22		Avg Flowrate			lph	25			
23		Max Flowrate			lph	40,8			
24	ENVIRONMENT	Equipment Location				Indoor			
25		Min. Temperature			°C	2			
26		Max . Temperature			°C	38			
27		Max. Humidity			%	95			
28		Corrosive Atmosphere				Non Corrosif			
29		Freeze				N/A			
30		Comments							
31	SAFETY	Electrical Classification				Non Hazardous Area			
32		Province				Nunavut			2
33	OPERATING CONDITIONS	Batch size			L	*288*			
34		Kg / batch			Kg	*0,72*			
35		Theoretical feeder cap/rev			Kg/rev	*0,09867*			
36		Feeder rpm			rpm	*24,8*			
37		Effective mass flowrate			kg/min	*1,83*			
38		Pre-rinsing time			min	*1,9*			
39		Dosing time			sec	*23,6*			
40		Maturing time (incl transf)			min	60			
41		Emptying time			min	0,49			
42		Total time			min	61,8			
43	TECHNICAL DESCRIPTION	Mechanical Components	Skid Frame	Manufacturer | Model	- | -	VWTC	LATIS#		
44				Material	-	SS304			
45				Color	-	N/A			
46				Dry Polymer Storage Type	-	Vacuum Conveyor & Hopper			
47			Vacuum Conveyor	Manufacturer | Model	- | -	Tiger-Vac			
48			-	Manufacturer | Model	- | -		Motor Head EC-12 (210951)		
49			Dry Feeder	Manufacturer | Model	- | -	WAM	MBF 073 I:70 4-5-D-E//575V//NEMA		
50				Motor's Manufacturer |Type	-	BALDOR	NEMA		2
51				Horsepower	HP	0.75	0.5		
52			Eductor	Manufacturer | Model	- | -	SCHUTTE&KOERTING	1,5"- Fig264 PVC Eductor		
53				Material		PVC			
54			Maturation Mixer	Manufacturer | Model	- | -	ENVIREQUIP / NORD	HP250-EVG01-0.33		
55				Motor's Manufacturer |Type	-	NORD			
56				Horsepower	HP	0.33			
57			Maturation Tank	Manufacturer | Model	- | -	VWTC			
58				Material |Nominal Capacity	- | L	304L S.S.	250		
59				Transfer Type		Stacked Maturation Tank			
60			Storage Tank	Manufacturer | Model	- | -	VWTC			
61				Material |Nominal Capacity	- | L	304L S.S.	250		
62			Tanks Location / Feeder			Right (Standard)			
63			Isolation Valve - Driving Water	Manufacturer | Model	-	CHEMLINE	21A010EC		
64				Diameter | Quantity	-	1"	1		
65			Solenoid Valve - Driving Valve	Manufacturer | Model	120VAC	ASCO	8210G004-120VAC		
66				Diameter | Quantity	-	1"	1		
67			Metering Valve- Wetting Cone	Manufacturer | Model	-	CHEMLINE	SM2A005ES		
68				Diameter | Quantity	-	1/2"	1		
69			Solenoid Valve - Feeder	Manufacturer | Model	120VAC	ASCO	8345G001-120VAC		
70				Diameter | Quantity	-	1/4"	1		
71			Actuated Transfer Valve	Manufacturer | Model	120VAC	CHEMLINE	57A020AEL-A/ER20.12		
72				Diameter | Quantity	-	2"	1		
73			Check Valve- Liquid Polymer	Manufacturer | Model	-	CHEMLINE	BTA015EC		
74				Diameter | Quantity	-	11/2"	1		
75			Isolation Valve- Tank Outlet	Manufacturer | Model	-	CHEMLINE	21A015EC		
76				Diameter | Quantity	-	11/2"	1		
77			Isolation Valves- Tanks Drains	Manufacturer | Model	-	CHEMLINE	21A015EC		
78				Diameter | Quantity	-	1 1/2"	2		
79			Static Mixer	Manufacturer | Model	-	KOFLO	1,5-40C-4-6-2		
80				Diameter | Quantity	-	1.5"	1		
81			Tuyauterie	VWTC Piping Class Code	-	A050C			
82				Pipe Material	-	PVC sh80			
83				Design Pressure	psig	80			2
84				Design Temperature	°C	38			
85				Operating Pressure	psig	65			
86				Test Pressure	psig	120			2
87				Test duration	min	60			
88				Test Fluid	-	Eau			

1	VEOLIA					VWT CANADA #		PDS_0005_HYDP-250		
2						Project #		5000218036		
3						Date		2018-09-11		
4						HYDRA-POL				
5	CLIENT	REV	DESCRIPTION			DATE	By	Chkd	App.	
6		1	FOR APPROVAL			2018-09-11	G.H.	C.B.	G.P.	
7	CITY OF IQALUIT	2	FOR APPROVAL			2019-01-24	F.V.	C.B.	G.P.	
8		3								
9	PROJECT	4								
10	IQALUIT	5								
11		6								
12		7								
13		TAG:	APPLICATION :							REV
89	TECHNICAL DESCRIPTION	ELECTRICITY, INSTRUMENTATION & CONTROLS	INSTRUMENTS	Hopper Low Level Switch	Manufacturer | Model	24 VDC	Endress&Hauser	FTE31-C6DB11-A		
90					Diameter | Quantity		MNPT 1-1/2	1		
91				Service Water Pressure Switch	Manufacturer | Model		Allen-Bradley	836T-T253J		
92					Diameter | Quantity		1/4" MNPT	1		
93				Service Water Pressure Gauge	Manufacturer | Model		Ashcroft 2.5"	25-1009SWL-02L-0/160PSIG + Glycerine		
94					Diameter | Quantity		N/A	1		
95				Tanks Level Transmitter	Manufacturer | Model	24 VDC	Endress&Hauser (Pressure)	PMC21-CA1V1ECVXJJ		
96					Diameter | Quantity		1/2" MNPT	2		
97				HYDRASTAT	Manufacturer | Model		Hach	D3725E2T		
				HYDRASTAT controller	Manufacturer | Model	120 VAC	Hach	LXV404.99.00552		
98			CONTROL PANEL	PLC	Manufacturer | Model		Allen-Bradley	CompactLogix L16 (1769L16ERBB1B)		
99				HMI	Manufacturer | Model		Allen-Bradley	PanelView Plus 7 400 (2711PT4W21D8S)		
100					HMI Screen Size		4"			
101				Panel Enclosure	Material | Enclosure Rating		Painted steel	NEMA-4		
102			ELECTRICITY	Power Supply	Voltage | Amps		575V/3Ph/60Hz	30 Amps		
103				Frame Grounding			By others			
104				Wiring	Pre wired (Yes/No)		Yes			
105					Cable Type		TECK 90-Armoured Cable			
106	UTILITIES	Service Water for Chemical Transport		Required Driving Water Flowrate		m^3/h	5.2			
107				Min. Pressure (in operation at Qmax)		psig	70			
108				Residual Chlorine Concentration		mg Cl_2/L	<0.5 mg Cl2/L			
109				Driving Water Temperature Range		Deg C	10 deg C <T<25 deg C			
110	CONNECTIONS	Driving Water Inlet			Diameter (NPS)	in	1"			
111					Type		Socket Union			
112		Storage Tank Outlet			Diameter (NPS)	in	1-1/2"			
113					Type		Socket Union			
114		Drain			Diameter (NPS)	in	1-1/2"			
115					Type		Socket Union			
116		Overflow			Diameter (NPS)	in	2"			
117					Type		By others			
118		Anchors			Qty		See General Arrangement DWG			
119					Supply		By others			
120	CODE, APPROVAL & TESTS	Piping Design Code					ASME B31.3 Non Certified			
121		Control Panel Approval					CSA/cUL			
122										
123	OVERALL DIMENSIONS AND WEIGTH	Weight (dry)				kg	See General Arrangement DWG			
124		Overall Length				mm				
125		Overall Width				mm				
126		Overall Heigth				mm				

Project:	IQALUIT
Project#:	5000218036
Document #:	5000218036_DS_0005_PM_VWT
by:	GH
chkd:	GP
appvd:	CB

HYDRAPOL 250

SUPPLIER TECHNICAL DATASHEETS

OIM manual section: 4.3.5.2

CS-300-2003 : Identification sheet

VWTC PROJECT NUMBER:	Iqaluit WWTP	REV:	01
PROJECT NAME:	5000218036	SUBMITTED TO (COMPANY):	
ENGINEER:	G. HÉBERT	SUBMITTED TO (RESPONSIBLE)	
PROJECT MANAGER:	C. BEKAERT	PROJECT NUM REFERENCE.:	
PHONE NUMBER:		LOT NUMBER:	

SUPPLIER	EQPT CODE	EQPT TAG NO	DIA	DESCRIPTION	INFO 1	INFO 2	INFO 3	APPLIC.	NOTE	REV
CHEMLINE	VABFPV352256	BV-04-743	50 mm (2")	HP-250 VALVE	TYPE: BUTTERFLY | 150 PSI//MANUFACTURER : CHEMLINE//MODEL : 57A020AEL-A / ER20.12//CONNECTION TYPE : WAFER | //BODY : PVC// SEAL | SEAT :EPDM | EPDM// STEM : 403 SS	ACTUATOR TYPE : ELECTRIC// MANUFACTURER : CHEMLINE// MODEL # :ER20.12// 115/220 VAC		HP-250		1

PDF Published December 13, 2017

Type 57α/56/75 Wafer Elastomer Seated Butterfly Valves

CHEMLINE PLASTICS
SUPERIOR FLOW SOLUTIONS

Chemline elastomer seated butterfly valves have a successful history of over 40 years and have replaced metal valves in many difficult process applications. Type 57α body, disc and seat are designed to offer excellent flow characteristics and low closing torques. Stem torques are unaffected by excessive flange bolt torques. Valves up to 16" have corrosion resistant FRP gear operators. Top flange and shaft dimensions are to ISO 5211 standard for easy mounting of actuators. A large selection of body, disc and seat materials permit these valves into a wide range of on/off and throttling control applications in lines up to 24" size.

PVC PP PVDF PDCPD[1]

CRN Registered Consult Chemline

NSF[3] Certified to NSF/ANSI 61

BODY TYPE: Type 57α: 1-1/2" – 14"
Type 56: 16"
Type 75: 18" – 24"

MATERIALS: Body: PVC, PP, PVDF, PDCPD[1]
Disc: PP (standard), PVC, PVDF

SEAT & O-RINGS: EPDM, FKM (Viton®)[2]



Gear Operated
- 8" to 24"

Lever Operated
- 1-1/2" to 8"

features

Compact and Light Weight

High Corrosion Resistance
- Solid plastic body and disc
- Polypropylene hand levers up to 8"
- FRP gear operators up to 16"

Abrasion Resistant
- Solid plastic disc
- PVDF disc available for high abrasion resistance

Easy Actuator Mounting
- Valves up to 16" have standard ISO 5211 top flange and shaft dimensions

Easily Installed
- Full bolt hole circle makes installation and alignment easy

Better Sealing
- Spherical disc/seat seal design offers effective sealing at lower stem torques, and long life for the seat

Better Flow
- Streamlined disc offers higher C_V values

Protection against Flange Bolt Over Tightening
- Body gussets and new seat design prevent excessive flange bolt torques from affecting valve stem torques

CRN Registration numbers by province
- Ontario: OC11045.5
- Newfoundland: OC11045.50
- Saskatchewan/Manitoba/Quebec: OC11045.56
- New Brunswick: OC11045.57
- Nova Scotia: OC11045.58
- P.E.I.: OC11045.59
- British Columbia: not required
- Alberta: not required[4]

[1] PDCPD=Polydicyclopenthadiene.
[2] Other materials are available.
[3] Type 57α PVC valves are certified under NSF/ANSI Standard 61 for contact with drinking water.
[4] Not required for non-expandable fluids.

12/17 ©Chemline Plastics Limited 2017
Chemline is a registered trade mark of Chemline Plastics Limited

Type 57α Butterfly Valves 1-1/4" to 14"

engineered for superior performance

Polypropylene Hand Lever
- Lockable

Sturdy PPG Position Lock
- 19 stops for fine flow control
- Resists high torque loads

Full Bolt Circle
- For easy installation

Gussets on Body
- Prevent excessive compression of seat



Deluxe FRP Gear Operator
- Yellow position indicator is NAMUR design for easy mounting of a limit switch box
- IP 67 enclosure resists short term immersion



Moulded Elastomer Seat
- Easily replaceable
- Flange face has raised "o-ring" profile
  – *Low flange bolt torques to seal*

Special Sealing Design
- Seals and disc have spherical sealing surfaces
  – *Lower stem torques to seal*
  – *Longer seat life compared to conventional designs*

PP Bushing with Double O-Rings
- Proven superior shaft seal design

Streamlined Disc
- High C_V values
- Good flow characteristics, important for control applications

Shaft O-Ring
- For vacuum resistance

Stainless Steel Shaft
- Not wetted
- Engagement over full length of the disc



Type 57α Butterfly Valves 1-1/4" to 14"

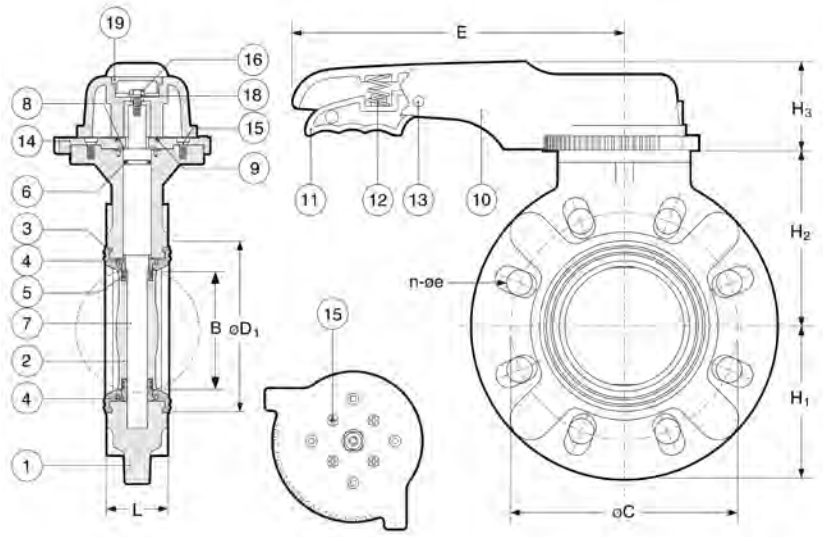

1-1/2" – 8" Lever Operated

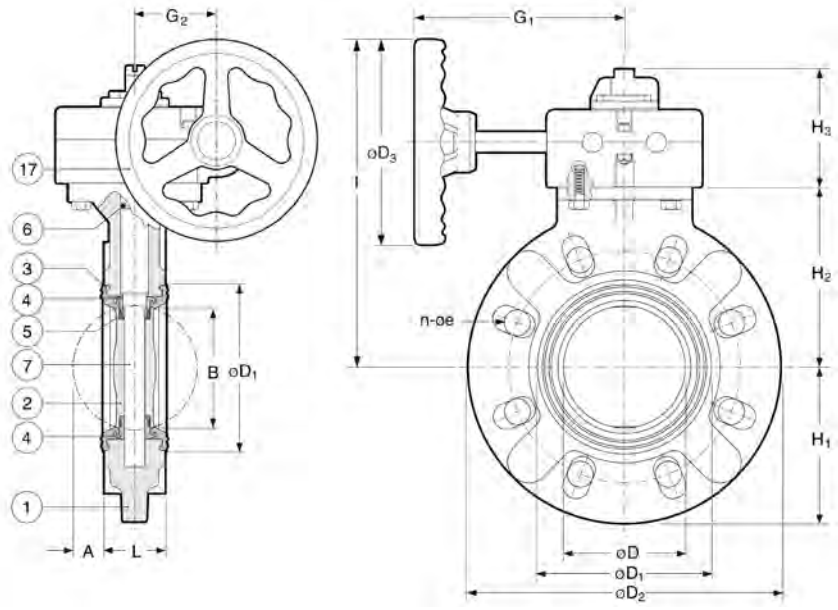

8" to 14" Gear Operated

PARTS

▲ Recommended Spare Parts

No.	Part	Pcs.	Materials
1	Body	1	PVC, PP PVDF, PDCPD[1]
2	Disc	1	PP, PVC, PVDF
3▲	Seat	1	EPDM, FKM (Viton®)
4	Seat Bushing	2	PP, PVC, PVDF
5▲	Bushing O-Ring	4	EPDM, FKM (Viton®)
6▲	Shaft O-Ring	1	EPDM, FKM (Viton®)
7	Shaft	1	403 SS
8	Shaft Retainer	1	PP
9▲	Plate O-Ring	1	EPDM, FKM (Viton®)
10	Hand Lever	1	PP
11	Trigger	1	PPG
12	Spring	1	304 SS
13	Pin	1	PPG
14	Position Lock Plate	1	PPG
15	Plate Screw	4	304 SS
16	Hand Lever Bolt	1	304 SS
17	Gear Operator	1	FRP housing, PP handwheel & 304 SS shaft
18	Handle Lever Washer	1	304 SS
19	Hand Lever Cap	1	PPG

[1] PDCPD=Polydicyclopenthadiene.

DIMENSIONS INCHES

Size	L	A	B*	C	n	e	D	D_1	D_2	D_3	E/G_1	G_2	H_1	H_2	H_3	I
1-1/2"	1.54	0.12	0.87	3.88	4	0.62	1.77	2.80	5.91	–	8.7	–	3.0	3.9	2.2	–
2"	1.65	0.28	1.46	4.75	4	0.75	2.20	3.19	6.50	–	8.7	–	3.3	4.3	2.2	–
2-1/2"	1.81	0.46	2.03	5.50	4	0.75	2.72	3.74	7.28	–	8.7	–	3.6	4.7	2.2	–
3"	1.81	0.61	2.43	6.00	4	0.75	3.03	4.13	8.31	–	9.8	–	4.2	5.3	2.2	–
4"	2.20	0.91	3.36	7.50	8	0.75	4.02	5.28	9.37	–	9.8	–	4.7	5.9	2.2	–
5"	2.60	1.24	4.36	8.50	8	0.88	5.08	6.65	10.35	–	12.6	–	5.2	6.6	2.7	–
6"	2.80	1.56	5.20	9.51	8	0.88	5.91	7.48	11.22	–	12.6	–	5.6	7.2	2.7	–
8" Lever	3.43	2.13	6.87	11.75	8	0.88	7.68	9.53	13.39	–	15.8	–	6.7	8.4	2.7	–
8" Gear	3.43	2.13	6.87	11.75	8	0.88	7.68	9.53	13.39	6.3	6.6	2.5	6.7	8.1	3.6	12.64
10"	4.41	2.72	8.80	14.25	12	1.00	9.84	11.89	16.57	6.3	6.6	2.5	8.3	9.5	3.6	14.02
12"	5.08	3.43	10.79	17.00	12	1.00	11.93	14.17	19.21	11.8	9.5	3.9	9.6	11.7	4.3	19.29
14"	5.08	4.37	12.85	18.75	12	1.12	13.82	15.47	21.22	11.8	9.5	3.9	10.6	12.8	4.3	20.35

* **B**=Minimum inside diameter (I.D.) of mating pipe. If I.D. of pipe is **B** dimension or less, the inside of pipe and must be chamfered or spacers provided. Consult Chemline.

Type 56/75 Series Butterfly Valves 16" to 24"

New PDCPD bodies have full thickness design

- Prevents excessive compression of seat if flange bolts are over torqued

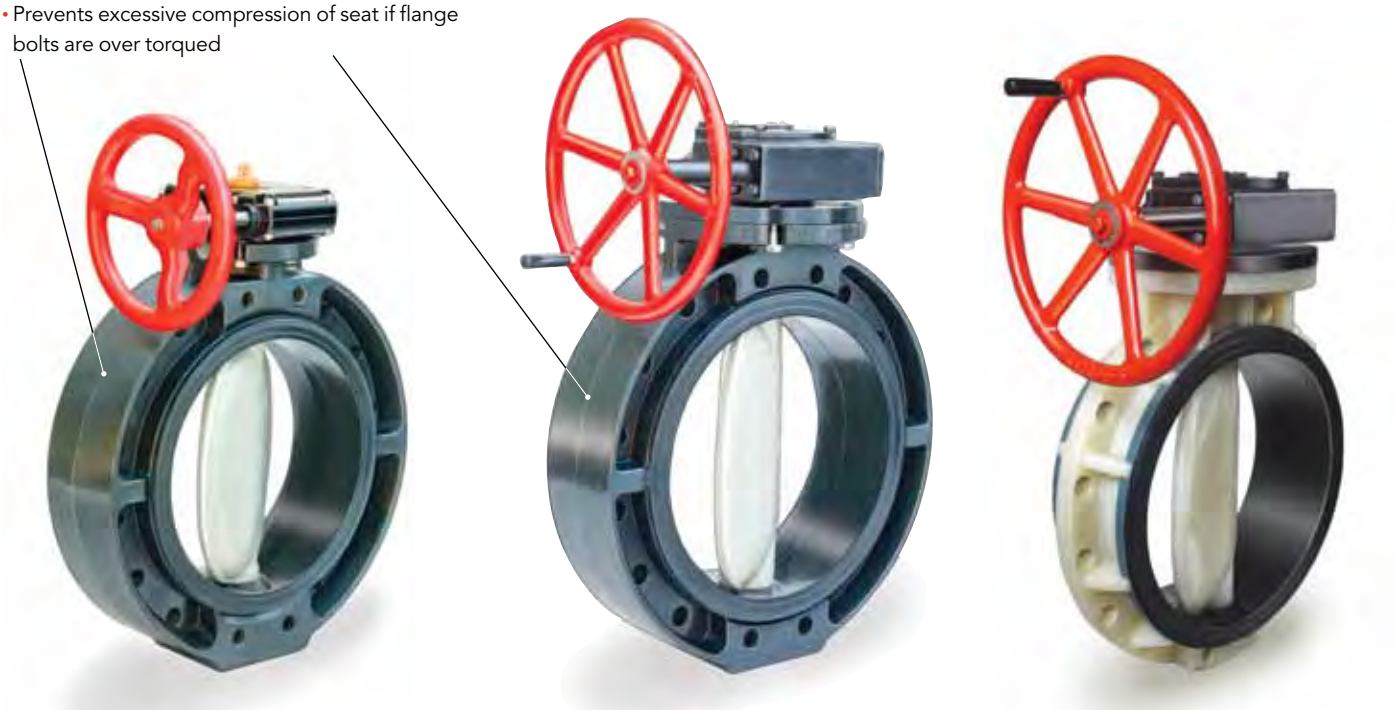

16" Type 56 with PDCPD body, PP disc

18" to 24" Type 75 with PDCPD body, PP disc

18" to 24" Type 75 with PVDF body, PVDF disc

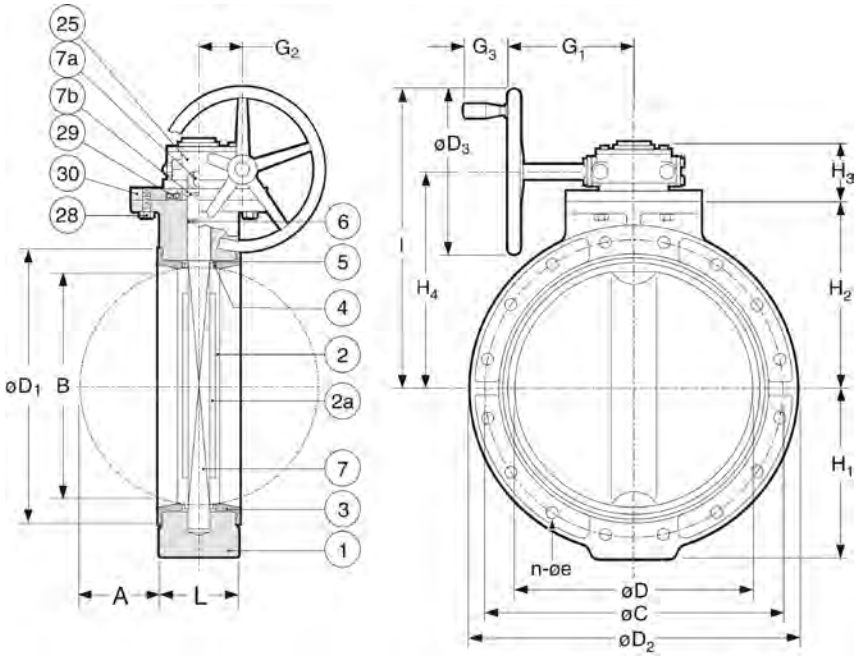

Drawing body detail is for PDCPD version. Detail for PP and PVDF body versions are slightly different. Consult Chemline.

PARTS

▲ Recommended Spare Parts

No.	Part	Pcs.	Materials
1	Body	1	PDCPD[1], PP, PVDF
2	Disc	1	PP, PVDF
2a	Disc Insert	1	Carbon Steel
3▲	Seat	1	EPDM, FKM (Viton®)
4▲	Large Disc O-Ring	2	EPDM, FKM (Viton®)
5▲	Small Disc O-Ring	2	EPDM, FKM (Viton®)
6▲	Shaft O-Ring	1	EPDM, FKM (Viton®)
7	Shaft	1	403 SS
7a	Shaft Key	1	Carbon Steel
7b	Snap Ring	1	304 SS
17	Gear Operator[2]	1	Cast Aluminum Epoxy Coated
28	Bolt	4	304 SS
29	Bolt	4	304 SS
30	Gear Operator Stand	1	400 SS

[1] PDCPD=Polydicyclopenthadiene.

[2] Gear Operator for 16" only is FRP with PP hand wheel and 304 SS shaft.

DIMENSIONS INCHES

Size	Type	L	A	B*	C	n	e	D	D_1	D_2	D_3	G_1	G_2	G_3	H_1	H_2	H_3	H_4	I
16"	56	6.65	4.67	14.53	21.25	16	1.12	15.98	18.50	24.41	11.81	10.7	3.9	–	12.4	13.8	4.3	15.35	21.3
18"	75	7.05	5.38	16.34	22.75	16	1.26	17.80	20.67	26.18	16.14	12.6	4.3	3.4	13.2	14.6	5.5	17.44	25.6
20"	75	7.48	6.15	18.29	25.00	20	1.26	19.76	22.64	28.35	16.14	12.6	4.3	3.4	14.4	15.8	5.5	18.62	26.8
24"	75	8.23	7.76	22.27	29.50	20	1.38	23.74	27.01	32.01	16.14	12.6	4.3	3.4	16.7	18.3	5.5	21.18	29.3

* **B**=Minimum inside diameter (I.D.) of mating pipe. If I.D. of pipe is **B** dimension or less, the inside of pipe and must be chamfered or spacers provided. Consult Chemline. **Note:** Type 75 was formerly referred to as TB Series.

Elastomer Seated Butterfly Valves

WORKING PRESSURES PSI

NET WEIGHTS LB.

Size	Valve Type	PVC Body/PP Disc			PP Body/PP Disc		PVDF Body/PVDF Disc/FKM(Viton®)				Body/Disc		
		0-50°C 32-122°F	60°C 140°F	83°C 181°F	–20-60°C –4-140°F	80°C 176°F	–20-60°C –4-140°F	79°C 175°F	100°C 212°F	121°C 250°F	PVC/ PP	PP/ PP	PVDF/ PVDF
1-1/2″	57α	150	70	30	150	105	150	105	90	75	2.9	2.4	3.1
2″	57α	150	70	30	150	105	150	105	90	75	3.3	2.6	3.7
2-1/2″	57α	150	70	30	150	105	150	105	90	75	3.7	3.1	4.2
3″	57α	150	70	30	150	105	150	105	90	75	4.2	3.5	4.9
4″	57α	150	45	30	150	105	150	105	90	75	5.5	4.4	6.4
5″	57α	150	45	30	150	105	150	105	90	75	10.8	8.8	12.6
6″	57α	150	45	30	150	105	150	105	90	75	12.8	10.1	15.2
8″ Lever	57α	150	40	20	150	90	150	90	75	60	20.5	16.3	24.3
8″ Gear	57α	150	40	20	150	90	150	90	75	60	23.6	19.6	27.6
10″	57α	150	40	20	150	90	150	90	75	60	32.4	26.9	41.0
12″	57α	112	30	15	112	60	112	60	45	30	61.7	52.9	76.1
14″	57α	112	30	7	112	60	112	60	45	30	66.6	58.0	81.1

WORKING PRESSURES PSI

NET WEIGHTS[1] LB.

Size	Valve Type	PDCPD Body/ PP Disc			PDCPD Body/ PVDF Disc/FKM(Viton®)				PP Body/ PP Disc		PVDF Body/ PVDF Disc/FKM(Viton®)				Body/Disc		
		0-50°C 32-122°F	60°C 140°F	83°C 181°F	0-30°C 32-86°F	60°C 140°F	80°C 176°F	100°C 212°F	–20-60°C –4-140°F	80°C 176°F	–20-60°C –4-140°F	79°C 175°F	100°C 212°F	121°C 250°F	PDCPD/ PP	PDCPD/ PVDF	PVDF/ PVDF
16″	56	110	90	15	110	90	45	30	90	45	90	45	30	15	79.4	103	101
18″	75	110	90	15	110	90	45	30	75	45	70	45	30	15	140.	221	227
20″	75	110	90	15	110	90	45	30	50	45	50	30	20	15	170.	252	273
24″	75	110	90	15	110	90	45	30	50	45	50	30	20	15	251.	309	346

Note: Type 75 was formerly referred to as TB Series.

[1] Weights are for valves excluding lugs.

Cv VALUES VS. DISC ANGLE

BOLT TORQUES

Size	15°	30°	45°	60°	75°	90°	Recommended Flange Bolt Torques Foot-Lbs.
1-1/2″	0	3.6	14.2	30.5	49.7	71.	15
2″	0	6.0	24.	51.6	84.	120.	17
2-1/2″	0	12.5	50.	108.	175.	250.	17
3″	0	15.0	60.	129.	210.	300.	22
4″	0	23.5	94.	202.	329.	470.	22
5″	0	41.5	166.	357.	581.	830.	30
6″	0	55.	220.	473.	770.	1,100.	30
8″	0	125.	500.	1,075.	1,750.	2,500.	41
10″	0	193.	772.	1,660.	2,702.	3,860.	41
12″	0	285.	1,140.	2,451.	3,990.	5,700.	44
14″	0	322.	1,288.	2,769.	4,508.	6,440.	44
16″	0	300.	2,277.	4929.	6,822.	8,340.	58
18″	0	392.	2,973.	6436.	8,908.	10,890.	58
20″	0	506.	3,838.	8309.	11,501.	14,060.	72
24″	0	666.	5,051.	10,934.	15,133.	18,500.	72

options + accessories



Shaft Extensions

- Different materials and lengths are available
- Several designs:
  - with no housing for indoors
  - with waterproofed PVC housing for indoors or outdoors
  - with stainless steel housing for buried services

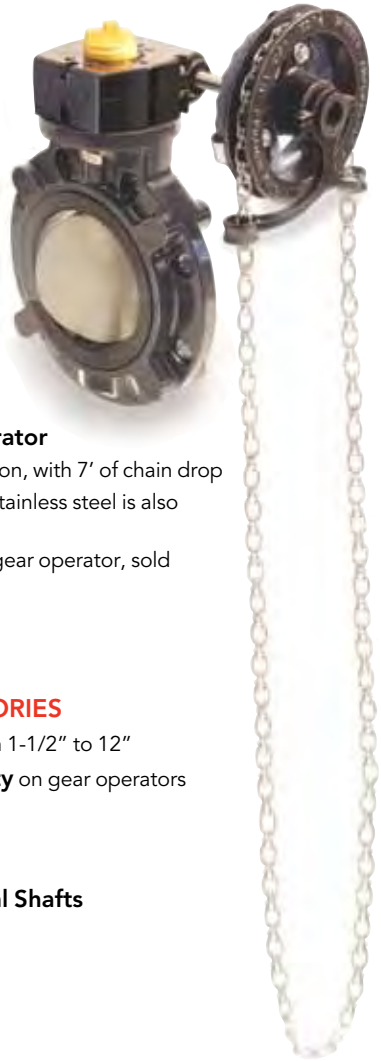

Chain Wheel Operator

- For overhead opeation, with 7' of chain drop
- Cast iron standard, stainless steel is also available
- Requires the use of gear operator, sold separately

OTHER ACCESSORIES

- **Gear Operator** on 1-1/2" to 12"
- **Locking Capability** on gear operators

OPTIONS

- **Different Seats**
- **Different Material Shafts**



Optional Lock-out Handle & Hasp

- To prevent unauthorized operation of the valve during maintenance shut-downs
- Padlocks go through holes in hasp



Limit Switches

- Available for lever and gear operated valves
- Electrical feedback of manual valve position
- NEMA 4X enclosure, position indicator beacon, 2x SPDT switches, stainless steel hardware



Municipal Operating Nut

- For buried service

Elastomer Seated Butterfly Valves

electric + pneumatic actuation

Pneumatic and Electric Actuators

- A complete range of actuators and control accessories are available, mounted to valves using PPG plastic brackets and 304 stainless steel couplings. Refer to separate data sheets.
- All actuators are CSA approved, have NEMA 4S enclosures, stainless steel hardware and permanently lubricated gear train



A Series Electric

- butterfly valves up to 6"
- up to 2000 in-lbs torque
- On-Off (3 wire) adjustable travel, optional On-Off (2 wire), failsafe multi-turn, 3 position modulating, BUS
- Visual feedback, optional 2 feedback switches, feedback potentiometer and feedback transmitter



Q Series Electric

- butterfly valves up to 3"
- 300 in-lbs torque
- On-Off (3 wire) adjustable travel, optional On-Off (2 wire), failsafe 3-position, modulating
- Visual feedback, optional 2 feedback switches, feedback potentiometer and feedback transmitter



V Series Electric

- butterfly valves up to 20"
- up to 8850 in-lbs torque
- On-Off (2/3 wire) adjustable travel, optional failsafe, modulating, BUS
- Visual feedback, 2 feedback switches, optional 2 extra feedback switches, feedback potentiometer and feedback transmitter



Pneumatic Actuators

PA Series

- butterfly valves up to 24"
- up to 40,660 in-lbs torque
- industrial process, submerged
- bleach/water washdown
- Rilsan-coated aluminum

PP Series

- butterfly valves up to 6"
- up to 1,335 in-lbs torque
- industrial process with minimal use of metal
- Glass-filled Polyamide

P3 Series

- butterfly valves up to 10"
- up to 8,850 in-lbs torque
- corrosive, submerged and off-shore applications
- 316 stainless steel

ORDERING EXAMPLE

| Chemline Butterfly Valves | | |

PDF Published January 10, 2018

E Series Electric Actuators

CHEMLINE PLASTICS
SUPERIOR FLOW SOLUTIONS

The Chemline E Series Electric Actuator is a reversible rotary unit with output torques up to 880 in.-lb. These units are ideal for all Chemline ball and butterfly valves up to 4". The E Series is compact, light weight and has a plastic housing. A large black handle provides manual override and position indicator.

Chemline also offers complete actuated ball, butterfly and diaphragm valves, assembled and bench tested. Actuation service is also available for all quarter-turn metal valves.

for Chemline ball & butterfly valves up to 4"

SERIES: ER10 – 90 in.lb.
ER20 – 180 in.lb.
ER35 – 310 in.lb.
ER60 – 530 in.lb.
ER100 – 880 in.lb.

VOLTAGES: 115/220 VAC, 12/24 VDC, 24 VAC

ENCLOSURE: Polyamide 6.6
NEMA 4X



E Series on SM2 Series True Union Ball Valve

features

Multiple Operation/Control Options
- 2 & 3-wire (standard)
- Adjustable Travel (standard)
- Manual Override (standard)
- Bus communication (optional)
- Digital Positioner (optional)
- Failsafe (optional)
- Cold Weather Heater/Thermostat (standard)

Multiple Feedback Options
- Visual (standard)
- Feedback Switches (standard)
- Extra Feedback Switches (optional)
- Feedback Potentiometer (optional)
- Feedback Transmitter (optional)

Special Inspection Labelled by CSA
(Canadian Standards Association)

NEMA 4X Enclosure
- Waterproof, corrosion proof with high impact Polyamide 6.6 housing and stainless steel fasteners

No Maintenance
- Permanently lubricated gear train
- Designed for 250,000 + cycles

Thermal Overload Protection
- Thermal switch embedded onto control board

Extended Operating Temperature Range
- –10 to 60C (15 to 140°F) (standard)

Standard Mounting Dimensions
- ISO-5211 mounting bolt circle and drive

technical

Operating Voltage
- 115/220 VAC (standard)
- 12/24 VDC or 12 VAC (optional)

Electrical Conduit Entry
- 2 x 1/2" NPT

Motor Direction
- Reversing

Motor Cycle Time
- Fixed (standard)

01/18 ©Chemline Plastics Limited 2018
Chemline is a registered trade mark of Chemline Plastics Limited

DIMENSIONS INCHES

Port View

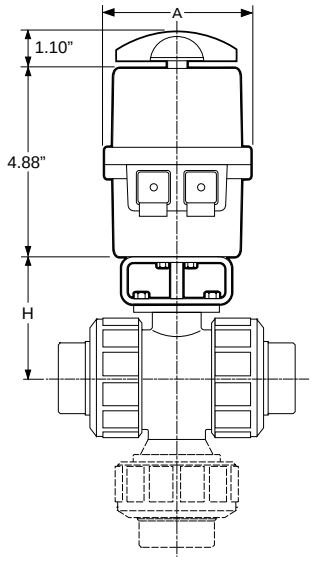

Type 21 True Union and Type 23 Multi Port Ball Valves

Port View

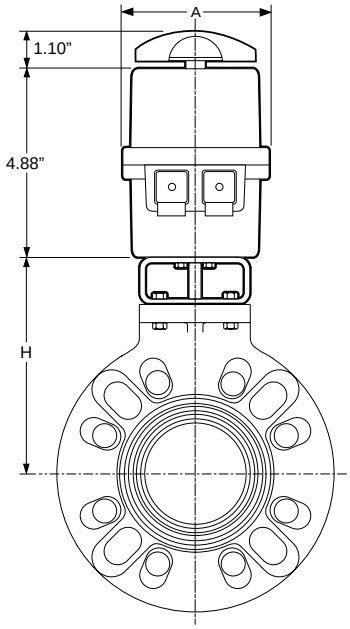

Type 57 Butterfly Valves

Side View / Port View

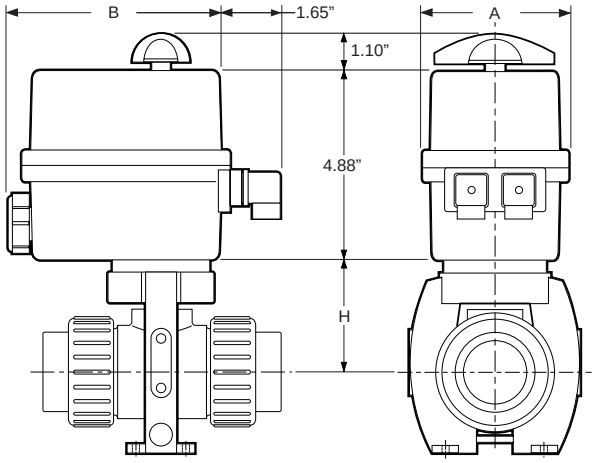

SM Metering and SP Proportional True Union Ball Valves

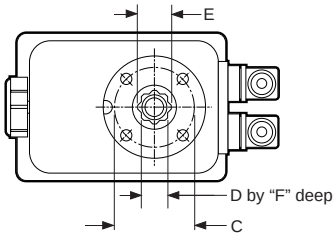

Bottom View

DIMENSION INCHES

Model	A	B	C/Thread	D	E Inches (ISO)	F
ER10	3.62	5.35	1.42 (F03) M5	0.55	0.551" 14mm	0.640
ER20	3.62	5.35	1.65 (F04) M5	0.55	0.551" 14mm	0.640
ER35	5.04	5.94	1.97 (F05) M6	0.87	0.551" 14mm	0.945
ER60	5.04	5.94	1.97 (F05) M6	0.87	0.866" 22mm	0.945
ER100	5.04	5.94	2.76 (F07) M8	0.87	0.866" 22mm	0.945

DIMENSION "H" INCHES

Valve Size	Valve Type				
	Type 21 Ball	Type 23 Multiport Ball	SM Metering/SP Proportional Ball	Type 57 Butterfly	ChemValve Butterfly
1/2"	2.76	2.76	1.97	–	–
3/4"	3.01	3.01	2.36	–	–
1"	3.29	3.29	2.60	–	–
1-1/4"	3.64	3.98	2.91	–	–
1-1/2"	3.98	3.98	3.76	5.65	–
2"	4.43	4.43	4.90	5.95	6.89
2-1/2"	5.12	5.47	–	6.35	7.52
3"	5.47	5.47	–	6.65	8.27
4"	–	–	–	7.35	9.05

Valves not to scale. For valve dimensions and parts refer to separate valve data sheets.

E Series Electric Actuators

SPECIFICATIONS

Model	Running Torques (in.-lbs.)	Nm	115 VAC / 220 VAC (x=12) Power Draw (Watts)[1]	115 VAC / 220 VAC (x=12) Duty Cycle	12 to 24 VDC & 24 VAC (x=346) Power Draw (Watts)[1]	12 to 24 VDC & 24 VAC (x=346) Duty Cycle	Cycle Time/90° (sec.)	Weight (lbs.)
ER10	90	10	15W	80%	15W	80%	11	3.0
ER20	180	20	15W	80%	15W	80%	12	3.0
ER35	310	35	15W	80%	15W	80%	7	6.2
ER60	530	60	45W	80%	45W	80%	12	6.9
ER100	880	100	45W	80%	45W	80%	23	6.9

[1] Power draw values are for actuators with locked rotors.

AC WIRING 115 VAC/220 VAC

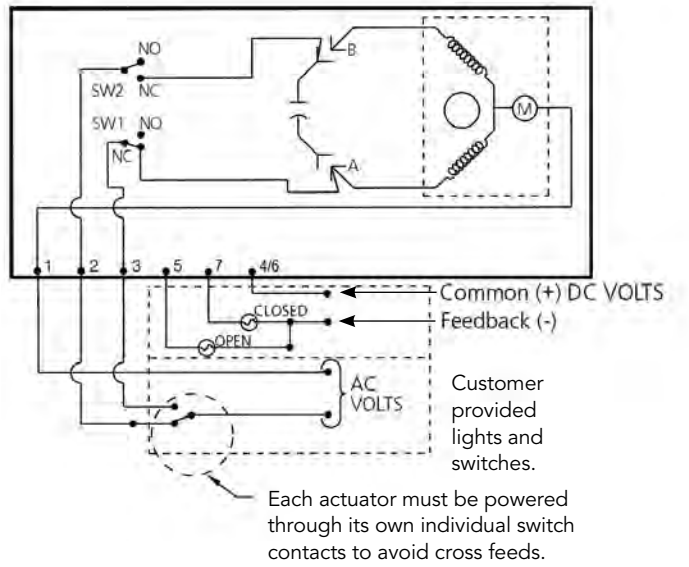

VALVE OPERATION

Neutral – To Terminal 1
To Open – Power to Terminal 2
To Close – Power to Terminal 3

NOTES:

1. Actuator shown in counter clockwise extreme of travel, or 'open' position.
2. Motor has a thermal protector as shown by (M) in the diagram.

OPERATION/CONTROL OPTIONS

- **Bus Communication** – Proprietary bus communication/operation capability
- **Digital Positioner** – Onboard digital position controller accepts 4 to 20 mA, 0 to 20 mA, 0 to 10 VDC or other inputs. These units are easier to calibrate, have faster response and provide more precise proportional control.
- **Failsafe Capability** – Onboard backup battery pack powers actuator in case of power failure

FEEDBACK OPTIONS

- **Extra Feedback Switches** – For extra end-of-travel position feedback
- **Feedback Potentiometer** – To feedback the precise valve position to a remote location, or to allow "jogging" control
- **Feedback Transmitter** – A circuit board coupled with a feedback potentiometer provides 4 to 20 mA output used by other equipment (PLC, data logger, etc.)

55 Guardsman Road, Thornhill, ON, L3T 6L2, Canada | ISO 9001:2008 Certified
1.800.930.2436 (CHEM) | fax.905.889.8553 | request@chemline.com | chemline.com

CS-301-100 : Identification sheet

VWTC PROJECT NUMBER:	Iqaluit WWTP	REV:	01
PROJECT NAME:	5000218036	SUBMITTED TO (COMPANY):	
ENGINEER:	G. HÉBERT	SUBMITTED TO (RESPONSIBLE)	
PROJECT MANAGER:	C. BEKAERT	PROJECT NUM REFERENCE.:	
PHONE NUMBER:		LOT NUMBER:	

SUPPLIER	EQPT CODE	EQPT TAG NO	DIA	DESCRIPTION	INFO 1	INFO 2	INFO 3	APPLIC.	NOTE	REV
CHEMLINE	VABLPV200251	BV-04-710	DIA: 25 mm (1")	HP-250 VALVE	TYPE: BALL VALVE//MANUFACTURER : CHEMLINE//MODEL : Type21-A-010-E-C//CONNECTION TYPE : COMBO | 25 mm (1")//BODY : PVC (ASTM D1784)// SEAL | SEAT :PTFE | EPDM// STEM : PVC			HP-250		1
CHEMLINE	VABLPV200253	BV-04-744	DIA: 38 mm (1-1/2")	HP-250 VALVE	TYPE: BALL VALVE//MANUFACTURER : CHEMLINE//MODEL : Type21-A-015-E-C//CONNECTION TYPE : COMBO | 38 mm (1-1/2")//BODY : PVC (ASTM D1784)// SEAL | SEAT :PTFE | EPDM// STEM : PVC			HP-250		1
CHEMLINE	VABLPV200253	BV-04-747	DIA: 38 mm (1-1/2")	HP-250 VALVE	TYPE: BALL VALVE//MANUFACTURER : CHEMLINE//MODEL : Type21-A-015-E-C//CONNECTION TYPE : COMBO | 38 mm (1-1/2")//BODY : PVC (ASTM D1784)// SEAL | SEAT :PTFE | EPDM// STEM : PVC			HP-250		1

SUPPLIER	EQPT CODE	EQPT TAG NO	DIA	DESCRIPTION	INFO 1	INFO 2	INFO 3	APPLIC.	NOTE	REV
CHEMLINE	VABLPV200253	BV-04-750	DIA: 38 mm (1-1/2")	HP-250 VALVE	TYPE: BALL VALVE//MANUFACTURER : CHEMLINE//MODEL : Type21-A-015-E-C//CONNECTION TYPE : COMBO | 38 mm (1-1/2")//BODY : PVC (ASTM D1784)// SEAL | SEAT :PTFE | EPDM// STEM : PVC			HP-250		1

PDF Published March 1, 2013

Type 21 Ball Valves

CHEMLINE PLASTICS
SUPERIOR FLOW SOLUTIONS

The Chemline Type 21 True Union Ball valve incorporates state of the art features for long term performance. This is a full port, full blocking True Union valve pressure rated at 16 bar (230 psi)[4]. Double stem o-rings and Safety Shear stem design provide for a high degree of safety on hazardous fluid applications. All sizes have an ISO standard actuator mounting platform integral to the valve body. This provides for sturdy and secure mounting of pneumatic or electric actuators.

PVC | CPVC | PP | PVDF

CRN Registered Consult Chemline

NSF[5] Certified to NSF/ANSI 61

SERIES: Type 21

SIZES: 3/8" – 4"

ENDS: Socket, Threaded, Flanged, Butt[1] or ChemFlare™

SEATS: PTFE

SEALS[2]: EPDM, FKM (Viton®), CPE[3]



features

Pressure rated to 230 psi[4]
- Provides a high factor of safety

Integral Actuator Mounting Platform
- Actuation is easy. Electric or pneumatic actuators may be mounted in the field.

Full Port
- High capacity and low pressure drops

Fully Blocking
- Downstream union nut may be safely disassembled for piping maintenance while valve is closed off under full system pressure

Built-In Spanner Wrench
- Top of the handle is designed to be used as a tool for accessing internal parts

Safety Shear Stem Design
- Stem has double o-rings
- Designed to hold full pressure even if stem breaks due to excessive torque

High Chemical Resistant Material
- PVC and CPVC compounds have an "A" chemical resistance rating as per ASTM D-1784. They have outperformed other PVC and CPVC compounds on aggressive chemicals.

[1] Butt ends for fusion to Chemline metric PP, PVDF or ECTFE (Halar®) piping.
[2] Other materials are available.
[3] CPE=Chlorinated Polyethylene.
[4] PVC, CPVC and PVDF 1/2" to 2" are rated at 230 psi; 2-1/2" to 4" and all size PP valves are rated at 150 psi at 20°C.
[5] PVC valves with EPDM or FKM (Viton®) seals are certified under NSF/ANSI Standard 61 for contact with drinking water.

03/13 ©Chemline Plastics Limited 2013
Chemline is a registered trade mark of Chemline Plastics Limited

Type 21 Ball Valves

features

Double Stem O-Rings – Safety Shear Design

- Upper o-ring groove is deeper than lower. In case of excessive stem torque, stem will shear at the upper groove, leaving the inner o-ring intact to seal against full line pressure.

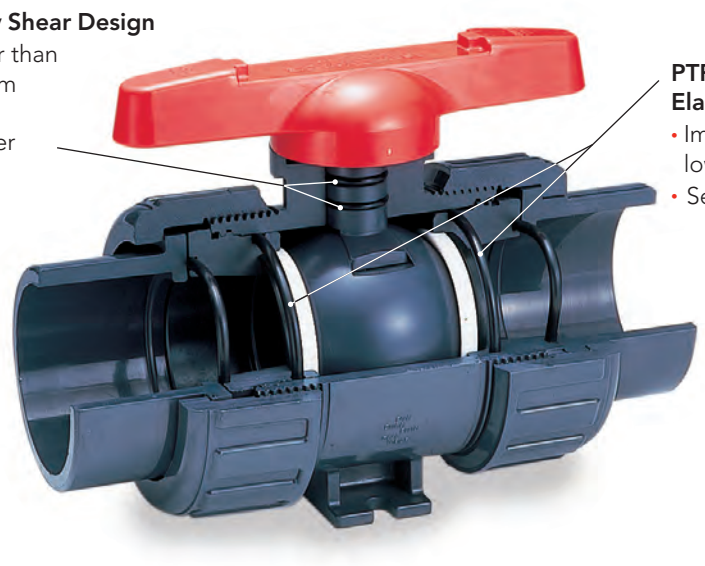

PTFE Seats have Elastomer Cushions

- Improved sealing while lowering stem torques
- Self adjusts for seat wear

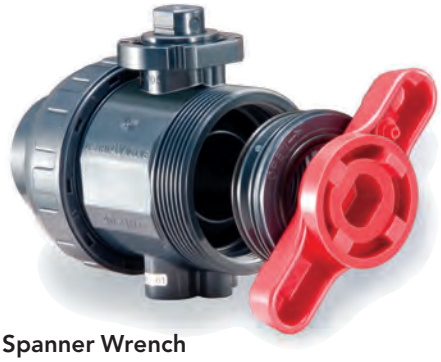

Built in Spanner Wrench

- For removing or tightening the seat carrier
- All parts are replaceable



Integral Actuator Mounting Platform

- Actuation is easy. Electric or pneumatic actuators may be mounted in the field. Simply pull off the handle to reveal a standard ISO 5211 mounting platform which accepts bolt-on hardware.



Fully Blocking

- Downstream pipe may be removed while upstream side is still pressurized. This may be done with valve installed in either direction.



Base Mounting Pad

- Optional threaded inserts allow valves to be securely anchored
- Supplied standard with actuated valves

Type 21 Ball Valves

options + accessories



ChemFlare™ Ends

- For connection to PFA tube. Leak-free connections for difficult services such as sodium hypochlorite

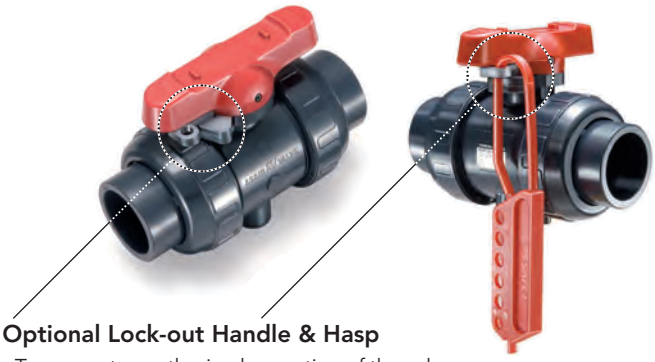

Optional Lock-out Handle & Hasp

- To prevent unauthorized operation of the valve
- Used during maintenance shut-downs



One-piece moulded PVC and CPVC 6" socket ends

- Allows installation of 4" valve in 6" line
- Factory moulded, not fabricated with couplings and reducers cemented together
- Fixed to valve mechanically just like the one-piece moulded factory flanges



Different Colour Handles

- Choose a handle colour other than standard red for colour coding different services

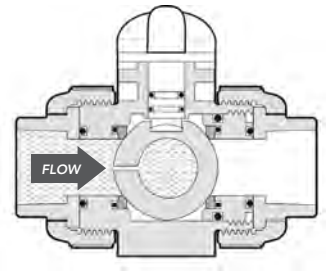

Vented Ball

- For sodium hypochlorite services at any concentration
- Valve shown in closed position

electric + pneumatic actuation

Pneumatic and Electric Actuators

- A complete range of actuators and control accessories are available, mounted to valves using PPG plastic brackets and stainless steel couplings. Refer to separate data sheets.



Electromni® Electric



Q Series Electric



A Series Electric



V Series Electric
with Local Control Station



PA Series Pneumatic

Type 21 Ball Valves

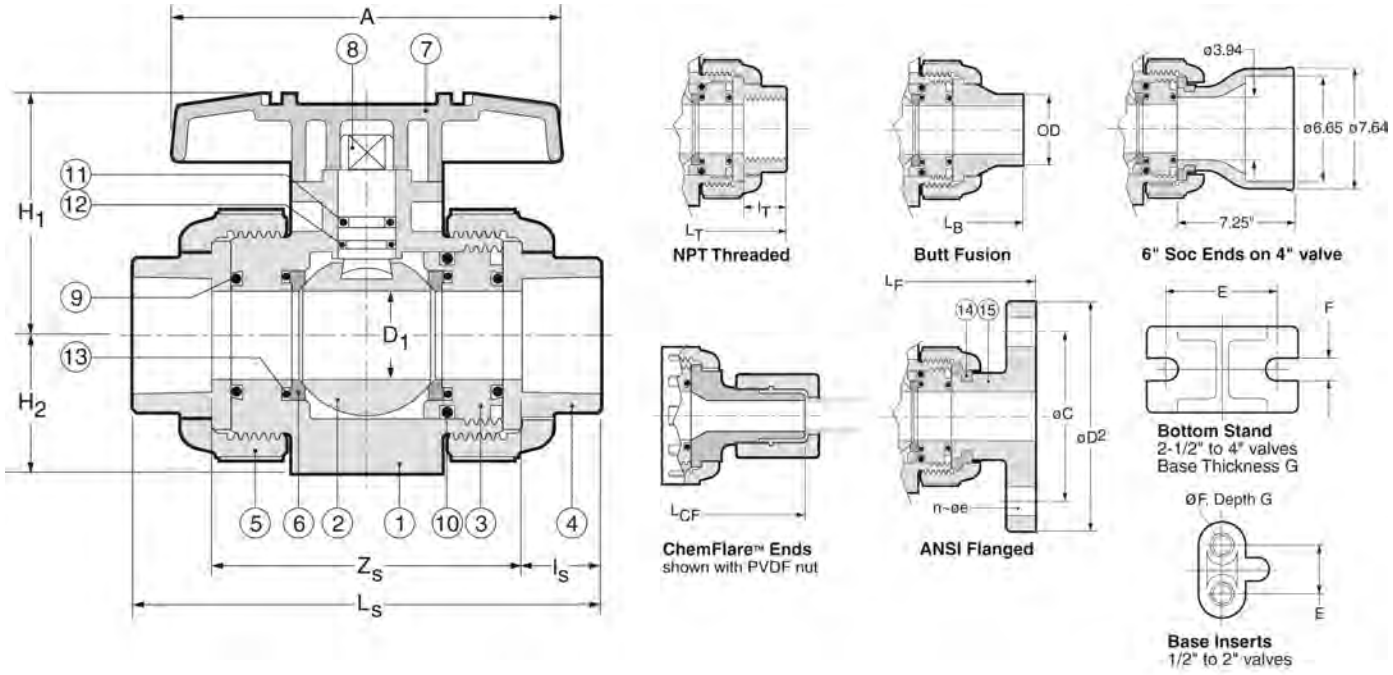

PARTS

▲ Recommended Spare Parts

No.	Part	Pcs.	Materials
1	Body	1	PVC, CPVC, PP, PVDF
2	Ball	1	PVC, CPVC, PP, PVDF
3	Carrier[1]	1/2	PVC, CPVC, PP, PVDF
4	End Connector	2	PVC, CPVC, PP, PVDF
5	Union Nut	2	PVC, CPVC, PP, PVDF
6▲	Ball Seat	2	PTFE
7	Handle	1	ABS

[1] 1 carrier for sizes 1/2" to 2", 2 carriers for sizes 2-1/2" to 4"
[2] EPDM seals standard with PVC, CPVC, PP; FKM (Viton®) with PVDF valves
[3] 2 pcs 1/2" to 2", 6 pcs 2-1/2" to 4"

PARTS

▲ Recommended Spare Parts

No.	Part	Pcs.	Materials
8	Stem	1	PVC, CPVC, PP, PVDF
9▲	Face O-Ring[2]	2	EPDM, FKM (Viton®)
10▲	Carrier O-Ring[2]	2	EPDM, FKM (Viton®)
11▲	Upper Thicker Stem O-Ring[2]	1	EPDM, FKM (Viton®)
12▲	Lower Thinner Stem O-Ring[2]	1	EPDM, FKM (Viton®)
13	Seat Cushion[2]	2	EPDM, FKM (Viton®)
14	Flange Retainer[3]	2/6	PVDF
15	Flange	2	PVC, CPVC, PP, PVDF

DIMENSIONS INCHES

					End Connections														Valve Base		
					Socket			Threaded		Factory Flanged					Butt		ChemFlare™				
Size	D Bore	A	H_1	H_2	L_S	Z_S	l_S	l_T	L_T	L_F	D_2	C	n	e	L_B	OD	L_{CF}	Tube[4]	E	F[5]	G
1/2"	.59	3.6	2.03	1.14	4.45	2.70	.875	.64	4.02	5.63	3.50	2.38	4	.62	4.88	.79	6.12	1/2"	.75	.29	.43
3/4"	.79	3.9	2.34	1.38	5.08	3.08	1.00	.65	4.72	6.77	3.88	2.75	4	.62	5.67	.98	6.52	3/4"	.75	.29	.43
1"	.98	4.3	2.68	1.54	5.75	3.50	1.13	.81	5.16	7.36	4.25	3.12	4	.62	6.06	1.26	7.26	1"	.75	.29	.43
1-1/4"	1.22	4.8	3.17	1.85	6.46	5.21	1.25	.85	5.91	7.48	4.62	3.50	4	.62	6.85	1.57	9.58	1-1/4"	1.18	.35	.59
1-1/2"	1.57	5.2	3.50	2.17	7.24	4.49	1.38	.85	6.42	8.35	5.00	3.88	4	.62	7.64	1.97	–	–	1.18	.35	.59
2"	2.01	6.3	4.02	2.60	8.23	5.23	1.50	1.90	7.76	9.21	6.00	4.75	4	.75	8.82	2.48	–	–	1.18	.35	.59
2-1/2"	2.28	7.87	4.96	2.83	9.45	5.95	1.75	1.21	8.46	10.20	7.00	5.49	4	.75	9.72	2.95	–	–	1.89	.35	.23
3"	2.70	9.45	5.51	3.35	11.10	7.35	1.88	1.30	10.39	11.97	7.50	6.00	4	.75	11.61	3.54	–	–	2.17	.43	.28
4"	3.54	11.81	7.01	4.33	13.88	9.87	2.00	1.38	14.17	14.65	9.00	7.50	8	.75	14.76	4.33	–	–	2.56	.43	.32

[4] ChemFlare™ ends are available for reduced tube sizes down to 1/4".
[5] Optional threaded inserts: 1/2" to 1" valves – UNC 1/4"-20; 1-1/4" to 2" valves – UNC 5/16"-18. 'Recoil' brand inserts require drilling before insertion.

Type 21 Ball Valves

WORKING PRESSURES PSI, Water, Non-Shock

VACUUM RATING • 29.9 inches mercury

Size	PVC			CPVC						PP			PVDF				
	20°C 68°F	40°C 104°F	50°C 122°F	20°C 68°F	40°C 104°F	50°C 122°F	60°C 140°F	80°C 176°F	90°C 194°F	20°C 68°F	60°C 140°F	80°C 176°F	20°C 68°F	40°C 104°F	60°C 140°F	80°C 176°F	100°C 212°F
1/2"– 2"	230	165	150	230	165	150	120	75	55	150	85	55	230	185	150	110	85
2-1/2"– 4"	150	150	150	150	150	150	120	75	55	150	70	40	150	150	150	110	85

Temperature Ranges: PVC 0 to 60°C (32 to 140°F), **CPVC** 0 to 95°C (32 to 203°F), **PP** –20 to 80°C (–4 to 176°F), **PVDF** –40 to 100°C (–40 to 212°F)

WEIGHTS LB. THREADED or SOCKET

WEIGHTS LB. FLANGED

Size	PVC	CPVC	PP	PVDF	PVC	CPVC	PP	PVDF
1/2"	0.4	0.4	0.4	0.4	0.9	0.9	0.7	1.1
3/4"	0.7	0.7	0.7	0.9	1.3	1.5	1.1	1.5
1"	0.9	1.1	0.9	1.1	1.8	2.0	1.5	2.2
1-1/4"	1.5	1.5	1.3	1.8	2.6	2.9	2.0	3.3
1-1/2"	2.4	2.6	1.5	2.9	3.7	4.0	2.6	4.4
2"	4.0	4.4	2.6	4.9	5.5	6.0	4.0	8.2
2-1/2"	5.1	5.5	3.7	6.2	7.3	7.7	5.3	8.8
3"	8.2	8.8	5.5	9.9	10.1	11.0	7.5	12.6
4"	19.4	21.8	13.2	24.9	21.6	23.4	15.4	26.7

Cv VALUES VS. BALL ANGLE

Size	0%	25%	50%	75%	100%
1/2"	0	0.35	1.3	5.5	14.
3/4"	0	0.73	2.8	11.5	29.
1"	0	1.2	4.5	18.6	47.
1-1/4"	0	1.8	6.8	28.4	72.
1-1/2"	0	3.9	14.7	61.2	155.
2"	0	4.8	18.0	75.0	190.
2-1/2"	0	9.1	34.7	144.0	365.
3"	0	10.2	39.0	162.0	410.
4"	0	17.0	64.6	269.0	680.

SAMPLE SPECIFICATION

1. All True Union Ball Valves in PVC, CPVC, PP or PVDF shall be Chemline Type 21 or equal sizes 1/2" to 2" in PVC, CPVC, and PVDF rated at 230 psi and in PP 150 psi maximum working pressure. Sizes 2-1/2", 3" and 4" rated at 150 psi maximum working pressure with EPDM, FKM (Viton®) or CPE seals. Ball seats shall be PTFE with elastomer cushions for closure with minimum stem torques.
2. All valves will have Safety Shear stem design, blowout-proof with double o-rings for safety. The top o-ring groove shall be deeper so that if the stem breaks off under excessive torque the lower o-ring will remain intact and the valve will hold pressure.
3. All valves shall be full port and two-way blocking design.
4. All valves will be CRN (Canadian Registration Number) registered with TSSA.
5. PVC valves with EPDM or FKM (Viton®) seals shall be certified under NSF/ANSI Standard 61 for contact with drinking water.
6. All valves shall have chemical resistant labels permanently marked with manufacturing number to provide production level traceability.
7. PVC compound shall have an ASTM cell classification 12454-A with a minimum suffix "A" designation for chemical resistance as per ASTM D-1784 (CSA report LO 4000-172).
8. CPVC compound shall have an ASTM cell classification 23567-A with a minimum suffix "A" designation for chemical resistance as per ASTM D-1784.
9. PP material will conform to ASTM D-4101 PP 021 B 67272 material requirements.
10. PVDF material shall be unpigmented conforming to ASTM D-3222 material requirements and to be USDA Title 21 Chapter 1 Part 177. 2510 requirements for contact with food.
11. Socket ends in PVC and CPVC shall be Schedule 80 and conform to ASTM D-2467.
12. Threaded ends shall be Schedule 80 and conform to ASTM D-2464.
13. Butt fusion ends in PP or PVDF will be compatible with Chemline PP or PVDF metric piping systems.
14. Flanged ends shall be ANSI Class 150 one-piece factory moulded (not fabricated) to ensure maximum strength and close tolerance end to end dimensions.

ORDERING EXAMPLE

Chemline True Union Ball Valves	21	A	020	E	S
Body Material	**A** – PVC **B** – PP **C** – CPVC **K** – PVDF				
Size[1]	**002** – 1/4" **010** – 1" **025** – 2-1/2" **003** – 3/8" **012** – 1-1/4" **030** – 3" **005** – 1/2" **015** – 1-1/2" **040** – 4" **007** – 3/4" **020** – 2" **060** – 6"				
Seals	**E** – EPDM **V** – FKM (Viton®) **C** – CPE **B** – Nitrile **A** – Aflas®				
Ends	**S** – Socket **T** – Threaded **F** – Flanged **B** – Butt[2] **CF** – ChemFlare™				

Example: Chemline Type 21 True Union Ball Valve, PVC, 2", with EPDM seals, socket ends.

[1] 1/4" is normally the 3/8" valve reduced. 6" is 4" valve with 6" end connections.

[2] PP, PVDF and ECTFE (Halar®) metric butt fusion ends (1/2" to 4") connect to Chemline PP, PVDF and ECTFE (Halar®) piping systems.

OTHER OPTIONS & ACCESSORIES

- **Alternate O-Ring Seals**
- **Stem Extensions** made to any length
- **Limit Switches** – For open and/or closed position indication
- **Municipal Operating Nut**
- **Lubrication-free Valves** – Factory clean room assembled
- **Vented Ball** – For sodium hypochlorite applications

CHEMLINE PLASTICS
SUPERIOR FLOW SOLUTIONS

55 Guardsman Road, Thornhill, ON, L3T 6L2, Canada | ISO 9001:2008 Certified
tel.905.889.7890 | fax.905.889.8553 | request@chemline.com | chemline.com

CS-301-501 : Identification sheet

VWTC PROJECT NUMBER:	Iqaluit WWTP	REV:	01
PROJECT NAME:	5000218036	SUBMITTED TO (COMPANY):	
ENGINEER:	G. HÉBERT	SUBMITTED TO (RESPONSIBLE)	
PROJECT MANAGER:	C. BEKAERT	PROJECT NUM REFERENCE.:	
PHONE NUMBER:		LOT NUMBER:	

SUPPLIER	EQPT CODE	EQPT TAG NO	DIA	DESCRIPTION	INFO 1	INFO 2	INFO 3	APPLIC.	NOTE	REV
CHEMLINE	VABLPV346917	BV-04-716	DIA: 13 mm (1/2")	HP-250 VALVE	TYPE: BALL VALVE//MANUFACTURER : CHEMLINE//MODEL : SM2-A-005-E-S//CONNECTION TYPE : SOCKET | 13 mm (1/2")//BODY : PVC (ASTM D1784)// SEAL | SEAT : | EPDM// STEM : N/A			HP-250		1
CHEMLINE	VABLPV346917	BV-04-717	DIA: 13 mm (1/2")	HP-250 VALVE	TYPE: BALL VALVE//MANUFACTURER : CHEMLINE//MODEL : SM2-A-005-E-S//CONNECTION TYPE : SOCKET | 13 mm (1/2")//BODY : PVC (ASTM D1784)// SEAL | SEAT : | EPDM// STEM : N/A			HP-250		1

PDF Published October 18, 2017

Metering Ball Valves

CHEMLINE PLASTICS
SUPERIOR FLOW SOLUTIONS

Chemline SM Series Metering Ball Valve is designed for fine linear flow control of chemicals or clean fluids. The ball is solid with graduated V-groove cut on the outside surface. Precise linear flow control is accomplished through 180° rotation of the handle. With a positioning electric actuator, this becomes an inexpensive control valve. If higher C_V values are required, refer to SP Series Proportional ball valves.

PVC PP

SERIES: SM2
SIZES: 1/2" – 1"
ENDS: Threaded, Socket, Butt[1] or ChemFlare™ [2]
SEATS: PTFE
O-RINGS: EPDM, FPM (Viton®)





Integral 180° Scale with 5° Increments
- Linear flow control and settable flow rates

features

Precise Linear Flow Control
- Provided by a special V-groove ball and wide handle travel (0° to 180°)

Full Size Range
- 6 valves sizes 1/2" to 2" offers a large selection of C_V values

High End Ball Valve Features
- Full Blocking design
- Double Stem O-Rings for safety
- PTFE seats with elastomer cushion
  - Automatically compensates for seat wear or expansion
- 230 psi pressure rated (PVC)

Low Stem Torques
- Due to floating ball design and cushioned PTFE seats

Bidirectional
- Works with flow in either direction

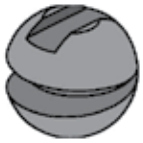

Ball Detail



[1]Butt ends for fusion to Chemline metric PP piping.
[2]For ChemFlare™ end connectors, consult Chemline.

10/17 ©Chemline Plastics Limited 2017
Chemline is a registered trade mark of Chemline Plastics Limited

Metering Ball Valves

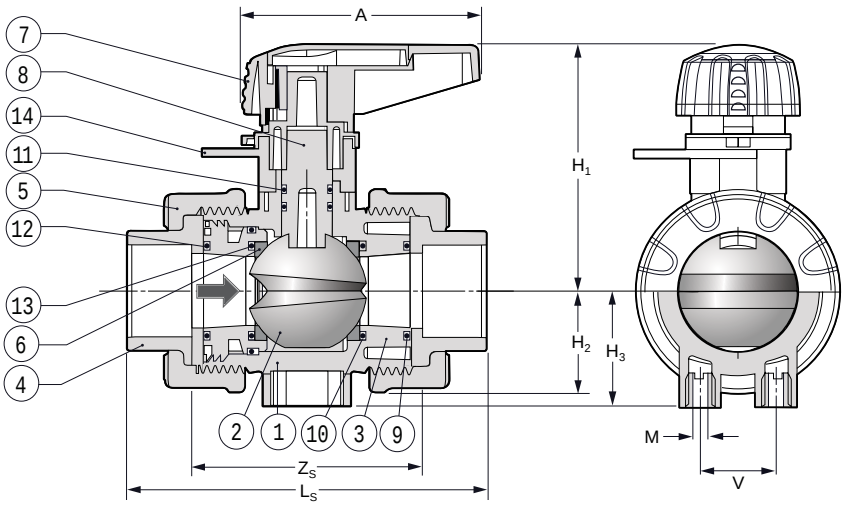

PARTS

No.	Part	Pcs.	Materials
1	Body	1	PVC, PP, PVDF
2	Ball	1	PVC, PP, PVDF
3	Carrier	1	PVC, PP, PVDF
4	End Connector	2	PVC, PP, PVDF
5	Union Nut	5	PVC, PP, PVDF
6	Ball Seat	2	PTFE
7	Handle	1	PVC
8	Stem	1	PVC, PP, PVDF
9	Carrier Face O-Ring	1	EPDM, FPM(Viton®)
10	Carrier O-Ring	1	EPDM, FPM(Viton®)
11	Stem O-Ring[1]	2	EPDM, FPM(Viton®)
12	Face O-Ring	1	EPDM, FPM(Viton®)
13	Seat Cushion[1]	2	EPDM, FPM(Viton®)
14	Position Indicator Scale	1	PVC

DIMENSIONS INCHES

							PVC			PP		
Size	A	H_1	H_3	H	M	V	Z_s	L_s	H_2	Z_s	L_s	H_2
1/2"	2.62	2.48	1.10	2.50	M5	0.98	2.48	3.74	0.99	2.64	3.74	1.06
3/4"	3.21	3.03	1.20	2.70	M5	0.98	2.83	4.33	1.16	3.03	4.29	1.18
1"	3.21	3.39	1.60	3.00	M6	1.02	3.11	4.84	1.39	3.27	4.69	1.57

ELECTRICALLY OR PNEUMATICALLY ACTUATED

The metering ball valve becomes a proportional control valve with the addition of a Q or E Series electric or P Series pneumatic actuator with 4-20 mA positioner

- Thermoplastic housing and mounting bracket
- Manual override
- Position indication
- Mechanical travel stops
- Different voltages are available



Q Series Electric



E Series Electric



P Series Pneumatic

E Series Electric Actuator on a SM2 Valve

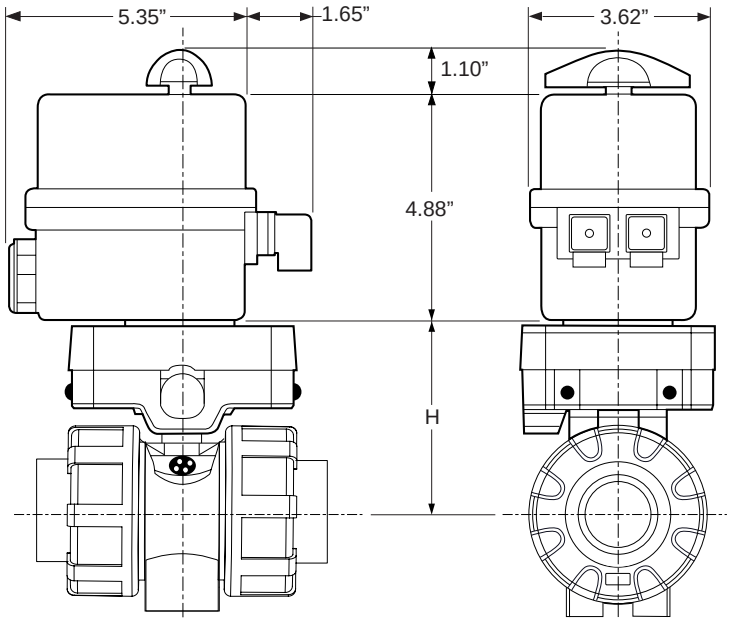

Side View

Port View

Metering Ball Valves

WORKING PRESSURES PSI

NET WEIGHTS LB. Cv VALUES

Size	PVC 20°C 68°F	PVC 40°C 104°F	PVC 60°C 140°F	PP 20°C 68°F	PP 40°C 104°F	PP 60°C 140°F	PP 80°C 176°F	PVC	PP	USGPM Flow at 1 psi △P
1/2″	230	130	30	150	100	65	20	0.35	0.29	1.4
3/4″	230	130	30	150	100	65	20	0.60	0.44	1.9
1″	230	130	30	150	100	65	20	0.84	0.64	2.3

Temperature Ranges: PVC 0 to 60°C (32 to 140°F), PP 0 to 95°C (32 to 203°F)

Cv VALUE vs. VALVE OPENING

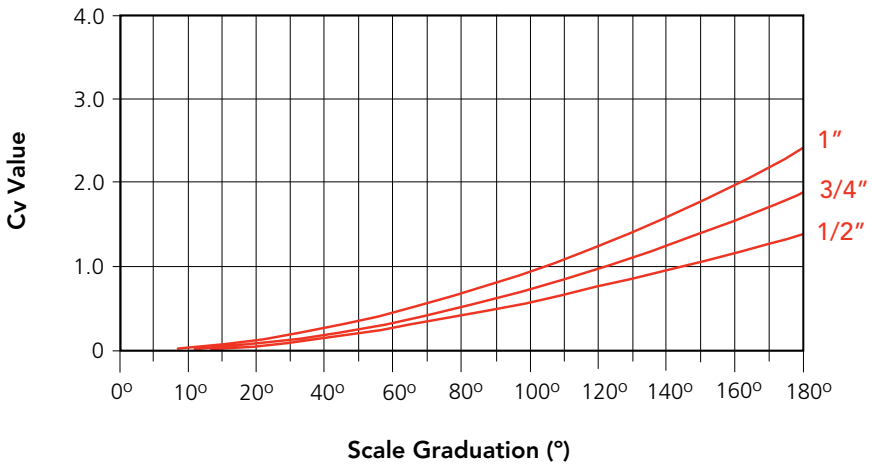

SAMPLE SPECIFICATION

1. All low flow control valves, 1/2″ to 1″, will be Chemline SM Series metering ball valves.
2. Body material will be PVC or PP, and o-rings will be EPDM or FPM (Viton®).
3. Body will be full blocking design with double stem o-rings for safety, rated at 230 psi maximum working pressure for PVC and 150 psi for PP material.
4. Ball will be floating design, molded solid with a V-groove for linear flow control over a 180° range of handle rotation.
5. Seats will be PTFE with elastomer cushions for positive closure with minimum stem torques and automatic compensation for seat wear and expansion.
6. Position indicating scale will be 0° to 180° with 5° increments for fine flow control and settable flow rates.
7. End connections will be 1/2″ to 1″ ANSI socket or FNPT threaded or 150 lb flanged or butt fusion for Chemline metric PP pipe or ChemFlare™ for PFA tubing.

ORDERING EXAMPLE

Chemline Metering Ball Valves	SM2	A	010	E	S
Valve Material	**A** – PVC	**B** – PP			
Size	**005** – 1/2″	**007** – 3/4″	**010** – 1″		
Seals	**E** – EPDM	**V** – FPM (Viton®)			
Ends	**S** – Socket	**T** – Threaded	**B** – Butt[1]	**CF** – ChemFlare™	

Example: SM2 Series Ball Valve, PVC, 1″, EPDM seals, socket ends.

[1] PP metric butt fusion ends (1/2″ to 2″) connect to Chemline PP piping systems.

VACUUM RATING

- 29.9 inches mercury

OPTIONS & ACCESSORIES

- **Reduced Ends**
- **Electric or Pneumatic Actuator with Positioner**
  – Operates as a linear control valve

CHEMLINE PLASTICS
SUPERIOR FLOW SOLUTIONS

55 Guardsman Road, Thornhill, ON, L3T 6L2, Canada | ISO 9001:2008 Certified
1.800.930.2436 (CHEM) | fax.905.889.8553 | request@chemline.com | chemline.com

CS-302-100 : Identification sheet

VWTC PROJECT NUMBER:	Iqaluit WWTP	REV:	01
PROJECT NAME:	5000218036	SUBMITTED TO (COMPANY):	
ENGINEER:	G. HÉBERT	SUBMITTED TO (RESPONSIBLE)	
PROJECT MANAGER:	C. BEKAERT	PROJECT NUM REFERENCE.:	
PHONE NUMBER:		LOT NUMBER:	

SUPPLIER	EQPT CODE	EQPT TAG NO	DIA	DESCRIPTION	INFO 1	INFO 2	INFO 3	APPLIC.	NOTE	REV
CHEMLINE	VANRPV200667	CV-04-718	DIA: 38 mm (1-1/2")	HP-250 VALVE	TYPE: CHECK | 150 PSI//MANUFACTURER : CHEMLINE//MODEL : BTA015EC//CONNECTION TYPE : COMBO | 1-1/2"//BODY : PVC// SEAL | SEAT :EPDM | // STEM : N/A			HP-250		1

PDF Published March 1, 2013

Ball Check & Foot Valves

CHEMLINE PLASTICS
SUPERIOR FLOW SOLUTIONS

The economical and versatile Chemline Ball Check Valve is the most popular type of non-return valves for pipe sizes under 6". A wide selection of body and seat materials, and end connections are available for many different applications. It has good flow capacity and will handle many slurry and suspended solid services. This valve works in both horizontal and vertical lines. The Foot Valve is for end of line services such as sumps.

PVC | CPVC | PP | PVDF

CRN Registered Consult Chemline

NSF[3] Certified to NSF/ANSI 61

SERIES: BT: True Union Check
BC: Single Union Check
FT: True Union Check
FV: Single Union Check

SIZES: 1/2" – 4"

ENDS: Threaded, Socket, Flanged, Butt[1] or ChemFlare™[2]

SEAT/SEALS: EPDM, FKM (Viton®), PTFE coated FKM (Viton®)

features

- **True Union to 2"**
- **Full Port to 4"**
- **NSF Certified[3]**
- **Built-in Union Design** – For easy installation and maintenance
- **Free Floating Ball** – The only moving part
- **Uniseat/Seal** – Easily removable
- **May be used either horizontally or vertically**
- **Excellent flow characteristics**
- **Low seating and opening pressures**



True Union Check
1/2" to 2" in all materials



Single Union Check
1/2" to 4" in PVC
2-1/2" to 4" in CPVC, PP and PVDF



Foot Valve is light weight and has a low profile basket

[1] PP and PVDF Butt fusion ends (available 1/2" to 2") connect to Chemline PP and PVDF piping systems.
[2] For ChemFlare™ end connectors, consult Chemline.
[3] PVC valves with EPDM or FKM (Viton®) seals are certified under NSF/ANSI Standard 61 for contact with drinking water.

03/13 ©Chemline Plastics Limited 2013
Chemline is a registered trade mark of Chemline Plastics Limited

Ball Check Valves

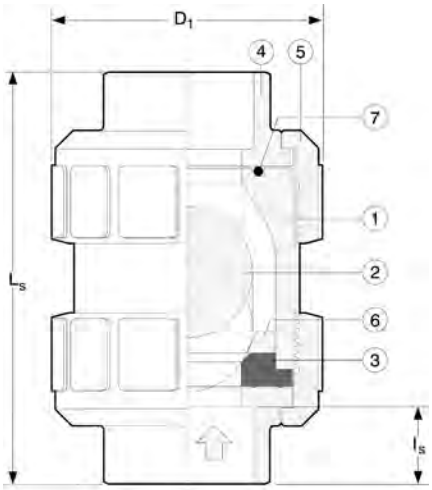

True Union Valve

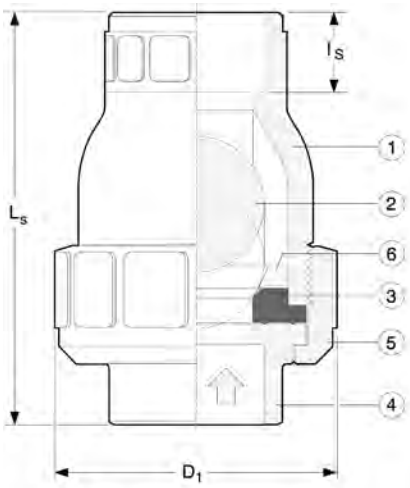

Single Union Valve

PARTS

▲ Recommended Spare Parts

No.	Part	Pcs. T/U	Pcs. S/U	Materials
1	Body	1	1	PVC, CPVC, PP, PVDF
2	Ball	1	1	PVC, CPVC, PP, PVDF
3▲	Uniseat/Seal[1]	1	1	EPDM, FKM(Viton®), PTFE coated FKM (Viton®)
4	End Connector	2	1	PVC, CPVC, PP, PVDF
5	Union Nut	2	1	PVC, CPVC, PP, PVDF
6	Stop Ring	1	1	PVC, CPVC, PP, PVDF
7	Face O-Ring	1	1	EPDM, FKM(Viton®)
9	Flange Retainer[2]	2	1	PVDF
10	Factory Flange[3]	2	1	PVC, CPVC, PP, PVDF

[1] Standard seals are EPDM in PVC, CPVC and PP valves, PTFE coated FKM (Viton®) in PVDF valves. Coating is .002" thick.

[2] True Union: 2 pcs 1/2" to 2", 6 pcs 1-1/2" to 4" Single Union: 1 pcs 1/2" to 2", 3 pcs 2-1/2" to 4".

[3] True Union flanged valves have two factory flanges. Single Union valves have one factory flange and one fabricated flange. Consult Chemline for details on fabricated type.

UNION END CONNECTIONS



NPT Threaded



Butt Fusion PP and PVDF

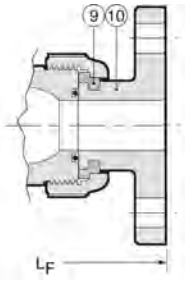

Factory Flanged

DIMENSIONS INCHES

WEIGHTS LB.

Size	D_1	I_s	I_T	True Union PVC & CPVC L_T	True Union PVC & CPVC L_S	True Union PVC & CPVC L_F	True Union PP & PVDF L_T	True Union PP & PVDF L_B	True Union PP & PVDF L_F	Single Union PVC L_T	Single Union PVC L_S	Single Union PVC L_F	True Union Socket or Butt PVC	True Union Socket or Butt CPVC	True Union Socket or Butt PP	True Union Socket or Butt PVDF	Single Union PVC
1/2"	1.9	0.69	0.59	3.4	3.4	5.1	3.4	4.0	5.1	3.2	3.4	5.6	0.3	0.3	0.2	0.3	0.2
3/4"	2.4	0.72	0.67	4.1	3.9	6.1	4.1	4.4	6.1	3.8	3.7	6.6	0.5	0.5	0.3	0.6	0.4
1"	2.8	0.88	0.79	4.5	4.4	6.5	4.5	4.8	6.5	4.2	4.3	7.3	0.7	0.8	0.4	0.9	0.6
1-1/4"	3.1	0.94	0.87	5.0	4.9	6.6	5.0	5.9	6.6	6.2	6.3	12.3	1.1	1.2	0.7	1.5	1.5
1-1/2"	3.7	1.09	0.98	5.9	5.9	7.6	5.9	5.8	7.6	5.6	5.7	9.1	1.6	1.7	1.0	2.0	1.3
2"	4.2	1.16	1.10	7.0	6.8	8.4	7.0	6.5	8.4	6.5	6.5	10.5	2.2	2.4	1.4	2.7	1.8

DIMENSIONS INCHES

WEIGHTS LB.

Size	D_1	I_s[4]	I_T	Single Union PVC & CPVC L_T	Single Union PVC & CPVC L_S	Single Union PVC & CPVC L_F	Single Union PP & PVDF L_T	Single Union PP & PVDF L_B	Single Union PP & PVDF L_F	Single Union PVC	Single Union CPVC	Single Union PP	Single Union PVDF
2-1/2"	6.0	2.10	2.17	10.0	10.4	14.3	8.7	*	*	5.7	6.2	*	*
3"	6.0	1.88	1.38	8.7	9.6	12.2	8.7	*	*	5.1	5.5	3.3	6.3
4"	8.3	2.00	1.77	12.1	12.2	15.0	12.1	*	*	12.7	13.9	8.1	15.7

[4] Consult Chemline.

Foot Valves

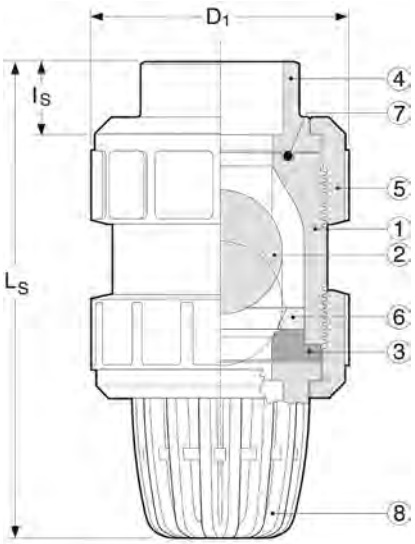

True Union Valve

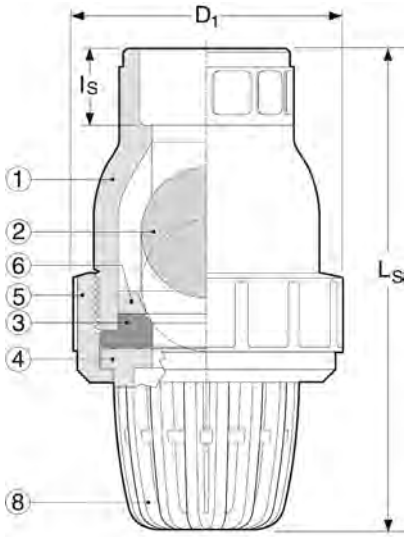

Single Union Valve

PARTS

▲ Recommended Spare Parts

No.	Part	Pcs. T/U	Pcs. S/U	Materials
1	Body	1	1	PVC, CPVC, PP, PVDF
2	Ball	1	1	PVC, CPVC, PP, PVDF
3▲	Uniseat/Seal[1]	1	1	EPDM, FKM(Viton®), PTFE coated FKM (Viton®)
4	End Connector	2	1	PVC, CPVC, PP, PVDF
5	Union Nut	2	1	PVC, CPVC, PP, PVDF
6	Stop Ring	1	1	PVC, CPVC, PP, PVDF
7	Face O-Ring	1	1	EPDM, FKM(Viton®)
8	Foot Valve Basket	1	1	PVC, CPVC, PP, PVDF
9	Flange Retainer[2]	3	0	PVDF
10	Factory Flange[3]	1	0	PVC, CPVC, PP, PVDF

[1] Standard seals are EPDM in PVC, CPVC and PP valves, PTFE coated FKM (Viton®) in PVDF valves. Coating is .002" thick.

[2] True Union: 1 pc 1/2" to 2", 3 pcs 2-1/2" to 4".

[3] True Union valves have factory flanges. Single Union have fabricated flanges. Consult Chemline for details on fabricated type.

END CONNECTIONS FOR TRUE UNION VALVE

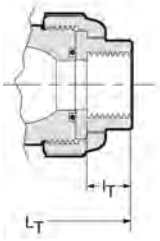

NPT Threaded



Butt Fusion
PP and PVDF

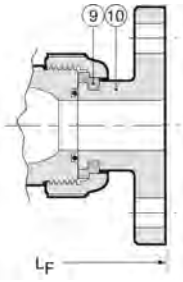

Factory Flanged

DIMENSIONS INCHES

WEIGHTS LB.

Size	D_1	I_s Soc	I_T Thd	True Union PVC & CPVC L_T	True Union PVC & CPVC L_S	True Union PVC & CPVC L_F	Single Union PVC L_T	Single Union PVC L_S	Single Union PVC L_F	Single Union PVC Socket
1/2"	1.9	0.69	0.59	2.8	2.9	3.7	3.5	3.7	4.7	0.3
3/4"	2.4	0.72	0.67	3.3	3.3	4.4	4.1	4.2	5.4	0.4
1"	2.8	0.88	0.79	3.7	3.7	4.8	4.5	4.8	6.1	0.8
1-1/4"	3.7	0.94	0.87	*	*	*	*	*	*	1.8
1-1/2"	3.7	1.09	0.98	5.4	5.4	6.3	6.8	7.0	8.5	1.7
2"	4.2	1.16	1.10	6.4	6.4	7.2	7.4	7.6	9.3	2.1
2-1/2"	6.0	2.10	2.17	–	–	–	*	*	*	7.4
3"	6.0	1.88	1.38	–	–	–	11.6	12.1	14.2	7.1
4"	8.3	2.00	1.77	–	–	–	14.7	15.0	17.4	15.7

* Consult Chemline for dimensions.

For CPVC (2-1/2" to 4"), PP and PVDF Foot Valve lengths, consult Chemline.

Ball Check & Foot Valves

WORKING PRESSURES PSI

Size	PVC	CPVC				Polypropylene			PVDF			
	0-50°C 32-122°F	0-50°C 32-122°F	60°C 140°F	80°C 176°F	90°C 194°F	–20-30°C –4-90°F	60°C 140°F	80°C 176°F	–20-60°C –4-140°F	80°C 176°F	90°C 194°F	100°C 212°F
1/2″	150	150	115	85	60	150	90	60	150	120	110	85
3/4″	150	150	115	85	60	150	90	60	150	120	110	85
1″	150	150	115	85	60	150	90	60	150	120	110	85
1-1/4″	150	150	115	85	60	150	90	60	150	120	110	85
1-1/2″	150	150	115	85	60	150	90	60	150	120	110	85
2″	150	150	115	85	60	150	90	60	150	120	110	85
2-1/2″	100	100	90	60	45	100	60	45	100	90	60	45
3″	100	100	90	60	45	100	60	45	100	90	60	45
4″	100	100	90	60	45	100	60	45	100	90	60	45

Maximum Temperatures: PVC 0 to 60°C (32 to 140°F), **CPVC** 0 to 95°C (32 to 203°F), **PP** –20 to 90°C (–4 to194°F), **PVDF** –40 to 100°C (–40 to 212°F)

MINIMUM SEATING AND OPENING PRESSURE PSI

Size	Vertical Piping		Horizontal Piping		Cv VALVES
	Open	Seating	Open	Seating	Check Valves
1/2″	0.7	2.8	0.1	2.8	6.5
3/4″	0.7	4.3	0.1	4.3	17.
1″	0.7	4.3	0.1	4.3	25.
1-1/4″	1.4	4.3	0.3	4.3	86.
1-1/2″	1.4	4.3	0.3	4.3	86.
2″	1.4	4.3	0.3	4.3	130.
2-1/2″	1.4	2.8	0.3	2.8	280.
3″	1.4	2.8	0.3	2.8	280.
4″	1.4	2.8	0.3	2.8	500.

VACUUM RATING

- 29.9 inches mercury
- Maximum recommended velocity 5 m/s

SAMPLE SPECIFICATION

All Ball Check valves in PVC, CPVC, PP or PVDF shall be Chemline BT or BC Series or equal with EPDM [FKM (Viton®) or PTFE coated FKM (Viton®)] seats and union ends. Sizes 1/2″ to 2″ shall be slip-out True Union style, sizes 2-1/2″ to 4″ shall be single union. The elastomer uniseat/seal shall function as both the ball seat and the union seal. Ball Check valves shall be rated 150 psi up to 2″ and 100 psi for sizes 2-1/2″ to 4″.

ORDERING EXAMPLE

Chemline Ball Check/Foot Valves	BT	A	020	E	S
Valve Type	**BT** – True Union Ball Check **BC** – Single Union Ball Check **FV** – Single Union Foot Valve **FT** – True Union Foot Valve				
Body Material		**A** – PVC **C** – CPVC **B** – PP **K** – PVDF			
Size			**005** – 1/2″ **007** – 3/4″ **010** – 1″ **012** – 1-1/4″ **015** – 1-1/2″ **020** – 2″ **025** – 2-1/2″ **030** – 3″ **040** – 4″		
Seals				**E** – EPDM **V** – FKM (Viton®) **T** – PTFE coated FKM (Viton®)	
Ends					**S** – Socket **T** – Threaded **F** – Flanged **B** – Butt[1] **CF** – ChemFlare™

Example: Ball Check Valve, PVC, 2″, with EPDM seat, socket ends.

[1] PP and PVDF metric butt fusion ends (1/2″ to 2″) connect to Chemline PP and PVDF piping systems.

OPTIONS & ACCESSORIES

- **PTFE coated Uniseat/Seal**
- **Spring Loaded Ball** – Assists ball to seat faster

CHEMLINE PLASTICS
SUPERIOR FLOW SOLUTIONS

55 Guardsman Road, Thornhill, ON, L3T 6L2, Canada | ISO 9001:2008 Certified
tel.905.889.7890 | fax.905.889.8553 | request@chemline.com | chemline.com

CS-304-100 : Identification sheet

VWTC PROJECT NUMBER:	Iqaluit WWTP	REV:	01
PROJECT NAME:	5000218036	SUBMITTED TO (COMPANY):	
ENGINEER:	G. HÉBERT	SUBMITTED TO (RESPONSIBLE)	
PROJECT MANAGER:	C. BEKAERT	PROJECT NUM REFERENCE.:	
PHONE NUMBER:		LOT NUMBER:	

SUPPLIER	EQPT CODE	EQPT TAG NO	DIA	DESCRIPTION	INFO 1	INFO 2	INFO 3	APPLIC.	NOTE	REV
TEKNO VALVE	VASDBR308797	SV-04-714	DIA: 1"	HP-250 VALVE	TYPE: SOLENOID VALVE//MANUFACTURER : ASCO//MODEL : 8210G004-120VAC//CONNECTION TYPE : THREADED | 25 mm (1") | 25 mm (1")//BODY : BRASS// SEAL | SEAT :NBR | PA// STEM : N/A	ACTING : PILOT	NORMALLY : FERMÉ/CLOSED	HP-250		1

Features

- Wide range of pressure ratings, sizes, and resilient materials provide long service life and low internal leakage
- High flow valves for liquid, corrosive, and air/inert gas service
- Industrial applications include:
  - Car wash
  - Laundry equipment
  - Air compressors
  - Industrial water control
  - Pumps

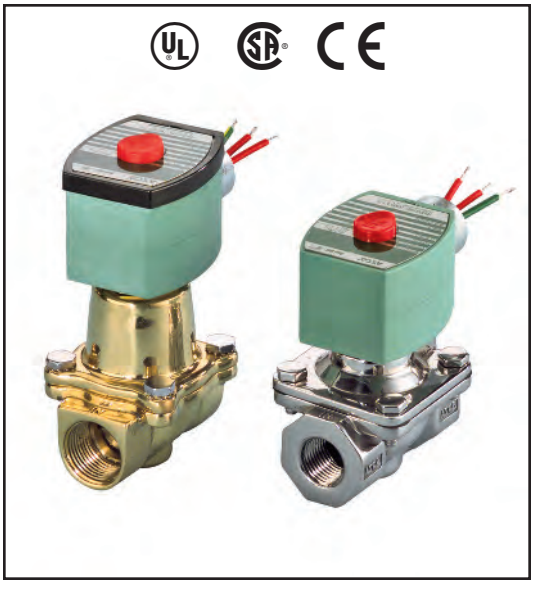

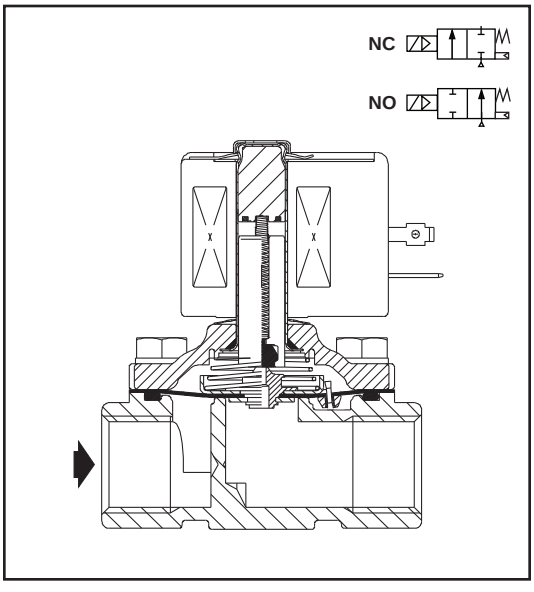

Construction

Valve Parts in Contact with Fluids		
Body	Brass	304 Stainless Steel*
Seals and Discs	NBR or PTFE	
Disc-Holder	PA	
Core Tube	305 Stainless Steel	
Core and Plugnut	430F Stainless Steel	
Springs	302 Stainless Steel	
Shading Coil	Copper	Silver

*Catalog Numbers 8210G127, 8210G129, 8210G132, 8210G133 have 316L Stainless Steel bodies.

Electrical

Standard Coil and Class of Insulation	Watt Rating and Power Consumption				Spare Coil Part Number			
		AC			General Purpose		Explosionproof	
	DC Watts	Watts	VA Holding	VA Inrush	AC	DC	AC	DC
F	-	6.1	16	40	238210	-	238214	-
F	11.6	10.1	25	70	238610	238710	238614	238714
F	16.8	16.1	35	180	272610	97617	272614	97617
F	-	17.1	40	93	238610	-	238614	-
F	-	20	43	240	99257	-	99257	-
F	-	20.1	48	240	272610	-	272614	-
F	30.8	-	-	-	-	501695	-	501696
H	40.6	-	-	-	-	238910	-	238914

Standard Voltages: 24, 120, 240, 480 volts AC, 60 Hz (or 110, 220 volts AC, 50 Hz). 6, 12, 24, 120, 240 volts DC. Must be specified when ordering.
Other voltages available when required.

Solenoid Enclosures

Standard: RedHat II - Watertight, Types 1, 2, 3, 3S, 4, and 4X; RedHat - Type I.

Optional: RedHat II - Explosionproof and Watertight, Types 3, 3S, 4, 4X, 6, 6P, 7, and 9; Red-Hat - Explosionproof and Watertight, Types 3, 4, 4X, 7, and 9.

(To order, add prefix "EF" to catalog number, except Catalog Numbers 8210B057, 8210B058, and 8210B059, which are not available with Explosionproof enclosures.)
See Optional Features Section for other available options.

Nominal Ambient Temp. Ranges

RedHat II/RedHat AC: 32°F to 125°F (0°C to 52°C)
RedHat II DC: 32°F to 104°F (0°C to 40°C)
RedHat DC: 32°F to 77°F (0°C to 25°C)
(104°F/40°C occasionally)
8210G227 AC: 32°F to 130°F (0°C to 54°C)
DC: 32°F to 90°F (0°C to 32°C)
Refer to Engineering Section for details.

Approvals

UL listed as indicated. CSA certified.
RedHat II meets applicable CE directives.
Refer to Engineering Section for details.

ATEX/IECEx certified with prefix "EV" as listed. *Refer to Optional Features Electrical Section for details.*

2/2 SERIES 8210

ASCO®

Specifications (English units)

Pipe Size (in)	Orifice Size (in)	Cv Flow Factor	Operating Pressure Differential (psi)							Max. Fluid Temp. °F		Brass Body			Stainless Steel Body			Watt Rating/ Class of Coil Insulation ⑦	
				Max. AC			Max. DC												
			Min.	Air-Inert Gas	Water	Light Oil @ 300 SSU	Air-Inert Gas	Water	Light Oil @ 300 SSU	AC	DC	Catalog Number	Const. Ref. ④	UL ⑤ Listing	Catalog Number	Const. Ref. ④	UL ⑤ Listing	AC	DC
NORMALLY CLOSED (Closed when de-energized), NBR or PTFE ② Seating																			
3/8	3/8	1.5	①	150	125	-	40	40	-	180	150	8210G073 ③	1P	●	8210G036 ③	1P	●	6.1/F	11.6/F
3/8	5/8	3	0	150	150	-	40	40	-	180	150	8210G093	5D	❍	-	-	-	10.1/F	11.6/F
3/8	5/8	3	5	200	150	135	125	100	100	180	150	8210G001 ▼	6D	❍	-	-	-	6.1/F	11.6/F
3/8	5/8	3	5	300	300	300	-	-	-	175	-	8210G006 ✓	5D	❍	-	-	-	17.1/F	-
1/2	7/16	2.2	①	150	125	-	40	40	-	180	150	8210G015 ③	2P	●	8210G037 ③	2P	●	6.1/F	11.6/F
1/2	5/8	4	0	150	150	-	40	40	-	180	150	8210G094 ✓	5D	❍	-	-	-	10.1/F	11.6/F
1/2	5/8	4	0	150	150	125	40	40	-	175	150	-	-	-	8210G087 ✓	7D	●	17.1/F	11.6/F
1/2	5/8	4	5	200	150	135	125	100	100	180	150	8210G002 ▼	6D	❍	-	-	-	6.1/F	11.6/F
1/2	5/8	4	5	300	300	300	-	-	-	175	-	8210G007	5D	❍	-	-	-	17.1/F	-
1/2	3/4	4	5	-	300	-	-	300	-	130	90	8210G227	5D	❍ †	-	-	-	17.1/F	40.6/H
3/4	5/8	4.5	0	150	150	125	40	40	-	175	150	-	-	-	8210G088 ✓	7D	●	17.1/F	11.6/F
3/4	3/4	5	5	125	125	125	100	90	75	180	150	8210G009 ▼	9D	❍	-	-	-	6.1/F	11.6/F
3/4	3/4	5	0	150	150	-	40	40	-	180	150	8210G095 ✓	8D	❍	-	-	-	10.1/F	11.6/F
3/4	3/4	6.5	5	250	150	100	125	125	125	180	150	8210G003 ▼	11D	❍	-	-	-	6.1/F	11.6/F
3/4	3/4	6	0	350	300	200	200	200	200	200	180	8210G026 ② ‡ ◆	40P/10D	●	-	-	-	16.1F	30.8/F
1	1	13	0	150	125	125	135	120	120	180	180	8210G054 ‡ ◆	41D/31D	●	8210G089 ‡ ◆	45D/15D	●	16.1/F	30.8/F
1	1	13	5	150	150	100	125	125	125	180	150	8210G004 ▼	12D	❍	-	-	-	6.1/F	11.6/F
1	1	13.5	0	300	225	115	-	-	-	200	-	8210G027 ‡	42P	●	-	-	-	20.1/F	-
1	1	13.5	10	300	300	300	-	-	-	175	-	8210G078 ②	13P	-	-	-	-	17.1/F	-
1 1/4	1 1/8	15	0	150	125	125	135	120	120	180	180	8210G055 ‡ ◆	43D/32D	●	-	-	-	16.1/F	30.8/F
1 1/4	1 1/8	15	5	150	150	100	125	125	125	180	150	8210G008 ▼	16D	❍	-	-	-	6.1/F	11.6/F
1 1/2	1 1/4	22.5	0	150	125	125	135	120	120	180	180	8210G056 ‡ ◆	44D/33D	●	-	-	-	16.1/F	30.8/F
1 1/2	1 1/4	22.5	5	150	150	100	125	125	125	180	150	8210G022 ▼	18D	●	8210G127	-	-	6.1/F	11.6/F
2	1 3/4	43	5	150	125	90	50	50	50	180	150	8210G100	20P	●	8210G129	-	-	6.1/F	11.6/F
2 1/2	1 3/4	45	5	150	125	90	50	50	50	180	150	8210G101	21P	●	-	-	-	6.1/F	11.6/F
NORMALLY OPEN (Open when de-energized), NBR Seating (PA Disc-Holder, except as noted)																			
3/8	5/8	3	0	150	150	125	125	125	80	180	150	8210G033	23D	●	-	-	-	10.1/F	11.6/F
3/8	5/8	3	5	250	200	200	250	200	200	180	180	8210G011 ⑧ ⑨	39D	●	-	-	-	10.1/F	11.6/F
1/2	5/8	4	0	150	150	125	125	125	80	180	150	8210G034 ✓	23D	●	-	-	-	10.1/F	11.6/F
1/2	5/8	3	0	150	150	100	125	125	80	180	150	-	-	-	8210G030 ✓	37D	●	10.1/F	11.6/F
1/2	5/8	4	5	250	200	200	250	200	200	180	180	8210G012 ⑧ ⑨	39D	●	-	-	-	10.1/F	11.6/F
3/4	3/4	5.5	0	150	150	125	125	125	80	180	150	8210G035 ✓	25D	●	-	-	-	10.1/F	11.6/F
3/4	5/8	3	0	150	150	100	125	125	80	180	150	-	-	-	8210G038 ✓	38D	●	10.1/F	11.6/F
3/4	3/4	6.5	5	-	-	-	250	200	200	-	180	8210C013	24D	●	-	-	-	-	16.8/F
3/4	3/4	6.5	5	250	200	200	-	-	-	180	-	8210G013	46D	●	-	-	-	16.1/F	-
1	1	13	0	125	125	125	-	-	-	180	-	8210B057 ⑥ ⑩	34D	●	-	-	-	20/F	-
1	1	13	5	-	-	-	125	125	125	-	180	8210D014	26D	●	-	-	-	-	16.8/F
1	1	13	5	150	150	125	-	-	-	180	-	8210G014	47D	●	-	-	-	16.1/F	-
1 1/4	1 1/8	15	0	125	125	125	-	-	-	180	-	8210B058 ⑥ ⑩	35D	●	-	-	-	20/F	-
1 1/4	1 1/8	15	5	-	-	-	125	125	125	-	180	8210D018	28D	●	-	-	-	-	16.8/F
1 1/4	1 1/8	15	5	150	150	125	-	-	-	180	-	8210G018	48D	●	-	-	-	16.1/F	-
1 1/2	1 1/4	22.5	0	125	125	125	-	-	-	180	-	8210B059 ⑥ ⑩	36D	●	-	-	-	20/F	-
1 1/2	1 1/4	22.5	5	-	-	-	125	125	125	-	180	8210D032	29D	●	-	-	-	-	16.8/F
1 1/2	1 1/4	22.5	5	150	150	125	-	-	-	180	-	8210G032	49D	●	8210G132	-	-	16.1/F	-
2	1 3/4	43	5	-	-	-	125	125	125	-	150	8210 103	30P	●	-	-	-	-	16.8/F
2	1 3/4	43	5	125	125	125	-	-	-	180	-	8210G103	50P	●	8210G133	-	-	16.1/F	-
2 1/2	1 3/4	45	5	-	-	-	125	125	125	-	150	8210 104	27P	●	-	-	-	-	16.8/F
2 1/2	1 3/4	45	5	125	125	125	-	-	-	180	-	8210G104	51P	●	-			16.1/F	-

① 5 psi on Air; 1 psi on Water.
② Valve provided with PTFE main disc.
③ Valve includes Ultem (G.E. trademark) piston.
④ Letter "D" denotes diaphragm construction; "P" denotes piston construction.
⑤ ❍ Safety Shutoff Valve; ● General Purpose Valve.
Refer to Engineering Section (Approvals) for details.
⑥ Valves not available with Explosionproof enclosures.
⑦ On 50 hertz service, the watt rating for the 6.1/F solenoid is 8.1 watts.
⑧ AC construction also has PA seating.
⑨ No disc-holder.
⑩ Stainless steel disc-holder.
† UL listed for fire protection systems per UL429A.
‡ DC constructions must have solenoid mounted vertical and upright.
✓ ATEX/IECEx certified with prefix "EV".
▼ ATEX/IECEx certified for DC only with prefix "EV".
◆ Not available in 6 Volt DC. EF and HB prefix only.

Specifications (Metric units)

Pipe Size (in)	Orifice Size (mm)	Kv Flow Factor (m^3/hr)	Operating Pressure Differential (bar)							Max. Fluid Temp. °C		Brass Body			Stainless Steel Body			Watt Rating/ Class of Coil Insulation ⑦	
				Max. AC			Max. DC												
			Min.	Air-Inert Gas	Water	Light Oil @ 300 SSU	Air-Inert Gas	Water	Light Oil @ 300 SSU	AC	DC	Catalog Number	Const. Ref. ④	UL ⑤ Listing	Catalog Number	Const. Ref. ④	UL ⑤ Listing	AC	DC
NORMALLY CLOSED (Closed when de-energized), NBR or PTFE ② Seating																			
3/8	10	1.3	①	10	9	-	3	3	-	82	65	8210G073 ③	1P	●	8210G036 ③	1P	●	6.1/F	11.6/F
3/8	16	2.6	0	10	10	-	3	3	-	82	65	8210G093	5D	❍	-	-	-	10.1/F	11.6/F
3/8	16	2.6	0.3	14	10	9	9	7	7	82	65	8210G001 ▼	6D	❍	-	-	-	6.1/F	11.6/F
3/8	16	2.6	0.3	21	21	21	-	-	-	79	-	8210G006 ✓	5D	❍	-	-	-	17.1/F	-
1/2	11	1.9	①	10	9	-	3	3	-	82	65	8210G015 ③	2P	●	8210G037 ③	2P	●	6.1/F	11.6/F
1/2	16	3.4	0	10	10	-	3	3	-	82	65	8210G094 ✓	5D	❍	-	-	-	10.1/F	11.6/F
1/2	16	3.4	0	10	10	9	3	3	-	79	65	-	-	-	8210G087 ✓	7D	●	17.1/F	11.6/F
1/2	16	3.4	0.3	14	10	9	9	7	7	82	65	8210G002 ▼	6D	❍	-	-	-	6.1/F	11.6/F
1/2	16	3.4	0.3	21	21	21	-	-	-	79	-	8210G007	5D	❍	-	-	-	17.1/F	-
1/2	19	3.4	0.3	-	21	-	-	21	-	54	32	8210G227	5D	❍ †	-	-	-	17.1/F	40.6H
3/4	16	3.9	0	10	10	9	3	3	-	79	65	-	-	-	8210G088 ✓	7D	●	17.1/F	11.6/F
3/4	19	4.3	0.3	9	9	9	7	6	5	82	65	8210G009 ▼	9D	❍	-	-	-	6.1/F	11.6/F
3/4	19	4.3	0	10	10	-	3	3	-	82	65	8210G095 ✓	8D	❍	-	-	-	10.1/F	11.6/F
3/4	19	5.6	0.3	17	10	7	9	9	9	82	65	8210G003 ▼	11D	❍	-	-	-	6.1/F	11.6/F
3/4	19	5.1	0	24	21	14	14	14	14	93	82	8210G026 ② ‡ ◆	40P/10D	●	-	-	-	16.1F	30.8/F
1	25	11	0	10	9	9	9	8	8	82	82	8210G054 ‡ ◆	41D/31D	●	8210G089 ‡ ◆	45D/15D	●	16.1/F	30.8/F
1	25	11	0.3	10	10	7	9	9	9	82	65	8210G004 ▼	12D	❍	-	-	-	6.1/F	11.6/F
1	25	11.5	0	21	16	8	-	-	-	93	-	8210G027 ‡	42P	●	-	-	-	20.1/F	-
1	25	11.5	0.7	21	21	21	-	-	-	79	-	8210G078 ②	13P	-	-	-	-	17.1/F	-
1 1/4	29	13	0	10	9	9	9	8	8	82	82	8210G055 ‡ ◆	43D/32D	●	-	-	-	16.1/F	30.8/F
1 1/4	29	13	0.3	10	10	7	9	9	9	82	65	8210G008 ▼	16D	❍	-	-	-	6.1/F	11.6/F
1 1/2	32	19.5	0	10	9	9	9	8	8	82	82	8210G056 ‡ ◆	44D/33D	●	-	-	-	16.1/F	30.8/F
1 1/2	32	19.5	0.3	10	10	7	9	9	9	82	65	8210G022 ▼	18D	●	8210G127	-	-	6.1/F	11.6/F
2	44	37	0.3	10	9	6	3	3	3	82	65	8210G100	20P	●	8210G129	-	-	6.1/F	11.6/F
2 1/2	44	39	0.3	10	9	6	3	3	3	82	65	8210G101	21P	●	-	-	-	6.1/F	11.6/F
NORMALLY OPEN (Open when de-energized), NBR Seating (PA Disc-Holder, except as noted)																			
3/8	16	2.6	0.0	10	10	9	9	9	6	82	65	8210G033	23D	●	-	-	-	10.1/F	11.6/F
3/8	16	2.6	0.3	17	14	14	17	14	14	82	82	8210G011 ⑧ ⑨	39D	●	-	-	-	10.1/F	11.6/F
1/2	16	3.4	0	10	10	9	9	9	6	82	65	8210G087 ✓	7D	●	-	-	-	10.1/F	11.6/F
1/2	16	2.6	0	10	10	7	9	9	6	82	65	-	-	-	8210G087 ✓	7D	●	10.1/F	11.6/F
1/2	16	3.4	0.3	17	14	14	17	14	14	82	82	8210G012 ⑧ ⑨	39D	●	-	-	-	10.1/F	11.6/F
3/4	19	4.7	0	10	10	9	9	9	6	82	65	8210G087 ✓	7D	●	-	-	-	10.1/F	11.6/F
3/4	16	2.6	0	10	10	7	9	9	6	82	65	-	-	-	8210G087 ✓	7D	●	10.1/F	11.6/F
3/4	19	5.6	0.3	-	-	-	17	14	14	-	82	8210C013	24D	●	-	-	-	-	16.8/F
3/4	19	5.6	0.3	17	14	14	-	-	-	82	-	8210G013	46D	●	-	-	-	16.1/F	-
1	25	11	0	9	9	9	-	-	-	82	-	8210B057 ⑥ ⑩	34D	●	-	-	-	20/F	-
1	25	11	0.3	-	-	-	9	9	9	-	82	8210D014	26D	●	-	-	-	-	16.8/F
1	25	11	0.3	10	10	9	-	-	-	82	-	8210G014	47D	●	-	-	-	16.1/F	-
1 1/4	29	13	0	9	9	9	-	-	-	82	-	8210B058 ⑥ ⑩	35D	●	-	-	-	20/F	-
1 1/4	29	13	0.3	-	-	-	9	9	9	-	82	8210D018	28D	●	-	-	-	-	16.8/F
1 1/4	29	13	0.3	10	10	9	-	-	-	82	-	8210G018	48D	●	-	-	-	16.1/F	-
1 1/2	32	19.5	0	9	9	9	-	-	-	82	-	8210B059 ⑥ ⑩	36D	●	-	-	-	20/F	-
1 1/2	32	19.5	0.3	-	-	-	9	9	9	-	82	8210D032	29D	●	-	-	-	-	16.8/F
1 1/2	32	19.5	0.3	10	10	9	-	-	-	82	-	8210G032	49D	●	8210G132	-	-	16.1/F	-
2	44	37	0.3	-	-	-	9	9	9	-	65	8210 103	30P	●	-	-	-	-	16.8/F
2	44	37	0.3	9	9	9	-	-	-	82	-	8210G103	50P	●	8210G133	-	-	16.1/F	-
2 1/2	44	39	0.3	-	-	-	9	9	9	-	65	8210 104	27P	●	-	-	-	-	16.8/F
2 1/2	44	39	0.3	9	9	9	-	-	-	82	-	8210G104	51P	●	-	-	-	16.1/F	-

① 0.3 bar on Air; 0.0 bar on Water.
② Valve provided with PTFE main disc.
③ Valve includes ULtem (G.E. trademark) piston.
④ Letter "D" denotes diaphragm construction; "P" denotes piston construction.
⑤ ❍ Safety Shutoff Valve; ● General Purpose Valve.
Refer to Engineering Section (Approvals) for details.
⑥ Valves not available with Explosionproof enclosures.
⑦ On 50 hertz service, the watt rating for the 6.1/F solenoid is 8.1 watts.
⑧ AC construction also has PA seating.
⑨ No disc-holder.
⑩ Stainless steel disc-holder.
† UL listed for fire protection systems per UL429A.
‡ DC constructions must have solenoid mounted vertical and upright.
✓ ATEX/IECEx certified with prefix "EV".
▼ ATEX/IECEx certified for DC only with prefix "EV".
◆ Not available in 6 Volt DC. EF and HB prefix only.

Dimensions: inches (mm)

Const. Ref.		H	K	L	P	W
1*	in	3.85	3.00	1.91	3.41	1.69
	mm	98	76	49	87	43
2*	in	4.17	3.25	2.28	3.63	1.69
	mm	106	83	58	92	43
5	in	3.84	2.31	2.75	3.28	2.28
	mm	98	59	70	83	58
6*	in	3.38	1.94	2.75	2.80	2.28
	mm	86	49	70	71	58
7	in	4.19	2.50	2.81	3.47	2.39
	mm	106	64	71	88	61
8	in	4.13	2.47	2.81	3.44	2.29
	mm	105	63	71	87	58
9*	in	3.66	2.10	2.81	2.96	2.28
	mm	93	53	71	75	58
10*	in	5.20	3.40	2.80	4.50	2.50
	mm	131	86	71	114	62
11*	in	4.16	2.66	3.84	3.52	2.75
	mm	106	68	98	89	70
12	in	5.64	3.15	3.75	4.01	3.36
	mm	143	80	95	102	85
13	in	4.44	3.22	3.75	4.19	5.81
	mm	113	82	95	106	147
15*	in	5.20	3.30	3.80	4.40	3.80
	mm	133	83	98	111	98
16	in	5.64	3.15	3.66	4.01	3.56
	mm	143	80	93	102	90
18*	in	6.11	3.30	4.38	4.16	3.92
	mm	155	84	111	106	100
20*	in	7.33	3.71	5.06	4.57	4.87
	mm	186	94	129	116	124
21*	in	7.33	3.71	5.50	4.57	4.87
	mm	186	94	140	116	124
23	in	4.35	2.65	2.75	3.79	2.28
	mm	110	67	70	96	58
24	in	5.06	X	3.78	4.44	2.75
	mm	129	X	96	113	70
25	in	4.64	2.81	2.81	3.94	2.28
	mm	118	71	71	100	58
26	in	6.53	X	3.75	4.91	3.19
	mm	166	X	95	125	81
27	in	8.22	X	5.50	5.47	4.87
	mm	209	X	140	139	124
28	in	6.53	X	3.66	4.91	3.19
	mm	166	X	93	125	81
29	in	7.03	X	4.38	5.06	4.40
	mm	179	X	111	129	112

* DC dimensions slightly larger.
IMPORTANT: Valves may be mounted in any position, except as noted in specifications table.

Const. Ref. 1, 2

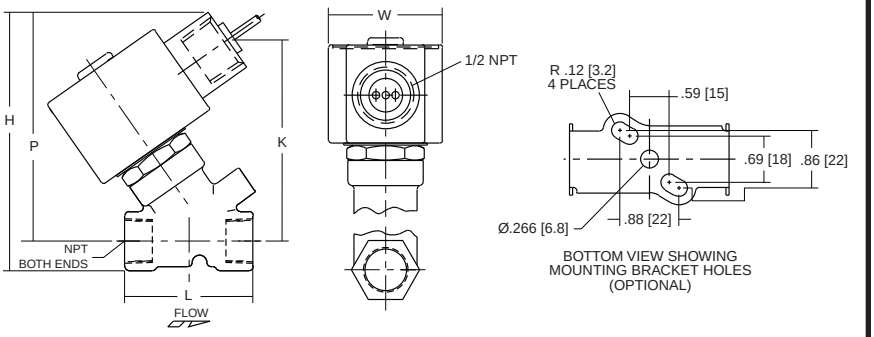

Const. Ref. 13

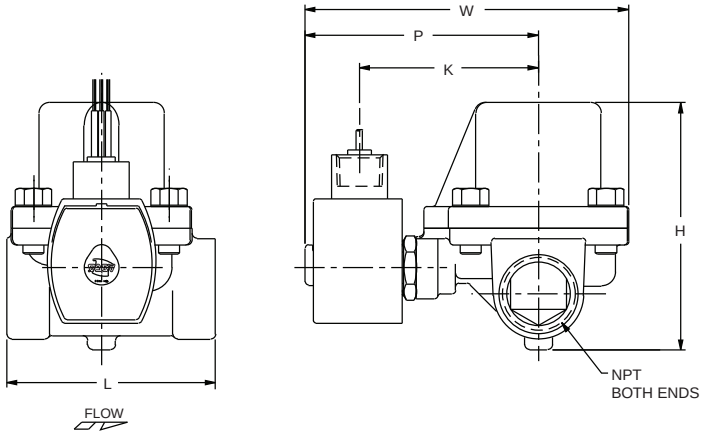

Const. Ref. 5-9, 11, 23 , 25, 37,38, 40-46

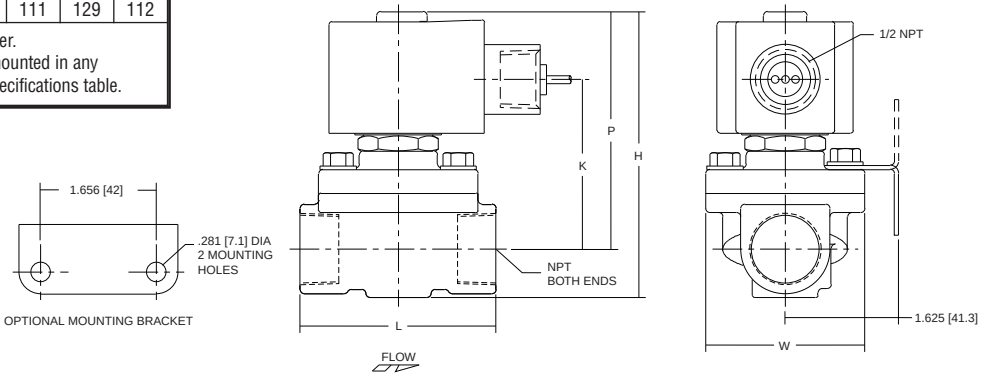

Dimensions: inches (mm)

Const. Ref.		H	K	L	P	W
30	in	8.22	X	5.06	5.47	4.87
	mm	209	X	129	139	124
31	in	5.13	3.19	3.76	4.32	3.27
	mm	130	81	95	110	83
32	in	5.60	3.44	3.66	4.57	3.27
	mm	142	87	93	116	83
33	in	5.92	3.66	4.51	4.80	3.89
	mm	150	93	115	122	99
34	in	6.91	X	3.75	6.09	3.25
	mm	176	X	95	155	83
35	in	7.34	X	3.66	6.34	3.25
	mm	186	X	93	161	83
36	in	7.66	X	4.38	6.56	3.91
	mm	1.95	X	111	167	99
37	in	4.61	2.75	2.81	3.89	2.39
	mm	117	70	71	99	61
38	in	4.61	2.75	2.81	3.89	2.39
	mm	117	70	71	99	61
39	in	5.42	2.31	2.75	4.86	3.80
	mm	138	59	70	123	97
40	in	5.20	3.29	2.81	4.50	2.28
	mm	132	83	71	114	58
41	in	5.13	3.10	3.75	4.32	3.25
	mm	130	79	95	110	83
42	in	6.43	4.40	3.93	5.62	3.25
	mm	163	112	100	143	83
43	in	5.57	3.35	3.66	4.57	3.25
	mm	142	85	93	116	83
44	in	5.90	3.57	4.38	4.79	3.91
	mm	150	91	111	122	99
45	in	5.26	3.17	3.75	4.38	3.84
	mm	134	81	95	111	98
46	in	4.95	3.10	3.84	4.31	2.75
	mm	126	79	98	110	70
47	in	6.43	3.59	3.75	4.81	3.52
	mm	163	91	95	122	90
48	in	6.43	3.59	3.66	4.81	3.73
	mm	163	91	93	122	95
49	in	6.91	3.75	4.38	4.96	4.40
	mm	176	95	111	126	112
50	in	8.13	4.15	5.06	5.37	4.87
	mm	207	105	129	136	124
51	in	8.13	4.15	5.50	5.37	5.18
	mm	207	105	140	136	132

IMPORTANT: Valves may be mounted in any position, except as noted in specifications table.

Const. Ref. 10, 15, 31, 32, 33

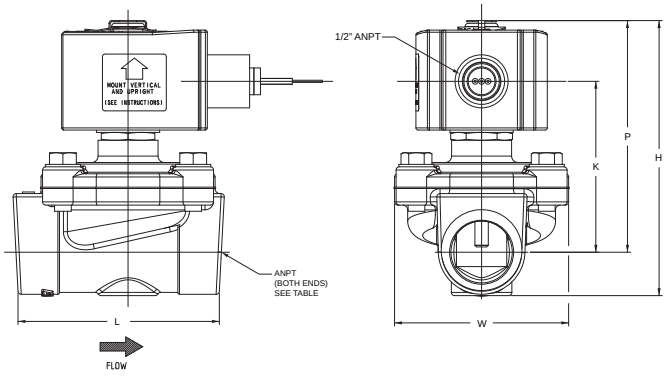

Const. Ref. 24, 34, 35, 36

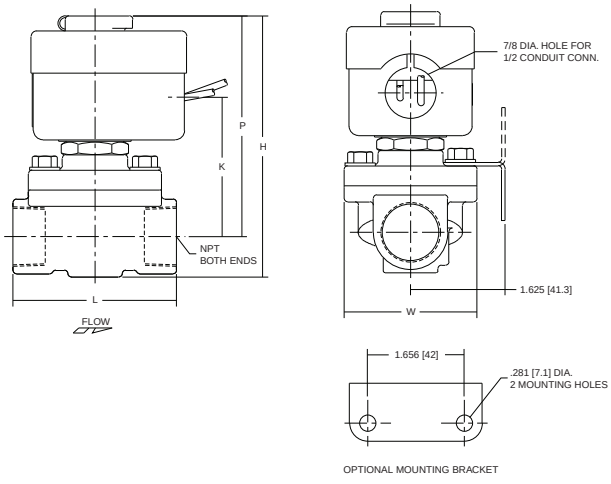

Const. Ref. 12, 16, 26, 28, 47, 48

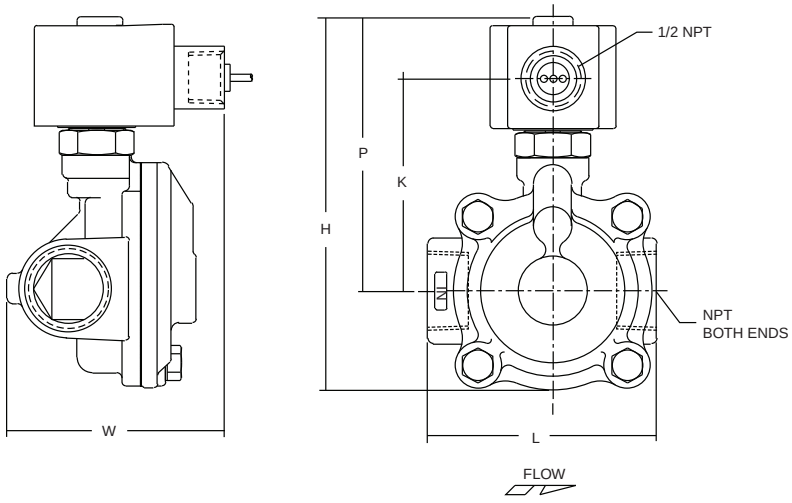

Dimensions: inches (mm)

Const. Ref. 39

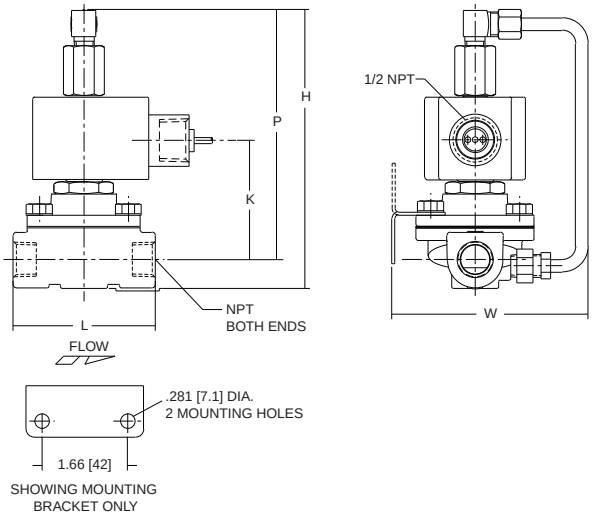

Const. Ref. 18, 29, 49

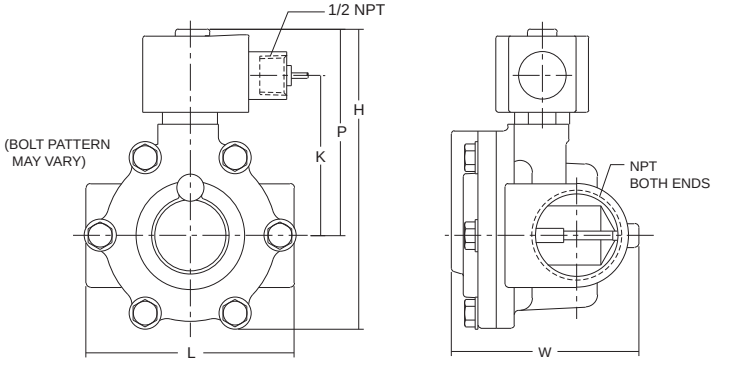

Const. Ref. 20, 21, 27, 30, 50, 51

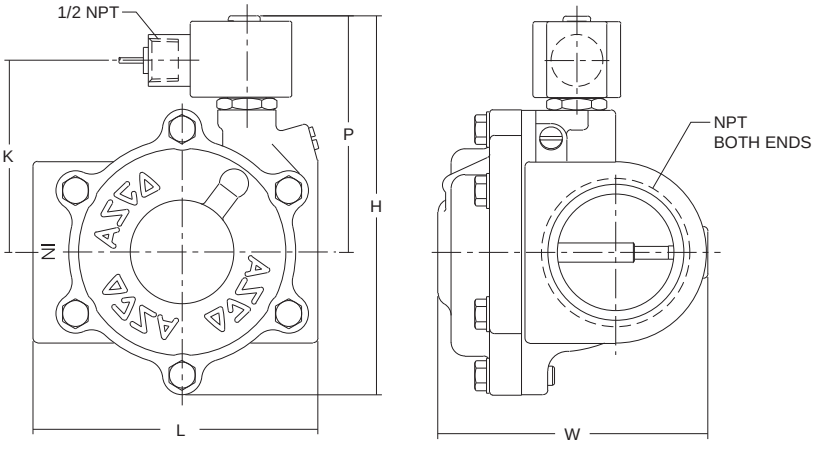

CS-304-500 : Identification sheet

VWTC PROJECT NUMBER:	Iqaluit WWTP	REV:	01
PROJECT NAME:	5000218036	SUBMITTED TO (COMPANY):	
ENGINEER:	G. HÉBERT	SUBMITTED TO (RESPONSIBLE)	
PROJECT MANAGER:	C. BEKAERT	PROJECT NUM REFERENCE.:	
PHONE NUMBER:		LOT NUMBER:	

SUPPLIER	EQPT CODE	EQPT TAG NO	DIA	DESCRIPTION	INFO 1	INFO 2	INFO 3	APPLIC.	NOTE	REV
TEKNO VALVE	VASDBR330455	SV-04-713	N/A	HP-250 VALVE	TYPE: SOLENOID VALVE//MANUFACTURER : ASCO//MODEL : 8345G001-120VAC//CONNECTION TYPE : THREADED | 6 mm (1/4") | 6 mm (1/4")//BODY : BRASS// SEAL | SEAT :NBR | // STEM : N/A	ACTING : PILOT	NORMALLY : CLOSED	HP-250		1

Features

- Compact valves for general service applications
- Low-cost, 4-way valve when low flow is sufficient
- Mountable in any position

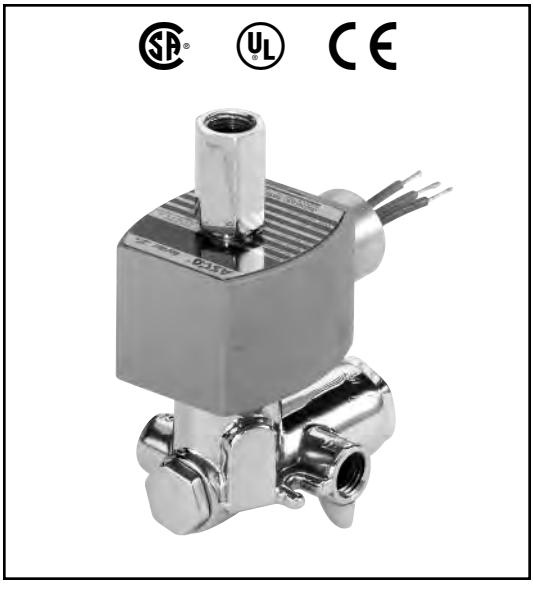

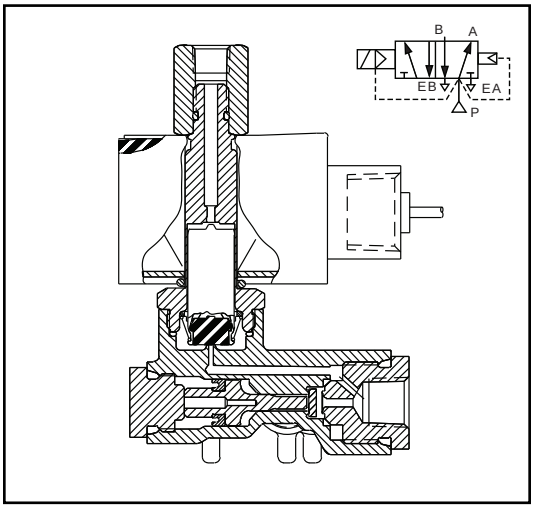

Construction

Valve Parts in Contact with Fluids		
Body	Brass	316 Stainless Steel
Seals and Disc	NBR and PA	
Core Tube	305 Stainless Steel	
Core and Plugnut	430F Stainless Steel	
Springs	302 Stainless Steel	
Shading Coil	Copper	Silver
Piston	PA	

Electrical

Standard Coil and Class of Insulation	Watt Rating and Power Consumption				Spare Coil Part Number					
		AC			General Purpose		Explosionproof (EF)		Explosionproof (EV)	
	DC Watts	Watts	VA Holding	VA Inrush	AC	DC	AC	DC	AC	DC
F	11.6	10.1	25	50	238610	238710	238614	238714	274614	274714

Standard Voltages: 24, 120, 240, 480 volts AC, 60 Hz (or 110, 220 volts AC, 50 Hz). 6, 12, 24, 120, 240 volts DC. Must be specified when ordering.
Other voltages are available when required.

Solenoid Enclosures

Standard: Watertight, Types 1, 2, 3, 3S, 4, and 4X.

Optional: Explosionproof and Watertight, Types 3, 3S, 4, 4X, 6, 6P, 7, and 9. (To order, add prefix "EF" or, for Explosionproof Stainless Steel trim and hub on Brass-Bodied valves, add "EV" to catalog number.)

See Optional Features Section for other available options.

Nominal Ambient Temp. Ranges

AC: 32˚F to 125˚F (0˚C to 52˚C)
DC: 32˚F to 104˚F (0˚C to 40˚C)

Refer to Engineering Section for details.

Approvals

CSA certified. UL listed as General Purpose Valve.
EV8345G081 solenoid only UL approved.
Meets applicable CE directives.
Refer to Engineering Section for details.

ATEX/IECEx certified with prefix "EV" as listed.
Refer to Optional Features Electrical Section for details.

Important

A Minimum Operating Pressure Differential must be maintained between the pressure and exhaust ports. Supply and exhaust piping must be full area, unrestricted. ASCO flow controls and other similar components must be installed in the cylinder lines only.

Refer to Engineering Section for details.

ASCO®

Specifications (English units)

Pipe Size (in)	Orifice Size (in)		Cv Flow Factor		Operating Pressure Differential (psi)							Max. Fluid Temp. °F		Brass Body	Stainless Steel Body		Watt Rating/ Class of Coil Insulation	
					Max. AC				Max. DC									
	Press.	Exh.	Inlet	Exh.	Min.	Air-Inert Gas	Water	Lt. Oil @ 50 SSU	Air-Inert Gas	Water	Lt. Oil @ 50 SSU	AC	DC	Catalog Number	Catalog Number	Const. Ref.	AC	DC
SINGLE SOLENOID																		
1/4	1/16	3/32	.09	.09	10	150	150	150	100	100	100	180	104	8345G001 ①	EV8345G081 ①	1	10.1/F	11.6/F
SINGLE SOLENOID AIR-ONLY CONSTRUCTION - Exhaust to Atmosphere																		
1/4	1/16	3/32	.09	.09	10	150	-	-	100	-	-	180	104	8345H003	-	1	10.1/F	11.6/F

① ATEX/IECEx certified with prefix "EV".

Specifications (Metric units)

Pipe Size (in)	Orifice Size (mm)		Kv Flow Factor (m^3/h)		Operating Pressure Differential (bar)							Max. Fluid Temp. °C		Brass Body	Stainless Steel Body		Watt Rating/ Class of Coil Insulation	
					Max. AC				Max. DC									
	Press.	Exh.	Inlet	Exh.	Min.	Air-Inert Gas	Water	Lt. Oil @ 50 SSU	Air-Inert Gas	Water	Lt. Oil @ 50 SSU	AC	DC	Catalog Number	Catalog Number	Const. Ref.	AC	DC
SINGLE SOLENOID																		
1/4	2	2	.08	.08	0.7	10	10	10	7	7	7	82	40	8345G001 ①	EV8345G081 ①	1	10.1/F	11.6/F
SINGLE SOLENOID AIR-ONLY CONSTRUCTION - Exhaust to Atmosphere																		
1/4	2	2	.08	.08	0.7	10	-	-	7	-	-	82	40	8345H003	-	1	10.1/F	11.6/F

① ATEX/IECEx certified with prefix "EV".

Dimensions inches (mm)

Const. Ref. 1

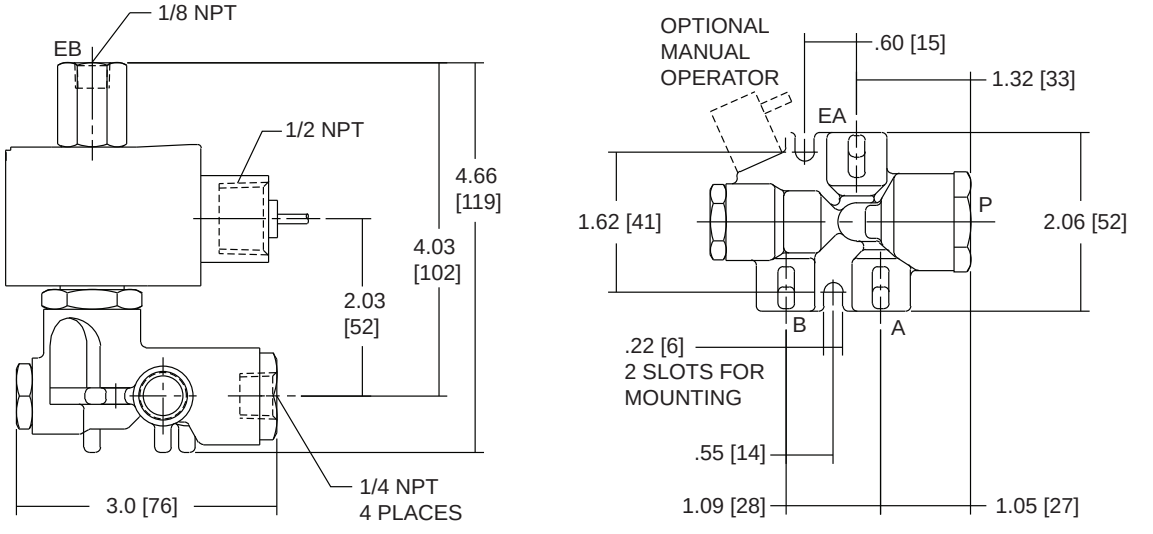

CS-405-112 : Identification sheet

VWTC PROJECT NUMBER:	Iqaluit WWTP	REV:	01
PROJECT NAME:	5000218036	SUBMITTED TO (COMPANY):	
ENGINEER:	G. HÉBERT	SUBMITTED TO (RESPONSIBLE)	
PROJECT MANAGER:	C. BEKAERT	PROJECT NUM REFERENCE.:	
PHONE NUMBER:		LOT NUMBER:	

SUPPLIER	EQPT CODE	EQPT TAG NO	DIA	DESCRIPTION	INFO 1	INFO 2	INFO 3	APPLIC.	NOTE	REV
ENDRESS & HAUSER	IEMRLE344048	LIT-04-742		HP-250 INSTRUMENT	LEVEL TRANSMITTER/MANUFACTURER : ENDRESS AND HAUSER/MODEL: PMC21-CA1V1ECVXJJ/ CA: Approval CSA GU / 1: Output 4-20mA / V: Electrical Connection Valve plug ISO4400 NPT1/2 / 1E: Sensor range 250mbar / C: Sensor range; kPa/Mpa	VXJ: Process connection: MNPT1/2 FNPT 1/4, 316L / J: Seal EPDM		HP-250		1
ENDRESS & HAUSER	IEMRLE344048	LIT-04-746		HP-250 INSTRUMENT	LEVEL TRANSMITTER/MANUFACTURER : ENDRESS AND HAUSER/MODEL: PMC21-CA1V1ECVXJJ/ CA: Approval CSA GU / 1: Output 4-20mA / V: Electrical Connection Valve plug ISO4400 NPT1/2 / 1E: Sensor range 250mbar / C: Sensor range; kPa/Mpa	VXJ: Process connection: MNPT1/2 FNPT 1/4, 316L / J: Seal EPDM		HP-250		1

Technical Information
Cerabar PMC11, PMC21, PMP11, PMP21

Process pressure measurement



Pressure transducer with ceramic and metal sensors

Application

The Cerabar is a pressure transducer for the measurement of absolute and gauge pressure in gases, vapors, liquids and dust. The Cerabar can be used internationally thanks to a wide range of approvals and process connections.

Your benefits

- High reproducibility and long-term stability
- Reference accuracy: up to 0.3%
- Customized measuring ranges
  - Turn down up to 5:1
  - Sensor for measuring ranges up to 400 bar (6 000 psi)
- Housing and process isolating diaphragm made of 316L

Endress+Hauser
People for Process Automation

Table of contents

Document information 4
Document function 4
Symbols used 4
Documentation 5
Terms and abbreviations 6
Turn down calculation 7

Function and system design 8
Measuring principle - process pressure measurement 8
Measuring system 8
Device features 9
Product design 11
System integration 11

Input 12
Measured variable 12
Measuring range 12

Output 15
Output signal 15
Signal range 4 to 20 mA 15
Load (for 4 to 20 mA devices) 15
Load resistance (for 0 to 10 V devices) 15
Signal on alarm 4 to 20 mA 15
Dead time, time constant 15
Dynamic behavior 16

Power supply 17
Terminal assignment 17
Supply voltage 17
Current consumption and alarm signal 17
Power supply fault 18
Electrical connection 18
Cable specification 18
Residual ripple 18
Influence of power supply 18
Overvoltage protection 18

Performance characteristics of ceramic process isolating diaphragm 19
Reference operating conditions 19
Measuring uncertainty for small absolute pressure measuring ranges 19
Influence of the installation position 19
Resolution 19
Reference accuracy 19
Thermal change of the zero output and the output span . . . 19
Long-term stability 20
Switch-on time 20

Performance characteristics of metallic process isolating diaphragm 21
Reference operating conditions 21
Measuring uncertainty for small absolute pressure measuring ranges 21
Influence of the installation position 21
Resolution 21
Reference accuracy 21
Thermal change of the zero output and the output span . . . 21
Long-term stability 21
Switch-on time 21

Installation 22
Installation conditions 22
Influence of the installation position 22
Mounting location 22
Mounting instructions for oxygen applications 23

Environment 25
Ambient temperature range 25
Storage temperature range 25
Climate class 25
Degree of protection 25
Vibration resistance 25
Electromagnetic compatibility 25

Process 26
Process temperature range for devices with ceramic process isolating diaphragm 26
Process temperature range for devices with metallic process isolating diaphragm 26
Pressure specifications 27

Mechanical construction 28
Design, dimensions 28
Electrical connection 28
Housing 29
Process connections with internal, ceramic process isolating diaphragm 30
Process connections with internal, ceramic process isolating diaphragm 31
Process connections with internal, ceramic process isolating diaphragm 32
Process connections with internal, ceramic process isolating diaphragm 32
Process connections with internal, metal process isolating diaphragm 33
Process connections with internal, metal process isolating diaphragm 34
Process connections with internal, metal process isolating diaphragm 35
Process connections with internal, metal process isolating diaphragm 35
Process connections with flush-mounted, metal process isolating diaphragm 36
Materials in contact with process 37
Materials not in contact with process 38
Cleaning 39

Operability 40
Plug-on display PHX20 (optional) 40

Certificates and approvals 41
CE mark 41

RoHS 41
RCM-Tick marking 41
EAC conformity 41
Approval 41
Safety Instructions (XA) 41
Marine approval (pending) 42
Pressure Equipment Directive 2014/68/EU (PED) 42
Other standards and guidelines 42
CRN approval 43
Calibration unit 43
Calibration 43
Inspection certificates 43

Ordering information 44
Scope of delivery 44

Accessories 45
Weld-in adapter 45
Plug-on display PHX20 45
M12 plug connectors 45

Documentation 46
Field of Activities 46
Technical Information 46
Operating Instructions 46
Brief Operating Instructions 46
Safety Instructions (XA) 46

Document information

Document function

The document contains all the technical data on the device and provides an overview of the accessories and other products that can be ordered for the device.

Symbols used

Safety symbols

Symbol	Meaning
DANGER	**DANGER!** This symbol alerts you to a dangerous situation. Failure to avoid this situation will result in serious or fatal injury.
WARNING	**WARNING!** This symbol alerts you to a dangerous situation. Failure to avoid this situation can result in serious or fatal injury.
CAUTION	**CAUTION!** This symbol alerts you to a dangerous situation. Failure to avoid this situation can result in minor or medium injury.
NOTICE	**NOTE!** This symbol contains information on procedures and other facts which do not result in personal injury.

Electrical symbols

Symbol	Meaning	Symbol	Meaning
	**Protective ground connection** A terminal which must be connected to ground prior to establishing any other connections.		**Ground connection** A grounded terminal which, as far as the operator is concerned, is grounded via a grounding system.

Symbols for certain types of information

Symbol	Meaning
	**Permitted** Procedures, processes or actions that are permitted.
	**Forbidden** Procedures, processes or actions that are forbidden.
	**Tip** Indicates additional information.
	Reference to documentation
	Reference to page
	Reference to graphic
	Visual inspection

Symbols in graphics

Symbol	Meaning
1, 2, 3 ...	Item numbers
1. , 2. , 3. ...	Series of steps
A, B, C, ...	Views

Documentation

The document types listed are available:
In the Download Area of the Endress+Hauser Internet site: www.endress.com → Download

Brief Operating Instructions (KA): getting the 1st measured value quickly

The Brief Operating Instructions contain all the essential information from incoming acceptance to initial commissioning.

Operating Instructions (BA): your comprehensive reference

These Operating Instructions contain all the information that is required in various phases of the life cycle of the device: from product identification, incoming acceptance and storage, to mounting, connection, operation and commissioning through to troubleshooting, maintenance and disposal.

Safety Instructions (XA)

Safety Instructions (XA) are supplied with the device depending on the approval. These instructions are an integral part of the Operating Instructions.

Device	Directive	Documentation	Option [1]
PMP21	ATEX II 1/2G Ex ia IIC T4 Ga/Gb	XA01271P	BA
PMC21	ATEX II 2G Ex ia IIC T4 Gb	XA01271P	BB
PMC21 PMP21	ATEX II 3G Ex ec IIC T4 Gc	XA01533P	BC
PMC21 PMP21	FM IS Cl. I, Div.1 Gr. A-D T4	XA01321P	FA
PMC21 PMP21	CSA C/US IS Cl. I Div. 1 Gr. A-D	XA01322P	CB
PMC21 PMP21	EAC Ex ia IIC T4 Ga/Gb	XA01540P	GA
PMC21 PMP21	IEC Ex ia IIC T4 Ga/Gb	XA01271P	IA
PMC21 PMP21	NEPSI Ex ia IIC T4	XA01363P	NA
PMC21 PMP21	TIIS Ex ia IIC T4	In preparation	TA

1) Product Configurator, order code for "Approval"

The nameplate provides information on the Safety Instructions (XA) that are relevant for the device.

Terms and abbreviations

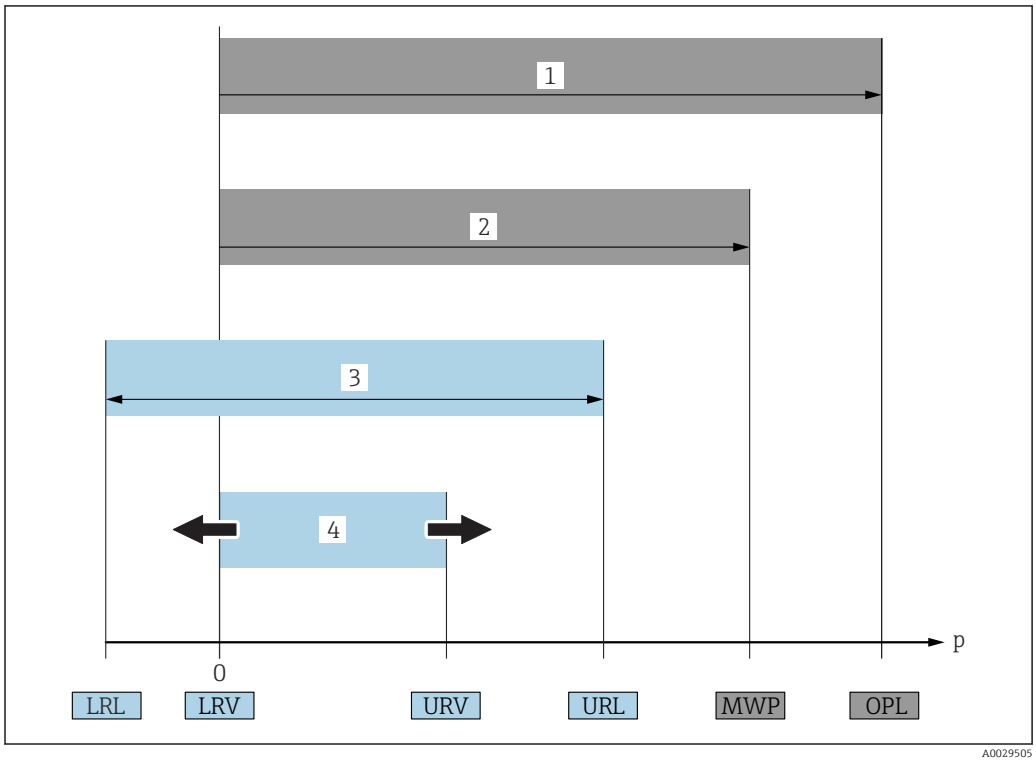

Item	Term/ abbreviation	Explanation
1	OPL	The OPL (over pressure limit = sensor overload limit) for the measuring device depends on the lowest-rated element, with regard to pressure, of the selected components, i.e. the process connection has to be taken into consideration in addition to the measuring cell. Also observe pressure-temperature dependency. For the relevant standards and additional notes, see the "Pressure specifications" section → 27 . The OPL may only be applied for a limited period of time.
2	MWP	The MWP (maximum working pressure) for the sensors depends on the lowest-rated element, with regard to pressure, of the selected components, i.e. the process connection has to be taken into consideration in addition to the measuring cell. Also observe pressure-temperature dependency. For the relevant standards and additional notes, see the "Pressure specifications" section → 27 . The MWP may be applied at the device for an unlimited period. The MWP can also be found on the nameplate.
3	Maximum sensor measuring range	Span between LRL and URL This sensor measuring range is equivalent to the maximum calibratable/adjustable span.
4	Calibrated/ adjusted span	Span between LRV and URV Factory setting: 0 to URL Other calibrated spans can be ordered as customized spans.
p	-	Pressure
-	LRL	Lower range limit
-	URL	Upper range limit
-	LRV	Lower range value
-	URV	Upper range value
-	TD (turn down)	Turn down The turn down is preset at the factory and cannot be changed. Example - see the following section.

Turn down calculation

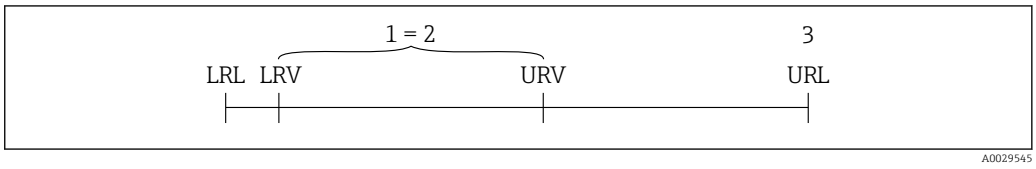

1 Calibrated/adjusted span
2 Zero point-based span
3 URL sensor

Example

- Sensor:10 bar (150 psi)
- Upper range value (URL) = 10 bar (150 psi)

Turn down (TD):

$$TD = \frac{URL}{|URV - LRV|}$$

$$TD = \frac{10\ bar\ (150\ psi)}{|5\ bar\ (75\ psi) - 0\ bar\ (0\ psi)|} = 2$$

In this example, the TD is 2:1.
This span is based on the zero point.

- Calibrated/adjusted span: 0 to 5 bar (0 to 75 psi)
- Lower range value (LRV) = 0 bar (0 psi)
- Upper range value (URV) = 5 bar (75 psi)

Function and system design

Measuring principle - process pressure measurement

Devices with ceramic process isolating diaphragm (Ceraphire®)

The ceramic sensor is an oil-free sensor, i.e. the process pressure acts directly on the robust ceramic process isolating diaphragm and causes it to deflect. A pressure-dependent change in capacitance is measured at the electrodes of the ceramic substrate and the process isolating diaphragm. The measuring range is determined by the thickness of the ceramic process isolating diaphragm.

Advantages:
- Guaranteed overload resistance up to 40 times the nominal pressure
- The ultrapure 99.9% ceramic (Ceraphire®, see also "www.endress.com/ceraphire") ensures:
  - Extremely high chemical durability
  - High mechanical durability
- Can be used in absolute vacuum
- Small measuring ranges

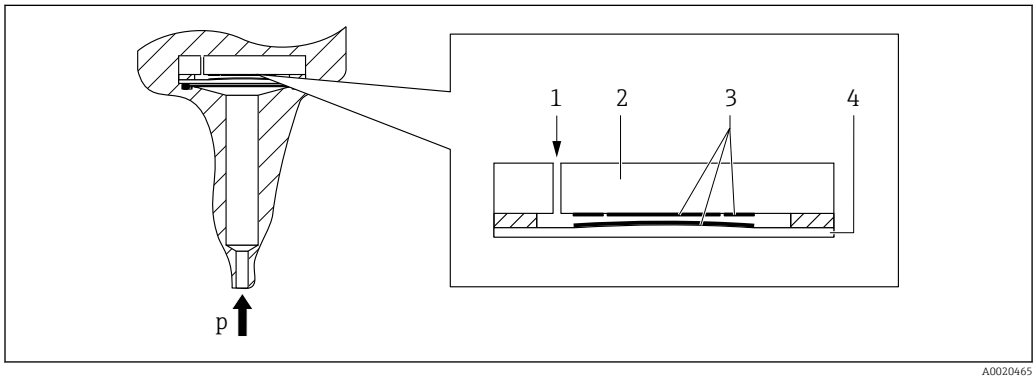

A0020465

1 Air pressure (gauge pressure sensors)
2 Ceramic substrate
3 Electrodes
4 Ceramic process isolating diaphragm

Devices with metallic process isolating diaphragm

The process pressure deflects the metal process isolating diaphragm of the sensor and a fill fluid transfers the pressure to a Wheatstone bridge (semiconductor technology). The pressure-dependent change in the bridge output voltage is measured and evaluated.

Advantages:
- Can be used for high process pressures
- Fully welded sensor
- Slim, flush-mounted process connections available

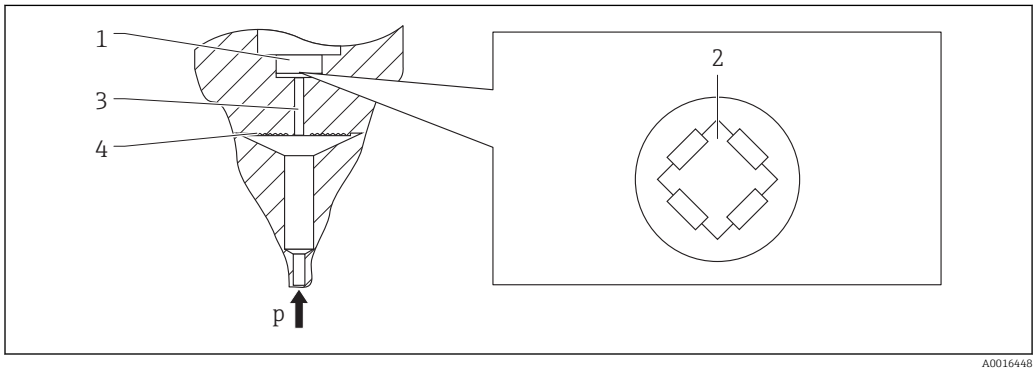

A0016448

1 Silicon measuring element, substrate
2 Wheatstone bridge
3 Channel with fill fluid
4 Metal process isolating diaphragm

Measuring system

A complete measuring system comprises:

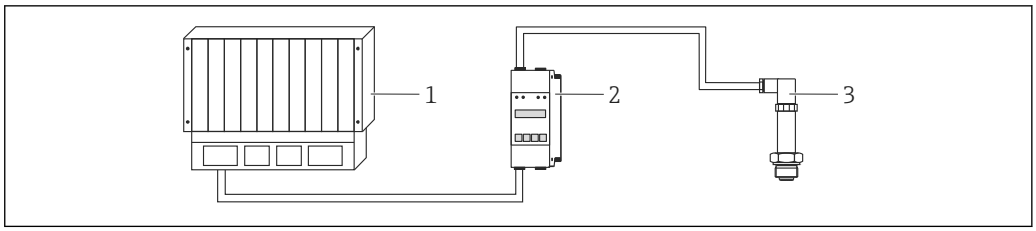

1 PLC (programmable logic control)
2 e.g. RN221N / RMA42 (if required)
3 Pressure transducer

Device features

	PMC11
Field of application	Gauge pressure
Process connections	▪ Thread ISO 228 ▪ Thread ASME ▪ DIN 13
Measuring ranges	From −400 to +400 mbar (−6 to +6 psi) to −1 to +40 bar (−15 to +600 psi).
OPL (depends on the measuring range)	Max. 0 to +60 bar (0 to +900 psi)
Process temperature range	−25 to +85 °C (−13 to +185 °F)
Ambient temperature range	−40 to +70 °C (−40 to +158 °F)
Reference accuracy	Up to 0.5 %, TD 5:1, for details see the "Reference accuracy" section.
Supply voltage	▪ 4 to 20 mA output: 10 to 30V DC ▪ 0 to 10 V output: 12 to 30V DC
Output	▪ 4 to 20 mA ▪ 0 to 10 V
Material	▪ Housing made from 316L (1.4404) ▪ Process connections made from 316L ▪ Process isolating diaphragm made from Al_2O_3 aluminum-oxide ceramic, (Ceraphire®), ultrapure 99.9 %
Options	▪ Certificate of calibration ▪ Cleaned from oil+grease

	PMP11
Field of application	Gauge pressure
Process connections	▪ Thread ISO 228, also flush-mount ▪ Thread ASME ▪ DIN 13
Measuring ranges	From −400 to +400 mbar (−6 to +6 psi) to −1 to +40 bar (−15 to +600 psi).
OPL (depends on the measuring range)	Max. 0 to +160 bar (0 to +2 400 psi)
Process temperature range	−25 to +85 °C (−13 to +185 °F)
Ambient temperature range	−40 to +70 °C (−40 to +158 °F)
Reference accuracy	Up to 0.5 %, TD 5:1, for details see the "Reference accuracy" section.
Supply voltage	▪ 4 to 20 mA output: 10 to 30V DC ▪ 0 to 10 V output: 12 to 30V DC
Output	▪ 4 to 20 mA ▪ 0 to 10 V

	PMP11
Material	▪ Housing made from 316L (1.4404) ▪ Process connections made from 316L (1.4404) ▪ Process isolating diaphragm made from 316L (1.4435)
Options	▪ Certificate of calibration ▪ Cleaned from oil+grease

	PMC21
Field of application	Gauge pressure and absolute pressure
Process connections	▪ Thread ISO 228 ▪ Thread DIN 13 ▪ Thread ASME ▪ Thread JIS
Measuring ranges	From −100 to +100 mbar (−1.5 to +1.5 psi) to −1 to +40 bar (−15 to +600 psi).
OPL (depends on the measuring range)	Max. 0 to +60 bar (0 to +900 psi)
Process temperature range	−25 to +100 °C (−13 to +212 °F)
Ambient temperature range	▪ −40 to +85 °C (−40 to +185 °F) ▪ Devices for hazardous areas: −40 to +70 °C (−40 to +158 °F)
Reference accuracy	Up to 0.3 %, TD 5:1, for details see the "Reference accuracy" section.
Supply voltage	10 to 30 V DC
Output	4 to 20 mA
Material	▪ Housing made from 316L (1.4404) ▪ Process connections made from 316L ▪ Process isolating diaphragm made from Al_2O_3 aluminum-oxide ceramic, (Ceraphire®), ultrapure 99.9 %
Options	▪ Ex approvals ▪ Marine certificate ▪ Min. alarm current setting ▪ 3.1 Material certificates ▪ Certificate of calibration ▪ Cleaned from oil+grease ▪ Cleaned for O_2 service

	PMP21
Field of application	Gauge pressure and absolute pressure
Process connections	▪ Thread ISO 228, also flush-mount ▪ Thread DIN 13 ▪ Thread ASME ▪ Thread JIS
Measuring ranges	From −400 to +400 mbar (−6 to +6 psi) to −1 to +400 bar (−15 to +6 000 psi).
OPL (depends on the measuring range)	Max. 0 to +600 bar (0 to +9 000 psi)
Process temperature range	−40 to +100 °C (−40 to +212 °F)
Ambient temperature range	−40 to +85 °C (−40 to +185 °F)
Reference accuracy	Up to 0.3 %, TD 5:1, for details see the "Reference accuracy" section.
Supply voltage	10 to 30 V DC
Output	4 to 20 mA

	PMP21
Material	▪ Housing made from 316L (1.4404) ▪ Process connections made from 316L (1.4404) ▪ Process isolating diaphragm made from 316L (1.4435)
Options	▪ Ex approvals ▪ Marine certificate ▪ Min. alarm current setting ▪ 3.1 Material certificates ▪ Certificate of calibration ▪ Cleaned from oil+grease

Product design

Overview	Position	Description
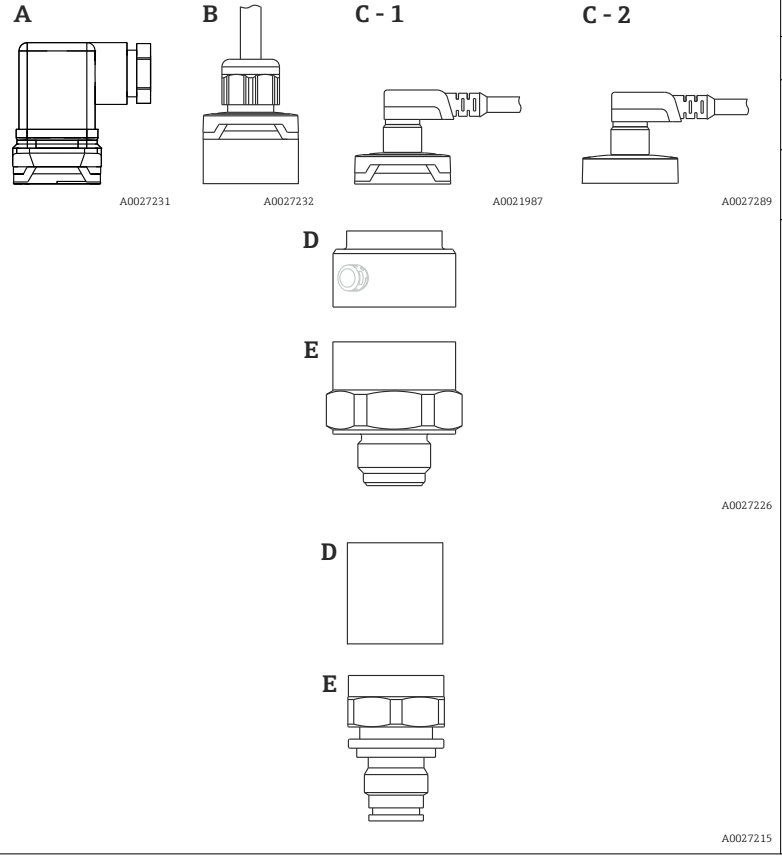	A	Valve plug
	B	Cable
	C- 1	M12 plug Housing cap made of plastic
	C- 2	M12 plug For Ex ec and IP69: metal housing cap
	D E	Housing Process connection (sample illustration)

System integration

The device can be given a tag name (max. 8 alphanumeric characters).

Description	Option [1]
Measuring point (TAG), see additional specifications	Z1

1) Product Configurator, order code for "Identification"

Input

Measured variable

Measured process variable

- PMC11: gauge pressure
- PMP11: gauge pressure
- PMC21: gauge pressure or absolute pressure
- PMP21: gauge pressure or absolute pressure

Calculated process variable

Pressure

Measuring range

Ceramic process isolating diaphragm

Sensor	Device	Maximum Sensor measuring range		Lowest calibratable span [1]	MWP	OPL	Factory settings [2]	Option [3]
		lower (LRL)	upper (URL)					
		[bar (psi)]	[bar (psi)]	[bar (psi)]	[bar (psi)]	[bar (psi)]		
Devices for gauge pressure measurement								
100 mbar (1.5 psi) [4]	PMC21	−0.1 (−1.5)	+0.1 (+1.5)	0.02 (0.3)	2.7 (40.5)	4 (60)	0 to 100 mbar (0 to 1.5 psi)	1C
250 mbar (4 psi) [5]	PMC21	−0.25 (−4)	+0.25 (+4)	0.05 (1)	3.3 (49.5)	5 (75)	0 to 250 mbar (0 to 4 psi)	1E
400 mbar (6 psi) [6]	PMC11 PMC21	−0.4 (−6)	+0.4 (+6)	0.08 (1.2)	5.3 (79.5)	8 (120)	0 to 400 mbar (0 to 6 psi)	1F
1 bar (15 psi) [6]	PMC11 PMC21	−1 (−15)	+1 (+15)	0.2 (3)	6.7 (100.5)	10 (150)	0 to 1 bar (0 to 15 psi)	1H
2 bar (30 psi) [6]	PMC11 PMC21	−1 (−15)	+2 (+30)	0.4 (0.6)	12 (180)	18 (270)	0 to 2 bar (0 to 30 psi)	1K
4 bar (60 psi) [6]	PMC11 PMC21	−1 (−15)	+4 (+60)	0.8 (1.2)	16.7 (250.5)	25 (375)	0 to 4 bar (0 to 60 psi)	1M
6 bar (90 psi) [6]	PMC11 PMC21	−1 (−15)	+6 (+90)	2.4 (36)	26.7 (400.5)	40 (600)	0 to 6 bar (0 to 90 psi)	1N
10 bar (150 psi) [6]	PMC11 PMC21	−1 (−15)	+10 (+150)	2 (30)	26.7 (400.5)	40 (600)	0 to 10 bar (0 to 150 psi)	1P
16 bar (240 psi) [6]	PMC11 PMC21	−1 (−15)	+16 (+240)	6.4 (96)	40 (600)	60 (900)	0 to 16 bar (0 to 240 psi)	1Q
25 bar (375 psi) [6]	PMC11 PMC21	−1 (−15)	+25 (+375)	10 (150)	40 (600)	60 (900)	0 to 25 bar (0 to 375 psi)	1R
40 bar (600 psi) [6]	PMC11 PMC21	−1 (−15)	+40 (+600)	8 (120)	40 (600)	60 (900)	0 to 40 bar (0 to 600 psi)	1S

Sensor	Device	Maximum Sensor measuring range		Lowest calibratable span [1]	MWP	OPL	Factory settings [2]	Option [3]
		lower (LRL)	upper (URL)					
		[bar (psi)]	[bar (psi)]	[bar (psi)]	[bar (psi)]	[bar (psi)]		
Devices for absolute pressure measurement								
100 mbar (1.5 psi) [6]	PMC21	0	+0.1 (+1.5)	0.1 (1.5)	2.7 (40.5)	4 (60)	0 to 100 mbar (0 to 1.5 psi)	2C
250 mbar (4 psi) [6]	PMC21	0	+0.25 (+4)	0.25 (4)	3.3 (49.5)	5 (75)	0 to 250 mbar (0 to 4 psi)	2E
400 mbar (6 psi) [6]	PMC21	0	+0.4 (+6)	0.4 (6)	5.3 (79.5)	8 (120)	0 to 400 mbar (0 to 6 psi)	2F
1 bar (15 psi) [6]	PMC21	0	+1 (+15)	0.4 (6)	6.7 (100.5)	10 (150)	0 to 1 bar (0 to 15 psi)	2H
2 bar (30 psi) [6]	PMC21	0	+2 (+30)	0.4 (0.6)	12 (180)	18 (270)	0 to 2 bar (0 to 30 psi)	2K
4 bar (60 psi) [6]	PMC21	0	+4 (+60)	0.8 (1.2)	16.7 (250.5)	25 (375)	0 to 4 bar (0 to 60 psi)	2M
10 bar (150 psi) [6]	PMC21	0	+10 (+150)	2 (30)	26.7 (400.5)	40 (600)	0 to 10 bar (0 to 150 psi)	2P
40 bar (600 psi) [6]	PMC21	0	+40 (+600)	8 (120)	40 (600)	60 (900)	0 to 40 bar (0 to 600 psi)	2S

1) Highest turn down that can be set at the factory: 5:1. The turn down is preset and cannot be changed.
2) Other measuring ranges (e.g. −1 to +5 bar (−15 to 75 psi)) can be ordered with customer-specific settings (see the Product Configurator, order code for "Calibration; Unit" option "J"). It is possible to invert the output signal (LRV = 20 mA; URV = 4 mA). Prerequisite: URV < LRV
3) Product Configurator, order code for "Sensor range"
4) Vacuum resistance: 0.7 bar (10.5 psi) abs
5) Vacuum resistance: 0.5 bar (7.5 psi) abs
6) Vacuum resistance: 0 bar (0 psi) abs

Maximum turn down which can be ordered for absolute pressure and gauge pressure sensors

Devices for gauge pressure measurement
- 6 bar (90 psi), 16 bar (240 psi), 25 bar (375 psi): TD 1:1 to TD 2.5:1
- All other measuring ranges: TD 1:1 to TD 5:1

Devices for absolute pressure measurement
- 100 mbar (1.5 psi), 250 mbar (4 psi), 400 mbar (6 psi): TD 1:1
- 1 bar (15 psi): TD 1:1 to TD 2.5:1
- All other measuring ranges: TD 1:1 to TD 5:1

Metal process isolating diaphragm

Sensor	Device	Maximum Sensor measuring range		Lowest calibratable span [1]	MWP	OPL	Factory settings [2]	Option [3]
		lower (LRL)	upper (URL)					
		[bar (psi)]	[bar (psi)]	[bar (psi)]	[bar (psi)]	[bar (psi)]		
Devices for gauge pressure measurement								
400 mbar (6 psi) [4]	PMP11 PMP21	−0.4 (−6)	+0.4 (+6)	0.4 (6)	1 (15)	1.6 (24)	0 to 400 mbar (0 to 6 psi)	1F
1 bar (15 psi) [4]	PMP11 PMP21	−1 (−15)	+1 (+15)	0.4 (6)	2.7 (40.5)	4 (60)	0 to 1 bar (0 to 15 psi)	1H
2 bar (30 psi) [4]	PMP11 PMP21	−1 (−15)	+2 (+30)	0.4 (6)	6.7 (100.5)	10 (150)	0 to 2 bar (0 to 30 psi)	1K
4 bar (60 psi) [4]	PMP11 PMP21	−1 (−15)	+4 (+60)	0.8 (12)	10.7 (160.5)	16 (240)	0 to 4 bar (0 to 60 psi)	1M
6 bar (90 psi) [4]	PMP11 PMP21	−1 (−15)	+6 (+90)	2.4 (36)	16 (240)	24 (360)	0 to 6 bar (0 to 90 psi)	1N
10 bar (150 psi) [4]	PMP11 PMP21	−1 (−15)	+10 (+150)	2 (30)	25 (375)	40 (600)	0 to 10 bar (0 to 150 psi)	1P
16 bar (240 psi) [4]	PMP11 PMP21	−1 (−15)	+16 (+240)	5 (75)	25 (375)	64 (960)	0 to 16 bar (0 to 240 psi)	1Q
25 bar (375 psi) [4]	PMP11 PMP21	−1 (−15)	+25 (+375)	5 (75)	25 (375)	100 (1500)	0 to 25 bar (0 to 375 psi)	1R
40 bar (600 psi) [4]	PMP11 PMP21	−1 (−15)	+40 (+600)	8 (120)	100 (1500)	160 (2400)	0 to 40 bar (0 to 600 psi)	1S
100 bar (1 500 psi) [4]	PMP21	−1 (−15)	+100 (+1500)	20 (300)	100 (1500)	160 (2400)	0 to 100 bar (0 to 1 500 psi)	1U
400 bar (6 000 psi) [4]	PMP21	−1 (−15)	+400 (+6000)	80 (1200)	400 (6000)	600 (9000)	0 to 400 bar (0 to 6 000 psi)	1W
Devices for absolute pressure measurement								
400 mbar (6 psi) [4]	PMP21	0 (0)	0.4 (+6)	0.4 (6)	1 (15)	1.6 (24)	0 to 400 mbar (0 to 6 psi)	2F
1 bar (15 psi) [4]	PMP21	0 (0)	1 (+15)	0.4 (6)	2.7 (40.5)	4 (60)	0 to 1 bar (0 to 15 psi)	2H
2 bar (30 psi) [4]	PMP21	0 (0)	2 (+30)	0.4 (6)	6.7 (100.5)	10 (150)	0 to 2 bar (0 to 30 psi)	2K
4 bar (60 psi) [4]	PMP21	0 (0)	4 (+60)	0.8 (12)	10.7 (160.5)	16 (240)	0 to 4 bar (0 to 60 psi)	2M
10 bar (150 psi) [4]	PMP21	0 (0)	10 (+150)	2 (30)	25 (375)	40 (600)	0 to 10 bar (0 to 150 psi)	2P
40 bar (600 psi) [4]	PMP21	0 (0)	+40 (+600)	8 (120)	100 (1500)	160 (2400)	0 to 40 bar (0 to 600 psi)	2S
100 bar (1 500 psi) [4]	PMP21	0 (0)	+100 (+1500)	20 (300)	100 (1500)	160 (2400)	0 to 100 bar (0 to 1 500 psi)	2U
400 bar (6 000 psi) [4]	PMP21	0 (0)	+400 (+6000)	80 (1200)	400 (6000)	600 (9000)	0 to 400 bar (0 to 6 000 psi)	2W

1) Highest turn down that can be set at the factory: 5:1. The turn down is preset and cannot be changed.
2) Other measuring ranges (e.g. −1 to +5 bar (−15 to 75 psi)) can be ordered with customer-specific settings (see the Product Configurator, order code for "Calibration; Unit" option "J"). It is possible to invert the output signal (LRV = 20 mA; URV = 4 mA). Prerequisite: URV < LRV
3) Product Configurator, order code for "Sensor range"
4) Vacuum resistance: 0.01 bar (0.145 psi) abs

Maximum turn down which can be ordered for absolute pressure and gauge pressure sensors

Device	Range	400 mbar (6 psi)	1 bar (15 psi) 6 bar (90 psi) 16 bar (240 psi)	2 bar (30 psi) 4 bar (60 psi) 10 bar (150 psi) 25 to 400 bar (375 to 6 000 psi)
PMP11	0.5%	TD 1:1	TD 1:1 to TD 2.5:1	TD 1:1 to TD 5:1
PMP21	0.3%	TD 1:1	TD 1:1 to TD 2.5:1	TD 1:1 to TD 5:1

Output

Output signal

Description	Option [1]
4 to 20 mA (2-wire)	1
PMC11: 0 to 10 V output (3-wire) PMP11: 0 to 10 V output (3-wire)	2

1) Product Configurator, order code for "Output"

Signal range 4 to 20 mA

3.8 mA to 20.5 mA

Load (for 4 to 20 mA devices)

In order to guarantee sufficient terminal voltage in two-wire devices, a maximum load resistance R_L (including line resistance) must not be exceeded, depending on the supply voltage U_B of the supply unit.

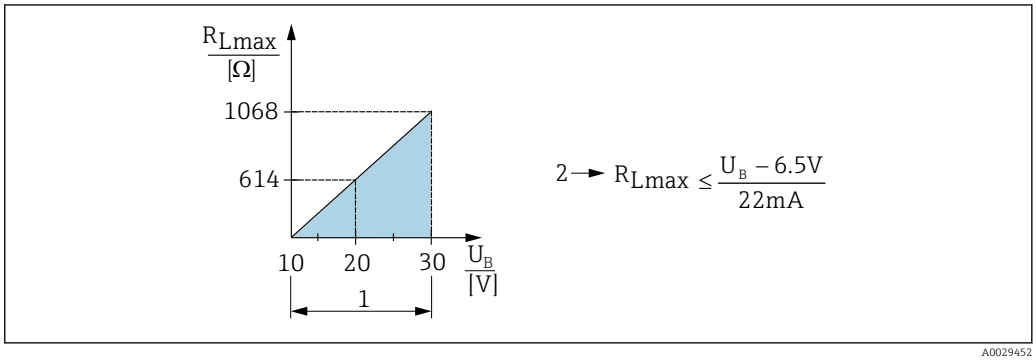

1 Power supply 10 to 30 V DC
2 R_{Lmax} maximum load resistance
U_B Supply voltage

Load resistance (for 0 to 10 V devices)

The load resistance must be ≥ 5 [kΩ].

Signal on alarm 4 to 20 mA

The response of the output to error is regulated in accordance with NAMUR NE43.

Factory setting MAX alarm: >21 mA

alarm current

Device	Description	Option
PMC21 PMP21	Adjusted min. alarm current	IA [1]

1) Product Configurator order code for "Service"

Dead time, time constant

Presentation of the dead time and the time constant:

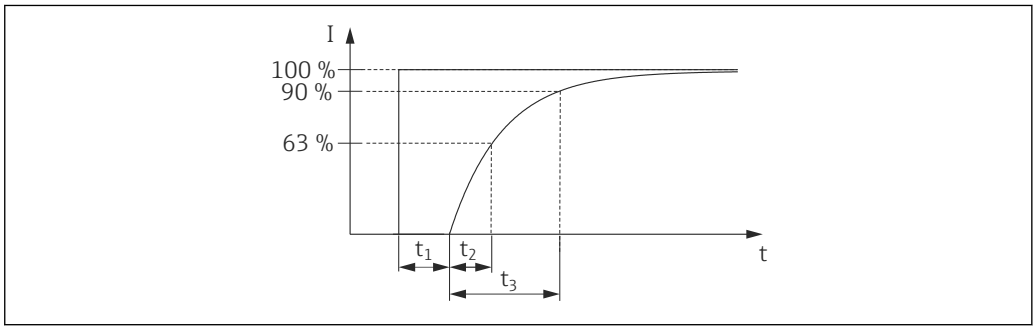

Dynamic behavior

Analog electronics

Dead time (t_1) [ms]	Time constant (T63), t_2 [ms]	Time constant (T90), t_3 [ms]
6 ms	10 ms	15 ms

Power supply

WARNING

Limitation of electrical safety due to incorrect connection!

- In accordance with IEC/EN61010 a separate circuit breaker must be provided for the device .
- When using the measuring device in hazardous areas, installation must comply with the corresponding national standards and regulations and the Safety Instructions or Installation or Control Drawings.
- All explosion protection data are given in separate documentation which is available upon request. The Ex documentation is supplied as standard with all devices approved for use in explosion hazardous areas.
- Protective circuits against reverse polarity, HF influences and overvoltage peaks are integrated.
- The device must be operated with a 500 mA fine-wire fuse (slow-blow).

Terminal assignment

4 to 20 mA output

Device	M12 plug	Valve plug	Cable
PMC11 PMP11 PMC21 PMP21	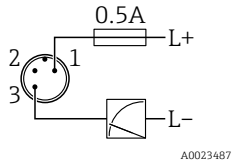	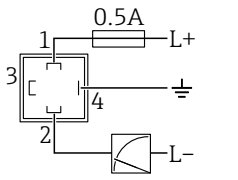	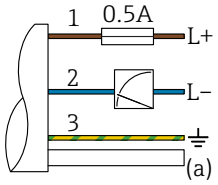 *1 brown = L+* *2 blue = L-* *3 green/yellow = ground connection* *(a) reference air hose*

0 to 10 V output

Device	M12 plug	Valve plug	Cable
PMC11 PMP11	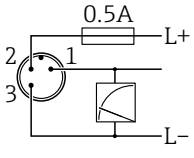	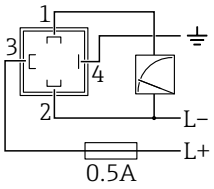	-

Supply voltage

Electronic version	Device	Supply voltage
4 to 20 mA output	PMC11 PMP11 PMC21 PMP21	10 to 30 V DC
0 to 10 V output	PMC11 PMP11	12 to 30 V DC

Current consumption and alarm signal

Number of wires	Device	Normal operation	Alarm signal [1]
2	PMC11 PMP11 PMC21 PMP21	≤ 26 mA	> 21 mA
3	PMC11 PMP11	< 12 mA	11 V

1) For MAX alarm (factory setting)

Power supply fault

- Behavior in the event of overvoltage (>30 V):
  The device works continuously up to 34 V DC without damage. If the supply voltage is exceeded, the specified characteristics are no longer guaranteed.
- Behavior in the event of undervoltage:
  If the supply voltage falls below the minimum value, the device switches off in a defined manner (status same as for no power supply).

Electrical connection

Degree of protection

Device	Connection	Climate class	Option [1]
PMP21 PMP21	Cable5 m (16 ft)	IP66/68 [2] NEMA type 4X/6P enclosure	A
PMP21 PMP21	Cable10 m (33 ft)	IP66/68 [2] NEMA type 4X/6P enclosure	B
PMP21 PMP21	Cable25 m (82 ft)	IP66/68 [2] NEMA type 4X/6P enclosure	C
PMC11 PMP11	M12 plug	IP65 NEMA type 4X enclosure	L
PMC21 PMP21	M12 plug	IP65/67 NEMA type 4X enclosure	M
PMC11 PMP11 PMC21 PMP21	Valve plug ISO4400 M16	IP65 NEMA type 4X enclosure	U
PMC11 PMP11 PMC21 PMP21	Valve plug ISO4400 NPT ½	IP65 NEMA type 4X enclosure	V

1) Product Configurator, order code for "Electrical connection"
2) IP 68 (1.83m H2O for 24 h)

Cable specification

For valve plug: < 1.5 mm^2 (16 AWG) and Ø3.5 to 6.5 mm (0.14 to 0.26 in)

Residual ripple

The device operates within the reference accuracy up to ±5 % of the residual ripple of the supply voltage, within the permitted voltage range.

Influence of power supply

≤0.005 % of the URL/1 V

Overvoltage protection

The device does not contain any special elements to protect against overvoltage ("wire to ground"). Nevertheless the requirements of the applicable EMC standard EN 61000-4-5 (testing voltage 1kV EMC wire/ground) are met.

Performance characteristics of ceramic process isolating diaphragm

Reference operating conditions

- As per IEC 60770
- Ambient temperature T_A = constant, in the range of:+21 to +33 °C (+70 to +91 °F)
- Humidity φ = constant, in the range of 5 to 80 % rH
- Ambient pressure p_A = constant, in the range of:860 to 1060 mbar (12.47 to 15.37 psi)
- Position of measuring cell = constant, in range: horizontal ±1° (see also "Influence of the installation position" section → 🖹 22)
- Zero based span
- Material of process isolating diaphragm: Al_2O_3 (aluminum-oxide ceramic, Ceraphire®)
- Supply voltage: 24 V DC ±3 V DC
- Load: 320 Ω (at 4 to 20 mA output)

Measuring uncertainty for small absolute pressure measuring ranges

The smallest extended uncertainty of measurement that can delivered by our standards is:

- in range 1 to 30 mbar (0.0145 to 0.435 psi): 0.4 % of reading
- in range < 1 mbar (0.0145 psi): 1 % of reading.

Influence of the installation position

→ 🖹 22

Resolution

Current output: min. 1.6 µA

Reference accuracy

The reference accuracy contains the non-linearity [DIN EN 61298-2 3.11] including the pressure hysteresis [DIN EN 61298-23.13] and non-repeatability [DIN EN 61298-2 3.11] in accordance with the limit point method as per [DIN EN 60770].

Device	% of the calibrated span to the maximum turn down		
	Reference accuracy	Non-linearity [1]	Non-repeatability
PMC11 [2]	±0.5	±0.1	±0.1
PMC21	±0.3	±0.1	±0.1

1) The non-linearity for the 40 bar (600 psi) sensor can be up to ± 0.15% of the calibrated span up to the maximum turn down.
2) For devices with 0 to 10 V output, a non-linearity of up to max. 0.3 V can occur for signal values below 0.03 V.

Overview of the turn down ranges → 🖹 13

Measuring ranges	Turn down	Device	% of URL
100 mbar (1.5 psi)to 40 bar (600 psi)	1:1 to TD 5:1	PMC11	±0.5
		PMC21	±0.3 [1]

1) For the 100 mbar (1.5 psi) and 250 mbar (4 psi) measuring ranges, the following applies: In the event of heat effects on the initial reference conditions, an additional deviation of max. 0.3 mbar (4.5 psi) from the zero point or the output span is possible.

Thermal change of the zero output and the output span

Measuring cell	−20 to +85 °C (−4 to +185 °F)	−40 to −20 °C (−40 to −4 °F) +85 to +100 °C (+185 to +212 °F)
	% of URL for TD 1:1	
<1 bar (15 psi)	<1	<1.2
≥ 1 bar (15 psi)	<0.8	<1

Long-term stability

1 year	5 years	8 years
% of URL		
±0.2	±0.4	±0.45

Switch-on time

≤2 s (For small measuring ranges, pay attention to the thermal compensation effects.)

Performance characteristics of metallic process isolating diaphragm

Reference operating conditions

- As per IEC 60770
- Ambient temperature T_A = constant, in the range of:+21 to +33 °C (+70 to +91 °F)
- Humidity φ = constant, in the range of 5 to 80 % rH
- Ambient pressure p_A = constant, in the range of:860 to 1060 mbar (12.47 to 15.37 psi)
- Position of measuring cell = constant, in range: horizontal ±1° (see also "Influence of the installation position" section → 🖹 22)
- Zero based span
- Process isolating diaphragm material: AISI 316L (1.4435)
- Filling oil: NSF-H1 synthetic oil in accordance with FDA 21 CFR 178.3570
- Supply voltage: 24 V DC ±3 V DC
- Load: 320 Ω (at 4 to 20 mA output)

Measuring uncertainty for small absolute pressure measuring ranges

The smallest extended uncertainty of measurement that can delivered by our standards is:

- in range 1 to 30 mbar (0.0145 to 0.435 psi): 0.4 % of reading
- in range < 1 mbar (0.0145 psi): 1 % of reading.

Influence of the installation position

→ 🖹 22

Resolution

Current output: min. 1.6 µA

Reference accuracy

The reference accuracy contains the non-linearity [DIN EN 61298-2 3.11] including the pressure hysteresis [DIN EN 61298-23.13] and non-repeatability [DIN EN 61298-2 3.11] in accordance with the limit point method as per [DIN EN 60770].

Device	% of the calibrated span to the maximum turn down		
	Reference accuracy	Non-linearity	Non-repeatability
PMP11 [1)]	±0.5	±0.1	±0.1
PMP21	±0.3	±0.1	±0.1

1) For devices with 0 to 10 V output, a non-linearity of up to max. 0.3 V can occur for signal values below 0.015 V.

Overview of the turn down ranges → 🖹 14

Thermal change of the zero output and the output span

Measuring cell	−20 to +85 °C (−4 to +185 °F)	−20 to −40 °C (−4 to −40 °F) +85 to +100 °C (+185 to +212 °F)
	% of the calibrated span for TD 1:1	
<1 bar (15 psi)	<1	<1.2
≥ 1 bar (15 psi)	<0.8	<1

Long-term stability

1 year	5 years	8 years
% of URL		
±0.2	±0.4	±0.45

Switch-on time

≤2 s

Installation

Installation conditions

- No moisture may enter the housing when installing or operating the device, or when establishing the electrical connection.
- Point the cable and connector downwards where possible to prevent moisture from entering (e.g. rain or condensation water).

Influence of the installation position

Any orientation is possible. However, the orientation may cause a zero point shift i.e. the measured value does not show zero when the vessel is empty or partially full.

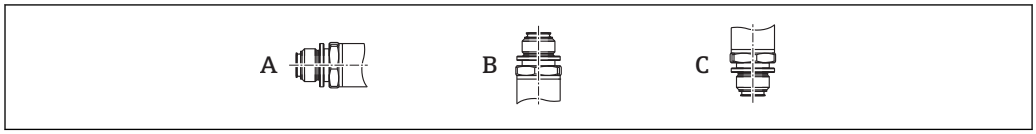

A0024708

Type	Process isolating diaphragm axis is horizontal (A)	Process isolating diaphragm pointing upwards (B)	Process isolating diaphragm pointing downwards (C)
PMP11 PMP21	Calibration position, no effect	Up to +4 mbar (+0.058 psi)	Up to −4 mbar (−0.058 psi)
PMC11, PMC21 < 1 bar (15 psi)	Calibration position, no effect	Up to +0.3 mbar (+0.0044 psi)	Up to −0.3 mbar (−0.0044 psi)
PMC11, PMC21 ≥1 bar (15 psi)	Calibration position, no effect	Up to +3 mbar (+0.0435 psi)	Up to −3 mbar (−0.0435 psi)

Mounting location

Pressure measurement

Pressure measurement in gases

Mount the device with shutoff device above the tapping point so that any condensate can flow into the process.

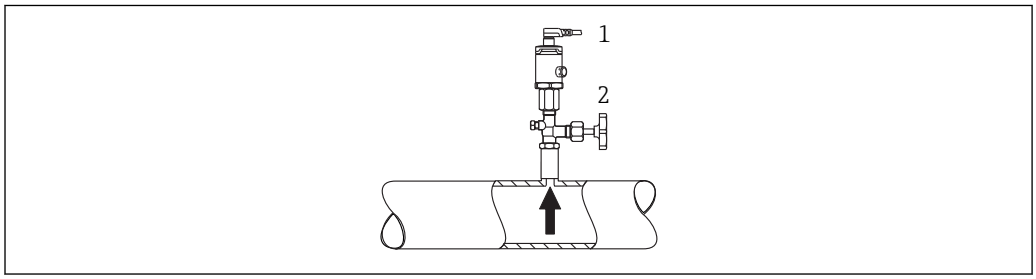

A0021904

1 Device
2 Shutoff device

Pressure measurement in vapors

For pressure measurement in vapors, use a siphon. The siphon reduces the temperature to almost ambient temperature. Mount the device with a shutoff device at the same height as the tapping point.

Advantage:
only minor/negligible heat effects on the device.

Note the max. permitted ambient temperature of the transmitter!

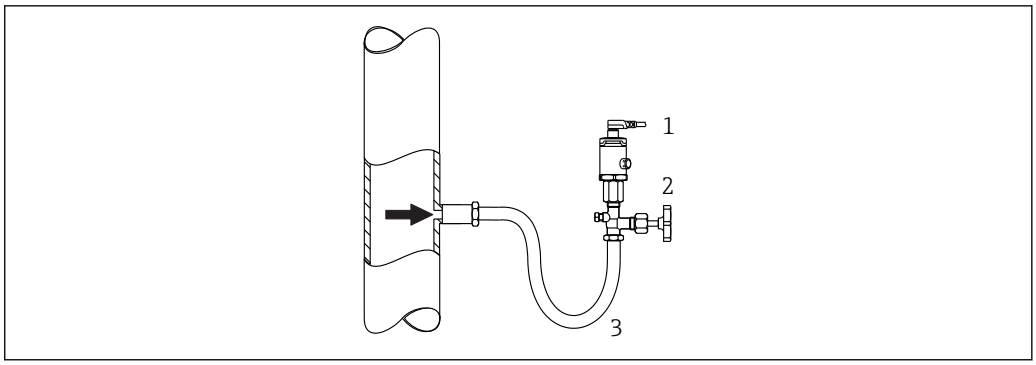

A0024395

1 *Device*
2 *Shutoff device*
3 *Siphon*

Pressure measurement in liquids

Mount the device with a shutoff device at the same height as the tapping point.

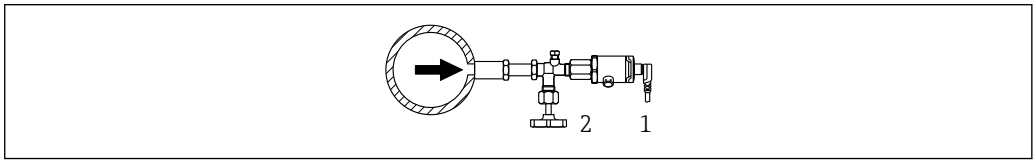

A0024399

1 *Device*
2 *Shutoff device*

Level measurement

- Always install the device below the lowest measuring point.
- Do not install the device at the following positions:
  - In the filling curtain
  - In the tank outlet
  - In the suction area of a pump
  - Or at a point in the tank which could be affected by pressure pulses from the agitator.

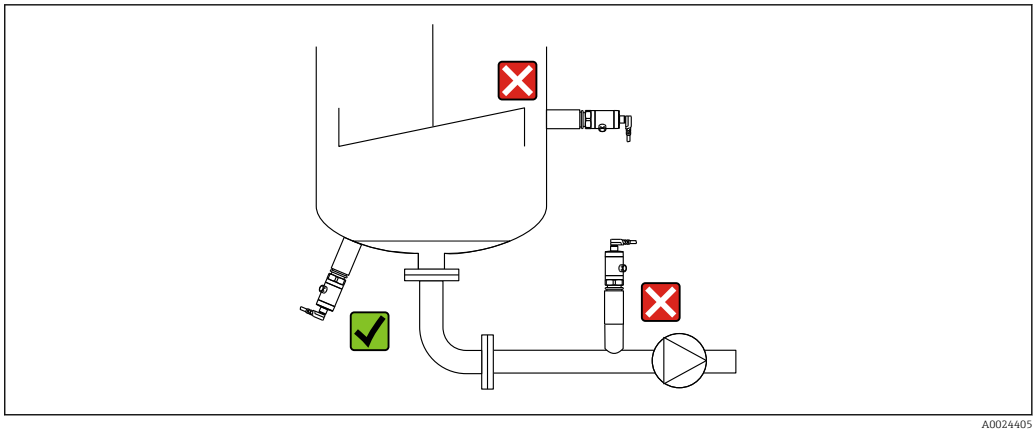

A0024405

Mounting instructions for oxygen applications

Oxygen and other gases can react explosively to oils, grease and plastics, such that, among other things, the following precautions must be taken:

- All components of the system, such as measuring devices, must be cleaned in accordance with the BAM requirements.
- Dependent on the materials used, a certain maximum temperature and a maximum pressure for oxygen applications must not be exceeded.
- The following table lists devices (devices only, not accessories or enclosed accessories), which are suitable for gaseous oxygen applications.

Device	p_{max} for oxygen applications	T_{max} for oxygen applications	Option [1]
PMC21	40 bar (600 psi)	−10 to +60 °C (+14 to +140 °F)	HB

1) Product Configurator, order code for "Service"

Environment

Ambient temperature range

Device	Ambient temperature range [1]
PMC11 PMP11	−40 to +70 °C (−40 to +158 °F)
PMC21 PMP21	−40 to +85 °C (−40 to +185 °F)
PMC21 PMP21	Devices for hazardous areas: −40 to +70 °C (−40 to +158 °F)

1) Exception: the following cable is designed for an operating temperature range of −25 to +70 °C (−13 to +158 °F): Product Configurator order code for "Accessory enclosed", option "RZ".

Storage temperature range

−40 to +85 °C (−40 to +185 °F)

Climate class

Device	Climate class	Note
PMC11 PMP11 PMC21 PMP21	Class 3K5	Air temperature: −5 to +45 °C (+23 to +113 °F), relative humidity: 4 to 95 % satisfied according to IEC 721-3-3 (condensation not possible)

Degree of protection

Device	Connection	Climate class	Option [1]
PMP21 PMP21	Cable5 m (16 ft)	IP66/68 [2] NEMA type 4X/6P enclosure	A
PMP21 PMP21	Cable10 m (33 ft)	IP66/68 [2] NEMA type 4X/6P enclosure	B
PMP21 PMP21	Cable25 m (82 ft)	IP66/68 [2] NEMA type 4X/6P enclosure	C
PMC11 PMP11	M12 plug	IP65 NEMA type 4X enclosure	L
PMC21 PMP21	M12 plug	IP65/67 NEMA type 4X enclosure	M
PMC11 PMP11 PMC21 PMP21	Valve plug ISO4400 M16	IP65 NEMA type 4X enclosure	U
PMC11 PMP11 PMC21 PMP21	Valve plug ISO4400 NPT ½	IP65 NEMA type 4X enclosure	V

1) Product Configurator, order code for "Electrical connection"
2) IP 68 (1.83m H2O for 24 h)

Vibration resistance

Test standard	Vibration resistance
IEC 60068-2-64:2008	Guaranteed for 5 to 2000Hz: 0.05 g^2/Hz

Electromagnetic compatibility

- Interference emission as per EN 61326-1 equipment B
- Interference immunity as per EN 61326-1 (industrial environment)
- NAMUR recommendation EMC (NE21)
- Maximum deviation: 1.5% for TD 1:1

For more details, refer to the Declaration of Conformity.

Process

Process temperature range for devices with ceramic process isolating diaphragm

Device	Process temperature range
PMC11	−25 to +85 °C (−13 to +185 °F)
PMC21	−25 to +100 °C (−13 to +212 °F)
PMC21 for oxygen applications	−10 to +60 °C (+14 to +140 °F)

- For saturated steam applications, use a device with a metal process isolating diaphragm, or provide a siphon for temperature isolation when installing.
- Pay attention to the process temperature range of the seal. See also the following table.

Seal	Notes	Process temperature range	Option
FKM	-	−20 to +100 °C (−4 to +212 °F)	A [1]
FKM	Cleaned for oxygen service	−10 to +60 °C (+14 to +140 °F)	A [1] and HB [2]
EPDM 70	-	−25 to +100 °C (−13 to +212 °F)	J [1]

1) Product Configurator, order code for "Seal"
2) Product Configurator, order code for "Service"

Applications with changes in temperature

Frequent extreme changes in temperatures can temporarily cause measuring errors. Temperature compensation takes place after a few minutes. Internal temperature compensation is faster the smaller the change in temperature and the longer the time interval.

For further information please contact your local Endress+Hauser Sales Center.

Process temperature range for devices with metallic process isolating diaphragm

Device	Process temperature range
PMP11	−25 to +85 °C (−13 to +185 °F)
PMP21	−40 to +100 °C (−40 to +212 °F)

Applications with changes in temperature

Frequent extreme changes in temperatures can temporarily cause measuring errors. Internal temperature compensation is faster the smaller the change in temperature and the longer the time interval.

For further information please contact your local Endress+Hauser Sales Center.

Pressure specifications

WARNING

The maximum pressure for the measuring device depends on the lowest-rated element with regard to pressure.

- For pressure specifications, see the "Measuring range" section and the "Mechanical construction" section.
- The Pressure Equipment Directive (2014/68/EU) uses the abbreviation "PS". The abbreviation "PS" corresponds to the MWP (maximum working pressure) of the measuring device.
- MWP (maximum working pressure): The MWP (maximum working pressure) is specified on the nameplate. This value is based on a reference temperature of +20 °C (+68 °F) and may be applied to the device for an unlimited period of time. Observe the temperature dependency of the MWP.
- OPL (over pressure limit): The test pressure corresponds to the over pressure limit of the sensor and may only be applied temporarily to ensure that the measurement is within the specifications and no permanent damage develops. In the case of sensor range and process connections where the over pressure limit (OPL) of the process connection is smaller than the nominal value of the sensor, the device is set at the factory, at the very maximum, to the OPL value of the process connection. If you want to use the entire sensor range, select a process connection with a higher OPL value.
- Oxygen applications: In oxygen applications, the values for "p_{max} and T_{max} for oxygen applications may not be exceeded .
- Devices with ceramic process isolating diaphragm: avoid steam hammering! Steam hammering can cause zero point drifts. Recommendation: Residue (water droplets or condensation) may remain on the process isolating diaphragm following CIP cleaning and can result in local steam hammering the next time steam cleaning takes place. In practice, drying the process isolating diaphragm (e.g. by blowing) has proved to prevent steam hammering.

Mechanical construction

Design, dimensions

Device height

The device height is calculated from
- the height of the electrical connection
- the height of the housing and
- the height of the individual process connection.

The individual heights of the components are listed in the following sections. To calculate the device height simply add up the individual heights of the components. Where applicable also take into consideration the installation distance (space that is used to install the device). You can use the following table for this purpose:

Section	Page	Height	Example
Electrical connection	→ 28	(A)	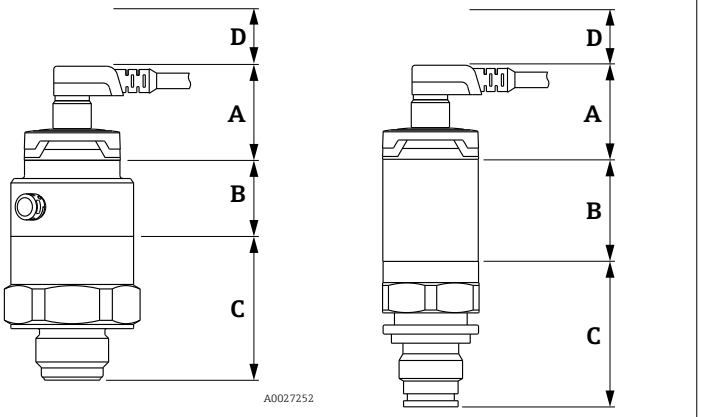
Housing height	→ 29	(B)	
Process connection height	→ 30 → 33	(C)	
Installation distance	-	(D)	

Electrical connection

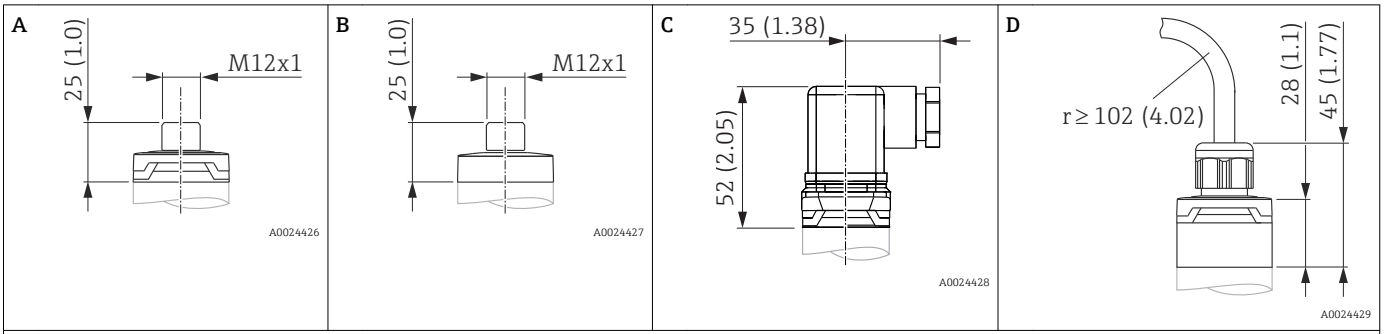

Engineering unit mm (in)

Position	Description	Material	Weight kg (lbs)	Device	Option [1]
A	M12 plug IP65 (Additional dimensions → 45)	Housing cap made of plastic	0.012 (0.03)	PMC11 PMP11	L
A	M12 plug IP65/67 (Additional dimensions → 45)	Housing cap made of plastic	0.012 (0.03)	PMC21 PMP21	M Plug connector with cable can be ordered as an accessory → 45
B	M12 plug IP66/67	Housing cap made of metal	0.030 (0.07)	PMC21 PMP21	In the case of Ex ec type of protection, the housing cap is made of metal.
C	M16 valve plug	Plastic PPSU	0.060 (0.14)	PMC11 PMP11 PMC21 PMP21	U

Position	Description	Material	Weight kg (lbs)	Device	Option [1]
C	NPT ½ valve plug	Plastic PPSU	0.060 (0.14)	PMC11 PMP11 PMC21 PMP21	V
D	Cable5 m (16 ft)	PUR (UL94V0)	0.280 (0.62)	PMC21 PMP21	A
D	Cable10 m (33 ft)	PUR (UL94V0)	0.570 (1.26)	PMC21 PMP21	B
D	Cable25 m (82 ft)	PUR (UL94V0)	1.400 (3.09)	PMC21 PMP21	C

1) Product Configurator, order code for "Electrical connection"

Housing

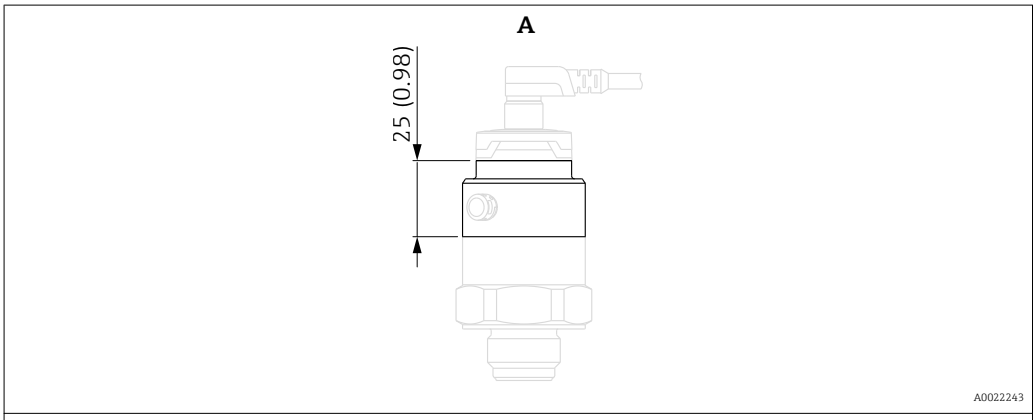

Engineering unit mm (in)

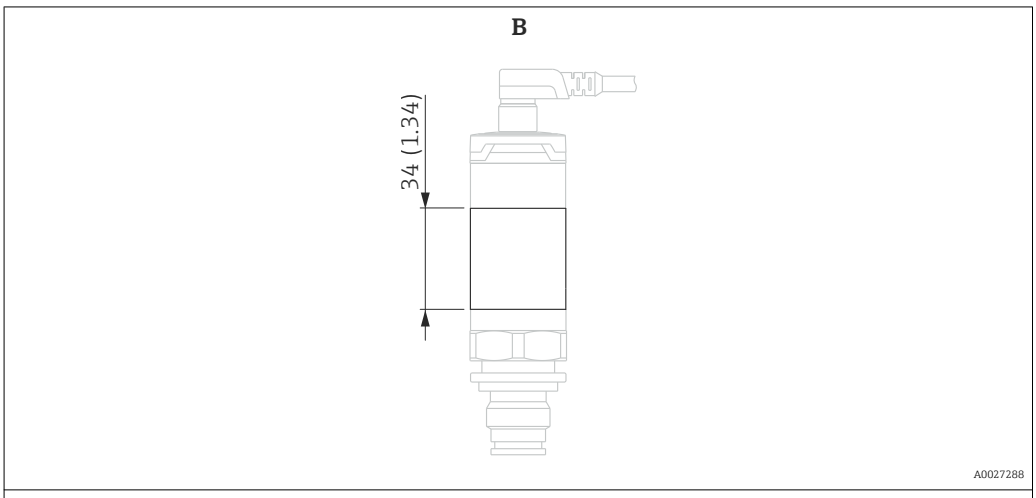

Engineering unit mm (in)

Item	Device	Material	Weight kg (lbs)
A	PMC11 PMC21	Stainless steel 316L	0.150 (0.33)
B	PMP11 PMP21	Stainless steel 316L	0.090 (0.20)

Process connections with internal, ceramic process isolating diaphragm

Thread ISO 228 G

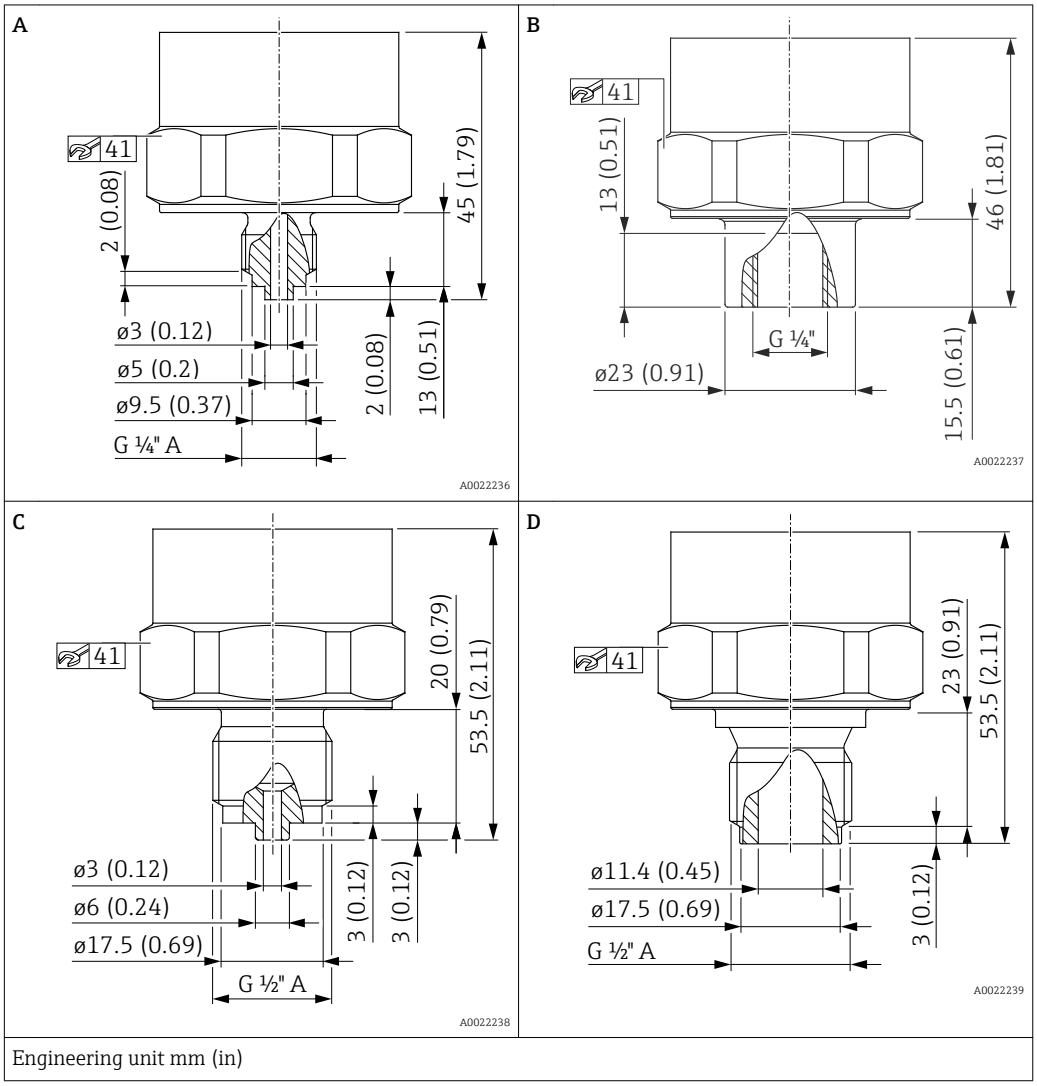

Engineering unit mm (in)

Device	Item	Description	Material	Weight	Option [1]
				kg (lbs)	
▪ PMC11 ▪ PMC21	A	Thread ISO 228 G ¼" A, EN 837	316L	0.160 (0.35)	WTJ
▪ PMC11 ▪ PMC21	B	Thread ISO 228 G ¼" (female)	316L	0.180 (0.40)	WAJ
▪ PMC11 ▪ PMC21	C	Thread ISO 228 G ½" A, EN 837	316L	0.180 (0.40)	WBJ
▪ PMC11 ▪ PMC21	D	Thread ISO 228 G ½" A, bore11.4 mm (0.45 in)	316L	0.180 (0.40)	WWJ

1) Product Configurator, order code for "Process connection"

Process connections with internal, ceramic process isolating diaphragm

Thread ASME

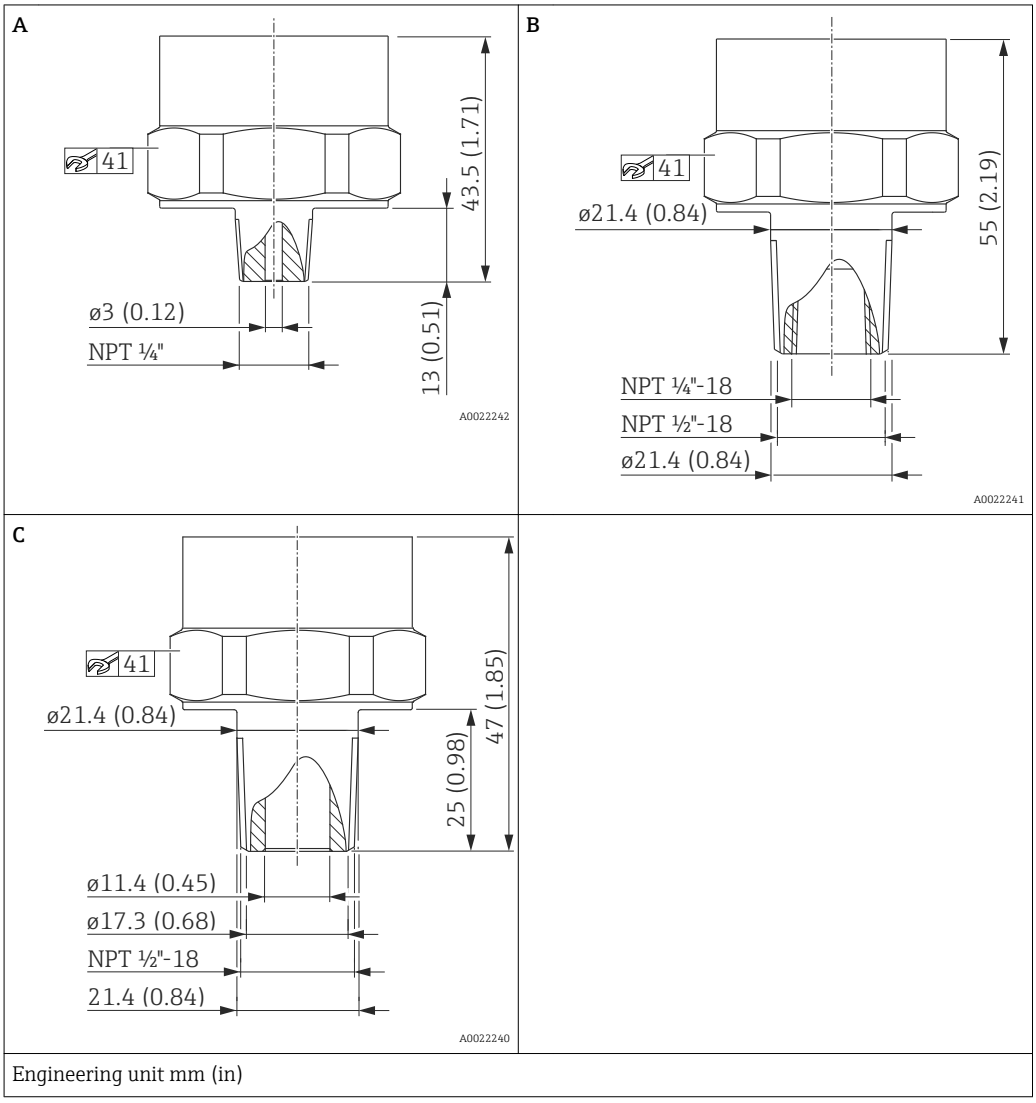

Engineering unit mm (in)

Device	Item	Description	Material	Weight	Approval	Option [1]
				kg (lbs)		
▪ PMC11 ▪ PMC21	A	ASME ¼" MNPT, bore3 mm (0.12 in)	316L	0.160 (0.35)	CRN	VUJ
▪ PMC11 ▪ PMC21	B	ASME ½" MNPT, ¼" FNPT (female)	316L	0.190 (0.42)	CRN	VXJ
▪ PMC11 ▪ PMC21	C	ASME ½" MNPT, bore11.4 mm (0.45 in)	316L	0.190 (0.42)	CRN	VWJ

1) Product Configurator, order code for "Process connection"

Process connections with internal, ceramic process isolating diaphragm

Thread DIN13

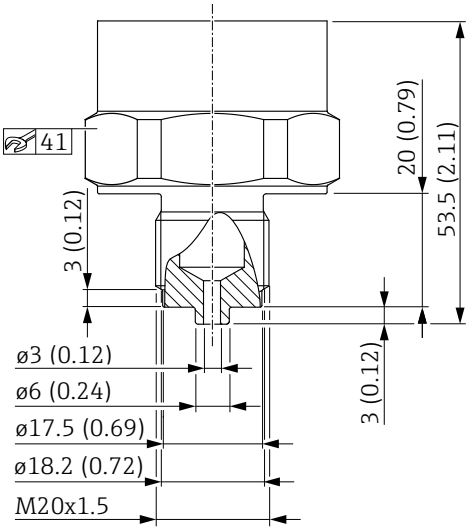

Engineering unit mm (in)

Device	Description	Material	Weight	Option [1]
			kg (lbs)	
▪ PMC11 ▪ PMC21	DIN 13 M20 x 1.5, EN 837, bore 3 mm (0.12 in)	316L	0.180 (0.40)	X4J

1) Product Configurator, order code for "Process connection"

Process connections with internal, ceramic process isolating diaphragm

Thread JIS B0203

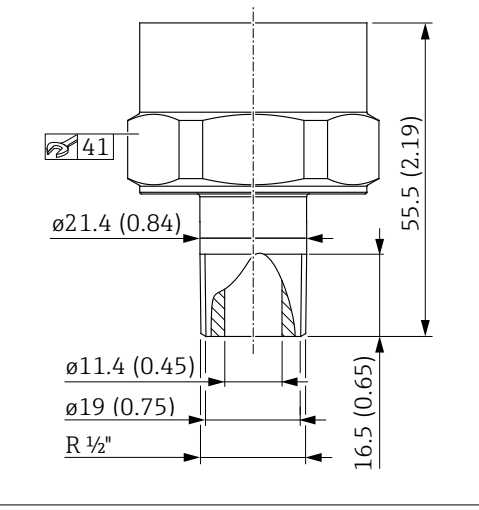

Engineering unit mm (in)

Device	Description	Material	Weight	Option [1]
			kg (lbs)	
PMC21	JIS B0203 R 1/2 (male)	316L	0.180 (0.40)	ZJJ

1) Product Configurator, order code for "Process connection"

Process connections with internal, metal process isolating diaphragm

Thread ISO 228 G

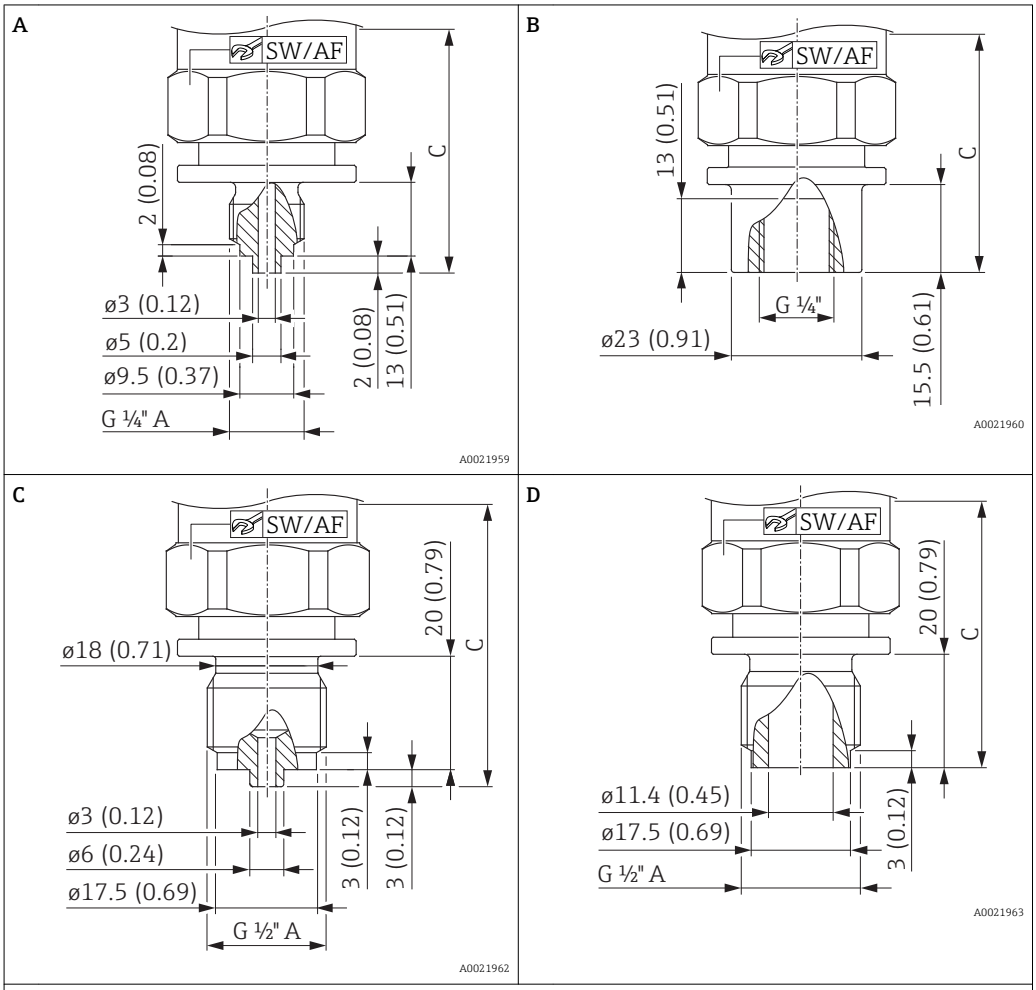

Engineering unit mm (in)

Position	Device	Description	Material	Nominal value to 100 bar (1 500 psi)			Nominal value 400 bar (6 000 psi)			Option [1]
				Weight kg (lbs)	Height C	SW/ AF	Weight kg (lbs)	Height C	SW/ AF	
A	PMP11 PMP21	Thread ISO 228 G ¼" A, EN 837	316L	0.200 (0.44)	57 (2.24)	32	0.240 (0.53)	69 (2.72)	27	WTJ
B	PMP11 PMP21	Thread ISO 228 G ¼" (female)	316L	0.220 (0.49)	57 (2.24)	32	0.260 (0.57)	69 (2.72)	27	WAJ
C	PMP11 PMP21	Thread ISO 228 G ½" A, EN 837	316L	0.220 (0.49)	65 (2.56)	32	0.270 (0.60)	77 (3.03)	27	WBJ
D	PMP11 PMP21	Thread ISO 228 G ½" A, bore11.4 mm (0.45 in)	316L	0.220 (0.49)	62 (2.44)	32	0.260 (0.57)	74 (2.91)	27	WWJ

1) Product Configurator, order code for "Process connection"

Process connections with internal, metal process isolating diaphragm

Thread ASME

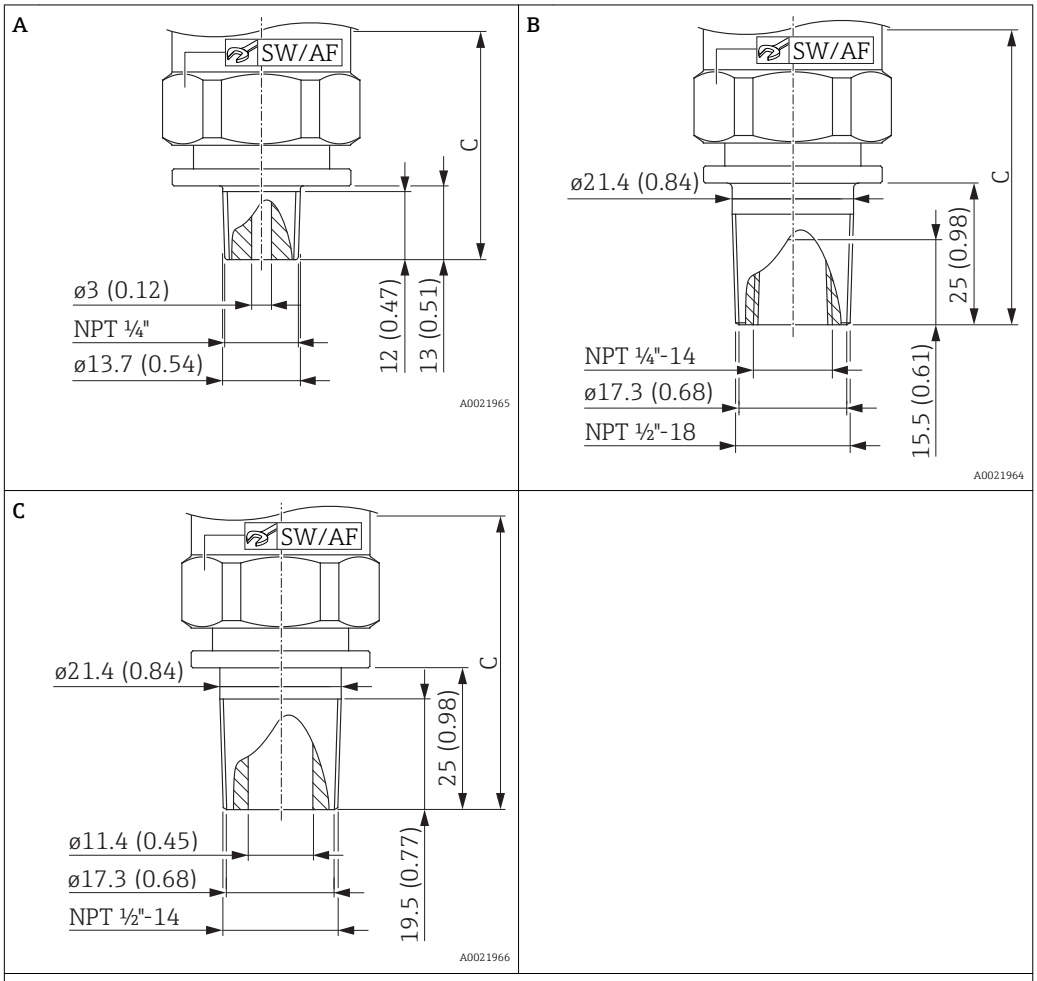

Engineering unit mm (in)

Position	Device	Description	Material	Nominal value to 100 bar (1 500 psi)			Nominal value 400 bar (6 000 psi)			Approval	Option [1]
				Weight kg (lbs)	Height C	SW/ AF	Weight kg (lbs)	Height C	SW/ AF		
A	PMP11 PMP21	ASME ¼" MNPT, bore3 mm (0.12 in)	316L	0.200 (0.44)	55 (2.17)	32	0.240 (0.53)	67 (2.64)	27	CRN	VUJ
B	PMP11 PMP21	ASME ½" MNPT, ¼" FNPT (female)	316L	0.230 (0.51)	67 (2.64)	32	0.260 (0.57)	79 (3.11)	27	CRN	VXJ
C	PMP11 PMP21	ASME ½" MNPT, bore11.4 mm (0.45 in)	316L	0.230 (0.51)	67 (2.67)	32	0.270 (0.60)	79 (3.11)	27	CRN	VWJ

1) Product Configurator, order code for "Process connection"

Process connections with internal, metal process isolating diaphragm

Thread DIN13

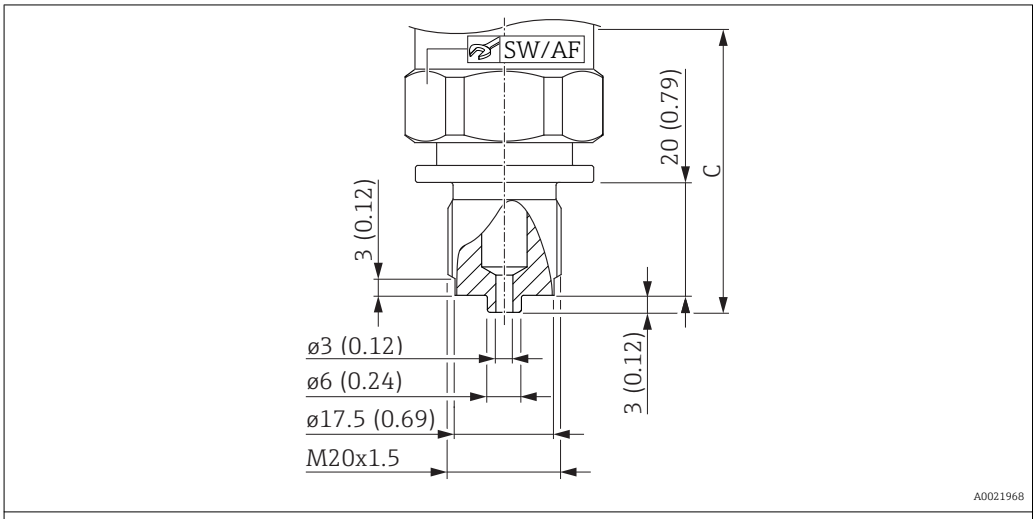

Engineering unit mm (in)

Description	Device	Material	Nominal value to 100 bar (1500 psi)			Nominal value 400 bar (6000 psi)			Option [1]
			Weight kg (lbs)	Height C	SW/ AF	Weight kg (lbs)	Height C	SW/ AF	
DIN 13 M20 x 1.5, EN 837, bore 3 mm (0.12 in)	PMP11 PMP21	316L	0.220 (0.49)	65 (2.56)	32	0.260 (0.57)	77 (3.03)	27	X4J

1) Product Configurator, order code for "Process connection"

Process connections with internal, metal process isolating diaphragm

Thread JIS B0203

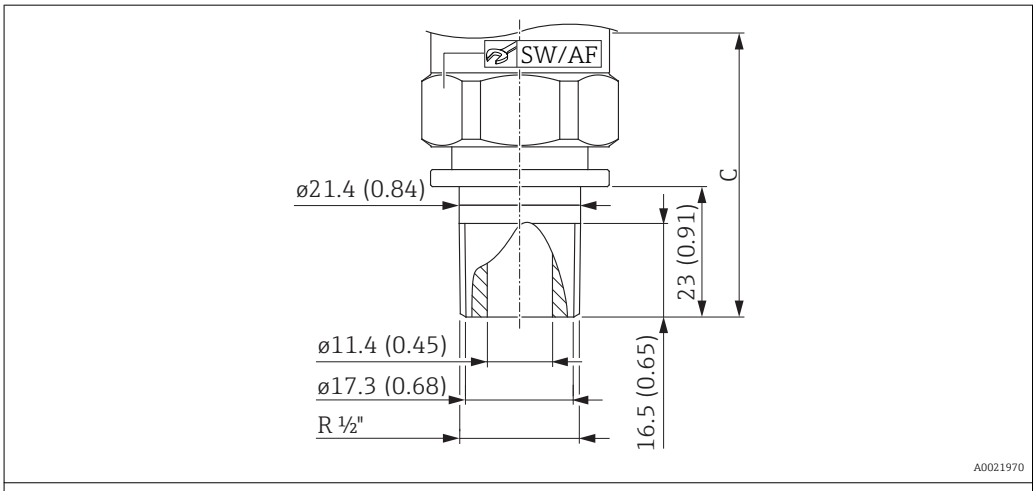

Engineering unit mm (in). Diameter of process isolating diaphragm: 17.2 mm (0.68 in)

Description	Device	Material	Nominal value to 100 bar (1500 psi)			Nominal value 400 bar (6000 psi)			Option [1]
			Weight kg (lbs)	Height C	SW/ AF	Weight kg (lbs)	Height C	SW/ AF	
JIS B0203 R ½" (male)	PMP21	316L	0.230 (0.51)	65 (2.56)	32	0.260 (0.57)	77 (3.03)	27	ZJJ

1) Product Configurator, order code for "Process connection"

Process connections with flush-mounted, metal process isolating diaphragm

Thread ISO 228 G

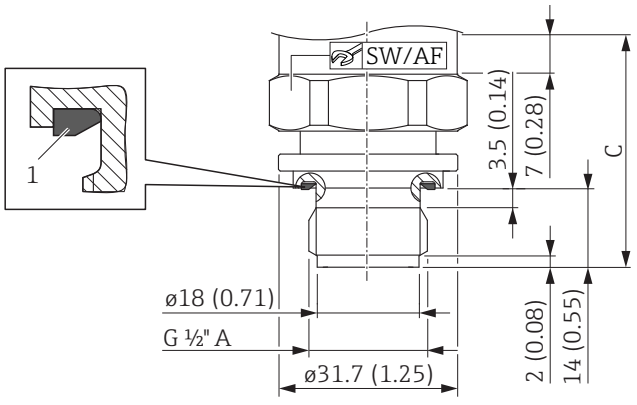

1 FKM form seal, pre-mounted

Engineering unit mm (in). Diameter of process isolating diaphragm: 17.2 mm (0.68 in)

Device	Description	Material	Nominal value to 100 bar (1500 psi)			Nominal value 400 bar (6000 psi)			Option [1]
			Weight	Height C	SW/ AF	Weight	Height C	SW/ AF	
			kg (lbs)			kg (lbs)			
PMP11 PMP21	Thread ISO 228 G ½" A DIN3852	316L	0.140 (0.31)	41 (1.61)	32	0.120 (0.26)	35 (1.38)	32	WJJ

1) Product Configurator, order code for "Process connection"

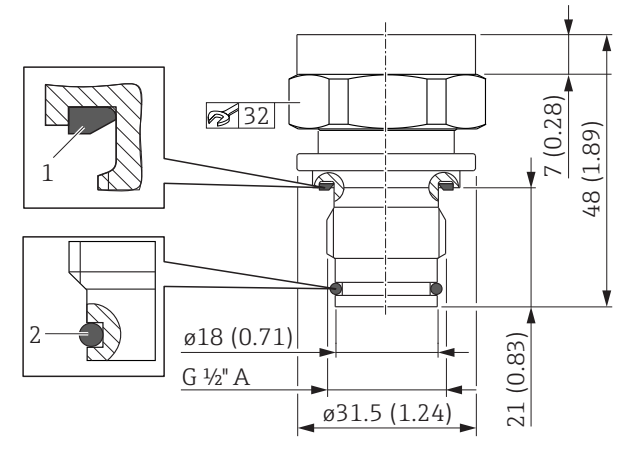

1 FKM form seal, pre-mounted
2 FKM O-ring, pre-mounted

Engineering unit mm (in). Diameter of process isolating diaphragm: 17.2 mm (0.68 in)

Device [1]	Description	Material	Weight	Option [2]
			kg (lbs)	
PMP11 PMP21	Thread ISO 228 G ½" A O-ring seal, flush-mounted	316L	0.150 (0.33)	WUJ

1) Suitable for weld-in adapter 52002643 and 52010172
2) Product Configurator, order code for "Process connection"

Materials in contact with process

NOTICE

- Device components in contact with the process are listed in the "Mechanical construction" and "Ordering information" sections.

TSE Certificate of Suitability

The following applies to all device components in contact with the process:

- They do not contain any materials derived from animals.
- No additives or operating materials derived from animals are used in production or processing.

Process connections

Endress+Hauser supplies a threaded connection made of stainless steel in accordance with AISI 316L (DIN/ EN material number 1.4404 or 1.4435). With regard to their stability-temperature property, the materials 1.4404 and 1.4435 are grouped together under 13E0 in EN 1092-1: 2001 Tab. 18. The chemical composition of the two materials can be identical.

Process isolating diaphragm

Description	Material
Ceramic process isolating diaphragm	Al_2O_3 aluminum-oxide ceramic, Ceraphire® FDA, ultrapure 99.9 % (see also www.endress.com/ceraphire) The US Food & Drug Administration (FDA) has no objections to the use of ceramics made from aluminum oxide as a surface material in contact with foodstuffs. This declaration is based on the FDA certificates of our ceramic suppliers.
Metal process isolating diaphragm	AISI 316L (DIN/EN material number 1.4435)

Seals

See the specific process connection.

Materials not in contact with process

Housing

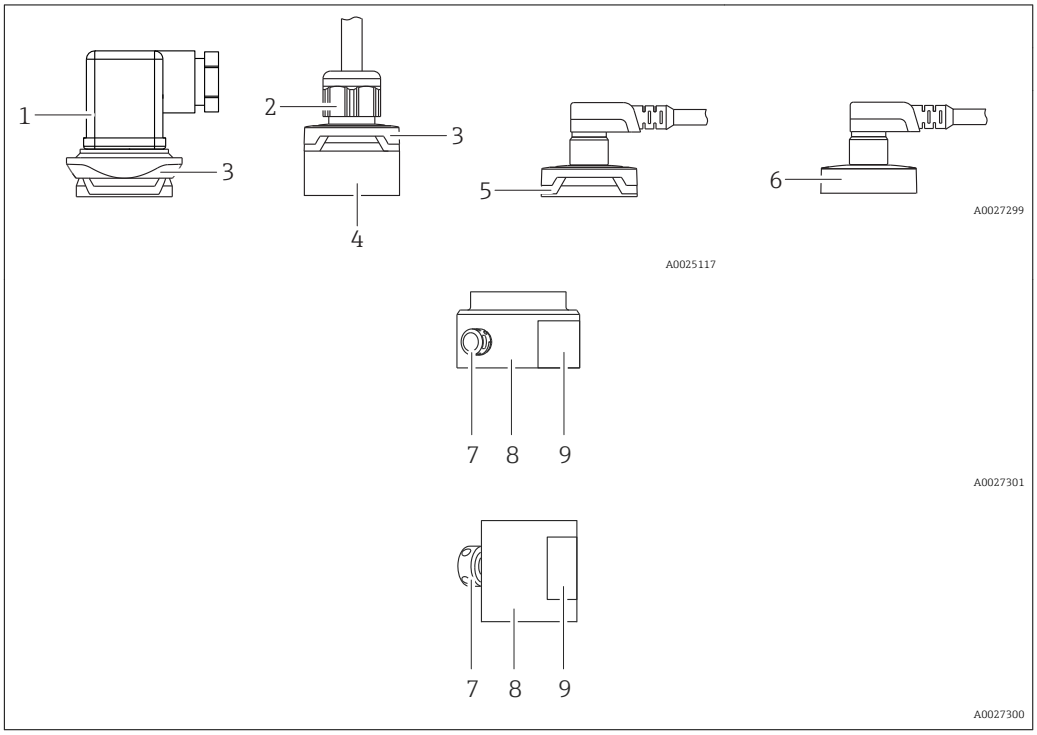

Item number	Component part	Material
1	Valve plug	▪ Seal: NBR ▪ Plug: PA ▪ Screw: V2A
2	Cable	▪ Pressure screw: PVDF ▪ Seal: TPE-V ▪ Cable: PUR (UL 94 V0)
3	Design element	PBT/PC
4	Connection	PPSU
5	M12 plug	Plastic: PPSU
6	M12 plug	Metal 316L (1.4404) For Ex ec: metal housing cap
7	Pressure compensation element	PMP11: PBT/PC PMP21 standard: PBT/PC PMP21 with Ex ec approval: 1.4404
8	Housing	316L (1.4404)
9	Nameplates	Plastic foil (attached to housing) or directly lasered onto the housing

Filling oil

Device	Filling oil
PMP11 PMP21	NSF-H1 synthetic oil in accordance with FDA 21 CFR 178.3570

Cleaning

Device	Description	Option [1]
PMC11 PMP11 PMC21 PMP21	Cleaned from oil+grease	HA
PMC21	Cleaned for oxygen service	HB

1) Product Configurator, order code for "Service"

Operability

Plug-on display PHX20 (optional)

No display or other operation facility is required to operate the device. However, devices with a valve plug can be fitted with the optional local display PHX20.

Description	Option [1]
Plug-on display PHX20, IP65	RU

1) Product Configurator, order code for "Accessories"

A 1-line liquid crystal display (LCD) is used. The local display shows measured values, fault messages and information messages. The device display can be turned in 90° steps. Depending on the orientation of the device, it is therefore easy to read the measured values.

Technical data

Display:	4-digit, red LED display
Digit height:	7.62 mm; programmable decimal point setting
Display range:	-1999 to 9999
Accuracy:	0.2% of the span ±1 digit
Electrical connection:	To transmitter with 4 to 20 mA output and elbow plug DIN 43 650, reverse polarity protection
Display power supply:	Not required, powered automatically from the power loop
Voltage drop:	≤ 5 V (corresponds to load: max. 250 Ω)
Rate of conversion:	3 measurements per second
Damping:	0.3 to 20 s (configurable)
Data backup:	Non-volatile EEPROM
Error message:	▪ HI: overrange ▪ LO: below range
Programming:	Via 2 keys, menu-guided, display range scaling, decimal point, damping, error message
Degree of protection:	IP 65
Influence of temperature on the display:	0.1% / 10 K
Electromagnetic compatibility (EMC):	Interference emission as per EN 50081, interference immunity as per EN 50082
Permitted current load:	Max. 60 mA
Ambient temperature:	0 to +60 °C (+32 to +140 °F)
Housing material:	Pa6 GF30 plastic, blue Front screen made from red PMMA
Order number:	52022914

Certificates and approvals

CE mark

The device meets the legal requirements of the relevant EC directives. Endress+Hauser confirms that the device has been successfully tested by applying the CE mark.

RoHS

The measuring system complies with the substance restrictions of the Restriction on Hazardous Substances Directive 2011/65/EU (RoHS 2).

RCM-Tick marking

The supplied product or measuring system meets the ACMA (Australian Communications and Media Authority) requirements for network integrity, interoperability, performance characteristics as well as health and safety regulations. Here, especially the regulatory arrangements for electromagnetic compatibility are met. The products are labelled with the RCM- Tick marking on the name plate.



A0029561

EAC conformity

The PMC21, PMP21 and PMP23 devices meet the legal requirements of the applicable EAC directives. These are listed in the corresponding EAC Declaration of Conformity along with the standards applied.

Endress+Hauser confirms successful testing of the device by affixing to it the EAC mark.

Approval

CSA C/US General Purpose

Safety Instructions (XA)

Safety Instructions (XA) are supplied with the device depending on the approval. These instructions are an integral part of the Operating Instructions.

Device	Directive	Documentation	Option [1]
PMP21	ATEX II 1/2G Ex ia IIC T4 Ga/Gb	XA01271P	BA
PMC21	ATEX II 2G Ex ia IIC T4 Gb	XA01271P	BB
PMC21 PMP21	ATEX II 3G Ex ec IIC T4 Gc	XA01533P	BC
PMC21 PMP21	FM IS Cl. I, Div.1 Gr. A-D T4	XA01321P	FA
PMC21 PMP21	CSA C/US IS Cl. I Div. 1 Gr. A-D	XA01322P	CB
PMC21 PMP21	EAC Ex ia IIC T4 Ga/Gb	XA01540P	GA
PMC21 PMP21	IEC Ex ia IIC T4 Ga/Gb	XA01271P	IA
PMC21 PMP21	NEPSI Ex ia IIC T4	XA01363P	NA
PMC21 PMP21	TIIS Ex ia IIC T4	In preparation	TA

1) Product Configurator, order code for "Approval"

The nameplate provides information on the Safety Instructions (XA) that are relevant for the device.

Marine approval (pending)

Device	Description	Option [1]
PMC21 PMP21	DNV GL	LE
PMC21 PMP21	ABS	LF

1) Product Configurator, order code for "Additional approval"

Pressure Equipment Directive 2014/68/EU (PED)

Pressure equipment with allowable pressure ≤ 200 bar (2 900 psi)

Pressure equipment (with a maximum allowable pressure PS ≤ 200 bar (2 900 psi)) can be classified as pressure accessories in accordance with Pressure Equipment Directive 2014/68/EU. If the maximum allowable pressure is ≤ 200 bar (2 900 psi) and the pressurized volume of the pressure equipment is ≤ 0.1 l, the pressure equipment is subject to the Pressure Equipment Directive (cf. Pressure Equipment Directive 2014/68/EU, Article 4, point 3). The Pressure Equipment Directive only requires that the pressure equipment shall be designed and manufactured in accordance with the "sound engineering practice of a Member State".

Reasons:

- Pressure Equipment Directive (PED) 2014/68/EU Article 4, point 3
- Pressure equipment directive 2014/68/EU, Commission's Working Group "Pressure", Guideline A-05 + A-06

Note:

A partial examination shall be performed for pressure instruments that are part of safety equipment for the protection of a pipe or vessel from exceeding allowable limits (safety accessory in accordance with Pressure Equipment Directive 2014/68/EU, Article 2, point 4).

Pressure equipment with allowable pressure > 200 bar (2 900 psi)

Pressure equipment designated for application in every process fluid having a pressurized volume of <0.1 l and a max. allowable pressure PS > 200 bar (2 900 psi) shall satisfy the essential safety requirements set out in Annex I of the Pressure Equipment Directive 2014/68/EU. According to Article 13 pressure equipment shall be classified by category in accordance with Annex II. The conformity assessment of the pressure equipment shall be determined by the category I under consideration of the above-mentioned low pressurized volume. These devices shall be provided with CE marking.

Reasons:

- Pressure Equipment Directive 2014/68/EU, Article 13, Annex II
- Pressure equipment directive 2014/68/EU, Commission's Working Group "Pressure", Guideline A-05

Note:

A partial examination shall be performed for pressure instruments that are part of safety equipment for the protection of a pipe or vessel from exceeding allowable limits (safety accessory in accordance with Pressure Equipment Directive 2014/68/EU, Article 2, point 4).

The following also applies:

PMP21 with threaded connection and internal process isolating diaphragm PN > 200 :

Suitable for stable gases in group 1, category I, module A

Other standards and guidelines

The applicable European guidelines and standards can be found in the relevant EU Declarations of Conformity. The following were also applied:

DIN EN 60770 (IEC 60770):

Transmitters for use in industrial process control systems Part 1: Methods for performance evaluation

Methods for evaluating the performance of transmitters for control and regulation in industrial process control systems.

DIN 16086:

Electrical pressure measuring instruments, pressure sensors, pressure transmitters, pressure measuring instruments, concepts, specifications on data sheets

Procedure for writing specifications in data sheets for electrical pressure measuring instruments, pressure sensors and pressure transmitters.

EN 61326-X:

EMC product family standard for electrical equipment for measurement, control and laboratory use.

EN 60529:

Degrees of protection provided by enclosures (IP code)

NAMUR - User association of automation technology in process industries.

NE21 - Electromagnetic Compatibility (EMC) of Industrial Process and Laboratory Control Equipment.

NE43 - Standardization of the Signal Level for the Failure Information of Digital Transmitters.

NE44 - Standardization of Status Indicators on PCT Instruments with the Help of Light Emitting Diodes

NE53 - Software of Field Devices and Signal-processing Devices with Digital Electronics

CRN approval

A CRN approval is available for some device versions. A CRN-approved process connection with a CSA approval must be ordered for a CRN-approved device. The CRN-approved devices are assigned the registration number 0F18141.5C.

Ordering information: Product Configurator, order code for "Process connection" (the CRN process connections are indicated appropriately in the "Mechanical construction" section.)

Calibration unit

Description	Option [1]
Sensor range; %	A
Sensor range; mbar/bar	B
Sensor range; kPa/MPa	C
Sensor range; psi	F
Customer-specific; see additional spec.	J

1) Product Configurator, order code for "Calibration; unit"

Calibration

Description	Option [1]
3-point certificate of calibration	F3

1) Product Configurator order code for "Calibration"

Inspection certificates

Device	Description	Option [1]
PMC21 PMP21	3.1 Material documentation, wetted metal parts, EN10204-3.1 inspection certificate	JA

1) Product Configurator, order code for "Test, Certificate"

Ordering information

Detailed ordering information is available from the following sources:
- In the Product Configurator on the Endress+Hauser website: www.endress.com -> Click "Corporate" -> Select your country -> Click "Products" -> Select the product using the filters and search field -> Open product page -> The "Configure" button to the right of the product image opens the Product Configurator.
- From your Endress+Hauser Sales Center: www.addresses.endress.com

Product Configurator - the tool for individual product configuration
- Up-to-the-minute configuration data
- Depending on the device: Direct input of measuring point-specific information such as measuring range or operating language
- Automatic verification of exclusion criteria
- Automatic creation of the order code and its breakdown in PDF or Excel output format
- Ability to order directly in the Endress+Hauser Online Shop

Scope of delivery
- Measuring device
- Optional accessories
- Brief Operating Instructions
- Certificates

Accessories

Weld-in adapter

Various weld-in adapters are available for installation in vessels or pipes.

Device	Description	Option [1]	Order number
PMP21	Weld-in adapter G½, 316L	QA	52002643
PMP21	Weld-in adapter G½, 316L 3.1 EN10204-3.1 material, inspection certificate	QB	52010172
PMP21	Weld-in tool adapter G½, brass	QC	52005082

1) Product Configurator, order code for "Enclosed accessories"

If installed horizontally and weld-in adapters with a leakage hole are used, ensure that the leakage hole is pointing down. This allows leaks to be detected as quickly as possible.

Plug-on display PHX20

→ 🖹 40

M12 plug connectors

Connector	Degree of protection	Material	Option [1]	Order number
M12 (self-terminated connection at M12 plug) 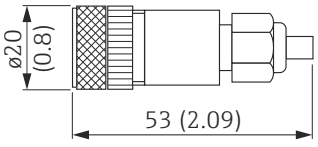	IP67	▪ Union nut: Cu Sn/Ni ▪ Body: PBT ▪ Seal: NBR	R1	52006263
M12 90 degrees with 5m (16 ft) cable 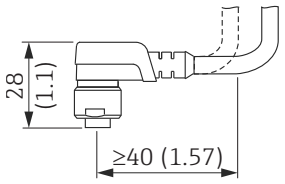	IP67	▪ Union nut: GD Zn/Ni ▪ Body: PUR ▪ Cable: PVC	RZ	52010285
M12 90 degrees (self-terminated connection at M12 plug) 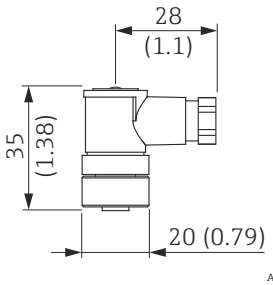	IP67	▪ Union nut: GD Zn/Ni ▪ Body: PBT ▪ Seal: NBR	RM	71114212

1) Product Configurator, order code for "Enclosed accessories"

Documentation

Field of Activities

Pressure measurement, powerful instruments for process pressure, differential pressure, level and flow:

FA00004P/00/EN

Technical Information

- TI00241F/00/EN: EMC test procedures
- TI00426F/00/EN: Weld-in adapters, process adapters and flanges (overview)

Operating Instructions

BA01271P/00/EN

Brief Operating Instructions

KA01164P/00/EN

Safety Instructions (XA)

Safety Instructions (XA) are supplied with the device depending on the approval. These instructions are an integral part of the Operating Instructions.

Device	Directive	Documentation	Option [1]
PMP21	ATEX II 1/2G Ex ia IIC T4 Ga/Gb	XA01271P	BA
PMC21	ATEX II 2G Ex ia IIC T4 Gb	XA01271P	BB
PMC21 PMP21	ATEX II 3G Ex ec IIC T4 Gc	XA01533P	BC
PMC21 PMP21	FM IS Cl. I, Div.1 Gr. A-D T4	XA01321P	FA
PMC21 PMP21	CSA C/US IS Cl. I Div. 1 Gr. A-D	XA01322P	CB
PMC21 PMP21	EAC Ex ia IIC T4 Ga/Gb	XA01540P	GA
PMC21 PMP21	IEC Ex ia IIC T4 Ga/Gb	XA01271P	IA
PMC21 PMP21	NEPSI Ex ia IIC T4	XA01363P	NA
PMC21 PMP21	TIIS Ex ia IIC T4	In preparation	TA

1) Product Configurator, order code for "Approval"

The nameplate provides information on the Safety Instructions (XA) that are relevant for the device.



www.addresses.endress.com

Endress+Hauser

People for Process Automation

CS-407-100 : Identification sheet

VWTC PROJECT NUMBER:	Iqaluit WWTP	REV:	02
PROJECT NAME:	5000218036	SUBMITTED TO (COMPANY):	
ENGINEER:	F.VINCI	SUBMITTED TO (RESPONSIBLE)	
PROJECT MANAGER:	C. BEKAERT	PROJECT NUM REFERENCE.:	
PHONE NUMBER:		LOT NUMBER:	

SUPPLIER	EQPT CODE	EQPT TAG NO	DIA	DESCRIPTION	INFO 1	INFO 2	INFO 3	APPLIC.	NOTE	REV
HACH	IEPOCY201499	AE-04-741	N/A	HP-250 INSTRUMENT	CONDUCTIVITY SENSOR/MANUFACTURER: HACH// MODEL: D3725E2T // SENSOR CABLE: 22FT // CALIBRATED RANGE: 200 - 2,000,000 uS/cm // BODY: PP	N/A	N/A	HP-250		1
HACH	IEPOCY201499	AE-04-745	N/A	HP-250 INSTRUMENT	CONDUCTIVITY SENSOR/MANUFACTURER: HACH// MODEL: D3725E2T // SENSOR CABLE: 22FT // CALIBRATED RANGE: 200 - 2,000,000 uS/cm // BODY: PP	N/A	N/A	HP-250		2

Inductive Conductivity Sensors



The innovative technology of Hach's Inductive Conductivity Sensors eliminates polarization and electrode coating problems in harsh environments. Available in sanitary (CIP) flange style and convertible styles in PFA Teflon®, polypropylene, PEEK®, and PVDF.

Features and Benefits

Wide Measuring Range

Hach's Inductive Conductivity Sensors measure 200 up to 2,000,000 microSiemens/cm. A built-in Pt 1000 RTD compensates the measured conductivity for changes in process temperature.

Low-maintenance Design

The inductive sensor design eliminates polarization and electrode coating problems that commonly affect conventional contacting electrode-type conductivity sensors.

Complete Digital System

All 3700 sc sensors come complete with a Digital Gateway for use with a Hach sc Digital Controller.

Principal of Operation

Inductive conductivity sensors induce a low current in a closed loop of solution, then measure the magnitude of this current to determine the solution's conductivity. The conductivity analyzer drives Torroid A, inducing an alternating current in the solution. This current signal flows in a closed loop through the sensor bore and surrounding solution. Torroid B senses the magnitude of the induced current which is proportional to the conductance of the solution. The analyzer processes this signal and displays the corresponding reading.

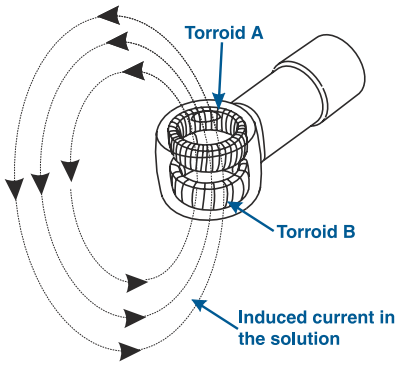

Versatile Mounting Styles

Sensors can be installed using a choice of four mounting styles—immersion, insertion, union, and sanitary. Please turn to page 6 for more information.

Full-Featured "Plug and Play" Hach sc Digital Controllers

There are no complicated wiring or set up procedures with any Hach sc controller. Just plug in any combination of Hach digital sensors and it's ready to use—it's "plug and play."

One or multiple sensors—The sc controller family allows you to receive data from up to eight Hach digital sensors in any combination using a single controller.

Communications—Multiple alarm/control schemes are available using the relays and PID control outputs. Available communications include analog 4-20 mA, digital MODBUS® (RS485 and RS232) or Profibus DP protocols. (Other digital protocols are available. Contact your Hach representative for details.)

Data logger—A built-in data logger collects measurement data, calibration, verification points, and alarm history.

Specifications*

Measuring Range
From 200 microSiemens/cm up to 2,000,000 microSiemens/cm

Operating Temperature Range
-10 to 200°C (14 to 392°F); limited only by sensor body material and mounting hardware; see below

Flow Rate
3 m (10 ft.) per second, maximum

Temperature Compensator
Pt 1000 RTD

Sensor Cable
Polypropylene and PVDF Sensors:
5 conductor (plus two isolated shields) cable with XLPE (cross-linked polyethylene) jacket; rated to 150°C (302°F); 6 m (20 ft.) long

PEEK® and PFA Teflon® Sensors:
5 conductor (plus two isolated shields) cable with Teflon-coated jacket; rated to 200°C (392°F); 6 m (20 ft.) long

Wetted Materials
Polypropylene, PVDF, PEEK® or PFA Teflon®

Model 3700 sc-series Material Compatibility

	Polypropylene	PVDF	PEEK®	Teflon®
Calcium Chloride		•	•	•
Hydrochloric Acid		•		•
Hydrofluoric Acid		•		•
Nitric Acid				•
Phosphoric Acid		•	•	•
Potassium Hydroxide	•		•	•
Seawater	•	•	•	•
Sodium Hydroxide	•		•	•
Sulfuric Acid				•
Water	•	•	•	•

NOTE: Compatibilities are valid for temperatures up to 115°C. For other applications or conditions, please contact Hach Technical Support.

Temperature/Pressure Limits
Sensor Only (no hardware):

Polypropylene
6.9 bar at 100°C (100 psi at 212°F)
PVDF
6.9 bar at 120°C (100 psi at 248°F)
PEEK®
13.8 bar at 200°C (200 psi at 392°F)
PFA Teflon®
13.8 bar at 200°C (200 psi at 392°F)

Temperature/Pressure Limits (continued)
Sensor with Hardware:

Immersion and Union†
See graphs below for specific Hach sensor and mounting hardware combinations

CPVC Mounting Hardware
(All Sensor Materials)

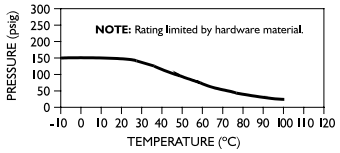

PVDF Mounting Hardware
(All Sensor Materials)

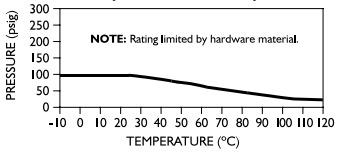

316 Stainless Steel Mounting Hardware

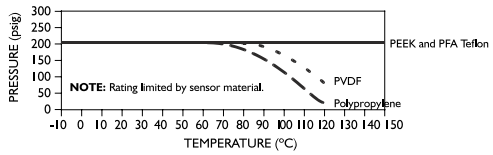

304 Stainless Steel Sanitary Mounting Hardware††
With Polypropylene Sensor

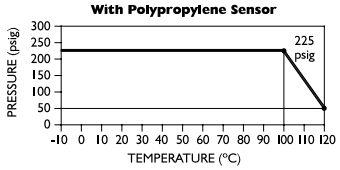

With PVDF Sensor

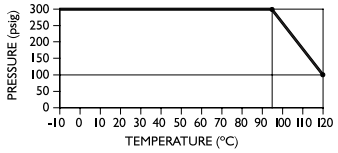

With PFA Teflon Sensor

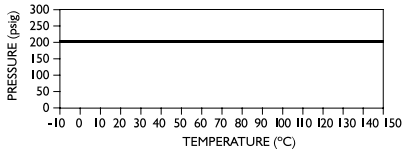

†Ratings for the above Hach sensor and mounting hardware combinations are based upon water service. More severe service may require a correction factor.

††Sanitary hardware ratings are for MH018S8SZ hardware. Other hardware and clamp combinations may reduce the listed ratings.

Insertion Hardware only:	MH118M9NZ	MH138M9NZ
Temperature Range**	-5 to 95°C (23 to 203°F) supported or unsupported	-5 to 80°C (23 to 176°F) unsupported if installed vertically; -5 to 95°C (23 to 203°F) when supported with bracket
Maximum Pressure**	5.5 bar at 95°C (80 psig at 203°F)	3.5 bar at 90°C (50 psig at 194°F)
Wetted Materials	316 stainless steel, Teflon® valve seats, and Viton® O-rings	CPVC, brass, Teflon® valve seats, and Viton® O-ring seals

***These sensor/hardware temperature and pressure ratings are limited by the hardware material, maximum pressure, and whether the assembly is supported or unsupported.*

**Specifications subject to change without notice.*

PEEK® is a registered Trademark of ICI Americas, Inc.; Teflon® is a registered Trademark of DuPont Co.; Viton® is a registered trademark of E.I. DuPont de Nemours + Co.

Engineering Specifications

1. The electrodeless conductivity sensor shall measure from 0-200 to 0-2,000,000 microSiemens/cm, and shall have a built-in Pt 1000 RTD element to compensate measured conductivity for changes in process temperature.

2. The sensor shall be constructed of only one wetted body material which shall be polypropylene, PVDF, PEEK® or PFA Teflon®.

3. The sensor cable shall be water resistant and rated to 150ºC (302ºF) for polypropylene and PVDF sensors or 200ºC (392ºF) for PEEK® and PFA Teflon® sensors.

4. The sensor shall have a 1/2-inch nominal diameter bore for operation in slurries.

5. The sensor shall be a:

   a) Convertible style that can be directly fastened onto the end of a pipe for immersion mounting or, by using a special Hach union-mount adapter, mounted into any 2-inch NPT fitting (tee, weldolet, pipe saddle, etc.). The convertible style sensor can also be insertion mounted into a 2-inch ball valve assembly.

   b) Sanitary style with materials that conform to the provisions of 3-A Sanitary Standards to withstand CIP cleaning, and with an integral 2-inch sanitary-mount flange to mount into a standard 2-inch sanitary tee.

6. An optional sensor module or Digital Gateway shall be available for connecting to a Hach sc Digital Controller.

7. The sensor shall be Hach Company 3700 sc or 3700 Inductive Conductivity Sensor.

Dimensions

Convertible Style

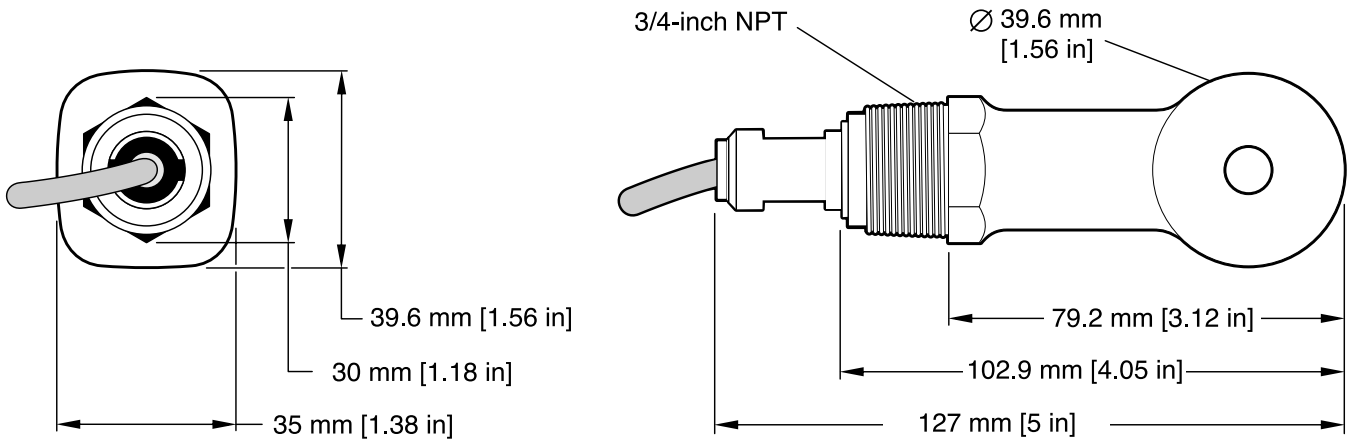

Sanitary Style

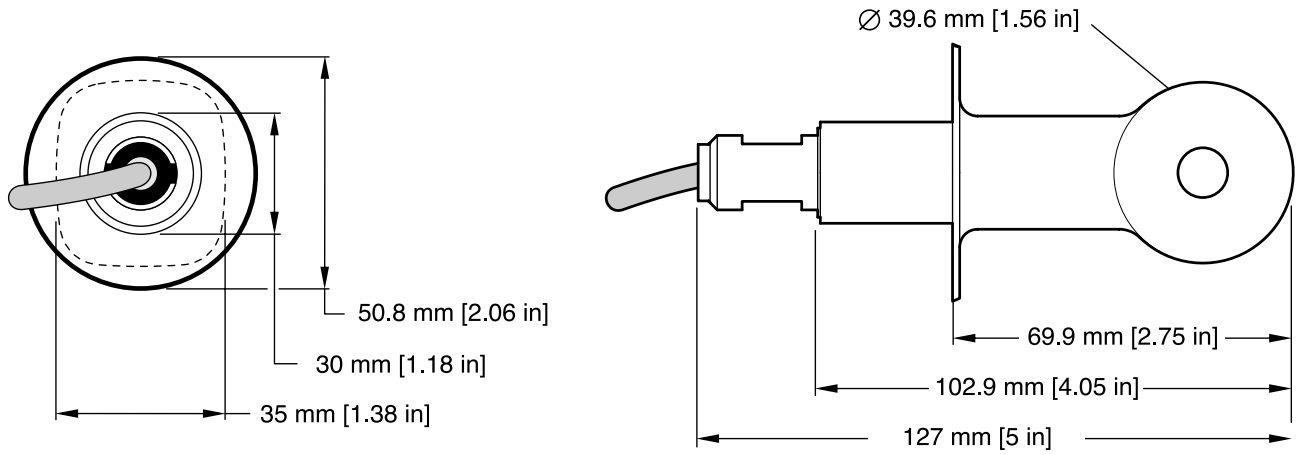

Ordering Information

3700 sc Digital Inductive Conductivity Sensors

All digital inductive sensors come complete with standard sensor cable length of 6 m (20 ft.), digital gateway, and a 1 m (3.3 ft.) digital extension cable.

Choice of body styles:

- *Convertible – 2-inch NPT, designed for tee, other flow through, insertion, and pipe mountings for immersion.*
- *Sanitary (CIP) –2-inch flange, special cap, and EPDM compound gasket. Conforms to provisions of 3-A Sanitary Standards.*

Product Number	Body Style	Body Material
D3705E2T	Sanitary	Polypropylene
D3706E2T	Sanitary	PVDF
D3708E2T	Sanitary	PFA Teflon
D3725E2T	Convertible	Polypropylene
D3726E2T	Convertible	PVDF
D3727E2T	Convertible	PEEK
D3728E2T	Convertible	PFA Teflon

Digital Gateway

6120800 Use the Digital Gateway to connect analog Hach 3700 inductive conductivity sensors to the Hach sc1000 digital controller

3700 Analog Inductive Conductivity Sensors

All Analog sensors come complete with standard sensor cable length of 6 m (20 ft.).

Choice of body styles:

- *Convertible – 2-inch NPT, designed for tee, other flow through, insertion, and pipe mountings for immersion.*
- *Sanitary (CIP) –2-inch flange, special cap, and EPDM compound gasket. Conforms to provisions of 3-A Sanitary Standards.*

Product Number	Body Style	Body Material
3705E2T	Sanitary	Polypropylene
3706E2T	Sanitary	PVDF
3708E2T	Sanitary	PFA Teflon
3725E2T	Convertible	Polypropylene
3726E2T	Convertible	PVDF
3727E2T	Convertible	PEEK
3728E2T	Convertible	PFA Teflon

Accessories

Cables

Digital cables are used only with digital sensors or gateways when connecting to a Hach sc Digital Controller.

6122400 Digital Extension Cable, 1 m (3.2 ft.)

5796000 Digital Extension Cable, 7.7 m (25 ft.)

5796100 Digital Extension Cable, 15 m (50 ft.)

5796200 Digital Extension Cable, 31 m (100 ft.)

Analog cables are used only with analog sensors, junction box, and controller.

1W1100 Analog Interconnect Cable (order per foot)

Digital Termination Box

Used with digital extension cables when the desired cable length between the digital sensor/digital gateway and sc Digital Controller is between 100 m (328 ft) and 1000 m (3280 ft).

5867000 Digital Termination Box

Analog Junction Box

Used with analog interconnect cable when the desired cable length between analog sensor and analog controller is greater than the standard length of sensor cable. Each junction box includes terminal strip and gasket.

60A2053 Junction Box, Surface-mount, aluminum (includes mounting hardware)

60A9944 Junction Box, Pipe-mount, PVC for 1/2-inch diameter pipe (includes mounting hardware)

60G2052 Junction Box, Pipe-mount, PVC for 1-inch diameter pipe (includes mounting hardware)

76A4010-001 Junction Box, NEMA 4X (no mounting hardware included)

Conductivity Reference Solutions

Please specify the desired conductivity value when placing your order.

Product Number	Description	Volume
25M3A2000-119	100-1000 µS/cm	1 liter
25M3A2050-119	1000-2000 µS/cm	1 liter
25M3A2100-119	2000-150,000 µS/cm	1 liter
25M3A2200-119	200,000-300,000 µS/cm	1 liter

Ordering Information *continued*

Mounting Hardware

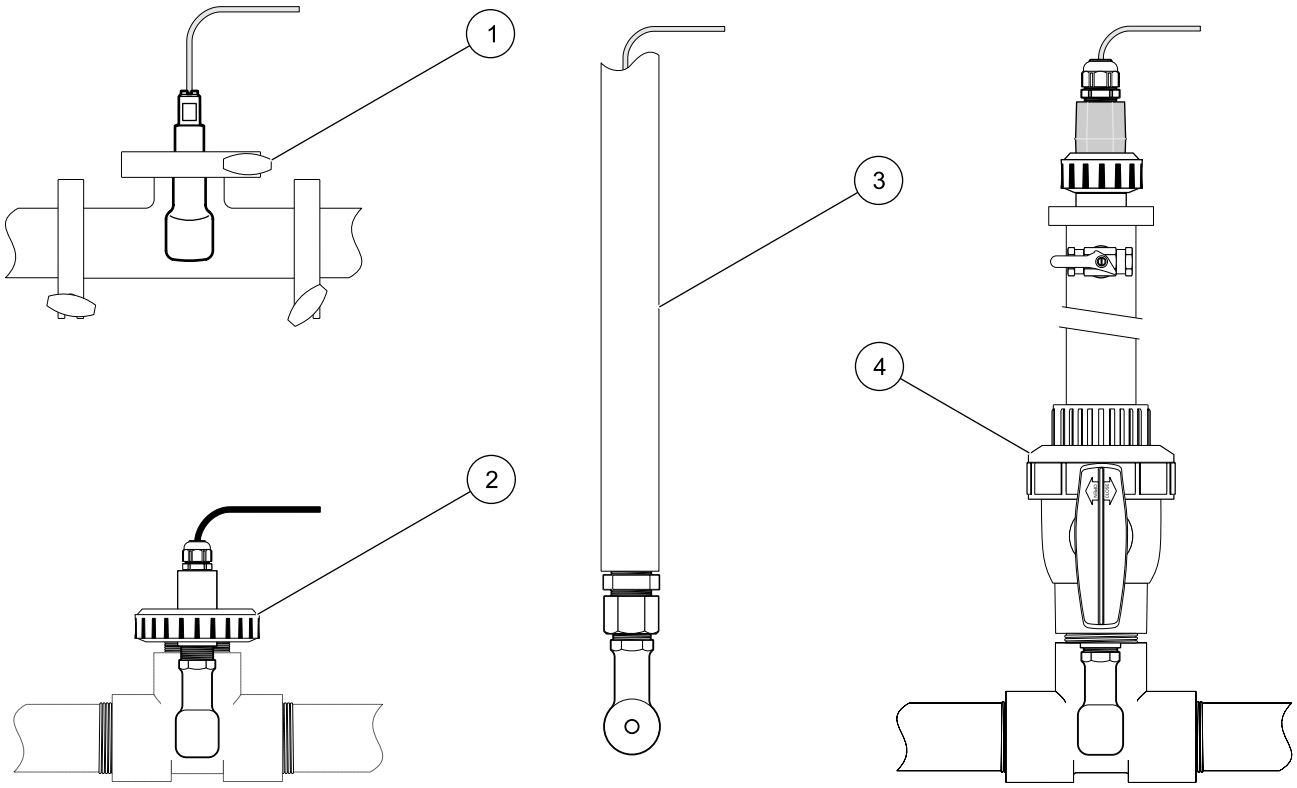

1. Sanitary Style sensor sanitary clamp mounting

2. Convertible Style sensor union mounting

3. Convertible Style sensor immersion mounting

4. Convertible Style sensor ball valve mounting

Sanitary Mount

MH018S8SZ 316SS
Includes 316 SS sanitary 2-inch tee, heavy-duty clamp, special cap, and EPDM compound gasket.

Union Mount

MH518N3NZ 316 SS
MH538N3NZ CPVC
MH568N3NZ PVDF
Includes adapter and a 2-inch pipe tee. Union adapters are used with convertible style sensors that are to be union or flange mounted into a standard 2-inch NPT pipe tee or insertion mounted into a 2-inch ball valve assembly.

Immersion Mount

MH432G CPVC Pipe
Includes 1/2-inch diameter x 4-foot pipe, 1/2- x 3/4-inch NPT coupling, and plastic pipe-mount junction box with terminal strip.

Insertion Mount

MH138M9NZ CPVC
MH118M9NZ 316 SS
Includes 2-inch NPT insertion assembly with ball valve.

Common Applications

Refer to page 2 for sensor temperature and pressure limits.

Industry	Application	Recommended Sensor Style (and Material)
Metals Finishing and Mining	Plating bath monitoring	Convertible (polypropylene)
	Alkaline/caustic wash	Convertible (polypropylene)
	Rinse water	Convertible (polypropylene)
	Pickling processes	Convertible (PVDF)
	Metals recovery	Convertible (PEEK)
	Copper floatation	Convertible (PEEK)
	Scrubbers	Convertible (polypropylene)
Chemicals and Refining	Acid production	Convertible (PFA Teflon)
	Caustic production	Convertible (PFA Teflon
	Phosphates	Convertible (PFA Teflon)
	Fertilizers	Convertible (PFA Teflon)
	Detergents	Convertible (PFA Teflon)
	Glycerin	Convertible (PVDF)
	Moisture detection	Convertible (PVDF or PFA Teflon)
	Scrubbers	Convertible (PVDF)
	Wastewater	Convertible (PVDF)
	Oil well drilling mud	Convertible (PEEK)
	Leak detection	Convertible (PEEK)
	Alkylation	Convertible (PFA Teflon)
	Spill detection	Convertible (PEEK)
Food and Beverage	Brine concentration	Convertible (polypropylene)
	Desalting	Convertible (polypropylene)
	Cheese production	Sanitary (PFA Teflon)
	Caustic peeling	Convertible (PFA Teflon)
	Pickle making	Sanitary (polypropylene)
	CIP applications	Sanitary (PFA Teflon)
	Rinse water control	Convertible (polypropylene)
	Sugar carbonation	Convertible (PFA Teflon)
Pulp and Paper	White, black and green liquor	Convertible (PEEK)
	Stock washing	Convertible (PEEK)
	Wash and cooking liquor control	Convertible (PEEK)
	Scrubbers	Convertible (PEEK)
	Spill detection	Convertible (PEEK)
Textile Manufacturing	Rinse water	Convertible (polypropylene)
	Dye baths	Convertible (polypropylene)
	Bleaching	Convertible (polypropylene)
	Mercerizing	Convertible (polypropylene)
	Acid washing	Convertible (polypropylene)
	Carbonizing and scouring baths	Convertible (polypropylene)
Natural Waters, Lakes, Streams, and Sea Water	Water pollution monitoring	Convertible (polypropylene)
	Salt intrusion	Convertible (polypropylene)
	Salinity	Convertible (polypropylene)
Clean Water Treatment	Ion exchange regeneration	Convertible (polypropylene)
	Reverse osmosis concentrate monitoring	Convertible (polypropylene)
	Softener regeneration	Convertible (polypropylene)
	Acid/caustic concentration control	Convertible (PVDF)
Wastewater Treatment	Acid/caustic concentration control	Convertible (PEEK)
	Spill detection	Convertible (PEEK)
Steam Generation	Boiler blowdown	Convertible (polypropylene)
	Flue gas scrubbers	Convertible (polypropylene)

To complete your conductivity measurement system, choose from these Hach controllers...

Model sc200 Controller

(see Lit. #2665)

The sc200 controller platform can be configured to operate either 2 Digital Sensor Inputs, or 1 or 2 Analog Sensor Inputs, or a combination of Digital and Analog Sensor Inputs. Customers may choose their communication options from a variety of offerings ranging from MODBUS RTU to Profibus DPV1.

sc200 for Hach Digital Sensors

LXV404.99.00552 sc200 controller, 2 channel, digital
LXV404.99.00502 sc200 controller, 1 channel, digital
LXV404.99.00542 sc200 controller, 2 channel, digital & mA input
LXV404.99.00512 sc200 controller, 2 channel, digital & pH/DO
LXV404.99.00522 sc200 controller, 2 channel, digital & Conductivity
LXV404.99.00532 sc200 controller, 2 channel, digital & Flow

sc200 for Hach Analog Sensors

LXV404.99.00102 sc200 controller, 1 channel, pH/DO
LXV404.99.00112 sc200 controller, 2 channel, pH/DO
LXV404.99.00202 sc200 controller, 1 channel, Conductivity
LXV404.99.00222 sc200 controller, 2 channel, Conductivity
LXV404.99.00212 sc200 controller, 2 channel, pH/DO & Conductivity
LXV404.99.00302 sc200 controller, 1 channel, Flow
LXV404.99.00332 sc200 controller, 2 channel, Flow
LXV404.99.00312 sc200 controller, 2 channel, Flow & pH/DO
LXV404.99.00322 sc200 controller, 2 channel, Flow & Conductivity

Note: Other sensor combinations are available. Please contact Hach Technical Support or your Hach representative.
Note: Communication options (MODBUS and Profibus DPV1) are available.

Model sc1000 Controller

(see Lit. #2403)

Each sc1000 Probe Module provides power to the system and can accept up to 8 digital sensors/expansion boards. Probe Modules can be networked together to accommodate up to 32 digital sensors/expansion boards attached to the same network.

LXV402.99.00002 sc1000 Display Module
LXV400.99.1R572 sc1000 Probe Module, 4 sensors, 4 mA Out, 4 mA In, 4 Relays, 110-230V
LXV400.99.1B572 sc1000 Probe Module, 4 sensors, 4 mA Out, 4 mA In, 4 Relays, RS-485 (MODBUS), 110-230V
LXV400.99.1F572 sc1000 Probe Module, 4 sensors, 4 mA Out, 4 mA In, 4 Relays, PROFIBUS DP, 110-230V
LXV400.99.1R582 sc1000 Probe Module, 6 sensors, 4 mA Out, 4 mA In, 4 Relays, 110-230V

si792 2-wire Transmitter (for 3700 Analog Inductive Conductivity Sensors)

(see Lit. #2605)

The Hach si792 2-wire electrochemistry transmitters are full-featured, intuitive to operate, and work with Hach's world-class water quality sensors. Rugged construction is designed for Class I, Division 2 (C1, D2) respectively Class I, Division 1 (C1, D1) application. Digital communication capabilities are available.

LXV503.99.70002 si792 E; Class 1 Division 2; HART
LXV503.99.70102 si792x E; Class 1 Division 1; HART
LXV503.99.76102 si792x E-PA; Class 1 Division 1; PROFIBUS PA
LXV503.99.77102 si792x E-FF; Class 1 Division 1; FOUNDATION FIELDBUS

Lit. No. 2465 Rev 2
J10 Printed in U.S.A.
©Hach Company, 2010. All rights reserved.
In the interest of improving and updating its equipment, Hach Company reserves the right to alter specifications to equipment at any time.

At Hach, it's about learning from our customers and providing the right answers. It's more than ensuring the quality of water—it's about ensuring the quality of life. When it comes to the things that touch our lives...

Keep it pure.

Make it simple.

Be right.

For current price information, technical support, and ordering assistance, contact the Hach office or distributor serving your area.

In the United States, contact:

HACH COMPANY World Headquarters
P.O. Box 389
Loveland, Colorado 80539-0389
U.S.A.
Telephone: 800-227-4224
Fax: 970-669-2932
E-mail: orders@hach.com
www.hach.com

U.S. exporters and customers in Canada, Latin America, sub-Saharan Africa, Asia, and Australia/New Zealand, contact:

HACH COMPANY World Headquarters
P.O. Box 389
Loveland, Colorado 80539-0389
U.S.A.
Telephone: 970-669-3050
Fax: 970-461-3939
E-mail: intl@hach.com
www.hach.com

In Europe, the Middle East, and Mediterranean Africa, contact:

HACH LANGE GmbH
Willstätterstraße 11
D-40549 Düsseldorf
GERMANY
Tel: +49 (0) 211 5288-0
Fax: +49 (0) 211 5288-143
E-mail: info@hach-lange.de
www.hach-lange.com

HACH®

Be Right™

sc200™ UNIVERSAL CONTROLLER

Applications
- Drinking Water
- Wastewater
- Industrial Water
- Power



One Controller for the Broadest Range of Sensors.

Choose from 30 digital and analog sensor families for up to 17 different parameters.

Maximum Versatility

The sc200 controller allows the use of digital and analog sensors, either alone or in combination, to provide compatibility with Hach's broad range of sensors, eliminating the need for dedicated, parameter-specific controllers.

Ease of Use and Confidence in Results

Large, high-resolution, transreflective display provides optimal viewing resolution in any lighting condition. Guided calibration procedures in 19 languages minimize complexity and reduce operator error. Password-protected SD card reader offers a simple solution for data download and transfer. Visual warning system provides critical alerts.

Wide Variety of Communication Options

Utilize two to five analog outputs to transmit primary and secondary values for each sensor, or integrate Hach sensors and analyzers into MODBUS RS232/RS485, Profibus® DP, and HART networks.



Password protected SD card reader offers a simple solution for data download and transfer, and sc200 and digital sensor configuration file duplication and backup.

HACH®
Be Right™

Controller Comparison







Features	Previous Models sc100™ Controller	Previous Models GLI53 Controller	sc200™ Controller	Benefits
Display	64 x 128 pixels 33 x 66 mm (1.3 x 2.6 in.)	64 x 128 pixels 33 x 66 mm (1.3 x 2.6 in.)	160 x 240 pixels 48 x 68 mm (1.89 x 2.67 in.) Transreflective	• Improved user interface—50% bigger • Easier to read in daylight and sunlight
Data Management	irDA Port/PDA Service Cable	N/A	SD Card Service Cable	• Simplifies data transfer • Standardized accessories/max compatibility
Sensor Inputs	2 Max Direct Digital Analog via External Gateway	2 Max Analog Depending on Parameter	2 Max Digital and/or Analog with Sensor Card	• Simplifies analog sensor connections • Works with analog and digital sensors
Analog Inputs	N/A	N/A	1 Analog Input Signal Analog 4-20mA Card	• Enables non-sc analyzer monitoring • Accepts mA signals from other analyzers for local display • Consolidates analog mA signals to a digital output
4-20 mA Outputs	2 Standard	2 Standard	2 Standard Optional 3 Additional	• Total of five (5) 4-20 mA outputs allows multiple mA outputs per sensor input
Digital Communication	MODBUS RS232/RS485 Profibus DP V1.0	HART	MODBUS RS232/RS485 Profibus DP V1.0 HART 7.2	• Unprecedented combination of sensor breadth and digital communication options

Choose from Hach's Broad Range of Digital and Analog Sensors

Parameter	Sensor	Digital or Analog
Ammonia	AMTAX™ sc, NH4D sc, AISE sc, AN-ISE sc	●
Chlorine	CLF10 sc, CLT10 sc, 9184 sc	●
Chlorine Dioxide	9185 sc	●
Conductivity	GLI 3400 Contacting, GLI 3700 Inductive	△
Dissolved Oxygen	LDO® Model 2, 5740 sc	●
Dissolved Oxygen	5500	△
Flow	U53, F53 Sensors	△
Nitrate	NITRATAX™ sc, NO3D sc, NISE sc, AN-ISE sc	●
Oil in Water	FP360 sc	●
Organics	UVAS sc	●
Ozone	9187 sc	●
pH/ORP	pHD	●
pH/ORP	pHD, pH Combination, LCP	△
Phosphate	PHOSPHAX™ sc	●
Sludge Level	SONATAX™ sc	●
Suspended Solids	SOLITAX™ sc, TSS sc	●
Turbidity	1720E, FT660 sc, SS7 sc, ULTRATURB sc, SOLITAX sc, TSS sc	●
Ultra Pure Conductivity	8310, 8311, 8312, 8315, 8316, 8317 Contacting	△
Ultra Pure pH/ORP	8362	△

● = Digital △ = Analog

Connect up to two of any of the sensors listed above, in any combination, to meet your application needs. The diagrams below demonstrate the potential configurations. Operation of analog sensors requires the controller to be equipped with the appropriate sensor module. Contact Hach Technical Support for help with selecting the appropriate module.

2 Channel Configurations

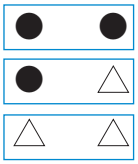

1 Channel Configurations

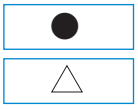

Specifications*

Dimensions (H x W x D)	5.7 in x 5.7 in x 7.1 in (144 mm x 144 mm x 181 mm)
Display	Graphic dot matrix LCD with LED backlighting, transreflective
Display Size	1.9 x 2.7 in. (48 mm x 68 mm)
Display Resolution	240 x 160 pixels
Weight	3.75 lbs. (1.70 kg)
Power Requirements (Voltage)	100 - 240 V AC, 24 V DC
Power Requirements (Hz)	50/60 Hz
Operating Temperature Range	-20 to 60 °C , 0 to 95% RH non-condensing
Analog Outputs	Two (Five with optional expansion module) to isolated current outputs, max 550 Ω , Accuracy: ± 0.1% of FS (20mA) at 25 °C, ± 0.5% of FS over -20 °C to 60 °C range Operational Mode: measurement or calculated value
Analog Output Functional Mode	Linear, Logarithmic, Bi-linear, PID
Security Levels	2 password-protected levels
Mounting Configurations	Wall, pole, and panel mounting
Enclosure Rating	NEMA 4X/IP66
Conduit Openings	1/2 in NPT Conduit
Relay: Operational Mode	Primary or secondary measurement, calculated value (dual channel only) or timer
Relay Functions	Scheduler (Timer), Alarm, Feeder Control, Event Control, Pulse Width Modulation, Frequency Control, and Warning
Relays	Four electromechanical SPDT (Form C) contacts, 1200 W, 5 A
Communication	MODBUS RS232/RS485, PROFIBUS DPV1, or HART 7.2 optional
Memory Backup	Flash memory
Electrical Certifications	EMC CE compliant for conducted and radiated emissions: - CISPR 11 (Class A limits) - EMC Immunity EN 61326-1 (Industrial limits) Safety cETLus safety mark for: - General Locations per ANSI/UL 61010-1 & CAN/CSA C22.2. No. 61010-1 - Hazardous Location Class I, Division 2, Groups A,B,C & D (Zone 2, Group IIC) per FM 3600 / FM 3611 & CSA C22.2 No. 213 M1987 with approved options and appropriately rated Class I, Division 2 or Zone 2 sensors cULus safety mark - General Locations per UL 61010-1 & CAN/CSA C22.2. No. 61010-1

Subject to change without notice.

Dimensions

Surface Mounting Dimensions

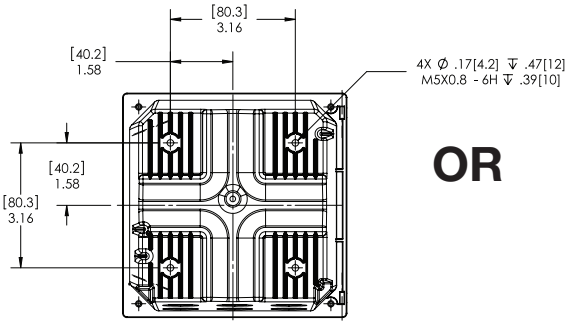

Mounting Dimensions
(Rear View)

OR

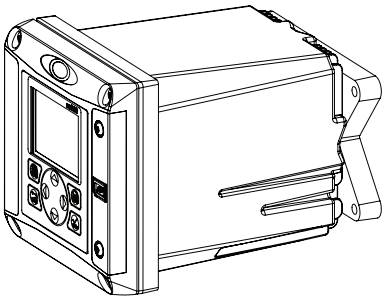

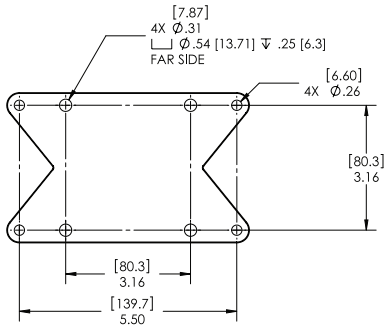

Bracket (supplied) for Surface Mounting
(Not compatible with Weather and Sun Shield p/n 9220600 when surface mounting.)

Panel Mounting Dimensions

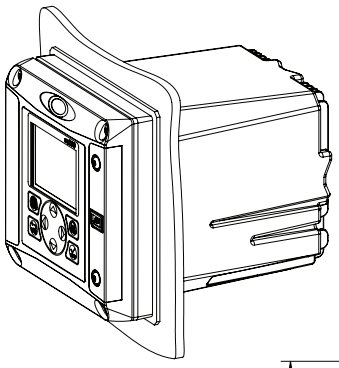

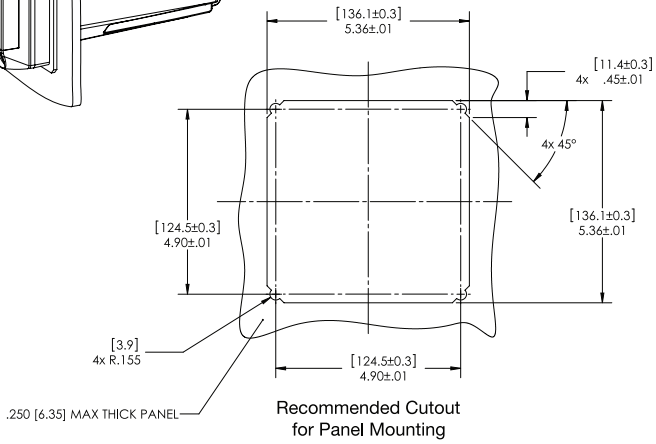

Recommended Cutout
for Panel Mounting

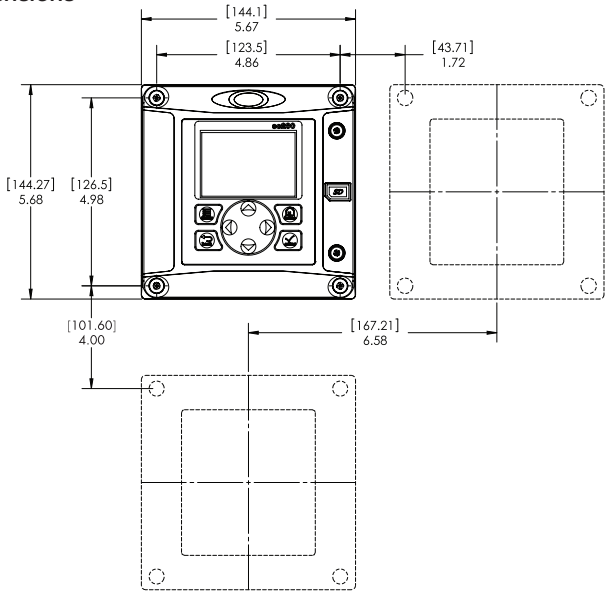

Minimum Spacing Dimensions
for Group Mounting

Top and Bottom Views

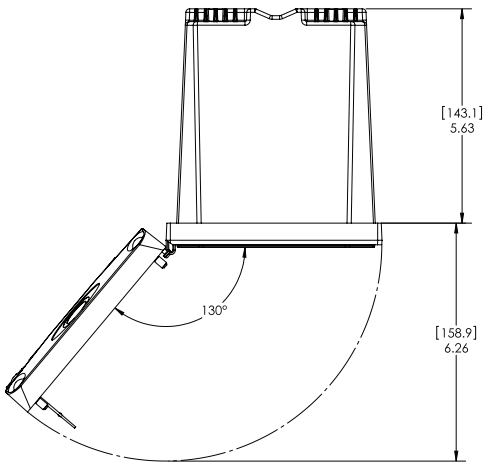

Door Opening Details

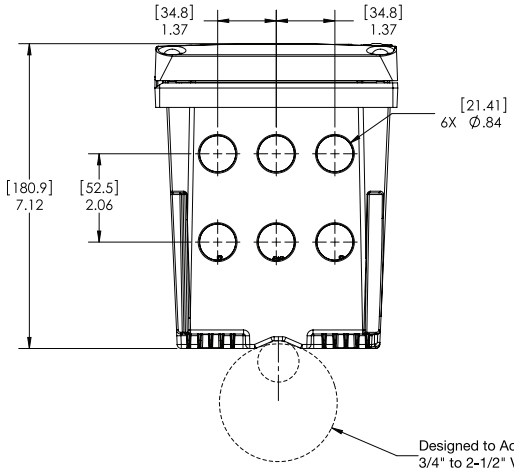

Ordering Information

sc200 for Hach Digital and Analog Sensors

LXV404.99.00552	sc200 controller, 2 channels, digital
LXV404.99.00502	sc200 controller, 1 channel, digital
LXV404.99.00102	sc200 controller, 1 channel, pH/DO
LXV404.99.00202	sc200 controller, 1 channel, Conductivity
LXV404.99.01552	sc200 controller, 2 channels, digital, Modbus RS232/RS485
LXV404.99.00112	sc200 controller, 2 channel, pH/DO

Note: Other Sensor combinations are available. Please contact Hach Technical Support or your Hach representative.

Note: Communication options (MODBUS, Profibus DPV1, and HART) are available. Please contact Hach Technical Support or your Hach representative.



sc200 for Ultrapure Sensors

9500.99.00602	sc200 controller, 1 channel, ultrapure conductivity
9500.99.00702	sc200 controller, 1 channel, ultrapure pH
9500.99.00662	sc200 controller, 2 channel, ultrapure conductivity
9500.99.00772	sc200 controller, 2 channel, ultrapure pH



Sensor and Communication Modules

9012900	Analog pH/ORP and DO module for GLI Sensors
9013000	Analog Conductivity module for GLI Sensors
9012700	Flow module
9012800	4-20 mA Input Module
9525700	Analog pH/ORP Module for Polymetron Sensors
9525800	Analog Conductivity Module for Polymetron Sensors
9013200	Modbus 232/485 Module
9173900	Profibus DP Module
9328100	HART Module
9334600	4-20 mA Output Module (Provides 3 additional mA Outputs)



Accessories

9220600	sc200 Weather and Sun Shield with UV Protection Screen
8809200	sc200 UV Protection Screen
9218200	SD card reader (USB) for connection to PC
9218100	4 GB SD card

HACH COMPANY World Headquarters: Loveland, Colorado USA

United States: 800-227-4224 tel 970-669-2932 fax orders@hach.com
Outside United States: 970-669-3050 tel 970-461-3939 fax int@hach.com
hach.com

LIT2665 Rev 7
K13 Printed in U.S.A.
©Hach Company, 2013. All rights reserved.
In the interest of improving and updating its equipment,
Hach Company reserves the right to alter specifications to equipment at any time.

HACH®
Be Right™

CS-407-108 : Identification sheet

VWTC PROJECT NUMBER:	Iqaluit WWTP	REV:	01
PROJECT NAME:	5000218036	SUBMITTED TO (COMPANY):	
ENGINEER:	G. HÉBERT	SUBMITTED TO (RESPONSIBLE)	
PROJECT MANAGER:	C. BEKAERT	PROJECT NUM REFERENCE.:	
PHONE NUMBER:		LOT NUMBER:	

SUPPLIER	EQPT CODE	EQPT TAG NO	DIA	DESCRIPTION	INFO 1	INFO 2	INFO 3	APPLIC.	NOTE	REV
HACH	IECNGU201988	AIT-04-741	144 mm x 144 mm x 181 mm	HP-250 INSTRUMENT	DIGITAL SC 200 TRANSMITTER / MANUF. : HACH / MODEL : LXV404.99.00552	100-240V AC, No Power Cord // 2x 4-20mA Out // 1x Digital input // 1x analog conductivity sensor input	N/A	HP-250		1

sc200™ UNIVERSAL CONTROLLER

Applications
- Drinking Water
- Wastewater
- Industrial Water
- Power



One Controller for the Broadest Range of Sensors.

Choose from 30 digital and analog sensor families for up to 17 different parameters.

Maximum Versatility

The sc200 controller allows the use of digital and analog sensors, either alone or in combination, to provide compatibility with Hach's broad range of sensors, eliminating the need for dedicated, parameter-specific controllers.

Ease of Use and Confidence in Results

Large, high-resolution, transreflective display provides optimal viewing resolution in any lighting condition. Guided calibration procedures in 19 languages minimize complexity and reduce operator error. Password-protected SD card reader offers a simple solution for data download and transfer. Visual warning system provides critical alerts.

Wide Variety of Communication Options

Utilize two to five analog outputs to transmit primary and secondary values for each sensor, or integrate Hach sensors and analyzers into MODBUS RS232/RS485, Profibus® DP, and HART networks.



Password protected SD card reader offers a simple solution for data download and transfer, and sc200 and digital sensor configuration file duplication and backup.

HACH®
Be Right™

Controller Comparison







Features	Previous Models sc100™ Controller	Previous Models GLI53 Controller	sc200™ Controller	Benefits
Display	64 x 128 pixels 33 x 66 mm (1.3 x 2.6 in.)	64 x 128 pixels 33 x 66 mm (1.3 x 2.6 in.)	160 x 240 pixels 48 x 68 mm (1.89 x 2.67 in.) Transreflective	• Improved user interface—50% bigger • Easier to read in daylight and sunlight
Data Management	irDA Port/PDA Service Cable	N/A	SD Card Service Cable	• Simplifies data transfer • Standardized accessories/max compatibility
Sensor Inputs	2 Max Direct Digital Analog via External Gateway	2 Max Analog Depending on Parameter	2 Max Digital and/or Analog with Sensor Card	• Simplifies analog sensor connections • Works with analog and digital sensors
Analog Inputs	N/A	N/A	1 Analog Input Signal Analog 4-20mA Card	• Enables non-sc analyzer monitoring • Accepts mA signals from other analyzers for local display • Consolidates analog mA signals to a digital output
4-20 mA Outputs	2 Standard	2 Standard	2 Standard Optional 3 Additional	• Total of five (5) 4-20 mA outputs allows multiple mA outputs per sensor input
Digital Communication	MODBUS RS232/RS485 Profibus DP V1.0	HART	MODBUS RS232/RS485 Profibus DP V1.0 HART 7.2	• Unprecedented combination of sensor breadth and digital communication options

Choose from Hach's Broad Range of Digital and Analog Sensors

Parameter	Sensor	Digital or Analog
Ammonia	AMTAX™ sc, NH4D sc, AISE sc, AN-ISE sc	●
Chlorine	CLF10 sc, CLT10 sc, 9184 sc	●
Chlorine Dioxide	9185 sc	●
Conductivity	GLI 3400 Contacting, GLI 3700 Inductive	△
Dissolved Oxygen	LDO® Model 2, 5740 sc	●
Dissolved Oxygen	5500	△
Flow	U53, F53 Sensors	△
Nitrate	NITRATAX™ sc, NO3D sc, NISE sc, AN-ISE sc	●
Oil in Water	FP360 sc	●
Organics	UVAS sc	●
Ozone	9187 sc	●
pH/ORP	pHD	●
pH/ORP	pHD, pH Combination, LCP	△
Phosphate	PHOSPHAX™ sc	●
Sludge Level	SONATAX™ sc	●
Suspended Solids	SOLITAX™ sc, TSS sc	●
Turbidity	1720E, FT660 sc, SS7 sc, ULTRATURB sc, SOLITAX sc, TSS sc	●
Ultra Pure Conductivity	8310, 8311, 8312, 8315, 8316, 8317 Contacting	△
Ultra Pure pH/ORP	8362	△

● = Digital △ = Analog

Connect up to two of any of the sensors listed above, in any combination, to meet your application needs. The diagrams below demonstrate the potential configurations. Operation of analog sensors requires the controller to be equipped with the appropriate sensor module. Contact Hach Technical Support for help with selecting the appropriate module.

2 Channel Configurations

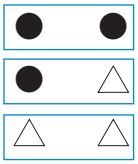

1 Channel Configurations

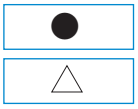

Specifications*

Dimensions (H x W x D)	5.7 in x 5.7 in x 7.1 in (144 mm x 144 mm x 181 mm)
Display	Graphic dot matrix LCD with LED backlighting, transreflective
Display Size	1.9 x 2.7 in. (48 mm x 68 mm)
Display Resolution	240 x 160 pixels
Weight	3.75 lbs. (1.70 kg)
Power Requirements (Voltage)	100 - 240 V AC, 24 V DC
Power Requirements (Hz)	50/60 Hz
Operating Temperature Range	-20 to 60 °C , 0 to 95% RH non-condensing
Analog Outputs	Two (Five with optional expansion module) to isolated current outputs, max 550 Ω , Accuracy: ± 0.1% of FS (20mA) at 25 °C, ± 0.5% of FS over -20 °C to 60 °C range Operational Mode: measurement or calculated value
Analog Output Functional Mode	Linear, Logarithmic, Bi-linear, PID
Security Levels	2 password-protected levels
Mounting Configurations	Wall, pole, and panel mounting
Enclosure Rating	NEMA 4X/IP66
Conduit Openings	1/2 in NPT Conduit
Relay: Operational Mode	Primary or secondary measurement, calculated value (dual channel only) or timer
Relay Functions	Scheduler (Timer), Alarm, Feeder Control, Event Control, Pulse Width Modulation, Frequency Control, and Warning
Relays	Four electromechanical SPDT (Form C) contacts, 1200 W, 5 A
Communication	MODBUS RS232/RS485, PROFIBUS DPV1, or HART 7.2 optional
Memory Backup	Flash memory
Electrical Certifications	EMC CE compliant for conducted and radiated emissions: - CISPR 11 (Class A limits) - EMC Immunity EN 61326-1 (Industrial limits) Safety cETLus safety mark for: - General Locations per ANSI/UL 61010-1 & CAN/CSA C22.2. No. 61010-1 - Hazardous Location Class I, Division 2, Groups A,B,C & D (Zone 2, Group IIC) per FM 3600 / FM 3611 & CSA C22.2 No. 213 M1987 with approved options and appropriately rated Class I, Division 2 or Zone 2 sensors cULus safety mark - General Locations per UL 61010-1 & CAN/CSA C22.2. No. 61010-1

Subject to change without notice.

Dimensions

Surface Mounting Dimensions

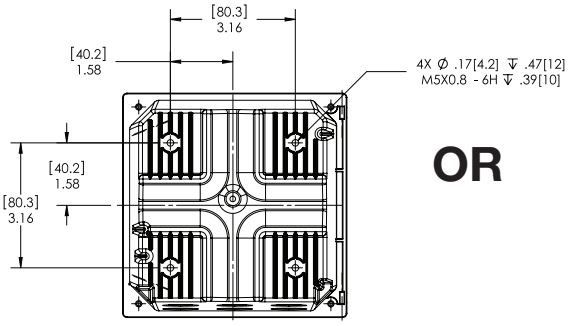

Mounting Dimensions
(Rear View)

OR

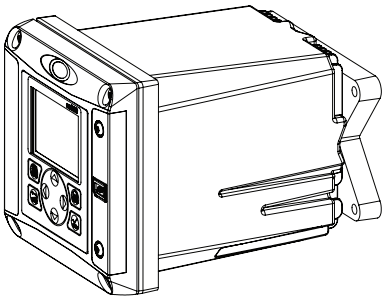

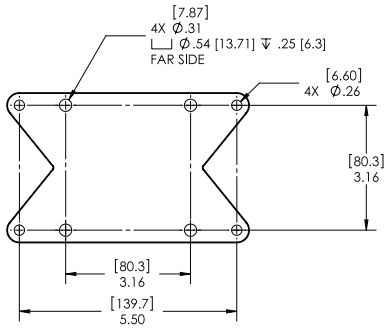

Bracket (supplied) for Surface Mounting
(Not compatible with Weather and Sun Shield p/n 9220600 when surface mounting.)

Panel Mounting Dimensions

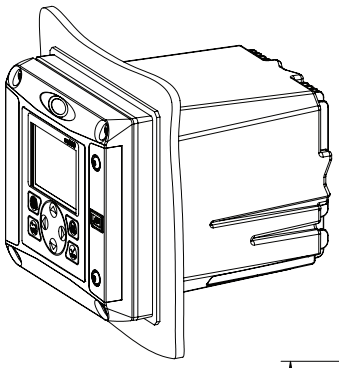

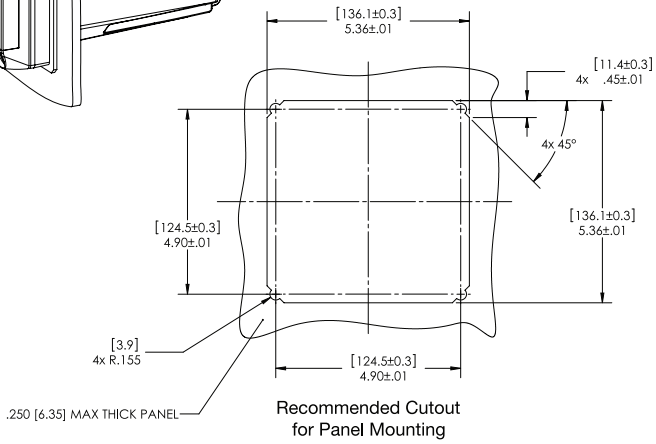

Recommended Cutout
for Panel Mounting

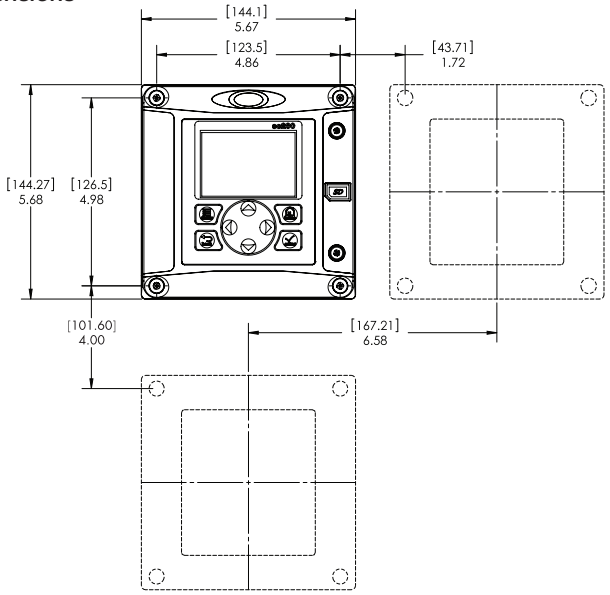

Minimum Spacing Dimensions
for Group Mounting

Top and Bottom Views

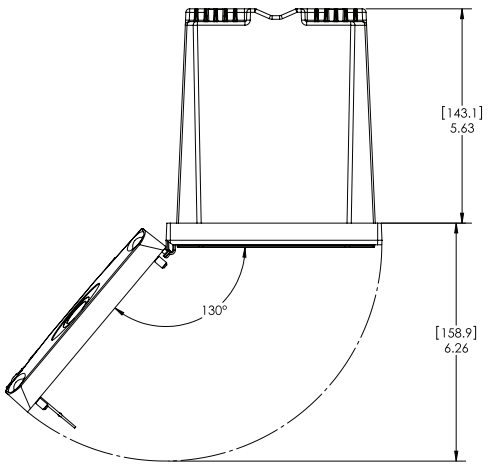

Door Opening Details

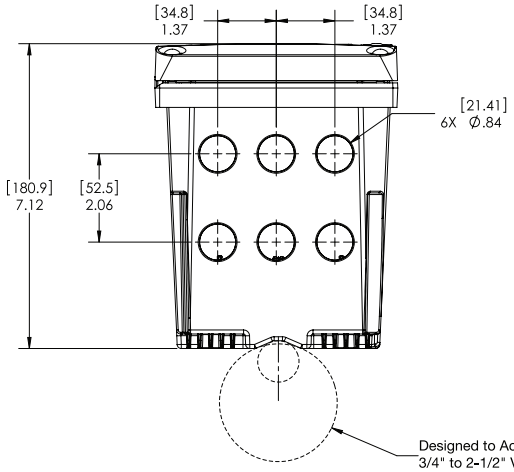

Ordering Information

sc200 for Hach Digital and Analog Sensors

LXV404.99.00552	sc200 controller, 2 channels, digital
LXV404.99.00502	sc200 controller, 1 channel, digital
LXV404.99.00102	sc200 controller, 1 channel, pH/DO
LXV404.99.00202	sc200 controller, 1 channel, Conductivity
LXV404.99.01552	sc200 controller, 2 channels, digital, Modbus RS232/RS485
LXV404.99.00112	sc200 controller, 2 channel, pH/DO

Note: Other Sensor combinations are available. Please contact Hach Technical Support or your Hach representative.

Note: Communication options (MODBUS, Profibus DPV1, and HART) are available. Please contact Hach Technical Support or your Hach representative.



sc200 for Ultrapure Sensors

9500.99.00602	sc200 controller, 1 channel, ultrapure conductivity
9500.99.00702	sc200 controller, 1 channel, ultrapure pH
9500.99.00662	sc200 controller, 2 channel, ultrapure conductivity
9500.99.00772	sc200 controller, 2 channel, ultrapure pH



Sensor and Communication Modules

9012900	Analog pH/ORP and DO module for GLI Sensors
9013000	Analog Conductivity module for GLI Sensors
9012700	Flow module
9012800	4-20 mA Input Module
9525700	Analog pH/ORP Module for Polymetron Sensors
9525800	Analog Conductivity Module for Polymetron Sensors
9013200	Modbus 232/485 Module
9173900	Profibus DP Module
9328100	HART Module
9334600	4-20 mA Output Module (Provides 3 additional mA Outputs)



Accessories

9220600	sc200 Weather and Sun Shield with UV Protection Screen
8809200	sc200 UV Protection Screen
9218200	SD card reader (USB) for connection to PC
9218100	4 GB SD card

HACH COMPANY World Headquarters: Loveland, Colorado USA

United States: 800-227-4224 tel 970-669-2932 fax orders@hach.com
Outside United States: 970-669-3050 tel 970-461-3939 fax int@hach.com
hach.com

LIT2665 Rev 7
K13 Printed in U.S.A.
©Hach Company, 2013. All rights reserved.
In the interest of improving and updating its equipment,
Hach Company reserves the right to alter specifications to equipment at any time.

HACH®
Be Right™

CS-413-300 : Identification sheet

VWTC PROJECT NUMBER:	Iqaluit WWTP	REV:	01
PROJECT NAME:	5000218036	SUBMITTED TO (COMPANY):	
ENGINEER:	G. HÉBERT	SUBMITTED TO (RESPONSIBLE)	
PROJECT MANAGER:	C. BEKAERT	PROJECT NUM REFERENCE.:	
PHONE NUMBER:		LOT NUMBER:	

SUPPLIER	EQPT CODE	EQPT TAG NO	DIA	DESCRIPTION	INFO 1	INFO 2	INFO 3	APPLIC.	NOTE	REV
ASHCROFT	IMPSGG300380	PI-04-711	DIA. CADRAN: 2.5"	HP-250 INSTRUMENT	PRESSURE GAUGE/MANUFACTURER: ASHCROFT// MODEL: 25-1009SWL-02L-160PSIG// 1/4''	N/A	N/A	HP-250		1

ASHCROFT®

Duralife® Pressure Gauge Type 1009, ASME B 40.1 Grade 1A (±1% of span)

DESIGNED FOR SAFETY AND LONGER LIFE

- ***5-year limited warranty***
- ***Patented PowerFlex™ movement isolates movement from shock and vibration for longer life***
- ***All stainless, all-welded construction for long life***
- ***ASME Grade 1A, 1% accuracy full scale***
- ***True Zero™ pointer indication – no stop pin to mask false zero reading – ensures safety and process control***

The following Table is *not* for conversion purposes.

STANDARD RANGES [3][4][5]

Pressure psi	kg/cm² - bar	kPa
0/15	0/1	0/100
0/30	0/1.6	0/160
0/60	0/2.5	0/250
0/100	0/4	0/400
0/160	0/6	0/600
0/200	0/10	0/1000
0/300	0/16	0/1600
0/400	0/25	0/2500
0/600	0/40	0/4000
0/800	0/60	0/6000
0/1000	0/100	0/10,000
0/1500	0/160	0/16,000
0/2000	0/250	0/25,000
0/3000	0/400	0/40,000
0/4000	0/600	0/60,000
0/5000	0/1000	0/100,000
0/6000		
0/7500		
0/10,000		
0/15,000		
Vacuum		
30 in./0 in.Hg	–1/0	–100/0
Compound		
30 in.Hg/15 psi	–1/0/1.5	–100/0/150
30 in.Hg /30 psi	–1/0/3	–100/0/300
30 in.Hg /60 psi	–1/0/5	–100/0/500
30 in.Hg /100 psi	–1/0/9	–100/0/900
30 in.Hg /150 psi	–1/0/15	–100/0/1500
30 in.Hg /300 psi	–1/0/24	–100/0/2400

- ***New PLUS!™ Performance Option:***
  - ***Liquid-filled performance in a dry gauge***
  - ***Fights vibration and pulsations without liquid-fill headaches***
  - ***See pages 6-7 for details***
  - ***Order as option XLL***

OTHER FEATURES:

Available in 2½″ and 3½″ dial sizes, Duralife® pressure gauges are liquid fillable and field convertible for panel mounting. Both zero and span adjustments are standard.

The gauge is available dry, liquid-filled weatherproof or hermetically sealed and *now* with *PLUS!™* performance option. A five year limited warranty is standard with the Duralife® 1009.



BOURDON SYSTEM SELECTION[1]

Ordering Code	Bourdon Tube & Tip Material[1]	Socket Material	Tube Type	Range Selection Limits (psi)	NPT Conn.[6]
AW	316 stainless steel	Bronze	C-Tube	Vac/600	¼
AW	316 stainless steel	Bronze	Helical	1000	¼
SW	316 stainless steel	316 stainless steel	C-Tube	Vac/600	¼ & ½[2]
SW	316 stainless steel	316 stainless steel	Helical	800/15,000	¼ & ½[2]

(1) For selection of the correct Bourdon system material, see the media application table on page 243.
(2) ½ NPT available 3½″ lower SW system only.
(3) Type 1009 gauges may be ordered with metric single-scale dial: kPa,bar or kg/cm².
(4) Dual-scale dials will be supplied with standard metric inner scale and equivalent psi outer scale or with standard psi inner scale and equivalent metric outer scale–please specify.
(5) Special logos and scales available upon request.
(6) ¼″ JIS, BSP or DIN threads available on SW systems.

TO ORDER THIS 1009 DURALIFE PRESSURE GAUGE:

Select:	35	1009	SW	(L)	02L	XXX	1000#

1. Dial size–2½″, 3½″
2. Case type–1009
3. Tube and socket material
4. Liquid filled (glycerin), leave blank if dry
5. Connection size–⅛ (01), ¼ (02), ½ (04)
6. Connection location–Lower (L), Back (B)
7. Optional Features–see page 176
8. Standard pressure range–1000 psi

Accessories: see pages 233-238

Consult factory for guidance in product selection
Phone (203) 385-0217, Fax (203) 385-0602 or
visit our web site at www.ashcroft.com

DRESSER Instruments

ASHCROFT®
Trust the shield.™

Type 310, 315 All-Welded "Mini" Diaphragm Seal



PRODUCT FEATURES

- Compact size to fit space-restricted areas
- Designed to protect transducers, mini-switches and 3½″ or smaller pressure gauges from corrosion, plugging or freeze-up
- All-welded metal construction prevents leakage of process media
- Rated for 2500 psi at 100°F
- Fill/bleed connection is standard
- Available with male process connection (Type 310)

The compact size of the Ashcroft® 310 mini-seal allows it to fit into space-restricted areas and is designed to protect transducers, mini-switches, and 3½" or smaller dial size pressure gauges from corrosion, plugging or freeze- up. All welded metal construction prevents leakage of process media. It is rated for 2500 psi at 100°F and has a 316L stainless steel top housing standard. Lower housing materials include 316L stainless steel or Hastelloy C. Diaphragm materials include 316L stainless, Hastelloy C or Tantalum. ¼ NPT or ½ NPT process connection sizes are available.

PRODUCT SPECIFICATIONS

Model Number:	Type 310, 315
Process Connection Size:	¼″, ½″ (⅛″, ¾″, 1″- 310 only) (see table A)
Instrument Connection Size:	⅛, ¼ NPT
Diaphragm Material:	316L SS, Hastelloy C276, Tantalum, Monel
Bottom Housing Materials:	316L SS, Hastelloy C276, Monel, Hastelloy B
Filling Fluid:	Glycerin, Silicone, Halocarbon, Syltherm

All specifications are subject to change without notice.
All sales subject to standard terms and conditions.
© Ashcroft Inc. 2015 09/15

Ashcroft Inc., 250 East Main Street, Stratford, CT 06614 USA
Tel: 203-378-8281 • Fax: 203-385-0408
email: info@ashcroft.com • www.ashcroft.com

Type 310, 315 All-Welded "Mini" Diaphragm Seal

Table A – Process Connection

Process Connection	Size	Code
Threaded – male NPT*	⅛	01
Threaded – male NPT*	¼	02
Threaded – male NPT*	½	04
Threaded – male NPT*	¾	06
Threaded – male NPT*	1	08
Threaded – female NPT†	¼	25
Threaded – female NPT†	½	50

*Available in Type 310 only.
†Available in Types 310 & 315.

Pressure Ratings – All 2500 psi except flanged seals are per ASME B 16.5, temperature limit determined by diaphragm, bottom housing and/or filling fluid.

Table B – Type

Description	Code
All-welded mini-seal	310
All-welded midi-seal w/flushing connection	315

Table C – Diaphragm Materials

Materials	Code
316L stainless steel	S
Hastelloy C-276	H
Tantalum	U
Monel	P

Table D – Housing Materials

Bottom(1)	Code	Top(2)
316L SS	S	316L SS
Hastelloy C-276	H	316L SS
Monel	M	Monel

(1) Other bottom housing materials on application.
(2) Top housing material is 316L SS (standard). Monel mini-seal standard with monel top housing.

Table E – Instrument Connection

Instrument Connection	Size	Code
Threaded – female NPT	¼	02T
Threaded – female NPT	⅛	01T

NOTES:
(1) For use with most 3½″ and smaller gauges. Movementless gauge 4½″ (exception).
(2) Other bottom housing materials on application.
(3) Top housing material is 316L SS (standard). Monel mini-seal standard with monel top housing.
(4) Not available with monel bottom housing.

Table F – Filling Fluid

Fill	Service	Connection to Instrument	Temperature Range °F	Code
Glycerin	Pressure	Direct Only	0/400	CG
Silicone	Pressure/Vacuum	Direct or Flexible Line	–40/600	CK
Halocarbon	Pressure/Vacuum in presence of strong oxidizing agent	Direct or Flexible Line	–70/300	CF
Syltherm	Pressure	Direct or Flexible Line	–40/750	HA

Monel is a registered trademark of Huntington Alloys, Inc.
Hastelloy is a registered trademark of Cabot Corp.
Halocarbon is a registered trademark of Halocarbon Products
GYLON 3510 is a registered trademark of Garlock Inc.

HOW TO ORDER:

1. **From Table A...** select PROCESS CONNECTION (e.g., 1/4″ process code 25)
2. **From Table B...** select TYPE (310)
3. **From Table B...** select DIAPHRAGM MATERIAL. (e.g., 316L stainless steel–code S)
4. **From Table C...** select BOTTOM HOUSING MATERIAL. (e.g., 316 stainless steel–code S)
5. **From Table D...** select INSTRUMENT CONNECTION size. (e.g., 1/4 NPT–code 02T)
6. **From Table E...** select FILLING FLUID, if diaphragm seal will be attached to instrument. (e.g., Glycerin–code CG)

Coded order: **25-310SS-02T-CG**

Dimension

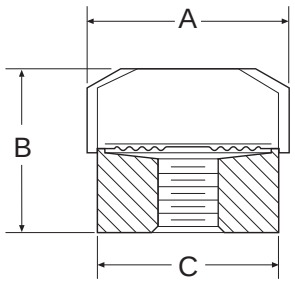

Types 310 mini-seal – Threaded ¼, ½, ¾, NPT

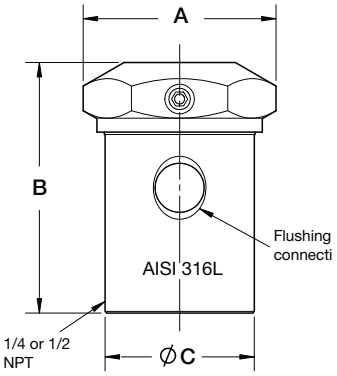

Types 315 mini-seal – Threaded ¼, ½, ¾, NPT

	A		B		C	
	in	mm	in	mm	in	mm
Type 310	1.75	(38)	.81	(30)	1.34	(34)
Type 315	1.73	(44)	2.25	(57.2)	1.34	(34)

All specifications are subject to change without notice.
All sales subject to standard terms and conditions.
© Ashcroft Inc. 2015 09/15

Ashcroft Inc., 250 East Main Street, Stratford, CT 06614 USA
Tel: 203-378-8281 • Fax: 203-385-0408
email: info@ashcroft.com • www.ashcroft.com

CS-434-100 : Identification sheet

VWTC PROJECT NUMBER:	Iqaluit WWTP	REV:	01
PROJECT NAME:	5000218036	SUBMITTED TO (COMPANY):	
ENGINEER:	G. HÉBERT	SUBMITTED TO (RESPONSIBLE)	
PROJECT MANAGER:	C. BEKAERT	PROJECT NUM REFERENCE.:	
PHONE NUMBER:		LOT NUMBER:	

SUPPLIER	EQPT CODE	EQPT TAG NO	DIA	DESCRIPTION	INFO 1	INFO 2	INFO 3	APPLIC.	NOTE	REV
ALLEN BRADLEY	IEPOPS201955	PSL-04-711	N/A	HP-250 INSTRUMENT	PRESSURE SWITCH/MANUFACTURER: ALLEN BRADLEY// MODEL: 836T-T253J	1/4" FNPT female pipe connection	Adjustable Range : 12-150 psi	HP-250		1



Bulletin 836T Pressure Controls

- Operating ranges from 30 in. Hg vacuum…5000 psi
- Independently adjustable range and differential
- Copper alloy and stainless steel bellows
- 2- and 4-Circuit contact block
- Pressure difference controls available
- 1/4 in. and 3/8 in. N.P.T. and O-ring straight thread connections
- Type 4 & 13 and Type 7 & 9 and 4 & 13 combination enclosures

Table of Contents

Product Overview ..... this page
Technical Data 13-26
Product Selection 13-34
Modifications 13-41
Accessories 13-42
Conversion Kits 13-43
Factory Options 13-44
Wiring Diagrams 13-45
Approximate Dimensions 13-48

Standards Compliance and Certification

(For file and guide numbers, see page 13-44)

Product Overview

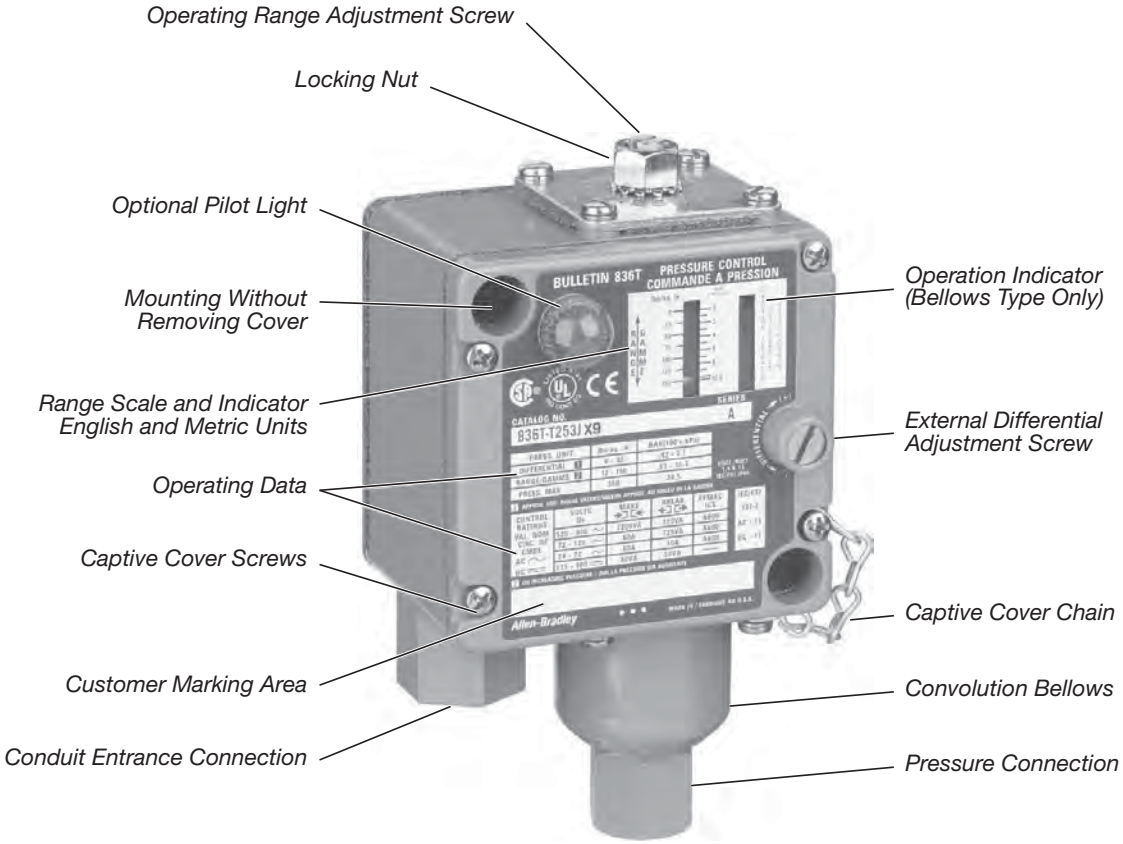

Bulletin 836T Style T Bellows Type Enclosure Type 1, 4 & 13, IEC IP66

Description

Bulletin 836T Pressure Controls are control circuit devices designed to meet the traditional requirements of the transportation, machine tool, and other heavy-duty industries. Allen-Bradley Bulletin 836T Pressure Controls can be used in pneumatic and hydraulic applications. The copper alloy bellows actuators can be used with air, water, oil, vapor, and other non-corrosive gases and liquids. Type 316 stainless steel bellows are available for more corrosive gases, vapors, and fluids.

A rugged stainless steel cylinder and stainless steel piston assembly is used for the higher-pressure coolant and hydraulic oil applications. May also be used with water and water-based fluids. The controls feature snap-action precision switches equipped with silver contacts. A relatively friction-free mechanism provides consistent operation regardless of mounting position. Devices are designed to allow easy adjustment of pressure settings.

Allen-Bradley Bulletin 836T Pressure Controls are used in many types of applications with adjustable ranges from 30 in. Hg vacuum…5000 psi. They can be used to control pneumatic systems and maintain a pressure tank within a preset and constant pressure range. They can be used to detect over-pressures of gases and liquids to prevent damage to valuable equipment. Pressure controls can also detect low pressure to protect equipment from loss of coolants and lubrication.

Bulletin 836T Pressure Controls are offered in a variety of styles to fit a wide range of applications. The devices are available with either a Type 1, 4 & 13, or 7 & 9 and 4 & 13 combined enclosure. They are available with two-circuit or four-circuit contact blocks. Accessories and modifications are available to tailor the devices to meet most application requirements.

Applications

- Machine tools
- Machine hydraulic pressures
- Material clamping fixtures
- Lubricant and coolant pressures
- Compactor ram pressures
- Air compressors

Style T — Pressure Control



Style T

- Independently adjustable operating range and differential
- Single bellows or piston operation

Copper Alloy Bellows

- 1/4 in. N.P.T. female pipe connection
- Adjustable operating range — 30 in. Hg vacuum…650 psi
- Maximum line pressure — up to 1300 psi
- Occasional surge pressure — up to 1600 psi

Type 316 Stainless Steel Bellows

- 1/4 in. N.P.T. female pipe connection
- Adjustable operating range — 30 in. Hg vacuum…375 psi
- Maximum line pressure — up to 600 psi
- Occasional surge pressure — up to 600 psi

Piston

- 3/8 in. N.P.T. female pipe connection
- SAE 7/16-20 UNF-2B thread O-ring boss seal
- SAE 9/16-18 UNF-2B thread O-ring boss seal
- Adjustable operating range — 40…5000 psi
- Occasional surge pressure — up to 15,000 psi

Style D — Pressure Difference Control



Style D

- Independently adjustable system difference range and differential
- Two-bellows operation, one bellows connected to each system

Copper Alloy Bellows

- 1/4 in. N.P.T. female pipe connection
- Adjustable system difference range — 1…70 psi
- Maximum line pressure — up to 600 psi
- Occasional surge pressure — up to 650 psi

Type 316 Stainless Steel Bellows

- 1/4 in. N.P.T. female pipe connection
- Adjustable system difference range — 1…70 psi
- Maximum line pressure — up to 500 psi
- Occasional surge pressure — up to 500 psi

Technical Terms

Adjustable operating range — Total span within which the contacts can be adjusted to trip and reset.

Trip setting — Higher pressure setting at which value the contacts transfer from their normal state to a change state.

Reset setting — Lower pressure setting at which value the contacts return to their normal state.

Adjustable differential — Difference between the trip and reset values

Minimum differential — When the differential is set to the lowest possible difference between trip and reset.

Maximum differential — When the differential is set to the highest possible difference between trip and reset.

Max. occasional surge pressure — Maximum surge pressure that can be applied to the actuator. Surges or ransients can occur during start-up and shut-down of a machine or system. Expressed in milliseconds, complex electronic instrumentation is required to measure the varying amplitude, frequency, and duration of this wave form. Extreme surges that occur approximately 8 times in a 24-hour period are negligible.

Maximum line pressure — Maximum sustained pressure that can be applied to the actuator without permanent damage. The control should not be cycled at this pressure. **Note:** Does not apply to piston type controls.

psi — Pounds per square inch gauge (positive pressure). Devices listed are in gauge pressure units which use atmospheric pressure as a reference. Atmospheric pressure at sea level is approximately 14.7 psi or 30 in. Hg.

Vacuum — Inches of mercury (in. Hg) vacuum (negative pressure).

Operating range adjustment screw — This screw is used to adjust the trip setting by varying the force of the main spring.

Differential adjustment screw — This screw is used to adjust reset setting by varying the force of the differential blade spring.

Pressure media — There are many types of pressure media that can be controlled. Examples include air, water, hydraulic fluids, and other types of gases and liquids. The type of media and the maximum system pressure will determine the type of actuator used for the pressure control application. See page 13-33.

Pressure connection — Common standard types of pressure connections used in control systems are 1/4 in. and 3/8 in. N.P.T. female pipe threads. SAE 7/16 and SAE 9/16 O-ring boss seals are also available (piston versions only).

Contact configuration — Bulletin 836T controls are available with either a 2-circuit or 4-circuit contact block. See page 13-31.

Style D

Style D — pressure difference controls adjustable system difference range — The adjustable operating range for a pressure difference control.

System difference pressure bushing — This bushing is used to adjust the trip setting by varying the force on the main spring.

Trip setting — Desired difference in pressure between the two bellows at which value the contacts transfer from their normal state to a changed state. This occurs in one of the following conditions:

- The pressure in the bottom bellows is higher than the pressure in the top bellows by a value equal to the trip setting.
- The pressure in the bottom bellows remains constant and the pressure in the top bellows decreases by a value equal to the trip setting.

Reset setting — Predetermined normal difference in pressure between the two bellows, at which value the contacts return to their normal state. This occurs in one of the following conditions:

- The pressure in the bottom bellows is lower than the top bellows.
- The pressure in the bottom bellows remains constant and the pressure in the top bellows increases.

Figure 1
Graphics to illustrate technical terms

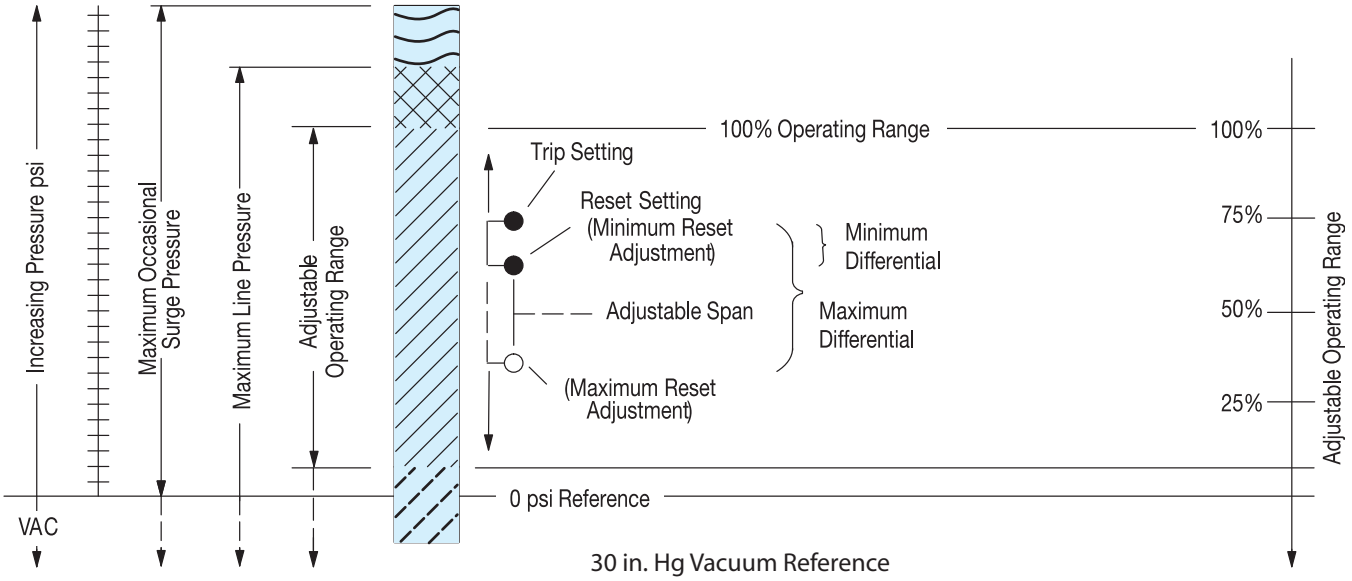

Visit our website: www.ab.com/catalogs
Preferred availability cat. nos. are printed in **bold**

Allen-Bradley

Theory of Operation

Bulletin 836T Pressure Controls are designed to open or close electrical circuits in response to changes in pneumatic (air or gas) or hydraulic (oil or non-corrosive liquids) pressure. Piston controls are not intended for use with air or water. Figure 2 shows the basic operating mechanism.

Pressure is applied to the actuator which can be either a bellows or piston type. As pressure rises, the actuator exerts force on the main spring. When the threshold force of the main spring is overcome, levers transfer the motion to the contact block, displacing the contacts — this is referred to as the trip setting. The unique lever design amplifies the actuator motion, providing shorter stroke, which results in maximizing bellows life.

The lever assembly also includes a virtually friction-free over-center toggle arrangement, providing positive snap action to the contact block for long contact life. As pressure falls, force on the differential spring increases and contacts return to their normal state — this is referred to as reset setting. Varying the force of the main spring (by turning the operating range adjustment screw) determines when the contacts will trip. Varying the force of the differential spring (by turning the differential adjustment screw) determines when the contacts will reset. Setting trip and reset values determines the operating parameters of the application.

Figure 2
Basic mechanical structure

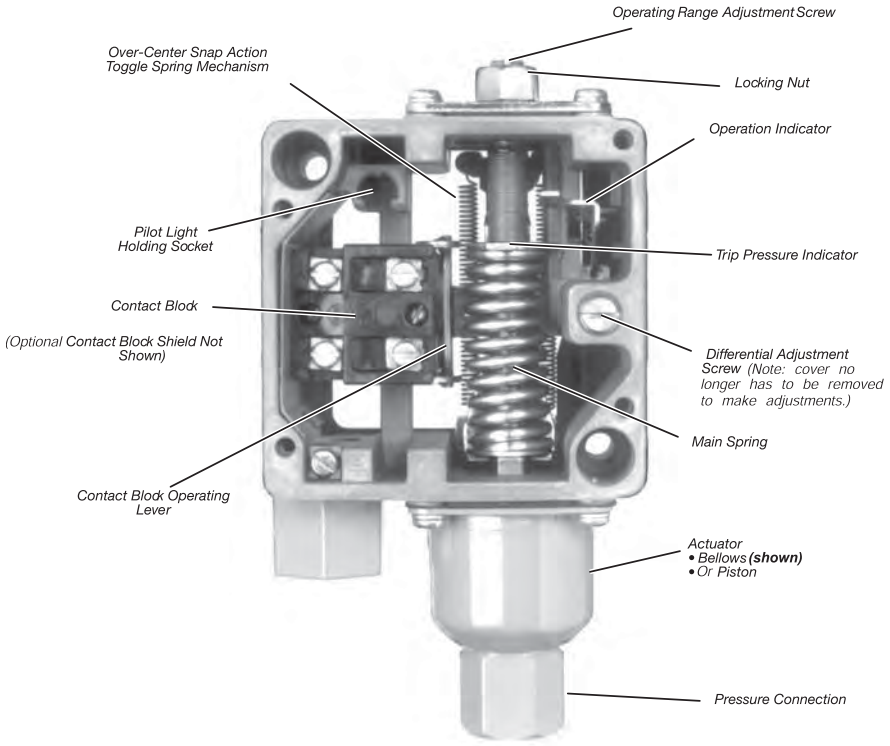

Applications for Control

Pressure controls can be used to either control or monitor a machine or process. Figure 3 shows a typical control application. Here, pressure is controlled within predetermined high and low values. Figure 4 shows a typical monitoring application. Here, pressure is monitored between a high and low value, signaling when a preset limit has been exceeded.

Figure 3
Typical control application

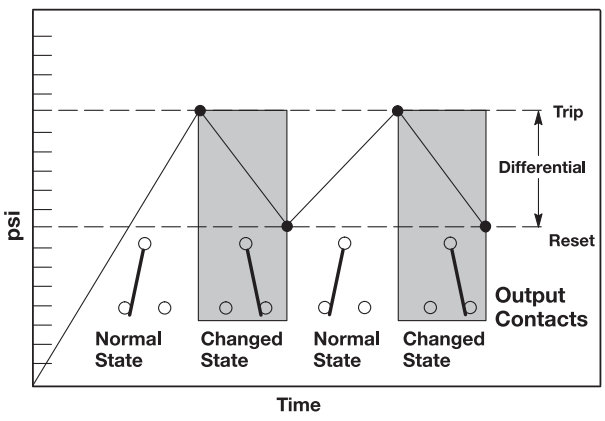

Figure 4
Typical monitoring application

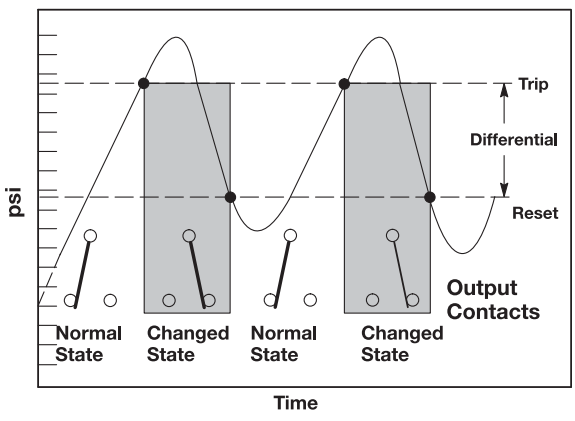

Control Setting — Style T Pressure Controls

Allen-Bradley controls are designed for ease of setting to help minimize installation time. Standard pressure controls shipped from the factory are set at the maximum operating range and minimum differential. By using a pressure gauge and following these simple directions, the control can be set to the specific requirements for each application. See Figure 5.

Step 1 — Adjust trip setting
The trip setting is controlled by the operating range adjustment screw and is adjusted externally. After loosening the lock nut, the trip setting is set by turning the operating range adjustment screw counterclockwise to lower the trip setting or clockwise to raise the trip setting. The approximate trip setting is shown on the indicating scale. When the proper setting is reached, simply tighten the lock nut.
Note: Turning the operating range adjustment screw will cause both the trip and reset settings to change in virtually equal increments.

Step 2 — Adjust reset setting
The reset setting is controlled by an external differential adjustment screw. The reset setting is set by turning the differential adjustment screw clockwise to increase the differential or counterclockwise to decrease the differential.
Note: Adjusting the differential has little or no affect on the trip setting.

Figure 5
Trip and reset adjustment for pressure controls

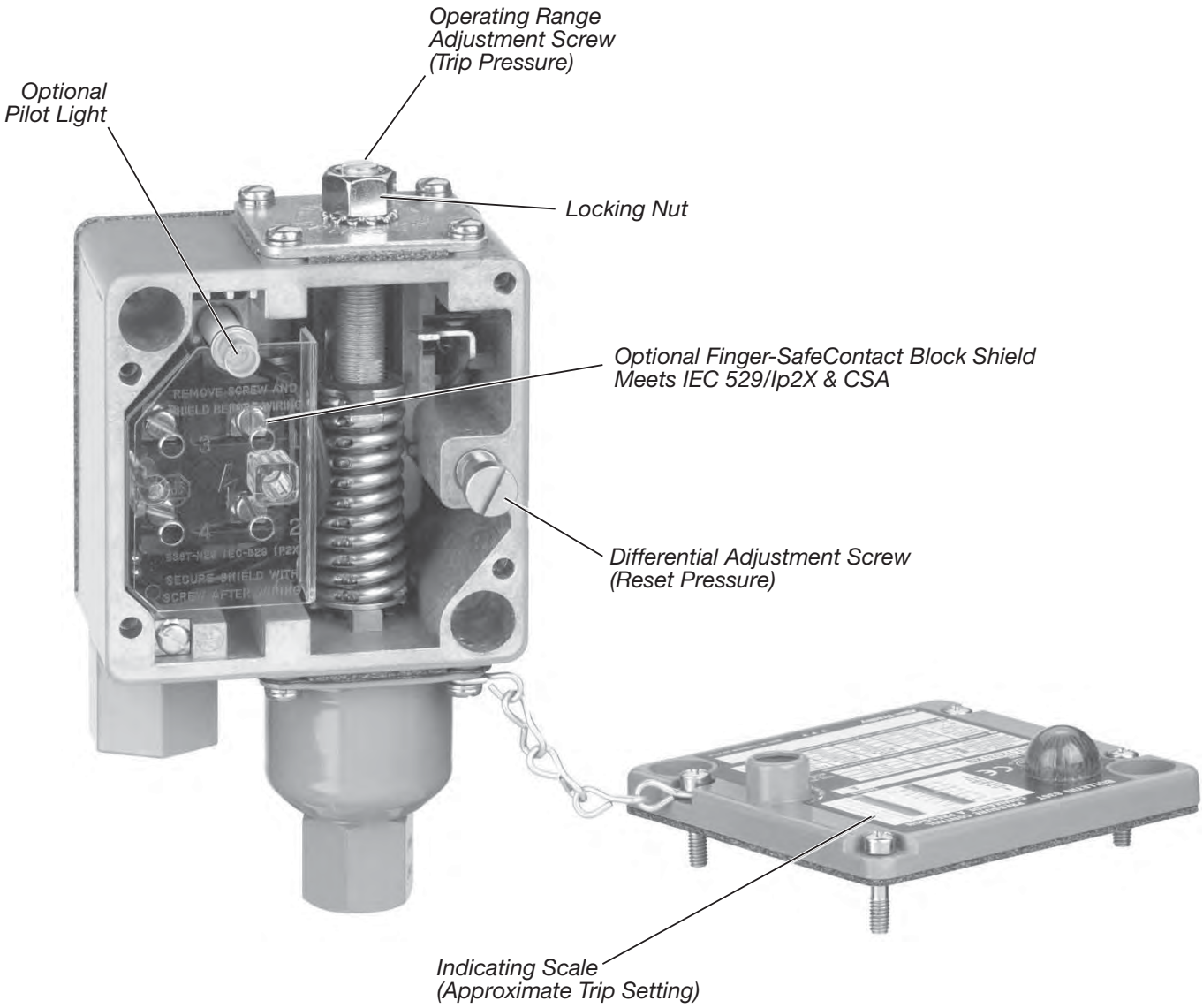

Control Setting — Style D Pressure Difference Controls

Standard pressure difference controls shipped from the factory are set at the maximum adjustable difference range and minimum differential. Remove the front cover and use a pressure gauge to make the following adjustments. See Figure 6.

Step 1 — Adjust trip setting (difference pressure)

The trip setting is controlled by the system difference pressure bushing and is adjusted internally. With no pressure (open to atmosphere) applied to top bellows, apply a constant pressure to bottom bellows equal to the desired difference in pressure at which the contacts are to trip. Insert a 1/8 in. diameter rod into a hole in the bushing and turn bushing to the left. Continue to turn bushing until the mechanism trips; circuit 1-2 will open. At this value, the trip setting is set at the pressure which is being applied to the bottom bellows.
Note: Turning the system difference pressure bushing will cause both the trip and reset settings to change in virtually equal increments.

Step 2 — Adjust reset setting (differential pressure)

The reset setting is controlled by differential adjustment screw (this adjustment can be made with the cover on). The reset setting is adjusted by turning the differential adjustment screw clockwise to increase the differential or counterclockwise to decrease the differential.
Note: Adjusting the differential has little or no affect upon the trip setting (difference pressure).

Figure 6
Trip and reset adjustment for pressure difference controls — 4-circuit contact block

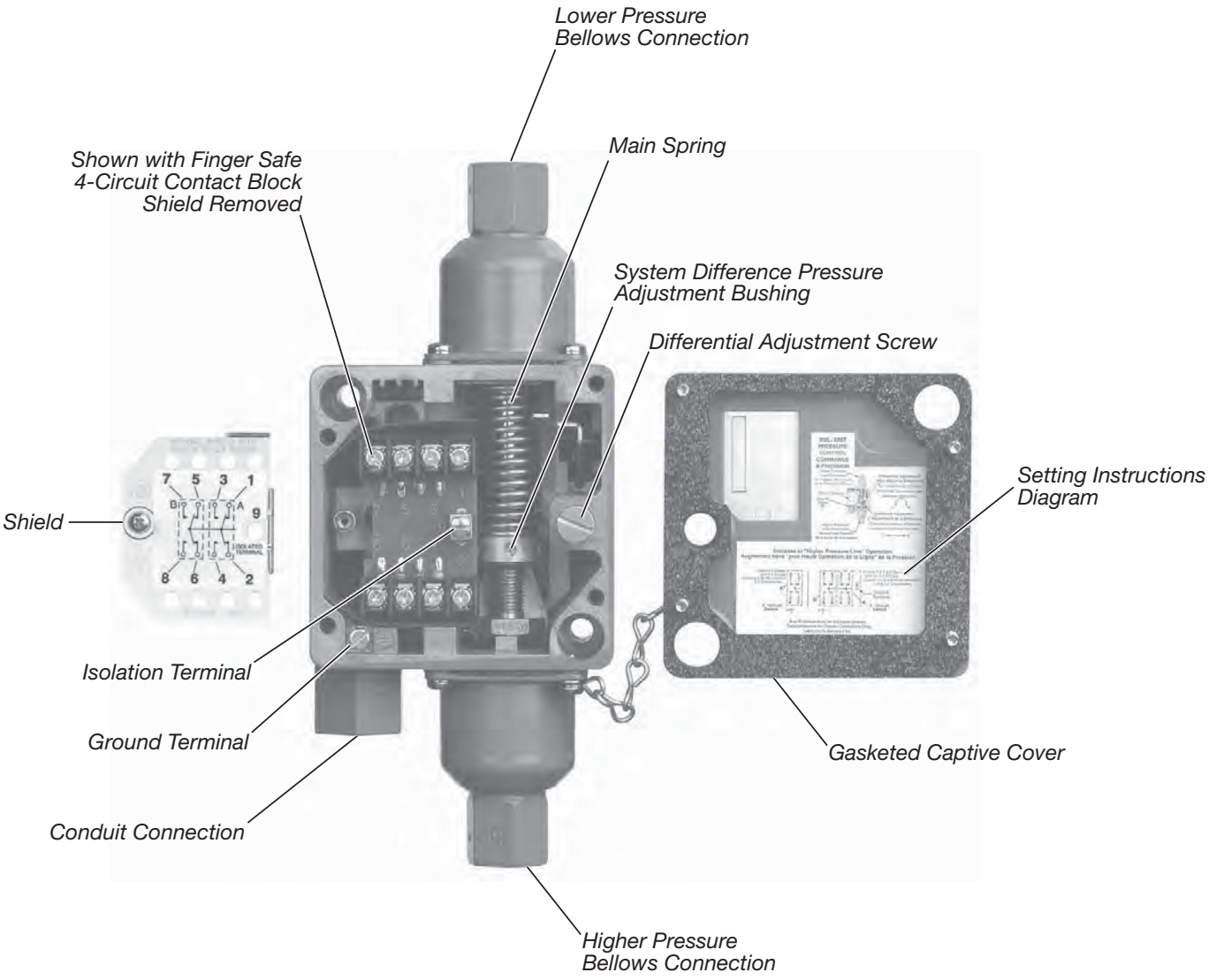

Repeat Accuracy and Mechanical Life

The design and construction of Bulletin 836T Pressure Controls provide a typical repeat accuracy equal to or better than the values shown in the repeat accuracy table below. Repeat accuracy is based on percent of maximum range, evaluated from test data and calculated using the formula per ICS 2-225 standards. Repeat accuracy and mechanical life of bellows type controls is graphically illustrated in Figure 7. The life curve does not apply to piston type controls.

For general applications, controls selected where the contacts operate between 30% and 80% of the operating range and where the maximum line and surge pressures do not exceed the specified values will provide excellent life and repeat accuracy. For more specific applications, it is important to note that the controls are designed to operate below or above these values. However, there may be a small trade-off between the factors of repeat accuracy and mechanical life.

Figure 7
Repeat accuracy versus mechanical life graph

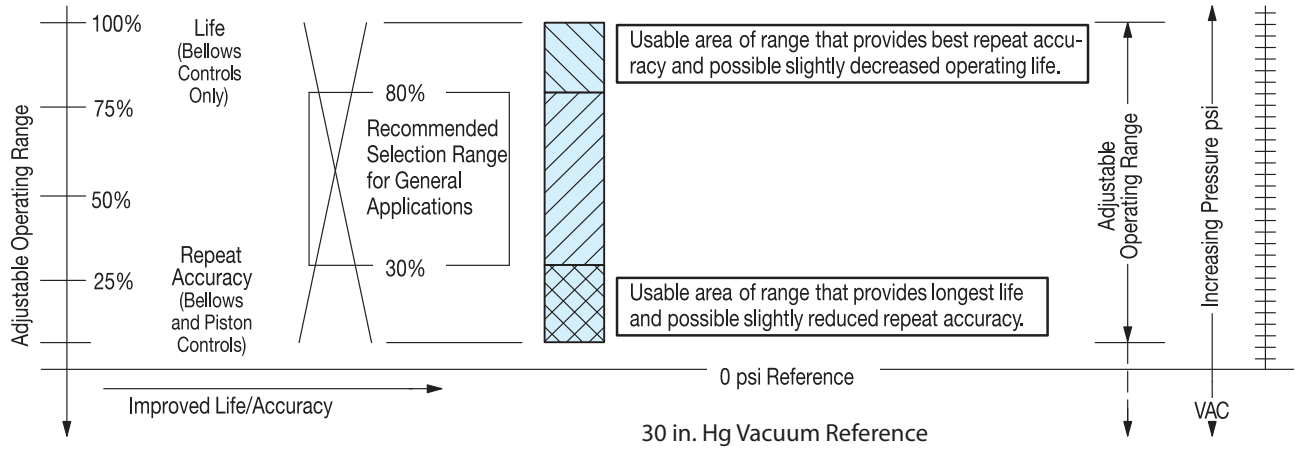

Repeat Accuracy

Type	Typical Characteristics (% of Maximum Range) ✶
Bellows	± 1%
Piston with seal	± 5% ❄
Piston without seal	± 3%

✶ Evaluation made from test data and calculated using formula per ICS 2-225 standards.

❄ Seal adds additional friction and value shown takes into consideration initial breakaway frictional force incurred during start-up or infrequent cycle operation. On continual cycle operation the repeat accuracy approaches ±3%.

Conversion Factors (Rounded)

psi x 703.1 = mmH_2O
psi x 27.68 = in. H_2O
psi x 51.71 = mm/Hg
psi x 2.036 = in. Hg
psi x 0.0703 = kg/cm^2
psi x 0.0689 = bar
psi x 68.95 = mbar
psi x 6895 = Pa
psi x 6.895 = kPa

Note: psi - pounds per square inch (gauge).
H_2O at 39.2 °F
Hg at 32 °F

Mounting without Removing Cover

Bulletin 836T controls can be mounted without removing the front cover. This helps prevent foreign materials from entering the opened enclosure during the interval between mounting and wiring of the control.

Factory Set Pressure Controls

Rockwell Automation will factory set pressure controls to customer specified values. Unspecified pressure controls shipped from the factory are set at the maximum operating range and minimum differential. See Factory-Set Pressure Controls, page 13-44.

Temperature Range

The temperature range at +32 °F (0 °C) or below is based on the absence of freezing moisture, water, or other fluids that may solidify and impede the operation of the control. Temperature ratings:

Operating: –22… +150 °F (–30…+66 °C)
Storage: –22…+200 °F (–30…+93 °C)

Contacts

Bulletin 836T controls feature 2- and 4-circuit contact blocks for added control circuit flexibility. Two-circuit contact blocks have one normally open contact and one normally closed contact and may be arranged for single-pole double-throw operation or separate circuit operation having the same polarity. Four-circuit contact blocks may be arranged for double-pole double-throw operation or separate circuit operation having the same polarity.

2-Circuit Contact Ratings — NEMA A600 (ICS 2-125)

AC						DC	
Maximum AC Voltage	A		Continuous Carrying Current	VA		Maximum Voltage	[A]
	Make	Break		Make	Break		
120	60	6.00	10	7200	720	115…125	0.4
240	30	3.00	10	7200	720	230…250	0.2
480	15	1.50	10	7200	720	550…600	0.1
600	12	1.20	10	7200	720	—	—

IEC 337-1					
Maximum Operational Voltage U_e	Utilization Category	Maximum Continuous Current I_{th}	Volts U_e	Rated Operational Current Make	Rated Operational Current Break
AC600	AC-11	10	120…600 AC	7200 VA	720 VA
		10	72…120 AC	60 A	720 VA
DC600	DC-11	10	24…72 AC	60 A	10 A
		—	115…600 DC	50 VA	50 VA

4-Circuit Contact Ratings — NEMA B150 (ICS 2-125)

AC						DC	
Maximum AC Voltage	A		Continuous Carrying Current	VA		Maximum Voltage	[A]
	Make	Break		Make	Break		
120	30	3.00	5	3600	360	115…120	0.33
240	27.5	2.80	5	6600	660	230…240	0.17

IEC 337-1					
Maximum Operational Voltage U_e	Utilization Category	Maximum Continuous Current I_{th}	Volts U_e	Rated Operational Current Make	Rated Operational Current Break
AC150	AC-11	5	72…120 AC	30 A	360 VA
		5	24…72 AC	30 A	3 A
DC150	DC-11	—	115…240 DC	40 VA	40 VA

Note: NEMA does not rate contacts to switch low voltage and current. Bulletin 836T Styles T and D Pressure Controls are supplied with silver contacts. The devices are designed to deliver high force snap action to the contacts. This provides exceptional contact fidelity at 24V DC I/O card current level entry when the integrity of the enclosure is maintained.

Contact Wiring Configurations

2-Circuit Contact Blocks

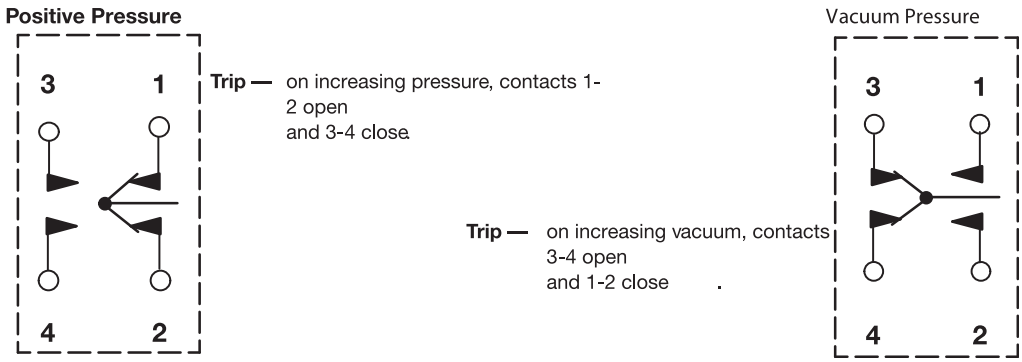

4-Circuit Contact Blocks

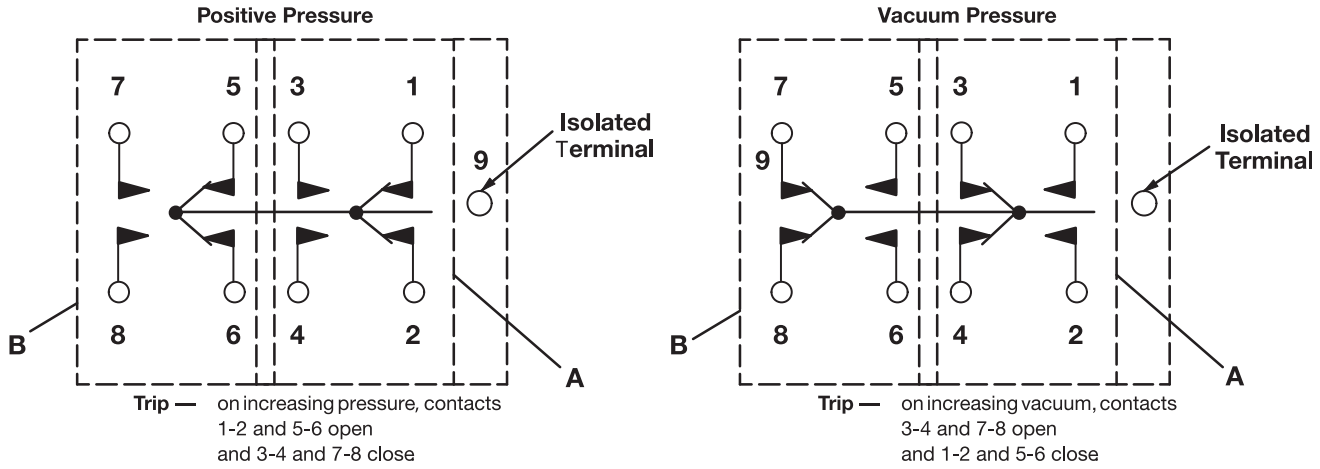

Note: Circuits A and B are electrically isolated from one another.
A or B circuits must be the same polarity.

Nameplate with Removable Paint Mask

The masks are convenient for the many users who repaint controls to match the machine or color code equipment. Saves costly time-consuming hand masking necessary so as not to conceal product functional specifications and approval listings. This feature is standard on most controls at no additional cost. The paint mask feature cannot be supplied on controls with pilot lights. They are also not available on those devices where it is necessary to remove the mask and add suffix modifications to the catalog number or specific customer identification in the space provided.

Figure 8
Removable paint mask



Cover with Transparent Mask and Instruction Label in Place



Cover with Mask Partially Removed

Pressure Control Selection

The selection table below is an overview of the five types of Bulletin 836T Pressure Controls Rockwell Automation offers. Each type of control is suitable for use on many types of applications. Pressure ranges, pressure connections, enclosure types, and the compatibility of the actulator with different types of pressure media are given to assist in the selection of which type of control to use.

836T				
Actuator Type	Copper Alloy Bellows	Type 316 Stainless Steel Bellows	Piston Type Without Seal	Piston Type With Seal
Adjustable operating ranges	30 in. Hg vacuum…650 psi	30 in. Hg vacuum…375 psi	40…5000 psi	80…5000 psi
Adjustable differentials	2…125 psi	2…90 psi	20…650 psi	40…650 psi
Maximum line pressures	up to 1300 psi	up to 600 psi	—	—
Occasional surge pressures	up to 1600 psi	up to 600 psi	up to 15,000 psi	up to 15,000 psi
Pressure Media				
Air	•	•		
Water	•	•	•	•
Hydraulic fluids	•	•	•	•
Corrosive liquids ∗		•		
Non-corrosive liquids	•	•	•	•
Corrosive gases ∗		•		
Non-corrosive gases	•	•		
Enclosures				
Type 1, 4 & 13	•	•	•	•
Type 7 & 9 and 4 & 13, IP66	•	•	•	•
Pipe Connections				
Standard pressure connection	1/4 in. N.P.T. female pipe thread	1/4 in. N.P.T. female pipe thread	3/8 in. N.P.T. female pipe thread SAE 7/16-20 UNF-2B thread O-ring boss seal SAE 9/16-18 UNF-2B thread O-ring boss seal	3/8 in. N.P.T. female pipe thread SAE 7/16-20 UNF-2B thread O-ring boss seal SAE 9/16-18 UNF-2B thread O-ring boss seal

∗ Corrosive liquids and gases must be compatible with Type 316 Stainless Steel Bellows.

Note: Pressure difference controls are supplied with either copper alloy or stainless steel bellows. See Product Selection on page 13-39 and page 13-40 for details.

Ordering Bulletin 836T Pressure Controls

When ordering Bulletin 836T Pressure Controls, consider the following:

- Device style
- Adjustable operating range
- Adjustable differential
- Maximum line pressure
- Occasional surge pressure
- Pressure media
- Enclosure type
- Pressure connection

How to Order

Step 1: Basic Device
Select a catalog number for the basic device.....**See pages 13-35…13-40.**

Step 2: Modifications
If required, add the appropriate modification suffix code(s) to the catalog number of the basic device.....**See page 13-41.**

Step 3: Accessories
If required, order accessories.....**See page 13-42.**

Step 4: Factory Options
Factory-set pressure controls.....**See page 13-44 .**

Catalog Number Explanation

Note: Catalog number must not include blank spaces.

836T –	T	25	1	J	X40	X15
	a	*b*	*c*	*d*	*e*	*f*

a

Style of Device	
Code	Description
T	Pressure control
D	Pressure difference control

b

Operator Type		
Code	Style	Description
25	T	Copper alloy bellows
26	T	Type 316 stainless steel bellows
30	T	Piston without seal
35	T	Piston with seal
40	T	Piston with seal (independent trip and reset adjustment)
45	D	Copper alloy bellows
46	D	Type 316 stainless steel bellows

c

Pressure Specifications
See “Pressure Specifications” on pages 13-35…13-40

d

Enclosure Type	
Code	Description
J	1, 4 & 13 Industrial use
E	7 & 9 and 4 & 13 Combined hazardous locations

e

Contact Block Type	
Code	Description
None	2-circuit contact block - standard
X40	4-circuit contact block

f

Modification 1
Add suffix codes in descending order whenever possible. (Optional. See page 13-41.)

Product Selection



Style T — Type 1, 4 & 13 with Pilot Light Option



Style T — Type 1, 4 & 13 with Pilot Light, Range Locking Cap, and 5-Pin Mini-Receptacle

Style T Pressure Controls with Copper Alloy Bellows∗ — S.P.D.T. 2-Circuit Contact Block

Standard Pressure Controls shipped from the factory are set at the maximum operating range and minimum differential.

Pressure Specifications				Enclosure Type	
	Adjustable Differential [psi] (Approximate Mid-Range Values)	Maximum psi		Type 1, 4 & 13	Type 7 & 9 and 4 & 13 ‡
Adjustable Operating Range [psi]		Line Pressure	Occasional Surge Pressure❄	Cat. No.	Cat. No.
30 in. Hg vacuum…35	2…7	80	90	**836T-T251J**	836T-T251E
6…75	3…15	200	220	**836T-T252J**	836T-T252E
12…150	6…30	350	450	**836T-T253J**	836T-T253E
20…300	10…55	600	750	**836T-T254J**	836T-T254E
40…450	20…90	900	1200	**836T-T255J**	836T-T255E
60…650	30…125	1300	1600	**836T-T256J**	836T-T256E

Style T Pressure Controls with Copper Alloy Bellows∗ — D.P.D.T. 4-Circuit Contact Block

Standard Pressure Controls shipped from the factory are set at the maximum operating range and minimum differential.

Pressure Specifications				Enclosure Type	
	Adjustable Differential [psi] (Approximate Mid-Range Values)	Maximum psi		Type 1, 4 & 13	Type 7 & 9 and 4 & 13 ‡
Adjustable Operating Range [psi]		Line Pressure	Occasional Surge Pressure❄	Cat. No.	Cat. No.
30 in. Hg vacuum…35	2.2…7	80	90	836T-T251JX40	836T-T251EX40
6…75	4.5…15	200	220	**836T-T252JX40**	836T-T252EX40
12…150	9…30	350	450	**836T-T253JX40**	836T-T253EX40
20…300	15…55	600	750	836T-T254JX40	836T-T254EX40
40…450	30…90	900	1200	836T-T255JX40	836T-T255EX40
60…650	45…125	1300	1600	836T-T256JX40	836T-T256EX40

∗ Copper alloy bellows may be used on water or air, and other liquids or gases not corrosive to this alloy.

❄ Transients (pulses) can occur in a system prior to reaching a steady-state condition. Surge pressures within published values generated during startup or shutdown of a machine or system, not exceeding eight times in a 24-hour period, are negligible.

‡ The combined Type 7 & 9 and 4 & 13 hazardous gas and dust service enclosure is supplied with special gasket and O-ring seal to diminish/exclude moisture, fluids, and dust from entering the enclosure. Enclosure is rated for the following environments:
CLASS I Groups C,D
CLASS II Groups E,F,G
CLASS III

Ordering Modifications

Modifications are ordered by adding the appropriate modification suffix code to the catalog number of the basic device. Add suffix codes to the catalog number in descending order.

Item	Description	Suffix Code
Oxygen/nitrous oxide service	Bellows and fittings specially prepared for oxygen and nitrous oxide service. Devices tested with pure oxygen, bellows plugged for protection from contamination and a tag warning against contamination is applied.	X2
External adjustment sealed	The 836T external adjustment is sealed, requiring cover removal to adjust differential (includes contact block shield)	X3
Tamper resistant setting	Range and differential adjustments are factory sealed. Price includes factory setting charge.∗	X4
SAE 7/16-20 UNF thread O-ring boss seal (piston type pressure control)	Female SAE straight thread O-ring seal designed to prevent leaks and minimize loss of hydraulic fluids.	X6
SAE 9/16-18 UNF thread O-ring boss seal (piston type pressure control)		X7
Neon pilot light 120V AC	A high-intensity neon pilot light for 120V AC, 60 Hz applications is available and can be wired for ON or OFF operation. The current rating is 1.0 mA.❄	X9
Red LED pilot light 24V DC	A high-intensity LED 24V DC pilot light is available to meet the requirements of the automotive, machine tool builders, and other industries. The current rating is 22 mA and can be wired for ON or OFF operation.❄	X15
Green LED pilot light 24V DC		X18
Special diaphragm assembly (piston type pressure control)	Diaphragm is made of Viton® and Nomex® fabric. Required when phosphate ester base and other adverse hydraulic fluids are present. Use on Catalog Numbers **836T-T300J** through **836T-T303J** series controls.	X25
Special diaphragm and O-ring assembly (piston type pressure control)	Diaphragm is made of Viton® and Nomex® fabric, O-ring is made of Viton® . Required when phosphate esterbase and other adverse hydraulic fluids are present. Use on Catalog Numbers **836T-T350J, -T351J, -T352J, -T353J** and **-T400J** series controls.	X26
Viton® enclosure gaskets	Special enclosure gaskets made of Viton® are available for applications where the standard gasket materials are not fluid compatible. Viton® is generally specified by the user for use with existing and newly developed coolants and hydraulic fluids to maintain enclosure integrity. These include cover, backplate, cover, and bellows or piston gaskets. **Note**: Viton® enclosure gaskets are often used with special diaphragm assemblies **(X25 or X26)**. See description above.	X29
5-Pin mini-type receptacle without pilot light❄	Select the desired pin wiring configuration from the diagrams on pages 13-45…13-47. Rated at 8 A, 600V.	See pages 13-45…13-47.
5-Pin mini-type receptacle with prewired pilot light❄	Select the desired pin wiring, pilot light wiring, and voltage from the diagrams on pages 13-45…13-47. Includes receptacle and pilot light. Rated at 8 A, 600V.	See pages 13-45…13-47.
5-Pin micro-connect receptacle without pilot light❄	Select the desired pin wiring configuration from the diagrams on pages 13-45…13-47. Add number "1" to the suffix number immediately following the letter "X." **Example: "X19" becomes "X119."** Rated at 3 A, 300V. Pin/Wiring Code: 1 – Red with white tracer, 2 – Red, 3 – Green (Gnd), 4 – Red with yellow tracer, 5 – Red with Black Tracer	See pages 13-45…13-47.
5-Pin micro-connect receptacle with prewired pilot light❄	Select the desired pin wiring configuration and pilot light (X9 or X15, see above for specifications) from the diagrams on pages 13-45…13-47. Add number "1" to the Suffix Number immediately following the letter "X." **Example: "X12X9" becomes "X121X9."** Rated at 3 A, 300V. Pin/Wiring Code: 1 – Red with white tracer, 2 – Red, 3 – Green (Gnd), 4 – Red with yellow tracer, 5 – Red with black tracer	See pages 13-45…13-47.
Additional optional receptacles and wiring❄	For assistance, please consult your local Rockwell Automation sales office or Allen-Bradley distributor.	

∗ See paragraph entitled “Factory-Set Pressure Controls” on page 13-44.
❄ Not available on the Type 7 & 9 and 4 & 13 combined enclosed devices.

Ordering Accessories

Accessories are ordered as separate catalog numbers. Select the required accessories from the accessories table below.

Item	Description	Type	Cat. No.
External fixed pulsation snubbers	Controls are supplied as standard with an internal pulsation snubber. However, a control properly selected and used within the adjustable range values, yet having a short bellows life, is a good indication of the presence of extreme surge pressures. External fixed pulsation snubbers are available to provide **additional** dampening when extreme pulsations or surges are present. Recommended if more than eight line surges occur in a 24-hour time period.	Snubber for bellows control 1/4-18 N.P.T. thread	**836-N7**
		Snubber for piston control 3/8-18 N.P.T. thread	**836T-N8**
Selectable element pulsation snubbers	Controls are supplied as standard with an internal pulsation snubber. However, a control properly selected and used within the adjustable range values, yet having a short bellows life, is a good indication of the presence of extreme surge pressures. Selectable element pulsation snubbers are supplied with five different elements to provide a selectable balance between maximizing pressure control life and minimizing control response time. Pulsation snubbers are supplied with the mid-range element already mounted and four other color-coded porosity elements included in the package. See "Selectable Pulsation Snubber Porosity Elements" table on this page for porosity specifications.	Snubber for bellows control 1/4-18 N.P.T. thread	**836-N40**
		Snubber for piston control 3/8-18 N.P.T. thread	**836T-N41**
	Female SAE straight thread O-ring seal designed to prevent leaks and minimize loss of hydraulic fluids. Use on applications with a pressure range of 550…5000 psi.	SAE 7/16-20 UNF-2B thread O-ring boss seal for piston controls	836T-N49
		SAE 9/16-18 UNF-2B thread O-ring boss seal for piston controls	**836T-N50**
Selectable pulsation snubber porosity elements	Package consists of five porosity elements and complete instructions. Elements are color-coded for easy identification. Elements are available in five different porosities for a wide range of applications. See selectable pulsation snubber porosity elements table.		See Table on this page
Locking cap	Deters unauthorized tampering of range setting. Once installed, the locking cap can be removed with a screwdriver to re-adjust the control.	—	**836T-N13**
Isolation trap with two 1/4 in. male pipe fittings	An isolation trap is available for high-temperature media applications from 150…600 °F or corrosive applications compatible with Type 316 stainless steel tubing and fittings. The isolation coil is inserted between the bellows of the pressure control and the elevated temperature line of the system. The isolation trap will fill with condensed water or can be filled with water or suitable fluid when installed. A silicone buffer fluid is available in a convenient dispenser. Copper alloy lower and higher pressure range bellows can be applied to many applications using the isolation trap. The silicone buffer fluid is used to isolate many corrosive substances from coming in contact with the bellows. The isolation trap is rated at 3000 psi working pressure. Not available for piston-type controls. See photo on this page.		836-N25
Isolation trap with one 1/4 in. male and one 1/4 in. female pipe fittings			836-N26
2 oz. of buffer fluid to fill bellows and tubing			836-N27
Metric electrical entry conduit adapters	BS 20 mm thread adapter		**836T-N36**
	Pg 13.5 thread adapter		836T-N37

Selectable Pulsation Snubber Porosity Elements

Recommended Type of Service	Color Code	Porosity	Cat. No.
Viscous fluids (over 500 SSU)*	None	Coarser	836-N43
Medium type oils (225…500 SSU)*	Black		**836-N44**
Water and light oils (30… 225 SSU)*	Brown		**836-N45**
Low viscosity fluids (under 30 SSU)*	Green		**836-N46**
Air and other gases	Red	Finer	**836-N47**
One of each of the above	—	Assorted	836-N48

* Saybolt Seconds Universal (SSU) — units of viscosity measurement.

Note: Color code is located on end of element.



Isolation Trap and Silicone Buffer Fluid

Fixed Pulsation Snubbers



Male/Female Pipe Threads

Selectable Element Pulsation Snubbers



Male/Female Pipe Threads

Pulsation Snubbers

Conversion Kits

Ordering Conversion Kits

Conversion Kits are ordered by adding the appropriate suffix code to the catalog number of the basic device. Select the required conversion kits from the table below.

Conversion Kits

Item	Description	Suffix Code
Neon pilot light conversion kit	Converts standard control to control with 120V AC neon pilot light. Not available on Type 7 & 9 devices. Kit includes pilot light and cover assembly.	N9
Red LED pilot light conversion kit	Converts standard control to control with 24V DC LED pilot light; has a 22 mA current rating. Not available on Type 7 & 9 devices. Kit includes pilot light and cover assembly.	N15
Green LED pilot light conversion kit	Converts standard control to control with 24V DC LED pilot light; has a 22 mA current rating. Not available on Type 7 & 9 devices. Kit includes pilot light and cover assembly.	N18

Example:
To convert a **Cat. No. 836T-T301J** to a **Cat. No. 836T-T301JX15**, order **Cat. No. 836T-T301JN15**.

Renewal Parts

Ordering Renewal Parts

Renewal Parts are ordered as separate catalog numbers. Select the required renewal parts from the table below.

Renewal Parts

Item	Description	Cat. No.
2-Circuit contact block renewal kit	Allows renewal of worn contacts for Bulletin 836T controls.	**836T-N1**
4-Circuit contact block renewal kit	Allows renewal of worn contacts for Bulletin 836T controls.	836T-N2
Renewal seals for piston-type controls	For use on Cat. No. 836T-T350J.	836T-N20
	For use on Cat. No. 836T-T351J.	836T-N21
	For use on Cat. No. 836T-T352J and 836T-T400J.	836T-N22
	For use on Cat. No. 836T-T353J.	836T-N23

Factory-Set Pressure Controls

Ordering factory-set pressure controls

- When a specific factory setting is requested, the specific terminal connections must be specified — e.g., N.O. or N.C. It must also be specified whether the contact operation is occurring on either increasing or decreasing pressure. For example:

Normally Closed (N.C.) contacts to open at∗ psi increasing pressure and close at∗ psi decreasing pressure.

—OR—

Normally Open (N.O.) contacts to close at∗ psi increasing pressure and open at∗ psi decreasing pressure.

- If minimum differential is not critical and the inherent minimum differential satisfies the application, specify the factory setting as follows:

Normally Closed (N.C.) contacts to open at∗ psi increasing pressure minimum differential.

—OR—

Normally Open (N.O.) contacts to close at∗ psi increasing pressure minimum differential.

Quality analog test gauges§ are used when applying requested factory settings to these rugged industrial grade pressure controls. (Gauges are calibrated and accuracy is traceable to the The National Institute of Standards and Technology.)

The actual requested setting is applied to the control by reading the set point directly from the test gauge being used. However, traceable gauge tolerance variance between source and user, and possible severe shock during shipping and installation, may contribute to the factory settings deviating slightly from the specified values. Slight recalibration can easily be accomplished upon final installation to meet specific requirements for the more demanding applications.

When installed, the controls will perform with a repeat accuracy as established in the paragraph entitled “Repeat Accuracy" (see page 13-54). Special service is available to factory-set controls on digital laboratory instruments, up to 600 psi, when required for more critical applications. An additional charge may be added for this service contingent upon setting tolerance and quantity. Please contact your local Rockwell Automation sales office or Allen-Bradley distributor.

∗ Specify psi (pounds per square inch) or, in. Hg vac (inches of mercury vacuum).

❄ Per ANSI B40.1 Grade 2A (0.5% accuracy full scale), Grade 3A (0.25% accuracy full scale).

If not specified, setting tolerances will be as shown in the table below.

Pressure Range	Tolerance
30 in. Hg Vac....0	+/- 1 in. Hg vac.
> 0...100 psi	+/- 1 psi
> 100...300 psi	+/- 2 psi
> 300...500 psi	+/- 5 psi
> 500...1000 psi	+/- 10 psi
> 1000...5000 psi	+/- 50 psi

Standards Compliance

- UL508
- CSA 22,2 No. 14
- UL698, 1604 (Haz. Loc.)
- NEMA ICS-2

Certifications

File and Guide Numbers

	UL		CSA	
	File Number	Guide Number	File Number	Class
Bulletin 836T	E14842	NKPZ	LR1234	3211-03
	E53048 (Haz. Loc.)	NOWT	LR11924 (Haz. Loc.)	3218-05
	Hazardous Location enclosure devices are not CE compliant. All other enclosed devices are CE compliant.			

Approximate Dimensions and Shipping Weights

Dimensions in inches (millimeters). Dimensions are not intended to be used for manufacturing purposes.

Type 4 & 13 (Bellows)

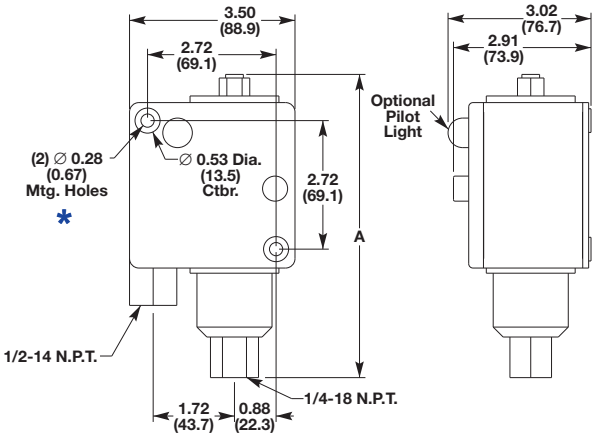

Approximate Shipping Weight 3-1/2 lbs. (1.6 kg)

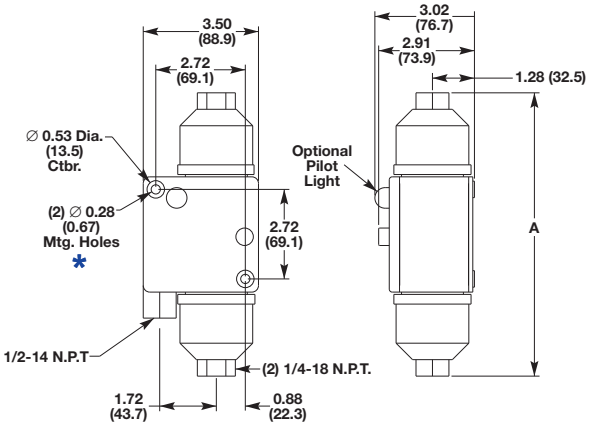

Approximate Shipping Weight 4 lbs. (1.8 kg)

Cat. No.	A Dimensions	Cat. No.	A Dimensions	Cat. No.	A Dimensions	Cat. No.	A Dimensions
836T-T251J	6.65 (169)	**836T-T254J**	6.95 (176)	**836T-D450J**	8.60 (218)	836T-D460J	8.60 (218)
836T-T260J		**836T-T255J**					
—	—	**836T-T256J**	7.09 (180)	**836T-D451J**	8.14 (207)		
836T-T252J	6.41(163)	**836T-T262J**	7.33 (186)	**836T-D452J**		**836T-T252J**	8.5 (216)
836T-T253J		**836T-T263J**	7.25 (184)			836T-D463J	10.06 (256)
836T-T261J				**836T-D453J**	9.5 (241)		

Type 4 & 13 (Piston)

(Does not include Dual Bellows Devices)

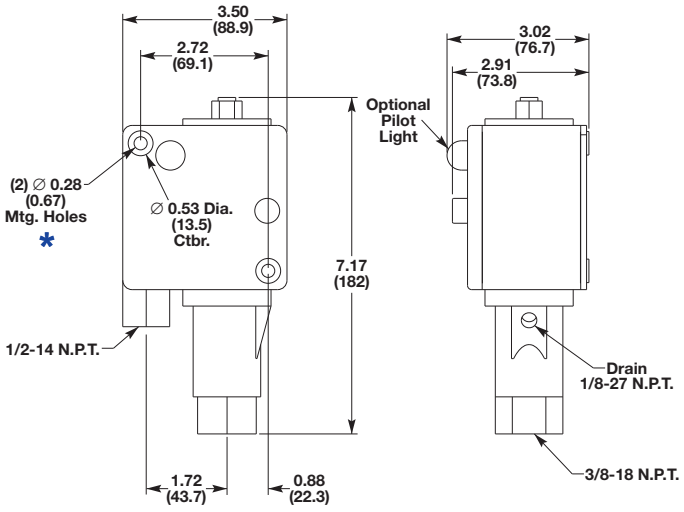

Approximate Shipping Weight 4.5 lbs. (2.0 kg)

Type 4 & 13 and 7 & 9 Bellows and Piston Type

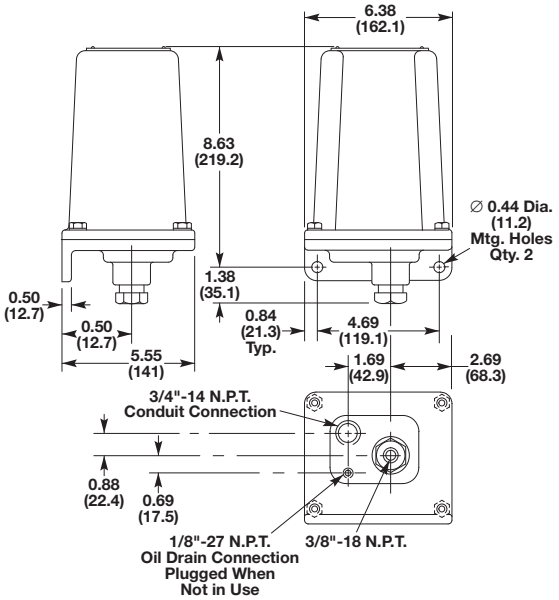

Approximate Shipping Weight 10 lbs. (4.5 kg)

* (2) mounting screws are required: 3/16 x 20 x 2 in. Counterbore depth is 1-1/8 in. Overall depth of mtg hole (front to back) is 2-1/4 in.

Cat. No.	
836T-T300J	836T-T350J
	836T-T351J
836T-T301J	836T-T352J
836T-T302J	836T-T353J
836T-T303J	836T-T400J

CS-451-200 : Identification sheet

VWTC PROJECT NUMBER:	Iqaluit WWTP	REV:	01
PROJECT NAME:	5000218036	SUBMITTED TO (COMPANY):	
ENGINEER:	G. HÉBERT	SUBMITTED TO (RESPONSIBLE)	
PROJECT MANAGER:	C. BEKAERT	PROJECT NUM REFERENCE.:	
PHONE NUMBER:		LOT NUMBER:	

SUPPLIER	EQPT CODE	EQPT TAG NO	DIA	DESCRIPTION	INFO 1	INFO 2	INFO 3	APPLIC.	NOTE	REV
ENDRESS & HAUSER	IESWLE5204819	LSL-04-710		HP-250 INSTRUMENT	LEVEL SWITCH // MANUF: E&H// MODEL :FTE31-C6DB11 Soliswitch FTE31, thread NPT Level limit switch, Paddel. Solid >= 100 g/dm3. 1x relay double pole change over switch.	Housing: Plastics PBT, IP65 NEMA4 Rod: steel 1.4305 (303). 1x Cable entry NPT 1/2. Appval:C CSA DIP Cl. II,III, Div.1, Gr.EFG Power : 24VDC, relay	Paddel; Additional Option:1 316Ti; basic version Version:1 Basic version B Marking: 71072711: TAG on device	HP-250		1

Level | Pressure | Flow | Temperature | Liquid Analysis | Registration | Systems Components | Services | Solutions

Technical Information

Soliswitch FTE31

Level Limit Switch
Economical paddle limit switch
For application in dust hazardous explosive areas



Application areas
The universal paddle level limit switch FTE 31 is used as a full, empty and demand alarm on silos containing solids. Its construction and materials make the unit suitable for use in the food industry.
The unit is suitable as a level limit switch in dust explosion hazardous areas.
Typical applications are level detection in:
- Cereals
- Sugar
- Cacao
- Animal feeds
- Washing powders
- Chalk
- Dry plaster
- Cement
- Granulates
- Wood chips

Features and benefits
- Simple operation
- Proven principle
- Slip clutch
- Ingress protection to IP 65 / NEMA 4x / Type 4x

TI068R/09/en
51002384

Endress+Hauser
People for Process Automation

Function and system construction

Measurement principle

The shaft and paddle are driven using a reduction gear and synchronous motor. If the paddle is stopped by material covering it, the hinged motor in the housing moves from the rest to the switch position. This movement operates two switch contacts, the first is for external level indication and the second switches the power off to the motor.
The paddle starts to rotate once the medium level falls below the paddle, the hinged motor returns to its rest position and the two contacts switch to normal operation. Intermittent loads that operate against or even in the same direction of rotation are evened out by using a slip clutch.

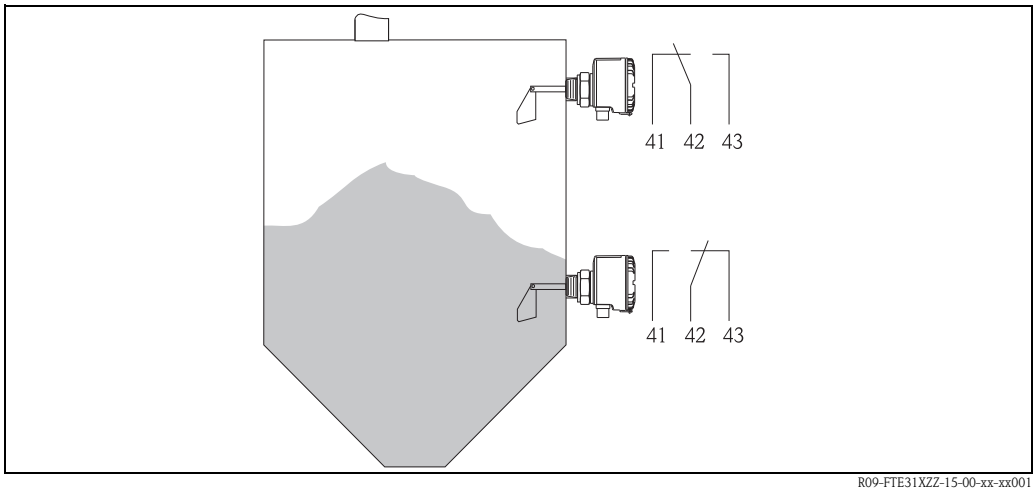

Level measurement changeover contact

System

Complete level measurement limit switch, paddle, shaft with synchronous motor and slip clutch, single pole double throw switch.

Input values

Measurement value

Level of solids

Range

Variable types dependent on:
- Installation point
- Length of shaft or rope

Output values

Output signal

Binary, once the set level is reached the micro switch contact changes.

Output circuit

Connectable load:
≤ 250 VAC, 10 A nominal current, 3 A on motor

Switch output

Potential free changeover contact (SPDT)

Switch delay

Approx. 2 seconds

Mechanical life time

min. 500 000 switch cycles

Power supply

Electrical connection

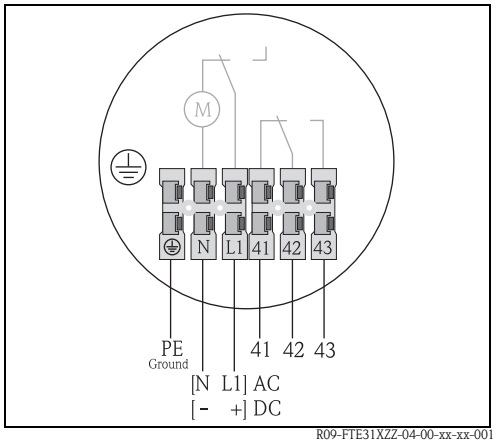

Terminal layout FTE31

AC	DC	
PE		Earth (ground) connection
N	-	Power connection
L	+	Power connection
41		Normally closed contact
42		Common contact
43		Normally open contact

Cable entry

Power supply and signal cable (in-/output):
- Thread for cable gland [½" NPT]

Power supply

Standard:
- 230 V AC, 50/60 Hz (±10%)

Option:
- 115 V AC, 50/60 Hz (±10%)
- 20...28 V DC

Power consumption

AC: P < 4,5 VA; DC: P < 3,5 W

Current requirement

DC: $I_{max} \leq 66$ mA

Installation conditions

Installation hints

Installation position:
- horizontal up to shaft length > 300 mm (11.8") or vertical (see diagram)
- side load on the shaft max. 60 N
- Load on the rope max. 1500 N

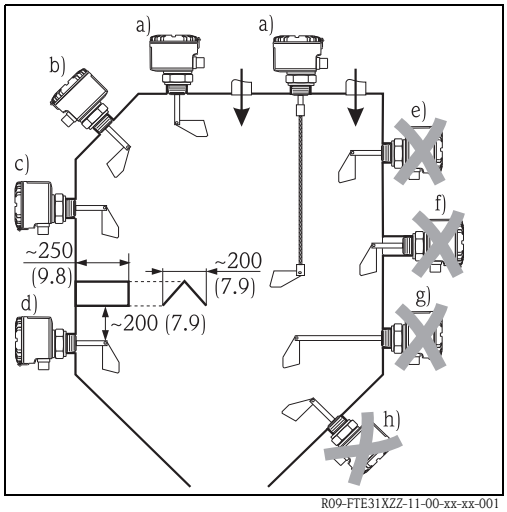

Installation of the FTE31 paddle level limit switch, dimensions in mm (inch).

Correct installation	Incorrect installation
a) Vertical from top of silo	e) In dierction of solids flow
b) Angled from the top	f) Installation coupling too long
c) From the side	g) Horizontal with shaft length > 300 mm
d) With protective cover against falling solids	h) Angled from below

The FTE31 paddle limit switch can be installed in solids silos as shown under points a, b, c and d.

Environment conditions

Ambient temperature	- 20 °C ... + 60 °C (-4 °F ... + 140 °F)
Storage temperature	- 20 °C ... + 60 °C (-4 °F ... + 140 °F)
Ingress protection	■ IP 65 / NEMA 4x / Type 4x with closed cover ■ IP 20 / NEMA 1 with open cover
Vibration protection	IEC 654-3, dimension V.S.1 (v<3 mm/s, 1<f<150 Hz)
EMC	To EN 61 326, Class B
Protection class	I
Over voltage protection category	II
Altitude	Up to 2000 m (6560 ft) above sea level.

Process conditions

Material temperature range	- 20 °C ... + 80 °C (-4 °F ... 176 °F)
Operating pressure range	0.5 bar ... 1.8 bar (7.25 PSI ... 26.1 PSI)
Material conditions	Solids - grain size ≤ 50 mm (1.97")
Product density (solids weight)	100 g/l

Mechanical construction

Model/dimensions

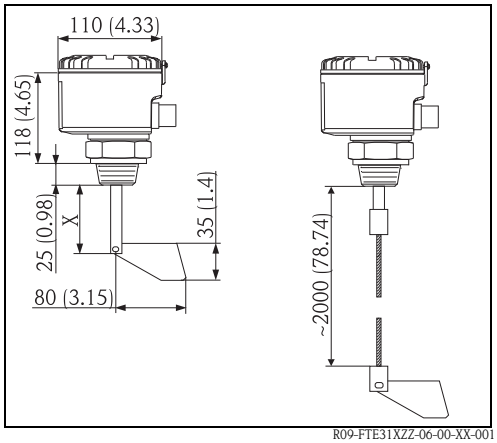

Construction of the compact unit - dimensions in mm (inch).

Shaft variations:

Standard shaft X = 75 mm (2.95")
Special length X:
100 mm (3.94"), 200 mm (7.87"), 300 mm (11.8"), 400 mm (15.75"), 500 mm (19.7"), 600 mm (23.6")

Rope version:

Rope length approx. 2000 mm (78.7"), can be shortened.

Caution!
If the shaft length is > 300 mm (11.8") the FTE31 can only be installed vertically downwards.

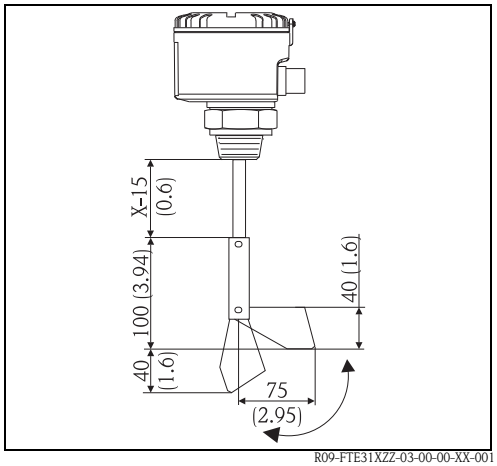

Hinged paddle - dimensions in mm (inch)

Option hinged paddle:

The paddle is hinged so that it can be easily mounted through a threaded mounting boss. Because it is spring loaded the paddle retuns to its normal operation once inside the vessel. Removal of the unit is always possible.

The hinged paddle can be mounted to both the solid shaft as well as the rope extension versions.

Weight	approx. 1 kg (2.2 lb)
Materials	Housing, cover and process connection: – VALOX 553 plastic with 30% fibre glass. Shaft: – Corrosion resistant steel 1.4435 Paddle: – Corrosion reseitant steel 1.4435 Option: – Process connection - corrosion resistant steel 1.4435 – Rope extension- corrosion resistant1.4571 with corrosion resistant steel 1.4305 weight – Hinged paddle - corrosion resistant steel 1.4435 O-ring seal: – NBR Shaft sealing ring: – NBR Perbunan Cable entries NPT ½": – Nickel plated brass
Shaft bearing	High performance friction bearing - maintenance free
Shaft revolution	approx. 1 revolution per minute
Process connection	Threaded boss - thread NPT 1¼" or NPT 1½"
Electrical connection	Plug-in terminals 2.5 mm^2 (14 AWG) solid core, 1.5 mm^2 (16 AWG) stranded with ferrule

Certification

CE approval	The measurement system fulfils the requirements demanded by the EU regulations. Endress+Hauser acknowledges successful unit testing by adding the CE mark.
FM	DIP Class II, Div. 1+2, Groups E, F, G and Class III
CSA	DIP Class II, Div. 1+2, Groups E, F, G and Class III

Ordering information

Soliswitch FTE31, Thread NPT

Approval:		
	A	Non-hazardous area
	B	FM DIP Cl. II, III, Div. 1, Gr. EFG
	C	CSA DIP Cl. II, III, Div. 1, Gr. EFG
Power supply:		
	1	230 V AC, relay 250 V AC, 100 mA-10 A
	2	115 V AC, relay 250 V AC, 100 mA-10 A
	3	20...28 V DC, relay 250 V AC, 100 mA-10 A
	4	230 V AC, relay PLC 48 V DC, 10 mA-100 mA
	5	115 V AC, relay PLC 48 V DC, 10 mA-100 mA
	6	20...28 V DC, relay PLC 48 V DC, 10 mA-100 mA
Process connection:		
	A	Thread NPT 1¼", Valox553 (PBT)
	B	Thread NPT 1¼", 316L
	C	Thread NPT 1½", Valox553 (PBT)
	D	Thread NPT 1½", 316L
Version:		
	A	Shaft 100 mm
	B	Shaft 200 mm
	C	Shaft 300 mm
	D	Shaft 400 mm, vertical installation
	E	Shaft 500 mm, vertical installation
	F	Shaft 600 mm, vertical installation
	Y	Other
	1	Shaft 75 mm, compact
	2	Rope 2 m, 316, shortable
Paddle; Additionla option:		
	1	316Ti; basic version
	2	316L; fold-away, w/o signal lamp

FTE31- ⇐ **Ordercode**

This ordering information can give an overview about the available order options. The Endress+Hauser sales organization can provide detailed ordering information and information on the order code.

Accessories

Hinged paddle for retro-fitting
Order no. 50089768

Further documentation

Short form operating manual KA094R/09/a3

Instruments International

Endress+Hauser
Instruments International AG
Kaegenstrasse 2
4153 Reinach
Switzerland

Tel. +41 61 715 81 00
Fax +41 61 715 25 00
www.endress.com
info@ii.endress.com

Endress+Hauser
People for Process Automation

CS-504-100 : Identification sheet

VWTC PROJECT NUMBER:	Iqaluit WWTP	REV:	01
PROJECT NAME:	5000218036	SUBMITTED TO (COMPANY):	
ENGINEER:	G. HÉBERT	SUBMITTED TO (RESPONSIBLE)	
PROJECT MANAGER:	C. BEKAERT	PROJECT NUM REFERENCE.:	
PHONE NUMBER:		LOT NUMBER:	

SUPPLIER	EQPT CODE	EQPT TAG NO	DIA	DESCRIPTION	INFO 1	INFO 2	INFO 3	APPLIC.	NOTE	REV
SCHUTTE&KOERTING	EJGUEJ200371	IJ-04-715	N/A	HP-250 EDUCTOR	MANUFACTURER: SHUTTE&KOERTING / MODEL: 1,5"- Fig264 PVC Eductor	N/A	N/A	HP-250		1

Schutte & Koerting

Water Jet Eductors

Introduction

The Water Jet Eductor is a type of ejector which utilizes the kinetic energy of a pressurized liquid to entrain another liquid, mix the two, and discharge the mixture against a counter pressure. Ejectors of this type are used throughout industry for pumping and mixing operations.

Application

Water jet eductors have numerous uses in the plant such as lifting, pumping, mixing and agitation of liquids, granular solids and slurries. Some specific applications are: draining flooded areas, emptying tanks and sumps, pumping and mixing operations in oil treating systems, dewatering sand and coal barges, introducing anti-knock agents and coloring additives into gasoline, continuous blending, acidifying, causticizing of oils, producing emulsions, pumping food products, pumping sand and filter clay, tank mixing, and various proportioning operations. As an example of eductor performance in a typical use, a jet eductor measuring 8½" in length will empty a 500 gallon water tank in less than half an hour, using water at 60 psig, as the sole source of motive power.

Features

Self Priming Eductors require no priming and can be used for either continuous or intermittent operation.
Simple and Reliable Since the basic eductor has no moving parts to wear or break, only periodic inspection is required.
Corrosion and Erosion Resistant Because they can be made from most materials, or coated with corrosion resistant materials, eductors can be made resistant to the corrosive effects of the liquids handled and the environment.
Automatic Control Units can be adapted for automatic operation by means of a regulating spindle or a snap valve and float arrangement.
Non-Electrical Eductors can be used in hazardous locations where electrically operated alternatives would require expensive explosion-proofing.
Easy to Install Either threaded or flanged connections are available. Units are compact, relatively light and can be adapted to a variety of piping configurations.
Low Cost Water eductors are inexpensive in relation to the work they do.

Construction

Water Jet Eductors consist of only three basic components: a converging nozzle, a diffuser (or venturi) and a body to hold these parts in their proper relative positions and provide a suction chamber.



Converging Nozzle | Diffuser (or Venturi) | Body - holds diffuser and nozzle in position

Jet ejectors can be made from most workable materials, such as: cast iron, bronze, stainless steel, aluminum, polyvinyl chloride, polyester fiberglass, Phenolic Fiberglass Reinforced Plastic (FRP), Teflon[2] and Hastelloy[3].

A variety of types and sizes are available as noted on the following pages. Certain variables such as pressure, temperature, viscosity, density, operating conditions of suction and discharge fluids, and desired results must be considered in determining the type of eductor best suited to your needs. S&K engineers will work with you to select the proper eductor for your application.

Request Performance Data Supplement 2M for operating characteristics of water jet eductors.

Index

Description	Page
Fig. 264 Water Jet Eductor	2
Fig. 266 Water Jet Eductor	2
Fig. 264 PVC and Kynar Water Jet Eductor	3
Fig. 2645 Automatic Eductor	4
Fig. 265 Liquid Jet Eductor	5
Fig. 242 Condensate and Mixing Eductor	6
Fig. 258 Tank Mixing Eductor	7
Fig. 268 Tank Mixing Eductor	7
Fig. 254 Hopper-Equipped Eductor	9
Fig. 267 Hopper-Equipped Eductor	9
Fig. 227 Hopper-Equipped Eductor	9
Fig. 224 Water Jet Sand and Mud Eductor	10
Fig. 235 Annular Multi-Nozzle Water Jet Eductor	11
Fig. 222 Portable Eductor	12
Fig. 212 Corrosion Resistant Eductor	12
Typical Applications of S&K Water Jet Eductors	12

Fig. 264 and Fig. 266 Water Jet Eductors

S&K Fig. 264 and Fig. 266 Water Jet Eductors are designed for liquid pumping and mixing operations and for the handling of some solids where requirements do not necessitate capacities greater than those obtained with sizes up to and including 6". They are considered the standard eductors within this size range. Typical applications begin on page 12.

In operation, pressure liquid enters the eductor through the pressure nozzle and produces a high velocity jet. This jet action creates a vacuum in the line which causes the suction liquid to flow up into the body of the eductor where it is entrained by the pressure liquid. Both liquids are thoroughly mixed in the throat of the eductor and are discharged against back pressure. The streamlined body with no pockets permits the pressure liquid to move straight through the eductor and reduces the possibility of solids in the suction material collecting and clogging. In addition, pressure drop in the suction chamber is held to a minimum.

Accompanying Bulletin 2M Supplement Performance Data provides performance information.

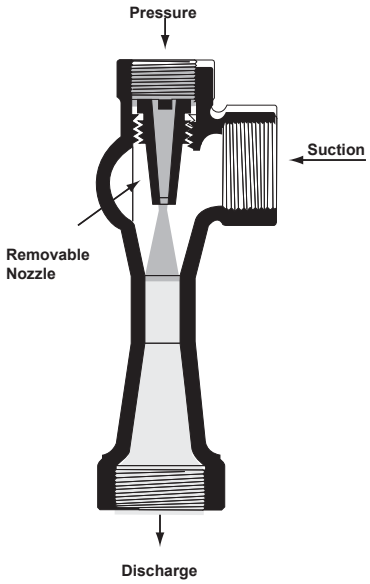

Fig 1. FIG. 264 EDUCTOR
Eductors of this type have streamlined bodies with threaded pipe connections. They are made in sizes ranging from 1/2" to 3" and are stocked in these sizes in ductile iron and bronze and Fig. 316 stainless steel. They are stocked in sizes from 1/2", 2", and 3" in PVC. Other materials are available on order.



Fig. 2. FIG. 264 EDUCTOR

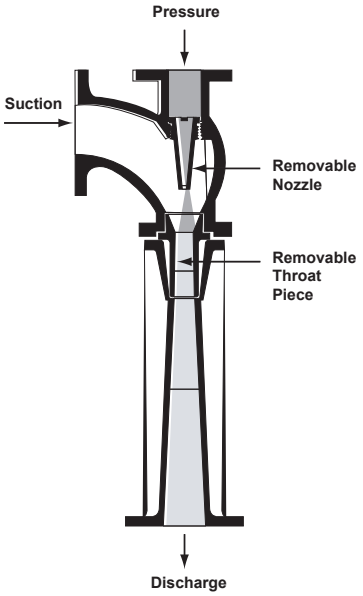

Fig. 3. FIG. 266 EDUCTOR.
These eductors are similar to Fig. 264 Eductors except that they have flanged connections and removable throat bushings along with removable nozzles. They are supplied in cast iron, bronze-mounted in 4" and 6" sizes. Other materials can be supplied on special order.

Table 1. Sizes and Dimensions, Fig. 264 and Fig. 266 Water Jet Eductors

Size In Inches	Connections In Inches		Wgt. In Lbs.	Working Pressures						Dimensions in Inches			Max. Round Particle Size In Inches
	Suction Disch.	Pressure		Cast Iron		Bronze		Stainless Steel		A	B	C	
				Motive psi	Body psi	Motive psi	Body psi	Motive psi	Body psi				
Fig. 264 Eductor													
1/2	1/2	3/8	3/4	150	125	125	100	600	500	1 1/16	2 9/16	1 1/8	1/16
3/4	3/4	1/2	1 1/4	125	125	100	100	500	500	1 3/8	3 3/8	1 1/4	1/8
1	1	3/4	2	150	150	150	125	600	600	1 1/2	4 3/16	1 5/8	5/32
1 1/2	1 1/2	1	4	150	100	125	90	600	400	2	6 1/2	2	5/16
2	2	1 1/4	6	150	100	125	85	600	400	2 1/4	7 5/8	2 1/4	3/8
2 1/2	2 1/2	1 1/2	11	200	150	200	125	600	300	2 11/16	9 1/4	3 1/8	3/8
3	3	2	20	250	150	225	125	600	400	3 1/8	11 1/4	3 1/2	13/16
Fig. 266 Eductor													
4	4	2 1/2	100	125	125	-	-	-	-	4 3/8	19 1/4	7 13/16	1
6	6	4	180	125	125	-	-	-	-	6 1/16	28 3/8	9 1/8	1 1/8

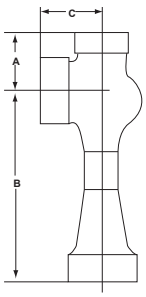

Fig. 264

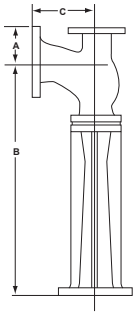

Fig. 266

Schutte & Koerting • 2510 Metropolitan Drive • Trevose, PA 19053 • USA • tel: (215) 639-0900 • fax: (215) 639-1597 • www.s-k.com • sales@s-k.com

Fig. 264 PVC and Kynar Water Jet Eductors

Fig. 264 PVC and Kynar Eductors offer resistance to many corrosive media. PVC Eductors are not recommended, however, for acetone, ketones, ether, esters, aromatic hydrocarbons or chlorinated hydrocarbons. A table of recommended uses is available on request. Maximum temperature rating is 150°F. Kynar Eductors will handle PVC applications including those mentioned above. Kynar's temperature limitation is 250°F. Pressure ratings are given in Table 2.

Fig. 264 PVC and Kynar Eductors operate on the same principle as do all other S&K Eductors. Performance characteristics with water are shown in Bulletin 2M Supplement Technical Data. For performance with other liquids, contact S&K.

Nozzles and diffusers are not removable on these eductors. Sizes 1" and smaller are of molded construction.

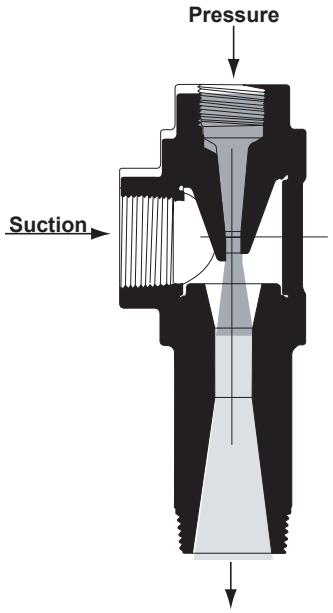

Fig. 4. FIG. 264 PVC EDUCTOR. Sizes from 1 1/2" up are designed as shown here and in Fig. 5. On these sizes, the pressure and suction connections are female and the discharge connection is male. All connections are threaded.



Fig. 5. FIG. 264 PVC EDUCTOR.

Table 2. Sizes, Dimensions, and Particle Size Data, Fig. 264 Water Jet Eductor

Size in Inches	Connections in Inches		Wgt. In Lbs.	Dimensions in Inches			Working Pressure (psig) at 75°F	Max. Round Particle Sizes (in inches) Eductors will Handle
	Suction Disch.	Pressure		A	B	C		
1/2s	1/2s	3/8s	1/2	1 7/16	3 1/4	1 7/16	325	1/16
1/2	1/2	3/8	1/2	1 7/16	3 1/4	1 7/16	325	1/16
3/4	3/4	1/2	1/2	1 11/16	3 1/2	1 11/16	275	1/8
1	1	3/4	1/2	1 7/8	3 11/16	1 7/8	250	5/32
1 1/2	1 1/2	1	1 1/2	2 9/16	5 11/32	2 1/16	200	5/16
2	2	1 1/4	2 1/2	3 1/32	6 21/32	2 5/32	185	3/8
3	3	2	6 3/4	4 1/8	9 1/2	3 7/8	165	13/16

s = denotes smaller internals.

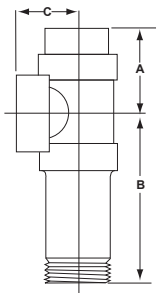



Fig. 6. FIG. 264 KYNAR EDUCTOR. 1/2" to 1" Design. Sizes 1/2", 3/4", and 1" look like this. All connections are female and are threaded.

Fig. 2645 Automatic Eductor

Fig. 2645 Automatic Water Jet Eductors are used to pump out sumps (pits, tanks, etc.) where liquid accumulates slowly but must be evacuated when it reaches a predetermined level.

As the liquid in the sump (basin, tank, cellar, bilge, etc.) accumulates, it raises the ball float until the upward action of the float opens the snap-acting valve, admitting motive fluid into the pressure connection of the eductor.

The jet action of the motive fluid creates a vacuum in the eductor and entrains the suction fluid, discharging both fluids under pressure. As the suction fluid is thus pumped out, the sump level drops to a point where the snap-acting valve shuts off. No further pumping action takes place until the sump again fills to the operating level.

Operation of the Fig. 2645 Eductor is completely automatic. It is self-operated, requires no electrical connections or any external power other than the motive fluid. The snap-acting valve and ball float are the only moving parts. The full assembly is so compact it can be installed in tanks as small as 13 1/2" diameter.

For performance information, see accompanying Bulletin 2M Supplement Performance Data.

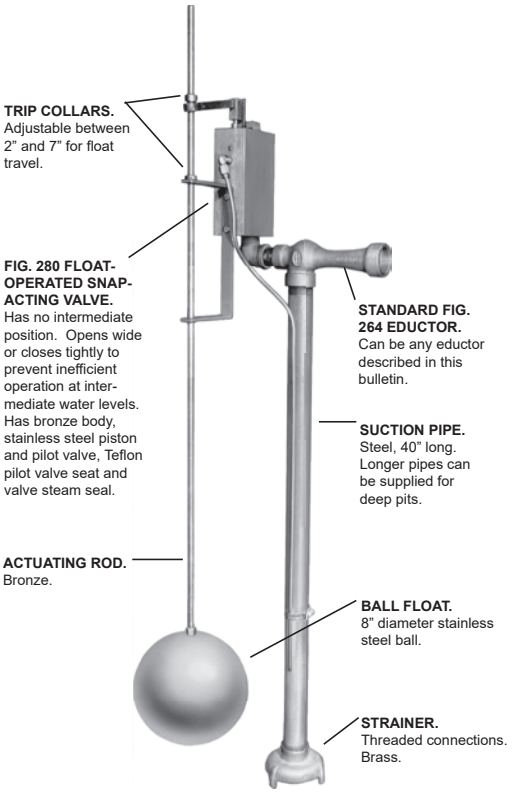

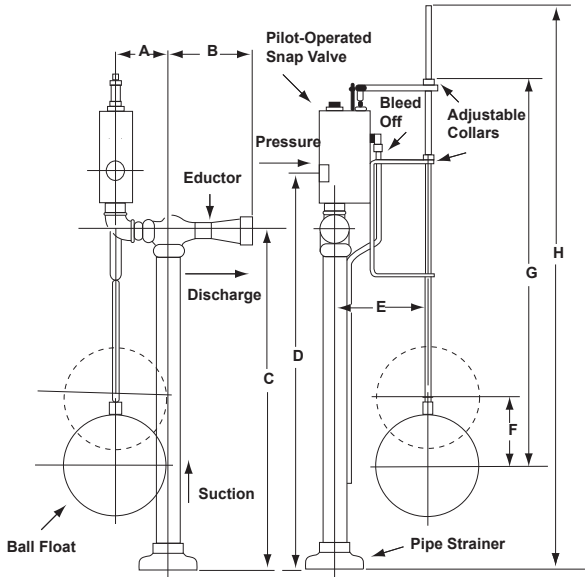

Table 3. Sizes and Dimensions, Fig. 2645 Automatic Eductor

Eductor Size In Inches	Connections In Inches N.P.T.		Wgt. In Lbs.	Working Pressure (Bronze)		Dimensions in Inches							
	Suc.-Disch.	Pressure (Snap-Valve)		Motive* (psig)	Body (psig)	A	B	C	D	E	F	G	H
3/4	3/4	1	24	100	100	3 11/16	3 3/8	41	44 7/8	7 5/6	5 3/8	47 1/8	60
1	1	1	26	150	125	4 5/16	4 3/16	41	44 7/8	7 5/6	5 3/8	47 1/8	60
1 1/2	1 1/2	1	32	125	90	4 1/8	6 1/2	41	44 7/8	7 5/6	5 3/8	47 1/8	60
2	2	2	43	125	85	6 1/4	7 5/8	38 3/8	43 15/16	7 7/16	5 3/8	47 1/8	60
2 1/2	2 1/2	2	65	200	125	6 11/16	9 1/4	38 3/8	43 15/16	7 7/16	5 3/8	47 1/8	60
3	3	2	81	200	125	6 3/8	11 1/4	38 3/8	43 15/16	7 7/16	5 3/8	47 1/8	60

*Minimum motive pressure for all Fig. 2645 Eductors: 40 psig

Fig. 265 Liquid Jet Eductor

Fig. 265 Liquid Jet Eductor is similar in design to the Fig. 264 Water Jet Eductor and is made for liquid pumping and mixing operations and for handling some solids where requirements do not necessitate capacities greater than those obtained with sizes up to and including 3". Typical applications begin on page 12.

The Fig. 265 Liquid Jet Eductor provides higher discharge pressures and higher suction flow capacities than other standard eductors.

In operation, pressure liquid enters the eductor through the pressure nozzle and produces a high velocity jet. This jet action creates a vacuum in the line which causes the suction liquid to flow up into the body of the eductor where it is entrained by the pressure liquid. Both liquids are thoroughly mixed in the throat of the eductor and are discharged against back pressure. The streamlined body with no pockets permits the pressure liquid to move straight through the eductor and reduces the possibility of solids in the suction material collecting and clogging. In addition, pressure drop in the suction chamber is held to a minimum.

Accompanying Bulletin 2M Supplement Performance Data provides performance information.

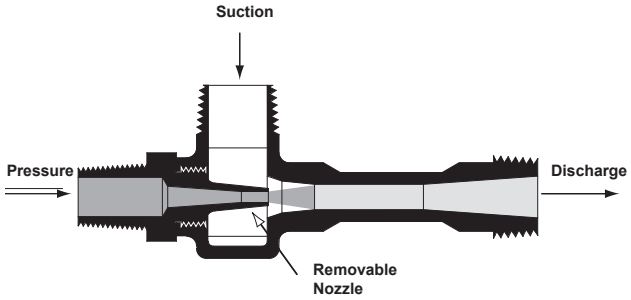

Fig 8. FIG. 265 LIQUID JET EDUCTOR
Eductors of this type have streamlined investment cast bodies with threaded NPT male pipe connections. They are made in sizes ranging from 3/4" to 3" and are stocked in these sizes in Fig. 316 stainless steel. Other materials are available on order.



Fig. 9. FIG. 265 EDUCTOR.

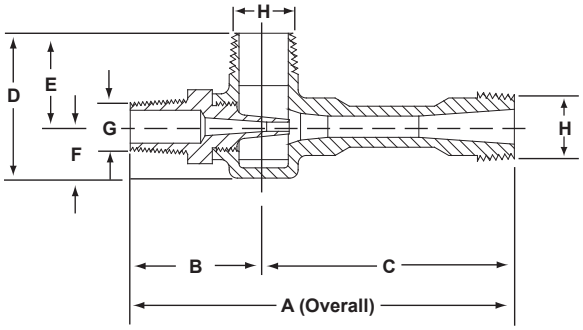

Table 265. Sizes and Dimensions, Fig. 265 Liquid Jet Eductor

Size (In Inches)	Wgt.	Dimensions						Connections	
		A	B	C	D	E	F	G	H
3/4	1	5 7/8	2	3 7/8	2 1/4	1 1/2	3/4	3/8	3/4
1	2	7 1/8	2 1/4	4 7/8	2 3/4	1 3/4	1	1/2	1
1 1/2	4	11	2 3/4	8 1/4	3 21/32	2 1/2	1 5/16	1	1 1/2
2	8	14 3/8	3 1/8	11 1/4	5	2 7/8	2 1/8	1 1/4	2
3	30	23 7/8	4	19 7/8	8	5	3	2	3

Fig. 242 Condensate and Mixing Eductor

Fig. 242 Water Jet Eductors are designed to mix two liquids intimately in various proportions in operations where the pressure liquid is the greater proportion of the mixture. Typical applications include: removal of condensate; mixing gasoline with acid; blending and proportioning chemical solutions; and diluting acids and alkali.

In operation, the pressure liquid issues from the nozzle at high velocity and entrains the suction liquid. The extreme turbulence in the throat of the eductor mixes the two liquids, blending and emulsifying thoroughly and completely. Colloidal suspensions can also be produced.

Entrainment ratio is dependent upon the eductor design. Close regulation within the design limits is usually obtained by a valve in the suction liquid line.

The pressure drop between the pressure liquid and the discharge should be at least 10 psi to give adequate mixing, and the difference between the discharge pressure and the suction pressure should not exceed 75% of the difference between the operating pressure and the suction pressure.

When used for removal of condensate, the eductor should be installed three feet below the condensate level at the drain of the condenser. For performance information, see Technical Data Supplement to Bulletin 2M.



Fig. 10. FIG. 242 EDUCTOR.

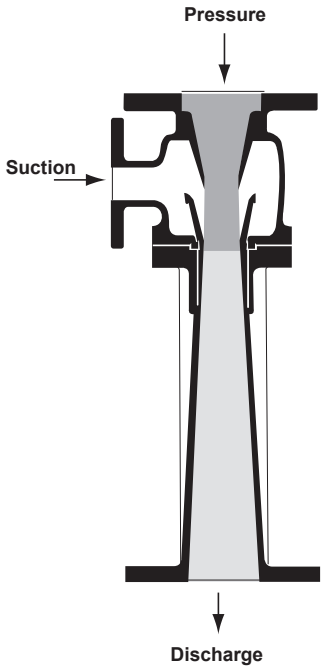

Fig. 11. FIG. 242 EDUCTOR.
The 242 is the flanged type Condensate and Mixing Eductor. This style, too, is made in bronze or cast iron, bronze mounted, but can be supplied in other materials. Nozzles and throat bushings are removable.

Table 4. Sizes and Dimensions, Fig. 242 Condensate and Mixing Eductor

Size No.	Connection in Inches			Dimensions in Inches			Weight in Lbs.
	Pressure	Suction*	Discharge	A	B	C	
2	2	1 - 2	2	4 3/4	11 3/4	3 3/4	50
2 1/2	2 1/2	1 1/4 - 2 1/2	2 1/2	3 1/2	15 1/4	4	60
3	3	2 - 3	3	4	17 15/16	4 5/8	70
4	4	2 - 4	4	5 9/16	20 3/8	5 1/2	80
6	6	3 - 6	6	6 1/4	29	6	270
8	8	4 - 8	8	14 1/16	35 1/2	7 13/16	450

*Note: Suction connection may vary to suit conditions.

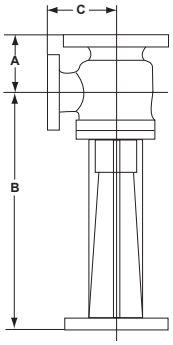

Fig. 258 and Fig. 268 Tank Mixing Eductors

Fig. 258 and Fig. 268 Tank Mixing Eductors are used to agitate liquid, dissolve powdered solids in liquid, and to mix two or more liquids intimately within a tank or other vessel without the use of baffles or moving parts inside the tank. These units take the place of mechanical agitators.

The 268 is used in preference to the 258 in operations where it is desirable to start mixing from a shallow level or where uniform local agitation is required over large, shallow tank area. Typical applications of each are shown in the application section beginning on page 12.

Fig. 258 and 268 Eductors are operated by a flow of pressure liquid through the nozzle. As shown in the sectional drawings, the motive liquid entrains suction liquid, the two are mixed intimately in the venturi, and the mixture is discharged into the tank. Pressure liquid can be taken from the tank by means of a pump or it can be a new liquid. Standard, stock units are designed to entrain 3 gallons of suction fluid for each gallon of motive fluid. (Special designs of the 258 Eductor can be made to give 1 to 1 ratio.)

Normally, the tank is filled by means of the eductors. Mixing occurs as soon as the level of liquid in the tank covers the suction of the eductor. In addition to the mixing obtained between suction and motive fluids in the eductor, the jet action of the discharge from the eductor serves to agitate the tank and prevents stratification.

If a drawing or sketch of the mixing tank is furnished, S&K will recommend and quote on the proper type of distribution system.

Performance information is given in accompanying Performance Data, Bulletin 2M Supplement. Similar units using steam as motive fluid for heating, circulating and mixing are described in Bulletin 3A as “Fig. 314” units.

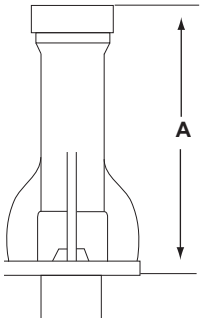

Table 5. Sizes and Dimensions, Fig. 258 Tank Mixing Eductor

Size in Inches	Connections in Inches		Wgt. in Lbs.	Dimensions in Inches
	Disch.	Pressure		A
1/2	1	1/2	2	5 1/2
3/4	1 1/2	3/4	6	8 1/2
1	2	1	22 1/2	12 5/16
1 1/4	2 1/2	1 1/4	29	11 1/8
1 1/2	3	1 1/2	36 1/2	15 7/8
2	4*	2	78	19 5/8
3	6*	3	ON APPL.	28 13/16
4	†	4*		†
5	†	5*		†
6	†	6*		†

*Flanged Connection
† Varies with performance and application
Note: A discharge flange is not supplied on large fabricated units unless required by the application.
(See Fig. 16 for dimensions of Fig. 268 Eductor).

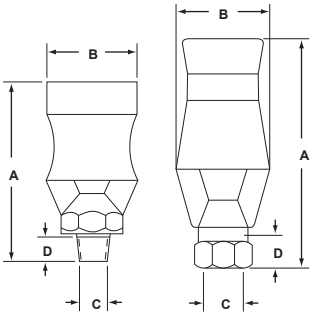

Sizes 3/8, 3/4 Sizes 1 1/2, 2, 3

Table 5-A. Sizes and Dimensions, Fig. 268 Tank Mixing Eductor

Size in Inches	A	B	C	D	Wgt. in Lbs.
3/8	3 3/4	1 3/4	3/8	7/16	3/4
3/4	5 1/4	2 3/8	3/4	9/16	2 1/2
1 1/2	8 13/16	4 1/16	1 1/2	13/16	6 1/4
2	12 1/4	5 13/16	2	45/64	22
3	17	8 1/8	3	15/16	48

Fig. 258 and Fig. 268 Tank Mixing Eductors



Fig. 12. FIG. 258 TANK MIXING EDUCTOR.

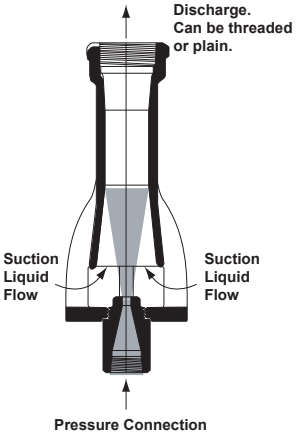

Fig. 13. FIG. 258 TANK MIXING EDUCTOR.
Standard units are made in cast iron and bronze but can be made in many other materials on special order. Large sizes can be fabricated instead of cast.



Fig. 14. FIG. 268 TANK MIXING EDUCTOR. 3/8" and 3/4" sizes.

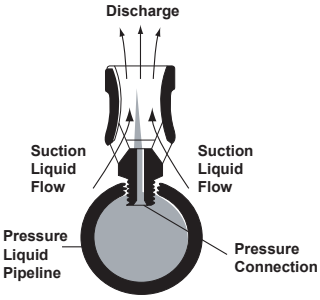

Fig. 15. FIG. 268 TANK MIXING EDUCTOR.
This design is used for 3/8" (3 3/4" overall length and 1 3/4" overall width), and 3/4" (5 1/4" overall length and 2 3/8" overall width) pressure connection sizes. It is threaded directly into threads tapped into the 1 1/2" diameter or larger pressure liquid pipeline. It is cast in one piece and is stocked in cast iron, bronze and 316 stainless steel. Other materials can be supplied on special order.



Fig. 17. FIG. 268 TANK MIXING EDUCTOR. 1 1/2" size and over.

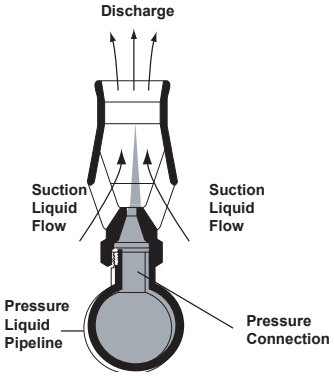

Fig. 16. FIG. 268 TANK MIXING EDUCTOR.
This design is used for 1 1/2" (8 7/8" overall length x 4 1/8" overall width), 2" (12 1/4" overall length x 5 7/8" overall width) and 3" (17" overall length x 8 1/8" overall width) pressure connection sizes. All are cast in one piece and have female thread connections for installation on nipples welded into the pressure liquid piping. The 1 1/2" and 2" sizes are stocked in cast iron, bronze, and 316 stainless steel. The 3" size is stocked in cast iron and stainless steel only. Other materials can be supplied on special order.

Fig. 254 and Fig. 267 and Fig. 227 Hopper-Equipped Eductors

Fig. 254 and Fig. 267 Hopper-Type Eductors are made for handling slurries or dry solids in granular form and are used extensively for ejecting sludges from tank bottoms, for pumping sand from filter beds and for washing and conveying granular materials. Typical materials handled include: borax, charcoal, diatomaceous earth, lime, mash, fly ash, rosin, rock and granulated salt, sand, dry sawdust, light soda ash, dry sodium nitrate, powdered sulphur, wheat and many others.

A typical application of Fig. 254 Eductor is shown in the application section of this bulletin, beginning on page 12. the material from adhering to the sides of the hopper and keep it moving down into the eductor. Pressure water, passing through the eductor nozzle, entrains the sand, sludge or other materials and discharges into the piping system.

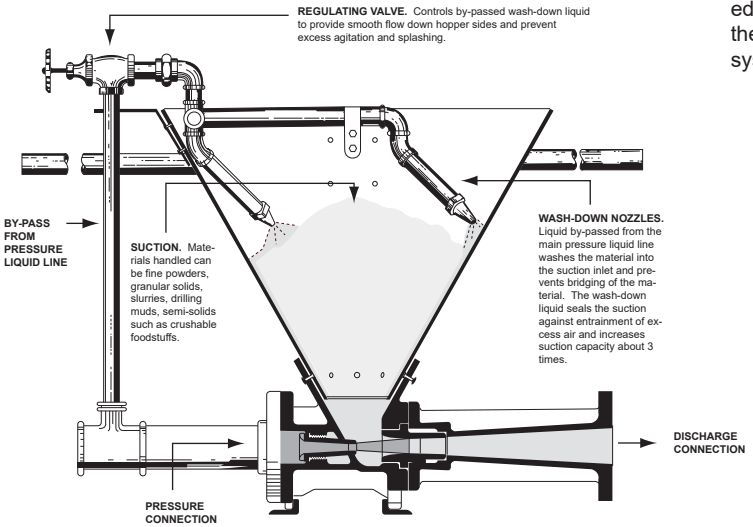

Fig. 18. FIG. 254 HOPPER-EQUIPPED EDUCTOR.
Standard units are made in cast iron and have hardened steel nozzles and throat bushings. Special materials are also available on special order. Both nozzles and throat pieces are removable and pressure and discharge connections can be fitted for hose where maximum portability is desired. Handles and supporting feet are optional.

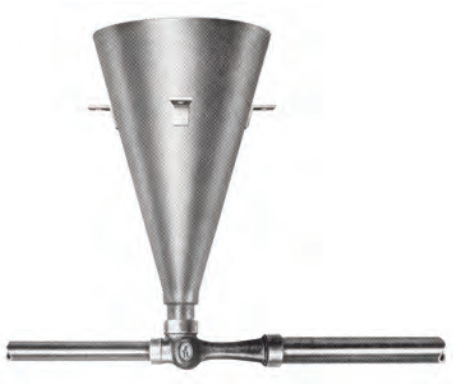

Fig. 19. FIG. 267 HOPPER-EQUIPPED EDUCTOR.
This economical unit is available from stock with body and nozzle in cast iron, bronze, 316 stainless steel, Kynar and PVC. Hoppers are stocked in Type 304 stainless steel (1, 1 1/2 & 2" sizes) and are also available in galvanized steel, brass, aluminum and PVC.

Table 6. Sizes and Dimensions, Fig. 254(1) and Fig. 267(2) Hopper-Equipped Eductors

Size in Inches	Connection (Inches)		Dimension (Inches)			
	Disch.	Press.	A	B	C	D
FIG. 254(1)						
1 1/2	1 1/2	1 1/2	13 1/4	11 1/2	18	15 1/4
2	2	2	14 1/2	13 3/4	21	17 3/4
3	3	2 1/2	17 3/4	17 1/2	23 3/8	19 3/4
4	4	4	19 5/8	24 3/16	27	22 1/2
6	6	6	28 1/16	36 7/16	38	28 5/16
FIG. 267(2)						
1	1	3/4	1 1/2	4 3/16	24	42
1 1/2	1 1/2	1	2	6 1/2	24	41 1/2
2	2	1 1/4	2 1/4	7 5/8	24	41
2 1/2	2 1/2	1 1/2	2 11/16	9 1/4	24	41 1/4
3	3	2	3 1/8	11 1/4	24	40 3/4

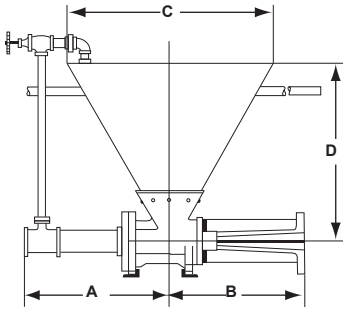

Fig. 254(1)

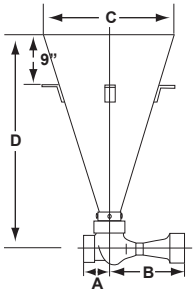

Fig. 267(2)

Fig. 227 Hopper-Equipped Eductor

Furnished with a stainless steel funnel, the eductor can be made of any machinable material. Bronze units up to and including 3" and cast iron units up to and including 4" sizes are available from stock. Prices, delivery or a sectional outline drawing 67-XS-081-J will be furnished on request. Stainless steel funnels are stocked in 1-1/4", 1-1/2" and 2" sizes.

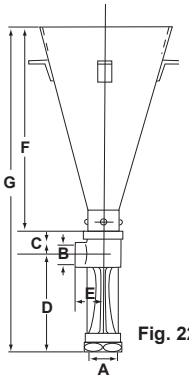

Fig. 227

Table 227. Sizes and Dimensions of Fig. 227 Hopper-Equipped Eductor

Dimensions in Inches							Wgt. (Lbs)
A	B	C	D	E	F	G	
1 1/4	3/4	1 9/16	6 7/16	1 13/16	39 5/8	47 5/8	31
1 1/2	3/4	2	8 13/16	2	39 1/4	50	36
2	1	2 1/2	9 1/8	2 1/4	38 1/2	49 7/8	45
2 1/2	1 1/4	2 3/4	11 1/4	2 3/8	37 7/8	51 7/8	51
3	1 1/2	3 1/16	13 5/16	2 3/4	37	53 3/8	58
4	2	3 5/8	17 1/16	3 3/16	35 1/2	56 3/16	70

Fig. 224 Water Jet Sand and Mud Eductor

Fig. 224 Water Jet Sand and Mud Eductors are used in pumping out wells, pits, tanks, or sumps where there is an accumulation of sand, mud, or other material not easily handled by the standard eductor. They are ideal for handling the heavy sludge residue from refining operations. A typical application of a Fig. 224 Eductor is shown in the application section beginning on page 12.

These eductors have an open suction and are designed to be submerged in the material being handled. The pressure liquid, passing through the nozzle, produces a high velocity jet which entrains the sludge or mud. This mixture is then discharged through a vertical pipe or hose. For performance information, see Bulletin 2M Supplement.

Similar units which use steam as the motive power are described in Bulletin 2A under “Fig. 225 Syphons”.

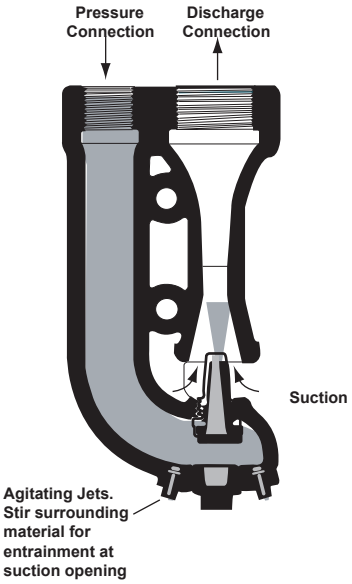

Fig. 20. FIG. 224 WATER JET SAND AND MUD EDUCTOR.
Standard units are made of cast iron with bronze pressure nozzles. Other corrosion-resistant materials are available on special order.



Fig. 21. FIG. 224 EDUCTOR.

Table 7. Sizes and Dimensions, Fig. 224 Sand and Mud Eductor

Size in Inches	Connections in Inches		Wgt in Lbs.	Dimensions in Inches	
	Disch.	Pressure		A	B
1 1/2	1 1/2	1	8	9 3/8	4 5/8
2 1/2	2 1/2	2	42	16 3/4	7 7/8
3	3	2 1/2	87	21 7/8	10 1/4
4	4	3	130	25 1/2	11
5*	5	4	-	30 1/4	17 3/8
6*	6	4	-	35 5/16	18

*Flanged Connections.

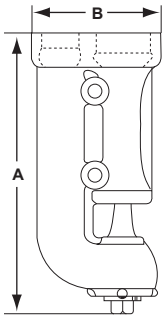

Fig. 235 Annular Multi-Nozzle Water Jet Eductor

Fig. 235 Annular Multi-Nozzle Water Jet Eductors are designed to handle solids and semi-solids. They operate at highest efficiency in large sizes and at low discharge heads. Because these eductors have high air handling capacities, they are particularly well suited for priming large pumps such as dredging pumps which frequently encounter air pockets.

Nozzles on the periphery of the throat introduce the pressure water. The pressure water creates a vacuum which draws in and entrains the material being handled and all flow discharges through the discharge connection. All suction flow is in a straight line through the eductor. For performance information, see Bulletin 2M Supplement.

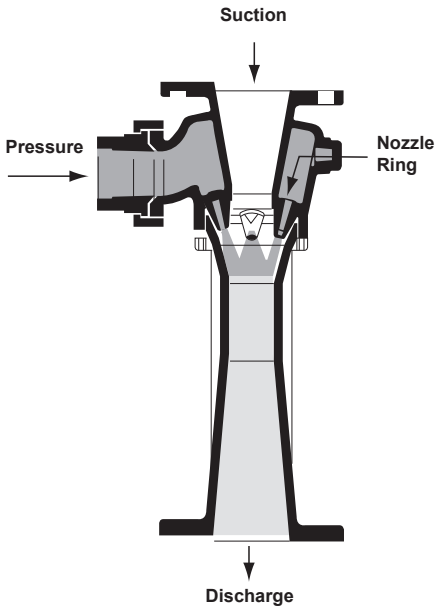

Fig. 22. FIG. 235 ANNULAR MULTI-NOzzLE WATER JET EDUCTOR.
These eductors are made to order from any workable material. Sizes from 1 1/2" to 6" are cast with flanged suction, discharge and pressure connections, except 2" size which has sil-brazed pressure connection. Sizes above 6" (to 28" and up) are generally fabricated.

Table 8. Sizes and Dimensions, Fig. 235 Annular Multi-Nozzle Water Jet Eductor

Size in Inches	Connections in Inches		Wgt. In Lbs.	Dimensions in Inches		
	Suction Disch.	Pressure		A	B	C
1 1/2	1 1/2	1	16	2 7/8	8 7/16	3 3/8
2	2	1 1/4	22	3 1/8	11 7/8	3 3/4
2 1/2	2 1/2	1 1/2	27	3 1/4	12 5/16	4
4	4	2 1/2	65	4 1/8	18 11/16	5 1/8
5	5	3	100	4 5/8	24 7/16	6
6	6	4	150	5 1/4	30	7 1/4

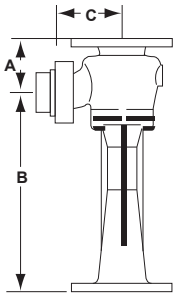



Fig. 23. FIG. 235 EDUCTOR.
(2" size with sil-brazed connection).

Special Purpose Eductors

The special-purpose eductors illustrated here are similar in operation to the basic Fig. 264 Eductor described on page 3.



Fig. 24. FIG. 222 PORTABLE EDUCTOR.
Is designed for use as an auxiliary with a pump where the suction lift is too great for the pump alone. Made of anodized aluminum, bronze or other materials as required.



Fig. 25. FIG. 212 CORROSION RESISTANT EDUCTOR.
Is made of Phenolic Fiberglass Reinforced Plastic (FRP). Body is of one-piece construction.

TYPICAL APPLICATIONS OF S&K WATER JET EDUCTORS

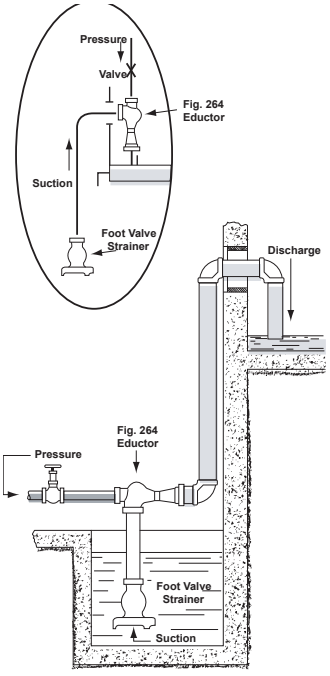

Fig. 26. FIG. 264 EDUCTOR USED TO EMPTY TANKS.
Water jet eductors are often used to empty tanks or to pump out sumps, penstocks, cellars, and the like. The pressure line should be fitted with a regulating stop valve and a pressure gauge while the suction line should be provided with an S&K Strainer. Discharge lines should be sealed for a positive pick-up of the liquid by turning the discharge line up or by submerging the end of the discharge line. It is recommended that the eductor be installed a short distance above the liquid to be handled and that short suction lines be used. Eductors will operate with long suction lines, as shown in the line drawing, however, with suction lifts greater than 15', capacities are reduced considerably. When handling hot liquid the eductor must be arranged with a short suction line or must be submerged.

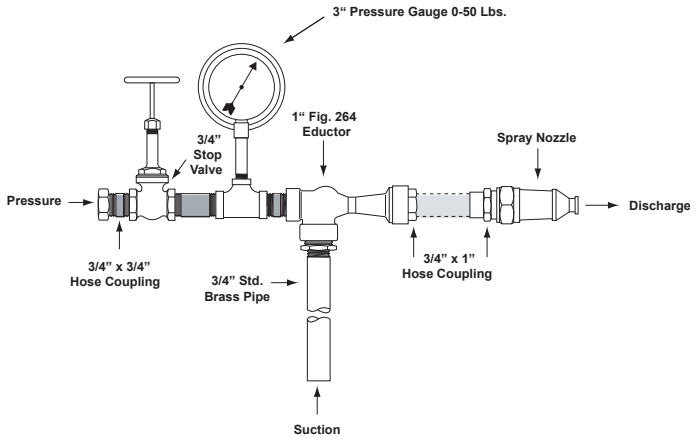

Fig. 27. FIG. 264 EDUCTOR USED IN MIXING LIQUIDS.
This illustration shows a typical arrangement used in mixing liquids such as chemicals or fertilizers in proportion for spraying. The solution to be applied is mixed in a container in approximately twice the strength at which it is to be used. The water jet proportioning apparatus is operated by a jet of high pressure water and is controlled by a 3/4" stop valve. A 3" pressure gauge indicates pressure. The jet action of the pressure water draws the solution from the container and the water and solution are mixed in the throat of the eductor and are discharged through a standard 3/4" hose to a spray nozzle. Solids can be handled and sprayed through a non-clogging type spray nozzle.

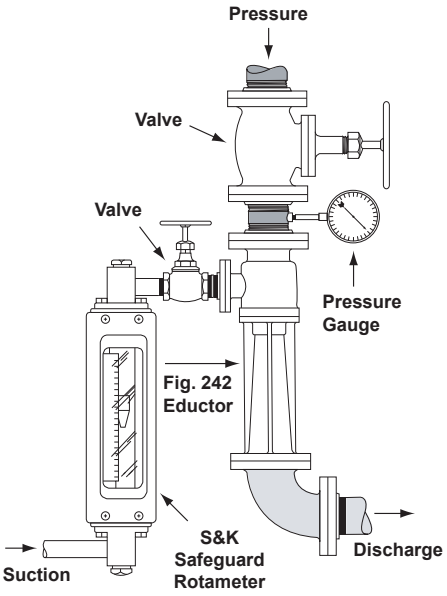

Fig. 28. FIG. 242 EDUCTOR USED IN TYPICAL PROPORTIONING SYSTEM.
This shows a typical proportioning system using a Fig. 242 Eductor. Rate of flow is measured by a Rotameter and is controlled by a valve in the line. A valve in the pressure line and orifice of the eductor nozzle control the flow of the pressure liquid. Fluids are thoroughly mixed in the desired proportions and are then discharged.

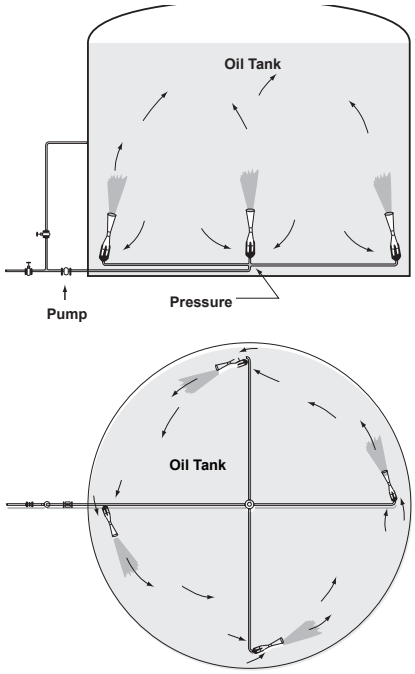

Fig. 29. FIG. 258 EDUCTORS FOR TANK BLENDING OF OILS.
For the tank blending of oils, the arrangement shown has proved highly satisfactory. In this particular installation five 8" Fig. 258 Eductors are used in a 100' tank. Initially, the eductors are used to fill the tank during which time they provide continuous agitation. After the tank is filled, the oil is drawn off and recirculated by means of the same pumps. Oil from the top of the tank issues through the eductor nozzle and entrains oil from the bottom of the tank. The two are mixed in the throat of the eductor and are discharged with sufficient force to maintain constant agitation and further blending in the tank.

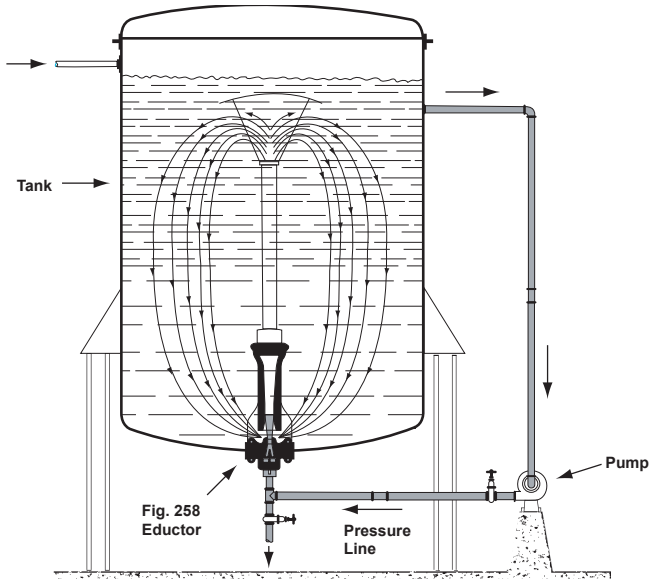

Fig. 30. FIG. 258 EDUCTOR IN BATCH MIXING APPLICATION.
This illustrates the batch mixing of two or more liquids with an S&K Fig. 258 Eductor. The pressure liquid, taken from the top of the tank is passed through a pump to the eductor. The jet action of this fluid entrains the liquid at the bottom of the tank and proper mixing results.

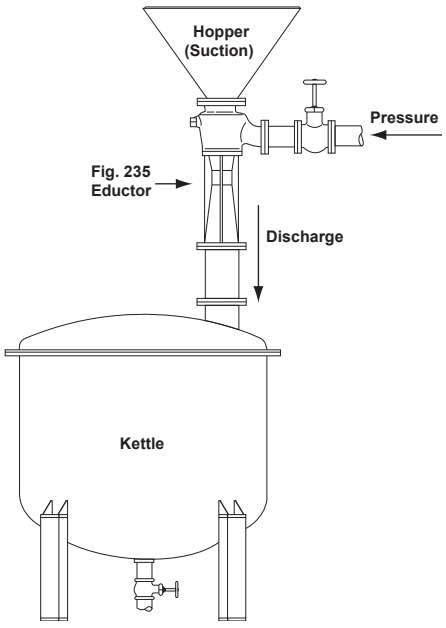

Fig. 31. FIG. 235 EDUCTOR USED IN MIXING DRY POWDER.
Mixing dry powder and a liquid prior to discharge into a tank is accomplished through the use of a Fig. 235 Eductor as shown here.
Pressure liquid enters the eductor, entrains the powder, mixes the two in the venturi of the eductor and discharges the mixture into a receptacle. The streamline eductor design provides maximum efficiency in this operation.

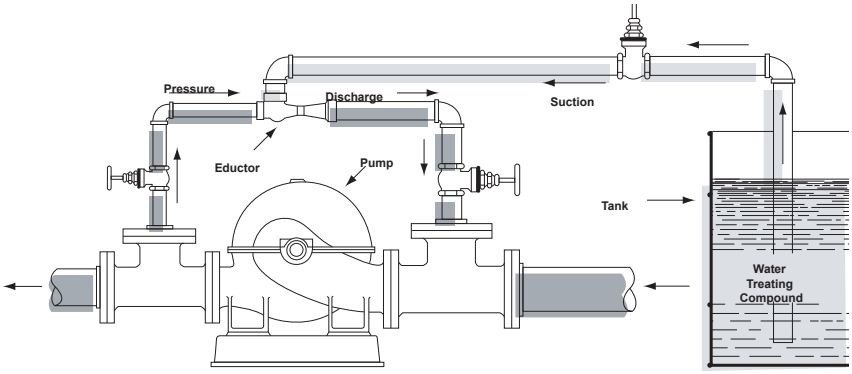

Fig. 32. FIG. 264 OR FIG. 265 WATER JET EDUCTORS USED TO ENTRAIN ANOTHER LIQUID.
This illustration shows a Fig. 264 or Fig. 265 Eductor being used to introduce a water treating compound into boiler feed water. A portion of the water issuing from the pump is bypassed into the eductor where it acts as the pressure medium to draw in and entrain the water treating compound.

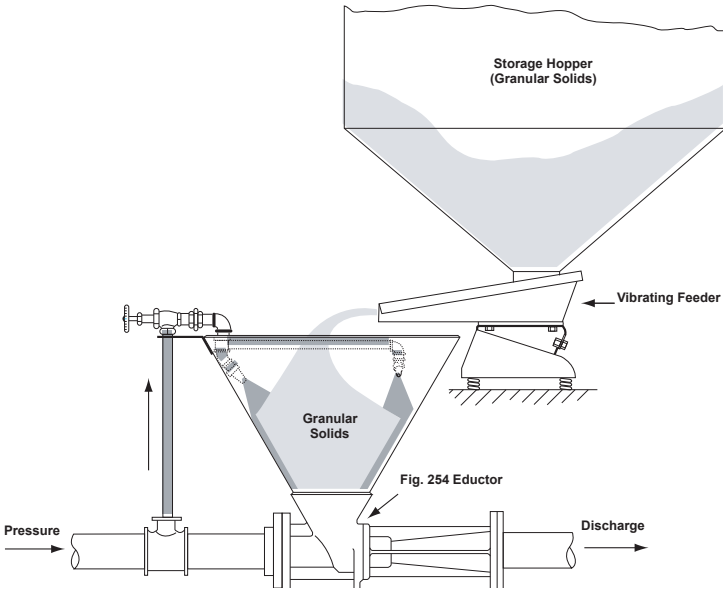

Fig. 33. APPLICATION OF FIG. 254 SOLIDS/LIQUID HOPPER EDUCTOR.
One arrangement for handling granular solids with the Fig. 254 Eductor is illustrated here. In this installation, granular solids drop from a storage hopper into a vibrating feeder which feeds the solids into the eductor hopper at a controlled rate. Water, bypassed from the pressure line, flows through nozzles located in the hopper and washes the solids into the eductor. There they are entrained by the jet action of the pressure water and are discharged. Although the material can be placed in the hopper manually, this system reduces handling and controls the flow of solids.

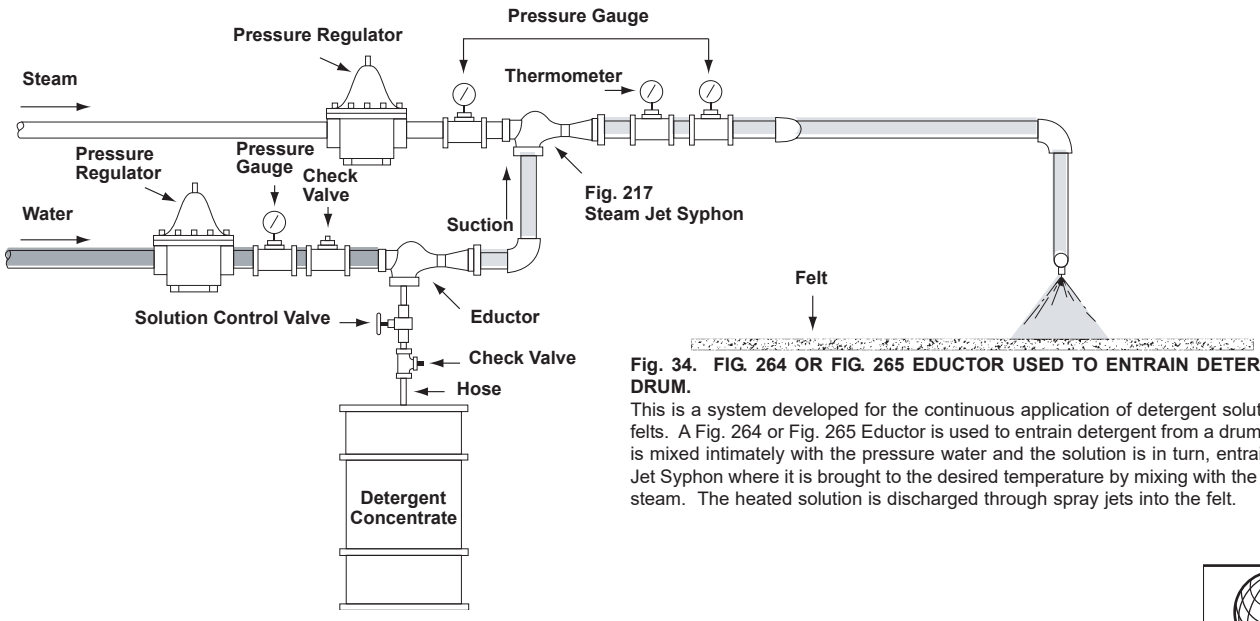

Fig. 34. FIG. 264 OR FIG. 265 EDUCTOR USED TO ENTRAIN DETERGENT FROM A DRUM.
This is a system developed for the continuous application of detergent solution to paper mill felts. A Fig. 264 or Fig. 265 Eductor is used to entrain detergent from a drum. This detergent is mixed intimately with the pressure water and the solution is in turn, entrained by a Steam Jet Syphon where it is brought to the desired temperature by mixing with the syphon's motive steam. The heated solution is discharged through spray jets into the felt.

ISO 9001 Certified

CS-650-600 : Identification sheet

VWTC PROJECT NUMBER:	Iqaluit WWTP	REV:	01
PROJECT NAME:	5000218036	SUBMITTED TO (COMPANY):	
ENGINEER:	G. HÉBERT	SUBMITTED TO (RESPONSIBLE)	
PROJECT MANAGER:	C. BEKAERT	PROJECT NUM REFERENCE.:	
PHONE NUMBER:		LOT NUMBER:	

SUPPLIER	EQPT CODE	EQPT TAG NO	DIA	DESCRIPTION	INFO 1	INFO 2	INFO 3	APPLIC.	NOTE	REV
KOFLO	FPMIPV202516	SM-04-719	Dia.= 1-1/2	HP-250 MIXER	STATIC MIXER / MANUFACTURER : KOFLO / MODEL : / 1.5-40C-4-6-21-1/2"	N/A	N/A	HP-250		1

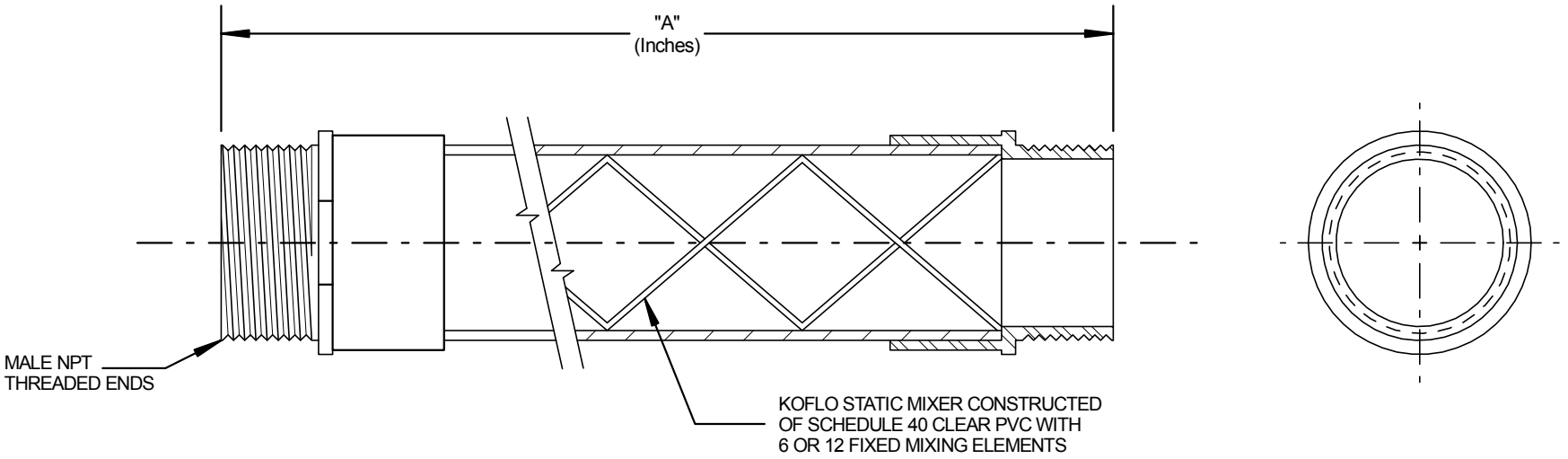

Size	6 Element Model Number	"A" 6 Element	12 Element Model Number	"A" 12 Element
3/8"	3/8-40C-4-6-2	6-1/2	3/8-40C-4-12-2	11
1/2"	1/2-40C-4-6-2	7	1/2-40C-4-12-2	12
3/4"	3/4-40C-4-6-2	9	3/4-40C-4-12-2	15
1"	1-40C-4-6-2	11	1-40C-4-12-2	18
1-1/4"	1.25-40C-4-6-2	14	1.25-40C-4-12-2	25
1-1/2"	1.5-40C-4-6-2	15	1.5-40C-4-12-2	28
2"	2-40C-4-6-2	19	2-40C-4-12-2	35

Koflo Corporation
309 CARY POINT DR.
CARY, IL 60013

SCALE: NONE	APPROVED BY JJT	DRAWN BY NJF
DATE: 1/18/94		REVISED 10/15/01
CUSTOMER:		REVISED 5/22/08
		REVISED 6/12/09
MODEL NO: CLEAR PVC SCHEDULE 40 MIXER		DRAWING NUMBER: KD-993

CS-910-501 : Identification sheet

VWTC PROJECT NUMBER:	Iqaluit WWTP	REV:	01
PROJECT NAME:	5000218036	SUBMITTED TO (COMPANY):	
ENGINEER:	G. HÉBERT	SUBMITTED TO (RESPONSIBLE)	
PROJECT MANAGER:	C. BEKAERT	PROJECT NUM REFERENCE.:	
PHONE NUMBER:		LOT NUMBER:	

SUPPLIER	EQPT CODE	EQPT TAG NO	DIA	DESCRIPTION	INFO 1	INFO 2	INFO 3	APPLIC.	NOTE	REV
ENVIREQUIP	CMSPMI319897	MXR-04-760	N/A	HP-250 MIXER	HP250 (2016) MIXER // Manuf : Envirequip // Model : EVG01-0.3 // Mtl : 304L SS	Impeller Dia : 11.75" // 180,19 RPM // Shaft lg : 23.125"	Nord Motor 0.33 HP / 575/3/60	HP-250		1

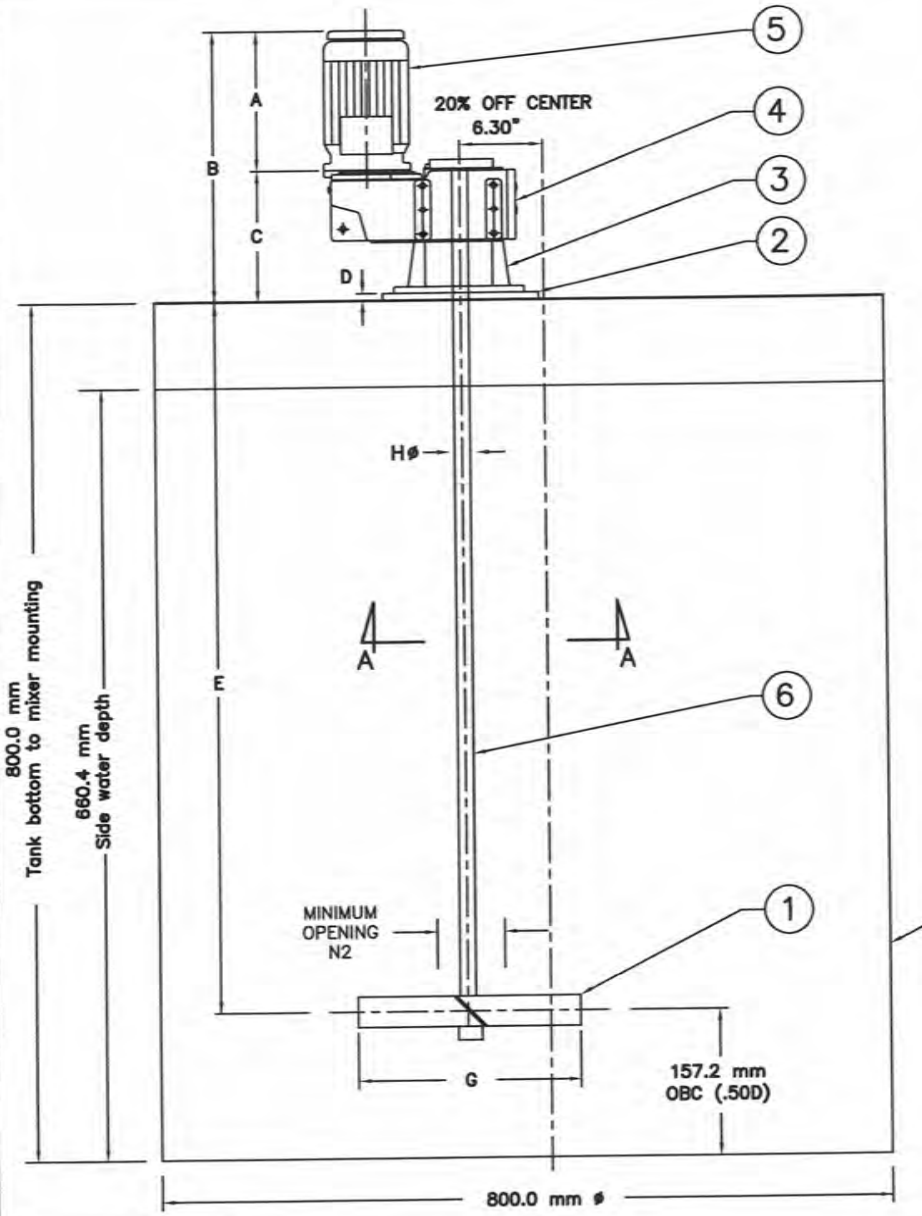

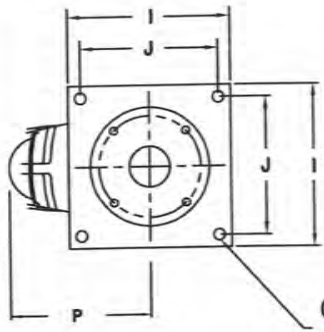

"A–A"

ITEM	DESCRIPTION	MATERIAL
1	Axial impeller (P–4) 314.3 mm (12.375") ø @ 45.0°	304L
2	Base 304.8 mm x 304.8 mm (12.0" X 12.0")	Steel
3	Pedestal <B5 Flange>	
4	NORD Reducer 181.19 RPM	
5	NORD motor 0.33 Hp, 575/3/60, TEFC	
6	Shaft: (1) section 642.9 mm (25.312") @ 1.25"ø	304L

APPL'N: POLYMER (QTY 1)
MIX–TECH MIXERS
MODEL: EVG01–0.33
0.25 kW @ 181.19 RPM
S/N:
Rotation: Clockwise
Thrust: Down
Tag #:

Weight: 65 Lbs
Mounting loads
Torque reaction = 289 in lb
Bending moment = 309 in lb
Estimated beam: 7C @ 9.8 # up to 4 ft.

ST #: 910–501
LATIS #: CMSPMI319897

HP 250

Dimensions: Inches																
MOD.:	A	B	C	D	E	E2	F	Gø	Hø SHAFT	I	J	Kø	Lø	M	N2	P
EVG01	8.12	13.98	5.36	.50	25.312	–	–	12.37	1.25	12.0	10.5	.562	.50	–	6.25	6.0

Dimensions: mm																
MOD.:	A	B	C	D	E	E2	F	Gø	Hø SHAFT	I	J	Kø	Lø	M	N2	P
EVG01	206.2	355.1	136.1	12.7	642.9	–	–	314.3	31.8	304.8	266.7	14.3	12.7	–	158.8	152.4

Ce dessin et l'information qu'il contient sont la propriété de ENVIREQUIP WTEM Inc. Il est interdit de le copier, le photographier, l'imprimer, le prêter ou de l'utiliser sans la permission de ENVIREQUIP WTEM Inc.

This drawing and the information contained thereon is the property of ENVIREQUIP WTEM Inc. It is not to be printed, photographed, copied, loaned or used without the permission of ENVIREQUIP WTEM Inc.

NO	DATE	REVISION	P/B

PROJET/PROJECT
EVG01–0.33/304/575 (CIRT)

ENVIREQUIP
WTEM INC.
400 Boul. du Lac – Suite 2
Dorval, QC H9S 5J8
Montreal Tel: (514) 338-1043
Kitt (21484 Little Russell Rd.)
Glen Robertson, Ont K0B 1H0
Ontario Tel: (613) 874-2818
Fax: (613) 874-2828
E-mail: envireq@glen-net.ca

TITRE/TITLE
"MIX–TECH" Mixers
Veolia Water Technologies
EVG SERIES

DESSINÉ PAR: DRAWN BY: PJ	DATE: August 2015
DESS. NO: DWG NO: EVG	ECH./SCALE: N.T.S
VÉRIFIÉ PAR: CHECKED BY: PJ	PROJ.NO:
APPROUVÉ PAR: APPROVED BY: RJ	REV: 00

CS-910-400 : Identification sheet

VWTC PROJECT NUMBER:	Iqaluit WWTP	REV:	01
PROJECT NAME:	5000218036	SUBMITTED TO (COMPANY):	
ENGINEER:	G. HÉBERT	SUBMITTED TO (RESPONSIBLE)	
PROJECT MANAGER:	C. BEKAERT	PROJECT NUM REFERENCE.:	
PHONE NUMBER:		LOT NUMBER:	

SUPPLIER	EQPT CODE	EQPT TAG NO	DIA	DESCRIPTION	INFO 1	INFO 2	INFO 3	APPLIC.	NOTE	REV
WAM	CMSPGU320680	PAG-04-720, PSF-04-730	N/A	HP-250 FEEDER	SCREW FEEDER // Manuf : WAM // Model : MBF/073.A/TT/UD4.SST.UO2/F.0.Q.+.++++.++++ Feeding rate: 2,3 Liter/min at 25 rpm For material: dry polymer powder, approx.. 0.8 Kg/Ltr Blending tool: nbr. 1, plowshare shape	Feeding screw: nbr. 4, full flighting on pipe, SS304 Drive blending tool: varvel gear box ratio 1:40 Drive feeding screw: varvel gear box ratio 1:70 Shaft sealing: SS with	Baldor 0.75 HP blending tool motor 1750rpm Baldor 0.5 HP feeding screw motor 1750rpm Nema 056, 575V-60Hz, Inverter duty Discharge tube :MDXSC24	HP-250		1

WAM®

WAMGROUP

1

TECHNICAL CATALOGUE

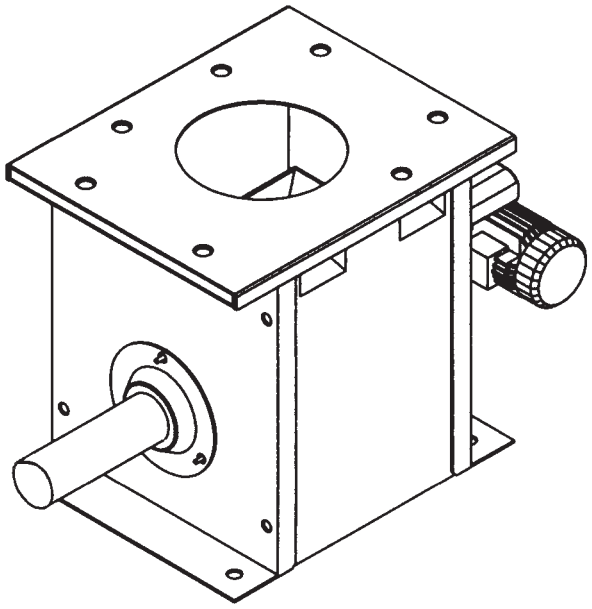

MBF

- **MICRO - BATCH FEEDERS**
  TECHNICAL CATALOGUE
- ***MIKRODOSIERER***
  TECHNISCHER KATALOG
- **MICRODOSEURS**
  CATALOGUE TECHNIQUE
- ***MICRODOSATORI***
  CATALOGO TECNICO

All rights reserved © WAMGROUP S.p.A.

CATALOGUE No.	VAL.062.-.T.4L		CREATION DATE
ISSUE	CIRCULATION	DATE OF LATEST UPDATE	03.00
A17	100	02.11	

All the products described in this catalogue are manufactured according to **WAMGROUP S.p.A. Quality System procedures**. The Company's Quality System, certified in July 1994 according to International Standards **UNI EN ISO 9002** and extended to the latest release of **UNI EN ISO 9001**, ensures that the entire production process, starting from the processing of the order to the technical service after delivery, is carried out in a controlled manner that guarantees the quality standard of the product.

*Alle in diesem Katalog beschriebenen Produkte werden gemäß dem **Qualitätssystem der WAMGROUP S.p.A.** hergestellt. Das im Juli 1994 gemäß der internationalen Norm **UNI EN ISO 9002** und auf die neueste Version der **UNI EN ISO 9001** erweiterte, zertifizierte Qualitätssystem der Firma gewährleistet, dass der gesamte Produktionsprozess von der Auftragsbearbeitung bis zum technischen Kundendienst nach Lieferung in kontrollierter Art und Weise erfolgt, so dass der Qualitätsstandard des Produkts gewährleistet ist.*

Tous les produits décrits dans ce catalogue sont fabriqués selon les procédures du **Système de Qualité de WAMGROUP S.p.A.**, certifié en Juillet 1994 selon les normes internationales **UNI EN ISO 9002** et étendu à la dernière version de la norme **UNI EN ISO 9001**. Cela garantit que le processus de production, à partir de la gestion de la commande au service technique après-vente, est effectué de manière contrôlée garantissant la norme de qualité du produit.

*Tutti i prodotti descritti nel catalogo sono stati realizzati secondo le **procedure del Sistema Qualità di WAMGROUP S.p.A.** Il Sistema Qualità aziendale, certificato dal luglio 1994 in conformità alle normative internazionali **UNI EN ISO 9002** e successivamente esteso all' ultima versione delle normative **UNI EN ISO 9001**, garantisce che l'intero processo produttivo, dalla formulazione dell'ordine fino all'assistenza tecnica dopo la consegna, si svolga secondo modalità controllate che garantiscono lo standard qualitativo del prodotto.*

This publication cancels and replaces any previous edition and revision.
We reserve the right to implement modifications without notice.
This catalogue cannot be reproduced, even partially, without prior written consent by the Manufacturer.

Diese Veröffentlichung storniert und ersetzt alle früheren Ausgaben und überarbeiteten Fassungen.
Wir behalten uns das Recht vor, Änderungen ohne vorherige Information durchzuführen.
Dieser Katalog darf selbst auszugsweise nicht ohne das schriftliche Einverständnis der Herstellers vervielfältigt werden.

Cette publication annule et remplace toute édition et révision antérieure.
Nous nous réservons le droit de mettre en place des modifications sans préavis
Aucune reproduction, partielle ou intégrale du catalogue, ne pourra être faite sans l'accord préalable et écrit du Fabricant.

Questa pubblicazione annulla e sostituisce le edizioni e revisioni precedenti.
Ci riserviamo la facoltà di apportare modifiche senza preavviso.
Il presente catalogo non può essere riprodotto, nemmeno parzialmente, senza previo consenso scritto del Costruttore.

1 TECHNICAL CATALOGUE — TECHNISCHER KATALOG

DESCRIPTION AND TECHNICAL CHARACTERISTICS	BESCHREIBUNG UND TECHNISCE MERKMALE T. 6 → .23
ORDER CODES	BESTELLCODES 24 → .27
ACCESSORIES	ZUBEHÖR 28 → .42
OPERATION AND MAINTENANCE	BETRIEBS- UND WARTUNGSANLEITUNG 43
INQUIRY AND ORDER FORM	ANFRAGE- UND BESTELLBLATT 44

1 CATALOGUE TECNIQUE — CATALOGO TECNICO

DESCRIPTION ET CARACTERISTIQUES TECHNIQUES	DESCRIZIONE E CARATTERISTICHE TECNICHE T. 6 → .23
CODES DE COMMANDE	CODICI DI ORDINAZIONE 24 → .27
ACCESSOIRES	ACCESSORI 28 → .42
UTILISATION ET ENTRETIEN	USO E MANUTENZIONE 43
QUESTIONNAIRE	MODULO DI RICHIESTA 44

2 MAINTENANCE CATALOGUE — WARTUNGSKATALOG

OPERATION AND MAINTENANCE	BETRIEBS- UND WARTUNGSANLEITUNG M. 4 → .24

2 CATALOGUE D'ENTRETIEN — CATALOGO DI MANUTENZIONE

UTILISATION ET ENTRETIEN	USO E MANUTENZIONE M. 4 → .24

3 SPARE PARTS CATALOGUE — ERSAITZTEILKATALOG

SPARE PARTS	ERSATZTEIL R. 4 → .12

3 CATALOGUE PIECES DE RECHANGE — CATALOGO RICAMBI

PIECES DE RECHANGE	PEZZI DI RICAMBIO R. 4 → .12

CODES - *CODEBEZEICHNUNGEN* - SIGLES - *SIGLE*

MBF	Micro batch feeder	Mikrodosierer	Microdoseur modulaire	Microdosatore per polveri
MDXCR	Round cover	Runde Abdeckung	Couvercle rond	Coperchio tondo
MDXGS	Cutter grille for square hopper	Quadratischer Aufreißgrill	Grille carré	Griglia quadrata
MDXSV	Vertical spout	Ablaufrohr	Sortie verticale	Scarico verticale
MDXTR	Round hopper	Runder Aufgabetrichter	Trémie ronde	Tramoggia verticale
MDXTS	Square hopper	Quadratischer Aufgabetricher	Trémie carrée	Tramoggia quadrata
UTD	Metering screw	Dosierwerkzeug	Outil dosage	Utensile dosaggio
UTO	Blending tool	Homogenisierwerkzeug	Homogénéisateur	Utensile omogenizzazione
MBT	Seal	Wellenabdichtung	Etanchéité	Tenuta
MBTP	Extendend pipe	Verlängert Innenrohr	Tube rallongé	Tubo prolungato
MBPR	Linerfeeder pipe	Dosierrohr mit innernaiskleidung	Tube de dosage avec revetement interieeur	Scarico rivestito internamente
MBPI	STD inspection hatch	STD inspektionstür	Trappe de visite	Portello di ispezione
MBPIP	Inspection hatch with extended tube	Inspektionstür mit länglichrohr	Trappe de visite avec tube prolonge	Portello di ispezione con tubo prolungato

MBF micro-batch feeders are used in gravimetric and volumetric dosing plants for powders and granular materials of various kinds. The body is made of WAM®'s engineering polymers SINT®ER ,SINT®AL or AISI 304L/316L, while all other feeder parts including nuts and bolts are made of staimless steel 304.

On request micro-batch feeders are supplied in a food-grade version.

Unless otherwise specified all the dimensions are given in millimetres.

MBF Mikrodosierer werden in gravimetrischen und volumetrischen Dosieranlagen von Pulvern und Granulaten aller Art eingesetzt. Das Gehäuse besteht aus den Polymeren SINT®ER, SINT®AL oder edelstahl 1.4301/1.4401. Alle anderen Komponenten einschließlich Schraubenmaterial sind aus Edelstahl 1.4301.

Auf Wunsch ist eine nahrungsmitteltaugliche Version lieferbar.

Wenn nicht anders angegeben, alle Maßangaben in Millimetern.

Les microdoseurs MBF sont utilisés dans toutes les installations de dosage à poids ou volumétriques pour les plus divers matériaux en poudre ou granulés. Le corps est construit en SINT®ER, SINT®AL ou AISI 304L/316L. Les autres composants sont en acier inox 304L, boulonnerie comprise.

Sur demande le microdoseur est fourni en version indiquée pour des produits alimentaires.

Sauf indication contraire, toutes les dimensions sont exprimées en millimètres.

I microdosatori MBF sono utilizzati in tutti gli impianti di dosaggio a peso o volumetrici per polveri e materiali granulari di vario tipo. Il corpo è costruito in SINT®ER, SINT®AL o AISI 304L/316L, mentre le altre parti sono in AISI 304L, bulloneria compresa.

Su richiesta, queste macchine possono essere fornite idonee per prodotti alimentari.

Se non specificato altrimenti, tutte le dimensioni sono in millimetri.

FINISHING - *FINISH* - FINITION - *FINITURE*

End plate	Endschild	Bride d'extremité	Frontale	**AISI 304L EDELSTAHL 1.4301**
Drive support	Antriebshaltung	Plaque de fixation	Piastra d'attacco	**ALUMINIUM ALLUMINIO**
Reducer	Getriebe	Reducteur	Riduttore	**ALUMINIUM ALLUMINIO**
Speed variator	Regelgetriebe	Variateur	Variatore	**RAL 5010**
Motor	Elektromotor	Moteur	Motore	**RAL7001**

SELECTION CRITERIA - *AUSWAHLKRITEREN* - CRITERES DE CHOIX - *CRITERI DI SCELTA*

CF = [dm³/ J] = theoretical capacity per hour at 1 RPM.
CE = [dm³/ h] = real capacity of MBF
CR = [dm³/ h] requested capacity.
CT = [dm³/ h] theoretical capacity
N = [RPM] = metering screw speed.
mvs = material efficienc

Given:
- the characteristics of the material to be handled, the application and the feeding system into the microbatch feeder;
- CR (=capacity requested by customer), in order to choose correct MBF type proceed as follows:
- Check from material table mvs and all other important characteristics (e.g. metering screw type, accessories, others)
- Calculate real capacity CE of standard MBF (with fixed or variable speed as required by customer)

CE = CT x mvs

where for CT refer to page T.10. If difference between CE and CT is too big (that is, if customer does not accept standard MBF) it is necessary to find correct MBF speed in order to obtain the requested capacity, using the following formula:

$$N = \frac{CR}{CF \times mvs}$$

Subsequently, select ratio nearest to specific requirements (see page T.11). In carrying out these calculations it has to be born in mind that mvs given in materials table is empirical. The real value depends on a number of factors which may be difficult to control, such as the condition of the material, atmospheric conditions, height of material column inside the hopper, speed of rotation etc. For material efficiency mvs see pag. T10.

CF = [dm³/J] = theoretische Stundenleistung bei 1 U/min
CE = [dm³/ h] =effektive Dosierleistung MBF
CR = [dm³/ h] = kundenseits geforderte Dosierleistung
CT = [dm³/ h] = theoretische Dosierleistung
N = [Upm] = Drehzahl des Dosierwerkzeugs
mvs = Material-Wirkungsgrad

Gegeben:
- Bezeichnung und Beschreibung des Dosierguts, zu erwartende Betriebs- und Beschickungsart
- CR (= kundenseits geforderte Dosierleistung). Um den MBF-Dosierer korrekt auszulegen, muß nun wie folgt vorgegangen werden:
- Eigenschaften des Dosierguts der Materialtabelle entnehmen z.B. mvs, Dosierwerkzeug, Zubehör etc.)
- Effektive Dosierleistung CE des Standard-Dosierers errechnen (mit fester oder variabler Drehzahl, je nach Kundenwunsch)

CE = CT x mvs

wobei CT wie auf Seite T.10 angegeben. Wenn Differenz zwischen GE und CT zu groß, bzw. Kunde MBF Standard-Dosierer nicht akzeptiert, muß jene Drehzahl gefunden werden, bei welcher der Dosierer die kundenseits geforderte Stundenleistung erbringt. Hierzu ist folgende Formel zu verwenden :

$$N = \frac{CR}{CF \times mvs}$$

Demzufolge wählt man eine Getriebeuntersetzung (siehe Seite T.11), die den Wünschen des Kunden am nächsten kommt. Bei der Ermittlung der vorgenannten Werte ist zu berücksichtigen, daß der in der Materialtabelle aufgeführte Parameter mvs ein rein empirischer Durchschnittswert aus der Summe der bisher gemachten Erfahrungen mit dem jeweiligen Medium ist, welcher im Einzelfall teilweise stark schwankt. In der Tat hängt mvs von mehreren, zum Teil schwer kontrollierbaren Variablen ab (z.B. Zustand des Dosierguts, Witterungseinflüsse, Materialsäule im Aufgabetrichter, Dosierer-Drehzahl etc.). Für Material-Wirkungsgrad siehe Seite T.10.

CF = [dm³/J] = débit horaire théorique pour 1 RPM
CE = [dm³/h] = débit effectif MBF
CR = [dm³/h] débit souhaité par le client
CT = [dm³/h] débit théorique MBF
N = [TPM] = vitesse de rotation de la spire doseuse.
mvs = coefficient du matéria

Donné:
- la description du matériau à doser, le fonctionnement prévu et le système d'alimentation du microdoseur,
- CR (= débit souhaité par le client), là succession correcte des opérations pour la choix d'un microdoseur est la suivante:
- Contrôler dans le tableau des matériaux mvs et toutes les autres caractéristiques impor-tantes (ex.; type de spire doseuse, accessoires, autres) - Calculer le débit effectif CE du MBF standard (vitesse fixe ou variable suivant la demande du client)

CE = CT x mvs

où CT est à la page T.10. Si la différence entre CE et CT est trop grande (c'est à dire, le client n'accepte pas le MBF standard), il est nécessaire de trouver à quelle vitesse de rotation devra tourner le MBF pour obtenir le débit souhaité par le client. On utilisera la formule:

$$N = \frac{CR}{CF \times mvs}$$

Ensuite il faut choisir (voir page T.11) le rapport qui se rapproche le plus de celui souhaité par le client. A ce point du calcul quoi qu'il en soit, il est nécessaire de tenir compte que mvs figuran dans le tableau matériaux est en realité une donnée empirique obtenue comme une moyenne des résultas de l'expérience passée. Cette donnée peut dépendre en fait de multiple facteurs difficiles à contrôler (ex. état du matériau, conditions atmosphériques, hauteur de la colonne du matériau dans la trémie, vitesse de rotation etc.).
Le coefficient du matériau mvs est indiqué a page T.10.

CF = [dm³/J] = portata teorica oraria per 1 RPM
CE = [dm³/h] = portata effettiva MBF
CR = [dm³/h] = portata richiesta dal cliente
CT = [dm³/h] = portata teorica MBF
N = [RPM] = velocità di rotazione dell'utensile di dosaggio
mvs= efficienza del material

Dati:
- la descrizione dei materiale da dosare, il funzionamento previsto e il sistema di alimentazione dei microdosatore,
- CR (= portata richiesta dal cliente), la successione corretta delle operazioni per la scelta dei MBF è la seguente:
- controllare mvs e tutte le altre caratteristiche importanti nella tabella materiali (es.: tipo di utensile di dosaggio, accessori, vari, etc.)
- calcolare la portata effettiva CE del MBF standard (a velocità fissa o variabile in base alla richiesta dei cliente)

CE = CT x mvs

dove CT è a pag. T.10. Se la differenza tra CE e CT è troppo grande (cioè il cliente non accetta il ns. MBF standard) è necessario trovare a quale velocità di rotazione deve ruotare l' MBF per ottenere la portata richiesta dal cliente. Si usa la formula:

$$N = \frac{CR}{CF \times mvs}$$

Poi si sceglie (vedi pag. T.11) il rapporto che più si avvicina ai desideri del cliente. In questi calcoli è comunque necessario tenere presente che mvs riportato nella tabella materiali, è in realtà un dato empirico ottenuto come media dei risultati delle esperienze fatte, risultati talvolta anche distanti tra di loro. Esso può dipendere infatti da molteplici variabili, alcuni delle quali di difficil controllo (es. stato del materiale, condizioni atmosferiche, altezza colonna materiale nella tramoggia, velocità di rotazione, etc.).
Il coefficien e mvs è indicato a pagina T.10.

DIMENSIONS - *EINBAUMASSE* - ENCOMBREMENT - *INGOMBRO*

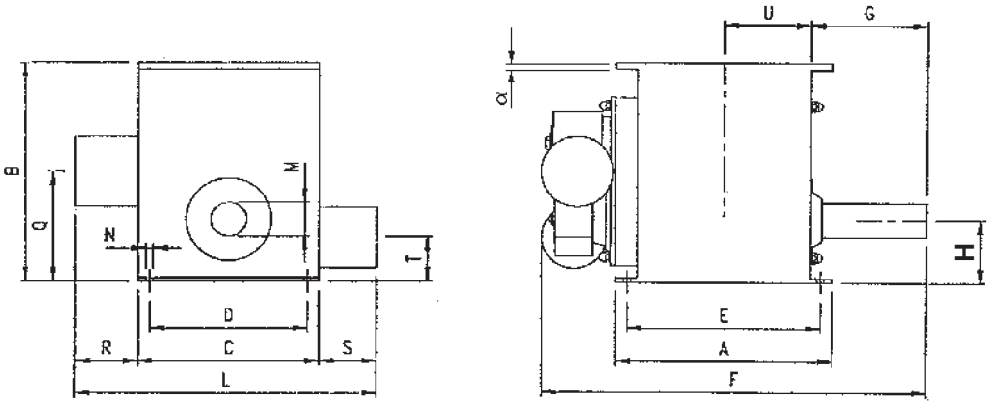

MBF	A	B	C	D	E	F	G	H	L*	M	N	Q	R*	S**	T	U	α	dm³	kg
042	310	295	250	200	253	595	200	100	535	42	12.5	235	160	125	100	105	12	5	20
073	464	486	390	305	410	855	250	135	600	76	12.5	240	135	75	95	185	15	28	60
114	464	486	390	305	410	855	250	135	600	114	12.5	259	135	75	95	185	15	35	65

* Without variable speed reducer
* *Ohne Regelgetriebe*
* Sans variateur
* *Senza variatore*

** According to IEC - Standards
** *Gemäß IEC - Norm*
** Selon normes IEC
** *Secondo norme IEC*

MBF 042

TOP FLANGE
FLANSCH OBEN
BRIDE SUPERIEURE
FLANGIATURA SUPERIORE

BOTTOM FLANGE
FLANSCH UNTEN
BRIDE INFERIEURE
FLANGIATURA INFERIORE

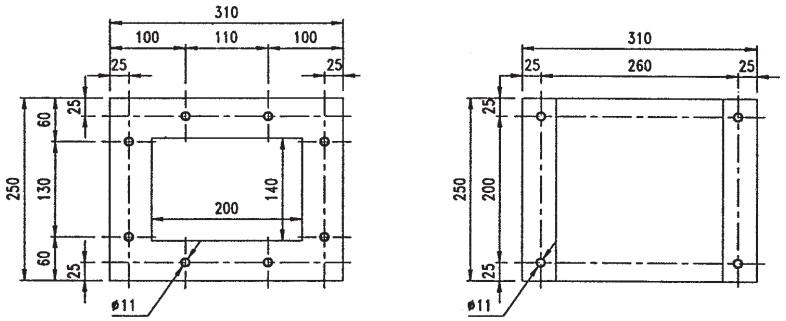

MBF 073

MBF 114

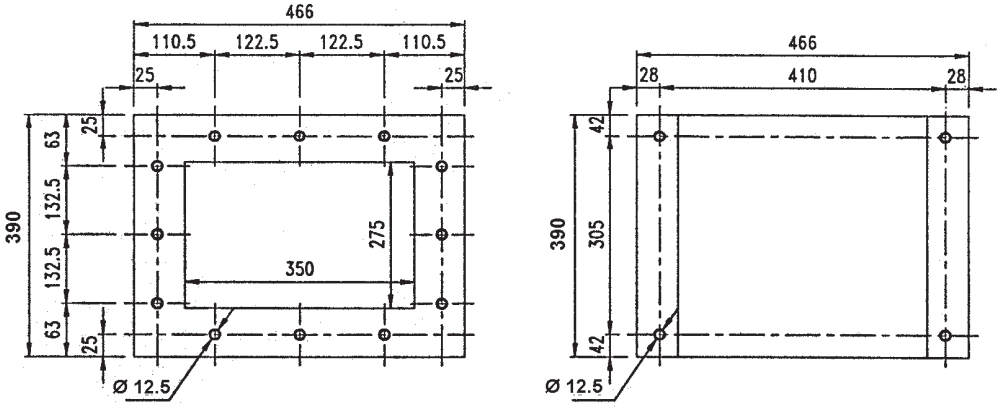

STANDARD SUPPLY - *STANDARD-LIEFERUMFANG* - FORNITURE STANDARD - *FORNITURE STANDARD*

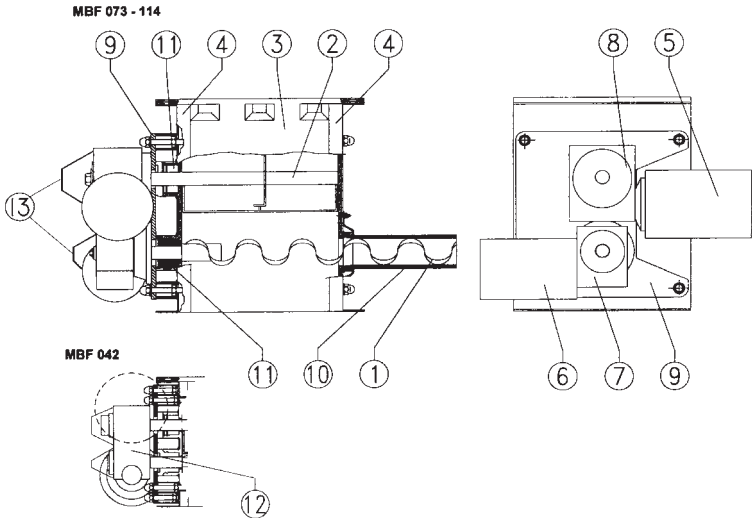

1	Metering screw	Dosierwerkzeug	Vis de dosage	Utensile dosaggio
2	Blending tool	Homogenisierwerkzeug	Homogénéisateur	Utensile omogeneiz.
3	Elastomer trough	Dosiertrog	Corps	Corpo
4	End plate	Endschild	Bride d'extremité	Frontale
5	Agitator motor	E- Motor Homogenisierer	Moteur electr. outil de homogé.	Motore elect. omogen.
6	Metering screw motor	E- Motor Dosierer	Moteur elect. outil de dosage	Motore elect. dosaggio
7	Metering screw reducer	Getriebe Dosierer	Réducteur outil de dosage	Riduttore dosaggio
8	Blending tool reducer	Getriebe Homogenisierer	Réducteur outil de homogén.	Riduttore omogeneiz.
9	Drive support	Antriebshalterung	Plaque de fixatio	Piastra d'attacco
10	Feeder pipe	Dosierrohr	Sortie	Uscita
11	Seals	Wellenabdichtungen	Etancheitées	Tenute
12	Reducer	Getriebe	Réducteur	Riduttore
13	Cover	Abdeckung	Couvercle	Coperchio

N.B. Item 4 in the stainless steel version, front panel can be opened for inspection.
N.B. Pos.4 in der Edelstahlversion mit abnehmbarer Frontplatte zu Inspektionszwecken.
N.B. Pos.4 dans la version en acier inox, plaque frontale peut être ouverte pour inspection.
N.B. Pos.4 nella versione in AISI, frontale apribile per ispezione.

The batch feeder must not be starded before the screw conveyor itself, as well as the plant it is going to be installed in, have been declared in conformity with the European Directive 14/06/1982 (89/392/EEC).

It is the plant designer's / plant fitte 's responsability to design and install all necessary protection in order to avoid that breaking and / or yielding of the equipment or of parts of it might damage people and / or parts of the plant (e.g. adequate protection against falling down of the motor etc.).
For dangerous materials, i.e. those that must not get in contact with the human body or be inhaled, for flammable, explosive and bacteriologically dangerous materials the plant manufacturer or fitter must provide for the required safety devices and measures.

Der Dosier darf nicht in Betrieb genommen werden, bevor sowohl sie selbst, als auch die Anlage, in die sie eingebaut wird, mit den Vorschriften der Direktive 14/06/1982 (89/392/ECC) für konform erklärt wurde.
Es liegt in der Verantwortung des Anlagenplaners bzw. -aufstellers, alle notwendigen Schutzvorrichtungen vorzusehen, welche es verhindern, daß durch einen Geräte- oder Teiledefekt Personen- und/oder Sachschäden verursacht werden (z.B. geeigneter Schutz gegen das Herunterfallen des Motors etc.).
Für Gefahrenprodukte, bzw. solche, die nicht mit dem menschlichen Körper in Kontakt geraten oder eingeatmet werden dürfen, für leicht entzündbare, explosive sowie bakteriologisch gefährliche Medien muß der Anlagenbauer bzw. –errichter die für die Sicherheit erforderlichen Vorrichtungen vorsehen und Maßnahmen treffen.

Il est interdit de mettre le doseur en fonction avant que la machine / l'installation dans laquelle elles doivent être montées a été déclarée conforme aux dispositions de la Directive 14/06/1982 (89/392/ECC).

Dans ce cadre il est la responsabilité du constructeur de l'installation ou de l'installateur de projeter et d'installer tout équipement de protection nécessaire afin d'eviter que des ruptures et / ou des parties d'elle puissent causer de dégâts à des personnes et / ou des choses (par ex.: des protections appropriées contre la chaute du moteur etc.).
Pour des produits dangereux, nuisibles au contact et/ou à l'inhalation, inflammables, explosifs et dangereux du point de vue bactériologique et/ou viral, le constructeur de l'installation ou l'installateur devront prévoir des dispositifs appropriés au besoin.

E' vietato mettere il dosatore in funzione prima che la macchina/ impianto, nel quale devono essere installate, sia dichiarato conforme alle disposizioni della direttiva 14/06/1982 (89/392/EEC).

In quest'ambito è cura dell'impiantista / installatore predisporre ed installare tutti gli accorgimenti / protezioni al fin di evitare danni a cose o persone in caso di rotture e conseguente caduta di pezzi della macchina (ad es.: rottura del motore).
Per prodotti pericolosi, nocivi al contatto e/o all'inalzione, infiammabili esplosivi e pericolosi dal punto di vista batteriologico e/o virale, l'impiantista e/o l'installatore, dovranno prevedere idonei dispositivi all'uopo.

THEORETICAL STANDARD FEED RATES - *THEORETISCHE STANDARD - DOSIERLEISTUNGEN*
DEBITS THEORIQUES STANDARD - *PORTATE TEORICHE STANDARD*

TAB. 1

MBF		THEORETICAL STANDARD FEED RATES *THEORETISCHE STANDARD-DOSIERLEISTUNGEN* DEBITS THEORIQUES STANDARD *PORTATE TEORICHE STANDARD*		CT
	Metering screws *Dosierwerkzeuge* Outils dosage *Utensili dosatori*	Hourly feed rate at *Dosierleistung pro Stunde bei* Débit horaïre à *Portata oraria a* 1 rpm	Fixed speed feed rate *Leistung bei Konstanter Drehzahl* Débit à vitesse fixe *Portata a velocità fissa* 93 rpm	Feed rate with variable speed *Leistung bei variabler Drehzahl* Débit à vitesse variable *Portata a velocità variabile* 13 - 67 rpm	Capacity whit diff. variator *Leist. bei var. Drehz. + Diff.* Débit à vites. var. avec différ. *Port.a vel. variab. con differ.* 4 - 60 rpm
	Type	**dm³ / h**	**dm³ / h**	**dm³ / h**	**dm³ / h**
042	1 - 4 - D - 2 - B	0.7	65	9 - 48	
	3	0.6	56	8 - 40	
	5	0.64	60	8 - 45	
	7	0.95	88	12 - 64	
073	1 - 2 - B	5.7	530	74 - 382	23 - 342
	3	4.4	410	57 - 295	18 - 264
	4 - 5 - D - E	7.4	688	96 - 496	31 - 421
114	1 - 2 - B	26	2418	338 - 1742	104 - 1560
	3	13.6	1265	177 - 911	55 - 816
	4 - 5 - D- E	29.7	2762	386 - 1990	130 - 1930

N.B. The theoretical feed rate has to be multiplied by the efficient factor which depends on the type of feeder screw and on the material fed
N.B. Die theoretische Dosierleistung ist dem Wirkungsfactor zu multiplizieren, der wierderum abhängig ist vom Dosierwendeltyp und vom dosierten Medium.
N.B. La débit théorique doit être multiplié pae le facteurs d'efficience qui est en fonction de la spire et du produit dosé
N.B. La portata teorica deve essere moltiplicata per il fattore di efficenza che è in funzione dell'elica e del prodotto trasportato.

General efficiency coefficient mvs depeneding on feeder screw us
Allgemeiner Wirkungsgrad mvs in Abhängigkeit von der eingesetzten Dosierwendel
Coefficient d'efficacité général en fonction du type de spire utilis
Coefficienti di efficienza generico mvs, in funzione del tipo di elica utilizzata

TAB. 3

UTD. 12 UTD. 32	UTD. 22 UTD. B2	UTD. 42 UTD. D2	UTD. 5 UTD. G UTD. E
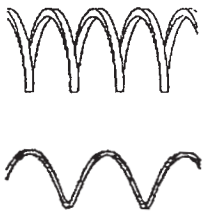	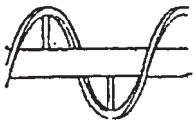		
Efficiency: 1.	**Wirkungsgrad: 0.6**	**Coefficient: 0.7**	**Efficienza: 0.**

The theoretical feeds rate (pag.T.11)has to be multiplied by the efficient factor which depends on the type of feeder screw fed.

Note:
The efficiency factor can vary due to grain size, bulk density, degree of humidity and all the other material properties that have an influence on handling the material.

Die theoretischen Dosierleistungen gem. Seite T.11 müssen mit diesem Faktor je nach eingestzter Dosierwendeltype multipliziert werden.

Anm.:
Der Wirkungsgrad kann sich aufgrund der Körnung, des Schüttgewichts, des Feuchtegrads sowie aller übrigen, sich auf das Handling auswirkenden Produkte.

Les débits théoriques comme à page T.11 doivent être multipliés par ce facteur en fonction des spires choisies.

Note:
Le facteur d'efficacité peut subir des variations à cause de la granulométrie, du poids spécifique, de l'humidité et de tous les composants imputables au matériau transporté.

Le portate teoriche come a pag. T.11 debbono essere moltiplicate per questo fattore in funzione delle eliche scelte.

Nota:
Il fattore di efficienza può subire delle variazioni dovute a granulometria, al peso specifico, umidità e a tutte quelle componenti imputabili al prodotto trasportato.

THEORETICAL CAPACITIES SPC - *THEORETISCHE DOSIERLEIST.SPEZ.*
DEBITS THEORIQUES SPC. - *PORTATE TEORICHE SPECIALI*

TAB. 2

MBF				THEORETICAL FEED RATES *THEORETISCHE DOSIERLEISTUNGEN* DEBITS THEORIQUES *PORTATE TEORICHE*			CT
	Metering screws *Dosierwerkzeuge* Outils dosage *Utensili dosatori*	Hourly feed rate at *Dosierleistung pro Stunde bei* Débit horaïre à *Portata oraria a* 1 rpm	Gear ratios *Getriebeuntersetzungen* Rapports réducteurs *Rapporti riduttori*	Fixed speed feed rate *Leistung bei Konstanter Drehzahl* Débit à vitesse fixe *Portata a velocità fissa*	Feed rate with variable speed *Leistung bei variabler Drehzahl* Débit à vitesse variable *Portata a velocità variabile*		Capacity with diff. variator *Leist. bei var. Drehz. + Diff.* Débit à vites. var. avec différ. *Port.a vel. variab. con differ.*
	Type	dm³ / h	1 / ..	dm³ / h	dm³ / h MIN	dm³ / h MAX	dm³ / h
42	1-2-4-B-D	0.70	10 15 28 40(std)	98 65 35 24	14 9 5 3	70 47 25 17	
	3	0.6	10 15 28 40 (std)	82 55 29 20	11 8 4 3	59 39 21 15	
	5-E	0.64	10 15 28 40(std)	90 60 32 22	12 8 4 3	64 43 23 16	
	7-G	0.95	10 15 28 40 (std)	133 89 48 33	19 12 7 5	95 63 34 24	
73	1-2-B	5.7	10 15 20 28 40 (std) 70	798 532 399 285 199 114	111 74 56 40 28 16	570 380 285 203 142 81	33-513 22-342 17-256 12-183 8-128 5-73
	3	4.4	10 15 20 28 40 (std) 70	616 411 308 220 154 88	86 57 43 31 21 12	440 293 220 157 110 63	26-396 17-264 13-198 9-141 6-99 4-57
	4-5-D-E	7.4	10 15 20 28 40(std) 70	1,036 691 518 370 259 148	144 96 72 52 36 21	740 493 370 264 185 106	43-66 29-444 21-333 15-238 11-167 6-95
114	1-2-B	26	10 15 20 28 40 (std) 70	3,640 2,427 1,820 1,300 910 520	507 338 254 181 127 72	2,600 1,733 1,300 929 650 371	151-2,340 101-1,560 75-1,170 54-836 38-585 22-334
	3	13.6	10 15 20 28 40 (std) 70	1,904 1,269 952 680 476 272	265 177 133 95 66 38	1,360 907 680 486 340 194	79-1,224 53-816 39-612 28-437 20-306 11-175
	4-5-D-E	29.7	10 15 20 28 40 (std) 70	4,158 2,772 2,079 1,485 1,040 594	579 386 290 207 145 83	2,970 1,980 1,485 1,061 743 424	172-2,673 115-1,782 86-1,337 62-955 43-668 25-382

N.B. The theoretical feed rate has to be multiplied by the efficient factor which depends on the type of feeder screw and on the material fed
(See tab. 3 pag. T.10)

N.B. Die theoretische Dosierleistung ist dem Wirkungsfactor zu multiplizieren, der wierderum abhängig ist vom Dosierwendeltyp und vom dosierten Medium.(Siehe Tabelle 3 Seite T.10)

N.B. La débit théorique doit être multiplié pae le facteurs d'efficience qui est en fonction de la spire et du produit dosé.(oir tab. 3 pag. T.10)

N.B. La portata teorica deve essere miltiplicata per il fattore di efficenza che è in funzione dell'elica e del prodotto trasportato.(vedi tab.3 pag. T.10)

FIXED SPEED DRIVES - *ANTRIEBE MIT KONSTANTER DREHZAHL*
MOTORISATIONS A VITESSE FIXE - *MOTORIZZAZIONI A VELOCITA' FISSA*

MBF 042	**METERING SCREW - *DOSIERWERKZEUG* - OUTIL DOSAGE - *UTENSILE DOSAGGIO***				
	RPM	**STANDARD**	**SPECIAL**		
		93	140	50	35
	Ratio - *Untersetzung* Rapport - *Rapporto*	1:15	1:10	1:28	1:40
	Gear red. - *Getriebe* Réduct. - *Riduttore*	RW BB ØØ	RW AA ØØ	RW DA ØØ	RW EA ØØ
	Motors - *E-Motoren* Moteurs - *Motori*	**0.12 kW 4P 50 Hz 63A B5 (std)** (0.18 kW/0.25 kW 4P 50 Hz 63b/63c B5)			
	BLENDING TOOL - *HOMOGENISIERWERKZEUG* - OUTIL DE HOMOGENEISATION - *OMOGENEIZZATORE*				
	RPM	35			
	Ratio - *Untersetzung* Rapport - *Rapporto*	1:40			
	Motors - *E-Motoren* Moteurs - *Motori*	**0.25 kW 4P 50 Hz 71A B5 (std)** (0.37 kW 4P 50 Hz 71B B5)			

MBF 073 114	**METERING SCREW - *DOSIERWERKZEUG* - OUTIL DOSAGE - *UTENSILE DOSAGGIO***						
	RPM	**STANDARD**	**SPECIAL**				
		93	140	70	50	35	20
	Ratio - *Untersetzung* Rapport - *Rapporto*	1:15	1:10	1:20	1:28	1:40	1:70
	Gear red. - *Getriebe* Réduct. - *Riduttore*	B5 PAM 71 Ø Flange = 160 mm Ø M* = 14 mm Ø U* = 24 mm					
	Motors - *E-Motoren* Moteurs - *Motori*	**0.25 kW 4P 50 Hz 71A B5 (std)** (0.37 kW 4P 50 Hz 71B B5)					
	BLENDING TOOL - *HOMOGENISIERWERKZEUG* - OUTIL DE HOMOGENEISATION - *OMOGENEIZZATORE*						
	RPM	**STANDARD**	**SPECIAL**				
		35	14				
	Ratio - *Untersetzung* Rapport - *Rapporto*	1:40	1:100				
	Gearbox - *Getriebe* Réduct. - *Riduttore*	B5bi PAM 80 Ø Flange = 200 mm Ø M* = 19 mm Ø U* = 25 mm					
	Motors - *E-Motoren* Moteurs - *Motori*	**0.55 kW 4P 50 Hz 80A B5 (std)** (0.75 kW 4P 50 Hz 80B B5)					

* **ØM** = Ø Electric motor shaft - *Welle elektromotore* - Arbre moteur electrique - *Albero motore elettrico*

* **ØU** = Ø Screw shaft - *Werkzeugwelle* - Arbre outil - *Albero utensile*

VARIABLE SPEED DRIVES - *ANTRIEBE MIT VARIABLER DREHZAHL*
MOTORISATIONS A VITESSE VARIABLE - *MOTORIZZAZIONI A VELOCITA' VARIABILE*

MBF 042	**METERING SCREW - *DOSIERWERKZEUG* - OUTIL DOSAGE - *UTENSILE DOSAGGIO***				
	RPM	**STANDARD**	**SPECIAL**		
		93	140	50	35
	Ratio - *Untersetzung* Rapport - *Rapporto*	1:15	1:10	1:28	1:40
	Gear red. - *Getriebe* Réduct. - *Riduttore*	RW NB ØØ	RW MA ØØ	RW QA ØØ	RW RA ØØ
	Variator - *Regelgetr.* Variateur - *Variatore*	B5/B5 PAM 63/63 n° 190-910 rpm Ø Flange 140/140 mm Ø M* = 11 mm Ø U* = 11 mm			
	Motors - *E-Motoren* Moteurs - *Motori*	**0.12 kW 4P 50 Hz 63C B5 (std)** **(0.18 kW/0.25 kW 4P 50 Hz 63b/63c B5)**			
	BLENDING TOOL - *HOMOGENISIERWERKZEUG* - OUTIL DE HOMOGENEISATION - *OMOGENEIZZATORE*				
	RPM	35			
	Ratio - *Untersetzung* Rapport - *Rapporto*	1:40			
	Motors - *E-Motoren* Moteurs - *Motori*	**0.25 kW 4P 50 Hz 71A B5 (std)** (0.37 kW 4P 50 Hz 71B B5)			

N.B.: the motors provided on the speed variator are special and can therefore be 0.22-0.25 kW, depending on the supplier
Anm.: Die auf dem Drehzahlregler vorhandenen Motoren sind Spezialausführungen und können je nach Hersteller 0,22 -0,25 kW haben
N.B.: Etant donnée que les moteurs prévus sur variateur sont spéciaux, ils peuvent être de 0.22-0.25 kW, en fonction du fournisseur
N.B.: i motori previsti su variatore, essendo speciali, potranno essere, 0.22-0.25 kW in funzione del fornitore

MBF 073 114	**METERING SCREW - *DOSIERWERKZEUG* - OUTIL DOSAGE - *UTENSILE DOSAGGIO***						
	RPM	**STANDARD**	**SPECIAL**				
		93	140	70	50	35	20
	Ratio - *Untersetzung* Rapport - *Rapporto*	1:15	1:10	1:20	1:28	1:40	1:70
	Gear red. - *Getriebe* Réduct. - *Riduttore*	B5/B5 PAM 71 Ø Flange = 160 mm Ø M* = 14 mm Ø U* = 24 mm					
	Variator - *Regelgetr.* Variateur - *Variatore*	B5/B5 PAM 71/71 n° 190-1000 rpm Ø Flange 160/160 mm Ø M* =14 mm Ø U* =14 mm					
	Differrent. - *Different.* Différént. - *Differenz.*	B5/B5 PAM 71/71 n° 0-1000 rpm Ø Flange 160/160 mm Ø M* =14 mm Ø U* =14 mm					
	Motors - *E-Motoren* Moteurs - *Motori*	**0.25 kW 4P 50 Hz 71A B5 (std)** (0.37 kW 4P 50 Hz 71B B5)					
	BLENDING TOOL - *HOMOGENISIERWERKZEUG* - OUTIL DE HOMOGENEISATION - *OMOGENEIZZATORE*						
	RPM	**STANDARD**	**SPECIAL**				
		35	14				
	Ratio - *Untersetzung* Rapport - *Rapporto*	1:40	1:100				
	Gear red. - *Getriebe* Réduct. - *Riduttore*	B5bi PAM 80 Ø Flange = 200 mm Ø M* = 19 mm Ø U* = 25 mm					
	Motors - *E-Motoren* Moteurs - *Motori*	**0.55 kW 4P 50 Hz 80A B5 (std)** (0.75 kW 4P 50 Hz 80B B5)					

*** ØM** = Ø Electric motor shaft - *Welle elektromotor* - Arbre moteur electrique - *Albero motore elettrico*
*** ØU** = Ø Screw shaft - *Werkzeugwelle* - Arbre outil - *Albero utensile*

FINISHING - *FINISH* - FINITION - *FINITURE*

End plate	Endschild	Bride d'extremité	Frontale	**St. St. 304 / EDELSTAHL 1.4301 / AISI 304**
Drive support	Antriebshalter.	Plaque de fixation	Piastra d'attacco	**ALUMINIUM / ALLUMINIO**
Reducer	Getriebe	Reducteur	Riduttore	**ALUMINIUM / ALLUMINIO**
Speed variator	Regelgetriebe	Variateur	Variatore	**RAL 5010**
Motor	Elektromotor	Moteur	Motore	**RAL 7001**

STANDARD METERING SCREWS - *STANDARD-DOSIERWERKZEUGE*
OUTILS DE DOSAGE STANDARD - *UTENSILI DOSAGGI STD*



UTD. 12	TYPE 1			
	RECTANGULAR SECTION SPIRAL WITHOUT CENTRE PIPE	**WENDEL MIT RECHTECKIGEM QUERSCHNITT OHNE INNENROHR**	**HELICE A SECTION RECTANGULAIRE SANS TUBE INTERIEUR**	**ELICHE A SEZIONE RETTANGOLARE PRIVE DI TUBO INTERNO**
	Light sticky materials: flou , sugar, cocoa, pellets, granular products, light and slightly sticky oxides.	Geeignet für Medien mit geringem Schüttgewicht und mit Tendenz zum Anbacken: Mehl, Zucker, Kakao, Pellets, Granulate, Oxyde mit geringem Schüttgewicht und gewisser Tendenz zum Anbacken.	Matériaux légers avec une tendance au tassement: farines, sucre, cacao, pellets, poduits granulaires, oxides légers.	Materiali leggeri con tendenza all'impaccamento: farine, zucchero, cacao, pellets, prodotti granulari, ossidi leggeri moderatamente impaccati.

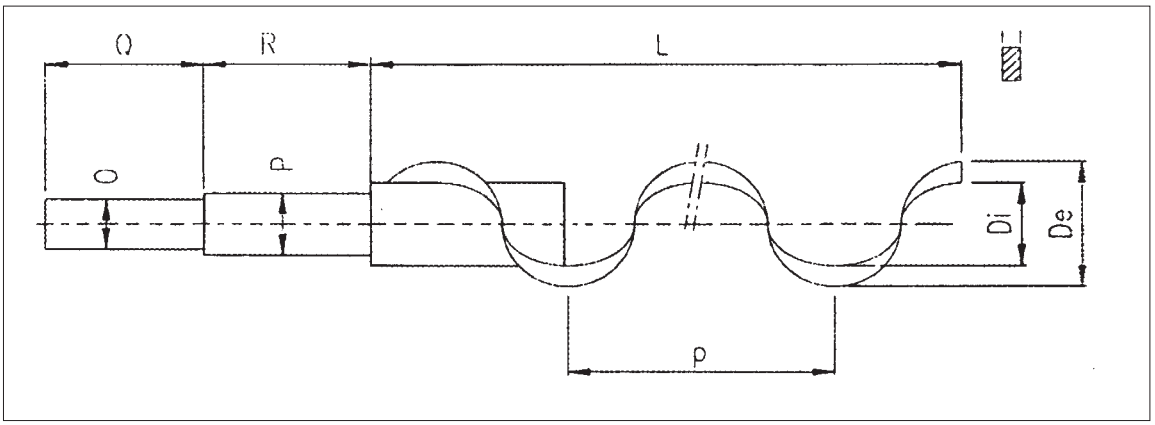

TYPE1 Rectangular section spiral withhout centre pipe
TYPE1 *Wendel mit rechteckigem Querschnitt ohne Innenrohr*
TYPE1 Hélice à section rectangulaire sans tube intérieur
TIPO 1 *Eliche a sezione rettangolare senza tubo interno*

MBF	Code	De	Di	p	S	L	Ø O	Ø P	Q	R	kg
042	**UTD 212**	26	16	30	5	403	14	25	58	81	0.5
073	**UTD 312**	60	40	60	5	607	24	29	96	119	3
114	**UTD 412**	100	67	100	5	607	24	29	96	119	5

STD BLENDING TOOLS - STD - *HOMOGENISIERWERKZEUGE*
HOMOGENEISATEURS STD - *UTENSILI OMOGENEIZZAZIONE STD*

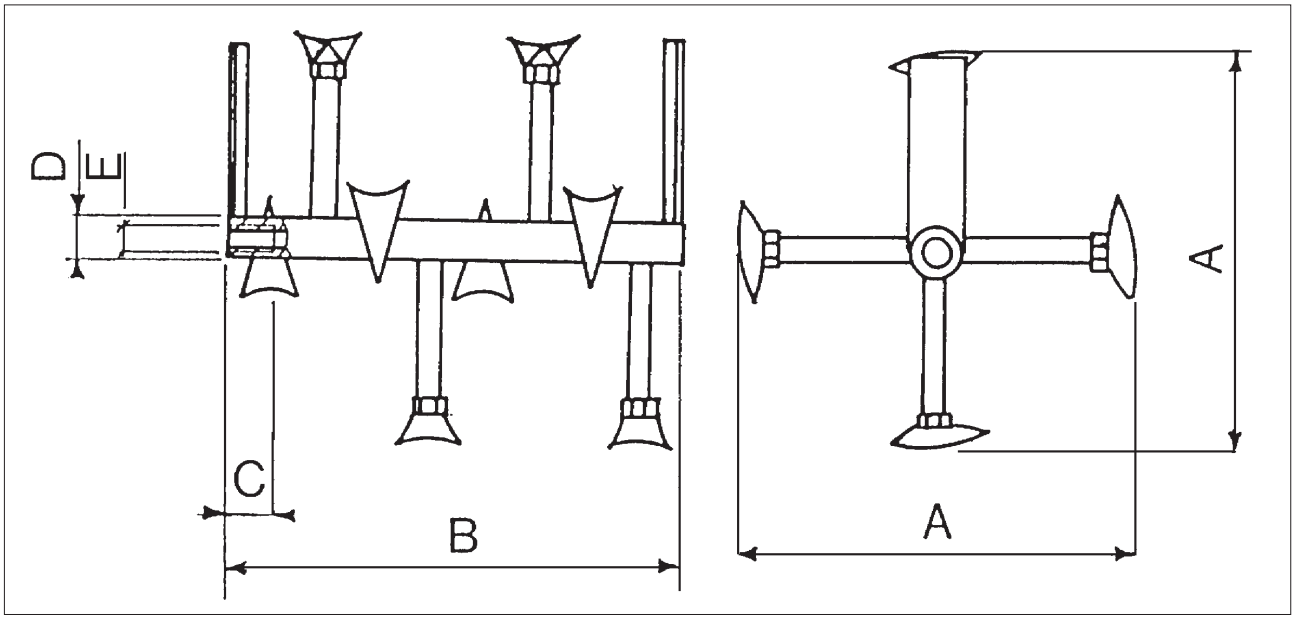

TYPE 2

MBF	Code	A	B	C	D	E	kg
042	**UTO 22**	130	199	25	25	M 12	1
073	**UTO 23**	269	349	35	35	M 16	3.5
114	**UTO 24**	269	349	35	35	M 16	3.5

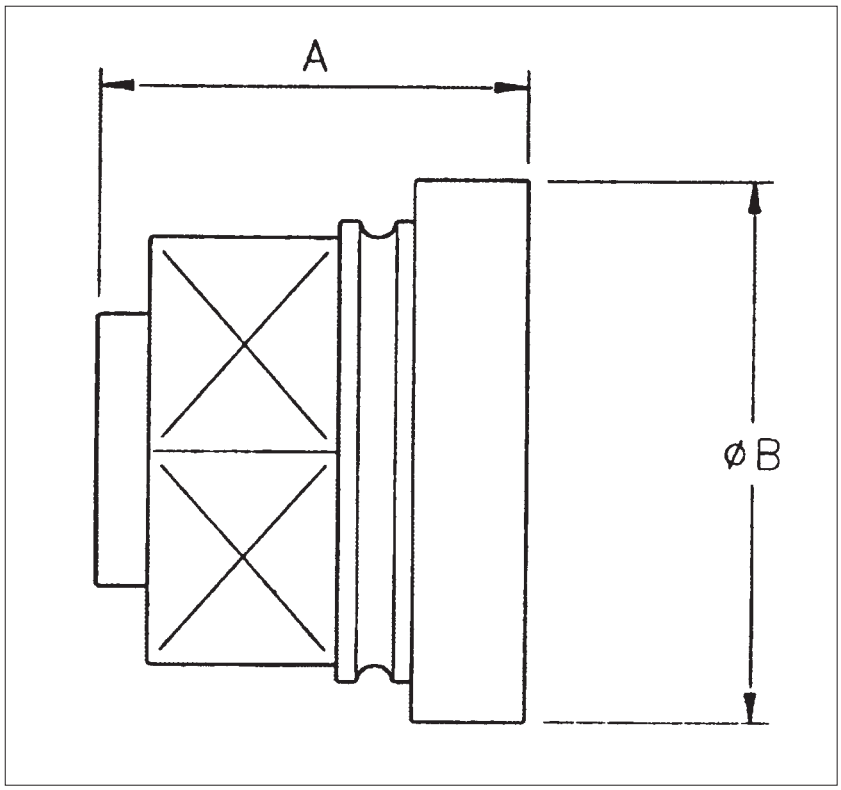

SINT®ER

MBF	Code	A	B
042	**MBT N2**	54	60
073	**MBT N3**	57	80
114	**MBT N4**	57	80

SINT®AL

MBF	Code	A	B
042	**MBT F2**	54	60
073	**MBT F3**	57	80
114	**MBT F4**	57	80

SPECIAL METERING SCREWS - *SPEZIALDOSIERWERKZEUGE* - OUTILS DOSAGE SPECIAUX - *UTENSILI DOSAGGIO SPECIALI*

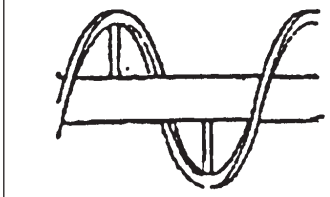

UTD. 22 — TYPE 2

RIBBON SPIRAL ON PIPE	BRANDWENDEL MIT INNENROHR	HELICE A RUBAN AVEC TUBE INTERIERUR	ELICHE A NASTRO CON TUBO INTERNO
Heavy sticky materials, heavy oxides, clay	Geeignet für Medien mit höherem Schüttgewicht und mit Tendenz zum Anbacken: Oxyde mit höherem Schüttgewicht, Ton	Matériaux lourds avec tendance au tassement, oxides lourdes, argiles	Materiali pesanti con tendenza all'impaccamento ossidi pesanti, argille



UTD. 32 — TYPE 3

ROUND SECTION SPIRAL WITHOUT CENTRE PIPE	WENDEL MIT RUNDEM QUERSCHNITT OHNE INNENROHR	HELICE A SECTION RONDE SANS TUBE INTERIEUR	ELICHE A SEZIONE TONDA PRIVE DI TUBO INTERNO
Light materials, granular products, pellets, PVC, polymers in pellets.	Geeignet für Medien mit geringem Schüttgewicht, ohne Tendenz zum Anbacken: Granulate, Pellets; PVC, Polymere in Pellets.	Matériaux légers, produits granulaires, pelets, PVC, polymers en pellets.	Materiali leggeri non impaccati, prodotti granulari, pellets, PVC, polimeri in pellets.

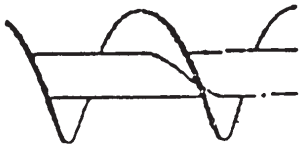

UTD.42 — TYPE 4

STANDARD SCREW	VOLLBLATTWENDEL MIT INNENROHR	HELICE AVEC TUBE INTERIEUR	ELICHE CONTINUE CON TUBO INTERNO
Heavy fluid materials metallic granules.	Geeignet für gut fließende Medien mit höherem Schüttgewicht: Schiefer gemahlen, Metallgranulate.	Matériaux lourds et fluides, grains de métal.	Materiali pesanti e scorrevoli, graniglia di metalli.



UTD. 5. — TYPE 5

HELICOID SCREW ON TAPERED PIPE MADE FROM SINT®ER OR SINT®AL	WENDEL MIT KONISCHER WELLE AUS SINT®ER ODER SINT®AL	HELICE AVEC TUBE CONIQUE EN SINT®ER OU SINT®AL	ELICA CON TUBO CONICO IN SINT®ER O SINT®AL
Whenever even metering on the entire surface along with mixing of materials with different particle size, bulk density and/or fluency is required.	Findet überall Verwendung, wo eine homogene Dosierung auf der gesamten Fläche in Verbindung mit einer Durchmischung von Medien mit unterschiedlicher Körnung, Fließfähigkeit und/ oder Schüttdichte erforderlich ist.	Où qu'une extraction homogéne sur toute la surface avec des mélanges de produits à granulométries différentes, à poids spécifiques différents et/ ou degrés différents de fluidité	Dovunque sia necessaria una estrazione omogenea su tutta la superficie con miscele di prodotti a diversa granulometria, diverso peso specifico, diverso grado di scorrevolezza.

SPECIAL METERING SCREWS - *SPEZIAL-DOSIERWERKZEUGE* - OUTILS DOSAGE SPECIAUX - *UTENSILI DOSAGGIO SPECIAL*

	**UTD. 7.**	**TYPE 7**		
	SAME AS TYPE 5 BUT WITH DIFFERENT PITCH	WIE TYP 5, JEDOCH MIT UNTERSCHIEDLICHER STEIGUNG	SIMILAIRE AU TYPE 5, MAIS AVEC PAS DIFFERENT	SIMILE AL TIPO 5, MA CON PASSO DIVERSO

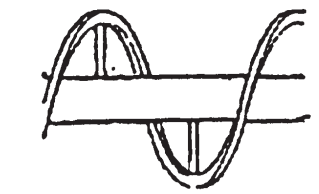	**UTD. B2**	**TYPE B**		
	SAME AS TYPE 2 BUT EXTENDED	WIE TYP 2, JEDOCH VERLÄNGERT	SIMILAIRE AU TYPE 2, MAIS PROLONGÉ	SIMILE AL TIPO 2, MA PROLUNGATO

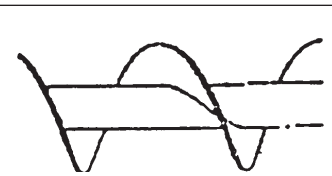	**UTD. D2**	**TYPE D**		
	SAME AS TYPE 4 BUT EXTENDED	WIE TYP 4, JEDOCH VERLÄNGERT	SIMILAIRE AU TYPE 4, MAIS PROLONGÉ	SIMILE AL TIPO 4, MA PROLUNGATO

	**UTD. E.**	**TYPE E**		
	SAME AS TYPE 5 BUT EXTENDED	WIE TYP 5, JEDOCH VERLÄNGERT	SIMILAIRE AU TYPE 5, MAIS PROLONGÉ	SIMILE AL TIPO 5, MA PROLUNGATO

	**UTD. G.**	**TYPE G**		
	SAME AS TYPE 7 BUT EXTENDED	WIE TYP 7, JEDOCH VERLÄNGERT	SIMILAIRE AU TYPE 7, MAIS PROLONGÉ	SIMILE AL TIPO 7, MA PROLUNGATO

SPECIAL METERING SCREWS - *SPEZIAL-DOSIERWERKZEUGE* - OUTILS DOSAGE SPECIAUX - *UTENSILI DOSAGGIO SPECIAL*

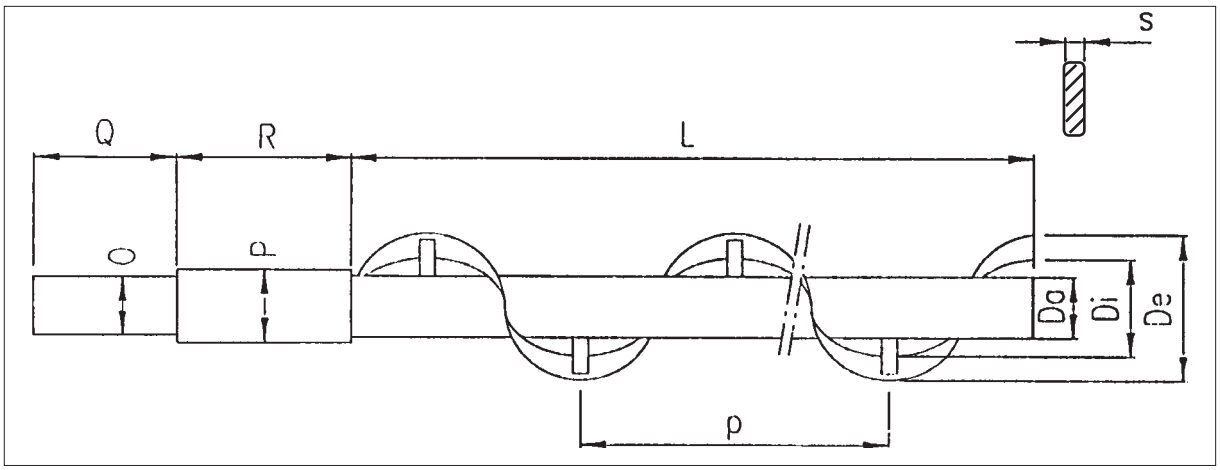

TYPE 2 **and** **TYPE B** Ribbon flight on pip
TYPE 2 ***und*** ***TYPE B*** *Bandwendel mit Innenrohr*
TYPE 2 **et** **TYPE B** à ruban avec tube interieur
TIPO 2 ***e*** ***TIPO B*** *a nastro con tubo interno*

Type	MBF	Code	De	Di	Da	p	S	L	Ø O	Ø P	Q	R	kg
2	**042**	**UTD222**	30	20	10	30	5	403	14	25	58	81	2
	073	**UTD322**	60	40	25	60	5	607	24	29	96	119	3
	114	**UTD422**	100	67	25	100	5	607	24	29	96	119	4
B	**042**	**UTD2B2**	30	20	10	30	5	573	14	25	58	81	3
	073	**UTD3B2**	60	40	25	60	5	857	24	29	96	119	4
	114	**UTD4B2**	100	67	25	100	5	857	24	29	96	119	4,5

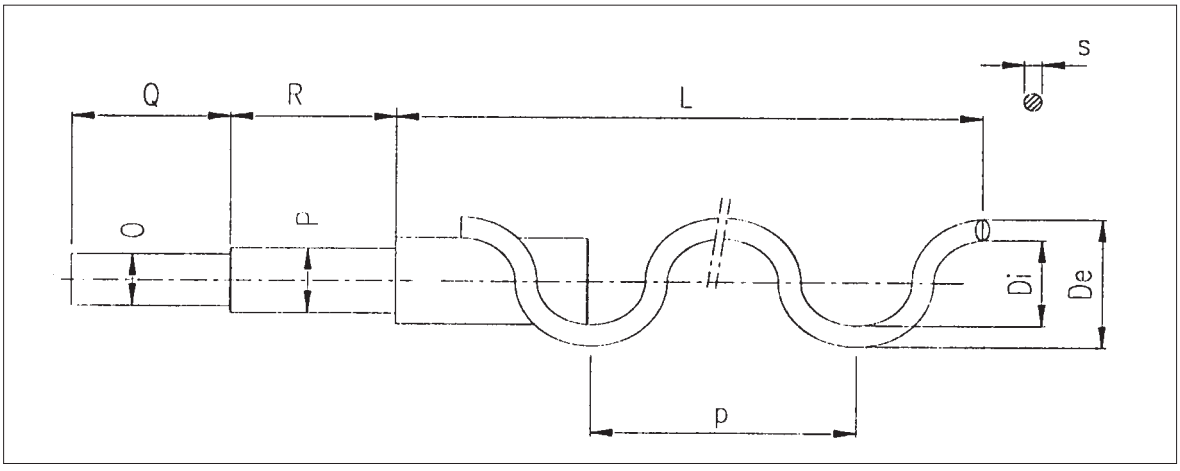

TYPE 3 Round section spiral without centre pipe
TYPE 3 *Wendel mit rundem Querschnitt ohne Innenrohr*
TYPE 3 Hélice à section rectangulaire sans tube intérieur
TIPO 3 *Eliche sezione tonda senza tubo interno*

Type	MBF	Code	De	Di	p	S	L	Ø O	Ø P	Q	R	kg
3	**042**	**UTD 232**	26	16	30	5	403	14	25	58	81	0.5
	073	**UTD 332**	57	40	60	8	607	24	29	96	119	3
	114	**UTD 432**	90	70	75	10	607	24	29	96	119	5

SPECIAL METERING SCREWS - *SPEZIAL-DOSIERWERKZEUGE* - OUTILS DOSAGE SPECIAUX - *UTENSILI DOSAGGIO SPECIAL*

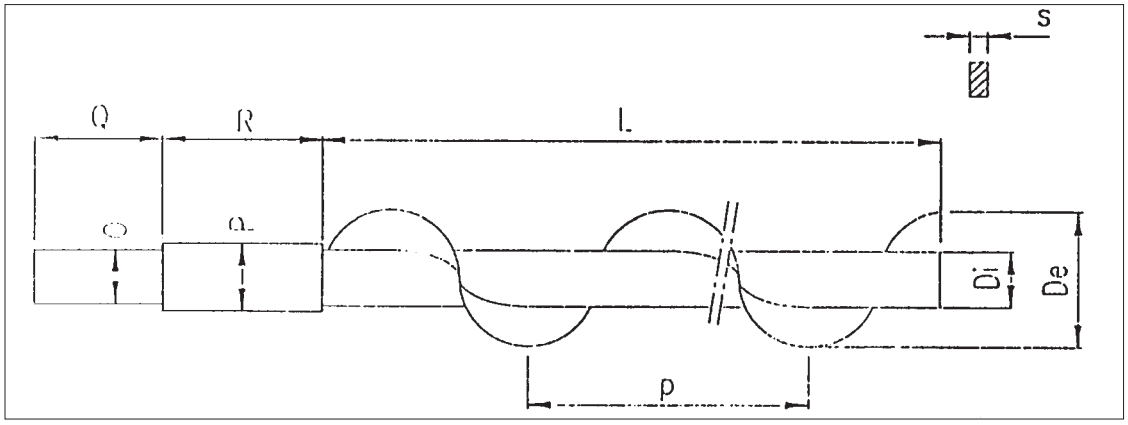

TYPE 4 and **TYPE D** standard screws
TYPE 4 *und* ***TYPE D*** *Vollblattwendeln mit Innenrohr*
TYPE 4 et **TYPE D** hélices continues avec tube interieur
TIPO 4 *e* ***TIPO D*** *eliche continue con tubo interno*

EXTENDED
VERLÄNGERT
RALLONGE
ALLUNGATO

Type	MBF	Code	De	Di	p	S	L	Ø O	Ø P	Q	R	kg
4	042	UTD 242	30	20	30	5	403	14	25	58	81	1.5
	073	UTD 342	57	25	60	5	607	24	29	96	119	3.5
	114	UTD 442	90	32	100	5	607	24	29	96	119	6
D	042	UTD 2D2	30	20	30	5	573	14	25	58	81	2
	073	UTD 3D2	57	25	60	5	857	24	29	96	118	5
	114	UTD 4D2	90	32	100	5	857	24	29	96	119	7.5

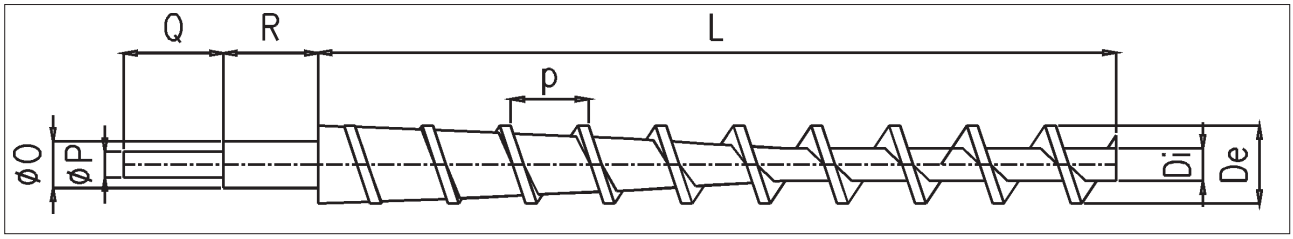

TYPE 5 and **TYPE E** screws made of SINT®ER or SINT®AL with tapered pipe
TYPE 5 *und* ***TYPE E*** *Wendeln aus SINT®ER oder SINT®AL mit konischem Innenrohr*
TYPE 5 et **TYPE E** Hélices en SINT®ER ou SINT®AL avec tube conique
TIPO 5 *e* ***TIPO E*** *Eliche in SINT®ER o SINT®AL con tubo conico*

EXTENDED
VERLÄNGERT
RALLONGE
ALLUNGATO

Type	MBF	Code	De	Di	p	L	Ø O	Ø P	Q	R	kg
5	042	UTD 25.	30	15	20	403	25	14	58	81	0.6
	073	UTD 35.	60	25	60	607	30	24	96	119	2
	114	UTD 45.	100	35	100	607	30	24	96	119	3
E	042	UTD 2E.	30	15	20	573	25	14	58	81	0.85
	073	UTD 3E.	60	25	60	857	30	24	96	119	2
	114	UTD 4E.	100	35	100	857	30	24	96	119	3.5

4	SINT®ER
5	SINT®AL

SPECIAL METERING SCREWS - *SPEZIAL-DOSIERWERKZEUGE* - OUTILS DOSAGE SPECIAUX - *UTENSILI DOSAGGIO SPECIAL*

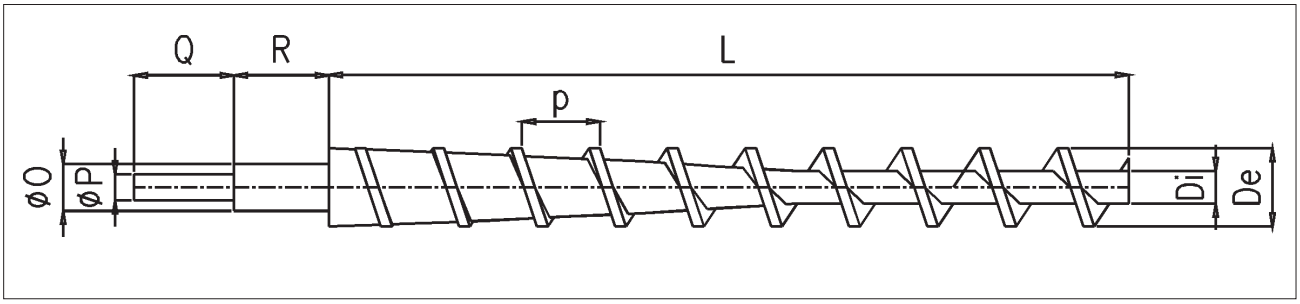

TYPE 7- G Screw with tapered centre pipe made of SINT®ER or SINT®AL
TYPE 7- G *Vollblattwendel mit konischem Innenrohr aus SINT®ER oder SINT®AL*
TYPE 7- G Hélice continue avec tube intérieur conique en SINT®ER ou SINT®AL
TIPO 7- G *Elica continua con yubo interno conico in SINT®ER o SINT®AL*

Type	MBF	Code	De	Di	p	L	Ø O	Ø P	Q	R	kg
7	**042**	**UTD 27 .**	30	20	30	403	25	14	58	81	0.6
G	**042**	**UTD 2G .**	30	20	30	573	25	14	58	81	0.7

4	SINT®ER
5	SINT®AL

SPECIAL SHAFT SEAL - *SONDER-WELLENABDICHTUNG* - ETANCHEITE SPECIALE - *TENUTA SPECIALE*

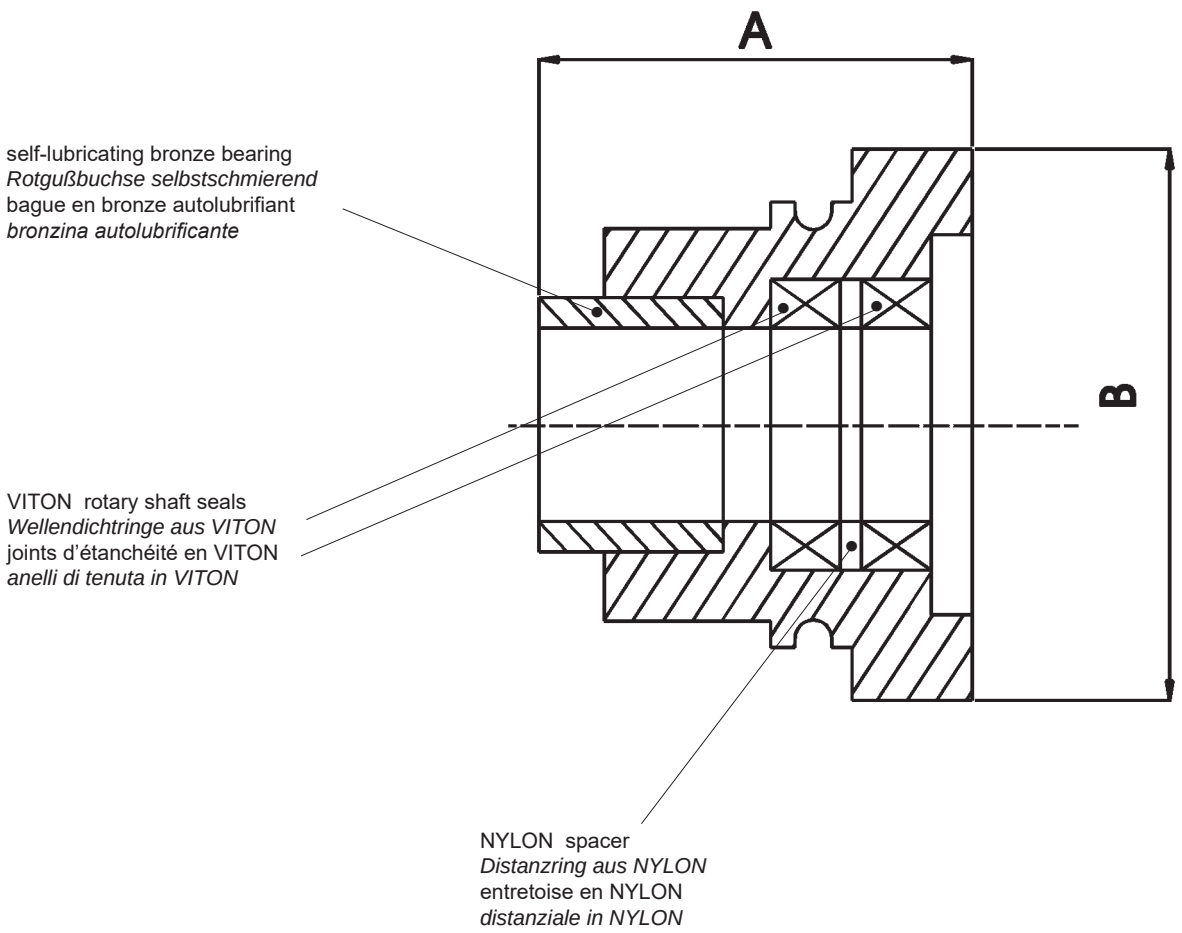

MBF	Code	A	B	kg
042	**MBTX2**	54	60	0.35
073	**MBTX3**	57	80	0.5
114	**MBTX4**	57	80	0.5

SPECIAL SHAFT SEAL WITH GREASING - *SONDER-WELLENABDICHTUNG MIT FETT*
ETANCHEITE SPECIALE AVEC GRAISSE - *TENUTA SPECIALE CON INGRASSAGGIO*

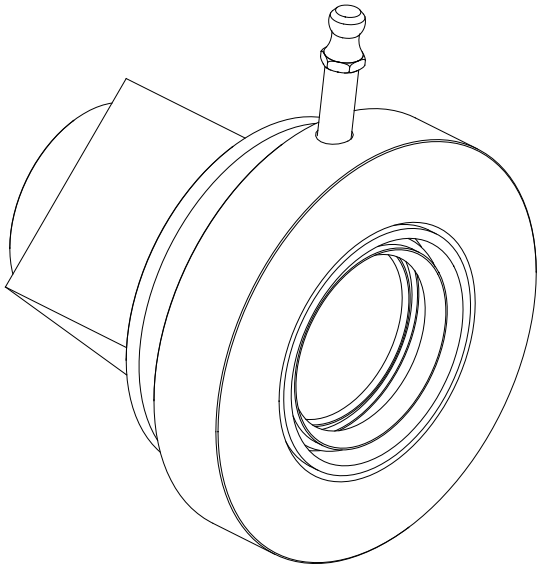

MBTT 2

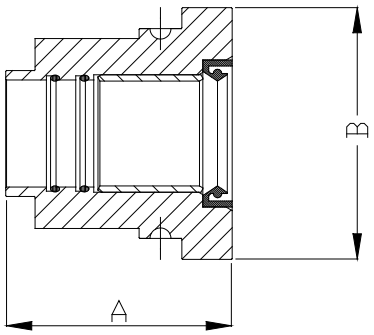

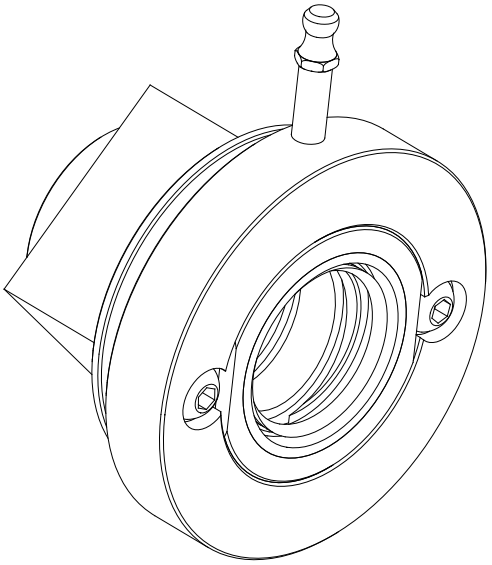

MBTT 3 - 4

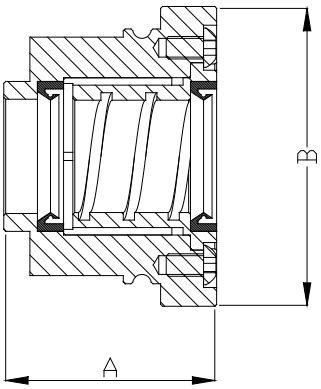

MBF	Code	A	B	kg
042	MBTT2	54	60	0.35
073	MBTT3	57	80	0.5
114	MBTT4	57	80	0.5

N.B. : The MBTT seal is standard with stainless steel version only
N.B. : MBTT-Wellenabdichtung ist nur für Edelstahlversion Standard
N.B. : L'étanchéité MBTT est standard seulement pour la version en acier inox
N.B. : La tenuta MBTT è STD solo sulla versione in AISI

①	②	③	④	⑤	⑥	⑦	⑧	⑨	⑩	⑪	⑫
MBF	073	N	TN	UD 1	SST	UO 2	B	0	Q	1	0025	0055

MICROBATCH FEEDER
TYPE “MBF”

DIAMETER
042 - 073 - 114

BODY MATERIAL
N =Standard SINT® polymer
F= Food SINT® polymer
A= St.Steel 304L
B= St.steel 316L

SEAL
TN= SINT®ER
TF= SINT®AL
TT= 304 ST.STEEL WITH GREASING
TA= 304 ST.STEEL WITH TEFLON
TX= 304 ST.STEEL WITH BRONZE

FEEDER SCREW
+++ - UD1 (©)- UD2- UD3- UD4- UD5- UD7(#)- UDB- UDD- UDE- UDG(#)

FEEDER PIPE
SST= STANDARD FEEDER PIPE
SPL= EXTENDED FEEDER PIPE
SSR= LINER FEEDER PIPE
SPR= EXTENDED LINER FEEDER PIPE

BLENDING TOOL
+++ = WITHOUT
UO1= SHAPED PADDLES
UO2= STANDARD PLOUGHSHARE

FEEDER DRIVE
+ = WITHOUT 0 rpm (§)
A = FIXED SPEED 1/10 -140 rpm
B = FIXED SPEED 1/15 -93 rpm (©)
C = FIXED SPEED 1/20 -70 rpm (§)
D = FIXED SPEED 1/28 -50 rpm
E = FIXED SPEED 1/40 -35 rpm
F = FIXED SPEED 1/70 -20 rpm (§)

VARIABLE SPEED
0 = WITHOUT (©)
1= VARIABLE SPEED 1000 rpm-190 rpm
2= VARIABLE SPEED WITH DIFFERENTIAL 900 rpm-10 rpm (§)

BLENDING DRIVE
+ = WITHOUT GEAR (§)
Q = STANDARD SPEED 35 rpm
S = SPECIAL SPEED 14 rpm (§)

VOLTAGE
+ = WITHOUT MOTOR
1 = 220-240 / 380-420 V 50 Hz; 440-480 V 60 Hz (©)
6 = 210-230 / 360-400 V 60 Hz

DRIVE POWER FEEDER SCREW
++++ = WITHOUT MOTOR
0012= 0,12 kW for D=042 (©)
0018 = 0,18 kW for D=042
0025= 0,25 kW for D= 042-073-114 (©)
0037= 0,37 kW for D= 042-073-114

DRIVE POWER FEEDER SCREW
++++ = WITHOUT MOTOR
0025= 0,25 kW for D=042 (©)
0037= 0,37 kW for D= 042
0055= 0,25 kW for D= 073-114 (©)
0075= 0,75 kW for D= 073-114

LEGENDA:
© STANDARD
§ NO MBF042
# ONLY MBF042

① MBF	② 073	③ N	④ TN	⑤ UD 1	⑥ SST	⑦ UO 2	⑧ B	⑨ 0	⑩ Q	⑪ 1	⑫ 0025	0055

MIKRODOSIERER
TYP “MBF”

DURCHMESSER
042 - 073 - 114

WERKSTOFF GEHÄUSE
N =Standard SINT®ER Technisches Polymer
F= SINT®AL Technisches Polymer
A= Edelstahl 1.4301
B= Edelstahl 1.4401

WELLENABDICHTUNG
TN= SINT®ER
TF= SINT®AL
TT= Edelstahl 1.4301 MIT FETT
TA= Edelstahl 1.4301 MIT TEFLON-BUCHSE
TX= Edelstahl 1.4301

DOSIERWERKZEUGE
+++ - UD1 (©)- UD2- UD3- UD4- UD5- UD7(#)- UDB-
UDD- UDE- UDG(#)

DOSIERROHR MIT INNENAUSKLEIDUNG
SST= STANDARD DOSIERROHR
SPL= VERLÄNGERTES DOSIERROHR
SSR= DOSIEROHR MIT INNENAUSKLEIDUG
SPR= VERLÄNGERTES DOSIERROHR MIT INNENAUSKLEIDUG

HOMOGENISIERWEKZEUG
+++ = OHNE HOMOGENISIERWEKZEUG
UO1= HOMOGENISIERWEKZEUG MIT PADDEL
UO2= STANDARD PFLUGSCHAR-HOMOGENISIERWEKZEUG

DREHZAHL DES DOSIERANTRIEBS
+ = OHNE GETRIEBE 0 rpm (§)
A = KOSTANTE DREHZAHL 1/10 -140 rpm
B = KOSTANTE DREHZAHL 1/15 -93 rpm (©)
C = KOSTANTE DREHZAHL 1/20 -70 rpm (§)
D = KOSTANTE DREHZAHL 1/28 -50 rpm
E = KOSTANTE DREHZAHL 1/40 -35 rpm
F = KOSTANTE DREHZAHL 1/70 -20 rpm (§)

REGELBARE DREHZAHL
0 = KOSTANTE DREHZAHL (©)
1 = REGELBARE DREHZAHL 1000 rpm-190 rpm
2 = REGELBARE DREHZAHL MIT DIFFERENTIAL 900 rpm-10 rpm (§)

ANTRIEB HOMOGENISIERWERKZEUG
+ = OHNE GETRIEBE (§)
Q = STANDARD-DREHZAHL 35 rpm
S = SONDER-DREHZAHL14 rpm (§)

SPANNUNG- FREQUENZ
+ = OHNE VERSORGUNG
1 = 220-240 / 380-420 V 50 Hz; 440-480 V 60 Hz (©)
6 = 210-230 / 360-400 V 60 Hz

ANTRIEBSLEISTUNG DOSIERWERKZEUG
++++ = OHNE ANTRIEB
0012= 0,12 kW mit D=042 (©)
0018 = 0,18 kW mit D=042
0025= 0,25 kW mit D= 042-073-114 (©)
0037= 0,37 kW mit D= 042-073-114

ANTRIEBSLEISTUNG HOMOGENISIERWERKZEUG
++++ = OHNE ANTRIEB
0025= 0,25 kW mit D=042 (©)
0037= 0,37 kW mit D= 042
0055= 0,25 kW mit D= 073-114 (©)
0075= 0,75 kW mit D= 073-114

LEGENDA:
© STANDARD
§ NO MBF042
# NUR MBF042

① MBF	② 073	③ N	④ TN	⑤ UD 1	⑥ SST	⑦ UO 2	⑧ B	⑨ 0	⑩ Q	⑪ 1	⑫ 0025	0055

MICRODOSEUR
TYPE “MBF”

DIAMETRE
042 - 073 - 114

MATERIAU CORPS
N =Standard SINT® Tecnopolmero
F= SINT® Tecnopolimero Alimentare
A= AISI 304L
B= AISI 316L

ETANCHEITES
TN= SINT®ER
TF= SINT®AL
TT= AISI 304 AVEC GRAISEE
TA= AISI 304 AVEC TEFLON
TX= AISI 304 SPECIALE

OUTIL DE DOSAGE
+++ - UD1 (©)- UD2- UD3- UD4- UD5- UD7(#)- UDB- UDD- UDE- UDG(#)

TUBE DE DOSAGE
SST= TUBE DE DOSAGE STANDAR
SPL= TUBE DE DOSAGE RALLONGEE
SSR= TUBE DE DOSAGE AVEC REVETEMENT INTERIEU
SPR= TUBE DE DOSAGE RALLONGE AVEC REVETEMENT INTERIEUR

OUTILS HOMOGENEISATEUR
+++ = AVEC HOMOGENEISATEUR
UO1= SPECIAL
UO2= STANDARD

MOTORISATION DE DOSAGE
+ = AVEC MOTORISATION 0 rpm (§)
A = VITESSE COSTANTE 1/10 -140 rpm
B = VITESSE COSTANTE 1/15 -93 rpm (©)
C = VITESSE COSTANTE 1/20 -70 rpm (§)
D = VITESSE COSTANTE 1/28 -50 rpm
E = VITESSE COSTANTE 1/40 -35 rpm
F = VITESSE COSTANTE 1/70 -20 rpm (§)

VITESSE VARIABLE
0 = VITESSE COSTANTE (©)
1= VITESSE VARIABLE 1000 rpm-190 rpm
2= VITESSE VARIABLE AVEC DIFFÉRENZIALE 900 rpm-10 rpm (§)

MOTORISATION DE HOMOGENEISATION
+ = AVEC MOTORISATION (§)
Q = STANDARD 35 rpm
S = SPECIAL 14 rpm (§)

VOLTAGE ET FREQUENCE D’ALIMENTATION
+ = SANS MOTEUR
1 = 220-240 / 380-420 V 50 Hz; 440-480 V 60 Hz (©)
6 = 210-230 / 360-400 V 60 Hz

PUISSANCE MOT. OUTIL DE DOSAGE
++++ = SANS MOTEUR
0012= 0,12 kW per D=042 (©)
0018 = 0,18 kW per D=042
0025= 0,25 kW per D= 042-073-114 (©)
0037= 0,37 kW per D= 042-073-114

PUISSANCE MOT. OUTIL DE HOMOGENEISATION
++++ = SANS MOTEUR
0025= 0,25 kW per D=042 (©)
0037= 0,37 kW per D= 042
0055= 0,25 kW per D= 073-114 (©)
0075= 0,75 kW per D= 073-114

LEGENDA:
© STANDARD
§ NO MBF042
# SEULEMENT POUR MBF042

MBF

- ORDER CODES
- BESTELLCODE
- CODES DE COMMANDE
- CODICI DI ORDINAZIONE

ITALIANO

①	②	③	④	⑤	⑥	⑦	⑧	⑨	⑩	⑪	⑫
MBF	073	N	TN	UD 1	SST	UO 2	B	0	Q	1	0025	0055

MICRODOSATORE
TIPO “MBF”

DIAMETRO
042 - 073 - 114

MATERIALE CORPO
N =Standard SINT® Tecnopolimero
F= SINT® Tecnopolimero Alimentare
A= AISI 304L
B= AISI 316L

TENUTE
TN= SINT®ER
TF= SINT®AL
TT= AISI 304 INGRASSATE
TA= AISI 304 CON TEFLON
TX= AISI 304 CON BRONZO

UTENSILE DI DOSAGGIO
+++ - UD1 (©)- UD2- UD3- UD4- UD5 - UD7(#) - UDB- UDD- UDE- UDG(#)

TUBO DI SCARICO
SST= SCARICO STANDARD
SPL= SCARICO PROLUNGATO
SSR= SCARICO INTERNAMENTE RIVESTITO
SPR= SCARICO PROLUNGATO INTERNAMENTE RIVESTITO

UTENSILE DI OMOGENIZZAZIONE
+++ = SENZA
UO1= SPECIALE
UO2= STANDARD A VOMERI

MOTORIZZAZIONE DOSAGGIO
+ = ASSENTE 0 rpm (§)
A = VELOCITA’ FISSA 1/10 -140 rpm
B = VELOCITA’ FISSA 1/15 -93 rpm (©)
C = VELOCITA’ FISSA 1/20 -70 rpm (§)
D = VELOCITA’ FISSA 1/28 -50 rpm
E = VELOCITA’ FISSA 1/40 -35 rpm
F = VELOCITA’ FISSA 1/70 -20 rpm (§)

VELOCITA’ VARIABILE
0 = VELOCITA’ COSTANTE (©)
1= VELOCITA’ VARIABILE 1000 rpm-190 rpm
2= VELOCITA’ VARIABILE DIFFERENZIALE 900 rpm-10 rpm (§)

MOTORIZZAZIONE OMOGENIZZATORE
+ = ASSENTE (§)
Q = STANDARD 35 rpm
S = SPECIALE 14 rpm (§)

TENSIONE E FREQUENZA
+ = SENZA MOTORE
1 = 220-240 / 380-420 V 50 Hz; 440-480 V 60 Hz (©)
6 = 210-230 / 360-400 V 60 Hz

MOTORIZZAZIONE UTENSILE DOSAGGIO
++++ = SENZA MOTORE
0012= 0,12 kW per D=042 (©)
0018 = 0,18 kW per D=042
0025= 0,25 kW per D= 042-073-114 (©)
0037= 0,37 kW per D= 042-073-114

MOTORIZZAZIONE UTENSILE OMOGENIZZAZIONE
++++ = SENZA MOTORE
0025= 0,25 kW per D=042 (©)
0037= 0,37 kW per D= 042
0055= 0,25 kW per D= 073-114 (©)
0075= 0,75 kW per D= 073-114

LEGENDA:
© STANDARD
§ NO MBF042
# SOLO MBF042

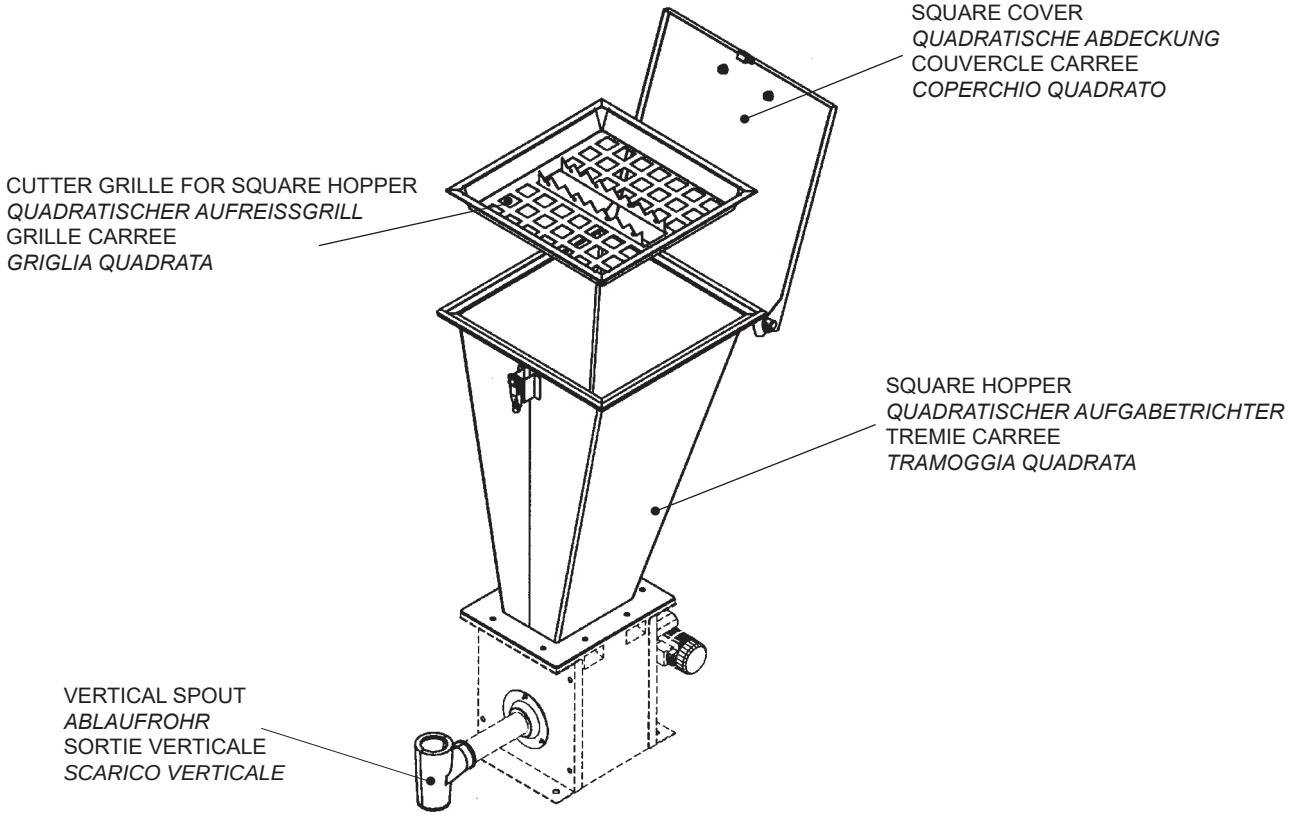
SQUARE COVER
QUADRATISCHE ABDECKUNG
COUVERCLE CARREE
COPERCHIO QUADRATO
CUTTER GRILLE FOR SQUARE HOPPER
QUADRATISCHER AUFREISSGRILL
GRILLE CARREE
GRIGLIA QUADRATA
SQUARE HOPPER
QUADRATISCHER AUFGABETRICHTER
TREMIE CARREE
TRAMOGGIA QUADRATA
VERTICAL SPOUT
ABLAUFROHR
SORTIE VERTICALE
SCARICO VERTICALE

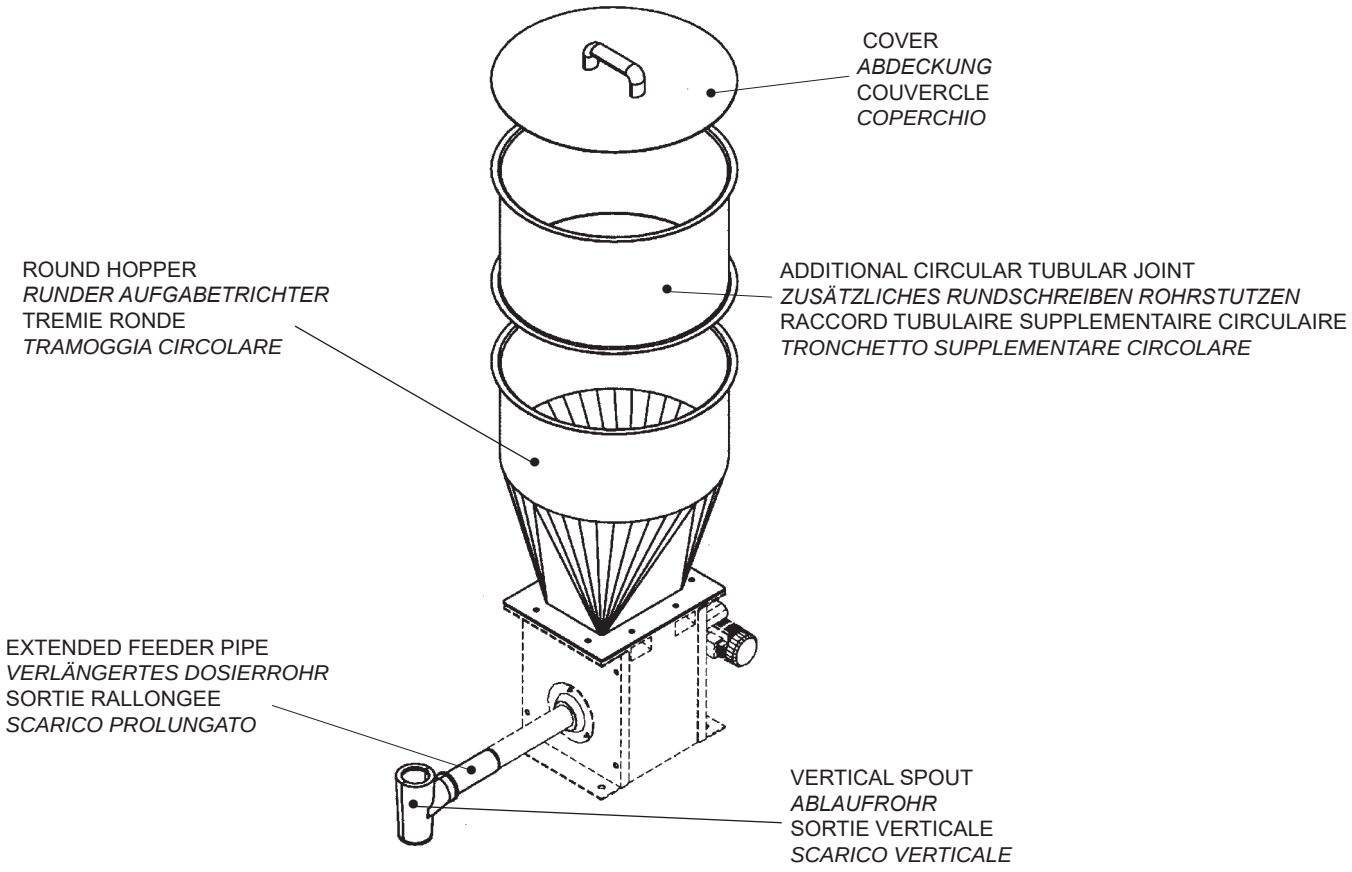
COVER
ABDECKUNG
COUVERCLE
COPERCHIO
ROUND HOPPER
RUNDER AUFGABETRICHTER
TREMIE RONDE
TRAMOGGIA CIRCOLARE
ADDITIONAL CIRCULAR TUBULAR JOINT
ZUSÄTZLICHES RUNDSCHREIBEN ROHRSTUTZEN
RACCORD TUBULAIRE SUPPLEMENTAIRE CIRCULAIRE
TRONCHETTO SUPPLEMENTARE CIRCOLARE
EXTENDED FEEDER PIPE
VERLÄNGERTES DOSIERROHR
SORTIE RALLONGEE
SCARICO PROLUNGATO
VERTICAL SPOUT
ABLAUFROHR
SORTIE VERTICALE
SCARICO VERTICALE

SQUARE HOPPER - *QUADRATISCER AUFGABETRICHTER* -TREMIE CARREE - *TRAMOGGIA QUADRATA*

M	D	X	T	S	1	2

2: Stainless steel - *Edelstahl 1.4301* - Inox 304 - *AISI 304*

Type hopper
Trichtergröße
Type de trémie
Grandezza tramoggia

1	MBF 042
2	MBF 073 -114

Square hopper
Quadratischer Aufgabetrichter
Trémie carrée
Tramoggia quadrata

Micro batch feeder accessories
Zubehör Mikrodosierer
Accessoires microdoseur
Accessori microdosatore

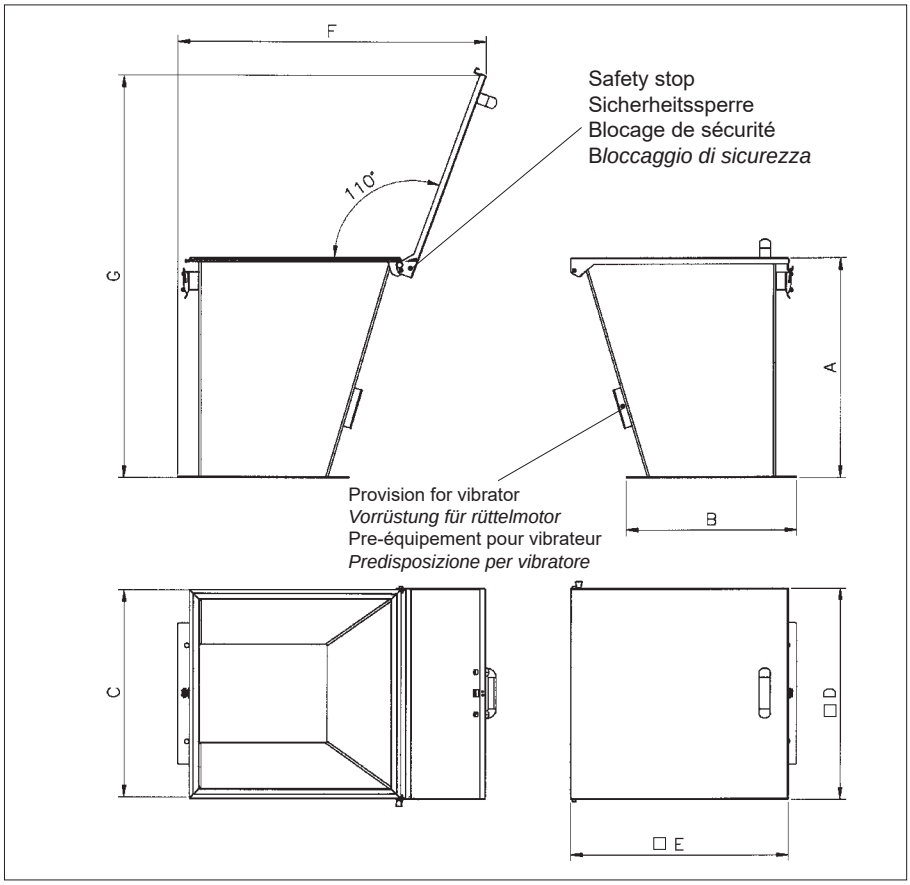

MDXTS	Suitable for - *Passend zu* Pour type - *Idoneo* MBF	A	B	C	□ D	□ E	F	G	dm³	kg
12	042	600	310	428	434	445	640	980	25	12
22	073 - 114	600	466	575	582	595	840	1120	75	19

ROUND HOPPER - *RUNDER AUFGABETRICHTER* - TREMIE RONDE - *TRAMOGGIA CIRCOLARE*

M	D	X	T	R	1	2

2: Stainless steel - *Edelstahl 1.4301* - Inox 304 - *AISI 304*

Type hopper
Trichtergröße
Type de trémie
Grandezza tramoggia

1	MBF 042
2	MBF 073 -114

Round hopper
Runder Aufgabetrichter
Trémie ronde
Tramoggia circolare

Micro batch feeder accessories
Zubehör zu Mikrodosierer
Accessoires microdoseur
Accessori microdosatore

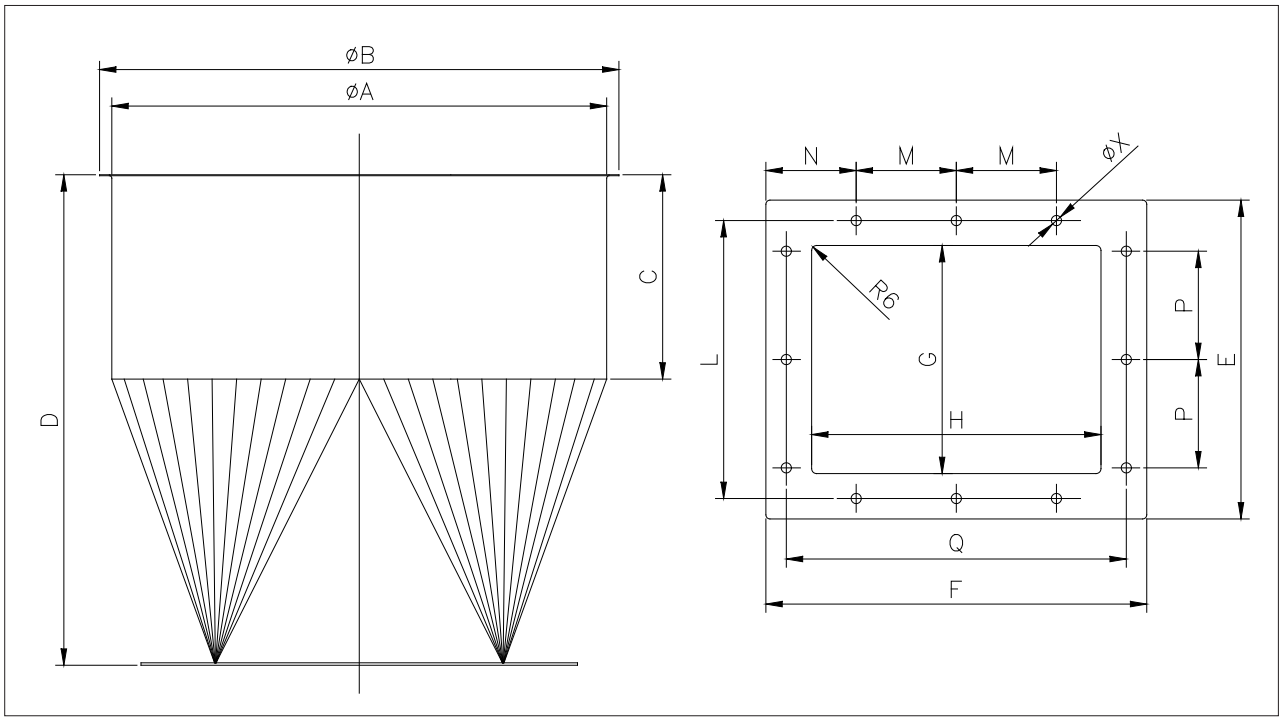

MDXTR	Suitable for - *Passend zu* Pour type - *Idoneo* MBF	Ø A	Ø B	C	D	E	F	G	H	L	M	N	P	Q	Holes - *Bohrungen* Trous - *Fori* X		dm³	kg
															Ø	n°		
12	042	408	436	200	500	250	310	140	200	200	110	100	130	260	9	8	52	12
22	073 - 114	630	636	250	600	390	466	279	354	340	122.5	110.5	132.5	416	12.5	12	120	20

ADDITIONAL CIRCULAR TUBULAR JOINT - *ZUSÄTZLICHES RUNDSCHREIBEN ROHRSTUTZEN*
RACCORD TUBULAIRE SUPPLEMENTAIRE CIRCULAIRE - *TRONCHETTO SUPPLEMENTARE CIRCOLARE*

M	D	X	A	R	1	2

2: Stainless steel - *Edelstahl 1.4301* - Inox 304 - *AISI 304*

Type hopper
Trichtergröße
Type de trémie
Grandezza tramoggia

1	MBF 042
2	MBF 073 -114

Additional circular tubular joint
Zusätzliches rundschreiben Rohrstutzen
Raccord tubulaire supplementaire circulaire
Tronchetto supplementare circolare

Micro batch feeder accessories
Zubehör zu Mikrodosierer
Accessoires microdoseur
Accessori microdosatore

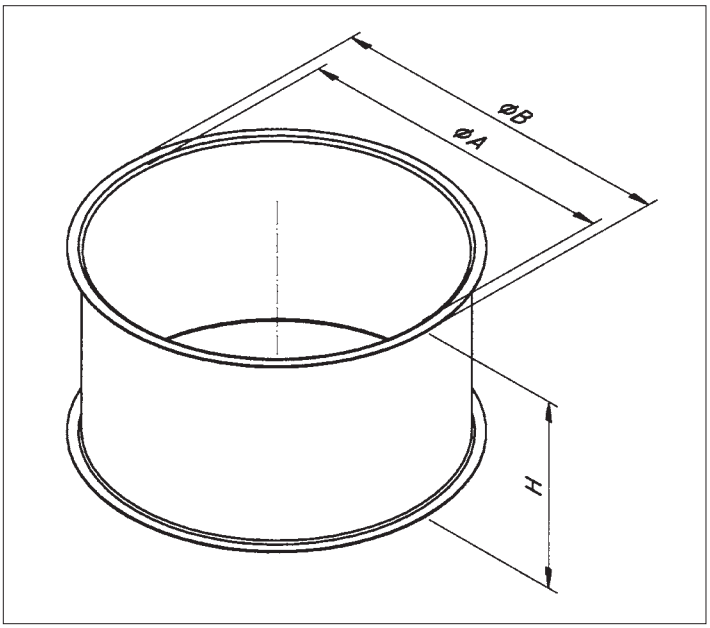

MDXAR	Suitable for - *Passend zu* Pour type - *Idoneo* MBF	Ø A	Ø B	H	dm^3
12	042	406	436	200	25
22	073-114	605	635	180	50

CUTTER GRILLE FOR SQUARE HOPPER - *QUADRATISCHER AUFREISSGRILL* - GRILLE CARREE - *GRIGLIA QUADRATA*

M	D	X	G	S	1	2

2: Stainless steel - *Edelstahl 1.4301* - Inox 304 - *AISI 304*

Type hopper
Trichtergröße
Type de trémie
Grandezza tramoggia

1	MBF 042
2	MBF 073 -114

Type hopper cutter grille
Grill
Type de grille
Griglia quadrata tagliasacchi

Micro batch feeder accessories
Zubehör Mikrodosierer
Accessoires microdoseur
Accessori per microdosatore

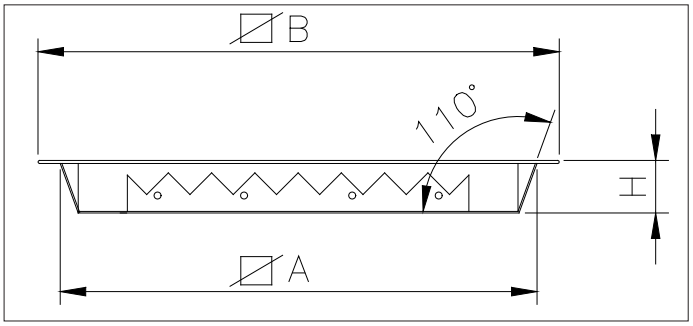

MDXGS	Suitable for - *Passend zu* Pour type - *Idoneo* MBF	□ A	□ B	H	kg
12	042	345	410	40	2
22	073 - 114	495	555	40	3

FLANGES - *FLANSCHE*
BRIDES - *FLANGIATURE*

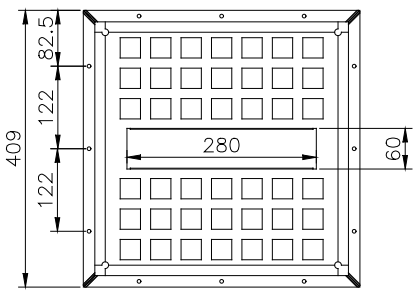

MDXGS12

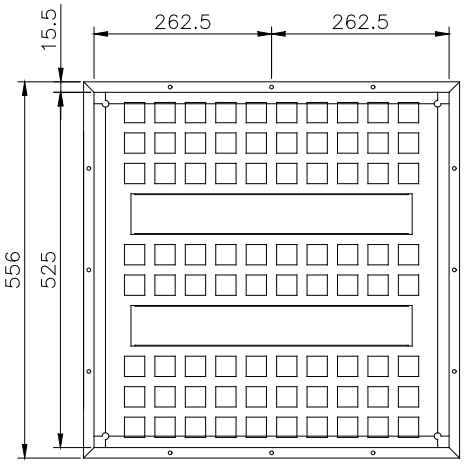

MDXGS22

ROUND COVER - *RUNDE ABDECKUNG* - COUVERCLE ROND - *COPERCHIO TONDO*

M	D	X	C	R	1	2

2: Stainless steel - *Edelstahl 1.4301* - Inox 304 - *AISI 304*

Type hopper
Trichtergröße
Type de trémie
Grandezza tramoggia

1	MBF 042
2	MBF 073 -114

Round cover
Runde Abdeckung
Couvercle rond
Coperchio tondo

Micro- batch fedeer accessories
Zubehör Mikrodosierer
Accessoires microdoseur
Accessori per microdosatore

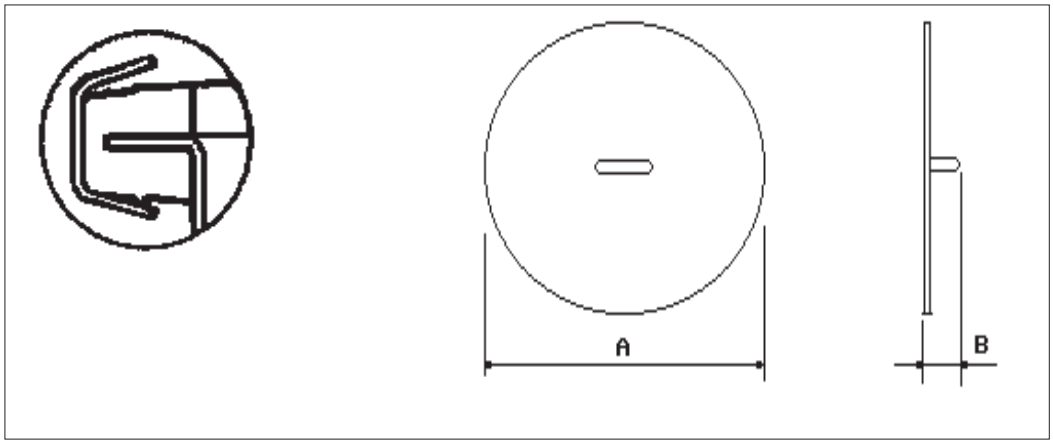

MDXCR	Suitable for - *Passend zu* Pour type - *Idoneo* MBF	A	B	kg
12	042	436	50	2
22	073 - 114	635	50	3

PNEUMATIC BALL VIBRATORS - *DRUCKLUFT-KUGELVIBRATOREN*
VIBRATEURS PNEUMATIQUES A BILLE - *VIBRATORI PNEUMATICI A SFERA*
"S"

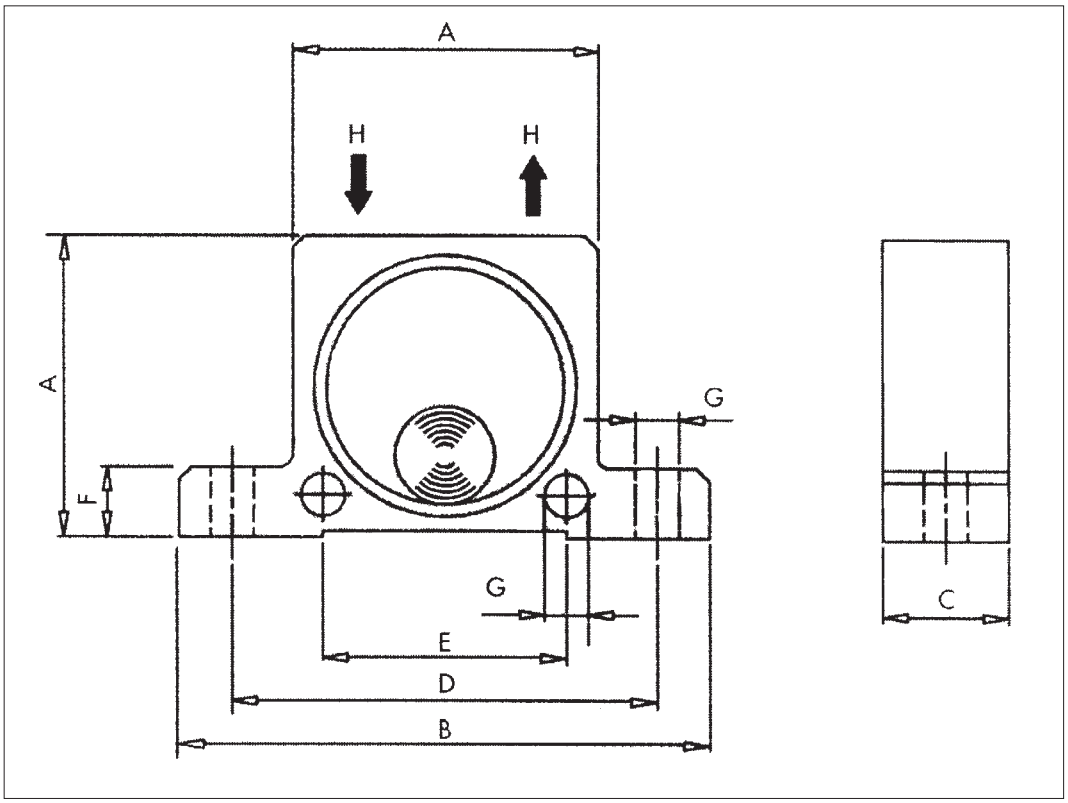

Dimensions - *Abmessungen* - Dimensions - *Dimensioni*

Type	A		B		C		D		E		F		G		H	kg	
	mm	in	mm	in	mm	in	mm	in	mm	in	mm	in	mm	in		kg	lbs
S 20	80	3.15	128	5.04	33	1.30	104	4.09	60	2.36	16	0.63	9	0.35	1/4¨	0.53	1.17
S 25					38	1.50										0.63	1.39

Performance data - *Leistungsdaten* - Performances - *Prestazioni*

Type	Vibrations - *Schwingungwen* Vibrations - *Vibrazioni* min			Fc max. kg						Air consumption - *Luftverbrauch* Consommation d'air - *Consumo d'aria* l/min					
	2 bar 29 psi	4 bar 58 psi	6 bar 87 psi	2 bar = 29 psi		4 bar = 58 psi		6 bar = 87 psi		2 bar = 29 psi		4 bar = 58 psi		62 bar = 87psi	
				kg	lbs	kg	lbs	kg	lbs	dm^3	cf	dm^3	cf	dm^3	cf
S 20	10.500	14.500	16.500	72	162	122	275	172	387	130	4.6	230	81	340	12.0
S 25	9.200	12.200	14.000	93	209	157	353	205	461	160	5.6	290	10.2	425	15.0

ELECTRIC EXTERNAL MOTOVIBRATORS - *ELEKTRISCHE VIBRATIONSMOTOREN*
MOTOVIBRATEURS EXTERNES ELECTRIQUES - *MOTOVIBRATORI ELETTRICI*
MVE

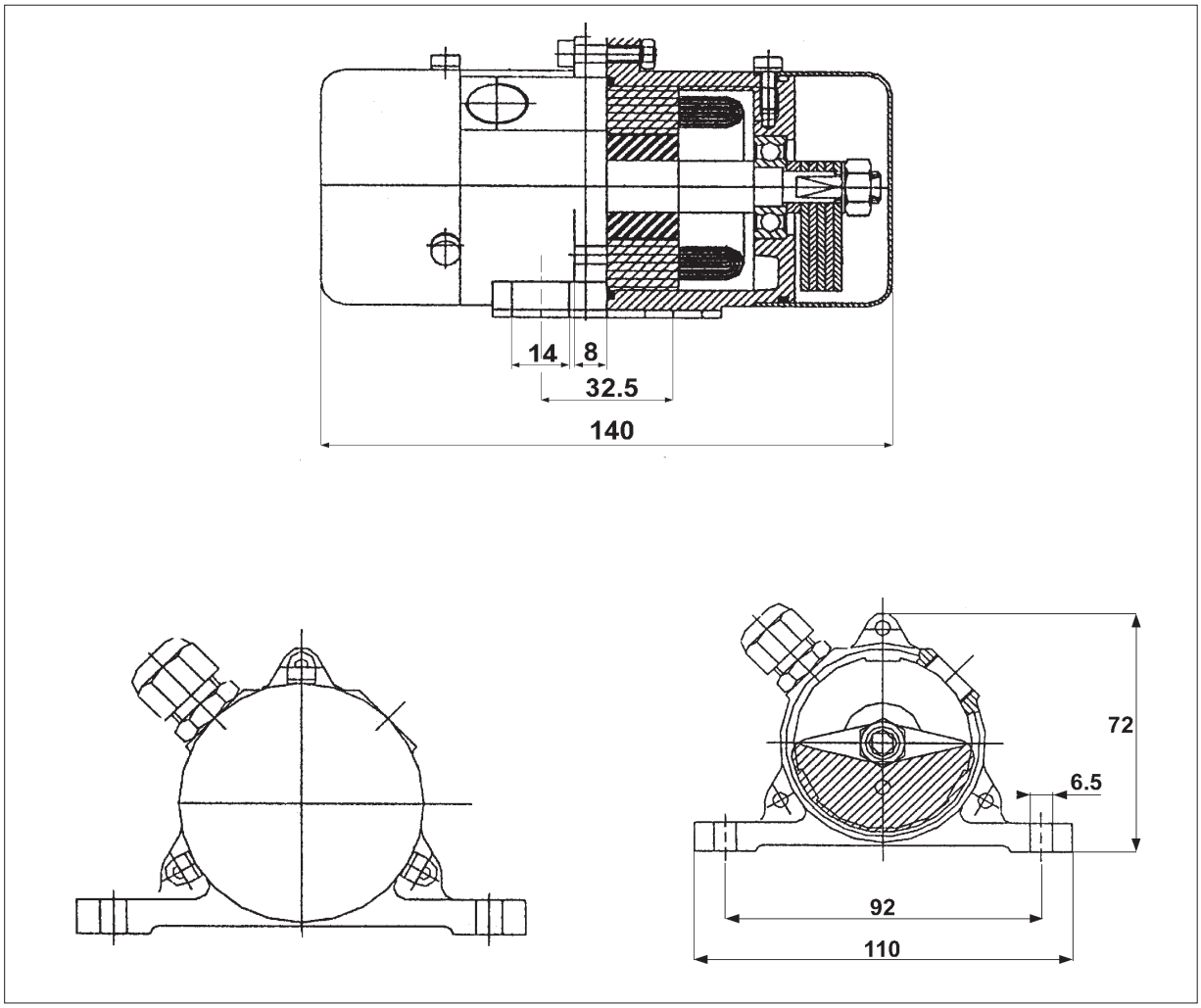

Type	Max. power *Max. Leistung* Puissance max. *Potenza max.* W		Max. current *Max. Stromaufnahme* Courant max. *Assorbimento max.* A		RPM *U/min* TPM *Giri/min*		Centrifugal force *Zentrifugalkraft* Force centrifuge *Forza centrifuga* kg		Weight *Gewicht* Poids *Peso*
	50 Hz	60 Hz	220 V 50 Hz	115 V 60 Hz	50 Hz	60 Hz	50 Hz	60 Hz	kg
MVE 20	32	36	0.10	0.23	2750	3300	0-22	0-32	1.5

TECNICAL FEATURES

- Adjustable Centrifugal Force
- Protection IP 65
- Insulation Class “F”
- Continuous Duty

TECHNISCHE MERKMALE

- Einstellbare Zentrifugalkraft
- Schutzart IP 65
- Iso-Klasse F
- 100% ED

CARACTERISTIQUES TECHNIQUES

- Force centrifuge réglable
- Protection IP 65
- Classe d’isolation F
- Service continu

CARATTERISTICHE TECNICHE

- Forza centrifuga regolabile
- Protezione IP 65
- Classe d’isolamento F
- Servizio continuo

SPECIAL BLENDING TOOLS - *SPEZIAL-HOMOGENISIERWERKZEUGE*
OUTILS DE HOMOGENEISATION SPECIAUX - *UTENSILI OMOGENEIZZAZIONE SPECIALI*

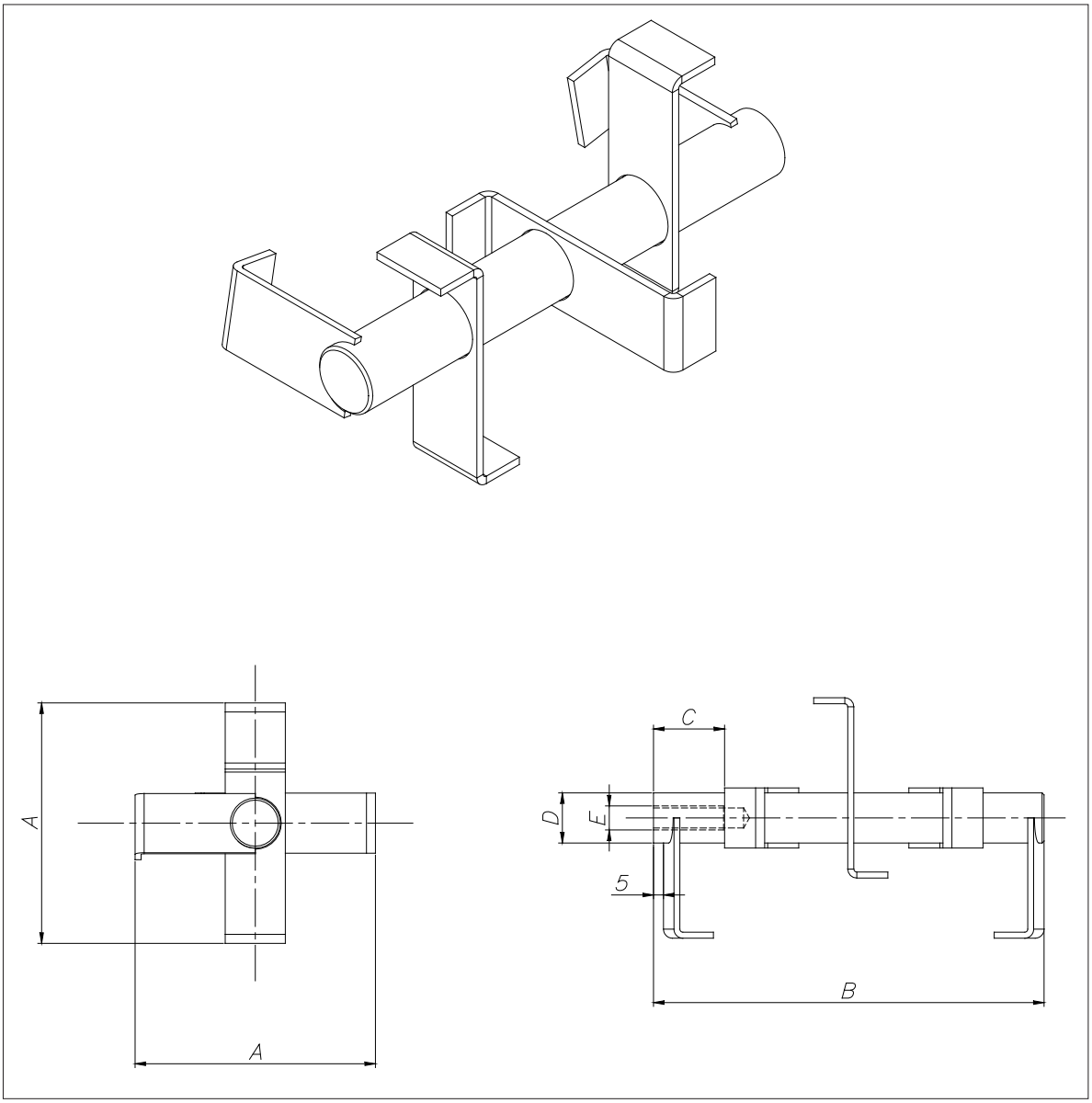

TYPE1

MBF	Code	A	B	D	E	kg
042	**UTO 12**	130	199	25	M 12	1
073	**UTO 13**	260	349	35	M 16	3.5
114	**UTO 13**	260	349	35	M 16	3.5

STD INSPECTION HATCH FOR AISI 304L MBF TYPE - ***STD INSPEKTIONSTÜR FÜR MBF IN EDELSTAHL 1.4301***
TRAPPE DE VISITE STD POUR MBF DANS AISI 304L - ***PORTELLO DI ISPEZIONE STD PER MBF IN AISI 304L***

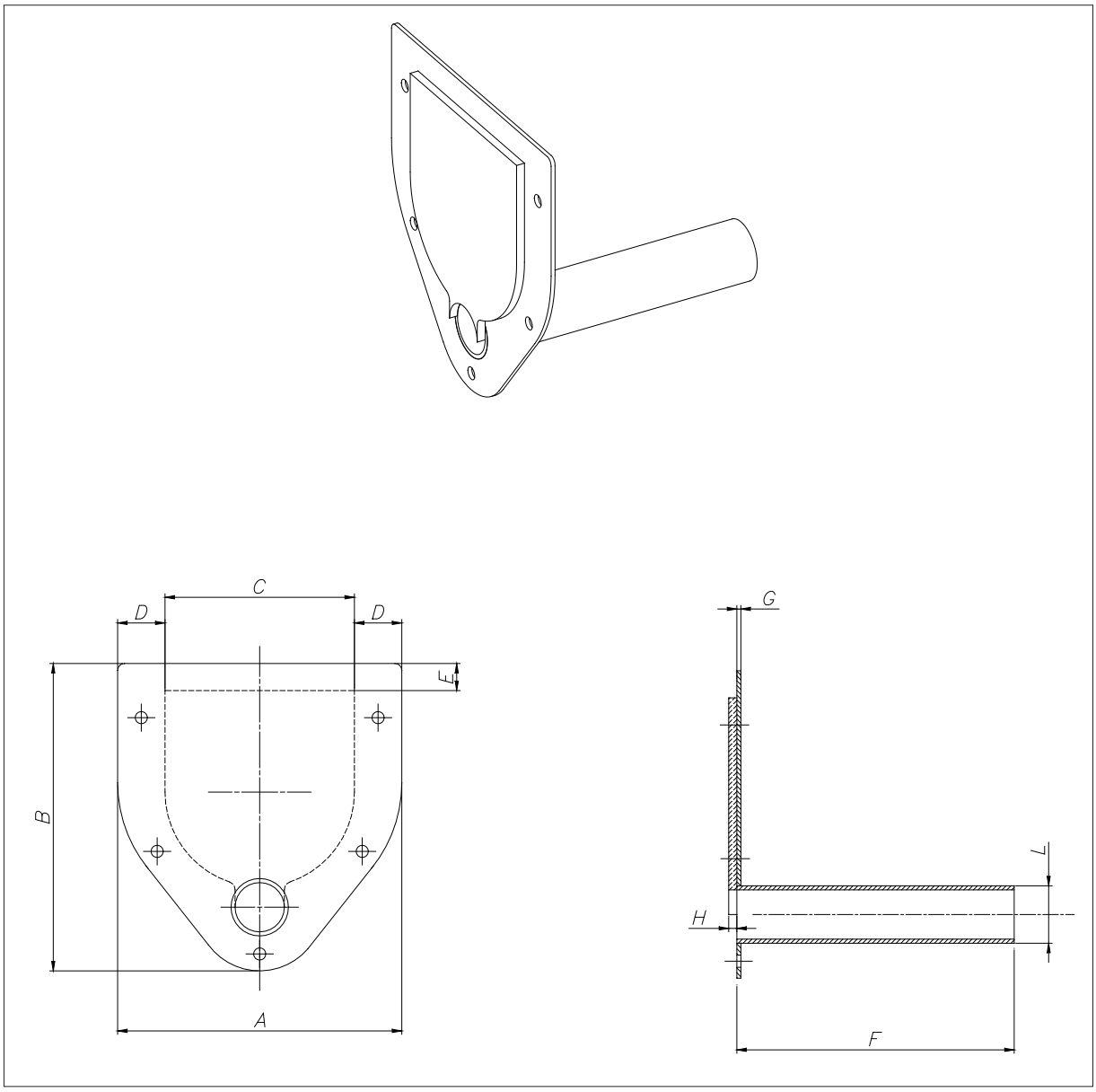

MBF	Code	A	B	C	D	E	F	G	H	Ø L	kg
042	**MBPI 2**	210	227	140	35	20	205	3	6	42	1.4
073	**MBPI 3**	345	395	275	35	20	255	3	6	76	5.6
114	**MBPI 4**	350	431	275	37	20	255	3	6	114	6.3

INSPECTION HATCH FOR AISI 304L MBF TYPE WITH EXTENDED TUBE
INSPEKTIONSTÜR FÜR MBF IN EDELSTAHL 1.4301 MIT* LÄNGLICH*ROHR
TRAPPE DE VISITE POUR MBF DANS AISI 304L AVEC TUBE PROLONGE
PORTELLO DI ISPEZIONE PER MBF IN AISI 304L CON TUBO PROLUNGATO

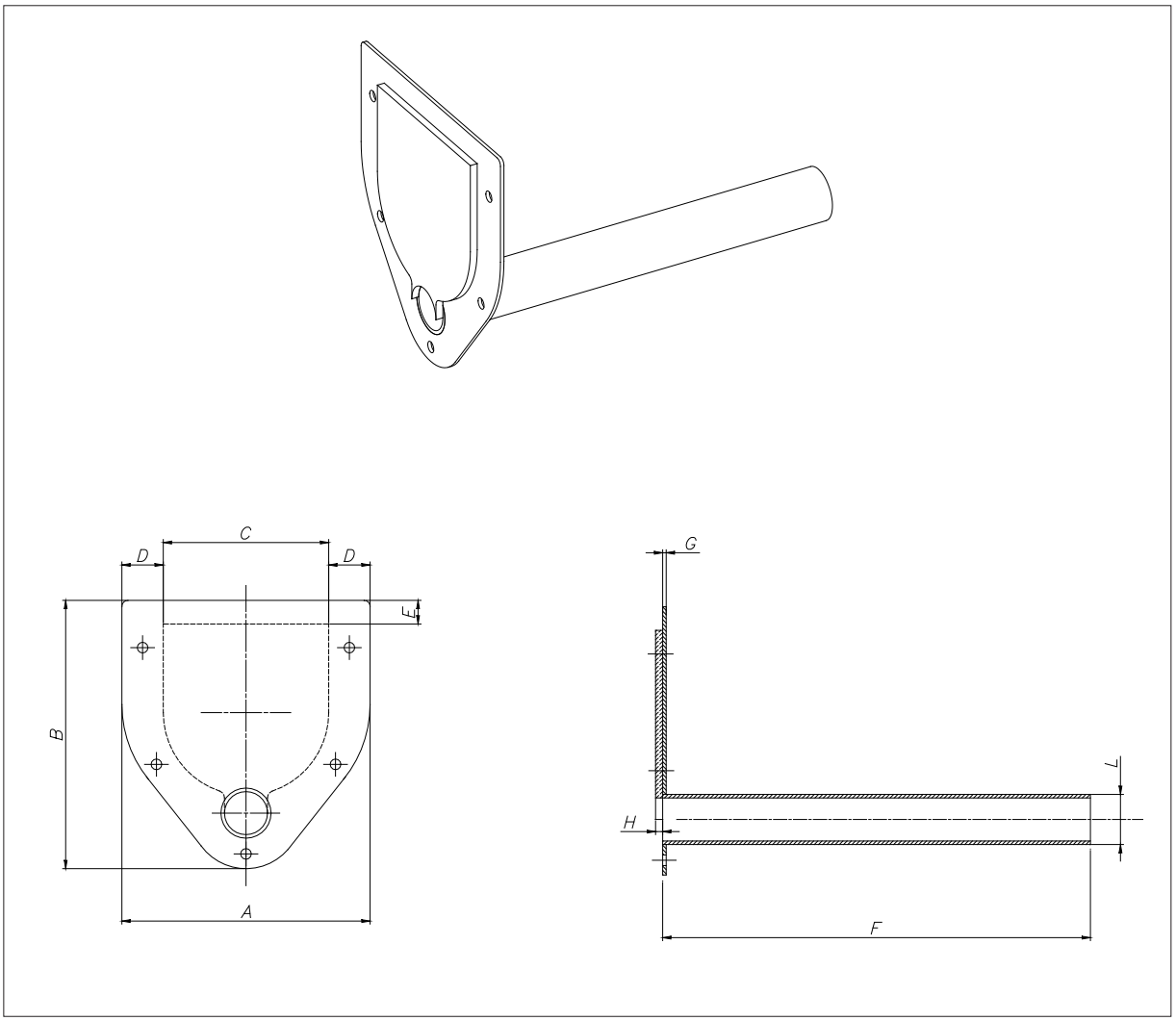

MBF	Code	A	B	C	D	E	F	G	H	Ø L	kg
042	**MBPIP 2**	210	227	140	35	20	362	3	6	42	1.8
073	**MBPIP 3**	345	395	275	35	20	505	3	6	76	6.8
114	**MBPIP 4**	350	431	275	37	20	505	3	6	114	7.4

FEEDER PIPE - *DOSIERROHR* - TUBE DE DOSAGE - *SCARICO*

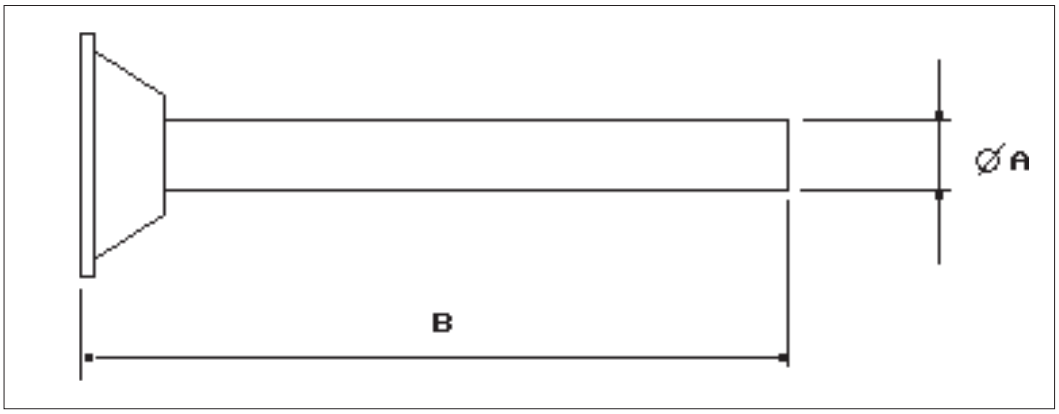

STANDARD FEEDER PIPE - *STANDARD DOSIERROHR* - TUBE DE DOSAGE STANDARD - *SCARICO STANDARD*				
Code	**Suitable for - *Passend zu* Pour type - *Idoneo per* MBF**	**Ø A**	**B**	**kg**
MBT 2	042	42	200	1.0
MBT 3	073	76	250	2.4
MBT 4	114	114	250	4.0

EXTENDED FEEDER PIPE - *VERLÄNGERTES DOSIERROHR* - SORTIE RALLONGEE - *SCARICO PROLUNGATO*				
Code	**Suitable for - *Passend zu* Pour type - *Idoneo per* MBF**	**Ø A**	**B**	**kg**
MBTP 2	042	42	370	1.2
MBTP 3	073	76	500	2.7
MBTP 4	114	114	500	4.4

LINERFEEDER PIPE - *DOSIERROHR MIT INNENAUSKLEIDUNG*
TUBE DE DOSAGE AVEC REVETEMENT INTERIEUR - *SCARICO INTERNAMENTE RIVESTITO*

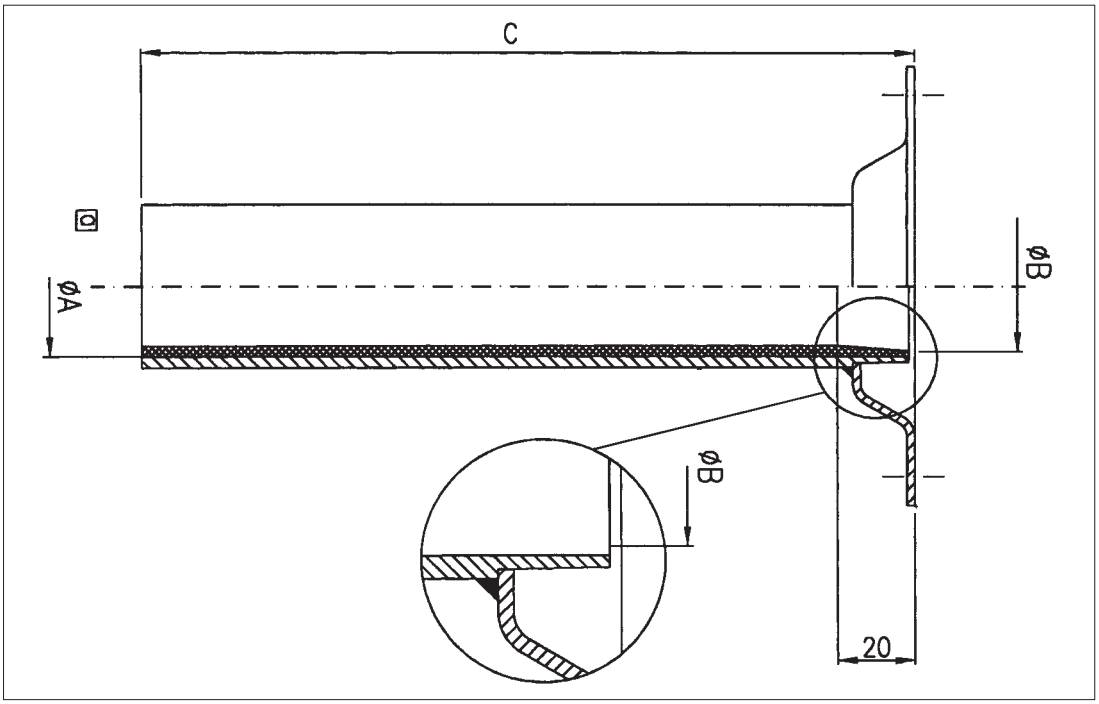

4 SINT®ER
5 SINT®AL

STANDARD LINED FEEDER PIPE - *STANDARD DOSIERROHR MIT INNENAUSKLEIDUNG* TUBE DE DOSAGE AVEC REVETEMENT INTERIEUR - *SCARICO STD INTERNAMENTE RIVESTITO*					
Code	**Suitable for - *Passend zu* Pour type - *Idoneo per* MBF**	**Ø A**	**Ø B**	**C**	**kg**
MBTR 2 .	042	31	34	200	1.2
MBTR 3 .	073	61	63	250	2.7
MBTR 4 .	114	101	104	250	4.4

4 SINT®ER
5 SINT®AL

EXTENDED LINED FEEDER PIPE - *VERLÄNGERTES DOSIERROHR MIT INNENAUSKLEIDUNG* TUBE DE DOSAGE RALLONGE AVEC REVETEMENT INTERIEUR - *SCARICO PROLUNGATO INTERNAMENTE RIVESTITO*					
Code	**Suitable for - *Passend zu* Pour type - *Idoneo per* MBF**	**Ø A**	**Ø B**	**C**	**kg**
MBTRP 2 .	042	31	34	370	1.6
MBTRP 3 .	073	61	63	500	3.2
MBTRP 4 .	114	101	104	500	5.2

VERTICAL SPOUT - *ABLAUFROHR* - SORTIE VERTICALE - *SCARICO VERTICALE*

M	D	X	S	V	2	4

4: SINT®ER
5: SINT®AL

2 = MBF 042
3 = MBF 073
4 = MBF 114

Vertical spout
Ablaufrohr
Sortie verticale
Scarico verticale

Micro-batch fedeer accessories
Zubehör Mikrodosierer
Accessoires microdoseur
Accessori microdosatore

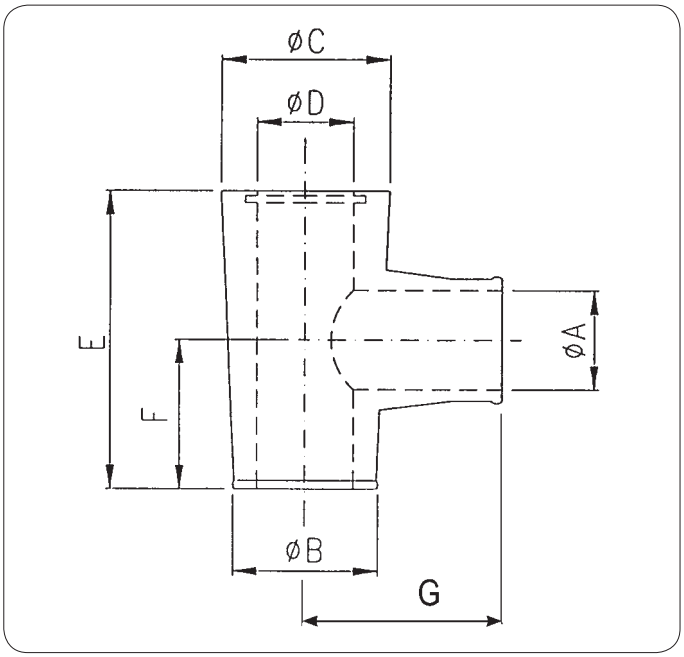

MDXSV	Suitable for - *Passend zu* Pour type - *Idoneo* MBF	Ø A	Ø B	Ø C	Ø D	E	F	G	kg
2.	042	42	60	70	50	126	63	81	0.27
3.	073	75	121	130	100	187.5	95	143.5	1.3
4.	114	114	175	190	150	230	115	191	3

4	SINT®ER
5	SINT®AL

VERTICAL SPOUT WITH PNEUMATIC CLOSURE - *ABLAUFROHR MIT PNEUMATISCHEM VERSCHLUSS*
SORTIE VERTICALE AVEC FERMETEURE PNEUMATIQUE - *SCARICO VERTICALE CON CHIUSURA PNEUMATICA*

M	D	X	S	C	2	4

4: SINT®ER
5: SINT®AL

2 = MBF 042
3 = MBF 073
4 = MBF 114

vertical spout with pneumatic cover
Ablaufrohr mit pneumatischem verschluss
Sortie verticale avec fermeteure pneumatique
Scarico verticale con chiusura pneumatica

Micro-batch fedeer accessories
Zubehör Mikrodosierer
Accessoires microdoseur
Accessori microdosatore

N.B.: Operation P_{max} 4 bar !
N.B.: Betrieb P_{max} 4 bar !
N.B.: P_{max} de travail 4 bar !
N.B.: P_{max} di lavoro 4 bar !

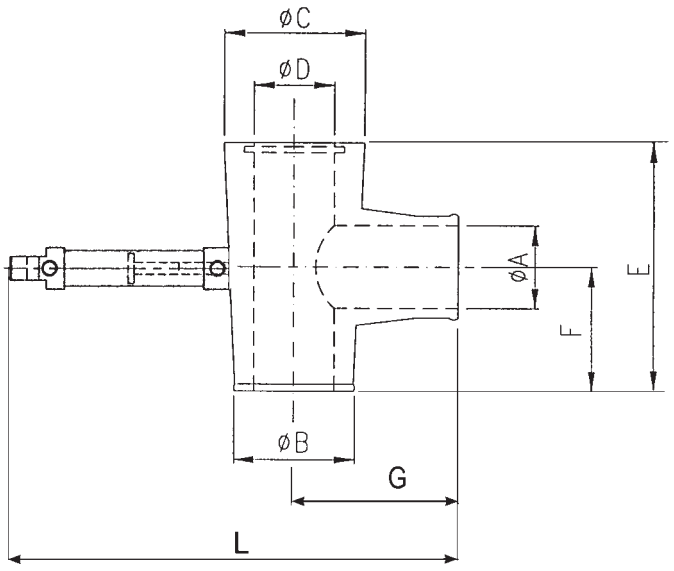

MDXSC	Suitable for - *Passend zu* Pour type - *Idoneo* MBF	Ø A	Ø B	Ø C	Ø D	E	F	G	L	kg
2.	042	42	60	70	50	126	63	81	214.5	0.5
3.	073	75	121	130	100	187.5	95	143.5	353.5	2.8
4.	114	114	175	190	150	230	115	191	472	4.5

4	SINT®ER
5	SINT®AL

Note: Microcylinder ISO 6432 - Anm.: Mikrozylinder ISO 6432
Remarque: Micro-cylindre ISO 6432 - *Nota: Microcilindro ISO 6432*

MAGENTIC SENSOR KIT FOR MICRO-CYLINDER - *MAGNETISCHES SENSORKIT FÜR MIKROZYLINDER*
KIT SENSEUR MEGNETIQUE POUR MICRO-CYLINDRE - *KIT SENSORE MAGNETICO RILEVAMENTO PER MICROCILINDRO*

KXM	Suitable for - *Passend zu* Pour type - *Idoneo* MBF
16	MDXSC2
20	MDXSC3
25	MDXSC4

AUTOMATIC LUBRICATOR | **AUTOMATISCHE SCHMIERVORRICHTUNG** | **GRAISSEUR AUTOMATIQUE** | **LUBRIFICATORE AUTOMATICO**

CARTRIDGE GREASE NIPPLE LIT - *SCHMIERPATRONENSATZ*
KIT GRAISSEUR CARTOUCHE - *KIT INGRASSATORE CARTUCCIA*

M D X I 125

- 125 — Capacity - *Kapazität* - Capacité - *Capacità*
- I — Grease nipple - *Schmiernippel* - Graisseur - *Ingrassatore*
- D — Micro-batch feeders accessories - *Mikrodosierer zubehör* Accessoires microdoseurs - *Accessori microdosatore*

TECHNICAL SPECIFICATIONS	
Capacity	125 ml
Operating period	Adjustable at 1-12 months
Operating temperature	-20°C a + 55°C°
Max. operating pressure	5 bar**
Activation mechanism	Hydrogen gas release battery (H2)
Threading	G 1/4
Recommended storage temperature	+20°C
Storage period	2 years***
Weight	Approx. 190g (including grease)
Appellative	LAGD 125/WA (filled with SKF LGWA 2 grease) LAGD 125/"lubricant"

TECHNISCHE DATEN	
Kapazität	125 ml
Betriebsdauer	Von 1 bis 12 Monate einstellbar
Betriebstemperatur	-20°C bis + 55°C°
Max. Betriebsdruck	5 bar**
Einschaltmechanismus	Wasserstoff freisetzende Batterie (H2)
Gewinde	G 1/4
Empfohlene Lagerhaltungstemperatur	+20°C
Lagerzeit	2 Jahre ***
Gewicht	circa 190 g (Fett inbegriffen)
Bezeichnung	LAGD 125/WA (mit Fett SKF LGWA 2 gefüllt) LAGD 125/"Schmierstoff"

CARACTÉRISTIQUES TECHNIQUES	
Capacité	125 ml
Période de fonctionnement	Réglable de 1 à 12 mois
Température de fonctionnement	-20°C a + 55°C°
Pression max. de fonctionnement	5 bar**
Mécanisme d'activation	Batterie à dégagement de gaz hydrogène (H2)
Filetage	G 1/4
Température conseillée pour le stockage	+20°C
Période de stockage	2 ans***
Poids	Env. 190jj (graisse incluse)
Désignation	LAGD 125/WA (avec le plein de graisse SKF LGWA 2 grease) LAGD 125/"lubrifiant"

DATI TECNICI	
Capacità	125 ml
Periodo di funzionamento	Regolabile da 1 a 12 mesi
Temperatura di funzionamento	-20°C a + 55°C°
Pressione max. di funzionamento	5 bar**
Meccanismo di attivazione	Batteria a sviluppo di gas idrogeno (H_2)
Filettatura	G 1/4
Temperatura consigliata per lo stoccaggio	+20°C
Periodo di stoccaggio	2 anni***
Peso	Circa 190g (grasso incluso)
Appellativo	LAGD 125/WA (riempito con grasso SKF LGWA 2) LAGD 125/"lubrificante"

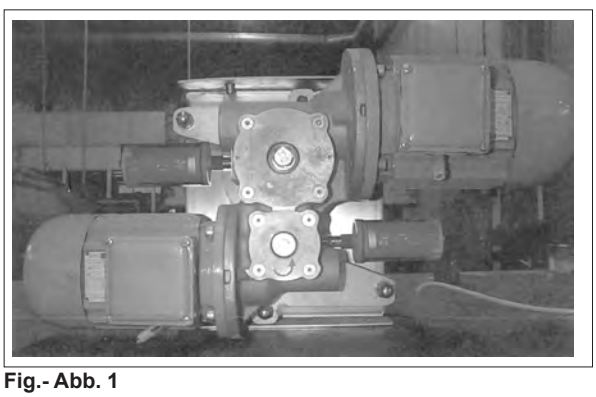

Fig.- Abb. 1
SKF assembly on Batch feeder - *Montage SKF auf Dosierer*
Montage SKF sur doseur - *Montaggio SKF su dosatore*

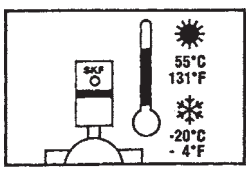

Operatin temperature - *Betriebstemperatur*
Température de fonctionnement
Temperatura di funzionamento

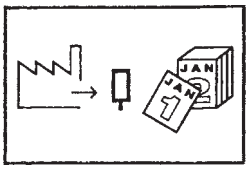

Production date - *Produktionsdatum*
Date de production - *Data di produzione*



MATERIAL TO DOSE
PHYSICAL AND CHEMICAL CHARACTERISTICS

- ☐☐ ☐☐ DENSITY
- ☐☐☐☐ GRANULOMETRY
- ☐ FLUIDITY
- ☐ ABRASIVITY
- ☐ BUILDS UP AND HARDENS
- ☐ STATIC ELECTRICITY GENERATOR
- ☐ DECOMPOSITION - DAMAGING
- ☐ FLAMMABILITY
- ☐ PLASTICITY - TENDENCY TO SOFTEN
- ☐ DUSTINESS
- ☐ AIRATED - FLUIDITY
- ☐ EXPLOSIVITY
- ☐ VISCOSITY - ADHESIVENENESS
- ☐ CONTAMINABILITY
- ☐ DEGRADABILITY
- ☐ PRESENCE OF TOXIC GAS
- ☐ HIGH CORROSIVITY
- ☐ MEDIUM CORROSIVITY
- ☐ HYGROSCOPICITY
- ☐ FORMATION OF GRANULES
- ☐ INTERLOCKS, AGGLOMERATES
- ☐ PRESENCE OF OILS AND GREASE
- ☐ TENDENCY TO COMPACT UNDER PRESSURE
- ☐ LIGHT AND SOFT
- ☐ HIGH TEMPERATURE

REQUEST CAPACITY (dm^3/h) ☐☐☐☐ (kg/h) ☐☐☐☐

TOLERANCE ☐ ☐

LOADING AND HOPPER CAPACITY

MBW MODEL

FEED SCREW AND AGITATOR ☐ ☐ R ☐

ACCESSORIES

MOTORS V Hz

NOTES

DOSIERMEDIUM
PHYSIKALISCHE UND CHEMISCHE EIGENSCHAFTEN

- ☐☐ ☐☐ SCHÜTTGEWICHT
- ☐☐☐☐ KÖRNUNG
- ☐ FLIESSFÄHIGKEIT
- ☐ ABRASIVITÄT
- ☐ HÄRTET LEICHT AUS
- ☐ LÄDT SICH STATICH AUF
- ☐ VERROTTET LEICHT
- ☐ LEICHT ENTZÜNDBAR
- ☐ PLASTIFIZIERT
- ☐ HOHE STAUBENTWICKLUNG
- ☐ HOHER LUFTANTEIL
- ☐ EXPLOSIV
- ☐ VISKOS, STARK HAFTEND
- ☐ LEICHT ZU VERUNREINIGEN
- ☐ ZERFALLT LEICHT
- ☐ ENTWICKELT GIFTIGE GASE ODER RAUCH
- ☐ SEHR KORROSIV
- ☐ HYGROSKOPISCH
- ☐ NEIGT ZUR KORN-ODER KLUMPENBILDUNG
- ☐ ÖL-ODER FETTHALTIG
- ☐ NEIGT ZUM ANBACKEN
- ☐ SEHR LEICHT
- ☐ HOHE TEMPERATUR

GEFORDERTE DURCHSATZLEISTUNG (dm^3/h) ☐☐☐☐ (kg/h) ☐☐☐☐

TOLERANZ %____*☐ ☐

ART DER BESCHICKUNG:
TRICHTERKAPAZITÄT:
BETRIEBSDAUER :(h/Tag)
EINSCHALTUNGEN PRO STUNDE:
WOHIN WIRD DOSIERT ?
WENN VARIABLE DURCHSATZLEISTUNG GEFORDERT, WARUM ?
DOSIERER TYPE:

DOSIER-/HOMOGENISIERWERKZEUG ☐ ☐ R ☐
ZUBEHÖR:

ELEKTROMOTOR (E) V Hz

BEMERKUNGEN :

MATERIAU A DOSER
CARACTERISTIQUES PHYSICO - CHIMIQUES

- ☐☐ ☐☐ POIDS SPECIFIQUE
- ☐☐☐☐ GRANULOMETRIE
- ☐ CORROSION
- ☐ ABRASIVITE
- ☐ DELATATION ET DURCISEMENT
- ☐ ENGENDRE DE L' ELECTRICITE STATIQUE
- ☐ DECOMPOSITION - DETERIOSATION
- ☐ IMFLAMABLE
- ☐ PLASTIQUE
- ☐ SOUPLE
- ☐ AERE - FLUIDE
- ☐ EXPLOSIF
- ☐ VISCOSITE
- ☐ CONTAMINABLE
- ☐ DEGRADABLE
- ☐ CREATION DE GAZ TOXIDE ET DE FUME NUISIBLE
- ☐ HAUTE CORROSION
- ☐ MOYEN CORROSION
- ☐ HYGROSCOPIQUE
- ☐ FORMATION DE GRANULE
- ☐ PRESENTE HUILE ET GRAISSE
- ☐ TASSEMENT SOUS PRESSION
- ☐ TRES LEGER
- ☐ TEMPERATURE ELEVEE
- ☐

DEBIT DEMANDE (dm^3/h) ☐☐☐☐ (kg/h) ☐☐☐☐

TOLERANCE ☐ ☐

SYSTEME DE CHARGEMENT ET CAPACITE DE LA TREMIE

MICRODOSEUR TYPE

VIS DOSAGE ET HO-MOGENEISATION ☐ ☐ R ☐

ACCESSOIRES

MOTEURS V Hz

NOTES

MATERIALE DA DOSARE
CARATTERISTICHE FISICO CHIMICHE

- ☐☐ ☐☐ PESO SPECIFICO
- ☐☐☐☐ GRANULOMETRIA
- ☐ SCORREVOLEZZA
- ☐ ABRASIVITA'
- ☐ ACCRESCIMENTO E INDURIMENTO
- ☐ GENERA ELETTRICITA' STATICA
- ☐ DECOMPOSIZIONE - DETERIORAMENTO
- ☐ INFIAMMABILITA'
- ☐ PLASTICITA ' - TENDENZA ALL'AMMORBIDIMENTO
- ☐ POLVEROSITA'
- ☐ AERAZIONE - FLUIDITA'
- ☐ ESPLOSIVITA'
- ☐ VISCOSITA' E ADESIONE
- ☐ CONTABILITA'
- ☐ DEGRADABILITA'
- ☐ CREAZIONE DI GAS TOSSICO DI FUMO NOCIVO
- ☐ ALTA CORROSIVITA'
- ☐ MEDIA CORROSIVITA'
- ☐ IGROSCOPICITA'
- ☐ FORMAZIONE DI GRANULI,INTRECCIAMENTI, E
- ☐ AGGLOMERATI
- ☐ PRESENZA DI OLII E GRASSI
- ☐ IMPACCAMENTO SOTTO PRESSIONE
- ☐ MOLTO LEGGERO E SOFFICE
- ☐ TEMPERATURA ELEVATA

PORTATA RICHIESTA(dm^3/h) ☐☐☐☐ (kg/h) ☐☐☐☐

TOLLERANZA ☐ ☐

SISTEMA DI CARICO E CAPACITA' TRAMOGGIA

MICRODOSATORE TIPO

UTENSILE DOSAGGIO E OMOG. ☐ ☐ R ☐

ACCESSORI

MOTORI V Hz

NOTE

N.B. Rights reserved to modify technical specifications
N.B. Angaben ohne Gewähr. Änderungen können ohne Vorankündigung vorgenommen werden.
N.B. Toutes données portées dans le présent catalogue n'engagent pas le fabricant. Elles peuvent être modifiéès à tout moment.
N.B. Tutti i dati riportati nel presente catalogo non sono impegnativi e possono subire variazioni in qualsiasi momento.

WAMGROUP S.p.A.
Via Cavour, 338
I - 41030 Ponte Motta
Cavezzo (MO) - ITALY

☎ +39 / 0535 / 618111
fax +39 / 0535 / 618226
e-mail info@wamgroup.it
internet www.wamgroup.com
videoconference + 39 / 0535 / 49032

CS-910-555 : Identification sheet

VWTC PROJECT NUMBER:	Iqaluit WWTP	REV:	02
PROJECT NAME:	5000218036	SUBMITTED TO (COMPANY):	
ENGINEER:	F.VINCI	SUBMITTED TO (RESPONSIBLE)	
PROJECT MANAGER:	C. BEKAERT	PROJECT NUM REFERENCE.:	
PHONE NUMBER:		LOT NUMBER:	

SUPPLIER	EQPT CODE	EQPT TAG NO	DIA	DESCRIPTION	INFO 1	INFO 2	INFO 3	APPLIC.	NOTE	REV
TIGER-VAC	TOIEGU317247	VAC-04-710		HP-250 HOISTING	POWERHEAD ASSEMBLY FOR EC-12 w/CLOTH FILTER // Manuf: Tiger-Vac // Model : EC-12 // Silencer 212440 // 240Vac / 60Hz			HP-250		2

Model EC-12(G) HEPA electrically operated industrial vaccuum cleaner

With HEPA fi ltration for Wet & Dry recovery
Filtration effi ency of 99.99% on 0.3 microns

1



- Made of heavy-duty epoxy coated metal and mounted on a 4-wheel base
- Exhaust silencer for a quieter operation

Technical data	Performance	Recovery Capacity	Dimensions
220-240V/60Hz Watts: 1250 Amps: 5.5	Airflow: 110CFM Vacuum Pressure: 110" H_2O	12 gallons (46 litres)	Height: 32" (81 cm) Width: 22" (56 cm) Weight: 45 lbs (20.5 kg)

1. **Model EC-12** 220-240V
2. **Exhaust Silencer** (#212440)
3. **Complete tool kit:**

- HEPA Filter (#213146)
- Polyester main filter (#211311B)
- Floater shut-off mechanism (#211277)
- 10' crush-proof suction hose (#381137A)
- 2-piece wand (#381163)
- Floor tool for dry recovery (#381380)
- Floor tool for wet recovery (# 381381)
- Crevice tool (#381197)

2



Optional Exhaust Silencer

3



Optional

REVIEWED BY CONTRACTOR

Kudlik Construction Ltd.

NAME: Sandra Rousseau P.Eng

DATE: Jun 11, 2019

VEOLIA

SHOP DRAWINGS

Dosing Skid (Duplex) Submittal package Date : 2019-06-10

General Information			
Project	**WWTP UPGRADE - IQALUIT**		
Client:	Kudlik Construction Ltd.	Project Number	2018-062
To:	Sandra Rousseau P.Eng., Project Manger	E-mail:	srousseau@kudlik.biz
Contractor	Veolia Water Technologies Canad Inc.	Project Number	5000218036
Address	4105 Sartelon, Ville St. Laurent PQ, H4S 2B3		
Project Manger:	Clément Bekaert	E-mail:	clement.bekaert@veolia.com
Phone:	514-334-7230 x 3243	Cell:	514-246-6232

Information on the Equipment		
Specialty:	Process	
Equipment:	Dosing Skid (Duplex)	
Drawing Reference:		
Specification reference:	46 36 11	
Article:		
Revision:	Rev02	
Titre:	Dosing Skid (Duplex) submittal package	
Numero client:	DA-Veolia-DS-06-Dosing Skid Duplex	
Numero Veolia	5000218036_DS_0006_GEN_VWT	
Envoyer pour:	Approbation/Information:	Approbation

Consultant Approval

STANTEC PROJECT #: 110126045
This review by Stantec is for general conformance with the design concept of Stantec's design of the:
☐ Architectural ☐ Structural ☐ Mechanical ☑ Electrical ☐ Other
component(s) only and does not mean that Stantec has verified or approves the shop drawing(s). The Contractor remains solely responsible for the shop drawing(s) and this review by Stantec does not relieve the Contractor of the Contractor's responsibility for errors or omissions in the shop drawing(s) or for meeting all requirements of the contract documents. This review does not mean that Stantec approves the detailed design inherent in the shop drawing, responsibility for which shall remain with the Contractor submitting same, nor does this review mean that Stantec accepts any deviation of the shop drawing(s) from the contract documents. The Contractor is responsible for confirming all dimensions and correlating them at the job site, for all construction means, methods and techniques, and for coordination of construction work of all trades, including coordination of all shop drawings.

SUBMITTAL # DA-Veolia-DS-06-Dosing Skid Duplex-Rev02

Stantec

☑ REVIEWED
☐ REVIEWED, AS NOTED
☐ REVISE AND RESUBMIT
☐ NOT REVIEWED

DATE 2019-06-13
BY Jamie McLeish

STANTEC PROJECT #: 110126045
This review by Stantec is for general conformance with the design concept of Stantec's design of the:
☐ Process ☐ Structural ☐ Mechanical ☐ Electrical ☐ Other
component(s) only and does not mean that Stantec has verified or approves the shop drawing(s). The Contractor remains solely responsible for the shop drawing(s) and this review by Stantec does not relieve the Contractor of the Contractor's responsibility for errors or omissions in the shop drawing(s) or for meeting all requirements of the contract documents. This review does not mean that Stantec approves the detailed design inherent in the shop drawing, responsibility for which shall remain with the Contractor submitting same, nor does this review mean that Stantec accepts any deviation of the shop drawing(s) from the contract documents. The Contractor is responsible for confirming all dimensions and correlating them at the job site, for all construction means, methods and techniques, and for coordination of construction work of all trades, including coordination of all shop drawings.

SUBMITTAL # DA-Veolia-DS-06-Dosing Skid Duplex-Rev02

Stantec

☑ REVIEWED
☐ REVIEWED, AS NOTED
☐ REVISE AND RESUBMIT
☐ NOT REVIEWED

DATE Jun 11, 2019
BY Alejandro Rojas, P.Eng

STANTEC PROJECT #: 110126045
This review by Stantec is for general conformance with the design concept of Stantec's design of the:
☐ Architectural ☐ Structural ☐ Mechanical ☐ Electrical ☑ Other Instrumentation
component(s) only and does not mean that Stantec has verified or approves the shop drawing(s). The Contractor remains solely responsible for the shop drawing(s) and this review by Stantec does not relieve the Contractor of the Contractor's responsibility for errors or omissions in the shop drawing(s) or for meeting all requirements of the contract documents. This review does not mean that Stantec approves the detailed design inherent in the shop drawing, responsibility for which shall remain with the Contractor submitting same, nor does this review mean that Stantec accepts any deviation of the shop drawing(s) from the contract documents. The Contractor is responsible for confirming all dimensions and correlating them at the job site, for all construction means, methods and techniques, and for coordination of construction work of all trades, including coordination of all shop drawings.

SUBMITTAL # DA-Veolia-DS-06 Dosing Skid Duplex

Stantec

☐ REVIEWED
☑ REVIEWED, AS NOTED
☐ REVISE AND RESUBMIT
☐ NOT REVIEWED

DATE June 24, 2019
BY Amanda Bron, EIT

4105 Sartelon
Ville St. Laurent, PQ
H4S-2B3

Phone: 514-334-7230
Fax: 514-334-5070
www.veoliawatertechnologies.ca

Project name:	IQALUIT
Project#:	5000218036
Document #:	5000218036_DS_0006_PM_VWT Rev2
by:	BB
chkd:	GH
appvd:	CB

SUBMITTAL PACKAGE

SKID DUPLEX - Rev 2

Are PI04-986 and PI04-989 part of Vendor supply? Shown on the P&IDs, but not shown in the shop drawing.

Project name:	IQALUIT
Project#:	5000218036
Document #:	5000218036_DS_0006_PM_VWT Rev2
by:	BB
chkd:	GH
appvd:	CB

SKID DUPLEX

PROCESS DATASHEET

OIM manual section: 4.3.6.1

	VEOLIA				VWT CANADA #		PSDS_0006_PCH		
					Project #		5000218036		
					Date		2018-09-18		
					Polymer				
CLIENT	REV	DESCRIPTION			DATE	By	Chkd	App.	
	1	FOR APPROVAL			2018-09-18	G.H.	GP	C.B.	
CITY OF IQALUIT	2	FOR APPROVAL 2			2018-09-18	G.H.	GP	C.B.	
	3	FOR APPROVAL 3			2019-01-29	F.V.	GP	C.B.	
PROJECT	4								
	5								
IQALUIT	6								
	7								
	TAG:								REV
GENERAL	Dosed Chemical					Polymer			
	Number of skids					1			
	Pumps type					Cavity Progressive Pump			
	Model Serie					Netszch			
	Total number of pumps					2			
	Number of pumps in duty					1			
	Number of pumps in standby					1			
	Number of dosing points					1			
PROCESS REQUIREMENT	Min Flowrate				lph	50			
	Avg Flowrate				lph	554			3
	Max Flowrate				lph	600			
ENVIRONMENT	Equipment Location					Indoor			
	Min. Temperature				°C	5			
	Max . Temperature				°C	25			
	Max. Humidity				%	95			
	Corrosive Atmosphere					Non Corrossive			
	Freeze					N/A			
	Comments								
SAFETY	Electrical Classification					Non Hazardous			
	Province/State					Nunavut			
PUMP(S) CAPACITY	Max Flowrate				lph	600			
	Min Flowrate				lph	50			
TECHNICAL DESCRIPTION	Skid Frame			Material		Stainless Steel			3
				Type		Stand Alone			
				Option #1		N/A			
				Option #2					
	Pump		x	Dosing Pumps		Netszch NM021BY01L06B			
			x	Variable Frequency Drive	N/A	See Electrical Submital Package			
	Components			Foot valve c/w flexible hose					
				Isolation Valves (Common Suction)	N/A	N/A		0	
			x	Isolation Valves (Suction)	Chemline	21A010EC		2	
			x	Isolation Valve Calibration Cylinder (Suction)	Chemline	21A010EC		2	
			x	Isolation Valves (Discharge)	Chemline	21A010EC		5	
				Isolation Valves Calibration Cylinder (Discharge)	N/A	N/A		0	
				Check Valves (Discharge)	N/A	N/A		0	
			x	Backpressure Valves	Chemline	SB12A010EU (BPVG)		2	
		Valves		C/w Isolator & Press. Gauge	Chemline	SGA-005-002-P-G + P025-160-BM	Config. L-U	0	
			x	Relief Valves	Chemline	SB12A010EU (RV)		2	
				W/o Press. Gauge	N/A	N/A	N/A		
			x	Metering Valve - Carrier Water	Chemline SM	SMA015ES		1	
			x	Isolation Valves - Carrier Water	Chemline	21A015EC		1	
			x	Check Valves - Carrier Water	Chemline	BTA015ES		1	
			x	On/Off Valves - Carrier Water	ASCO	8210G056-120VAC	Brass	1	
			x	Cleaning Valves	Chemline	21A005EC		2	
			x	Calibration Cylinder	PFS	PV#2-10000	10000 ml	1	
			x	Variable Area Flowmeter	Chemline	FSA02000		0	
		Misc.		Flow Switch	N/A			0	
				Isolation Valves Flow Meter (Discharge)	N/A	N/A		0	
				Flowmeter	N/A			0	
				Pulsation Dampener	N/A			0	
	Piping			VWS Piping spec code		A050C			
				Pipe Material		PVC Sh 80 ASTM D1784			
				Common Suction Nominal Pipe Size	in	1 1/2"			
				Suction Pipe Nominal Pipe Size	in	1"			
				Discharge Pipe Nominal Pipe Size	in	1"			
UTILITIES	Service Water for Chemical Transport			Flowrate (per injection line)	lph	1500			
				Pressure	psig				
				Transport Water Nominal Pipe Size	in	1 1/2"			

1	VEOLIA					VWT CANADA #		PSDS_0006_PCH		
2						Project #		5000218036		
3						Date		2018-09-18		
4						Polymer				
5	CLIENT	REV	DESCRIPTION			DATE	By	Chkd	App.	
6		1	FOR APPROVAL			2018-09-18	G.H.	GP	C.B.	
7	CITY OF IQALUIT	2	FOR APPROVAL 2			2018-09-18	G.H.	GP	C.B.	
8		3	FOR APPROVAL 3			2019-01-29	F.V.	GP	C.B.	
9	PROJECT	4								
10		5								
11	IQALUIT	6								
12		7								
13		TAG:								REV
72		Design Pressure				psig	60			3
73		Design Temperature				°C	35			
74	DESIGN CRITERIA	Operating Pressure				psig	45			3
75		Test Pressure				psig	90			3
76		Test duration				min	15			
77		Test Fluid				-	Water			
78		Inlet		Diameter (NPS)		in	1 1/2"			
79				Type			Socket union			
80	CONNECTIONS	Outlet		Diameter (NPS)		in	1 1/2"			
81				Type			Socket union			
82		Transport Water		Diameter (NPS)		in	1 1/2"			
83				Type			Socket union			
84		Main Power					575V/3Ph/60 Hz			
85		Controls					VFD c/w 4-20 mA			
86	ELECTRICITY	Frame Grounding								
87		Wiring		Pre wired (Y or N | details)			w/o wiring and JB			
88				Cable Type						
89		Anchors		Qty			6			
90				Supply			No			
91		Design Code					ASME B31.3 Non Certified			
92	CODE, APPROVAL & CERTIFICATIONS	Glueing					Glueing B31.3 non certified / Non Certified Shop			
93		Mandatory Registration								
94										
95		Weight (dry)		Final		kg	Refer to GA drawing			
96	OVERALL DIMENSIONS AND WEIGHT	Overall Length				mm				
97		Overall Width		Final		mm				
98		Overall Height				mm				

Veolia to supply JB-004 as per the P&ID?

Project name:	IQALUIT
Project#:	5000218036
Document #:	5000218036_DS_0006_PM_VWT
by:	BB
chkd:	GH
appvd:	CB

SKID DUPLEX

PUMP(S)

OIM manual section: 4.3.6.2

CS-999-002 : Identification sheet

VWTC PROJECT NUMBER:	Iqaluit WWTP	REV:	02
PROJECT NAME:	5000218036	SUBMITTED TO (COMPANY):	
ENGINEER:	F.VINCI	SUBMITTED TO (RESPONSIBLE)	
PROJECT MANAGER:	C. BEKAERT	PROJECT NUM REFERENCE.:	
PHONE NUMBER:		LOT NUMBER:	

SUPPLIER	EQPT CODE	EQPT TAG NO	DIA	DESCRIPTION	INFO 1	INFO 2	INFO 3	APPLIC.	NOTE	REV
NETSZCH	ST-999-002	P04-970		PROGRESSIVE CAVITY PUMP	DOSING PUMP // Manuf : NETZSCH // Model: NM021BY01L06B // AVERAGE FLOW RATE: 554LPH@45 psig //APPROX. MAX FLOWRATE: 600 LPH@85PSIG // APPROX. MIN FLOW RATE: 45 LPH@85PSIG // MOTOR MARATHON BLACK MAX 575/3/60, 1 HP // NORD GEAR INLINE REDUCER	WITH GEAR RATIO 5.77:1 // WETTED PARTS 316 SS // BUNA NITRILE STATOR // MECHANICAL SEAL BURGMANN SINGLE MG1-G60 // 1" SUCTION & DISCHARGE ANSI CLASS 150 B16.5 FLANGE // MOUNTED				2
NETSZCH	ST-999-002	P04-980		PROGRESSIVE CAVITY PUMP	DOSING PUMP // Manuf : NETZSCH // Model: NM021BY01L06B // AVERAGE FLOW RATE: 554LPH@45 psig //APPROX. MAX FLOWRATE: 677 LPH@85PSIG // APPROX. MIN FLOW RATE: 45 LPH@85PSIG // MOTOR MARATHON BLACK MAX 575/3/60, 1 HP // NORD GEAR INLINE REDUCER	WITH GEAR RATIO 5.77:1 // WETTED PARTS 316 SS // BUNA NITRILE STATOR // MECHANICAL SEAL BURGMANN SINGLE MG1-G60 // 1" SUCTION & DISCHARGE ANSI CLASS 150 B16.5 FLANGE // MOUNTED				2

NETZSCH Canada, Inc. 500 Welham Road, Barrie, On., L4N 8Z7
Ph: 705-797-8426 Fax: 705-797-8427 Toll Free: 1-866-683-7867

Pump Quotation - Technical

Offer: N180717ST-01 (Item #50)

NEMO® pump with base plate and drive: NM021BY01L06B

The physical characteristics of the pumped product, the application details, as well as the General Operating Conditions detailed in our offer have been taken from your inquiry or where not specified have been assumed by us. In the event of an order we would ask you to check any assumptions and all details as they will become contractually binding along with the selection of pump model, Drive, all specifications, and materials of construction, based on these details.

Product:			Polymer
Composition			not advised
Specific gravity	assumed	kg/dm³	1.0
Particle size/solid ball size	allowed	mm	maximum 3 / 12
pH value	Approx.		not advised
Solids content (w/w)		% TS	not advised
Dynamic viscosity	approx.	cP	100
Vapour pressure		mm Hg	Not advised

Application details:		*DW #*	*171841*	*171841*	*171841*	*171841*	*171841*	*171841*
Flow rate (Q)	approx.	LPH	300	350	400	450	500	600
	approx.	GPM	1.32	1.54	1.76	1.98	2.2	2.64
Differential pressure	approx.	psi	85	85	85	85	85	85
Suction pressure	assumed	psig	Flooded	flooded	flooded	flooded	flooded	flooded
Discharge pressure	approx.	psig	85	85	85	85	85	85
Pump operating speed	approx.	RPM	160	200	210	220	240	275
Sliding velocity	approx.	ft/s	0.8	1.0	1.1	1.2	1.3	1.4
Frequency	approx.	Hz	32	40	42	44	48	55
Power required at drive shaft	approx.	HP	0.3	0.32	0.34	0.36	0.38	0.40
Running torque	approx.	lb-ft	8.8	8.8	8.8	8.8	8.8	8.8
Starting torque	approx.	lb-ft	7.4	7.4	7.4	7.4	7.4	7.4
Operating temperature	assumed	°C	20	20	20	20	20	20

Assembly specification

installation	vertical

General operating conditions

Installation area	inside
ambient Temperature	approx. 20°C / 70 F
humidity	up to 75%
application type	Continuous operation
operating hours	8 hours/day
service voltage	3/60/575

Painting	coating system	Netzsch standard

Operating and Maintenance Instructions

Standard documentation in accordance with the 98/37/EG Machinery Directive.
Special documentation is available on request and would be charged for.

number	1
medium	Paper
language for O&M's and spare parts list	English
dispatch method	shipped with pump

NETZSCH Canada, Inc. 500 Welham Road, Barrie, On., L4N 8Z7
Ph: 705-797-8426 Fax: 705-797-8427 Toll Free: 1-866-683-7867

Offer: N180717ST-01 (Item #50)
Date: July 13, 2018

Customer No.:

NEMO® NM021BY01L06B Pump

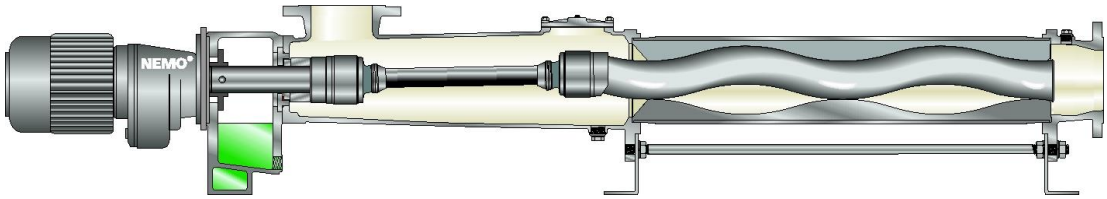

Characteristics and benefits of the NEMO® BY Block pump:

- Reliable and sophisticated construction
- Space-saving construction
- Modular construction system
- 4 different stator – rotor geometries available for most sizes
- Low investment and operating costs
- Low maintenance expenses

General characteristics	
name plate on the pump	in English (Stainless steel)
direction of rotation	to the right, clockwise (as viewed from drive end)

Pump Pedastal	
material	Cast iron 0.6025

Pump housing / End connection	
housing material	316 Stainless Steel
flange position	horizontal sidewards
function of housing connection	pressure connection
flange design	N.A.
nom. dia. & pressure for pump housing	1.25" NPT
suction flange design	N.A.
nom. dia. & pressure of suction flange	1.25" NPT
Function of end connection	suction connection
housing seals	FPM

Shaft seal	
type	Single mechanical Seal
shaft seal materials	Silicon Carbide Faces – Viton Elastomers
shaft seal type	Burgmann Single MG1-G60 – Q1Q1VGG

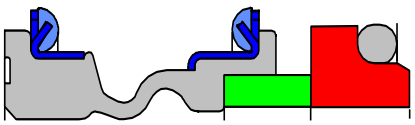

Rotating parts	
rotating parts materials	316 Stainless Steel

NETZSCH Canada, Inc. 500 Welham Road, Barrie, On., L4N 8Z7
Ph: 705-797-8426 Fax: 705-797-8427 Toll Free: 1-866-683-7867

Offer: N180717ST-01 (Item #50)
Date: July 13, 2018

Customer No.:

Joints	
joint type	pin joint
sealing type	SM Pin joint
joint sealing material	Viton/316 Stainless Steel
joint lubrication	Mineral oil

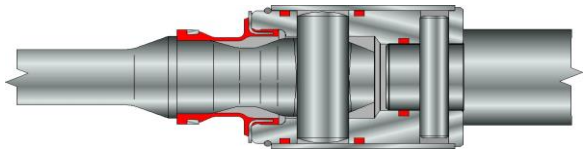

Rotor	
rotor material	316 Stainless Steel
temperature range for Stator expansion	UM20

Stator	
stator material	NEMOLAST® S61L – Buna Nitrile

Drive

Helical gear reducer	
manufacturer	Nord
type	SK172.1F-56C
gear ratio	5.77
speed @ 60 Hz	300
mounting position	M4
Motor	
Manufacturer	Marathon Black Max
motor HP	1.0
winding voltage	575
voltage range	+/- 10%
frequency / range	60 Hz / 1000:1 @ CT
number of poles	4
number of phases	3
Motor speed	1730 rpm
protection type	TENV
insulation class	F

Baseplate

assembly specification - material	Structural steel base plate

Approximate weight of pump assembly	135 lbs.

NETZSCH Canada, Inc. 500 Welham Road, Barrie, On., L4N 8Z7
Ph: 705-797-8426 Fax: 705-797-8427 Toll Free: 1-866-683-7867

Offer: N180717ST-01 (Item #50)
Date: July 13, 2018

Customer No.:

Performance curve:

NM021--01L Performance Curve
elastomer quality: standard

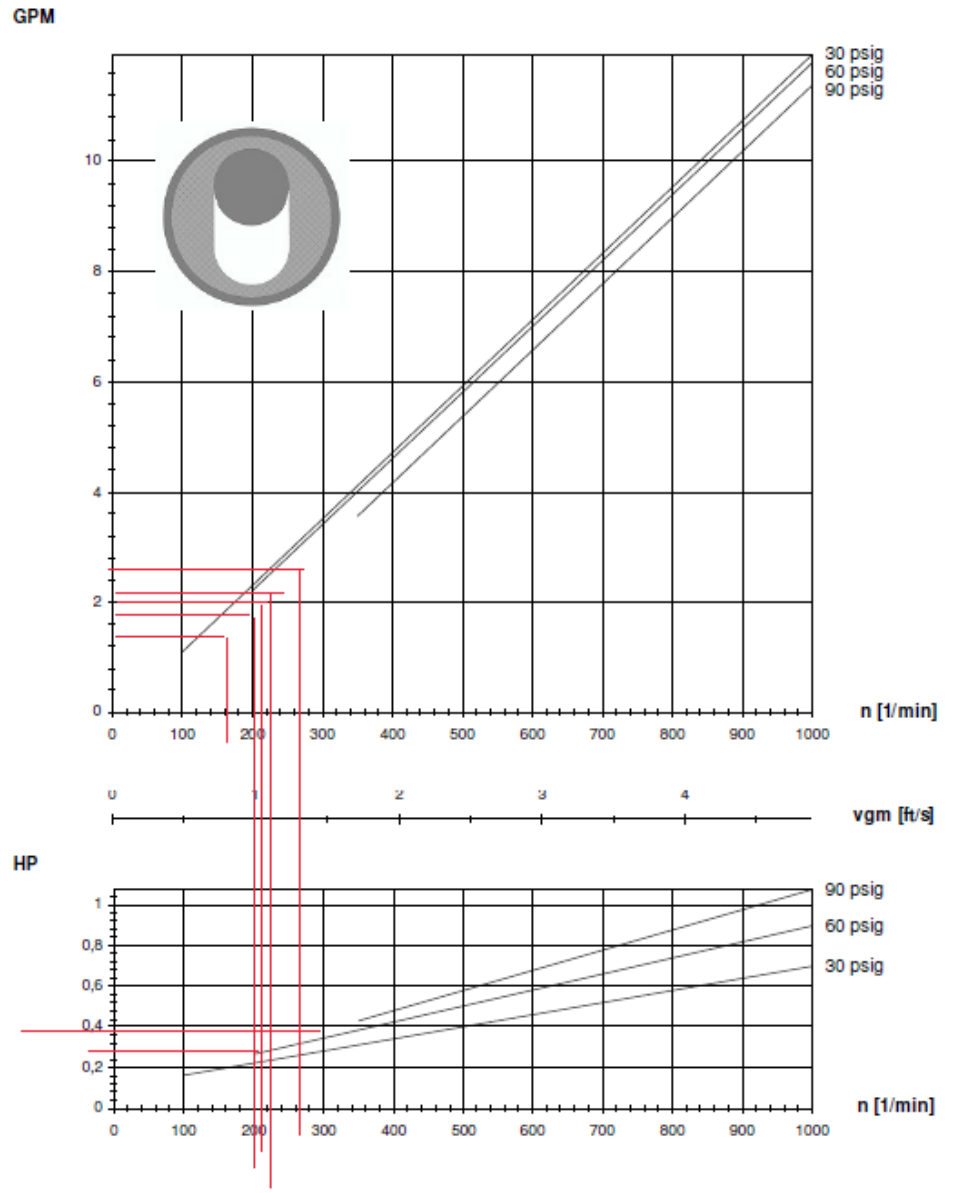

starting torque T(L) = 7,4 lbft

pressure	T
30 psig	7,4 lbft
60 psig	8,14 lbft
90 psig	8,88 lbft

Valid for water (1 cP) at 20 °C (70 °F). Tolerances are in accordance with VDMA 24284 (+10%/-5%).

VEOLIA's clarification: as shown on the pump's curve below, the pump speed for an averate flow rate of 554 LPH @ 45 psig is approximately 215 rpm.

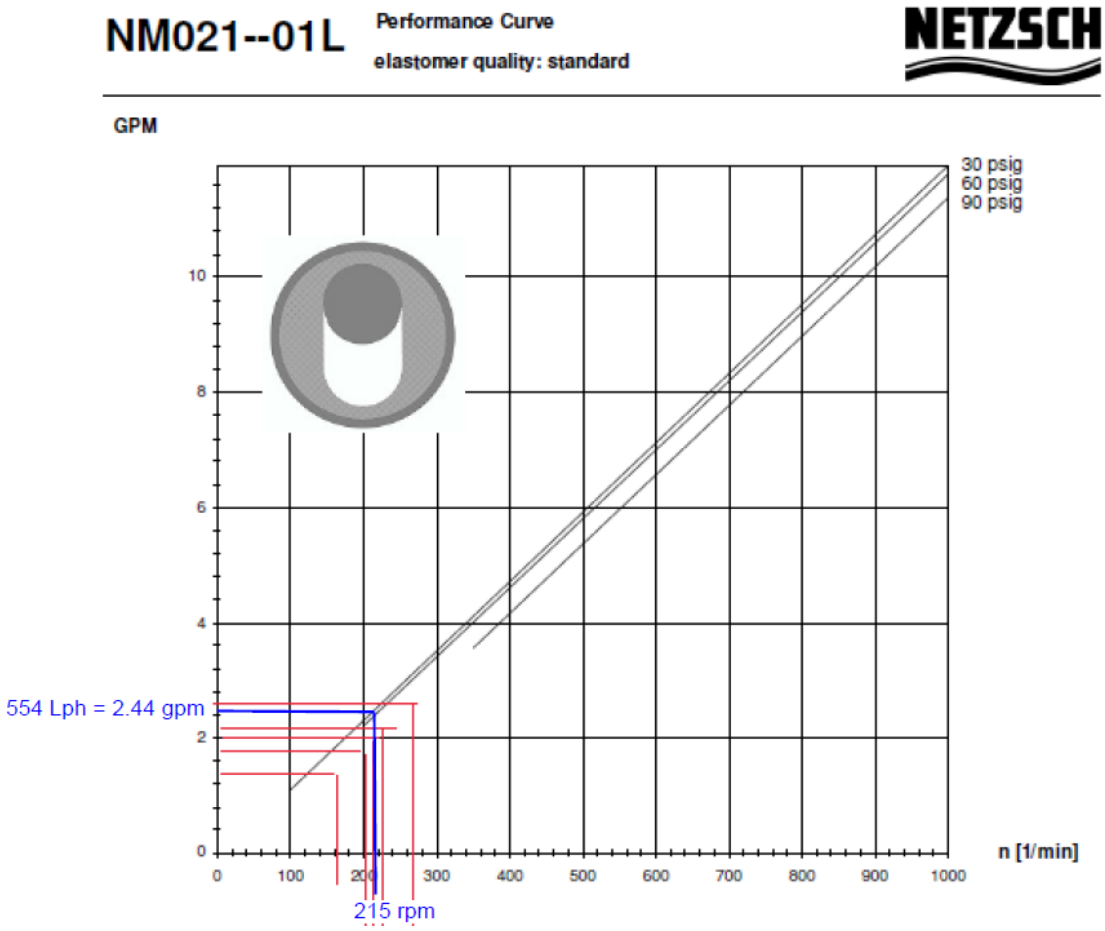

Temperature sensor for run-dry protection

VEOLIA confirms that all progressive cavity pumps supplied are equipped with a temperature sensor in the stator sleeve for run-dry protection and associated relay.

NETZSCH Canada, Inc. 500 Welham Road, Barrie, On., L4N 8Z7
Ph: 705-797-8426 Fax: 705-797-8427 Toll Free: 1-866-683-7867

Offer: N180717ST-01 (Item #50)
Date: July 13, 2018

Customer No.:

Pump drawing:

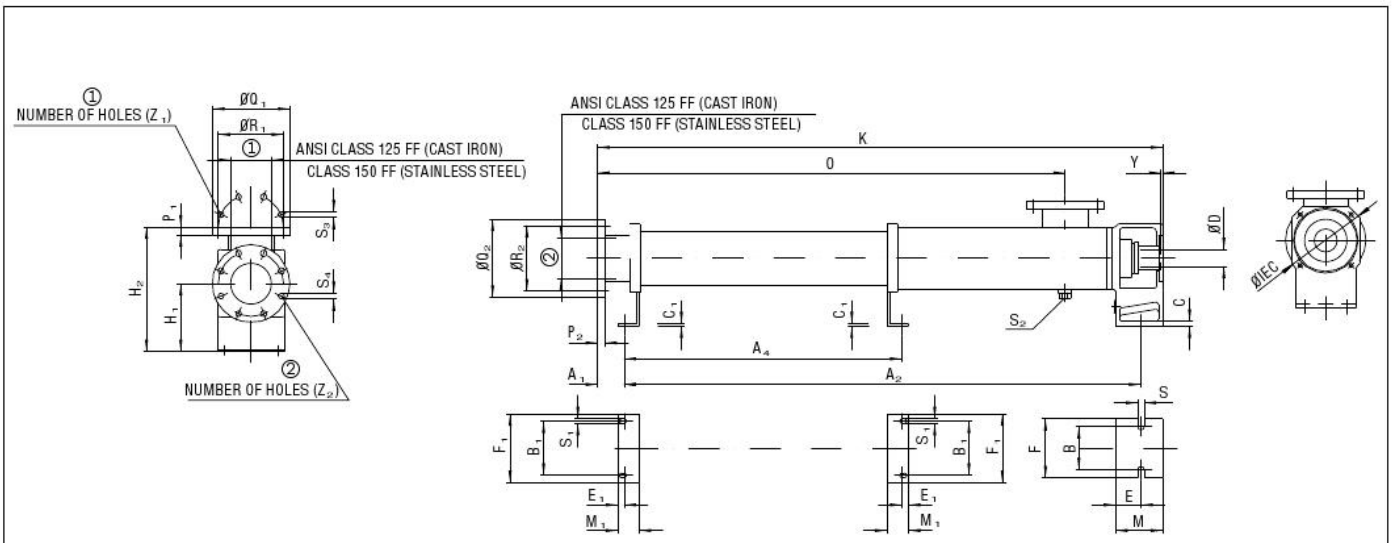

TYPE	BASIC DIMENSIONS																				ANSI ① / ②	PIPE CONNECTION P1 / P2	Q1 / Q2	R1 / R2	S3 / S4	Z1 / Z2	SHAFT END DMIN / DMAX	IEC
	A1	A2	A4	B	B1	C	C1	E	E1	F	F1	H1	H2	K	M	M1	O	S	S1	S2	Y							
NM015BY 02S12 / 01L06	41	411	–	95	50	8	5	28	15	125	80	100	160	481	55	40	328	12	9	NPT 1/2"	5		INTERNAL THREAD NPT 1 1/4"					12 / 20	140 / 160
																							INTERNAL THREAD NPT 1 1/4"						
NM021BY 02S12 / 01L06	41	487	–	95	50	8	5	28	15	125	80	100	160	557	55	40	404	12	9	NPT 1/2"	5		INTERNAL THREAD NPT 1 1/4"					12 / 20	140 / 160
																							INTERNAL THREAD NPT 1 1/4"						
NM031BY 02S12 / 01L06	77	637	–	115	69	10	5	27	20	150	100	112	222	759	70	50	540	12	11	NPT 3/4"	5		2"	15.7	152.4	120.6	19	4	20 / 28	160 / 200 / 250
																							2"	15.7	152.4	120.6	19	4		
NM038BY 02S12 / 01L06	85	950	–	115	95	10	6	35	20	150	130	132	262	1082	80	55	838	14	11	NPT 3/4"	5		3"	19.1	190.5	152.4	19	4	20 / 32	200 / 250
																							2.5"	17.5	177.8	139.7	19	4		

All dimensions are in mm. All dimensions are subject to change without notice.
Flanges are ANSI to inch standards. All flanges are flat faced.
All pumps are Thru-bolt Construction. Thru-bolts not shown for clarity.
For weights, use equivalent weights for SY pumps.

NETZSCH

NEMO PUMP (WP)
RANGE NM---B 02S12 / 01L06

DRAWING NUMBER
NDB4908995

GENERAL ARRANGEMENT DRAWING(GAD)

Tolerâncias Dimensionais/Dimensional Tolerances				Tolerâncias para Flanges cfe./Tolerances for Flanges according ASME B16.1 e B16.5	
Medida/Dimension	Tolerância/Tolerance	Medida/Dimension	Tolerância/Tolerance		Tolerância/Tolerance
>3 até/to 6	±0,5	>400 até/to 1000	±4,0		
>6 até/to 30	±1,0	>1000 até/to 2000	±6,0	Diâmetro da Furação/Drilling Diameter	±1,5
>30 até/to 120	±1,5	>2000 até/to 4000	±8,0	Diâmetro Furos/Holes Diameter	+1,0
>120 até/to 400	±2,5	>4000	±20	Espessura/Thickness	+3,0

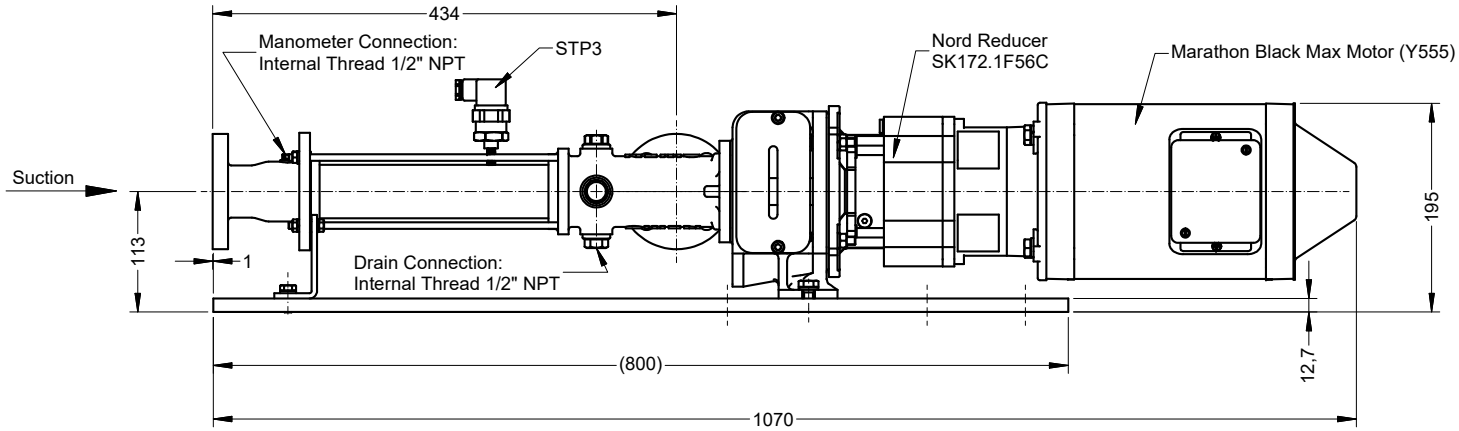

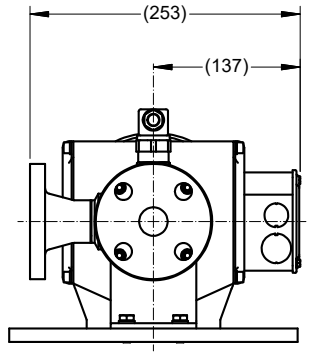

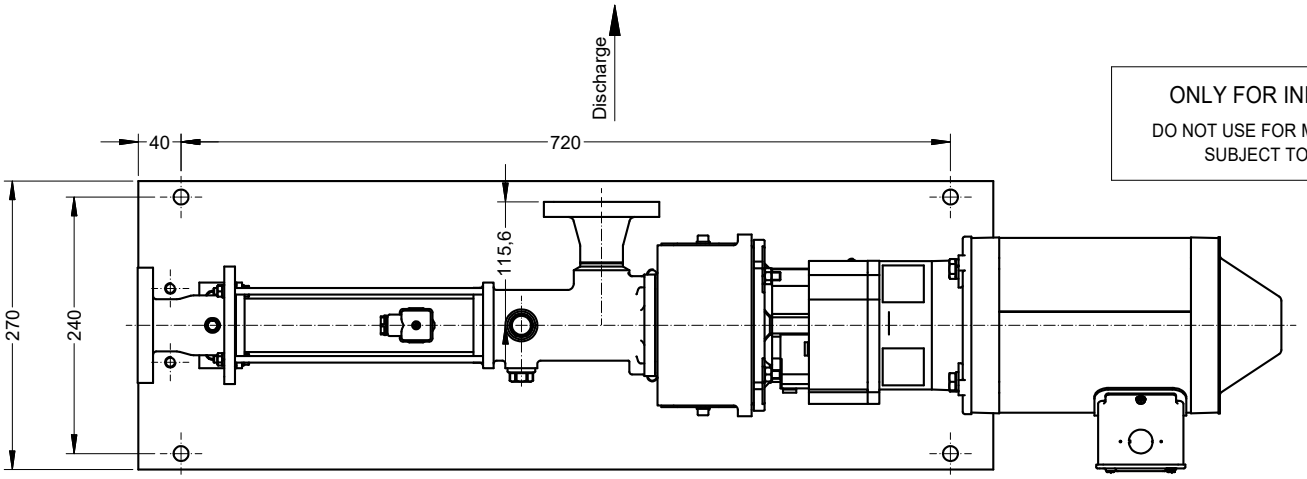

ONLY FOR INFORMATION

DO NOT USE FOR MANUFACTURING
SUBJECT TO CHANGES

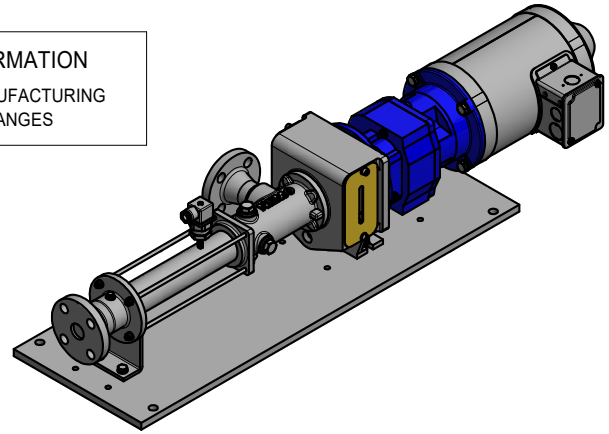

Flanges
Borings acc. Norma:

ASME B16.5 / Class 150 / FF / NPS 1

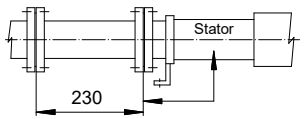

Lenght required for
stator disassembly

01	Alterado Bocal de Sucção e Descarga	Douglas	17/08/18
Revisão/Revision	Descrição/Description	Nome/Name	Data/Date

Cliente/Costumer:

Pedido/Order: | Referência/Reference:

NETZSCH

Título/Tittle:

Pump NM021BY01L06B

HD-252848

	Data/Date	Nome/Name
Desenhado Designer	17/08/2018	douglas.lourenco
Verificado/Checked Aprovado/Approved	17/08/2018	douglas.lourenco

TAG: | Peso/Weight kgf

Nr. Desenho/Drawing Nr.: NDB4735479 | Folha/Sheet: 1/1 | Escala/Scale: 1:5

Reservado todos os direitos sobre este documento técnico. All rights reserved.

0

NETZSCH CANADA INC. 2016

OPERATING AND MAINTENANCE INSTRUCTIONS:

STP3 DRY RUN PROTECTION





NETZSCH Canada, Incorporated
500 Welham Road
Barrie, Ontario L4N 8Z7
Tel: (705) 797-8426
Fax: (705) 797-8427
Toll: 866 683-7867

www.pumps.netzsch.com

1 DISMANTLING AND ASSEMBLY OF SPECIAL UNITS

WARNING Make sure that the power has been disconnected from the Temperature Controller prior to servicing.

The Stator Protector, which is a device to protect the stator from dry running mainly consists of three parts; the Temperature Controller (processor) with LED display, the Temperature Sensor (PT-100 RTD), and the Thermal Well.

1. The Device functions as follows

In the stator of the pump there is a Temperature Sensor. This sensor continuously measures the stator temperature which ranges from 0°C to 255°C. If the stator temperature rises above the programmed or specified cut-off temperature (about normal pumping temperature), which is set on the controller, there will be an optical or acoustic signal indication on the controller display. The controller can also be set to switch the pump off immediately. If the pump is not constantly monitored, it is recommended that the controller be set to shut the pump off automatically.

2. Technical Data

- Microprocessor based
- Measuring input for PT-100 RTD Temperature Sensor. Material of Construction: Platinum
- LED display, three digits, 13mm height, red indicator
- Switching position indication for internal K1 relay
- Resistance-Temperature Curve:
  European Alpha Curve = 0.00385
  American Alpha Curve = 0.003916
- Supply voltage 110 or 220 VAC or according to specification 24VAC.
- Storage temperature (-20°C to 70°C)
- Operating temperature (0°C to 60°C)
- Relative humidity maximum 75% no dew
- Suitable for panel mounting. Device is rated IP-54
- Output: 1relay 250 VAC 7^, 1 changeover contact
- Installation Dimensions: front panel 72mm x 72mm; 9 deep including terminals
- Terminals for threads max. 2,5 r

*Controller should be no more than 75 feet from the temperature sensor.

Vendor to supply RTD cable from temperature sensor to Omron controller in MCC-1.

3. Setting the Cut-Off Temperature

The cut-off temperature value of the controller in normal conditions is easy to adjust. When no key is pressed, the display shows the actual stator temperature.

- When the PGM button is pressed, the cut-off temperature is shown on the display.
- By keeping the PGM button pressed, the cut-off temperature can be raised or lowered to the desired setting by using the UP or DOWN key.
- Releasing the arrow UP or DOWN key loads the adjusted new value into the memory.
- Be careful. Always release the UP or DOWN key before releasing the PGM key to retain this value in memory even if there is a power failure.

1 DISMANTLING AND ASSEMBLY OF SPECIAL UNITS

4. Selecting the Cut-Off Temperature

- Adjust the cut-off temperature up to 150°C at the controller.
- Start the pump.
- When steady pumping is being obtained, a read out of the stator temperature will be displayed on the controller.
- If this temperature is accurate, taking into consideration the product and ambient temperatures, then the cut-off temperature can be set 5°C higher.

5. Switching Functions

With the temperature sensor connected and the operating voltage applied to the controller, the internal relay K1 is energized.

If the cut-off temperature is being exceeded or a short-circuit is occurring, the internal relay K1 drops out.

For terminals, see illustration on the following page.

In the event of sensor failure or short-circuit, the maximum temperature of 255°C flashes on the display.

6. Safety Precautions

For the installation of the Stator Protector, as well as for the separate mini transformer, the latest regulations which apply for electrical installations must be adhered to.
If a temperature sensor is operated within a hazardous area there must be a special enclosure installed between the Temperature Controller and the Temperature Sensor (RTD).

The switching of inductive loads (contacts) may result a false reading from the Controller, or in complete malfunction of the Unit. Here, we recommended the wiring of a Surge Suppressor.

7. Installation of Temperature Sensor and Controller

The stator (3005), as displayed in tables 1,2 and 3, is equipped with a Reducing Fitting (4580) and a Temperature Sensor (RTD), (4180).

The stator is delivered with a built-in Thermal Well (4570). When installed on a NEMO Pump, this Thermal Well should be mounted on its inlet side.

***Controller should be no more than 75 feet from the temperature sensor (RTD).**

NETZSCH

Stator Protector Model STP3
NEMO NM Pump Series

Table 1
S-Geometry

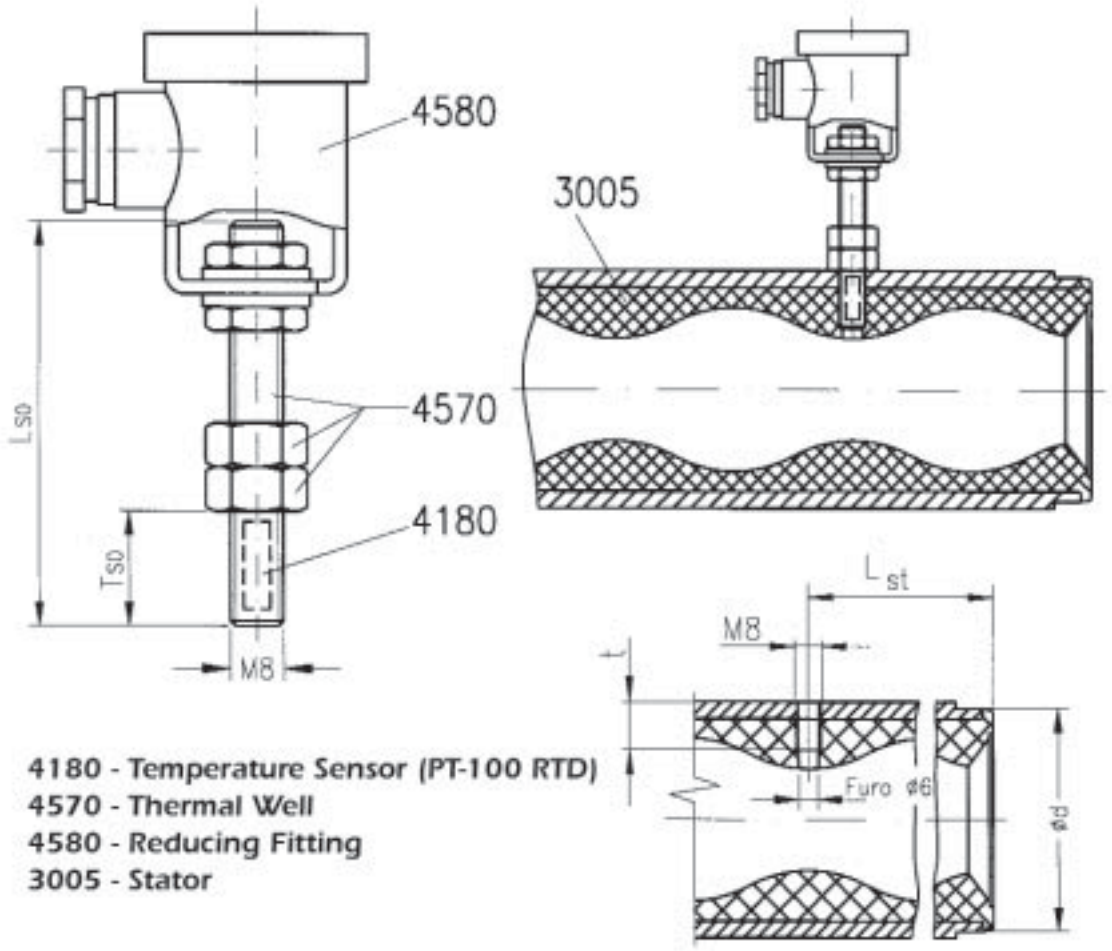

4180 - Temperature Sensor (PT-100 RTD)
4570 - Thermal Well
4580 - Reducing Fitting
3005 - Stator

Pump Model	SENSOR			STATOR		
	L_{S0}	T_{S0}	Distance of the Sensor from the Rotor	d	L_{st}	t
NM015–S	45	9	~6	37	24	9
NM021–S		12	~5.5	47	36	12
NM031–S		15	~7.5	66	47	15
NM038–S	65	23	~7.5	86	66	23
NM045–S		25	~7.5	101	77	25
NM053–S		30		118	92	30
NM063–S		36		141	107	36
NM076–S	85	40	~10	166	124	40
NM090–S		47		195	148	47
NM105–S		54	~11	225	181	54
NM125–S	105	66		265	215	66
NM148–S		80		315	257	80
						–

All dimensions in millimeters.

NETZSCH

Stator Protector Model STP3
NEMO NM Pump Series

Table 2
L-Geometry

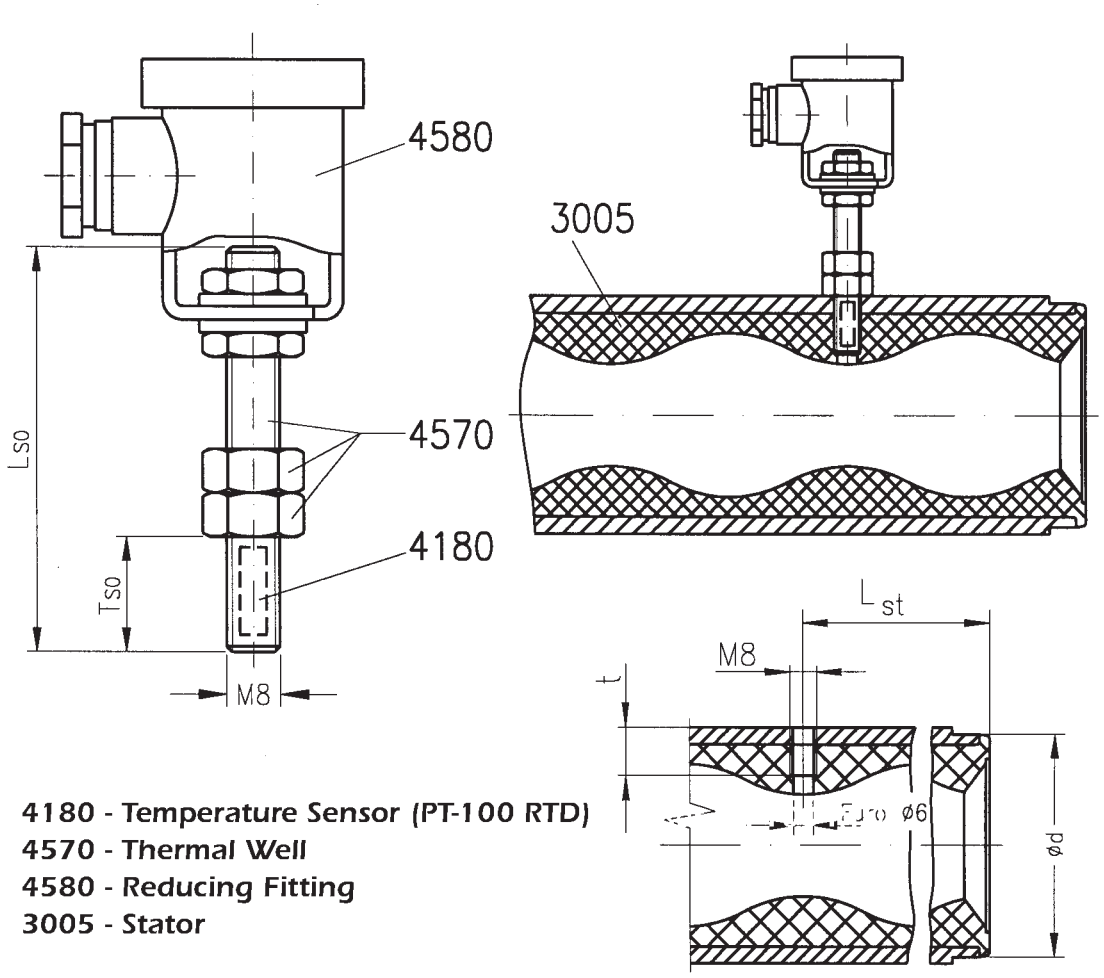

4180 - Temperature Sensor (PT-100 RTD)
4570 - Thermal Well
4580 - Reducing Fitting
3005 - Stator

Pump Model	SENSOR			STATOR		
	L_{so}	T_{so}	Distance of the Sensor from the Rotor	d	L_{st}	t
NM015–L	45	9	≈ 6	37	35	9
NM021–L		12	≈ 5.5	47	53	12
NM031–L		15	≈ 7.5	66	68	15
NM038–L	65	23	≈ 7.5	86	108	23
NM045–L		25	≈ 7.5	101	133	25
NM053–L		30		118	161	30
NM063–L		36		141	185	36
NM076–L	85	40	≈ 10	166	214	40
NM090–L		47		195	256	47
NM105–L		54	≈ 11	225	316	54
NM125–L	105	66		265	375	66
NM148–L		80		315	450	80

All dimensions in millimeters.

NETZSCH

Stator Protector Model STP3
NEMO NE Pump Series

Table 3

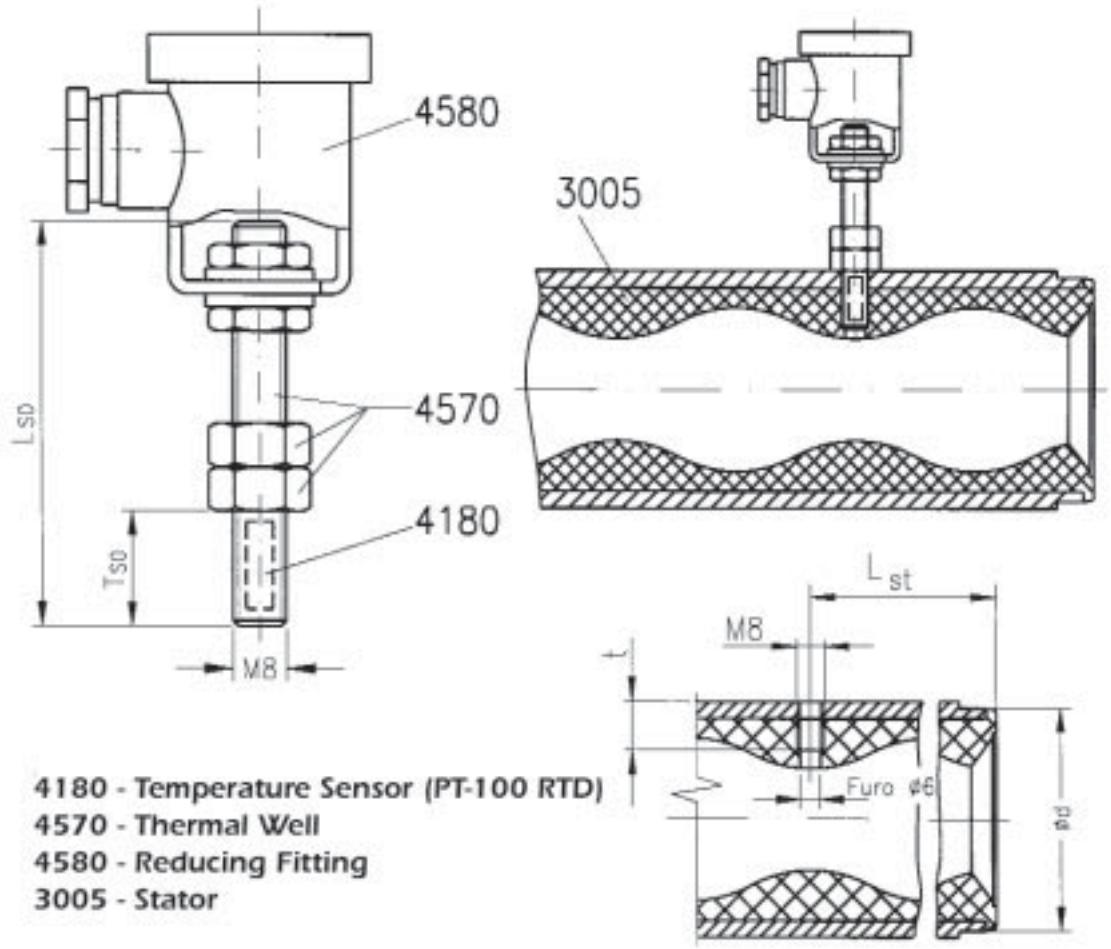

4180 - Temperature Sensor (PT-100 RTD)
4570 - Thermal Well
4580 - Reducing Fitting
3005 - Stator

Pump Model	SENSOR			STATOR			
	L_{SO}	T_{SO}	Distance of the Sensor from the Rotor	d	d_1	L_{st}	t
N_15	55	9	~6	39	27	40	9
N_20		12	~5.5	49	36	50	12
N_29						100	12
N_30	60	16	~ 7.5	71	54	75	16
N_40	65	22	~8	94	72	100	22
N_50	75	30		118	90	120	30
N_60	80	35		138	108	150	35
N_69				138	108	250	35
N_80	85	40	~10	174	144	200	40
N_89				174	144	250	40
N_100	95	52	~11	218	180	250	52
N_120	110	68		260	216	300	68
N_150	120	80	~10	315	270	375	80
N_200	150	117.5				475	

All dimensions in millimeters.

OMRON

Temperature Controllers
E5CSV

Simple to Set and Operate 1/16 DIN Size Controllers

- Easy setting using internal DIP and rotary switches
- ON/OFF or PID control (with on-demand auto-tuning) selectable
- Clearly visible digital display with character height of 13.5 mm
- Deviation indicator makes monitoring more effective
- Multiple temperature sensor input (thermocouple/platinum resistance thermometer) models stocked; thermocouple input only and platinum RTD input only models available
- Models with two alarms are ideal for temperature alarm applications
- Setting change protection prohibits tampering
- Sampling rate (500 ms) and selectable control period (2 and 20 s) improves response
- 8-mode alarm output and sensor error detection
- "Input shift" function adjusts display to reflect known sensor offsets



CE cULus LISTED NEW

- °C or °F field selectable
- Black or white cases available to match panel aesthetics
- RoHS compliant
- Water-resistant front panel rated NEMA 4X/IP66
- Compact: measures 48 H x 48 W x 78 D mm
- Accuracy ±0.5% of value

Model Number Structure

■ Model Number Legend

Models with Terminal Blocks

E5CSV-□□□□-□□
1 2 3 4 5 6

1. Output type
- R: Relay
- Q: Voltage for driving SSR

2. Number of alarms
- Blank: No alarm
- 1: 1 alarm
- 2: 2 alarms

3. Input type
- T: Thermocouple/platinum resistance thermometer (multi-input)
- KJ: Thermocouple
- P: Platinum resistance thermometer

4. Power supply voltage
- Blank: 100 to 240 VAC
- D: 24 VAC/VDC

5. Case color / Display scale
- Blank: Black
- W: Light gray
- F: Scale marked in °F (Black case only)

6. Power supply voltage
- AC100-240: 100 to 240 VAC
- AC/DC24: 24 VAC/VDC

Note: A functional explanation is provided here for illustration, but models are not necessarily available for all possible combinations. Please refer to *Ordering Information* when ordering.

Examples
- Voltage control output, without alarm, multi-input, light gray case: 115 VAC: E5CSV-QT-W AC100-240
- Relay control output, one alarm output, multi-input, black case: 24 VDC: E5CSV-R1TD AC/DC24

Ordering Information

■ List of Models

Size	Power supply voltage	Number of alarm points	Control output	TC/Pt multi-input Case color: Black Scale marked in °C	TC input Case color: Light gray Scale marked in °C	Pt input Case color: Light gray Scale marked in °C	TC/Pt multi-input Case color: Black Scale marked in °F
1/16 DIN 48 × 48 × 78 mm (W × H × D)	100 to 240 VAC	0	Relay	E5CSV-RT AC100-240			E5CSV-RT-F AC100-240
			Voltage (for driving SSR)	E5CSV-QT AC100-240			E5CSV-QT-F AC100-240
		1	Relay	E5CSV-R1T AC100-240	E5CSV-R1KJ-W	E5CSV-R1P-W	E5CSV-R1T-F AC100-240
			Voltage (for driving SSR)	E5CSV-Q1T AC100-240	E5CSV-Q1KJ-W	E5CSV-Q1P-W	E5CSV-Q1T-F AC100-240
		2 (See note)	Relay	E5CSV-R2T AC100-240			E5CSV-R2T-F AC100-240
			Voltage (for driving SSR)	E5CSV-Q2T AC100-240			E5CSV-Q2T-F AC100-240
	24 VAC/ VDC	0	Relay	E5CSV-RTD AC/DC24			
			Voltage (for driving SSR)	E5CSV-QTD AC/DC24			
		1	Relay	E5CSV-R1TD AC/DC24			E5CSV-R1TD-F AC/DC24
			Voltage (for driving SSR)	E5CSV-Q1TD AC/DC24			E5CSV-Q1TD-F AC/DC24
		2 (See note)	Relay	E5CSV-R2TD AC/DC24			
			Voltage (for driving SSR)	E5CSV-Q2TD AC/DC24			

Note: Models with two alarm outputs always use the upper limit alarm mode for the alarm 2 output.

■ Accessories (Order Separately)

Protective Cover

Type	Model
Hard Protective Cover	Y92A-48B

Terminal Cover

Model
E53-COV10

Specifications

■ Ratings

Supply voltage		100 to 240 VAC, 50/60 Hz	24 VAC/VDC, 50/60 Hz
Operating voltage range		85% to 110% of rated supply voltage	
Power consumption		5 VA	3 VA/2 W
Sensor input		Thermocouple input type: K, J, L Platinum resistance thermometer input type: Pt100, JPt100 Multi-input (thermocouple/platinum resistance thermometer) type: K, J, L, T, U, N, R, Pt100, JPt100	
Control output	Relay output	SPST-NO, 250 VAC, 3A (resistive load)	
	Voltage output (for driving the SSR)	12 VDC, 21 mA (with short-circuit protection circuit)3	
Control method		ON/OFF or 2-PID (with auto-tuning)	
Alarm output		SPST-NO, 250 VAC, 1A (resistive load)	
Setting method		Digital setting using front panel keys	
Indication method		3.5 digit, 7-segment digital display (character height: 13.5 mm) and deviation indicators	
Other functions		• Setting change prohibit (key protection) • Input shift • Temperature unit change (°C/°F) • Direct/reverse operation • Temperature range, Sensor switching (K/J/L, Pt100/JPt100) • Switching is performed between a thermocouple and platinum resistance thermometer for multi-input models. • Control period switching • 8-mode alarm output • Sensor error detection	
Ambient temperature		–10 to 55°C (with no condensation or icing)	
Ambient humidity		25% to 85%	
Storage temperature		–25 to 65°C (with no condensation or icing)	

■ Characteristics

Setting accuracy	Thermocouple (See note 1.):	(±0.5% of indication value or ±1°C, whichever is greater) ±1 digit max.
Indication accuracy (ambient temperature of 23°C)	Platinum resistance thermometer (See note 2.):	(±0.5% of indication value or ±1°C, whichever is greater) ±1 digit max.
Influence of temperature	R thermocouple inputs:	(±1% of PV or ±10°C, whichever is greater) ±1 digit max.
	Other thermocouple inputs:	(±1% of PV or ±4°C, whichever is greater) ±1 digit max.
Influence of voltage	Platinum resistance thermometer inputs:	(±1% of PV or ±2°C, whichever is greater) ±1 digit max.
Hysteresis (for ON/OFF control)	0.2% FS (0.1% FS for multi-input (thermocouple/platinum resistance thermometer) models)	
Proportional band (P)	1 to 999°C (automatic adjustment using auto-tuning/self-tuning)	
Integral time (I)	1 to 1,999 s (automatic adjustment using auto-tuning/self-tuning	
Derivative time (D)	1 to 1,999 s (automatic adjustment using auto-tuning/self-tuning)	
Alarm output range	Absolute-value alarm: Same as the control range Other: 0% to 100% FS Alarm hysteresis: 0.2°C or °F (fixed)	
Control period	2/20 s	
Sampling period	500 ms	
Insulation resistance	20 MΩ min. (at 500 VDC)	
Dielectric strength	2,000 VAC, 50/60 Hz for 1 min between current-carrying terminals of different polarity	
Vibration resistance — **Malfunction**	10 to 55 Hz, 20 m/s² for 10 min each in X, Y, and Z directions	
Vibration resistance — **Destruction**	10 to 55 Hz, 0.75-mm single amplitude for 2 hr each in X, Y, and Z directions	
Shock resistance — **Malfunction**	100 m/s² min., 3 times each in 6 directions	
Shock resistance — **Destruction**	300 m/s² min., 3 times each in 6 directions	
Life expectancy — **Electrical**	100,000 operations min. (relay output models)	
Weight	Approx. 120 g (Controller only)	
Degree of protection	Front panel: Equivalent to IP66; Rear case: IP20; Terminals: IP00	
Memory protection	EEPROM (non-volatile memory) (number of writes: 1,000,000)	
EMC	EMI Radiated: EN 55011 Group 1 Class A EMI Conducted: EN 55011 Group 1 Class A ESD Immunity: EN 61000-4-2: 4 kV contact discharge (level 2), 8 kV air discharge (level 3) Radiated Electromagnetic Field Immunity: EN 61000-4-3: 10 V/m (80-1000 MHz, 1.4-2.0 GHz amplitude modulated) (level 3), 10 V/m (900 MHz pulse modulated) Conducted Disturbance Immunity: EN 61000-4-6: 3 V (0.15 to 80 MHz) (level 2) Noise Immunity (First Transient Burst Noise): EN 61000-4-4 Burst Immunity: 2 kV power-line (level 3), 1 kV I/O signal-line (level 3) Surge Immunity: EN 61000-4-5: Power line: Normal mode 1 kV; Common mode 2 kV Output line (relay output): Normal mode 1 kV; Common mode 2 kV Voltage Dip/Interrupting Immunity: EN 61000-4-11 0.5 cycle, 100% (rated voltage)	
Approved standards	UL 61010C-1 (listing) CSA C22.2 No.1010-1	
Conformed standards	EN 61326, EN 61010-1, IEC 61010-1 VDE 0106 Part 100 (finger protection), when the terminal cover is mounted.	

Note: 1. The following exceptions apply to thermocouples.
- U, L: ±2°C ±1 digit max.
- R: ±3°C ±1 digit max. at 200°C or less

2. The following exceptions apply to platinum resistance thermometers.
Input set values 0, 1, 2, 3 for E5CSV: 0.5% FS ±1 digit max.
Input set value 1 for E5CSV: 0.5% FS ±1 digit max.

■ Electrical Life Expectancy Curve for Relays (Reference Values)

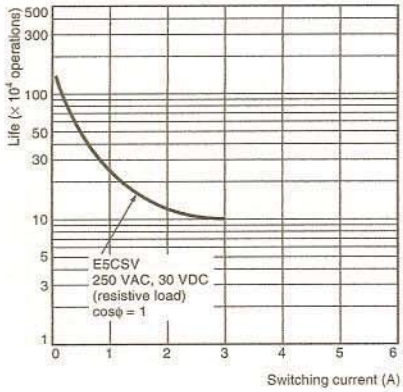

■ Temperature Range

Thermocouple Input Models

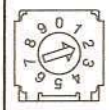

Temperature range (selected using switch)

(Default setting: 2)

Input	K						J/L			
Temperature range	200	300	400	500	600	999	200	300	400	500
Setting number	0	1	2	3	4	5	6	7	8	9
Minimum setting unit	1°C						1°C			

The shaded value indicates the default setting status.

Platinum Resistance Thermometer Input Models

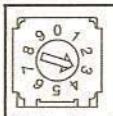

Temperature range (selected using switch)

(Default setting: 3)

Input	JPt100/Pt100									
Temperature range	50 / −50	50.0 / 0.0	80 / −20	99.9 / 0.0	200 / 0	300 / 0	400 / 0	300 / 0	400 / 0	199.9 / 0.0
Setting number	0	1	2	3	4	5	6	7	8	9
Minimum setting unit	1°C	0.1°C	1°C	0.1°C	1°C					0.1°C

The shaded value indicates the default setting status.

Multi-input (Thermocouple/Platinum Resistance Thermometer) Models

• Using Thermocouple Sensors, Control Mode Switch 5: OFF

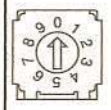

Temperature range (selected using switch)

(Default setting: 0)

Input	K		J		L	T		U	N	R
Temperature range	1,300 / −99	199.9 / 0.0	850 / −99	199.9 / 0.0	850 / −99	400 / −99	199.9 / 0.0	400 / −99	1,300 / −99	1,700 / 0
Setting number	0	1	2	3	4	5	6	7	8	9
Minimum setting unit	1°C	0.1°C	1°C	0.1°C	1°C		0.1°C	1°C		

The shaded value indicates the default setting status.

• Using Platinum Resistance Thermometers, Control Mode Switch 5: ON



Temperature range (selected using switch)

(Default setting: 0)

Input	Pt100					JPt100				
Temperature range	850 / −99	199.9 / 0.0	99 / −99	200 / 0	400 / 0	500 / −99	199.9 / 0.0	99 / −99	200 / 0	400 / 0
Setting number	0	1	2	3	4	5	6	7	8	9
Minimum setting unit	1°C	0.1°C	1°C				0.1°C	1°C		

The shaded value indicates the default setting status.

External Connection Diagram

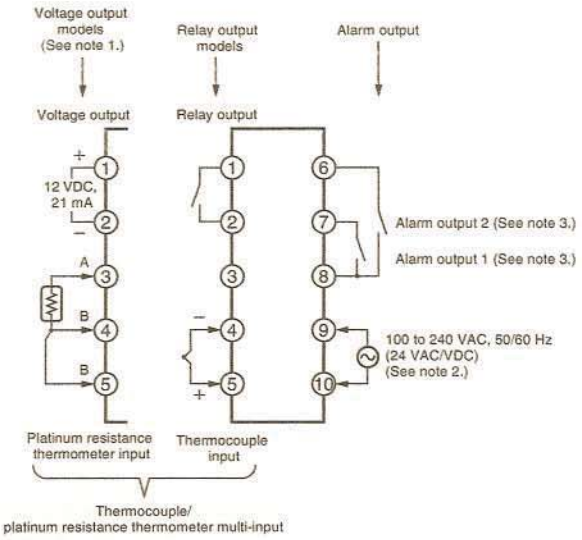

Note: 1. The voltage output (12 VDC, 21 mA) is not electrically isolated from the internal circuits. When using a grounding thermocouple, do not connect output terminals 1 or 2 to ground. Otherwise, unwanted current paths will cause measurement errors.

2. Models with 100 to 240 VAC and 24 VAC/VDC are separate. Models using 24 VDC have no polarity.

3. The number of alarm outputs depends on the model.

Nomenclature

E5CSV Models with Terminal Blocks



Operation

E5CSV

Deviation indicators

The △ indicator lights when the PV is greater than the SP and the ▽ indicator lights when the PV is less than the SP. The □ indicator (green) lights when the deviation is less than 1% FS (0.25% FS for multi-input models). These indicators flash during ST (self-tuning)/AT (auto-tuning).

Mode indicators

The SP indicator lights when the setting temperature is being displayed. The ALM indicator lights when the alarm value 1 is being displayed and flashes when the alarm value 2 is being displayed.

Mode Key

When the power is turned ON, normally the display will use the display items in the following order each time the Mode Key is pressed.

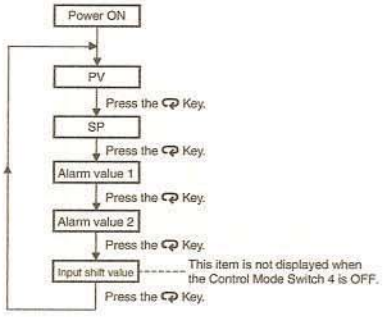



Lock Release Key

When the protect switch is ON, the set value can be changed by pressing the Up and Down Keys while holding down the Lock Release Key.

PV, SP, Alarm Value, Input Shift Display

The display switches each time the Key is pressed.

Output indicator

Lights when the control output is ON.

Alarm indicators

ALM1 (Alarm 1): Lights when the alarm 1 output is ON.
ALM2 (Alarm 2): Lights when the alarm 2 output is ON.

Up Key

Pressing the Up Key increases the SP/alarm value display. Keeping the Up Key pressed continues to increase the display value. When the internal protect switch is ON, press the Up Key while holding down the Lock Release Key.

Down Key

Pressing the Down Key decreases the SP/alarm value display. Keeping the Down Key pressed continues to decrease the display value. When the internal protect switch is ON, press the Down Key while holding down the Lock Release Key.

Settings before Turning ON the Power

E5CSV

Remove the E5CSV from the case to make the settings.

1. Insert the tool into the two tool insertion holes (one on the top and one on the bottom) and release the hooks.

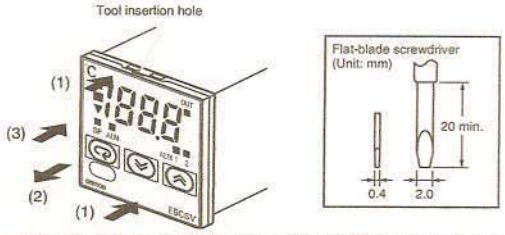

2. Insert the tool in the gap between the front panel and rear case, and pull out the front panel slightly. Grip the front panel and pull out fully. Be sure not to impose excessive force on the panel.

3. When inserting the E5CSV, check to make sure that the sealing rubber is in place and push the E5CSV toward the rear case until it snaps into position. While pushing the E5CSV into place, push down on the hooks on the top and bottom surfaces of the rear case so that the hooks are securely locked in place. Make sure that electronic components do not come into contact with the case.

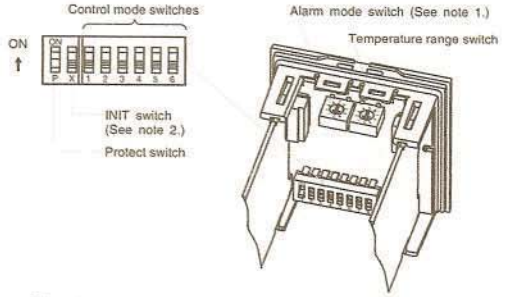

Note: 1. The alarm mode switch is not provided on models without alarms. Alarm 2 is always set to the upper limit in models with two alarms. A setting switch is not provided for alarm 2.
2. The INIT switch is always OFF during normal operation.

1. Sensor Type Specification

Select the number on the temperature range switch to change the temperature range.

Thermocouple (The default is 2.)

Input	K						J/L			
SP range	200	300	400	500	600	999	200	300	400	500
	0	0	0	0	0	0	0	0	0	0
Setting number	0	1	2	3	4	5	6	7	8	9

- The control range is -10% to +10% FS for each temperature range.

Note: The input indication range is the range that can be displayed for the control range (–99 to 1999). If the input is within the control range but exceeds the display range (–99 to 1999), values below –99 will be displayed as "ccc" and values above 1,999 will be displayed as "ddd."

Platinum Resistance Thermometer

(The default is 3.)

Input	JPt100/Pt100									
SP range	50	50.0	80	99.9	200	300	400	300	400	199.9
	–50	0.0	–20	0.0	0	0	0	0	0	0.0
Setting number	0	1	2	3	4	5	6	7	8	9

- The control range is -10% to +10% FS for each temperature range.

Note: 1. The input indication range is the range that can be displayed for the control range (–99 to 1999). If the input is within the control range but exceeds the display range (–99 to 1999), values below –99 will be displayed as "ccc" and values above 1,999 will be displayed as "ddd."
2. If the unit is changed to 1 degree when the SP and alarm value for the temperature range are displayed in 0.1-units from 0.0 to 199.9 or 0.0 to 99.9, the values will be multiplied by 10 (e.g., 0.5 becomes 5). If the unit is changed in the reverse direction, the values will be divided by 10. After changing the range, set the SP and alarm value again.
3. The temperature range for setting numbers 5 and 6 are the same as for 7 and 8, respectively.

Multi-input (Thermocouple/Platinum Resistance Thermometer) Models

- Using Thermocouple Sensors, Control Mode Switch 5: OFF

Input	K		J		L	T		U	N	R
SP range	1,300	199.9	850	199.9	850	400	199.9	400	1,300	1,700
	–99	0.0	–99	0.0	–99	–99	0.0	–99	–99	0
Setting number	0	1	2	3	4	5	6	7	8	9

- The control range is -20°C to +20°C of the input temperature range.

Note: 1. The input indication range is the range that can be displayed for the control range (–99 to 1999). If the input is within the control range but exceeds the display range (–99 to 1999), values below –99 will be displayed as "ccc" and values above 1,999 will be displayed as "ddd."
2. If unit is changed to 1 degree when the SP and alarm value for the temperature range are displayed in 0.1-units from 0.0 to 199.9 or 0.0 to 99.9, the values will be multiplied by 10 (e.g., 0.5 becomes 5). If the unit is changed in the reverse direction, the values will be divided by 10. After changing the range, set the SP and alarm value again.

- Using Platinum Resistance Thermometers, Control Mode Switch 5: ON

Input	Pt100					JPt100				
SP range	850	199.9	99	200	400	500	199.9	99	200	400
	–99	0.0	–99	0	0	–99	0.0	–99	0	0
Setting number	0	1	2	3	4	5	6	7	8	9

- The control range is -20°C to +20°C of the input temperature range.

Note: 1. The input indication range is the range that can be displayed for the control range (–99 to 1999). If the input is within the control range but exceeds the display range (–99 to 1999), values below –99 will be displayed as "ccc" and values above 1,999 will be displayed as "ddd."
2. If unit is changed to 1 degree when the SP and alarm value for the temperature range are displayed in 0.1-units from 0.0 to 199.9 or 0.0 to 99.9, the values will be multiplied by 10 (e.g., 0.5 becomes 5). If the unit is changed in the reverse direction, the values will be divided by 10. After changing the range, set the SP and alarm value again.

Mode Key Display Order

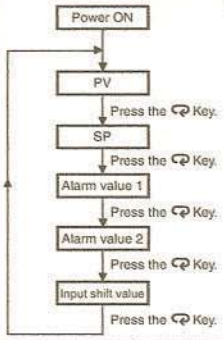

- If the SP falls outside the temperature range when the temperature range is changed, the SP will be displayed first. The SP will be changed automatically either to the minimum value or the maximum value, whichever is nearest.
- If the alarm value falls outside the temperature range when the temperature range is changed, the alarm value will be displayed first. The alarm value will be changed automatically to the maximum value in the new temperature range.

2. Operation Settings

Use the control mode switches () to change the control mode. (All switches are OFF for the default settings.)



Function selection			1	2	3	4	5	6
ON/OFF PID	PID control		ON					
	ON/OFF control		OFF					
Control period	2 s			ON				
	20 s			OFF				
Direct/ reverse operation	Direct operation (cooling)				ON			
	Reverse operation (heating)				OFF			
Input shift display	Enabled					ON		
	Disabled					OFF		
Temperature Sensor selection	Thermocouple	K, L					ON	
		K, J					OFF	
	Platinum resistance thermometer	Pt100					ON	
		JPt100					OFF	
	Multi-input (thermocouple/ platinum resistance thermometer)	Platinum resistance thermometer input					ON	
		Thermocouple input					OFF	
Temperature unit	°F							ON
	°C							OFF

Note: The previous name Pt100 has been changed to JPt100 in accordance with revisions to JIS. The previous name J-DIN has been changed to L in accordance with revisions to DIN standards.

3. Alarm Modes

Select the number of the alarm mode switch  when changing the alarm mode. (The default is 2).

Set value	Alarm type	Alarm output operation
0, 9	Alarm function OFF	OFF
1	Upper- and lower-limit	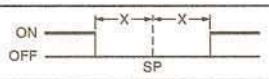
2	Upper-limit	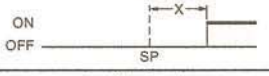
3	Lower-limit	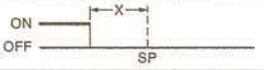
4	Upper- and lower-limit range	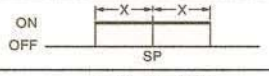
5	Upper- and lower-limit with standby sequence (See note 2.)	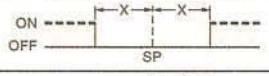
6	Upper-limit with standby sequence (See note 2.)	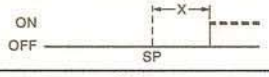
7	Lower-limit with standby sequence (See note 2.)	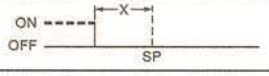
8	Absolute-value upper-limit	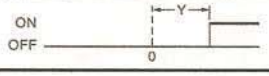

Note: 1. No alarm. The alarm value (alarm operation display) will not be displayed when the setting is 0 or 9 even if the selection key is pressed.
Alarm Setting Range
X: 0 to FS (full scale); Y: Within temperature range
The value of X is the deviation setting for the SP (set point).

2. Standby Sequence Function (The standby sequence operates when the power is turned ON.)

Rising Temperature

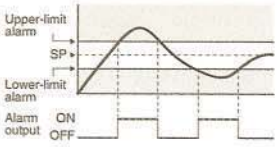

Dropping Temperature

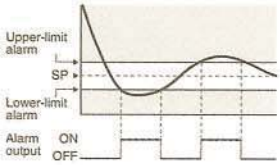

Note: Turn OFF the power before changing the DIP switch settings on the E5CSV. Each of the switch settings will be enabled after the power is turned ON.

For details on the position of the temperature range switch, control mode switches, and alarm mode switch, refer to page 6.

4. Using the Control Mode Switches

(1) Using ON/OFF Control and PID Control

ON/OFF Control

The control mode is set to ON/OFF control as the default setting.

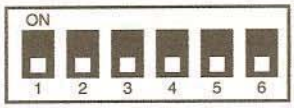

Switch 1 OFF: ON/OFF control

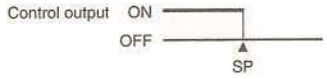

To perform cooling control of freezers, etc., turn ON switch 3.



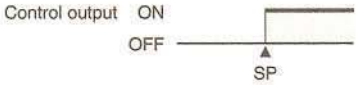

PID Control

Turn ON switch 1 to use PID control.

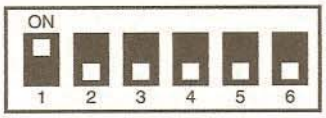

Switch 1 ON: PID control

1. Set the control period.

Performing Control via Relay Output, External Relay, or Conductor

Switch 2: OFF (control period: 20 s)

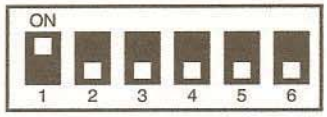

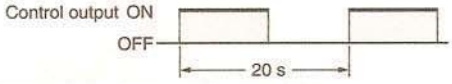

Quick Control Response Using an SSR

Switch 2: ON (control period: 2 s)

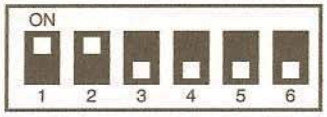

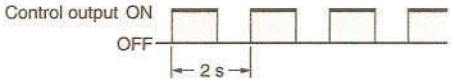

2. Set direct/reverse operation for the output.

Performing Heating Control for Heaters

Switch 3: OFF

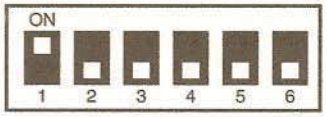

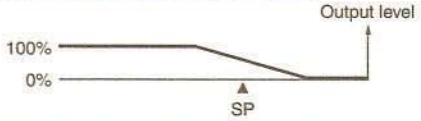

Performing Cooling Control for Freezers

Switch 3: ON



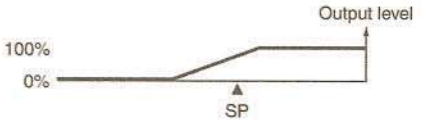

ST (Self-tuning) Features

ST (self-tuning) is a function that finds PID constants by using step response tuning (SRT) when Controller operation begins or when the set point is changed. Once the PID constants have been calculated, ST is not executed when the next control operation is started as long as the set point remains unchanged. When the ST function is in operation, be sure to turn ON the power supply of the load connected to the control output simultaneously with or before starting Controller operation.

Executing AT (Auto-tuning)

AT (auto-tuning) is executed by pressing the ▲ Up and ▼ Down Keys for at least 2 s while the PV is displayed. The deviation indicators flash during auto-tuning (AT) execution. AT will be cancelled by performing the same operation that AT is executing during AT operation. Flashing stops when AT is completed.

AT execution

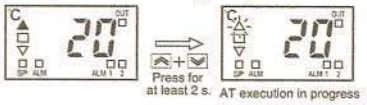

AT cancelled

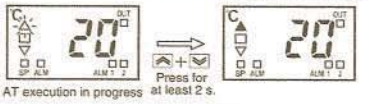

Note: One of the deviation indicators (▲■▼) will flash.

(2) Using the E5CSV in Devices for Fahrenheit-scale Users

(Displaying in °F)

Turn ON switch 6 to display temperatures in °F.

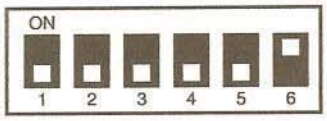

Temperature Range for °F

The temperature is set to °F using the same temperature range switch as °C.

Thermocouple

Setting	°F	
0	K	0 to 200
1		0 to 300
2		0 to 400
3		0 to 500
4		0 to 600
5		0 to 999
6	J/L	0 to 999
7		0 to 300
8		0 to 400
9		0 to 500

Platinum Resistance Thermometer

Setting	°F	
0	JPt100 or Pt100	-50 to 50
1		0.0 to 50.0
2		-20 to 80
3		0.0 to 99.9
4		0 to 200
5		0 to 300
6		0 to 400
7		0 to 600
8		0 to 800
9		0.0 to 199.9

Multi-input (Thermocouple/ Platinum Resistance Thermometer)

Control mode switch 5: OFF

Setting	°F	
0	K	-99 to 1999
1		0.0 to 199.9
2	J	-99 to 1500
3		0.0 to 199.9
4	L	-99 to 1500
5	T	-99 to 700
6		0.0 to 199.9
7	U	-99 to 700
8	N	-99 to 1999
9	R	0 to 1999

Multi-input (Thermocouple/ Platinum Resistance Thermometer)

Control mode switch 5: ON

Setting	°F	
0	Pt100	-99 to 1500
1		0.0 to 199.9
2		-99 to 99
3		0 to 200
4		0 to 400
5	JPt100	-99 to 900
6		0.0 to 199.9
7		-99 to 99
8		0 to 200
9		0 to 400

Note: The control range for a thermocouple input or platinum resistance thermometer input is -10% to +10% FS for each temperature range. The control range for multi-input (thermocouple/platinum resistance thermometer) models is -40 to +40° F of each temperature range.

Using K, L/Pt100 Thermometers

Turn ON switch 5 when using K, L/Pt100 Thermometers.

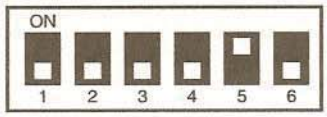

Note: The previous name J-DIN has been changed to L in accordance with revisions to DIN standards.

---

(3) Setting Input Shift

Turn ON switch 4, and after turning ON the power, press the Mode Key until *H0* (indicates input shift of 0) is displayed. Press the Up and Down Keys to set the shift value.

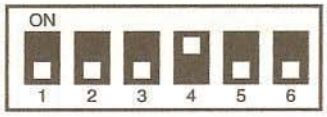

Shift Example

Input shift display	Measured temperature	Temperature display
H0 (no shift)	100°C	100°C
H9 (+9°C shift)	100°C	109°C
L9 (-9°C shift)	100°C	91°C

Note: When control mode switch 4 is turned OFF (no input shift display), the input shift is not displayed but the shift value is enabled. To disable input shift, set the input shift value to *H0*. The shift range depends on the setting unit.

Setting unit	1°C	0.1°C
Compensation range	-99 to +99°C	-9.9 to +9.9°C
Input shift display	L99 to H99	L9.9 to H9.9

5. Protect Switch

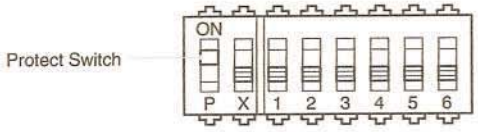

When the protect switch is ON, Up Key and Down Key operations are prohibited to prevent setting mistakes.

Installation

- All models in the E5CSV Series conform to DIN 43700 standards.
- The recommended panel thickness is 1 to 4 mm.
- Be sure to mount the E5CSV horizontally.

Mounting the E5CSV

1. For waterproof mounting, waterproof packing must be installed on the Controller. Waterproofing is not possible when group mounting several Controllers.
2. Insert the E5CSV into the mounting hole in the panel.
3. Push the adapter from the terminals up to the panel, and temporarily fasten the E5CSV.
4. Tighten the two fastening screws on the adapter. Alternately tighten the two screws little by little to maintain a balance. Tighten the screws to a torque of 0.29 to 0.39 N·m.

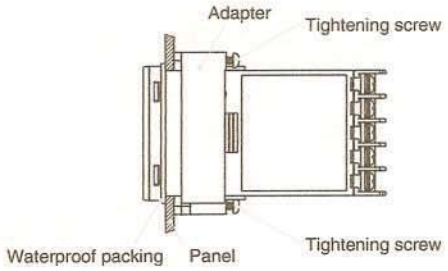

Error Displays and Causes

In addition to the alarm indicator, errors notification is provided on the display. Be sure to remove the cause of the error promptly.

Display status	Cause	Control output
PV displayed as FFF	The process value is higher than the control temperature range (overflow).	Heating control (reverse operation): OFF Cooling control (direct operation): ON
PV displayed as ---	The process value is lower than the control temperature range (underflow).	Heating control (reverse operation): ON Cooling control (direct operation): OFF
FFF flashing	(1)Thermocouple models and platinum resistance thermometer models: The process value is higher than the overflow temperature, or a Sensor error has occurred. (2)Multi-input (Thermocouple/platinum resistance thermometer) models: The process value is higher than the control temperature range or a Sensor error has occurred.	OFF
--- flashing	(1)Thermocouple and platinum resistance thermometer input: The process value is lower than the underflow temperature, or a Sensor error has occurred. (2)Thermocouples: The polarity is reversed. (3)Multi-input (Thermocouple/platinum resistance thermometer) models: The process value is lower than the control temperature range or a Sensor error has occurred.	OFF
E11 is displayed	A memory error (E11) has occurred. Turn the power ON again. If the display remains the same, the Controller must be repaired.	The control outputs and alarm outputs turn OFF.

Note: In models with an alarm, FFF appears or flashes on the display to indicate that the temperature has exceeded the maximum display temperature and the output is set according to the alarm mode. In the same way, --- appears or flashes on the display to indicate that the temperature has exceeded the minimum display temperature and the output is set according to the alarm mode.

Sensor Error Displays and Causes

■ Thermocouple

Status		Display	Control output
Burnout	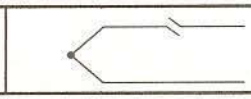	FFF flashing	OFF

Note: The room temperature is displayed if an input short-circuit occurs.

■ Platinum Resistance Thermometer

Status		Display	Control output
Burnout	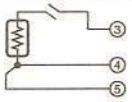	FFF flashing	OFF
	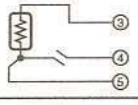	--- flashing	OFF
	2 or 3 wires disconnected	FFF flashing	OFF
Short-circuit	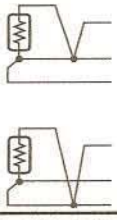	--- flashing	OFF

Note: The resistance value for platinum resistance thermometers is 100 Ω at 0°C and 140 Ω at 100°C.

Comparison with E5CS-X

■ Model Number Legend

Previous model

E5CS-□□□X
1 2 3

	Classification	Symbol	Meaning
1	Control output	R Q	Relay: SPDT (single-pole, double-throw) Voltage
2	Alarm output	Blank 1	No alarms One alarm
3	Input type	KJ P	Thermocouple (K, J) Platinum resistance thermometer (Pt100, JPt100)
	Terminal appearance	X	Model with terminal block

Main Differences

Terminal block models use the model number E5CSV.
The suffix "D" is added to models with a supply voltage of 24 VAC/VDC.
The suffix "W" is added to models with a light gray case color.

E5CSV

E5CSV-□□□□-□
1 2 3 4 5

	Classification	Symbol	Meaning
1	Control output	R Q	Relay: SPST-NO (single-pole, single-throw, normally open) Voltage
2	Alarm output	Blank 1 2	No alarms One alarm Two alarms
3	Input type	T KJ P	Multi-input (thermocouple/platinum resistance thermometer) models Thermocouple (K, J) Platinum resistance thermometer (Pt100, JPt100)
4	Supply specifications	Blank D	100 to 240 VAC 24 VAC/VDC
5	Case color	Blank W F	Black Light gray Scale marked in F° (Black case only)

■ Display

Previous model

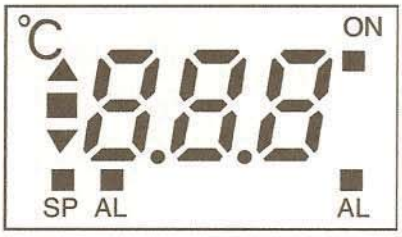

E5CSV

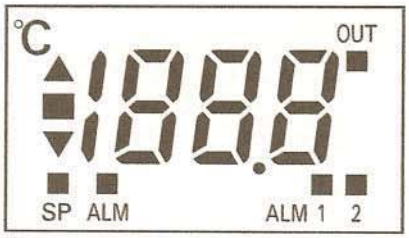

The display digits can be increased up to 1,999.
The ALM2 display has been added.
The display "ON" has changed to "OUT" and "AL" has changed to "ALM."

■ Functions

The control outputs for relay outputs have been changed from SPDT (single-pole, double-throw) to SPST-NO (single-pole, single-throw, normally open) contacts.
The control method has been changed to 2-PID control.
An auto-tuning (AT) function has been added.
The deviation display flashes during self-tuning (ST) and auto-tuning (AT).
The control calculation period has been improved from 2 s to 0.5 s.

■ External Dimensions

The depth has been shortened from 100 mm to 76 mm.

Comparison with E5CS-X

■ Model Number Legend

Previous model

E5CS-□□□X
1 2 3

	Classification	Symbol	Meaning
1	Control output	R Q	Relay: SPDT (single-pole, double-throw) Voltage
2	Alarm output	Blank 1	No alarms One alarm
3	Input type	KJ P	Thermocouple (K, J) Platinum resistance thermometer (Pt100, JPt100)
	Terminal appearance	X	Model with terminal block

Main Differences

Terminal block models use the model number E5CSV.
The suffix "D" is added to models with a supply voltage of 24 VAC/VDC.
The suffix "W" is added to models with a light gray case color.

E5CSV

E5CSV-□□□□-□
1 2 3 4 5

	Classification	Symbol	Meaning
1	Control output	R Q	Relay: SPST-NO (single-pole, single-throw, normally open) Voltage
2	Alarm output	Blank 1 2	No alarms One alarm Two alarms
3	Input type	T KJ P	Multi-input (thermocouple/platinum resistance thermometer) models Thermocouple (K, J) Platinum resistance thermometer (Pt100, JPt100)
4	Supply specifications	Blank D	100 to 240 VAC 24 VAC/VDC
5	Case color	Blank W F	Black Light gray Scale marked in F° (Black case only)

■ Terminal Arrangement

• The terminal arrangement has changed from a horizontal to vertical configuration.

Previous model	E5CSV
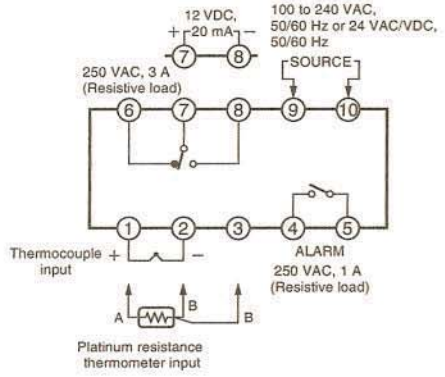	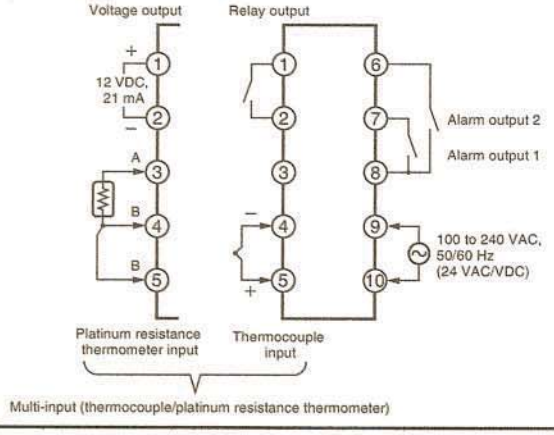

■ DIP Switch and Rotary Switch Setting Methods

No change from previous models.

Dimensions

Note: All units are in millimeters unless otherwise indicated.

■ Controller

E5CSV





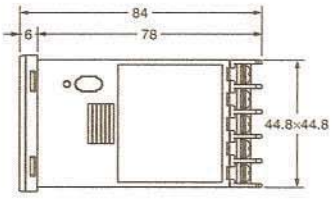

Note: Terminals cannot be removed.

Panel Cutout Dimensions

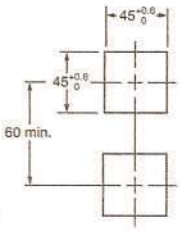

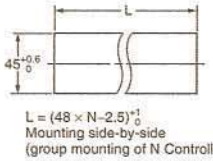

L = (48 × N−2.5) +1 0
Mounting side-by-side
(group mounting of N Controllers)

E5CSV + Adapter for Flush Mounting (Provided)

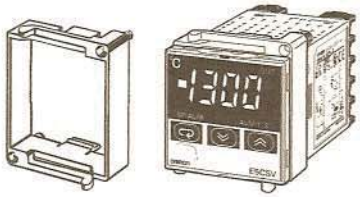

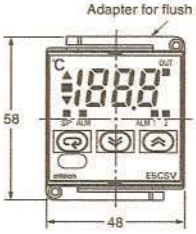

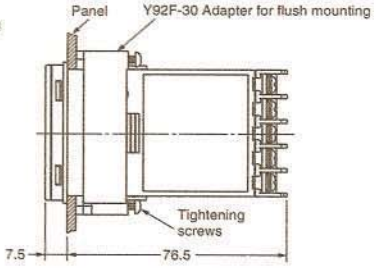

Note: 1. The recommended panel thickness is 1 to 4 mm.
2. Group mounting is possible in one direction only.

Hard Protective Cover

The Y92A-48B Protective Cover (hard type) is available for the following applications.

- To protect the set from dust and dirt.
- To prevent the panel from being accidentally touched causing displacement of set values.
- To provide effective protection against water droplets.



Terminal Cover

E53-COV10

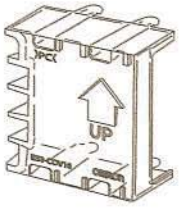

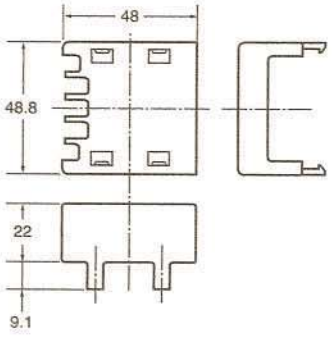

Precautions

⚠ Caution

Do not touch the terminals while power is being supplied. Doing so may occasionally result in minor injury due to electric shock.



Do not allow pieces of metal, wire clippings, or fine metallic shavings or filings from installation to enter the product. Doing so may occasionally result in electric shock, fire, or malfunction.



Do not use the product where subject to flammable or explosive gas. Otherwise, minor injury from explosion may occasionally occur.



Never disassemble, modify, or repair the product or touch any of the internal parts. Minor electric shock, fire, or malfunction may occasionally occur.



CAUTION - Risk of Fire and Electric Shock

a) This product is UL listed as Open Type Process Control Equipment. It must be mounted in an enclosure that does not allow fire to escape externally.

b) More than one disconnect switch may be required to de-energize the equipment before servicing the product.

c) Signal inputs are SELV, limited energy. (See note 1.)

d) Caution: To reduce the risk of fire or electric shock, do not interconnect the outputs of different Class 2 circuits. (See note 2.)



If the output relays are used past their life expectancy, contact fusing or burning may occasionally occur. Always consider the application conditions and use the output relays within their rated load and electrical life expectancy. The life expectancy of output relays varies considerably with the output load and switching conditions.



Loose screws may occasionally result in fire.
Tighten terminal screws to the specified torque of 0.74 to 0.90 N·m.



Unexpected operation may result in equipment damage or accidents if the settings are not appropriate for the controlled system. Set the Temperature Controller as follows:

- Set the parameters of the Temperature Controller so that they are appropriate for the controlled system.
- Turn the power supply to the Temperature Controller OFF before changing any switch setting. Switch settings are read only when the power supply is turned ON.
- Make sure that the INIT switch in the control mode switches is turned OFF before operating the Temperature Controller.



A malfunction in the Temperature Controller may occasionally make control operations impossible or prevent alarm outputs, resulting in property damage. To maintain safety in the event of malfunction of the Temperature Controller, take appropriate safety measures, such as installing a monitoring device on a separate line.



Faulty terminal contact or decreased waterproofing capability may result in a fire or equipment malfunction. When inserting the Temperature Controller into the rear case after setting the switches, check the watertight packing and make sure that the top and bottom hooks are locked securely in place.



Note: 1. A SELV circuit is one separated from the power supply with double insulation or reinforced insulation, that does not exceed 30 V r.m.s. and 42.4 V peak or 60 VDC.

2. A class 2 power supply is one tested and certified by UL as having the current and voltage of the secondary output restricted to specific levels.

■ Precautions for Safe Use

Be sure to observe the following precautions to prevent operation failure, malfunction, or adverse affects on the performance and functions of the product. Not doing so may occasionally result in unexpected events.

1. The product is designed for indoor use only. Do not use the product outdoors or in any of the following locations.
   - Places directly subject to heat radiated from heating equipment.
   - Places subject to splashing liquid or oil atmosphere.
   - Places subject to direct sunlight.
   - Places subject to dust or corrosive gas (in particular, sulfide gas and ammonia gas).
   - Places subject to intense temperature change.
   - Places subject to icing and condensation.
   - Places subject to vibration and large shocks.
2. Use and store the product within the rated temperature and humidity ranges.
   Group-mounting two or more Temperature Controllers, or mounting Temperature Controllers above each other may cause heat to build up inside the Temperature Controllers, which will shorten their service life. In such a case, use forced cooling by fans or other means of air ventilation to cool down the Temperature Controllers.
3. To allow heat to escape, do not block the area around the product. Do not block the ventilation holes on the product.
4. Use the specified size (M3.5, width of 7.2 mm or less) crimped terminals for wiring. To connect bare wires to the terminal block, use copper braided or solid wires with a gage of AWG24 to AWG18 (equal to a cross-sectional area of 0.205 to 0.832 mm^2). (The stripping length is 5 to 6 mm.) Up to two wires of the same size and type, or two crimp terminals can be inserted into a single terminal.
5. Be sure to wire properly with correct polarity of terminals. Do not wire any of the I/O terminals incorrectly.
6. Do not wire the terminals that are not used.
7. The voltage output (control output) is not electrically isolated from the internal circuits. When using a grounded temperature sensor, do not connect any of the control output terminals to ground. Otherwise unwanted current paths will cause measurement errors.
8. To avoid inductive noise, keep the wiring for the Temperature Controller's terminal block away from power cables carrying high voltages or large currents. Also, do not wire power lines together with or parallel to Temperature Controller wiring. Using shielded cables and using separate conduits or ducts is recommended.
   Attach a surge suppressor or noise filter to peripheral devices that generate noise (in particular, motors, transformers, solenoids, magnetic coils or other equipment that have an inductance component).
   When a noise filter is used at the power supply, first check the voltage or current, and attach the noise filter as close as possible to the temperature controller.
   Allow as much space as possible between the Temperature Controller and devices that generate powerful high frequencies (high-frequency welders, high-frequency sewing machines, etc.) or surge.

9. Use the product within the rated load and power supply.
10. Use a switch, relay, or other contact so that the power supply voltage reaches the rated voltage within 2 seconds. If the applied voltage is increased gradually, the power supply may not be reset or malfunctions may occur.
11. When using PID operation (self-tuning), turn ON the power supply to the load (e.g., heater) at the same time or before turning the power supply to the Temperature Controller ON. If power is turned ON for the Temperature Controller before turning ON power supply to the load, self-tuning will not be performed properly and optimum control will not be achieved.
12. Design the system (e.g., control panel) to allow for the 2 seconds of delay required for the Temperature Controller's output to stabilize after the power is turned ON.
13. A switch or circuit breaker should be provided close to this unit. The switch or circuit breaker should be within easy reach of the operator, and must be marked as a disconnecting means for this unit.
14. Approximately 30 minutes is required for the correct temperature to be displayed after turning the power supply to the Temperature Controller ON. Turn the power supply ON at least 30 minutes prior to starting control operations.
15. Be sure that the platinum resistance thermometer type and the input type set on the Temperature Controller are the same.
16. When extending the thermocouple lead wires, always use compensating conductors suitable for the type of thermocouple. Do not extend the lead wires on a platinum resistance thermometer. Use only low-resistance wire (5 Ω max. per line) for lead wires and make sure that the resistance is the same for all three wires.
17. When drawing out the Temperature Controller from the case, do not apply force that would deform or alter the Temperature Controller.
18. When drawing out the Temperature Controller from the case to replace the Temperature Controller, check the status of the terminals. If corroded terminals are used, contact faults with the terminals may cause the temperature inside the Temperature Controller to increase, possibly resulting in fire. If the terminals are corroded, replace the rear case as well.
19. When drawing out the Temperature Controller from the case, turn the power supply OFF first, and absolutely do not touch the terminals or electronic components or apply shock to them. When inserting the Temperature Controller, do not allow the electronic components to come into contact with the case.
20. Static electricity may damage internal components. Always touch grounded metal to discharge any static electricity before handling the Temperature Controller. When drawing out the Temperature Controller from the case, do not touch the electronic components or patterns on the board with your hand. Hold the Temperature Controller by the edge of the front panel when handling it.
21. Do not use paint thinner or similar chemical to clean with. Use standard grade alcohol.
22. Use tools when separating parts for disposal. Contact with the sharp internal parts may cause injury.

■ Precautions for Correct Use

Service Life

Use the Temperature Controller within the following temperature and humidity ranges:

Temperature: -10 to 55°C (with no icing or condensation)
Humidity: 25% to 85%

If the Controller is installed inside a control board, the ambient temperature must be kept to under 55°C, including the temperature around the Controller.

The service life of electronic devices like Temperature Controllers is determined not only by the number of times the relay is switched but also by the service life of internal electronic components. Component service life is affected by the ambient temperature: the higher the temperature, the shorter the service life and, the lower the temperature, the longer the service life. Therefore, the service life can be extended by lowering the temperature of the Temperature Controller.

When two or more Temperature Controllers are mounted horizontally close to each other or vertically next to one another, the internal temperature will increase due to heat radiated by the Temperature Controllers and the service life will decrease. In such a case, use forced cooling by fans or other means of air ventilation to cool down the Temperature Controllers. When providing forced cooling, however, be careful not to cool down the terminals sections alone to avoid measurement errors.

Measurement Accuracy

When extending or connecting the thermocouple lead wire, be sure to use compensating wires that match the thermocouple type. Do not extend the lead wire of the platinum resistance thermometer. If the lead wire of the platinum resistance thermometer must be extended, be sure to use wires that have low resistance and keep the resistance of the three lead wires the same.

Mount the Temperature Controller so that it is horizontally level.

If the measurement accuracy is low, check whether the input shift has been set correctly.

Waterproofing

The degree of protection is as shown below. Sections without any specification on their degree of protection or those with IP□0 are not waterproof.

Front panel: IP66, rear case: IP20, terminals: IP00

of use. Buyer shall be solely responsible for determining appropriateness of the particular Product with respect to Buyer's application, product or system. Buyer shall take application responsibility in all cases but the following is a non-exhaustive list of applications for which particular attention must be given:
(i) Outdoor use, uses involving potential chemical contamination or electrical interference, or conditions or uses not described in this document.
(ii) Use in consumer products or any use in significant quantities.
(iii) Energy control systems, combustion systems, railroad systems, aviation systems, medical equipment, amusement machines, vehicles, safety equipment, and installations subject to separate industry or government regulations.
(iv) Systems, machines and equipment that could present a risk to life or property. Please know and observe all prohibitions of use applicable to this Product.
NEVER USE THE PRODUCT FOR AN APPLICATION INVOLVING SERIOUS RISK TO LIFE OR PROPERTY OR IN LARGE QUANTITIES WITHOUT ENSURING THAT THE SYSTEM AS A WHOLE HAS BEEN DESIGNED TO

ity and does not constitute a warranty. It may represent the result of Omron's test conditions, and the user must correlate it to actual application requirements. Actual performance is subject to the Omron's Warranty and Limitations of Liability.

4. Change in Specifications. Product specifications and accessories may be changed at any time based on improvements and other reasons. It is our practice to change part numbers when published ratings or features are changed, or when significant construction changes are made. However, some specifications of the Product may be changed without any notice. When in doubt, special part numbers may be assigned to fix or establish key specifications for your application. Please consult with your Omron's representative at any time to confirm actual specifications of purchased Product.
5. Errors and Omissions. Information presented by Omron Companies has been checked and is believed to be accurate; however, no responsibility is assumed for clerical, typographical or proofreading errors or omissions.

NORDBLOC®.1 Helical Gearboxes
Installation and Maintenance Instructions

BIM 1013

USA

CDN

Retain These Safety Instructions For Future Use

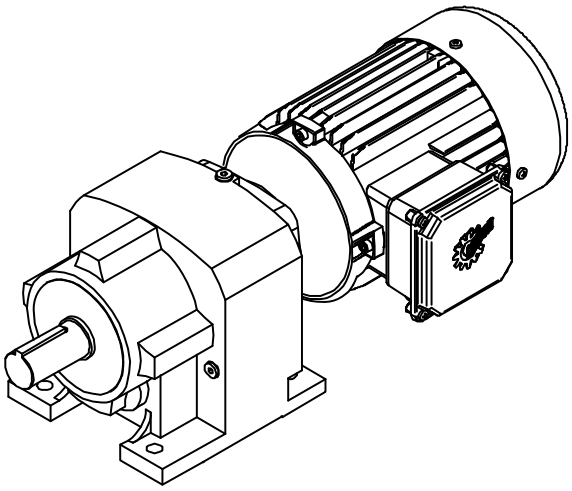

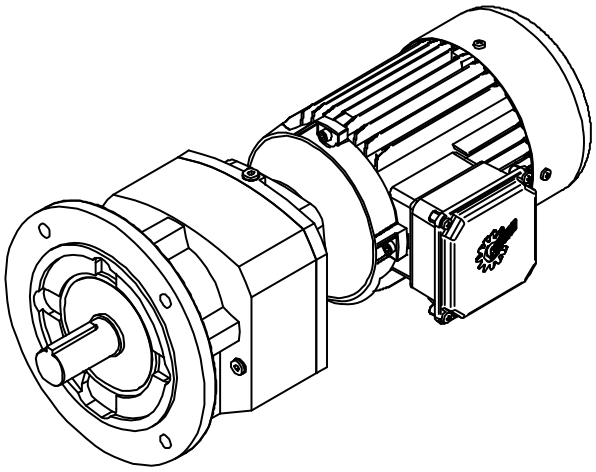

INSPECTION OF UNIT

Thoroughly inspect the equipment for any shipping and handling damage before accepting shipment from the freight company. If any of the goods called for in the bill of lading or express receipt are damaged or the quantity is short, do not accept until the freight or express agent makes an appropriate notation on your freight bill or express receipt. If any concealed loss or damage is discovered later, notify your freight carrier or express agent at once and request him to make an inspection. We will be very happy to assist you in collecting claims for loss or damage during shipment; however, this willingness on our part does not remove the transportation company's responsibility in reimbursing you for collection of claims or replacement of material. Claims for loss or damage in shipment must not be deducted from the NORD Gear invoice, nor should payment of the NORD Gear invoice be withheld awaiting adjustment of such claims, as the carrier guarantees safe delivery.

If considerable damage has been incurred and the situation is urgent, contact the nearest NORD Gear Sales Office for assistance. Please keep a written record of all communications.

RECORD NAMEPLATE DATA

Locate the gear reducer nameplate and record all nameplate data for future reference.

SK _____ S/N _____

RATIO _____ MAX TORQUE _____ RPM _____ MTG. POS _____

STORAGE

PROPER STORAGE UNTIL INSTALLED

Keep unit in a dry, temperature controlled area. If stored other than said, long term storage methods must be applied to the unit including complete fill with lubricant. Protect machined surfaces and rotate shafts periodically. Prior to putting unit into service, drain lubricant and refill to proper level as determined by the mounting position.

PROPER HANDLING OF THE UNIT

Exercise care to prevent damage to the unit when moving. Lift only at designed lifting points. Do not attach other machinery and lift by the unit lifting points. The lifting points are to be used to lift the unit only. Insure that adequate safety measures are taken to protect personnel during transportation. Protect the mounting surface from damage.

INSTALLATION OF UNIT

To ensure reliable service and dependable performance, an enclosed gear drive must be rigidly supported and the shafts accurately aligned. Folioing are some precautions required to accomplish this end.

FOUNDATION
The responsibility for the design and construction of the foundation is with the user. The foundation must be adequate to withstand normal operating loads and possible overloads while maintaining alignment to attached system components under such loads.

MOUNTING POSITION
Unless a unit is specifically ordered for inclined mounting, the foundation must be level and flat. The lubrication system may not operate properly if the unit is not mounted in the position for which it is designed. It may be desirable to elevate the foundation to facilitate oil drainage.

CONCRETE FOUNDATION
If a concrete foundation is used, steel mounting pads and bolts of sufficient size to distribute the stress into the concrete should be grouted into the foundation.

STEEL FOUNDATION
If a structural steel foundation is used (i.e. wide flange beams or channels), a base plate or sole plate of suitable thickness should be used and should extend under the entire unit.

FOOT MOUNTED UNITS
Use shims under the feet of the unit to align the output shaft to the driven equipment. Make sure that all feet are supported so that the housing will not distort when it is bolted down. Improper shimming will reduce the life of the unit and may cause failure. Dowel pins may be installed to prevent misalignment and ensure proper realignment if removed for service.

FLANGE MOUNTED UNITS
If a structural steel foundation is used (i.e. wide flange beams or channels), a base plate or sole plate of suitable thickness should be used and should extend under the entire unit. If a bulk head plate is used it should be of proper strength to minimize buckling distortions.

Flange Pilot 'AK' or 'AK1' tolerance
Metric (mm)

> ∅ 50 ≤ ∅ 80 = +0.012/-0.007
> ∅ 80 ≤ ∅ 120 = +0.013/-0.009
> ∅ 120 ≤ ∅ 180 = +0.014/-0.011
> ∅ 180 ≤ ∅ 230 = +0.016/-0.013
> ∅ 230 ≤ ∅ 315 = +0.000-0.032
> ∅ 315 ≤ ∅ 400 = +0.000/-0.036
> ∅ 400 ≤ ∅ 500 = +0.000/-0.040

Inch

> ∅ 1.969 ≤ ∅ 3.150 = +0.005/-0.0003
> ∅ 3.150 ≤ ∅ 4.724 = +0.005/-0.0004
> ∅ 4.724 ≤ ∅ 7.087 = +0.006/-0.0004
> ∅ 7.087 ≤ ∅ 9.055 = +0.006/-0.0005
> ∅ 9.055 ≤ ∅ 12.402 = +0.000/-0.0013
> ∅ 12.402 ≤ ∅ 15.748 = +0.000/-0.0014
> ∅ 15.748 ≤ ∅ 19.685 = +0.000/-0.0016

BOLT STRENGTH
Bolt size, strength and quantity should be verified to insure proper torque reaction capacity whatever the mounting arrangement.

PRIME MOVER MOUNTING
Align the prime mover to the reducer-input shaft using shims under the feet. Make sure that the feet are supported. Dowel pin the prime mover to its foundation.

SHAFT CONNECTIONS
When connecting shafts to either the input or output of the reducer, consider the following:

- Coupling hubs should be installed in accordance with ANSI/AGMA 9002-A86
- Consult with the manufacture to determine proper assembly and fit, prior to installing outboard sprockets or gears. Interference fits may require heating the sprocket or gear per the manufacturer's recommendations, generally up to 250°F to 300°F, (120°C to 150° C), before assembling to the shaft.

NORD SHAFT TOLERANCES

Solid shaft diameter tolerance
Metric (mm)

≤ ∅ 18 = +0.012/+0.001
> ∅ 18 ≤ ∅ 30 = +0.015/+0.002
> ∅ 30 ≤ ∅ 50 = +0.018/+0.002
> ∅ 50 ≤ ∅ 80 = +0.030/+0.011
> ∅ 80 ≤ ∅ 120 = +0.035/+0.013
> ∅ 120 ≤ ∅ 180 = +0.040/+0.015

Inch

≤ ∅ 1.750 = +0.0000/-0.0005
> ∅ 1.750 = +0.0000/-0.0010

Solid shaft drill and tap at shaft end
Metric (mm)

≤ ∅ 16 = M5
> ∅ 16 ≤ ∅ 21 = M6
> ∅ 21 ≤ ∅ 24 = M8
> ∅ 24 ≤ ∅ 30 = M10
> ∅ 30 ≤ ∅ 38 = M12
> ∅ 38 ≤ ∅ 50 = M16
> ∅ 50 ≤ ∅ 85 = M20
> ∅ 85 ≤ ∅ 130 = M24

Inch

≤ ∅ 0.500 = 10-24 x 0.43 deep
> ∅ 0.500 ≤ ∅ 0.875 = 1/4-20 x 0.59 deep
> ∅ 0.875 ≤ ∅ 0.938 = 5/16-18 x 0.71 deep
> ∅ 0.938 ≤ ∅ 1.100 = 3/8-16 x 0.87 deep
> ∅ 1.100 ≤ ∅ 1.300 = 1/2-13 x 1.10 deep
> ∅ 1.300 ≤ ∅ 1.875 = 5/8-11 x 1.4 deep
> ∅ 1.875 ≤ ∅ 3.500 = 3/4-10 x 1.7 deep
> ∅ 3.500 = 1-8 x 2.2 deep

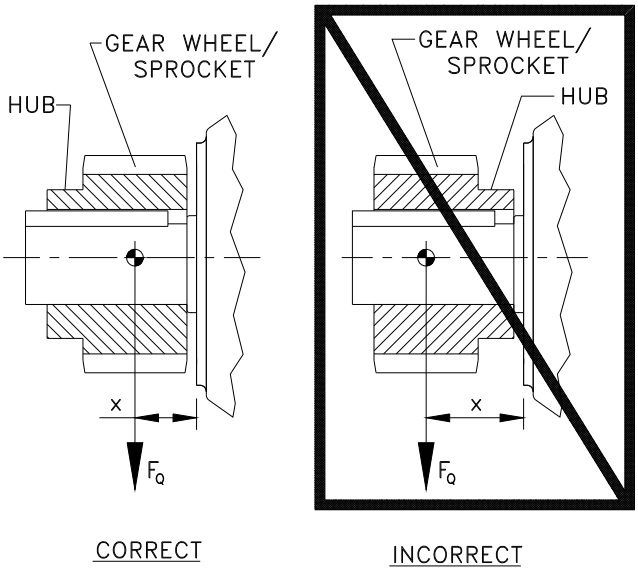

LOCATION
Coupling hubs should be mounted flush with the shaft ends, unless specifically ordered for overhung mounting. Pinions, sprockets and sheaves should be mounted as close as possible to the unit housing to minimize bearing loads and shaft deflections.

COUPLING ALIGNMENT
Shaft couplings should be installed according to the coupling manufacturer's recommendations for gap, angular and parallel alignment. In many installations, it is necessary to allow for thermal and mechanical shaft movement when determining shaft alignment. The coupling manufacturer's recommendations should be followed.

AXIAL DISPLACEMENT
The gap between shaft ends should be the same as the specified coupling gap unless overhung mounting of the coupling hub is specified. The coupling gap and shaft gap must be sufficient to accommodate any anticipated thermal or mechanical axial movement.

ANGULAR ALIGNMENT
Insert a spacer or shim stock equal to the required coupling gap between the coupling hub faces and measure the clearance using feeler gauges. Repeat this at the same depth at 90-degree intervals to determine the amount of angular misalignment.

PARALLEL ALIGNMENT
Mount a dial indicator to one coupling hub, and rotate this hub, sweeping the outside diameter of the other hub. The parallel misalignment is equal to one-half of the total indicator reading. Another method is to rest a straight edge squarely on the outside diameter of the hubs at 90-degree intervals and measure any gaps with feeler gauges. The maximum gap measurement is the parallel misalignment.

CHECKING ALIGNMENT
After both angular and parallel alignments are within specified limits, tighten all foundation bolts securely and repeat the above procedure to check alignment. If any of the specified limits for alignment are exceeded, realign the coupling.

SPROCKET OR SHEAVE ALIGNMENT
Align the sheaves or sprockets square and parallel by placing a straight edge across their faces. Alignment of bushed sheaves and sprockets should be checked after bushings have been tightened. Check horizontal shaft alignment by placing a level vertically against the face of the sheave or sprocket. Adjust belt or chain tension per the manufacturer's specified procedure.

OUTBOARD PINION ALIGNMENT
Align the pinion by adjusting the gear tooth clearance according to the manufacturer's recommendations and checking for acceptable outboard pinion tooth contact. The foundation bolts may have to be loosened and the unit moved slightly to obtain this contact. When the unit is moved to correct tooth contact, the prime mover should be realigned.

RECHECK ALIGNMENT
After a period of operation, recheck alignment and adjust as required.

1. Properly install unit on a rigid foundation
   - adequately supported
   - securely bolted into place
   - leveled so as not to distort the gear case
2. Properly install couplings suitable for the application and connected equipment.
3. Ensure accurate alignment with other equipment.
4. Furnish and install adequate machinery guards as needed to protect operating personnel and as required by the applicable standards of the Occupational Safety and Health Administration (OSHA), and by other applicable safety regulations;
5. Ensure that driving equipment is running in the correct direction before coupling to reducers with backstops (designed to operate only in a specific direction) or machinery designed to operate only in one direction.

CHANGES IN PERFORMANCE SPECIFICATIONS
The owner has the responsibility to consult with NORD GEAR if such items such as applied loads, operating speeds or other operating conditions have changed.

WARNING:
LOCK OUT POWER before any maintenance is performed. Make absolutely sure that no voltage is applied while work is

START-UP
1. Ensure that switches, alarms, heaters, coolers and other safety and protection devices are installed and operational for their intended purpose.
2. Verify that the installed mounting position is the same as the nametag mounting position. If not, relocate the vent plug, fill plug and drain plug according to the tables on pages 5-7 and make the necessary adjustments to the oil level.

OPERATION AND MAINTENANCE CHECKLIST
1. Operate the equipment as it was intended to be operated
2. Do not overload.
3. Run at correct speed.
4. Maintain lubricant in good condition and at proper level.
5. Dispose of used lubricant in accordance with applicable laws and regulations.
6. Apply proper maintenance to attached equipment at prescribed intervals recommended by the manufacturer.
7. Perform periodic maintenance of the gear drive as recommended by NORD.

LUBRICATION

Proper gearbox lubrication is essential in order to reduce friction, heat, and component wear. Lubricants reduce heat and wear by inserting a protective "fluid boundary" between mating parts and preventing direct metal to metal contact. Lubricants also help prevent corrosion and oxidation, minimize foam, improve heat transfer, optimize reducer efficiency, absorb shock loads and reduce noise.

- All reducers are shipped from the factory with a pre-determined oil fill level in accordance to the specified reducer size and mounting position (See pages 5-7).
- Actual oil volume can vary slightly depending upon the gear case size, mounting and ratio. Prior to commissioning the reducer, check the oil-fill level using the reducer's oil-level plug and drain or add additional oil as needed.

Standard Oil Type

The standard NORDBLOC.1 gear units are supplied with mineral-base oil, ISO viscosity grade VG220.

Gear units may also be supplied with specific lubricants designed to operate in certain environments, extend service life, or extend the service temperature range. *Consult the lubrication decal adjacent to the fill plug to determine the type of lubricant installed at the factory.*

Oil Viscosity

Viscosity or the oil's resistance to shear under load is often considered the single most important property of any gear oil. There are three primary reasons to consider a lubrication viscosity change as follows:

1. *Low temperature* gear oils should be selected so that the pour point is at least 9°F (5°C) lower than the expected minimum ambient temperature. In extreme cases, consider a lower ISO Viscosity rating and test the critical performance of the gear box under cold start-up.
2. *High temperature* applications may require an increase in the lubricants viscosity to assure proper lubrication conditions in the critical load zones of the gear unit. NORD also recommends switching to synthetic oil if oil sump temperatures exceed 176-185 °F (80-85 °C).
3. *In cases of extreme load conditions*, gear pairs and antifriction bearings may be more susceptible to scuffing wear. In these operating conditions, it may be beneficial to consider an increased lubrication viscosity and/or lubrication with improved antiwear additive packages.

NORD recommends that the user consult with their primary lubrication supplier when considering changes in oil viscosity.

Maximum Oil Sump Temperature Limit

To prevent reducer overheating, the reducer's maximum oil sump temperature limit must not be exceeded for prolonged periods of operation (up to 3 hours continuous operation depending upon reducer size).

Oil Type	Maximum Oil Temperature Limit	
	NORD	***AGMA 9005-D94***
Mineral	80-85 °C (176-185 °F)	95 °C (203 °F)
Synthetic	105 °C (220 ° F)	107 ° C (225 ° F)

The Importance of Routine Oil Analysis

Routine oil analysis, sound lubrication practices, and good tracking of oil performance trends as related to specific equipment, will help establish proper lubrication maintenance and change-out intervals. To maximize equipment reliability, NORD Gear generally recommends a condition-based lubrication maintenance program.

One may take exceptions to this general recommendation on sealed-for-life or maintenance-free gear units or smaller and less costly gear units. In these instances, the replacement cost of the gear unit is often small compared to the costs associated with this type of oil analysis program.

NORD suggests replacing the gear oil if oil analysis indicates any of the following:
• Viscosity has changed by approximately 10% or more.
• Debris particles (silicon, dust, dirt or sand) exceed 25 ppm.
• Iron content exceeds 150-200 ppm.
• Water content is greater than 0.05% (500 ppm).
• Acid number tests indicate a significant level of oxidative break-down of the oil and a critical reduction in Performance.

OIL PLUG OPTIONS

All gear units are assembled with the oil fill-level, oil-drain and vent plugs installed in their proper locations, according to the specified mounting position that is shown on the reducer nametag (See Pages 5-7). All standard plugs are metric and utilize sealing gaskets between the head of the plug and the reducer housing.

Drain Plug
All reducer drain plugs are metric socket head cap screws. For ease of draining the spent oil from the gear reducer use the socket head screw located at the lowest part of the gearbox.

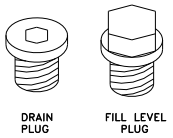

Fill Level Plug
For ease of identification, it is NORD's standard practice to provide a hex-head screw for the fill-level plug

Vent Plug Options
Proper reducer venting allows for air pressure differences that occur during operation, between the inner space of the reducer and the atmosphere, while ensuring leak-free operation. The Autovent™ is standard on all NORDBLOC.1 gear units.

Autovent™
The AUTOVENT™ helps prevent bearing and gear damage by blocking entry of foreign material (water, dust, corrosives, etc.) through a breather that acts like a check valve. The typical design utilizes a spring pressing a ball or a sealing plunger, which presses against a machined orifice. The check valve opens at approximately 2 psi during operation and closes tightly when the gearbox cools, producing a slightly negative pressure to ensure a tight seal. This keeps contaminants out of the oil, helps maintain proper oil cleanliness, reduces contamination, oil foaming and oxidation. The AUTOVENT™ is perfect for humid conditions, washdown applications, and dusty environments.

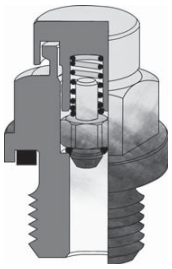

Open Vent
An optional open vent can be supplied on NORD reducers. The open vent will be closed upon delivery to prevent oil leakage. Before the reducer is put in service the open vent should be activated by removing the sealing plug.

Filtered Vent
NORD may offer an optional filtered vent, which allows gases to permeate, but does not allow dust and debris to pass through the vent.

MOUNTING POSITIONS

The mounting position charts that follow detail the standard mounting positions for horizontal and vertical mounting. The gearbox nametag will indicate the mounting position that was provided. For mounting orientations other than shown consult NORD Gear.

FOOT-MOUNTED

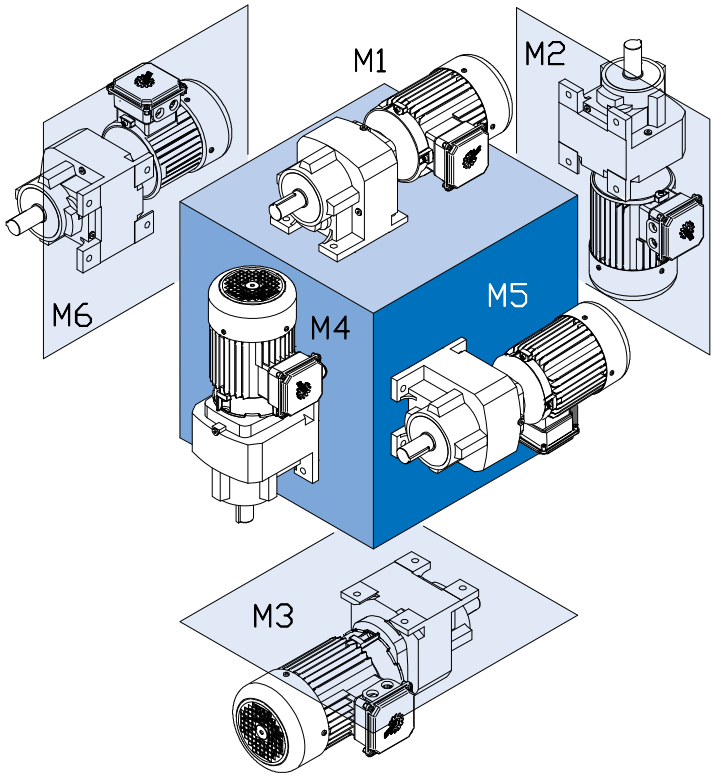

FLANGE-MOUNTED

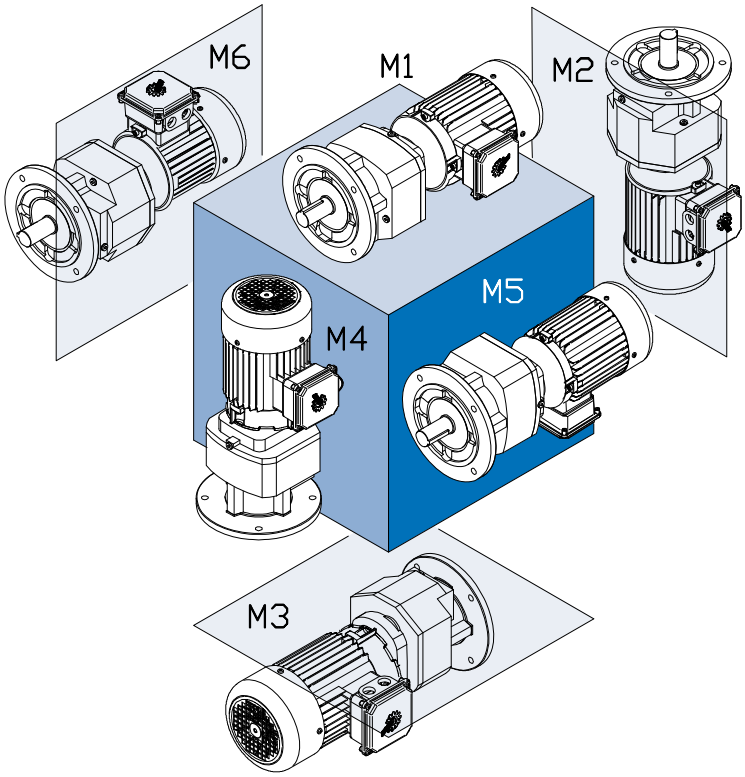

OIL PLUG LOCATIONS

All gear units are assembled with the oil fill-level, oil-drain and vent plugs installed in their proper locations, according to the specified mounting position that is shown on the reducer nametag. All standard plugs are metric and utilize sealing gaskets between the head of the plug and the reducer housing.

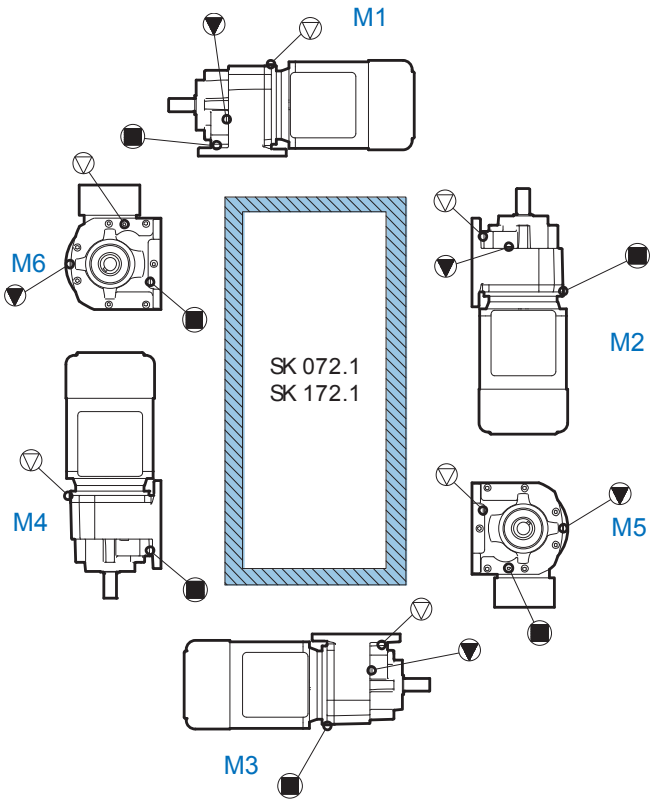

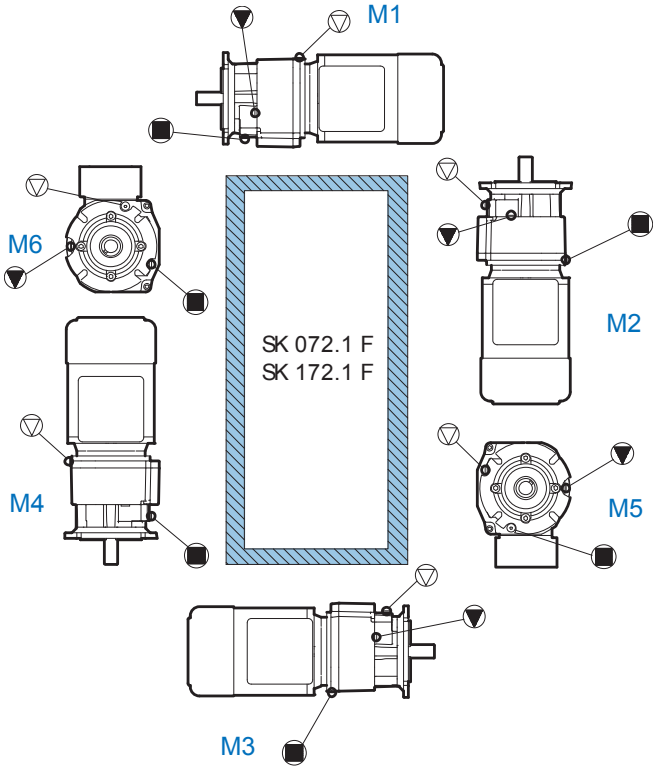

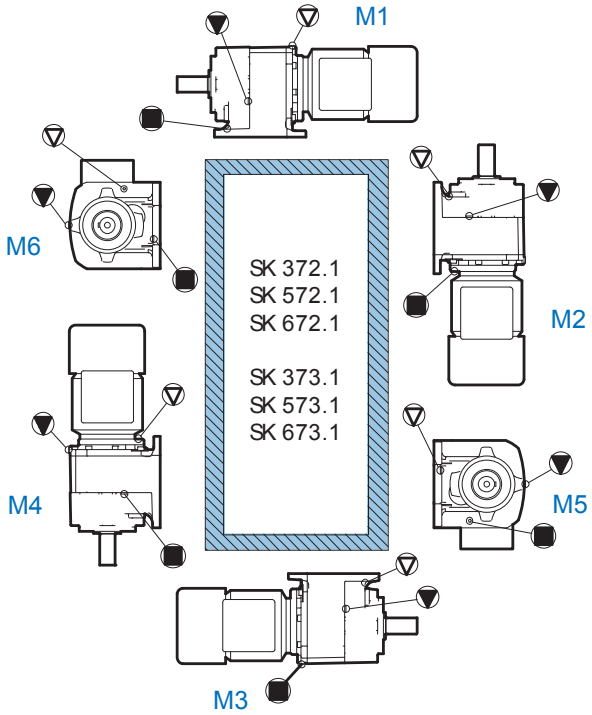

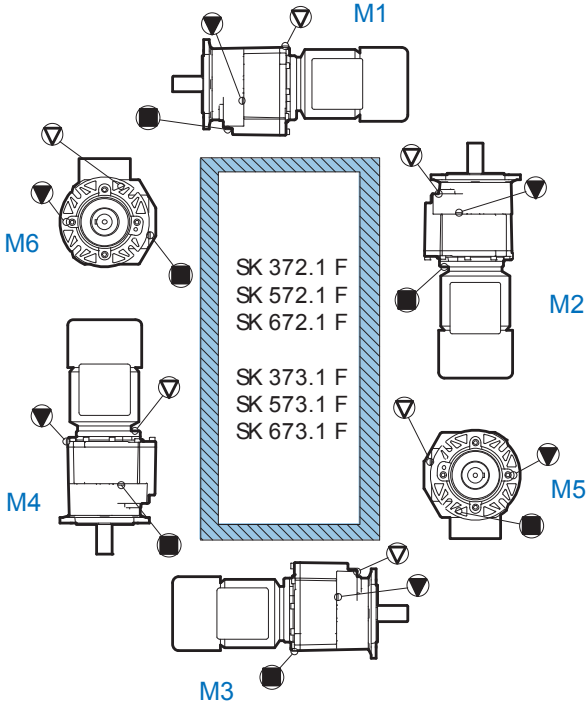

LUBRICANT CAPACITY

All reducers are shipped from the factory with a pre-determined oil fill level in accordance to the specified reducer size and mounting position. Actual oil volume can vary slightly depending upon the gear case size, mounting and ratio. Prior to commissioning the reducer, check the oil-fill level using the reducer's oil-level plug and drain or add additional oil as needed.

Foot-mounted

Mounting Position	M1		M2		M3		M4		M5		M6	
	Quarts	Liters	Quarts	Liters	Quarts	Liters	Quarts	Liters	Quarts	Liters	Quarts	Liters
SK 072.1	0.17	0.16	0.34	0.32	0.22	0.21	0.24	0.23	0.19	0.18	0.21	0.20
SK 172.1	0.29	0.27	0.62	0.59	0.44	0.42	0.48	0.45	0.34	0.32	0.41	0.39
SK 372.1	0.43	0.41	0.96	0.91	0.82	0.78	1.16	1.10	0.58	0.55	0.68	0.64
SK 373.1	0.43	0.41	0.90	0.85	0.79	0.75	1.10	1.04	0.58	0.55	0.63	0.60
SK 572.1	0.95	0.90	2.11	2.00	1.80	1.70	2.54	2.40	1.27	1.20	1.48	1.40
SK 573.1	0.95	0.90	2.01	1.90	1.74	1.65	2.43	2.30	1.27	1.20	1.43	1.35
SK 672.1	1.37	1.30	3.07	2.90	2.59	2.45	3.70	3.50	1.85	1.75	2.11	2.00
SK 673.1	1.37	1.30	2.96	2.80	2.54	2.40	3.59	3.40	1.85	1.75	2.06	1.95

Flange-Mounted

Mounting Position	M1		M2		M3		M4		M5		M6	
	Quarts	Liters	Quarts	Liters	Quarts	Liters	Quarts	Liters	Quarts	Liters	Quarts	Liters
SK 072.1	0.17	0.16	0.34	0.32	0.22	0.21	0.24	0.23	0.19	0.18	0.21	0.20
SK 172.1	0.29	0.27	0.62	0.59	0.44	0.42	0.48	0.45	0.34	0.32	0.41	0.39
SK 372.1	0.43	0.41	0.96	0.91	0.82	0.78	1.16	1.10	0.58	0.55	0.68	0.64
SK 373.1	0.43	0.41	0.90	0.85	0.79	0.75	1.10	1.04	0.58	0.55	0.63	0.60
SK 572.1	0.95	0.90	2.11	2.00	1.80	1.70	2.54	2.40	1.27	1.20	1.48	1.40
SK 573.1	0.95	0.90	2.01	1.90	1.74	1.65	2.43	2.30	1.27	1.20	1.43	1.35
SK 672.1	1.37	1.30	3.07	2.90	2.59	2.45	3.70	3.50	1.85	1.75	2.11	2.00
SK 673.1	1.37	1.30	2.96	2.80	2.54	2.40	3.59	3.40	1.85	1.75	2.06	1.95

MAINTENANCE

LUBRICATION REPLACEMENT

If the gear unit is filled with mineral oil, the lubricant should be replaced at least after every 10,000 operating hours or after every two years. If the gear unit is filled with synthetic oil, the lubricant should be replaced at least after every 20,000 operating hours or after every four years Often gear reducers are exposed to extreme ambient conditions, hostile environments, wet conditions, or dirty and dusty operating areas. Especially in these situations, it is important to establish a condition-based oil service interval.

OIL SPECIFICATIONS

NORD supplies all reducers' filled with oil from the factory. Standard lubricant is ISO VG220 mineral-based oil. Consult the sticker adjacent to the fill plug to determine the type of lubricant installed at the factory. However, some units have special lubricants designed to operate in certain environments or to extend the service life or service temperature range of the lubricant. If in doubt about which lubricant is needed, contact NORD Gear.

Standard Oil Lubricant

Gear Unit Type	Ambient Temperature	Oil Type	ISO Viscosity	Manufacturer Brand / Type
NORDBLOC®.1	-4 to 104 °F (-20 to 40 °C)	MIN-EP	VG 220	Shell / Omala 220 ♦

Optional Oil Lubricants

Gear Unit Type	Ambient Temperature	Oil Type	ISO Viscosity	Manufacturer Brand / Type
NORDBLOC®.1	-31 to 176 °F (-35 to 80 °C)	PAO	VG 460	Mobil / SHC 634
	-40 to 140 °F (-40 to 60 °C)	PAO	VG 220	Mobil / SHC 630 ♦
	-22 to 77 °F (-30 to 25 °C)	PAO	VG 150	Mobil / SHC 629
	23 to 104 °F (-5 to 40 °C)	FG	VG 220	Shell / FM 220 ♦
	-40 to 140 °F (-40 to 60 °C)	FG-PAO	VG 220	Shell / Cassida GL 220

Bearing Grease Lubricants

Grease Type (Thickener)	Ambient Temperature	NLGI Grade	Manufacturer Brand / Type
Standard (Li-Complex)	-22 to 140 °F (-30 to 60 °C)	NLGI 2	Shell Albida EP 2 ♦
High-Temperature (Polyurea)	-13 to 176 °F (-25 to 80 °C)	NLGI 2	Mobil Polyrex EP 2 ♦
Food-Grade (Al-Complex)	-13 to 104 °F (-25 to 40 °C)	NLGI 2	Mobil Grease FM 222 ♦

♦ Stocked Lubricants

OIL CROSS-REFERENCE CHART

ISO Viscosity	Oil Type	Service Temperature Range	Mobil	Shell	Castrol	Klüber Lubrication	bp	Tribol
VG 460	MIN-EP	68 to 122°F (20 to 50°C)	Mobilgear 634	Omala 460	7EP	Klüberoil GEM 1-460	Energol GR-XP 460	Tribol 1100/460
	PAO	-22 to 176°F (-30 to 80°C)	Mobil SHC 634	Omala 460 HD	Isolube EP 460	Klübersynth EG 4-460	N/A	Tribol 1510/460
VG 220	MIN-EP	20 to 104°F (-5 to 40°C)	Mobilgear 630	Omala 220	5EP	Klüberoil GEM 1-220	Energol GR-XP 220	Tribol 1100/220
	PAO	-30 to 176°F (-34 to +80°C)	Mobil SHC 630	Omala 220 HD	Isolube EP 220	Klübersynth EG 4-220	N/A	Tribol 1510/220
VG 150	MIN-EP	5 to 77°F (-15 to 25°C)	Mobilgear 629	Omala 150	4EP	Klüberoil GEM 1-150	Energol GR-XP 100	Tribol 1100/100
	PAO	-35 to 50°F (-37 to 10°C)	Mobil SHC 629	Omala 150 HD	Isolube EP 150	Klübersynth EG 4-150	N/A	N/A

Oil Formulation Codes

MIN-EP	Mineral Oil with EP Additive
PAO	Synthetic Polyalphaolefin Oil
PG	Synthetic Polyglycol Oil
FG	Food-Grade Oil
FG-PAO	Food-Grade, Synthetic Poyalphaolefin Oil

Important Notes

- Food grade lubricants must be in compliance with FDA 212 CFR 178.3570 and qualify as a NSF-H1 lubricant. Please consult with lubrication manufacture for more information.
- When making a lubrication change, check with the lubrication supplier to assure compatibility and to obtain recommended cleaning or flushing procedures.
- Do not to mix different oils with different additive packages or different base oil formulation types. Polyglycol (PG) oils are not miscible with other oil types and should never be mixed with mineral oil.
- Please Consult NORD if considering oils of ISO Viscosity VG100 or lower.

TROUBLE SHOOTING

PROBLEM WITH THE REDUCER		POSSIBLE CAUSES	SUGGESTED REMEDY
Runs Hot	Overloading	Load exceeds the capacity of the reducer	Check rated capacity of reducer, replace with unit of sufficient capacity or reduce load
	Improper lubrication	Insufficient lubrication	Check lubricant level and adjust up to recommended levels
		Excessive lubrication	Check lubricant level and adjust down to recommended levels
		Wrong lubrication	Flush out and refill with correct lubricant as recommended
Runs Noisy	Loose foundation bolts	Weak mounting structure	Inspect mounting of reducer. Tighten loose bolts and/ or reinforce mounting and structure
		Loose hold down bolts	Tighten bolts
	Failure of Bearings	May be due to lack of lubricant	Replace bearing. Clean and flush reducer and fill with recommended lubricant.
		Overload	Check rated capacity of reducer.
	Insufficient Lubricant	Level of lubricant in the reducer not properly maintained.	Check lubricant level and adjust to factory recommended level.
Output Shaft Does Not Turn	Internal parts are broken	Overloading of reducer can cause damage.	Replace broken parts. Check rated capacity of reducer.
		Key missing or sheared off on input shaft.	Replace key.
	Improper coupling connection	Coupling loose or disconnected.	Properly align reducer and coupling. Tighten coupling.
Oil Leakage	Worn Seals	Caused by dirt or grit entering seal.	Replace seals. Autovent may be clogged. Replace or clean.
		Overfilled reducer.	Check lubricant level and adjust to recommended level.
		Autovent™ clogged.	Clean or replace, being sure to prevent any dirt from falling into the reducer.
		Improper mounting position, such as wall or ceiling mount of horizontal reducer.	Check mounting position. Name tag & verify with mounting chart in manual.

www.nord.com

NORD Gear Corp
Toll Free 888-314-6673 info.us@nord.com

NORD Gear Ltd
888-668-4378 info.ca@nord.com

WEST
Corona, CA (Los Angeles)
Phone 608-849-0190

MIDWEST
Waunakee, WI (Madison)
Phone 608-849-7300

ATLANTIC
Charlotte, NC
Phone 608-849-0140

CANADA
Brampton, ON
Phone 905-796-3606

AC Motor Selection – Three-phase Motors

(Single-phase motors are shown on page 15-13)

3-Phase Characteristic	IronHorse™ 56C Frame 3-Phase	IronHorse™ T & TC Frames	Marathon microMAX™	Marathon Black Max®	Marathon Blue Max®	Marathon NEMA Premium® XRI®	Marathon Blue Chip XRI®
Electrical Characteristics							
Horsepower range	1/3 - 2	1 - 300 (T); 1 - 100 (TC)	1/4 - 10	1/4 - 30	40 - 100	1 - 10	15 - 100
Base speed (# Poles)	1800 (4), 3600 (2)	1200(6), 1800 (4), 3600(2)	1800 (4)	1800 (4) and 1200 (6)	1800 (4)	1200(6),1800(4),3600(2)	1800 (4)
Standard Voltage	208-230/460	208-230/460 (250 & 300 hp 460V only)	230/460 (1/4 hp is 230V only)	230/460 and 575	230/460	208-230/460	230/460 and 575
Insulation Class	F	F	H	F	H	F	F
Insulation System	dip & bake	double dip & bake	CR200 magnet wire	MAX GUARD®		CR200 magnet wire	
Service Factor	1.15 (line) 1.0 (drive)	1.15 (line) 1.0 (drive)	1.0	1.0	1.0	1.15 (line) 1.0 (drive)	1.15
Phase/Base Frequency	3/60						
Design Code (NEMA)	B	A: 10-50 hp 4&6 pole B: all other sizes	A and B for 1/4 - 2 hp	A	A	B	B
Duty Cycle	Continuous						
Thermal protection	None			Class F thermostats		None	
Mechanical Characteristics							
Frame size (mounting)	56C	143T/TC - 405TC/449T	56C - 215TC	56C - 286TC	324T(C)–405T(C)	56C - 215TC	254T - 405T
Enclosure	TEFC	TEFC	TENV and TEFC	TENV	TEFC and TEBC	TEFC	TEFC
Frame material	Rolled Steel frame; Aluminum end bell	Cast Iron	Rolled Steel	Rolled Steel w Al face; Cast Iron	Cast Iron	Rolled Steel	Cast Iron
End bracket material	Aluminum	Cast Iron	Aluminum	Aluminum, Cast Iron	Cast Iron	Aluminum	Cast Iron
Conduit box material	Steel	Cast Iron	Steel	Steel	Cast Iron	Steel	Steel (<326T) Cast Iron (>364T)
Fan guard material	Steel	Steel	Polypropylene	None (all ratings TENV)	Cast Iron	Plastic	Polyprop. (<286T) Cast Iron (>324T)
Fan material	Plastic	Plastic (143T/TC - 445/7T) Aluminum (449T)	Polypropylene	None (all ratings TENV)	Polypropylene	Plastic	Polypropylene
Lead termination	Conduit box	Conduit box	Conduit box except Terminal block - 1/4 hp	Conduit box	Conduit box	Conduit box	Conduit box
Standard mounting	C-Face with Removable Rigid Base	Rigid Base (C-Flange kit available) C-Face with Rigid Base (1-100 hp)	C-Face with Rigid Base & C-Face Round Body	C-Face with Rigid Base	C-Face with Rigid Base	C-Face with Rigid Base	Rigid Base
Drive end shaft slinger	Yes	Yes	No	No	Yes	Yes	Yes
Paint	Black	Epoxy primer / Synthetic alkyd enamel	Black powder-coat	Black enamel	Blue enamel	Blue enamel	epoxy paint
Bearings	Ball	1-75 hp: Ball 100-300 hp: Roller	Ball (C3 fit)	Ball (C3 fit)	Ball (C3 fit)	Ball	Ball (C3 fit)
Grease	Exxon Polyrex EM						
Standard conduit box assembly position	F1	F1 some sizes reversible to F2	F3	F1, reversible to F2	F1, reversible to F2	F3	F1
Performance Characteristics							
Constant Torque speed range	2:1	2:1	20:1 (TEFC) 1000:1 (TENV)	1000:1 (TENV)	2000:1 (all enclosures)	10:1	20:1
Variable Torque speed range	5:1	5:1	-	-	-	10:1	-
Constant Horsepower speed range	1.5:1	1.5:1	2:1	2:1 (90-120Hz intermittent @50% duty cycle)	2:1	2:1	2:1
Temperature rise	B	B	B	F	F (TEFC) and B (TEBC)	F	B
Encoder provisions	No	No	No	Yes	Yes	No	No
Other Characteristics							
Agency listings	cCSAus	CE, cCSAus, EPACT	UL Recognized and CSA Certified				
Warranty*		2 years	3 years (through Marathon Electric)				

See Terms and Conditions for motor warranty explanation.

1) For warranty on IronHorse motors below 50 hp, warranty service can be arranged through AutomationDirect.

2) For warranty on IronHorse motors 50 hp and above, motors must be inspected by a local EASA motor repair or service center; see AutomationDirect Terms & Conditions.

3) Marathon warranty service can be arranged through Marathon Electric service centers. See list of service centers on our web site at www.automationdirect.com.

Black Max® Vector Duty Motors

****** 230/460V and 575V Motors Available ******



MARATHON® ELECTRIC

Motor Shipping Schedule		
Same or one day *	Up to 7 days	Up to 10 days

Color indicates shipping lead time in business days. Check stock status online.

** For same-day shipping of stock motors requiring LTL shipment, order before 5 p.m. EST.*

Features

- Class F MAX GUARD® insulation system
- Constant torque operation from 0 to base speed on vector drive
- Constant horsepower operation to twice base RPM
- Continuous duty at 40° C ambient
- Optimized for operation with IGBT inverter (NEMA Design A)
- Class F N/C thermostats (one per phase)
- Utilizes double shielded ball bearings
- Exxon Polyrex® EM bearing grease
- Dual Mounting (C-Face with rigid base and C-Face with removable rigid base, as noted)
- F1 standard conduit box location, field reversible to F2 (except as noted)
- Available with optional encoder installed on opposite drive end
- Electrically reversible
- UL recognized and CSA certified
- Three year warranty

Applications

- Designed for inverter or vector applications where up to a 1000:1 constant torque speed range is required.
- Typical uses include: material handling, machine tools, conveyors, crane and hoist, metal processing, test stands, pumps, compressors, textile processing, and other industrial machinery installed in dusty or dirty environments.

230/460V Motor Specifications

Part Number	Price	HP	Base RPM	Volts	Enclosure	NEMA Frame	Model No.	F.L. Amps	Weight (lb)	Footnotes
Y592	<--->	1/4	1800	230/460	TENV	56C	56H17T2001	1.2 / 0.6	19	T, S, 13
Y534	<--->	1/2	1800	230/460	TENV	56C	56H17T5301	1.6 / 0.8	28	T, S, 6, 13
Y535	<--->	1	1800	230/460	TENV	56C	56H17T5302	3.0 / 1.5	41	T, S, 6, 13
Y536	<--->	1	1800	230/460	TENV	143TC	143THTR5326	3.0 / 1.5	43	T, S, 6, 13
Y537	<--->	1	1200	230/460	TENV	145TC	145THTR5376	3.8 / 1.9	49	T, S, 6, 13
Y538	<--->	1-1/2	1800	230/460	TENV	145TC	145THTR5326	4.8 / 2.4	50	T, S, 6, 13
Y551	<--->	2	1800	230/460	TENV	145TC	145THTN6046	6.0 / 3.0	72	T
Y540	<--->	2	1200	230/460	TENV	184TC	184THTL7776	6.6 / 3.3	88	T, AL
Y541	<--->	3	1800	230/460	TENV	182TC	182THTL7726	8.4 / 4.2	96	T, AL
Y542	<--->	3	1200	230/460	TENV	213TC	213THTL7776	9.4 / 4.7	118	T, AL
Y543	<--->	5	1800	230/460	TENV	184TC	184THTL7726	14.0 / 7.0	98	T, AL
Y544	<--->	5	1200	230/460	TENV	215TC	215THTL7776	15.4 / 7.7	138	T, AL
Y545	<--->	7-1/2	1800	230/460	TENV	213TC	213THTL7726	21.0 / 10.5	146	T, AL
Y546	<--->	7-1/2	1200	230/460	TENV	254TC	254THTL5776	22.0 / 11.0	209	T, AL
Y547*	<--->	10	1800	230/460	TENV	215TC	215THTL7726	27.0 / 13.5	159	T, AL
Y548*	<--->	10	1200	230/460	TENV	256TC	256THTL5776	28 / 14	203	T, AL
Y549*	<--->	15	1800	230/460	TENV	254TC	254THTL5726	40 / 20	250	T, AL, I
Y552*	<--->	20	1800	230/460	TENV	256TC	256THTNA7026	52 / 26	300	T, I
Y553*	<--->	25	1800	230/460	TENV	284TC	284THTNA7026	62 / 31	495	T, I
Y393*	<--->	30	1800	230/460	TENV	286TC	286THTNA7026	74 / 37	575	T, I

Footnotes:
T Thermostat overload
S Steel Frame Construction
6 Bolt-on, removable base for footless mounting option

Footnotes (continued):
13 F1 Mounting Only, cannot modify to F2
AL Aluminum Frame Construction
I Intermittent duty from 90-120 Hz operation

Note: Please review the AutomationDirect Terms & Conditions for twarranty and service on his product.
Warranty service can be arranged through numerous Marathon Electric service centers. See list of service centers on our Web site at www.automationdirect.com.

Black Max® Vector Duty Motors

Motor Shipping Schedule		
Same or one day	Up to 7 days	Up to 10 days

Color indicates shipping lead time in business days. Check stock status online.

575V Motor Specifications

Part Number	Price	HP	Base RPM	Volts	Enclosure	NEMA Frame	Model No.	F.L. Amps	Weight (lb)	Footnotes
Y555	<--->	1/2	1800	575	TENV	56C	56H17T5311	0.64	28	T, S, 6, 13
Y556	<--->	1	1800	575	TENV	56C	56H17T5312	1.2	41	T, S, 6, 13
Y557	<--->	2	1800	575	TENV	145TC	145TH1N6060	2.4	72	I
Y558	<--->	3	1800	575	TENV	182TC	182THTL7736	3.4	96	T, AL
Y559	<--->	5	1800	575	TENV	184TC	184THTL7736	5.6	98	T, AL
Y560	<--->	7-1/2	1800	575	TENV	213TC	213THTL7736	8.4	146	T, AL
Y561	<--->	10	1800	575	TENV	215TC	215THTL7736	10.8	159	T, AL
Y562	<--->	15	1800	575	TENV	254TC	254THTL5736	16.0	250	T, AL, I
Y563	<--->	20	1800	575	TENV	256TC	256THTNA7036	20.8	300	T, I
Y567	<--->	25	1800	575	TENV	284TC	284THTNA7036	24.8	495	T, I
Y394	<--->	30	1800	575	TENV	286TC	286THTNA7036	29.6	575	T, I

Footnotes:
T Thermostat overload
S Steel Frame Construction
6 Bolt-on, removable base for footless mounting option

Footnotes (continued):
13 F1 Mounting Only, cannot modify to F2
AL Aluminum Frame Construction
I Intermittent duty from 90-120 Hz operation

Note: Please review the AutomationDirect Terms & Conditions for warranty and service on this product. Warranty service can be arranged through numerous Marathon Electric service centers. See list of service centers on our Web site at www.automationdirect.com.

Motor with Shaft Mounted Encoder*:

A Dynapar Model HS35 shaft mounted encoder can be supplied with the motor as shown in the price table below. The encoder requires a 5-26 VDC power source, provides a count of 1024 pulses per revolution (PPR), differential line driver output and includes a 10-pin mating connector.

* If connecting the motor to a *DURAPULSE* AC drive, a GS3-FB Feedback Card is required for the drive.

Motor with Shaft Mounted Encoder								
230/460V Motors						575V Motors		
Part Number	Price	HP	Part Number	Price	HP	Part Number	Price	HP
Y592-A772	<--->	1/4	Y543-A772	<--->	5	Y555-A772	<--->	1/2
Y534-A772	<--->	1/2	Y544-A772	<--->	5	Y556-A772	<--->	1
Y535-A772	<--->	1	Y545-A772	<--->	7-1/2	Y557-A772	<--->	2
Y536-A772	<--->	1	Y546-A772	<--->	7-1/2	Y558-A772	<--->	3
Y537-A772	<--->	1	Y547-A772	<--->	10	Y559-A772	<--->	5
Y538-A772	<--->	1-1/2	Y548-A772	<--->	10	Y560-A772	<--->	7-1/2
Y551-A772	<--->	2	Y549-A772	<--->	15	Y561-A772	<--->	10
Y540-A772	<--->	2	Y552-A772	<--->	20	Y562-A772	<--->	15
Y541-A772	<--->	3	Y553-A772	<--->	25	Y563-A772	<--->	20
Y542-A772	<--->	3	Y393-A772	<--->	30	Y567-A772	<--->	25
						Y394-A772	<--->	30

Note: Please review the AutomationDirect Terms & Conditions for warranty and service on this product. Warranty service can be arranged through numerous Marathon Electric service centers. See list of service centers on our Web site at www.automationdirect.com.

Encoder connector pinout:

Note: A mating connector is supplied with the encoder.

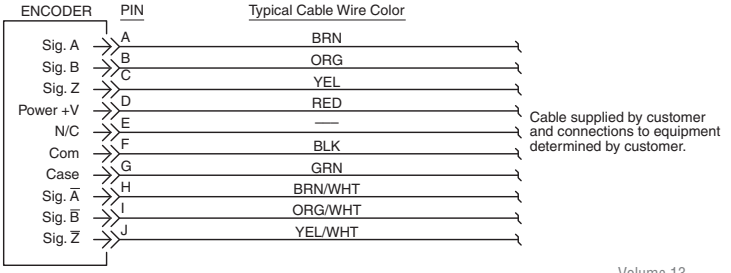

Black Max® Vector Duty Motors

Motor Performance Data (460 Volt) *																
Part Number	HP	F.L. rpm	F.L. Amps @460V	N.L. Amps @460V	F.L. Torque (lb-ft)	B.D. Torque (lb-ft)	Max. C hp rpm *	Max. Safe rpm	F.L. Effic. (%)	F.L. Power Factor	Rotor Inertia ($lb\text{-}ft^2$)	Ohms/Ph - Equiv. Wye Circuit (460 VAC) (at rated operating temp. in 40° C ambient)				
												R1	R2	X1	X2	XM
Y592	1/4	1755	0.6	0.45	0.75	4.5	3540	5400	70.0	58.0	0.045	26.300	23.000	30.240	14.700	572.000
Y534	1/2	1735	0.8	0.52	1.5	5.8	3510	5400	80.0	72.0	0.056	22.307	17.028	24.123	18.163	532.976
Y535	1	1750	1.5	1.0	3.0	15.0	3505	5400	84.0	75.0	0.110	8.378	5.623	10.707	9.912	278.036
Y536	1	1750	1.5	1.0	3.0	15.0	3505	5400	84.0	75.0	0.110	8.378	5.623	10.707	9.912	278.036
Y537	1	1145	1.9	1.3	4.5	16.0	2260	5400	80.0	62.5	0.140	10.302	8.372	13.793	15.325	193.835
Y538	1-1/2	1755	2.4	1.6	4.5	29.0	3518	5400	85.5	69.0	0.140	4.257	3.538	5.998	5.884	161.009
Y551	2	1750	3.0	1.7	6.0	28.5	3525	5400	85.5	78.0	0.130	3.834	2.897	5.950	5.637	154.800
Y540	2	1160	3.3	2.1	9.0	34.0	2315	5400	82.5	67.5	0.380	3.948	3.436	7.725	12.113	116.900
Y541	3	1755	4.2	2.2	9.0	48.0	3515	4200	85.5	80.0	0.420	2.356	1.731	4.266	4.304	123.930
Y542	3	1158	4.7	3.0	13.6	49.0	2300	4200	82.5	72.5	0.600	2.469	2.318	6.508	4.125	83.910
Y543	5	1765	7.0	4.2	14.8	70.0	3555	4200	89.5	74.5	0.550	1.242	0.947	2.534	4.236	64.128
Y544	5	1165	7.7	4.8	22.5	87.0	2320	4200	84.0	71.0	0.900	1.130	1.250	3.709	2.573	51.972
Y545	7-1/2	1765	10.5	5.5	22.3	95.5	3525	4200	90.2	76.0	0.850	0.699	0.567	1.765	2.260	38.178
Y546	7-1/2	1170	11.0	6.0	34.0	118.0	2325	4200	87.5	73.0	1.200	0.510	0.680	2.846	3.247	42.714
Y547	10	1774	13.5	7.4	29.5	125.0	3540	4200	90.2	76.0	1.300	0.369	0.334	1.423	2.281	34.932
Y548	10	1160	14	7.0	45.5	135.0	2320	4200	89.5	75.5	1.500	0.534	0.693	2.258	2.323	30.530
Y549	15	1765	20	11.0	45.0	170.0	3550	3600	92.4	76.0	1.600	0.134	0.316	1.047	1.569	22.151
Y552	20	1768	26	13.5	59.5	290.0	3560	3600	93.6	80.0	3.100	0.234	0.213	0.746	0.689	18.204
Y553	25	1770	31	14.0	74.2	330.0	3530	3600	93.6	75.0	4.400	0.143	0.160	0.724	0.678	13.965
Y393	30	1772	37	23.5	89.0	375.0	3560	3600	94.5	74.0	5.500	0.113	0.123	0.543	0.557	11.200

* Maximum Constant hp rpm is for direct coupled loads.

Motor Performance Data (575 Volt) *																
Part Number	HP	F.L. rpm	F.L. Amps @575V	N.L. Amps @575V	F.L. Torque (lb-ft)	B.D. Torque (lb-ft)	Max. C hp rpm*	Max. Safe rpm	F.L. Effic. (%)	F.L. Power Factor	Rotor Inertia ($lb\text{-}ft^2$)	Ohms/Ph - Equiv. Wye Circuit (575 VAC) (at rated operating temp. in 40° C ambient)				
												R1	R2	X1	X2	XM
Y555	1/2	1735	0.8	0.8	1.52	5.8	3510	5400	80.0	72	0.056	22.307	17.028	24.123	18.163	532.976
Y556	1	1750	1.6	0.8	3.0	15.0	3505	5400	84.0	75	0.11	8.378	5.623	10.707	9.912	278.036
Y557	2	1750	2.4	1.6	6.0	28.5	3525	5400	85.5	78	0.13	3.834	2.897	5.950	5.637	154.780
Y558	3	1755	3.2	1.6	9.0	48.0	3515	4200	85.5	80	0.42	2.356	1.731	4.266	4.304	123.926
Y559	5	1765	5.6	3.2	14.9	70.0	3555	4200	89.5	74.5	0.52	1.242	1.134	2.268	3.969	64.071
Y560	7-1/2	1765	8.0	4.8	22.3	95.5	3525	4200	90.2	76	0.9	0.699	0.567	1.765	2.260	38.178
Y561	10	1774	11.2	5.6	29.6	125.0	3540	4200	90.2	76	1.3	0.284	0.284	1.420	2.272	34.932
Y562	15	1765	16.0	8.8	44.6	170.0	3550	3600	92.4	76	1.6	0.314	0.316	1.047	1.569	22.151
Y563	20	1770	20.8	11.2	59.5	290.0	3560	3600	93.6	77	3.5	0.220	0.192	0.675	0.684	18.204
Y567	25	1770	24.8	11.2	74.2	330.0	3530	3600	93.6	80	4.4	0.143	0.160	0.724	0.678	13.965
Y394	30	1772	29.6	14.4	88.9	375.0	3560	3600	94.5	80	5.3	0.113	0.123	0.543	0.557	11.186

* Maximum Constant hp rpm is for direct coupled loads.

Black Max® Vector Duty Motors

Motor Dimensions

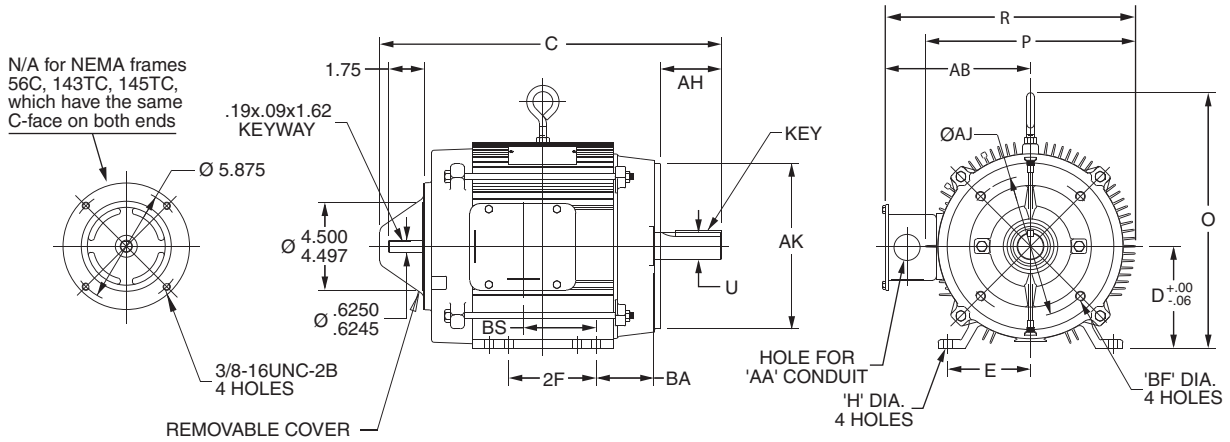

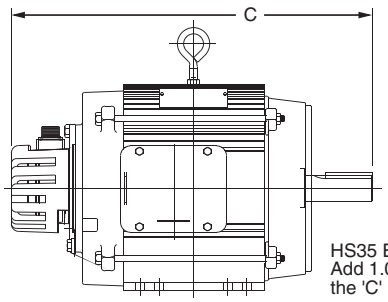

Note: Thermostat protector leads are brought out in the motor conduit box and marked as P1/P2.

Motor Dimensions [Inches]

Part # 230/460V	Part # 575V	HP	NEMA Frame	Frame Construct	C	D	E	2F	H	O	P	R	U	AA	AB	AH	AJ	AK Max	BA	BF	BS	Key
Y592	-	1/4			11.88				.34	6.35	5.69	7.21			4.37						2.84	
Y534	Y555	1/2	56C		13.48		2.44	3.00				8.77	.625		5.56	2.06					3.75	
Y535	Y556	1		Rolled Steel	14.98																5.25	
Y536	-	1	143TC		15.04	3.50		4.00	.35	6.71	6.42			None			5.875	4.500	2.75	3/8-16	4.93	.19x.19x1.38
Y537	-	1			16.04		2.75	5.00				8.46	.875		5.25	2.12					5.93	
Y538	-	1-1/2	145TC																			
Y551	Y557	2		Cast Iron	14.68			5.00	.37	7.45	7.98	11.03			7.04			4.50	2.62		3.81	
Y540	-	2	184TC		16.94	4.50	3.75	5.50	.44	11.22	9.74	12.07	1.125	1.09	7.19	2.62			3.50		2.75	.25x.25x1.75
Y541	Y558	3	182TC		17.39			4.50													2.98	
Y542	-	3	213TC		19.04	5.22	4.25	5.50	.47	12.47	10.75	12.78	1.375	1.34	7.39	3.12			4.25		4.05	.31x.31x2.38
Y543	Y559	5	184TC		18.94	4.50	3.75		.44	11.22	9.74	12.07	1.125	1.09	7.19	2.62			3.50		3.75	.25x.25x1.75
Y544	-	5	215TC		20.54	5.22	4.25	7.00	.47	12.47	10.75	12.78	1.375	1.34	7.39	3.12			4.25		5.55	.31x.31x2.38
Y545	Y560	7-1/2	213TC	Aluminum	20.54			5.50									7.25	8.500		1/2-13		
Y546	-	7-1/2	254TC		25.37	6.22	5.00	8.25	.56	13.46		13.75	1.625	1.75 &2.0	8.38	3.75					8.85	.38x.38x2.88
Y547	Y561	10	215TC		23.04	5.22	4.25	7.00	.47	12.47		12.78	1.375	1.34	7.39	3.12					8.05	.31x.31x2.38
Y548	-	10	256TC		26.87			10.00						1.75 & 2.00							10.40	
Y549	Y562	15	254TC		26.87	6.22	5.00	8.25		13.46	N/A	13.54	1.625		8.17	3.75			4.75			.38x.38x2.88
Y552	Y563	20	256TC		27.13			10.00	.56	16.49	14.32	17.84		1.25	10.68						4.75	
Y553	Y567	25	284TC	Cast Iron	27.08	7.00	5.50	9.50		15.57	15.89	21.26	1.875	2.00	13.31	4.38	9.0	10.500		3/8-16		.50x.50x3.25
Y393	Y394	30	286TC		28.58			11.00													5.50	

Note: Dimensions are for reference only. For complete dimensional information, refer to Marathon Electric at www.marathonelectric.com.

STABLE™ Motor Slide Bases

Mounting Slide Bases for 56 to 449T NEMA Motors

Features

- Allows adjustment of motor mounting position
- Double adjusting screws for frames 182T - 449T
- Manufactured to precise dimensional standards
- Dimensionally interchangeable with existing major makes
- Heavy-duty steel construction
- Painted with oven-baked primer for better adhesion of customer's paint
- All "D" bolts (motor mounting bolts) are fixed to the exact motor foot pattern
- All "D" bolts are welded into position to prevent spinning and dropping from slots
- Bases are provided with washers



Motor Slide Bases											
Part Number	Price	Fits Frame Type	Shipping Weight (lb)	Fits Motor							
				IronHorse	Marathon micro -MAX	Marathon Black Max 230/460V	Marathon Black Max 575V	Marathon Blue Max	Marathon NEMA Premium XRI	Marathon Blue Chip XRI 230/460V	Marathon Blue Chip XRI 575V
MTA-BASE-W56	<--->	56	3.5	MTR-xxx-xxxx MTPM-xxx-xxxx	Y500 Y360 Y364	Y592(-A772) Y534(-A772) Y535(-A772)	Y555(-A772) Y556(-A772)	–	E2000	–	–
MTA-BASE-W143T	<--->	143T/TC	5.0	MTC-001-3BD18(CK) MTC-1P5-3BD36	–	Y536(-A772)	–	–	E2001 E2003	–	–
MTA-BASE-W145T	<--->	145T/TC	5.6	MTC-001-3BD12 MTC-1P5-3BD18(CK) MTC-002-3BD18(CK) MTC-002-3BD36	Y368	Y537(-A772) Y538(-A772) Y551(-A772)	Y557(-A772)	–	E2002 E2004 E2006 E2007	–	–
MTA-BASE-W182T	<--->	182T/TC	10	MTC-1P5-3BD12 MTC-003-3BD18(CK) MTC-003-3BD36	Y999	Y541(-A772)	Y558(-A772)	–	E2005 E2009 E2010	–	–
MTA-BASE-W184T	<--->	184T/TC	10	MTC-002-3BD12 MTC-005-3BD18(CK) MTC-005-3BD36	Y372	Y540(-A772) Y543(-A772)	Y559(-A772)	–	E2008 E2012 E2013	–	–
MTA-BASE-W213T	<--->	213T/TC	15	MTC-003-3BD12 MTC-7P5-3BD18(CK) MTC-7P5-3BD36	Y994	Y542(-A772) Y545(-A772)	Y560(-A772)	–	E2011 E2015 E2016	–	–
MTA-BASE-W215T	<--->	215T/TC	16	MTC-005-3BD12 MTC-010-3BD18(CK) MTC-010-3BD36	Y996	Y544(-A772) Y547(-A772)	Y561(-A772)	–	E2014 E2018 E2019	–	–
MTA-BASE-W254T	<--->	254T/TC	20	MTC-7P5-3BD12 MTC-015-3BD18(CK)	–	Y546(-A772) Y549(-A772)	Y562(-A772)	–	–	E205	E307
MTA-BASE-W256T	<--->	256T/TC	21	MTC-010-3BD12 MTC-020-3BD18(CK)	–	Y548(-A772) Y552(-A772)	Y563(-A772)	–	–	E206	E308
MTA-BASE-W284T	<--->	284T/TC	23	MTC-025-3BD18(CK)	–	Y553(-A772)	Y567(-A772)	–	–	E207	E309
MTA-BASE-W286T	<--->	286T/TC	24	MTC-030-3BD18(CK)	–	Y393(-A772)	Y394(-A772)	–	–	E208	E310
MTA-BASE-W324T	<--->	324T/TC	33	MTC-040-3BD18(CK)	–	–	–	Y571(-A774) Y513(-A775)	–	E209	E311
MTA-BASE-W326T	<--->	326T/TC	35	MTC-050-3BD18(CK)	–	–	–	Y572(-A774) Y514(-A775)	–	E210	E312
MTA-BASE-W364T	<--->	364T/TC	46	MTC-060-3BD18(CK)	–	–	–	Y573(-A774) Y515(-A775)	–	E211	E313
MTA-BASE-W365T	<--->	365T/TC	47	MTC-075-3BD18(CK)	–	–	–	Y574(-A774) Y516(-A775)	–	E212	E315
MTA-BASE-W404T	<--->	404T/TC	64	–	–	–	–	–	–	–	–
MTA-BASE-W405T	<--->	405T/TC	65	MTC-100-3BD18(CK)	–	–	–	Y575(-A774) Y517(-A775)	–	E213	E314
MTA-BASE-W444T	<--->	444T	69	MTC-125-3BD18	–	–	–	–	–	–	–
MTA-BASE-W445T	<--->	445T	70	MTC-150-3BD18	–	–	–	–	–	–	–
MTA-BASE-W447T	<--->	445/7T 447T	92	MTC-200-3BD18	–	–	–	–	–	–	–
MTA-BASE-W449T	<--->	449T	98	MTC-250-3D18 MTC-300-3D18	–	–	–	–	–	–	–

STABLE Motor Slide Bases

Dimensions – Mounting Slide Bases for NEMA Motors

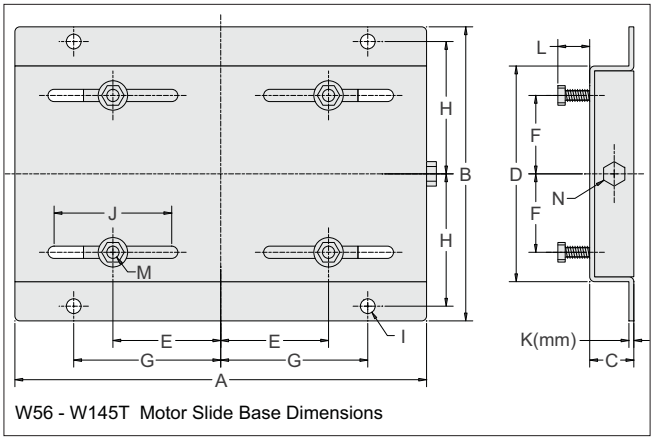

W56 - W145T Motor Slide Base Dimensions

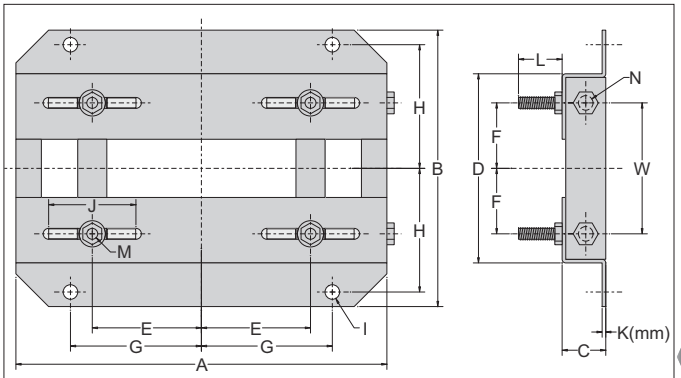

W182T - W449T Motor Slide Base Dimensions
(W182T-W215T bases have one-piece top plates, similar to W56-W145T)

Dimensions [inches, except as noted] - STABLE Motor Slide Bases

MTA-BASE-Wxxxx	A	B	C	D	E	F	G	H	I	J	K(mm)	L	M	N	W
56	10-5/8	6-1/2	1-1/8	4-1/2	2-7/16	1-1/2	3-13/16	2-7/8	3/8	3	2 mm	7/8	5/16 x 1	3/8 x 4	n/a
143T	10-1/2	7-1/2	1-1/8	5-1/2	2-3/4	2	3-3/4	3-3/8	3/8	3	3 mm	13/16	5/16 x 1	3/8 x 4	n/a
145T	10-1/2	8-1/2	1-1/8	6-1/2	2-3/4	2-1/2	3-3/4	3-7/8	3/8	3	3 mm	13/16	5/16 x 1	3/8 x 4	n/a
182T	12-3/4	9-1/2	1-1/2	6-1/2	3-3/4	2-1/4	4-1/2	4-1/4	1/2	3	3.5 mm	1-1/2	3/8 x 1-3/4	1/2 x 6	4-1/2
184T	12-3/4	10-1/2	1-1/2	7-1/2	3-3/4	2-3/4	4-1/2	4-3/4	1/2	3	3.5 mm	1-1/2	3/8 x 1-3/4	1/2 x 6	5-1/2
213T	15	11	1-3/4	7-1/2	4-1/4	2-3/4	5-1/4	4-3/4	1/2	3-1/2	3.8 mm	1-1/2	3/8 x 1-3/4	1/2 x 6	5-1/2
215T	15	12-1/2	1-3/4	9	4-1/4	3-1/2	5-1/4	5-1/2	1/2	3-1/2	3.8 mm	1-1/2	3/8 x 1-3/4	1/2 x 6	7
254T	17-3/4	15-1/8	2	10-3/4	5	4-1/8	6-1/4	6-5/8	5/8	4	4.6 mm	1-7/16	1/2 x 1-3/4	5/8 x 6	5-5/16
256T	17-3/4	16-7/8	2	12-1/2	5	5	6-1/4	7-1/2	5/8	4	4.6 mm	1-7/16	1/2 x 1-3/4	5/8 x 6	7
284T	19-3/4	16-7/8	2	12-1/2	5-1/2	4-3/4	7	7-1/2	5/8	4-1/2	4.6 mm	1-11/16	1/2 x 2	5/8 x 6	7
286T	19-3/4	18-3/8	2	14	5-1/2	5-1/2	7	8-1/4	5/8	4-1/2	4.6 mm	1-11/16	1/2 x 2	5/8 x 6	8
324T	22-3/4	19-1/4	2-1/2	14	6-1/4	5-1/4	8	8-1/2	3/4	5-1/4	4.6 mm	2-3/16	5/8 x 2-1/2	3/4 x 9	7
326T	22-3/4	20-3/4	2-1/2	15-1/2	6-1/4	6	8	9-1/4	3/4	5-1/4	4.6 mm	2-3/16	5/8 x 2-1/2	3/4 x 9	8-1/2
364T	25-1/2	20-1/2	2-1/2	15-1/2	7	5-5/8	9	9-1/8	3/4	6	5.8 mm	2-1/16	5/8 x 2-1/2	3/4 x 9	7-3/4
365T	25-1/2	21-1/2	2-1/2	16-1/2	7	6-1/8	9	9-5/8	3/4	6	5.8 mm	2-1/16	5/8 x 2-1/2	3/4 x 9	8-3/4
404T	28-3/4	22-3/8	3	16-1/2	8	6-1/8	10	9-7/8	7/8	7	5.8 mm	2-1/2	3/4 x 3	3/4 x 11	8-3/4
405T	28-3/4	23-7/8	3	18	8	6-7/8	10	10-5/8	7/8	7	5.8 mm	2-1/2	3/4 x 3	3/4 x 11	10-1/4
444T	31-1/4	24-5/8	3	19-1/4	9	7-1/4	11	11	7/8	7-1/2	5.8 mm	2-1/2	3/4 x 3	3/4 x 11	11
445T	31-1/4	26-5/8	3	21-1/4	9	8-1/4	11	12	7/8	7-1/2	5.8 mm	2-1/2	3/4 x 3	3/4 x 11	13
447T	31-1/4	30-1/8	3	24-3/4	9	10	11	13-3/4	7/8	7-1/2	8 mm	3	3/4 x 3-1/2	3/4 x 11	16-1/2
449T	31-1/4	35-1/8	3	29-3/4	9	12-1/2	11	16-1/4	7/8	7-1/2	8 mm	3	3/4 x 3-1/2	3/4 x 11	21-1/2

Project name:	IQALUIT
Project#:	5000218036
Document #:	5000218036_DS_0006_PM_VWT
by:	BB
chkd:	GH
appvd:	CB

SKID DUPLEX

VALVES

OIM manual section: 4.3.6.3

CS-301-100 : Identification sheet

VWTC PROJECT NUMBER:	Iqaluit WWTP	REV:	01
PROJECT NAME:	5000218036	SUBMITTED TO (COMPANY):	
ENGINEER:	G. HÉBERT	SUBMITTED TO (RESPONSIBLE)	
PROJECT MANAGER:	C. BEKAERT	PROJECT NUM REFERENCE.:	
PHONE NUMBER:		LOT NUMBER:	

SUPPLIER	EQPT CODE	EQPT TAG NO	DIA	DESCRIPTION	INFO 1	INFO 2	INFO 3	APPLIC.	NOTE	REV
CHEMLINE	VABLPV200249	BV-04-964	DIA: 13 mm (1/2")	CLEANING VALVES	TYPE: BALL VALVE//MANUFACTURER : CHEMLINE//MODEL : Type21-A-005-E-C//CONNECTION TYPE : COMBO | 13 mm (1/2")//BODY : PVC (ASTM D1784)// SEAL | SEAT :PTFE | EPDM// STEM : PVC					1
CHEMLINE	VABLPV200249	BV-04-965	DIA: 13 mm (1/2")	CLEANING VALVES	TYPE: BALL VALVE//MANUFACTURER : CHEMLINE//MODEL : Type21-A-005-E-C//CONNECTION TYPE : COMBO | 13 mm (1/2")//BODY : PVC (ASTM D1784)// SEAL | SEAT :PTFE | EPDM// STEM : PVC					1
CHEMLINE	VABLPV200251	BV-04-970	DIA: 25 mm (1")	ISOLATION VALVES (DISCHARGE)	TYPE: BALL VALVE//MANUFACTURER : CHEMLINE//MODEL : Type21-A-010-E-C//CONNECTION TYPE : COMBO | 25 mm (1")//BODY : PVC (ASTM D1784)// SEAL | SEAT :PTFE | EPDM// STEM : PVC					1

SUPPLIER	EQPT CODE	EQPT TAG NO	DIA	DESCRIPTION	INFO 1	INFO 2	INFO 3	APPLIC.	NOTE	REV
CHEMLINE	VABLPV200251	BV-04-971	DIA: 25 mm (1")	ISOLATION VALVES (DISCHARGE)	TYPE: BALL VALVE//MANUFACTURER : CHEMLINE//MODEL : Type21-A-010-E-C//CONNECTION TYPE : COMBO | 25 mm (1")//BODY : PVC (ASTM D1784)// SEAL | SEAT :PTFE | EPDM// STEM : PVC					1
CHEMLINE	VABLPV200251	BV-04-972	DIA: 25 mm (1")	ISOLATION VALVES (DISCHARGE)	TYPE: BALL VALVE//MANUFACTURER : CHEMLINE//MODEL : Type21-A-010-E-C//CONNECTION TYPE : COMBO | 25 mm (1")//BODY : PVC (ASTM D1784)// SEAL | SEAT :PTFE | EPDM// STEM : PVC					1
CHEMLINE	VABLPV200251	BV-04-973	DIA: 25 mm (1")	ISOLATION VALVES (DISCHARGE)	TYPE: BALL VALVE//MANUFACTURER : CHEMLINE//MODEL : Type21-A-010-E-C//CONNECTION TYPE : COMBO | 25 mm (1")//BODY : PVC (ASTM D1784)// SEAL | SEAT :PTFE | EPDM// STEM : PVC					1
CHEMLINE	VABLPV200251	BV-04-974	DIA: 25 mm (1")	ISOLATION VALVES (DISCHARGE)	TYPE: BALL VALVE//MANUFACTURER : CHEMLINE//MODEL : Type21-A-010-E-C//CONNECTION TYPE : COMBO | 25 mm (1")//BODY : PVC (ASTM D1784)// SEAL | SEAT :PTFE | EPDM// STEM : PVC					1
CHEMLINE	VABLPV200253	BV-04-960	DIA: 38 mm (1-1/2")	ISOLATION VALVES (SUCTION)	TYPE: BALL VALVE//MANUFACTURER : CHEMLINE//MODEL : Type21-A-015-E-C//CONNECTION TYPE : COMBO | 38 mm (1-1/2")//BODY : PVC (ASTM D1784)// SEAL | SEAT :PTFE | EPDM// STEM : PVC					1

SUPPLIER	EQPT CODE	EQPT TAG NO	DIA	DESCRIPTION	INFO 1	INFO 2	INFO 3	APPLIC.	NOTE	REV
CHEMLINE	VABLPV200253	BV-04-961	DIA: 38 mm (1-1/2")	ISOLATION VALVES (SUCTION)	TYPE: BALL VALVE//MANUFACTURER : CHEMLINE//MODEL : Type21-A-015-E-C//CONNECTION TYPE : COMBO | 38 mm (1-1/2")//BODY : PVC (ASTM D1784)// SEAL | SEAT :PTFE | EPDM// STEM : PVC					1
CHEMLINE	VABLPV200253	BV-04-962	DIA: 38 mm (1-1/2")	ISOLATION VALVE CALIBRATION CYLINDER (SUCTION)	TYPE: BALL VALVE//MANUFACTURER : CHEMLINE//MODEL : Type21-A-015-E-C//CONNECTION TYPE : COMBO | 38 mm (1-1/2")//BODY : PVC (ASTM D1784)// SEAL | SEAT :PTFE | EPDM// STEM : PVC					1
CHEMLINE	VABLPV200253	BV-04-963	DIA: 38 mm (1-1/2")	ISOLATION VALVE CALIBRATION CYLINDER (SUCTION)	TYPE: BALL VALVE//MANUFACTURER : CHEMLINE//MODEL : Type21-A-015-E-C//CONNECTION TYPE : COMBO | 38 mm (1-1/2")//BODY : PVC (ASTM D1784)// SEAL | SEAT :PTFE | EPDM// STEM : PVC					1
CHEMLINE	VABLPV200253	BV-04-981	DIA: 38 mm (1-1/2")	ISOLATION VALVES - CARRIER WATER	TYPE: BALL VALVE//MANUFACTURER : CHEMLINE//MODEL : Type21-A-015-E-C//CONNECTION TYPE : COMBO | 38 mm (1-1/2")//BODY : PVC (ASTM D1784)// SEAL | SEAT :PTFE | EPDM// STEM : PVC					1

PDF Published March 1, 2013

Type 21 Ball Valves

CHEMLINE PLASTICS
SUPERIOR FLOW SOLUTIONS

The Chemline Type 21 True Union Ball valve incorporates state of the art features for long term performance. This is a full port, full blocking True Union valve pressure rated at 16 bar (230 psi)[4]. Double stem o-rings and Safety Shear stem design provide for a high degree of safety on hazardous fluid applications. All sizes have an ISO standard actuator mounting platform integral to the valve body. This provides for sturdy and secure mounting of pneumatic or electric actuators.

PVC | CPVC | PP | PVDF

CRN Registered Consult Chemline

NSF[5] Certified to NSF/ANSI 61

SERIES: Type 21

SIZES: 3/8" – 4"

ENDS: Socket, Threaded, Flanged, Butt[1] or ChemFlare™

SEATS: PTFE

SEALS[2]: EPDM, FKM (Viton®), CPE[3]



features

Pressure rated to 230 psi[4]
- Provides a high factor of safety

Integral Actuator Mounting Platform
- Actuation is easy. Electric or pneumatic actuators may be mounted in the field.

Full Port
- High capacity and low pressure drops

Fully Blocking
- Downstream union nut may be safely disassembled for piping maintenance while valve is closed off under full system pressure

Built-In Spanner Wrench
- Top of the handle is designed to be used as a tool for accessing internal parts

Safety Shear Stem Design
- Stem has double o-rings
- Designed to hold full pressure even if stem breaks due to excessive torque

High Chemical Resistant Material
- PVC and CPVC compounds have an "A" chemical resistance rating as per ASTM D-1784. They have outperformed other PVC and CPVC compounds on aggressive chemicals.

[1] Butt ends for fusion to Chemline metric PP, PVDF or ECTFE (Halar®) piping.
[2] Other materials are available.
[3] CPE=Chlorinated Polyethylene.
[4] PVC, CPVC and PVDF 1/2" to 2" are rated at 230 psi; 2-1/2" to 4" and all size PP valves are rated at 150 psi at 20°C.
[5] PVC valves with EPDM or FKM (Viton®) seals are certified under NSF/ANSI Standard 61 for contact with drinking water.

03/13 ©Chemline Plastics Limited 2013
Chemline is a registered trade mark of Chemline Plastics Limited

Type 21 Ball Valves

features

Double Stem O-Rings – Safety Shear Design

- Upper o-ring groove is deeper than lower. In case of excessive stem torque, stem will shear at the upper groove, leaving the inner o-ring intact to seal against full line pressure.

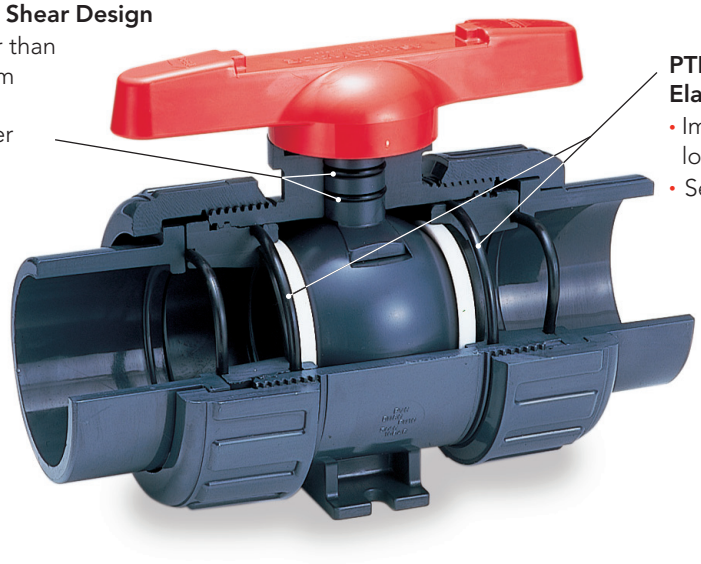

PTFE Seats have Elastomer Cushions

- Improved sealing while lowering stem torques
- Self adjusts for seat wear

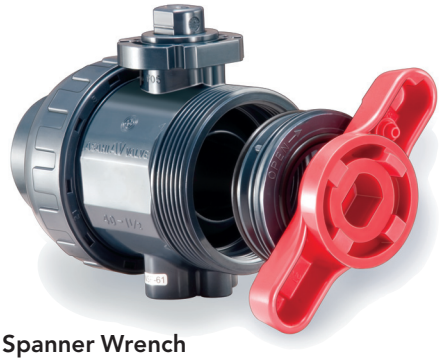

Built in Spanner Wrench

- For removing or tightening the seat carrier
- All parts are replaceable



Integral Actuator Mounting Platform

- Actuation is easy. Electric or pneumatic actuators may be mounted in the field. Simply pull off the handle to reveal a standard ISO 5211 mounting platform which accepts bolt-on hardware.



Fully Blocking

- Downstream pipe may be removed while upstream side is still pressurized. This may be done with valve installed in either direction.



Base Mounting Pad

- Optional threaded inserts allow valves to be securely anchored
- Supplied standard with actuated valves

Type 21 Ball Valves

options + accessories

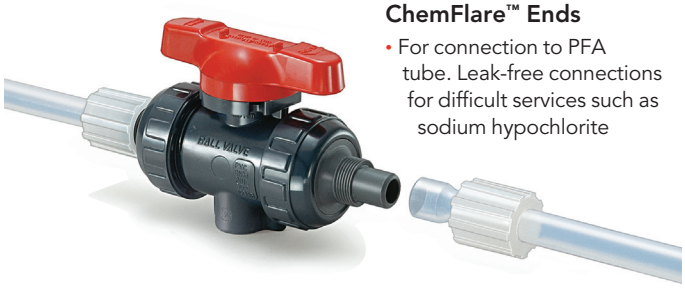

ChemFlare™ Ends

- For connection to PFA tube. Leak-free connections for difficult services such as sodium hypochlorite

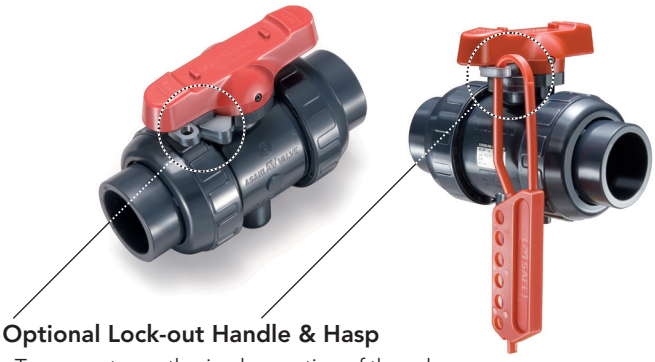

Optional Lock-out Handle & Hasp

- To prevent unauthorized operation of the valve
- Used during maintenance shut-downs



One-piece moulded PVC and CPVC 6" socket ends

- Allows installation of 4" valve in 6" line
- Factory moulded, not fabricated with couplings and reducers cemented together
- Fixed to valve mechanically just like the one-piece moulded factory flanges



Different Colour Handles

- Choose a handle colour other than standard red for colour coding different services

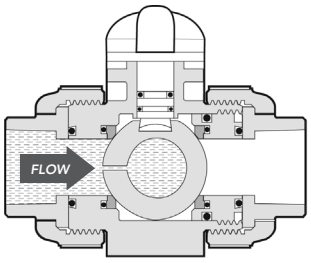

Vented Ball

- For sodium hypochlorite services at any concentration
- Valve shown in closed position

electric + pneumatic actuation

Pneumatic and Electric Actuators

- A complete range of actuators and control accessories are available, mounted to valves using PPG plastic brackets and stainless steel couplings. Refer to separate data sheets.



Electromni® Electric



Q Series Electric

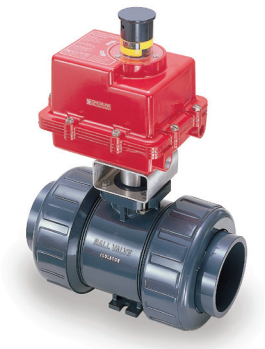

A Series Electric



V Series Electric
with Local Control Station



PA Series Pneumatic

Type 21 Ball Valves

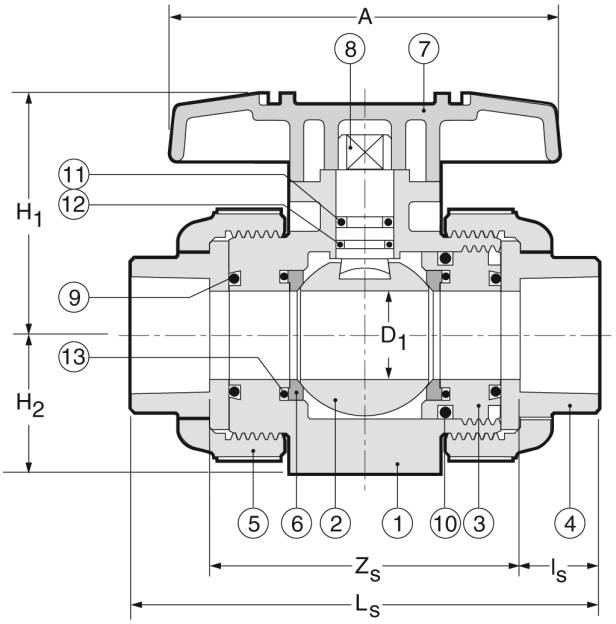

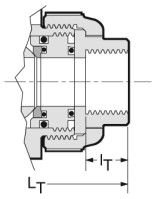

NPT Threaded

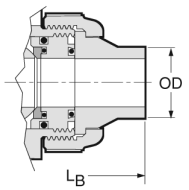

Butt Fusion

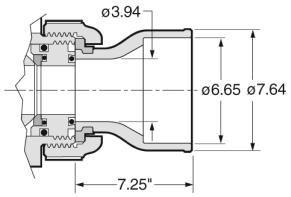

6" Soc Ends on 4" valve

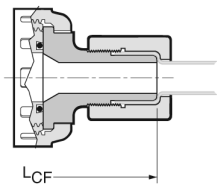

ChemFlare™ Ends
shown with PVDF nut

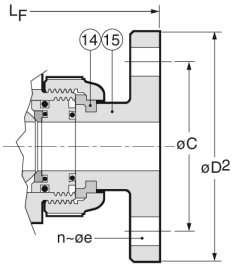

ANSI Flanged

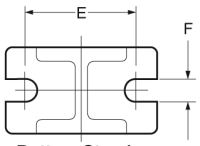

Bottom Stand
2-1/2" to 4" valves
Base Thickness G

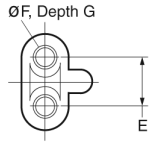

Base Inserts
1/2" to 2" valves

PARTS

▲ Recommended Spare Parts

No.	Part	Pcs.	Materials
1	Body	1	PVC, CPVC, PP, PVDF
2	Ball	1	PVC, CPVC, PP, PVDF
3	Carrier[1]	1/2	PVC, CPVC, PP, PVDF
4	End Connector	2	PVC, CPVC, PP, PVDF
5	Union Nut	2	PVC, CPVC, PP, PVDF
6▲	Ball Seat	2	PTFE
7	Handle	1	ABS

[1] 1 carrier for sizes 1/2" to 2", 2 carriers for sizes 2-1/2" to 4"
[2] EPDM seals standard with PVC, CPVC, PP; FKM (Viton®) with PVDF valves
[3] 2 pcs 1/2" to 2", 6 pcs 2-1/2" to 4"

PARTS

▲ Recommended Spare Parts

No.	Part	Pcs.	Materials
8	Stem	1	PVC, CPVC, PP, PVDF
9▲	Face O-Ring[2]	2	EPDM, FKM (Viton®)
10▲	Carrier O-Ring[2]	2	EPDM, FKM (Viton®)
11▲	Upper Thicker Stem O-Ring[2]	1	EPDM, FKM (Viton®)
12▲	Lower Thinner Stem O-Ring[2]	1	EPDM, FKM (Viton®)
13	Seat Cushion[2]	2	EPDM, FKM (Viton®)
14	Flange Retainer[3]	2/6	PVDF
15	Flange	2	PVC, CPVC, PP, PVDF

DIMENSIONS INCHES

					End Connections														Valve Base		
					Socket			Threaded		Factory Flanged					Butt		ChemFlare™				
Size	D Bore	A	H_1	H_2	L_S	Z_S	l_S	l_T	L_T	L_F	D_2	C	n	e	L_B	OD	L_{CF}	Tube[4]	E	F[5]	G
1/2"	.59	3.6	2.03	1.14	4.45	2.70	.875	.64	4.02	5.63	3.50	2.38	4	.62	4.88	.79	6.12	1/2"	.75	.29	.43
3/4"	.79	3.9	2.34	1.38	5.08	3.08	1.00	.65	4.72	6.77	3.88	2.75	4	.62	5.67	.98	6.52	3/4"	.75	.29	.43
1"	.98	4.3	2.68	1.54	5.75	3.50	1.13	.81	5.16	7.36	4.25	3.12	4	.62	6.06	1.26	7.26	1"	.75	.29	.43
1-1/4"	1.22	4.8	3.17	1.85	6.46	5.21	1.25	.85	5.91	7.48	4.62	3.50	4	.62	6.85	1.57	9.58	1-1/4"	1.18	.35	.59
1-1/2"	1.57	5.2	3.50	2.17	7.24	4.49	1.38	.85	6.42	8.35	5.00	3.88	4	.62	7.64	1.97	–	–	1.18	.35	.59
2"	2.01	6.3	4.02	2.60	8.23	5.23	1.50	1.90	7.76	9.21	6.00	4.75	4	.75	8.82	2.48	–	–	1.18	.35	.59
2-1/2"	2.28	7.87	4.96	2.83	9.45	5.95	1.75	1.21	8.46	10.20	7.00	5.49	4	.75	9.72	2.95	–	–	1.89	.35	.23
3"	2.70	9.45	5.51	3.35	11.10	7.35	1.88	1.30	10.39	11.97	7.50	6.00	4	.75	11.61	3.54	–	–	2.17	.43	.28
4"	3.54	11.81	7.01	4.33	13.88	9.87	2.00	1.38	14.17	14.65	9.00	7.50	8	.75	14.76	4.33	–	–	2.56	.43	.32

[4] ChemFlare™ ends are available for reduced tube sizes down to 1/4".
[5] Optional threaded inserts: 1/2" to 1" valves – UNC 1/4"-20; 1-1/4" to 2" valves – UNC 5/16"-18. 'Recoil' brand inserts require drilling before insertion.

Type 21 Ball Valves

WORKING PRESSURES PSI, Water, Non-Shock

VACUUM RATING • 29.9 inches mercury

Size	PVC			CPVC						PP			PVDF				
	20°C 68°F	40°C 104°F	50°C 122°F	20°C 68°F	40°C 104°F	50°C 122°F	60°C 140°F	80°C 176°F	90°C 194°F	20°C 68°F	60°C 140°F	80°C 176°F	20°C 68°F	40°C 104°F	60°C 140°F	80°C 176°F	100°C 212°F
1/2"– 2"	230	165	150	230	165	150	120	75	55	150	85	55	230	185	150	110	85
2-1/2"– 4"	150	150	150	150	150	150	120	75	55	150	70	40	150	150	150	110	85

Temperature Ranges: PVC 0 to 60°C (32 to 140°F), **CPVC** 0 to 95°C (32 to 203°F), **PP** –20 to 80°C (–4 to 176°F), **PVDF** –40 to 100°C (–40 to 212°F)

WEIGHTS LB. THREADED or SOCKET

WEIGHTS LB. FLANGED

Size	PVC	CPVC	PP	PVDF	PVC	CPVC	PP	PVDF
1/2"	0.4	0.4	0.4	0.4	0.9	0.9	0.7	1.1
3/4"	0.7	0.7	0.7	0.9	1.3	1.5	1.1	1.5
1"	0.9	1.1	0.9	1.1	1.8	2.0	1.5	2.2
1-1/4"	1.5	1.5	1.3	1.8	2.6	2.9	2.0	3.3
1-1/2"	2.4	2.6	1.5	2.9	3.7	4.0	2.6	4.4
2"	4.0	4.4	2.6	4.9	5.5	6.0	4.0	8.2
2-1/2"	5.1	5.5	3.7	6.2	7.3	7.7	5.3	8.8
3"	8.2	8.8	5.5	9.9	10.1	11.0	7.5	12.6
4"	19.4	21.8	13.2	24.9	21.6	23.4	15.4	26.7

Cv VALUES VS. BALL ANGLE

Size	0%	25%	50%	75%	100%
1/2"	0	0.35	1.3	5.5	14.
3/4"	0	0.73	2.8	11.5	29.
1"	0	1.2	4.5	18.6	47.
1-1/4"	0	1.8	6.8	28.4	72.
1-1/2"	0	3.9	14.7	61.2	155.
2"	0	4.8	18.0	75.0	190.
2-1/2"	0	9.1	34.7	144.0	365.
3"	0	10.2	39.0	162.0	410.
4"	0	17.0	64.6	269.0	680.

SAMPLE SPECIFICATION

1. All True Union Ball Valves in PVC, CPVC, PP or PVDF shall be Chemline Type 21 or equal sizes 1/2" to 2" in PVC, CPVC, and PVDF rated at 230 psi and in PP 150 psi maximum working pressure. Sizes 2-1/2", 3" and 4" rated at 150 psi maximum working pressure with EPDM, FKM (Viton®) or CPE seals. Ball seats shall be PTFE with elastomer cushions for closure with minimum stem torques.
2. All valves will have Safety Shear stem design, blowout-proof with double o-rings for safety. The top o-ring groove shall be deeper so that if the stem breaks off under excessive torque the lower o-ring will remain intact and the valve will hold pressure.
3. All valves shall be full port and two-way blocking design.
4. All valves will be CRN (Canadian Registration Number) registered with TSSA.
5. PVC valves with EPDM or FKM (Viton®) seals shall be certified under NSF/ANSI Standard 61 for contact with drinking water.
6. All valves shall have chemical resistant labels permanently marked with manufacturing number to provide production level traceability.
7. PVC compound shall have an ASTM cell classification 12454-A with a minimum suffix "A" designation for chemical resistance as per ASTM D-1784 (CSA report LO 4000-172).
8. CPVC compound shall have an ASTM cell classification 23567-A with a minimum suffix "A" designation for chemical resistance as per ASTM D-1784.
9. PP material will conform to ASTM D-4101 PP 021 B 67272 material requirements.
10. PVDF material shall be unpigmented conforming to ASTM D-3222 material requirements and to be USDA Title 21 Chapter 1 Part 177. 2510 requirements for contact with food.
11. Socket ends in PVC and CPVC shall be Schedule 80 and conform to ASTM D-2467.
12. Threaded ends shall be Schedule 80 and conform to ASTM D-2464.
13. Butt fusion ends in PP or PVDF will be compatible with Chemline PP or PVDF metric piping systems.
14. Flanged ends shall be ANSI Class 150 one-piece factory moulded (not fabricated) to ensure maximum strength and close tolerance end to end dimensions.

ORDERING EXAMPLE

Chemline True Union Ball Valves	21	A	020	E	S
Body Material	**A** – PVC **B** – PP	**C** – CPVC **K** – PVDF			
Size[1]	**002** – 1/4" **010** – 1" **025** – 2-1/2"	**003** – 3/8" **012** – 1-1/4" **030** – 3"	**005** – 1/2" **015** – 1-1/2" **040** – 4"	**007** – 3/4" **020** – 2" **060** – 6"	
Seals	**E** – EPDM	**V** – FKM (Viton®)	**C** – CPE	**B** – Nitrile	**A** – Aflas®
Ends	**S** – Socket	**T** – Threaded	**F** – Flanged	**B** – Butt[2]	**CF** – ChemFlare™

Example: Chemline Type 21 True Union Ball Valve, PVC, 2", with EPDM seals, socket ends.

[1] 1/4" is normally the 3/8" valve reduced. 6" is 4" valve with 6" end connections.

[2] PP, PVDF and ECTFE (Halar®) metric butt fusion ends (1/2" to 4") connect to Chemline PP, PVDF and ECTFE (Halar®) piping systems.

OTHER OPTIONS & ACCESSORIES

- **Alternate O-Ring Seals**
- **Stem Extensions** made to any length
- **Limit Switches** – For open and/or closed position indication
- **Municipal Operating Nut**
- **Lubrication-free Valves** – Factory clean room assembled
- **Vented Ball** – For sodium hypochlorite applications

CHEMLINE PLASTICS
SUPERIOR FLOW SOLUTIONS

55 Guardsman Road, Thornhill, ON, L3T 6L2, Canada | ISO 9001:2008 Certified
tel.905.889.7890 | fax.905.889.8553 | request@chemline.com | chemline.com

CS-301-500 : Identification sheet

VWTC PROJECT NUMBER:	Iqaluit WWTP	REV:	01
PROJECT NAME:	5000218036	SUBMITTED TO (COMPANY):	
ENGINEER:	G. HÉBERT	SUBMITTED TO (RESPONSIBLE)	
PROJECT MANAGER:	C. BEKAERT	PROJECT NUM REFERENCE.:	
PHONE NUMBER:		LOT NUMBER:	

SUPPLIER	EQPT CODE	EQPT TAG NO	DIA	DESCRIPTION	INFO 1	INFO 2	INFO 3	APPLIC.	NOTE	REV
CHEMLINE	VABLPV207251	NV-04-984	DIA: 38 mm (1-1/2")	METERING VALVE - CARRIER WATER	TYPE: BALL VALVE//MANUFACTURER : CHEMLINE//MODEL : SM-A-015-E-S//CONNECTION TYPE : SOCKET | 38 mm (1-1/2")//BODY : PVC (ASTM D1784)// SEAL | SEAT : | EPDM// STEM : N/A					1

PDF Published March 1, 2013

Metering Ball Valves

CHEMLINE PLASTICS
SUPERIOR FLOW SOLUTIONS

Chemline SM Series Metering Ball Valve is designed for fine linear flow control of chemicals or clean fluids. The ball is solid with graduated V-groove cut on the outside surface. Precise linear flow control is accomplished through 180° rotation of the handle. With a positioning electric actuator, this becomes an inexpensive control valve. If higher C_V values are required, refer to SP Series Proportional ball valves.

PVC PP

SERIES:	SM
SIZES:	1/2" – 2"
ENDS:	Threaded, Socket, Butt[1] or ChemFlare™ [2]
SEATS:	PTFE
O-RINGS:	EPDM, FPM (Viton®)

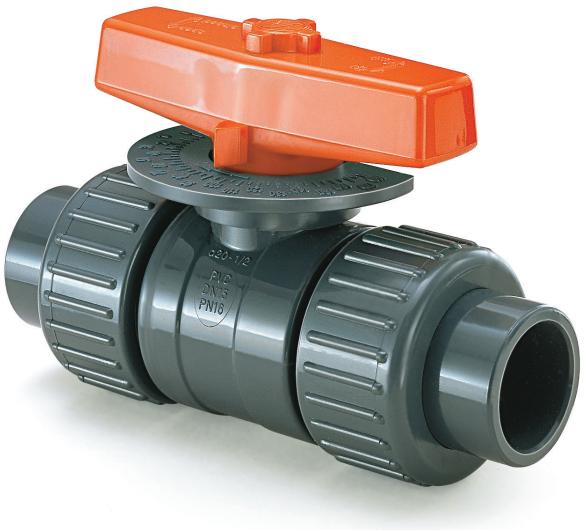

features

Precise Linear Flow Control
- Provided by a special V-groove ball and wide handle travel (0° to 180°)

Full Size Range
- 6 valves sizes 1/2" to 2" offers a large selection of C_V values

High End Ball Valve Features
- Full Blocking design
- Double Stem O-Rings for safety
- PTFE seats with elastomer cushion
  - Automatically compensates for seat wear or expansion
- 230 psi pressure rated (PVC)

Low Stem Torques
- Due to floating ball design and cushioned PTFE seats

Bidirectional
- Works with flow in either direction

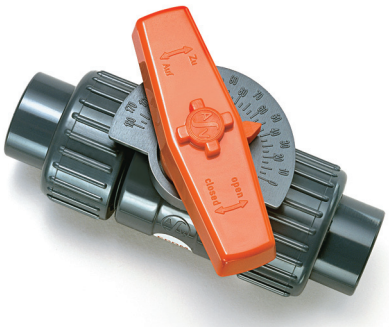

Integral 180° Scale with 5° Increments
- Fine linear flow control and settable flow rates

[1]Butt ends for fusion to Chemline metric PP or PVDF piping.
[2]For ChemFlare™ end connectors, consult Chemline.

03/13 ©Chemline Plastics Limited 2013
Chemline is a registered trade mark of Chemline Plastics Limited

Metering Ball Valves

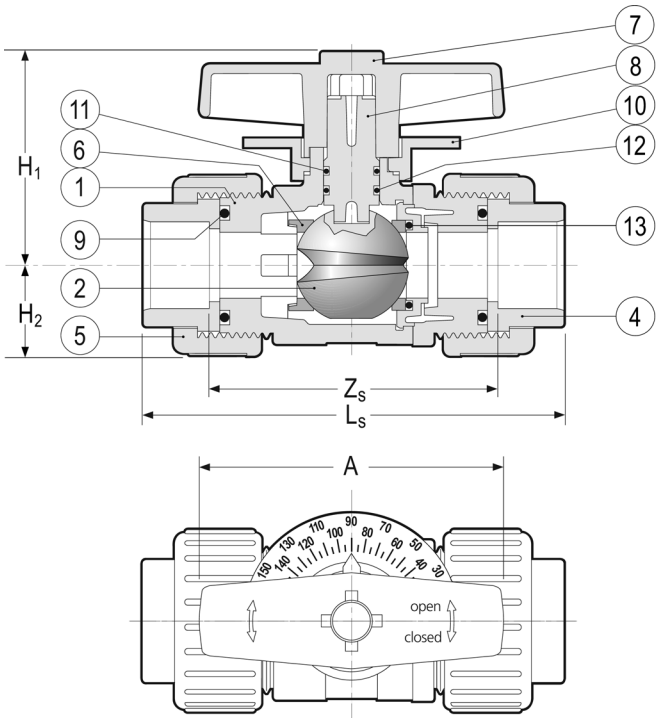

PARTS

No.	Part[1]	Pcs.	Materials
1	Body	1	PVC, PP
2	Ball	1	PVC, PP
4	End Connector	1	PVC, PP
5	Union Nut	1	PVC, PP
6	Ball Seat	1	PTFE
7	Handle	2	PVC
8	Stem	1	PVC, PP
9	Face O-Ring	2	EPDM, FPM(Viton®)
10	Position Indicator Scale	2	PVC, PP
11	Upper Stem O-Ring	2	EPDM, FPM(Viton®)
12	Lower Stem O-Ring	2	EPDM, FPM(Viton®)
13	Seat Cushion	2	EPDM, FPM(Viton®)

[1]Parts are for identification only and cannot be replaced.

DIMENSIONS INCHES

	PVC						PP					
Size	A	Z_s	L_s	H	H_1	H_2	A	Z_s	L_s	H	H_1	H_2
1/2″	2.60	2.76	4.02	1.97	2.05	0.81	2.60	2.71	3.86	1.97	2.05	0.90
3/4″	3.07	3.23	4.72	2.36	2.44	1.00	3.07	3.19	4.45	2.36	2.44	1.10
1″	3.46	3.43	5.16	2.60	2.80	1.14	3.46	3.35	4.76	2.60	2.80	1.30
1-1/4″	3.86	3.86	5.91	2.91	3.23	1.42	3.86	3.82	5.43	2.91	3.23	1.55
1-1/2″	4.25	3.98	6.42	3.76	3.54	1.57	4.25	3.98	5.83	3.76	3.54	1.71
2″	4.64	4.76	7.75	4.90	4.33	1.97	4.64	4.76	6.93	4.90	4.33	2.11

E Series Electric Actuator on a SM Series Ball Valve

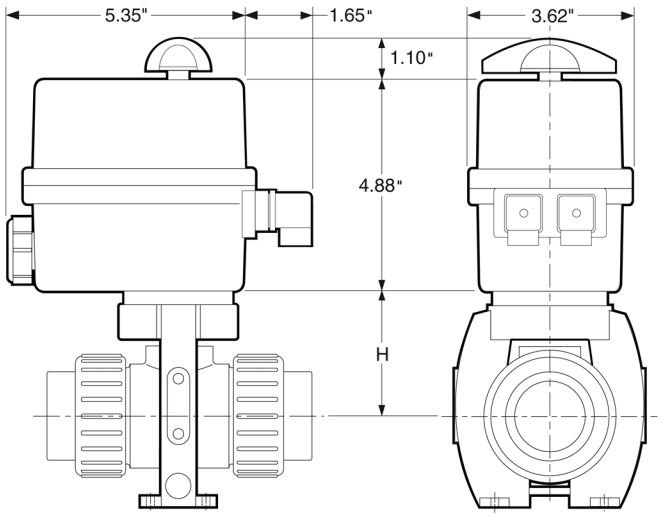

Side View End View



ELECTRICALLY ACTUATED

The metering ball valve becomes a proportional control valve with the addition of an E Series electric actuator with on-board positioner

- Thermoplastic housing and mounting bracket
- Manual override
- Position indication
- Mechanical travel stops
- Two external DIN plugs (one for power and one for signal) are **pre-wired to the terminal strip. The actuator may be wired up without opening the lid.**
- Different voltages are available

Metering Ball Valves

WORKING PRESSURES PSI

NET WEIGHTS LB. Cv VALUES

Size	PVC 20°C 68°F	PVC 40°C 104°F	PVC 60°C 140°F	PP 20°C 68°F	PP 40°C 104°F	PP 60°C 140°F	PP 80°C 176°F	PVC	PP	USGPM Flow at 1 psi △P
1/2″	230	130	30	150	100	65	20	0.35	0.29	1.4
3/4″	230	130	30	150	100	65	20	0.60	0.44	1.9
1″	230	130	30	150	100	65	20	0.84	0.64	2.3
1-1/4″	230	130	30	150	100	65	20	1.50	1.04	3.4
1-1/2″	230	130	30	150	100	65	20	2.10	1.63	4.5
2″	230	130	30	150	100	65	20	3.70	2.60	7.4

Temperature Ranges: PVC 0 to 60°C (32 to 140°F), PP 0 to 95°C (32 to 203°F)

Cv VALUE vs. VALVE OPENING

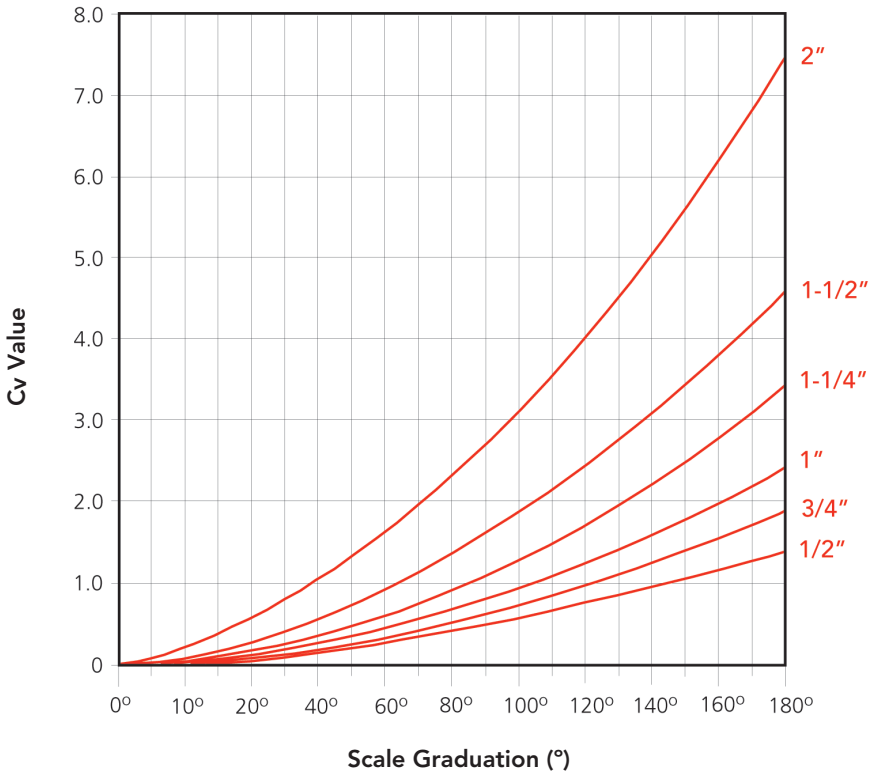

SAMPLE SPECIFICATION

1. All low flow control valves, 1/2″ to 2″, will be Chemline SM Series metering ball valves.
2. Body material will be PVC or PP, and o-rings will be EPDM or FPM (Viton®).
3. Body will be full blocking design with double stem o-rings for safety, rated at 230 psi maximum working pressure for PVC and 150 psi for PP material.
4. Ball will be floating design, molded solid with a V-groove for linear flow control over a 180° range of handle rotation.
5. Seats will be PTFE with elastomer cushions for positive closure with minimum stem torques and automatic compensation for seat wear and expansion.
6. Position indicating scale will be 0° to 180° with 5° increments for fine flow control and settable flow rates.
7. End connections will be 1/2″ to 2″ ANSI socket or FNPT threaded or 150 lb flanged or butt fusion for Chemline metric PP, PVDF or ECTFE (Halar®) pipe or ChemFlare™ for PFA tubing.

ORDERING EXAMPLE

Chemline Metering Ball Valves	SM	A	010	E	S
Valve Material	**A** – PVC	**B** – PP			
Size	**005** – 1/2″	**007** – 3/4″	**010** – 1″		
	012 – 1-1/4″	**015** – 1-1/2″	**020** – 2″		
Seals	**E** – EPDM	**V** – FPM (Viton®)			
Ends	**S** – Socket	**T** – Threaded	**B** – Butt[1]	**CF** – ChemFlare™	

Example: SM Series Ball Valve, PVC, 1″, EPDM seals, socket ends.

[1] PP and PVDF metric butt fusion ends (1/2″ to 2″) connect to Chemline PP and PVDF piping systems.

VACUUM RATING

- 29.9 inches mercury

OPTIONS & ACCESSORIES

- **Reduced Ends**
- **Electric Actuator with Positioner**
  – Operates as a linear control valve

CHEMLINE PLASTICS
SUPERIOR FLOW SOLUTIONS

55 Guardsman Road, Thornhill, ON, L3T 6L2, Canada | ISO 9001:2008 Certified
tel.905.889.7890 | fax.905.889.8553 | request@chemline.com | chemline.com

CS-302-100 : Identification sheet

VWTC PROJECT NUMBER:	Iqaluit WWTP	REV:	01
PROJECT NAME:	5000218036	SUBMITTED TO (COMPANY):	
ENGINEER:	G. HÉBERT	SUBMITTED TO (RESPONSIBLE)	
PROJECT MANAGER:	C. BEKAERT	PROJECT NUM REFERENCE.:	
PHONE NUMBER:		LOT NUMBER:	

SUPPLIER	EQPT CODE	EQPT TAG NO	DIA	DESCRIPTION	INFO 1	INFO 2	INFO 3	APPLIC.	NOTE	REV
CHEMLINE	VANRPV200667	CV-04-900	DIA: 38 mm (1-1/2")	CHECK VALVE	TYPE: CHECK | 150 PSI//MANUFACTURER : CHEMLINE//MODEL : BTA015EC//CONNECTION TYPE : COMBO | 1-1/2"//BODY : PVC// SEAL | SEAT :EPDM | // STEM : N/A					1

PDF Published March 1, 2013

Ball Check & Foot Valves

CHEMLINE PLASTICS
SUPERIOR FLOW SOLUTIONS

The economical and versatile Chemline Ball Check Valve is the most popular type of non-return valves for pipe sizes under 6". A wide selection of body and seat materials, and end connections are available for many different applications. It has good flow capacity and will handle many slurry and suspended solid services. This valve works in both horizontal and vertical lines. The Foot Valve is for end of line services such as sumps.

PVC | CPVC | PP | PVDF

CRN Registered Consult Chemline

NSF[3] Certified to NSF/ANSI 61

SERIES: BT: True Union Check
BC: Single Union Check
FT: True Union Check
FV: Single Union Check

SIZES: 1/2" – 4"

ENDS: Threaded, Socket, Flanged, Butt[1] or ChemFlare™[2]

SEAT/SEALS: EPDM, FKM (Viton®), PTFE coated FKM (Viton®)

features

- **True Union to 2"**
- **Full Port to 4"**
- **NSF Certified[3]**
- **Built-in Union Design** – For easy installation and maintenance
- **Free Floating Ball** – The only moving part
- **Uniseat/Seal** – Easily removable
- **May be used either horizontally or vertically**
- **Excellent flow characteristics**
- **Low seating and opening pressures**



True Union Check
1/2" to 2" in all materials



Single Union Check
1/2" to 4" in PVC
2-1/2" to 4" in CPVC, PP and PVDF



Foot Valve is light weight and has a low profile basket

[1] PP and PVDF Butt fusion ends (available 1/2" to 2") connect to Chemline PP and PVDF piping systems.
[2] For ChemFlare™ end connectors, consult Chemline.
[3] PVC valves with EPDM or FKM (Viton®) seals are certified under NSF/ANSI Standard 61 for contact with drinking water.

03/13 ©Chemline Plastics Limited 2013
Chemline is a registered trade mark of Chemline Plastics Limited

Ball Check Valves

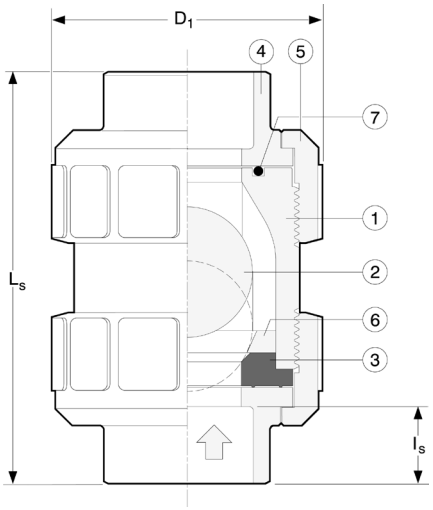

True Union Valve

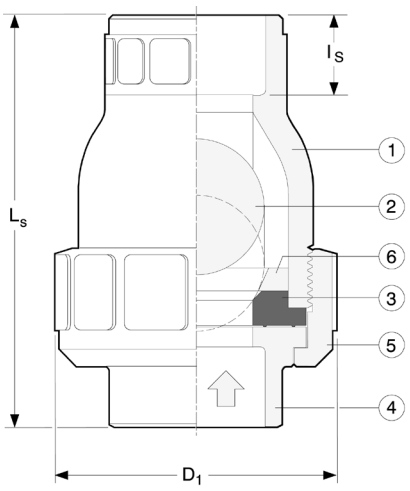

Single Union Valve

PARTS

▲ Recommended Spare Parts

No.	Part	Pcs. T/U	Pcs. S/U	Materials
1	Body	1	1	PVC, CPVC, PP, PVDF
2	Ball	1	1	PVC, CPVC, PP, PVDF
3▲	Uniseat/Seal[1]	1	1	EPDM, FKM(Viton®), PTFE coated FKM (Viton®)
4	End Connector	2	1	PVC, CPVC, PP, PVDF
5	Union Nut	2	1	PVC, CPVC, PP, PVDF
6	Stop Ring	1	1	PVC, CPVC, PP, PVDF
7	Face O-Ring	1	1	EPDM, FKM(Viton®)
9	Flange Retainer[2]	2	1	PVDF
10	Factory Flange[3]	2	1	PVC, CPVC, PP, PVDF

[1] Standard seals are EPDM in PVC, CPVC and PP valves, PTFE coated FKM (Viton®) in PVDF valves. Coating is .002" thick.

[2] True Union: 2 pcs 1/2" to 2", 6 pcs 1-1/2" to 4" Single Union: 1 pcs 1/2" to 2", 3 pcs 2-1/2" to 4".

[3] True Union flanged valves have two factory flanges. Single Union valves have one factory flange and one fabricated flange. Consult Chemline for details on fabricated type.

UNION END CONNECTIONS

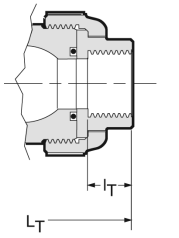

NPT Threaded

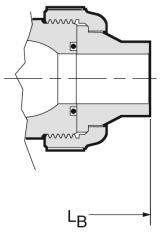

Butt Fusion PP and PVDF

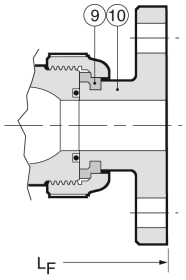

Factory Flanged

DIMENSIONS INCHES

WEIGHTS LB.

Size	D_1	I_s	I_T	True Union PVC & CPVC L_T	True Union PVC & CPVC L_S	True Union PVC & CPVC L_F	True Union PP & PVDF L_T	True Union PP & PVDF L_B	True Union PP & PVDF L_F	Single Union PVC L_T	Single Union PVC L_S	Single Union PVC L_F	True Union Socket or Butt PVC	True Union Socket or Butt CPVC	True Union Socket or Butt PP	True Union Socket or Butt PVDF	Single Union PVC
1/2"	1.9	0.69	0.59	3.4	3.4	5.1	3.4	4.0	5.1	3.2	3.4	5.6	0.3	0.3	0.2	0.3	0.2
3/4"	2.4	0.72	0.67	4.1	3.9	6.1	4.1	4.4	6.1	3.8	3.7	6.6	0.5	0.5	0.3	0.6	0.4
1"	2.8	0.88	0.79	4.5	4.4	6.5	4.5	4.8	6.5	4.2	4.3	7.3	0.7	0.8	0.4	0.9	0.6
1-1/4"	3.1	0.94	0.87	5.0	4.9	6.6	5.0	5.9	6.6	6.2	6.3	12.3	1.1	1.2	0.7	1.5	1.5
1-1/2"	3.7	1.09	0.98	5.9	5.9	7.6	5.9	5.8	7.6	5.6	5.7	9.1	1.6	1.7	1.0	2.0	1.3
2"	4.2	1.16	1.10	7.0	6.8	8.4	7.0	6.5	8.4	6.5	6.5	10.5	2.2	2.4	1.4	2.7	1.8

DIMENSIONS INCHES

WEIGHTS LB.

Size	D_1	I_s[4]	I_T	Single Union PVC & CPVC L_T	Single Union PVC & CPVC L_S	Single Union PVC & CPVC L_F	Single Union PP & PVDF L_T	Single Union PP & PVDF L_B	Single Union PP & PVDF L_F	Single Union PVC	Single Union CPVC	Single Union PP	Single Union PVDF
2-1/2"	6.0	2.10	2.17	10.0	10.4	14.3	8.7	*	*	5.7	6.2	*	*
3"	6.0	1.88	1.38	8.7	9.6	12.2	8.7	*	*	5.1	5.5	3.3	6.3
4"	8.3	2.00	1.77	12.1	12.2	15.0	12.1	*	*	12.7	13.9	8.1	15.7

[4] Consult Chemline.

Foot Valves

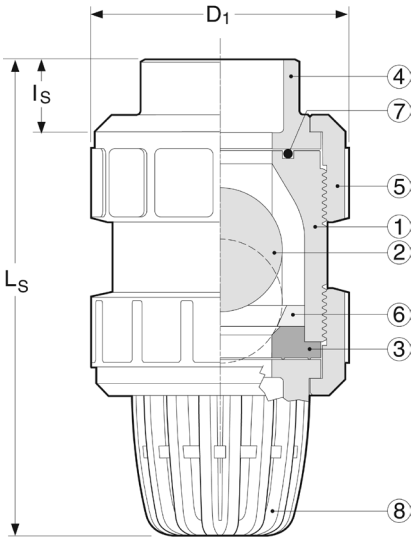

True Union Valve

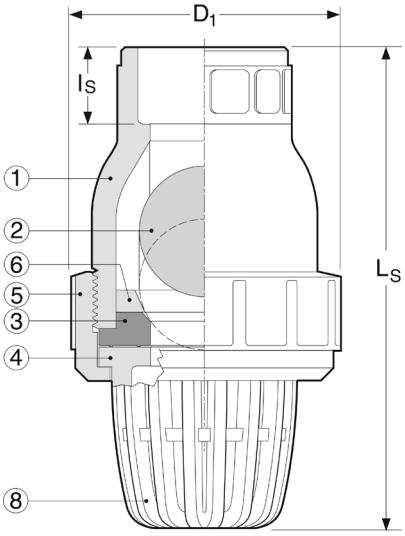

Single Union Valve

PARTS

▲ Recommended Spare Parts

No.	Part	Pcs. T/U	Pcs. S/U	Materials
1	Body	1	1	PVC, CPVC, PP, PVDF
2	Ball	1	1	PVC, CPVC, PP, PVDF
3▲	Uniseat/Seal[1]	1	1	EPDM, FKM(Viton®), PTFE coated FKM (Viton®)
4	End Connector	2	1	PVC, CPVC, PP, PVDF
5	Union Nut	2	1	PVC, CPVC, PP, PVDF
6	Stop Ring	1	1	PVC, CPVC, PP, PVDF
7	Face O-Ring	1	1	EPDM, FKM(Viton®)
8	Foot Valve Basket	1	1	PVC, CPVC, PP, PVDF
9	Flange Retainer[2]	3	0	PVDF
10	Factory Flange[3]	1	0	PVC, CPVC, PP, PVDF

[1] Standard seals are EPDM in PVC, CPVC and PP valves, PTFE coated FKM (Viton®) in PVDF valves. Coating is .002" thick.

[2] True Union: 1 pc 1/2" to 2", 3 pcs 2-1/2" to 4".

[3] True Union valves have factory flanges. Single Union have fabricated flanges. Consult Chemline for details on fabricated type.

END CONNECTIONS FOR TRUE UNION VALVE

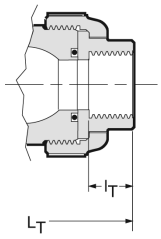

NPT Threaded

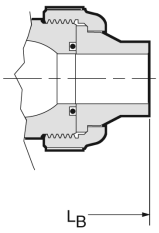

Butt Fusion
PP and PVDF

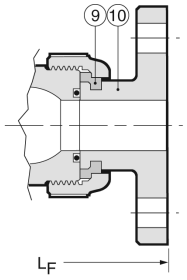

Factory Flanged

DIMENSIONS INCHES

WEIGHTS LB.

Size	D_1	I_s Soc	I_T Thd	True Union PVC & CPVC L_T	True Union PVC & CPVC L_S	True Union PVC & CPVC L_F	Single Union PVC L_T	Single Union PVC L_S	Single Union PVC L_F	Single Union PVC Socket
1/2"	1.9	0.69	0.59	2.8	2.9	3.7	3.5	3.7	4.7	0.3
3/4"	2.4	0.72	0.67	3.3	3.3	4.4	4.1	4.2	5.4	0.4
1"	2.8	0.88	0.79	3.7	3.7	4.8	4.5	4.8	6.1	0.8
1-1/4"	3.7	0.94	0.87	*	*	*	*	*	*	1.8
1-1/2"	3.7	1.09	0.98	5.4	5.4	6.3	6.8	7.0	8.5	1.7
2"	4.2	1.16	1.10	6.4	6.4	7.2	7.4	7.6	9.3	2.1
2-1/2"	6.0	2.10	2.17	–	–	–	*	*	*	7.4
3"	6.0	1.88	1.38	–	–	–	11.6	12.1	14.2	7.1
4"	8.3	2.00	1.77	–	–	–	14.7	15.0	17.4	15.7

* Consult Chemline for dimensions.

For CPVC (2-1/2" to 4"), PP and PVDF Foot Valve lengths, consult Chemline.

Ball Check & Foot Valves

WORKING PRESSURES PSI

Size	PVC	CPVC				Polypropylene			PVDF			
	0-50°C 32-122°F	0-50°C 32-122°F	60°C 140°F	80°C 176°F	90°C 194°F	–20-30°C –4-90°F	60°C 140°F	80°C 176°F	–20-60°C –4-140°F	80°C 176°F	90°C 194°F	100°C 212°F
1/2″	150	150	115	85	60	150	90	60	150	120	110	85
3/4″	150	150	115	85	60	150	90	60	150	120	110	85
1″	150	150	115	85	60	150	90	60	150	120	110	85
1-1/4″	150	150	115	85	60	150	90	60	150	120	110	85
1-1/2″	150	150	115	85	60	150	90	60	150	120	110	85
2″	150	150	115	85	60	150	90	60	150	120	110	85
2-1/2″	100	100	90	60	45	100	60	45	100	90	60	45
3″	100	100	90	60	45	100	60	45	100	90	60	45
4″	100	100	90	60	45	100	60	45	100	90	60	45

Maximum Temperatures: PVC 0 to 60°C (32 to 140°F), **CPVC** 0 to 95°C (32 to 203°F), **PP** –20 to 90°C (–4 to194°F), **PVDF** –40 to 100°C (–40 to 212°F)

MINIMUM SEATING AND OPENING PRESSURE PSI

Cv VALVES

Size	Vertical Piping		Horizontal Piping		Check Valves
	Open	Seating	Open	Seating	
1/2″	0.7	2.8	0.1	2.8	6.5
3/4″	0.7	4.3	0.1	4.3	17.
1″	0.7	4.3	0.1	4.3	25.
1-1/4″	1.4	4.3	0.3	4.3	86.
1-1/2″	1.4	4.3	0.3	4.3	86.
2″	1.4	4.3	0.3	4.3	130.
2-1/2″	1.4	2.8	0.3	2.8	280.
3″	1.4	2.8	0.3	2.8	280.
4″	1.4	2.8	0.3	2.8	500.

VACUUM RATING

- 29.9 inches mercury
- Maximum recommended velocity 5 m/s

SAMPLE SPECIFICATION

All Ball Check valves in PVC, CPVC, PP or PVDF shall be Chemline BT or BC Series or equal with EPDM [FKM (Viton®) or PTFE coated FKM (Viton®)] seats and union ends. Sizes 1/2″ to 2″ shall be slip-out True Union style, sizes 2-1/2″ to 4″ shall be single union. The elastomer uniseat/seal shall function as both the ball seat and the union seal. Ball Check valves shall be rated 150 psi up to 2″ and 100 psi for sizes 2-1/2″ to 4″.

ORDERING EXAMPLE

Chemline Ball Check/Foot Valves	BT	A	020	E	S
Valve Type	**BT** – True Union Ball Check **BC** – Single Union Ball Check **FV** – Single Union Foot Valve **FT** – True Union Foot Valve				
Body Material	**A** – PVC **C** – CPVC **B** – PP **K** – PVDF				
Size	**005** – 1/2″ **007** – 3/4″ **010** – 1″ **012** – 1-1/4″ **015** – 1-1/2″ **020** – 2″ **025** – 2-1/2″ **030** – 3″ **040** – 4″				
Seals	**E** – EPDM **V** – FKM (Viton®) **T** – PTFE coated FKM (Viton®)				
Ends	**S** – Socket **T** – Threaded **F** – Flanged **B** – Butt[1] **CF** – ChemFlare™				

Example: Ball Check Valve, PVC, 2″, with EPDM seat, socket ends.

[1] PP and PVDF metric butt fusion ends (1/2″ to 2″) connect to Chemline PP and PVDF piping systems.

OPTIONS & ACCESSORIES

- **PTFE coated Uniseat/Seal**
- **Spring Loaded Ball** – Assists ball to seat faster

CHEMLINE PLASTICS
SUPERIOR FLOW SOLUTIONS

55 Guardsman Road, Thornhill, ON, L3T 6L2, Canada | ISO 9001:2008 Certified
tel.905.889.7890 | fax.905.889.8553 | request@chemline.com | chemline.com

CS-303-100 : Identification sheet

VWTC PROJECT NUMBER:	Iqaluit WWTP	REV:	01
PROJECT NAME:	5000218036	SUBMITTED TO (COMPANY):	
ENGINEER:	G. HÉBERT	SUBMITTED TO (RESPONSIBLE)	
PROJECT MANAGER:	C. BEKAERT	PROJECT NUM REFERENCE.:	
PHONE NUMBER:		LOT NUMBER:	

SUPPLIER	EQPT CODE	EQPT TAG NO	DIA	DESCRIPTION	INFO 1	INFO 2	INFO 3	APPLIC.	NOTE	REV
CHEMLINE	VARFPV207282	PSV-968	DIA: 25 mm (1")	RELIEF VALVES	TYPE: RELIEF VALVE | 150#//MANUFACTURER : CHEMLINE//MODEL : SB12A010EU//CONNECTION TYPE : UNION SOCKET | 25 mm (1")//BODY : PVC// SEAL | SEAT :EPDM | EPDM// STEM : N/A					1
CHEMLINE	VARFPV207282	PSV-969	DIA: 25 mm (1")	RELIEF VALVES	TYPE: RELIEF VALVE | 150#//MANUFACTURER : CHEMLINE//MODEL : SB12A010EU//CONNECTION TYPE : UNION SOCKET | 25 mm (1")//BODY : PVC// SEAL | SEAT :EPDM | EPDM// STEM : N/A					1

PDF Published September 17, 2014

SB12 Series Back Pressure/Relief Valves

CHEMLINE PLASTICS
SUPERIOR FLOW SOLUTIONS

PVC PP PVDF

CRN Registered as Category C Fittings Consult Chemline

NSF[3] Certified to NSF/ANSI 61

SERIES: SB12

SIZES: 3/8" – 4"

ENDS: True Union Socket, Threaded or ChemFlare™[1] Spigot[2] Bodies with Plain, Socket, Threaded or Flanged ends

DIAPHRAGM: PTFE Bonded EPDM

SEALS: EPDM, FKM (Viton®)



True Union Ends
Easy installation and maintenance

The Chemline SB Series Back Pressure/ Relief Valve has two functions. As a ***back pressure valve***, installed in-line downstream of a pump, the back pressure below the metering pump is maintained. When installed in the branch of a tee it is a ***pressure relief valve***. The valve stays closed until inlet pressure reaches the set pressure which is adjusted by turning the spring tensioning bolt. Inlet pressure acts upward against the piston allowing excess pressure to flow upwards through the orifice.

The SB12 Series has a built-in check valve function, desirable for dosing applications. It is not so sensitive as to open with every pulsation from a metering pump.

features

True Union Ends
- Easy installation and maintenance
- Eliminate chemical leakage problems common with old fashioned threaded connections

Long Cycling Life
- Dynamic seal is PTFE bonded EPDM for high chemical resistance
- This moulded diaphragm is designed for superior sealing and flex life

Superior Performance in Dosing Systems
- Valves are hydraulically designed for very low hysteresis ("backlash") and to eliminate chatter
- Built-in check (non-return) function
- Valve opening depends on inlet pressure only and is uneffected by changes in downstream (back) pressure

CRN Registration numbers by province
- Ontario: OC10134.5
- Newfoundland: OC10134.50
- Alberta: OC10134.52
- Saskatchewan/Manitoba/Quebec: OC10134.56
- New Brunswick: OC10134.57
- Nova Scotia: OC10134.58
- P.E.I.: OC10134.59
- British Columbia: not required

technical

Set Pressure Ranges
- 1/2" to 2" – 5 to 150 psi
- 2-1/2" and 3" – 7.5 to 150 psi
- 2-1/2" to 4" – 4 to 60 psi (optional)
- 4" – 7.5 to 90 psi

Maximum Viscosity
- 120cP is maximum recommended service viscosity

[1] For ChemFlare™ end connectors, consult Chemline.
[2] PP and PVDF spigot ends have DIN dimensions and will butt fuse directly to Chemline PP and PVDF piping systems.
[3] PVC valves with EPDM or FKM (Viton®) seals are certified under NSF/ANSI Standard 61 for contact with drinking water.

09/14 ©Chemline Plastics Limited 2014
Chemline is a registered trade mark of Chemline Plastics Limited

SB12 Series Back Pressure/Relief Valves 1/2" to 2"

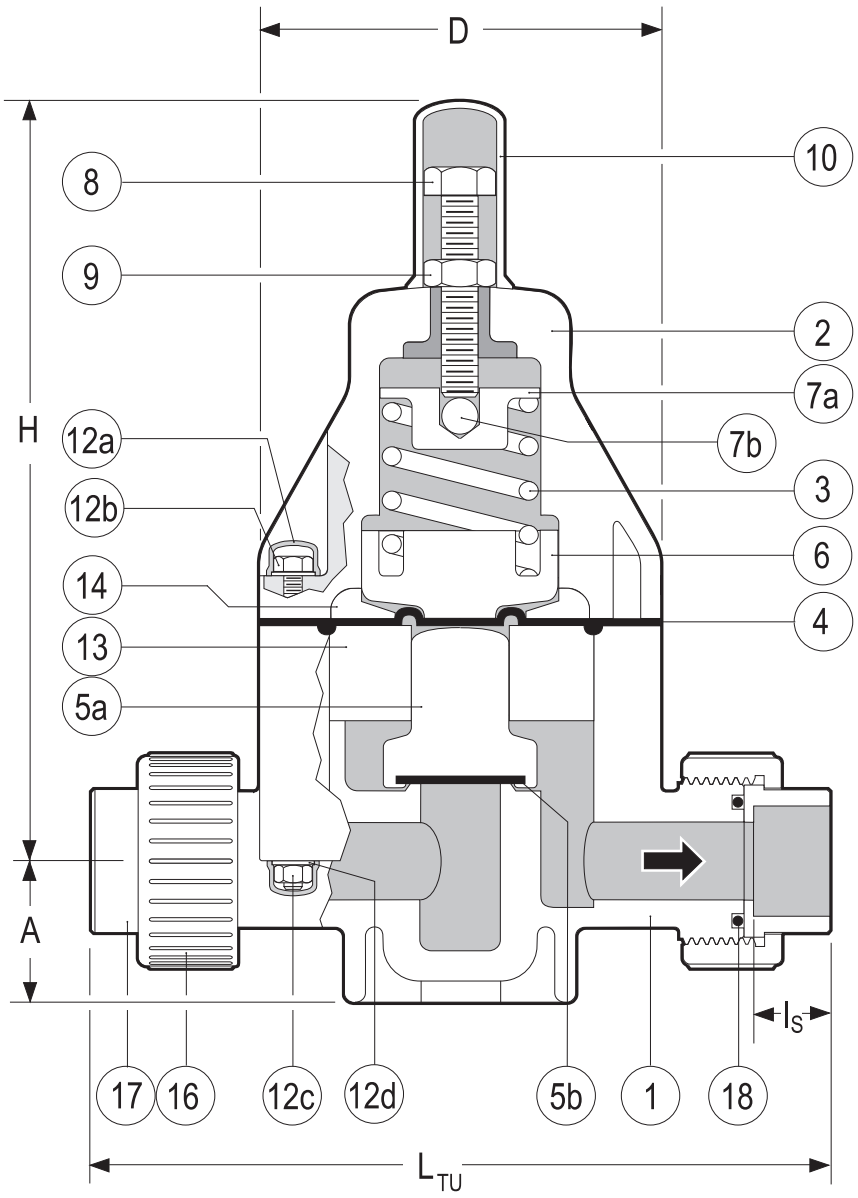

True Union Body

PARTS

▲ Recommended Spare Parts

No.	Part	Pcs.	Materials
1	Body	1	PVC, PP, PVDF
2	Bonnet	1	PPG
3	Spring	1	Galvanized Steel
4▲	Control Diaphragm	1	PTFE bonded EPDM
5a▲	Piston	1	PVC, PP, PVDF
5b▲	Seat	1	EPDM, FPM(Viton®)
6	Lower Spring Retainer	1	PPG
7a	Upper Spring Retainer	1	Cad. Plated Steel
7b	Ball	1	304 SS
8	Spring Tensioning Bolt	1	304 SS
9	Lock Nut	1	304 SS
10	Spring Bolt Cap	1	PE
12a	Bolt/Nut Cap	8/12[1]	PE
12b	Hex Bolt	4/6[1]	304 SS
12c	Hex Nut	4/6[1]	304 SS
12d	Washer	8/12[1]	304 SS
13	Spacer Disc	1	PVC, PP, PVDF
14	Pressure Plate	1	PP
16	Union Nut	2	PVC, PP, PVDF
17	End Connector	2	PVC, PP, PVDF
18▲	Face O-Ring	2	EPDM, FPM(Viton®)

[1] 1/2" size / 3/4" to 2" sizes

OTHER ENDS

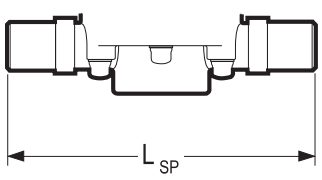

Spigot Body

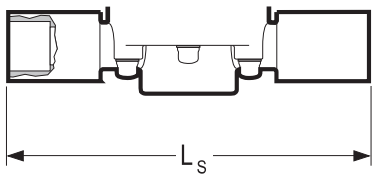

Socket

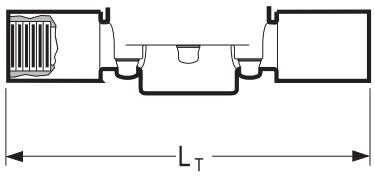

Threaded

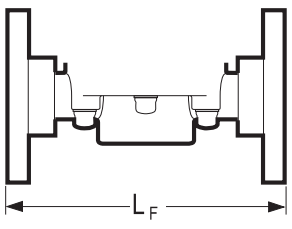

Flanged

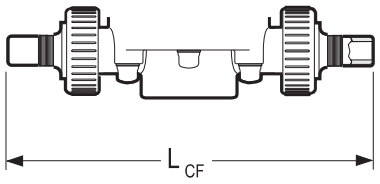

ChemFlare™

DIMENSIONS INCHES — WEIGHTS LB. — Cv VALUES

			PVC								PP and PVDF						
Size	D	H	A	I_S	L_{TU}[2]	L_{SP}[3]	L_S	L_T	L_F	L_{CF}	A	L_{SP}[3]	L_{TU}[2]	PVC	PP	PVDF	USGPM Flow at 1 psi △P
3/8"	3.2	6.9	1.0	0.6	6.5	5.7	7.4	7.2	4.5	8.2	0.9	5.7	**	1.8	1.5	2.2	2.1
1/2"	3.2	6.9	1.0	0.6	6.8	5.7	8.0	7.8	6.3	8.3[4]	0.9	5.7	7.1	1.9	1.6	2.4	3.0
3/4"	4.2	8.0	1.5	0.7	8.3	6.9	9.3	8.9	7.4	9.7	1.4	6.9	8.4	4.1	3.5	4.6	6.6
1"	4.2	8.0	1.5	0.9	8.5	6.9	9.6	9.3	7.4	10.2	1.4	6.9	8.7	4.2	3.5	4.7	8.7
1-1/4"	5.8	10.3	2.2	1.0	10.9	8.8	11.6	11.2	9.2	13.5	2.1	8.8	10.9	11.0	9.0	12.0	18.0
1-1/2"	5.8	10.3	2.2	1.2	11.1	8.8	12.2	11.5	9.5	–	2.1	8.8	11.2	11.2	9.2	12.2	20.0
2"	5.8	10.3	2.2	1.5	11.3	9.6	12.9	12.0	10.0	–	2.1	8.8	13.2	11.4	9.4	12.4	21.4

[2] True Union bodies come standard with socket ends. Threaded union ends are available. ** Consult Chemline.

[3] Spigot bodies are used for non union socket, threaded or flanged ends. All spigot ends have metric dimensions and the PP and PVDF spigots butt fuse directly to Chemline PP and PVDF piping. [4] Tube size can be reduced to 1/4" tube, LCF = 7.74" for 1/4", 8.26" for 3/8".

MAXIMUM PRESSURES PSI

	PVC				PP					PVDF					
Size	20°C 68°F	30°C 86°F	40°C 104°F	50°C 122°F	30°C 86°F	40°C 104°F	50°C 122°F	60°C 140°F	70°C 158°F	30°C 86°F	50°C 122°F	70°C 158°F	80°C 176°F	90°C 194°F	100°C 212°F
1/2"– 2"	150	105	60	15	150	90	60	37.5	15	150	100	60	45	30	15

Temperature Ranges: PVC 0 to 50°C (32 to 122°F), **PP** 10 to 70°C (50 to 158°F), **PVDF** –30 to 100°C (–22 to 212°F).

SB12 Series Back Pressure/Relief Valves 1/2” to 2”

pressure loss nomogram for SB12 valves 3/8” to 2”

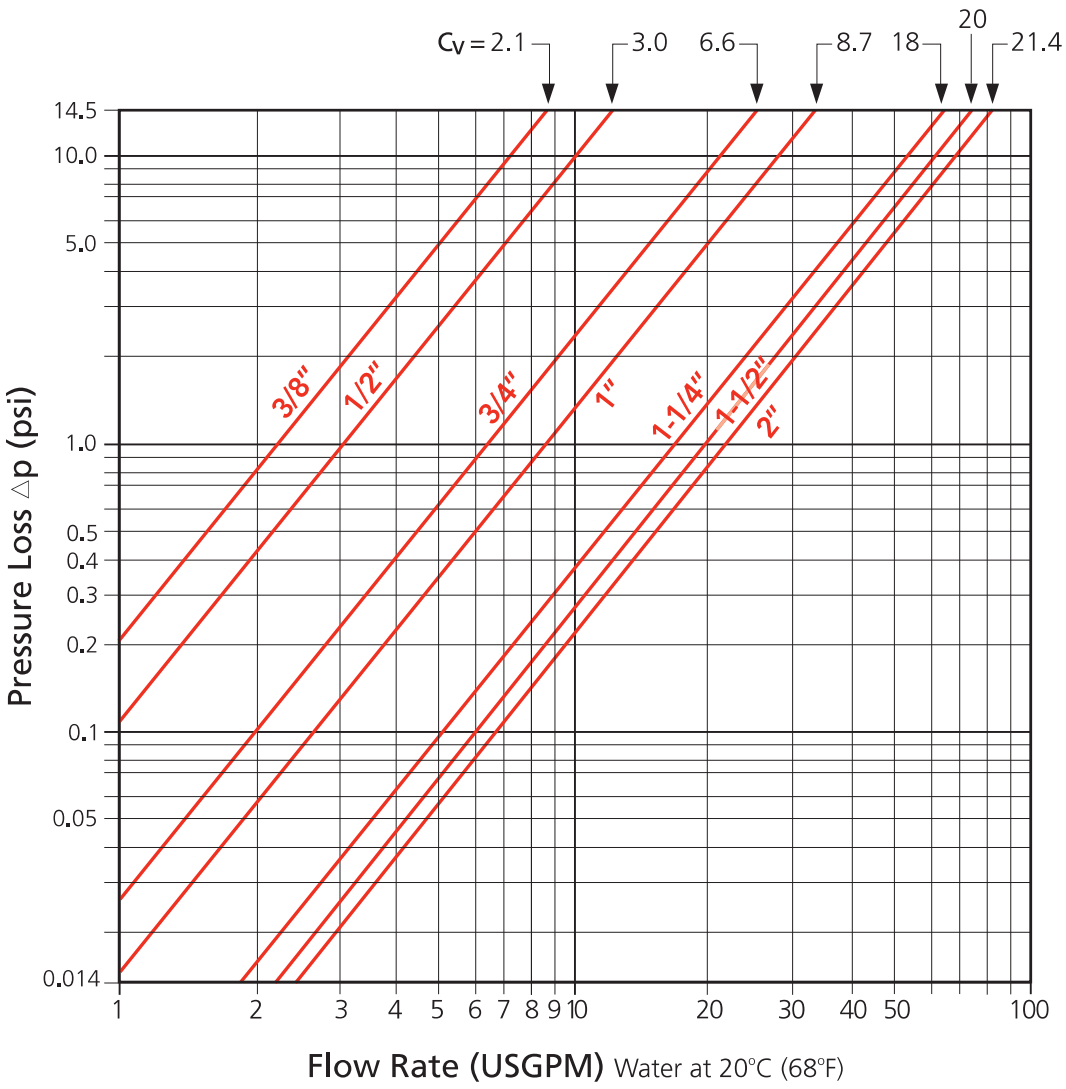

typical dosing system schematic

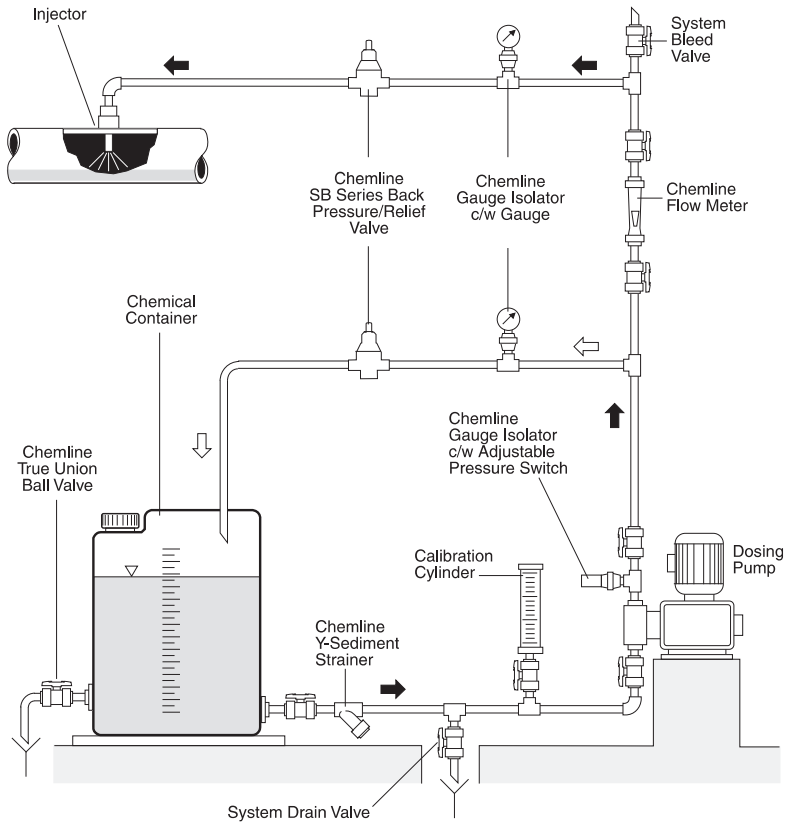

application of pressure relief valves

Constant System Pressure

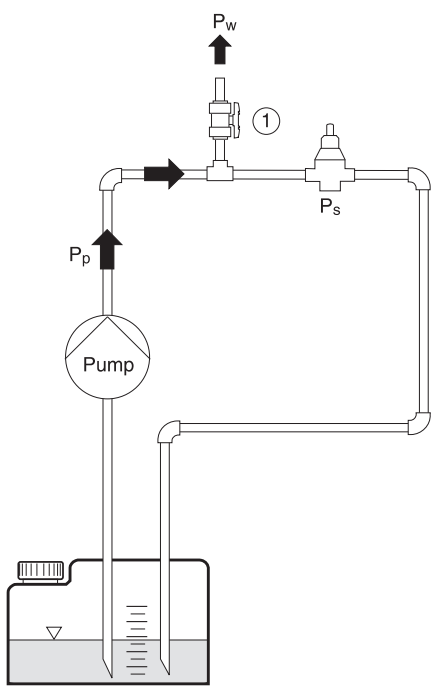

$P_p \geq P_w$
$P_p \geq P_s$ → valve opens
$P_p \leq P_s$ → valve closed

Consumer 1 and/or 2 Open, Valve Closes

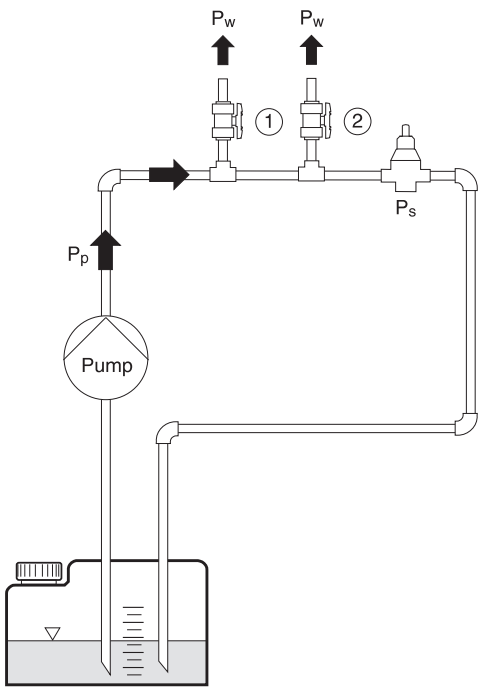

$P_p \geq P_s$ → valve opens
$P_p \leq P_s$ → valve closed

Non-Return Valve

Container 1 is located above the pump

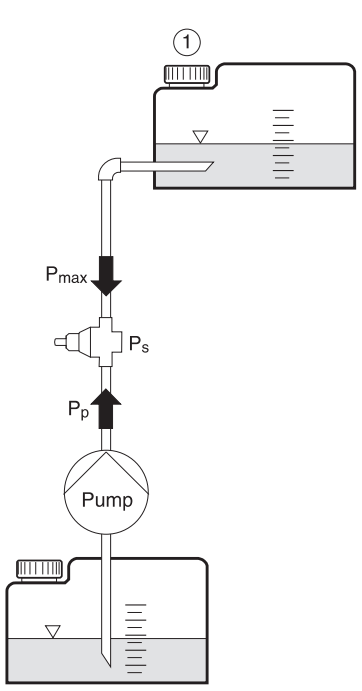

$P_s \geq P_{max}$
$P_p \geq P_s$ → valve opens
$P_p \leq P_s$ → valve closed

Overflow Valve

Pressure of container or application system should not exceed the maximum pressure value

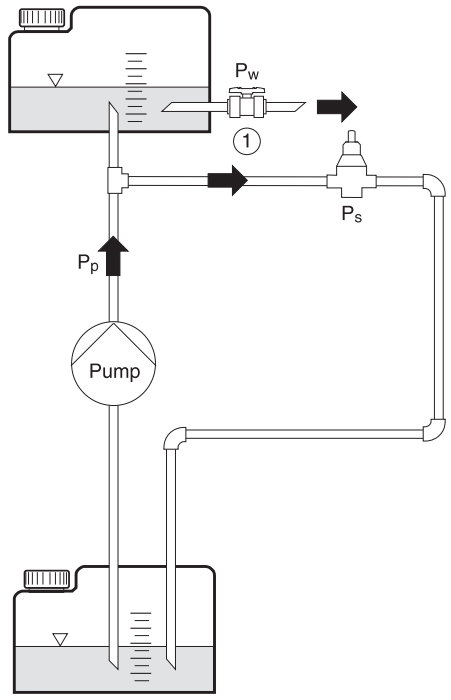

$P_s \leq P_w$
$P_p \geq P_s$ → valve opens
$P_p \leq P_s$ → valve closed

P_w = Working Pressure
P_p = Pump Pressure
P_s = Set Pressure

SB12 Series Back Pressure/Relief Valves 1/2" to 2"

working pressure vs. flow rate

The curves show the relationship between the working pressure and the approximate flow rate through the valve for water at 20°C (68°F) . These values will vary depending on:

- The configuration of the piping and the pressure losses associated with it
- The fluid if not water at 20°C (68°F)
- Whether the pressure is rising or falling, hysteresis is approximately 4 psi for 1/2" to 2" valves. For valves 2-1/2" to 4", hysteresis is approximately 14.5 psi.

operation examples

1. The valve is set closed at 100 psi. At a pressure increase of 10 psi, a flow of approximately 1.0 USGPM will be reached.
   - set pressure = 100 psi
   - working pressure = 110 psi
   - opening pressure = approximately 104 psi
2. The valve is set closed at 50 psi. At a pressure increase of 10 psi, a flow of approximately 1.0 USGPM will be reached.
   - set pressure = 50 psi
   - working pressure = 60 psi
   - opening pressure = approximately 54 psi

3/8" Valves

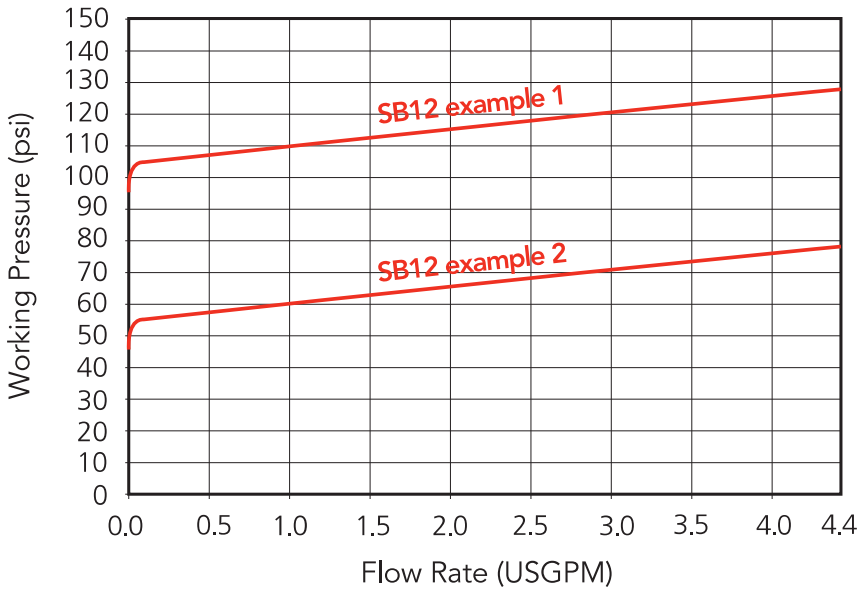

1/2" Valves

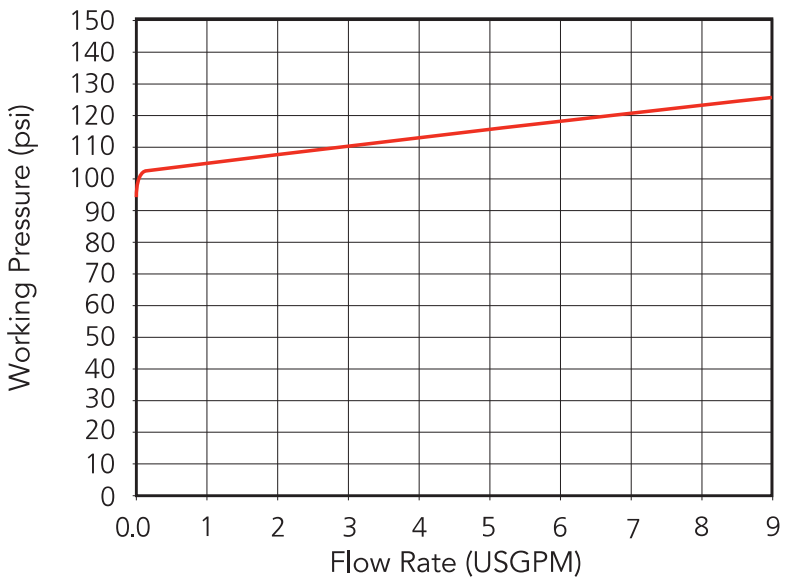

3/4" Valves

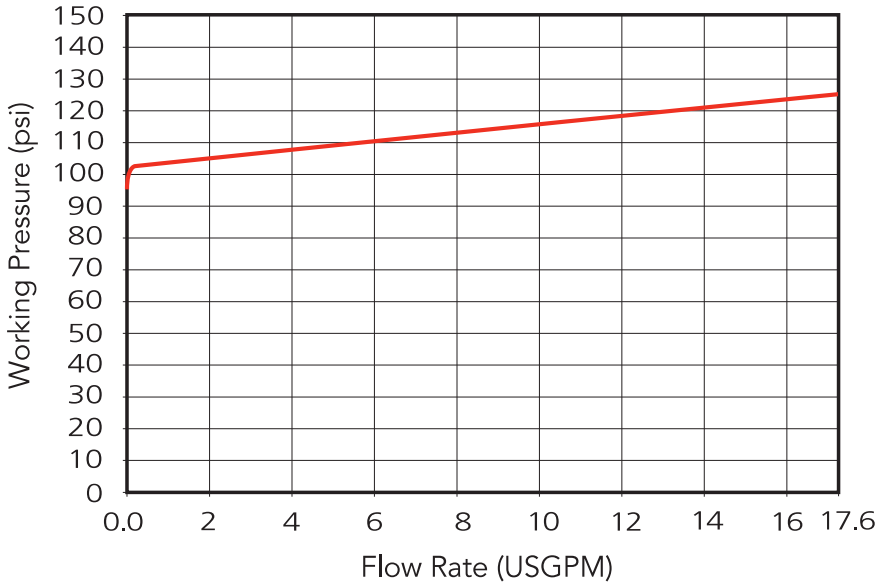

1" Valves

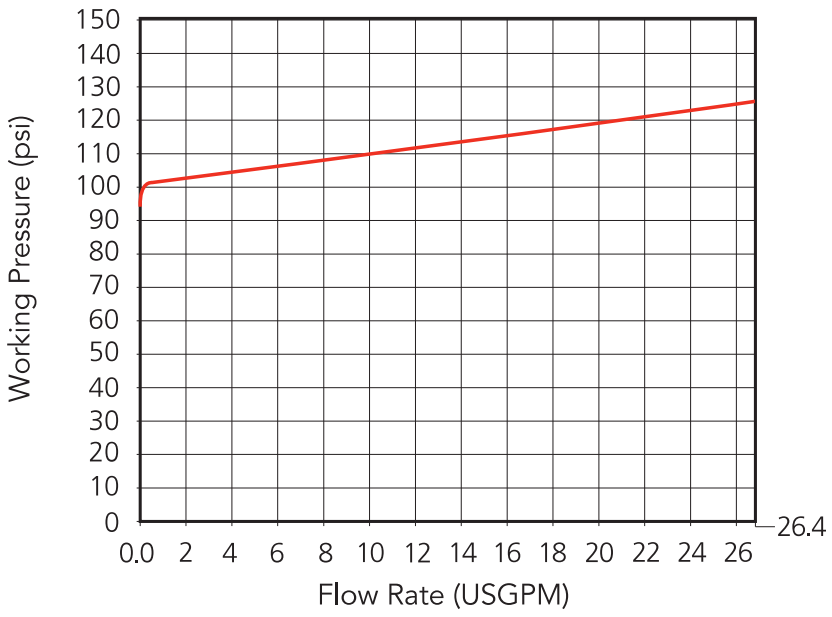

1-1/4" Valves

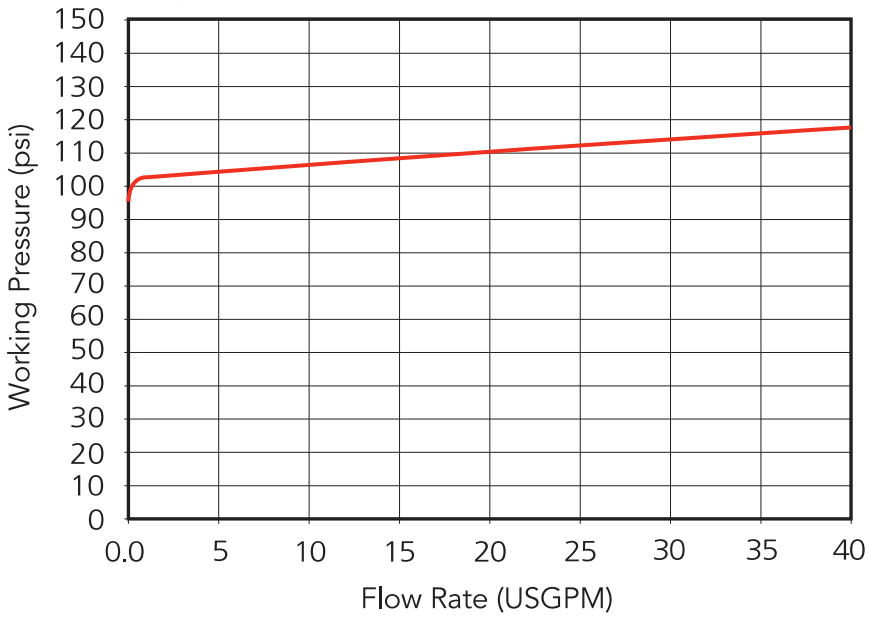

1-1/2" Valves

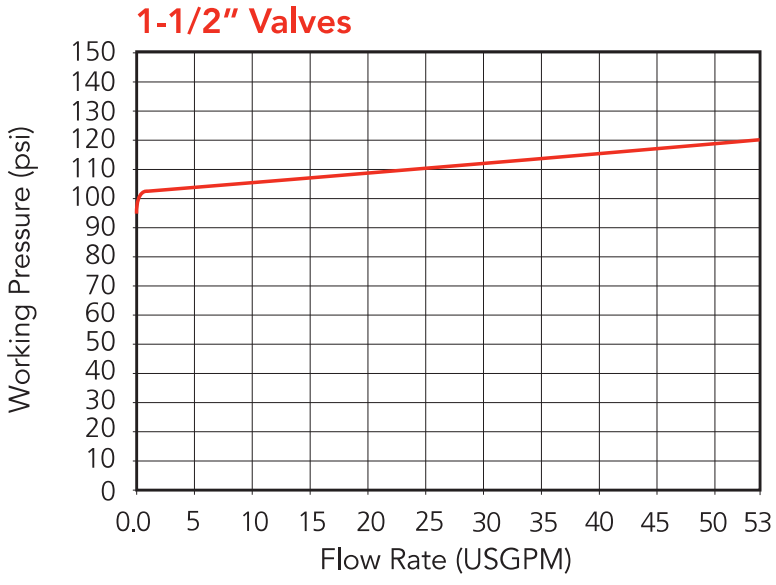

2" Valves

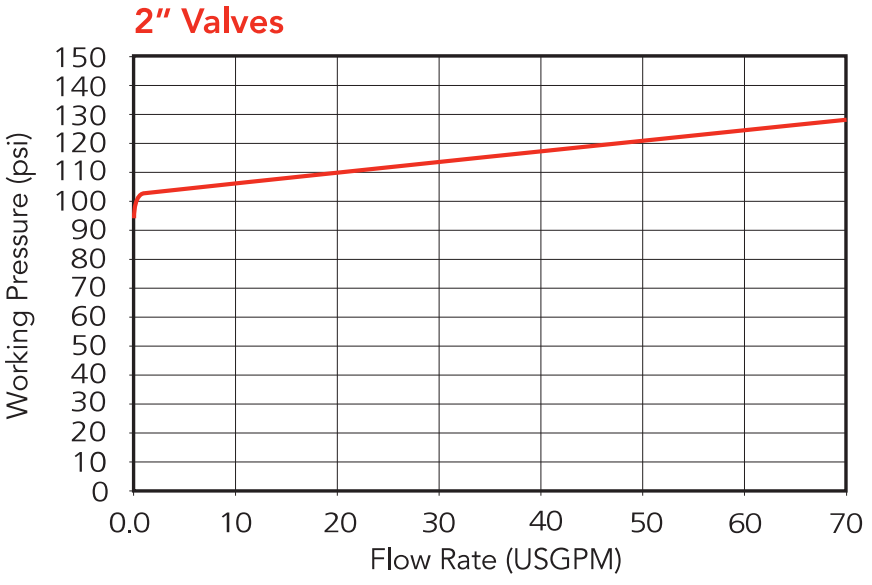

SB12 Series Back Pressure/Relief Valves 2-1/2" to 4"

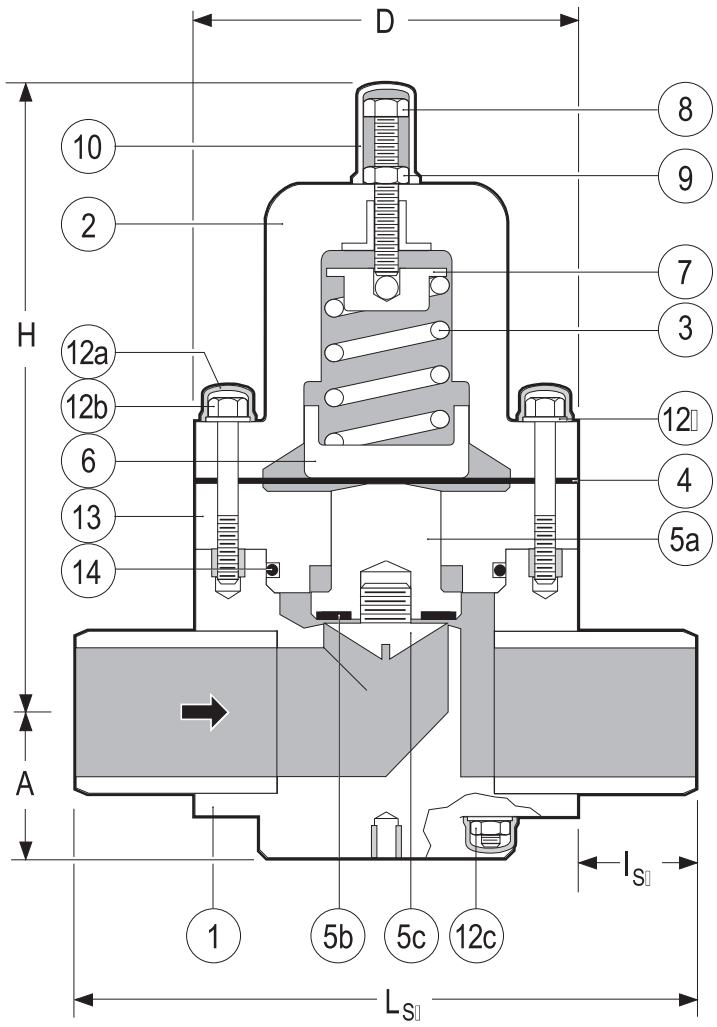

Spigot Body

PARTS

▲ Recommended Spare Parts

No.	Part	Pcs.	Materials
1	Body	1	PVC, PP, PVDF
2	Bonnet	1	PPG
3	Spring	1	Galvanized Steel
4▲	Control Diaphragm	1	PTFE bonded EPDM
5a▲	Piston	2	PVC, PP, PVDF
5b▲	Seat	1	EPDM, FPM(Viton®)
5c▲	Seat Retainer	1	PVC, PP, PVDF
6	Lower Spring Retainer	1	PPG
7	Upper Spring Retauner	1	304 SS
8	Spring Tensioning Bolt	1	304 SS
9	Lock Nut	1	304 SS
10	Spring Bolt Cap	1	PE
12a	Hex Bolt/Nut Cap	20	PE
12b	Hex Bolt/Stud	12[1]	304 SS
12c	Hex Nut	20	304 SS
12d	Washer	20	304 SS
13	Spacer Disc	1	PVC, PP, PVDF
14	Spacer O ring	1	EPDM, FPM(Viton®)

[1] 2 large upper bolts, 2 shorter lower bolts, 8 studs

OTHER ENDS

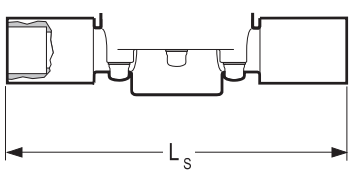

Socket

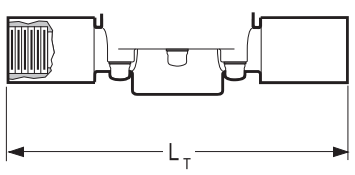

Threaded

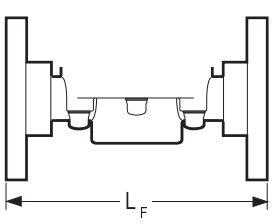

Flanged



ChemFlare™ Ends

- For connection to PFA tube. Leak-free connections for difficult services such as sodium hypochlorite

DIMENSIONS INCHES

WEIGHTS LB.

Cv VALUES

Size	PVC, PP & PVDF A	D	H	L_{SP}[2]	I_{SP}	PVC L_F	PVC	PP	PVDF	USGPM Flow at 1 psi △P
2-1/2"	2.7	6.9	11.1	11.2	2.1	12.2	20.9	15.4	24.6	41
3"	3.0	7.9	12.2	14.2	3.1	15.0	26.4	23.8	30.8	63
4"	3.7	9.8	14.2	16.5	3.3	16.9	33.0	26.4	37.4	98

[2] Plain spigot ends in PP & PVDF may be butt fused directly to Chemline PP & PVDF piping systems. Weights based on spigot bodies.

MAXIMUM PRESSURES PSI

Size	PVC 20°C 68°F	30°C 86°F	40°C 104°F	50°C 122°F	PP 20°C 68°F	30°C 86°F	40°C 104°F	50°C 122°F	60°C 140°F	70°C 158°F	PVDF 30°C 86°F	50°C 122°F	70°C 158°F	80°C 176°F	90°C 194°F	100°C 212°F
2-1/2"– 4"	150	90	44	15	150	116	90	60	37.5	15	150	90	55	40	30	15

Temperature Ranges: PVC 0 to 50°C (32 to 122°F), **PP** 10 to 70°C (50 to 158°F), **PVDF** –30 to 100°C (–22 to 212°F).

ORDERING EXAMPLE

Chemline Back Pressure/ Relief Valves	SB12	A	005	V	U
Body Material	**A** – PVC	**B** – PP	**K** – PVDF		
Size	**003** – 3/8" **010** – 1" **020** – 2"	**005** – 1/2" **012** – 1-1/4" **025** – 2-1/2"	**007** – 3/4" **015** – 1-1/2" **030** – 3"	**040** – 4"		
Elastomers	**E** – EPDM	**V** – FPM (Viton®)				
Ends	**S** – Socket **CFx** – ChemFlare™	**T** – Threaded	**F** – Flanged **Blank** – Spigot (Butt)	**U** – Union Socket		

Example: Chemline SB 12 Series, PVC, 1/2" diameter, FPM (Viton®) seals, Union socket ends.
x = 4 for 1/4", **6** for 3/8", **8** for 1/2", **12** for 1" ID tube connections.

OPTIONS

- 4 to 60 psi Pressure Range springs for 2-1/2" to 4" valves
- **Integral Pressure Gauge –** for inlet and/or outlet
- Bodies in 316 Stainless Steel and PTFE



Optional Pressure Gauge

- For inlet and/or outlet

SB12 Series Back Pressure/Relief Valves 2-1/2" to 4"

working pressure vs. flow rate

- Whether the pressure is rising or falling, hysteresis is approximately 14.5 psi for 2-1/2" to 4" valves

2-1/2" Valves / 4 to 60 psi set pressure range

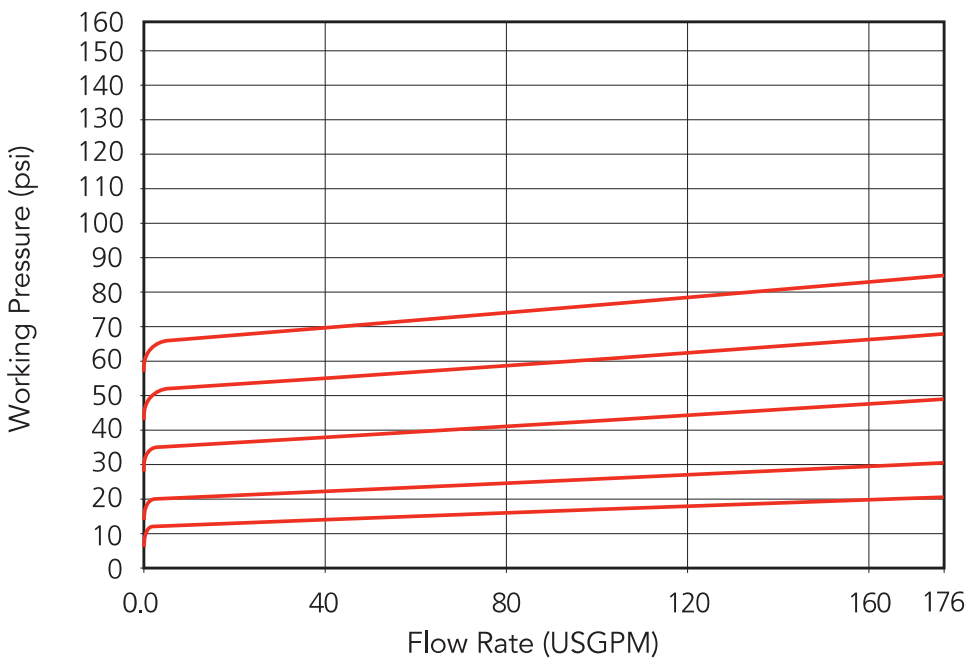

2-1/2" Valves / 7.5 to 150 psi set pressure range

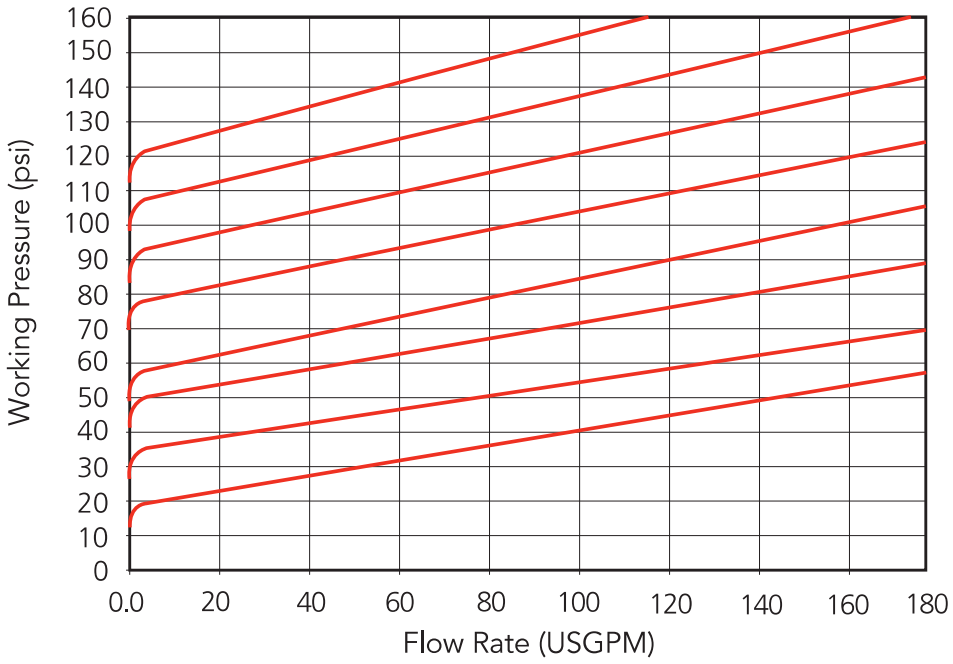

3" Valves / 4 to 60 psi set pressure range

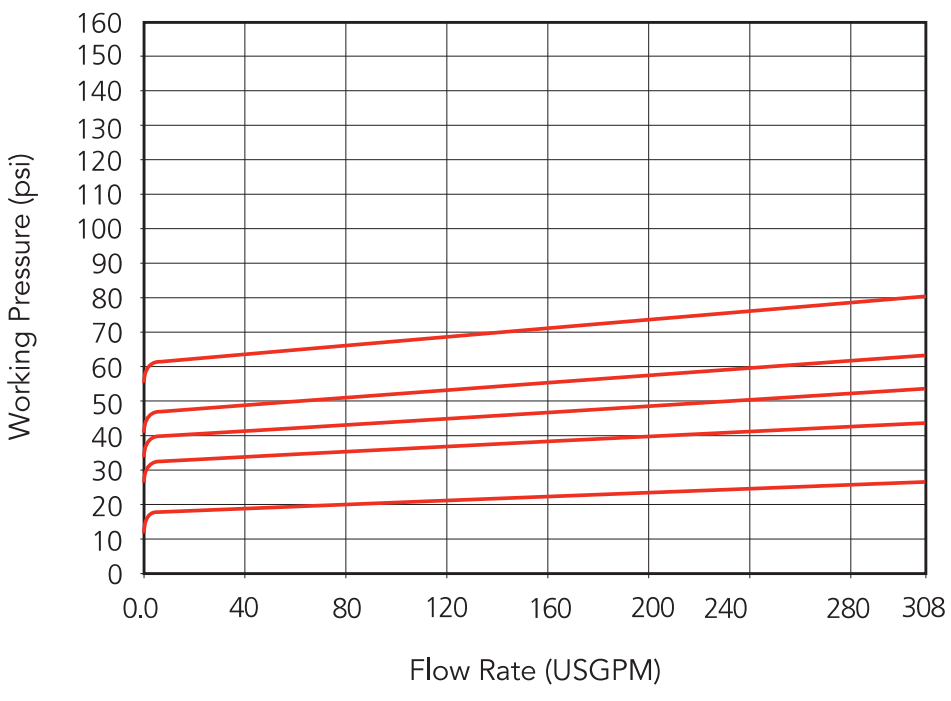

3" Valves / 7.5 to 150 psi set pressure range

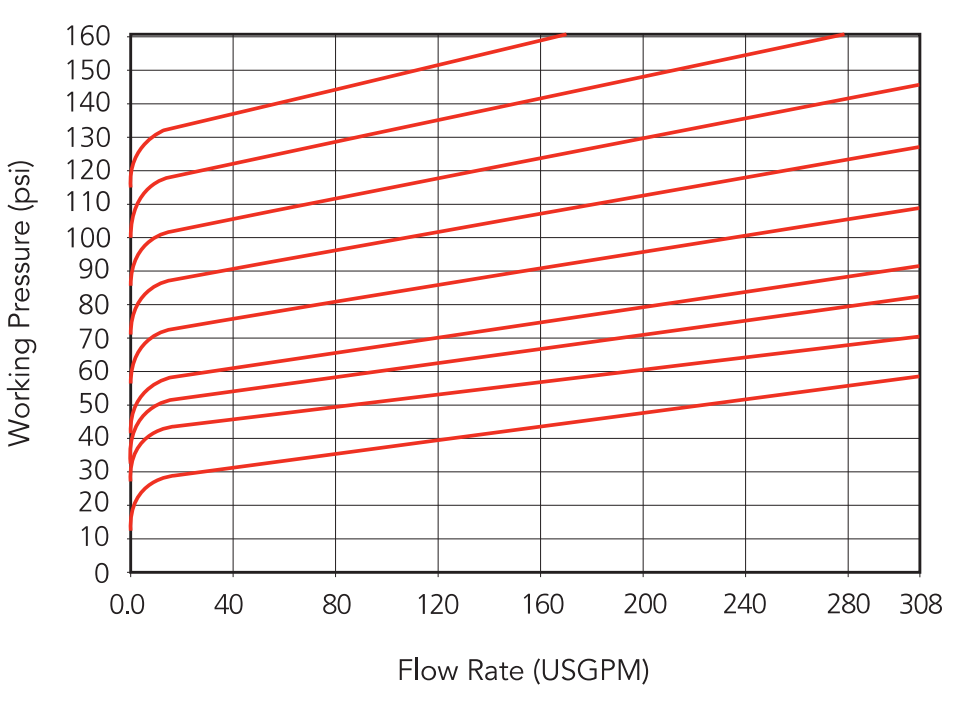

4" Valves / 4 to 60 psi set pressure range

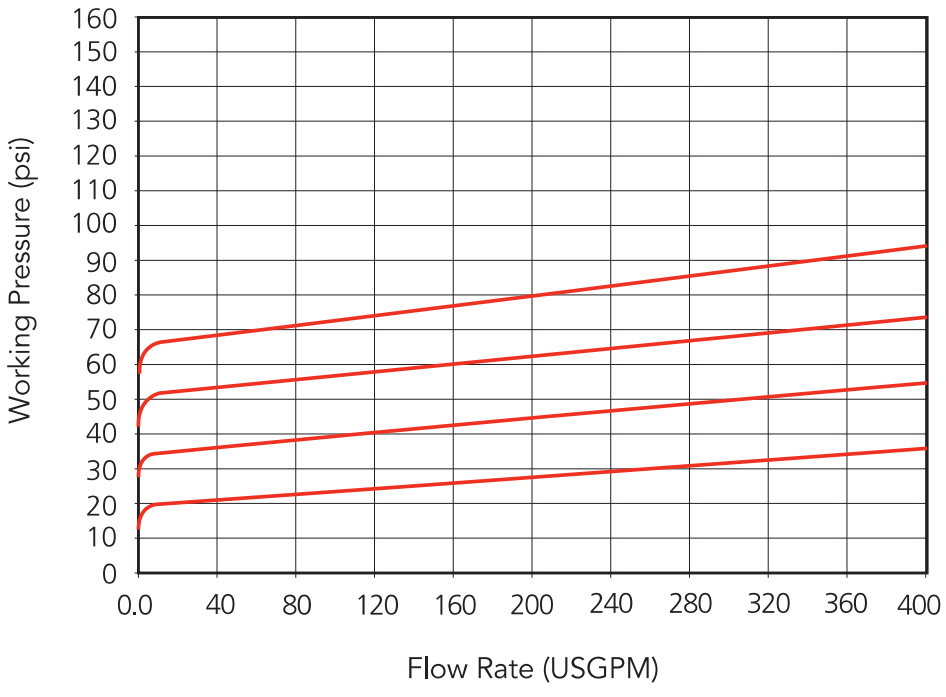

4" Valves / 7.5 to 90 psi set pressure range

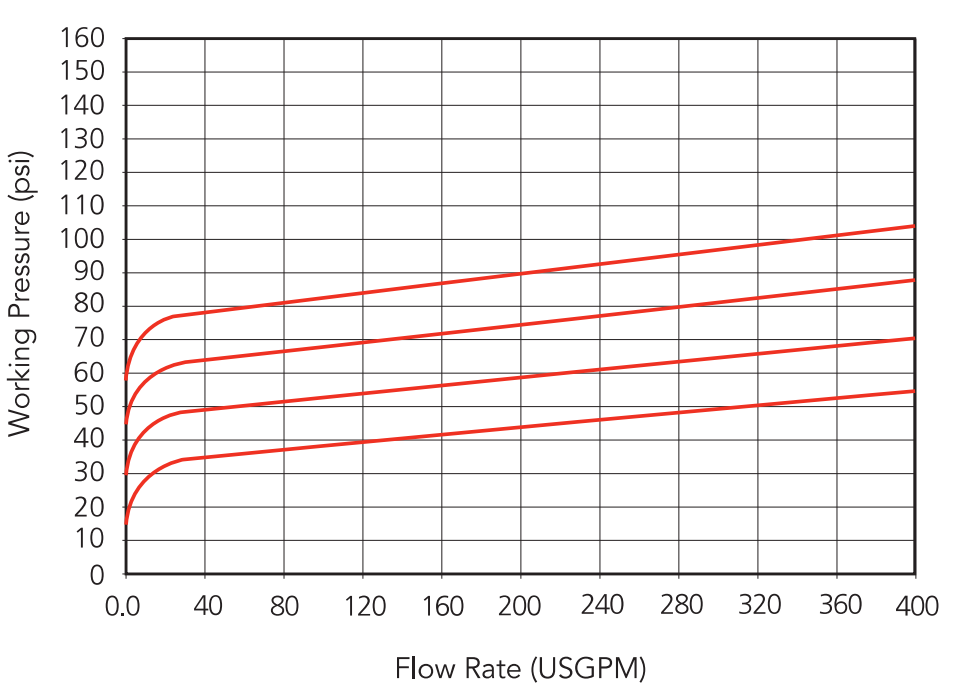

CHEMLINE PLASTICS
SUPERIOR FLOW SOLUTIONS

55 Guardsman Road, Thornhill, ON, L3T 6L2, Canada | ISO 9001:2008 Certified
tel.905.889.7890 | fax.905.889.8553 | request@chemline.com | chemline.com

CS-304-100 : Identification sheet

VWTC PROJECT NUMBER:	Iqaluit WWTP	REV:	01
PROJECT NAME:	5000218036	SUBMITTED TO (COMPANY):	
ENGINEER:	G. HÉBERT	SUBMITTED TO (RESPONSIBLE)	
PROJECT MANAGER:	C. BEKAERT	PROJECT NUM REFERENCE.:	
PHONE NUMBER:		LOT NUMBER:	

SUPPLIER	EQPT CODE	EQPT TAG NO	DIA	DESCRIPTION	INFO 1	INFO 2	INFO 3	APPLIC.	NOTE	REV
TEKNO VALVE	VASDBR308795	SV-04-982	N/A	ON/OFF VALVES - CARRIER WATER	TYPE: SOLENOID VALVE//MANUFACTURER : ASCO//MODEL : 8210G056//CONNECTION TYPE : THREADED | 38 mm (1 1/2") | 38 mm (1 1/2")//BODY : BRASS// SEAL | SEAT : | // STEM : N/A	ACTING : PILOT	NORMALLY : FERMÉ/CLOSED			1

Features

- Wide range of pressure ratings, sizes, and resilient materials provide long service life and low internal leakage
- High flow valves for liquid, corrosive, and air/inert gas service
- Industrial applications include:
  - Car wash
  - Laundry equipment
  - Air compressors
  - Industrial water control
  - Pumps

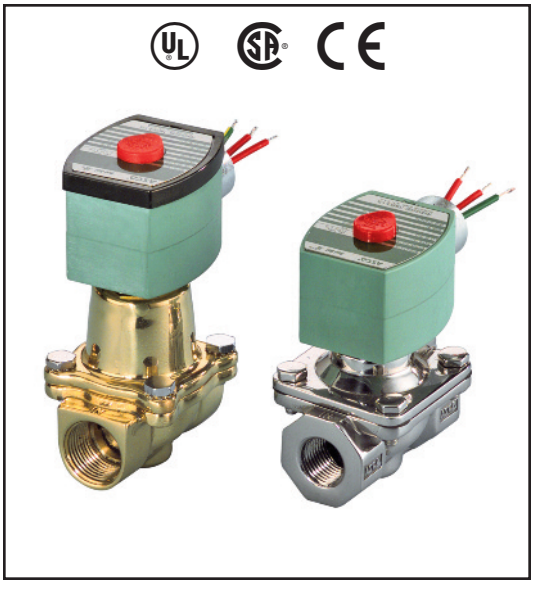

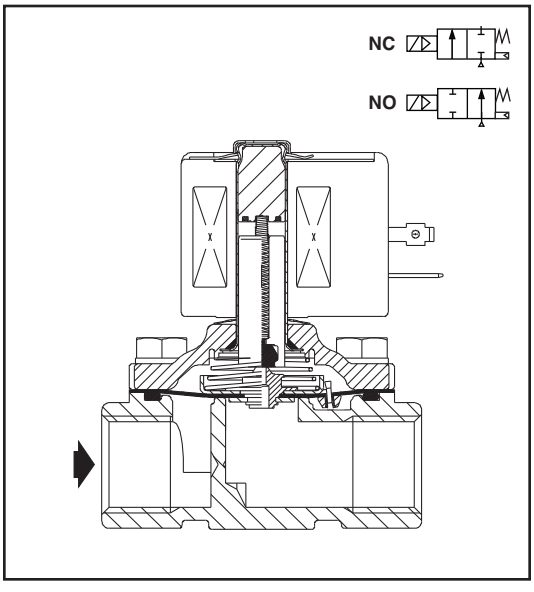

Construction

Valve Parts in Contact with Fluids		
Body	Brass	304 Stainless Steel*
Seals and Discs	NBR or PTFE	
Disc-Holder	PA	
Core Tube	305 Stainless Steel	
Core and Plugnut	430F Stainless Steel	
Springs	302 Stainless Steel	
Shading Coil	Copper	Silver

*Catalog Numbers 8210G127, 8210G129, 8210G132, 8210G133 have 316L Stainless Steel bodies.

Electrical

Standard Coil and Class of Insulation	Watt Rating and Power Consumption				Spare Coil Part Number			
		AC			General Purpose		Explosionproof	
	DC Watts	Watts	VA Holding	VA Inrush	AC	DC	AC	DC
F	-	6.1	16	40	238210	-	238214	-
F	11.6	10.1	25	70	238610	238710	238614	238714
F	16.8	16.1	35	180	272610	97617	272614	97617
F	-	17.1	40	93	238610	-	238614	-
F	-	20	43	240	99257	-	99257	-
F	-	20.1	48	240	272610	-	272614	-
F	30.8	-	-	-	-	501695	-	501696
H	40.6	-	-	-	-	238910	-	238914

Standard Voltages: 24, 120, 240, 480 volts AC, 60 Hz (or 110, 220 volts AC, 50 Hz). 6, 12, 24, 120, 240 volts DC. Must be specified when ordering.
Other voltages available when required.

Solenoid Enclosures

Standard: RedHat II - Watertight, Types 1, 2, 3, 3S, 4, and 4X; RedHat - Type I.

Optional: RedHat II - Explosionproof and Watertight, Types 3, 3S, 4, 4X, 6, 6P, 7, and 9; Red-Hat - Explosionproof and Watertight, Types 3, 4, 4X, 7, and 9.

(To order, add prefix "EF" to catalog number, except Catalog Numbers 8210B057, 8210B058, and 8210B059, which are not available with Explosionproof enclosures.)
See Optional Features Section for other available options.

Nominal Ambient Temp. Ranges

RedHat II/RedHat AC: 32°F to 125°F (0°C to 52°C)
RedHat II DC: 32°F to 104°F (0°C to 40°C)
RedHat DC: 32°F to 77°F (0°C to 25°C)
(104°F/40°C occasionally)
8210G227 AC: 32°F to 130°F (0°C to 54°C)
DC: 32°F to 90°F (0°C to 32°C)
Refer to Engineering Section for details.

Approvals

UL listed as indicated. CSA certified.
RedHat II meets applicable CE directives.
Refer to Engineering Section for details.

ATEX/IECEx certified with prefix "EV" as listed. *Refer to Optional Features Electrical Section for details.*

2/2 SERIES 8210

ASCO®

Specifications (English units)

Pipe Size (in)	Orifice Size (in)	Cv Flow Factor	Operating Pressure Differential (psi)							Max. Fluid Temp. °F		Brass Body			Stainless Steel Body			Watt Rating/ Class of Coil Insulation ⑦	
				Max. AC			Max. DC												
			Min.	Air-Inert Gas	Water	Light Oil @ 300 SSU	Air-Inert Gas	Water	Light Oil @ 300 SSU	AC	DC	Catalog Number	Const. Ref. ④	UL ⑤ Listing	Catalog Number	Const. Ref. ④	UL ⑤ Listing	AC	DC
NORMALLY CLOSED (Closed when de-energized), NBR or PTFE ② Seating																			
3/8	3/8	1.5	①	150	125	-	40	40	-	180	150	8210G073 ③	1P	●	8210G036 ③	1P	●	6.1/F	11.6/F
3/8	5/8	3	0	150	150	-	40	40	-	180	150	8210G093	5D	❍	-	-	-	10.1/F	11.6/F
3/8	5/8	3	5	200	150	135	125	100	100	180	150	8210G001 ▼	6D	❍	-	-	-	6.1/F	11.6/F
3/8	5/8	3	5	300	300	300	-	-	-	175	-	8210G006 ✓	5D	❍	-	-	-	17.1/F	-
1/2	7/16	2.2	①	150	125	-	40	40	-	180	150	8210G015 ③	2P	●	8210G037 ③	2P	●	6.1/F	11.6/F
1/2	5/8	4	0	150	150	-	40	40	-	180	150	8210G094 ✓	5D	❍	-	-	-	10.1/F	11.6/F
1/2	5/8	4	0	150	150	125	40	40	-	175	150	-	-	-	8210G087 ✓	7D	●	17.1/F	11.6/F
1/2	5/8	4	5	200	150	135	125	100	100	180	150	8210G002 ▼	6D	❍	-	-	-	6.1/F	11.6/F
1/2	5/8	4	5	300	300	300	-	-	-	175	-	8210G007	5D	❍	-	-	-	17.1/F	-
1/2	3/4	4	5	-	300	-	-	300	-	130	90	8210G227	5D	❍ †	-	-	-	17.1/F	40.6/H
3/4	5/8	4.5	0	150	150	125	40	40	-	175	150	-	-	-	8210G088 ✓	7D	●	17.1/F	11.6/F
3/4	3/4	5	5	125	125	125	100	90	75	180	150	8210G009 ▼	9D	❍	-	-	-	6.1/F	11.6/F
3/4	3/4	5	0	150	150	-	40	40	-	180	150	8210G095 ✓	8D	❍	-	-	-	10.1/F	11.6/F
3/4	3/4	6.5	5	250	150	100	125	125	125	180	150	8210G003 ▼	11D	❍	-	-	-	6.1/F	11.6/F
3/4	3/4	6	0	350	300	200	200	200	200	200	180	8210G026 ② ‡ ◆	40P/10D	●	-	-	-	16.1F	30.8/F
1	1	13	0	150	125	125	135	120	120	180	180	8210G054 ‡ ◆	41D/31D	●	8210G089 ‡ ◆	45D/15D	●	16.1/F	30.8/F
1	1	13	5	150	150	100	125	125	125	180	150	8210G004 ▼	12D	❍	-	-	-	6.1/F	11.6/F
1	1	13.5	0	300	225	115	-	-	-	200	-	8210G027 ‡	42P	●	-	-	-	20.1/F	-
1	1	13.5	10	300	300	300	-	-	-	175	-	8210G078 ②	13P	-	-	-	-	17.1/F	-
1 1/4	1 1/8	15	0	150	125	125	135	120	120	180	180	8210G055 ‡ ◆	43D/32D	●	-	-	-	16.1/F	30.8/F
1 1/4	1 1/8	15	5	150	150	100	125	125	125	180	150	8210G008 ▼	16D	❍	-	-	-	6.1/F	11.6/F
1 1/2	1 1/4	22.5	0	150	125	125	135	120	120	180	180	8210G056 ‡ ◆	44D/33D	●	-	-	-	16.1/F	30.8/F
1 1/2	1 1/4	22.5	5	150	150	100	125	125	125	180	150	8210G022 ▼	18D	●	8210G127	-	-	6.1/F	11.6/F
2	1 3/4	43	5	150	125	90	50	50	50	180	150	8210G100	20P	●	8210G129	-	-	6.1/F	11.6/F
2 1/2	1 3/4	45	5	150	125	90	50	50	50	180	150	8210G101	21P	●	-	-	-	6.1/F	11.6/F
NORMALLY OPEN (Open when de-energized), NBR Seating (PA Disc-Holder, except as noted)																			
3/8	5/8	3	0	150	150	125	125	125	80	180	150	8210G033	23D	●	-	-	-	10.1/F	11.6/F
3/8	5/8	3	5	250	200	200	250	200	200	180	180	8210G011 ⑧ ⑨	39D	●	-	-	-	10.1/F	11.6/F
1/2	5/8	4	0	150	150	125	125	125	80	180	150	8210G034 ✓	23D	●	-	-	-	10.1/F	11.6/F
1/2	5/8	3	0	150	150	100	125	125	80	180	150	-	-	-	8210G030 ✓	37D	●	10.1/F	11.6/F
1/2	5/8	4	5	250	200	200	250	200	200	180	180	8210G012 ⑧ ⑨	39D	●	-	-	-	10.1/F	11.6/F
3/4	3/4	5.5	0	150	150	125	125	125	80	180	150	8210G035 ✓	25D	●	-	-	-	10.1/F	11.6/F
3/4	5/8	3	0	150	150	100	125	125	80	180	150	-	-	-	8210G038 ✓	38D	●	10.1/F	11.6/F
3/4	3/4	6.5	5	-	-	-	250	200	200	-	180	8210C013	24D	●	-	-	-	-	16.8/F
3/4	3/4	6.5	5	250	200	200	-	-	-	180	-	8210G013	46D	●	-	-	-	16.1/F	-
1	1	13	0	125	125	125	-	-	-	180	-	8210B057 ⑥ ⑩	34D	●	-	-	-	20/F	-
1	1	13	5	-	-	-	125	125	125	-	180	8210D014	26D	●	-	-	-	-	16.8/F
1	1	13	5	150	150	125	-	-	-	180	-	8210G014	47D	●	-	-	-	16.1/F	-
1 1/4	1 1/8	15	0	125	125	125	-	-	-	180	-	8210B058 ⑥ ⑩	35D	●	-	-	-	20/F	-
1 1/4	1 1/8	15	5	-	-	-	125	125	125	-	180	8210D018	28D	●	-	-	-	-	16.8/F
1 1/4	1 1/8	15	5	150	150	125	-	-	-	180	-	8210G018	48D	●	-	-	-	16.1/F	-
1 1/2	1 1/4	22.5	0	125	125	125	-	-	-	180	-	8210B059 ⑥ ⑩	36D	●	-	-	-	20/F	-
1 1/2	1 1/4	22.5	5	-	-	-	125	125	125	-	180	8210D032	29D	●	-	-	-	-	16.8/F
1 1/2	1 1/4	22.5	5	150	150	125	-	-	-	180	-	8210G032	49D	●	8210G132	-	-	16.1/F	-
2	1 3/4	43	5	-	-	-	125	125	125	-	150	8210 103	30P	●	-	-	-	-	16.8/F
2	1 3/4	43	5	125	125	125	-	-	-	180	-	8210G103	50P	●	8210G133	-	-	16.1/F	-
2 1/2	1 3/4	45	5	-	-	-	125	125	125	-	150	8210 104	27P	●	-	-	-	-	16.8/F
2 1/2	1 3/4	45	5	125	125	125	-	-	-	180	-	8210G104	51P	●	-			16.1/F	-

① 5 psi on Air; 1 psi on Water.
② Valve provided with PTFE main disc.
③ Valve includes Ultem (G.E. trademark) piston.
④ Letter "D" denotes diaphragm construction; "P" denotes piston construction.
⑤ ❍ Safety Shutoff Valve; ● General Purpose Valve.
Refer to Engineering Section (Approvals) for details.
⑥ Valves not available with Explosionproof enclosures.
⑦ On 50 hertz service, the watt rating for the 6.1/F solenoid is 8.1 watts.
⑧ AC construction also has PA seating.
⑨ No disc-holder.
⑩ Stainless steel disc-holder.
† UL listed for fire protection systems per UL429A.
‡ DC constructions must have solenoid mounted vertical and upright.
✓ ATEX/IECEx certified with prefix "EV".
▼ ATEX/IECEx certified for DC only with prefix "EV".
◆ Not available in 6 Volt DC. EF and HB prefix only.

Specifications (Metric units)

Pipe Size (in)	Orifice Size (mm)	Kv Flow Factor (m^3/hr)	Operating Pressure Differential (bar)							Max. Fluid Temp. °C		Brass Body			Stainless Steel Body			Watt Rating/ Class of Coil Insulation ⑦	
				Max. AC			Max. DC												
			Min.	Air-Inert Gas	Water	Light Oil @ 300 SSU	Air-Inert Gas	Water	Light Oil @ 300 SSU	AC	DC	Catalog Number	Const. Ref. ④	UL ⑤ Listing	Catalog Number	Const. Ref. ④	UL ⑤ Listing	AC	DC
NORMALLY CLOSED (Closed when de-energized), NBR or PTFE ② Seating																			
3/8	10	1.3	①	10	9	-	3	3	-	82	65	8210G073 ③	1P	●	8210G036 ③	1P	●	6.1/F	11.6/F
3/8	16	2.6	0	10	10	-	3	3	-	82	65	8210G093	5D	❍	-	-	-	10.1/F	11.6/F
3/8	16	2.6	0.3	14	10	9	9	7	7	82	65	8210G001 ▼	6D	❍	-	-	-	6.1/F	11.6/F
3/8	16	2.6	0.3	21	21	21	-	-	-	79	-	8210G006 ✓	5D	❍	-	-	-	17.1/F	-
1/2	11	1.9	①	10	9	-	3	3	-	82	65	8210G015 ③	2P	●	8210G037 ③	2P	●	6.1/F	11.6/F
1/2	16	3.4	0	10	10	-	3	3	-	82	65	8210G094 ✓	5D	❍	-	-	-	10.1/F	11.6/F
1/2	16	3.4	0	10	10	9	3	3	-	79	65	-	-	-	8210G087 ✓	7D	●	17.1/F	11.6/F
1/2	16	3.4	0.3	14	10	9	9	7	7	82	65	8210G002 ▼	6D	❍	-	-	-	6.1/F	11.6/F
1/2	16	3.4	0.3	21	21	21	-	-	-	79	-	8210G007	5D	❍	-	-	-	17.1/F	-
1/2	19	3.4	0.3	-	21	-	-	21	-	54	32	8210G227	5D	❍ †	-	-	-	17.1/F	40.6H
3/4	16	3.9	0	10	10	9	3	3	-	79	65	-	-	-	8210G088 ✓	7D	●	17.1/F	11.6/F
3/4	19	4.3	0.3	9	9	9	7	6	5	82	65	8210G009 ▼	9D	❍	-	-	-	6.1/F	11.6/F
3/4	19	4.3	0	10	10	-	3	3	-	82	65	8210G095 ✓	8D	❍	-	-	-	10.1/F	11.6/F
3/4	19	5.6	0.3	17	10	7	9	9	9	82	65	8210G003 ▼	11D	❍	-	-	-	6.1/F	11.6/F
3/4	19	5.1	0	24	21	14	14	14	14	93	82	8210G026 ② ‡ ◆	40P/10D	●	-	-	-	16.1F	30.8/F
1	25	11	0	10	9	9	9	8	8	82	82	8210G054 ‡ ◆	41D/31D	●	8210G089 ‡ ◆	45D/15D	●	16.1/F	30.8/F
1	25	11	0.3	10	10	7	9	9	9	82	65	8210G004 ▼	12D	❍	-	-	-	6.1/F	11.6/F
1	25	11.5	0	21	16	8	-	-	-	93	-	8210G027 ‡	42P	●	-	-	-	20.1/F	-
1	25	11.5	0.7	21	21	21	-	-	-	79	-	8210G078 ②	13P	-	-	-	-	17.1/F	-
1 1/4	29	13	0	10	9	9	9	8	8	82	82	8210G055 ‡ ◆	43D/32D	●	-	-	-	16.1/F	30.8/F
1 1/4	29	13	0.3	10	10	7	9	9	9	82	65	8210G008 ▼	16D	❍	-	-	-	6.1/F	11.6/F
1 1/2	32	19.5	0	10	9	9	9	8	8	82	82	8210G056 ‡ ◆	44D/33D	●	-	-	-	16.1/F	30.8/F
1 1/2	32	19.5	0.3	10	10	7	9	9	9	82	65	8210G022 ▼	18D	●	8210G127	-	-	6.1/F	11.6/F
2	44	37	0.3	10	9	6	3	3	3	82	65	8210G100	20P	●	8210G129	-	-	6.1/F	11.6/F
2 1/2	44	39	0.3	10	9	6	3	3	3	82	65	8210G101	21P	●	-	-	-	6.1/F	11.6/F
NORMALLY OPEN (Open when de-energized), NBR Seating (PA Disc-Holder, except as noted)																			
3/8	16	2.6	0.0	10	10	9	9	9	6	82	65	8210G033	23D	●	-	-	-	10.1/F	11.6/F
3/8	16	2.6	0.3	17	14	14	17	14	14	82	82	8210G011 ⑧ ⑨	39D	●	-	-	-	10.1/F	11.6/F
1/2	16	3.4	0	10	10	9	9	9	6	82	65	8210G087 ✓	7D	●	-	-	-	10.1/F	11.6/F
1/2	16	2.6	0	10	10	7	9	9	6	82	65	-	-	-	8210G087 ✓	7D	●	10.1/F	11.6/F
1/2	16	3.4	0.3	17	14	14	17	14	14	82	82	8210G012 ⑧ ⑨	39D	●	-	-	-	10.1/F	11.6/F
3/4	19	4.7	0	10	10	9	9	9	6	82	65	8210G087 ✓	7D	●	-	-	-	10.1/F	11.6/F
3/4	16	2.6	0	10	10	7	9	9	6	82	65	-	-	-	8210G087 ✓	7D	●	10.1/F	11.6/F
3/4	19	5.6	0.3	-	-	-	17	14	14	-	82	8210C013	24D	●	-	-	-	-	16.8/F
3/4	19	5.6	0.3	17	14	14	-	-	-	82	-	8210G013	46D	●	-	-	-	16.1/F	-
1	25	11	0	9	9	9	-	-	-	82	-	8210B057 ⑥ ⑩	34D	●	-	-	-	20/F	-
1	25	11	0.3	-	-	-	9	9	9	-	82	8210D014	26D	●	-	-	-	-	16.8/F
1	25	11	0.3	10	10	9	-	-	-	82	-	8210G014	47D	●	-	-	-	16.1/F	-
1 1/4	29	13	0	9	9	9	-	-	-	82	-	8210B058 ⑥ ⑩	35D	●	-	-	-	20/F	-
1 1/4	29	13	0.3	-	-	-	9	9	9	-	82	8210D018	28D	●	-	-	-	-	16.8/F
1 1/4	29	13	0.3	10	10	9	-	-	-	82	-	8210G018	48D	●	-	-	-	16.1/F	-
1 1/2	32	19.5	0	9	9	9	-	-	-	82	-	8210B059 ⑥ ⑩	36D	●	-	-	-	20/F	-
1 1/2	32	19.5	0.3	-	-	-	9	9	9	-	82	8210D032	29D	●	-	-	-	-	16.8/F
1 1/2	32	19.5	0.3	10	10	9	-	-	-	82	-	8210G032	49D	●	8210G132	-	-	16.1/F	-
2	44	37	0.3	-	-	-	9	9	9	-	65	8210 103	30P	●	-	-	-	-	16.8/F
2	44	37	0.3	9	9	9	-	-	-	82	-	8210G103	50P	●	8210G133	-	-	16.1/F	-
2 1/2	44	39	0.3	-	-	-	9	9	9	-	65	8210 104	27P	●	-	-	-	-	16.8/F
2 1/2	44	39	0.3	9	9	9	-	-	-	82	-	8210G104	51P	●	-	-	-	16.1/F	-

① 0.3 bar on Air; 0.0 bar on Water.
② Valve provided with PTFE main disc.
③ Valve includes ULtem (G.E. trademark) piston.
④ Letter "D" denotes diaphragm construction; "P" denotes piston construction.
⑤ ❍ Safety Shutoff Valve; ● General Purpose Valve.
Refer to Engineering Section (Approvals) for details.
⑥ Valves not available with Explosionproof enclosures.
⑦ On 50 hertz service, the watt rating for the 6.1/F solenoid is 8.1 watts.
⑧ AC construction also has PA seating.
⑨ No disc-holder.
⑩ Stainless steel disc-holder.
† UL listed for fire protection systems per UL429A.
‡ DC constructions must have solenoid mounted vertical and upright.
✓ ATEX/IECEx certified with prefix "EV".
▼ ATEX/IECEx certified for DC only with prefix "EV".
◆ Not available in 6 Volt DC. EF and HB prefix only.

Dimensions: inches (mm)

Const. Ref.		H	K	L	P	W
1*	in	3.85	3.00	1.91	3.41	1.69
	mm	98	76	49	87	43
2*	in	4.17	3.25	2.28	3.63	1.69
	mm	106	83	58	92	43
5	in	3.84	2.31	2.75	3.28	2.28
	mm	98	59	70	83	58
6*	in	3.38	1.94	2.75	2.80	2.28
	mm	86	49	70	71	58
7	in	4.19	2.50	2.81	3.47	2.39
	mm	106	64	71	88	61
8	in	4.13	2.47	2.81	3.44	2.29
	mm	105	63	71	87	58
9*	in	3.66	2.10	2.81	2.96	2.28
	mm	93	53	71	75	58
10*	in	5.20	3.40	2.80	4.50	2.50
	mm	131	86	71	114	62
11*	in	4.16	2.66	3.84	3.52	2.75
	mm	106	68	98	89	70
12	in	5.64	3.15	3.75	4.01	3.36
	mm	143	80	95	102	85
13	in	4.44	3.22	3.75	4.19	5.81
	mm	113	82	95	106	147
15*	in	5.20	3.30	3.80	4.40	3.80
	mm	133	83	98	111	98
16	in	5.64	3.15	3.66	4.01	3.56
	mm	143	80	93	102	90
18*	in	6.11	3.30	4.38	4.16	3.92
	mm	155	84	111	106	100
20*	in	7.33	3.71	5.06	4.57	4.87
	mm	186	94	129	116	124
21*	in	7.33	3.71	5.50	4.57	4.87
	mm	186	94	140	116	124
23	in	4.35	2.65	2.75	3.79	2.28
	mm	110	67	70	96	58
24	in	5.06	X	3.78	4.44	2.75
	mm	129	X	96	113	70
25	in	4.64	2.81	2.81	3.94	2.28
	mm	118	71	71	100	58
26	in	6.53	X	3.75	4.91	3.19
	mm	166	X	95	125	81
27	in	8.22	X	5.50	5.47	4.87
	mm	209	X	140	139	124
28	in	6.53	X	3.66	4.91	3.19
	mm	166	X	93	125	81
29	in	7.03	X	4.38	5.06	4.40
	mm	179	X	111	129	112

* DC dimensions slightly larger.
IMPORTANT: Valves may be mounted in any position, except as noted in specifications table.

Const. Ref. 1, 2

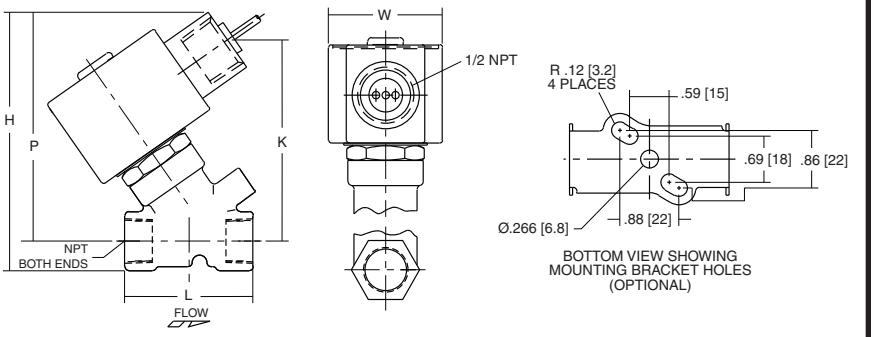

Const. Ref. 13

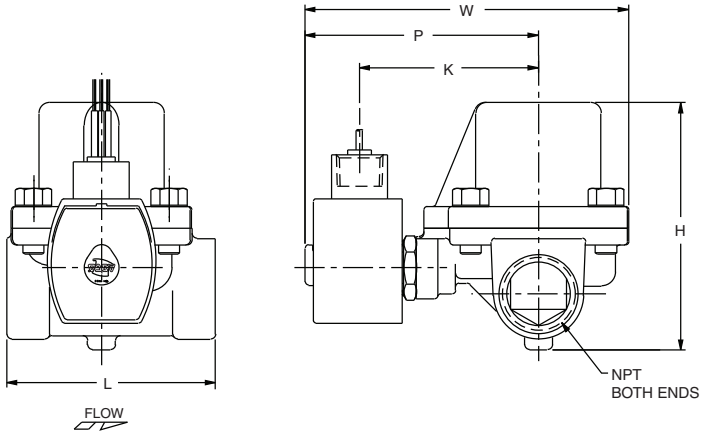

Const. Ref. 5-9, 11, 23 , 25, 37,38, 40-46

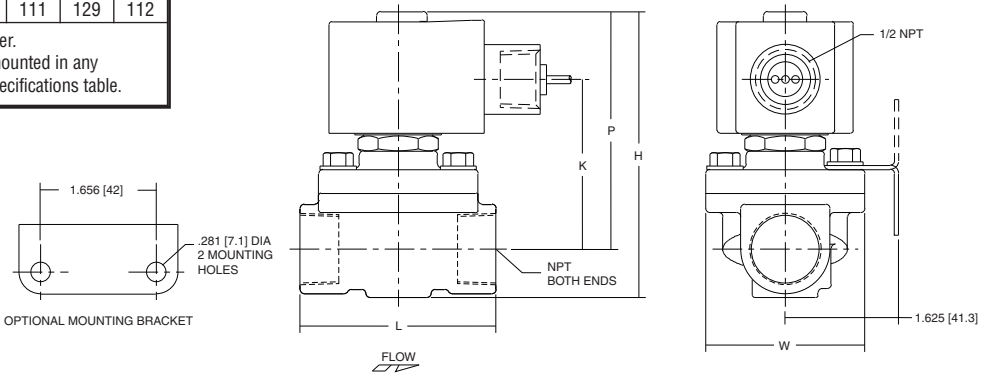

Dimensions: inches (mm)

Const. Ref.		H	K	L	P	W
30	in	8.22	X	5.06	5.47	4.87
	mm	209	X	129	139	124
31	in	5.13	3.19	3.76	4.32	3.27
	mm	130	81	95	110	83
32	in	5.60	3.44	3.66	4.57	3.27
	mm	142	87	93	116	83
33	in	5.92	3.66	4.51	4.80	3.89
	mm	150	93	115	122	99
34	in	6.91	X	3.75	6.09	3.25
	mm	176	X	95	155	83
35	in	7.34	X	3.66	6.34	3.25
	mm	186	X	93	161	83
36	in	7.66	X	4.38	6.56	3.91
	mm	1.95	X	111	167	99
37	in	4.61	2.75	2.81	3.89	2.39
	mm	117	70	71	99	61
38	in	4.61	2.75	2.81	3.89	2.39
	mm	117	70	71	99	61
39	in	5.42	2.31	2.75	4.86	3.80
	mm	138	59	70	123	97
40	in	5.20	3.29	2.81	4.50	2.28
	mm	132	83	71	114	58
41	in	5.13	3.10	3.75	4.32	3.25
	mm	130	79	95	110	83
42	in	6.43	4.40	3.93	5.62	3.25
	mm	163	112	100	143	83
43	in	5.57	3.35	3.66	4.57	3.25
	mm	142	85	93	116	83
44	in	5.90	3.57	4.38	4.79	3.91
	mm	150	91	111	122	99
45	in	5.26	3.17	3.75	4.38	3.84
	mm	134	81	95	111	98
46	in	4.95	3.10	3.84	4.31	2.75
	mm	126	79	98	110	70
47	in	6.43	3.59	3.75	4.81	3.52
	mm	163	91	95	122	90
48	in	6.43	3.59	3.66	4.81	3.73
	mm	163	91	93	122	95
49	in	6.91	3.75	4.38	4.96	4.40
	mm	176	95	111	126	112
50	in	8.13	4.15	5.06	5.37	4.87
	mm	207	105	129	136	124
51	in	8.13	4.15	5.50	5.37	5.18
	mm	207	105	140	136	132

IMPORTANT: Valves may be mounted in any position, except as noted in specifications table.

Const. Ref. 10, 15, 31, 32, 33

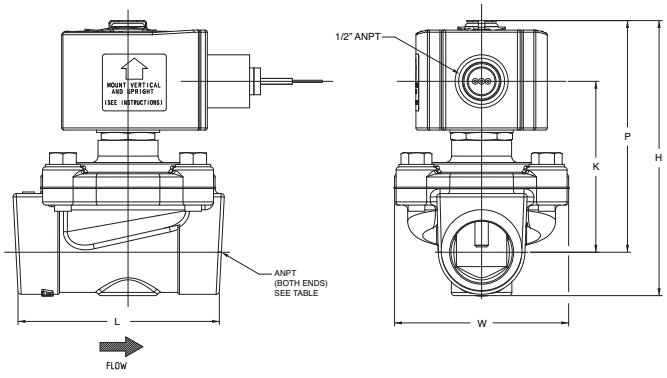

Const. Ref. 24, 34, 35, 36

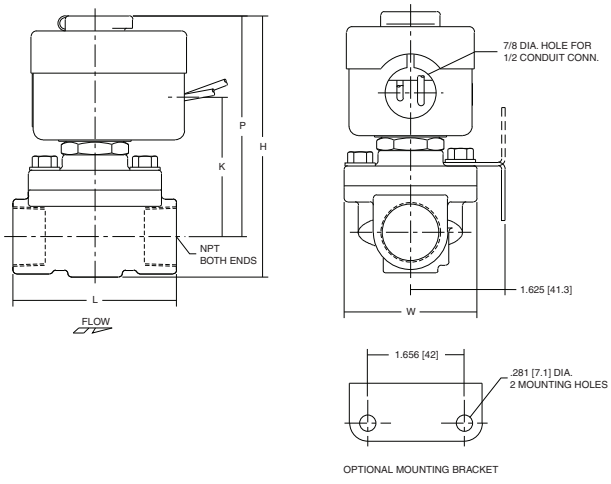

Const. Ref. 12, 16, 26, 28, 47, 48

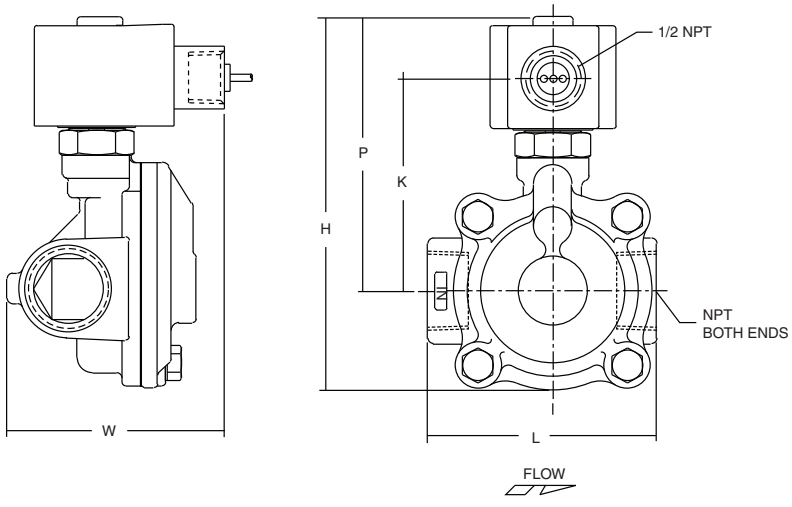

Dimensions: inches (mm)

Const. Ref. 39

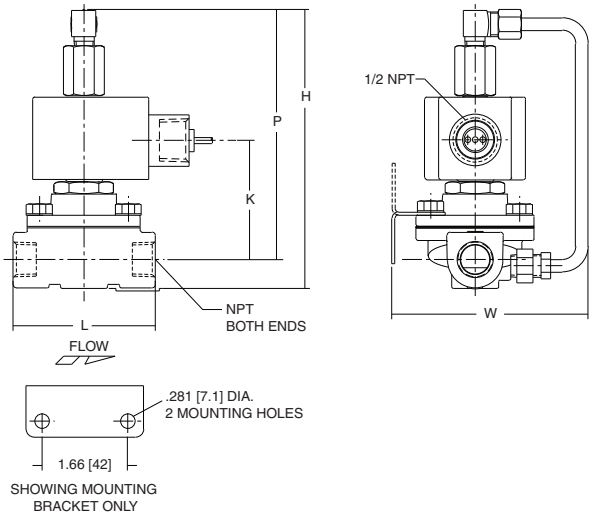

Const. Ref. 18, 29, 49

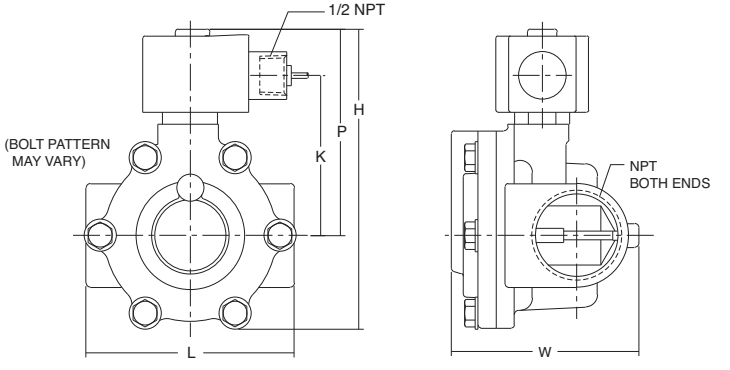

Const. Ref. 20, 21, 27, 30, 50, 51

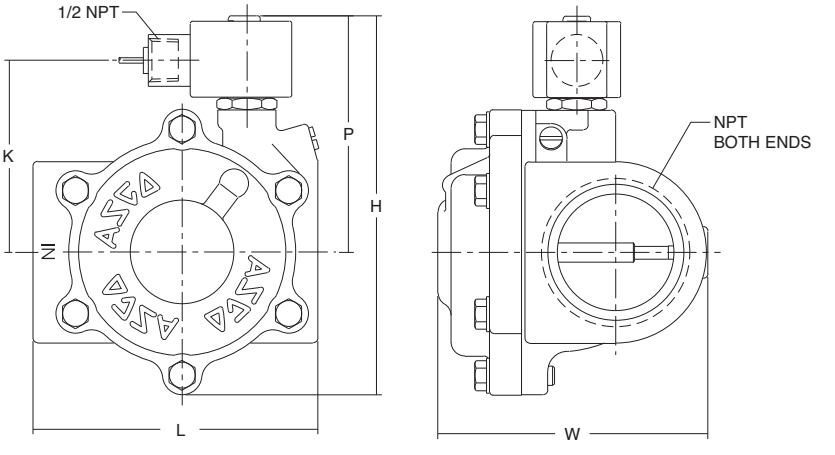

CS-305-170 : Identification sheet

VWTC PROJECT NUMBER:	Iqaluit WWTP	REV:	01
PROJECT NAME:	5000218036	SUBMITTED TO (COMPANY):	
ENGINEER:	G. HÉBERT	SUBMITTED TO (RESPONSIBLE)	
PROJECT MANAGER:	C. BEKAERT	PROJECT NUM REFERENCE.:	
PHONE NUMBER:		LOT NUMBER:	

SUPPLIER	EQPT CODE	EQPT TAG NO	DIA	DESCRIPTION	INFO 1	INFO 2	INFO 3	APPLIC.	NOTE	REV
CHEMLINE	VARFPV348512	PRV-968	DIA: 25 mm (1")	BACKPRESSURE VALVES	TYPE: BACK PRESSURE VALVE | 150#//MANUFACTURER : CHEMLINE//MODEL : SB12A010EU + SGA-005-002-P-G + P025-160-BM//CONNECTION TYPE : UNION SOCKET | 25 mm (1")//BODY : PVC// SEAL | SEAT :EPDM | EPDM// STEM : N/A	(CONFIG. L_U)				1
CHEMLINE	VARFPV348512	PRV-969	DIA: 25 mm (1")	BACKPRESSURE VALVES	TYPE: BACK PRESSURE VALVE | 150#//MANUFACTURER : CHEMLINE//MODEL : SB12A010EU + SGA-005-002-P-G + P025-160-BM//CONNECTION TYPE : UNION SOCKET | 25 mm (1")//BODY : PVC// SEAL | SEAT :EPDM | EPDM// STEM : N/A	(CONFIG. L_U)				1

PDF Published September 17, 2014

SB12 Series Back Pressure/Relief Valves

CHEMLINE PLASTICS
SUPERIOR FLOW SOLUTIONS

PVC PP PVDF

CRN Registered as Category C Fittings Consult Chemline

NSF[3] Certified to NSF/ANSI 61

SERIES: SB12

SIZES: 3/8" – 4"

ENDS: True Union Socket, Threaded or ChemFlare™[1] Spigot[2] Bodies with Plain, Socket, Threaded or Flanged ends

DIAPHRAGM: PTFE Bonded EPDM

SEALS: EPDM, FKM (Viton®)



True Union Ends
Easy installation and maintenance

The Chemline SB Series Back Pressure/ Relief Valve has two functions. As a ***back pressure valve***, installed in-line downstream of a pump, the back pressure below the metering pump is maintained. When installed in the branch of a tee it is a ***pressure relief valve***. The valve stays closed until inlet pressure reaches the set pressure which is adjusted by turning the spring tensioning bolt. Inlet pressure acts upward against the piston allowing excess pressure to flow upwards through the orifice.

The SB12 Series has a built-in check valve function, desirable for dosing applications. It is not so sensitive as to open with every pulsation from a metering pump.

features

True Union Ends
- Easy installation and maintenance
- Eliminate chemical leakage problems common with old fashioned threaded connections

Long Cycling Life
- Dynamic seal is PTFE bonded EPDM for high chemical resistance
- This moulded diaphragm is designed for superior sealing and flex life

Superior Performance in Dosing Systems
- Valves are hydraulically designed for very low hysteresis ("backlash") and to eliminate chatter
- Built-in check (non-return) function
- Valve opening depends on inlet pressure only and is uneffected by changes in downstream (back) pressure

CRN Registration numbers by province
- Ontario: OC10134.5
- Newfoundland: OC10134.50
- Alberta: OC10134.52
- Saskatchewan/Manitoba/Quebec: OC10134.56
- New Brunswick: OC10134.57
- Nova Scotia: OC10134.58
- P.E.I.: OC10134.59
- British Columbia: not required

technical

Set Pressure Ranges
- 1/2" to 2" – 5 to 150 psi
- 2-1/2" and 3" – 7.5 to 150 psi
- 2-1/2" to 4" – 4 to 60 psi (optional)
- 4" – 7.5 to 90 psi

Maximum Viscosity
- 120cP is maximum recommended service viscosity

[1] For ChemFlare™ end connectors, consult Chemline.
[2] PP and PVDF spigot ends have DIN dimensions and will butt fuse directly to Chemline PP and PVDF piping systems.
[3] PVC valves with EPDM or FKM (Viton®) seals are certified under NSF/ANSI Standard 61 for contact with drinking water.

09/14 ©Chemline Plastics Limited 2014
Chemline is a registered trade mark of Chemline Plastics Limited

SB12 Series Back Pressure/Relief Valves 1/2" to 2"

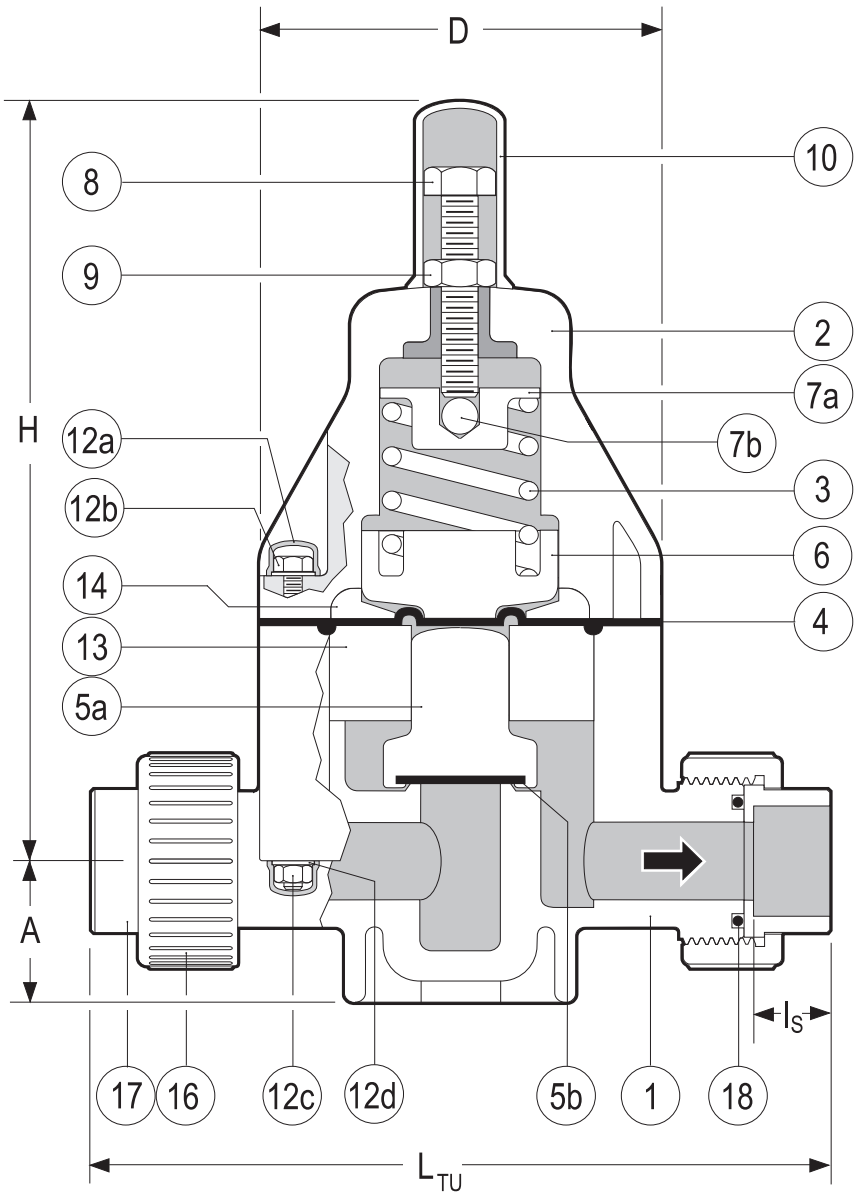

True Union Body

PARTS

▲ Recommended Spare Parts

No.	Part	Pcs.	Materials
1	Body	1	PVC, PP, PVDF
2	Bonnet	1	PPG
3	Spring	1	Galvanized Steel
4▲	Control Diaphragm	1	PTFE bonded EPDM
5a▲	Piston	1	PVC, PP, PVDF
5b▲	Seat	1	EPDM, FPM(Viton®)
6	Lower Spring Retainer	1	PPG
7a	Upper Spring Retainer	1	Cad. Plated Steel
7b	Ball	1	304 SS
8	Spring Tensioning Bolt	1	304 SS
9	Lock Nut	1	304 SS
10	Spring Bolt Cap	1	PE
12a	Bolt/Nut Cap	8/12[1]	PE
12b	Hex Bolt	4/6[1]	304 SS
12c	Hex Nut	4/6[1]	304 SS
12d	Washer	8/12[1]	304 SS
13	Spacer Disc	1	PVC, PP, PVDF
14	Pressure Plate	1	PP
16	Union Nut	2	PVC, PP, PVDF
17	End Connector	2	PVC, PP, PVDF
18▲	Face O-Ring	2	EPDM, FPM(Viton®)

[1] 1/2" size / 3/4" to 2" sizes

OTHER ENDS

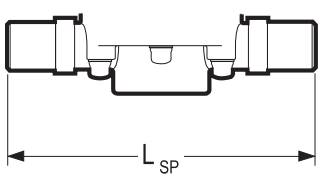

Spigot Body

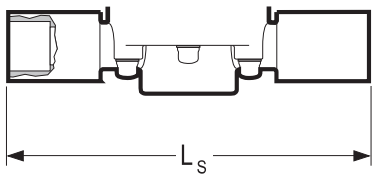

Socket

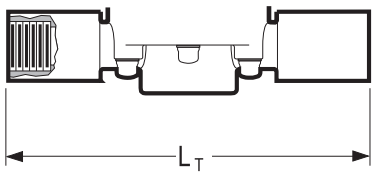

Threaded

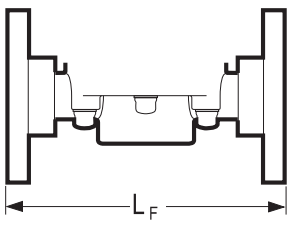

Flanged

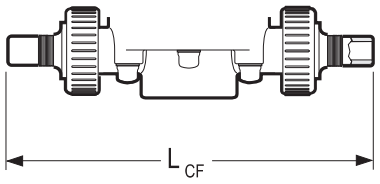

ChemFlare™

DIMENSIONS INCHES — WEIGHTS LB. — Cv VALUES

			PVC								PP and PVDF						
Size	D	H	A	I_S	L_{TU}[2]	L_{SP}[3]	L_S	L_T	L_F	L_{CF}	A	L_{SP}[3]	L_{TU}[2]	PVC	PP	PVDF	USGPM Flow at 1 psi △P
3/8"	3.2	6.9	1.0	0.6	6.5	5.7	7.4	7.2	4.5	8.2	0.9	5.7	**	1.8	1.5	2.2	2.1
1/2"	3.2	6.9	1.0	0.6	6.8	5.7	8.0	7.8	6.3	8.3[4]	0.9	5.7	7.1	1.9	1.6	2.4	3.0
3/4"	4.2	8.0	1.5	0.7	8.3	6.9	9.3	8.9	7.4	9.7	1.4	6.9	8.4	4.1	3.5	4.6	6.6
1"	4.2	8.0	1.5	0.9	8.5	6.9	9.6	9.3	7.4	10.2	1.4	6.9	8.7	4.2	3.5	4.7	8.7
1-1/4"	5.8	10.3	2.2	1.0	10.9	8.8	11.6	11.2	9.2	13.5	2.1	8.8	10.9	11.0	9.0	12.0	18.0
1-1/2"	5.8	10.3	2.2	1.2	11.1	8.8	12.2	11.5	9.5	–	2.1	8.8	11.2	11.2	9.2	12.2	20.0
2"	5.8	10.3	2.2	1.5	11.3	9.6	12.9	12.0	10.0	–	2.1	8.8	13.2	11.4	9.4	12.4	21.4

[2] True Union bodies come standard with socket ends. Threaded union ends are available. ** Consult Chemline.

[3] Spigot bodies are used for non union socket, threaded or flanged ends. All spigot ends have metric dimensions and the PP and PVDF spigots butt fuse directly to Chemline PP and PVDF piping. [4] Tube size can be reduced to 1/4" tube, LCF = 7.74" for 1/4", 8.26" for 3/8".

MAXIMUM PRESSURES PSI

	PVC				PP					PVDF					
Size	20°C 68°F	30°C 86°F	40°C 104°F	50°C 122°F	30°C 86°F	40°C 104°F	50°C 122°F	60°C 140°F	70°C 158°F	30°C 86°F	50°C 122°F	70°C 158°F	80°C 176°F	90°C 194°F	100°C 212°F
1/2"– 2"	150	105	60	15	150	90	60	37.5	15	150	100	60	45	30	15

Temperature Ranges: PVC 0 to 50°C (32 to 122°F), **PP** 10 to 70°C (50 to 158°F), **PVDF** –30 to 100°C (–22 to 212°F).

SB12 Series Back Pressure/Relief Valves 1/2” to 2”

pressure loss nomogram for SB12 valves 3/8” to 2”

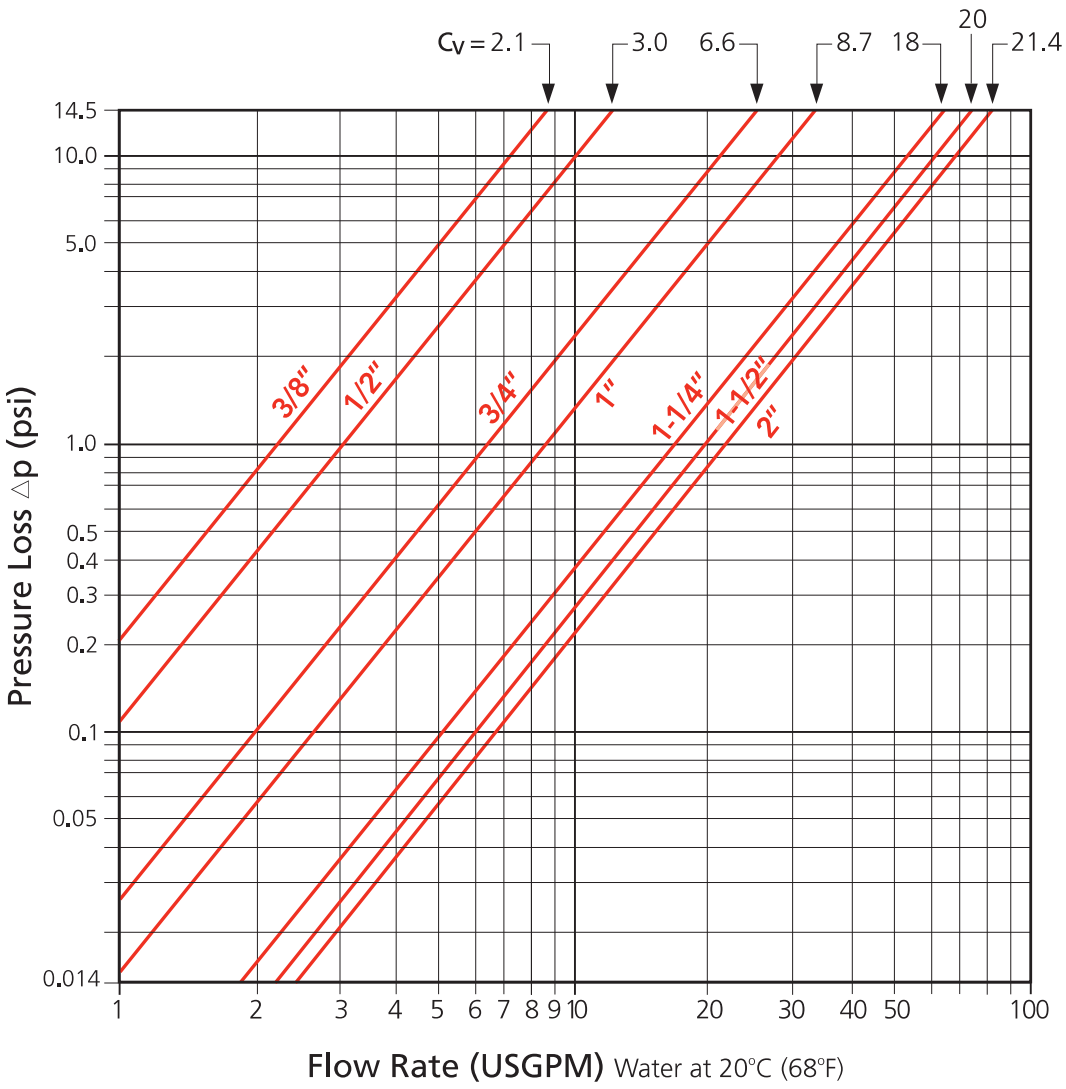

typical dosing system schematic

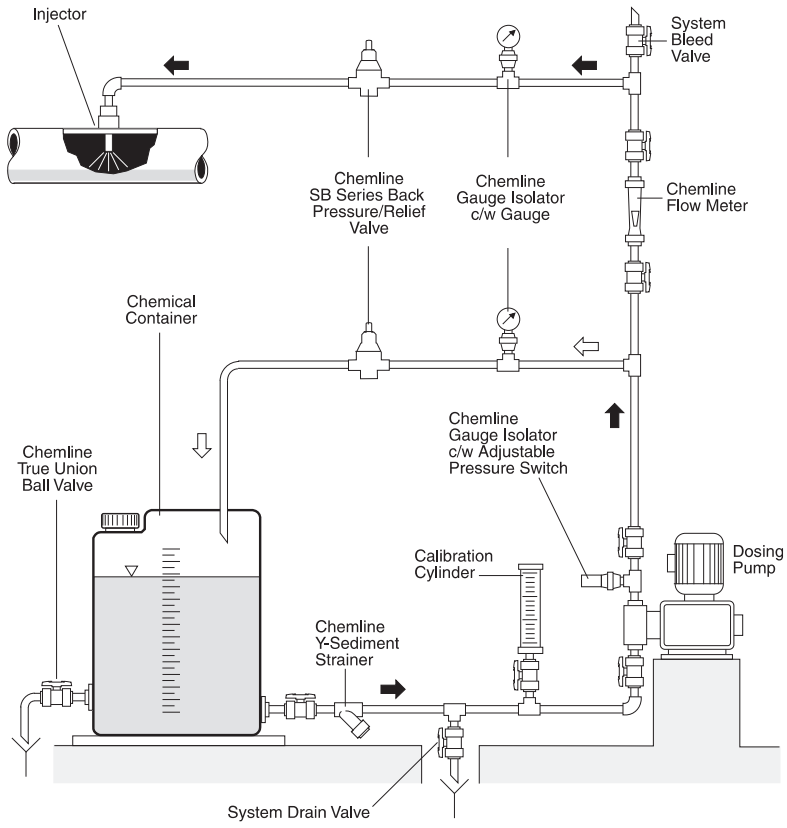

application of pressure relief valves

Constant System Pressure

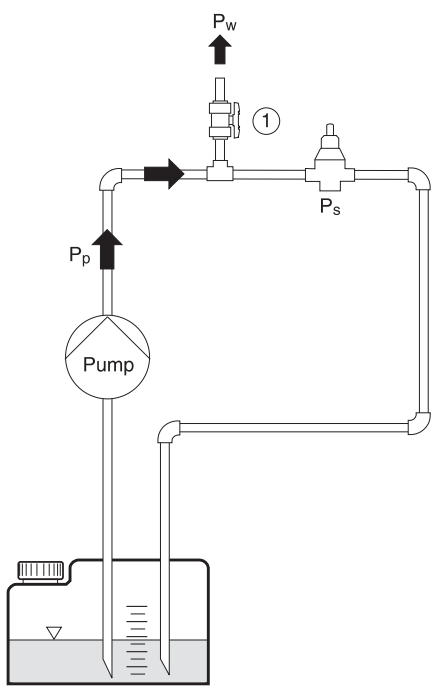

$P_p \geq P_w$
$P_p \geq P_s$ → valve opens
$P_p \leq P_s$ → valve closed

Consumer 1 and/or 2 Open, Valve Closes

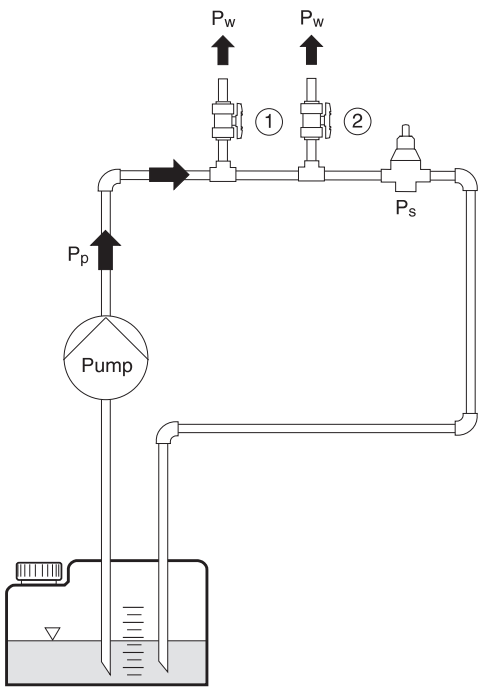

$P_p \geq P_s$ → valve opens
$P_p \leq P_s$ → valve closed

Non-Return Valve

Container 1 is located above the pump

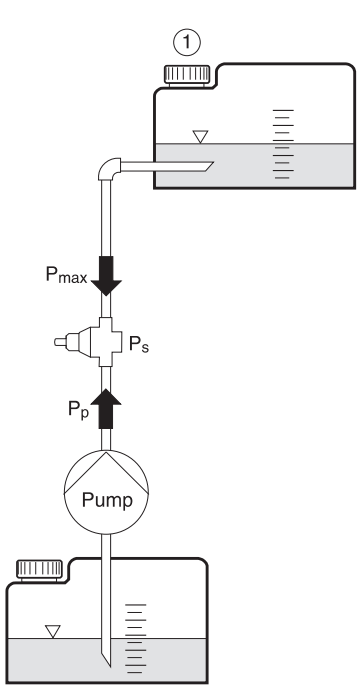

$P_s \geq P_{max}$
$P_p \geq P_s$ → valve opens
$P_p \leq P_s$ → valve closed

Overflow Valve

Pressure of container or application system should not exceed the maximum pressure value

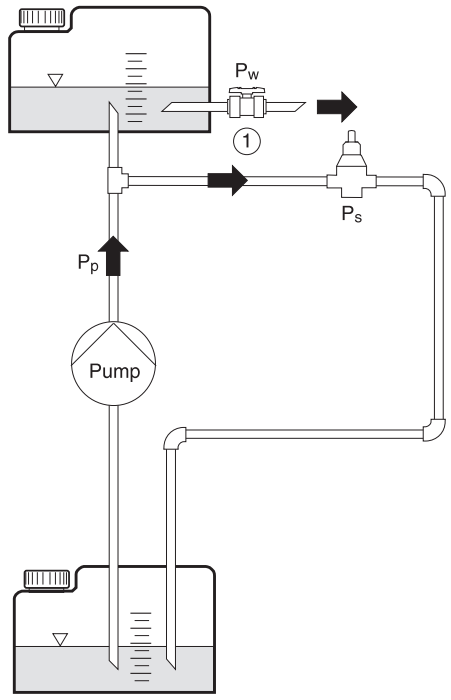

$P_s \leq P_w$
$P_p \geq P_s$ → valve opens
$P_p \leq P_s$ → valve closed

P_w = Working Pressure
P_p = Pump Pressure
P_s = Set Pressure

SB12 Series Back Pressure/Relief Valves 1/2" to 2"

working pressure vs. flow rate

The curves show the relationship between the working pressure and the approximate flow rate through the valve for water at 20°C (68°F) . These values will vary depending on:

- The configuration of the piping and the pressure losses associated with it
- The fluid if not water at 20°C (68°F)
- Whether the pressure is rising or falling, hysteresis is approximately 4 psi for 1/2" to 2" valves. For valves 2-1/2" to 4", hysteresis is approximately 14.5 psi.

operation examples

1. The valve is set closed at 100 psi. At a pressure increase of 10 psi, a flow of approximately 1.0 USGPM will be reached.
   - set pressure = 100 psi
   - working pressure = 110 psi
   - opening pressure = approximately 104 psi
2. The valve is set closed at 50 psi. At a pressure increase of 10 psi, a flow of approximately 1.0 USGPM will be reached.
   - set pressure = 50 psi
   - working pressure = 60 psi
   - opening pressure = approximately 54 psi

3/8" Valves

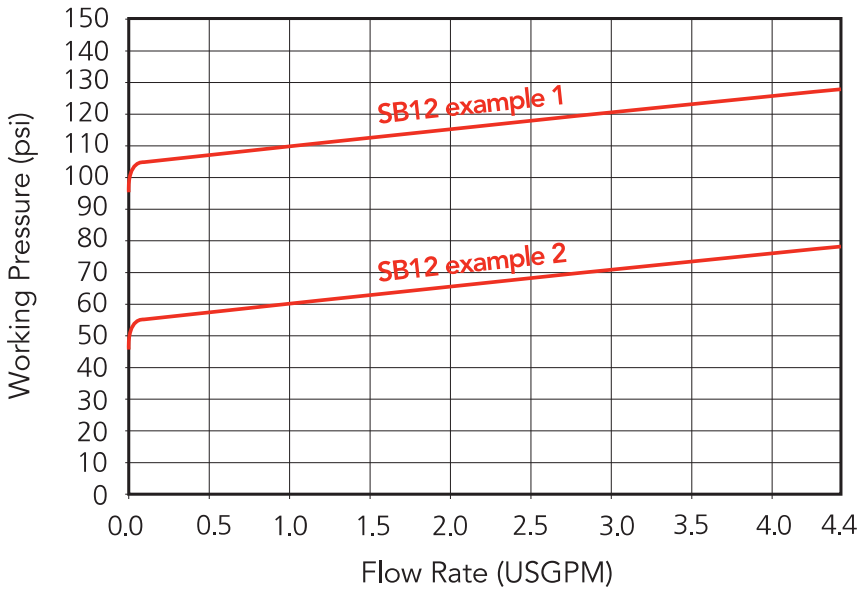

1/2" Valves

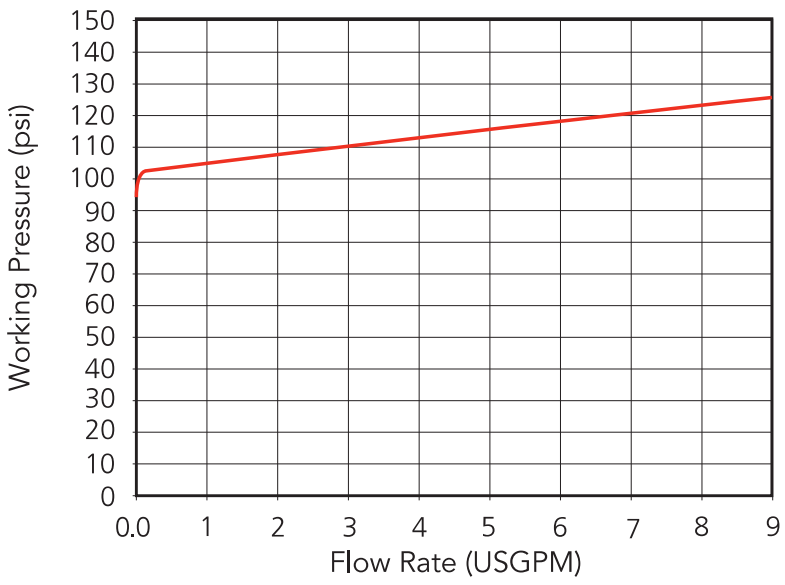

3/4" Valves

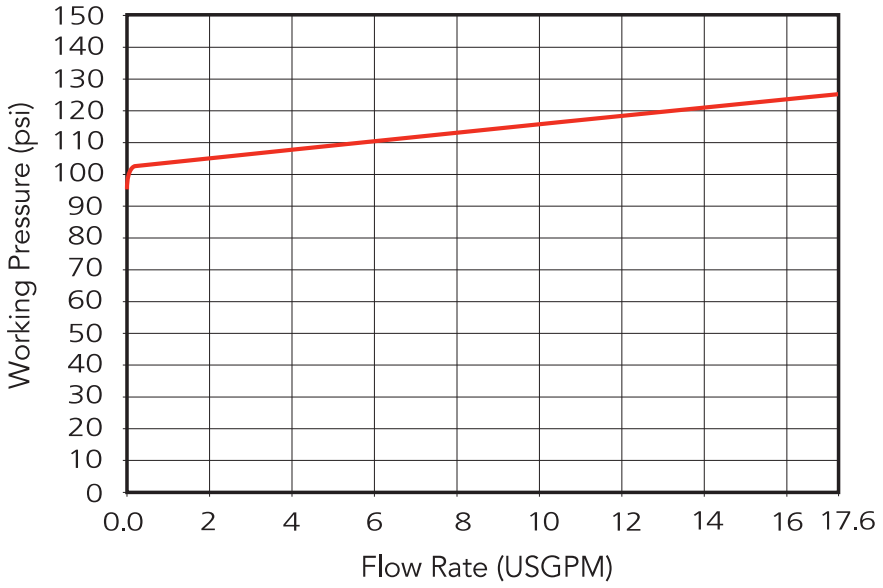

1" Valves

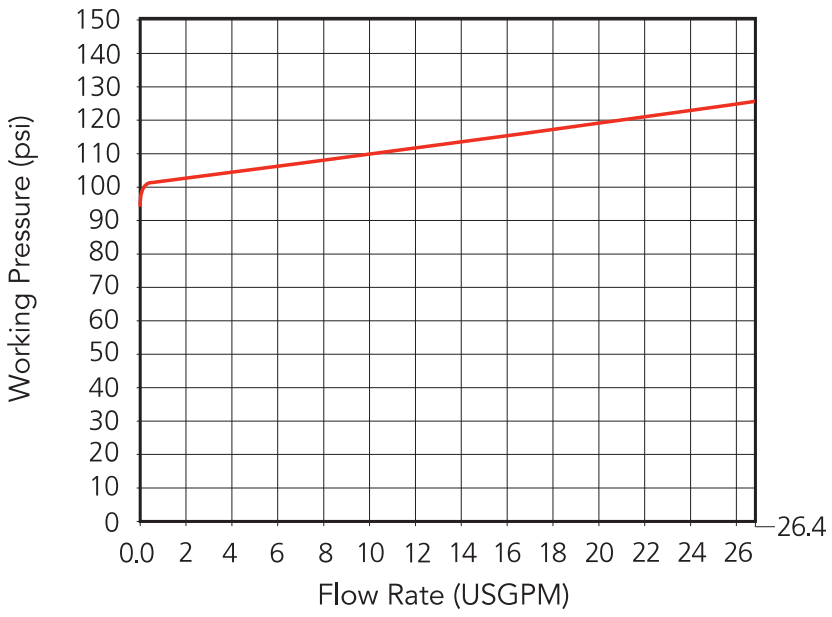

1-1/4" Valves

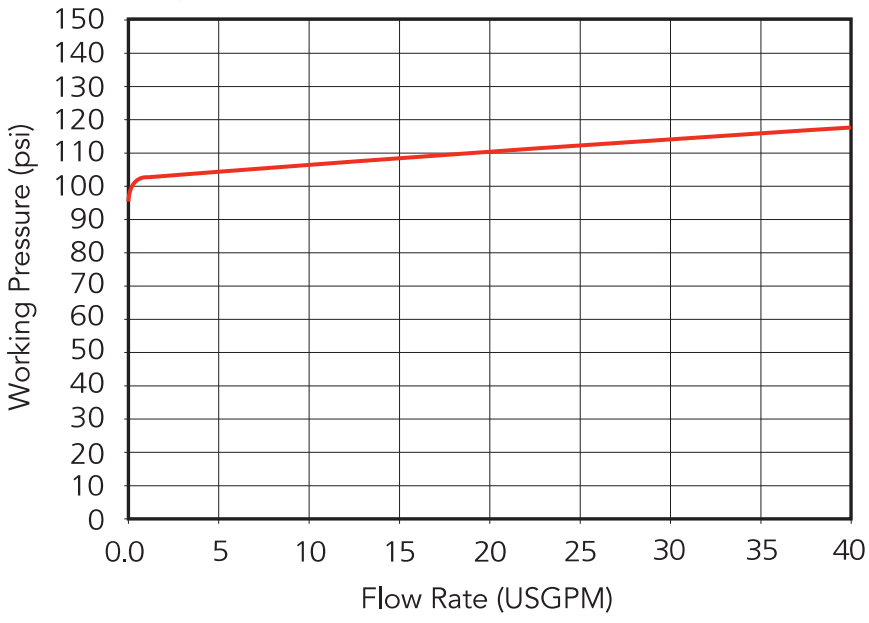

1-1/2" Valves

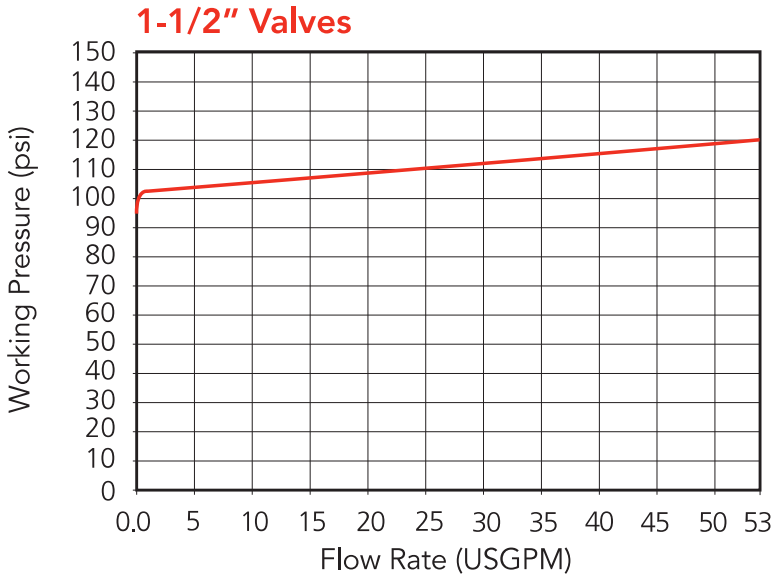

2" Valves

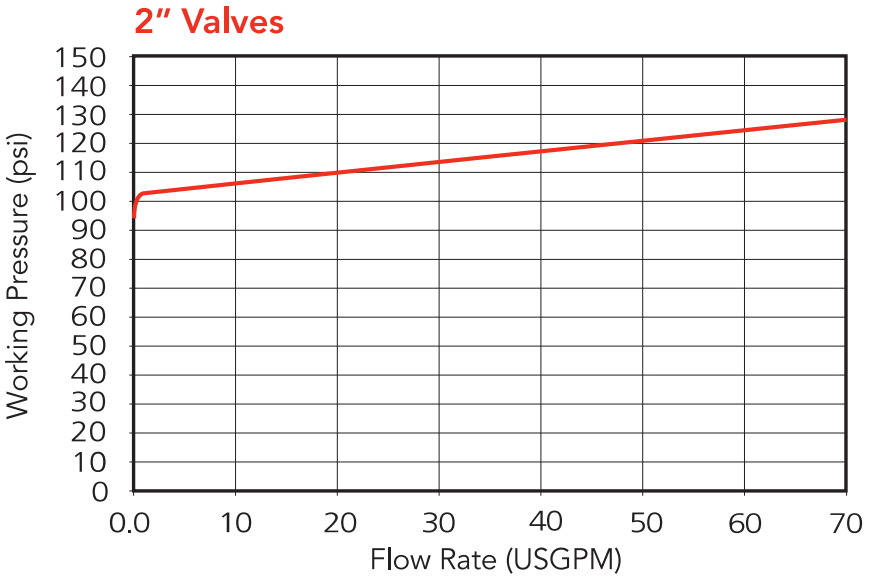

SB12 Series Back Pressure/Relief Valves 2-1/2" to 4"

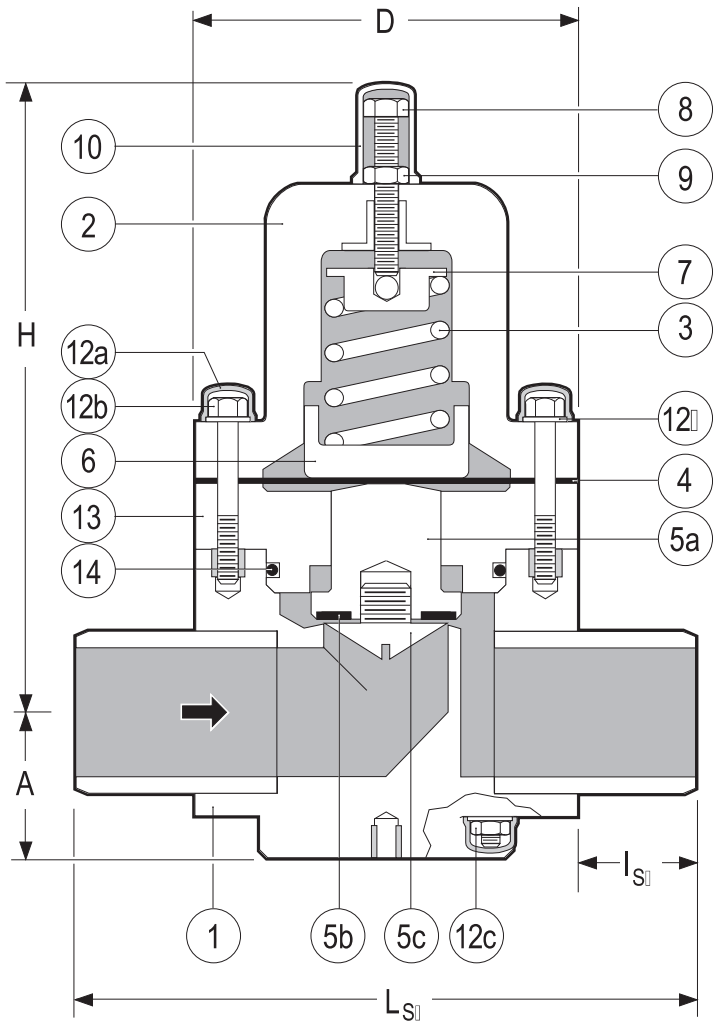

Spigot Body

PARTS

▲ Recommended Spare Parts

No.	Part	Pcs.	Materials
1	Body	1	PVC, PP, PVDF
2	Bonnet	1	PPG
3	Spring	1	Galvanized Steel
4▲	Control Diaphragm	1	PTFE bonded EPDM
5a▲	Piston	2	PVC, PP, PVDF
5b▲	Seat	1	EPDM, FPM(Viton®)
5c▲	Seat Retainer	1	PVC, PP, PVDF
6	Lower Spring Retainer	1	PPG
7	Upper Spring Retauner	1	304 SS
8	Spring Tensioning Bolt	1	304 SS
9	Lock Nut	1	304 SS
10	Spring Bolt Cap	1	PE
12a	Hex Bolt/Nut Cap	20	PE
12b	Hex Bolt/Stud	12[1]	304 SS
12c	Hex Nut	20	304 SS
12d	Washer	20	304 SS
13	Spacer Disc	1	PVC, PP, PVDF
14	Spacer O ring	1	EPDM, FPM(Viton®)

[1] 2 large upper bolts, 2 shorter lower bolts, 8 studs

OTHER ENDS

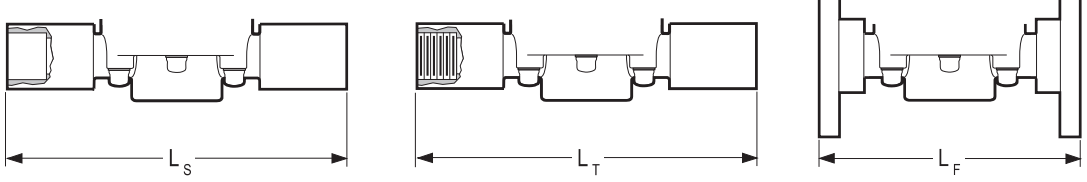

Socket Threaded Flanged



ChemFlare™ Ends

- For connection to PFA tube. Leak-free connections for difficult services such as sodium hypochlorite

DIMENSIONS INCHES

WEIGHTS LB.

Cv VALUES

Size	PVC, PP & PVDF A	D	H	L_{SP}[2]	I_{SP}	PVC L_F	PVC	PP	PVDF	USGPM Flow at 1 psi △P
2-1/2"	2.7	6.9	11.1	11.2	2.1	12.2	20.9	15.4	24.6	41
3"	3.0	7.9	12.2	14.2	3.1	15.0	26.4	23.8	30.8	63
4"	3.7	9.8	14.2	16.5	3.3	16.9	33.0	26.4	37.4	98

[2] Plain spigot ends in PP & PVDF may be butt fused directly to Chemline PP & PVDF piping systems. Weights based on spigot bodies.

MAXIMUM PRESSURES PSI

Size	PVC 20°C 68°F	30°C 86°F	40°C 104°F	50°C 122°F	PP 20°C 68°F	30°C 86°F	40°C 104°F	50°C 122°F	60°C 140°F	70°C 158°F	PVDF 30°C 86°F	50°C 122°F	70°C 158°F	80°C 176°F	90°C 194°F	100°C 212°F
2-1/2"– 4"	150	90	44	15	150	116	90	60	37.5	15	150	90	55	40	30	15

Temperature Ranges: PVC 0 to 50°C (32 to 122°F), **PP** 10 to 70°C (50 to 158°F), **PVDF** –30 to 100°C (–22 to 212°F).

ORDERING EXAMPLE

Chemline Back Pressure/ Relief Valves	**SB12**	**A**	**005**	**V**	**U**
Body Material	**A** – PVC	**B** – PP	**K** – PVDF		
Size	**003** – 3/8" **010** – 1" **020** – 2"	**005** – 1/2" **012** – 1-1/4" **025** – 2-1/2"	**007** – 3/4" **015** – 1-1/2" **030** – 3"	**040** – 4"		
Elastomers	**E** – EPDM	**V** – FPM (Viton®)				
Ends	**S** – Socket **CFx** – ChemFlare™	**T** – Threaded	**F** – Flanged **Blank** – Spigot (Butt)	**U** – Union Socket		

Example: Chemline SB 12 Series, PVC, 1/2" diameter, FPM (Viton®) seals, Union socket ends.
x = 4 for 1/4", **6** for 3/8", **8** for 1/2", **12** for 1" ID tube connections.

OPTIONS

- 4 to 60 psi Pressure Range springs for 2-1/2" to 4" valves
- **Integral Pressure Gauge** – for inlet and/or outlet
- Bodies in 316 Stainless Steel and PTFE



Optional Pressure Gauge

- For inlet and/or outlet

SB12 Series Back Pressure/Relief Valves 2-1/2" to 4"

working pressure vs. flow rate

- Whether the pressure is rising or falling, hysteresis is approximately 14.5 psi for 2-1/2" to 4" valves

2-1/2" Valves / 4 to 60 psi set pressure range

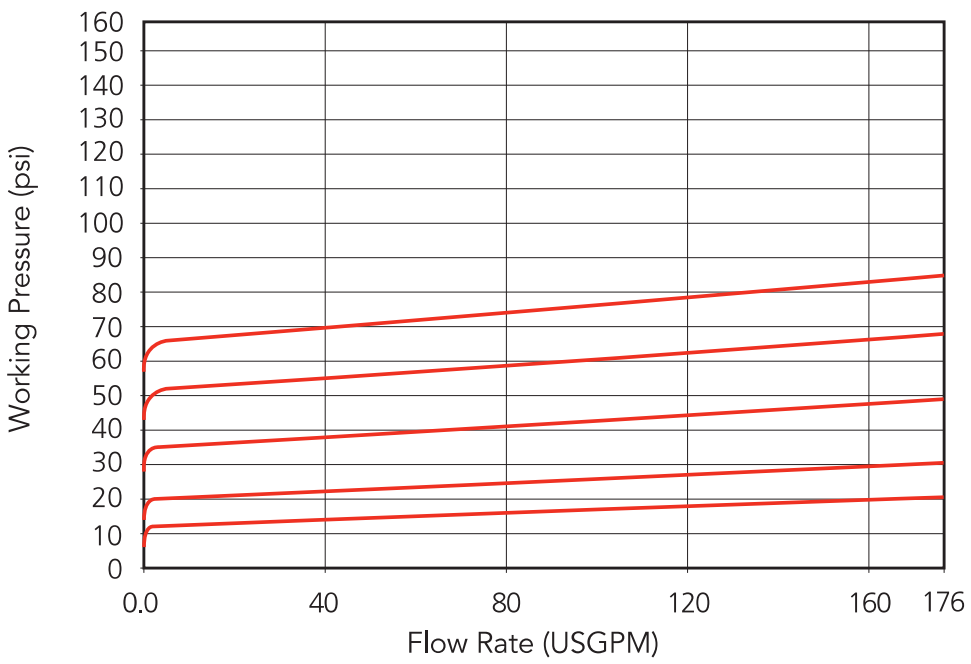

2-1/2" Valves / 7.5 to 150 psi set pressure range

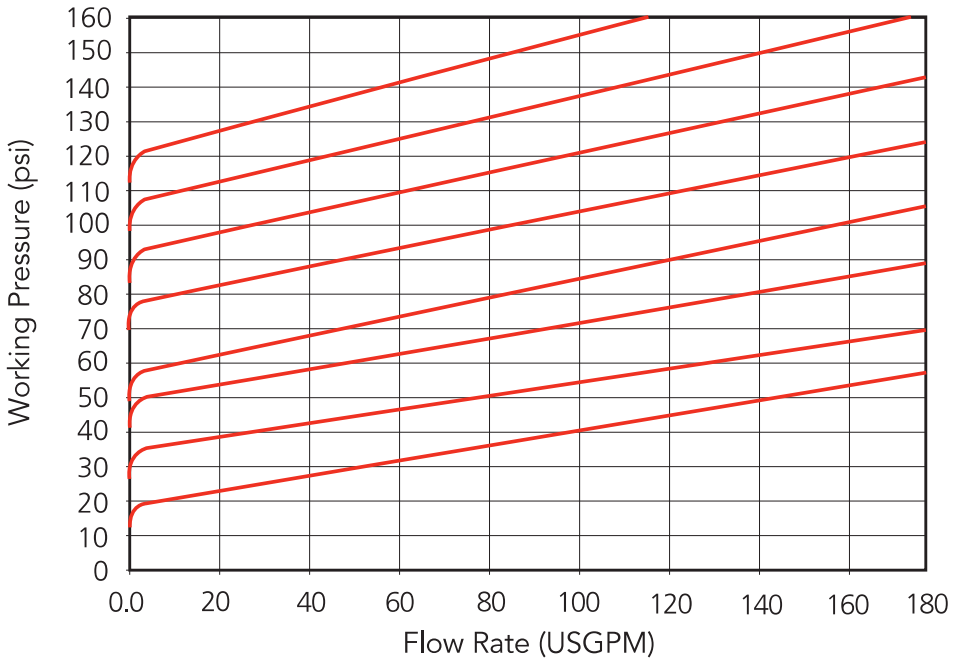

3" Valves / 4 to 60 psi set pressure range

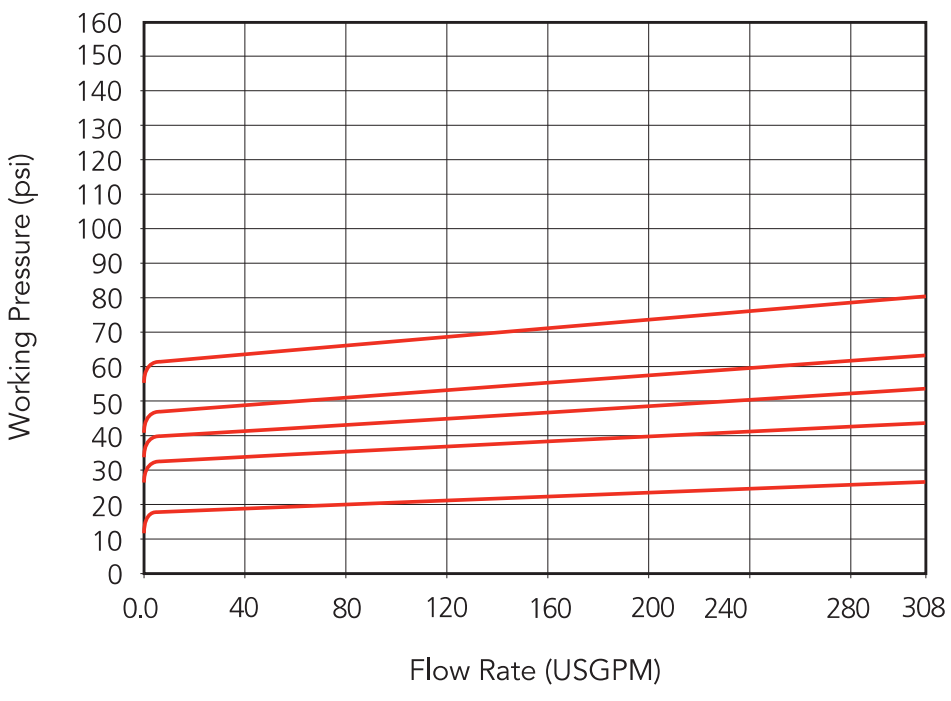

3" Valves / 7.5 to 150 psi set pressure range

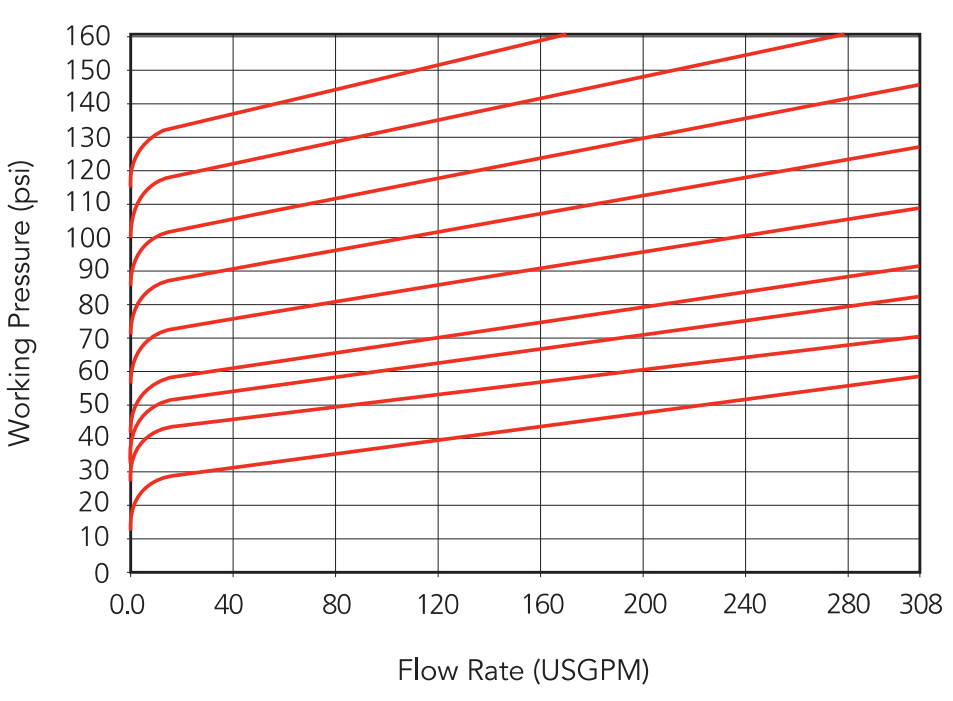

4" Valves / 4 to 60 psi set pressure range

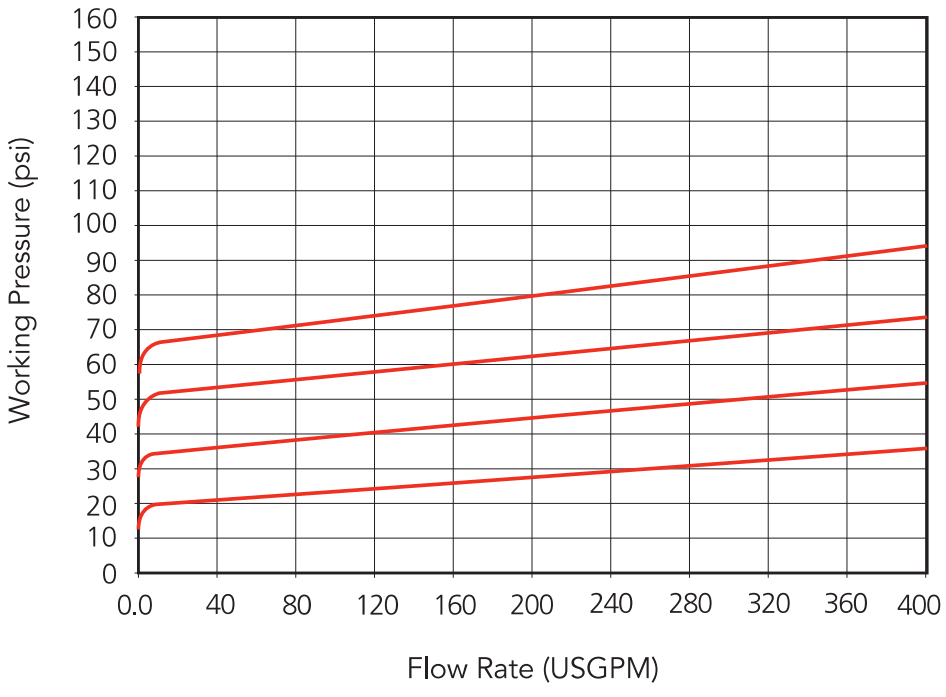

4" Valves / 7.5 to 90 psi set pressure range

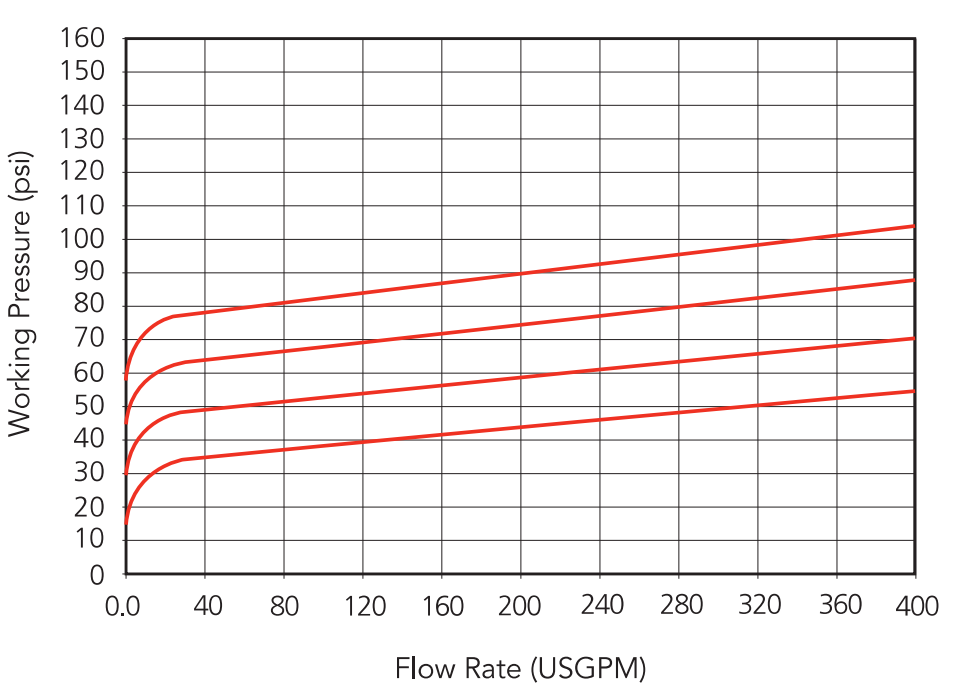

CHEMLINE PLASTICS
SUPERIOR FLOW SOLUTIONS

55 Guardsman Road, Thornhill, ON, L3T 6L2, Canada | ISO 9001:2008 Certified
tel.905.889.7890 | fax.905.889.8553 | request@chemline.com | chemline.com

PDF Published June 23, 2014

Gauge Isolators

CHEMLINE PLASTICS
SUPERIOR FLOW SOLUTIONS

PVC PP PVDF

CRN Registered Consult Chemline

NSF[4] Certified to NSF/ANSI 61

SERIES: SG

INLET CONNECTION: 1/4" or 1/2" Threaded[1]

INSTRUMENT CONNECTION: 1/4" or 1/2" Threaded

DIAPHRAGM: PTFE



Chemline SG Series Gauge Isolators allow inexpensive pressure gauges, or any other pressure instrument to be used in corrosive services. The upper chamber (gauge side) is filled with a stable fluid such as glycol or glycerine[2]. A diaphragm separates it from the lower chamber which receives the media under pressure.

The 1/2" gauge connection allows use of the popular 4" and 4-1/2" diameter gauges. Pressure switches or transmitters may also be installed. Customers can easily fill isolators and install their own gauges.

features

Easy to Mount Gauges

- It is easy to fill an isolator and field mount a gauge. No special equipment is required.
- Will accept popular 4" and 4-1/2" diameter gauges

Provision for Fill Port

- Housing may be drilled and tapped by Chemline or customer for a threaded fill port. This is used for filling isolator using a vacuum filling station

High Chemical Resistance

- Choice of body materials for a wide range of applications
- PTFE bonded EPDM dished diaphragm for high chemical resistance and sensitivity

Heavy Duty Design for Safety

- PPG[3] top chamber
- Heavy wall connection ports

CRN Registration number by province

- Ontario: OH16085.5

Optional Gauges

- Isolators are available alone or with gauge mounted and prefilled with glycol[2]

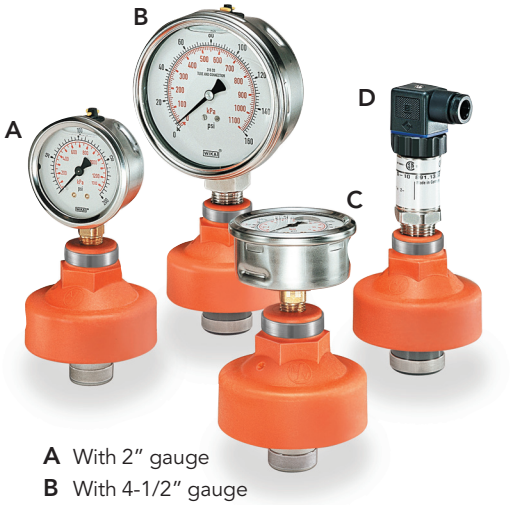

A With 2" gauge
B With 4-1/2" gauge
C With 2" back mount gauge
D With pressure transmitter

[1] Other available inlet connections are 1/2" socket or 1/2" to 1" flanged.
[2] Other fluids are available for special applications such as chlorine service.
[3] Glass reinforced polypropylene.
[4] PVC isolators are certified under NSF/ANSI Standard 61 for contact with drinking water.

06/14 ©Chemline Plastics Limited 2014
Chemline is a registered trade mark of Chemline Plastics Limited

Gauge Isolators

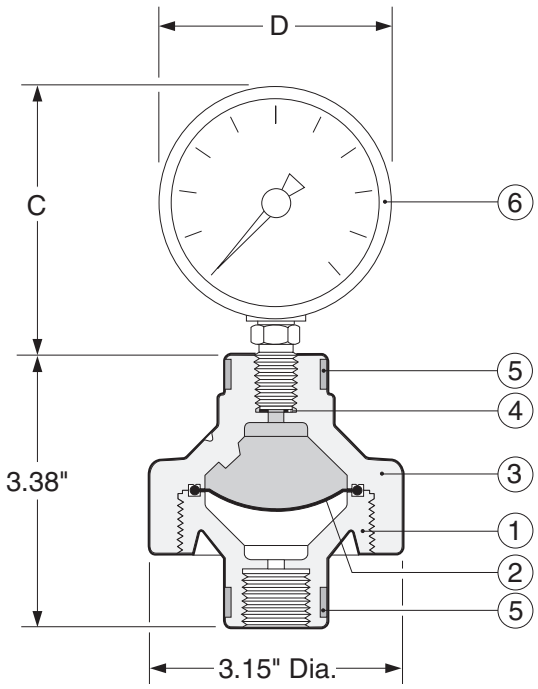

PARTS

No.	Part	Pcs.	Materials
1	Body	1	PVC, PP, PVDF
2	Diaphragm	1	PTFE
3	Bonnet	1	PPG[1]
4	Gasket	1	EPDM
5	Stainless Steel Bands	2	304 SS
6	Optional Gauge	1	See below

[1]PPG = Glass reinforced polypropylene

OPTIONAL GAUGES

- Chemline offers the gauges listed below mounted to isolator and prefilled with glycol, glycerine or special fluid for chlorine applications. These gauges have dials and cases filled with either glycol (standard), glycerine or silicon for corrosion resistance and dampening.
- Chemline SG gauge isolators are not recommended for vacuum applications. They will not affect the gauge accuracy as low as approximately 3 psi. The accuracy depends on the process conditions and the gauge installed on it.

OTHER OPTIONS

- **Flanged** inlet connections
- **Threaded Fill Port** – drilled, tapped and plugged
- Chemline will mount any pressure instrument supplied free issue by customer

DIMENSIONS (Gauge Isolator with optional gauge installed) INCHES

Optional Gauge Ordering No.	Gauge Diameter	Gauge Connection	Housing	Bourdon Tube	Window	Accuracy	Dimensions C	Dimensions D(max.)
P025-xx	2-1/2"	1/4"	316 SS	Brass	Polycarbonate	±1.5% of span	3.1	2.5
P025-xx-SS	2-1/2"	1/4"	316 SS	316 SS	Polycarbonate	±1.5% of span	3.1	2.5
P025-xx-SS/BM	2-1/2" Back Mount	1/4"	316 SS	316 SS	Polycarbonate	±1.5% of span	1.6	2.5
P025-xx-BM	2-1/2" Back Mount	1/4"	316 SS	Brass	Polycarbonate	±1.5% of span	1.6	2.5
P040-xx-SS	4"	1/2"	316 SS	316 SS	Safety Glass	±1% of span	4.5	4.0
P045-xx-SS	4-1/2"	1/2"	PBTP Plastic[2]	316 SS	Acrylic	±0.5% of span	6.3	5.8

xx denotes the maximum gauge pressure i.e., 30, 60, 100, 160 or 200 psi. See data page for recommended working pressures.
[2] PBTP = glass filled polyester.

WORKING PRESSURES PSI

WEIGHTS

Material	10 – 20°C 50 – 68°F	30°C 86°F	40°C 104°F	50°C 122°F	60°C 140°F	70°C 158°F	80°C 176°F	90°C 194°F	100°C 212°F	120°C 248°F	Net Weights Pounds[3]
PVC	150	100	80	45	15	–	–	–	–	–	1.0
PP	150	125	100	80	65	45	–	–	–	–	0.7
PVDF	150	150	150	125	105	85	70	60	45	30	1.3

Temperature Ranges: PVC 0 to 60°C (32 to 140°F), **PP** 10 to 80°C (50 to 176°F), **PVDF** –30 to 120°C (–22 to 248°F).
NR = Not Recommended. [3] Weights are for unfilled 1/2" x 1/2" isolators without gauges. 1/2" x 1/4" isolators are 20% lighter.

ORDERING EXAMPLE

Chemline Gauge Isolators	SG	A	005-	002	P	G
Body Material	**A** – PVC	**B** – PP	**K** – PVDF			
Inlet Size	**002** – 1/4"	**005** – 1/2"(Standard)				
Instrument Connection	**002** – 1/4"	**005** – 1/2"				
Diaphragm	**P** – PTFE bonded EPDM					
Filling & Mounting	**G** –Add only if isolator is supplied filled with glycol and gauge or pressure instrument is mounted by Chemline. Separate gauge item numbers are listed above.					

Example: Chemline SG Series Gauge Isolator, PVC, 1/2" x 1/4" FNPT inlet x instrument connections, PTFE diaphragm.

CHEMLINE PLASTICS
SUPERIOR FLOW SOLUTIONS
55 Guardsman Road, Thornhill, ON, L3T 6L2, Canada | ISO 9001:2008 Certified
tel.905.889.7890 | fax.905.889.8553 | request@chemline.com | chemline.com

Project name:	IQALUIT
Project#:	5000218036
Document #:	5000218036_DS_0006_PM_VWT
by:	BB
chkd:	GH
appvd:	CB

SKID DUPLEX

CALIBRATION CYLINDER

OIM manual section: 4.3.6.4

CS-500-100 : Identification sheet

VWTC PROJECT NUMBER:	Iqaluit WWTP	REV:	01
PROJECT NAME:	5000218036	SUBMITTED TO (COMPANY):	
ENGINEER:	G. HÉBERT	SUBMITTED TO (RESPONSIBLE)	
PROJECT MANAGER:	C. BEKAERT	PROJECT NUM REFERENCE.:	
PHONE NUMBER:		LOT NUMBER:	

SUPPLIER	EQPT CODE	EQPT TAG NO	DIA	DESCRIPTION	INFO 1	INFO 2	INFO 3	APPLIC.	NOTE	REV
PRIMARY FLUID	PUSPPV200284	CC-04-990	L: 23,16 " X W: 6,906 "	CALIBRATION CYLINDER	CALIBRATION CYLINDER/MANUFACTURER: PRIMARY FLUID/MODEL: PV2-10000	N/A	N/A			1

ACCUDRAW® Calibration Cylinders



Polypropylene


PVC


Glass



- PVC with removable "O" ring sealed top for easy cleaning

- yellow polypropylene level indicator float for high visibility

ACCUDRAW® ***has been developed for the accurate calibration of metering pumps. Standard features include:***

- translucent
- chemical resistant
- break resistant
- threaded, socket or flanged
- colored graduations and lettering
- PVC has dual scale USGPH & ml
- PVC sizes 100 - 20000 ml
- POLY sizes 100 - 4000 ml
- POLY meets ISO standards
- Glass sizes 100 - 20000 ml
- custom designs available

For detailed product information visit our website: primaryfluid.com

PRIMARY FLUID SYSTEMS INC.
Call Toll Free 1-800-776-6580
Tel (905) 333-8743 Fax (905) 333-8746
E-Mail: primary@primaryfluid.com
www.primaryfluid.com

ACCUDRAW® Calibration Cylinders

"For Accuracy That Counts"

For complete product information visit our website: primaryfluid.com



Flanged: Glass, PVC



Flanged: PVC

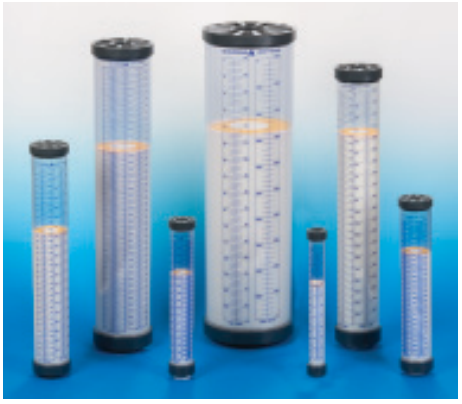

PV#4

Sizing and Ordering Information:

ACCUDRAW Standard Materials of Construction

AC = All polypropylene construction (see below for options)
PV = All polyvinylchloride construction (see below for options)
ACS = Glass*

Note: Cylinders are NOT pressure vessels

Example: AC#1-1000B

AC = PP (polypropylene)
#1 = Bottom threaded connection only
1000 = 1000 ml
B = BSP Thread

e.g. Part # AC #1 - 1000 B

Type:
AC = Polypropylene
PV = PVC
ACS = Glass

Style:
1 = Bottom threaded conn. only
2 = Top and Bottom threaded conn.
3 = Bottom threaded conn. c/w removable vented dust cap
4 = Top/Bottom threaded conn. c/w removable "O" ring sealed top and float ring level indicator
**** Glass calibration cylinders available in Style 2 only***

Graduation Scale:
PP - ml only
PVC - ml and GPH
Glass - ml only

Std. connection is NPT thread
Optional: add suffix as follows
S = Socket weld connection (PVC only)
GTV = Glass/TFE construction
GKV = Glass/PVDF construction
GCV = Glass/CPVC construction
GSV = Glass/SS construction
B = BSP Thread
F = Flanged

Substitute **E** for **V** for **EPDM** wetted "O" ring seal

Sizes:		**Material**
100 = 100 ml	(1.6 GPH)	PP, PVC, Glass
250 = 250 ml	(4 GPH)	PP, PVC, Glass
500 = 500 ml	(8 GPH)	PP, PVC, Glass
1000 = 1000 ml	(16 GPH)	PP, PVC, Glass
2000 = 2000 ml	(32 GPH)	PP, PVC, Glass
4000 = 4000 ml	(64 GPH)	PP, PVC, Glass
6000 = 6000 ml		Glass only
8000 = 8000 ml		Glass only
10000 = 10000 ml	(160 GPH)	PVC, Glass
20000 = 20000 ml	(320 GPH)	PVC, Glass

Custom sizes and materials available.

ACCUDRAW® Calibration Cylinders

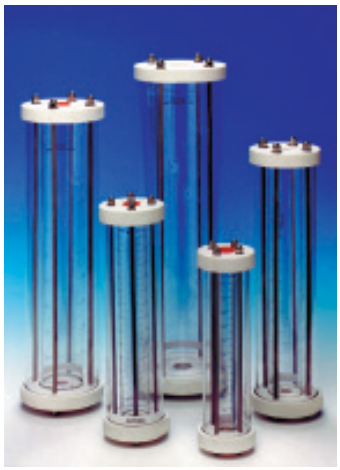

ACCUDRAW® Glass Calibration Cylinders ***are ideal for the calibration of metering pumps, batch systems and for handling hazardous chemicals.***

- volumes calibrated in ml
- construction materials available include TFE, PVDF, CPVC and 316 stainless steel
- sealing "O" rings are Viton and Buna N
- outer shield of acrylic construction
- port connections in NPT, metric or flanged
- standard sizes 100 - 20,000 ml
- custom designs available to your specifications

Sizing and Ordering Information: Glass Construction

Size	Conn.	Model # For TFE End Flgs	Model # For 316 S/S End Flgs	Model # For PVDF End Flgs	Model # For CPVC End Flgs
100 ml	1/2" NPT	ACS#2-100-GTV	ACS#2-100-GSV	ACS#2-100-GKV	ACS#2-100-GCV
250 ml	1/2" NPT	ACS#2-250-GTV	ACS#2-250-GSV	ACS#2-250-GKV	ACS#2-250-GCV
500 ml	1/2" NPT	ACS#2-500-GTV	ACS#2-500-GSV	ACS#2-500-GKV	ACS#2-500-GCV
1000 ml	1/2" NPT	ACS#2-1000-GTV	ACS#2-1000-GSV	ACS#2-1000-GKV	ACS#2-1000-GCV
2000 ml	1 " NPT	ACS#2-2000-GTV	ACS#2-2000-GSV	ACS#2-2000-GKV	ACS#2-2000-GCV
4000 ml	1" NPT	ACS#2-4000-GTV	ACS#2-4000-GSV	ACS#2-4000-GKV	ACS#2-4000-GCV
6000 ml	1" NPT	ACS#2-6000-GTV	ACS#2-6000-GSV	ACS#2-6000-GKV	ACS#2-6000-GCV
8000 ml	2" NPT	ACS#2-8000-GTV	ACS#2-8000-GSV	ACS#2-8000-GKV	ACS#2-8000-GCV
10000 ml	2" NPT	ACS#2-10000-GTV	ACS#2-10000-GSV	ACS#2-10000-GKV	ACS#2-10000-GCV
20000 ml	2" NPT	ACS#2-20000-GTV	ACS#2-20000-GSV	ACS#2-20000-GKV	ACS#2-20000-GCV

Cylinders are bolted together using stainless steel rods with Viton "O" rings for the glass seal and Buna N "O" rings for the acrylic seal. For EPDM "O" rings, subsititute "E" for "V".

Options available: (may affect price and delivery)

- **different type or size of thread connection, different "O" ring material, different flange material**

Descriptions:

TFE, PVDF and CPVC End Flanges:
Glass cylinder with acrylic outer shield and 3/4" thick (TFE, PVDF or CPVC) end flanges

316 S/S End Flanges:
Glass cylinder with acrylic outer shield and 1/2" thick 316 Stainless Steel end flanges

Glass Dimensional Information

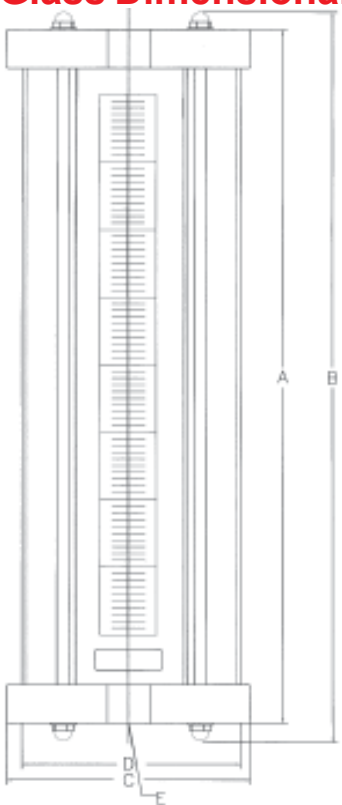

Note: Cylinders are <u>not</u> pressure vessels.

Dimensions subject to change without notice.

Glass cylinders with TFE, PVDF or CPVC End Flanges

Size ml	DIV ml	A inches	B inches	C inches	D inches	E thread
100	1.00	10.00	11.00	3.00	2.50	1/2" FNPT
250	2.00	12.75	13.50	3.50	3.00	1/2" FNPT
500	5.00	14.50	15.50	4.00	3.50	1/2" FNPT
1000	10.00	16.75	17.75	4.75	4.25	1/2" FNPT
2000	20.00	18.75	19.75	5.50	5.00	1" FNPT
4000	25.00	22.50	23.50	6.50	6.00	1" FNPT
6000	50.00	20.13	21.16	8.00	7.50	1" FNPT
8000	50.00	24.63	25.66	8.00	7.50	2" FNPT
10000	50.00	30.13	31.16	8.00	7.50	2" FNPT
20000	200.00	43.25	44.25	9.00	8.50	2" FNPT

Glass cylinders with 316 Stainless Steel End Flanges

Size ml	DIV ml	A inches	B inches	C inches	D inches	E thread
100	1.00	9.50	10.50	3.00	2.50	1/2" FNPT
250	2.00	12.25	13.00	3.50	3.00	1/2" FNPT
500	5.00	14.00	15.00	4.00	3.50	1/2" FNPT
1000	10.00	16.25	17.25	4.75	4.25	1/2" FNPT
2000	20.00	18.25	19.25	5.50	5.00	1" FNPT
4000	25.00	22.00	23.00	6.50	6.00	1" FNPT
6000	50.00	19.63	20.66	8.00	7.50	1" FNPT
8000	50.00	24.13	25.16	8.00	7.50	2" FNPT
10000	50.00	29.63	30.66	8.00	7.50	2" FNPT
20000	200.00	42.75	43.75	9.00	8.50	2" FNPT

ACCUDRAW® Calibration Cylinders

Installations

Conversion Factors
1 ml = 1 cc
1000 ml = 1 liter
ml/sec X 60 = ml/min
1 US gal/min X 0.063 = liters/sec
1 US gal = 3.786 liters

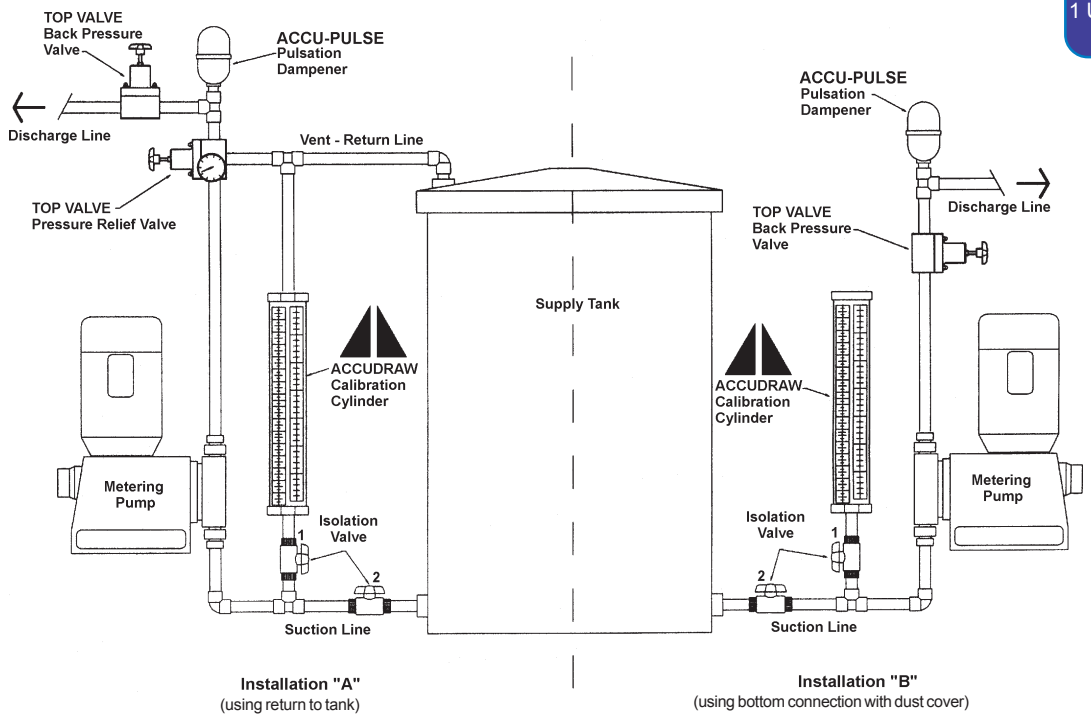

Other available products at www.primaryfluid.com

TOP VALVE Back Pressure/Pressure Relief



- *long life diaphragm*
- *range of 15 - 350 PSIG*
- *air release, optional gauge port*
- *PVC, CPVC, PVDF, Teflon, polypropylene, stainless, Alloy 20 and Hastelloy C*
- *7 sizes 1/4" - 2" NPT*
- *color coded handles indicate size*
- *higher pressure & temperature available*

PFS Corporation Stops



Designed to inject chemical into the center stream of process.

- *isolation valve allows for ease of maintenance*
- *available in 6 materials of construction*
- *wetted components have comparable or greater chemical resistance than quill construction material*
- *standard and custom lengths available*
- *connection in NPT, metric or flanged*

Custom built in other sizes & materials.

ACCUPULSE Pulsation Dampeners



Designed to remove pulsatingflows from positive displacement pumps.

- *increase system efficiency and pump life; decrease maintenance and costs*
- *protect pipes, meters, valves and instrumentation from pulsation and vibration*
- *ensure meter accuracy, longevity and repeatability*
- *prevent foaming and splashing*
- *extensive range of materials and sizes with lightweight, compact design*

Distributed By:

PRIMARY FLUID SYSTEMS INC.

Call Toll Free 1-800-776-6580
Tel: (905) 333-8743
Fax: (905) 333-8746

Distribution Territories Available

E:Mail: primary@primaryfluid.com
www.primaryfluid.com

® Registered Trade Mark of Primary Fluid Systems

ACCUDRAW®

PV#1

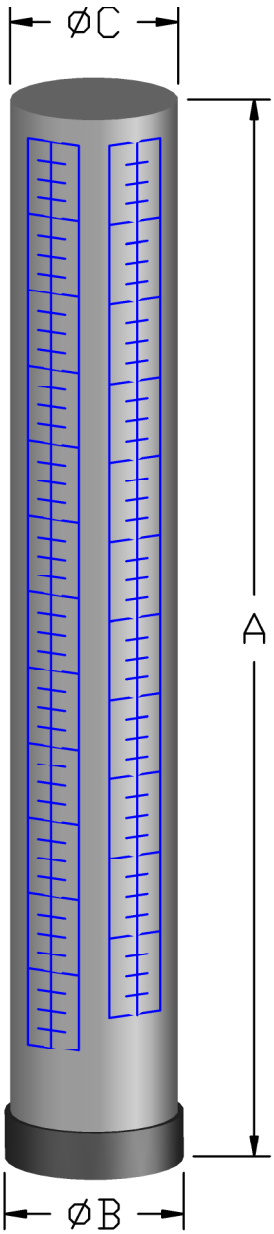

PV#2
PV#4

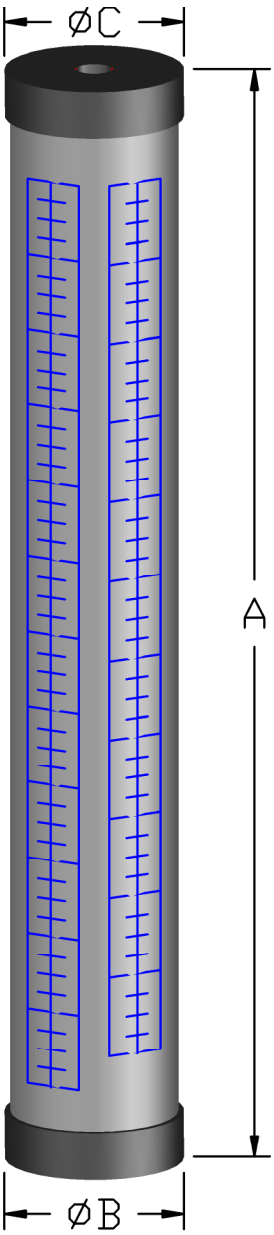

PV#3

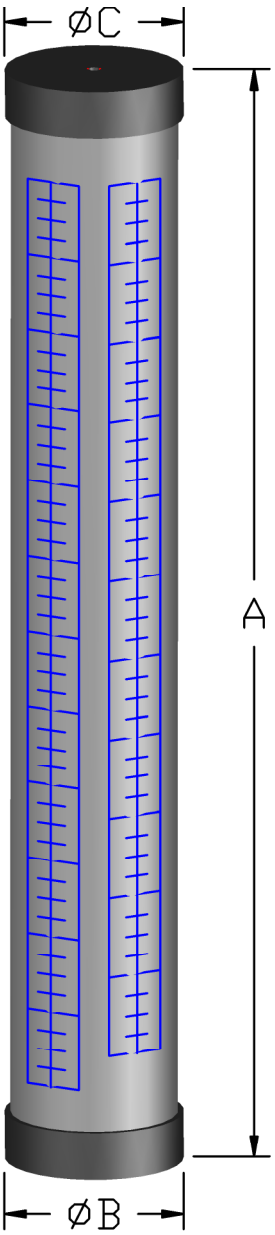

MODEL	SIZE ml(GPH)	DIV ml(GPH)	A (in.)	ØB (in.)	ØC (in.)	Connection	Top Conn.
PV#1	100 (1.60)	1.0 (0.02)	10.13	1.4	1.1	1/2" (DN 15)	OPEN
	250 (4.00)	2.0 (0.05)	10.88	1.9	1.6		
	500 (8.00)	5.0 (0.05)	12.13	2.4	2.1		
	1000 (16.0)	10.0 (0.125)	16.13	2.8	2.5		
	2000 (32.0)	20.0 (0.25)	20.00	3.5	3.1	1" (DN 25)	
	4000 (64.0)	25.0 (0.25)	22.00	4.5	4.1		
	10000 (160)	200.0 (2.00)	22.50	6.9	6.5	2" (DN 50)	
	15000 (240)	200.0 (2.00)	32.50	6.9	6.5		
	20000 (320)	200.0 (2.00)	42.50	6.9	6.5		
PV#2 & PV#4	100 (1.60)	1.0 (0.02)	10.50	1.4	1.4	1/2" (DN 15)	1/2" (DN 15)
	250 (4.00)	2.0 (0.05)	11.25	1.9	1.9		
	500 (8.00)	5.0 (0.05)	12.50	2.4	2.4		
	1000 (16.0)	10.0 (0.125)	16.50	2.8	2.8		
	2000 (32.0)	20.0 (0.25)	20.50	3.5	3.5	1" (DN 25)	1" (DN 25)
	4000 (64.0)	25.0 (0.25)	22.50	4.5	4.5		
	10000 (160)	200.0 (2.00)	23.00	6.9	6.9	2" (DN 50)	2" (DN 50)
	15000 (240)	200.0 (2.00)	33.00	6.9	6.9		
	20000 (320)	200.0 (2.00)	43.00	6.9	6.9		
PV#3	100 (1.60)	1.0 (0.02)	10.50	1.4	1.4	1/2" (DN 15)	DUST CAP
	250 (4.00)	2.0 (0.05)	11.25	1.9	1.9		
	500 (8.00)	5.0 (0.05)	12.50	2.4	2.4		
	1000 (16.0)	10.0 (0.125)	16.50	2.8	2.8		
	2000 (32.0)	20.0 (0.25)	20.50	3.5	3.5	1" (DN 25)	
	4000 (64.0)	25.0 (0.25)	22.50	4.5	4.5		
	10000 (160)	200.0 (2.00)	23.00	6.9	6.9	2" (DN 50)	
	15000 (240)	200.0 (2.00)	33.00	6.9	6.9		
	20000 (320)	200.0 (2.00)	43.00	6.9	6.9		

NOTE:
PV#4 CALIBRATION CYLINDERS HAVE REMOVABLE TOP CAPS.

DO NOT COPY WITHOUT PRIOR WRITTEN APPROVAL FROM PRIMARY FLUID SYSTEMS INC.

PRIMARY FLUID SYSTEMS INC.
1050 Cooke Blvd., Burlington, Ontario L7T 4A8

ACCUDRAW PV-SERIES
CALIBRATION CYLINDERS (PVC)

DATE ISSUED: JULY-29-2014	SCALE: NTS	SHEET: 1 OF 1
TOLERANCE: +/- 0.25"	DRAWN BY: NEAL YOON	
APPROVED BY:	DWG NO.: ADV_PV_CALCYL1	REV.#: 4

Project name: IQALUIT

Project#: 5000218036

Document #: 5000218036_DS_0006_PM_VWT

by: BB

chkd: GH

appvd: CB

SKID DUPLEX

INSTRUMENT

OIM manual section: 4.3.6.5

CS-449-100 : Identification sheet

VWTC PROJECT NUMBER:	Iqaluit WWTP	REV:	01
PROJECT NAME:	5000218036	SUBMITTED TO (COMPANY):	
ENGINEER:	G. HÉBERT	SUBMITTED TO (RESPONSIBLE)	
PROJECT MANAGER:	C. BEKAERT	PROJECT NUM REFERENCE.:	
PHONE NUMBER:		LOT NUMBER:	

SUPPLIER	EQPT CODE	EQPT TAG NO	DIA	DESCRIPTION	INFO 1	INFO 2	INFO 3	APPLIC.	NOTE	REV
CHEMLINE	IMFWGG300580	FI-983	1	VARIABLE AREA FLOWMETER	VARIABLE AREA FLOWMETER/MANUFACTURER: CHEMLINE/ MODEL: FSA02000	N/A	N/A			1

PDF Published March 1, 2013

Variable Area Flow Meters

CHEMLINE PLASTICS
SUPERIOR FLOW SOLUTIONS

Chemline F Series Variable Area Flow Meters are ideal for plastic piping. They provide a combination of accurate visual flow rate measurement and clear flow indication from a distance. Optional limit switches allow the units to signal a low or high flow alarm. An optional flow transmitter provides a 4 to 20 mA signal output. These flow meters must be installed vertically with flow upward.

PVC | PA | PSU | PVDF — Tube

PVC | CPVC | PP | PVDF — Ends

CRN Registered Consult Chemline

SERIES: FC – Compact – 5" Single Scale
FS – Full Size – 7" Dual Scale[1]

MATERIALS: Tube: Clear PVC, Polyamide (PA), Polysulfone (PSU) or PVDF[2]
Float: PVDF
Ends: PVC, CPVC, PP, PVDF, Socket, Threaded, Flanged, Butt or ChemFlare™[3]

O-RINGS: EPDM, FPM (Viton®)

CAPACITIES: Up to 220 USGPM (50,000 litres per hour)



features

Clear Visual Indication

- Large orange float is visible from a distance
- Range indicators slide along dovetail track

Easy Installation and Maintenance

- Just unscrew union nuts and tube slides out of line

Choice of Four Tube Materials for Many Applications:

- ***Clear PVC*** – For Water or Chemicals up to 60°C (140°F) – High Chemical resistance at low cost
- ***Polyamide (PA)*** – For Water or Air up to 75°C (167°F) – High impact strength and optical clarity
- ***Polysulfone (PSU)*** – For Chemicals and Gases up to 100°C (212°F) – High impact strength and good chemical resistance
- ***PVDF[2]*** – For Chemicals and Ultrapure fluids up to 110°C (230°F) – High impact strength and excellent chemical resistance.

Ideal for All Types of Plastic Piping

- All types of end connections in PVC, CPVC, PP & PVDF

Low Pressure Drop

Good Measuring Accuracy – Class IV

- ± 3% of indicated value, plus ± 1% of full scale. – Read scale at top (largest diameter) of float

Non Fouling

- Float is self supporting in the flow. No guide rod (which can cause the float to jam) is necessary.

[1] USGPM and litres per hour (water) scale is supplied as standard on full size meters.
[2] Because PVDF is translucent, a magnetic float and limit switches are usually used.
[3] For ChemFlare™ end connectors, consult Chemline.

03/13 ©Chemline Plastics Limited 2013
Chemline is a registered trade mark of Chemline Plastics Limited

Variable Area Flow Meters

NOTES:

PVDF flow meters are available in all sizes. Change third letter in item number to **K**.

[1] △P = Pressure loss through flow meter with water at 20°C (68°F).

[2] Dimension **L** is for PVC Socket ends.

FC SERIES – COMPACT SIZE – 5″ SCALE

Single USGPM (water) scale is supplied standard

End Conn. Size	Item Number			Flow Range (water)		Dimensions (inches)			Pressure Drop (psi)[1]	
	PVC Tube	Polyamide Tube	Polysulfone Tube	USGPM	Litres per hour	A	L[2]	D	Water	Air
3/8″	FCA00020	FCT00020	FCP00020	0.0132 – 0.106	3 – 24	6.50	8.2	1.38	0.05	0.07
	FCA00060	FCT00060	FCP00060	0.022 – 0.264	5 – 60	6.50	8.2	1.38	0.05	0.07
	FCA00100	FCT00100	FCP00100	0.04 – 0.44	10 – 100	6.50	8.2	1.38	0.05	0.07
	FCA00250	FCT00250	FCP00250	0.11 – 1.10	25 – 250	6.50	8.2	1.38	0.05	0.07
1/2″	FCA00051	FCT00051	FCP00051	0.02 – 0.22	5 – 50	6.69	8.7	1.69	0.04	0.06
	FCA00151	FCT00151	FCP00151	0.07 – 0.66	15 – 150	6.69	8.7	1.69	0.04	0.06
	FCA00251	FCT00251	FCP00251	0.11 – 1.10	25 – 250	6.69	8.7	1.69	0.04	0.06
	FCA00401	FCT00401	FCP00401	0.18 – 1.76	40 – 400	6.69	8.7	1.69	0.04	0.06
3/4″	FCA00152	FCT00152	FCP00152	0.07 – 0.66	15 – 150	7.28	9.6	2.09	0.09	0.12
	FCA00402	FCT00402	FCP00402	0.22 – 1.76	40 – 400	7.28	9.6	2.09	0.09	0.12
	FCA00602	FCT00602	FCP00602	0.26 – 2.64	60 – 600	7.28	9.6	2.09	0.09	0.12
	FCA01002	FCT01002	FCP01002	0.44 – 4.40	100 – 1,000	7.28	9.6	2.09	0.09	0.12
1″	FCA00253	FCT00253	FCP00253	0.11 – 1.10	25 – 250	7.87	10.5	2.36	0.09	0.12
	FCA00403	FCT00403	FCP00403	0.18 – 1.76	40 – 400	7.87	10.5	2.36	0.09	0.12
	FCA01003	FCT01003	FCP01003	0.44 – 4.40	100 – 1,000	7.87	10.5	2.36	0.09	0.12
	FCA01503	FCT01503	FCP01503	0.66 – 6.60	150 – 1,500	7.87	10.5	2.36	0.09	0.12

FS SERIES – STANDARD FULL SIZE – 7″ SCALE

Dual USGPM (water) and litres per hour scales are supplied standard

End Conn. Size	Item Number			Flow Range (water)		Dimensions (inches)			Pressure Drop (psi)[1]	
	PVC Tube	Polyamide Tube	Polysulfone Tube	USGPM	Litres per hour	A	L[2]	D	Water	Air
1″	FSA00600	FST00600	FSP00600	0.26 – 2.64	60 – 600	13.78	16.3	2.36	0.18	0.23
	FSA01000	FST01000	FSP01000	0.44 – 4.40	100 – 1,000	13.78	16.3	2.36	0.18	0.23
1-1/4″	FSA01500	FST01500	FSP01500	0.66 – 6.60	150 – 1,500	13.78	16.6	2.83	0.18	0.23
	FSA02500	FST02500	FSP02500	1.10 – 11.00	250 – 2,500	13.78	16.6	2.83	0.18	0.23
1-1/2″	FSA02000	FST02000	FSP02000	0.88 – 8.80	200 – 2,000	13.78	16.8	3.27	0.18	0.23
	FSA03000	FST03000	FSP03000	1.32 – 13.20	300 – 3,000	13.78	16.8	3.27	0.18	0.23
2″	FSA04000	FST04000	FSP04000	1.76 – 17.60	400 – 4,000	13.78	17.2	4.06	0.32	0.39
	FSA06000	FST06000	FSP06000	2.64 – 26.40	600 – 6,000	13.78	17.2	4.06	0.32	0.39
	FSA10000	FST10000	FSP10000	4.40 – 44.00	1,000 – 10,000	13.78	17.2	4.06	0.32	0.39
2-1/2″	FSA15000	FST15000	FSP15000	6.60 – 66.00	1,500 – 15,000	13.78	17.7	4.80	0.49	0.58
	FSA25000	FST25000	FSP25000	11.00 – 110.00	2,500 – 25,000	13.78	17.7	4.80	0.49	0.58
	FSA50000	FST50000	FSP50000	44.00 – 220.00	10,000 – 50,000	13.78	17.7	4.80	0.49	0.58

CONVERSION CHART – FLOW UNITS

From To	m^3/hr	litres/hr	USGPM	ImpGPM	ft^3/min
m^3/hr	1	1000	4.4029	3.6662	0.5886
litres/hr	0.001	1	.004403	.003666	.000589
USGPM	0.2271	227.12	1	0.8327	0.1337
ImpGPM	0.2728	272.77	1.2009	1	0.1605
ft^3/min	1.6990	1699	7.4806	6.2289	1

Values based on water at 20°C (68°F).

Variable Area Flow Meters

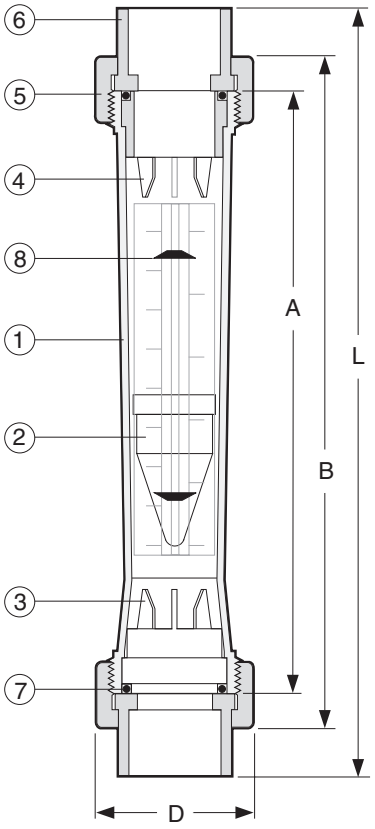

PARTS

▲ Recommended Spare Parts

No.	Part	Pcs.	Materials
1	Tube	1	Polyamide (PA), Polysulfone (PSU), Clear PVC, PVDF
2	Float	1	PVDF (standard or magnetic)
3	Lower Float Stop	1	PVDF
4	Upper Float Stop	1	PVDF
5	Union Nut	2	PVC, PPG, PVDF
6	End Connector	2	PVC, CPVC, PP or PVDF
7▲	O-Rings	2	EPDM, FPM(Viton®)
8▲	Range Indicator	2	ABS

ACCESSORIES

- **Limit Switches** – One switch for both maximum or minimum. A magnetic float is required.
- **Switch Ratings** – P (max) = 10 VA, E (max) = 470VAC, I (max) = 0.5A
- **Throttling Valve** for flow control
- **4–20 mA Output Signal Unit** must be factory calibrated for specific service

OPTIONS

- **Custom Direct Reading Scale** for services other than water
- **Alternate O-Rings** – ie. FPM (Viton®)
- **End Size Reduction** – Accuracy is not significantly affected by end reduction
- **Other Ends** – Threaded, socket or flanged end connections in PVC, CPVC, PP or PVDF. Butt ends in PP or PVDF.

MAXIMUM WORKING PRESSURES AND TEMPERATURE RANGES

Construction (‡ = Optional Materials)				Maximum	
Tube	O-Rings	Union Nuts	Ends	Pressure[2]	Temperature Range
PVC	EPDM	PVC	PVC	150 psi	0 to 60°C (32 to 140°F)
Polyamide (PA)	EPDM	PVC	PVC	150 psi	0 to 60°C (32 to 140°F)
Polyamide (PA)	EPDM	PPG‡	PP or CPVC‡	150 psi	0 to 75°C (32 to 167°F)
Polysulfone (PSU)	EPDM	PVC	PVC	150 psi	0 to 60°C (32 to 140°F)
Polysulfone (PSU)	EPDM	PPG‡	PP or CPVC‡	150 psi	0 to 90°C (32 to 194°F)
PVDF	FPM(Viton®)	PVDF	PVDF	150 psi	–40 to 110°C (–40 to 230°F)

[2] 150 psi is not recommended at maximum temperatures. Consult Chemline.

flow meter sizing – liquid flow

Standard Scale values are for clean water flow at 20°C (68°F). For liquids with densities and viscosities similar to water (ie. specific gravity of 1.0 and viscosities between 0.5 cP and 1.3 cP) the standard water scale will be accurate enough.

The table below shows correction factors to be applied for liquids with specific gravities other then 1.0. Multiply the correction factor by the water scale value to obtain actual flow rate. Example: For a liquid of specific gravity of 1.66, the correction factor is 0.740. For water flow range of 100 to 1000 litres/hr, corrected range becomes 74 to 740 litres/hr. Viscosity should be between 0.5 cP and 1.3 cP for standard scales to be accurate.

For "sizing" liquid flows ie. determining actual flow range of a tube, please advise the **chemical name, concentration, temperature, specific gravity** and **viscosity.** Custom direct reading scales in any units are available special order.

SCALE CORRECTION FACTORS – FOR LIQUIDS WITH SPECIFIC GRAVITIES OTHER THAN 1.00

Specific Gravity	.00	.01	.02	.03	.04	.05	.06	.07	.08	.09
	Scale Correction Factor									
0.4	1.647	1.626	1.605	1.585	1.565	1.548	1.529	1.513	1.495	1.479
0.5	1.462	1.447	1.433	1.418	1.404	1.391	1.377	1.364	1.351	1.339
0.6	1.326	1.316	1.304	1.292	1.282	1.271	1.259	1.250	1.239	1.229
0.7	1.220	1.211	1.202	1.192	1.183	1.175	1.167	1.157	1.149	1.142
0.8	1.134	1.125	1.117	1.111	1.104	1.096	1.089	1.082	1.075	1.068
0.9	1.062	1.055	1.048	1.042	1.035	1.030	1.024	1.017	1.011	1.005
1.0	1.000	0.994	0.988	0.982	0.978	0.972	0.967	0.962	0.956	0.951
1.1	0.947	0.943	0.936	0.932	0.927	0.923	0.917	0.913	0.909	0.904
1.2	0.900	0.895	0.891	0.887	0.883	0.878	0.874	0.870	0.866	0.862
1.3	0.858	0.854	0.850	0.846	0.842	0.838	0.835	0.831	0.827	0.824
1.4	0.820	0.818	0.814	0.810	0.806	0.803	0.800	0.797	0.794	0.791
1.5	0.787	0.784	0.781	0.778	0.776	0.773	0.770	0.767	0.764	0.759
1.6	0.756	0.754	0.751	0.748	0.745	0.742	0.740	0.737	0.734	0.730
1.7	0.728	0.726	0.723	0.720	0.717	0.714	0.712	0.709	0.706	0.704
1.8	0.701	0.699	0.696	0.694	0.691	0.689	0.686	0.684	0.682	0.679
1.9	0.677	0.674	0.672	0.669	0.667	0.665	0.663	0.661	0.658	0.657
2.0	0.654	0.652	0.650	0.648	0.646	0.644	0.641	0.604	0.637	0.636

flow meter sizing – gas flow

FLOW RANGES FOR AIR – AT STANDARD CONDITIONS (atmospheric pressure 14.7 psia/20°C).

FC SERIES – COMPACT SIZE – 5" SCALE

Flow Meter Item No.	Normal m_3/hr	Standard CFM
FCT00020	0.2 – 1.0	0.1 – 0.6
FCT00060	0.2 – 2.5	0.1 – 1.5
FCT00100	0.6 – 3.6	0.4 – 2.1
FCT00250	0.5 – 9.0	0.3 – 5.3
FCT00051	0.4 – 2.8	0.2 – 1.6
FCT00151	0.8 – 6.2	0.5 – 3.6
FCT00251	0.9 – 9.5	0.5 – 5.6
FCT00401	2.0 – 15.0	1.2 – 8.8
FCT00152	0.5 – 5.5	0.3 – 3.2
FCT00402	2.0 – 14.0	1.2 – 8.2
FCT00602	2.5 – 22.0	1.5 – 12.9
FCT01002	4.0 – 34.0	2.4 – 20.0
FCT00253	1.0 – 8.0	0.6 – 4.7
FCT00403	2.0 – 14.0	1.2 – 8.2
FCT01003	4.0 – 34.0	2.4 – 20.0
FCT01503	5.0 – 50.0	2.9 – 29.4

FS SERIES – STANDARD FULL SIZE – 7" SCALE

Flow Meter Item No.	Normal m_3/hr	Standard CFM
FST00600	2.5 – 20	1.5 – 12
FST01000	4 – 34	2.4 – 20
FST01500	5 – 50	2.9 – 29
FST02000	8.5 – 76	5.0 – 45
FST02500	8 – 70	4.7 – 41
FST03000	10 – 90	5.9 – 53
FST04000	14 – 125	8.2 – 74
FST06000	22 – 190	13 – 112
FST10000	35 – 300	21 – 177
FST15000	50 – 500	29 – 294
FST25000	80 – 720	47 – 424
FST50000	400 – 1,500	234 – 883

SCALE CORRECTION FACTORS – FOR AIR AT NON-STANDARD TEMPERATURES AND PRESSURES

Air density is dependent on the actual pressure and temperature.
Calculate the Scale Correction Factor using either Method 1 or 2. Multiply the standard air flow ranges above by the Factor to obtain actual flow rates.

Method 1

Calculate the Factor with the following formula.

$$\text{Factor} = \frac{1}{3.7005}\sqrt{\frac{\text{psia}}{(1+0.00367t)}}$$

psia = pressure of the air absolute
= psig + 14.7 (atmospheric pressure = 14.7 psia)
t = temperature of the air °C

Method 2

Calculate the density of the air at conditions and find factor from the chart below.

$$\text{Air Density (g/ml)} = \frac{\text{psia}}{11{,}360\,(1+0.00367t)}$$

psia = pressure of the air absolute
= psig + 14.7 (atmospheric pressure = 14.7 psia)
t = temperature of the air °C

Air Density vs. Flow Factor



Temperature vs. Pressure

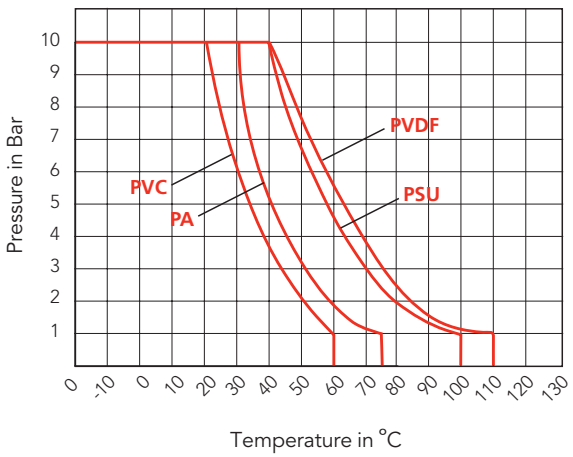

55 Guardsman Road, Thornhill, ON, L3T 6L2, Canada | ISO 9001:2008 Certified
tel.905.889.7890 | fax.905.889.8553 | request@chemline.com | chemline.com

LSFLO Reed Limit Switch

for FC & FS flow meters

The **LSFLO** limit switches serve as switches for minimum or maximum flow values. The normally open latching reed switch closes when the float in the measuring tube reaches and exceedes the switching position. The switch condition is maintained as long as the float is above the limit switch and will open when the float in the tube drops below the switch.

Normally closed switches are available on request.



technical

- **Operating voltage:** maximum 230 VAC
- **Operating current:** maximum 0.5 A
- **Constant current when switched:** maximum 1 A
- **Rupturing capacity:** maximum 10 W/10 VA
- **Closed resistance:** < 150 mΩ
- **Open resistance:** > 10^{10} Ω
- **Operating temperature:** 0°C(32°F) to 55°C(131°F)
- **Protection:** IP 65 (DIN EN 60528)
- **Hysteresis (switch on and off point):** 3 mm
- **Protection:** IP 65 (DIN EN 60528)
- **Dimensions:** 34 x 17 x 41 mm
- **Weight (with plug):** 40 g
- **Connections:** the polarity of the connections has no influence on the function

INSTALLATION

Screw clamps are used to fit the LSFLO on the dovetail guide of the flow meter.

CONNECTIONS

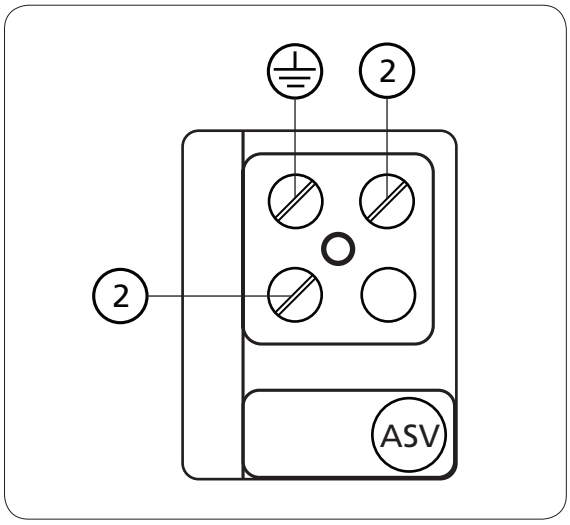

START-UP

Prior to the first start up it is important that the float passes the LSFLO switch three times to ensure the electronics inside recognize the magnetic field from the floats properly.

CHEMLINE PLASTICS
SUPERIOR FLOW SOLUTIONS

55 Guardsman Road, Thornhill, ON, L3T 6L2, Canada | ISO 9001:2008 Certified
tel.905.889.7890 | fax.905.889.8553 | request@chemline.com | chemline.com

ZE3000 Flow Transmitters

for FS flow meters

The **ZE300**0 flow transmitter provides a 4–20 mA output signal, generated by detection of the position of the magnetic float.

IMPORTANT: This micro-processor controlled unit is factory calibrated and unique to each flowmeter model. Flowmeter model must be advised when ordering.



technical

- **2-Wire technology**
- **4–20 mA analog output** (4-20.1 for 8 VDC supply; 4-22.0 for 28 VDC supply
- **8–28 VDC input**
- **Factory calibrated (flow meter to be specified when ordering)**
- **11 point calibration**
- **Non-volatile value storage**
- **0 Button to compensate for the surrounding magnetic influences**
- **Factory setting of the lower limit value (low-cut-off) 0-99% according to customer's specificaitons**
- **Factory time lag (low-pass filter) 0.1-2.5 sec. according to customer's specifications**
- **Measuring accuracy:** < 0.5%
- **Temperature range:** –30°C(–20°F) to 65°C(150°F)

INSTALLATION

Screw clamps are used to fit the ZE3000 on the dovetail guide of the flow meter.

During installation, ensure that the notch of the ZE3000 coincides with the 50% mark on the flow meter scale.

Following this, proceed with the wiring according to the diagram.

DIMENSIONS

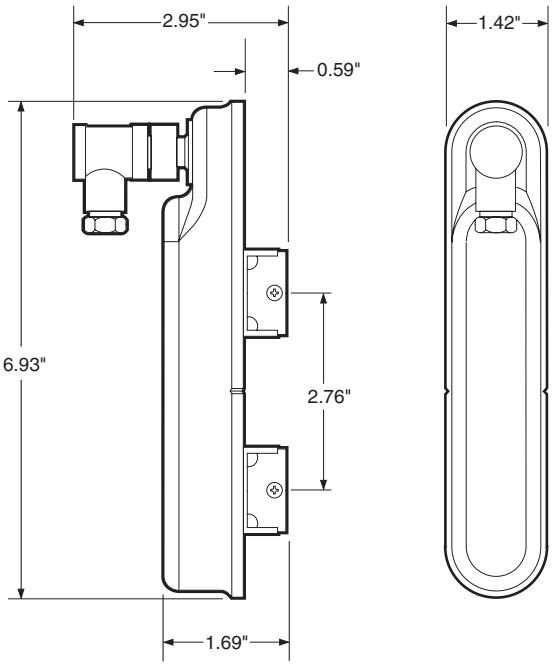

WIRING

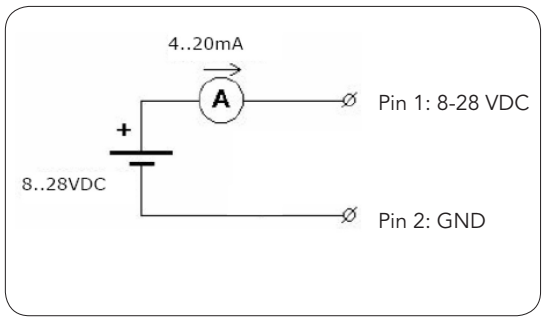

START-UP

After installation and wiring, press the 0 button for at least 2 sec. to compensate for possible electro-magnetic interference. During this time make sure the float is at the bottom of the flowmeter (ie. no flow condition).

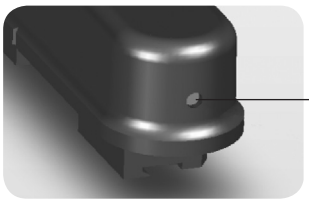

Note:
Do not press button during normal operation.

CHEMLINE PLASTICS
SUPERIOR FLOW SOLUTIONS

55 Guardsman Road, Thornhill, ON, L3T 6L2, Canada | ISO 9001:2008 Certified
tel.905.889.7890 | fax.905.889.8553 | request@chemline.com | chemline.com

ZE3075 Flow Transmitters

for FC flow meters

The **ZE3075** flow transmitter provides a 2- wire 4–20 mA output signal omit generated by precise detection of the position of the magnetic float.

The magnetic float travels along the reed chain of switches activating them.

This micro-processor controlled unit is field calibrated.

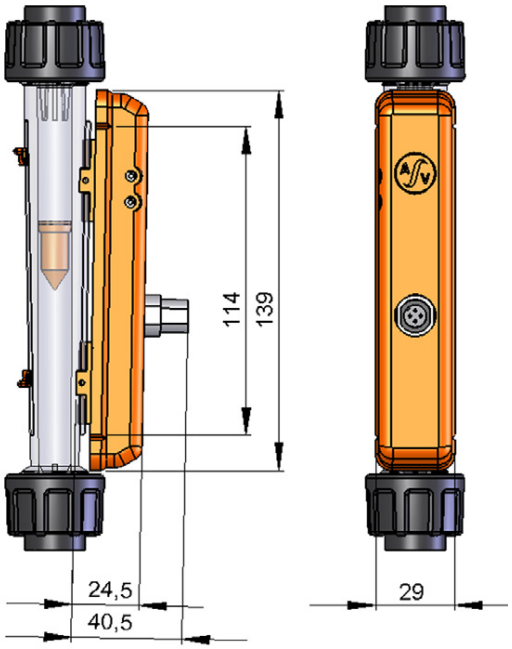

technical

- **2-Wire technology**
- **4–20 mA analog output** (4-20.1 for 8 VDC supply; 4-22.0 for 28 VDC supply
- **18–30 VDC input**
- **Field calibration**
- **Non-volatile value storage**
- **Measuring length:** 114 mm (4.5")
- **Measuring resolution:** 3.5 mm (0.138")
- **Measuring accuracy:** 3%
- **Temperature range:** –20°C(–4°F) to 70°C(158°F)

INSTALLATION

Screw clamps are used to fit the ZE3075 on the dovetail guide of the flow meter.

During installation, ensure that the top and bottom notches of the ZE3075 coincide with the 10% and 100% marks on the flow meter scale.

Following this, proceed with the wiring according to the diagram.

COMPONENTS

1. Alignment notches for the proper location of the transmitter
2. Potentiometer for the upper limit value of the output signal
3. Potentiometer for the lower limit value of the output signal
4. Plug connector

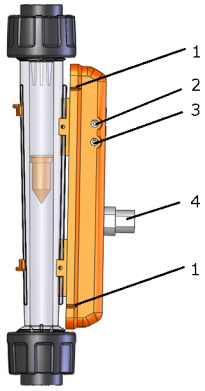

WIRING

The unit is connected with a commercially available unshielded cable.

Where electro-magnetic interference is to be expected, we recommend the use of a shielded cable.

Cable cross section: max. 0.75 mm² cable outer diameter: 6 to 8 mm.

Flange Connector

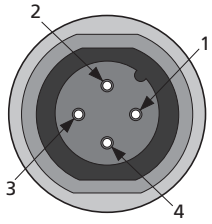

1. Signal (+)
2. Signal (+)
3. n.c.
4. n.c.

Circuit Diagram

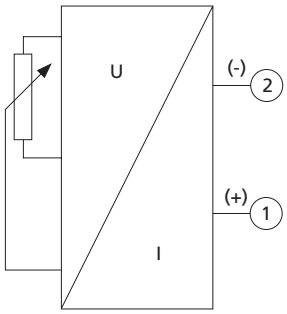

CALIBRATION

Compensation between the non-linear scaling of the flowmeter and the linear output signal of the flow data sensor must be performed by adjusting, preferably between 20% and 80% of the flow rate.

20% corresponds to 7.2mA and 80% to 16.8mA.

- Connect the ampermeter and the respective voltage supply to the flow data sensor
- Allow 20% of the flow to pass through the FC flow meter
- Set the min. trimmer potentiometer (3) such that the corresponding current (7.2mA) is shown in the ampermeter
- Allow 80% of the flow to pass through the FC flow meter
- Set the max. trimmer potentiometer (3) such that the corresponding current (16.8mA) is shown in the ampermeter
- Check the values at 20% and 80% several times and repeat the adjustment, if required

CHEMLINE PLASTICS
SUPERIOR FLOW SOLUTIONS

55 Guardsman Road, Thornhill, ON, L3T 6L2, Canada | ISO 9001:2008 Certified
tel.905.889.7890 | fax.905.889.8553 | request@chemline.com | chemline.com

CS-434-700 : Identification sheet

VWTC PROJECT NUMBER:	Iqaluit WWTP	REV:	01
PROJECT NAME:	5000218036	SUBMITTED TO (COMPANY):	
ENGINEER:	F.VINCI	SUBMITTED TO (RESPONSIBLE)	
PROJECT MANAGER:	C. BEKAERT	PROJECT NUM REFERENCE.:	
PHONE NUMBER:		LOT NUMBER:	

SUPPLIER	EQPT CODE	EQPT TAG NO	DIA	DESCRIPTION	INFO 1	INFO 2	INFO 3	APPLIC.	NOTE	REV
IFM	IESWSP342303	PSH-02-987 PSH-02-990		High pressure switch	PRESSURE SWITCH/ MANUFACTURER: IFM// MODEL:PN7294// EFECTOR SOO // Approval: cULUS CRN //Output: IOLink 1.1 or (OUT1 = switching output, OUT2 = switching output) // 4-digit alphanumeric display // measuring range -14.5…145 psi					1

Tags should be in Area 04.
Ex. PSH-04-987

PN7294

PN-010-REN14-QFRKG/US/ /V

Pressure sensors

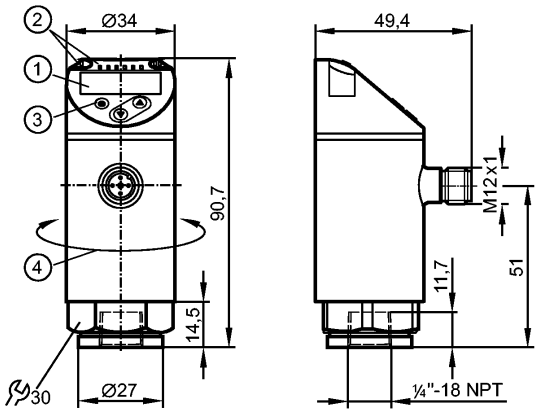

1: 4-digit alphanumeric display / alternating indication of red and green
2: LEDs (display unit / switching status)
3: Programming button
4: Upper part of the housing can be rotated by 345°

CE CRN cULus LISTED EAC IO-Link

Product characteristics
Electronic pressure monitor
M12 connector
Function programmable
Measuring element: ceramic-capacitive pressure measuring cell
Process connection: ¼" NPT I
2 outputs OUT1 = switching output OUT2 = switching output
4-digit alphanumeric display / alternating indication of red and green
Measuring range: -14.5...145 psi / -1...10 bar / -0.1...1.0 MPa

Application				
Application		Type of pressure: relative pressure liquids and gases of the fluid group 2 according to Article 9 of the Pressure Equipment Directive (PED)		
Pressure rating		1087 psi	75 bar	7.5 MPa
Bursting pressure min.		2175 psi	150 bar	15 MPa
Medium temperature	[°C]	-25...80		

Electrical data		
Electrical design		DC PNP/NPN
Operating voltage	[V]	18...30 DC [1])
Current consumption	[mA]	< 35
Insulation resistance	[MΩ]	> 100 (500 V DC)
Protection class		III
Reverse polarity protection		yes

Outputs		
Output		2 outputs OUT1 = switching output OUT2 = switching output
Output function		2 x normally open / closed programmable
Current rating	[mA]	150; 200 (...60 °C); 250 (...40 °C)

Voltage drop	[V]	< 2.5		
Short-circuit protection		yes (non-latching)		
Overload protection		yes		
Switching frequency	[Hz]	≤ 170		
Measuring / setting range				
Measuring range		-14.5...145 psi	-1...10 bar	-0.1...1.0 MPa
Setting range				
Set point, SP		-13.5...145 psi	-0.90...10 bar	-0.09...1 MPa
Reset point, rP		-14...144.5 psi	-0.95...9.95 bar	-0.095...0.995 MPa
in steps of		0.5 psi	0.05 bar	0.005 MPa
Accuracy / deviations				
Accuracy / deviations (in % of the span)				
Switch point accuracy		< ± 0.5		
Characteristics deviation *)		< ± 0.25 (BFSL) / < ± 0.5 (LS)		
Hysteresis		< ± 0.25		
Repeatability **)		< ± 0.1		
Long-term stability ***)		< ± 0.05		
Temperature coefficients (TEMPCO) in the temperature range -25...80° C (in % of the span per 10 K)				
Greatest TEMPCO of the zero point		0.2		
Greatest TEMPCO of the span		0.2		
Response times				
Power-on delay time	[s]	< 0.3		
Min. response time switching output	[ms]	< 3		
Delay time programmable dS, dr	[s]	0...50		
Integrated watchdog		yes		
Software / programming				
Programming options		hysteresis / window function; N.O. / N.C; output polarity; on delay, off delay; damping; display unit		
Interfaces				
IO-Link Device				
Transfer type		COM2 (38.4 kBaud)		
IO-Link revision		1.1		
SDCI standard		IEC 61131-9		
IO-Link Device ID		403 d / 00 01 93 h		
Profiles		Smart Sensor: Process Data Variable; Device Identification; Device Diagnosis		
SIO mode		yes		
Required master port class		A		
Process data analogue		1		
Process data binary		2		
Min. process cycle time	[ms]	2.3		
Environment				
Ambient temperature	[°C]	-25...80		
Storage temperature	[°C]	-40...100		
Protection		IP 65 / IP 67		

efector500

PN7294

PN-010-REN14-QFRKG/US/ /V

Pressure sensors

Tests / approvals			
Pressure equipment directive		article 3, section 3 - sound engineering practice	
EMC		DIN EN 61000-6-2 DIN EN 61000-6-3	
Shock resistance		DIN EN 60068-2-27	50 g (11 ms)
Vibration resistance		DIN EN 60068-2-6	20 g (10...2000 Hz)
MTTF	[Years]	224.01	
UL approval number		J001	
Mechanical data			
Process connection		¼" NPT I	
Materials (wetted parts)		316L stainless steel / 1.4404; ceramics; FKM	
Housing materials		316L stainless steel / 1.4404; PBT+PC-GF 30; PBT-GF 20; PC	
Switching cycles min.		100 million	
Tightening torque	[Nm]	(2...3 turns after finger tightened (recommended tightening torque²))	
Weight	[kg]	0.221	
Displays / operating elements			
Display		Display unit Switching status Measured values of red and green	3 x LED green (bar, psi, MPa) 2 x LED yellow 4-digit alphanumeric display / alternating indication
Electrical connection			
Connection		M12 connector; gold-plated contacts	

Wiring

Core colors

BK	black
BN	brown
BU	blue
WH	white



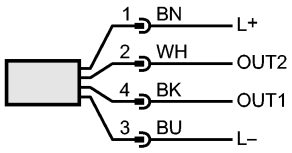

OUT1: switching output or IO-Link
OUT2: switching output
Colours to DIN EN 60947-5-2

Remarks			
Remarks		¹) to EN50178, SELV, PELV ²) Depends on lubrication, seal and pressure rating *) BFSL = Best Fit Straight Line / LS = Limit Value Setting **) with temperature fluctuations < 10 K ***) in% of the span / 6 months	
Pack quantity	[piece]	1	

REVIEWED BY CONTRACTOR

Kudlik Construction Ltd.

NAME: Sandra Rousseau P.Eng
DATE: Jun 11, 2019

SHOP DRAWINGS

Dosing Skid (triplex) Submittal package Date : 2019-06-10

General Information			
Project	**WWTP UPGRADE - IQALUIT**		
Client:	Kudlik Construction Ltd.	Project Number	2018-062
To:	Sandra Rousseau P.Eng., Project Manger	E-mail:	srousseau@kudlik.biz
Contractor	Veolia Water Technologies Canad Inc.	Project Number	5000218036
Address	4105 Sartelon, Ville St. Laurent PQ, H4S 2B3		
Project Manger:	Clément Bekaert	E-mail:	clement.bekaert@veolia.com
Phone:	514-334-7230 x 3243	Cell:	514-246-6232

Information on the Equipment		
Specialty:	Process	
Equipment:	Dosing Skid (triplex)	
Drawing Reference:		
Specification reference:	46 36 11	
Article:		
Revision:	Rev02	
Titre:	Dosing Skid (triplex) submittal package	
Numero client:	DA-Veolia-DS-07-Dosing Skid triplex	
Numero Veolia	5000218036_DS_0007_GEN_VWT	
Envoyer pour:	Approbation/Information:	Approbation

Consultant Approval

STANTEC PROJECT #: 110126045

This review by Stantec is for general conformance with the design concept of Stantec's design of the:

☐ Architectural ☐ Structural ☐ Mechanical ☑ Electrical ☐ Other

component(s) only and does not mean that Stantec has verified or approves the shop drawing(s). The Contractor remains solely responsible for the shop drawing(s) and this review by Stantec does not relieve the Contractor of the Contractor's responsibility for errors or omissions in the shop drawing(s) or for meeting all requirements of the contract documents. This review does not mean that Stantec approves the detailed design inherent in the shop drawing, responsibility for which shall remain with the Contractor submitting same, nor does this review mean that Stantec accepts any deviation of the shop drawing(s) from the contract documents. The Contractor is responsible for confirming all dimensions and correlating them at the job site, for all construction means, methods and techniques, and for coordination of construction work of all trades, including coordination of all shop drawings.

SUBMITTAL # DA-Veolia-DS-07-Dosing Skid Triplex-Rev02

Stantec

☑ REVIEWED
☐ REVIEWED, AS NOTED
☐ REVISE AND RESUBMIT
☐ NOT REVIEWED

DATE 2019-06-13

BY Jamie McLeish

STANTEC PROJECT #: 110126045

This review by Stantec is for general conformance with the design concept of Stantec's design of the:

☑ Process ☐ Structural ☐ Mechanical ☐ Electrical ☐ Other

component(s) only and does not mean that Stantec has verified or approves the shop drawing(s). The Contractor remains solely responsible for the shop drawing(s) and this review by Stantec does not relieve the Contractor of the Contractor's responsibility for errors or omissions in the shop drawing(s) or for meeting all requirements of the contract documents. This review does not mean that Stantec approves the detailed design inherent in the shop drawing, responsibility for which shall remain with the Contractor submitting same, nor does this review mean that Stantec accepts any deviation of the shop drawing(s) from the contract documents. The Contractor is responsible for confirming all dimensions and correlating them at the job site, for all construction means, methods and techniques, and for coordination of construction work of all trades, including coordination of all shop drawings.

SUBMITTAL # DA-Veolia-DS-07-Dosing Skid Triplex-Rev02

Stantec

☑ REVIEWED
☐ REVIEWED, AS NOTED
☐ REVISE AND RESUBMIT
☐ NOT REVIEWED

DATE Jun 11, 2019

BY Alejandro Rojas, P.Eng

4105 Sartelon
Ville St. Laurent, PQ
H4S-2B3

Phone: 514-334-7230
Fax: 514-334-5070
www.veoliawatertechnologies.ca

Project name:	IQALUIT
Project#:	5000218036
Document #:	5000218036_DS_0007_PM_VWT_REV02
by:	BB
chkd:	GH
appvd:	CB

SUBMITTAL PACKAGE

SKID TRIPLEX- REV02

Project name:	IQALUIT
Project#:	5000218036
Document #:	5000218036_DS_0007_PM_VWT_REV02
by:	BB
chkd:	GH
appvd:	CB

SKID TRIPLEX

PROCESS DATASHEET

OIM manual section: 4.3.7.1

1	VEOLIA					VWT CANADA #		PSDS_0007_PCH			
2						Project #		5000218036			
3						Date		2018-09-18			
4						Polymer					
5	CLIENT	REV	DESCRIPTION			DATE	By	Chkd		App.	
6		0									
7	CITY OF IQALUIT	1	FOR APPROVAL			2018-09-18	G.H.	GP		C.B.	
8		2	FOR APPROVAL 2			2018-10-11	G.H.	GP		C.B.	
9	PROJECT	3	FOR APPROVAL 3			2019-01-29	F.V.	GP		C.B.	
10		4									
11	IQALUIT	5									
12		6									
13		TAG:									REV
14	GENERAL	Dosed Chemical					Polymer				
15		Number of skids					1				
16		Pumps type					Cavity Progressive Pump				
17		Model Serie					Netszch				
18		Total number of pumps					3				
19		Number of pumps in duty					2				
20		Number of pumps in standby					1				
21		Number of dosing points					2				
22	PROCESS REQUIREMENT	Min Flowrate				lph	10				
23		Avg Flowrate				lph	102				3
24		Max Flowrate				lph	150				3
25	ENVIRONMENT	Equipment Location					Indoor				
26		Min. Temperature				°C	5				
27		Max . Temperature				°C	25				
28		Max. Humidity				%	95				
29		Corrosive Atmosphere					Non Corrossive				
30		Freeze					N/A				
31		Comments									
32	SAFETY	Electrical Classification					Non Hazardous				
33		Province/State					Nunavut				
34	PUMP(S) CAPACITY	Max Flowrate				lph	250				3
35		Min Flowrate				lph	10				
36	TECHNICAL DESCRIPTION	Skid Frame			Material		Stainless Steel				3
37					Type		Stand Alone				
38					Option #1		N/A				
39					Option #2						
40		Pump		X	Dosing Pumps		Netszch NM015BY01L06B				
41				x	Variable Frequency Drive	N/A	See Electrical Submital Package				
42		Components	Valves		Foot valve c/w flexible hose						
43					Isolation Valves (Common Suction)	N/A	N/A		0		
44				x	Isolation Valves (Suction)	Chemline	#N/A		3		
45				x	Isolation Valve Calibration Cylinder (Suction)	Chemline	#N/A		3		
46				x	Isolation Valves (Discharge)	Chemline	21A005EC		7		
47					Isolation Valves Calibration Cylinder (Discharge)	N/A	N/A		0		
48					Check Valves (Discharge)	N/A	N/A		0		
49				x	Backpressure Valves	Chemline	SB12A005EU (BPVG)		3		
50					C/w Isolator & Press. Gauge	Chemline	SGA-005-002-P-G + P025-160-BM	Config. L-U	0		
51				x	Relief Valves	Chemline	SB12A005EU (RV)		3		
52					W/o Press. Gauge	N/A	N/A	N/A			
53				x	Metering Valve - Carrier Water	Chemline SM	SM2A005ES		2		
54				x	Isolation Valves - Carrier Water	Chemline	21A005EC		2		
55				x	Check Valves - Carrier Water	Chemline	BTA005EC		2		
56				x	On/Off Valves - Carrier Water	ASCO	8210G094-120VAC	Brass	2		
57				x	Cleaning Valves	Chemline	21A005EC		3		
58			Misc.	x	Calibration Cylinder	PFS	PV#2-1000	1000 ml	1		
59				x	Variable Area Flowmeter	Chemline	FCA00401		2		
60					Flow Switch	N/A			0		
61					Isolation Valves Flow Meter (Discharge)	N/A	N/A		0		
62					Flowmeter	N/A			0		
63					Pulsation Dampener	N/A			0		
64		Piping			VWS Piping spec code		A050C				
65					Pipe Material		PVC Sh 80 ASTM D1784				
66					Common Suction Nominal Pipe Size	in	1"				
67					Suction Pipe Nominal Pipe Size	in	1''				
68					Discharge Pipe Nominal Pipe Size	in	1/2"				
69	UTILITIES	Service Water for Chemical Transport			Flowrate (per injection line)	lph	315				
70					Pressure	psig					
71					Transport Water Nominal Pipe Size	in	1/2"				

	VEOLIA					VWT CANADA #		PSDS_0007_PCH		
						Project #		5000218036		
						Date		2018-09-18		
						Polymer				
CLIENT	REV	DESCRIPTION			DATE	By		Chkd	App.	
	0									
CITY OF IQALUIT	1	FOR APPROVAL			2018-09-18	G.H.		GP	C.B.	
	2	FOR APPROVAL 2			2018-10-11	G.H.		GP	C.B.	
PROJECT	3	FOR APPROVAL 3			2019-01-29	F.V.		GP	C.B.	
	4									
IQALUIT	5									
	6									
	TAG:									REV
DESIGN CRITERIA	Design Pressure				psig	60				3
	Design Temperature				°C	35				
	Operating Pressure				psig	45				3
	Test Pressure				psig	90				3
	Test duration				min	15				
	Test Fluid				-	Water				
CONNECTIONS	Inlet			Diameter (NPS)	in	1"				
				Type		Socket union				
	Outlet			Diameter (NPS)	in	1/2"				
				Type		Socket union				
	Transport Water			Diameter (NPS)	in	1/2"				
				Type		Socket union				
ELECTRICITY	Main Power					575V/3Ph/60 Hz				
	Controls					VFD c/w 4-20 mA				
	Frame Grounding									
	Wiring			Pre wired (Y or N | details)		w/o wiring and JB				
				Cable Type						
	Anchors			Qty		6				
				Supply		No				
CODE, APPROVAL & CERTIFICATIONS	Design Code					ASME B31.3 Non Certified				
	Glueing					Glueing B31.3 non certified / Non Cer				
	Mandatory Registration									
OVERALL DIMENSIONS AND WEIGHT	Weight (dry)			Final	kg	Refer to GA drawing				
	Overall Length				mm					
	Overall Width			Final	mm					
	Overall Height				mm					

Is Veolia supplying JB-003 as shown on the P&ID?

Project name:	IQALUIT
Project#:	5000218036
Document #:	5000218036_DS_0007_PM_VWT
by:	BB
chkd:	GH
appvd:	CB

SKID TRIPLEX

PUMP(S)

OIM manual section: 4.3.7.2

CS-999-001 : Identification sheet

VWTC PROJECT NUMBER:	Iqaluit WWTP	REV:	02
PROJECT NAME:	5000218036	SUBMITTED TO (COMPANY):	
ENGINEER:	F.VINCI	SUBMITTED TO (RESPONSIBLE)	
PROJECT MANAGER:	C. BEKAERT	PROJECT NUM REFERENCE.:	
PHONE NUMBER:		LOT NUMBER:	

SUPPLIER	EQPT CODE	EQPT TAG NO	DIA	DESCRIPTION	INFO 1	INFO 2	INFO 3	APPLIC.	NOTE	REV
NETSZCH	ST-999-001	P04-770		PROGRESSIVE CAVITY PUMP	DOSING PUMP // Manuf : NETZSCH // Model: NM015BY01L06B // AVERAGE FLOW RATE: 102LPH@45PSIG // APPROX. MAX FLOWRATE: 260 LPH@85PSIG // APPROX. MIN FLOW RATE: 18 LPH@85PSIG // MOTOR MARATHON BLACK MAX 575/3/60, 0.5 HP // NORD GEAR INLINE REDUCER	WITH GEAR RATIO 5.5:1 // WETTED PARTS 316 SS // BUNA NITRILE STATOR // MECHANICAL SEAL BURGMANN SINGLE MG1-G60 // 1" SUCTION & DISCHARGE ANSI CLASS 150 B16.5 FLANGE // MOUNTED ON CUSTOM LOW PROFILE CARBON STEEL BASEPLATE //		C/W STP-3 DRY RUN PROTECTION SENSOR WITH OMRON CONTROLLER (NO CABLES) 120 VAC CSA APPROVED		2
NETSZCH	ST-999-001	P04-780		PROGRESSIVE CAVITY PUMP	DOSING PUMP // Manuf : NETZSCH // Model: NM015BY01L06B // AVERAGE FLOW RATE: 102LPH@45PSIG // APPROX. MAX FLOWRATE: 260 LPH@85PSIG // APPROX. MIN FLOW RATE: 18 LPH@85PSIG // MOTOR MARATHON BLACK MAX 575/3/60, 0.5 HP // NORD GEAR INLINE REDUCER	WITH GEAR RATIO 5.5:1 // WETTED PARTS 316 SS // BUNA NITRILE STATOR // MECHANICAL SEAL BURGMANN SINGLE MG1-G60 // 1" SUCTION & DISCHARGE ANSI CLASS 150 B16.5 FLANGE // MOUNTED ON CUSTOM LOW PROFILE CARBON STEEL BASEPLATE //		C/W STP-3 DRY RUN PROTECTION SENSOR WITH OMRON CONTROLLER (NO CABLES) 120 VAC CSA APPROVED		2

SUPPLIER	EQPT CODE	EQPT TAG NO	DIA	DESCRIPTION	INFO 1	INFO 2	INFO 3	APPLIC.	NOTE	REV
NETSZCH	ST-999-001	P04-790		PROGRESSIVE CAVITY PUMP	DOSING PUMP // Manuf : NETZSCH // Model: NM015BY01L06B // AVERAGE FLOW RATE: 102LPH@45PSIG // APPROX. MAX FLOWRATE: 260 LPH@85PSIG // APPROX. MIN FLOW RATE: 18 LPH@85PSIG // MOTOR MARATHON BLACK MAX 575/3/60, 0.5 HP // NORD GEAR INLINE REDUCER	WITH GEAR RATIO 5.5:1 // WETTED PARTS 316 SS // BUNA NITRILE STATOR // MECHANICAL SEAL BURGMANN SINGLE MG1-G60 // 1" SUCTION & DISCHARGE ANSI CLASS 150 B16.5 FLANGE // MOUNTED ON CUSTOM LOW PROFILE CARBON STEEL BASEPLATE //			CONDENSED INFORMATION 3 (FR) C/W STP-3 DRY RUN PROTECTION SENSOR WITH OMRON CONTROLLER (NO CABLES) 120 VAC CSA APPROVED	2

NETZSCH Canada, Inc. 500 Welham Road, Barrie, On., L4N 8Z7
Ph: 705-797-8426 Fax: 705-797-8427 Toll Free: 1-866-683-7867

Pump Quotation - Technical

Offer: N180717ST-01 (Item #30)

NEMO® pump with base plate and drive: NM015BY01L06B

The physical characteristics of the pumped product, the application details, as well as the General Operating Conditions detailed in our offer have been taken from your inquiry or where not specified have been assumed by us. In the event of an order we would ask you to check any assumptions and all details as they will become contractually binding along with the selection of pump model, Drive, all specifications, and materials of construction, based on these details.

Product:			Polymer
Composition			not advised
Specific gravity	assumed	kg/dm³	1.0
Particle size/solid ball size	allowed	mm	maximum 2 / 9
pH value	Approx.		not advised
Solids content (w/w)		% TS	not advised
Dynamic viscosity	approx.	cP	100
Vapour pressure		mm Hg	Not advised

Application details:		***DW #***	***172020***	***172020***	***172020***	***172020***
Flow rate (Q)	approx.	LPH	150	175	200	250
	approx.	GPM	0.66	0.77	0.88	1.1
Differential pressure	approx.	psi	85	85	85	85
Suction pressure	assumed	psig	Flooded	flooded	flooded	flooded
Discharge pressure	approx.	psig	85	85	85	85
Pump operating speed	approx.	RPM	200	230	260	310
Sliding velocity	approx.	ft/s	0.65	0.85	0.95	1.15
Frequency	approx.	Hz	38	44	50	60
Power required at drive shaft	approx.	HP	0.12	0.13	0.14	0.15
Running torque	approx.	lb-ft	2.6	2.6	2.6	2.6
Starting torque	approx.	lb-ft	1.6	1.6	1.6	1.6
Operating temperature	assumed	°C	20	20	20	20

Assembly specification

installation	vertical

General operating conditions

Installation area	inside
ambient Temperature	approx. 20°C / 70 F
humidity	up to 75%
application type	Continuous operation
operating hours	8 hours/day
service voltage	3/60/575

Painting	coating system	Netzsch standard

Operating and Maintenance Instructions

Standard documentation in accordance with the 98/37/EG Machinery Directive.
Special documentation is available on request and would be charged for.

number	1
medium	Paper
language for O&M's and spare parts list	English
dispatch method	shipped with pump

NETZSCH Canada, Inc. 500 Welham Road, Barrie, On., L4N 8Z7
Ph: 705-797-8426 Fax: 705-797-8427 Toll Free: 1-866-683-7867

Offer: N180717ST-01 (Item #30)
Date: July 13, 2018

Customer No.:

NEMO® NM015BY01L06B Pump

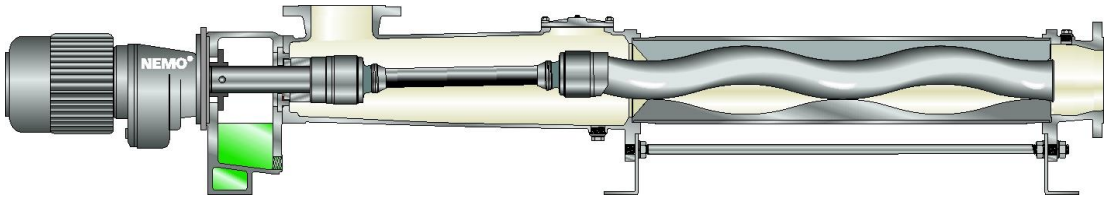

Characteristics and benefits of the NEMO® BY Block pump:

- Reliable and sophisticated construction
- Space-saving construction
- Modular construction system
- 4 different stator – rotor geometries available for most sizes
- Low investment and operating costs
- Low maintenance expenses

General characteristics	
name plate on the pump	in English (Stainless steel)
direction of rotation	to the right, clockwise (as viewed from drive end)

Pump Pedastal	
material	Cast iron 0.6025

Pump housing / End connection	
housing material	316 Stainless Steel
flange position	horizontal sidewards
function of housing connection	pressure connection
flange design	N.A.
nom. dia. & pressure for pump housing	1.25" NPT
suction flange design	N.A.
nom. dia. & pressure of suction flange	1.25" NPT
Function of end connection	suction connection
housing seals	FPM

Shaft seal	
type	Single mechanical Seal
shaft seal materials	Silicon Carbide Faces – Viton Elastomers
shaft seal type	Burgmann Single MG1-G60 – Q1Q1VGG

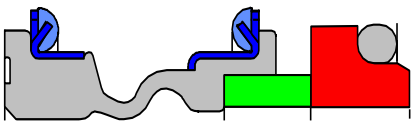

Rotating parts	
rotating parts materials	316 Stainless Steel

NETZSCH Canada, Inc. 500 Welham Road, Barrie, On., L4N 8Z7
Ph: 705-797-8426 Fax: 705-797-8427 Toll Free: 1-866-683-7867

Offer: N180717ST-01 (Item #30)
Date: July 13, 2018

Customer No.:

Joints	
joint type	pin joint
sealing type	SM Pin joint
joint sealing material	Viton/316 Stainless Steel
joint lubrication	Mineral oil

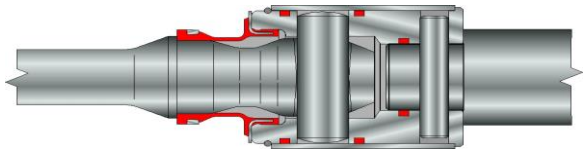

Rotor	
rotor material	316 Stainless Steel
temperature range for Stator expansion	UM20

Stator	
stator material	NEMOLAST® S61L – Buna Nitrile

Drive

Helical gear reducer	
manufacturer	Nord
type	SK072.1F-56C
gear ratio	5.5
speed @ 60 Hz	312
mounting position	M4
Motor	
Manufacturer	Marathon Black Max
motor HP	0.5
winding voltage	575
voltage range	+/- 10%
frequency / range	60 Hz / 1000:1 @ CT
number of poles	4
number of phases	3
Motor speed	1720 rpm
protection type	TENV
insulation class	F

Baseplate

assembly specification - material	Structural steel base plate

Approximate weight of pump assembly	95 lbs.

NETZSCH Canada, Inc. 500 Welham Road, Barrie, On., L4N 8Z7
Ph: 705-797-8426 Fax: 705-797-8427 Toll Free: 1-866-683-7867

Offer: N180717ST-01 (Item #30)
Date: July 13, 2018

Customer No.:

Performance curve:

NM015--01L Performance Curve
elastomer quality: standard

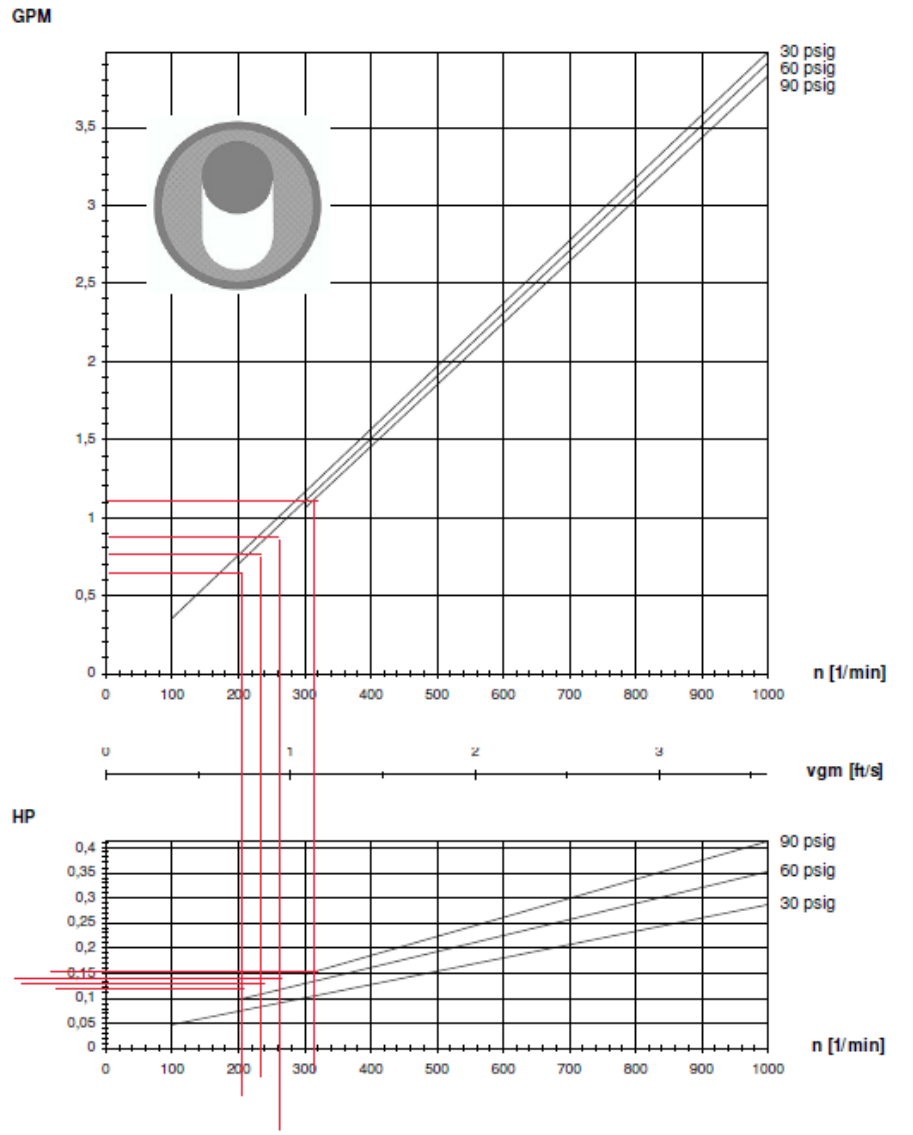

starting torque T(L) = 1,628 lbft

pressure	T
30 psig	1,85 lbft
60 psig	2,294 lbft
90 psig	2,664 lbft

Valid for water (1 cP) at 20 °C (70 °F). Tolerances are in accordance with VDMA 24284 (+10%/-5%).

www.netzsch-pumpen.de

NETZSCH Canada, Inc. 500 Welham Road, Barrie, On., L4N 8Z7
Ph: 705-797-8426 Fax: 705-797-8427 Toll Free: 1-866-683-7867

Offer: N180717ST-01 (Item #30)
Date: July 13, 2018

Customer No.:

Pump drawing:

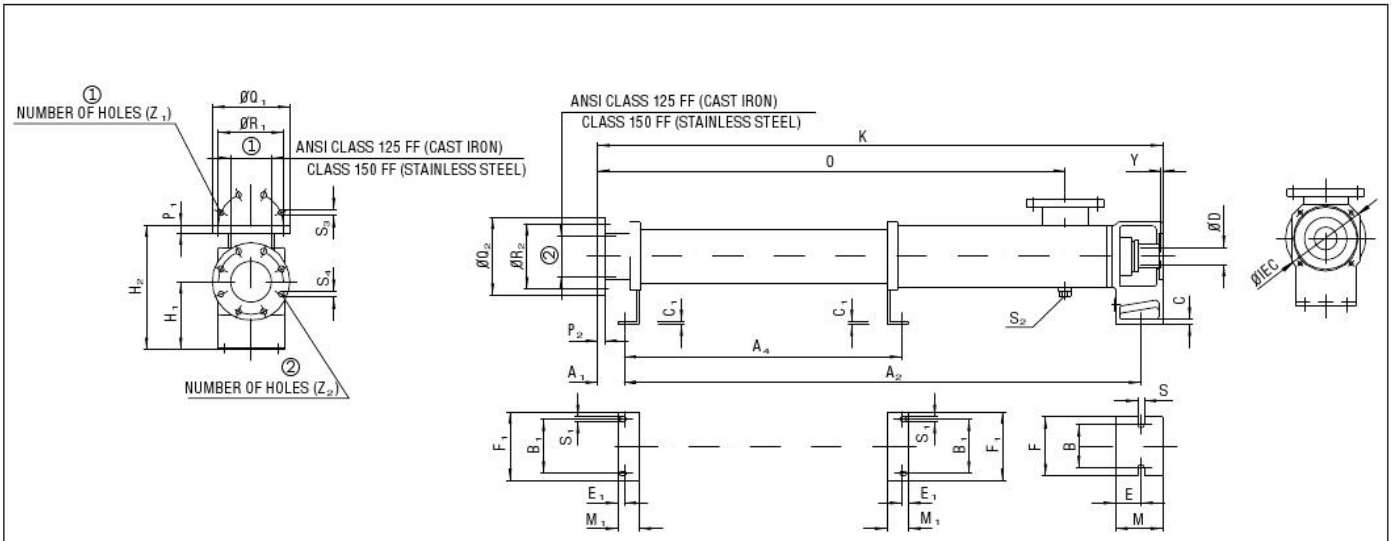

TYPE	BASIC DIMENSIONS																				ANSI ① / ②	PIPE CONNECTION P1 / P2	Q1 / Q2	R1 / R2	S3 / S4	Z1 / Z2	SHAFT END DMIN / DMAX	IEC
	A1	A2	A4	B	B1	C	C1	E	E1	F	F1	H1	H2	K	M	M1	O	S	S1	S2	Y								
NM015BY 02S12 / 01L06	41	411	–	95	50	8	5	28	15	125	80	100	160	481	55	40	328	12	9	NPT 1/2"	5	INTERNAL THREAD NPT 1 1/4"					12	140
																						INTERNAL THREAD NPT 1 1/4"					20	160
NM021BY 02S12 / 01L06	41	487	–	95	50	8	5	28	15	125	80	100	160	557	55	40	404	12	9	NPT 1/2"	5	INTERNAL THREAD NPT 1 1/4"					12	140
																						INTERNAL THREAD NPT 1 1/4"					20	160
NM031BY 02S12 / 01L06	77	637	–	115	69	10	5	27	20	150	100	112	222	759	70	50	540	12	11	NPT 3/4"	5	2"	15.7	152.4	120.6	19	4	20	160
																						2"	15.7	152.4	120.6	19	4	28	200 250
NM038BY 02S12 / 01L06	85	950	–	115	95	10	6	35	20	150	130	132	262	1082	80	55	838	14	11	NPT 3/4"	5	3"	19.1	190.5	152.4	19	4	20	200
																						2.5"	17.5	177.8	139.7	19	4	32	250

All dimensions are in mm. All dimensions are subject to change without notice.
Flanges are ANSI to inch standards. All flanges are flat faced.
All pumps are Thru-bolt Construction. Thru-bolts not shown for clarity.
For weights, use equivalent weights for SY pumps.

NETZSCH

NEMO PUMP (WP)
RANGE NM---B 02S12 / 01L06

DRAWING NUMBER
NDB4908995

GENERAL ARRANGEMENT DRAWING(GAD)

Tolerâncias Dimensionais/Dimensional Tolerances				Tolerâncias para Flanges cfe./Tolerances for Flanges according ASME B16.1 e B16.5	
Medida/Dimension	Tolerância/Tolerance	Medida/Dimension	Tolerância/Tolerance		Tolerância/Tolerance
>3 até/to 6	±0,5	>400 até/to 1000	±4,0		
>6 até/to 30	±1,0	>1000 até/to 2000	±6,0	Diâmetro da Furação/Drilling Diameter	±1,5
>30 até/to 120	±1,5	>2000 até/to 4000	±8,0	Diâmetro Furos/Holes Diameter	+1,0
>120 até/to 400	±2,5	>4000	±20	Espessura/Thickness	+3,0

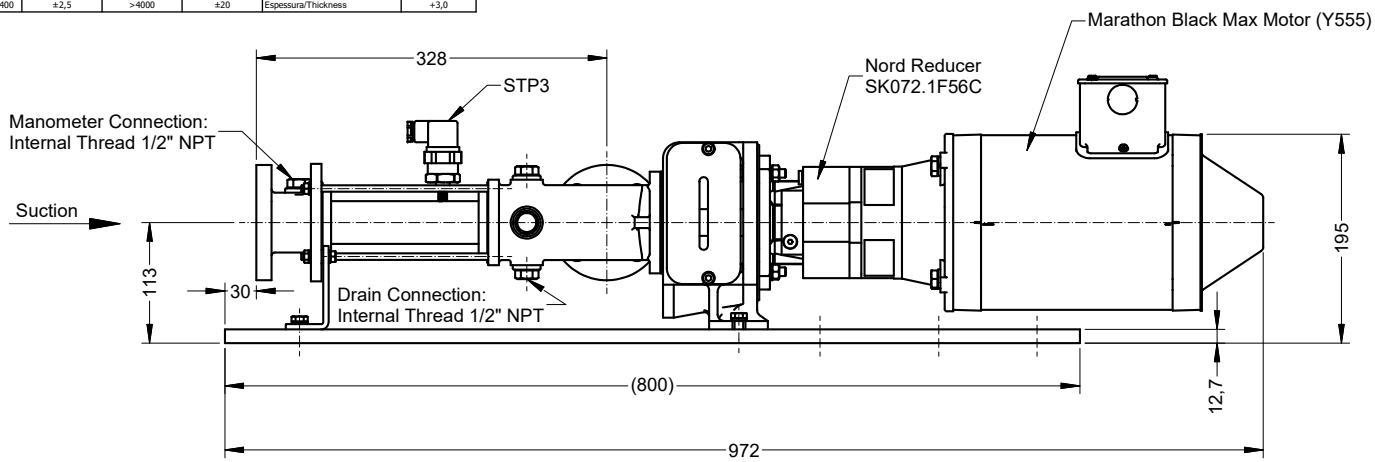

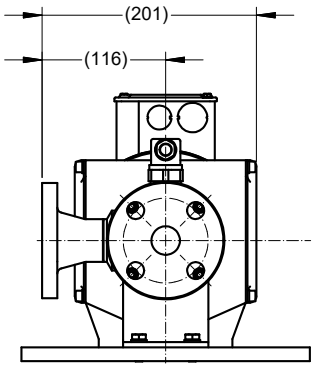

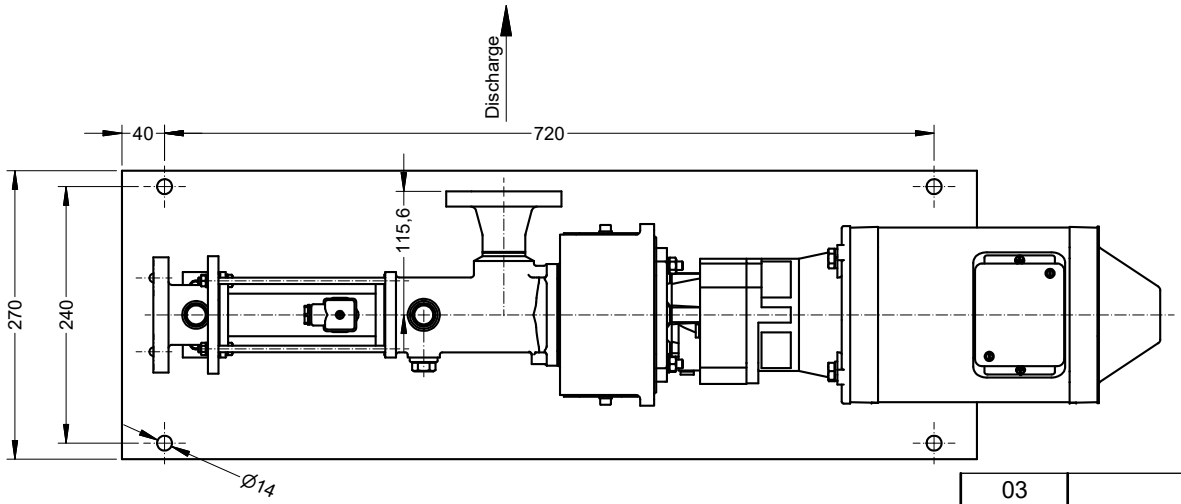

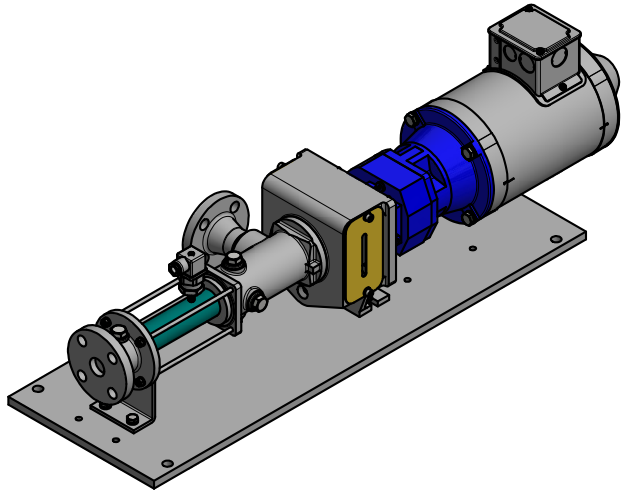

Revisão/Revision	Descrição/Description	Nome/Name	Data/Date
03	Rotacionado bocal de sucção 180°	Douglas	22/02/19
02	Rotacionado bocal de sucção 180°	Douglas	11/09/18
01	Alterado Bocal de Sucção e Descarga	Douglas	17/08/18

Cliente/Costumer:

Pedido/Order: | Referência/Reference:

Flanges
Borings acc. Norm:

ASME B16.5 / Classe 150 / FF / NPS 1

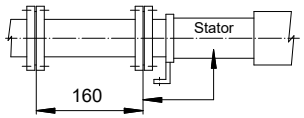

Lenght required for
stator disassembly

NETZSCH

Título/Tittle:

Pump NM015BY01L06B

HD-252848

	Data/Date	Nome/Name
Desenhado/Designer	17/08/2018	douglas.lourenco
Verificado/Checked Aprovado/Approved	17/08/2018	douglas.lourenco

TAG: | Peso/Weight kgf

Nr. Desenho/Drawing Nr.: NDB4735478 | Folha/Sheet: 1/1 | Escala/Scale: 1:5

Reservado todos os direitos sobre este documento técnico. All rights reserved.

0

NETZSCH CANADA INC. 2016

OPERATING AND MAINTENANCE INSTRUCTIONS:

STP3 DRY RUN PROTECTION





NETZSCH Canada, Incorporated
500 Welham Road
Barrie, Ontario L4N 8Z7
Tel: (705) 797-8426
Fax: (705) 797-8427
Toll: 866 683-7867

www.pumps.netzsch.com

1 DISMANTLING AND ASSEMBLY OF SPECIAL UNITS

WARNING Make sure that the power has been disconnected from the Temperature Controller prior to servicing.

The Stator Protector, which is a device to protect the stator from dry running mainly consists of three parts; the Temperature Controller (processor) with LED display, the Temperature Sensor (PT-100 RTD), and the Thermal Well.

1. The Device functions as follows

In the stator of the pump there is a Temperature Sensor. This sensor continuously measures the stator temperature which ranges from 0°C to 255°C. If the stator temperature rises above the programmed or specified cut-off temperature (about normal pumping temperature), which is set on the controller, there will be an optical or acoustic signal indication on the controller display. The controller can also be set to switch the pump off immediately. If the pump is not constantly monitored, it is recommended that the controller be set to shut the pump off automatically.

2. Technical Data

- Microprocessor based
- Measuring input for PT-100 RTD Temperature Sensor. Material of Construction: Platinum
- LED display, three digits, 13mm height, red indicator
- Switching position indication for internal K1 relay
- Resistance-Temperature Curve:
  European Alpha Curve = 0.00385
  American Alpha Curve = 0.003916
- Supply voltage 110 or 220 VAC or according to specification 24VAC.
- Storage temperature (-20°C to 70°C)
- Operating temperature (0°C to 60°C)
- Relative humidity maximum 75% no dew
- Suitable for panel mounting. Device is rated IP-54
- Output: 1relay 250 VAC 7A, 1 changeover contact
- Installation Dimensions: front panel 72mm x 72mm; deep including terminals
- Terminals for threads max. 2,5

*Controller should be no more than 75 feet from the temperature sensor.

Vendor to provided cable from temperature sensor through to Omron Controller in MCC-1.

3. Setting the Cut-Off Temperature

The cut-off temperature value of the controller in normal conditions is easy to adjust. When no key is pressed, the display shows the actual stator temperature.

- When the PGM button is pressed, the cut-off temperature is shown on the display.
- By keeping the PGM button pressed, the cut-off temperature can be raised or lowered to the desired setting by using the UP or DOWN key.
- Releasing the arrow UP or DOWN key loads the adjusted new value into the memory.
- Be careful. Always release the UP or DOWN key before releasing the PGM key to retain this value in memory even if there is a power failure.

1 DISMANTLING AND ASSEMBLY OF SPECIAL UNITS

4. Selecting the Cut-Off Temperature

- Adjust the cut-off temperature up to 150°C at the controller.
- Start the pump.
- When steady pumping is being obtained, a read out of the stator temperature will be displayed on the controller.
- If this temperature is accurate, taking into consideration the product and ambient temperatures, then the cut-off temperature can be set 5°C higher.

5. Switching Functions

With the temperature sensor connected and the operating voltage applied to the controller, the internal relay K1 is energized.

If the cut-off temperature is being exceeded or a short-circuit is occurring, the internal relay K1 drops out.

For terminals, see illustration on the following page.

In the event of sensor failure or short-circuit, the maximum temperature of 255°C flashes on the display.

6. Safety Precautions

For the installation of the Stator Protector, as well as for the separate mini transformer, the latest regulations which apply for electrical installations must be adhered to.
If a temperature sensor is operated within a hazardous area there must be a special enclosure installed between the Temperature Controller and the Temperature Sensor (RTD).

The switching of inductive loads (contacts) may result a false reading from the Controller, or in complete malfunction of the Unit. Here, we recommended the wiring of a Surge Suppressor.

7. Installation of Temperature Sensor and Controller

The stator (3005), as displayed in tables 1,2 and 3, is equipped with a Reducing Fitting (4580) and a Temperature Sensor (RTD), (4180).

The stator is delivered with a built-in Thermal Well (4570). When installed on a NEMO Pump, this Thermal Well should be mounted on its inlet side.

***Controller should be no more than 75 feet from the temperature sensor (RTD).**

NETZSCH

Stator Protector Model STP3
NEMO NM Pump Series

Table 1
S-Geometry

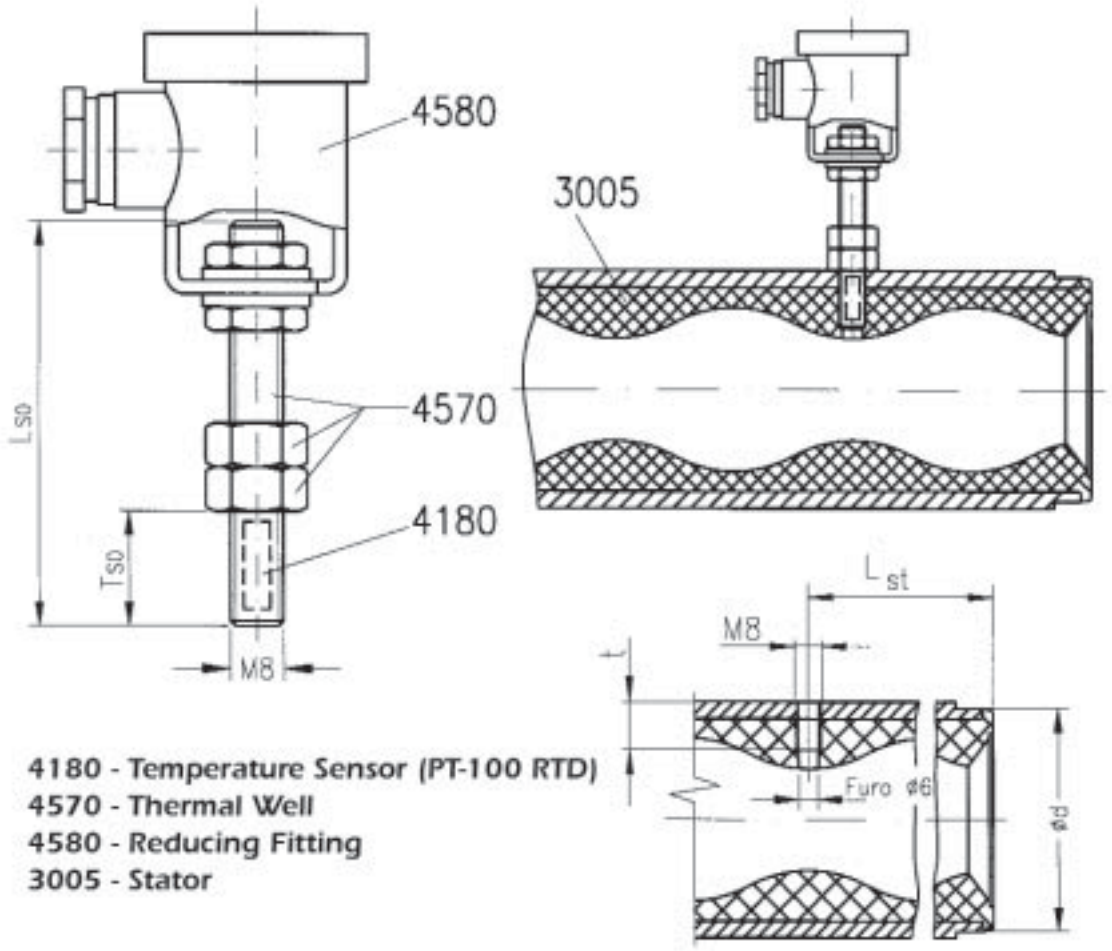

4180 - Temperature Sensor (PT-100 RTD)
4570 - Thermal Well
4580 - Reducing Fitting
3005 - Stator

Pump Model	SENSOR			STATOR		
	L_{S0}	T_{S0}	Distance of the Sensor from the Rotor	d	L_{st}	t
NM015–S	45	9	~6	37	24	9
NM021–S		12	~5.5	47	36	12
NM031–S		15	~7.5	66	47	15
NM038–S	65	23	~7.5	86	66	23
NM045–S		25	~7.5	101	77	25
NM053–S		30		118	92	30
NM063–S		36		141	107	36
NM076–S	85	40	~10	166	124	40
NM090–S		47		195	148	47
NM105–S		54	~11	225	181	54
NM125–S	105	66		265	215	66
NM148–S		80		315	257	80
						–

All dimensions in millimeters.

NETZSCH

Stator Protector Model STP3
NEMO NM Pump Series

Table 2
L-Geometry

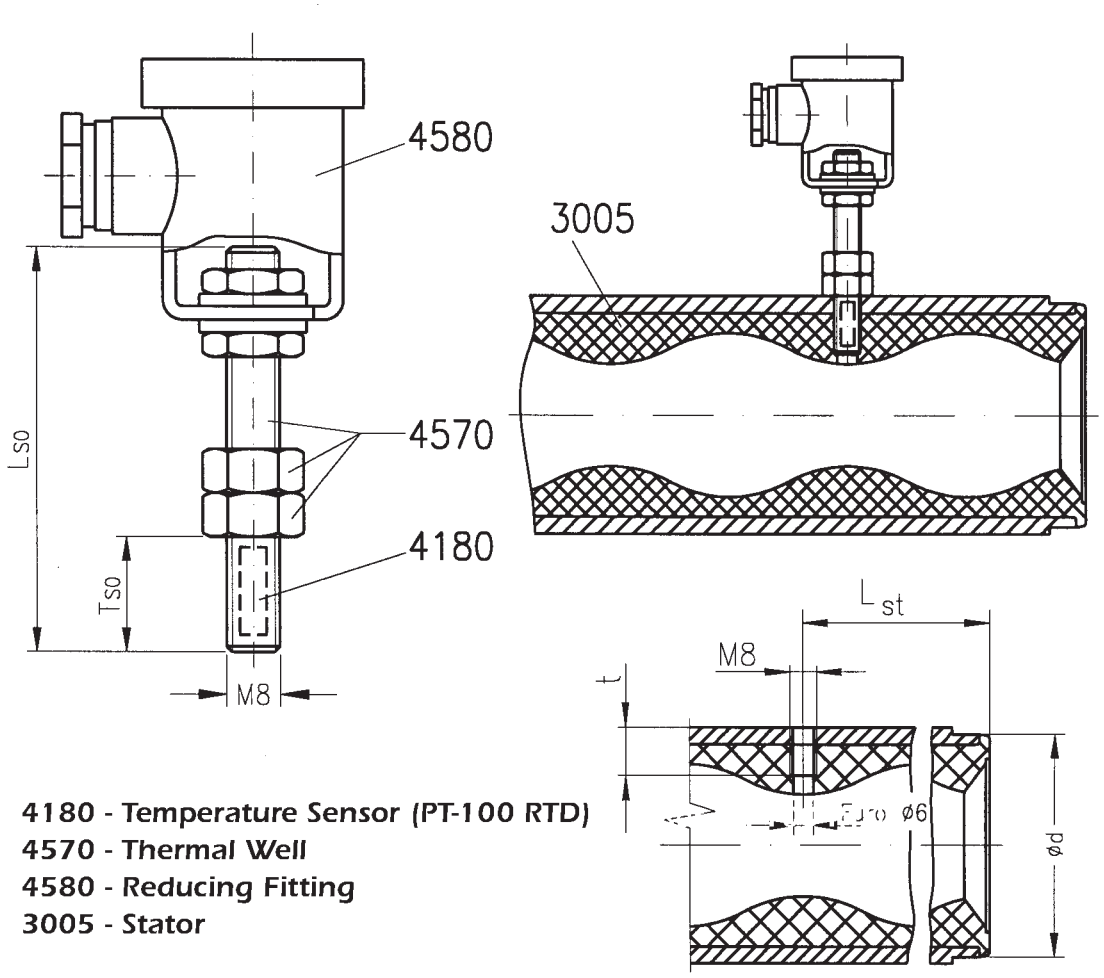

4180 - Temperature Sensor (PT-100 RTD)
4570 - Thermal Well
4580 - Reducing Fitting
3005 - Stator

Pump Model	SENSOR			STATOR		
	L_{so}	T_{so}	Distance of the Sensor from the Rotor	d	L_{st}	t
NM015–L	45	9	≈ 6	37	35	9
NM021–L		12	≈ 5.5	47	53	12
NM031–L		15	≈ 7.5	66	68	15
NM038–L	65	23	≈ 7.5	86	108	23
NM045–L		25	≈ 7.5	101	133	25
NM053–L		30		118	161	30
NM063–L		36		141	185	36
NM076–L	85	40	≈ 10	166	214	40
NM090–L		47		195	256	47
NM105–L		54	≈ 11	225	316	54
NM125–L	105	66		265	375	66
NM148–L		80		315	450	80

All dimensions in millimeters.

NETZSCH

Stator Protector Model STP3
NEMO NE Pump Series

Table 3

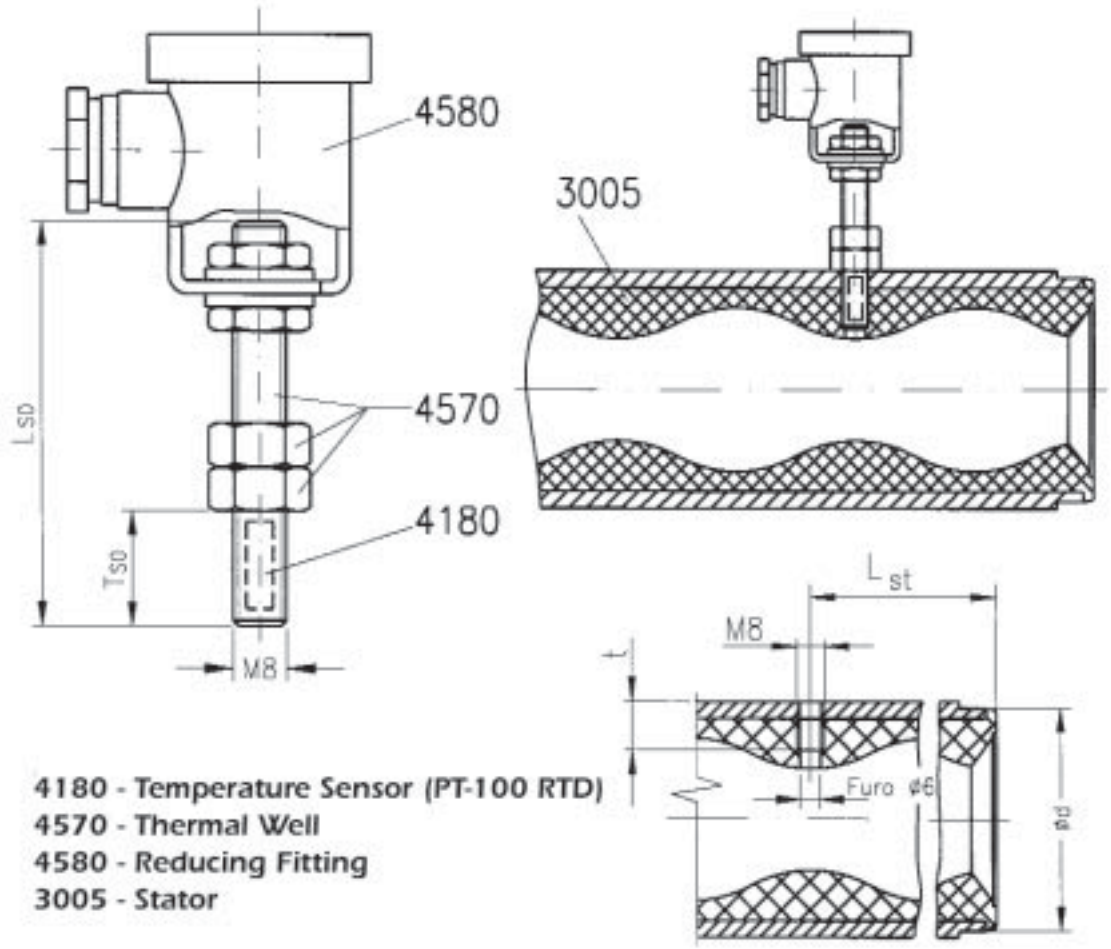

4180 - Temperature Sensor (PT-100 RTD)
4570 - Thermal Well
4580 - Reducing Fitting
3005 - Stator

Pump Model	SENSOR			STATOR			
	L_{SO}	T_{SO}	Distance of the Sensor from the Rotor	d	d_1	L_{st}	t
N_15	55	9	~6	39	27	40	9
N_20		12	~5.5	49	36	50	12
N_29						100	12
N_30	60	16	~ 7.5	71	54	75	16
N_40	65	22	~8	94	72	100	22
N_50	75	30		118	90	120	30
N_60	80	35		138	108	150	35
N_69				138	108	250	35
N_80	85	40	~10	174	144	200	40
N_89				174	144	250	40
N_100	95	52	~11	218	180	250	52
N_120	110	68		260	216	300	68
N_150	120	80	~10	315	270	375	80
N_200	150	117.5				475	

All dimensions in millimeters.

OMRON

Temperature Controllers
E5CSV

Simple to Set and Operate 1/16 DIN Size Controllers

- Easy setting using internal DIP and rotary switches
- ON/OFF or PID control (with on-demand auto-tuning) selectable
- Clearly visible digital display with character height of 13.5 mm
- Deviation indicator makes monitoring more effective
- Multiple temperature sensor input (thermocouple/platinum resistance thermometer) models stocked; thermocouple input only and platinum RTD input only models available
- Models with two alarms are ideal for temperature alarm applications
- Setting change protection prohibits tampering
- Sampling rate (500 ms) and selectable control period (2 and 20 s) improves response
- 8-mode alarm output and sensor error detection
- "Input shift" function adjusts display to reflect known sensor offsets



CE cULus LISTED NEW

- °C or °F field selectable
- Black or white cases available to match panel aesthetics
- RoHS compliant
- Water-resistant front panel rated NEMA 4X/IP66
- Compact: measures 48 H x 48 W x 78 D mm
- Accuracy ±0.5% of value

Model Number Structure

■ Model Number Legend

Models with Terminal Blocks

E5CSV-□□□□-□□
1 2 3 4 5 6

1. Output type
- R: Relay
- Q: Voltage for driving SSR

2. Number of alarms
- Blank: No alarm
- 1: 1 alarm
- 2: 2 alarms

3. Input type
- T: Thermocouple/platinum resistance thermometer (multi-input)
- KJ: Thermocouple
- P: Platinum resistance thermometer

4. Power supply voltage
- Blank: 100 to 240 VAC
- D: 24 VAC/VDC

5. Case color / Display scale
- Blank: Black
- W: Light gray
- F: Scale marked in °F (Black case only)

6. Power supply voltage
- AC100-240: 100 to 240 VAC
- AC/DC24: 24 VAC/VDC

Note: A functional explanation is provided here for illustration, but models are not necessarily available for all possible combinations. Please refer to *Ordering Information* when ordering.

Examples
- Voltage control output, without alarm, multi-input, light gray case: 115 VAC: E5CSV-QT-W AC100-240
- Relay control output, one alarm output, multi-input, black case: 24 VDC: E5CSV-R1TD AC/DC24

Ordering Information

■ List of Models

Size	Power supply voltage	Number of alarm points	Control output	TC/Pt multi-input Case color: Black Scale marked in °C	TC input Case color: Light gray Scale marked in °C	Pt input Case color: Light gray Scale marked in °C	TC/Pt multi-input Case color: Black Scale marked in °F
1/16 DIN 48 × 48 × 78 mm (W × H × D)	100 to 240 VAC	0	Relay	E5CSV-RT AC100-240			E5CSV-RT-F AC100-240
			Voltage (for driving SSR)	E5CSV-QT AC100-240			E5CSV-QT-F AC100-240
		1	Relay	E5CSV-R1T AC100-240	E5CSV-R1KJ-W	E5CSV-R1P-W	E5CSV-R1T-F AC100-240
			Voltage (for driving SSR)	E5CSV-Q1T AC100-240	E5CSV-Q1KJ-W	E5CSV-Q1P-W	E5CSV-Q1T-F AC100-240
		2 (See note)	Relay	E5CSV-R2T AC100-240			E5CSV-R2T-F AC100-240
			Voltage (for driving SSR)	E5CSV-Q2T AC100-240			E5CSV-Q2T-F AC100-240
	24 VAC/ VDC	0	Relay	E5CSV-RTD AC/DC24			
			Voltage (for driving SSR)	E5CSV-QTD AC/DC24			
		1	Relay	E5CSV-R1TD AC/DC24			E5CSV-R1TD-F AC/DC24
			Voltage (for driving SSR)	E5CSV-Q1TD AC/DC24			E5CSV-Q1TD-F AC/DC24
		2 (See note)	Relay	E5CSV-R2TD AC/DC24			
			Voltage (for driving SSR)	E5CSV-Q2TD AC/DC24			

Note: Models with two alarm outputs always use the upper limit alarm mode for the alarm 2 output.

■ Accessories (Order Separately)

Protective Cover

Type	Model
Hard Protective Cover	Y92A-48B

Terminal Cover

Model
E53-COV10

Specifications

■ Ratings

Supply voltage		100 to 240 VAC, 50/60 Hz	24 VAC/VDC, 50/60 Hz
Operating voltage range		85% to 110% of rated supply voltage	
Power consumption		5 VA	3 VA/2 W
Sensor input		Thermocouple input type: K, J, L Platinum resistance thermometer input type: Pt100, JPt100 Multi-input (thermocouple/platinum resistance thermometer) type: K, J, L, T, U, N, R, Pt100, JPt100	
Control output	Relay output	SPST-NO, 250 VAC, 3A (resistive load)	
	Voltage output (for driving the SSR)	12 VDC, 21 mA (with short-circuit protection circuit)3	
Control method		ON/OFF or 2-PID (with auto-tuning)	
Alarm output		SPST-NO, 250 VAC, 1A (resistive load)	
Setting method		Digital setting using front panel keys	
Indication method		3.5 digit, 7-segment digital display (character height: 13.5 mm) and deviation indicators	
Other functions		• Setting change prohibit (key protection) • Input shift • Temperature unit change (°C/°F) • Direct/reverse operation • Temperature range, Sensor switching (K/J/L, Pt100/JPt100) • Switching is performed between a thermocouple and platinum resistance thermometer for multi-input models. • Control period switching • 8-mode alarm output • Sensor error detection	
Ambient temperature		–10 to 55°C (with no condensation or icing)	
Ambient humidity		25% to 85%	
Storage temperature		–25 to 65°C (with no condensation or icing)	

■ Characteristics

Setting accuracy	Thermocouple (See note 1.):	(±0.5% of indication value or ±1°C, whichever is greater) ±1 digit max.
Indication accuracy (ambient temperature of 23°C)	Platinum resistance thermometer (See note 2.):	(±0.5% of indication value or ±1°C, whichever is greater) ±1 digit max.
Influence of temperature	R thermocouple inputs:	(±1% of PV or ±10°C, whichever is greater) ±1 digit max.
	Other thermocouple inputs:	(±1% of PV or ±4°C, whichever is greater) ±1 digit max.
Influence of voltage	Platinum resistance thermometer inputs:	(±1% of PV or ±2°C, whichever is greater) ±1 digit max.
Hysteresis (for ON/OFF control)	0.2% FS (0.1% FS for multi-input (thermocouple/platinum resistance thermometer) models)	
Proportional band (P)	1 to 999°C (automatic adjustment using auto-tuning/self-tuning)	
Integral time (I)	1 to 1,999 s (automatic adjustment using auto-tuning/self-tuning	
Derivative time (D)	1 to 1,999 s (automatic adjustment using auto-tuning/self-tuning)	
Alarm output range	Absolute-value alarm: Same as the control range Other: 0% to 100% FS Alarm hysteresis: 0.2°C or °F (fixed)	
Control period	2/20 s	
Sampling period	500 ms	
Insulation resistance	20 MΩ min. (at 500 VDC)	
Dielectric strength	2,000 VAC, 50/60 Hz for 1 min between current-carrying terminals of different polarity	
Vibration resistance — **Malfunction**	10 to 55 Hz, 20 m/s² for 10 min each in X, Y, and Z directions	
Vibration resistance — **Destruction**	10 to 55 Hz, 0.75-mm single amplitude for 2 hr each in X, Y, and Z directions	
Shock resistance — **Malfunction**	100 m/s² min., 3 times each in 6 directions	
Shock resistance — **Destruction**	300 m/s² min., 3 times each in 6 directions	
Life expectancy — **Electrical**	100,000 operations min. (relay output models)	
Weight	Approx. 120 g (Controller only)	
Degree of protection	Front panel: Equivalent to IP66; Rear case: IP20; Terminals: IP00	
Memory protection	EEPROM (non-volatile memory) (number of writes: 1,000,000)	
EMC	EMI Radiated: EN 55011 Group 1 Class A EMI Conducted: EN 55011 Group 1 Class A ESD Immunity: EN 61000-4-2: 4 kV contact discharge (level 2), 8 kV air discharge (level 3) Radiated Electromagnetic Field Immunity: EN 61000-4-3: 10 V/m (80-1000 MHz, 1.4-2.0 GHz amplitude modulated) (level 3), 10 V/m (900 MHz pulse modulated) Conducted Disturbance Immunity: EN 61000-4-6: 3 V (0.15 to 80 MHz) (level 2) Noise Immunity (First Transient Burst Noise): EN 61000-4-4 Burst Immunity: 2 kV power-line (level 3), 1 kV I/O signal-line (level 3) Surge Immunity: EN 61000-4-5: Power line: Normal mode 1 kV; Common mode 2 kV Output line (relay output): Normal mode 1 kV; Common mode 2 kV Voltage Dip/Interrupting Immunity: EN 61000-4-11 0.5 cycle, 100% (rated voltage)	
Approved standards	UL 61010C-1 (listing) CSA C22.2 No.1010-1	
Conformed standards	EN 61326, EN 61010-1, IEC 61010-1 VDE 0106 Part 100 (finger protection), when the terminal cover is mounted.	

Note: 1. The following exceptions apply to thermocouples.
- U, L: ±2°C ±1 digit max.
- R: ±3°C ±1 digit max. at 200°C or less

2. The following exceptions apply to platinum resistance thermometers.
Input set values 0, 1, 2, 3 for E5CSV: 0.5% FS ±1 digit max.
Input set value 1 for E5CSV: 0.5% FS ±1 digit max.

■ Electrical Life Expectancy Curve for Relays (Reference Values)

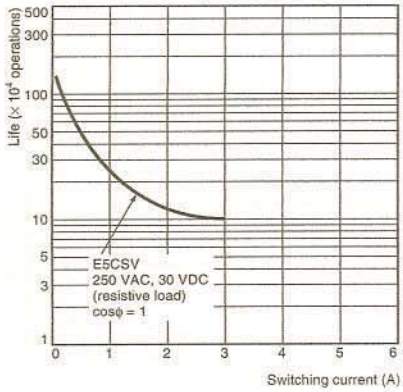

■ Temperature Range

Thermocouple Input Models

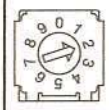

Temperature range (selected using switch)

(Default setting: 2)

Input	K						J/L			
Temperature range	200	300	400	500	600	999	200	300	400	500
Setting number	0	1	2	3	4	5	6	7	8	9
Minimum setting unit	1°C						1°C			

The shaded value indicates the default setting status.

Platinum Resistance Thermometer Input Models

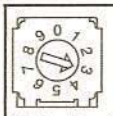

Temperature range (selected using switch)

(Default setting: 3)

Input	JPt100/Pt100									
Temperature range	50 / −50	50.0 / 0.0	80 / −20	99.9 / 0.0	200 / 0	300 / 0	400 / 0	300 / 0	400 / 0	199.9 / 0.0
Setting number	0	1	2	3	4	5	6	7	8	9
Minimum setting unit	1°C	0.1°C	1°C	0.1°C	1°C					0.1°C

The shaded value indicates the default setting status.

Multi-input (Thermocouple/Platinum Resistance Thermometer) Models

• Using Thermocouple Sensors, Control Mode Switch 5: OFF

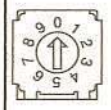

Temperature range (selected using switch)

(Default setting: 0)

Input	K		J		L	T		U	N	R
Temperature range	1,300 / −99	199.9 / 0.0	850 / −99	199.9 / 0.0	850 / −99	400 / −99	199.9 / 0.0	400 / −99	1,300 / −99	1,700 / 0
Setting number	0	1	2	3	4	5	6	7	8	9
Minimum setting unit	1°C	0.1°C	1°C	0.1°C	1°C		0.1°C	1°C		

The shaded value indicates the default setting status.

• Using Platinum Resistance Thermometers, Control Mode Switch 5: ON



Temperature range (selected using switch)

(Default setting: 0)

Input	Pt100					JPt100				
Temperature range	850 / −99	199.9 / 0.0	99 / −99	200 / 0	400 / 0	500 / −99	199.9 / 0.0	99 / −99	200 / 0	400 / 0
Setting number	0	1	2	3	4	5	6	7	8	9
Minimum setting unit	1°C	0.1°C	1°C				0.1°C	1°C		

The shaded value indicates the default setting status.

External Connection Diagram

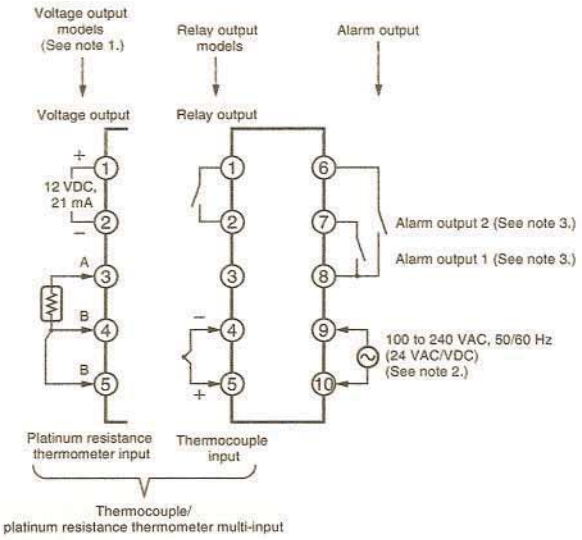

Note: 1. The voltage output (12 VDC, 21 mA) is not electrically isolated from the internal circuits. When using a grounding thermocouple, do not connect output terminals 1 or 2 to ground. Otherwise, unwanted current paths will cause measurement errors.

2. Models with 100 to 240 VAC and 24 VAC/VDC are separate. Models using 24 VDC have no polarity.

3. The number of alarm outputs depends on the model.

Nomenclature

E5CSV Models with Terminal Blocks



Operation

E5CSV

Deviation indicators

The △ indicator lights when the PV is greater than the SP and the ▽ indicator lights when the PV is less than the SP. The □ indicator (green) lights when the deviation is less than 1% FS (0.25% FS for multi-input models). These indicators flash during ST (self-tuning)/AT (auto-tuning).

Mode indicators

The SP indicator lights when the setting temperature is being displayed. The ALM indicator lights when the alarm value 1 is being displayed and flashes when the alarm value 2 is being displayed.

Mode Key

When the power is turned ON, normally the display will use the display items in the following order each time the Mode Key is pressed.

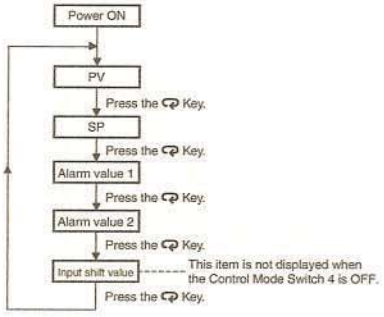



Lock Release Key

When the protect switch is ON, the set value can be changed by pressing the Up and Down Keys while holding down the Lock Release Key.

PV, SP, Alarm Value, Input Shift Display

The display switches each time the Key is pressed.

Output indicator

Lights when the control output is ON.

Alarm indicators

ALM1 (Alarm 1): Lights when the alarm 1 output is ON.
ALM2 (Alarm 2): Lights when the alarm 2 output is ON.

Up Key

Pressing the Up Key increases the SP/alarm value display. Keeping the Up Key pressed continues to increase the display value. When the internal protect switch is ON, press the Up Key while holding down the Lock Release Key.

Down Key

Pressing the Down Key decreases the SP/alarm value display. Keeping the Down Key pressed continues to decrease the display value. When the internal protect switch is ON, press the Down Key while holding down the Lock Release Key.

Settings before Turning ON the Power

E5CSV

Remove the E5CSV from the case to make the settings.

1. Insert the tool into the two tool insertion holes (one on the top and one on the bottom) and release the hooks.

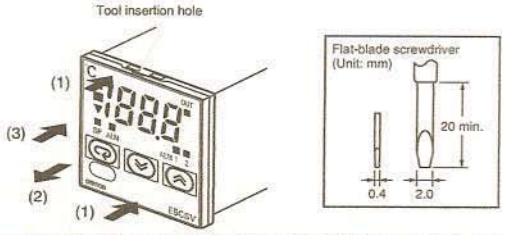

2. Insert the tool in the gap between the front panel and rear case, and pull out the front panel slightly. Grip the front panel and pull out fully. Be sure not to impose excessive force on the panel.

3. When inserting the E5CSV, check to make sure that the sealing rubber is in place and push the E5CSV toward the rear case until it snaps into position. While pushing the E5CSV into place, push down on the hooks on the top and bottom surfaces of the rear case so that the hooks are securely locked in place. Make sure that electronic components do not come into contact with the case.

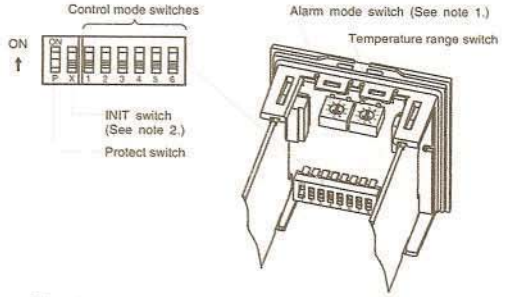

Note: 1. The alarm mode switch is not provided on models without alarms. Alarm 2 is always set to the upper limit in models with two alarms. A setting switch is not provided for alarm 2.
2. The INIT switch is always OFF during normal operation.

1. Sensor Type Specification

Select the number on the temperature range switch to change the temperature range.

Thermocouple (The default is 2.)

Input	K						J/L			
SP range	200	300	400	500	600	999	200	300	400	500
	0	0	0	0	0	0	0	0	0	0
Setting number	0	1	2	3	4	5	6	7	8	9

- The control range is -10% to +10% FS for each temperature range.

Note: The input indication range is the range that can be displayed for the control range (–99 to 1999). If the input is within the control range but exceeds the display range (–99 to 1999), values below –99 will be displayed as "ccc" and values above 1,999 will be displayed as "ddd."

Platinum Resistance Thermometer

(The default is 3.)

Input	JPt100/Pt100									
SP range	50	50.0	80	99.9	200	300	400	300	400	199.9
	–50	0.0	–20	0.0	0	0	0	0	0	0.0
Setting number	0	1	2	3	4	5	6	7	8	9

- The control range is -10% to +10% FS for each temperature range.

Note: 1. The input indication range is the range that can be displayed for the control range (–99 to 1999). If the input is within the control range but exceeds the display range (–99 to 1999), values below –99 will be displayed as "ccc" and values above 1,999 will be displayed as "ddd."
2. If the unit is changed to 1 degree when the SP and alarm value for the temperature range are displayed in 0.1-units from 0.0 to 199.9 or 0.0 to 99.9, the values will be multiplied by 10 (e.g., 0.5 becomes 5). If the unit is changed in the reverse direction, the values will be divided by 10. After changing the range, set the SP and alarm value again.
3. The temperature range for setting numbers 5 and 6 are the same as for 7 and 8, respectively.

Multi-input (Thermocouple/Platinum Resistance Thermometer) Models

- Using Thermocouple Sensors, Control Mode Switch 5: OFF

Input	K		J		L	T		U	N	R
SP range	1,300	199.9	850	199.9	850	400	199.9	400	1,300	1,700
	–99	0.0	–99	0.0	–99	–99	0.0	–99	–99	0
Setting number	0	1	2	3	4	5	6	7	8	9

- The control range is -20°C to +20°C of the input temperature range.

Note: 1. The input indication range is the range that can be displayed for the control range (–99 to 1999). If the input is within the control range but exceeds the display range (–99 to 1999), values below –99 will be displayed as "ccc" and values above 1,999 will be displayed as "ddd."
2. If unit is changed to 1 degree when the SP and alarm value for the temperature range are displayed in 0.1-units from 0.0 to 199.9 or 0.0 to 99.9, the values will be multiplied by 10 (e.g., 0.5 becomes 5). If the unit is changed in the reverse direction, the values will be divided by 10. After changing the range, set the SP and alarm value again.

- Using Platinum Resistance Thermometers, Control Mode Switch 5: ON

Input	Pt100					JPt100				
SP range	850	199.9	99	200	400	500	199.9	99	200	400
	–99	0.0	–99	0	0	–99	0.0	–99	0	0
Setting number	0	1	2	3	4	5	6	7	8	9

- The control range is -20°C to +20°C of the input temperature range.

Note: 1. The input indication range is the range that can be displayed for the control range (–99 to 1999). If the input is within the control range but exceeds the display range (–99 to 1999), values below –99 will be displayed as "ccc" and values above 1,999 will be displayed as "ddd."
2. If unit is changed to 1 degree when the SP and alarm value for the temperature range are displayed in 0.1-units from 0.0 to 199.9 or 0.0 to 99.9, the values will be multiplied by 10 (e.g., 0.5 becomes 5). If the unit is changed in the reverse direction, the values will be divided by 10. After changing the range, set the SP and alarm value again.

Mode Key Display Order

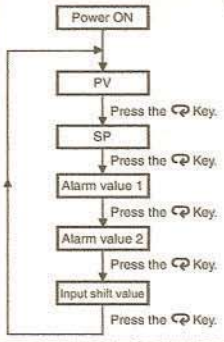

- If the SP falls outside the temperature range when the temperature range is changed, the SP will be displayed first. The SP will be changed automatically either to the minimum value or the maximum value, whichever is nearest.
- If the alarm value falls outside the temperature range when the temperature range is changed, the alarm value will be displayed first. The alarm value will be changed automatically to the maximum value in the new temperature range.

2. Operation Settings

Use the control mode switches () to change the control mode. (All switches are OFF for the default settings.)



Function selection			1	2	3	4	5	6
ON/OFF PID	PID control		ON					
	ON/OFF control		OFF					
Control period	2 s			ON				
	20 s			OFF				
Direct/ reverse operation	Direct operation (cooling)				ON			
	Reverse operation (heating)				OFF			
Input shift display	Enabled					ON		
	Disabled					OFF		
Temperature Sensor selection	Thermocouple	K, L					ON	
		K, J					OFF	
	Platinum resistance thermometer	Pt100					ON	
		JPt100					OFF	
	Multi-input (thermocouple/ platinum resistance thermometer)	Platinum resistance thermometer input					ON	
		Thermocouple input					OFF	
Temperature unit	°F							ON
	°C							OFF

Note: The previous name Pt100 has been changed to JPt100 in accordance with revisions to JIS. The previous name J-DIN has been changed to L in accordance with revisions to DIN standards.

3. Alarm Modes

Select the number of the alarm mode switch  when changing the alarm mode. (The default is 2).

Set value	Alarm type	Alarm output operation
0, 9	Alarm function OFF	OFF
1	Upper- and lower-limit	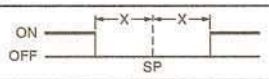
2	Upper-limit	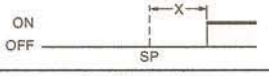
3	Lower-limit	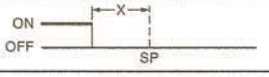
4	Upper- and lower-limit range	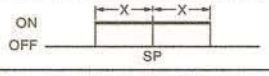
5	Upper- and lower-limit with standby sequence (See note 2.)	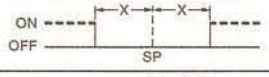
6	Upper-limit with standby sequence (See note 2.)	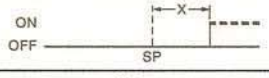
7	Lower-limit with standby sequence (See note 2.)	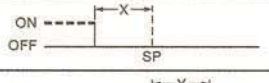
8	Absolute-value upper-limit	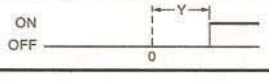

Note: 1. No alarm. The alarm value (alarm operation display) will not be displayed when the setting is 0 or 9 even if the selection key is pressed.
Alarm Setting Range
X: 0 to FS (full scale); Y: Within temperature range
The value of X is the deviation setting for the SP (set point).

2. Standby Sequence Function (The standby sequence operates when the power is turned ON.)

Rising Temperature

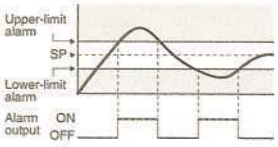

Dropping Temperature

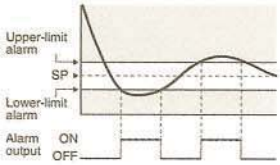

Note: Turn OFF the power before changing the DIP switch settings on the E5CSV. Each of the switch settings will be enabled after the power is turned ON.

For details on the position of the temperature range switch, control mode switches, and alarm mode switch, refer to page 6.

4. Using the Control Mode Switches

(1) Using ON/OFF Control and PID Control

ON/OFF Control

The control mode is set to ON/OFF control as the default setting.

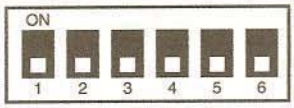

Switch 1 OFF: ON/OFF control

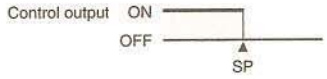

To perform cooling control of freezers, etc., turn ON switch 3.



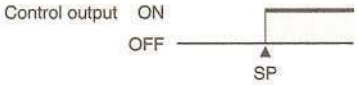

PID Control

Turn ON switch 1 to use PID control.

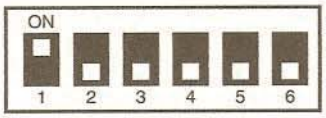

Switch 1 ON: PID control

1. Set the control period.

Performing Control via Relay Output, External Relay, or Conductor

Switch 2: OFF (control period: 20 s)

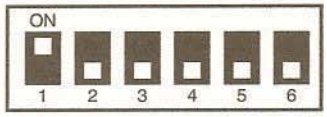

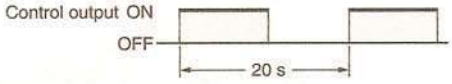

Quick Control Response Using an SSR

Switch 2: ON (control period: 2 s)

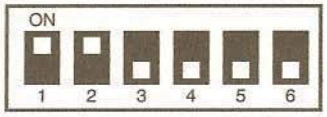

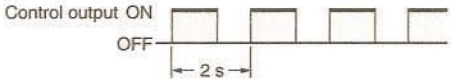

2. Set direct/reverse operation for the output.

Performing Heating Control for Heaters

Switch 3: OFF

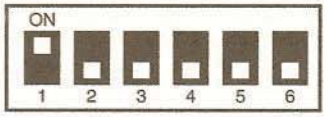

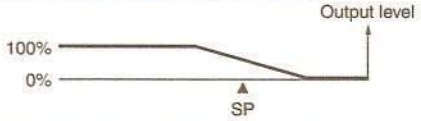

Performing Cooling Control for Freezers

Switch 3: ON



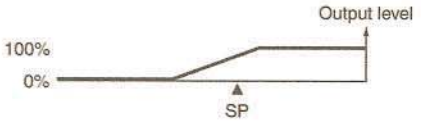

ST (Self-tuning) Features

ST (self-tuning) is a function that finds PID constants by using step response tuning (SRT) when Controller operation begins or when the set point is changed. Once the PID constants have been calculated, ST is not executed when the next control operation is started as long as the set point remains unchanged. When the ST function is in operation, be sure to turn ON the power supply of the load connected to the control output simultaneously with or before starting Controller operation.

Executing AT (Auto-tuning)

AT (auto-tuning) is executed by pressing the ▲ Up and ▼ Down Keys for at least 2 s while the PV is displayed. The deviation indicators flash during auto-tuning (AT) execution. AT will be cancelled by performing the same operation that AT is executing during AT operation. Flashing stops when AT is completed.

AT execution

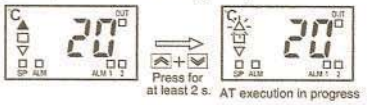

AT cancelled

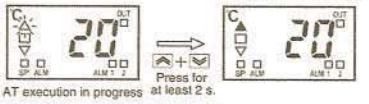

Note: One of the deviation indicators (▲■▼) will flash.

(2) Using the E5CSV in Devices for Fahrenheit-scale Users

(Displaying in °F)

Turn ON switch 6 to display temperatures in °F.

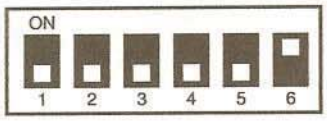

Temperature Range for °F

The temperature is set to °F using the same temperature range switch as °C.

Thermocouple

Setting	°F	
0	K	0 to 200
1		0 to 300
2		0 to 400
3		0 to 500
4		0 to 600
5		0 to 999
6	J/L	0 to 999
7		0 to 300
8		0 to 400
9		0 to 500

Platinum Resistance Thermometer

Setting	°F	
0	JPt100 or Pt100	-50 to 50
1		0.0 to 50.0
2		-20 to 80
3		0.0 to 99.9
4		0 to 200
5		0 to 300
6		0 to 400
7		0 to 600
8		0 to 800
9		0.0 to 199.9

Multi-input (Thermocouple/ Platinum Resistance Thermometer)

Control mode switch 5: OFF

Setting	°F	
0	K	-99 to 1999
1		0.0 to 199.9
2	J	-99 to 1500
3		0.0 to 199.9
4	L	-99 to 1500
5	T	-99 to 700
6		0.0 to 199.9
7	U	-99 to 700
8	N	-99 to 1999
9	R	0 to 1999

Multi-input (Thermocouple/ Platinum Resistance Thermometer)

Control mode switch 5: ON

Setting	°F	
0	Pt100	-99 to 1500
1		0.0 to 199.9
2		-99 to 99
3		0 to 200
4		0 to 400
5	JPt100	-99 to 900
6		0.0 to 199.9
7		-99 to 99
8		0 to 200
9		0 to 400

Note: The control range for a thermocouple input or platinum resistance thermometer input is -10% to +10% FS for each temperature range. The control range for multi-input (thermocouple/platinum resistance thermometer) models is -40 to +40° F of each temperature range.

Using K, L/Pt100 Thermometers

Turn ON switch 5 when using K, L/Pt100 Thermometers.

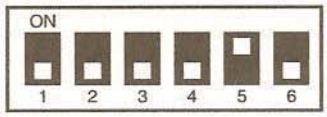

Note: The previous name J-DIN has been changed to L in accordance with revisions to DIN standards.

---

(3) Setting Input Shift

Turn ON switch 4, and after turning ON the power, press the Mode Key until *H0* (indicates input shift of 0) is displayed. Press the Up and Down Keys to set the shift value.

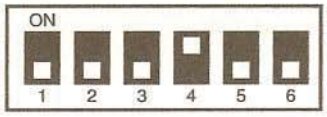

Shift Example

Input shift display	Measured temperature	Temperature display
H0 (no shift)	100°C	100°C
H9 (+9°C shift)	100°C	109°C
L9 (-9°C shift)	100°C	91°C

Note: When control mode switch 4 is turned OFF (no input shift display), the input shift is not displayed but the shift value is enabled. To disable input shift, set the input shift value to *H0*. The shift range depends on the setting unit.

Setting unit	1°C	0.1°C
Compensation range	-99 to +99°C	-9.9 to +9.9°C
Input shift display	L99 to H99	L9.9 to H9.9

5. Protect Switch

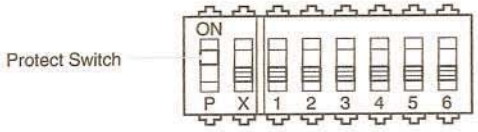

When the protect switch is ON, Up Key and Down Key operations are prohibited to prevent setting mistakes.

Installation

- All models in the E5CSV Series conform to DIN 43700 standards.
- The recommended panel thickness is 1 to 4 mm.
- Be sure to mount the E5CSV horizontally.

Mounting the E5CSV

1. For waterproof mounting, waterproof packing must be installed on the Controller. Waterproofing is not possible when group mounting several Controllers.
2. Insert the E5CSV into the mounting hole in the panel.
3. Push the adapter from the terminals up to the panel, and temporarily fasten the E5CSV.
4. Tighten the two fastening screws on the adapter. Alternately tighten the two screws little by little to maintain a balance. Tighten the screws to a torque of 0.29 to 0.39 N·m.

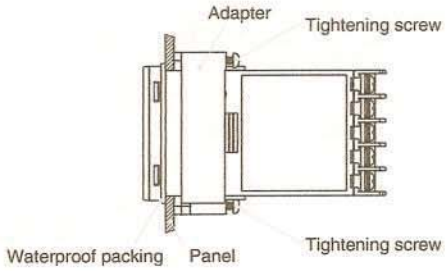

Error Displays and Causes

In addition to the alarm indicator, errors notification is provided on the display. Be sure to remove the cause of the error promptly.

Display status	Cause	Control output
PV displayed as FFF	The process value is higher than the control temperature range (overflow).	Heating control (reverse operation): OFF Cooling control (direct operation): ON
PV displayed as ---	The process value is lower than the control temperature range (underflow).	Heating control (reverse operation): ON Cooling control (direct operation): OFF
FFF flashing	(1)Thermocouple models and platinum resistance thermometer models: The process value is higher than the overflow temperature, or a Sensor error has occurred. (2)Multi-input (Thermocouple/platinum resistance thermometer) models: The process value is higher than the control temperature range or a Sensor error has occurred.	OFF
--- flashing	(1)Thermocouple and platinum resistance thermometer input: The process value is lower than the underflow temperature, or a Sensor error has occurred. (2)Thermocouples: The polarity is reversed. (3)Multi-input (Thermocouple/platinum resistance thermometer) models: The process value is lower than the control temperature range or a Sensor error has occurred.	OFF
E11 is displayed	A memory error (E11) has occurred. Turn the power ON again. If the display remains the same, the Controller must be repaired.	The control outputs and alarm outputs turn OFF.

Note: In models with an alarm, FFF appears or flashes on the display to indicate that the temperature has exceeded the maximum display temperature and the output is set according to the alarm mode. In the same way, --- appears or flashes on the display to indicate that the temperature has exceeded the minimum display temperature and the output is set according to the alarm mode.

Sensor Error Displays and Causes

■ Thermocouple

Status		Display	Control output
Burnout	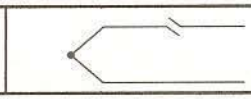	FFF flashing	OFF

Note: The room temperature is displayed if an input short-circuit occurs.

■ Platinum Resistance Thermometer

Status		Display	Control output
Burnout	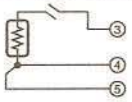	FFF flashing	OFF
	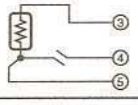	--- flashing	OFF
	2 or 3 wires disconnected	FFF flashing	OFF
Short-circuit	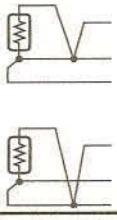	--- flashing	OFF

Note: The resistance value for platinum resistance thermometers is 100 Ω at 0°C and 140 Ω at 100°C.

Comparison with E5CS-X

■ Model Number Legend

Previous model

E5CS-□□□X
1 2 3

	Classification	Symbol	Meaning
1	Control output	R Q	Relay: SPDT (single-pole, double-throw) Voltage
2	Alarm output	Blank 1	No alarms One alarm
3	Input type	KJ P	Thermocouple (K, J) Platinum resistance thermometer (Pt100, JPt100)
	Terminal appearance	X	Model with terminal block

Main Differences

Terminal block models use the model number E5CSV.
The suffix "D" is added to models with a supply voltage of 24 VAC/VDC.
The suffix "W" is added to models with a light gray case color.

E5CSV

E5CSV-□□□□-□
1 2 3 4 5

	Classification	Symbol	Meaning
1	Control output	R Q	Relay: SPST-NO (single-pole, single-throw, normally open) Voltage
2	Alarm output	Blank 1 2	No alarms One alarm Two alarms
3	Input type	T KJ P	Multi-input (thermocouple/platinum resistance thermometer) models Thermocouple (K, J) Platinum resistance thermometer (Pt100, JPt100)
4	Supply specifications	Blank D	100 to 240 VAC 24 VAC/VDC
5	Case color	Blank W F	Black Light gray Scale marked in F° (Black case only)

■ Display

Previous model

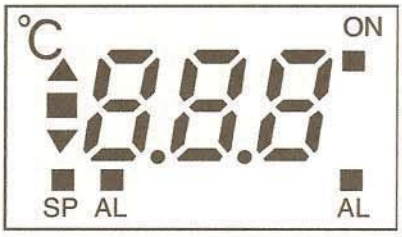

E5CSV

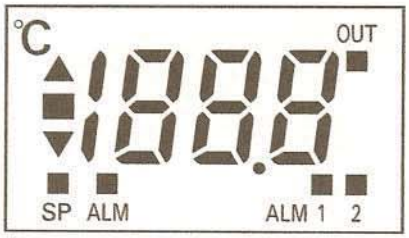

The display digits can be increased up to 1,999.
The ALM2 display has been added.
The display "ON" has changed to "OUT" and "AL" has changed to "ALM."

■ Functions

The control outputs for relay outputs have been changed from SPDT (single-pole, double-throw) to SPST-NO (single-pole, single-throw, normally open) contacts.
The control method has been changed to 2-PID control.
An auto-tuning (AT) function has been added.
The deviation display flashes during self-tuning (ST) and auto-tuning (AT).
The control calculation period has been improved from 2 s to 0.5 s.

■ External Dimensions

The depth has been shortened from 100 mm to 76 mm.

Comparison with E5CS-X

■ Model Number Legend

Previous model

E5CS-□□□X
1 2 3

	Classification	Symbol	Meaning
1	Control output	R Q	Relay: SPDT (single-pole, double-throw) Voltage
2	Alarm output	Blank 1	No alarms One alarm
3	Input type	KJ P	Thermocouple (K, J) Platinum resistance thermometer (Pt100, JPt100)
	Terminal appearance	X	Model with terminal block

Main Differences

Terminal block models use the model number E5CSV.
The suffix "D" is added to models with a supply voltage of 24 VAC/VDC.
The suffix "W" is added to models with a light gray case color.

E5CSV

E5CSV-□□□□-□
1 2 3 4 5

	Classification	Symbol	Meaning
1	Control output	R Q	Relay: SPST-NO (single-pole, single-throw, normally open) Voltage
2	Alarm output	Blank 1 2	No alarms One alarm Two alarms
3	Input type	T KJ P	Multi-input (thermocouple/platinum resistance thermometer) models Thermocouple (K, J) Platinum resistance thermometer (Pt100, JPt100)
4	Supply specifications	Blank D	100 to 240 VAC 24 VAC/VDC
5	Case color	Blank W F	Black Light gray Scale marked in F° (Black case only)

■ Terminal Arrangement

• The terminal arrangement has changed from a horizontal to vertical configuration.

Previous model	E5CSV
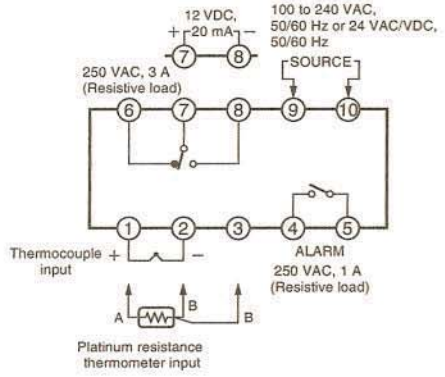	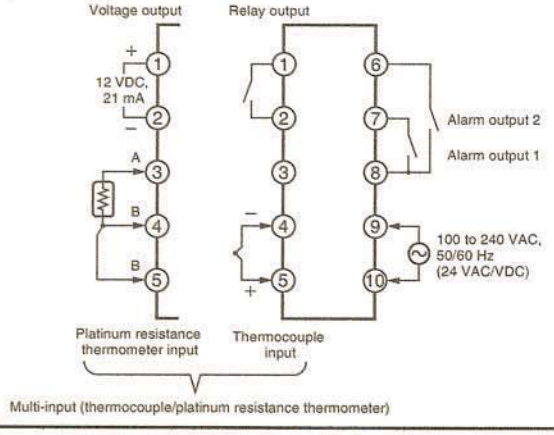

■ DIP Switch and Rotary Switch Setting Methods

No change from previous models.

Dimensions

Note: All units are in millimeters unless otherwise indicated.

■ Controller

E5CSV





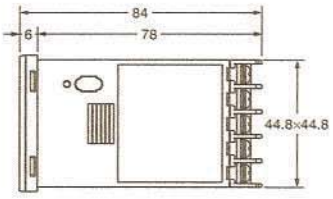

Note: Terminals cannot be removed.

Panel Cutout Dimensions

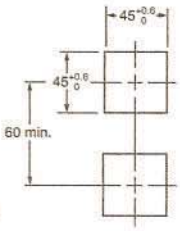

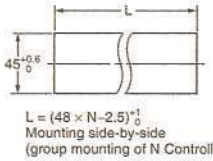

L = (48 × N−2.5) +1 0
Mounting side-by-side
(group mounting of N Controllers)

E5CSV + Adapter for Flush Mounting (Provided)

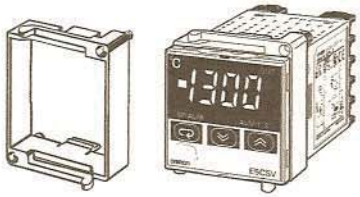

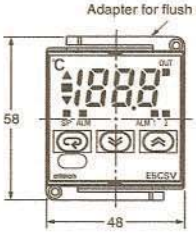

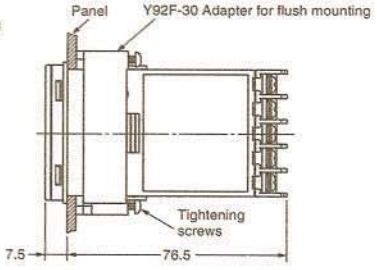

Note: 1. The recommended panel thickness is 1 to 4 mm.
2. Group mounting is possible in one direction only.

Hard Protective Cover

The Y92A-48B Protective Cover (hard type) is available for the following applications.

- To protect the set from dust and dirt.
- To prevent the panel from being accidentally touched causing displacement of set values.
- To provide effective protection against water droplets.



Terminal Cover

E53-COV10

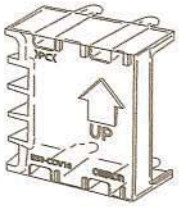

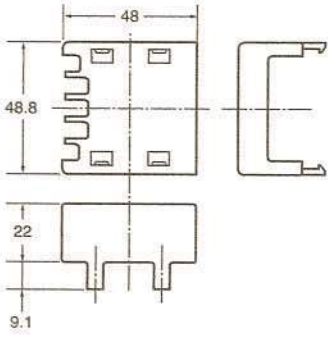

Precautions

⚠ Caution

Do not touch the terminals while power is being supplied. Doing so may occasionally result in minor injury due to electric shock.



Do not allow pieces of metal, wire clippings, or fine metallic shavings or filings from installation to enter the product. Doing so may occasionally result in electric shock, fire, or malfunction.



Do not use the product where subject to flammable or explosive gas. Otherwise, minor injury from explosion may occasionally occur.



Never disassemble, modify, or repair the product or touch any of the internal parts. Minor electric shock, fire, or malfunction may occasionally occur.



CAUTION - Risk of Fire and Electric Shock

a) This product is UL listed as Open Type Process Control Equipment. It must be mounted in an enclosure that does not allow fire to escape externally.

b) More than one disconnect switch may be required to de-energize the equipment before servicing the product.

c) Signal inputs are SELV, limited energy. (See note 1.)

d) Caution: To reduce the risk of fire or electric shock, do not interconnect the outputs of different Class 2 circuits. (See note 2.)



If the output relays are used past their life expectancy, contact fusing or burning may occasionally occur. Always consider the application conditions and use the output relays within their rated load and electrical life expectancy. The life expectancy of output relays varies considerably with the output load and switching conditions.



Loose screws may occasionally result in fire.
Tighten terminal screws to the specified torque of 0.74 to 0.90 N·m.



Unexpected operation may result in equipment damage or accidents if the settings are not appropriate for the controlled system. Set the Temperature Controller as follows:

- Set the parameters of the Temperature Controller so that they are appropriate for the controlled system.
- Turn the power supply to the Temperature Controller OFF before changing any switch setting. Switch settings are read only when the power supply is turned ON.
- Make sure that the INIT switch in the control mode switches is turned OFF before operating the Temperature Controller.



A malfunction in the Temperature Controller may occasionally make control operations impossible or prevent alarm outputs, resulting in property damage. To maintain safety in the event of malfunction of the Temperature Controller, take appropriate safety measures, such as installing a monitoring device on a separate line.



Faulty terminal contact or decreased waterproofing capability may result in a fire or equipment malfunction. When inserting the Temperature Controller into the rear case after setting the switches, check the watertight packing and make sure that the top and bottom hooks are locked securely in place.



Note: 1. A SELV circuit is one separated from the power supply with double insulation or reinforced insulation, that does not exceed 30 V r.m.s. and 42.4 V peak or 60 VDC.

2. A class 2 power supply is one tested and certified by UL as having the current and voltage of the secondary output restricted to specific levels.

■ Precautions for Safe Use

Be sure to observe the following precautions to prevent operation failure, malfunction, or adverse affects on the performance and functions of the product. Not doing so may occasionally result in unexpected events.

1. The product is designed for indoor use only. Do not use the product outdoors or in any of the following locations.
   - Places directly subject to heat radiated from heating equipment.
   - Places subject to splashing liquid or oil atmosphere.
   - Places subject to direct sunlight.
   - Places subject to dust or corrosive gas (in particular, sulfide gas and ammonia gas).
   - Places subject to intense temperature change.
   - Places subject to icing and condensation.
   - Places subject to vibration and large shocks.
2. Use and store the product within the rated temperature and humidity ranges.
   Group-mounting two or more Temperature Controllers, or mounting Temperature Controllers above each other may cause heat to build up inside the Temperature Controllers, which will shorten their service life. In such a case, use forced cooling by fans or other means of air ventilation to cool down the Temperature Controllers.
3. To allow heat to escape, do not block the area around the product. Do not block the ventilation holes on the product.
4. Use the specified size (M3.5, width of 7.2 mm or less) crimped terminals for wiring. To connect bare wires to the terminal block, use copper braided or solid wires with a gage of AWG24 to AWG18 (equal to a cross-sectional area of 0.205 to 0.832 mm^2). (The stripping length is 5 to 6 mm.) Up to two wires of the same size and type, or two crimp terminals can be inserted into a single terminal.
5. Be sure to wire properly with correct polarity of terminals. Do not wire any of the I/O terminals incorrectly.
6. Do not wire the terminals that are not used.
7. The voltage output (control output) is not electrically isolated from the internal circuits. When using a grounded temperature sensor, do not connect any of the control output terminals to ground. Otherwise unwanted current paths will cause measurement errors.
8. To avoid inductive noise, keep the wiring for the Temperature Controller's terminal block away from power cables carrying high voltages or large currents. Also, do not wire power lines together with or parallel to Temperature Controller wiring. Using shielded cables and using separate conduits or ducts is recommended.
   Attach a surge suppressor or noise filter to peripheral devices that generate noise (in particular, motors, transformers, solenoids, magnetic coils or other equipment that have an inductance component).
   When a noise filter is used at the power supply, first check the voltage or current, and attach the noise filter as close as possible to the temperature controller.
   Allow as much space as possible between the Temperature Controller and devices that generate powerful high frequencies (high-frequency welders, high-frequency sewing machines, etc.) or surge.

9. Use the product within the rated load and power supply.
10. Use a switch, relay, or other contact so that the power supply voltage reaches the rated voltage within 2 seconds. If the applied voltage is increased gradually, the power supply may not be reset or malfunctions may occur.
11. When using PID operation (self-tuning), turn ON the power supply to the load (e.g., heater) at the same time or before turning the power supply to the Temperature Controller ON. If power is turned ON for the Temperature Controller before turning ON power supply to the load, self-tuning will not be performed properly and optimum control will not be achieved.
12. Design the system (e.g., control panel) to allow for the 2 seconds of delay required for the Temperature Controller's output to stabilize after the power is turned ON.
13. A switch or circuit breaker should be provided close to this unit. The switch or circuit breaker should be within easy reach of the operator, and must be marked as a disconnecting means for this unit.
14. Approximately 30 minutes is required for the correct temperature to be displayed after turning the power supply to the Temperature Controller ON. Turn the power supply ON at least 30 minutes prior to starting control operations.
15. Be sure that the platinum resistance thermometer type and the input type set on the Temperature Controller are the same.
16. When extending the thermocouple lead wires, always use compensating conductors suitable for the type of thermocouple. Do not extend the lead wires on a platinum resistance thermometer. Use only low-resistance wire (5 Ω max. per line) for lead wires and make sure that the resistance is the same for all three wires.
17. When drawing out the Temperature Controller from the case, do not apply force that would deform or alter the Temperature Controller.
18. When drawing out the Temperature Controller from the case to replace the Temperature Controller, check the status of the terminals. If corroded terminals are used, contact faults with the terminals may cause the temperature inside the Temperature Controller to increase, possibly resulting in fire. If the terminals are corroded, replace the rear case as well.
19. When drawing out the Temperature Controller from the case, turn the power supply OFF first, and absolutely do not touch the terminals or electronic components or apply shock to them. When inserting the Temperature Controller, do not allow the electronic components to come into contact with the case.
20. Static electricity may damage internal components. Always touch grounded metal to discharge any static electricity before handling the Temperature Controller. When drawing out the Temperature Controller from the case, do not touch the electronic components or patterns on the board with your hand. Hold the Temperature Controller by the edge of the front panel when handling it.
21. Do not use paint thinner or similar chemical to clean with. Use standard grade alcohol.
22. Use tools when separating parts for disposal. Contact with the sharp internal parts may cause injury.

■ Precautions for Correct Use

Service Life

Use the Temperature Controller within the following temperature and humidity ranges:

Temperature: -10 to 55°C (with no icing or condensation)
Humidity: 25% to 85%

If the Controller is installed inside a control board, the ambient temperature must be kept to under 55°C, including the temperature around the Controller.

The service life of electronic devices like Temperature Controllers is determined not only by the number of times the relay is switched but also by the service life of internal electronic components. Component service life is affected by the ambient temperature: the higher the temperature, the shorter the service life and, the lower the temperature, the longer the service life. Therefore, the service life can be extended by lowering the temperature of the Temperature Controller.

When two or more Temperature Controllers are mounted horizontally close to each other or vertically next to one another, the internal temperature will increase due to heat radiated by the Temperature Controllers and the service life will decrease. In such a case, use forced cooling by fans or other means of air ventilation to cool down the Temperature Controllers. When providing forced cooling, however, be careful not to cool down the terminals sections alone to avoid measurement errors.

Measurement Accuracy

When extending or connecting the thermocouple lead wire, be sure to use compensating wires that match the thermocouple type. Do not extend the lead wire of the platinum resistance thermometer. If the lead wire of the platinum resistance thermometer must be extended, be sure to use wires that have low resistance and keep the resistance of the three lead wires the same.

Mount the Temperature Controller so that it is horizontally level.

If the measurement accuracy is low, check whether the input shift has been set correctly.

Waterproofing

The degree of protection is as shown below. Sections without any specification on their degree of protection or those with IP□0 are not waterproof.

Front panel: IP66, rear case: IP20, terminals: IP00

of use. Buyer shall be solely responsible for determining appropriateness of the particular Product with respect to Buyer's application, product or system. Buyer shall take application responsibility in all cases but the following is a non-exhaustive list of applications for which particular attention must be given:
(i) Outdoor use, uses involving potential chemical contamination or electrical interference, or conditions or uses not described in this document.
(ii) Use in consumer products or any use in significant quantities.
(iii) Energy control systems, combustion systems, railroad systems, aviation systems, medical equipment, amusement machines, vehicles, safety equipment, and installations subject to separate industry or government regulations.
(iv) Systems, machines and equipment that could present a risk to life or property. Please know and observe all prohibitions of use applicable to this Product.
NEVER USE THE PRODUCT FOR AN APPLICATION INVOLVING SERIOUS RISK TO LIFE OR PROPERTY OR IN LARGE QUANTITIES WITHOUT ENSURING THAT THE SYSTEM AS A WHOLE HAS BEEN DESIGNED TO

ity and does not constitute a warranty. It may represent the result of Omron's test conditions, and the user must correlate it to actual application requirements. Actual performance is subject to the Omron's Warranty and Limitations of Liability.

4. Change in Specifications. Product specifications and accessories may be changed at any time based on improvements and other reasons. It is our practice to change part numbers when published ratings or features are changed, or when significant construction changes are made. However, some specifications of the Product may be changed without any notice. When in doubt, special part numbers may be assigned to fix or establish key specifications for your application. Please consult with your Omron's representative at any time to confirm actual specifications of purchased Product.
5. Errors and Omissions. Information presented by Omron Companies has been checked and is believed to be accurate; however, no responsibility is assumed for clerical, typographical or proofreading errors or omissions.

CALL NOW 800-985-6929 http://www.automatedpt.com Email: charles@automatedpt.com

Intelligent Drivesystems

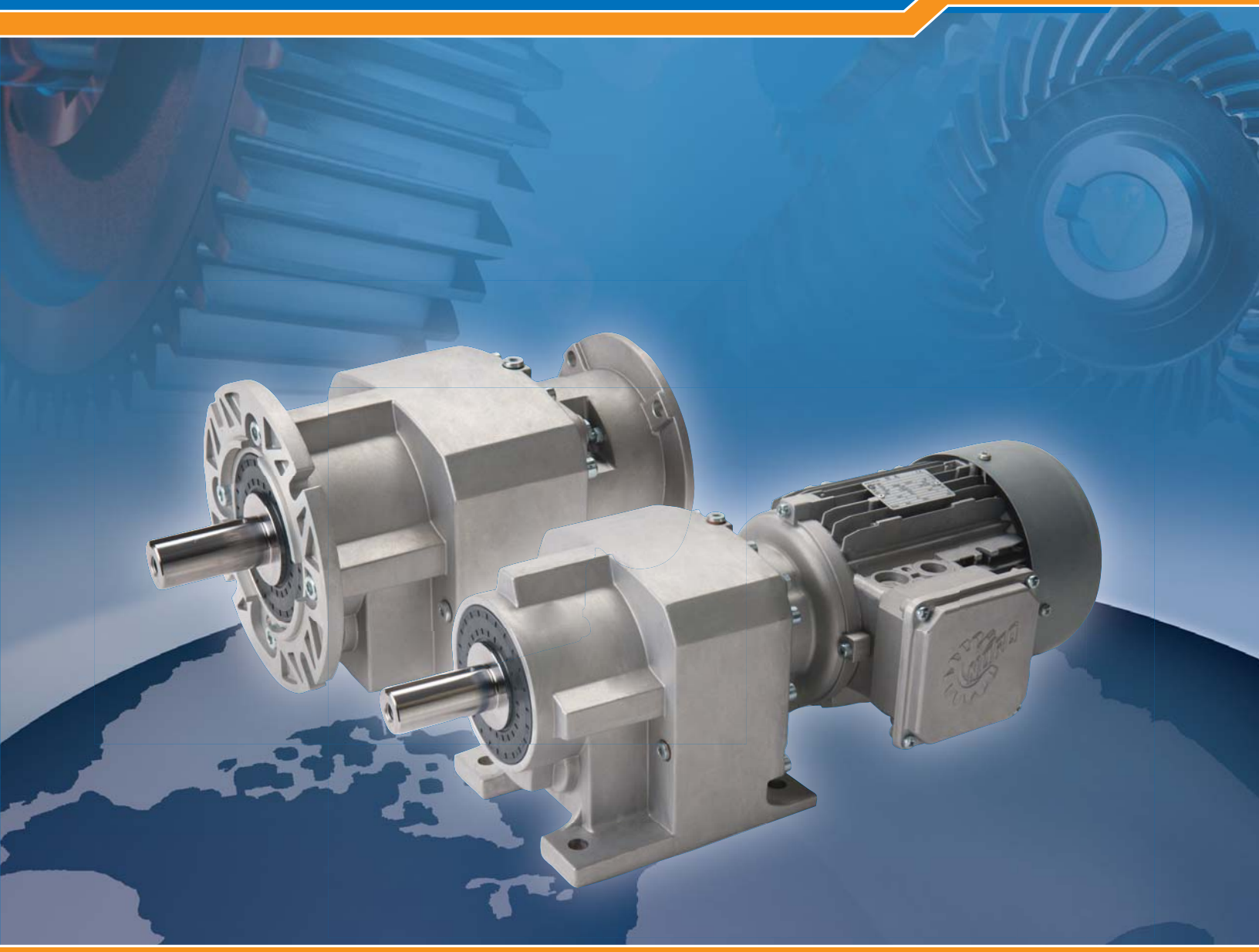

NORDBLOC®.1 SERIES

Innovative Design

F1012

NORD DRIVESYSTEMS

CALL NOW 800-985-6929 http://www.automatedpt.com Email: charles@automatedpt.com

Nordbloc® .1 Innovative Design

Bearing Design

The design of the bearing systems is a key innovation in the new NORDBLOC® .1 units. The output bearing is greatly oversized which provides a number of important advantages. This design results in a much larger bearing capacity than what is needed if the bearings were selected based on load forces. It also results in an output bearing that is much physically larger than competitive gear units. In order to accommodate the larger bearings, an innovative design called staggered bearing topology was developed.

It is common to have the support bearings for different shafts in the same plane; this greatly restricts the physical size of the bearings. As you can see in the scale drawing, the output bearing in the NORD unit is much larger than the competitors unit. A key part of the bearing system design is to have large bearing spans. This also increases the overall bearing system capacity. As a byproduct of the larger bearings, the internal shaft diameters increase – thus increasing the shaft strength. The gear housing also has larger output bearing bores which increases the housing strength.

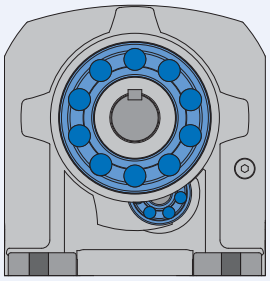

Nordbloc.1® Unit

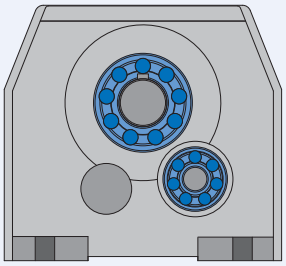

Competitor Unit

NORD Bearing Advantages & Benefits

- ☑ Oversized bearings
- ☑ Staggered bearing topology
- ☑ Longer bearing life
- ☑ Higher overhung load capacity
- ☑ Increased thrust capacity
- ☑ No assembly covers needed

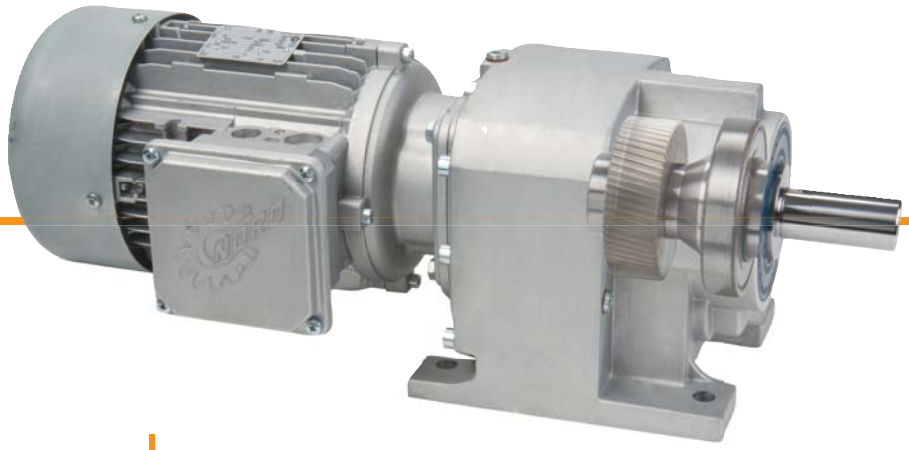

NORD DRIVESYSTEMS

Nordbloc® .1
Innovative Design

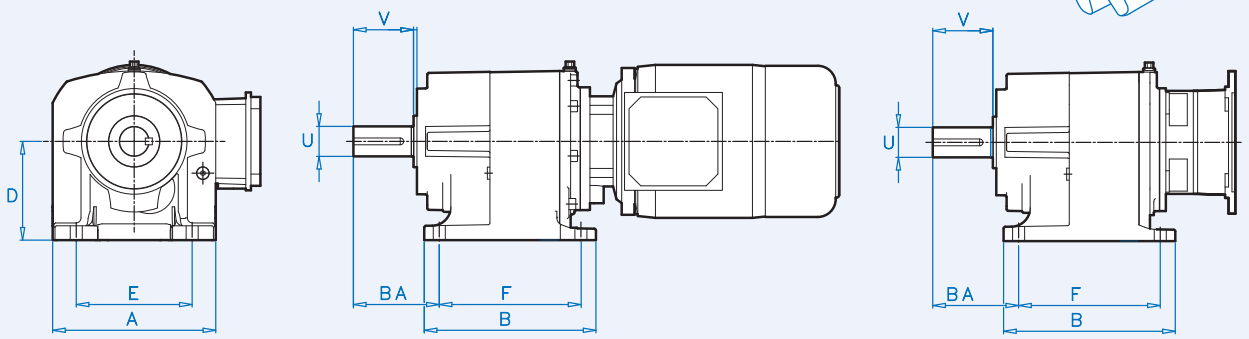

Dimensions [inch]

Size	A	B	BA	D	E	F	U	V
SK 072.1	4.09	4.29	1.89	2.56	3.35	3.74	0.750	1.57
SK 172.1	5.51	5.31	2.28	2.95	4.33	4.33	0.750	1.57
SK 372.1 SK 373.1	5.91	6.30	2.95	3.54	4.33	5.12	1.000	1.97
SK 572.1 SK 573.1	7.48	7.87	3.54	4.53	5.31	6.50	1.250 & 1.375	2.36
SK 672.1 SK 673.1	8.27	9.25	3.93	5.12	5.91	7.68	1.375	2.75
SK 772.1 SK 773.1	9.33	9.65	4.57	5.51	6.69	8.07	1.625	3.15
SK 872.1 SK 873.1	11.81	12.20	5.55	7.09	8.46	10.24	2.125	3.94
SK 972.1 SK 973.1	13.70	14.37	6.33	8.86	9.84	12.20	2.375	4.72

Unicase®

NORD heavy-duty, one-piece housings are precisely machined to meticulous standards. Internal reinforcements further increase strength and rigidity. All bearings and seal seats are contained within the casting, eliminating splits or bolt-on carriers that can weaken the housing and allow oil leakage. Bores and mounting faces are machined in one step, producing extremely precise tolerances — thus ensuring accurate positioning of gear teeth, bearings and seals, and longer life for all components.

Rigid Housing Design (FEM)

NORD's new NORDBLOC® design used state-of-the-art Finite Element Modeling as a key design tool. This allowed optimal structural design to maximize the strength & rigidity of the gear box components.

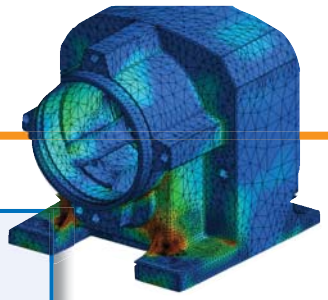

Rigid Unicase® Housing Advantages & Benefits

- ☑ Leak-free design
- ☑ Quiet operation
- ☑ High output torque capabilities

Nordbloc® .1 Innovative Design

Corrosion Resistant Aluminum Alloy Housing

The point one NORDBLOC® .1 makes use of the many advantageous material properties of an optimized aluminum alloy for the gear housing. The aluminum alloy housing provides a higher strength to weight ratio than cast iron. The housing material is also inherently corrosion resistant and does not need a paint coating. Finally the aluminum alloy housing is a much better heat conductor than cast iron which will decrease the gear units operating temperature this benefits the internal components and will yield longer service life.

Alloy Housing Advantages & Benefits

- ☑ Paint free
- ☑ Light weight
- ☑ Corrosion resistant
- ☑ Better thermal conductivity (lower temperature)
- ☑ Longer service life



Smooth Solid Gear Housing Surface

One goal of the new NORDBLOC® .1 units was to provide a smooth surface to prevent liquids from pooling or, solid material build-up on the units. This is an advantage in applications where cleanliness is important. Also, the gear units are designed to not have any assembly covers. This increases the product strength and also provides a smother surface. No rubberized bore plugs are used which provides a smoother, more uniform surface, greater strength and increased sealing integrity.

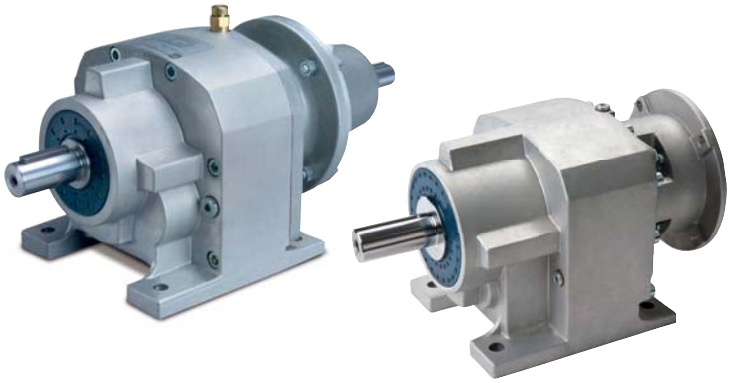

Smooth Gear Housing Advantages & Benefits

- ☑ Easy cleaning
- ☑ Smooth surface
- ☑ No assembly covers
- ☑ No bore plug caps

Nordbloc® .1 Innovative Design

Large Ratio per Gear Stage

NORD gear cutting technology allows for the production of gear sets with a higher maximum ratio per stage than many other speed reducer manufacturers. NORD commonly produces gear sets with a maximum ratio of between 8:1 and 10:1 per stage. This allows for double reduction gear units with a maximum ratio between 60:1 and 100:1. Most speed reducer manufactures' can only produce single-stage reduction of between 5:1 and 6:1. This means a two-stage reducer with a maximum reduction of about 25:1 to 35:1. NORD can often provide two-stage reducers when most companies must provide three-stage units. The same situation aplies to three, four and larger gear stages. This allows NORD to provide superior value and performance in many conditions.

Modular Design

All NORD products including the new NORDBLOC®.1 units are modular in design and provide extraordinary flexibility. The NORDBLOC® units provide great mounting versatility including:

- ☑ Foot mount
- ☑ Flange mount B5
- ☑ Face flange mount B14
- ☑ Foot mount with a B5 or B14 flange

The NORBLOC® unit can also be provided with a number of different input components including:

- ☑ Integral motor (Gearmotor)
- ☑ NEMA C-face motor adapter
- ☑ IEC B5 motor adapter
- ☑ Solid input shaft
- ☑ Custom motor adapter (servo, hydraulic motors, and more)

Large Ratio Advantages & Benefits

- ☑ Better value
- ☑ Higher efficiency
- ☑ Quieter operation
- ☑ Lower weight
- ☑ Longer life



DRIVESYSTEMS

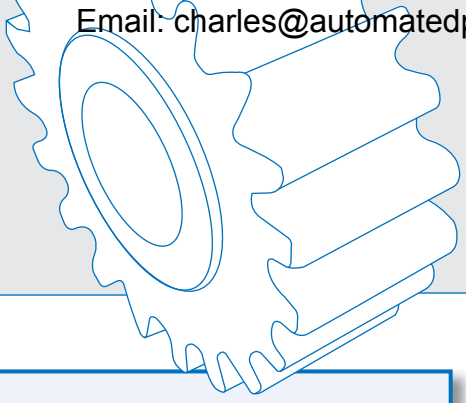

Nordbloc® .1 Standard Features

Autovent™

The AUTOVENT™ prevents bearing damage by blocking entry of foreign material (water, dust, corrosives, etc.) through breather. A ball and spring check valve opens at 2-3 psi during operation and closes tightly when the gearbox cools, producing a slightly negative pressure that ensures the valve seals tight. This keeps contaminants out of the oil to maintain proper oil cleanliness reducing contamination, foaming & oxidation. The AUTOVENT™ is perfect for humid conditions, washdown applications, and dusty environments.

Autovent Advantages & Benefits

- ☑ Cleaner gearbox oil
- ☑ Extended lubrication life
- ☑ Longer-lasting seals, gears, and bearings

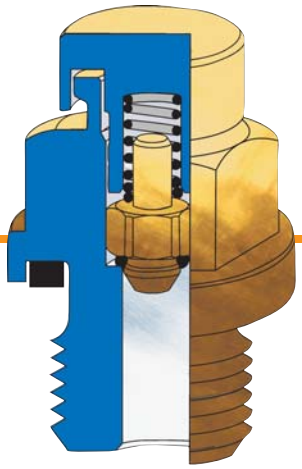

High-Quality Gearing (Infinite Life Design)

NORD continually invests in state-of the-art gear production equipment and in gear research. This allows us to produce exceptional high quality gears.

High-Quality Gearing Advantages & Benefits

- ☑ Designed and manufactured up to AGMA CLASS 13
- ☑ Infinite design life
- ☑ Case-hardened steel
- ☑ Exceptional hardness: 58 Rc minimum
- ☑ High-speed gears are ground; low speed gears skive hobbed
- ☑ 275% momentary overload capacity
- ☑ Low noise
- ☑ Low maintenance

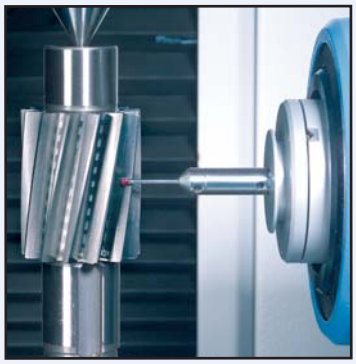

Energy Efficiency

Lowering your operating costs is one of our greatest goals. NORD research and development focuses on energy efficiency inverters designed for lower energy consumption. Our highly diverse line of in-line or right angle units and motors has been developed to suit your needs.

NORD DRIVESYSTEMS

Nordbloc® .1 Standard Features

Compact Coupled NEMA C-face Motor Adapter

NORD's unique NEMA C-face motor adapter provides the user with a high performance motor attachment system in a compact space. Historically, to have a compact C-face motor mounting the only choice was a low performance quill design with its distinct disadvantages including excessive bearing loading, rapid seal wear and metal-to-metal fretting corrosion. The fretting corrosion inherent with a quill design made the removal of a motor almost impossible. Also in the past, the use of a superior coupling system meant increased cost and a much longer motor bell. NORD's compact NEMA C-face adapter uses a high strength motor coupling and provides the space advantages of a quill but without the quills severe drawbacks.

Compact coupled Nema C-Face Advantanges & Benefits

- ☑ Compact space saving design
- ☑ Easy mounting
- ☑ Easy motor removal
- ☑ Motor coupling (not quill)
- ☑ Low bearing loading (long bearing life)
- ☑ Lower weight



NORD High-Performance Motors and Options

NORD motors are designed to run cool for producing longer service life. Low rotor inertia and high starting torque allow peak performance in the most difficult applications for inverter and vector duty per NEMA MG 1-2006 Section 31.4.4.2 voltage spikes. Our motors are internationally accepted, conforming to North American NEMA MG 1 and international IEC electrical specifications. High performance options include brakes, encoders, and forced cooling fans.





Factory Oil Filled

All NORDBLOC® units are filled at the factory with the proper quantity and type of lubrication. Oil fill before shipping prevents damage from dry start-ups.

Factory Oil Filled Advantanges & Benefits

- ☑ No need for filling onsite
- ☑ Ensures proper oil grade and fill level
- ☑ Prevents dry gearbox starts

CALL NOW 800-985-6929 http://www.automatedpt.com Email: charles@automatedpt.com

Product Overview

UNICASE™ SPEED REDUCERS



HELICAL IN-LINE
- Foot or Flange Mount
- Torque up to 205,000 lb-in
- Gear ratios – 1.82:1 to over 300,000:1



NORDBLOC®.1 HELICAL IN-LINE
- Foot or Flange Mount
- Torque up to 26,550 lb-in
- Gear ratios – 1.88:1 to over 370:1



PARALLEL HELICAL CLINCHER™
- Shaft, Flange or Foot Mount
- Torque up to 797,000 lb-in
- Gear ratios – 4.26:1 to over 300,000:1

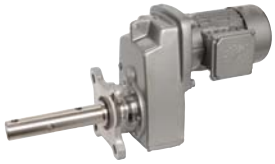

SCP SCREW CONVEYOR PACKAGE
- Shaft, or Flange Mount
- Torque up to 53,100 lb-in
- Gear ratios – 4.32:1 to over 1500:1



RIGHT ANGLE HELICAL-BEVEL 2-STAGE
- Foot, Flange or Shaft Mount
- Torque up to 5,840 lb-in
- Gear ratios – 4.1:1 to 72:1



RIGHT ANGLE HELICAL-BEVEL
- Foot, Flange or Shaft Mount
- Torque up to 283,000 lb-in
- Gear ratios – 8.04:1 to over 300,000:1



RIGHT ANGLE HELICAL-WORM
- Foot, Flange or Shaft Mount
- Torque up to 27,585 lb-in
- Gear ratios – 4.40:1 to over 300,000:1

HIGH PERFORMANCE MOTORS & BRAKEMOTORS



INVERTER/VECTOR DUTY
- Standard or Energy Efficient
- Integral, NEMA or Metric IEC
- 1/6 to 250 hp

UNICASE™ SPEED REDUCERS



MINICASE™ RIGHT ANGLE WORM
- Foot, Flange or Shaft Mount
- Torque up to 3,540 lb-in
- Gear ratios – 5:1 to 500:1



FLEXBLOC™ WORM
- Modular bolt-on options
- Torque up to 4,683 lb-in
- Gear ratios – 5:1 to 3,000:1



MAXXDRIVE™ LARGE INDUSTRIAL GEAR UNITS PARALLEL HELICAL
- Modular bolt-on options
- Torque up to 2,027,000 lb-in
- Gear ratios – 5:1 to 1,600:1



MAXXDRIVE™ LARGE INDUSTRIAL GEAR UNITS HELICAL-BEVEL
- Modular bolt-on options
- Torque up to 2,027,000 lb-in
- Gear ratios – 5:1 to 1,600:1

NORDAC AC VECTOR DRIVES



SK200E FAMILY
- Decentralized, high performance
- 380-480V, 3-phase to 10 hp
- 200-240V, 3-phase to 5 hp
- 200-240V, 1-phase to 1.5 hp
- 100-120V, 1-phase to 1 hp



SK500E FAMILY
- Compact, high performance
- 380-480V, 3-phase, to 50hp
- 200-240V, 3-phase, to 15hp
- 200-240V, 1-phase, to 3hp
- 110-120V, 1-phase, to 1.5hp



SK700E FAMILY
- Flexible high performance
- 380-460V, 3-phase, to 200hp

NORD DRIVESYSTEMS
www.nord.com

NORD Gear Corporation
National Customer Service Toll-Free: 888.314.6673
info.us@nord.com

NORD Gear Limited
Toll-Free in Canada: 800.668.4378
info.ca@nord.com

WEST
Corona, CA (Los Angeles)
Phone: 608.849.0190

MIDWEST
Waunakee, WI (Madison)
Phone: 608.849.7300

EAST
Charlotte, NC
Phone: 608.849.0140

CANADA
Brampton, ON (Toronto)
Phone: 905.796.3606

1002000088/1011

CALL NOW 800-985-6929 http://www.automatedpt.com Email: charles@automatedpt.com

AC Motor Selection – Three-phase Motors

(Single-phase motors are shown on page 15-13)

3-Phase Characteristic	IronHorse™ 56C Frame 3-Phase	IronHorse™ T & TC Frames	Marathon microMAX™	Marathon Black Max®	Marathon Blue Max®	Marathon NEMA Premium® XRI®	Marathon Blue Chip XRI®
Electrical Characteristics							
Horsepower range	1/3 - 2	1 - 300 (T); 1 - 100 (TC)	1/4 - 10	1/4 - 30	40 - 100	1 - 10	15 - 100
Base speed (# Poles)	1800 (4), 3600 (2)	1200(6), 1800 (4), 3600(2)	1800 (4)	1800 (4) and 1200 (6)	1800 (4)	1200(6),1800(4),3600(2)	1800 (4)
Standard Voltage	208-230/460	208-230/460 (250 & 300 hp 460V only)	230/460 (1/4 hp is 230V only)	230/460 and 575	230/460	208-230/460	230/460 and 575
Insulation Class	F	F	H	F	H	F	F
Insulation System	dip & bake	double dip & bake	CR200 magnet wire	MAX GUARD®		CR200 magnet wire	
Service Factor	1.15 (line) 1.0 (drive)	1.15 (line) 1.0 (drive)	1.0	1.0	1.0	1.15 (line) 1.0 (drive)	1.15
Phase/Base Frequency	3/60						
Design Code (NEMA)	B	A: 10-50 hp 4&6 pole B: all other sizes	A and B for 1/4 - 2 hp	A	A	B	B
Duty Cycle	Continuous						
Thermal protection	None			Class F thermostats		None	
Mechanical Characteristics							
Frame size (mounting)	56C	143T/TC - 405TC/449T	56C - 215TC	56C - 286TC	324T(C)–405T(C)	56C - 215TC	254T - 405T
Enclosure	TEFC	TEFC	TENV and TEFC	TENV	TEFC and TEBC	TEFC	TEFC
Frame material	Rolled Steel frame; Aluminum end bell	Cast Iron	Rolled Steel	Rolled Steel w Al face; Cast Iron	Cast Iron	Rolled Steel	Cast Iron
End bracket material	Aluminum	Cast Iron	Aluminum	Aluminum, Cast Iron	Cast Iron	Aluminum	Cast Iron
Conduit box material	Steel	Cast Iron	Steel	Steel	Cast Iron	Steel	Steel (<326T) Cast Iron (>364T)
Fan guard material	Steel	Steel	Polypropylene	None (all ratings TENV)	Cast Iron	Plastic	Polyprop. (<286T) Cast Iron (>324T)
Fan material	Plastic	Plastic (143T/TC - 445/7T) Aluminum (449T)	Polypropylene	None (all ratings TENV)	Polypropylene	Plastic	Polypropylene
Lead termination	Conduit box	Conduit box	Conduit box except Terminal block - 1/4 hp	Conduit box	Conduit box	Conduit box	Conduit box
Standard mounting	C-Face with Removable Rigid Base	Rigid Base (C-Flange kit available) C-Face with Rigid Base (1-100 hp)	C-Face with Rigid Base & C-Face Round Body	C-Face with Rigid Base	C-Face with Rigid Base	C-Face with Rigid Base	Rigid Base
Drive end shaft slinger	Yes	Yes	No	No	Yes	Yes	Yes
Paint	Black	Epoxy primer / Synthetic alkyd enamel	Black powder-coat	Black enamel	Blue enamel	Blue enamel	epoxy paint
Bearings	Ball	1-75 hp: Ball 100-300 hp: Roller	Ball (C3 fit)	Ball (C3 fit)	Ball (C3 fit)	Ball	Ball (C3 fit)
Grease	Exxon Polyrex EM						
Standard conduit box assembly position	F1	F1 some sizes reversible to F2	F3	F1, reversible to F2	F1, reversible to F2	F3	F1
Performance Characteristics							
Constant Torque speed range	2:1	2:1	20:1 (TEFC) 1000:1 (TENV)	1000:1 (TENV)	2000:1 (all enclosures)	10:1	20:1
Variable Torque speed range	5:1	5:1	-	-	-	10:1	-
Constant Horsepower speed range	1.5:1	1.5:1	2:1	2:1 (90-120Hz intermittent @50% duty cycle)	2:1	2:1	2:1
Temperature rise	B	B	B	F	F (TEFC) and B (TEBC)	F	B
Encoder provisions	No	No	No	Yes	Yes	No	No
Other Characteristics							
Agency listings	cCSAus	CE, cCSAus, EPACT	UL Recognized and CSA Certified				
Warranty*		2 years	3 years (through Marathon Electric)				

See Terms and Conditions for motor warranty explanation.

1) For warranty on IronHorse motors below 50 hp, warranty service can be arranged through AutomationDirect.

2) For warranty on IronHorse motors 50 hp and above, motors must be inspected by a local EASA motor repair or service center; see AutomationDirect Terms & Conditions.

3) Marathon warranty service can be arranged through Marathon Electric service centers. See list of service centers on our web site at www.automationdirect.com.

Black Max® Vector Duty Motors

****** 230/460V and 575V Motors Available ******



MARATHON® ELECTRIC

Motor Shipping Schedule		
Same or one day *	Up to 7 days	Up to 10 days

Color indicates shipping lead time in business days. Check stock status online.

** For same-day shipping of stock motors requiring LTL shipment, order before 5 p.m. EST.*

Features

- Class F MAX GUARD® insulation system
- Constant torque operation from 0 to base speed on vector drive
- Constant horsepower operation to twice base RPM
- Continuous duty at 40° C ambient
- Optimized for operation with IGBT inverter (NEMA Design A)
- Class F N/C thermostats (one per phase)
- Utilizes double shielded ball bearings
- Exxon Polyrex® EM bearing grease
- Dual Mounting (C-Face with rigid base and C-Face with removable rigid base, as noted)
- F1 standard conduit box location, field reversible to F2 (except as noted)
- Available with optional encoder installed on opposite drive end
- Electrically reversible
- UL recognized and CSA certified
- Three year warranty

Applications

- Designed for inverter or vector applications where up to a 1000:1 constant torque speed range is required.
- Typical uses include: material handling, machine tools, conveyors, crane and hoist, metal processing, test stands, pumps, compressors, textile processing, and other industrial machinery installed in dusty or dirty environments.

230/460V Motor Specifications

Part Number	Price	HP	Base RPM	Volts	Enclosure	NEMA Frame	Model No.	F.L. Amps	Weight (lb)	Footnotes
Y592	<--->	1/4	1800	230/460	TENV	56C	56H17T2001	1.2 / 0.6	19	T, S, 13
Y534	<--->	1/2	1800	230/460	TENV	56C	56H17T5301	1.6 / 0.8	28	T, S, 6, 13
Y535	<--->	1	1800	230/460	TENV	56C	56H17T5302	3.0 / 1.5	41	T, S, 6, 13
Y536	<--->	1	1800	230/460	TENV	143TC	143THTR5326	3.0 / 1.5	43	T, S, 6, 13
Y537	<--->	1	1200	230/460	TENV	145TC	145THTR5376	3.8 / 1.9	49	T, S, 6, 13
Y538	<--->	1-1/2	1800	230/460	TENV	145TC	145THTR5326	4.8 / 2.4	50	T, S, 6, 13
Y551	<--->	2	1800	230/460	TENV	145TC	145THTN6046	6.0 / 3.0	72	T
Y540	<--->	2	1200	230/460	TENV	184TC	184THTL7776	6.6 / 3.3	88	T, AL
Y541	<--->	3	1800	230/460	TENV	182TC	182THTL7726	8.4 / 4.2	96	T, AL
Y542	<--->	3	1200	230/460	TENV	213TC	213THTL7776	9.4 / 4.7	118	T, AL
Y543	<--->	5	1800	230/460	TENV	184TC	184THTL7726	14.0 / 7.0	98	T, AL
Y544	<--->	5	1200	230/460	TENV	215TC	215THTL7776	15.4 / 7.7	138	T, AL
Y545	<--->	7-1/2	1800	230/460	TENV	213TC	213THTL7726	21.0 / 10.5	146	T, AL
Y546	<--->	7-1/2	1200	230/460	TENV	254TC	254THTL5776	22.0 / 11.0	209	T, AL
Y547*	<--->	10	1800	230/460	TENV	215TC	215THTL7726	27.0 / 13.5	159	T, AL
Y548*	<--->	10	1200	230/460	TENV	256TC	256THTL5776	28 / 14	203	T, AL
Y549*	<--->	15	1800	230/460	TENV	254TC	254THTL5726	40 / 20	250	T, AL, I
Y552*	<--->	20	1800	230/460	TENV	256TC	256THTNA7026	52 / 26	300	T, I
Y553*	<--->	25	1800	230/460	TENV	284TC	284THTNA7026	62 / 31	495	T, I
Y393*	<--->	30	1800	230/460	TENV	286TC	286THTNA7026	74 / 37	575	T, I

Footnotes:
T Thermostat overload
S Steel Frame Construction
6 Bolt-on, removable base for footless mounting option

Footnotes (continued):
13 F1 Mounting Only, cannot modify to F2
AL Aluminum Frame Construction
I Intermittent duty from 90-120 Hz operation

Note: Please review the AutomationDirect Terms & Conditions for twarranty and service on his product.
Warranty service can be arranged through numerous Marathon Electric service centers. See list of service centers on our Web site at www.automationdirect.com.

Black Max® Vector Duty Motors

Motor Shipping Schedule		
Same or one day	Up to 7 days	Up to 10 days

Color indicates shipping lead time in business days. Check stock status online.

575V Motor Specifications

Part Number	Price	HP	Base RPM	Volts	Enclosure	NEMA Frame	Model No.	F.L. Amps	Weight (lb)	Footnotes
Y555	<--->	1/2	1800	575	TENV	56C	56H17T5311	0.64	28	T, S, 6, 13
Y556	<--->	1	1800	575	TENV	56C	56H17T5312	1.2	41	T, S, 6, 13
Y557	<--->	2	1800	575	TENV	145TC	145THTN6060	2.4	72	T
Y558	<--->	3	1800	575	TENV	182TC	182THTL7736	3.4	96	T, AL
Y559	<--->	5	1800	575	TENV	184TC	184THTL7736	5.6	98	T, AL
Y560	<--->	7-1/2	1800	575	TENV	213TC	213THTL7736	8.4	146	T, AL
Y561	<--->	10	1800	575	TENV	215TC	215THTL7736	10.8	159	T, AL
Y562	<--->	15	1800	575	TENV	254TC	254THTL5736	16.0	250	T, AL, I
Y563	<--->	20	1800	575	TENV	256TC	256THTNA7036	20.8	300	T, I
Y567	<--->	25	1800	575	TENV	284TC	284THTNA7036	24.8	495	T, I
Y394	<--->	30	1800	575	TENV	286TC	286THTNA7036	29.6	575	T, I

Footnotes:
T Thermostat overload
S Steel Frame Construction
6 Bolt-on, removable base for footless mounting option

Footnotes (continued):
13 F1 Mounting Only, cannot modify to F2
AL Aluminum Frame Construction
I Intermittent duty from 90-120 Hz operation

Note: Please review the AutomationDirect Terms & Conditions for warranty and service on this product. Warranty service can be arranged through numerous Marathon Electric service centers. See list of service centers on our Web site at www.automationdirect.com.

Motor with Shaft Mounted Encoder*:

A Dynapar Model HS35 shaft mounted encoder can be supplied with the motor as shown in the price table below. The encoder requires a 5-26 VDC power source, provides a count of 1024 pulses per revolution (PPR), differential line driver output and includes a 10-pin mating connector.

* If connecting the motor to a *DURAPULSE* AC drive, a GS3-FB Feedback Card is required for the drive.

Motor with Shaft Mounted Encoder								
230/460V Motors						575V Motors		
Part Number	Price	HP	Part Number	Price	HP	Part Number	Price	HP
Y592-A772	<--->	1/4	Y543-A772	<--->	5	Y555-A772	<--->	1/2
Y534-A772	<--->	1/2	Y544-A772	<--->	5	Y556-A772	<--->	1
Y535-A772	<--->	1	Y545-A772	<--->	7-1/2	Y557-A772	<--->	2
Y536-A772	<--->	1	Y546-A772	<--->	7-1/2	Y558-A772	<--->	3
Y537-A772	<--->	1	Y547-A772	<--->	10	Y559-A772	<--->	5
Y538-A772	<--->	1-1/2	Y548-A772	<--->	10	Y560-A772	<--->	7-1/2
Y551-A772	<--->	2	Y549-A772	<--->	15	Y561-A772	<--->	10
Y540-A772	<--->	2	Y552-A772	<--->	20	Y562-A772	<--->	15
Y541-A772	<--->	3	Y553-A772	<--->	25	Y563-A772	<--->	20
Y542-A772	<--->	3	Y393-A772	<--->	30	Y567-A772	<--->	25
						Y394-A772	<--->	30

Note: Please review the AutomationDirect Terms & Conditions for warranty and service on this product. Warranty service can be arranged through numerous Marathon Electric service centers. See list of service centers on our Web site at www.automationdirect.com.

Encoder connector pinout:

Note: A mating connector is supplied with the encoder.

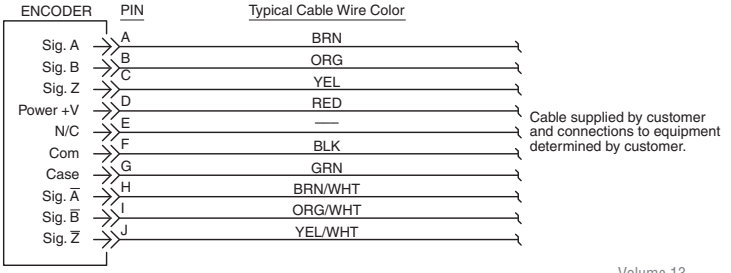

Black Max® Vector Duty Motors

Motor Performance Data (460 Volt) *																
Part Number	HP	F.L. rpm	F.L. Amps @460V	N.L. Amps @460V	F.L. Torque (lb-ft)	B.D. Torque (lb-ft)	Max. C hp rpm *	Max. Safe rpm	F.L. Effic. (%)	F.L. Power Factor	Rotor Inertia ($lb\text{-}ft^2$)	Ohms/Ph - Equiv. Wye Circuit (460 VAC) (at rated operating temp. in 40° C ambient)				
												R1	R2	X1	X2	XM
Y592	1/4	1755	0.6	0.45	0.75	4.5	3540	5400	70.0	58.0	0.045	26.300	23.000	30.240	14.700	572.000
Y534	1/2	1735	0.8	0.52	1.5	5.8	3510	5400	80.0	72.0	0.056	22.307	17.028	24.123	18.163	532.976
Y535	1	1750	1.5	1.0	3.0	15.0	3505	5400	84.0	75.0	0.110	8.378	5.623	10.707	9.912	278.036
Y536	1	1750	1.5	1.0	3.0	15.0	3505	5400	84.0	75.0	0.110	8.378	5.623	10.707	9.912	278.036
Y537	1	1145	1.9	1.3	4.5	16.0	2260	5400	80.0	62.5	0.140	10.302	8.372	13.793	15.325	193.835
Y538	1-1/2	1755	2.4	1.6	4.5	29.0	3518	5400	85.5	69.0	0.140	4.257	3.538	5.998	5.884	161.009
Y551	2	1750	3.0	1.7	6.0	28.5	3525	5400	85.5	78.0	0.130	3.834	2.897	5.950	5.637	154.800
Y540	2	1160	3.3	2.1	9.0	34.0	2315	5400	82.5	67.5	0.380	3.948	3.436	7.725	12.113	116.900
Y541	3	1755	4.2	2.2	9.0	48.0	3515	4200	85.5	80.0	0.420	2.356	1.731	4.266	4.304	123.930
Y542	3	1158	4.7	3.0	13.6	49.0	2300	4200	82.5	72.5	0.600	2.469	2.318	6.508	4.125	83.910
Y543	5	1765	7.0	4.2	14.8	70.0	3555	4200	89.5	74.5	0.550	1.242	0.947	2.534	4.236	64.128
Y544	5	1165	7.7	4.8	22.5	87.0	2320	4200	84.0	71.0	0.900	1.130	1.250	3.709	2.573	51.972
Y545	7-1/2	1765	10.5	5.5	22.3	95.5	3525	4200	90.2	76.0	0.850	0.699	0.567	1.765	2.260	38.178
Y546	7-1/2	1170	11.0	6.0	34.0	118.0	2325	4200	87.5	73.0	1.200	0.510	0.680	2.846	3.247	42.714
Y547	10	1774	13.5	7.4	29.5	125.0	3540	4200	90.2	76.0	1.300	0.369	0.334	1.423	2.281	34.932
Y548	10	1160	14	7.0	45.5	135.0	2320	4200	89.5	75.5	1.500	0.534	0.693	2.258	2.323	30.530
Y549	15	1765	20	11.0	45.0	170.0	3550	3600	92.4	76.0	1.600	0.134	0.316	1.047	1.569	22.151
Y552	20	1768	26	13.5	59.5	290.0	3560	3600	93.6	80.0	3.100	0.234	0.213	0.746	0.689	18.204
Y553	25	1770	31	14.0	74.2	330.0	3530	3600	93.6	75.0	4.400	0.143	0.160	0.724	0.678	13.965
Y393	30	1772	37	23.5	89.0	375.0	3560	3600	94.5	74.0	5.500	0.113	0.123	0.543	0.557	11.200

* Maximum Constant hp rpm is for direct coupled loads.

Motor Performance Data (575 Volt) *																
Part Number	HP	F.L. rpm	F.L. Amps @575V	N.L. Amps @575V	F.L. Torque (lb-ft)	B.D. Torque (lb-ft)	Max. C hp rpm*	Max. Safe rpm	F.L. Effic. (%)	F.L. Power Factor	Rotor Inertia ($lb\text{-}ft^2$)	Ohms/Ph - Equiv. Wye Circuit (575 VAC) (at rated operating temp. in 40° C ambient)				
												R1	R2	X1	X2	XM
Y555	1/2	1735	0.8	0.8	1.52	5.8	3510	5400	80.0	72	0.056	22.307	17.028	24.123	18.163	532.976
Y556	1	1750	1.6	0.8	3.0	15.0	3505	5400	84.0	75	0.11	8.378	5.623	10.707	9.912	278.036
Y557	2	1750	2.4	1.6	6.0	28.5	3525	5400	85.5	78	0.13	3.834	2.897	5.950	5.637	154.780
Y558	3	1755	3.2	1.6	9.0	48.0	3515	4200	85.5	80	0.42	2.356	1.731	4.266	4.304	123.926
Y559	5	1765	5.6	3.2	14.9	70.0	3555	4200	89.5	74.5	0.52	1.242	1.134	2.268	3.969	64.071
Y560	7-1/2	1765	8.0	4.8	22.3	95.5	3525	4200	90.2	76	0.9	0.699	0.567	1.765	2.260	38.178
Y561	10	1774	11.2	5.6	29.6	125.0	3540	4200	90.2	76	1.3	0.284	0.284	1.420	2.272	34.932
Y562	15	1765	16.0	8.8	44.6	170.0	3550	3600	92.4	76	1.6	0.314	0.316	1.047	1.569	22.151
Y563	20	1770	20.8	11.2	59.5	290.0	3560	3600	93.6	77	3.5	0.220	0.192	0.675	0.684	18.204
Y567	25	1770	24.8	11.2	74.2	330.0	3530	3600	93.6	80	4.4	0.143	0.160	0.724	0.678	13.965
Y394	30	1772	29.6	14.4	88.9	375.0	3560	3600	94.5	80	5.3	0.113	0.123	0.543	0.557	11.186

* Maximum Constant hp rpm is for direct coupled loads.

Black Max® Vector Duty Motors

Motor Dimensions

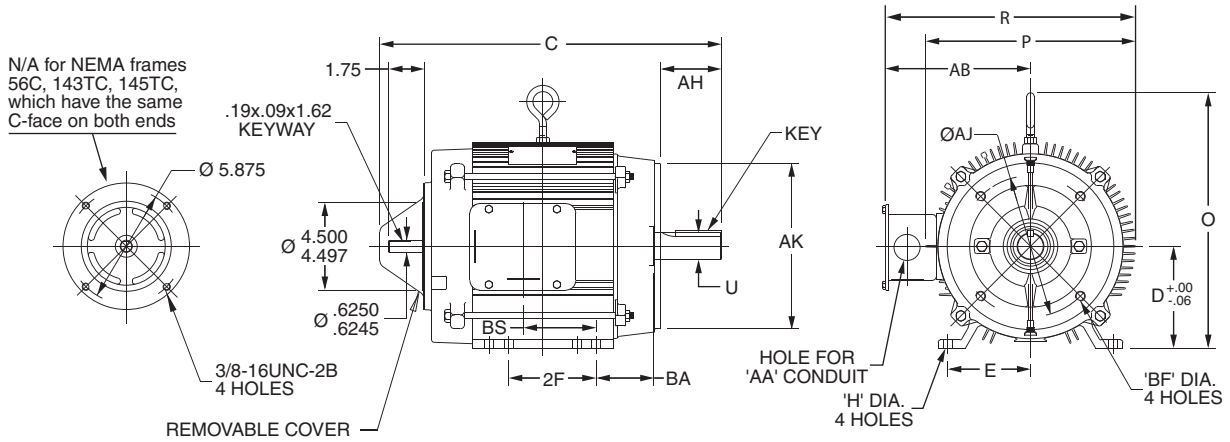

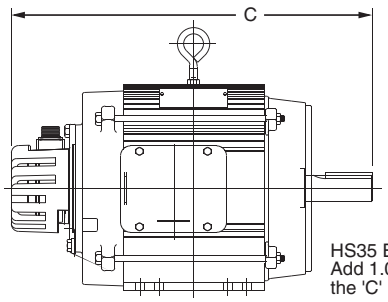

Note: Thermostat protector leads are brought out in the motor conduit box and marked as P1/P2.

Motor Dimensions [Inches]

Part # 230/460V	Part # 575V	HP	NEMA Frame	Frame Construct	C	D	E	2F	H	O	P	R	U	AA	AB	AH	AJ	AK Max	BA	BF	BS	Key
Y592	-	1/4			11.88				.34	6.35	5.69	7.21			4.37						2.84	
Y534	Y555	1/2	56C		13.48		2.44	3.00				8.77	.625		5.56	2.06					3.75	
Y535	Y556	1		Rolled Steel	14.98																5.25	
Y536	-	1	143TC		15.04	3.50		4.00	.35	6.71	6.42			None			5.875	4.500	2.75	3/8-16	4.93	.19x.19x1.38
Y537	-	1			16.04		2.75	5.00				8.46	.875		5.25	2.12					5.93	
Y538	-	1-1/2	145TC																			
Y551	Y557	2		Cast Iron	14.68			5.00	.37	7.45	7.98	11.03			7.04			4.50	2.62		3.81	
Y540	-	2	184TC		16.94	4.50	3.75	5.50	.44	11.22	9.74	12.07	1.125	1.09	7.19	2.62			3.50		2.75	.25x.25x1.75
Y541	Y558	3	182TC		17.39			4.50													2.98	
Y542	-	3	213TC		19.04	5.22	4.25	5.50	.47	12.47	10.75	12.78	1.375	1.34	7.39	3.12			4.25		4.05	.31x.31x2.38
Y543	Y559	5	184TC		18.94	4.50	3.75		.44	11.22	9.74	12.07	1.125	1.09	7.19	2.62			3.50		3.75	.25x.25x1.75
Y544	-	5	215TC		20.54	5.22	4.25	7.00	.47	12.47	10.75	12.78	1.375	1.34	7.39	3.12			4.25		5.55	.31x.31x2.38
Y545	Y560	7-1/2	213TC	Aluminum	20.54			5.50									7.25	8.500		1/2-13		
Y546	-	7-1/2	254TC		25.37	6.22	5.00	8.25	.56	13.46		13.75	1.625	1.75 &2.0	8.38	3.75					8.85	.38x.38x2.88
Y547	Y561	10	215TC		23.04	5.22	4.25	7.00	.47	12.47		12.78	1.375	1.34	7.39	3.12					8.05	.31x.31x2.38
Y548	-	10	256TC		26.87			10.00						1.75 & 2.00							10.40	
Y549	Y562	15	254TC		26.87	6.22	5.00	8.25		13.46	N/A	13.54	1.625		8.17	3.75			4.75			.38x.38x2.88
Y552	Y563	20	256TC		27.13			10.00	.56	16.49	14.32	17.84		1.25	10.68						4.75	
Y553	Y567	25	284TC	Cast Iron	27.08	7.00	5.50	9.50		15.57	15.89	21.26	1.875	2.00	13.31	4.38	9.0	10.500		3/8-16		.50x.50x3.25
Y393	Y394	30	286TC		28.58			11.00													5.50	

Note: Dimensions are for reference only. For complete dimensional information, refer to Marathon Electric at www.marathonelectric.com.

STABLE™ Motor Slide Bases

Mounting Slide Bases for 56 to 449T NEMA Motors

Features

- Allows adjustment of motor mounting position
- Double adjusting screws for frames 182T - 449T
- Manufactured to precise dimensional standards
- Dimensionally interchangeable with existing major makes
- Heavy-duty steel construction
- Painted with oven-baked primer for better adhesion of customer's paint
- All "D" bolts (motor mounting bolts) are fixed to the exact motor foot pattern
- All "D" bolts are welded into position to prevent spinning and dropping from slots
- Bases are provided with washers



Motor Slide Bases											
Part Number	Price	Fits Frame Type	Shipping Weight (lb)	Fits Motor							
				IronHorse	Marathon micro -MAX	Marathon Black Max 230/460V	Marathon Black Max 575V	Marathon Blue Max	Marathon NEMA Premium XRI	Marathon Blue Chip XRI 230/460V	Marathon Blue Chip XRI 575V
MTA-BASE-W56	<--->	56	3.5	MTR-xxx-xxxx MTPM-xxx-xxxx	Y500 Y360 Y364	Y592(-A772) Y534(-A772) Y535(-A772)	Y555(-A772) Y556(-A772)	–	E2000	–	–
MTA-BASE-W143T	<--->	143T/TC	5.0	MTC-001-3BD18(CK) MTC-1P5-3BD36	–	Y536(-A772)	–	–	E2001 E2003	–	–
MTA-BASE-W145T	<--->	145T/TC	5.6	MTC-001-3BD12 MTC-1P5-3BD18(CK) MTC-002-3BD18(CK) MTC-002-3BD36	Y368	Y537(-A772) Y538(-A772) Y551(-A772)	Y557(-A772)	–	E2002 E2004 E2006 E2007	–	–
MTA-BASE-W182T	<--->	182T/TC	10	MTC-1P5-3BD12 MTC-003-3BD18(CK) MTC-003-3BD36	Y999	Y541(-A772)	Y558(-A772)	–	E2005 E2009 E2010	–	–
MTA-BASE-W184T	<--->	184T/TC	10	MTC-002-3BD12 MTC-005-3BD18(CK) MTC-005-3BD36	Y372	Y540(-A772) Y543(-A772)	Y559(-A772)	–	E2008 E2012 E2013	–	–
MTA-BASE-W213T	<--->	213T/TC	15	MTC-003-3BD12 MTC-7P5-3BD18(CK) MTC-7P5-3BD36	Y994	Y542(-A772) Y545(-A772)	Y560(-A772)	–	E2011 E2015 E2016	–	–
MTA-BASE-W215T	<--->	215T/TC	16	MTC-005-3BD12 MTC-010-3BD18(CK) MTC-010-3BD36	Y996	Y544(-A772) Y547(-A772)	Y561(-A772)	–	E2014 E2018 E2019	–	–
MTA-BASE-W254T	<--->	254T/TC	20	MTC-7P5-3BD12 MTC-015-3BD18(CK)	–	Y546(-A772) Y549(-A772)	Y562(-A772)	–	–	E205	E307
MTA-BASE-W256T	<--->	256T/TC	21	MTC-010-3BD12 MTC-020-3BD18(CK)	–	Y548(-A772) Y552(-A772)	Y563(-A772)	–	–	E206	E308
MTA-BASE-W284T	<--->	284T/TC	23	MTC-025-3BD18(CK)	–	Y553(-A772)	Y567(-A772)	–	–	E207	E309
MTA-BASE-W286T	<--->	286T/TC	24	MTC-030-3BD18(CK)	–	Y393(-A772)	Y394(-A772)	–	–	E208	E310
MTA-BASE-W324T	<--->	324T/TC	33	MTC-040-3BD18(CK)	–	–	–	Y571(-A774) Y513(-A775)	–	E209	E311
MTA-BASE-W326T	<--->	326T/TC	35	MTC-050-3BD18(CK)	–	–	–	Y572(-A774) Y514(-A775)	–	E210	E312
MTA-BASE-W364T	<--->	364T/TC	46	MTC-060-3BD18(CK)	–	–	–	Y573(-A774) Y515(-A775)	–	E211	E313
MTA-BASE-W365T	<--->	365T/TC	47	MTC-075-3BD18(CK)	–	–	–	Y574(-A774) Y516(-A775)	–	E212	E315
MTA-BASE-W404T	<--->	404T/TC	64	–	–	–	–	–	–	–	–
MTA-BASE-W405T	<--->	405T/TC	65	MTC-100-3BD18(CK)	–	–	–	Y575(-A774) Y517(-A775)	–	E213	E314
MTA-BASE-W444T	<--->	444T	69	MTC-125-3BD18	–	–	–	–	–	–	–
MTA-BASE-W445T	<--->	445T	70	MTC-150-3BD18	–	–	–	–	–	–	–
MTA-BASE-W447T	<--->	445/7T 447T	92	MTC-200-3BD18	–	–	–	–	–	–	–
MTA-BASE-W449T	<--->	449T	98	MTC-250-3D18 MTC-300-3D18	–	–	–	–	–	–	–

STABLE Motor Slide Bases

Dimensions – Mounting Slide Bases for NEMA Motors

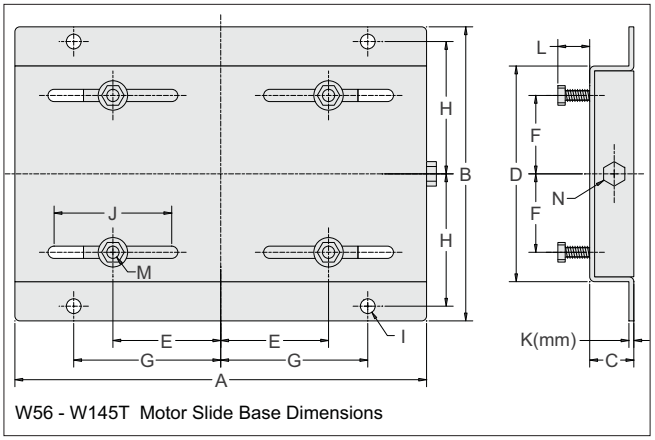

W56 - W145T Motor Slide Base Dimensions

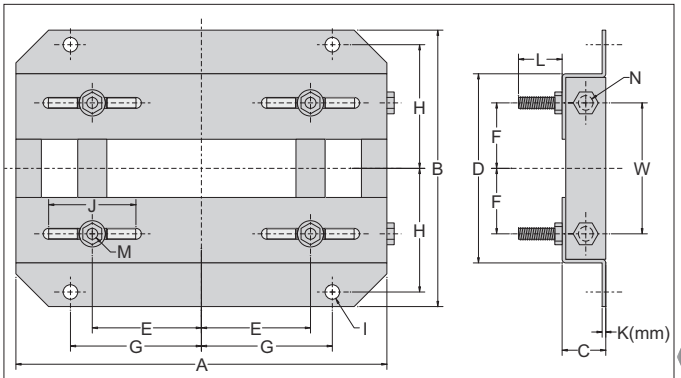

W182T - W449T Motor Slide Base Dimensions
(W182T-W215T bases have one-piece top plates, similar to W56-W145T)

Dimensions [inches, except as noted] - STABLE Motor Slide Bases

MTA-BASE-Wxxxx	A	B	C	D	E	F	G	H	I	J	K(mm)	L	M	N	W
56	10-5/8	6-1/2	1-1/8	4-1/2	2-7/16	1-1/2	3-13/16	2-7/8	3/8	3	2 mm	7/8	5/16 x 1	3/8 x 4	n/a
143T	10-1/2	7-1/2	1-1/8	5-1/2	2-3/4	2	3-3/4	3-3/8	3/8	3	3 mm	13/16	5/16 x 1	3/8 x 4	n/a
145T	10-1/2	8-1/2	1-1/8	6-1/2	2-3/4	2-1/2	3-3/4	3-7/8	3/8	3	3 mm	13/16	5/16 x 1	3/8 x 4	n/a
182T	12-3/4	9-1/2	1-1/2	6-1/2	3-3/4	2-1/4	4-1/2	4-1/4	1/2	3	3.5 mm	1-1/2	3/8 x 1-3/4	1/2 x 6	4-1/2
184T	12-3/4	10-1/2	1-1/2	7-1/2	3-3/4	2-3/4	4-1/2	4-3/4	1/2	3	3.5 mm	1-1/2	3/8 x 1-3/4	1/2 x 6	5-1/2
213T	15	11	1-3/4	7-1/2	4-1/4	2-3/4	5-1/4	4-3/4	1/2	3-1/2	3.8 mm	1-1/2	3/8 x 1-3/4	1/2 x 6	5-1/2
215T	15	12-1/2	1-3/4	9	4-1/4	3-1/2	5-1/4	5-1/2	1/2	3-1/2	3.8 mm	1-1/2	3/8 x 1-3/4	1/2 x 6	7
254T	17-3/4	15-1/8	2	10-3/4	5	4-1/8	6-1/4	6-5/8	5/8	4	4.6 mm	1-7/16	1/2 x 1-3/4	5/8 x 6	5-5/16
256T	17-3/4	16-7/8	2	12-1/2	5	5	6-1/4	7-1/2	5/8	4	4.6 mm	1-7/16	1/2 x 1-3/4	5/8 x 6	7
284T	19-3/4	16-7/8	2	12-1/2	5-1/2	4-3/4	7	7-1/2	5/8	4-1/2	4.6 mm	1-11/16	1/2 x 2	5/8 x 6	7
286T	19-3/4	18-3/8	2	14	5-1/2	5-1/2	7	8-1/4	5/8	4-1/2	4.6 mm	1-11/16	1/2 x 2	5/8 x 6	8
324T	22-3/4	19-1/4	2-1/2	14	6-1/4	5-1/4	8	8-1/2	3/4	5-1/4	4.6 mm	2-3/16	5/8 x 2-1/2	3/4 x 9	7
326T	22-3/4	20-3/4	2-1/2	15-1/2	6-1/4	6	8	9-1/4	3/4	5-1/4	4.6 mm	2-3/16	5/8 x 2-1/2	3/4 x 9	8-1/2
364T	25-1/2	20-1/2	2-1/2	15-1/2	7	5-5/8	9	9-1/8	3/4	6	5.8 mm	2-1/16	5/8 x 2-1/2	3/4 x 9	7-3/4
365T	25-1/2	21-1/2	2-1/2	16-1/2	7	6-1/8	9	9-5/8	3/4	6	5.8 mm	2-1/16	5/8 x 2-1/2	3/4 x 9	8-3/4
404T	28-3/4	22-3/8	3	16-1/2	8	6-1/8	10	9-7/8	7/8	7	5.8 mm	2-1/2	3/4 x 3	3/4 x 11	8-3/4
405T	28-3/4	23-7/8	3	18	8	6-7/8	10	10-5/8	7/8	7	5.8 mm	2-1/2	3/4 x 3	3/4 x 11	10-1/4
444T	31-1/4	24-5/8	3	19-1/4	9	7-1/4	11	11	7/8	7-1/2	5.8 mm	2-1/2	3/4 x 3	3/4 x 11	11
445T	31-1/4	26-5/8	3	21-1/4	9	8-1/4	11	12	7/8	7-1/2	5.8 mm	2-1/2	3/4 x 3	3/4 x 11	13
447T	31-1/4	30-1/8	3	24-3/4	9	10	11	13-3/4	7/8	7-1/2	8 mm	3	3/4 x 3-1/2	3/4 x 11	16-1/2
449T	31-1/4	35-1/8	3	29-3/4	9	12-1/2	11	16-1/4	7/8	7-1/2	8 mm	3	3/4 x 3-1/2	3/4 x 11	21-1/2

Project name: IQALUIT

Project#: 5000218036

Document #: 5000218036_DS_0007_PM_VWT

by: BB

chkd: GH

appvd: CB

SKID TRIPLEX

VALVES

OIM manual section: 4.3.7.3

CS-301-100 : Identification sheet

VWTC PROJECT NUMBER:	Iqaluit WWTP	REV:	01
PROJECT NAME:	5000218036	SUBMITTED TO (COMPANY):	
ENGINEER:	G. HÉBERT	SUBMITTED TO (RESPONSIBLE)	
PROJECT MANAGER:	C. BEKAERT	PROJECT NUM REFERENCE.:	
PHONE NUMBER:		LOT NUMBER:	

SUPPLIER	EQPT CODE	EQPT TAG NO	DIA	DESCRIPTION	INFO 1	INFO 2	INFO 3	APPLIC.	NOTE	REV
CHEMLINE	VABLPV200249	BV-04-766	DIA: 13 mm (1/2")	CLEANING VALVES	TYPE: BALL VALVE//MANUFACTURER : CHEMLINE//MODEL : Type21-A-005-E-C//CONNECTION TYPE : COMBO | 13 mm (1/2")//BODY : PVC (ASTM D1784)// SEAL | SEAT :PTFE | EPDM// STEM : PVC					1
CHEMLINE	VABLPV200249	BV-04-767	DIA: 13 mm (1/2")	CLEANING VALVES	TYPE: BALL VALVE//MANUFACTURER : CHEMLINE//MODEL : Type21-A-005-E-C//CONNECTION TYPE : COMBO | 13 mm (1/2")//BODY : PVC (ASTM D1784)// SEAL | SEAT :PTFE | EPDM// STEM : PVC					1
CHEMLINE	VABLPV200249	BV-04-768	DIA: 13 mm (1/2")	CLEANING VALVES	TYPE: BALL VALVE//MANUFACTURER : CHEMLINE//MODEL : Type21-A-005-E-C//CONNECTION TYPE : COMBO | 13 mm (1/2")//BODY : PVC (ASTM D1784)// SEAL | SEAT :PTFE | EPDM// STEM : PVC					1

SUPPLIER	EQPT CODE	EQPT TAG NO	DIA	DESCRIPTION	INFO 1	INFO 2	INFO 3	APPLIC.	NOTE	REV
CHEMLINE	VABLPV200249	BV-04-775	DIA: 13 mm (1/2")	ISOLATION VALVES (DISCHARGE)	TYPE: BALL VALVE//MANUFACTURER : CHEMLINE//MODEL : Type21-A-005-E-C//CONNECTION TYPE : COMBO | 13 mm (1/2")//BODY : PVC (ASTM D1784)// SEAL | SEAT :PTFE | EPDM// STEM : PVC					1
CHEMLINE	VABLPV200249	BV-04-776	DIA: 13 mm (1/2")	ISOLATION VALVES (DISCHARGE)	TYPE: BALL VALVE//MANUFACTURER : CHEMLINE//MODEL : Type21-A-005-E-C//CONNECTION TYPE : COMBO | 13 mm (1/2")//BODY : PVC (ASTM D1784)// SEAL | SEAT :PTFE | EPDM// STEM : PVC					1
CHEMLINE	VABLPV200249	BV-04-777	DIA: 13 mm (1/2")	ISOLATION VALVES (DISCHARGE)	TYPE: BALL VALVE//MANUFACTURER : CHEMLINE//MODEL : Type21-A-005-E-C//CONNECTION TYPE : COMBO | 13 mm (1/2")//BODY : PVC (ASTM D1784)// SEAL | SEAT :PTFE | EPDM// STEM : PVC					1
CHEMLINE	VABLPV200249	BV-04-778	DIA: 13 mm (1/2")	ISOLATION VALVES (DISCHARGE)	TYPE: BALL VALVE//MANUFACTURER : CHEMLINE//MODEL : Type21-A-005-E-C//CONNECTION TYPE : COMBO | 13 mm (1/2")//BODY : PVC (ASTM D1784)// SEAL | SEAT :PTFE | EPDM// STEM : PVC					1
CHEMLINE	VABLPV200249	BV-04-779	DIA: 13 mm (1/2")	ISOLATION VALVES (DISCHARGE)	TYPE: BALL VALVE//MANUFACTURER : CHEMLINE//MODEL : Type21-A-005-E-C//CONNECTION TYPE : COMBO | 13 mm (1/2")//BODY : PVC (ASTM D1784)// SEAL | SEAT :PTFE | EPDM// STEM : PVC					1

SUPPLIER	EQPT CODE	EQPT TAG NO	DIA	DESCRIPTION	INFO 1	INFO 2	INFO 3	APPLIC.	NOTE	REV
CHEMLINE	VABLPV200249	BV-04-781	DIA: 13 mm (1/2")	ISOLATION VALVES - CARRIER WATER	TYPE: BALL VALVE//MANUFACTURER : CHEMLINE//MODEL : Type21-A-005-E-C//CONNECTION TYPE : COMBO | 13 mm (1/2")//BODY : PVC (ASTM D1784)// SEAL | SEAT :PTFE | EPDM// STEM : PVC					1
CHEMLINE	VABLPV200249	BV-04-782	DIA: 13 mm (1/2")	ISOLATION VALVES - CARRIER WATER	TYPE: BALL VALVE//MANUFACTURER : CHEMLINE//MODEL : Type21-A-005-E-C//CONNECTION TYPE : COMBO | 13 mm (1/2")//BODY : PVC (ASTM D1784)// SEAL | SEAT :PTFE | EPDM// STEM : PVC					1

PDF Published March 1, 2013

Type 21 Ball Valves

CHEMLINE PLASTICS
SUPERIOR FLOW SOLUTIONS

The Chemline Type 21 True Union Ball valve incorporates state of the art features for long term performance. This is a full port, full blocking True Union valve pressure rated at 16 bar (230 psi)[4]. Double stem o-rings and Safety Shear stem design provide for a high degree of safety on hazardous fluid applications. All sizes have an ISO standard actuator mounting platform integral to the valve body. This provides for sturdy and secure mounting of pneumatic or electric actuators.

PVC | CPVC | PP | PVDF

CRN Registered Consult Chemline

NSF[5] Certified to NSF/ANSI 61

SERIES: Type 21

SIZES: 3/8" – 4"

ENDS: Socket, Threaded, Flanged, Butt[1] or ChemFlare™

SEATS: PTFE

SEALS[2]: EPDM, FKM (Viton®), CPE[3]



features

Pressure rated to 230 psi[4]
- Provides a high factor of safety

Integral Actuator Mounting Platform
- Actuation is easy. Electric or pneumatic actuators may be mounted in the field.

Full Port
- High capacity and low pressure drops

Fully Blocking
- Downstream union nut may be safely disassembled for piping maintenance while valve is closed off under full system pressure

Built-In Spanner Wrench
- Top of the handle is designed to be used as a tool for accessing internal parts

Safety Shear Stem Design
- Stem has double o-rings
- Designed to hold full pressure even if stem breaks due to excessive torque

High Chemical Resistant Material
- PVC and CPVC compounds have an "A" chemical resistance rating as per ASTM D-1784. They have outperformed other PVC and CPVC compounds on aggressive chemicals.

[1] Butt ends for fusion to Chemline metric PP, PVDF or ECTFE (Halar®) piping.
[2] Other materials are available.
[3] CPE=Chlorinated Polyethylene.
[4] PVC, CPVC and PVDF 1/2" to 2" are rated at 230 psi; 2-1/2" to 4" and all size PP valves are rated at 150 psi at 20°C.
[5] PVC valves with EPDM or FKM (Viton®) seals are certified under NSF/ANSI Standard 61 for contact with drinking water.

03/13 ©Chemline Plastics Limited 2013
Chemline is a registered trade mark of Chemline Plastics Limited

Type 21 Ball Valves

features

Double Stem O-Rings – Safety Shear Design

- Upper o-ring groove is deeper than lower. In case of excessive stem torque, stem will shear at the upper groove, leaving the inner o-ring intact to seal against full line pressure.

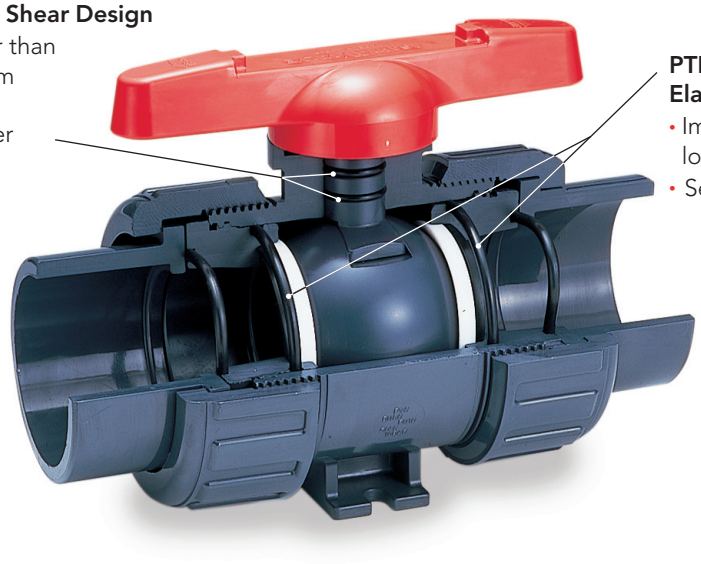

PTFE Seats have Elastomer Cushions

- Improved sealing while lowering stem torques
- Self adjusts for seat wear

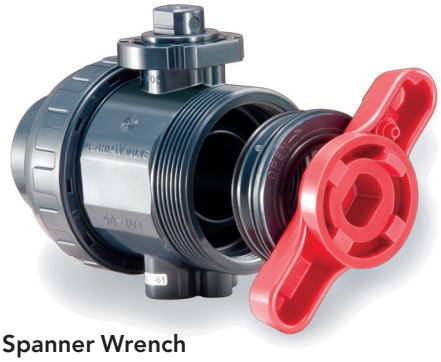

Built in Spanner Wrench

- For removing or tightening the seat carrier
- All parts are replaceable



Integral Actuator Mounting Platform

- Actuation is easy. Electric or pneumatic actuators may be mounted in the field. Simply pull off the handle to reveal a standard ISO 5211 mounting platform which accepts bolt-on hardware.



Fully Blocking

- Downstream pipe may be removed while upstream side is still pressurized. This may be done with valve installed in either direction.



Base Mounting Pad

- Optional threaded inserts allow valves to be securely anchored
- Supplied standard with actuated valves

Type 21 Ball Valves

options + accessories

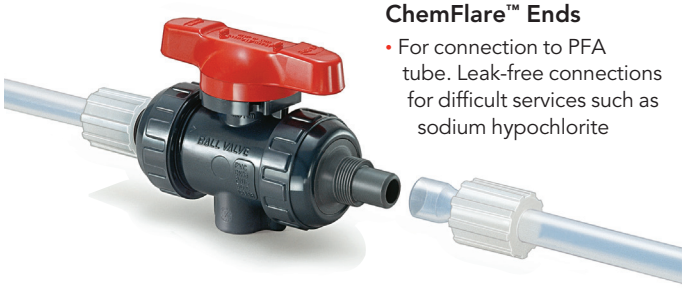

ChemFlare™ Ends

- For connection to PFA tube. Leak-free connections for difficult services such as sodium hypochlorite

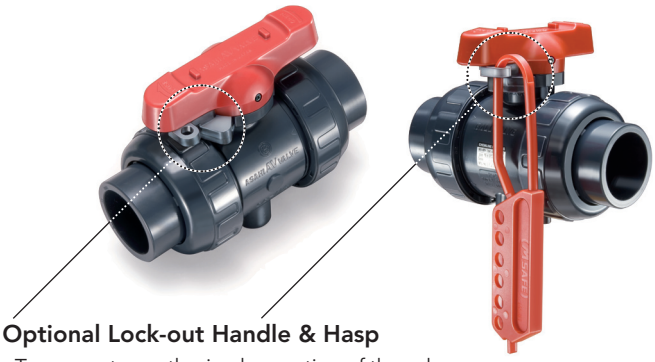

Optional Lock-out Handle & Hasp

- To prevent unauthorized operation of the valve
- Used during maintenance shut-downs



One-piece moulded PVC and CPVC 6" socket ends

- Allows installation of 4" valve in 6" line
- Factory moulded, not fabricated with couplings and reducers cemented together
- Fixed to valve mechanically just like the one-piece moulded factory flanges



Different Colour Handles

- Choose a handle colour other than standard red for colour coding different services

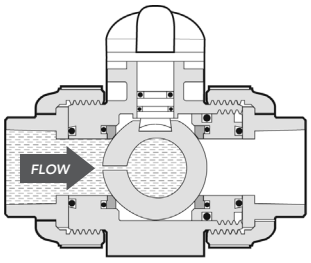

Vented Ball

- For sodium hypochlorite services at any concentration
- Valve shown in closed position

electric + pneumatic actuation

Pneumatic and Electric Actuators

- A complete range of actuators and control accessories are available, mounted to valves using PPG plastic brackets and stainless steel couplings. Refer to separate data sheets.



Electromni® Electric



Q Series Electric

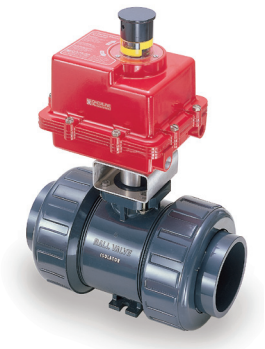

A Series Electric



V Series Electric
with Local Control Station



PA Series Pneumatic

Type 21 Ball Valves

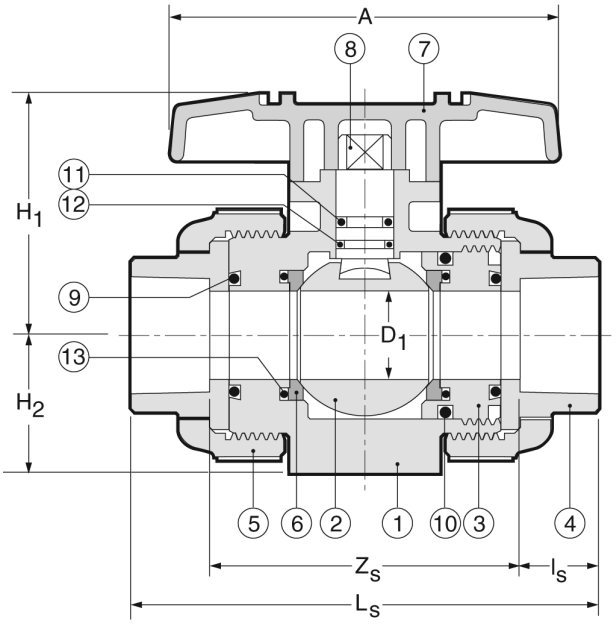

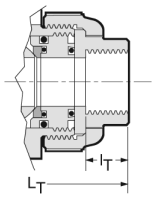

NPT Threaded

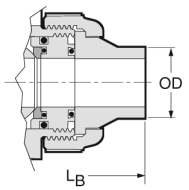

Butt Fusion

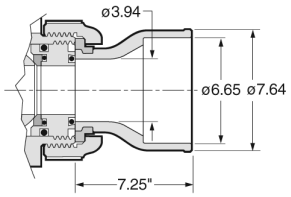

6" Soc Ends on 4" valve

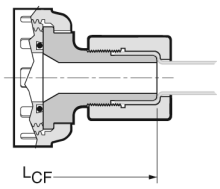

ChemFlare™ Ends
shown with PVDF nut

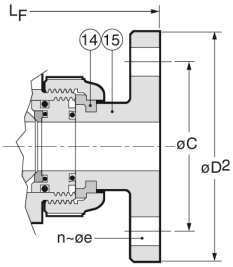

ANSI Flanged

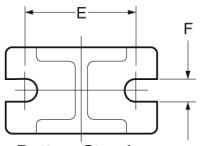

Bottom Stand
2-1/2" to 4" valves
Base Thickness G

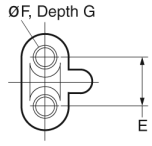

Base Inserts
1/2" to 2" valves

PARTS

▲ Recommended Spare Parts

No.	Part	Pcs.	Materials
1	Body	1	PVC, CPVC, PP, PVDF
2	Ball	1	PVC, CPVC, PP, PVDF
3	Carrier[1]	1/2	PVC, CPVC, PP, PVDF
4	End Connector	2	PVC, CPVC, PP, PVDF
5	Union Nut	2	PVC, CPVC, PP, PVDF
6▲	Ball Seat	2	PTFE
7	Handle	1	ABS

[1] 1 carrier for sizes 1/2" to 2", 2 carriers for sizes 2-1/2" to 4"
[2] EPDM seals standard with PVC, CPVC, PP; FKM (Viton®) with PVDF valves
[3] 2 pcs 1/2" to 2", 6 pcs 2-1/2" to 4"

PARTS

▲ Recommended Spare Parts

No.	Part	Pcs.	Materials
8	Stem	1	PVC, CPVC, PP, PVDF
9▲	Face O-Ring[2]	2	EPDM, FKM (Viton®)
10▲	Carrier O-Ring[2]	2	EPDM, FKM (Viton®)
11▲	Upper Thicker Stem O-Ring[2]	1	EPDM, FKM (Viton®)
12▲	Lower Thinner Stem O-Ring[2]	1	EPDM, FKM (Viton®)
13	Seat Cushion[2]	2	EPDM, FKM (Viton®)
14	Flange Retainer[3]	2/6	PVDF
15	Flange	2	PVC, CPVC, PP, PVDF

DIMENSIONS INCHES

					End Connections														Valve Base		
					Socket			Threaded		Factory Flanged					Butt		ChemFlare™				
Size	D Bore	A	H_1	H_2	L_S	Z_S	l_S	l_T	L_T	L_F	D_2	C	n	e	L_B	OD	L_{CF}	Tube[4]	E	F[5]	G
1/2"	.59	3.6	2.03	1.14	4.45	2.70	.875	.64	4.02	5.63	3.50	2.38	4	.62	4.88	.79	6.12	1/2"	.75	.29	.43
3/4"	.79	3.9	2.34	1.38	5.08	3.08	1.00	.65	4.72	6.77	3.88	2.75	4	.62	5.67	.98	6.52	3/4"	.75	.29	.43
1"	.98	4.3	2.68	1.54	5.75	3.50	1.13	.81	5.16	7.36	4.25	3.12	4	.62	6.06	1.26	7.26	1"	.75	.29	.43
1-1/4"	1.22	4.8	3.17	1.85	6.46	5.21	1.25	.85	5.91	7.48	4.62	3.50	4	.62	6.85	1.57	9.58	1-1/4"	1.18	.35	.59
1-1/2"	1.57	5.2	3.50	2.17	7.24	4.49	1.38	.85	6.42	8.35	5.00	3.88	4	.62	7.64	1.97	–	–	1.18	.35	.59
2"	2.01	6.3	4.02	2.60	8.23	5.23	1.50	1.90	7.76	9.21	6.00	4.75	4	.75	8.82	2.48	–	–	1.18	.35	.59
2-1/2"	2.28	7.87	4.96	2.83	9.45	5.95	1.75	1.21	8.46	10.20	7.00	5.49	4	.75	9.72	2.95	–	–	1.89	.35	.23
3"	2.70	9.45	5.51	3.35	11.10	7.35	1.88	1.30	10.39	11.97	7.50	6.00	4	.75	11.61	3.54	–	–	2.17	.43	.28
4"	3.54	11.81	7.01	4.33	13.88	9.87	2.00	1.38	14.17	14.65	9.00	7.50	8	.75	14.76	4.33	–	–	2.56	.43	.32

[4] ChemFlare™ ends are available for reduced tube sizes down to 1/4".
[5] Optional threaded inserts: 1/2" to 1" valves – UNC 1/4"-20; 1-1/4" to 2" valves – UNC 5/16"-18. 'Recoil' brand inserts require drilling before insertion.

Type 21 Ball Valves

WORKING PRESSURES PSI, Water, Non-Shock

VACUUM RATING • 29.9 inches mercury

Size	PVC			CPVC						PP			PVDF				
	20°C 68°F	40°C 104°F	50°C 122°F	20°C 68°F	40°C 104°F	50°C 122°F	60°C 140°F	80°C 176°F	90°C 194°F	20°C 68°F	60°C 140°F	80°C 176°F	20°C 68°F	40°C 104°F	60°C 140°F	80°C 176°F	100°C 212°F
1/2"– 2"	230	165	150	230	165	150	120	75	55	150	85	55	230	185	150	110	85
2-1/2"– 4"	150	150	150	150	150	150	120	75	55	150	70	40	150	150	150	110	85

Temperature Ranges: PVC 0 to 60°C (32 to 140°F), **CPVC** 0 to 95°C (32 to 203°F), **PP** –20 to 80°C (–4 to 176°F), **PVDF** –40 to 100°C (–40 to 212°F)

WEIGHTS LB. THREADED or SOCKET

WEIGHTS LB. FLANGED

Size	PVC	CPVC	PP	PVDF	PVC	CPVC	PP	PVDF
1/2"	0.4	0.4	0.4	0.4	0.9	0.9	0.7	1.1
3/4"	0.7	0.7	0.7	0.9	1.3	1.5	1.1	1.5
1"	0.9	1.1	0.9	1.1	1.8	2.0	1.5	2.2
1-1/4"	1.5	1.5	1.3	1.8	2.6	2.9	2.0	3.3
1-1/2"	2.4	2.6	1.5	2.9	3.7	4.0	2.6	4.4
2"	4.0	4.4	2.6	4.9	5.5	6.0	4.0	8.2
2-1/2"	5.1	5.5	3.7	6.2	7.3	7.7	5.3	8.8
3"	8.2	8.8	5.5	9.9	10.1	11.0	7.5	12.6
4"	19.4	21.8	13.2	24.9	21.6	23.4	15.4	26.7

Cv VALUES VS. BALL ANGLE

Size	0%	25%	50%	75%	100%
1/2"	0	0.35	1.3	5.5	14.
3/4"	0	0.73	2.8	11.5	29.
1"	0	1.2	4.5	18.6	47.
1-1/4"	0	1.8	6.8	28.4	72.
1-1/2"	0	3.9	14.7	61.2	155.
2"	0	4.8	18.0	75.0	190.
2-1/2"	0	9.1	34.7	144.0	365.
3"	0	10.2	39.0	162.0	410.
4"	0	17.0	64.6	269.0	680.

SAMPLE SPECIFICATION

1. All True Union Ball Valves in PVC, CPVC, PP or PVDF shall be Chemline Type 21 or equal sizes 1/2" to 2" in PVC, CPVC, and PVDF rated at 230 psi and in PP 150 psi maximum working pressure. Sizes 2-1/2", 3" and 4" rated at 150 psi maximum working pressure with EPDM, FKM (Viton®) or CPE seals. Ball seats shall be PTFE with elastomer cushions for closure with minimum stem torques.
2. All valves will have Safety Shear stem design, blowout-proof with double o-rings for safety. The top o-ring groove shall be deeper so that if the stem breaks off under excessive torque the lower o-ring will remain intact and the valve will hold pressure.
3. All valves shall be full port and two-way blocking design.
4. All valves will be CRN (Canadian Registration Number) registered with TSSA.
5. PVC valves with EPDM or FKM (Viton®) seals shall be certified under NSF/ANSI Standard 61 for contact with drinking water.
6. All valves shall have chemical resistant labels permanently marked with manufacturing number to provide production level traceability.
7. PVC compound shall have an ASTM cell classification 12454-A with a minimum suffix "A" designation for chemical resistance as per ASTM D-1784 (CSA report LO 4000-172).
8. CPVC compound shall have an ASTM cell classification 23567-A with a minimum suffix "A" designation for chemical resistance as per ASTM D-1784.
9. PP material will conform to ASTM D-4101 PP 021 B 67272 material requirements.
10. PVDF material shall be unpigmented conforming to ASTM D-3222 material requirements and to be USDA Title 21 Chapter 1 Part 177. 2510 requirements for contact with food.
11. Socket ends in PVC and CPVC shall be Schedule 80 and conform to ASTM D-2467.
12. Threaded ends shall be Schedule 80 and conform to ASTM D-2464.
13. Butt fusion ends in PP or PVDF will be compatible with Chemline PP or PVDF metric piping systems.
14. Flanged ends shall be ANSI Class 150 one-piece factory moulded (not fabricated) to ensure maximum strength and close tolerance end to end dimensions.

ORDERING EXAMPLE

Chemline True Union Ball Valves	**21**	**A**	**020**	**E**	**S**
Body Material	**A** – PVC **B** – PP	**C** – CPVC **K** – PVDF			
Size[1]	**002** – 1/4" **010** – 1" **025** – 2-1/2"	**003** – 3/8" **012** – 1-1/4" **030** – 3"	**005** – 1/2" **015** – 1-1/2" **040** – 4"	**007** – 3/4" **020** – 2" **060** – 6"	
Seals	**E** – EPDM	**V** – FKM (Viton®)	**C** – CPE	**B** – Nitrile	**A** – Aflas®
Ends	**S** – Socket	**T** – Threaded	**F** – Flanged	**B** – Butt[2]	**CF** – ChemFlare™

Example: Chemline Type 21 True Union Ball Valve, PVC, 2", with EPDM seals, socket ends.

[1] 1/4" is normally the 3/8" valve reduced. 6" is 4" valve with 6" end connections.

[2] PP, PVDF and ECTFE (Halar®) metric butt fusion ends (1/2" to 4") connect to Chemline PP, PVDF and ECTFE (Halar®) piping systems.

OTHER OPTIONS & ACCESSORIES

- **Alternate O-Ring Seals**
- **Stem Extensions** made to any length
- **Limit Switches** – For open and/or closed position indication
- **Municipal Operating Nut**
- **Lubrication-free Valves** – Factory clean room assembled
- **Vented Ball** – For sodium hypochlorite applications

CHEMLINE PLASTICS
SUPERIOR FLOW SOLUTIONS

55 Guardsman Road, Thornhill, ON, L3T 6L2, Canada | ISO 9001:2008 Certified
tel.905.889.7890 | fax.905.889.8553 | request@chemline.com | chemline.com

CS-301-501 : Identification sheet

VWTC PROJECT NUMBER:	Iqaluit WWTP	REV:	01
PROJECT NAME:	5000218036	SUBMITTED TO (COMPANY):	
ENGINEER:	G. HÉBERT	SUBMITTED TO (RESPONSIBLE)	
PROJECT MANAGER:	C. BEKAERT	PROJECT NUM REFERENCE.:	
PHONE NUMBER:		LOT NUMBER:	

SUPPLIER	EQPT CODE	EQPT TAG NO	DIA	DESCRIPTION	INFO 1	INFO 2	INFO 3	APPLIC.	NOTE	REV
CHEMLINE	VABLPV346917	NV-04-787	DIA: 13 mm (1/2")	METERING VALVE - CARRIER WATER	TYPE: BALL VALVE//MANUFACTURER : CHEMLINE//MODEL : SM2-A-005-E-S//CONNECTION TYPE : SOCKET | 13 mm (1/2")//BODY : PVC (ASTM D1784)// SEAL | SEAT : | EPDM// STEM : N/A					1
CHEMLINE	VABLPV346917	NV-04-788	DIA: 13 mm (1/2")	METERING VALVE - CARRIER WATER	TYPE: BALL VALVE//MANUFACTURER : CHEMLINE//MODEL : SM2-A-005-E-S//CONNECTION TYPE : SOCKET | 13 mm (1/2")//BODY : PVC (ASTM D1784)// SEAL | SEAT : | EPDM// STEM : N/A					1

PDF Published October 18, 2017

Metering Ball Valves

CHEMLINE PLASTICS
SUPERIOR FLOW SOLUTIONS

Chemline SM Series Metering Ball Valve is designed for fine linear flow control of chemicals or clean fluids. The ball is solid with graduated V-groove cut on the outside surface. Precise linear flow control is accomplished through 180° rotation of the handle. With a positioning electric actuator, this becomes an inexpensive control valve. If higher C_V values are required, refer to SP Series Proportional ball valves.

PVC PP

SERIES: SM2
SIZES: 1/2" – 1"
ENDS: Threaded, Socket, Butt[1] or ChemFlare™ [2]
SEATS: PTFE
O-RINGS: EPDM, FPM (Viton®)





Integral 180° Scale with 5° Increments
- Linear flow control and settable flow rates

features

Precise Linear Flow Control
- Provided by a special V-groove ball and wide handle travel (0° to 180°)

Full Size Range
- 6 valves sizes 1/2" to 2" offers a large selection of C_V values

High End Ball Valve Features
- Full Blocking design
- Double Stem O-Rings for safety
- PTFE seats with elastomer cushion
  - Automatically compensates for seat wear or expansion
- 230 psi pressure rated (PVC)

Low Stem Torques
- Due to floating ball design and cushioned PTFE seats

Bidirectional
- Works with flow in either direction

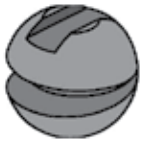

Ball Detail



[1]Butt ends for fusion to Chemline metric PP piping.
[2]For ChemFlare™ end connectors, consult Chemline.

10/17 ©Chemline Plastics Limited 2017
Chemline is a registered trade mark of Chemline Plastics Limited

Metering Ball Valves

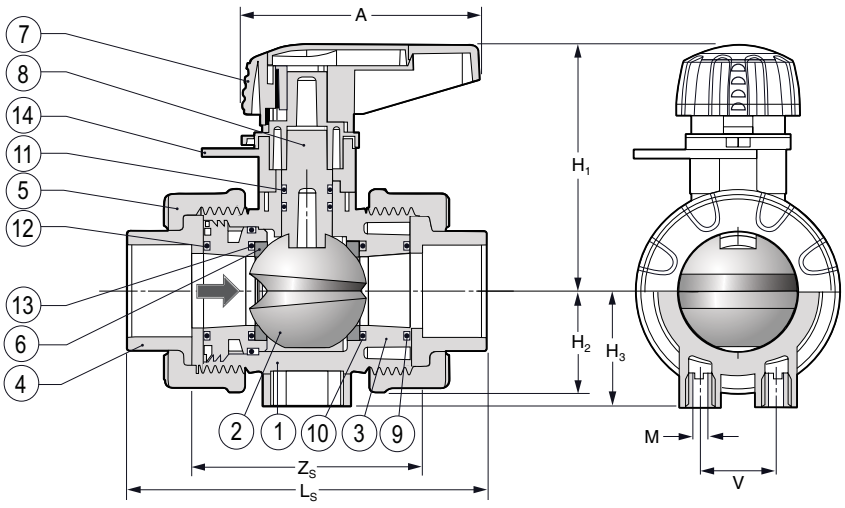

PARTS

No.	Part	Pcs.	Materials
1	Body	1	PVC, PP, PVDF
2	Ball	1	PVC, PP, PVDF
3	Carrier	1	PVC, PP, PVDF
4	End Connector	2	PVC, PP, PVDF
5	Union Nut	5	PVC, PP, PVDF
6	Ball Seat	2	PTFE
7	Handle	1	PVC
8	Stem	1	PVC, PP, PVDF
9	Carrier Face O-Ring	1	EPDM, FPM(Viton®)
10	Carrier O-Ring	1	EPDM, FPM(Viton®)
11	Stem O-Ring[1]	2	EPDM, FPM(Viton®)
12	Face O-Ring	1	EPDM, FPM(Viton®)
13	Seat Cushion[1]	2	EPDM, FPM(Viton®)
14	Position Indicator Scale	1	PVC

DIMENSIONS INCHES

							PVC			PP		
Size	A	H_1	H_3	H	M	V	Z_s	L_s	H_2	Z_s	L_s	H_2
1/2"	2.62	2.48	1.10	2.50	M5	0.98	2.48	3.74	0.99	2.64	3.74	1.06
3/4"	3.21	3.03	1.20	2.70	M5	0.98	2.83	4.33	1.16	3.03	4.29	1.18
1"	3.21	3.39	1.60	3.00	M6	1.02	3.11	4.84	1.39	3.27	4.69	1.57

ELECTRICALLY OR PNEUMATICALLY ACTUATED

The metering ball valve becomes a proportional control valve with the addition of a Q or E Series electric or P Series pneumatic actuator with 4-20 mA positioner

- Thermoplastic housing and mounting bracket
- Manual override
- Position indication
- Mechanical travel stops
- Different voltages are available



Q Series Electric



E Series Electric



P Series Pneumatic

E Series Electric Actuator on a SM2 Valve

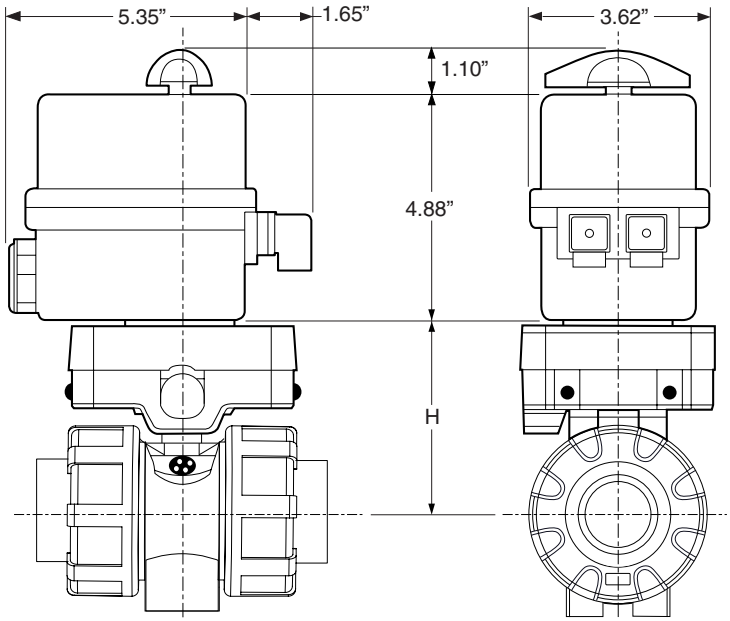

Side View

Port View

Metering Ball Valves

WORKING PRESSURES PSI — NET WEIGHTS LB. — Cv VALUES

Size	PVC 20°C 68°F	PVC 40°C 104°F	PVC 60°C 140°F	PP 20°C 68°F	PP 40°C 104°F	PP 60°C 140°F	PP 80°C 176°F	PVC	PP	USGPM Flow at 1 psi △P
1/2"	230	130	30	150	100	65	20	0.35	0.29	1.4
3/4"	230	130	30	150	100	65	20	0.60	0.44	1.9
1"	230	130	30	150	100	65	20	0.84	0.64	2.3

Temperature Ranges: PVC 0 to 60°C (32 to 140°F), PP 0 to 95°C (32 to 203°F)

Cv VALUE vs. VALVE OPENING

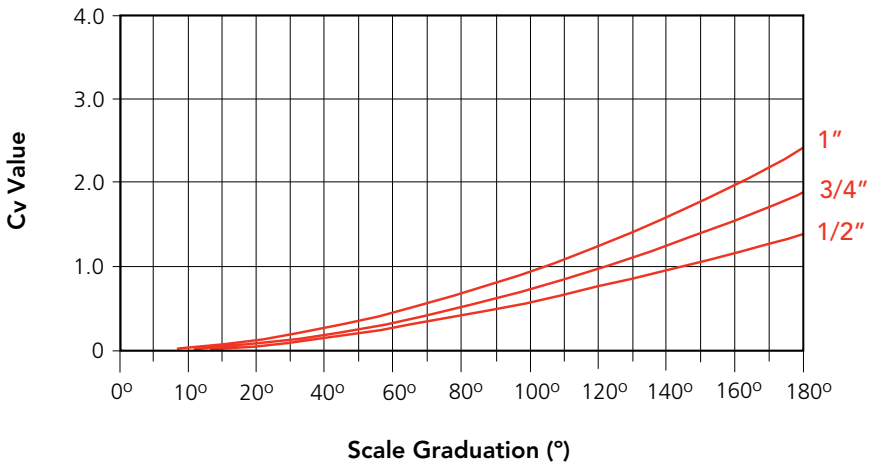

SAMPLE SPECIFICATION

1. All low flow control valves, 1/2" to 1", will be Chemline SM Series metering ball valves.
2. Body material will be PVC or PP, and o-rings will be EPDM or FPM (Viton®).
3. Body will be full blocking design with double stem o-rings for safety, rated at 230 psi maximum working pressure for PVC and 150 psi for PP material.
4. Ball will be floating design, molded solid with a V-groove for linear flow control over a 180° range of handle rotation.
5. Seats will be PTFE with elastomer cushions for positive closure with minimum stem torques and automatic compensation for seat wear and expansion.
6. Position indicating scale will be 0° to 180° with 5° increments for fine flow control and settable flow rates.
7. End connections will be 1/2" to 1" ANSI socket or FNPT threaded or 150 lb flanged or butt fusion for Chemline metric PP pipe or ChemFlare™ for PFA tubing.

ORDERING EXAMPLE

Chemline Metering Ball Valves	SM2	A	010	E	S
Valve Material	**A** – PVC	**B** – PP			
Size	**005** – 1/2"	**007** – 3/4"	**010** – 1"		
Seals	**E** – EPDM	**V** – FPM (Viton®)			
Ends	**S** – Socket	**T** – Threaded	**B** – Butt[1]	**CF** – ChemFlare™	

Example: SM2 Series Ball Valve, PVC, 1", EPDM seals, socket ends.

[1] PP metric butt fusion ends (1/2" to 2") connect to Chemline PP piping systems.

VACUUM RATING

- 29.9 inches mercury

OPTIONS & ACCESSORIES

- **Reduced Ends**
- **Electric or Pneumatic Actuator with Positioner**
  – Operates as a linear control valve

55 Guardsman Road, Thornhill, ON, L3T 6L2, Canada | ISO 9001:2008 Certified
1.800.930.2436 (CHEM) | fax.905.889.8553 | request@chemline.com | chemline.com

CS-303-100 : Identification sheet

VWTC PROJECT NUMBER:	Iqaluit WWTP	REV:	01
PROJECT NAME:	5000218036	SUBMITTED TO (COMPANY):	
ENGINEER:	G. HÉBERT	SUBMITTED TO (RESPONSIBLE)	
PROJECT MANAGER:	C. BEKAERT	PROJECT NUM REFERENCE.:	
PHONE NUMBER:		LOT NUMBER:	

SUPPLIER	EQPT CODE	EQPT TAG NO	DIA	DESCRIPTION	INFO 1	INFO 2	INFO 3	APPLIC.	NOTE	REV
CHEMLINE	VAPSPV329498	PSV-772	DIA: 12 mm (1/2")	RELIEF VALVES	TYPE: RELIEF VALVE | 150#//MANUFACTURER : CHEMLINE//MODEL : SB12A005EU//CONNECTION TYPE : UNION SOCKET | 12 mm (1/2")//BODY : PVC// SEAL | SEAT :EPDM | EPDM// STEM : N/A					1
CHEMLINE	VAPSPV329498	PSV-773	DIA: 12 mm (1/2")	RELIEF VALVES	TYPE: RELIEF VALVE | 150#//MANUFACTURER : CHEMLINE//MODEL : SB12A005EU//CONNECTION TYPE : UNION SOCKET | 12 mm (1/2")//BODY : PVC// SEAL | SEAT :EPDM | EPDM// STEM : N/AA					1
CHEMLINE	VAPSPV329498	PSV-774	DIA: 12 mm (1/2'')	RELIEF VALVES	TYPE: RELIEF VALVE | 150#//MANUFACTURER : CHEMLINE//MODEL : SB12A005EU//CONNECTION TYPE : UNION SOCKET | 12 mm (1/2")//BODY : PVC// SEAL | SEAT :EPDM | EPDM// STEM : N/A					1

PDF Published September 17, 2014

SB12 Series Back Pressure/Relief Valves

CHEMLINE PLASTICS
SUPERIOR FLOW SOLUTIONS

PVC PP PVDF

CRN Registered as Category C Fittings Consult Chemline

NSF 3 Certified to NSF/ANSI 61

SERIES: SB12

SIZES: 3/8" – 4"

ENDS: True Union Socket, Threaded or ChemFlare™[1] Spigot[2] Bodies with Plain, Socket, Threaded or Flanged ends

DIAPHRAGM: PTFE Bonded EPDM

SEALS: EPDM, FKM (Viton®)



True Union Ends
Easy installation and maintenance

The Chemline SB Series Back Pressure/ Relief Valve has two functions. As a ***back pressure valve***, installed in-line downstream of a pump, the back pressure below the metering pump is maintained. When installed in the branch of a tee it is a ***pressure relief valve***. The valve stays closed until inlet pressure reaches the set pressure which is adjusted by turning the spring tensioning bolt. Inlet pressure acts upward against the piston allowing excess pressure to flow upwards through the orifice.

The SB12 Series has a built-in check valve function, desirable for dosing applications. It is not so sensitive as to open with every pulsation from a metering pump.

features

True Union Ends
- Easy installation and maintenance
- Eliminate chemical leakage problems common with old fashioned threaded connections

Long Cycling Life
- Dynamic seal is PTFE bonded EPDM for high chemical resistance
- This moulded diaphragm is designed for superior sealing and flex life

Superior Performance in Dosing Systems
- Valves are hydraulically designed for very low hysteresis ("backlash") and to eliminate chatter
- Built-in check (non-return) function
- Valve opening depends on inlet pressure only and is uneffected by changes in downstream (back) pressure

CRN Registration numbers by province
- Ontario: OC10134.5
- Newfoundland: OC10134.50
- Alberta: OC10134.52
- Saskatchewan/Manitoba/Quebec: OC10134.56
- New Brunswick: OC10134.57
- Nova Scotia: OC10134.58
- P.E.I.: OC10134.59
- British Columbia: not required

technical

Set Pressure Ranges
- 1/2" to 2" – 5 to 150 psi
- 2-1/2" and 3" – 7.5 to 150 psi
- 2-1/2" to 4" – 4 to 60 psi (optional)
- 4" – 7.5 to 90 psi

Maximum Viscosity
- 120cP is maximum recommended service viscosity

[1] For ChemFlare™ end connectors, consult Chemline.
[2] PP and PVDF spigot ends have DIN dimensions and will butt fuse directly to Chemline PP and PVDF piping systems.
[3] PVC valves with EPDM or FKM (Viton®) seals are certified under NSF/ANSI Standard 61 for contact with drinking water.

09/14 ©Chemline Plastics Limited 2014
Chemline is a registered trade mark of Chemline Plastics Limited

SB12 Series Back Pressure/Relief Valves 1/2" to 2"

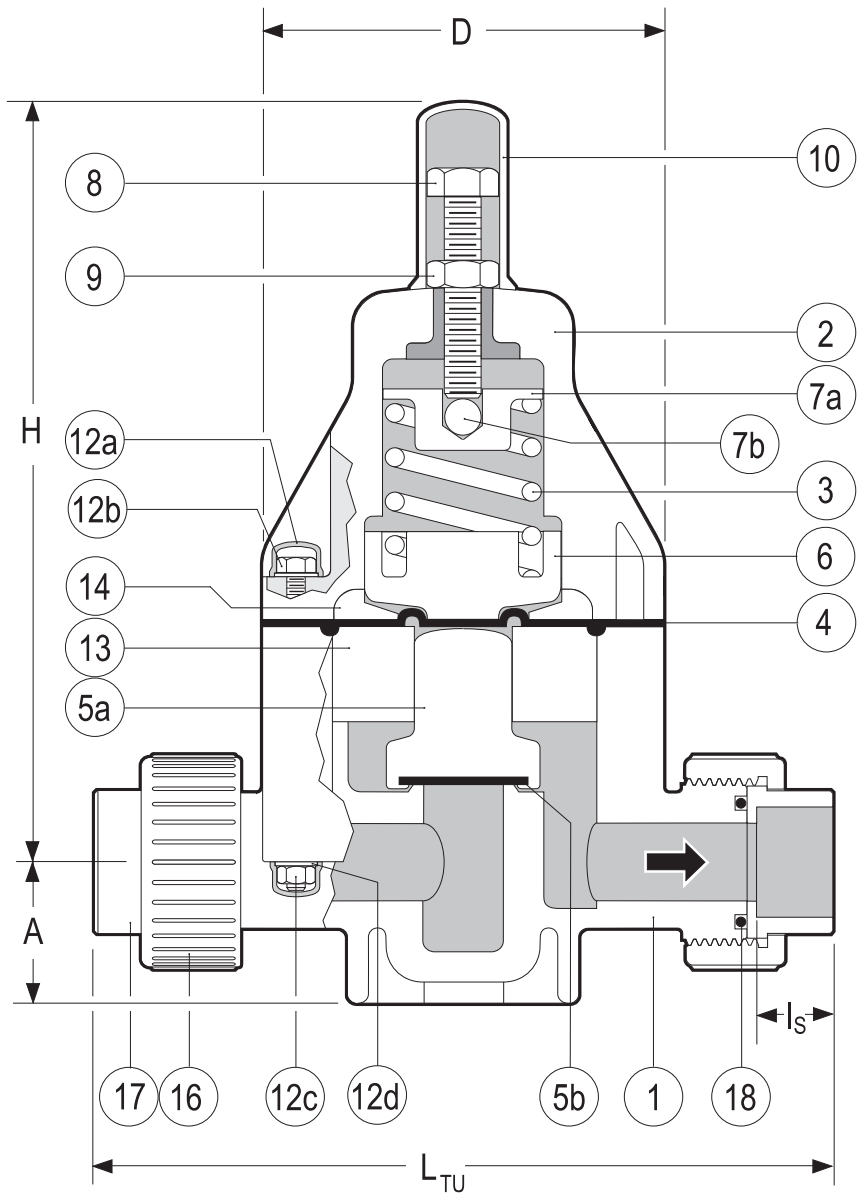

True Union Body

PARTS

▲ Recommended Spare Parts

No.	Part	Pcs.	Materials
1	Body	1	PVC, PP, PVDF
2	Bonnet	1	PPG
3	Spring	1	Galvanized Steel
4▲	Control Diaphragm	1	PTFE bonded EPDM
5a▲	Piston	1	PVC, PP, PVDF
5b▲	Seat	1	EPDM, FPM(Viton®)
6	Lower Spring Retainer	1	PPG
7a	Upper Spring Retainer	1	Cad. Plated Steel
7b	Ball	1	304 SS
8	Spring Tensioning Bolt	1	304 SS
9	Lock Nut	1	304 SS
10	Spring Bolt Cap	1	PE
12a	Bolt/Nut Cap	8/12[1]	PE
12b	Hex Bolt	4/6[1]	304 SS
12c	Hex Nut	4/6[1]	304 SS
12d	Washer	8/12[1]	304 SS
13	Spacer Disc	1	PVC, PP, PVDF
14	Pressure Plate	1	PP
16	Union Nut	2	PVC, PP, PVDF
17	End Connector	2	PVC, PP, PVDF
18▲	Face O-Ring	2	EPDM, FPM(Viton®)

[1] 1/2" size / 3/4" to 2" sizes

OTHER ENDS

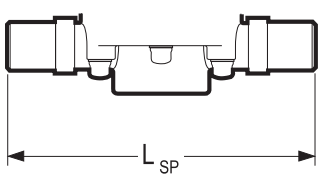

Spigot Body

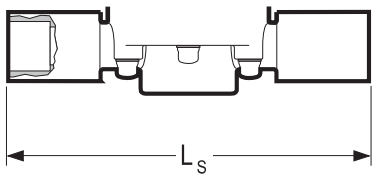

Socket

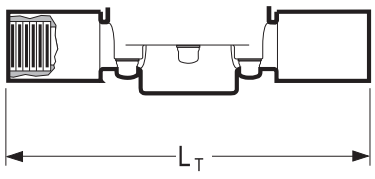

Threaded

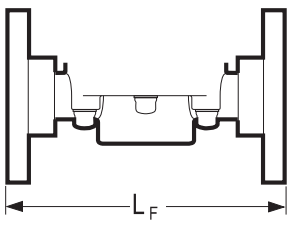

Flanged

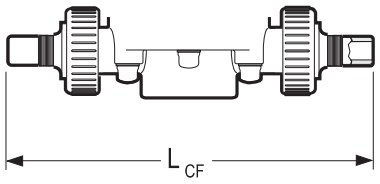

ChemFlare™

DIMENSIONS INCHES — WEIGHTS LB. — Cv VALUES

			PVC								PP and PVDF						
Size	D	H	A	I_S	L_{TU}[2]	L_{SP}[3]	L_S	L_T	L_F	L_{CF}	A	L_{SP}[3]	L_{TU}[2]	PVC	PP	PVDF	USGPM Flow at 1 psi △P
3/8"	3.2	6.9	1.0	0.6	6.5	5.7	7.4	7.2	4.5	8.2	0.9	5.7	**	1.8	1.5	2.2	2.1
1/2"	3.2	6.9	1.0	0.6	6.8	5.7	8.0	7.8	6.3	8.3[4]	0.9	5.7	7.1	1.9	1.6	2.4	3.0
3/4"	4.2	8.0	1.5	0.7	8.3	6.9	9.3	8.9	7.4	9.7	1.4	6.9	8.4	4.1	3.5	4.6	6.6
1"	4.2	8.0	1.5	0.9	8.5	6.9	9.6	9.3	7.4	10.2	1.4	6.9	8.7	4.2	3.5	4.7	8.7
1-1/4"	5.8	10.3	2.2	1.0	10.9	8.8	11.6	11.2	9.2	13.5	2.1	8.8	10.9	11.0	9.0	12.0	18.0
1-1/2"	5.8	10.3	2.2	1.2	11.1	8.8	12.2	11.5	9.5	–	2.1	8.8	11.2	11.2	9.2	12.2	20.0
2"	5.8	10.3	2.2	1.5	11.3	9.6	12.9	12.0	10.0	–	2.1	8.8	13.2	11.4	9.4	12.4	21.4

[2] True Union bodies come standard with socket ends. Threaded union ends are available. ** Consult Chemline.
[3] Spigot bodies are used for non union socket, threaded or flanged ends. All spigot ends have metric dimensions and the PP and PVDF spigots butt fuse directly to Chemline PP and PVDF piping. [4] Tube size can be reduced to 1/4" tube, LCF = 7.74" for 1/4", 8.26" for 3/8".

MAXIMUM PRESSURES PSI

	PVC				PP					PVDF					
Size	20°C 68°F	30°C 86°F	40°C 104°F	50°C 122°F	30°C 86°F	40°C 104°F	50°C 122°F	60°C 140°F	70°C 158°F	30°C 86°F	50°C 122°F	70°C 158°F	80°C 176°F	90°C 194°F	100°C 212°F
1/2"– 2"	150	105	60	15	150	90	60	37.5	15	150	100	60	45	30	15

Temperature Ranges: PVC 0 to 50°C (32 to 122°F), **PP** 10 to 70°C (50 to 158°F), **PVDF** –30 to 100°C (–22 to 212°F).

SB12 Series Back Pressure/Relief Valves 1/2” to 2”

pressure loss nomogram for SB12 valves 3/8” to 2”

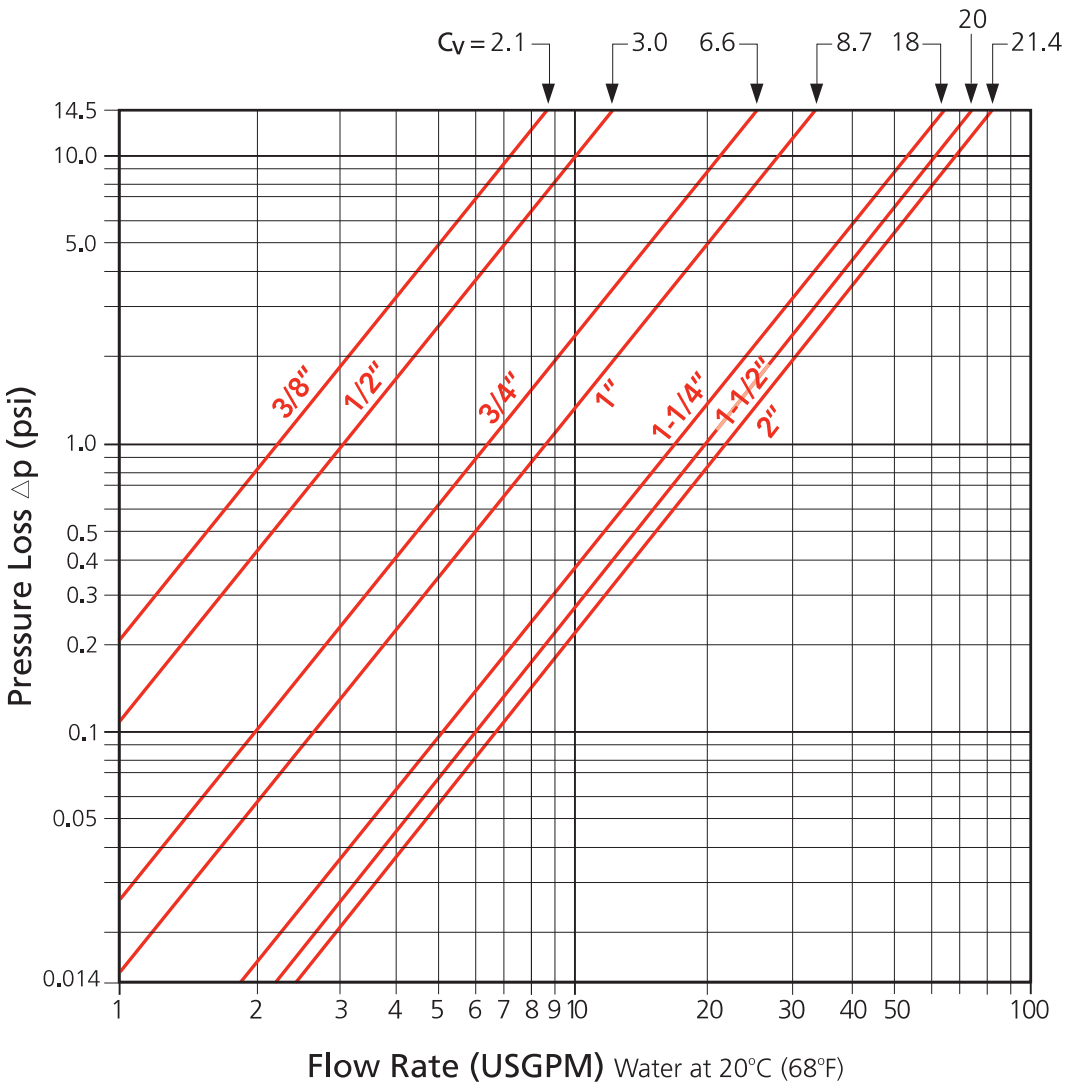

typical dosing system schematic

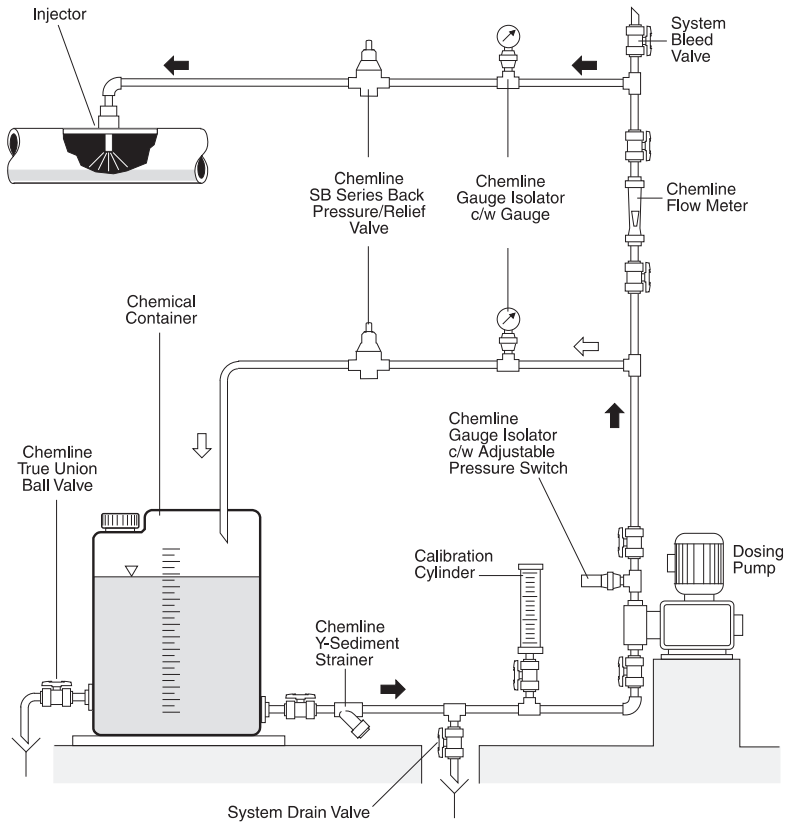

application of pressure relief valves

Constant System Pressure

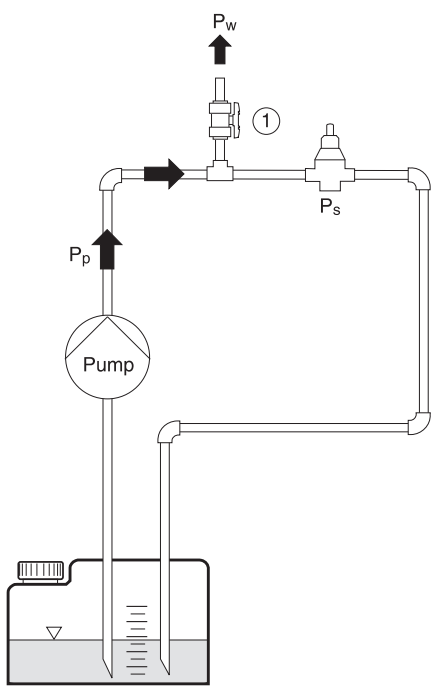

$P_p \geq P_w$
$P_p \geq P_s$ → valve opens
$P_p \leq P_s$ → valve closed

Consumer 1 and/or 2 Open, Valve Closes

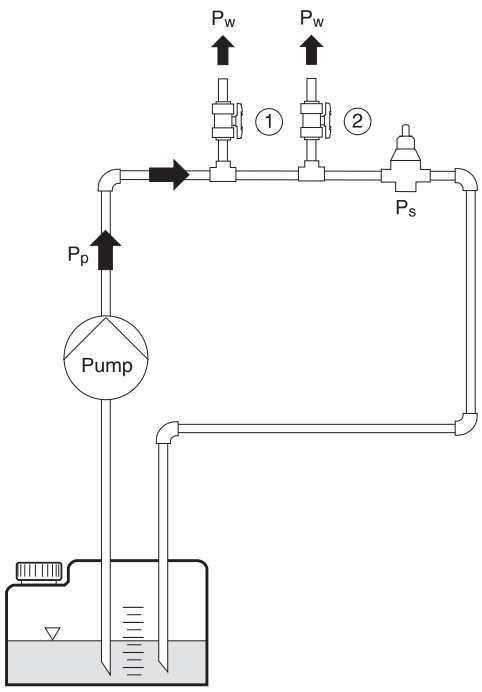

$P_p \geq P_s$ → valve opens
$P_p \leq P_s$ → valve closed

Non-Return Valve

Container 1 is located above the pump

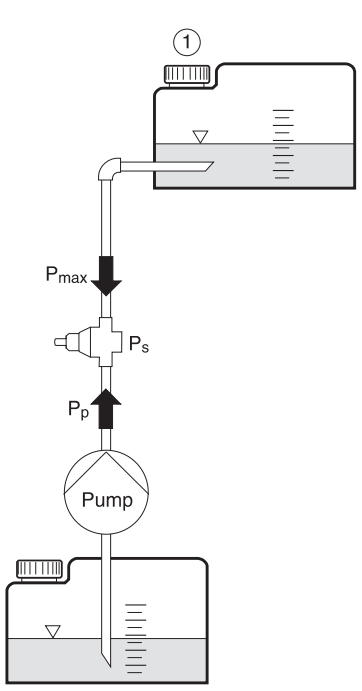

$P_s \geq P_{max}$
$P_p \geq P_s$ → valve opens
$P_p \leq P_s$ → valve closed

Overflow Valve

Pressure of container or application system should not exceed the maximum pressure value

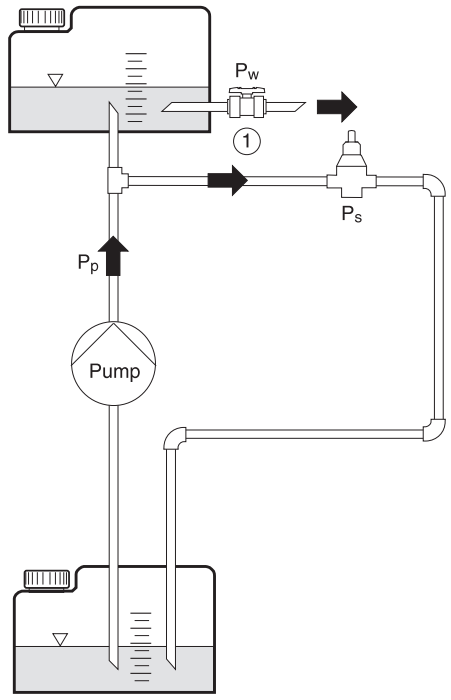

$P_s \leq P_w$
$P_p \geq P_s$ → valve opens
$P_p \leq P_s$ → valve closed

P_w = Working Pressure
P_p = Pump Pressure
P_s = Set Pressure

SB12 Series Back Pressure/Relief Valves 1/2" to 2"

working pressure vs. flow rate

The curves show the relationship between the working pressure and the approximate flow rate through the valve for water at 20°C (68°F) . These values will vary depending on:

- The configuration of the piping and the pressure losses associated with it
- The fluid if not water at 20°C (68°F)
- Whether the pressure is rising or falling, hysteresis is approximately 4 psi for 1/2" to 2" valves. For valves 2-1/2" to 4", hysteresis is approximately 14.5 psi.

operation examples

1. The valve is set closed at 100 psi. At a pressure increase of 10 psi, a flow of approximately 1.0 USGPM will be reached.
   - set pressure = 100 psi
   - working pressure = 110 psi
   - opening pressure = approximately 104 psi
2. The valve is set closed at 50 psi. At a pressure increase of 10 psi, a flow of approximately 1.0 USGPM will be reached.
   - set pressure = 50 psi
   - working pressure = 60 psi
   - opening pressure = approximately 54 psi

3/8" Valves

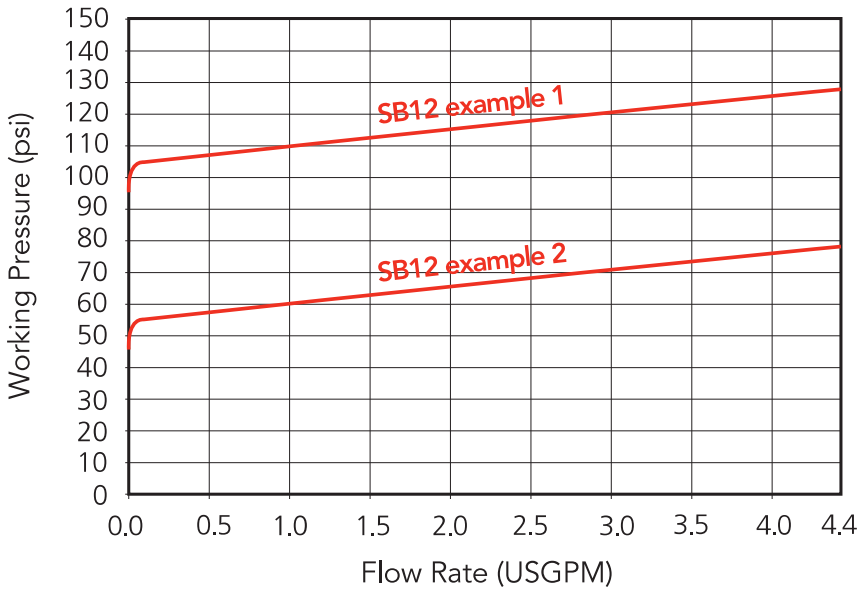

1/2" Valves

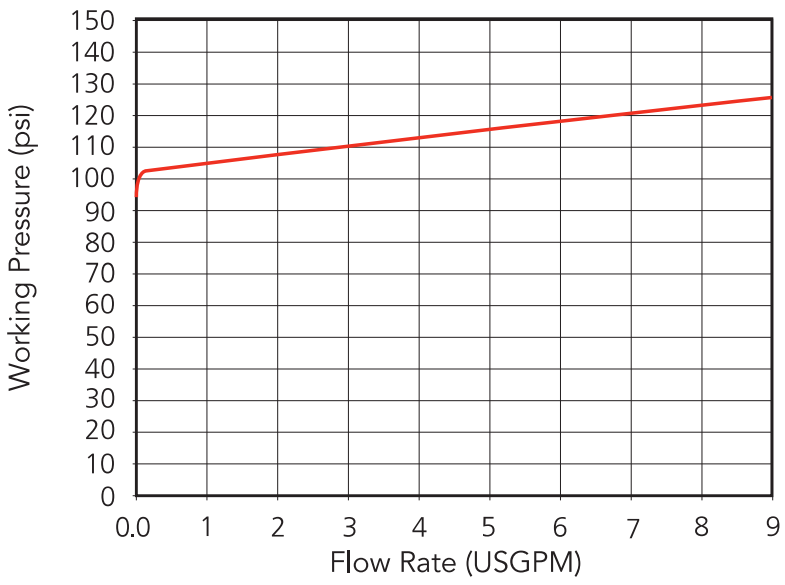

3/4" Valves

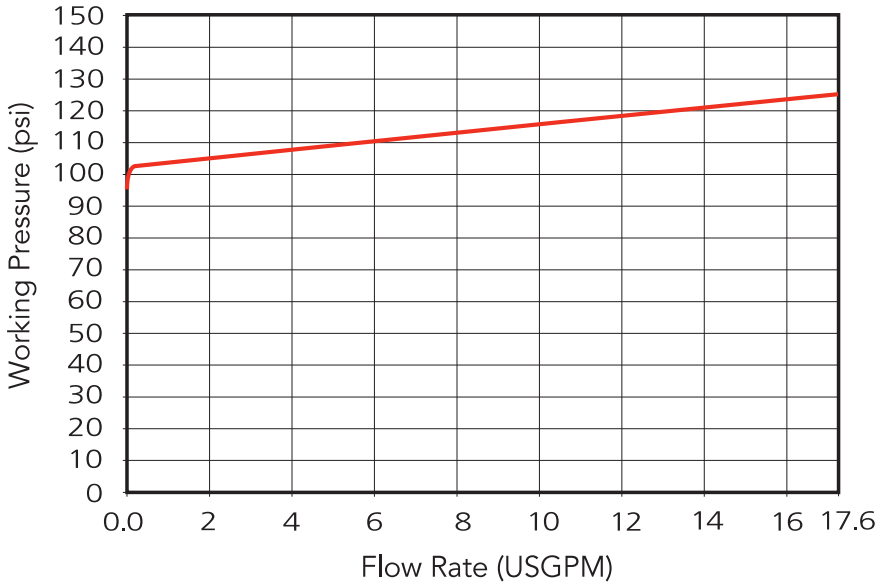

1" Valves

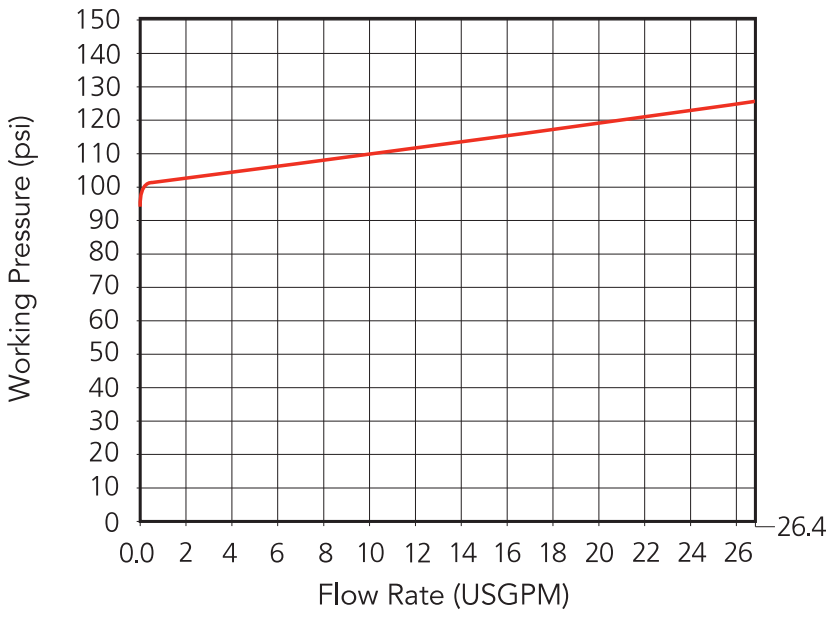

1-1/4" Valves

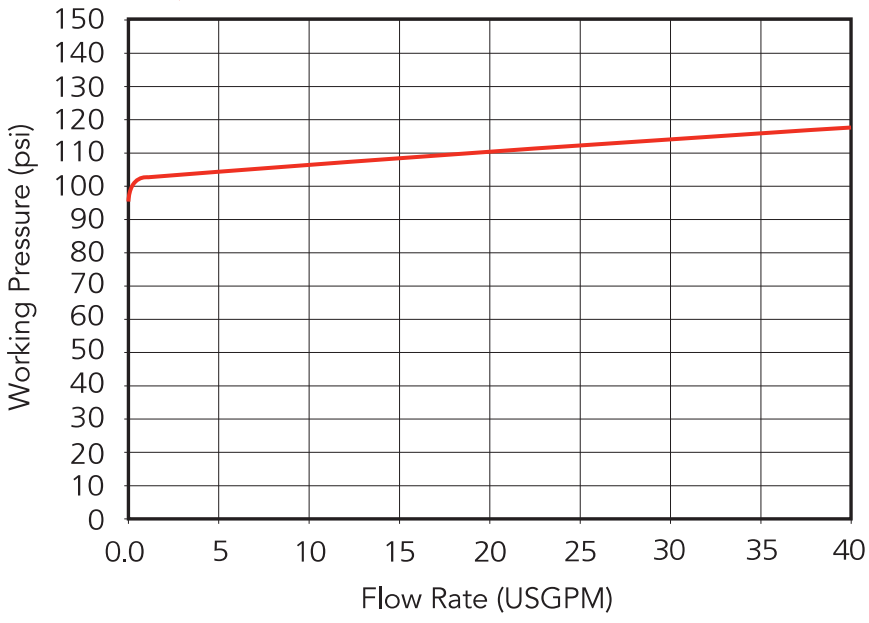

1-1/2" Valves

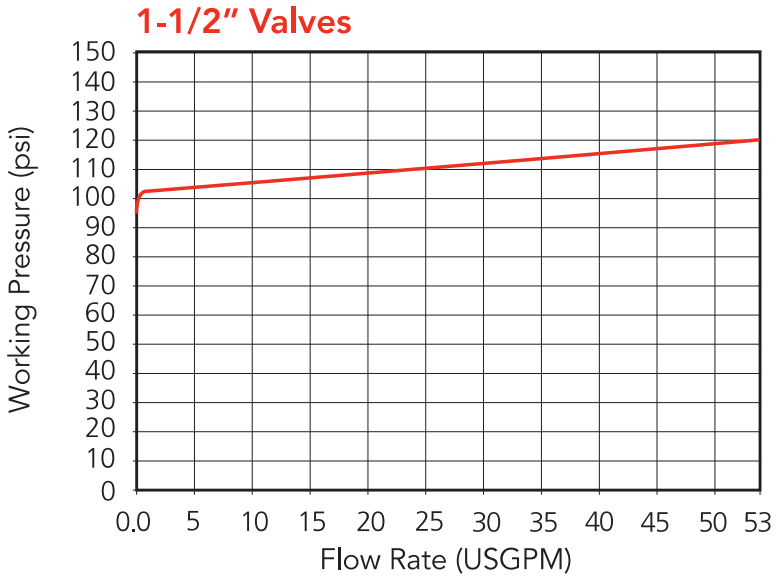

2" Valves

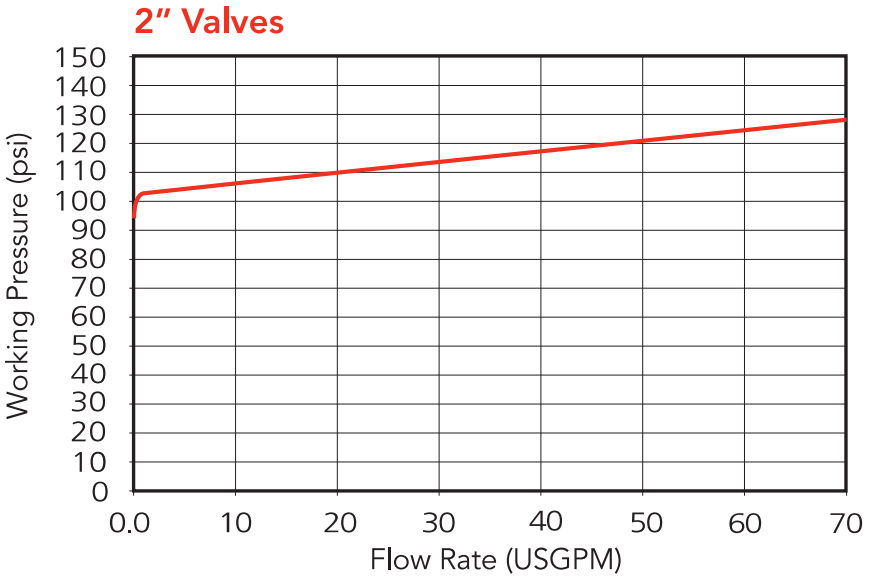

SB12 Series Back Pressure/Relief Valves 2-1/2" to 4"

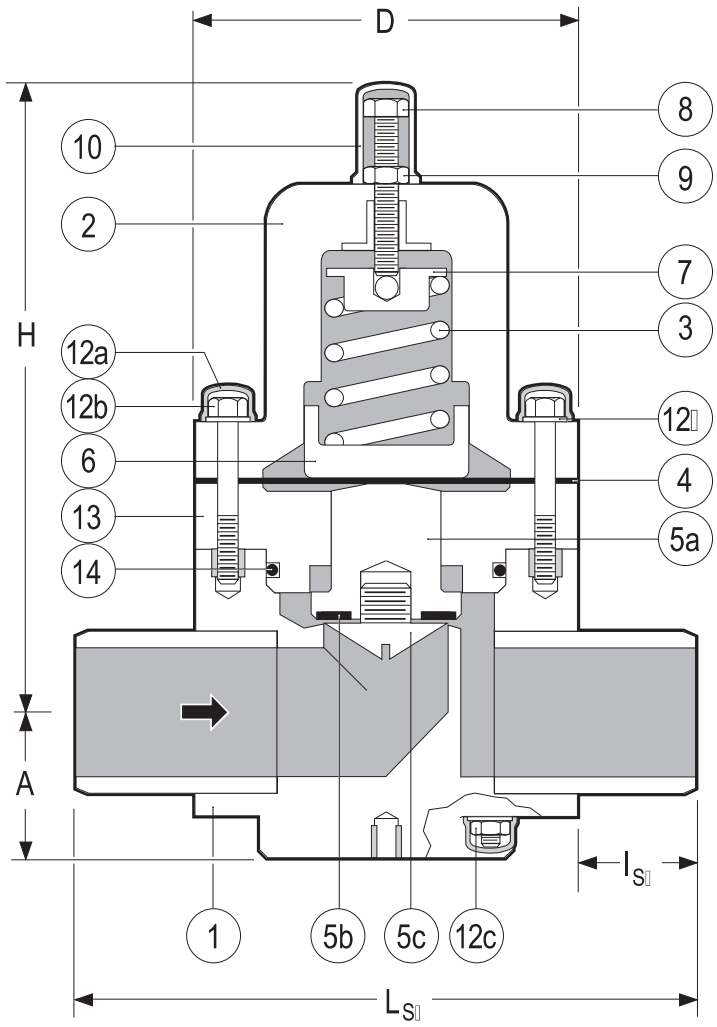

Spigot Body

PARTS

▲ Recommended Spare Parts

No.	Part	Pcs.	Materials
1	Body	1	PVC, PP, PVDF
2	Bonnet	1	PPG
3	Spring	1	Galvanized Steel
4▲	Control Diaphragm	1	PTFE bonded EPDM
5a▲	Piston	2	PVC, PP, PVDF
5b▲	Seat	1	EPDM, FPM(Viton®)
5c▲	Seat Retainer	1	PVC, PP, PVDF
6	Lower Spring Retainer	1	PPG
7	Upper Spring Retauner	1	304 SS
8	Spring Tensioning Bolt	1	304 SS
9	Lock Nut	1	304 SS
10	Spring Bolt Cap	1	PE
12a	Hex Bolt/Nut Cap	20	PE
12b	Hex Bolt/Stud	12[1]	304 SS
12c	Hex Nut	20	304 SS
12d	Washer	20	304 SS
13	Spacer Disc	1	PVC, PP, PVDF
14	Spacer O ring	1	EPDM, FPM(Viton®)

[1] 2 large upper bolts, 2 shorter lower bolts, 8 studs

OTHER ENDS

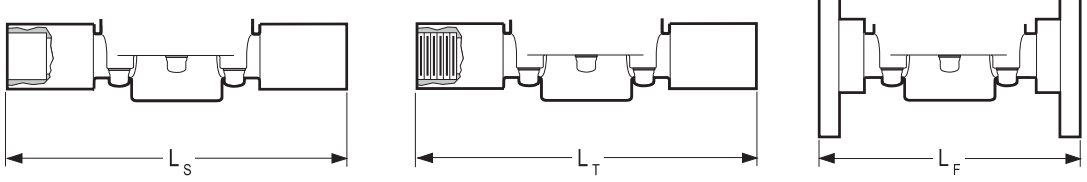

Socket Threaded Flanged



ChemFlare™ Ends

- For connection to PFA tube. Leak-free connections for difficult services such as sodium hypochlorite

DIMENSIONS INCHES

WEIGHTS LB.

Cv VALUES

Size	PVC, PP & PVDF A	D	H	L_{SP}[2]	I_{SP}	PVC L_F	PVC	PP	PVDF	USGPM Flow at 1 psi △P
2-1/2"	2.7	6.9	11.1	11.2	2.1	12.2	20.9	15.4	24.6	41
3"	3.0	7.9	12.2	14.2	3.1	15.0	26.4	23.8	30.8	63
4"	3.7	9.8	14.2	16.5	3.3	16.9	33.0	26.4	37.4	98

[2] Plain spigot ends in PP & PVDF may be butt fused directly to Chemline PP & PVDF piping systems. Weights based on spigot bodies.

MAXIMUM PRESSURES PSI

Size	PVC 20°C 68°F	30°C 86°F	40°C 104°F	50°C 122°F	PP 20°C 68°F	30°C 86°F	40°C 104°F	50°C 122°F	60°C 140°F	70°C 158°F	PVDF 30°C 86°F	50°C 122°F	70°C 158°F	80°C 176°F	90°C 194°F	100°C 212°F
2-1/2"– 4"	150	90	44	15	150	116	90	60	37.5	15	150	90	55	40	30	15

Temperature Ranges: PVC 0 to 50°C (32 to 122°F), **PP** 10 to 70°C (50 to 158°F), **PVDF** –30 to 100°C (–22 to 212°F).

ORDERING EXAMPLE

Chemline Back Pressure/ Relief Valves	**SB12**	**A**	**005**	**V**	**U**
Body Material	**A** – PVC	**B** – PP	**K** – PVDF		
Size	**003** – 3/8" **010** – 1" **020** – 2"	**005** – 1/2" **012** – 1-1/4" **025** – 2-1/2"	**007** – 3/4" **015** – 1-1/2" **030** – 3"	**040** – 4"		
Elastomers	**E** – EPDM	**V** – FPM (Viton®)				
Ends	**S** – Socket **CFx** – ChemFlare™	**T** – Threaded	**F** – Flanged **Blank** – Spigot (Butt)	**U** – Union Socket		

Example: Chemline SB 12 Series, PVC, 1/2" diameter, FPM (Viton®) seals, Union socket ends.
x = 4 for 1/4", **6** for 3/8", **8** for 1/2", **12** for 1" ID tube connections.

OPTIONS

- 4 to 60 psi Pressure Range springs for 2-1/2" to 4" valves
- **Integral Pressure Gauge** – for inlet and/or outlet
- Bodies in 316 Stainless Steel and PTFE



Optional Pressure Gauge

- For inlet and/or outlet

SB12 Series Back Pressure/Relief Valves 2-1/2" to 4"

working pressure vs. flow rate

- Whether the pressure is rising or falling, hysteresis is approximately 14.5 psi for 2-1/2" to 4" valves

2-1/2" Valves / 4 to 60 psi set pressure range

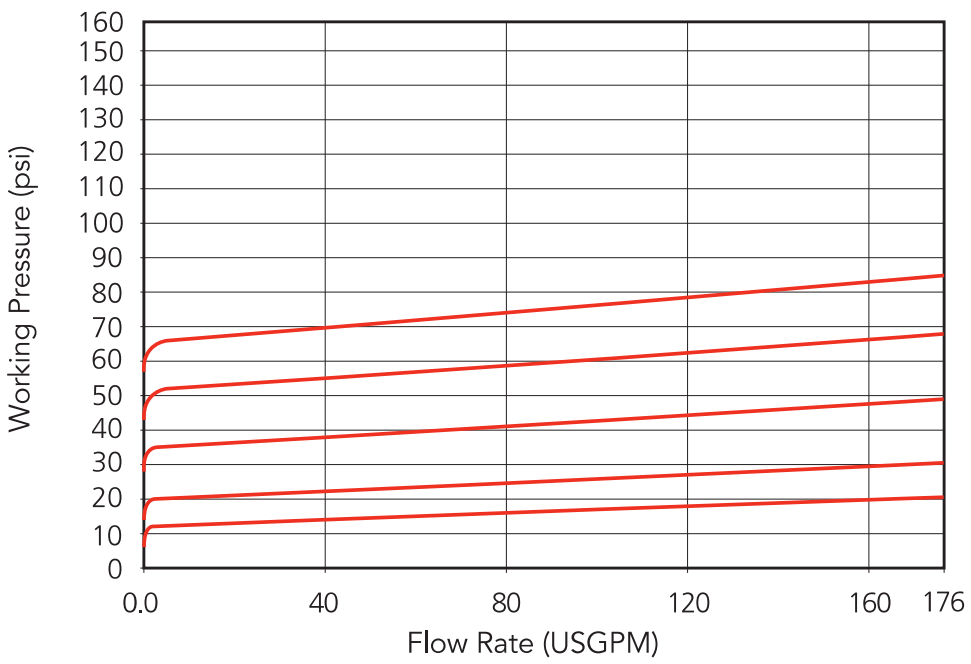

2-1/2" Valves / 7.5 to 150 psi set pressure range

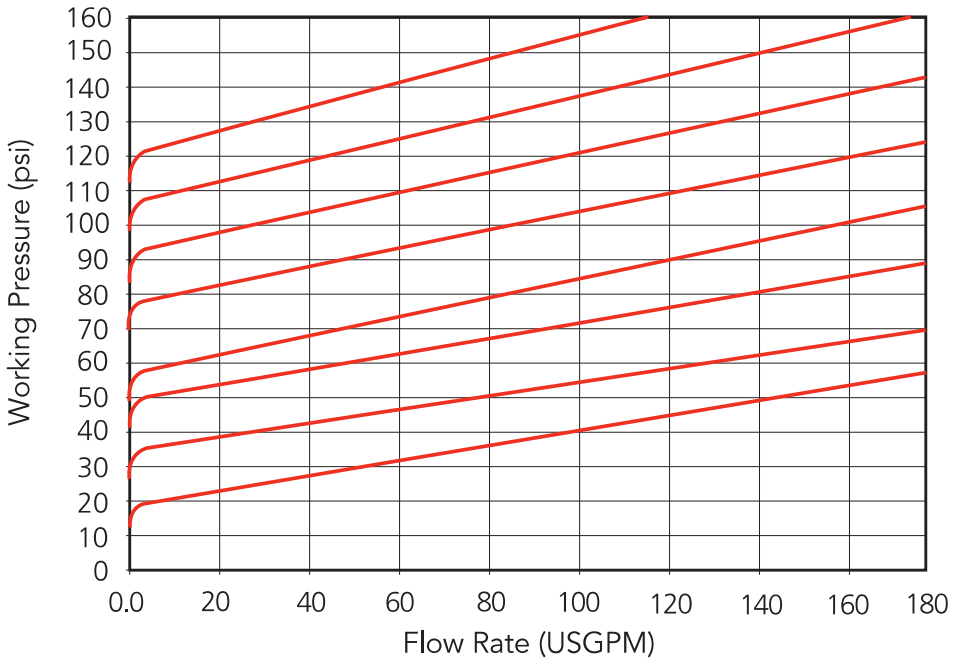

3" Valves / 4 to 60 psi set pressure range

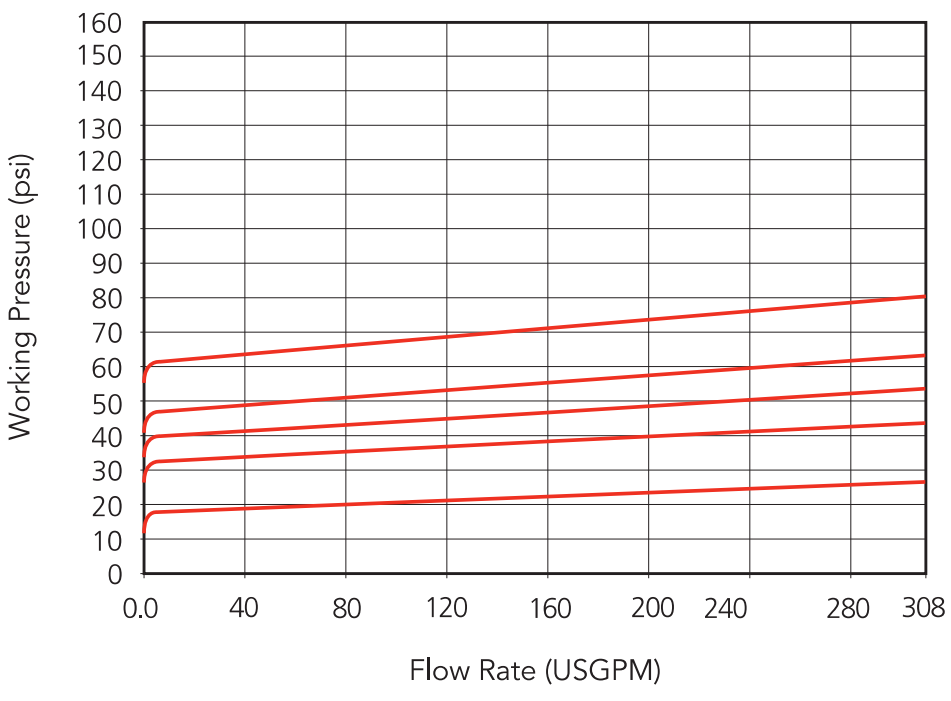

3" Valves / 7.5 to 150 psi set pressure range

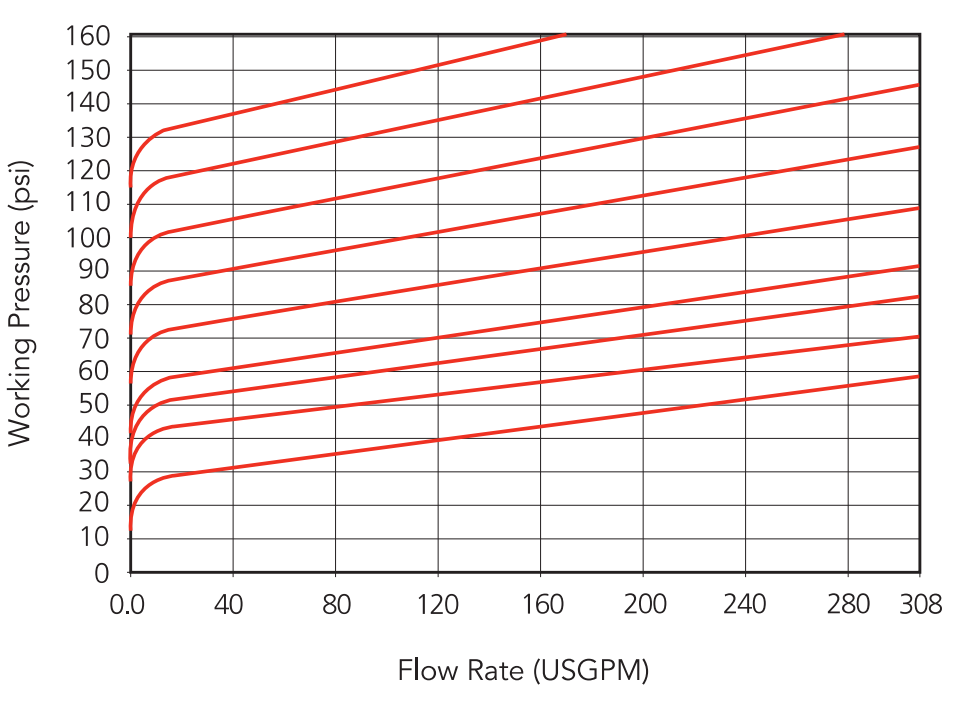

4" Valves / 4 to 60 psi set pressure range

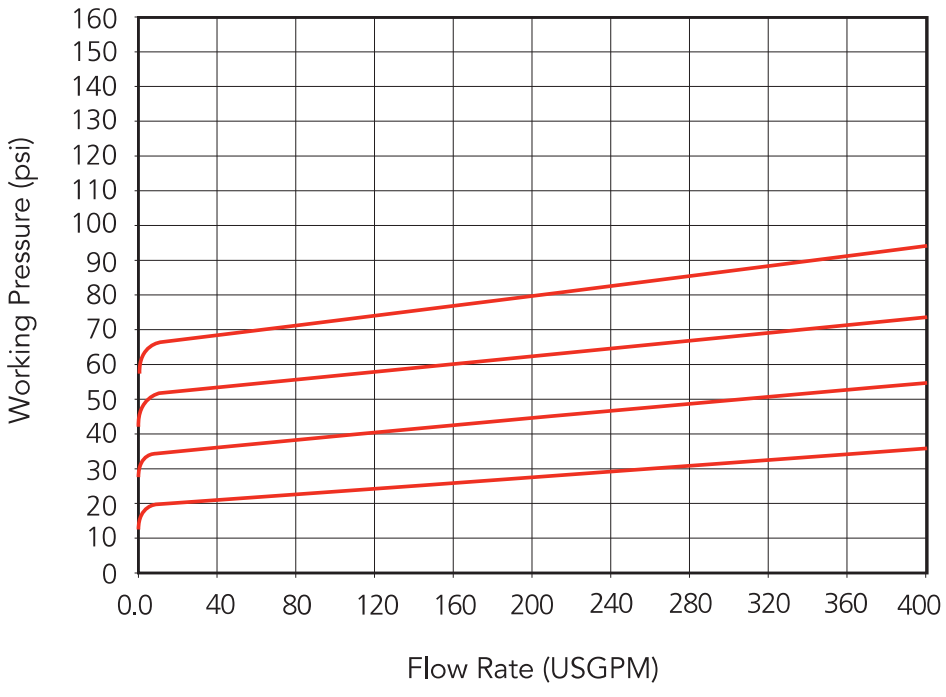

4" Valves / 7.5 to 90 psi set pressure range

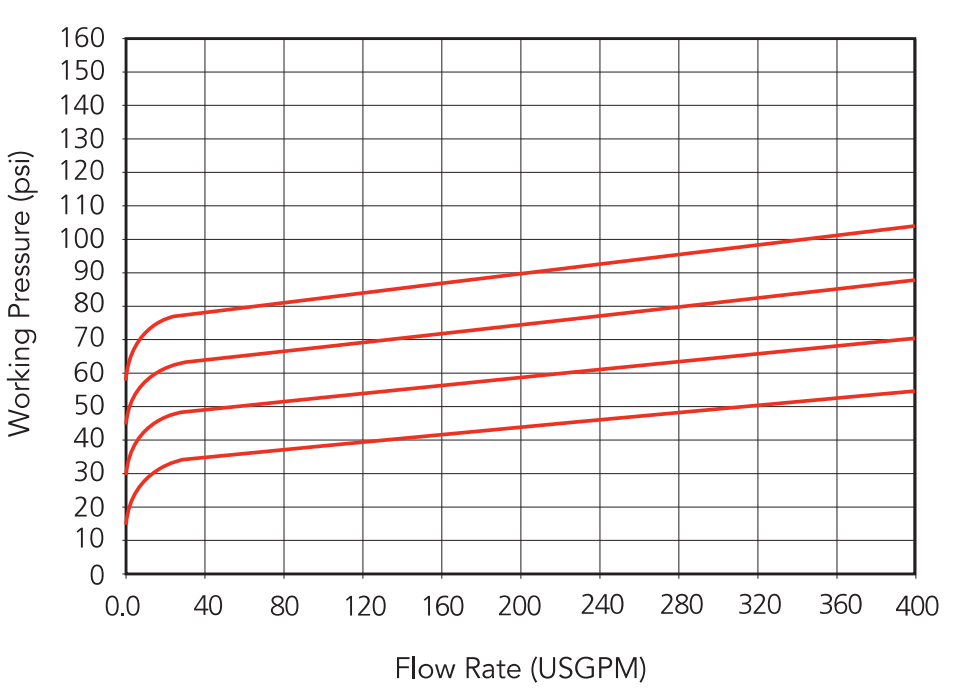

CHEMLINE PLASTICS
SUPERIOR FLOW SOLUTIONS

55 Guardsman Road, Thornhill, ON, L3T 6L2, Canada | ISO 9001:2008 Certified
tel.905.889.7890 | fax.905.889.8553 | request@chemline.com | chemline.com

CS-304-100 : Identification sheet

VWTC PROJECT NUMBER:	Iqaluit WWTP	REV:	01
PROJECT NAME:	5000218036	SUBMITTED TO (COMPANY):	
ENGINEER:	G. HÉBERT	SUBMITTED TO (RESPONSIBLE)	
PROJECT MANAGER:	C. BEKAERT	PROJECT NUM REFERENCE.:	
PHONE NUMBER:		LOT NUMBER:	

SUPPLIER	EQPT CODE	EQPT TAG NO	DIA	DESCRIPTION	INFO 1	INFO 2	INFO 3	APPLIC.	NOTE	REV
TEKNO VALVE	VASDBR303370	SV-04-783	N/A	ON/OFF VALVES - CARRIER WATER	TYPE: SOLENOID VALVE//MANUFACTURER : ASCO//MODEL : 8210G094//CONNECTION TYPE : THREADED | 13 mm (1/2") | 13 mm (1/2")//BODY : BRASS// SEAL | SEAT : | // STEM : N/A	ACTING : PILOT	NORMALLY : FERMÉ/CLOSED			1
TEKNO VALVE	VASDBR303370	SV-04-784	N/A	ON/OFF VALVES - CARRIER WATER	TYPE: SOLENOID VALVE//MANUFACTURER : ASCO//MODEL : 8210G094//CONNECTION TYPE : THREADED | 13 mm (1/2") | 13 mm (1/2")//BODY : BRASS// SEAL | SEAT : | // STEM : N/A	ACTING : PILOT	NORMALLY : FERMÉ/CLOSED			1

Features

- Wide range of pressure ratings, sizes, and resilient materials provide long service life and low internal leakage
- High flow valves for liquid, corrosive, and air/inert gas service
- Industrial applications include:
  - Car wash
  - Laundry equipment
  - Air compressors
  - Industrial water control
  - Pumps

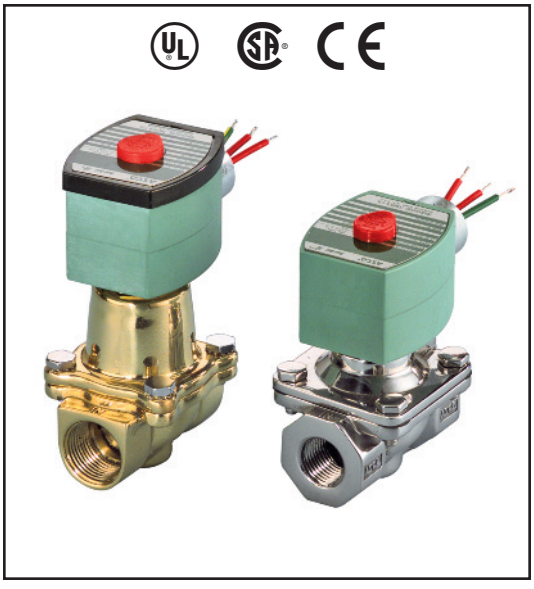

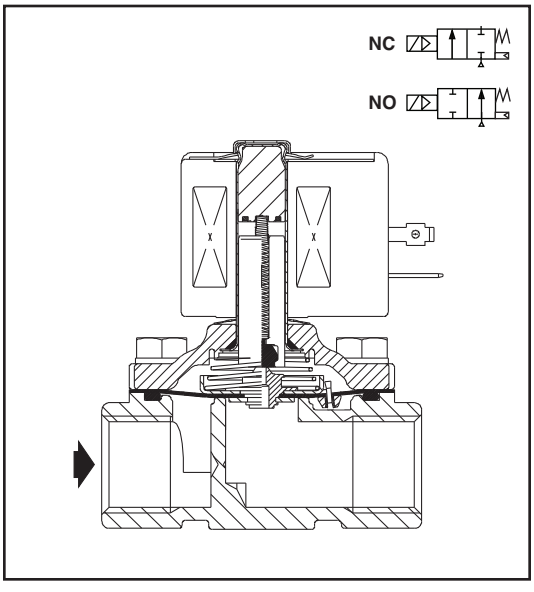

Construction

Valve Parts in Contact with Fluids		
Body	Brass	304 Stainless Steel*
Seals and Discs	NBR or PTFE	
Disc-Holder	PA	
Core Tube	305 Stainless Steel	
Core and Plugnut	430F Stainless Steel	
Springs	302 Stainless Steel	
Shading Coil	Copper	Silver

*Catalog Numbers 8210G127, 8210G129, 8210G132, 8210G133 have 316L Stainless Steel bodies.

Electrical

Standard Coil and Class of Insulation	Watt Rating and Power Consumption				Spare Coil Part Number			
		AC			General Purpose		Explosionproof	
	DC Watts	Watts	VA Holding	VA Inrush	AC	DC	AC	DC
F	-	6.1	16	40	238210	-	238214	-
F	11.6	10.1	25	70	238610	238710	238614	238714
F	16.8	16.1	35	180	272610	97617	272614	97617
F	-	17.1	40	93	238610	-	238614	-
F	-	20	43	240	99257	-	99257	-
F	-	20.1	48	240	272610	-	272614	-
F	30.8	-	-	-	-	501695	-	501696
H	40.6	-	-	-	-	238910	-	238914

Standard Voltages: 24, 120, 240, 480 volts AC, 60 Hz (or 110, 220 volts AC, 50 Hz). 6, 12, 24, 120, 240 volts DC. Must be specified when ordering.
Other voltages available when required.

Solenoid Enclosures

Standard: RedHat II - Watertight, Types 1, 2, 3, 3S, 4, and 4X; RedHat - Type I.

Optional: RedHat II - Explosionproof and Watertight, Types 3, 3S, 4, 4X, 6, 6P, 7, and 9; Red-Hat - Explosionproof and Watertight, Types 3, 4, 4X, 7, and 9.

(To order, add prefix "EF" to catalog number, except Catalog Numbers 8210B057, 8210B058, and 8210B059, which are not available with Explosionproof enclosures.)
See Optional Features Section for other available options.

Nominal Ambient Temp. Ranges

RedHat II/RedHat AC: 32°F to 125°F (0°C to 52°C)
RedHat II DC: 32°F to 104°F (0°C to 40°C)
RedHat DC: 32°F to 77°F (0°C to 25°C)
(104°F/40°C occasionally)
8210G227 AC: 32°F to 130°F (0°C to 54°C)
DC: 32°F to 90°F (0°C to 32°C)
Refer to Engineering Section for details.

Approvals

UL listed as indicated. CSA certified.
RedHat II meets applicable CE directives.
Refer to Engineering Section for details.

ATEX/IECEx certified with prefix "EV" as listed. *Refer to Optional Features Electrical Section for details.*

2/2 SERIES 8210

ASCO®

Specifications (English units)

Pipe Size (in)	Orifice Size (in)	Cv Flow Factor	Operating Pressure Differential (psi)							Max. Fluid Temp. °F		Brass Body			Stainless Steel Body			Watt Rating/ Class of Coil Insulation ⑦	
				Max. AC			Max. DC												
			Min.	Air-Inert Gas	Water	Light Oil @ 300 SSU	Air-Inert Gas	Water	Light Oil @ 300 SSU	AC	DC	Catalog Number	Const. Ref. ④	UL ⑤ Listing	Catalog Number	Const. Ref. ④	UL ⑤ Listing	AC	DC
NORMALLY CLOSED (Closed when de-energized), NBR or PTFE ② Seating																			
3/8	3/8	1.5	①	150	125	-	40	40	-	180	150	8210G073 ③	1P	●	8210G036 ③	1P	●	6.1/F	11.6/F
3/8	5/8	3	0	150	150	-	40	40	-	180	150	8210G093	5D	❍	-	-	-	10.1/F	11.6/F
3/8	5/8	3	5	200	150	135	125	100	100	180	150	8210G001 ▼	6D	❍	-	-	-	6.1/F	11.6/F
3/8	5/8	3	5	300	300	300	-	-	-	175	-	8210G006 ✓	5D	❍	-	-	-	17.1/F	-
1/2	7/16	2.2	①	150	125	-	40	40	-	180	150	8210G015 ③	2P	●	8210G037 ③	2P	●	6.1/F	11.6/F
1/2	5/8	4	0	150	150	-	40	40	-	180	150	8210G094 ✓	5D	❍	-	-	-	10.1/F	11.6/F
1/2	5/8	4	0	150	150	125	40	40	-	175	150	-	-	-	8210G087 ✓	7D	●	17.1/F	11.6/F
1/2	5/8	4	5	200	150	135	125	100	100	180	150	8210G002 ▼	6D	❍	-	-	-	6.1/F	11.6/F
1/2	5/8	4	5	300	300	300	-	-	-	175	-	8210G007	5D	❍	-	-	-	17.1/F	-
1/2	3/4	4	5	-	300	-	-	300	-	130	90	8210G227	5D	❍ †	-	-	-	17.1/F	40.6/H
3/4	5/8	4.5	0	150	150	125	40	40	-	175	150	-	-	-	8210G088 ✓	7D	●	17.1/F	11.6/F
3/4	3/4	5	5	125	125	125	100	90	75	180	150	8210G009 ▼	9D	❍	-	-	-	6.1/F	11.6/F
3/4	3/4	5	0	150	150	-	40	40	-	180	150	8210G095 ✓	8D	❍	-	-	-	10.1/F	11.6/F
3/4	3/4	6.5	5	250	150	100	125	125	125	180	150	8210G003 ▼	11D	❍	-	-	-	6.1/F	11.6/F
3/4	3/4	6	0	350	300	200	200	200	200	200	180	8210G026 ② ‡ ◆	40P/10D	●	-	-	-	16.1F	30.8/F
1	1	13	0	150	125	125	135	120	120	180	180	8210G054 ‡ ◆	41D/31D	●	8210G089 ‡ ◆	45D/15D	●	16.1/F	30.8/F
1	1	13	5	150	150	100	125	125	125	180	150	8210G004 ▼	12D	❍	-	-	-	6.1/F	11.6/F
1	1	13.5	0	300	225	115	-	-	-	200	-	8210G027 ‡	42P	●	-	-	-	20.1/F	-
1	1	13.5	10	300	300	300	-	-	-	175	-	8210G078 ②	13P	-	-	-	-	17.1/F	-
1 1/4	1 1/8	15	0	150	125	125	135	120	120	180	180	8210G055 ‡ ◆	43D/32D	●	-	-	-	16.1/F	30.8/F
1 1/4	1 1/8	15	5	150	150	100	125	125	125	180	150	8210G008 ▼	16D	❍	-	-	-	6.1/F	11.6/F
1 1/2	1 1/4	22.5	0	150	125	125	135	120	120	180	180	8210G056 ‡ ◆	44D/33D	●	-	-	-	16.1/F	30.8/F
1 1/2	1 1/4	22.5	5	150	150	100	125	125	125	180	150	8210G022 ▼	18D	●	8210G127	-	-	6.1/F	11.6/F
2	1 3/4	43	5	150	125	90	50	50	50	180	150	8210G100	20P	●	8210G129	-	-	6.1/F	11.6/F
2 1/2	1 3/4	45	5	150	125	90	50	50	50	180	150	8210G101	21P	●	-	-	-	6.1/F	11.6/F
NORMALLY OPEN (Open when de-energized), NBR Seating (PA Disc-Holder, except as noted)																			
3/8	5/8	3	0	150	150	125	125	125	80	180	150	8210G033	23D	●	-	-	-	10.1/F	11.6/F
3/8	5/8	3	5	250	200	200	250	200	200	180	180	8210G011 ⑧ ⑨	39D	●	-	-	-	10.1/F	11.6/F
1/2	5/8	4	0	150	150	125	125	125	80	180	150	8210G034 ✓	23D	●	-	-	-	10.1/F	11.6/F
1/2	5/8	3	0	150	150	100	125	125	80	180	150	-	-	-	8210G030 ✓	37D	●	10.1/F	11.6/F
1/2	5/8	4	5	250	200	200	250	200	200	180	180	8210G012 ⑧ ⑨	39D	●	-	-	-	10.1/F	11.6/F
3/4	3/4	5.5	0	150	150	125	125	125	80	180	150	8210G035 ✓	25D	●	-	-	-	10.1/F	11.6/F
3/4	5/8	3	0	150	150	100	125	125	80	180	150	-	-	-	8210G038 ✓	38D	●	10.1/F	11.6/F
3/4	3/4	6.5	5	-	-	-	250	200	200	-	180	8210C013	24D	●	-	-	-	-	16.8/F
3/4	3/4	6.5	5	250	200	200	-	-	-	180	-	8210G013	46D	●	-	-	-	16.1/F	-
1	1	13	0	125	125	125	-	-	-	180	-	8210B057 ⑥ ⑩	34D	●	-	-	-	20/F	-
1	1	13	5	-	-	-	125	125	125	-	180	8210D014	26D	●	-	-	-	-	16.8/F
1	1	13	5	150	150	125	-	-	-	180	-	8210G014	47D	●	-	-	-	16.1/F	-
1 1/4	1 1/8	15	0	125	125	125	-	-	-	180	-	8210B058 ⑥ ⑩	35D	●	-	-	-	20/F	-
1 1/4	1 1/8	15	5	-	-	-	125	125	125	-	180	8210D018	28D	●	-	-	-	-	16.8/F
1 1/4	1 1/8	15	5	150	150	125	-	-	-	180	-	8210G018	48D	●	-	-	-	16.1/F	-
1 1/2	1 1/4	22.5	0	125	125	125	-	-	-	180	-	8210B059 ⑥ ⑩	36D	●	-	-	-	20/F	-
1 1/2	1 1/4	22.5	5	-	-	-	125	125	125	-	180	8210D032	29D	●	-	-	-	-	16.8/F
1 1/2	1 1/4	22.5	5	150	150	125	-	-	-	180	-	8210G032	49D	●	8210G132	-	-	16.1/F	-
2	1 3/4	43	5	-	-	-	125	125	125	-	150	8210 103	30P	●	-	-	-	-	16.8/F
2	1 3/4	43	5	125	125	125	-	-	-	180	-	8210G103	50P	●	8210G133	-	-	16.1/F	-
2 1/2	1 3/4	45	5	-	-	-	125	125	125	-	150	8210 104	27P	●	-	-	-	-	16.8/F
2 1/2	1 3/4	45	5	125	125	125	-	-	-	180	-	8210G104	51P	●	-			16.1/F	-

① 5 psi on Air; 1 psi on Water.
② Valve provided with PTFE main disc.
③ Valve includes Ultem (G.E. trademark) piston.
④ Letter "D" denotes diaphragm construction; "P" denotes piston construction.
⑤ ❍ Safety Shutoff Valve; ● General Purpose Valve.
Refer to Engineering Section (Approvals) for details.
⑥ Valves not available with Explosionproof enclosures.
⑦ On 50 hertz service, the watt rating for the 6.1/F solenoid is 8.1 watts.
⑧ AC construction also has PA seating.
⑨ No disc-holder.
⑩ Stainless steel disc-holder.
† UL listed for fire protection systems per UL429A.
‡ DC constructions must have solenoid mounted vertical and upright.
✓ ATEX/IECEx certified with prefix "EV".
▼ ATEX/IECEx certified for DC only with prefix "EV".
◆ Not available in 6 Volt DC. EF and HB prefix only.

Specifications (Metric units)

Pipe Size (in)	Orifice Size (mm)	Kv Flow Factor (m^3/hr)	Operating Pressure Differential (bar)							Max. Fluid Temp. °C		Brass Body			Stainless Steel Body			Watt Rating/ Class of Coil Insulation ⑦	
				Max. AC			Max. DC												
			Min.	Air-Inert Gas	Water	Light Oil @ 300 SSU	Air-Inert Gas	Water	Light Oil @ 300 SSU	AC	DC	Catalog Number	Const. Ref. ④	UL ⑤ Listing	Catalog Number	Const. Ref. ④	UL ⑤ Listing	AC	DC
NORMALLY CLOSED (Closed when de-energized), NBR or PTFE ② Seating																			
3/8	10	1.3	①	10	9	-	3	3	-	82	65	8210G073 ③	1P	●	8210G036 ③	1P	●	6.1/F	11.6/F
3/8	16	2.6	0	10	10	-	3	3	-	82	65	8210G093	5D	❍	-	-	-	10.1/F	11.6/F
3/8	16	2.6	0.3	14	10	9	9	7	7	82	65	8210G001 ▼	6D	❍	-	-	-	6.1/F	11.6/F
3/8	16	2.6	0.3	21	21	21	-	-	-	79	-	8210G006 ✓	5D	❍	-	-	-	17.1/F	-
1/2	11	1.9	①	10	9	-	3	3	-	82	65	8210G015 ③	2P	●	8210G037 ③	2P	●	6.1/F	11.6/F
1/2	16	3.4	0	10	10	-	3	3	-	82	65	8210G094 ✓	5D	❍	-	-	-	10.1/F	11.6/F
1/2	16	3.4	0	10	10	9	3	3	-	79	65	-	-	-	8210G087 ✓	7D	●	17.1/F	11.6/F
1/2	16	3.4	0.3	14	10	9	9	7	7	82	65	8210G002 ▼	6D	❍	-	-	-	6.1/F	11.6/F
1/2	16	3.4	0.3	21	21	21	-	-	-	79	-	8210G007	5D	❍	-	-	-	17.1/F	-
1/2	19	3.4	0.3	-	21	-	-	21	-	54	32	8210G227	5D	❍ †	-	-	-	17.1/F	40.6H
3/4	16	3.9	0	10	10	9	3	3	-	79	65	-	-	-	8210G088 ✓	7D	●	17.1/F	11.6/F
3/4	19	4.3	0.3	9	9	9	7	6	5	82	65	8210G009 ▼	9D	❍	-	-	-	6.1/F	11.6/F
3/4	19	4.3	0	10	10	-	3	3	-	82	65	8210G095 ✓	8D	❍	-	-	-	10.1/F	11.6/F
3/4	19	5.6	0.3	17	10	7	9	9	9	82	65	8210G003 ▼	11D	❍	-	-	-	6.1/F	11.6/F
3/4	19	5.1	0	24	21	14	14	14	14	93	82	8210G026 ② ‡ ◆	40P/10D	●	-	-	-	16.1F	30.8/F
1	25	11	0	10	9	9	9	8	8	82	82	8210G054 ‡ ◆	41D/31D	●	8210G089 ‡ ◆	45D/15D	●	16.1/F	30.8/F
1	25	11	0.3	10	10	7	9	9	9	82	65	8210G004 ▼	12D	❍	-	-	-	6.1/F	11.6/F
1	25	11.5	0	21	16	8	-	-	-	93	-	8210G027 ‡	42P	●	-	-	-	20.1/F	-
1	25	11.5	0.7	21	21	21	-	-	-	79	-	8210G078 ②	13P	-	-	-	-	17.1/F	-
1 1/4	29	13	0	10	9	9	9	8	8	82	82	8210G055 ‡ ◆	43D/32D	●	-	-	-	16.1/F	30.8/F
1 1/4	29	13	0.3	10	10	7	9	9	9	82	65	8210G008 ▼	16D	❍	-	-	-	6.1/F	11.6/F
1 1/2	32	19.5	0	10	9	9	9	8	8	82	82	8210G056 ‡ ◆	44D/33D	●	-	-	-	16.1/F	30.8/F
1 1/2	32	19.5	0.3	10	10	7	9	9	9	82	65	8210G022 ▼	18D	●	8210G127	-	-	6.1/F	11.6/F
2	44	37	0.3	10	9	6	3	3	3	82	65	8210G100	20P	●	8210G129	-	-	6.1/F	11.6/F
2 1/2	44	39	0.3	10	9	6	3	3	3	82	65	8210G101	21P	●	-	-	-	6.1/F	11.6/F
NORMALLY OPEN (Open when de-energized), NBR Seating (PA Disc-Holder, except as noted)																			
3/8	16	2.6	0.0	10	10	9	9	9	6	82	65	8210G033	23D	●	-	-	-	10.1/F	11.6/F
3/8	16	2.6	0.3	17	14	14	17	14	14	82	82	8210G011 ⑧ ⑨	39D	●	-	-	-	10.1/F	11.6/F
1/2	16	3.4	0	10	10	9	9	9	6	82	65	8210G087 ✓	7D	●	-	-	-	10.1/F	11.6/F
1/2	16	2.6	0	10	10	7	9	9	6	82	65	-	-	-	8210G087 ✓	7D	●	10.1/F	11.6/F
1/2	16	3.4	0.3	17	14	14	17	14	14	82	82	8210G012 ⑧ ⑨	39D	●	-	-	-	10.1/F	11.6/F
3/4	19	4.7	0	10	10	9	9	9	6	82	65	8210G087 ✓	7D	●	-	-	-	10.1/F	11.6/F
3/4	16	2.6	0	10	10	7	9	9	6	82	65	-	-	-	8210G087 ✓	7D	●	10.1/F	11.6/F
3/4	19	5.6	0.3	-	-	-	17	14	14	-	82	8210C013	24D	●	-	-	-	-	16.8/F
3/4	19	5.6	0.3	17	14	14	-	-	-	82	-	8210G013	46D	●	-	-	-	16.1/F	-
1	25	11	0	9	9	9	-	-	-	82	-	8210B057 ⑥ ⑩	34D	●	-	-	-	20/F	-
1	25	11	0.3	-	-	-	9	9	9	-	82	8210D014	26D	●	-	-	-	-	16.8/F
1	25	11	0.3	10	10	9	-	-	-	82	-	8210G014	47D	●	-	-	-	16.1/F	-
1 1/4	29	13	0	9	9	9	-	-	-	82	-	8210B058 ⑥ ⑩	35D	●	-	-	-	20/F	-
1 1/4	29	13	0.3	-	-	-	9	9	9	-	82	8210D018	28D	●	-	-	-	-	16.8/F
1 1/4	29	13	0.3	10	10	9	-	-	-	82	-	8210G018	48D	●	-	-	-	16.1/F	-
1 1/2	32	19.5	0	9	9	9	-	-	-	82	-	8210B059 ⑥ ⑩	36D	●	-	-	-	20/F	-
1 1/2	32	19.5	0.3	-	-	-	9	9	9	-	82	8210D032	29D	●	-	-	-	-	16.8/F
1 1/2	32	19.5	0.3	10	10	9	-	-	-	82	-	8210G032	49D	●	8210G132	-	-	16.1/F	-
2	44	37	0.3	-	-	-	9	9	9	-	65	8210 103	30P	●	-	-	-	-	16.8/F
2	44	37	0.3	9	9	9	-	-	-	82	-	8210G103	50P	●	8210G133	-	-	16.1/F	-
2 1/2	44	39	0.3	-	-	-	9	9	9	-	65	8210 104	27P	●	-	-	-	-	16.8/F
2 1/2	44	39	0.3	9	9	9	-	-	-	82	-	8210G104	51P	●	-	-	-	16.1/F	-

① 0.3 bar on Air; 0.0 bar on Water.
② Valve provided with PTFE main disc.
③ Valve includes ULtem (G.E. trademark) piston.
④ Letter "D" denotes diaphragm construction; "P" denotes piston construction.
⑤ ❍ Safety Shutoff Valve; ● General Purpose Valve.
Refer to Engineering Section (Approvals) for details.
⑥ Valves not available with Explosionproof enclosures.
⑦ On 50 hertz service, the watt rating for the 6.1/F solenoid is 8.1 watts.
⑧ AC construction also has PA seating.
⑨ No disc-holder.
⑩ Stainless steel disc-holder.
† UL listed for fire protection systems per UL429A.
‡ DC constructions must have solenoid mounted vertical and upright.
✓ ATEX/IECEx certified with prefix "EV".
▼ ATEX/IECEx certified for DC only with prefix "EV".
◆ Not available in 6 Volt DC. EF and HB prefix only.

Dimensions: inches (mm)

Const. Ref.		H	K	L	P	W
1*	in	3.85	3.00	1.91	3.41	1.69
	mm	98	76	49	87	43
2*	in	4.17	3.25	2.28	3.63	1.69
	mm	106	83	58	92	43
5	in	3.84	2.31	2.75	3.28	2.28
	mm	98	59	70	83	58
6*	in	3.38	1.94	2.75	2.80	2.28
	mm	86	49	70	71	58
7	in	4.19	2.50	2.81	3.47	2.39
	mm	106	64	71	88	61
8	in	4.13	2.47	2.81	3.44	2.29
	mm	105	63	71	87	58
9*	in	3.66	2.10	2.81	2.96	2.28
	mm	93	53	71	75	58
10*	in	5.20	3.40	2.80	4.50	2.50
	mm	131	86	71	114	62
11*	in	4.16	2.66	3.84	3.52	2.75
	mm	106	68	98	89	70
12	in	5.64	3.15	3.75	4.01	3.36
	mm	143	80	95	102	85
13	in	4.44	3.22	3.75	4.19	5.81
	mm	113	82	95	106	147
15*	in	5.20	3.30	3.80	4.40	3.80
	mm	133	83	98	111	98
16	in	5.64	3.15	3.66	4.01	3.56
	mm	143	80	93	102	90
18*	in	6.11	3.30	4.38	4.16	3.92
	mm	155	84	111	106	100
20*	in	7.33	3.71	5.06	4.57	4.87
	mm	186	94	129	116	124
21*	in	7.33	3.71	5.50	4.57	4.87
	mm	186	94	140	116	124
23	in	4.35	2.65	2.75	3.79	2.28
	mm	110	67	70	96	58
24	in	5.06	X	3.78	4.44	2.75
	mm	129	X	96	113	70
25	in	4.64	2.81	2.81	3.94	2.28
	mm	118	71	71	100	58
26	in	6.53	X	3.75	4.91	3.19
	mm	166	X	95	125	81
27	in	8.22	X	5.50	5.47	4.87
	mm	209	X	140	139	124
28	in	6.53	X	3.66	4.91	3.19
	mm	166	X	93	125	81
29	in	7.03	X	4.38	5.06	4.40
	mm	179	X	111	129	112

* DC dimensions slightly larger.
IMPORTANT: Valves may be mounted in any position, except as noted in specifications table.

Const. Ref. 1, 2

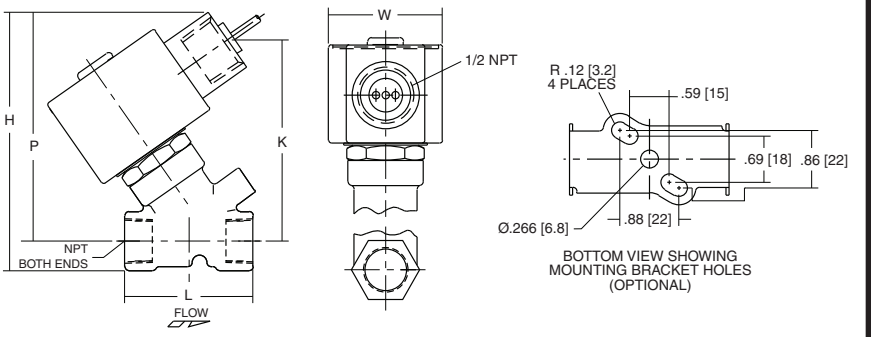

Const. Ref. 13

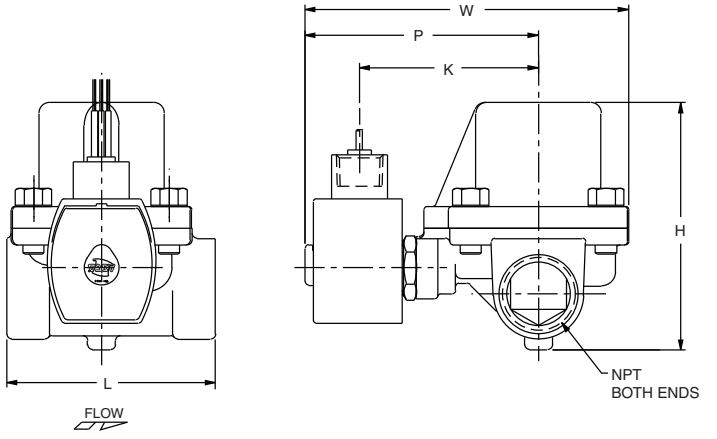

Const. Ref. 5-9, 11, 23 , 25, 37,38, 40-46

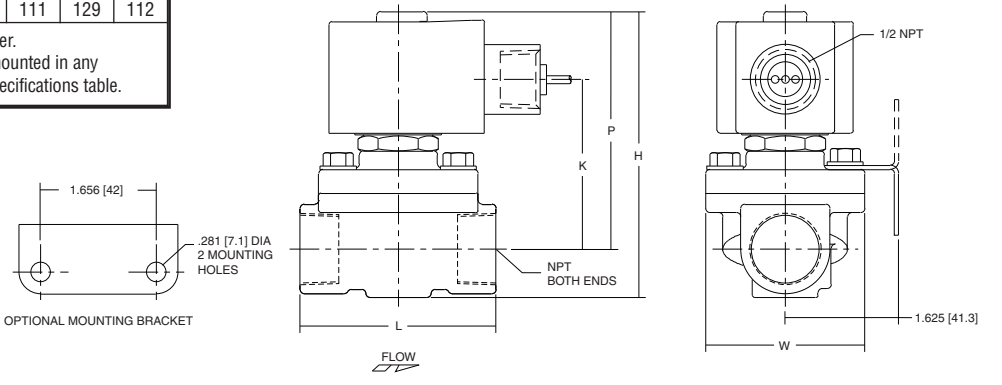

Dimensions: inches (mm)

Const. Ref.		H	K	L	P	W
30	in	8.22	X	5.06	5.47	4.87
	mm	209	X	129	139	124
31	in	5.13	3.19	3.76	4.32	3.27
	mm	130	81	95	110	83
32	in	5.60	3.44	3.66	4.57	3.27
	mm	142	87	93	116	83
33	in	5.92	3.66	4.51	4.80	3.89
	mm	150	93	115	122	99
34	in	6.91	X	3.75	6.09	3.25
	mm	176	X	95	155	83
35	in	7.34	X	3.66	6.34	3.25
	mm	186	X	93	161	83
36	in	7.66	X	4.38	6.56	3.91
	mm	1.95	X	111	167	99
37	in	4.61	2.75	2.81	3.89	2.39
	mm	117	70	71	99	61
38	in	4.61	2.75	2.81	3.89	2.39
	mm	117	70	71	99	61
39	in	5.42	2.31	2.75	4.86	3.80
	mm	138	59	70	123	97
40	in	5.20	3.29	2.81	4.50	2.28
	mm	132	83	71	114	58
41	in	5.13	3.10	3.75	4.32	3.25
	mm	130	79	95	110	83
42	in	6.43	4.40	3.93	5.62	3.25
	mm	163	112	100	143	83
43	in	5.57	3.35	3.66	4.57	3.25
	mm	142	85	93	116	83
44	in	5.90	3.57	4.38	4.79	3.91
	mm	150	91	111	122	99
45	in	5.26	3.17	3.75	4.38	3.84
	mm	134	81	95	111	98
46	in	4.95	3.10	3.84	4.31	2.75
	mm	126	79	98	110	70
47	in	6.43	3.59	3.75	4.81	3.52
	mm	163	91	95	122	90
48	in	6.43	3.59	3.66	4.81	3.73
	mm	163	91	93	122	95
49	in	6.91	3.75	4.38	4.96	4.40
	mm	176	95	111	126	112
50	in	8.13	4.15	5.06	5.37	4.87
	mm	207	105	129	136	124
51	in	8.13	4.15	5.50	5.37	5.18
	mm	207	105	140	136	132

IMPORTANT: Valves may be mounted in any position, except as noted in specifications table.

Const. Ref. 10, 15, 31, 32, 33

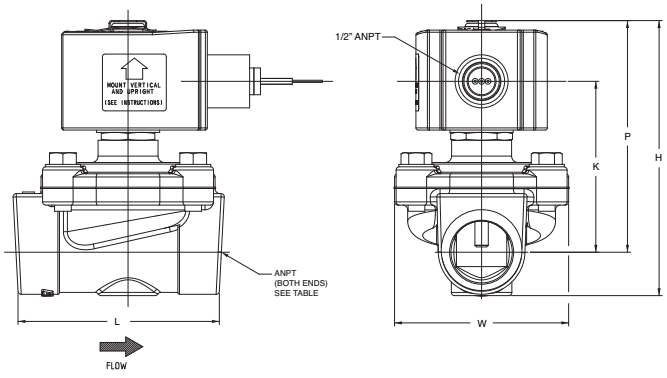

Const. Ref. 24, 34, 35, 36

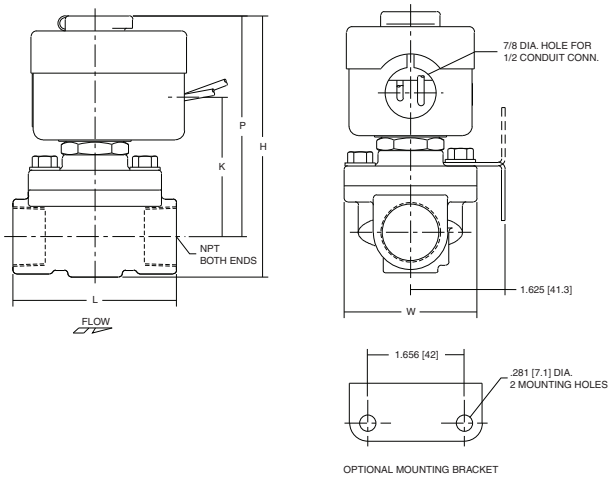

Const. Ref. 12, 16, 26, 28, 47, 48

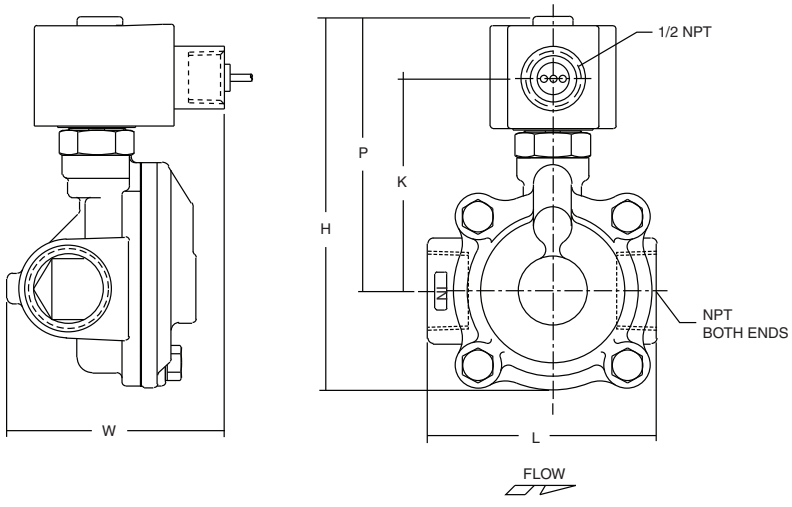

Dimensions: inches (mm)

Const. Ref. 39

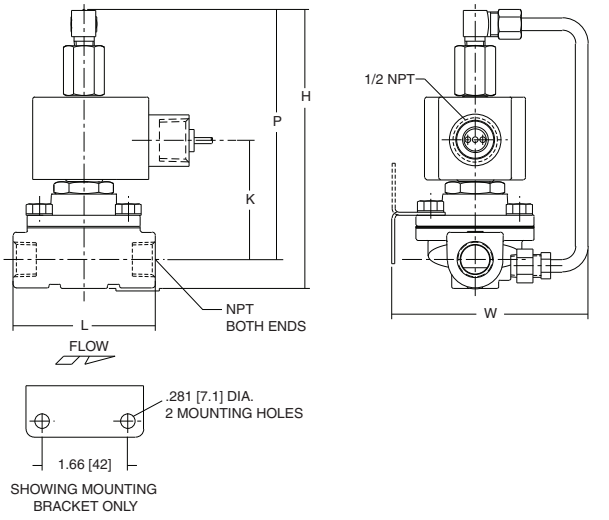

Const. Ref. 18, 29, 49

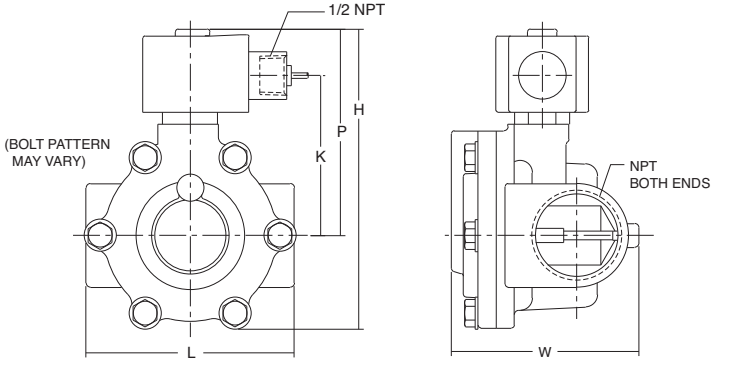

Const. Ref. 20, 21, 27, 30, 50, 51

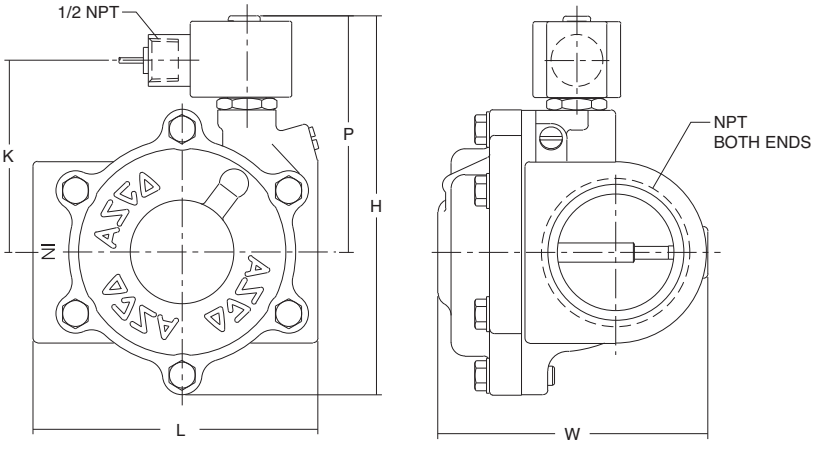

CS-305-170 : Identification sheet

VWTC PROJECT NUMBER:	Iqaluit WWTP	REV:	01
PROJECT NAME:	5000218036	SUBMITTED TO (COMPANY):	
ENGINEER:	G. HÉBERT	SUBMITTED TO (RESPONSIBLE)	
PROJECT MANAGER:	C. BEKAERT	PROJECT NUM REFERENCE.:	
PHONE NUMBER:		LOT NUMBER:	

SUPPLIER	EQPT CODE	EQPT TAG NO	DIA	DESCRIPTION	INFO 1	INFO 2	INFO 3	APPLIC.	NOTE	REV
CHEMLINE	VARFPV348512	PRV-772	DIA: 25 mm (1")	BACKPRESSURE VALVES	TYPE: BACK PRESSURE VALVE | 150#//MANUFACTURER : CHEMLINE//MODEL : SB12A010EU + SGA-005-002-P-G + P025-160-BM//CONNECTION TYPE : UNION SOCKET | 25 mm (1")//BODY : PVC// SEAL | SEAT :EPDM | EPDM// STEM : N/A	(CONFIG. L_U)				1
CHEMLINE	VARFPV348512	PRV-773	DIA: 25 mm (1")	BACKPRESSURE VALVES	TYPE: BACK PRESSURE VALVE | 150#//MANUFACTURER : CHEMLINE//MODEL : SB12A010EU + SGA-005-002-P-G + P025-160-BM//CONNECTION TYPE : UNION SOCKET | 25 mm (1")//BODY : PVC// SEAL | SEAT :EPDM | EPDM// STEM : N/A	(CONFIG. L_U)				1
CHEMLINE	VARFPV348512	PRV-774	DIA: 25 mm (1")	BACKPRESSURE VALVES	TYPE: BACK PRESSURE VALVE | 150#//MANUFACTURER : CHEMLINE//MODEL : SB12A010EU + SGA-005-002-P-G + P025-160-BM//CONNECTION TYPE : UNION SOCKET | 25 mm (1")//BODY : PVC// SEAL | SEAT :EPDM | EPDM// STEM : N/A	(CONFIG. L_U)				1

PDF Published September 17, 2014

SB12 Series Back Pressure/Relief Valves

CHEMLINE PLASTICS
SUPERIOR FLOW SOLUTIONS

PVC PP PVDF

CRN Registered as Category C Fittings Consult Chemline

NSF 3 Certified to NSF/ANSI 61

SERIES: SB12

SIZES: 3/8" – 4"

ENDS: True Union Socket, Threaded or ChemFlare™[1] Spigot[2] Bodies with Plain, Socket, Threaded or Flanged ends

DIAPHRAGM: PTFE Bonded EPDM

SEALS: EPDM, FKM (Viton®)



True Union Ends
Easy installation and maintenance

The Chemline SB Series Back Pressure/ Relief Valve has two functions. As a ***back pressure valve***, installed in-line downstream of a pump, the back pressure below the metering pump is maintained. When installed in the branch of a tee it is a ***pressure relief valve***. The valve stays closed until inlet pressure reaches the set pressure which is adjusted by turning the spring tensioning bolt. Inlet pressure acts upward against the piston allowing excess pressure to flow upwards through the orifice.

The SB12 Series has a built-in check valve function, desirable for dosing applications. It is not so sensitive as to open with every pulsation from a metering pump.

features

True Union Ends
- Easy installation and maintenance
- Eliminate chemical leakage problems common with old fashioned threaded connections

Long Cycling Life
- Dynamic seal is PTFE bonded EPDM for high chemical resistance
- This moulded diaphragm is designed for superior sealing and flex life

Superior Performance in Dosing Systems
- Valves are hydraulically designed for very low hysteresis ("backlash") and to eliminate chatter
- Built-in check (non-return) function
- Valve opening depends on inlet pressure only and is uneffected by changes in downstream (back) pressure

CRN Registration numbers by province
- Ontario: OC10134.5
- Newfoundland: OC10134.50
- Alberta: OC10134.52
- Saskatchewan/Manitoba/Quebec: OC10134.56
- New Brunswick: OC10134.57
- Nova Scotia: OC10134.58
- P.E.I.: OC10134.59
- British Columbia: not required

technical

Set Pressure Ranges
- 1/2" to 2" – 5 to 150 psi
- 2-1/2" and 3" – 7.5 to 150 psi
- 2-1/2" to 4" – 4 to 60 psi (optional)
- 4" – 7.5 to 90 psi

Maximum Viscosity
- 120cP is maximum recommended service viscosity

[1] For ChemFlare™ end connectors, consult Chemline.
[2] PP and PVDF spigot ends have DIN dimensions and will butt fuse directly to Chemline PP and PVDF piping systems.
[3] PVC valves with EPDM or FKM (Viton®) seals are certified under NSF/ANSI Standard 61 for contact with drinking water.

09/14 ©Chemline Plastics Limited 2014
Chemline is a registered trade mark of Chemline Plastics Limited

SB12 Series Back Pressure/Relief Valves 1/2" to 2"

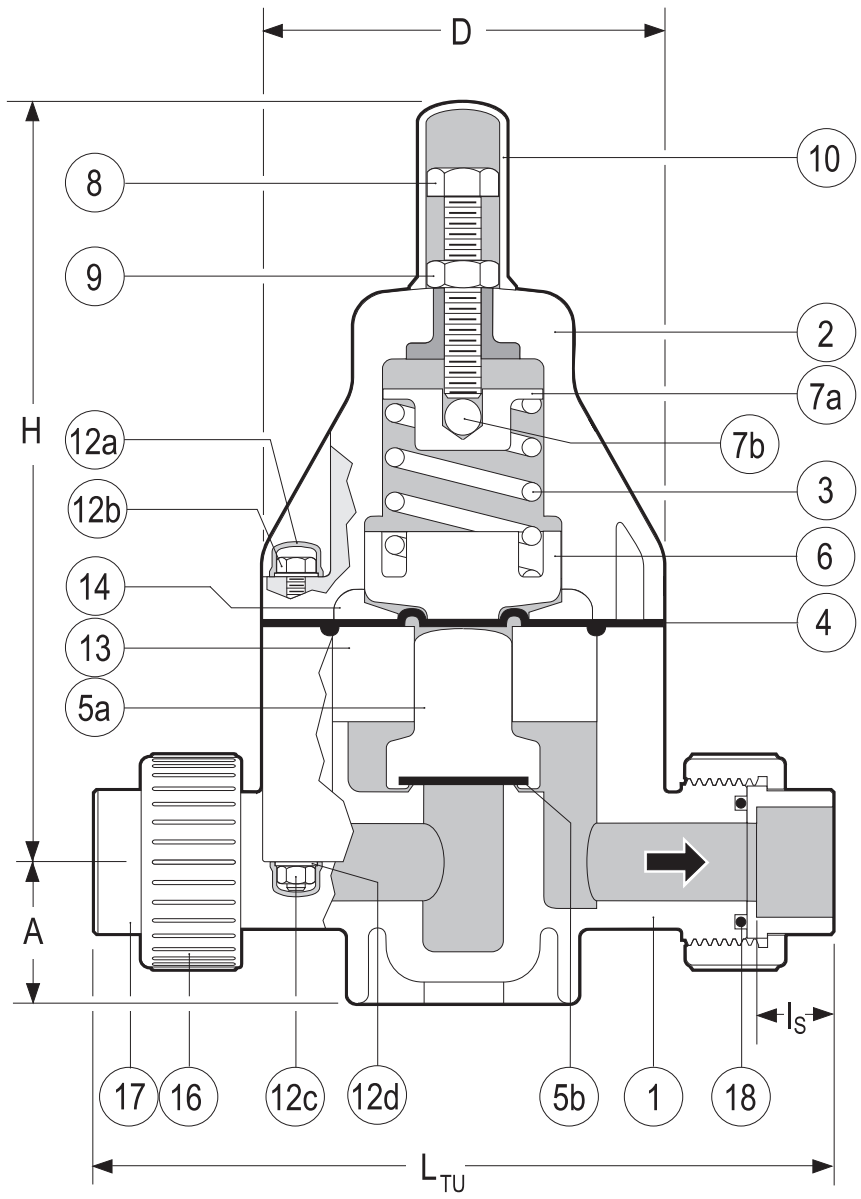

True Union Body

PARTS

▲ Recommended Spare Parts

No.	Part	Pcs.	Materials
1	Body	1	PVC, PP, PVDF
2	Bonnet	1	PPG
3	Spring	1	Galvanized Steel
4▲	Control Diaphragm	1	PTFE bonded EPDM
5a▲	Piston	1	PVC, PP, PVDF
5b▲	Seat	1	EPDM, FPM(Viton®)
6	Lower Spring Retainer	1	PPG
7a	Upper Spring Retainer	1	Cad. Plated Steel
7b	Ball	1	304 SS
8	Spring Tensioning Bolt	1	304 SS
9	Lock Nut	1	304 SS
10	Spring Bolt Cap	1	PE
12a	Bolt/Nut Cap	8/12[1]	PE
12b	Hex Bolt	4/6[1]	304 SS
12c	Hex Nut	4/6[1]	304 SS
12d	Washer	8/12[1]	304 SS
13	Spacer Disc	1	PVC, PP, PVDF
14	Pressure Plate	1	PP
16	Union Nut	2	PVC, PP, PVDF
17	End Connector	2	PVC, PP, PVDF
18▲	Face O-Ring	2	EPDM, FPM(Viton®)

[1] 1/2" size / 3/4" to 2" sizes

OTHER ENDS

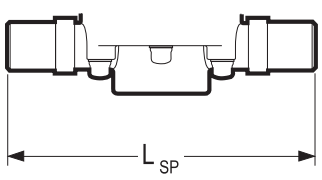

Spigot Body

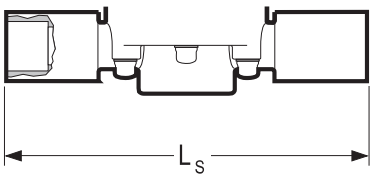

Socket

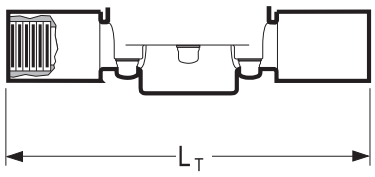

Threaded

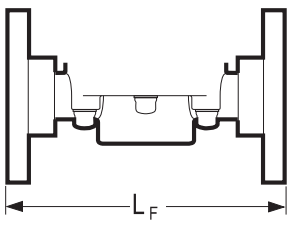

Flanged

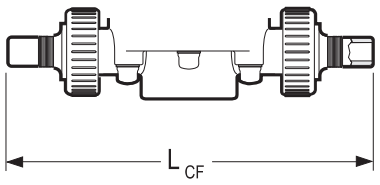

ChemFlare™

DIMENSIONS INCHES — WEIGHTS LB. — Cv VALUES

			PVC								PP and PVDF						
Size	D	H	A	I_S	L_{TU}[2]	L_{SP}[3]	L_S	L_T	L_F	L_{CF}	A	L_{SP}[3]	L_{TU}[2]	PVC	PP	PVDF	USGPM Flow at 1 psi △P
3/8"	3.2	6.9	1.0	0.6	6.5	5.7	7.4	7.2	4.5	8.2	0.9	5.7	**	1.8	1.5	2.2	2.1
1/2"	3.2	6.9	1.0	0.6	6.8	5.7	8.0	7.8	6.3	8.3[4]	0.9	5.7	7.1	1.9	1.6	2.4	3.0
3/4"	4.2	8.0	1.5	0.7	8.3	6.9	9.3	8.9	7.4	9.7	1.4	6.9	8.4	4.1	3.5	4.6	6.6
1"	4.2	8.0	1.5	0.9	8.5	6.9	9.6	9.3	7.4	10.2	1.4	6.9	8.7	4.2	3.5	4.7	8.7
1-1/4"	5.8	10.3	2.2	1.0	10.9	8.8	11.6	11.2	9.2	13.5	2.1	8.8	10.9	11.0	9.0	12.0	18.0
1-1/2"	5.8	10.3	2.2	1.2	11.1	8.8	12.2	11.5	9.5	–	2.1	8.8	11.2	11.2	9.2	12.2	20.0
2"	5.8	10.3	2.2	1.5	11.3	9.6	12.9	12.0	10.0	–	2.1	8.8	13.2	11.4	9.4	12.4	21.4

[2] True Union bodies come standard with socket ends. Threaded union ends are available. ** Consult Chemline.

[3] Spigot bodies are used for non union socket, threaded or flanged ends. All spigot ends have metric dimensions and the PP and PVDF spigots butt fuse directly to Chemline PP and PVDF piping. [4] Tube size can be reduced to 1/4" tube, LCF = 7.74" for 1/4", 8.26" for 3/8".

MAXIMUM PRESSURES PSI

	PVC				PP					PVDF					
Size	20°C 68°F	30°C 86°F	40°C 104°F	50°C 122°F	30°C 86°F	40°C 104°F	50°C 122°F	60°C 140°F	70°C 158°F	30°C 86°F	50°C 122°F	70°C 158°F	80°C 176°F	90°C 194°F	100°C 212°F
1/2"– 2"	150	105	60	15	150	90	60	37.5	15	150	100	60	45	30	15

Temperature Ranges: PVC 0 to 50°C (32 to 122°F), **PP** 10 to 70°C (50 to 158°F), **PVDF** –30 to 100°C (–22 to 212°F).

SB12 Series Back Pressure/Relief Valves 1/2” to 2”

pressure loss nomogram for SB12 valves 3/8” to 2”

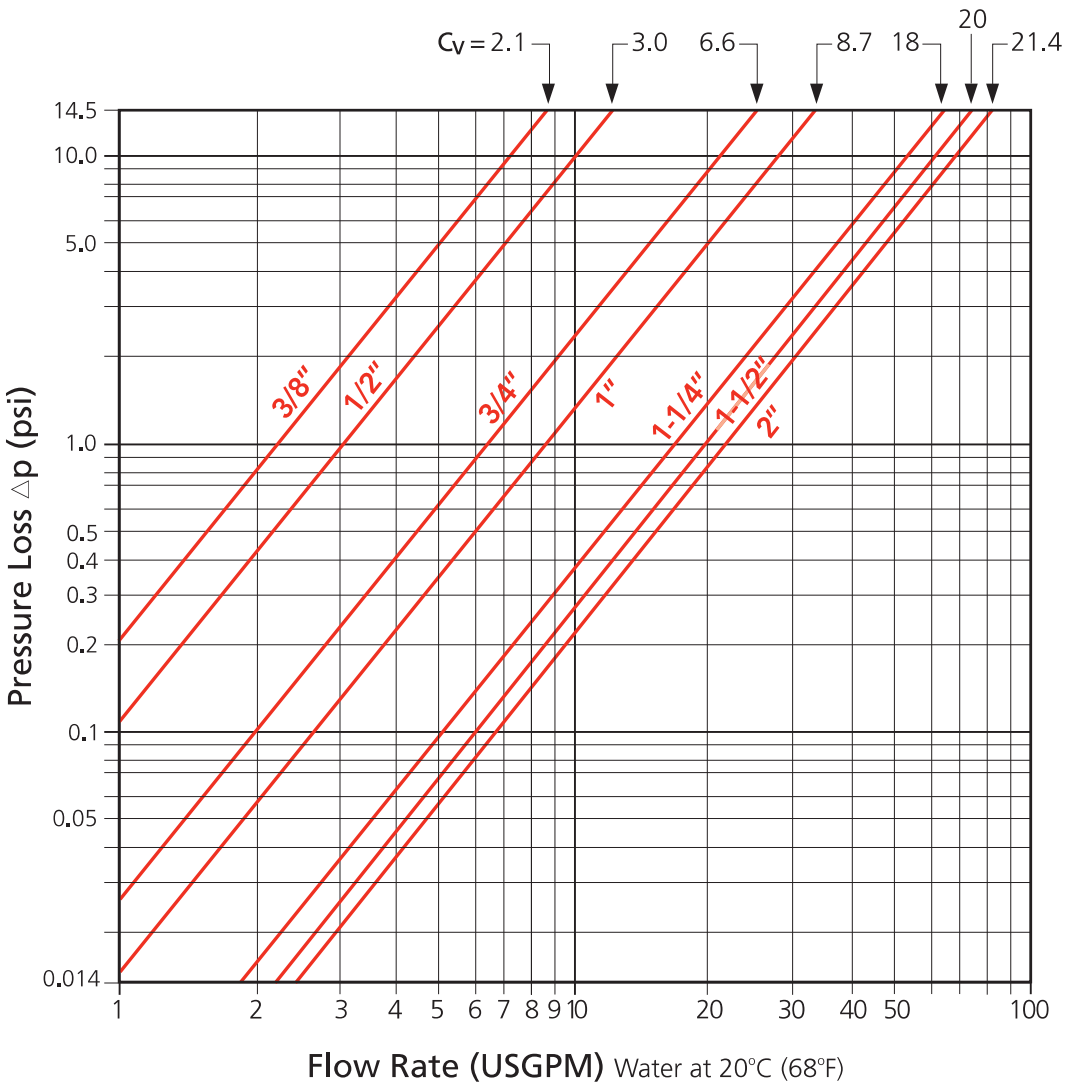

typical dosing system schematic

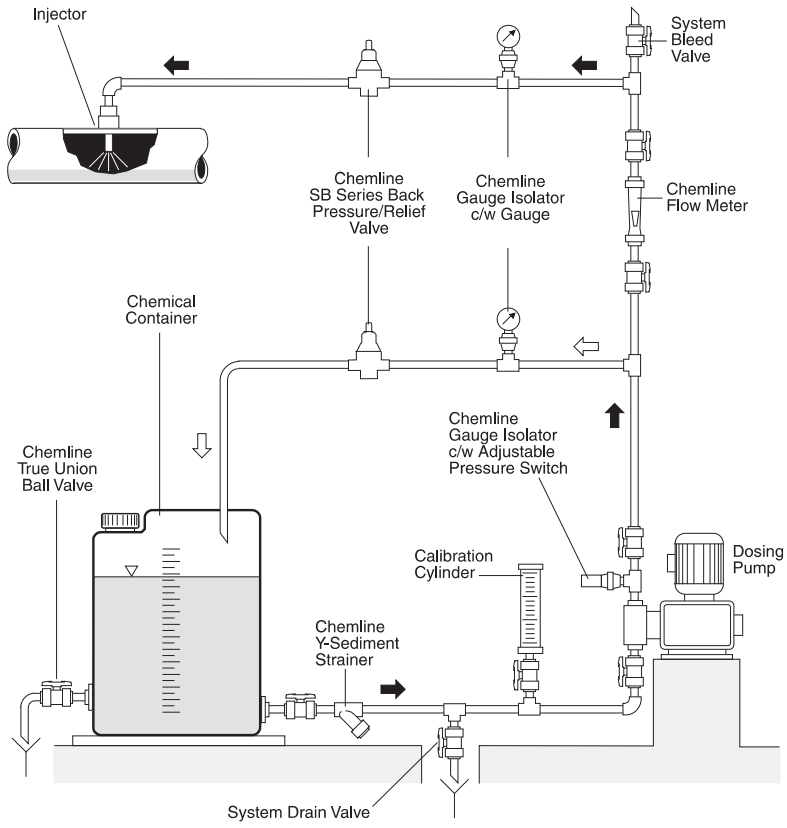

application of pressure relief valves

Constant System Pressure

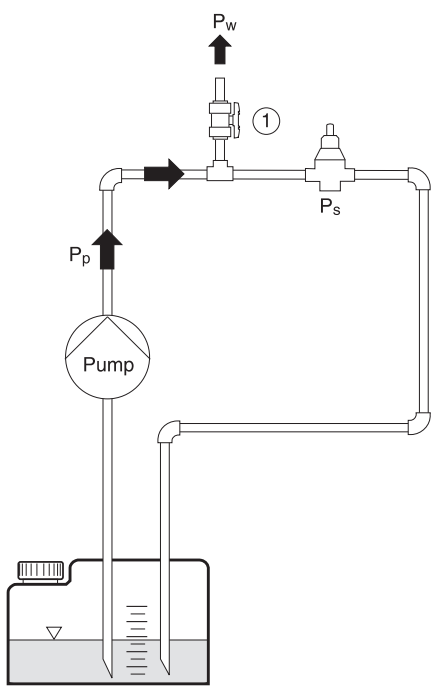

$P_p \geq P_w$
$P_p \geq P_s$ → valve opens
$P_p \leq P_s$ → valve closed

Consumer 1 and/or 2 Open, Valve Closes

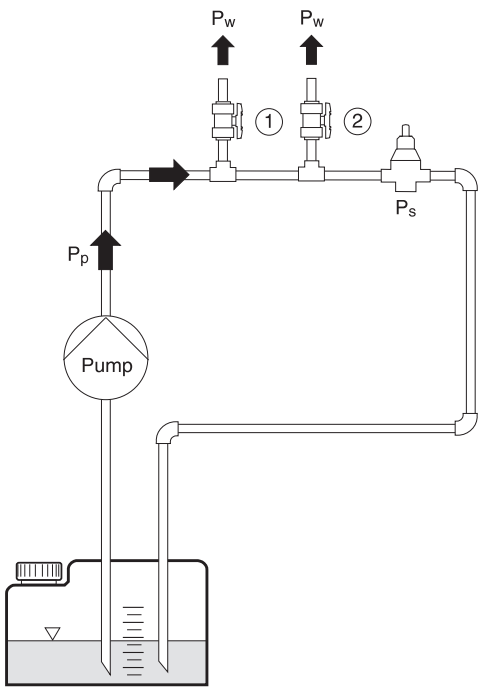

$P_p \geq P_s$ → valve opens
$P_p \leq P_s$ → valve closed

Non-Return Valve

Container 1 is located above the pump

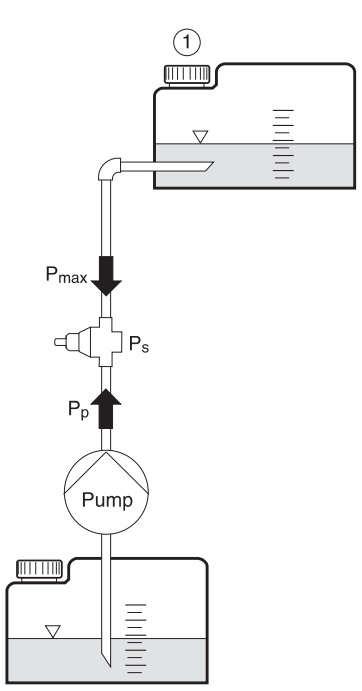

$P_s \geq P_{max}$
$P_p \geq P_s$ → valve opens
$P_p \leq P_s$ → valve closed

Overflow Valve

Pressure of container or application system should not exceed the maximum pressure value

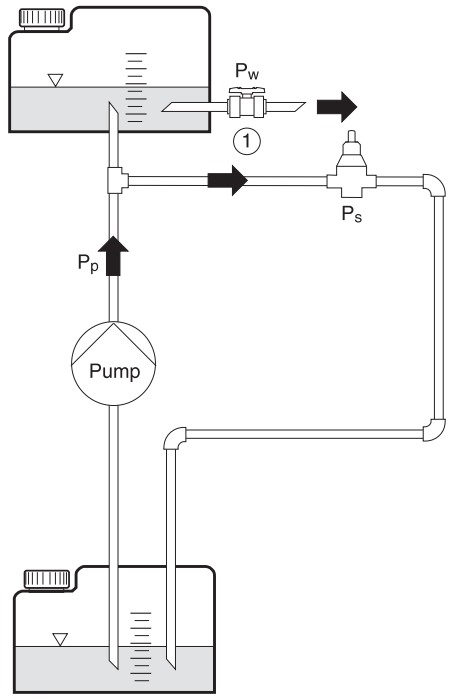

$P_s \leq P_w$
$P_p \geq P_s$ → valve opens
$P_p \leq P_s$ → valve closed

P_w = Working Pressure
P_p = Pump Pressure
P_s = Set Pressure

SB12 Series Back Pressure/Relief Valves 1/2" to 2"

working pressure vs. flow rate

The curves show the relationship between the working pressure and the approximate flow rate through the valve for water at 20°C (68°F) . These values will vary depending on:

- The configuration of the piping and the pressure losses associated with it
- The fluid if not water at 20°C (68°F)
- Whether the pressure is rising or falling, hysteresis is approximately 4 psi for 1/2" to 2" valves. For valves 2-1/2" to 4", hysteresis is approximately 14.5 psi.

operation examples

1. The valve is set closed at 100 psi. At a pressure increase of 10 psi, a flow of approximately 1.0 USGPM will be reached.
   - set pressure = 100 psi
   - working pressure = 110 psi
   - opening pressure = approximately 104 psi
2. The valve is set closed at 50 psi. At a pressure increase of 10 psi, a flow of approximately 1.0 USGPM will be reached.
   - set pressure = 50 psi
   - working pressure = 60 psi
   - opening pressure = approximately 54 psi

3/8" Valves

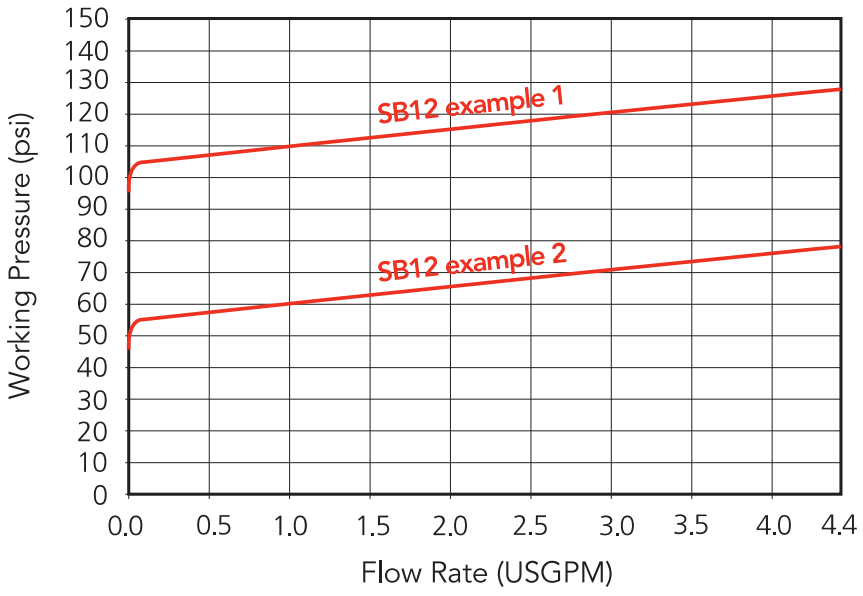

1/2" Valves

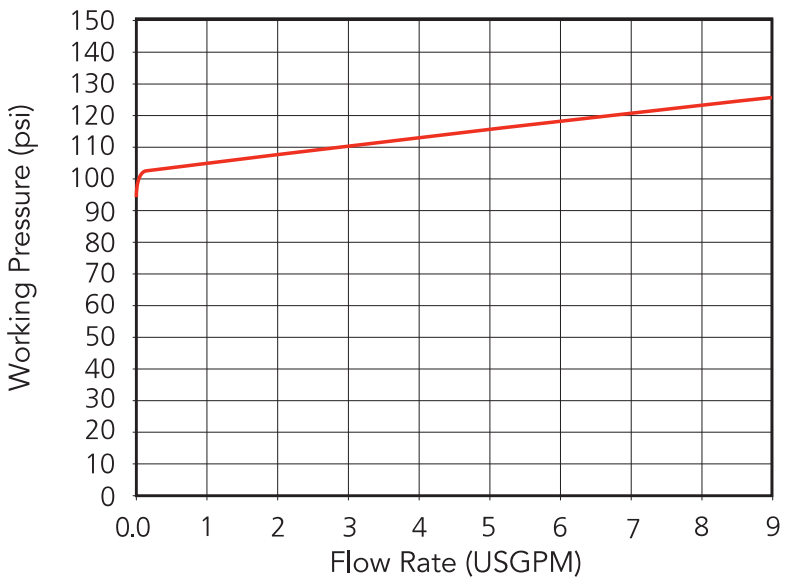

3/4" Valves

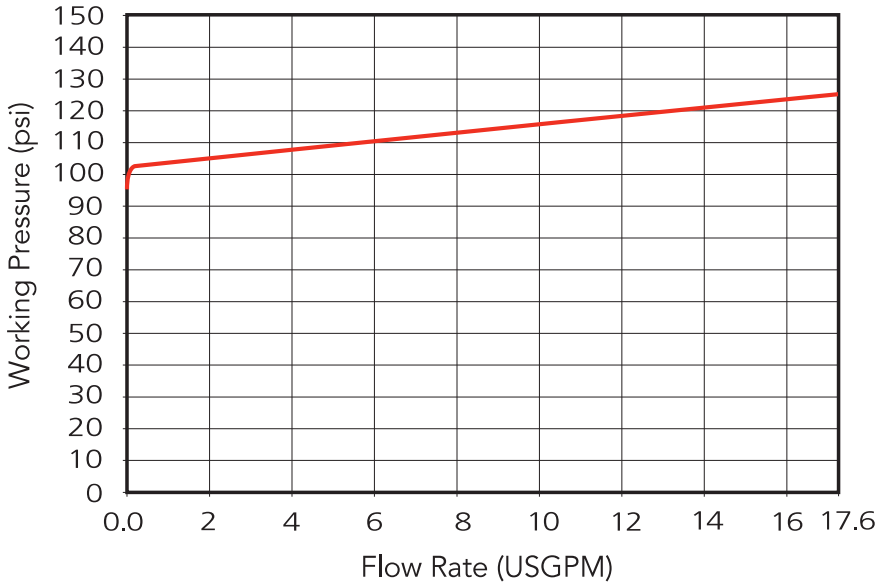

1" Valves

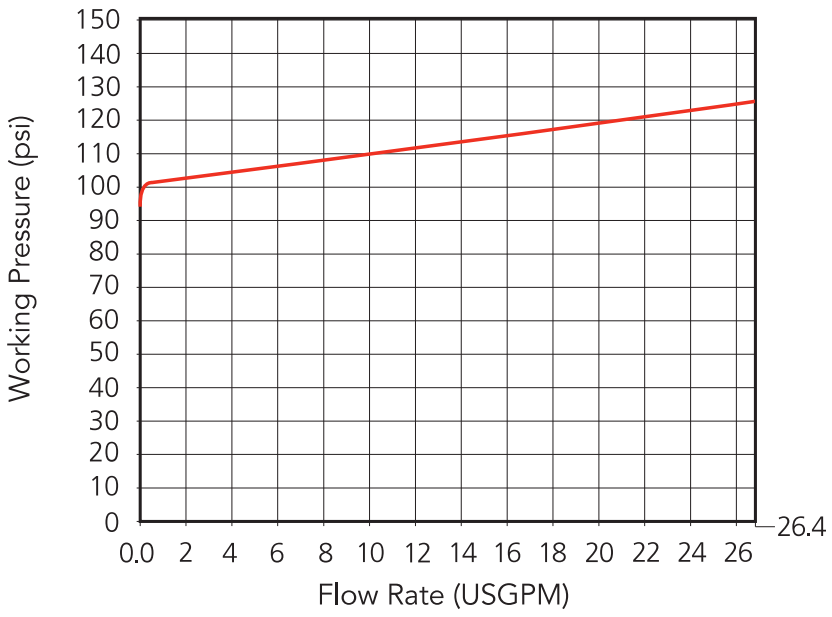

1-1/4" Valves

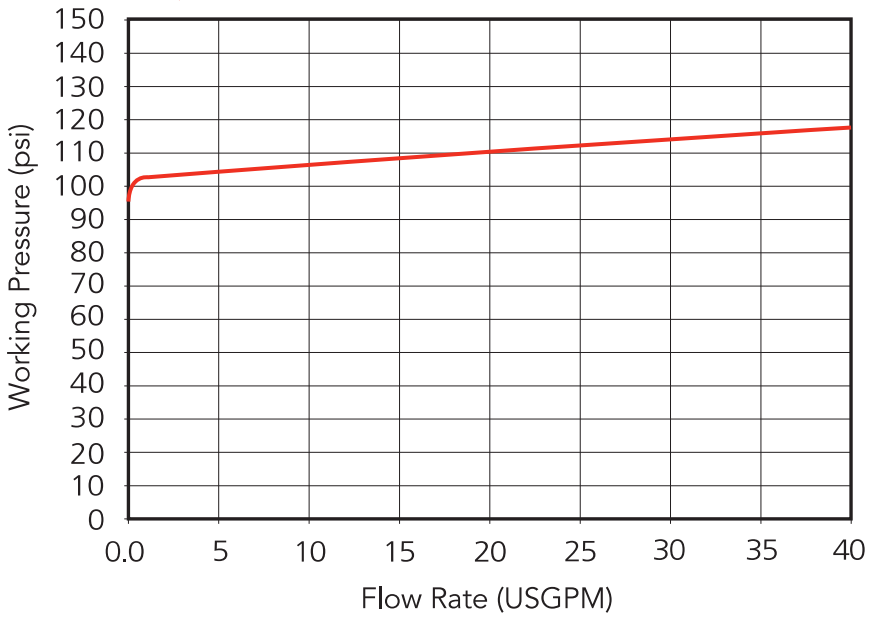

1-1/2" Valves

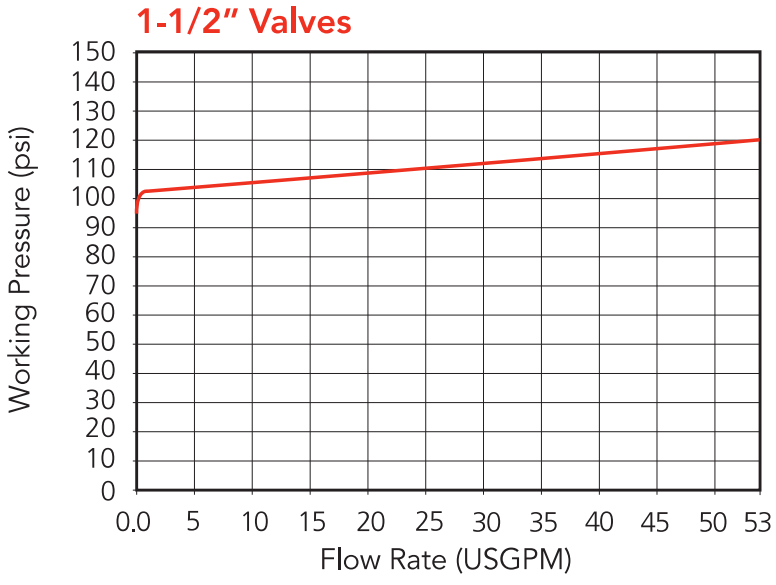

2" Valves

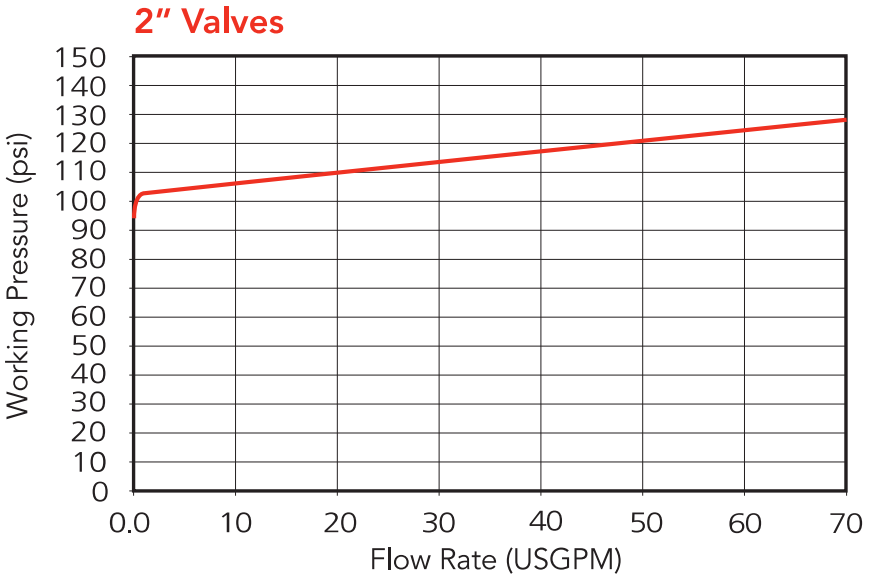

SB12 Series Back Pressure/Relief Valves 2-1/2" to 4"

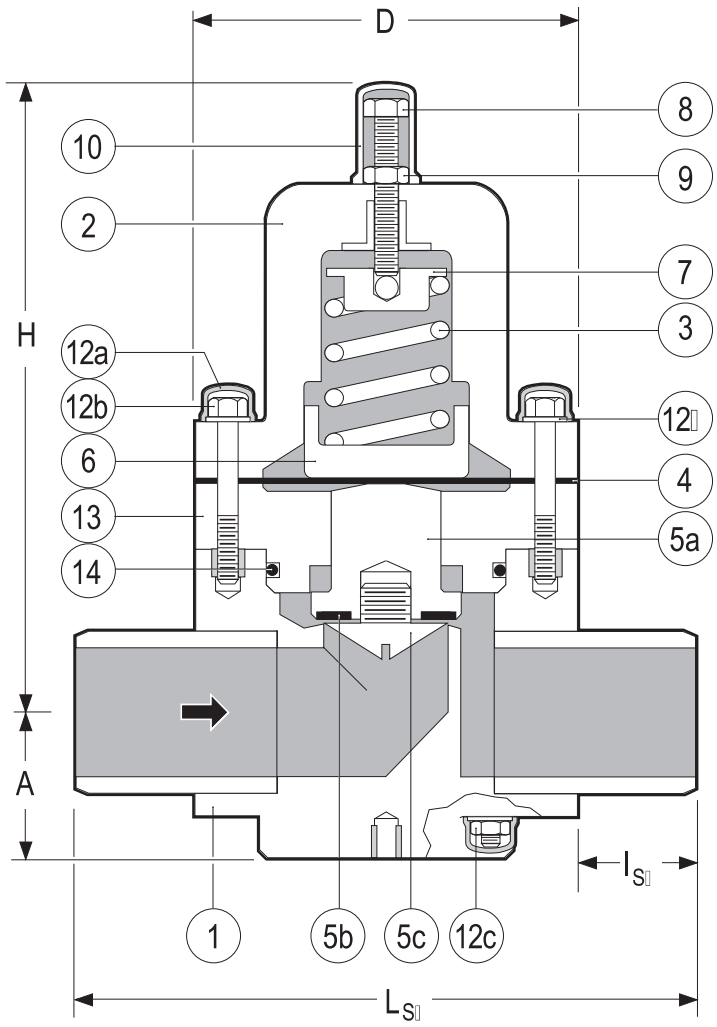

Spigot Body

PARTS

▲ Recommended Spare Parts

No.	Part	Pcs.	Materials
1	Body	1	PVC, PP, PVDF
2	Bonnet	1	PPG
3	Spring	1	Galvanized Steel
4▲	Control Diaphragm	1	PTFE bonded EPDM
5a▲	Piston	2	PVC, PP, PVDF
5b▲	Seat	1	EPDM, FPM(Viton®)
5c▲	Seat Retainer	1	PVC, PP, PVDF
6	Lower Spring Retainer	1	PPG
7	Upper Spring Retauner	1	304 SS
8	Spring Tensioning Bolt	1	304 SS
9	Lock Nut	1	304 SS
10	Spring Bolt Cap	1	PE
12a	Hex Bolt/Nut Cap	20	PE
12b	Hex Bolt/Stud	12[1]	304 SS
12c	Hex Nut	20	304 SS
12d	Washer	20	304 SS
13	Spacer Disc	1	PVC, PP, PVDF
14	Spacer O ring	1	EPDM, FPM(Viton®)

[1] 2 large upper bolts, 2 shorter lower bolts, 8 studs

OTHER ENDS

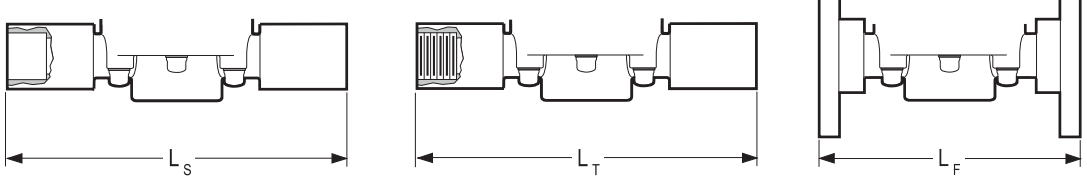

Socket Threaded Flanged



ChemFlare™ Ends

- For connection to PFA tube. Leak-free connections for difficult services such as sodium hypochlorite

DIMENSIONS INCHES

WEIGHTS LB.

Cv VALUES

Size	PVC, PP & PVDF A	D	H	L_{SP}[2]	I_{SP}	PVC L_F	PVC	PP	PVDF	USGPM Flow at 1 psi △P
2-1/2"	2.7	6.9	11.1	11.2	2.1	12.2	20.9	15.4	24.6	41
3"	3.0	7.9	12.2	14.2	3.1	15.0	26.4	23.8	30.8	63
4"	3.7	9.8	14.2	16.5	3.3	16.9	33.0	26.4	37.4	98

[2] Plain spigot ends in PP & PVDF may be butt fused directly to Chemline PP & PVDF piping systems. Weights based on spigot bodies.

MAXIMUM PRESSURES PSI

Size	PVC 20°C 68°F	30°C 86°F	40°C 104°F	50°C 122°F	PP 20°C 68°F	30°C 86°F	40°C 104°F	50°C 122°F	60°C 140°F	70°C 158°F	PVDF 30°C 86°F	50°C 122°F	70°C 158°F	80°C 176°F	90°C 194°F	100°C 212°F
2-1/2"– 4"	150	90	44	15	150	116	90	60	37.5	15	150	90	55	40	30	15

Temperature Ranges: PVC 0 to 50°C (32 to 122°F), **PP** 10 to 70°C (50 to 158°F), **PVDF** –30 to 100°C (–22 to 212°F).

ORDERING EXAMPLE

Chemline Back Pressure/ Relief Valves	SB12	A	005	V	U
Body Material	**A** – PVC	**B** – PP	**K** – PVDF		
Size	**003** – 3/8" **010** – 1" **020** – 2"	**005** – 1/2" **012** – 1-1/4" **025** – 2-1/2"	**007** – 3/4" **015** – 1-1/2" **030** – 3"	**040** – 4"		
Elastomers	**E** – EPDM	**V** – FPM (Viton®)				
Ends	**S** – Socket **CFx** – ChemFlare™	**T** – Threaded	**F** – Flanged **Blank** – Spigot (Butt)	**U** – Union Socket		

Example: Chemline SB 12 Series, PVC, 1/2" diameter, FPM (Viton®) seals, Union socket ends.
x = 4 for 1/4", **6** for 3/8", **8** for 1/2", **12** for 1" ID tube connections.

OPTIONS

- 4 to 60 psi Pressure Range springs for 2-1/2" to 4" valves
- **Integral Pressure Gauge** – for inlet and/or outlet
- Bodies in 316 Stainless Steel and PTFE



Optional Pressure Gauge

- For inlet and/or outlet

SB12 Series Back Pressure/Relief Valves 2-1/2" to 4"

working pressure vs. flow rate

- Whether the pressure is rising or falling, hysteresis is approximately 14.5 psi for 2-1/2" to 4" valves

2-1/2" Valves / 4 to 60 psi set pressure range

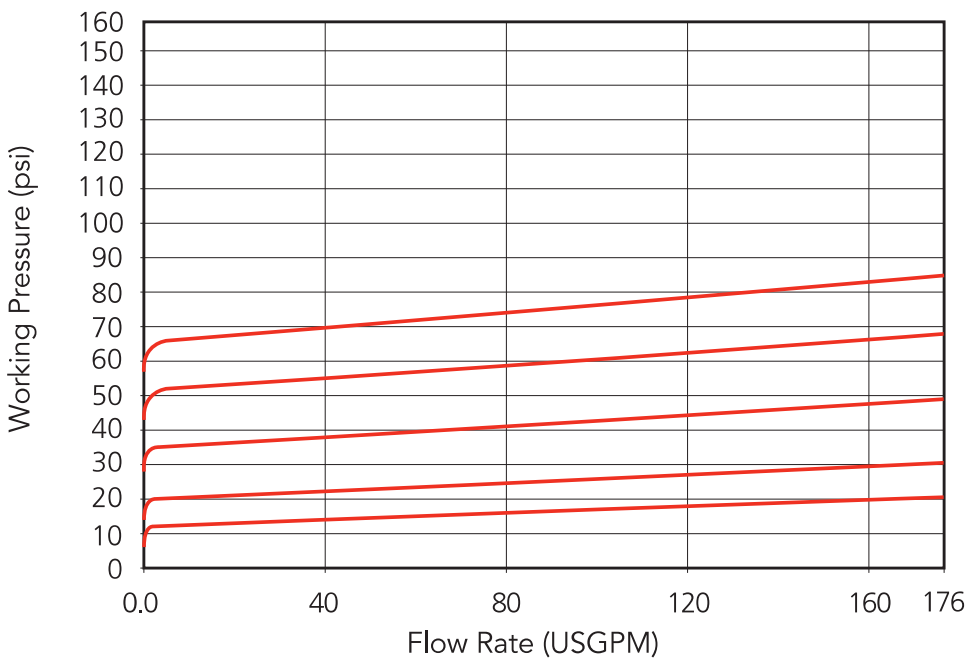

2-1/2" Valves / 7.5 to 150 psi set pressure range

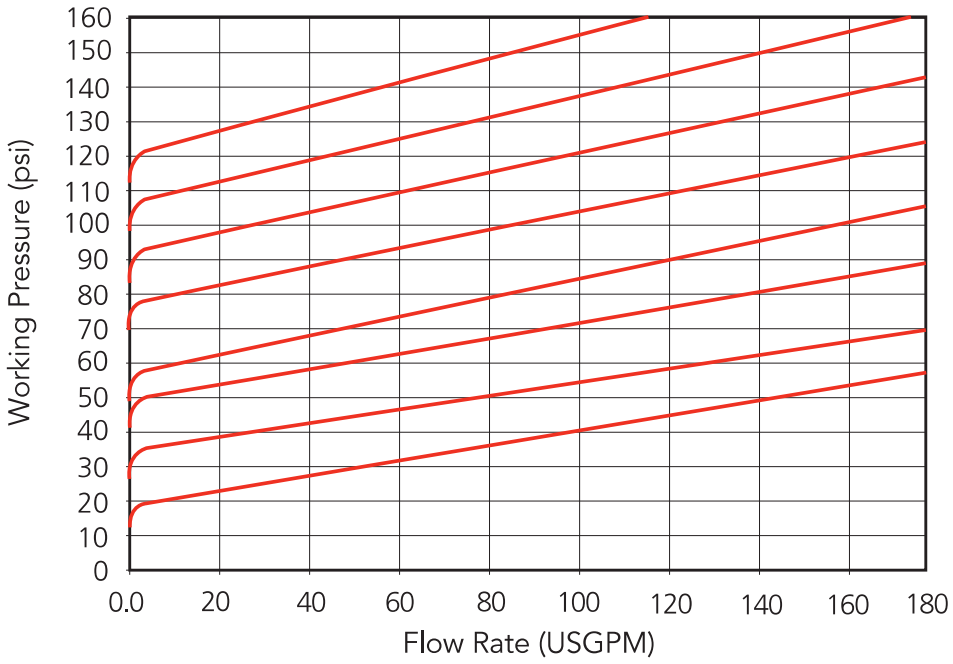

3" Valves / 4 to 60 psi set pressure range

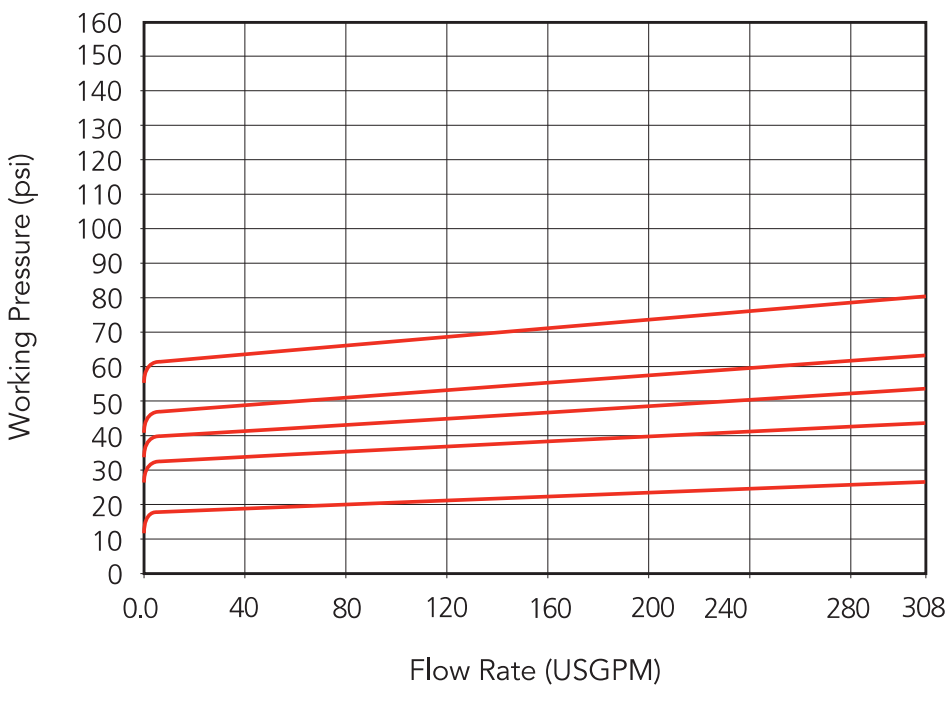

3" Valves / 7.5 to 150 psi set pressure range

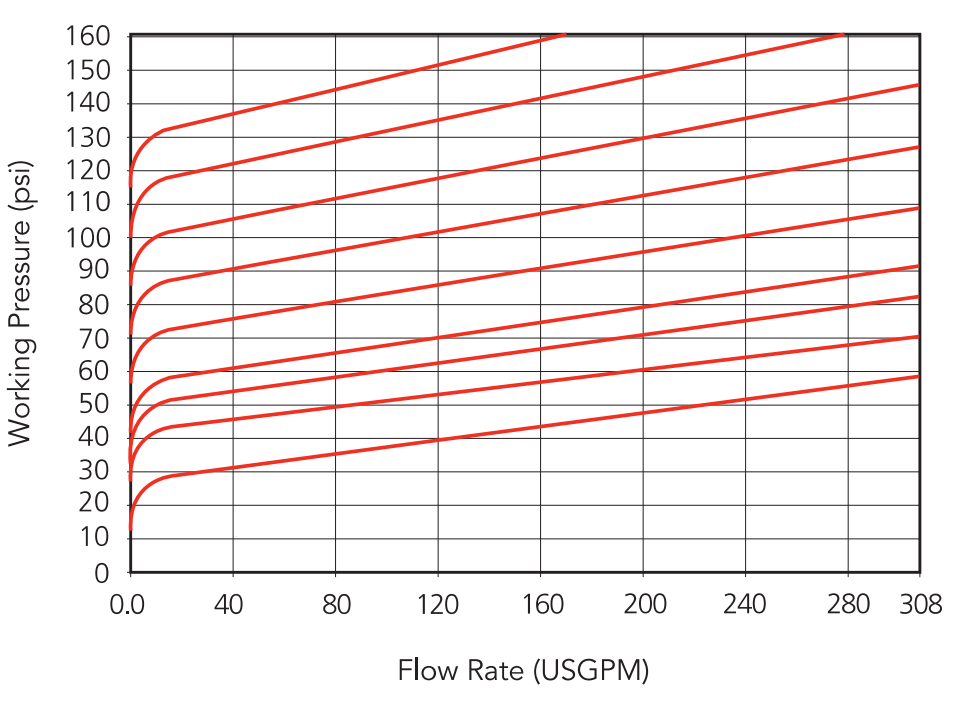

4" Valves / 4 to 60 psi set pressure range

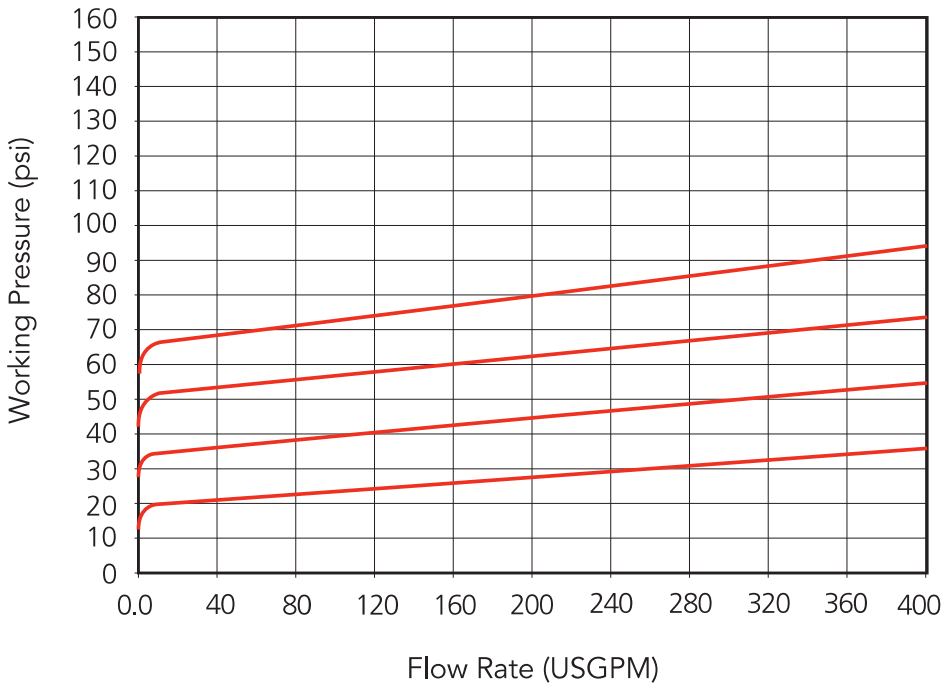

4" Valves / 7.5 to 90 psi set pressure range

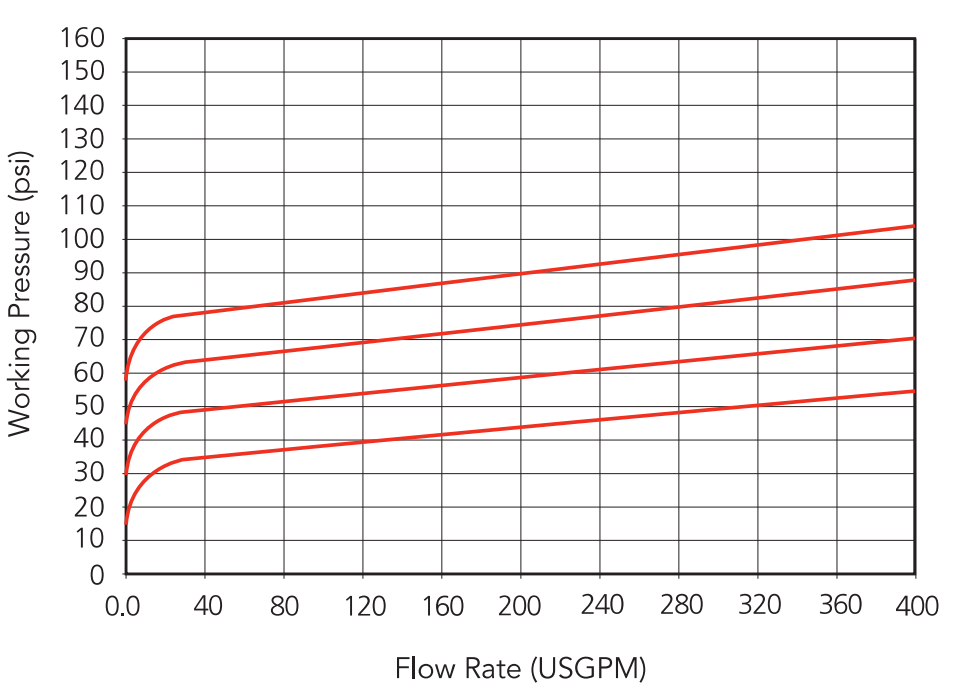

CHEMLINE PLASTICS
SUPERIOR FLOW SOLUTIONS

55 Guardsman Road, Thornhill, ON, L3T 6L2, Canada | ISO 9001:2008 Certified
tel.905.889.7890 | fax.905.889.8553 | request@chemline.com | chemline.com

PDF Published June 23, 2014

Gauge Isolators

CHEMLINE PLASTICS
SUPERIOR FLOW SOLUTIONS

PVC PP PVDF

CRN Registered Consult Chemline

NSF[4] Certified to NSF/ANSI 61

SERIES: SG

INLET CONNECTION: 1/4" or 1/2" Threaded[1]

INSTRUMENT CONNECTION: 1/4" or 1/2" Threaded

DIAPHRAGM: PTFE



Chemline SG Series Gauge Isolators allow inexpensive pressure gauges, or any other pressure instrument to be used in corrosive services. The upper chamber (gauge side) is filled with a stable fluid such as glycol or glycerine[2]. A diaphragm separates it from the lower chamber which receives the media under pressure.

The 1/2" gauge connection allows use of the popular 4" and 4-1/2" diameter gauges. Pressure switches or transmitters may also be installed. Customers can easily fill isolators and install their own gauges.

features

Easy to Mount Gauges

- It is easy to fill an isolator and field mount a gauge. No special equipment is required.
- Will accept popular 4" and 4-1/2" diameter gauges

Provision for Fill Port

- Housing may be drilled and tapped by Chemline or customer for a threaded fill port. This is used for filling isolator using a vacuum filling station

High Chemical Resistance

- Choice of body materials for a wide range of applications
- PTFE bonded EPDM dished diaphragm for high chemical resistance and sensitivity

Heavy Duty Design for Safety

- PPG[3] top chamber
- Heavy wall connection ports

CRN Registration number by province

- Ontario: OH16085.5

Optional Gauges

- Isolators are available alone or with gauge mounted and prefilled with glycol[2]

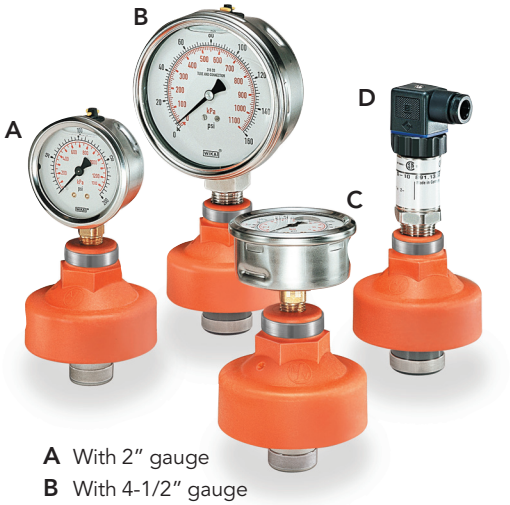

A With 2" gauge
B With 4-1/2" gauge
C With 2" back mount gauge
D With pressure transmitter

[1] Other available inlet connections are 1/2" socket or 1/2" to 1" flanged.
[2] Other fluids are available for special applications such as chlorine service.
[3] Glass reinforced polypropylene.
[4] PVC isolators are certified under NSF/ANSI Standard 61 for contact with drinking water.

06/14 ©Chemline Plastics Limited 2014
Chemline is a registered trade mark of Chemline Plastics Limited

Gauge Isolators

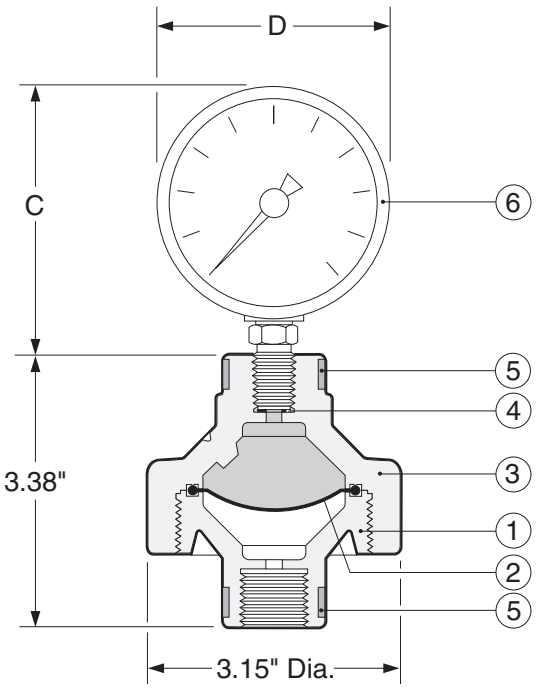

PARTS

No.	Part	Pcs.	Materials
1	Body	1	PVC, PP, PVDF
2	Diaphragm	1	PTFE
3	Bonnet	1	PPG[1]
4	Gasket	1	EPDM
5	Stainless Steel Bands	2	304 SS
6	Optional Gauge	1	See below

[1]PPG = Glass reinforced polypropylene

OPTIONAL GAUGES

- Chemline offers the gauges listed below mounted to isolator and prefilled with glycol, glycerine or special fluid for chlorine applications. These gauges have dials and cases filled with either glycol (standard), glycerine or silicon for corrosion resistance and dampening.
- Chemline SG gauge isolators are not recommended for vacuum applications. They will not affect the gauge accuracy as low as approximately 3 psi. The accuracy depends on the process conditions and the gauge installed on it.

OTHER OPTIONS

- **Flanged** inlet connections
- **Threaded Fill Port** – drilled, tapped and plugged
- Chemline will mount any pressure instrument supplied free issue by customer

DIMENSIONS (Gauge Isolator with optional gauge installed) INCHES

Optional Gauge Ordering No.	Gauge Diameter	Gauge Connection	Housing	Bourdon Tube	Window	Accuracy	Dimensions C	Dimensions D(max.)
P025-xx	2-1/2"	1/4"	316 SS	Brass	Polycarbonate	±1.5% of span	3.1	2.5
P025-xx-SS	2-1/2"	1/4"	316 SS	316 SS	Polycarbonate	±1.5% of span	3.1	2.5
P025-xx-SS/BM	2-1/2" Back Mount	1/4"	316 SS	316 SS	Polycarbonate	±1.5% of span	1.6	2.5
P025-xx-BM	2-1/2" Back Mount	1/4"	316 SS	Brass	Polycarbonate	±1.5% of span	1.6	2.5
P040-xx-SS	4"	1/2"	316 SS	316 SS	Safety Glass	±1% of span	4.5	4.0
P045-xx-SS	4-1/2"	1/2"	PBTP Plastic[2]	316 SS	Acrylic	±0.5% of span	6.3	5.8

xx denotes the maximum gauge pressure i.e., 30, 60, 100, 160 or 200 psi. See data page for recommended working pressures.
[2] PBTP = glass filled polyester.

WORKING PRESSURES PSI

WEIGHTS

Material	10 – 20°C 50 – 68°F	30°C 86°F	40°C 104°F	50°C 122°F	60°C 140°F	70°C 158°F	80°C 176°F	90°C 194°F	100°C 212°F	120°C 248°F	Net Weights Pounds[3]
PVC	150	100	80	45	15	–	–	–	–	–	1.0
PP	150	125	100	80	65	45	–	–	–	–	0.7
PVDF	150	150	150	125	105	85	70	60	45	30	1.3

Temperature Ranges: PVC 0 to 60°C (32 to 140°F), **PP** 10 to 80°C (50 to 176°F), **PVDF** –30 to 120°C (–22 to 248°F).
NR = Not Recommended. [3] Weights are for unfilled 1/2" x 1/2" isolators without gauges. 1/2" x 1/4" isolators are 20% lighter.

ORDERING EXAMPLE

Chemline Gauge Isolators SG	A	005-	002	P	G
Body Material	**A** – PVC	**B** – PP	**K** – PVDF		
Inlet Size	**002** – 1/4"	**005** – 1/2"(Standard)			
Instrument Connection	**002** – 1/4"	**005** – 1/2"			
Diaphragm	**P** – PTFE bonded EPDM				
Filling & Mounting	**G** –Add only if isolator is supplied filled with glycol and gauge or pressure instrument is mounted by Chemline. Separate gauge item numbers are listed above.				

Example: Chemline SG Series Gauge Isolator, PVC, 1/2" x 1/4" FNPT inlet x instrument connections, PTFE diaphragm.

CHEMLINE PLASTICS
SUPERIOR FLOW SOLUTIONS
55 Guardsman Road, Thornhill, ON, L3T 6L2, Canada | ISO 9001:2008 Certified
tel.905.889.7890 | fax.905.889.8553 | request@chemline.com | chemline.com

Project name:	IQALUIT
Project#:	5000218036
Document #:	5000218036_DS_0007_PM_VWT
by:	BB
chkd:	GH
appvd:	CB

SKID TRIPLEX

CALIBRATION CYLINDER

OIM manual section: 4.3.7.4

CS-500-100 : Identification sheet

VWTC PROJECT NUMBER:	Iqaluit WWTP	REV:	01
PROJECT NAME:	5000218036	SUBMITTED TO (COMPANY):	
ENGINEER:	G. HÉBERT	SUBMITTED TO (RESPONSIBLE)	
PROJECT MANAGER:	C. BEKAERT	PROJECT NUM REFERENCE.:	
PHONE NUMBER:		LOT NUMBER:	

SUPPLIER	EQPT CODE	EQPT TAG NO	DIA	DESCRIPTION	INFO 1	INFO 2	INFO 3	APPLIC.	NOTE	REV
PRIMARY FLUID	PUSPPV200290	CC-04-790	N/A	CALIBRATION CYLINDER	CALIBRATION CYLINDER/MANUFACTURER: PRIMARY FLUID/MODEL: PV2-1000	N/A	N/A			1

ACCUDRAW® Calibration Cylinders



Polypropylene


PVC


Glass



- PVC with removable "O" ring sealed top for easy cleaning

- yellow polypropylene level indicator float for high visibility

ACCUDRAW® ***has been developed for the accurate calibration of metering pumps. Standard features include:***

- translucent
- chemical resistant
- break resistant
- threaded, socket or flanged
- colored graduations and lettering
- PVC has dual scale USGPH & ml
- PVC sizes 100 - 20000 ml
- POLY sizes 100 - 4000 ml
- POLY meets ISO standards
- Glass sizes 100 - 20000 ml
- custom designs available

For detailed product information visit our website: primaryfluid.com

PRIMARY FLUID SYSTEMS INC.
Call Toll Free 1-800-776-6580
Tel (905) 333-8743 Fax (905) 333-8746
E-Mail: primary@primaryfluid.com
www.primaryfluid.com

ACCUDRAW® Calibration Cylinders

"For Accuracy That Counts"

For complete product information visit our website: primaryfluid.com



Flanged: Glass, PVC



Flanged: PVC

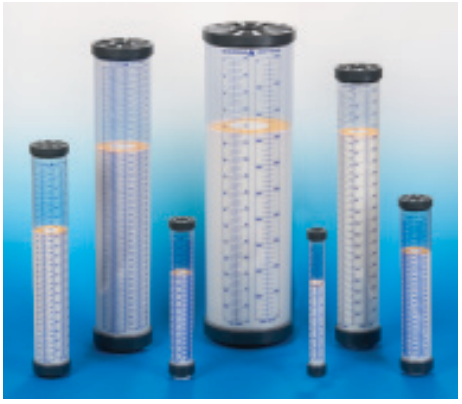

PV#4

Sizing and Ordering Information:

ACCUDRAW Standard Materials of Construction

AC = All polypropylene construction (see below for options)
PV = All polyvinylchloride construction (see below for options)
ACS = Glass*

Note: Cylinders are NOT pressure vessels

Example: AC#1-1000B
AC = PP (polypropylene)
#1 = Bottom threaded connection only
1000 = 1000 ml
B = BSP Thread

e.g. Part # AC #1 - 1000 B

Type:
AC = Polypropylene
PV = PVC
ACS = Glass

Style:
1 = Bottom threaded conn. only
2 = Top and Bottom threaded conn.
3 = Bottom threaded conn. c/w removable vented dust cap
4 = Top/Bottom threaded conn. c/w removable "O" ring sealed top and float ring level indicator
** **Glass calibration cylinders available in Style 2 only***

Graduation Scale:
PP - ml only
PVC - ml and GPH
Glass - ml only

Std. connection is NPT thread
Optional: add suffix as follows
S = Socket weld connection (PVC only)
GTV = Glass/TFE construction
GKV = Glass/PVDF construction
GCV = Glass/CPVC construction
GSV = Glass/SS construction
B = BSP Thread
F = Flanged

Substitute **E** for **V** for **EPDM** wetted "O" ring seal

Sizes:		**Material**
100 = 100 ml	(1.6 GPH)	PP, PVC, Glass
250 = 250 ml	(4 GPH)	PP, PVC, Glass
500 = 500 ml	(8 GPH)	PP, PVC, Glass
1000 = 1000 ml	(16 GPH)	PP, PVC, Glass
2000 = 2000 ml	(32 GPH)	PP, PVC, Glass
4000 = 4000 ml	(64 GPH)	PP, PVC, Glass
6000 = 6000 ml		Glass only
8000 = 8000 ml		Glass only
10000 = 10000 ml	(160 GPH)	PVC, Glass
20000 = 20000 ml	(320 GPH)	PVC, Glass

Custom sizes and materials available.

ACCUDRAW® Calibration Cylinders

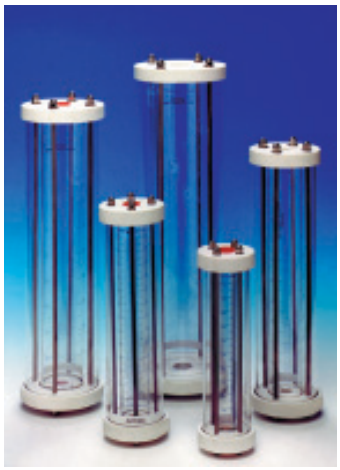

ACCUDRAW® Glass Calibration Cylinders ***are ideal for the calibration of metering pumps, batch systems and for handling hazardous chemicals.***

- volumes calibrated in ml
- construction materials available include TFE, PVDF, CPVC and 316 stainless steel
- sealing "O" rings are Viton and Buna N
- outer shield of acrylic construction
- port connections in NPT, metric or flanged
- standard sizes 100 - 20,000 ml
- custom designs available to your specifications

Sizing and Ordering Information: Glass Construction

Size	Conn.	Model # For TFE End Flgs	Model # For 316 S/S End Flgs	Model # For PVDF End Flgs	Model # For CPVC End Flgs
100 ml	1/2" NPT	ACS#2-100-GTV	ACS#2-100-GSV	ACS#2-100-GKV	ACS#2-100-GCV
250 ml	1/2" NPT	ACS#2-250-GTV	ACS#2-250-GSV	ACS#2-250-GKV	ACS#2-250-GCV
500 ml	1/2" NPT	ACS#2-500-GTV	ACS#2-500-GSV	ACS#2-500-GKV	ACS#2-500-GCV
1000 ml	1/2" NPT	ACS#2-1000-GTV	ACS#2-1000-GSV	ACS#2-1000-GKV	ACS#2-1000-GCV
2000 ml	1 " NPT	ACS#2-2000-GTV	ACS#2-2000-GSV	ACS#2-2000-GKV	ACS#2-2000-GCV
4000 ml	1" NPT	ACS#2-4000-GTV	ACS#2-4000-GSV	ACS#2-4000-GKV	ACS#2-4000-GCV
6000 ml	1" NPT	ACS#2-6000-GTV	ACS#2-6000-GSV	ACS#2-6000-GKV	ACS#2-6000-GCV
8000 ml	2" NPT	ACS#2-8000-GTV	ACS#2-8000-GSV	ACS#2-8000-GKV	ACS#2-8000-GCV
10000 ml	2" NPT	ACS#2-10000-GTV	ACS#2-10000-GSV	ACS#2-10000-GKV	ACS#2-10000-GCV
20000 ml	2" NPT	ACS#2-20000-GTV	ACS#2-20000-GSV	ACS#2-20000-GKV	ACS#2-20000-GCV

Cylinders are bolted together using stainless steel rods with Viton "O" rings for the glass seal and Buna N "O" rings for the acrylic seal. For EPDM "O" rings, subsititute "E" for "V".

Options available: (may affect price and delivery)

- **different type or size of thread connection, different "O" ring material, different flange material**

Descriptions:

TFE, PVDF and CPVC End Flanges:
Glass cylinder with acrylic outer shield and 3/4" thick (TFE, PVDF or CPVC) end flanges

316 S/S End Flanges:
Glass cylinder with acrylic outer shield and 1/2" thick 316 Stainless Steel end flanges

Glass Dimensional Information

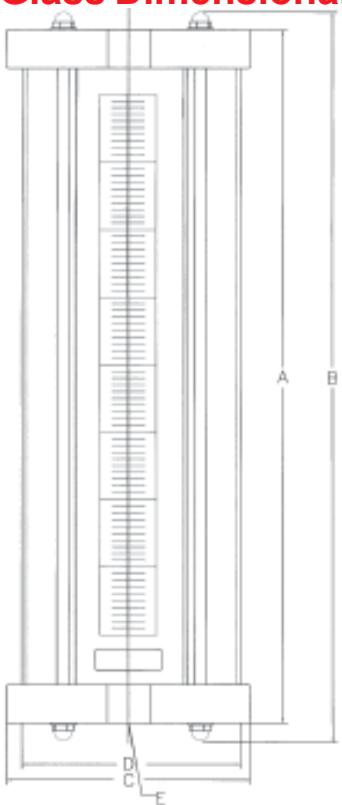

Note: Cylinders are <u>not</u> pressure vessels.

Dimensions subject to change without notice.

Glass cylinders with TFE, PVDF or CPVC End Flanges

Size ml	DIV ml	A inches	B inches	C inches	D inches	E thread
100	1.00	10.00	11.00	3.00	2.50	1/2" FNPT
250	2.00	12.75	13.50	3.50	3.00	1/2" FNPT
500	5.00	14.50	15.50	4.00	3.50	1/2" FNPT
1000	10.00	16.75	17.75	4.75	4.25	1/2" FNPT
2000	20.00	18.75	19.75	5.50	5.00	1" FNPT
4000	25.00	22.50	23.50	6.50	6.00	1" FNPT
6000	50.00	20.13	21.16	8.00	7.50	1" FNPT
8000	50.00	24.63	25.66	8.00	7.50	2" FNPT
10000	50.00	30.13	31.16	8.00	7.50	2" FNPT
20000	200.00	43.25	44.25	9.00	8.50	2" FNPT

Glass cylinders with 316 Stainless Steel End Flanges

Size ml	DIV ml	A inches	B inches	C inches	D inches	E thread
100	1.00	9.50	10.50	3.00	2.50	1/2" FNPT
250	2.00	12.25	13.00	3.50	3.00	1/2" FNPT
500	5.00	14.00	15.00	4.00	3.50	1/2" FNPT
1000	10.00	16.25	17.25	4.75	4.25	1/2" FNPT
2000	20.00	18.25	19.25	5.50	5.00	1" FNPT
4000	25.00	22.00	23.00	6.50	6.00	1" FNPT
6000	50.00	19.63	20.66	8.00	7.50	1" FNPT
8000	50.00	24.13	25.16	8.00	7.50	2" FNPT
10000	50.00	29.63	30.66	8.00	7.50	2" FNPT
20000	200.00	42.75	43.75	9.00	8.50	2" FNPT

ACCUDRAW® Calibration Cylinders

Installations

Conversion Factors
1 ml = 1 cc
1000 ml = 1 liter
ml/sec X 60 = ml/min
1 US gal/min X 0.063 = liters/sec
1 US gal = 3.786 liters

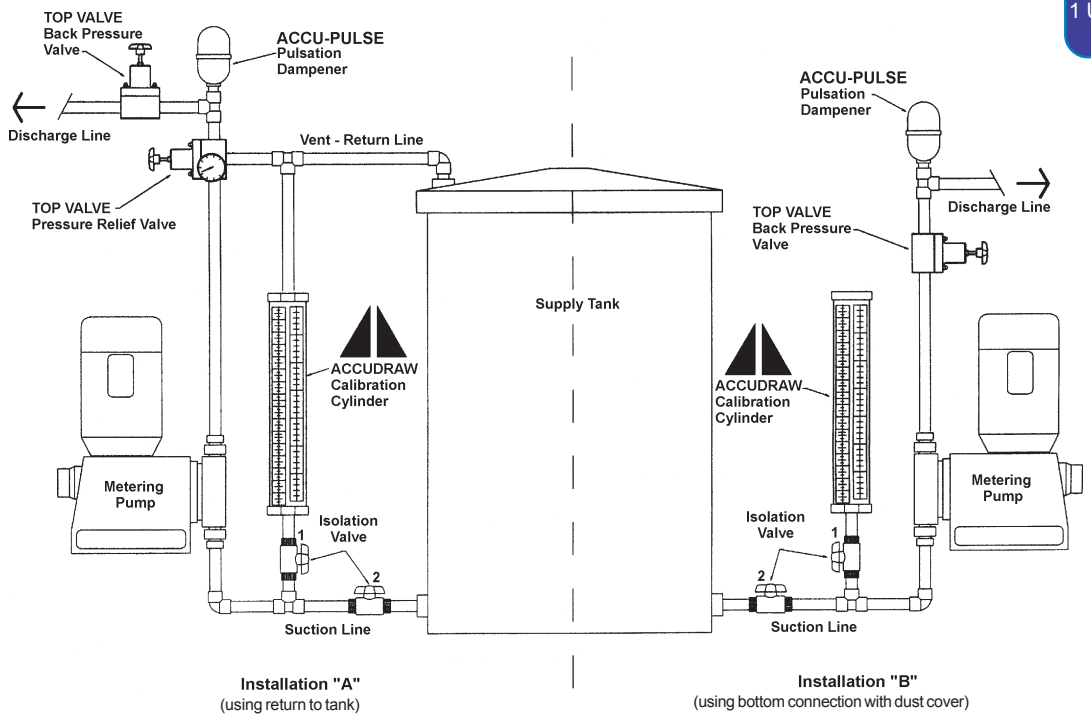

Other available products at www.primaryfluid.com

TOP VALVE Back Pressure/Pressure Relief



- *long life diaphragm*
- *range of 15 - 350 PSIG*
- *air release, optional gauge port*
- *PVC, CPVC, PVDF, Teflon, polypropylene, stainless, Alloy 20 and Hastelloy C*
- *7 sizes 1/4" - 2" NPT*
- *color coded handles indicate size*
- *higher pressure & temperature available*

PFS Corporation Stops



Designed to inject chemical into the center stream of process.

- *isolation valve allows for ease of maintenance*
- *available in 6 materials of construction*
- *wetted components have comparable or greater chemical resistance than quill construction material*
- *standard and custom lengths available*
- *connection in NPT, metric or flanged*

Custom built in other sizes & materials.

ACCUPULSE Pulsation Dampeners



Designed to remove pulsatingflows from positive displacement pumps.

- *increase system efficiency and pump life; decrease maintenance and costs*
- *protect pipes, meters, valves and instrumentation from pulsation and vibration*
- *ensure meter accuracy, longevity and repeatability*
- *prevent foaming and splashing*
- *extensive range of materials and sizes with lightweight, compact design*

Distributed By:

PRIMARY FLUID SYSTEMS INC.

Call Toll Free 1-800-776-6580
Tel: (905) 333-8743
Fax: (905) 333-8746

Distribution Territories Available

E:Mail: primary@primaryfluid.com
www.primaryfluid.com

® Registered Trade Mark of Primary Fluid Systems

ACCUDRAW®

PV#1

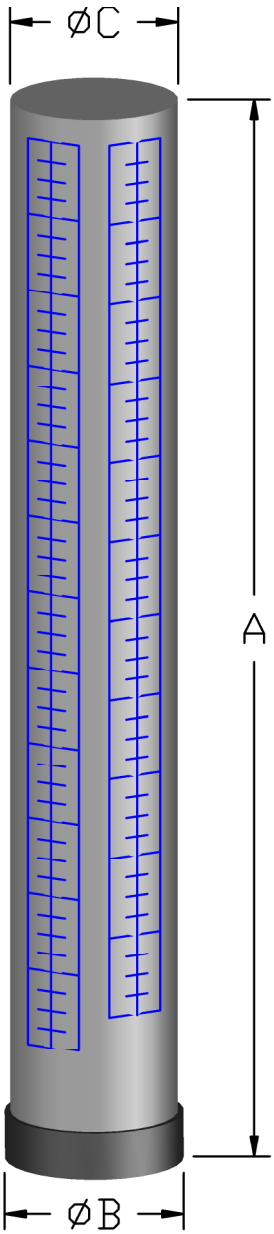

PV#2
PV#4

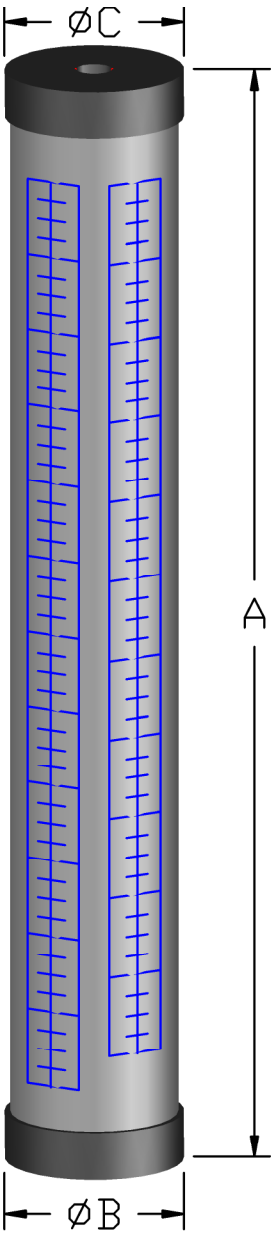

PV#3

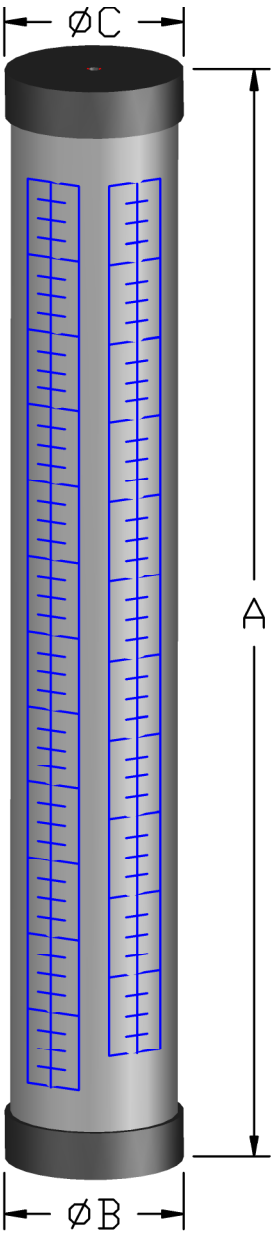

MODEL	SIZE ml(GPH)	DIV ml(GPH)	A (in.)	ØB (in.)	ØC (in.)	Connection	Top Conn.
PV#1	100 (1.60)	1.0 (0.02)	10.13	1.4	1.1	1/2" (DN 15)	OPEN
	250 (4.00)	2.0 (0.05)	10.88	1.9	1.6		
	500 (8.00)	5.0 (0.05)	12.13	2.4	2.1		
	1000 (16.0)	10.0 (0.125)	16.13	2.8	2.5		
	2000 (32.0)	20.0 (0.25)	20.00	3.5	3.1	1" (DN 25)	
	4000 (64.0)	25.0 (0.25)	22.00	4.5	4.1		
	10000 (160)	200.0 (2.00)	22.50	6.9	6.5	2" (DN 50)	
	15000 (240)	200.0 (2.00)	32.50	6.9	6.5		
	20000 (320)	200.0 (2.00)	42.50	6.9	6.5		
PV#2 & PV#4	100 (1.60)	1.0 (0.02)	10.50	1.4	1.4	1/2" (DN 15)	1/2" (DN 15)
	250 (4.00)	2.0 (0.05)	11.25	1.9	1.9		
	500 (8.00)	5.0 (0.05)	12.50	2.4	2.4		
	1000 (16.0)	10.0 (0.125)	16.50	2.8	2.8		
	2000 (32.0)	20.0 (0.25)	20.50	3.5	3.5	1" (DN 25)	1" (DN 25)
	4000 (64.0)	25.0 (0.25)	22.50	4.5	4.5		
	10000 (160)	200.0 (2.00)	23.00	6.9	6.9	2" (DN 50)	2" (DN 50)
	15000 (240)	200.0 (2.00)	33.00	6.9	6.9		
	20000 (320)	200.0 (2.00)	43.00	6.9	6.9		
PV#3	100 (1.60)	1.0 (0.02)	10.50	1.4	1.4	1/2" (DN 15)	DUST CAP
	250 (4.00)	2.0 (0.05)	11.25	1.9	1.9		
	500 (8.00)	5.0 (0.05)	12.50	2.4	2.4		
	1000 (16.0)	10.0 (0.125)	16.50	2.8	2.8		
	2000 (32.0)	20.0 (0.25)	20.50	3.5	3.5	1" (DN 25)	
	4000 (64.0)	25.0 (0.25)	22.50	4.5	4.5		
	10000 (160)	200.0 (2.00)	23.00	6.9	6.9	2" (DN 50)	
	15000 (240)	200.0 (2.00)	33.00	6.9	6.9		
	20000 (320)	200.0 (2.00)	43.00	6.9	6.9		

NOTE:
PV#4 CALIBRATION CYLINDERS HAVE REMOVABLE TOP CAPS.

DO NOT COPY WITHOUT PRIOR WRITTEN APPROVAL FROM PRIMARY FLUID SYSTEMS INC.

PRIMARY FLUID SYSTEMS INC.
1050 Cooke Blvd., Burlington, Ontario L7T 4A8

ACCUDRAW PV-SERIES
CALIBRATION CYLINDERS (PVC)

DATE ISSUED: JULY-29-2014	SCALE: NTS	SHEET: 1 OF 1
TOLERANCE: +/- 0.25"	DRAWN BY: NEAL YOON	
APPROVED BY:	DWG NO.: ADV_PV_CALCYL1	REV.#: 4

Project name: IQALUIT

Project#: 5000218036

Document #: 5000218036_DS_0007_PM_VWT

by: BB

chkd: GH

appvd: CB

SKID TRIPLEX

INSTRUMENT

OIM manual section: 4.3.7.5

CS-449-100 : Identification sheet

VWTC PROJECT NUMBER:	Iqaluit WWTP	REV:	01
PROJECT NAME:	5000218036	SUBMITTED TO (COMPANY):	
ENGINEER:	G. HÉBERT	SUBMITTED TO (RESPONSIBLE)	
PROJECT MANAGER:	C. BEKAERT	PROJECT NUM REFERENCE.:	
PHONE NUMBER:		LOT NUMBER:	

SUPPLIER	EQPT CODE	EQPT TAG NO	DIA	DESCRIPTION	INFO 1	INFO 2	INFO 3	APPLIC.	NOTE	REV
CHEMLINE	IMFWGG301909	FI-785	1/2"	VARIABLE AREA FLOWMETER	VARIABLE AREA FLOWMETER/MANUFACTURER: CHEMLINE/ MODEL: FCA00401	N/A	N/A			1
CHEMLINE	IMFWGG301909	FI-786	1/2"	VARIABLE AREA FLOWMETER	VARIABLE AREA FLOWMETER/MANUFACTURER: CHEMLINE/ MODEL: FCA00401	N/A	N/A			1

PDF Published March 1, 2013

Variable Area Flow Meters

CHEMLINE PLASTICS
SUPERIOR FLOW SOLUTIONS

Chemline F Series Variable Area Flow Meters are ideal for plastic piping. They provide a combination of accurate visual flow rate measurement and clear flow indication from a distance. Optional limit switches allow the units to signal a low or high flow alarm. An optional flow transmitter provides a 4 to 20 mA signal output. These flow meters must be installed vertically with flow upward.

PVC | PA | PSU | PVDF — Tube

PVC | CPVC | PP | PVDF — Ends

CRN Registered Consult Chemline

SERIES: FC – Compact – 5" Single Scale
FS – Full Size – 7" Dual Scale[1]

MATERIALS: Tube: Clear PVC, Polyamide (PA), Polysulfone (PSU) or PVDF[2]
Float: PVDF
Ends: PVC, CPVC, PP, PVDF, Socket, Threaded, Flanged, Butt or ChemFlare™[3]

O-RINGS: EPDM, FPM (Viton®)

CAPACITIES: Up to 220 USGPM (50,000 litres per hour)



features

Clear Visual Indication

- Large orange float is visible from a distance
- Range indicators slide along dovetail track

Easy Installation and Maintenance

- Just unscrew union nuts and tube slides out of line

Choice of Four Tube Materials for Many Applications:

- ***Clear PVC*** – For Water or Chemicals up to 60°C (140°F) – High Chemical resistance at low cost
- ***Polyamide (PA)*** – For Water or Air up to 75°C (167°F) – High impact strength and optical clarity
- ***Polysulfone (PSU)*** – For Chemicals and Gases up to 100°C (212°F) – High impact strength and good chemical resistance
- ***PVDF[2]*** – For Chemicals and Ultrapure fluids up to 110°C (230°F) – High impact strength and excellent chemical resistance.

Ideal for All Types of Plastic Piping

- All types of end connections in PVC, CPVC, PP & PVDF

Low Pressure Drop

Good Measuring Accuracy – Class IV

- ± 3% of indicated value, plus ± 1% of full scale. – Read scale at top (largest diameter) of float

Non Fouling

- Float is self supporting in the flow. No guide rod (which can cause the float to jam) is necessary.

[1] USGPM and litres per hour (water) scale is supplied as standard on full size meters.
[2] Because PVDF is translucent, a magnetic float and limit switches are usually used.
[3] For ChemFlare™ end connectors, consult Chemline.

03/13 ©Chemline Plastics Limited 2013
Chemline is a registered trade mark of Chemline Plastics Limited

Variable Area Flow Meters

NOTES:

PVDF flow meters are available in all sizes. Change third letter in item number to **K**.
[1] △P = Pressure loss through flow meter with water at 20°C (68°F).
[2] Dimension **L** is for PVC Socket ends.

FC SERIES – COMPACT SIZE – 5″ SCALE

Single USGPM (water) scale is supplied standard

End Conn. Size	Item Number PVC Tube	Item Number Polyamide Tube	Item Number Polysulfone Tube	Flow Range (water) USGPM	Flow Range (water) Litres per hour	Dimensions (inches) A	Dimensions (inches) L[2]	Dimensions (inches) D	Pressure Drop (psi)[1] Water	Pressure Drop (psi)[1] Air
3/8″	FCA00020	FCT00020	FCP00020	0.0132 – 0.106	3 – 24	6.50	8.2	1.38	0.05	0.07
	FCA00060	FCT00060	FCP00060	0.022 – 0.264	5 – 60	6.50	8.2	1.38	0.05	0.07
	FCA00100	FCT00100	FCP00100	0.04 – 0.44	10 – 100	6.50	8.2	1.38	0.05	0.07
	FCA00250	FCT00250	FCP00250	0.11 – 1.10	25 – 250	6.50	8.2	1.38	0.05	0.07
1/2″	FCA00051	FCT00051	FCP00051	0.02 – 0.22	5 – 50	6.69	8.7	1.69	0.04	0.06
	FCA00151	FCT00151	FCP00151	0.07 – 0.66	15 – 150	6.69	8.7	1.69	0.04	0.06
	FCA00251	FCT00251	FCP00251	0.11 – 1.10	25 – 250	6.69	8.7	1.69	0.04	0.06
	FCA00401	FCT00401	FCP00401	0.18 – 1.76	40 – 400	6.69	8.7	1.69	0.04	0.06
3/4″	FCA00152	FCT00152	FCP00152	0.07 – 0.66	15 – 150	7.28	9.6	2.09	0.09	0.12
	FCA00402	FCT00402	FCP00402	0.22 – 1.76	40 – 400	7.28	9.6	2.09	0.09	0.12
	FCA00602	FCT00602	FCP00602	0.26 – 2.64	60 – 600	7.28	9.6	2.09	0.09	0.12
	FCA01002	FCT01002	FCP01002	0.44 – 4.40	100 – 1,000	7.28	9.6	2.09	0.09	0.12
1″	FCA00253	FCT00253	FCP00253	0.11 – 1.10	25 – 250	7.87	10.5	2.36	0.09	0.12
	FCA00403	FCT00403	FCP00403	0.18 – 1.76	40 – 400	7.87	10.5	2.36	0.09	0.12
	FCA01003	FCT01003	FCP01003	0.44 – 4.40	100 – 1,000	7.87	10.5	2.36	0.09	0.12
	FCA01503	FCT01503	FCP01503	0.66 – 6.60	150 – 1,500	7.87	10.5	2.36	0.09	0.12

FS SERIES – STANDARD FULL SIZE – 7″ SCALE

Dual USGPM (water) and litres per hour scales are supplied standard

End Conn. Size	Item Number PVC Tube	Item Number Polyamide Tube	Item Number Polysulfone Tube	Flow Range (water) USGPM	Flow Range (water) Litres per hour	Dimensions (inches) A	Dimensions (inches) L[2]	Dimensions (inches) D	Pressure Drop (psi)[1] Water	Pressure Drop (psi)[1] Air
1″	FSA00600	FST00600	FSP00600	0.26 – 2.64	60 – 600	13.78	16.3	2.36	0.18	0.23
	FSA01000	FST01000	FSP01000	0.44 – 4.40	100 – 1,000	13.78	16.3	2.36	0.18	0.23
1-1/4″	FSA01500	FST01500	FSP01500	0.66 – 6.60	150 – 1,500	13.78	16.6	2.83	0.18	0.23
	FSA02500	FST02500	FSP02500	1.10 – 11.00	250 – 2,500	13.78	16.6	2.83	0.18	0.23
1-1/2″	FSA02000	FST02000	FSP02000	0.88 – 8.80	200 – 2,000	13.78	16.8	3.27	0.18	0.23
	FSA03000	FST03000	FSP03000	1.32 – 13.20	300 – 3,000	13.78	16.8	3.27	0.18	0.23
2″	FSA04000	FST04000	FSP04000	1.76 – 17.60	400 – 4,000	13.78	17.2	4.06	0.32	0.39
	FSA06000	FST06000	FSP06000	2.64 – 26.40	600 – 6,000	13.78	17.2	4.06	0.32	0.39
	FSA10000	FST10000	FSP10000	4.40 – 44.00	1,000 – 10,000	13.78	17.2	4.06	0.32	0.39
2-1/2″	FSA15000	FST15000	FSP15000	6.60 – 66.00	1,500 – 15,000	13.78	17.7	4.80	0.49	0.58
	FSA25000	FST25000	FSP25000	11.00 – 110.00	2,500 – 25,000	13.78	17.7	4.80	0.49	0.58
	FSA50000	FST50000	FSP50000	44.00 – 220.00	10,000 – 50,000	13.78	17.7	4.80	0.49	0.58

CONVERSION CHART – FLOW UNITS

From To	m^3/hr	litres/hr	USGPM	ImpGPM	ft^3/min
m^3/hr	1	1000	4.4029	3.6662	0.5886
litres/hr	0.001	1	.004403	.003666	.000589
USGPM	0.2271	227.12	1	0.8327	0.1337
ImpGPM	0.2728	272.77	1.2009	1	0.1605
ft^3/min	1.6990	1699	7.4806	6.2289	1

Values based on water at 20°C (68°F).

Variable Area Flow Meters

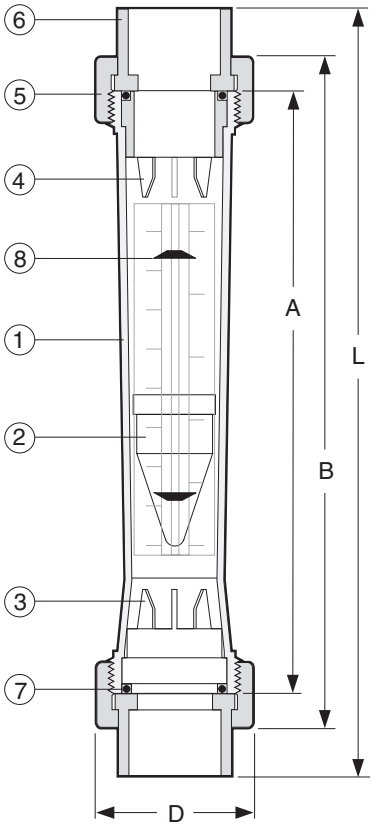

PARTS

▲ Recommended Spare Parts

No.	Part	Pcs.	Materials
1	Tube	1	Polyamide (PA), Polysulfone (PSU), Clear PVC, PVDF
2	Float	1	PVDF (standard or magnetic)
3	Lower Float Stop	1	PVDF
4	Upper Float Stop	1	PVDF
5	Union Nut	2	PVC, PPG, PVDF
6	End Connector	2	PVC, CPVC, PP or PVDF
7▲	O-Rings	2	EPDM, FPM(Viton®)
8▲	Range Indicator	2	ABS

ACCESSORIES

- **Limit Switches** – One switch for both maximum or minimum. A magnetic float is required.
- **Switch Ratings** – P (max) = 10 VA, E (max) = 470VAC, I (max) = 0.5A
- **Throttling Valve** for flow control
- **4–20 mA Output Signal Unit** must be factory calibrated for specific service

OPTIONS

- **Custom Direct Reading Scale** for services other than water
- **Alternate O-Rings** – ie. FPM (Viton®)
- **End Size Reduction** – Accuracy is not significantly affected by end reduction
- **Other Ends** – Threaded, socket or flanged end connections in PVC, CPVC, PP or PVDF. Butt ends in PP or PVDF.

MAXIMUM WORKING PRESSURES AND TEMPERATURE RANGES

Construction (‡ = Optional Materials)				Maximum	
Tube	O-Rings	Union Nuts	Ends	Pressure[2]	Temperature Range
PVC	EPDM	PVC	PVC	150 psi	0 to 60°C (32 to 140°F)
Polyamide (PA)	EPDM	PVC	PVC	150 psi	0 to 60°C (32 to 140°F)
Polyamide (PA)	EPDM	PPG‡	PP or CPVC‡	150 psi	0 to 75°C (32 to 167°F)
Polysulfone (PSU)	EPDM	PVC	PVC	150 psi	0 to 60°C (32 to 140°F)
Polysulfone (PSU)	EPDM	PPG‡	PP or CPVC‡	150 psi	0 to 90°C (32 to 194°F)
PVDF	FPM(Viton®)	PVDF	PVDF	150 psi	–40 to 110°C (–40 to 230°F)

[2] 150 psi is not recommended at maximum temperatures. Consult Chemline.

flow meter sizing – liquid flow

Standard Scale values are for clean water flow at 20°C (68°F). For liquids with densities and viscosities similar to water (ie. specific gravity of 1.0 and viscosities between 0.5 cP and 1.3 cP) the standard water scale will be accurate enough.

The table below shows correction factors to be applied for liquids with specific gravities other then 1.0. Multiply the correction factor by the water scale value to obtain actual flow rate. Example: For a liquid of specific gravity of 1.66, the correction factor is 0.740. For water flow range of 100 to 1000 litres/hr, corrected range becomes 74 to 740 litres/hr. Viscosity should be between 0.5 cP and 1.3 cP for standard scales to be accurate.

For "sizing" liquid flows ie. determining actual flow range of a tube, please advise the **chemical name, concentration, temperature, specific gravity** and **viscosity.** Custom direct reading scales in any units are available special order.

SCALE CORRECTION FACTORS – FOR LIQUIDS WITH SPECIFIC GRAVITIES OTHER THAN 1.00

Specific Gravity	.00	.01	.02	.03	.04	.05	.06	.07	.08	.09
	Scale Correction Factor									
0.4	1.647	1.626	1.605	1.585	1.565	1.548	1.529	1.513	1.495	1.479
0.5	1.462	1.447	1.433	1.418	1.404	1.391	1.377	1.364	1.351	1.339
0.6	1.326	1.316	1.304	1.292	1.282	1.271	1.259	1.250	1.239	1.229
0.7	1.220	1.211	1.202	1.192	1.183	1.175	1.167	1.157	1.149	1.142
0.8	1.134	1.125	1.117	1.111	1.104	1.096	1.089	1.082	1.075	1.068
0.9	1.062	1.055	1.048	1.042	1.035	1.030	1.024	1.017	1.011	1.005
1.0	1.000	0.994	0.988	0.982	0.978	0.972	0.967	0.962	0.956	0.951
1.1	0.947	0.943	0.936	0.932	0.927	0.923	0.917	0.913	0.909	0.904
1.2	0.900	0.895	0.891	0.887	0.883	0.878	0.874	0.870	0.866	0.862
1.3	0.858	0.854	0.850	0.846	0.842	0.838	0.835	0.831	0.827	0.824
1.4	0.820	0.818	0.814	0.810	0.806	0.803	0.800	0.797	0.794	0.791
1.5	0.787	0.784	0.781	0.778	0.776	0.773	0.770	0.767	0.764	0.759
1.6	0.756	0.754	0.751	0.748	0.745	0.742	0.740	0.737	0.734	0.730
1.7	0.728	0.726	0.723	0.720	0.717	0.714	0.712	0.709	0.706	0.704
1.8	0.701	0.699	0.696	0.694	0.691	0.689	0.686	0.684	0.682	0.679
1.9	0.677	0.674	0.672	0.669	0.667	0.665	0.663	0.661	0.658	0.657
2.0	0.654	0.652	0.650	0.648	0.646	0.644	0.641	0.604	0.637	0.636

flow meter sizing – gas flow

FLOW RANGES FOR AIR – AT STANDARD CONDITIONS (atmospheric pressure 14.7 psia/20°C).

FC SERIES – COMPACT SIZE – 5" SCALE

Flow Meter Item No.	Normal m_3/hr	Standard CFM
FCT00020	0.2 – 1.0	0.1 – 0.6
FCT00060	0.2 – 2.5	0.1 – 1.5
FCT00100	0.6 – 3.6	0.4 – 2.1
FCT00250	0.5 – 9.0	0.3 – 5.3
FCT00051	0.4 – 2.8	0.2 – 1.6
FCT00151	0.8 – 6.2	0.5 – 3.6
FCT00251	0.9 – 9.5	0.5 – 5.6
FCT00401	2.0 – 15.0	1.2 – 8.8
FCT00152	0.5 – 5.5	0.3 – 3.2
FCT00402	2.0 – 14.0	1.2 – 8.2
FCT00602	2.5 – 22.0	1.5 – 12.9
FCT01002	4.0 – 34.0	2.4 – 20.0
FCT00253	1.0 – 8.0	0.6 – 4.7
FCT00403	2.0 – 14.0	1.2 – 8.2
FCT01003	4.0 – 34.0	2.4 – 20.0
FCT01503	5.0 – 50.0	2.9 – 29.4

FS SERIES – STANDARD FULL SIZE – 7" SCALE

Flow Meter Item No.	Normal m_3/hr	Standard CFM
FST00600	2.5 – 20	1.5 – 12
FST01000	4 – 34	2.4 – 20
FST01500	5 – 50	2.9 – 29
FST02000	8.5 – 76	5.0 – 45
FST02500	8 – 70	4.7 – 41
FST03000	10 – 90	5.9 – 53
FST04000	14 – 125	8.2 – 74
FST06000	22 – 190	13 – 112
FST10000	35 – 300	21 – 177
FST15000	50 – 500	29 – 294
FST25000	80 – 720	47 – 424
FST50000	400 – 1,500	234 – 883

SCALE CORRECTION FACTORS – FOR AIR AT NON-STANDARD TEMPERATURES AND PRESSURES

Air density is dependent on the actual pressure and temperature.
Calculate the Scale Correction Factor using either Method 1 or 2. Multiply the standard air flow ranges above by the Factor to obtain actual flow rates.

Method 1

Calculate the Factor with the following formula.

$$\text{Factor} = \frac{1}{3.7005}\sqrt{\frac{\text{psia}}{(1+0.00367t)}}$$

psia = pressure of the air absolute
= psig + 14.7 (atmospheric pressure = 14.7 psia)
t = temperature of the air °C

Method 2

Calculate the density of the air at conditions and find factor from the chart below.

$$\text{Air Density (g/ml)} = \frac{\text{psia}}{11{,}360\,(1+0.00367t)}$$

psia = pressure of the air absolute
= psig + 14.7 (atmospheric pressure = 14.7 psia)
t = temperature of the air °C

Air Density vs. Flow Factor



Temperature vs. Pressure

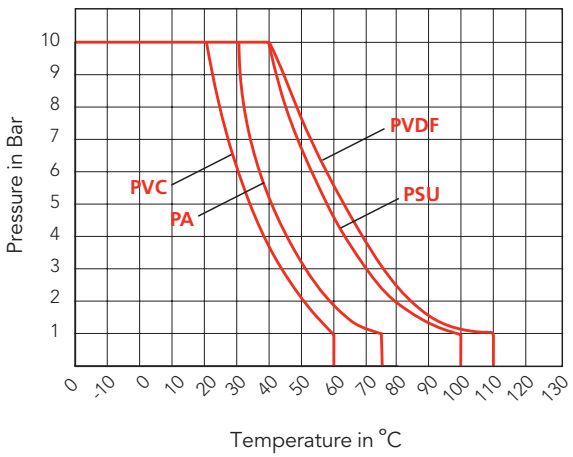

55 Guardsman Road, Thornhill, ON, L3T 6L2, Canada | ISO 9001:2008 Certified
tel.905.889.7890 | fax.905.889.8553 | request@chemline.com | chemline.com

LSFLO Reed Limit Switch

for FC & FS flow meters

The **LSFLO** limit switches serve as switches for minimum or maximum flow values. The normally open latching reed switch closes when the float in the measuring tube reaches and exceedes the switching position. The switch condition is maintained as long as the float is above the limit switch and will open when the float in the tube drops below the switch.

Normally closed switches are available on request.



technical

- **Operating voltage:** maximum 230 VAC
- **Operating current:** maximum 0.5 A
- **Constant current when switched:** maximum 1 A
- **Rupturing capacity:** maximum 10 W/10 VA
- **Closed resistance:** < 150 mΩ
- **Open resistance:** > 10^{10} Ω
- **Operating temperature:** 0°C(32°F) to 55°C(131°F)
- **Protection:** IP 65 (DIN EN 60528)
- **Hysteresis (switch on and off point):** 3 mm
- **Protection:** IP 65 (DIN EN 60528)
- **Dimensions:** 34 x 17 x 41 mm
- **Weight (with plug):** 40 g
- **Connections:** the polarity of the connections has no influence on the function

INSTALLATION

Screw clamps are used to fit the LSFLO on the dovetail guide of the flow meter.

CONNECTIONS

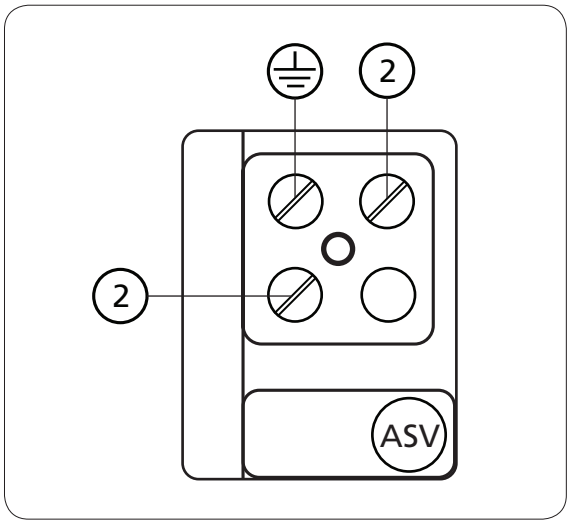

START-UP

Prior to the first start up it is important that the float passes the LSFLO switch three times to ensure the electronics inside recognize the magnetic field from the floats properly.

CHEMLINE PLASTICS
SUPERIOR FLOW SOLUTIONS

55 Guardsman Road, Thornhill, ON, L3T 6L2, Canada | ISO 9001:2008 Certified
tel.905.889.7890 | fax.905.889.8553 | request@chemline.com | chemline.com

ZE3000 Flow Transmitters

for FS flow meters

The **ZE300**0 flow transmitter provides a 4–20 mA output signal, generated by detection of the position of the magnetic float.

IMPORTANT: This micro-processor controlled unit is factory calibrated and unique to each flowmeter model. Flowmeter model must be advised when ordering.



technical

- **2-Wire technology**
- **4–20 mA analog output** (4-20.1 for 8 VDC supply; 4-22.0 for 28 VDC supply
- **8–28 VDC input**
- **Factory calibrated (flow meter to be specified when ordering)**
- **11 point calibration**
- **Non-volatile value storage**
- **0 Button to compensate for the surrounding magnetic influences**
- **Factory setting of the lower limit value (low-cut-off) 0-99% according to customer's specificaitons**
- **Factory time lag (low-pass filter) 0.1-2.5 sec. according to customer's specifications**
- **Measuring accuracy:** < 0.5%
- **Temperature range:** –30°C(–20°F) to 65°C(150°F)

INSTALLATION

Screw clamps are used to fit the ZE3000 on the dovetail guide of the flow meter.

During installation, ensure that the notch of the ZE3000 coincides with the 50% mark on the flow meter scale.

Following this, proceed with the wiring according to the diagram.

DIMENSIONS

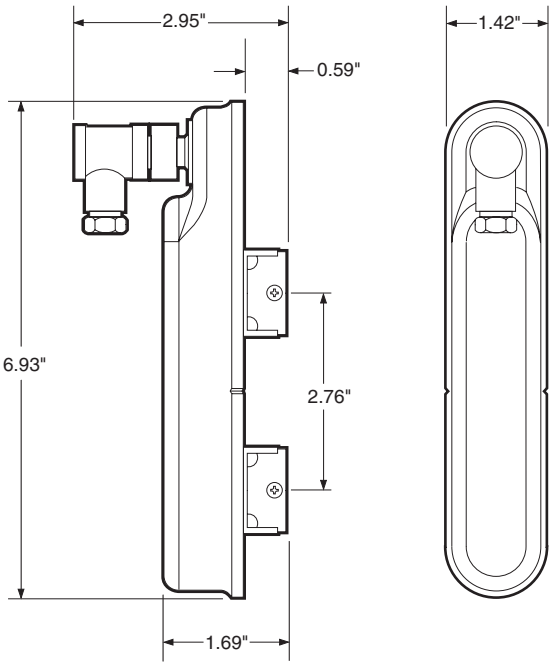

WIRING

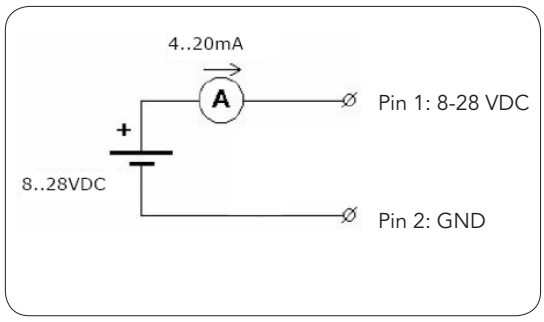

START-UP

After installation and wiring, press the 0 button for at least 2 sec. to compensate for possible electro-magnetic interference. During this time make sure the float is at the bottom of the flowmeter (ie. no flow condition).

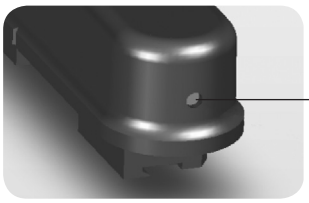

Note:
Do not press button during normal operation.

CHEMLINE PLASTICS
SUPERIOR FLOW SOLUTIONS

55 Guardsman Road, Thornhill, ON, L3T 6L2, Canada | ISO 9001:2008 Certified
tel.905.889.7890 | fax.905.889.8553 | request@chemline.com | chemline.com

ZE3075 Flow Transmitters

for FC flow meters

The **ZE3075** flow transmitter provides a 2- wire 4–20 mA output signal omit generated by precise detection of the position of the magnetic float.

The magnetic float travels along the reed chain of switches activating them.

This micro-processor controlled unit is field calibrated.

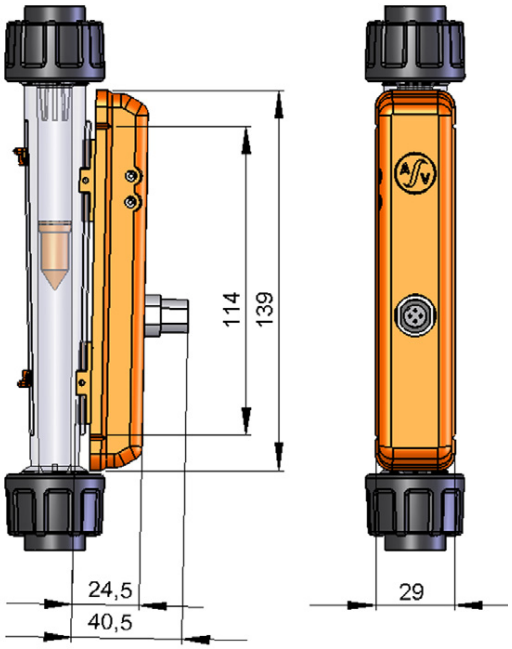

technical

- **2-Wire technology**
- **4–20 mA analog output** (4-20.1 for 8 VDC supply; 4-22.0 for 28 VDC supply
- **18–30 VDC input**
- **Field calibration**
- **Non-volatile value storage**
- **Measuring length:** 114 mm (4.5")
- **Measuring resolution:** 3.5 mm (0.138")
- **Measuring accuracy:** 3%
- **Temperature range:** –20°C(–4°F) to 70°C(158°F)

INSTALLATION

Screw clamps are used to fit the ZE3075 on the dovetail guide of the flow meter.

During installation, ensure that the top and bottom notches of the ZE3075 coincide with the 10% and 100% marks on the flow meter scale.

Following this, proceed with the wiring according to the diagram.

COMPONENTS

1. Alignment notches for the proper location of the transmitter
2. Potentiometer for the upper limit value of the output signal
3. Potentiometer for the lower limit value of the output signal
4. Plug connector

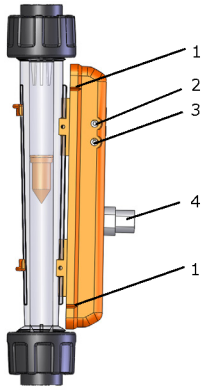

WIRING

The unit is connected with a commercially available unshielded cable.

Where electro-magnetic interference is to be expected, we recommend the use of a shielded cable.

Cable cross section: max. 0.75 mm² cable outer diameter: 6 to 8 mm.

Flange Connector

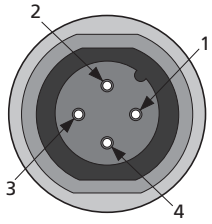

1. Signal (+)
2. Signal (+)
3. n.c.
4. n.c.

Circuit Diagram

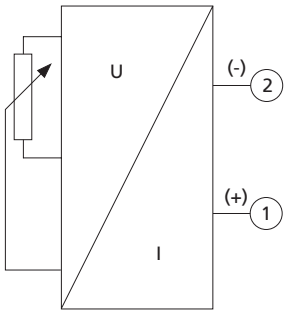

CALIBRATION

Compensation between the non-linear scaling of the flowmeter and the linear output signal of the flow data sensor must be performed by adjusting, preferably between 20% and 80% of the flow rate.

20% corresponds to 7.2mA and 80% to 16.8mA.

- Connect the ampermeter and the respective voltage supply to the flow data sensor
- Allow 20% of the flow to pass through the FC flow meter
- Set the min. trimmer potentiometer (3) such that the corresponding current (7.2mA) is shown in the ampermeter
- Allow 80% of the flow to pass through the FC flow meter
- Set the max. trimmer potentiometer (3) such that the corresponding current (16.8mA) is shown in the ampermeter
- Check the values at 20% and 80% several times and repeat the adjustment, if required

CHEMLINE PLASTICS
SUPERIOR FLOW SOLUTIONS

55 Guardsman Road, Thornhill, ON, L3T 6L2, Canada | ISO 9001:2008 Certified
tel.905.889.7890 | fax.905.889.8553 | request@chemline.com | chemline.com

CS-434-700 : Identification sheet

VWTC PROJECT NUMBER:	Iqaluit WWTP	REV:	01
PROJECT NAME:	5000218036	SUBMITTED TO (COMPANY):	
ENGINEER:	F.VINCI	SUBMITTED TO (RESPONSIBLE)	
PROJECT MANAGER:	C. BEKAERT	PROJECT NUM REFERENCE.:	
PHONE NUMBER:		LOT NUMBER:	

SUPPLIER	EQPT CODE	EQPT TAG NO	DIA	DESCRIPTION	INFO 1	INFO 2	INFO 3	APPLIC.	NOTE	REV
IFM	IESWSP342303	PSH-02-787 PSH-02-790 PSH-02-793		High pressure switch	PRESSURE SWITCH/ MANUFACTURER: IFM// MODEL:PN7294// EFECTOR SOO // Approval: cULUS CRN //Output: IOLink 1.1 or (OUT1 = switching output, OUT2 = switching output) // 4-digit alphanumeric display // measuring range -14.5…145 psi					1

Tags should be in area 04.
Ex. PSH-04-787

PN7294

PN-010-REN14-QFRKG/US/ /V

Pressure sensors

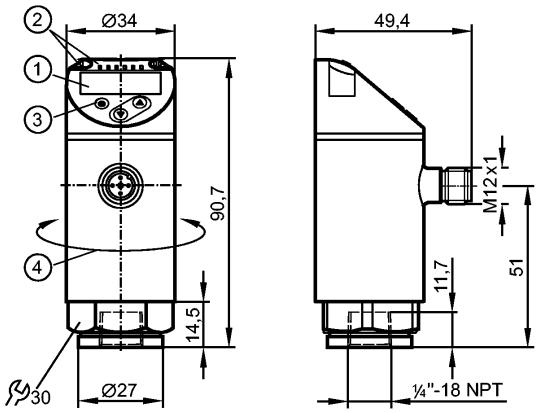

1: 4-digit alphanumeric display / alternating indication of red and green
2: LEDs (display unit / switching status)
3: Programming button
4: Upper part of the housing can be rotated by 345°

CE CRN cULus LISTED EAC IO-Link

Product characteristics
Electronic pressure monitor
M12 connector
Function programmable
Measuring element: ceramic-capacitive pressure measuring cell
Process connection: ¼" NPT I
2 outputs OUT1 = switching output OUT2 = switching output
4-digit alphanumeric display / alternating indication of red and green
Measuring range: -14.5...145 psi / -1...10 bar / -0.1...1.0 MPa

Application				
Application		Type of pressure: relative pressure liquids and gases of the fluid group 2 according to Article 9 of the Pressure Equipment Directive (PED)		
Pressure rating		1087 psi	75 bar	7.5 MPa
Bursting pressure min.		2175 psi	150 bar	15 MPa
Medium temperature	[°C]	-25...80		

Electrical data		
Electrical design		DC PNP/NPN
Operating voltage	[V]	18...30 DC [1])
Current consumption	[mA]	< 35
Insulation resistance	[MΩ]	> 100 (500 V DC)
Protection class		III
Reverse polarity protection		yes

Outputs		
Output		2 outputs OUT1 = switching output OUT2 = switching output
Output function		2 x normally open / closed programmable
Current rating	[mA]	150; 200 (...60 °C); 250 (...40 °C)

Voltage drop	[V]	< 2.5		
Short-circuit protection		yes (non-latching)		
Overload protection		yes		
Switching frequency	[Hz]	≤ 170		
Measuring / setting range				
Measuring range		-14.5...145 psi	-1...10 bar	-0.1...1.0 MPa
Setting range				
Set point, SP		-13.5...145 psi	-0.90...10 bar	-0.09...1 MPa
Reset point, rP		-14...144.5 psi	-0.95...9.95 bar	-0.095...0.995 MPa
in steps of		0.5 psi	0.05 bar	0.005 MPa
Accuracy / deviations				
Accuracy / deviations (in % of the span)				
Switch point accuracy		< ± 0.5		
Characteristics deviation *)		< ± 0.25 (BFSL) / < ± 0.5 (LS)		
Hysteresis		< ± 0.25		
Repeatability **)		< ± 0.1		
Long-term stability ***)		< ± 0.05		
Temperature coefficients (TEMPCO) in the temperature range -25...80° C (in % of the span per 10 K)				
Greatest TEMPCO of the zero point		0.2		
Greatest TEMPCO of the span		0.2		
Response times				
Power-on delay time	[s]	< 0.3		
Min. response time switching output	[ms]	< 3		
Delay time programmable dS, dr	[s]	0...50		
Integrated watchdog		yes		
Software / programming				
Programming options		hysteresis / window function; N.O. / N.C; output polarity; on delay, off delay; damping; display unit		
Interfaces				
IO-Link Device				
Transfer type		COM2 (38.4 kBaud)		
IO-Link revision		1.1		
SDCI standard		IEC 61131-9		
IO-Link Device ID		403 d / 00 01 93 h		
Profiles		Smart Sensor: Process Data Variable; Device Identification; Device Diagnosis		
SIO mode		yes		
Required master port class		A		
Process data analogue		1		
Process data binary		2		
Min. process cycle time	[ms]	2.3		
Environment				
Ambient temperature	[°C]	-25...80		
Storage temperature	[°C]	-40...100		
Protection		IP 65 / IP 67		

efector500

PN7294

PN-010-REN14-QFRKG/US/ /V

Pressure sensors

Tests / approvals			
Pressure equipment directive		article 3, section 3 - sound engineering practice	
EMC		DIN EN 61000-6-2 DIN EN 61000-6-3	
Shock resistance		DIN EN 60068-2-27	50 g (11 ms)
Vibration resistance		DIN EN 60068-2-6	20 g (10...2000 Hz)
MTTF	[Years]	224.01	
UL approval number		J001	
Mechanical data			
Process connection		¼" NPT I	
Materials (wetted parts)		316L stainless steel / 1.4404; ceramics; FKM	
Housing materials		316L stainless steel / 1.4404; PBT+PC-GF 30; PBT-GF 20; PC	
Switching cycles min.		100 million	
Tightening torque	[Nm]	(2...3 turns after finger tightened (recommended tightening torque²))	
Weight	[kg]	0.221	
Displays / operating elements			
Display		Display unit Switching status Measured values of red and green	3 x LED green (bar, psi, MPa) 2 x LED yellow 4-digit alphanumeric display / alternating indication
Electrical connection			
Connection		M12 connector; gold-plated contacts	

Wiring

Core colors

BK	black
BN	brown
BU	blue
WH	white



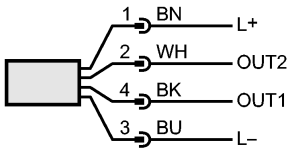

OUT1: switching output or IO-Link
OUT2: switching output
Colours to DIN EN 60947-5-2

Remarks			
Remarks		¹) to EN50178, SELV, PELV ²) Depends on lubrication, seal and pressure rating *) BFSL = Best Fit Straight Line / LS = Limit Value Setting **) with temperature fluctuations < 10 K ***) in% of the span / 6 months	
Pack quantity	[piece]	1	

REVIEWED BY CONTRACTOR

Kudlik Construction Ltd.

NAME: Sandra Rousseau P.Eng

DATE: Jul 17, 2019

SHOP DRAWINGS

Progressive Cavity Pumps Submittal package Date : 2019-07-17

General Information			
Project	**WWTP UPGRADE - IQALUIT**		
Client:	Kudlik Construction Ltd.	Project Number	2018-062
To:	Sandra Rousseau P.Eng., Project Manger	E-mail:	srousseau@kudlik.biz
Contractor	Veolia Water Technologies Canad Inc.	Project Number	5000218036
Address	4105 Sartelon, Ville St. Laurent PQ, H4S 2B3		
Project Manger:	Clément Bekaert	E-mail:	clement.bekaert@veolia.com
Phone:	514-334-7230 x 3243	Cell:	514-246-6232

Information on the Equipment		
Specialty:	Process	
Equipment:	Progressive Cavity Pumps	
Drawing Reference:		
Specification reference:	43 23 57	
Article:		
Revision:	Rev03	
Titre:	Progressive Cavity Pumps submittal package	
Numero client:	DA-Veolia-DS-08-Progressive Cavity Pumps	
Numero Veolia	5000218036_DS_0008_GEN_VWT	
Envoyer pour:	Approbation/Information:	Approbation

Consultant Approval

STANTEC PROJECT #: 110126045

SUBMITTAL # DA-VEOLIA-DS-08 REV 03 PROGRESSING CAVITY PUMPS

This review by Stantec is for general conformance with the design concept of Stantec's design of the:

☑ Process ☐ Electrical
☐ Structural ☐ Other
☐ Mechanical

component(s) only and does not mean that Stantec has verified or approves the shop drawing(s). The Contractor remains solely responsible for the shop drawing(s) and this review by Stantec does not relieve the Contractor of the Contractor's responsibility for errors or omissions in the shop drawing(s) or for meeting all requirements of the contract documents. This review does not mean that Stantec approves the detailed design inherent in the shop drawing, responsibility for which shall remain with the Contractor submitting same, nor does this review mean that Stantec accepts any deviation of the shop drawing(s) from the contract documents. The Contractor is responsible for confirming all dimensions and correlating them at the job site, for all construction means, methods and techniques, and for coordination of construction work of all trades, including coordination of all shop drawings.

Stantec

☑ REVIEWED

☐ REVIEWED, AS NOTED

☐ REVISE AND RESUBMIT

☐ NOT REVIEWED

DATE July 17, 2019

BY Alejandro Rojas, P.Eng

4105 Sartelon
Ville St. Laurent, PQ
H4S-2B3

Phone: 514-334-7230
Fax: 514-334-5070
www.veoliawatertechnologies.ca

TECHNICAL DOCUMENTATION

Project name:	IQALUIT
Project#:	5000218036
Document #:	5000218036_DS_0008_GEN_VWT
by:	BB
chkd:	GH
appvd:	CB

SUBMITTAL PACKAGE

PROGRESSIVE CAVITY PUMPS

5000218036_DS_0008_GEN_VWT Rev 3

Project name:	IQALUIT
Project#:	5000218036
Document #:	5000218036_DS_0008_GEN_VWT
by:	BB
chkd:	GH
appvd:	CB

SUPPLIER TECHNICAL DATASHEETS

OIM manual section: 4.3.8.1

CS-999-110 : Identification sheet

VWTC PROJECT NUMBER:	Iqaluit WWTP	REV:	02
PROJECT NAME:	5000218036	SUBMITTED TO (COMPANY):	
ENGINEER:	F.VINCI	SUBMITTED TO (RESPONSIBLE)	
PROJECT MANAGER:	C. BEKAERT	PROJECT NUM REFERENCE.:	
PHONE NUMBER:		LOT NUMBER:	

SUPPLIER	EQPT CODE	EQPT TAG NO	DIA	DESCRIPTION	INFO 1	INFO 2	INFO 3	APPLIC.	NOTE	REV
NETZSCH	ST-999-110	P-03-630		TRANSFER PUMP BFP	NETZSCH PC PUMP MODEL NM045BY01L07V COMPLETE WITH GEAR REDUCER, MOTOR & BASEPLATE COMPLETE // MATERIALS OF CONSTRUCTION INCLUDE CAST IRON HOUSING, 316 STAINLESS STEEL INTERNALS	5 HP TECO MOTOR, MODEL PDH00545C ,1800 RPM, 575/60/3, INVERTER DUTY, PREMIUM EFFICIENCY // NORD RIGHT ANGLED GEAR REDUCER WITH A GEAR RATIO OF 7.44:1 // FLANGE MOUNTED TO PUMP, ALL MOUNTED ON A CARBON STEEL BASEPLATE FOR GROUT, DRIP PAN				2
NETZSCH	ST-999-110	P-03-640		TRANSFER PUMP BFP	NETZSCH PC PUMP MODEL NM045BY01L07V COMPLETE WITH GEAR REDUCER, MOTOR & BASEPLATE COMPLETE // MATERIALS OF CONSTRUCTION INCLUDE CAST IRON HOUSING, 316 STAINLESS STEEL INTERNALS	5 HP TECO MOTOR, MODEL PDH00545C ,1800 RPM, 575/60/3, INVERTER DUTY, PREMIUM EFFICIENCY // NORD RIGHT ANGLED GEAR REDUCER WITH A GEAR RATIO OF 7.44:1 // FLANGE MOUNTED TO PUMP, ALL MOUNTED ON A CARBON STEEL BASEPLATE FOR GROUT, DRIP PAN				2

NETZSCH Canada, Inc. 500 Welham Road, Barrie, On., L4N 8Z7
Ph: 705-797-8426 Fax: 705-797-8427 Toll Free: 1-866-683-7867

Pump - Technical

NEMO® pump with drive & baseplate: NM045BY01L07V

The physical characteristics of the pumped product, application details, as well as the General Operating Conditions detailed in our offer have been taken from your inquiry or where not specified have been assumed by us. In the event of an order we would ask you to check any assumptions and all details as they will become contractually binding along with the selection of pump model, Drive, all specifications, and materials of construction, based on these details.

Product:			TWAS
Composition			Flowable
Specific gravity	Assumed	kg/dm³	1.05
Particle size/Solid size	Allowed	mm	15/61
pH value	Approx.		NA
Solids content (w/w)	Approx.	% TS	1-5
Dynamic viscosity	Assumed	CP	30000-63000
Vapour pressure		PSI	No advice

Application details:		***Content***	***normal***	***maximum***
Flow rate (Q)	approx.	M^3/hr	7.2	10.8
Differential pressure		Bar	2	2.6
Suction pressure	assumed	Barg	Flooded	flooded
Discharge pressure	Assumed	barg	2	2.6
Pump operating speed	approx.	RPM	185	245
Sliding velocity	approx.	m/s	0.7	0.9
Frequency	approx.	Hz	30	60
Power required at drive shaft	approx.	kW	0.85	1.5
Running torque	approx.	NM	49	55
Starting torque	approx.	NM	84	84
Operating temperature	assumed	°C	10	20

Assembly specification

installation	horizontal

General operating conditions

Installation area	inside
ambient Temperature	approx. 20°C / 70 F
humidity	up to 75%
application type	Continuous operation
operating hours	24 hours/day
service voltage	3/60/575

Painting	coating system	Netzsch Standard

Operating and Maintenance Instructions

Standard documentation in accordance with the 98/37/EG Machinery Directive.
Special documentation is available on request and would be charged for.

number	1
medium	Paper
language for O&M's and spare parts list	English
dispatch method	shipped with pump

NETZSCH Canada, Inc. 500 Welham Road, Barrie, On., L4N 8Z7
Ph: 705-797-8426 Fax: 705-797-8427 Toll Free: 1-866-683-7867

Offer: N180503ST-01
Date: May 3, 2018

Customer No.:

NEMO® NM045BY01L07V Pump

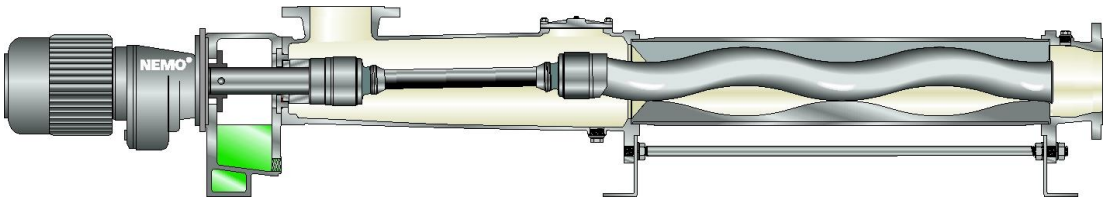

Characteristics and benefits of the NEMO® BY Block pump:

- Reliable and sophisticated construction
- Space-saving construction
- Modular construction system
- 4 different stator – rotor geometries available for most sizes
- Low investment and operating costs
- Low maintenance expenses

General characteristics	
name plate on the pump	in English (Stainless steel)
direction of rotation	to the left, counter clockwise (as viewed from drive end)

Pump Pedastal	
material	Cast iron 0.6025

Pump housing / End connection	
housing material	Cast Iron 0.6025
flange position	Pump#1::Left from DE, Pump#2: Right from DE
function of housing connection	suction connection
flange design	ANSI B16.1
nom. dia. & pressure for pump housing	3" -125#ANSI FLANGE
discharge flange design	ANSI B16.1
nom. dia. & pressure of discharge flange	3" -125#ANSI FLANGE
Function of end connection	pressure connection
housing seals	Buna

Shaft seal	
type	Single mechanical Seal
shaft seal materials	Silicon Carbide Faces – Viton Elastomers
shaft seal type	Burgmann Single MG1-G60 – Q1Q1VGG

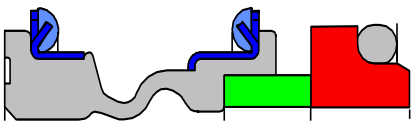

Rotating parts	
rotating parts materials	316 Stainless Steel Internals

NETZSCH Canada, Inc. 500 Welham Road, Barrie, On., L4N 8Z7
Ph: 705-797-8426 Fax: 705-797-8427 Toll Free: 1-866-683-7867

Offer: N180503ST-01
Date: May 3, 2018

Customer No.:

Joints		
	joint type	pin joint
	sealing type	SM Pin joint
	joint sealing material	Viton/316 Stainless Steel
	joint lubrication	Mineral oil

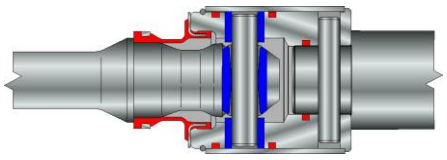

Rotor		
	rotor material	SAE 4140- Hard Chrome Plated
	temperature range	UM 20

Stator		
	stator material	NEMOLAST® S61M Buna
	accesory	STP-3 Dry Run protection Sensor

Drive

Helical gear reducer		
	manufacturer	Nord
	type	SK92672.1-180TC
	gear ratio	7.44
	speed @ 60 Hz	240
	mounting position	M1
Motor		
	Manufacturer	TECO Westinghouse
	motor HP	5
	winding voltage	575
	voltage range	+/-10 %
	frequency	60 Hz
	number of poles	4
	number of phases	3
	Motor speed	1750 rpm
	protection type	IP54 – TEFC, Class 1, Div.2, premium Efficiency
	insulation class	F

Baseplate **Structural Steel Baseplate with drip lip, grout holes & drains.**

Approximate weight of Pump and Gearmotor	845 lbs

NETZSCH Canada, Inc. 500 Welham Road, Barrie, On., L4N 8Z7
Ph: 705-797-8426 Fax: 705-797-8427 Toll Free: 1-866-683-7867

Offer: N180503ST-01
Date: May 3, 2018

Customer No.:

Performance curve:

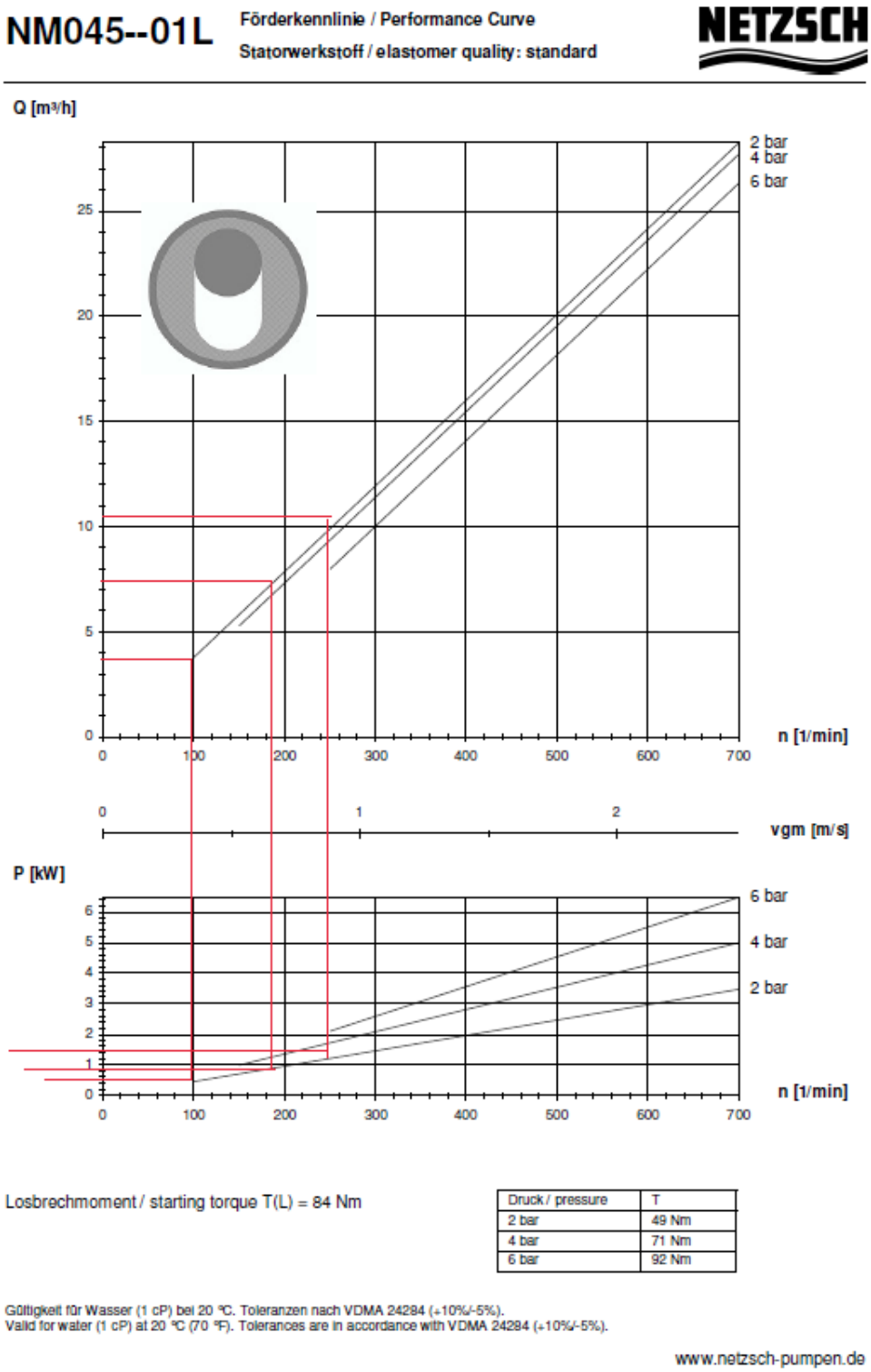

Losbrechmoment / starting torque T(L) = 84 Nm

Druck / pressure	T
2 bar	49 Nm
4 bar	71 Nm
6 bar	92 Nm

Gültigkeit für Wasser (1 cP) bei 20 °C. Toleranzen nach VDMA 24284 (+10%/-5%).
Valid for water (1 cP) at 20 °C (70 °F). Tolerances are in accordance with VDMA 24284 (+10%/-5%).

Dimension tolerances				Tolerances to flanges according ASME B16.1 E B16.5	
Measure	Tolerance	Measure	Tolerance		Tolerance
>3 to 6	±0,5	>400 to 1000	±4,0		
>6 to 30	±1,0	>1000 to 2000	±6,0	Diameter of bolt circle	+1,5
>30 to 120	±1,5	>2000 to 4000	±8,0	Diameter of bolt holes	+1,0
>120 to 400	±2,5	>4000	±20	Thickness	+3,0

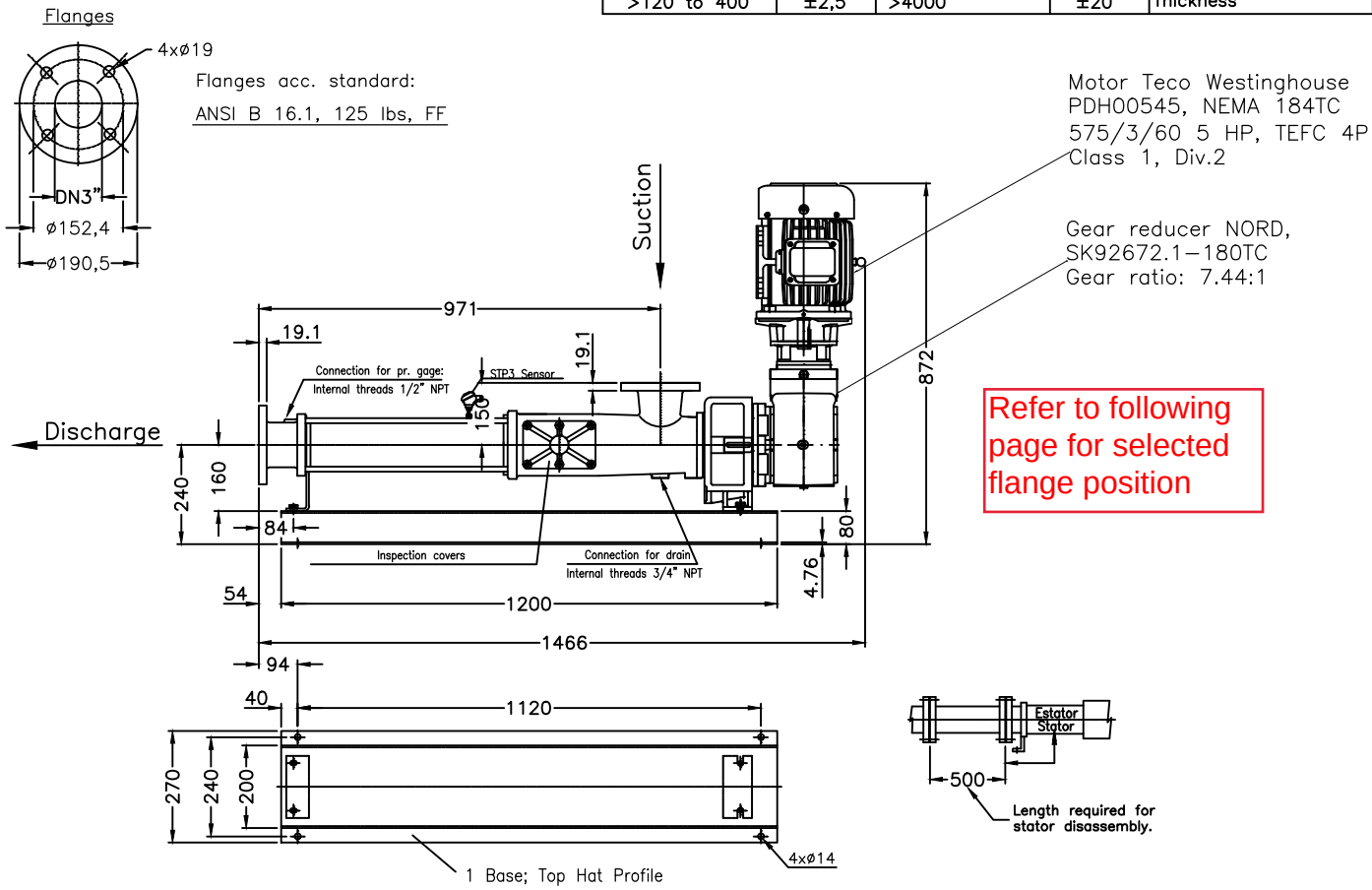

NETZSCH, CANADA INC.

THIRD ANGLE PROJECTION

THIS DRAWING IS THE SOLE PROPERTY OF NETZSCH CANADA, INC. BARRIE, ONT, CANADA. ANY USE OR REPRODUCTION OF ANY PART THEREOF IS FORBIDDEN WITHOUT WRITTEN APPROVAL OF NETZSCH CANADA, INC.

UNLESS OTHERWISE SPECIFIED:
DIMENSIONS ARE IN mm [Inches]
TOLERANCES: 2 PL DEC ± 0.01
3 PL DEC ± 0.005
ANGLE ± 0.5 °
REMOVE ALL BURRS
ALL CORNERS R 0.010 OR BBEAK
MIN RECEIVING INSPECTION PT

Tag #	Part #	P.O.#	REV.
DESCRIPTION: NEMO PUMP NM045BY01L07V		DRAWN BY: A.E.	DATE: Nov. 26, 2018
NTC DRAWING NO.: B045BY1-N180503ST-01		MATERIALS: CI/316/4140VCP/NBR/MG1/C.S.Baseplate	
COMMENTS: Baseplate to have drip rim, grout holes and drain		DO NOT SCALE	SHEET: 1 of 1

Tolerâncias Dimensionais/Dimensional Tolerances				Tolerâncias para Flanges cfe./Tolerances for Flanges according ASME B16.1 e B16.5	
Medida/Dimension	Tolerância/Tolerance	Medida/Dimension	Tolerância/Tolerance		Tolerância/Tolerance
>3 até/to 6	±0,5	>400 até/to 1000	±4,0		
>6 até/to 30	±1,0	>1000 até/to 2000	±6,0	Diâmetro da Furação/Drilling Diameter	±1,5
>30 até/to 120	±1,5	>2000 até/to 4000	±8,0	Diâmetro Furos/Holes Diameter	+1,0
>120 até/to 400	±2,5	>4000	±20	Espessura/Thickness	+3,0

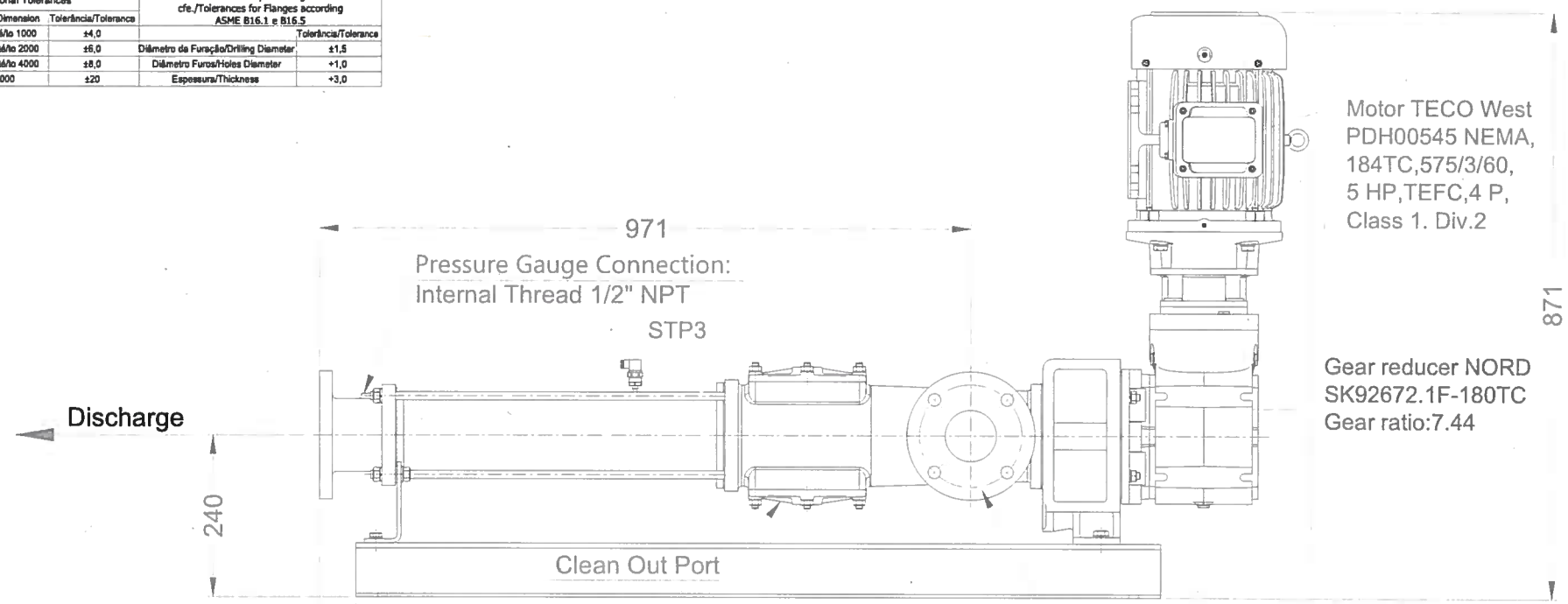

Motor TECO West
PDH00545 NEMA,
184TC,575/3/60,
5 HP,TEFC,4 P,
Class 1. Div.2

Gear reducer NORD
SK92672.1F-180TC
Gear ratio:7.44

Pump
B169802
P-03-630/630

Pump
B169803
P-03-630/640

Suction Flange
Boring acc. Norm:
Asme B-16.1 / Class 125 / FF / NPS 3

Discharge Flange
Boring acc. Norm:
Asme B-16.1 / Class 125 / FF / NPS 3

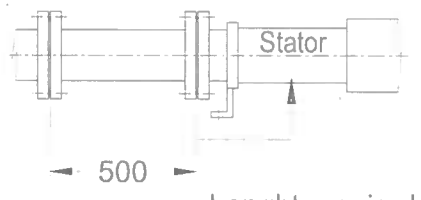

Lenght required for
stator disassembly.

VEOLIA

EXAMINÉ/EXAMINED
L'examen de ce dessin ne relève en aucune façon l'entrepreneur ou le fournisseur de sa responsabilité quant à l'exactitude de ce dessin ou à sa conformité avec les documents contractuels et les conditions de chantier.
Examination of this drawing will not release in any way the Contractor or Supplier of his responsibilities as of the precision of this drawing or to its compliance with the contract documents and job site conditions.

☒ *Procéder tel quel / Proceed as is*
☐ *Procéder tel qu'annoté / Proceed as noted*
☐ *Resoumettre / Re-submit*

Par / by: F. VINCI
Date: 2019/04/08

DRAWING FOR APPROVAL

IEC Flange: ø200
Shaft bore: ø30

Revisão/Revision	Descrição/Description	Nome/Name	Data/Date
05	Revised as comments	Knaesel	05/04/19
04	Included Baseplante	Knaesel	02/04/19
03	Revised as comments	Knaesel	27/03/19

Cliente/Customer: VEOLIA

Pedido/Order: 4210000241 | Referência/Reference: L50009344

NETZSCH

Título/Title:

Pump NM045BY01L07V

	Data/Date	Nome/Name
Desenhado/Designer	07/03/19	matheus.knaesel
Verificado/Checked, Aprovado/Approved	07/03/19	gustavo.henrique

TAG: | Peso/Weight 170 kgf

Nr. Desenho/Drawing Nr.: 4737650 | Folha/Sheet: 1/1 | Escala/Scale: 1:9

Reservado todos os direitos sobre este documento técnico. All rights reserved.

A3

Intelligent Drivesystems, Worldwide Services

INSTALLATION & OPERATING INSTRUCTIONS



NORD.COM/DOCS
DOCUMENT COLLECTION

Order Number:
NORD Model: SK92172.1VF CUS

NORD DRIVESYSTEMS

Order and product data

Order Number	
Product Name	Right-Angle Helical Bvl Gearbo
NORD Model Type	SK92172.1VF-CUS
Mounting Position	
Lubricant	VG220-MIN-EP
Lubricant Qty	

Contents

Manuals

U10020-Safety Notes
U10020 Version: 0.03

U10040-Storage & Commissioning
U10040 Version: 0.03

U10060-Unit Installation
U10060 Version: 2.02

U10750-Helical & Bevel Reducer lubrication
U10750 Version: 0.05

U11000-Helical & Bevel Reducer Lubrication Types
U11000 Version: 0.08

U12205 Lubrication Capacity-92.1-93.1 Series Helical Bevel Foot Mounted
U12205 Version: 0.08

U14305 Oil Plug & Vent Locations-92.1-93.1 Series Helical Bevel
U14305 Version: 0.02

U15415 92.1/93.1 Parts List
U15415 Version: 0.02

U19000-Troubleshooting
U19000 Version: 2409

U30000-Motors- AC INDUCTION, SINGLE & POLYPHASE
U30000 Version: 0.07

1. Safety & information symbols

All work including transportation, storage, installation, electrical connection, commissioning, servicing, maintenance and repair must be performed **only by qualified specialists or personnel**. It is recommended that repairs to NORD Products are carried out by the NORD Service Department. Instructions related to operational safety will be emphasized as shown.

Symbol	Meaning
⚠	**Danger, Caution or Warning -** Severe risk or danger of personal injury or death by working around dangerously high electrical voltage or moving machinery. Proper safety precautions must be taken.
NOTICE	**Notice -** Care must be taken to avoid the possibility of damaging the drive unit, driven machine, or the environment.
ℹ	**Important Note -** Useful note or tip to help assure trouble-free operation.
♻	**Material Disposal Note -** Important note concerning suggested material disposal.

2. Safety warnings

⚠ DANGER

- All work involved in the transport, connection, commissioning and maintenance of any NORD product must be carried out by qualified and responsible technicians. All applicable national, regional, and local work regulations and safety requirements must also be complied with. **NORD assumes no liability for personal injury, accidental death, or equipment damage and malfunctions resulting from failure to comply with installation or operating instructions, safety notes, or any work regulations and laws!**
- Gear unit installation and maintenance work may only be performed when no power is available to the prime mover or motor. Electric motors, electrical brakes, and variable frequency drives, contain potentially dangerous high-voltage. Prior to installation or maintenance, shut down the power at the circuit breaker or power switch. **While working on the drive, make sure the power from the prime mover is isolated or secured on "lock-out" to prevent accidental start-up and to safeguard against injury!**
- Surfaces of motors and gear units may become hot during operation or shortly after start-up. In some instances additional protection against accidental contact may be necessary. **Use caution to avoid burns or serious injury!**

3. Observe published performance range & nameplate data

NOTICE

Observe the data on all reducer nameplates and verify published ratings for the NORD item/s in question. Do not operate any NORD equipment outside the published performance range. Failure to comply may result in damage to the drive unit, driven machine, or the environment.

U.S. Nameplate

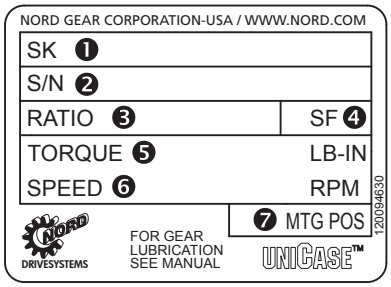

❶ Model/Type
❷ Serial Number
❸ Gear Ratio
❹ Service Factor
❺ Torque Rating
❻ Output Speed RPM
❼ Mounting Position

European Nameplate

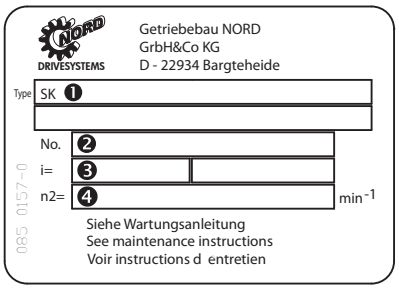

❶ Model/Type
❷ Serial Number
❸ Gear Ratio
❹ Speed

4. Transportation and handling

Make sure that all eyebolts and lifting lugs are tight and lift only at designed points. Protect the mounting surface from possible damage during transportation.

⚠ WARNING

Do not attach other machinery or loads to the NORD assembly, the supplied lifting bolts are not designed for this purpose and may result in drive damage or personal injury.

If the gearmotor or assembly is equipped with two suspension eye bolts, then both locations should be used for transportation and placement of the unit; in this case the tension force of the slings must not exceed a 45° angle.

In some instances it may be appropriate to use additional lifting straps or slings in order to assure safe transportation of the assembly. Always use sufficiently rated handling equipment and ensure that adequate safety measures are taken to protect personnel from injury during transportation. Once the NORD assembly is properly installed, remove the transportation fixtures.

7. DISPOSAL

MATERIAL DISPOSAL

Properly dispose of all used gear units and internal parts in accordance with all local regulations. In particular, all lubricants must be properly collected and disposed.

For confirmation of specific materials used in a specific reducer or gearmotor assembly, please consult NORD with the appropriate unit identification or serial number.

Components	Material
Gear wheels, shafts, rolling bearings, parallel keys, snap rings, spacers, shims, etc.	Steel
Gear housing and housing components	Cast iron or Aluminum (depending on type and size)
Worm gears	Bronze alloy
Radial seals, sealing caps, and rubber components	Elastomers with some steel
Coupling components	Plastic or Elastomer with Steel
Housing gaskets and flat oil seals	Asbestos-free sealing or gasket material (various types used)
Gear Oil	Mineral, SHC-Synthetic or PG-Synthetic (can vary)

STORAGE & COMMISSIONING

1. Storage

IMPORTANT NOTE

For storage periods longer than 9 months, or for storage in less than desirable conditions, please consult NORD for recommendations.

Storage for up to 9 months is possible, so long as the following conditions are observed:

- Store the gear unit in its actual mounting position in accordance with the specified oil fill-level, in a clean and dry temperature controlled area. Avoid temperature fluctuations within the range of 0°C and 40°C (32°F to 104°F) and avoid relative humidity conditions in excess of 60%.
- Protect all exposed or unpainted shaft and flange surfaces with an anti-corrosion agent or grease.
- Store in a location free from shock and vibration, to avoid false brinelling of bearing elements and raceways.
- Whenever possible, rotate the shafts periodically, by hand if necessary, to help prevent brinelling (bearing damage) and to help keep the shaft seals pliable.
- Avoid direct exposure to the sun or UV light and aggressive or corrosive materials in the environment (ozone, gases, solvents, acids, caustic solutions, salts, radioactivity, etc.

2. Commissioning

Prior to gear unit start-up, complete the following:

- Please check your gear unit for a vent and if applicable to your product, remove the sealing plug to activate.

NOTICE

To prevent build-up of excessive pressure, sealed vents must be activated as shown prior to gear unit start up. Excessive pressure may cause damage to internal gearbox components and leakage.



Sealed vent

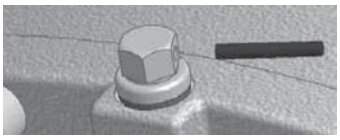

Activated vent

- Check the lubricant and be sure the gear unit is filled with the proper oil type, to the proper level, as determined by the mounting position.

IMPORTANT NOTE

Some smaller gear units are supplied as maintenance free/ lubricated for life gear units. Oil level may not be checked on some of these units.

- Check the condition of all shaft seals and all assembled flange gasket areas. If any change is detected in the shape, color, hardness or permeability, or if any leaks are detected, the corresponding shaft seals and/or gaskets must be replaced.
- Remove all anti-corrosive metal protectant from otherwise bare metal surfaces. Follow product manufacturers directions and warnings during surface protection removal.
- Check the resistance of all motor and brake windings to verify the integrity of the winding insulation and inspect all terminal box openings and wire connection areas to verify that all components are dry and free of corrosion.

3. Long-Term Storage

By taking special precautions, problems such as seal leakage and reducer failure due to the lack of lubrication, improper lubrication quantity, or contamination can be avoided. The following precautions will protect gear reducers during periods of extended storage:

- Store the gear unit in its actual mounting position in accordance with the specified oil fill-level, in a clean and dry temperature controlled area. Avoid temperature fluctuations within the range of 0°C and 40°C (32°F to 104°F) and avoid relative humidity conditions in excess of 60%.
- Fill the reducer full with oil that is compatible with the product normally used or recommended during service.
- Apply grease to all unpainted or unprotected shafts, bores, keyways, flange surfaces, tapped holes, and to the exterior of all oil seals.
- Store in a location free from shock and vibration, to avoid false brinelling of bearing elements and raceways.
- Once every few months rotate the input shaft approximately 10-20 revolutions to redistribute the weight of gears and shafts and to prevent brinnelling of the bearings and drying of the seal track.
- Avoid direct exposure to the sun or UV light and aggressive or corrosive materials in the environment (ozone, gases, solvents, acids, caustic solutions, salts, radioactivity, etc.)

4. Commissioning After Long-Term Storage

• Please check your gear unit for a vent and if applicable to your product, remove the sealing plug to activate.

NOTICE

To prevent build-up of excessive pressure, sealed vents must be activated as shown prior to gear unit start up. Excessive pressure may cause damage to internal gearbox components and leakage.

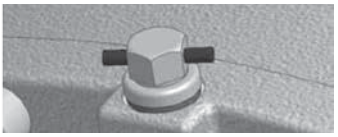

Sealed vent

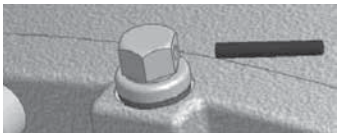

Activated vent

- Remove all anti-corrosive metal protectant from otherwise bare metal surfaces. Follow product manufacturers directions and warnings during surface protection removal.
- Drain the reducer and refill it with the proper type and amount of lubricant.
- Observe start-up and initial operation to make sure there are no seal or gasket leaks, or unusual sounds, vibration or heat rise during operation.
- Check the resistance of all motor and brake windings to verify the integrity of the winding insulation and inspect all terminal box openings and wire connection areas to verify that all components are dry and free of corrosion.

1. Installation site

Drives must be properly installed if they are to produce the rated torque. Improper installation may lead to oil leaks, reduced life, or even catastrophic failure. NORD gear drives and motors are intended to be installed at a suitable mounting site under the following conditions:

- Unimpeded airflow to and around the units.
- Accessibility to oil drain, level and breather plugs.
- On brakemotors, allow adequate space for removing the fan guard and replacing and adjusting the brake.
- Mounting surfaces must be flat, torsionally rigid, and dampened against vibration.
- Unless special measures are taken, the immediate vicinity around the gear drive or motor should not be exposed to any aggressive or corrosive substances, contaminated air, ozone, gases, solvents, acids, alkalis, salts, radioactivity, etc.

2. Mounting position

Reducer mounting position charts illustrate the standard mounting positions for horizontal and vertical mounting. All gear units are assembled with the oil fill-level, oil-drain and vent plugs installed in their proper locations, **according to the customer-specified mounting position**. For mounting orientations other than shown consult NORD Gear.

NOTICE

Improper oil levels may lead to premature component wear and diminished service life. The gear reducer may not receive proper lubrication if the unit is not mounted in the position for which it is designed. Observe the mounting position designated on the reducer nameplate, or specified in the order acknowledgement. Consult NORD prior to changing mounting position in the field. While it is often possible to simply relocate the oil fill-level and vent locations, and adjust the oil fill amount, in some cases, different mounting positions may lend themselves to different internal construction features.

3. Reducer mounting

- The support foundation must be straight, level and flat. Whether the gear unit is foot-mounted or flange-mounted, NORD recommends that the straightness and flatness of the customer-supplied support foundation follow **Table 1**.
- The gear unit must be properly aligned with the driven shaft of the machine in order to prevent additional stress or load forces from being imposed upon the gear unit.
- To facilitate oil drainage it may be desirable to elevate the gear box foundation above the surrounding support structure.
- All bolting surfaces must be clean and free from contamination and corrosion.

Table 1: Recommended Straightness and Flatness of Customer-Supplied Support Foundation

Above (in)	To & Including (in)	General Tolerance on Straigtness & Flatness ISO 2768-2, Tolerance Class K
0.00	0.39	+/- 0.002 in
0.39	1.18	+/- 0.004 in
1.18	3.9	+/- 0.008 in
3.9	11.8	+/- 0.016 in
11.8	39	+/- 0.024 in
39	118	+/- 0.031 in

Above (mm)	To & Including (mm)	General Tolerance on Straigtness & Flatness ISO 2768-2, Tolerance Class K
0	10	+/- 0.05 mm
10	30	+/- 0.1 mm
30	100	+/- 0.2 mm
100	300	+/- 0.4 mm
300	1000	+/- 0.6 mm
1000	3000	+/- 0.8 mm

Straightness: Based upon the length of the corresponding line.

Flatness: Based upon the longer lateral surface or the diameter of the circular surface.

IMPORTANT NOTE

The responsibility for the design and construction of the support foundation is with the user. The foundation must be adequate to withstand normal operating loads and possible overloads while maintaining alignment to attached system components under such loads. ***Motors and drive components mounted on prefabricated base plates can become misaligned during shipment. Always check alignment after installation.***

4. Steel foundation

An engineered structural steel foundation should be designed to provide adequate rigidity and prevent loads from distorting the housing or causing misalignment of internal gears and shafts. When foot-mounting the gear reducer, a base plate or sole plate with suitable thickness (generally equal or greater than the thickness of the drive feet) should be securely bolted to steel supports and extend under the entire gear drive assembly. When flange-mounting the gear unit, the bulk head plate must be engineered to minimize buckling distortions and support the cantilevered weight of the gear unit or gear motor.

NOTICE

Do not weld on the gear unit or use the gear unit as an earth or ground connection for any welding procedure as this may cause permanent damage to the bearings and gears.

5. Concrete foundation

If a concrete foundation is used, allow the concrete to set firmly before bolting down the gear drive. Grout structural steel mounting pads and bolts of sufficient size into the concrete, to adequately distribute the load stress onto the concrete foundation.

Figure 1: Concrete Foundation

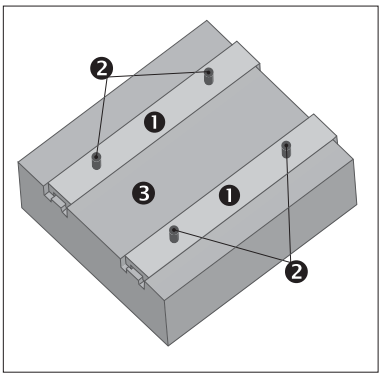

❶ Grouted Structural Steel Mounting Pads
❷ Mounting Bolts
❸ Concrete Foundation

6. Bolt connections for footed & flange mounted units

NORD footed reducers and flange-mount reducers (with B5 flange) have clearance designed into the mounting holes to allow for some minor adjustments in alignment. Bolt size, strength and quantity should be verified to insure proper torque reaction capacity whatever the mounting arrangement. Tightening torque for gear reducer mounting bolts, and recommended fastener grades, are provided in Table 2.

Table 2A: Tightening Torque for Inch Reducer Mounting Bolts

Thread Size	Grade SAE 5 / ASTM A449		Grade SAE 8	
(in)	(lb-ft)	(Nm)	(lb-ft)	(Nm)
1/4-20	7.1	9.6	10.0	13.6
5/16-18	16	21	22	30
3/8-16	28	37	39	53
1/2-13	69	93	98	132
5/8-11	138	188	195	264
3/4-10	247	334	348	472
7/8-9	396	537	558	757
1-8	592	802	833	1,130
1 1/8-7	-	-	1,233	1,672
1 1/4-7	-	-	1,717	2,327
1 3/8-6	-	-	2,267	3,073
1 1/2-6	-	-	2,983	4,045
1 3/4-5	-	-	4,458	6,045

- Calculated tightening torques are based a conventional 60°, clean and dry (un-lubricated) thread, with thread-friction and head-friction equal to 0.15.
- When using inch-fasteners, NORD recommends a minimum Grade SAE 5 (ASTM A-449) for sizes up to 1-8 UNC, and Grade SAE 8 for all larger sizes.

Table 2B: Tightening Torque for Metric Reducer Mounting Bolts

Above	ISO Grade 8.8		ISO Grade 10.9		ISO Grade 12.9	
(mm)	(lb-ft)	(Nm)	(lb-ft)	(Nm)	(lb-ft)	(Nm)
M4	2.4	3.2	3.5	4.7	4.1	5.5
M5	4.7	6.4	6.9	9.3	8.1	11
M6	8	11	12	16	14	19
M8	20	27	29	39	34	46
M10	39	53	58	78	67	91
M12	68	92	100	135	110	155
M14	107	145	159	215	180	250
M16	170	230	247	335	290	390
M18	240	325	343	465	400	540
M20	339	460	487	660	570	770
M22	465	630	664	900	770	1,050
M24	583	790	848	1,150	960	1,300
M27	848	1,150	1,217	1,650	1,440	1,950
M30	1,180	1,600	1,660	2,250	1,950	2,650
M36	2,050	2,780	2,884	3,910	3,470	4,710
M42	3,297	4,470	4,639	6,290	5,560	7,540
M48	4,940	6,700	7,010	9,500	8,260	11,200

- Calculated tightening torques are based on a conventional 60°, clean and dry (un-lubricated) thread, with thread-friction and head-friction equal to 0.15.
- When using metric-fasteners, NORD recommends a minimum ISO Grade 8.8 bolt.

7. Mounting the prime mover

When the motor is not flange mounted or integrally mounted to the gearbox, it is important to properly secure and align the gear drive with respect to the driven machine before attempting to align the prime mover or motor.

A. After the main gear drive is properly aligned and bolted in place, align the prime mover with respect to the reducer input shaft.

B. Use shims under the feet of the prime mover as needed, and secure in place with the proper mounting bolts. Dowel pins may be field-installed to help prevent misalignment and ensure proper realignment if removed for service.

IMPORTANT NOTE

When using a high speed coupling connection between the prime mover and the reducer, check alignment per the coupling manufacturers recommendations. If the coupling is misaligned, the reducer alignment or shimming is incorrect. Re-align the gear reducer and re-check the high-speed coupling alignment before re-aligning the motor.

HELICAL & BEVEL REDUCER LUBRICATION

1. Importance of proper lubrication

Proper gearbox lubrication is essential in order to reduce friction, heat, and component wear. Lubricants reduce heat and wear by inserting a protective "fluid boundary" between mating parts and preventing direct metal to metal contact. Lubricants also help prevent corrosion and oxidation, minimize foam, improve heat transfer, optimize reducer efficiency, absorb shock loads and reduce noise.

Most NORD reducers are shipped from the factory with a pre-determined oil fill level in accordance to the specified reducer size and mounting position.

2. Standard oil type

The following tables indicate the standard oil fill type used. Please see user manual U11000 for more specific information and for optional helical and bevel gear lubricants:

Serviceable Gear Units	
Helical In-line	Standard Oil Fill: ISO VG 220, Mineral Oil
Clincher Parallel-Shaft	
Right-Angle Bevel	
NORDBLOC® Series In-line	
NORDBLOC®.1 Series In-line	
Standard Series In-line	

IMPORTANT NOTE

For shipping purposes, the following large Clincher™ gear units are supplied without oil:
- Clincher™ Sizes SK11282, SK11382, SK11382.1 and SK12382

Maintenance-free / Lubricated For Life Gear Units	
Clincher™ sizes SK0182NB, SK0282NB & SK1382NB	Standard Oil Fill: ISO VG220 SHC/PAO Synthetic Oil
NORDBLOC® Sizes SK172, SK272, SK371F, SK372, SK373, SK320	

IMPORTANT NOTE

Maintenance-free units are supplied as sealed units with no vent-plug. Consult NORD prior to ordering if interested in ordering any of the above sizes as serviceable gear units.

IMPORTANT NOTE

Consult the sticker adjacent to the fill plug to determine the type of lubricant installed at the factory. Some units have special lubricants designed to operate in certain environments or intended to extend the service life or service temperature range of the lubricant. If in doubt about which lubricant is needed for a certain application, please contact NORD Gear.

3. Lubrication replacement

If the gear unit is filled with mineral oil, the lubricant should be replaced at least after every 10,000 operating hours or after every two years. If the gear unit is filled with synthetic oil, the lubricant should be replaced at least after every 20,000 operating hours or after every four years. Often gear reducers are exposed to extreme ambient conditions, hostile environments, wet conditions, or dirty and dusty operating areas. Especially in these situations, it is important to establish a condition-based oil service interval.

4. Oil viscosity

Viscosity, or the oil's resistance to shear under load, is often considered the single most important property of any gear oil.

- Often one will consider making a viscosity correction to the oil to improve the performance when operating the gear unit at low temperature or high temperature.
- In cases of extreme load conditions, gear pairs and antifriction bearings may be more susceptible to sliding or scuffing wear. In these operating conditions, it may also be beneficial to consider an increased lubrication viscosity and/or a lubrication with improved antiwear additive packages.

IMPORTANT NOTE

The user should consult with their primary lubrication supplier before considering changes in oil type or viscosity.

5. Maximum oil sump temperature limit

To prevent reducer overheating, the reducer's maximum oil sump temperature limit must not be exceeded for prolonged periods of operation (up to 3 hours continuous operation depending upon reducer size).

Oil Type	Maximum Oil Temperature Limit	
	NORD	AGMA 9005-D94
Mineral	80-85°C (176-185°F)	95°C (203°F)
Synthetic	105°C (220°F)	107°C (225°F)

IMPORTANT NOTE

Use caution when specifying gear reducers for high temperature service. If there is concern about exceeding the allowable safe operating temperatures, please consult NORD to discuss alternatives.

6. The importance of routine oil analysis

Routine oil analysis, sound lubrication practices, and good tracking of oil performance trends will help establish proper lubrication maintenance and change-out intervals. To maximize equipment reliability, NORD Gear generally recommends a condition-based lubrication maintenance program. One may take exceptions to this general recommendation on sealed-for-life or maintenance-free gear units or smaller and less costly gear units. In these instances, the replacement cost of the gear unit is often small compared to the costs associated with this type of oil analysis program.

NOTICE

NORD suggests replacing the gear oil if oil analysis indicates any of the following. Failure to replace the oil may cause internal damage to gearbox and diminished performance:

- Viscosity has changed by approximately 10% or more.
- Debris particles (silicon, dust, dirt or sand) exceed 25 ppm.
- Iron content exceeds 150-200 ppm.
- Water content is greater than 0.05% (500 ppm).
- The total acid number (TAN) tests indicate a significant level of oxidative break-down of the oil, and a critical reduction in performance; If the TAN number measured changes by more than 5% over the new oil, then an oil change would be recommended.

7. Mounting position and oil fill quantity

All NORD Gear reducers are shipped from the factory with a pre-determined oil fill level in accordance to the specified reducer size and mounting position. ***For additional information, please see the seperate mounting position diagrams and the corresponding oil fill quantity tables for the specified gear unit.***

The gearbox nametag will indicate the mounting position that was provided. ***For mounting orientations other than shown in the mounting position charts, please consult NORD Gear.***

IMPORTANT NOTE

Actual oil volume can vary slightly depending upon the gear case size, mounting and ratio. Prior to commissioning the reducer, check the oil-fill level using the reducer's oil-level plug and drain or add additional oil as needed. The minimum acceptable oil level is 0.15 in (4mm) below the oil level hole.

8. Oil plug locations

All gear units are assembled with the oil fill-level, oil-drain and vent plugs installed in their proper locations, according to the specified mounting position. All standard plugs are metric and utilize sealing gaskets between the head of the plug and the reducer housing.

9. Drain and fill-level plugs

All reducer drain plugs are metric socket head cap screws. For easier identification, it is NORD's standard practice to provide a hex-head screw for the fill-level plug. For ease of draining the used oil from the gear reducer, use the socket head screw located at the lowest part of the gearbox.


Drain Plug

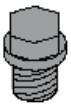
Fill Level Plug

10. Vent plug locations

Reducer venting allows for air pressure differences that occur during operation, between the inner space of the reducer and the atmosphere, while ensuring leak-free operation. The AUTOVENT™ is standard for all vented gear units, unless otherwise noted.

AUTOVENT™ - The AUTOVENT™ helps prevent bearing and gear damage by behaving like a check valve to block the entry of foreign material and prevent lubrication contamination from dust particles, moisture and air-borne process chemicals. The breather opens at approximately 0.3-0.9 psi during operation and closes tightly as the gearbox cools. This option is perfect for humid conditions and wash-down environments, helping to maintain proper oil cleanliness, while reducing foaming and oxidation.

Figure 1 AUTOVENT™ Types

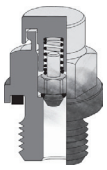
Type 1

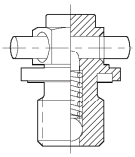

Type 2 with transportation plug

Open Vent - An optional open vent can be supplied by NORD. The open vent comes closed upon delivery with a transportation sealing plug (see Warning).

NOTICE

To prevent build-up of excessive pressure, sealed vents must be activated as shown prior to gear unit start up. Excessive pressure may cause damage to internal components and cause leakage.

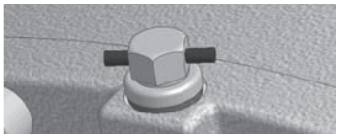
Sealed vent

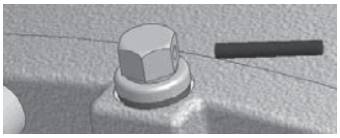
Activated vent

Filtered Vent - NORD may offer an optional filtered vent, which allows gases to permeate, but does not allow dust and debris to pass through the vent.

HELICAL & BEVEL REDUCER LUBRICATION TYPES

Lubrication Tables – Helical and Bevel Gear Units

Standard Oil Lubricants

ISO Viscosity	Oil Type	Ambient Temperature Range	Manufacturer Brand/Type	Notes
VG220	MIN-EP	0 to 40°C (32 to 104°)	Mobilgear 600XP220	♦❶
	PAO-EP	-35 to 60°C (-31 to 140°F)	Mobil SHC Gear 220	♦❷
	FG	-5 to 40°C (23 to 104°F)	Fuchs FM220	♦

Optional Oil Lubricants

ISO Viscosity	Oil Type	Ambient Temperature Range	Manufacturer Brand/Type	Notes
VG460	PAO-EP	-35 to 80°C (-31 to 176°F)	Mobil SHC Gear 460	-
	FG-PAO	-35 to 80°C (-31 to 176°F)	Mobil SHC Cibus 460	-
VG220	FG-PAO	-35 to 60°C (-31 to 140°F)	Mobil SHC Cibus 220	S
VG150	PAO-EP	-35 to 25°C (-31 to 77°F)	Mobil SHC Gear 150	-

Grease Options (applied to greased bearings and seal cavities)

NLGI Grade	Grease Thickener	Grease Base Oil	Ambient Temperature Range	Manufacturer Brand/Type	Notes
NLGI 2	Li-Complex	MIN	-30 to 60°C (-22 to 140°F)	Mobil Grease XHP222	♦❶
	Li-Complex	PAO	-40 to 80°C (-40 to 176°F)	Mobil / Mobilith SHC 220	♦❷
	Polyurea	FG-PAO	-30 to 80°C (-22 to 176°F)	Mobil SHC Polyrex 222	♦

♦ Stocked Lubricants

❶ Standard product on serviceable gear units

❷ Standard product on maintenance free gear units

IMPORTANT NOTE

- The "Ambient Temperature" is intended to be an operation guideline based upon the typical properties of all the lubricant. The viscosity and other properties of the lubricant change based upon load, speed, ambient conditions, and reducer operating temperatures. The user should consult with their lubrication supplier & NORD gear before considering changes in oil type or viscosity.
- To prevent reducer overheating, observe the maximum operating oil temperature limits:
  Mineral Oil: 80-85 °C (176 – 180 °F).
  Synthetic Oil: 105 °C (225 °F).
- In the following instances, please consult NORD for specific recommendations:
  - √ Gear units will operate in high ambient temperature conditions exceeding 40 °C (104 °F).
  - √ Gear units will operate in cold ambient temperature conditions approaching 0 °C (32 °F) or lower.
  - √ Lower than an ISO VG100 viscosity oil is being considered for a cold-temperature service.
  - √ Fluid grease is required for lubricating the gear unit.
- Observe the general lubrication guidelines outlined in user manual U10750.

Oil Formulation Codes

MIN-EP - Mineral Oil with EP Additive
PAO-EP - Synthetic Polyalphaolefin Oil with EP Additive
PAO - Synthetic Polyalphaolefin Oil
PG - Synthetic Polyglycol Oil
FG - Food-Grade Oil
FG-PAO - Food-Grade, Synthetic Poyalphaolefin Oil
FG-PG - Food-Grade, Synthetic Polyglycol Oil

Lubrication Notes

- Avoid using (EP) gear oils in worm gears that contain sulfur-phosphorous chemistries, as these additives can react adversely with bronze worm gears and accelerate wear.
- Food grade lubricants must be in compliance with FDA 212 CFR 178.3570 and qualify as a NSF-H1 lubricant. Please consult with lubrication manufacturer for more information.
- When making a lubrication change, check with the lubrication supplier to assure compatibility and to obtain recommended cleaning or flushing procedures.
- Do not to mix different oils with different additive packages or different base oil formulation types. Polyglycol (PG) oils are not miscible with other oil types and should never be mixed with mineral oil or polyalphaolefin (PAO) synthetic oil.

HELICAL & BEVEL REDUCER LUBRICATION TYPES

Oil Cross-reference Chart

ISO Viscosity	Oil Type	Ambient Temperature Range	Mobil	Shell	Castrol	FUCHS	KLÜBER LUBRICATION
VG150	MIN-EP	0 to 25°C (32 to 77°F)	Mobilgear 600XP150	Omala S2 G 150	Alpha SP150	Renolin EP150	Klüberoil GEM 1-150N
	PAO-EP	-30 to 25 °C (-22 to 77 °F)	Mobil SHC Gear 150	Omala S4 GX 150	Alphasyn EP150	Gearmaster SYN150/NA	Klübersynth EG 4-150
	PAO	-30 to 25°C (-22 to 77°F)	Mobil SHC629	Morlina S4 B 150	Alphasyn T150	N/A	Klübersynth GEM 4-150N
	PG	-25 to 25°C (-13 to 77°F)	Mobil Glygoyle 150	Omala S4 WE 150	Alphasyn PG150	Renolin PG150	Klübersynth GH 6-150
	FG	0 to 25°C (32 to 77°F)	Mobil DTE FM 150	N/A	N/A	N/A	N/A
	FG-PAO	-15 to 25°C (5 to 77°F)	Mobil SHC Cibus 150	N/A	N/A	Cassida GL150	Klüberoil 4 UH 1-150N
	FG-PG	-25 to 25°C (-13 to 77°F)	Mobil Glygoyle 150	N/A	N/A	N/A	Klübersynth UH1 6-150
VG220	MIN-EP	0 to 40°C (32 to 104°)	Mobilgear 600XP220	Omala S2 G 220	Alpha SP220	Renolin EP220	Klüberoil GEM 1-220N
	PAO-EP	-30 to 60 °C (-22 to 140 °F)	Mobil SHC Gear 220	Omala S4 GX 220	Alphasyn EP220	Gearmaster SYN220/NA	Klübersynth EG 4-220
	PAO	-30 to 60°C (-22 to 140°F)	Mobil SHC630	Morlina S4 B 220	Alphasyn T220	N/A	Klübersynth GEM 4-220N
	PG	-25 to 60°C (-13 to 140°F)	Mobil Glygoyle 220	Omala S4 WE 220	Alphasyn PG220	Renolin PG220	Klübersynth GH 6-220
	FG	0 to 40°C (32 to 104°F)	Mobil DTE FM 220	N/A	N/A	Fuchs FM220	N/A
	FG-PAO	-25 to 60°C (-13 to 140°F)	Mobil SHC Cibus 220	N/A	N/A	Cassida GL220	Klüberoil 4 UH 1-220N
	FG-PG	-25 to 60°C (-13 to 140°F)	Mobil Glygoyle 220	N/A	N/A	Cassida WG220	Klübersynth UH1 6-220
VG460	MIN-EP	0 to 40°C (32 to 104°F)	Mobilgear 600XP460	Omala S2 G 460	Alpha SP460	Renolin EP460	Klüberoil GEM 1-460N
	PAO-EP	-20 to 80°C (-4 to 176°F)	Mobil SHC Gear 460	Omala S4 GX 460	Alphasyn EP460	Gearmaster SYN460/NA	Klübersynth EG 4-460
	PAO	-20 to 80°C (-4 to 176°F)	Mobil SHC 634	Morlina S4 B 460	Alphasyn T460	N/A	Klübersynth GEM 4-460N
	PG	-20 to 80°C (-4 to 176°F)	Mobil Glygoyle 460	Omala S4 WE 60	Alphasyn PG460	N/A	Klübersynth GH 6-460
	FG	0 to 40°C (32 to 104°F)	Mobil DTE FM460	N/A	N/A	Fuchs FM460	N/A
	FG-PAO	-20 to 80°C (-4 to 176°F)	Mobil SHC Cibus 460	N/A	N/A	Cassida GL460	Klüberoil 4 UH 1-460N
	FG-PG	-20 to 80°C (-4 to 176°F)	Mobil Glygoyle 460	N/A	N/A	Cassida WG460	Klübersynth UH1 6-460

Low-end service temperature limit may vary for a specific lubricant; Please also see the important notes on Page 1.

92.1/93.1 SERIES HELICAL-BEVEL OIL FILL QUANTITIES

92.1/93.1 Helical-bevel mount lubrication

All NORD Gear reducers are shipped from the factory with a pre-determined oil fill level in accordance to the specified reducer size & mounting position. For additional information, please refer to the "Oil Plug & Vent Locations" documentation for your gear unit.

IMPORTANT NOTE

Actual oil volume can vary slightly depending upon the gear case size, mounting and ratio. Prior to commissioning the reducer, check the oil-fill level using the reducer's oil level plug and drain or add addition oil as needed.

For mounting orientations other than shown please consult NORD Gear. Reducer modifications may be required.

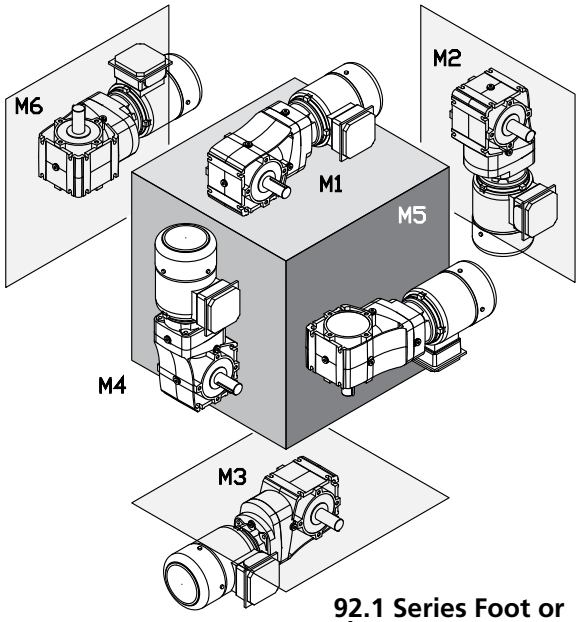

92.1 Series Foot or Flange Mount

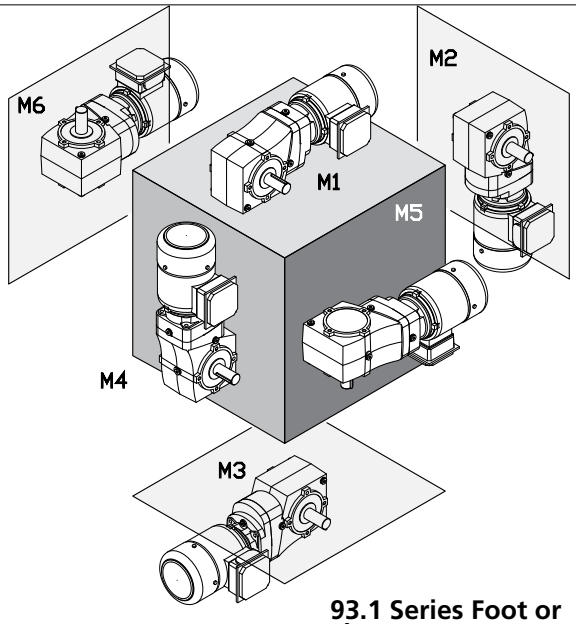

93.1 Series Foot or Flange Mount

92.1 Series Oil Fill

Type	M1		M2		M3		M4		M5		M6	
	Quarts	Liters	Quarts	Liters	Quarts	Liters	Quarts	Liters	Quarts	Liters	Quarts	Liters
SK 920072.1	0.22	0.21	0.50	0.47	0.22	0.36	0.22	0.34	0.22	0.28	0.22	0.28
SK 92072.1	0.28	0.26	0.52	0.49	0.44	0.42	0.57	0.54	0.31	0.29	0.33	0.31
SK 92172.1	0.36	0.34	0.65	0.61	0.55	0.52	0.71	0.67	0.44	0.42	0.51	0.48
SK 92372.1	0.45	0.43	0.97	0.92	0.77	0.73	0.88	0.83	0.58	0.55	0.65	0.61
SK 92672.1	0.90	0.85	1.69	1.60	1.27	1.20	1.59	1.50	1.08	1.02	1.08	1.02
SK 92772.1	1.37	1.30	2.80	2.65	1.97	1.86	2.85	2.70	1.69	1.60	1.69	1.60

Oil levels shown apply to all foot & flange mounted units.

93.1 Series Oil Fill

Type	M1		M2		M3		M4		M5		M6	
	Quarts	Liters	Quarts	Liters	Quarts	Liters	Quarts	Liters	Quarts	Liters	Quarts	Liters
SK 930072.1	0.30	0.28	0.69	0.65	0.22	0.56	0.22	0.54	0.22	0.39	0.22	0.39
SK 93072.1	0.41	0.39	0.98	0.93	0.83	0.79	1.08	1.02	0.52	0.49	0.66	0.62
SK 93172.1	0.63	0.60	1.24	1.17	0.99	0.94	1.29	1.22	0.69	0.65	0.90	0.85
SK 93372.1	1.06	1.00	2.08	1.97	1.74	1.65	2.26	2.14	1.18	1.12	1.42	1.34
SK 93672.1	1.90	1.80	3.41	3.23	2.86	2.71	4.02	3.80	2.13	2.02	2.59	2.45
SK 93772.1	2.87	2.72	4.89	4.63	3.91	3.70	6.13	5.80	3.10	2.93	3.43	3.25

Oil levels shown apply to all foot & flange mounted units.

92.1/93.1 SERIES HELICAL-BEVEL OIL PLUG & VENT LOCATIONS

Oil plug locations

Prior to commissioning the reducer, check the oil-fill level using the reducer's oil-level plug and drain or add additional oil as needed. ***For mounting orientations other than shown please consult NORD Gear. New plug locations may be required.***

92.1 Series

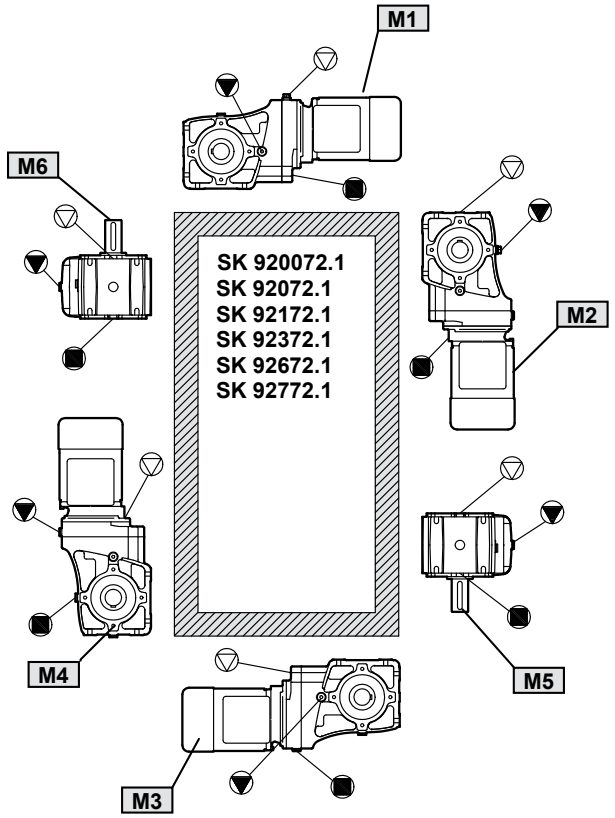

93.1 Series

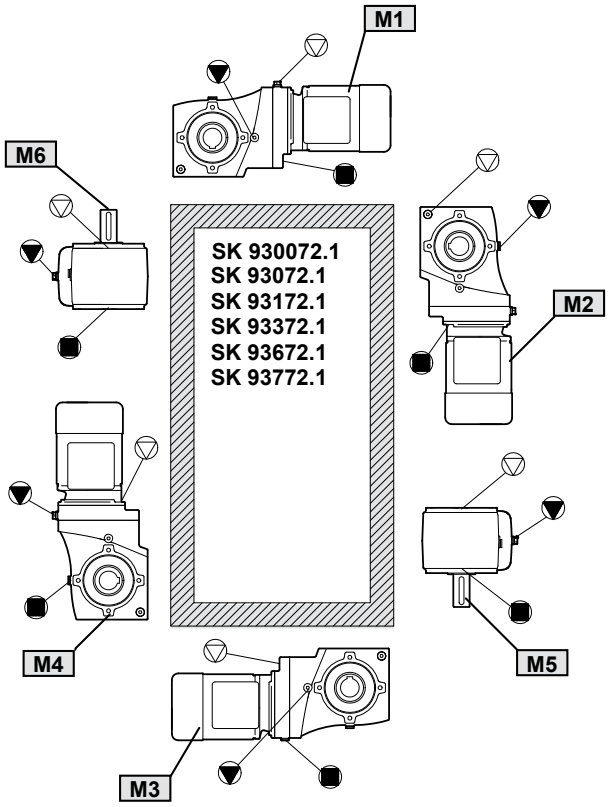

▽ = Vent

▼ = Oil Level

■ = Oil Plug

Intelligent Drivesystems, Worldwide Services

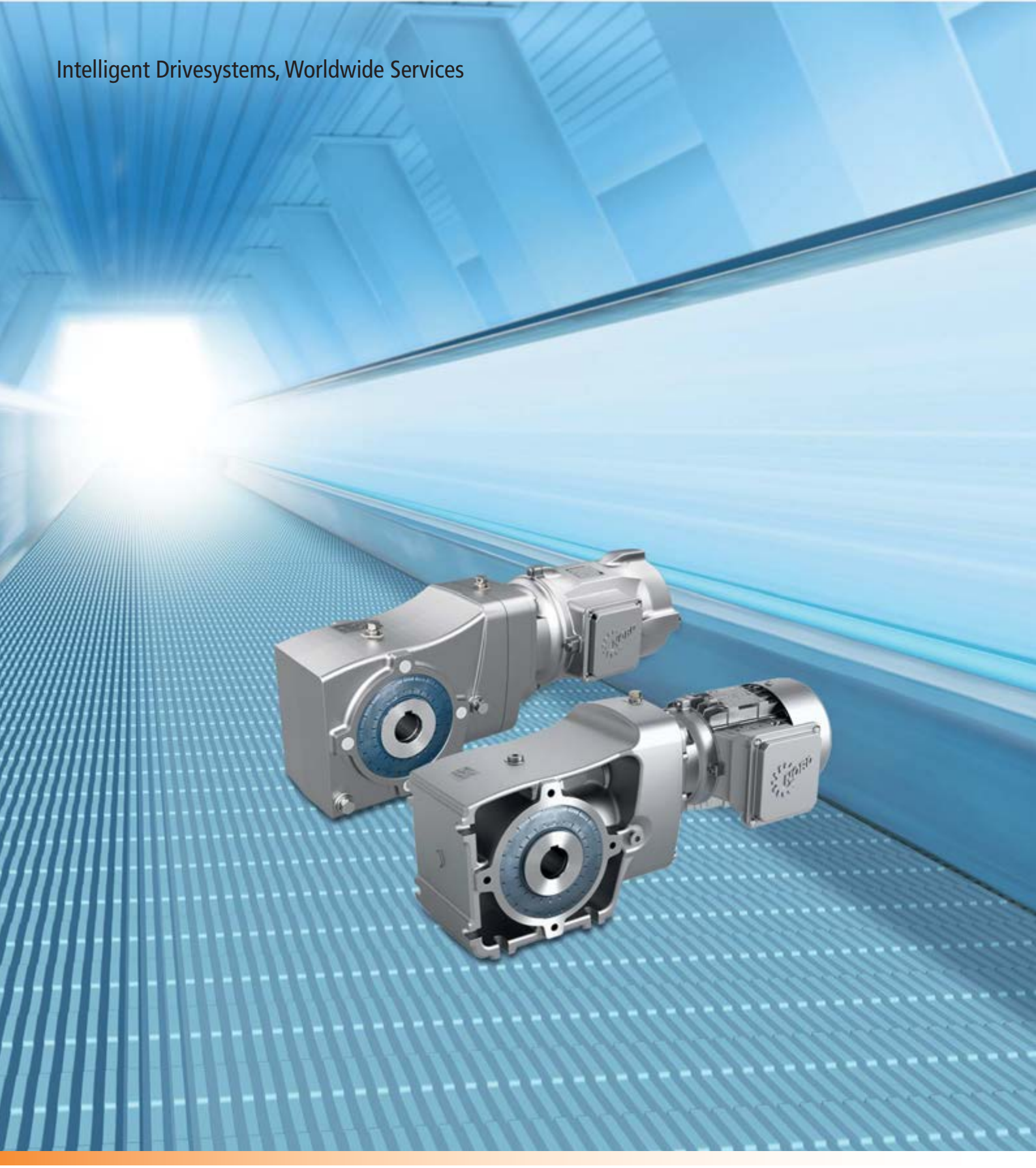

DE EN FR

PL1014

SK 920072.1 - SK 93772.1

Ersatzteilkatalog 2-stufige Kegelradgetriebe
Spare parts catalogue 2-stage helical bevel gear unit
Catalogue de pièces de rechange Couple coniques à 2 trains

NORD DRIVESYSTEMS

Allgemeine Ersatzteile
General parts list
Vues éclatées et nomenclature



2-stuf ge Kegelradgetriebe.....2 - 5
2-stage helical bevel gear unit
Couples coniques à 2 trains



Bestellangaben.....6 - 7
Order details
Informations de commande



2-stufige Kegelradgetriebe
2-stage Helical-Bevel Gear Unit
Couples coniques à 2 trains

EB 6239000-E1 #1

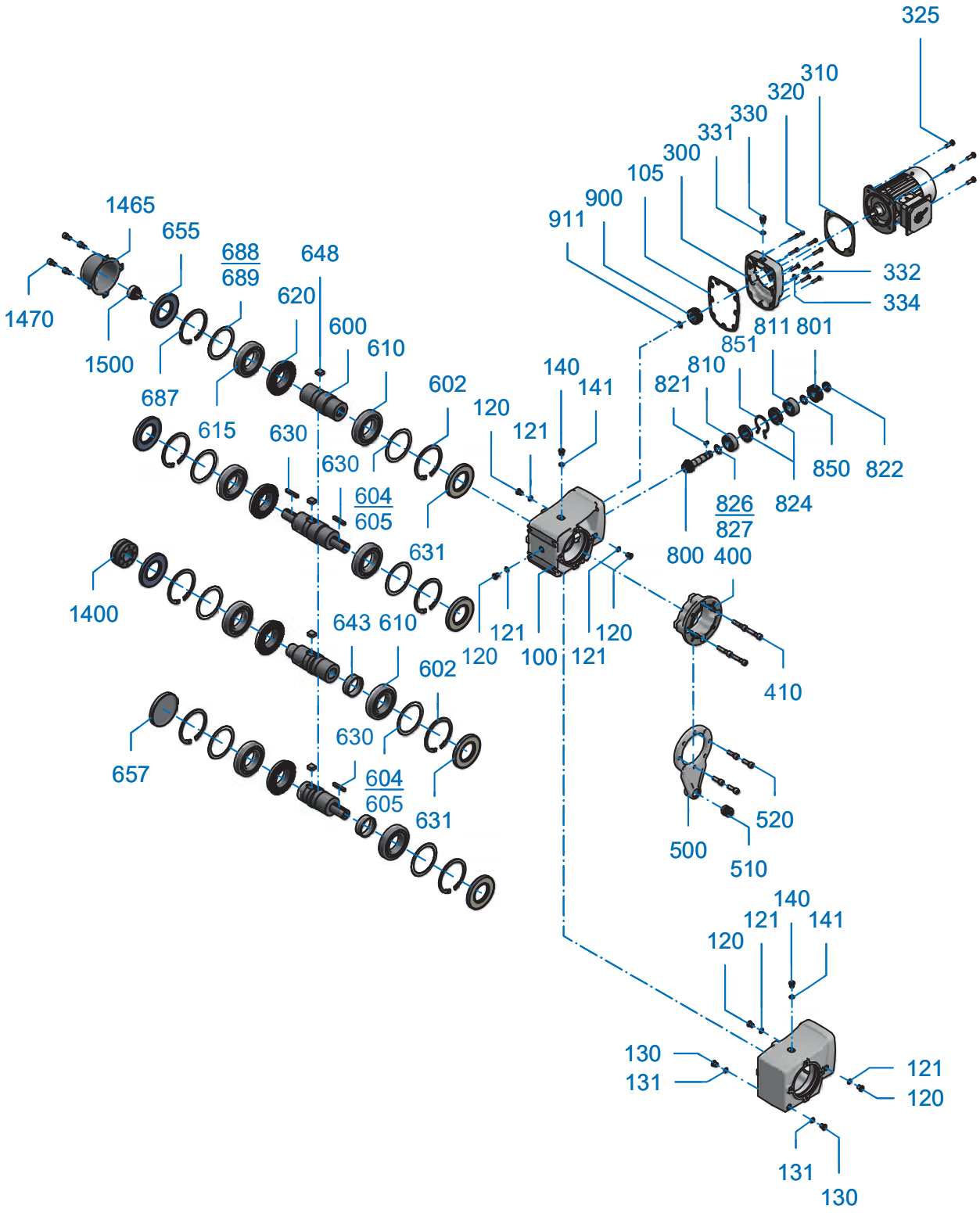



DE		EN		FR	
100	Gehäuse	100	Housing	100	Boîtier
105	Dichtung	105	Seal	105	Bague d’étanchéité
120	Schraube	120	Screw	120	Vis
121	Dichtung	121	Seal	121	Bague d’étanchéité
130	Schraube	130	Screw	130	Vis
131	Dichtung	131	Seal	131	Bague d’étanchéité
140	Schraube	140	Screw	140	Vis
141	Dichtung	141	Seal	141	Bague d’étanchéité
300	Getriebedeckel	300	Gear unit cover	300	Couvercle du réducteur
310	Dichtung	310	Seal	310	Bague d’étanchéité
320	Schraube	320	Screw	320	Vis
325	Schraube	325	Screw	325	Vis
330	Schraube	330	Screw	330	Vis
331	Dichtung	331	Seal	331	Bague d’étanchéité
332	Schraube	332	Screw	332	Vis
334	Dichtung	334	Seal	334	Bague d’étanchéité
400	Flansch	400	Flange	400	Brigde
410	Schraube	410	Screw	410	Vis
500	Drehmomentenstütze	500	Torque arm	500	Bras de réaction
510	Buchse	510	Socket	510	Douille
520	Schraube	520	Screw	520	Vis
600	Abtriebswelle	600	Output shaft	600	Arbre de sortie
610	Wälzlager	610	Roller bearing	610	Palier
615	Wälzlager	615	Roller bearing	615	Palier
620	Abtriebsrad	620	Output gear	620	Roue de sortie
630	Passfeder	630	Key	630	Clavette
631	Wellendichtring	631	Radial shaft seal	631	Bague d’étanchéité de l’arbre
634	Sicherungsring	650	Circlip	650	Circlip
635	Passscheibe	635	Shim	635	Rondelles d’ajustage
636	Passscheibe	636	Shim	636	Rondelles d’ajustage
643	Distanzbuchse	643	Socket	510	Douille
648	Passfeder	648	Key	648	Clavette
650	Sicherungsring	650	Circlip	650	Circlip
652	Passscheibe	652	Shim	652	Rondelle d’ajustage
653	Passscheibe	653	Shim	653	Rondelle d’ajustage
655	Wellendichtring	655	Radial shaft seal	655	Bague d’étanchéité de l’arbre
657	Verschlusskappe	657	Sealing cap	657	Bouchon
↓		↓		↓	



2-stufige Kegelradgetriebe
2-stage Helical-Bevel Gear Unit
Couples coniques à 2 trains

EB 6239000-E1 #1

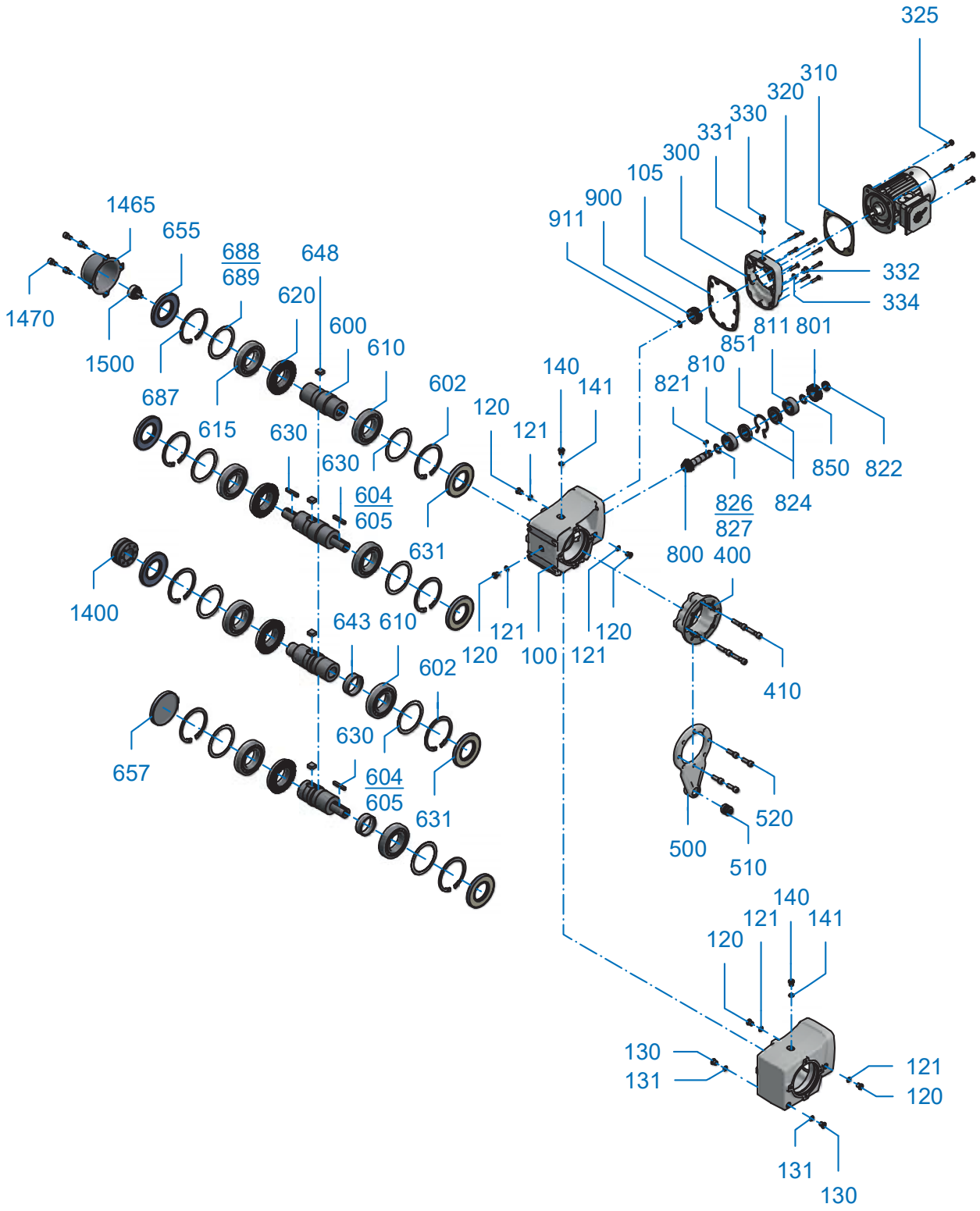



↑	DE	↑	EN	↑	FR
800	Ritzelwelle	800	Pinion shaft	800	Arbre de pignon
801	Antriebsrad	801	Drive gear	801	Roue d’entrée
810	Wälzlager	810	Roller bearing	810	Palier
811	Wälzlager	811	Roller bearing	811	Palier
820	Sicherungsring	820	Circlip	820	Circlip
821	Passfeder	630	Key	630	Clavette
822	Nutmutter	822	Locknut	822	Ecrou à encoches
823	Sicherungsblech	823	Tab washer	823	Rondelle d‘arrêt
824	Buchse	824	Socket	824	Douille
826	Passscheibe	826	Shim	826	Rondelle d’ajustage
827	Passscheibe	827	Shim	827	Rondelle d’ajustage
830	Stützscheibe	830	Supporting disc	830	Rondelle d‘appui
850	Buchse	850	Socket	850	Douille
851	Sicherungsring	851	Circlip	851	Circlip
900	Antriebsritzel	900	Driving pinion	900	Pignon d’entrée
910	Passfeder	910	Key	910	Clavette
911	Sicherungsring	911	Circlip	911	Circlip
1400	Baugruppe Schrumpfscheibe	1400	Shrink disc assembly	1400	Module de frette de serrage
1465	Haube	1465	Cover	1465	Capot
1470	Schraube	1470	Screw	1470	Vis
1500	Befestigungselement	1500	Fixing element	1500	Elément de f xation

Kontaktdaten / Contact details / Contacts:

Firma / Company / Entreprise:

Straße / Street / Rue:

Stadt / Town / Ville:

PLZ / Postcode/
Code postal:

Telefon / Telephone / Téléphone:

Fax:

E-mail:





Getriebebau NORD

Getriebebau-Nord-Straße 1
D-22941 Bargteheide

Telefon +49(0) 4532/289-0
Telefax +49(0) 4532/289-2253
E-Mail info@nord.com
www.nord.com

DE

Diese NORD Ersatzteilliste beinhaltet eine standardisierte Darstellung der NORD Getriebe. Um Ihnen das Finden und Nachbestellen von Ersatzteilen zu erleichtern, finden Sie am Ende der Ersatzteilliste ein Bestellformular mit wichtigen Hinweisen zur Bestimmung der richtigen Teile.

Für Rückfragen stehen wir Ihnen gerne zur Verfügung. Ihren lokalen Ansprechpartner finden Sie unter http://locator.nord.com.

EN

This NORD spare parts list contains a standardised depiction of NORD gear units. In order to enable you to find and re-order replacement parts more easily, you can find an order form and important information regarding the identification of the correct components at the end of this spare parts list.

We will be glad to help you if you have any queries: You can find your local contact partner under http://locator.nord.com.

FR

Cette liste de pièces de rechange NORD contient une représentation standard des réducteurs NORD. Pour faciliter la recherche et la commande de pièces de rechange, un formulaire de commande se trouve à la fin de la liste des pièces de rechange et vous donne toutes les informations essentielles pour déterminer les pièces dont vous avez besoin.

En cas de questions, n'hésitez pas à nous contacter. Pour connaître votre interlocuteur local, veuillez consulter le site http://locator.nord.com.

Erläuterung des Typenschildes
Explanation of the rating plate
Explication de la plaque signalétique

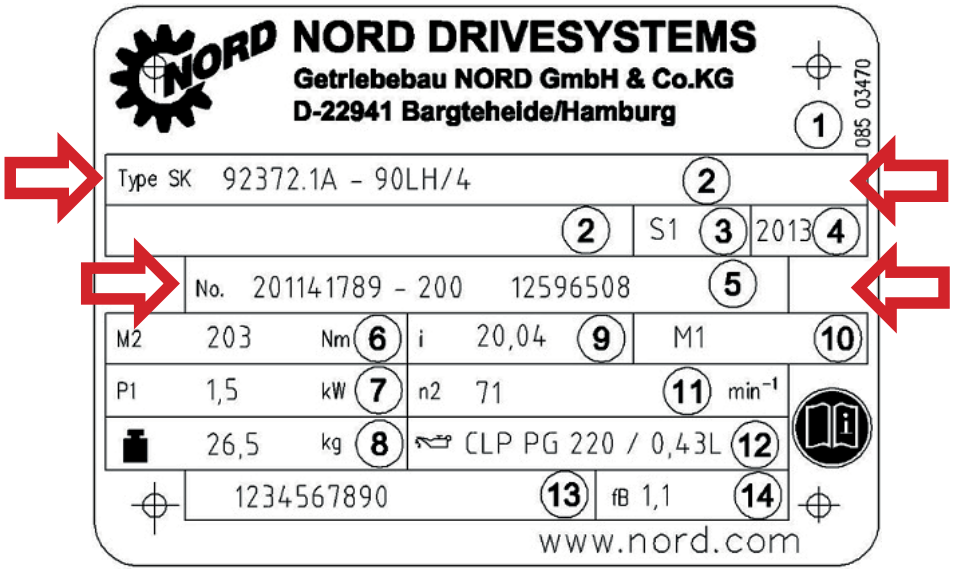

DE

1 Matrix – Barcode
2 NORD - Getriebetyp
3 Herstellungsjahr
4 Fabrikationsnummer
5 Nenndrehmoment der Getriebeabtriebswelle
6 Antriebsleistung
7 Gewicht entsprechend Auftragsausführung
8 Gesamte Getriebeübersetzung
9 Einbaulage
10 Nenndrehzahl der Getriebeabtriebswelle
11 Schmierstoffart, -viskosität und –menge
12 Kundenmaterialnummer
13 Betriebsfaktor

EN

1 Matrix – Barcode
2 NORD gear unit type
3 Year of manufacture
4 Serial number
5 Rated torque of gear unit output shaft
6 Drive power
7 Weight according to ordered version
8 Overall gear unit ratio
9 Installation orientation
10 Rated speed of gear unit output shaft
11 Lubricant type, viscosity and quantity
12 Customer's part number
13 Operating factor

FR

1 Code matriciel, à barres
2 Type de réducteur NORD
3 Année de fabrication
4 Numéro de série
5 Couple nominal de l'arbre de sortie du réducteur
6 Puissance d'entraînement
7 Poids selon l'exécution du contrat
8 Rapport de réduction total
9 Position de montage
10 Vitesse de rotation nominale de l'arbre de sortie du réducteur
12 Type de lubrif ant, viscosité et quantité
12 Numéro d'article client
13 Facteur de service

Ersatzteil-Bestellung / Replacement parts order / Commande de pièces de rechange:

Bezeichnung / Designation / Désignation:

Pos.-Nr. / Item No. / N° pos :

Stückzahl / Pieces / Quantité:

Getriebetyp / Gear unit type / Type de réducteur:

Fabrikationsnummer / Serial No. / Numéro de série:



NORD DRIVESYSTEMS Group

Headquarters and Technology Centre
in Bargteheide, close to Hamburg

Innovative drive solutions
for more than 100 branches of industry

Mechanical products
parallel shaft, helical gear, bevel gear and worm gear units

Electrical products
IE2/IE3/IE4 motors

Electronic products
centralised and decentralised frequency inverters,
motor starters and f eld distribution systems

7 state-of-the-art production plants
for all drive components

Subsidiaries in 36 countries on 5 continents
provide local stocks, assembly, production,
technical support and customer service

More than 3,500 employees throughout the world
create customer oriented solutions

www.nord.com/locator

Headquarters:

Getriebebau NORD GmbH & Co. KG
Getriebebau-Nord-Straße 1
22941 Bargteheide, Germany
Fon.: +49 (0) 4532 / 289 - 0
Fax: +49 (0) 4532 / 289 - 2253

Member of the NORD DRIVESYSTEMS Group

NORD DRIVESYSTEMS

Mat.Nr. 6002699/3117

TROUBLESHOOTING

Troubleshooting

This section identifies some of the most common issues involved with NORD Gear speed reducers , and provides recommendations to assist you in defining and answering your questions as you work with our products. You may also contact our Engineering/Application departments if your questions are not answered in the table below.

Problem With the Reducer		Possible Causes	Suggested Remedy
Runs Hot	Overloading	Load exceeds the capacity of the reducer	Check rated capacity of reducer, replace with unit of sufficient capacity or reduce the load.
	Improper lubrication	Insufficient lubrication	Check lubricant level and adjust up to recommended levels
		Excessive lubrication	Check lubricant level and adjust down to recommended levels.
		Wrong lubrication	Flush out and refill with correct lubricant as recommended
Runs Noisy	Loose foundation bolts	Weak mounting structure	Inspect mounting of reducer. Tighten loose bolts and/or reinforce mounting and structure.
		Loose hold down bolts	Tighten bolts
	Failure of bearings	May be due to lack of lubricant	Replace bearing. Clean and flush reducer and fill with recommended lubricant.
		Overload	Check rated capacity of reducer.
	Insufficient lubricant	Level of lubricant in reducer not properly maintained.	Check lubricant level and adjust to factory recommended level.
Output shaft does not turn	Internal parts are broken or missing	Overloading of reducer can cause damage	Replace broken parts. Check rated capacity of reducer.
		Key missing or sheared off on input shaft.	Replace key.
		Coupling loose or disconnected	Properly allign reducer and coupling. Tighten coupling.
Oil Leakage	Worn seals	Caused by dirt or grit entering seal.	Replace seals. Autovent may be clogged. Replace or clean.
	Unit runs hot or leaks	Overfilled reducer	Check lubricant level and adjust to recommended level.
		Vent clogged.	Clean or replace, being sure to prevent any dirt from falling into the reducer.
	Incorrect fill level	Improper mounting position, such as wall or ceiling mount of horizontal reducer.	Check mounting position on the name tag & verify with mounting chart in manual.

TECO Westinghouse MOTORS (CANADA) INC.	
	Date: September 27, 2018

Technical Documentation

PDH00545C

Optim TEFC | AEHH8N

Date: September 27, 2018

TECO Westinghouse
MOTORS (CANADA) INC.

Date: September 27, 2018

Dimensional Drawing

Catalogue	Model	HP	Pole	kW	Rating	Voltage	Hz	RPM
PDH00545C	AEHH8N	5	4	3.7	Continuous	575 V	60	1800

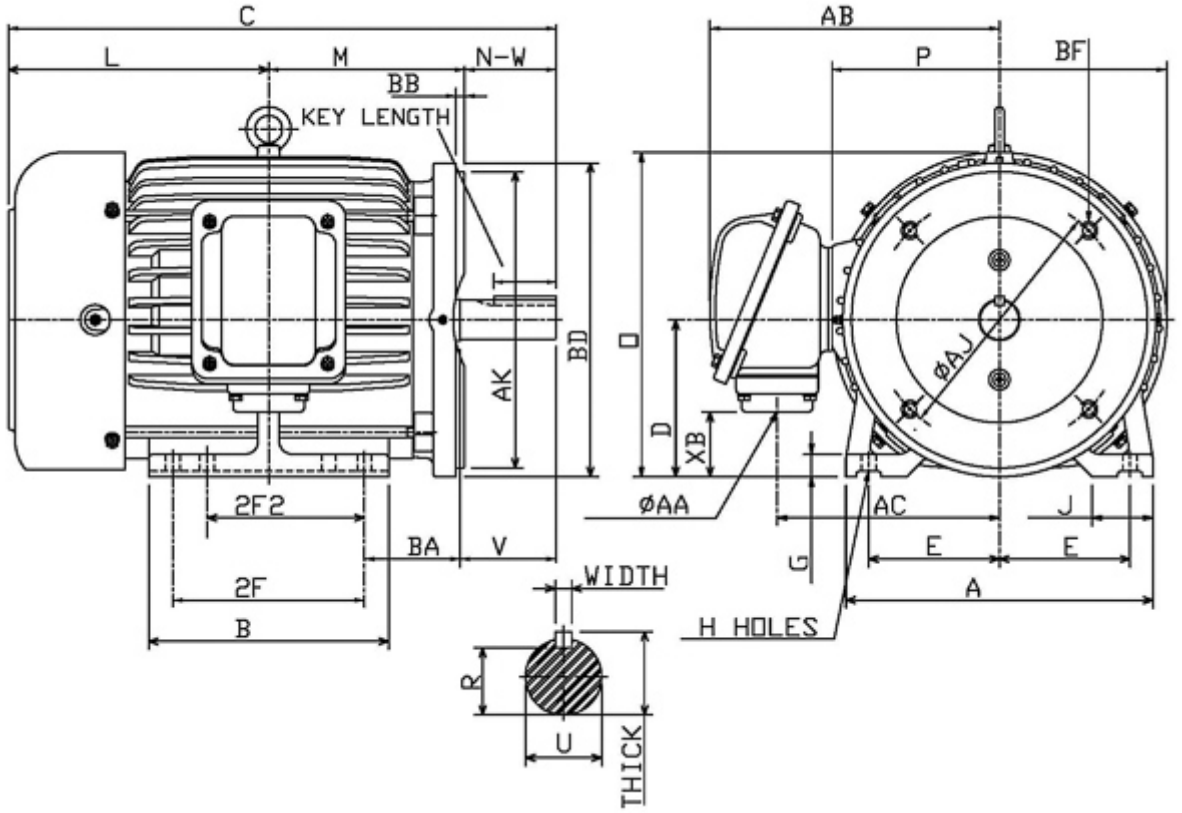

Frame Size	Mounting					A	B	C	CD	D
	E	2F	2F2	H	BA					
184TC	3.75	5.5	4.5	0.41	2.75	8.8	6.9	15.73		4.5

G	J	K	L	M	O	P	T	Key			Keyseat
								Width	Thick	Length	R
0.65	1.75		7.48	5.37	9.31	9.61	1.19	0.25	0.25	1.78	0.986

Terminal Housing				Aux Box		C/D Flange					
AA	AB	AC	XB	AE	AX	BB	AH	AK	BD	AJ	BF
3/4 NPT	8.31	6.38	1.86			0.25	2.62	8.5	9	7.25	1/2-13UNC

Shaft Extension			Bearings		Approx. Weight Lbs	SPL dBA/3ft	Ins. Class	S.F.	Drive Method	Dimensions
N-W	U	V	DE	NDE						
2.75	1.125	2.7	6306ZZ	6306ZZ	110	54	F	1.15	Direct Coupling / Belt Drive	Inches

TECO Westinghouse MOTORS (CANADA) INC.	
	Date: September 27, 2018

Technical Data Sheet

Motor Type: AEHH8N	Catalogue No: PDH00545C

Nameplate Information

HP	Pole	RPM	Frame	Voltage	Hz	Phase
5	4	1745	184TC	575	60	3
Enclosure	Ins. Class	Service Factor	Time Rating	NEMA Design	Rated Amb.	Rated Altitude
TEFC	F	1.15	Continuous	B	-40 to 40 °C	<3300 ft

Typical Performance

Efficiency (%)				Power Factor (%)		
Full Load		3/4 Load	1/2 Load	Full Load	3/4 Load	1/2 Load
Nom.	Min.					
89.5	87.5	88.5	88.5	85.5	81.5	71.5
Torque				Current (A)		
Full Load (lb-ft)	Locked Rotor (% FLT)	Pull Up (% FLT)	Break Down (% FLT)	No Load	Full Load	Locked Rotor
15.04	185	140	285	1.8	4.9	37
NEMA KVA Code	Inertia (WR^2)			Safe Stall Time (s)		Noise Level Sound Press. dB(A)
	Rotor ($lb\text{-}ft^2$)	NEMA Load ($lb\text{-}ft^2$)	Max. Allowable ($lb\text{-}ft^2$)	Cold	Hot	
J	0.422	27.0	88.0	35	25	54

VFD Duty Information

Speed Range			VFD		S.F.
Constant Torque	Variable Torque	Constant Power	Carrier	Type	
6-60Hz	3-60Hz	60-120Hz	≤ 5 kHz	VPWM or CPWM	1.0 Only

Additional Information

Bearings		Approx. Weight
DE	NDE	lbs
6306ZZ	6306ZZ	110

Hazardous Locations Information

CSA Certified	
Class I, Div 2, Groups B, C & D Class I, Zone 2, Groups IIB+H2, IIB & IIA	
Temp Code (Sinewave / VFD)	T3C / T3C

TECO Westinghouse MOTORS (CANADA) INC.	
	Date: September 27, 2018

Nameplate Drawing

Optim TEFC

TYPE	AEHH8N	CAT. NO.	PDH00545C		
OUTPUT	5 HP 3.7 kW	FRAME	184TC	TEFC	
R.P.M.	1745	POLE	4	INS.	F
VOLTS	575	PHASE	3	Hz	60
AMPS	4.9	CODE	J	S.F.	1.15
AMBIENT	40 °C	NOM. EFF. 89.5		MIN. EFF. 87.5	
BEARINGS	6306ZZ / 6306ZZ			RATING Cont.	

SER. NO.	TBD	DESIGN	B	WT. 110 LBS

PWM VFD DUTY	VT	CT	CP	S.F.
	3-60Hz	6-60Hz	60-120Hz	1.0 Only

Connection Diagram

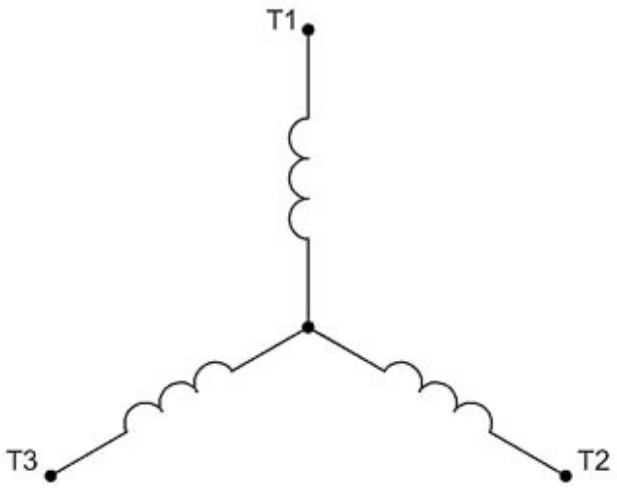

3 LEAD SINGLE VOLTAGE WYE					
VOLTAGE	CONN.	L1	L2	L3	
-	WYE	1	2	3	

WD_3Y

TECO Westinghouse MOTORS (CANADA) INC.	
	Date: September 27, 2018

Thermal Limit Curves

Motor Type: AEHH8N		Catalogue No: PDH00545C		Family: Optim TEFC	
HP	5	Safe Stall Time		Full Load A	0.0 / 4.9 A
Voltage	0 / 575V 60Hz	Hot	25 s	Locked Rotor A	757 %
RPM	1800	Cold	35 s	Locked Rotor A	0.0 / 37 A

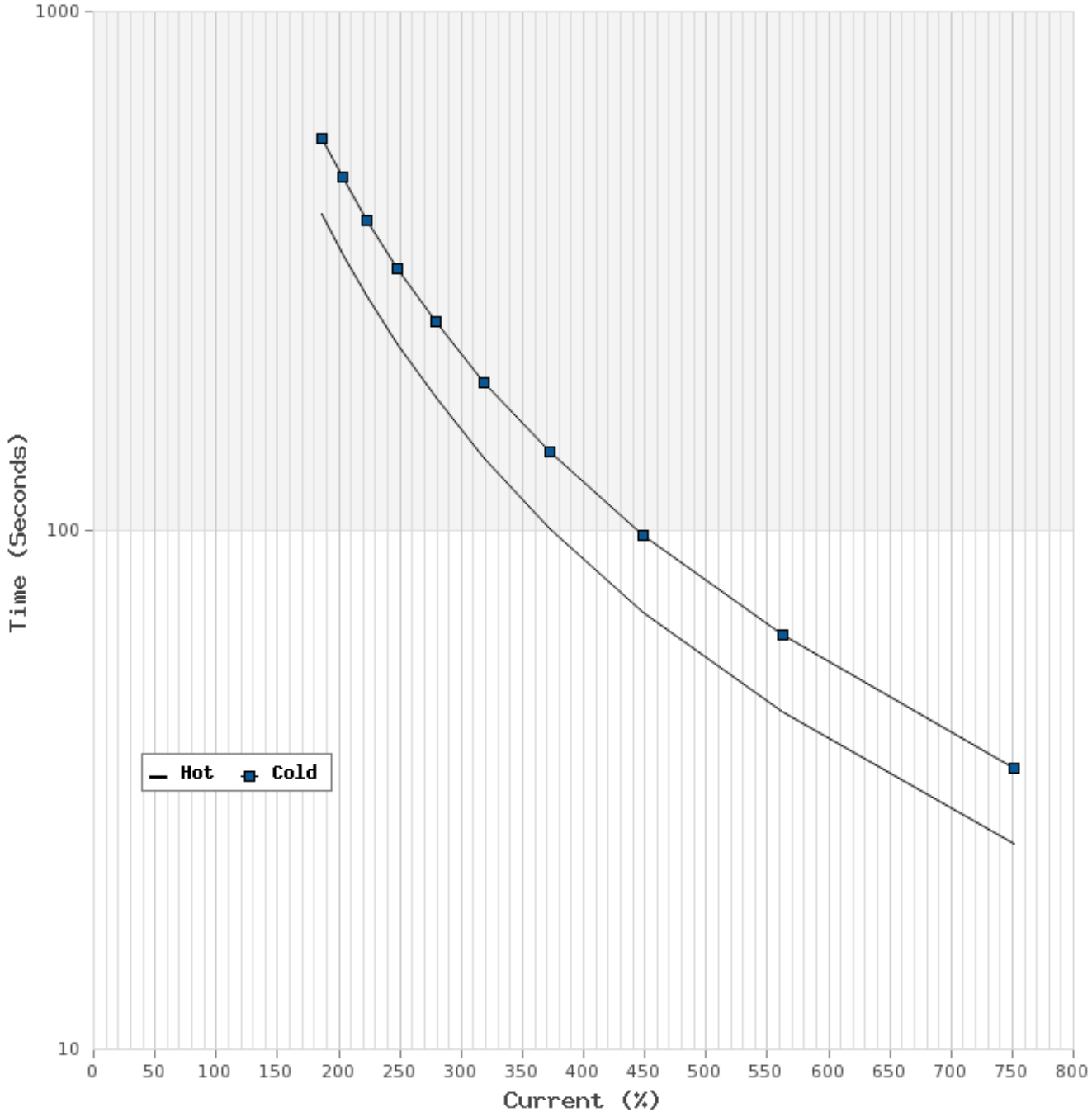

TECO Westinghouse MOTORS (CANADA) INC.	
	Date: September 27, 2018

T-N and I-N Curves

Motor Type: AEHH8N		Catalogue No: PDH00545C		Family: Optim TEFC	
HP	5	Full Load T	15.04 lb-ft	Full Load A	4.9 A
Voltage	575V 60Hz	Locked Rotor T	185 %	Locked Rotor A	37.0 A
RPM	1800	Pull Up T	140 %	Break Down T	285 %

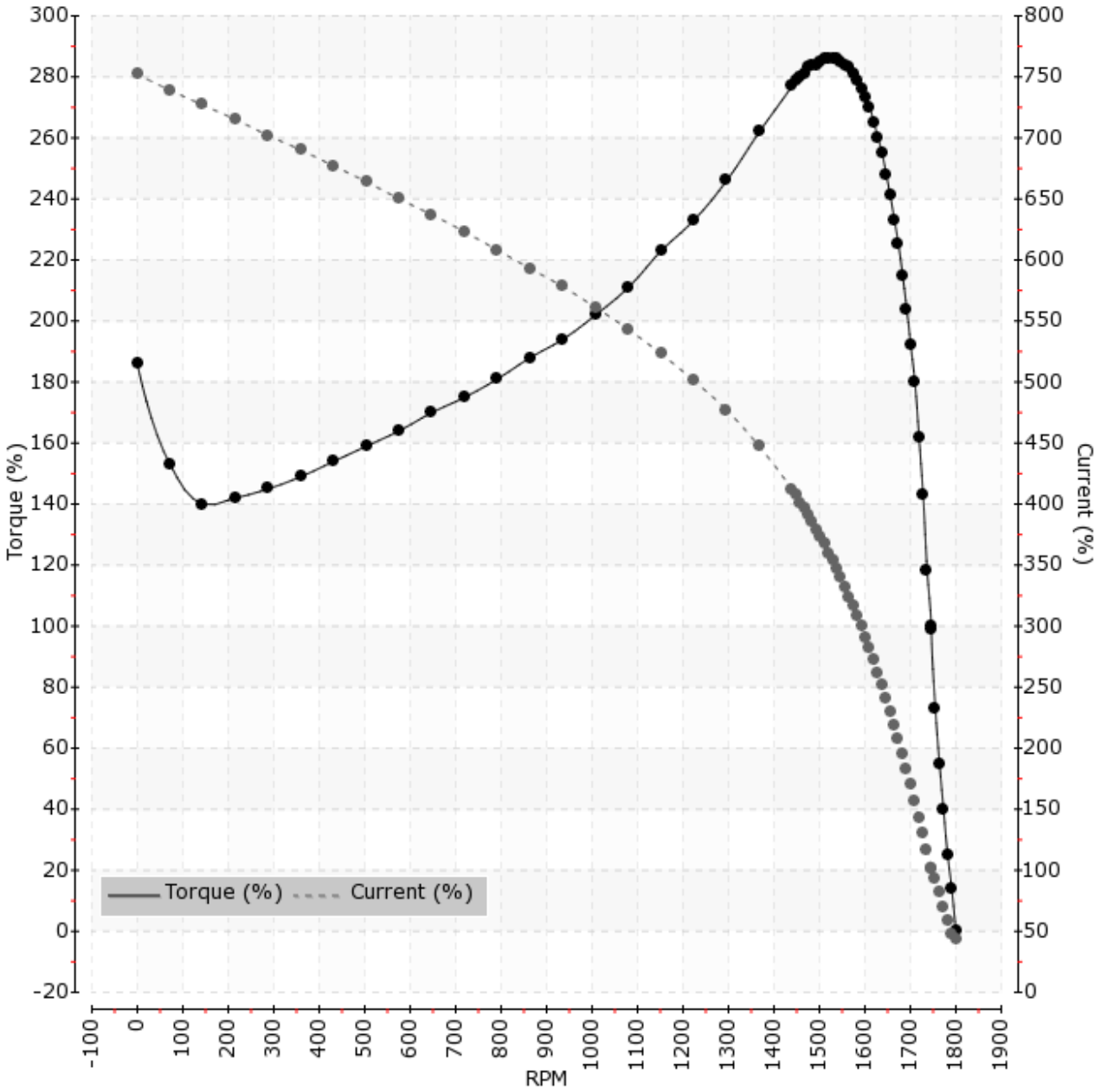

CS-999-120 : Identification sheet

VWTC PROJECT NUMBER:	Iqaluit WWTP	REV:	01
PROJECT NAME:	5000218036	SUBMITTED TO (COMPANY):	
ENGINEER:	G. HÉBERT	SUBMITTED TO (RESPONSIBLE)	
PROJECT MANAGER:	C. BEKAERT	PROJECT NUM REFERENCE.:	
PHONE NUMBER:		LOT NUMBER:	

SUPPLIER	EQPT CODE	EQPT TAG NO	DIA	DESCRIPTION	INFO 1	INFO 2	INFO 3	APPLIC.	NOTE	REV
NETZSCH	ST-999-120	P-02-610		TRANSFER PUMP TWAS	NETZSCH PC PUMP MODEL NM031BY01L06B COMPLETE WITH GEAR REDUCER, MOTOR & BASEPLATE COMPLETE // MATERIALS OF CONSTRUCTION INCLUDE CAST IRON HOUSING, 316 STAINLESS STEEL INTERNALS	1 HP TECO MOTOR, MODEL PDH00145C , 1800 RPM, 575/60/3, INVERTER DUTY, PREMIUM EFFICIENCY WITH A NORD RIGHT ANGLED GEAR REDUCER WITH A GEAR RATIO OF 7.58:1, FLANGE MOUNTED TO PUMP, ALL MOUNTED ON A CARBON STEEL BASEPLATE FOR GROUT, DRIP PAN				1
NETZSCH	ST-999-120	P-02-620		TRANSFER PUMP TWAS	NETZSCH PC PUMP MODEL NM031BY01L06B COMPLETE WITH GEAR REDUCER, MOTOR & BASEPLATE COMPLETE // MATERIALS OF CONSTRUCTION INCLUDE CAST IRON HOUSING, 316 STAINLESS STEEL INTERNALS	1 HP TECO MOTOR, MODEL PDH00145C , 1800 RPM, 575/60/3, INVERTER DUTY, PREMIUM EFFICIENCY WITH A NORD RIGHT ANGLED GEAR REDUCER WITH A GEAR RATIO OF 7.58:1, FLANGE MOUNTED TO PUMP, ALL MOUNTED ON A CARBON STEEL BASEPLATE FOR GROUT, DRIP PAN				1

NETZSCH Canada, Inc. 500 Welham Rd., Barrie, On., L4N 8Z7
Ph: 705-797-8426 Fax: 705-797-8427 Toll Free: 1-866-683-7867

Pump Quotation – Technical

Offer: N180503ST-01

NEMO® pump with base plate and drive: NM031BY01L06B

The physical characteristics of the pumped product, the application details, as well as the General Operating Conditions detailed in our offer have been taken from your inquiry or where not specified have been assumed by us. In the event of an order we would ask you to check any assumptions and all details as they will become contractually binding along with the selection of pump model, Drive, all specifications, and materials of construction, based on these details.

Product:		***Content***	***TWAS***
Composition			
Specific Gravity	Assumed	kg/dm³	1.05
Particle size/solid ball size	Allowed	mm	7/28
pH value	Approx.		NA
Solids content (w/w)	approx.	% TS	1-5
Dynamic viscosity	Approx.	cP	30000-63000
Vapour pressure	Approx.	kPaa	NA

Application details:		***Content***	***normal***	***maximum***
Flow rate (Q)	approx.	m³/hr	0.936	1.656
Differential pressure		bar	0.6	1
Suction pressure	Assumed	barg	flooded	Flooded
Discharge pressure	approx.	barg	0.6	1
Pump operating speed	approx.	RPM	120	205
Sliding velocity	approx.	m/s	0.25	0.45
Frequency	approx.	Hz	20	60
Power required at drive shaft	approx.	Kw	0.18	0.3
Running torque	approx.	Nm	11	11
Starting torque	approx.	Nm	23	23
Operating temperature	Assumed	°C	10	20

Assembly specification

installation	horizontal

General operating conditions

Installation area	Inside
ambient Temperature	approx. 20°C
humidity	up to 75%
application type	Continuous operation
operating hours	24 hours/day
service voltage	3/60/575

Painting	coating system	Netzsch Standard

Operating and Maintenance Instructions

Standard documentation in accordance with the 98/37/EG Machinery Directive.
Special documentation is available on request and would be charged for.

number	1
medium	Paper
language for O&M's and spare parts list	English
dispatch method	shipped with pump

NETZSCH Canada, Inc. 500 Welham Rd., Barrie, On., L4N 8Z7
Ph: 705-797-8426 Fax: 705-797-8427 Toll Free: 1-866-683-7867

Offer: N180503ST-01
Date: May 3, 2018
Customer No.:

NEMO® NM031BY01L06B Pump

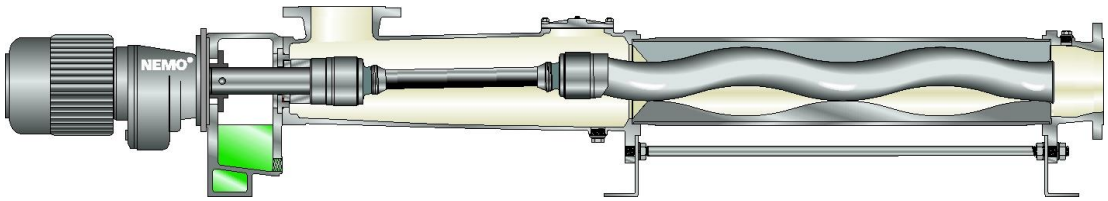

Characteristics and benefits of the NEMO® BY Block pump:

- Reliable and sophisticated construction
- Space-saving construction
- Modular construction system
- 4 different stator – rotor geometries available for most sizes
- Low investment and operating costs
- Low maintenance expenses

General characteristics	
name plate on the pump	in English (Stainless steel)
direction of rotation	to the left, counterclockwise (as viewed from drive end)

Pump Pedastal	
material	Cast iron 0.6025

Pump housing / End connection	
housing material	Cast Iron 0.6025
flange position	Pump#1::Left from DE, Pump#2: Right from DEE
function of housing connection	suction connection
nom. dia. & pressure for pump housing	2" – 125# ANSI FF
nom. dia. & pressure of discharge flange	2" – 125# ANSI FF
Function of end connection	discharge connection
housing seals	FPM

Shaft seal	
type	Single mechanical Seal
shaft seal materials	Silicon Carbide Faces – Viton Elastomers
shaft seal type	John Crane Single

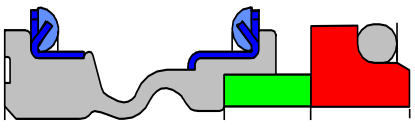

Rotating parts	
rotating parts materials	316 Stainless Steel Internals

NETZSCH Canada, Inc. 500 Welham Rd., Barrie, On., L4N 8Z7
Ph: 705-797-8426 Fax: 705-797-8427 Toll Free: 1-866-683-7867

Offer: N180503ST-01
Date: May 3, 2018
Customer No.:

Joints		
	joint type	pin joint (B)
	sealing type	SM Pin joint
	joint sealing material	Buna/316 Stainless Steel
	joint lubrication	Mineral oil

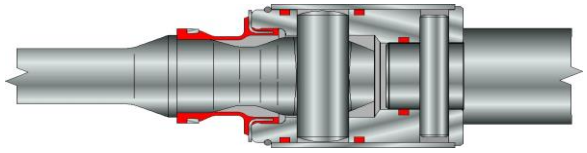

Rotor		
	rotor material	SAE 4140- Hard Chrome Plated Tool steel
	temperature range for Stator expansion	UM20

Stator		
	stator material	NEMOLAST® S61M - Buna Nitrile
	accesory	STP-3 Dry Run Protection Sensor with Omron Controller

Drive

Gear reducer		
	manufacturer	Nord
	type	SK92072.1VF-140TC
	gear ratio	8.67
	speed @ 60 Hz	202
	mounting position	M1
Motor		
	Manufacturer	TECO Westinghouse
	motor HP	1
	winding voltage	575
	voltage range	+/- 10%
	Frequency	60 Hz
	number of poles	4
	number of phases	3
	Motor speed	1765 rpm
	Protection Type	IP54- TEFC, Class I, Div. II, Premium Efficiency
	insulation class	F

Baseplate

	assembly specification - material	Structural steel baseplate with drip lip, grout holes, drains

Approximate weight of pump, gear reducer and baseplate	175 lb.

Offer: N180503ST-01
Date: May 3, 2018
Customer No.:

Performance curve:

NM031--01L

Förderkennlinie / Performance Curve
Statorwerkstoff / elastomer quality: standard

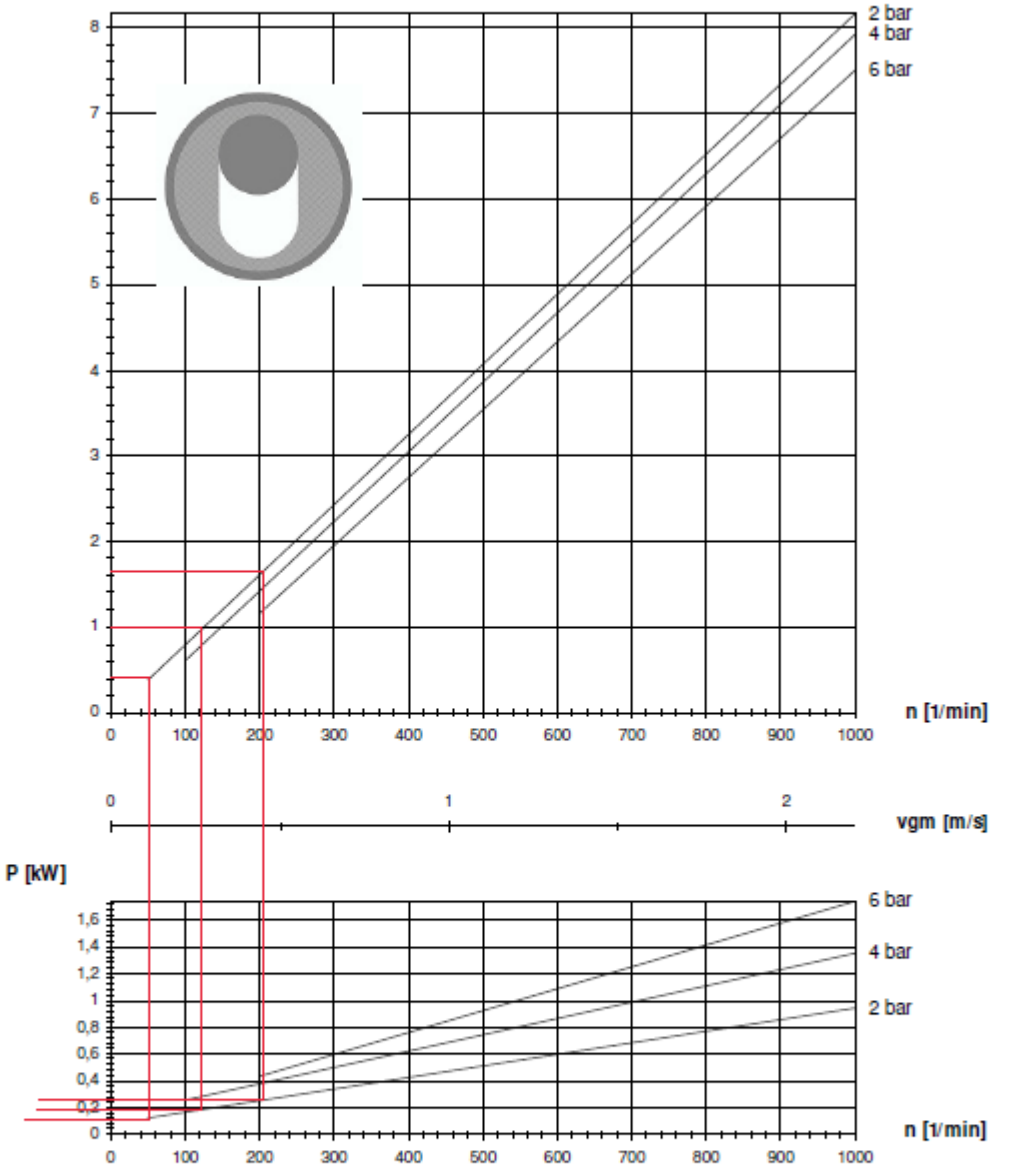

Losbrechmoment / starting torque T(L) = 23 Nm

Druck / pressure	T
2 bar	11 Nm
4 bar	15 Nm
6 bar	19 Nm

Gültigkeit für Wasser (1 cP) bei 20 °C. Toleranzen nach VDMA 24284 (+10%/-5%).
Valid for water (1 cP) at 20 °C (70 °F). Tolerances are in accordance with VDMA 24284 (+10%/-5%).

Dimension tolerances				Tolerances to flanges according ASME B16.1 E B16.5	
Measure	Tolerance	Measure	Tolerance		Tolerance
>3 to 6	±0,5	>400 to 1000	±4,0		
>6 to 30	±1,0	>1000 to 2000	±6,0	Diameter of bolt circle	+1,5
>30 to 120	±1,5	>2000 to 4000	±8,0	Diameter of bolt holes	+1,0
>120 to 400	±2,5	>4000	±20	Thickness	+3,0

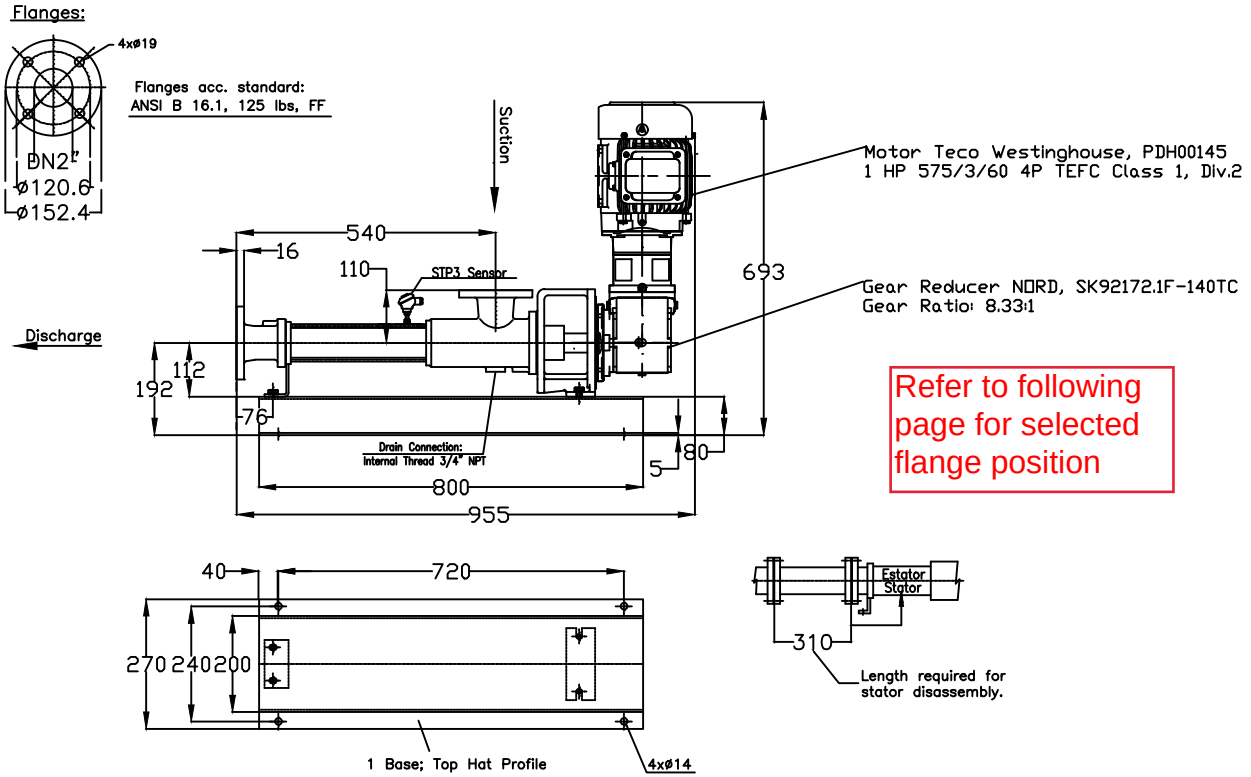

WEIGHT: 170 lbs approx.

NETZSCH, CANADA INC.

THIRD ANGLE PROJECTION

THIS DRAWING IS THE SOLE PROPERTY OF NETZSCH CANADA, INC. BARRIE, ONT, CANADA. ANY USE OR REPRODUCTION OF ANY PART THERE OF IS FORBIDDEN WITHOUT WRITTEN APPROVAL OF NETZSCH CANADA, INC.

UNLESS OTHERWISE SPECIFIED:
DIMENSIONS ARE IN mm [Inches]
TOLERANCES: 2 PL DEC ± 0.01
3 PL DEC ± 0.005
ANGLE ± 0.5 °
REMOVE ALL BURRS
ALL CORNERS R 0.010 OR BBEAK
MIN RECEIVING INSPECTION PT

Project #	Part #	P.O.#	REV.
DESCRIPTION: NEMO PUMP MODEL NM031BY01L06B		DRAWN BY: A.E.	DATE: Nov. 26, 2018
NTC DRAWING NO.: B031BY1-N180503ST-01	Materials: 0.6025/316/4140vcp/NBR/MG1/C.S.Baseplate		
COMMENTS: Baseplate to have drip lip,grout holes & drain		DO NOT SCALE	SHEET: 1 of 1

NETZSCH

Tolerâncias Dimensionais/Dimensional Tolerances				Tolerâncias para Flanges cfe./Tolerances for Flanges according ASME B16.1 e B16.5	
Medidas/Dimension	Tolerância/Tolerance	Medidas/Dimension	Tolerância/Tolerance		Tolerância/Tolerance
>3 até/to 6	±0,6	>400 até/to 1000	±4,0		
>6 até/to 30	±1,0	>1000 até/to 2000	±5,0	Diâmetro de Furação/Drilling Diameter	±1,0
>30 até/to 120	±1,5	>2000 até/to 4000	±8,0	Diâmetro Furos/Holes Diameter	±1,0
>120 até/to 400	±2,5	>4000	cfd	Espessura/Thickness	±0,5

Discharge Flange
Borings acc. Norm:
Ansi B 16.1 / Class 125 / FF / NPS 2

Suction Flange
Borings acc. Norm:
Ansi B 16.1 / Class 125 / FF / NPS 2

Motor Tecowestinghouse
PDH00145, 1 HP, 575/3/60,
TEFC, Class 1. Div2.

Gear reducer NORD,
SK92172.1F-140TC, 8.33:1

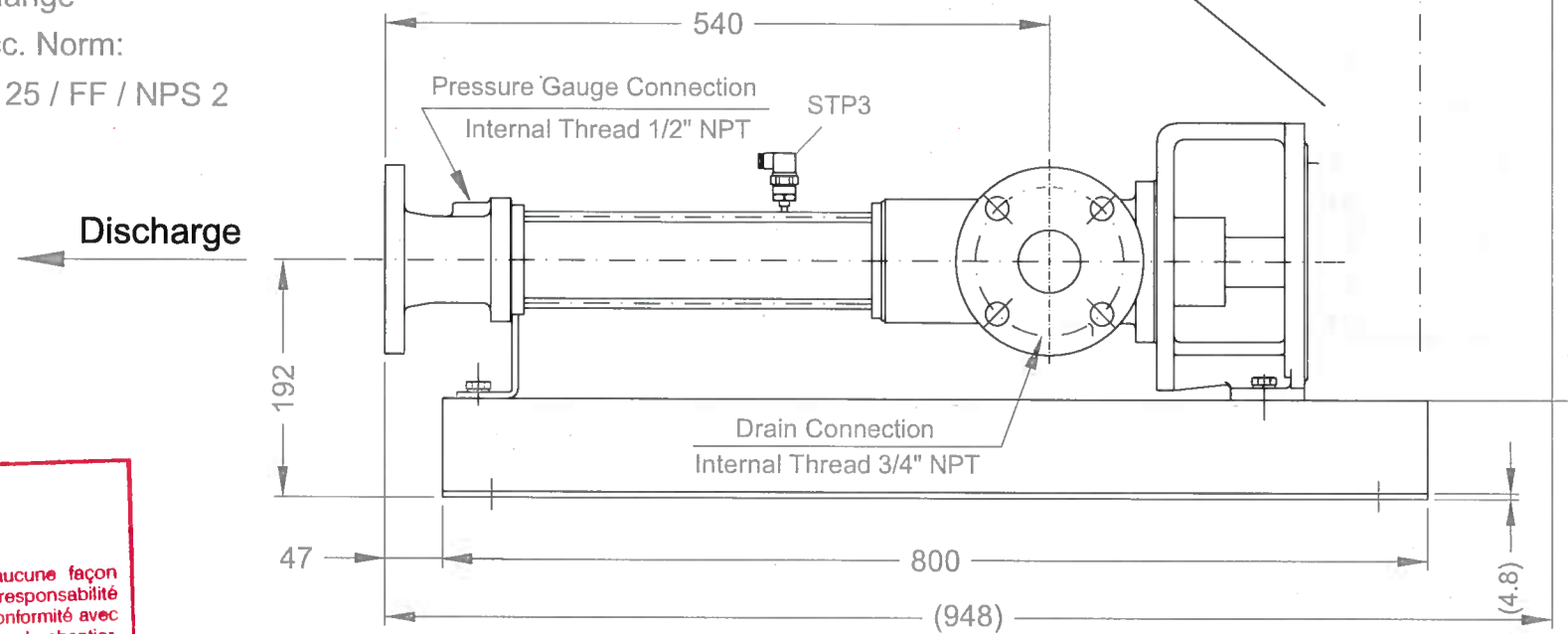

Pump
B169338
P-02-610

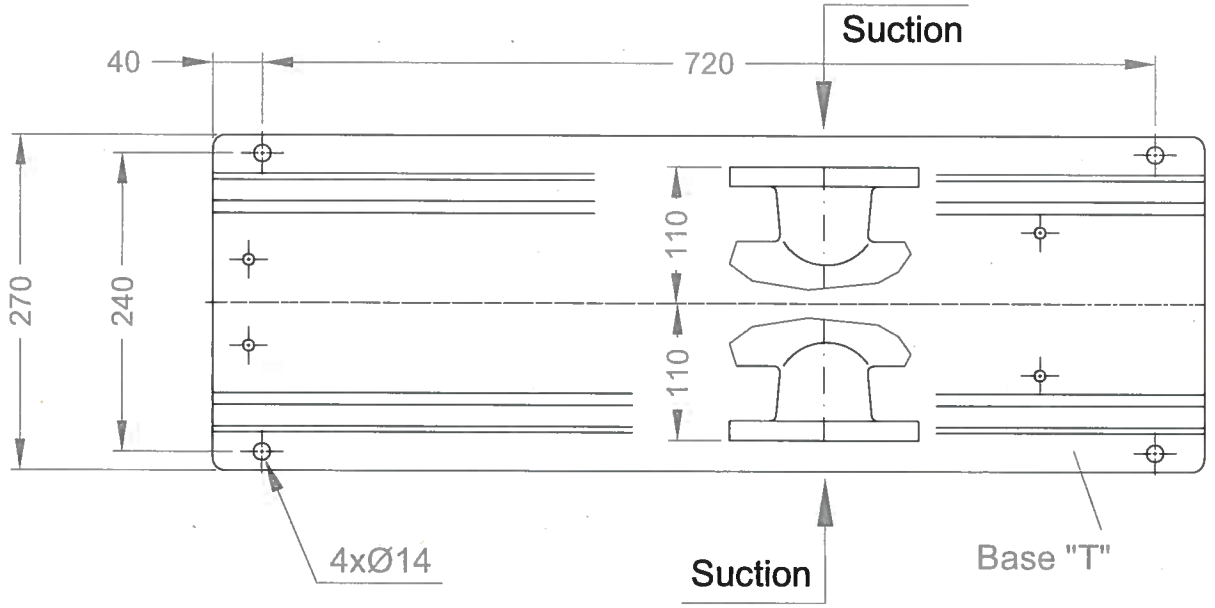

Pump
B169339
P-02-620

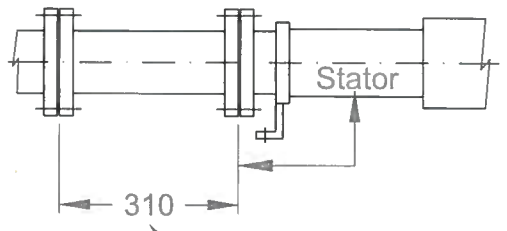

Length required for
stator disassembly.

VEOLIA

EXAMINÉ/EXAMINED

L'examen de ce dessin ne relève en aucune façon l'entrepreneur ou le fournisseur de sa responsabilité quant à l'exactitude de ce dessin ou à sa conformité avec les documents contractuels et les conditions de chantier. Examination of this drawing will not release in any way the Contractor or Supplier of his responsibilities as of the precision of this drawing or to its compliance with the contract documents and job site conditions.

☒ Procéder tel quel / Proceed as is
☐ Procéder tel qu'amnoté / Proceed as noted
☐ Resoumettre / Re-submit

Par / by: F.VINCI
Date: 2019/04/08

DRAWING FOR APPROVAL

IEC Flange ø160
Shaft bore ø19

* TAG:
P-02-610
P-02-620

Revisão/Revision	Descrição/Description	Nome/Name	Data/Date
03	Revised as comments	Denis Z	04/04/19
02	Revised as comments	Denis Z	02/04/19
01	Revised as comments	Ariana	26/03/19

Cliente/Customer: VEOLIA
Pedido/Order: 4210000241
Referência/Reference: 4210000241

NETZSCH

Título/Title:
Nemo Pump
NM031BY01L06B

	Data/Date	Nome/Name
Desenhado/Designer	26/03/19	ariana.horongoso
Verificado/Checked Aprovado/Approved	26/03/19	ariana.horongoso

TAG: *
Massa/Mass 0 kg
Nr. Desenho/Drawing Nr.: 4737685
Folha/Sheet: 1/1
Escala/Scale: Custom

Reservado todos os direitos sobre este documento técnico. All rights reserved.

A2

Intelligent Drivesystems, Worldwide Services

INSTALLATION & OPERATING INSTRUCTIONS



NORD.COM/DOCS
DOCUMENT COLLECTION

Order Number:
NORD Model: SK92172.1VF CUS

NORD DRIVESYSTEMS

Order and product data

Order Number	
Product Name	Right-Angle Helical Bvl Gearbo
NORD Model Type	SK92172.1VF-CUS
Mounting Position	
Lubricant	VG220-MIN-EP
Lubricant Qty	

Contents

Manuals

U10020-Safety Notes
U10020 Version: 0.03

U10040-Storage & Commissioning
U10040 Version: 0.03

U10060-Unit Installation
U10060 Version: 2.02

U10750-Helical & Bevel Reducer lubrication
U10750 Version: 0.05

U11000-Helical & Bevel Reducer Lubrication Types
U11000 Version: 0.08

U12205 Lubrication Capacity-92.1-93.1 Series Helical Bevel Foot Mounted
U12205 Version: 0.08

U14305 Oil Plug & Vent Locations-92.1-93.1 Series Helical Bevel
U14305 Version: 0.02

U15415 92.1/93.1 Parts List
U15415 Version: 0.02

U19000-Troubleshooting
U19000 Version: 2409

U30000-Motors- AC INDUCTION, SINGLE & POLYPHASE
U30000 Version: 0.07

1. Safety & information symbols

All work including transportation, storage, installation, electrical connection, commissioning, servicing, maintenance and repair must be performed **only by qualified specialists or personnel**. It is recommended that repairs to NORD Products are carried out by the NORD Service Department. Instructions related to operational safety will be emphasized as shown.

Symbol	Meaning
⚠	**Danger, Caution or Warning -** Severe risk or danger of personal injury or death by working around dangerously high electrical voltage or moving machinery. Proper safety precautions must be taken.
NOTICE	**Notice -** Care must be taken to avoid the possibility of damaging the drive unit, driven machine, or the environment.
ℹ	**Important Note -** Useful note or tip to help assure trouble-free operation.
♻	**Material Disposal Note -** Important note concerning suggested material disposal.

2. Safety warnings

⚠ DANGER

- All work involved in the transport, connection, commissioning and maintenance of any NORD product must be carried out by qualified and responsible technicians. All applicable national, regional, and local work regulations and safety requirements must also be complied with. **NORD assumes no liability for personal injury, accidental death, or equipment damage and malfunctions resulting from failure to comply with installation or operating instructions, safety notes, or any work regulations and laws!**
- Gear unit installation and maintenance work may only be performed when no power is available to the prime mover or motor. Electric motors, electrical brakes, and variable frequency drives, contain potentially dangerous high-voltage. Prior to installation or maintenance, shut down the power at the circuit breaker or power switch. **While working on the drive, make sure the power from the prime mover is isolated or secured on "lock-out" to prevent accidental start-up and to safeguard against injury!**
- Surfaces of motors and gear units may become hot during operation or shortly after start-up. In some instances additional protection against accidental contact may be necessary. **Use caution to avoid burns or serious injury!**

3. Observe published performance range & nameplate data

NOTICE

Observe the data on all reducer nameplates and verify published ratings for the NORD item/s in question. Do not operate any NORD equipment outside the published performance range. Failure to comply may result in damage to the drive unit, driven machine, or the environment.

U.S. Nameplate

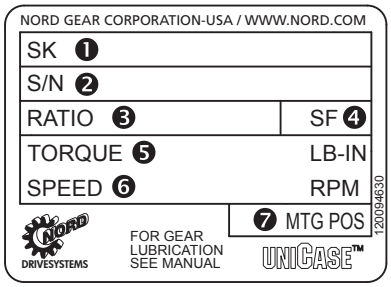

❶ Model/Type
❷ Serial Number
❸ Gear Ratio
❹ Service Factor
❺ Torque Rating
❻ Output Speed RPM
❼ Mounting Position

European Nameplate

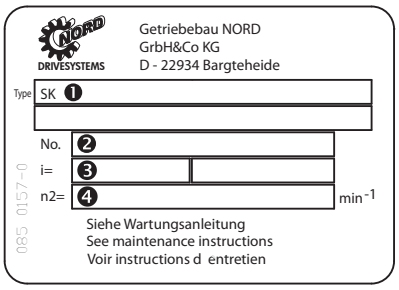

❶ Model/Type
❷ Serial Number
❸ Gear Ratio
❹ Speed

4. Transportation and handling

Make sure that all eyebolts and lifting lugs are tight and lift only at designed points. Protect the mounting surface from possible damage during transportation.

⚠ WARNING

Do not attach other machinery or loads to the NORD assembly, the supplied lifting bolts are not designed for this purpose and may result in drive damage or personal injury.

If the gearmotor or assembly is equipped with two suspension eye bolts, then both locations should be used for transportation and placement of the unit; in this case the tension force of the slings must not exceed a 45° angle.

In some instances it may be appropriate to use additional lifting straps or slings in order to assure safe transportation of the assembly. Always use sufficiently rated handling equipment and ensure that adequate safety measures are taken to protect personnel from injury during transportation. Once the NORD assembly is properly installed, remove the transportation fixtures.

7. DISPOSAL

MATERIAL DISPOSAL

Properly dispose of all used gear units and internal parts in accordance with all local regulations. In particular, all lubricants must be properly collected and disposed.

For confirmation of specific materials used in a specific reducer or gearmotor assembly, please consult NORD with the appropriate unit identification or serial number.

Components	Material
Gear wheels, shafts, rolling bearings, parallel keys, snap rings, spacers, shims, etc.	Steel
Gear housing and housing components	Cast iron or Aluminum (depending on type and size)
Worm gears	Bronze alloy
Radial seals, sealing caps, and rubber components	Elastomers with some steel
Coupling components	Plastic or Elastomer with Steel
Housing gaskets and flat oil seals	Asbestos-free sealing or gasket material (various types used)
Gear Oil	Mineral, SHC-Synthetic or PG-Synthetic (can vary)

STORAGE & COMMISSIONING

1. Storage

IMPORTANT NOTE

For storage periods longer than 9 months, or for storage in less than desirable conditions, please consult NORD for recommendations.

Storage for up to 9 months is possible, so long as the following conditions are observed:

- Store the gear unit in its actual mounting position in accordance with the specified oil fill-level, in a clean and dry temperature controlled area. Avoid temperature fluctuations within the range of 0°C and 40°C (32°F to 104°F) and avoid relative humidity conditions in excess of 60%.
- Protect all exposed or unpainted shaft and flange surfaces with an anti-corrosion agent or grease.
- Store in a location free from shock and vibration, to avoid false brinelling of bearing elements and raceways.
- Whenever possible, rotate the shafts periodically, by hand if necessary, to help prevent brinelling (bearing damage) and to help keep the shaft seals pliable.
- Avoid direct exposure to the sun or UV light and aggressive or corrosive materials in the environment (ozone, gases, solvents, acids, caustic solutions, salts, radioactivity, etc.

2. Commissioning

Prior to gear unit start-up, complete the following:

- Please check your gear unit for a vent and if applicable to your product, remove the sealing plug to activate.

NOTICE

To prevent build-up of excessive pressure, sealed vents must be activated as shown prior to gear unit start up. Excessive pressure may cause damage to internal gearbox components and leakage.



Sealed vent

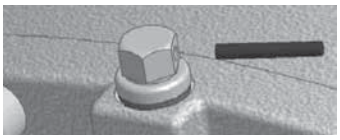

Activated vent

- Check the lubricant and be sure the gear unit is filled with the proper oil type, to the proper level, as determined by the mounting position.

IMPORTANT NOTE

Some smaller gear units are supplied as maintenance free/ lubricated for life gear units. Oil level may not be checked on some of these units.

- Check the condition of all shaft seals and all assembled flange gasket areas. If any change is detected in the shape, color, hardness or permeability, or if any leaks are detected, the corresponding shaft seals and/or gaskets must be replaced.
- Remove all anti-corrosive metal protectant from otherwise bare metal surfaces. Follow product manufacturers directions and warnings during surface protection removal.
- Check the resistance of all motor and brake windings to verify the integrity of the winding insulation and inspect all terminal box openings and wire connection areas to verify that all components are dry and free of corrosion.

3. Long-Term Storage

By taking special precautions, problems such as seal leakage and reducer failure due to the lack of lubrication, improper lubrication quantity, or contamination can be avoided. The following precautions will protect gear reducers during periods of extended storage:

- Store the gear unit in its actual mounting position in accordance with the specified oil fill-level, in a clean and dry temperature controlled area. Avoid temperature fluctuations within the range of 0°C and 40°C (32°F to 104°F) and avoid relative humidity conditions in excess of 60%.
- Fill the reducer full with oil that is compatible with the product normally used or recommended during service.
- Apply grease to all unpainted or unprotected shafts, bores, keyways, flange surfaces, tapped holes, and to the exterior of all oil seals.
- Store in a location free from shock and vibration, to avoid false brinelling of bearing elements and raceways.
- Once every few months rotate the input shaft approximately 10-20 revolutions to redistribute the weight of gears and shafts and to prevent brinnelling of the bearings and drying of the seal track.
- Avoid direct exposure to the sun or UV light and aggressive or corrosive materials in the environment (ozone, gases, solvents, acids, caustic solutions, salts, radioactivity, etc.)

4. Commissioning After Long-Term Storage

• Please check your gear unit for a vent and if applicable to your product, remove the sealing plug to activate.

NOTICE

To prevent build-up of excessive pressure, sealed vents must be activated as shown prior to gear unit start up. Excessive pressure may cause damage to internal gearbox components and leakage.

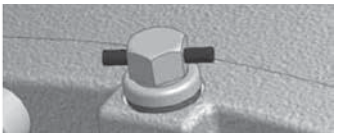

Sealed vent

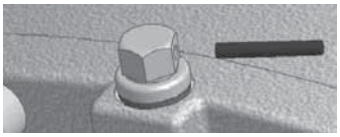

Activated vent

- Remove all anti-corrosive metal protectant from otherwise bare metal surfaces. Follow product manufacturers directions and warnings during surface protection removal.
- Drain the reducer and refill it with the proper type and amount of lubricant.
- Observe start-up and initial operation to make sure there are no seal or gasket leaks, or unusual sounds, vibration or heat rise during operation.
- Check the resistance of all motor and brake windings to verify the integrity of the winding insulation and inspect all terminal box openings and wire connection areas to verify that all components are dry and free of corrosion.

1. Installation site

Drives must be properly installed if they are to produce the rated torque. Improper installation may lead to oil leaks, reduced life, or even catastrophic failure. NORD gear drives and motors are intended to be installed at a suitable mounting site under the following conditions:

- Unimpeded airflow to and around the units.
- Accessibility to oil drain, level and breather plugs.
- On brakemotors, allow adequate space for removing the fan guard and replacing and adjusting the brake.
- Mounting surfaces must be flat, torsionally rigid, and dampened against vibration.
- Unless special measures are taken, the immediate vicinity around the gear drive or motor should not be exposed to any aggressive or corrosive substances, contaminated air, ozone, gases, solvents, acids, alkalis, salts, radioactivity, etc.

2. Mounting position

Reducer mounting position charts illustrate the standard mounting positions for horizontal and vertical mounting. All gear units are assembled with the oil fill-level, oil-drain and vent plugs installed in their proper locations, **according to the customer-specified mounting position**. For mounting orientations other than shown consult NORD Gear.

NOTICE

Improper oil levels may lead to premature component wear and diminished service life. The gear reducer may not receive proper lubrication if the unit is not mounted in the position for which it is designed. Observe the mounting position designated on the reducer nameplate, or specified in the order acknowledgement. Consult NORD prior to changing mounting position in the field. While it is often possible to simply relocate the oil fill-level and vent locations, and adjust the oil fill amount, in some cases, different mounting positions may lend themselves to different internal construction features.

3. Reducer mounting

- The support foundation must be straight, level and flat. Whether the gear unit is foot-mounted or flange-mounted, NORD recommends that the straightness and flatness of the customer-supplied support foundation follow **Table 1**.
- The gear unit must be properly aligned with the driven shaft of the machine in order to prevent additional stress or load forces from being imposed upon the gear unit.
- To facilitate oil drainage it may be desirable to elevate the gear box foundation above the surrounding support structure.
- All bolting surfaces must be clean and free from contamination and corrosion.

Table 1: Recommended Straightness and Flatness of Customer-Supplied Support Foundation

Above (in)	To & Including (in)	General Tolerance on Straigtness & Flatness ISO 2768-2, Tolerance Class K
0.00	0.39	+/- 0.002 in
0.39	1.18	+/- 0.004 in
1.18	3.9	+/- 0.008 in
3.9	11.8	+/- 0.016 in
11.8	39	+/- 0.024 in
39	118	+/- 0.031 in

Above (mm)	To & Including (mm)	General Tolerance on Straigtness & Flatness ISO 2768-2, Tolerance Class K
0	10	+/- 0.05 mm
10	30	+/- 0.1 mm
30	100	+/- 0.2 mm
100	300	+/- 0.4 mm
300	1000	+/- 0.6 mm
1000	3000	+/- 0.8 mm

Straightness: Based upon the length of the corresponding line.

Flatness: Based upon the longer lateral surface or the diameter of the circular surface.

IMPORTANT NOTE

The responsibility for the design and construction of the support foundation is with the user. The foundation must be adequate to withstand normal operating loads and possible overloads while maintaining alignment to attached system components under such loads. ***Motors and drive components mounted on prefabricated base plates can become misaligned during shipment. Always check alignment after installation.***

4. Steel foundation

An engineered structural steel foundation should be designed to provide adequate rigidity and prevent loads from distorting the housing or causing misalignment of internal gears and shafts. When foot-mounting the gear reducer, a base plate or sole plate with suitable thickness (generally equal or greater than the thickness of the drive feet) should be securely bolted to steel supports and extend under the entire gear drive assembly. When flange-mounting the gear unit, the bulk head plate must be engineered to minimize buckling distortions and support the cantilevered weight of the gear unit or gear motor.

NOTICE

Do not weld on the gear unit or use the gear unit as an earth or ground connection for any welding procedure as this may cause permanent damage to the bearings and gears.

5. Concrete foundation

If a concrete foundation is used, allow the concrete to set firmly before bolting down the gear drive. Grout structural steel mounting pads and bolts of sufficient size into the concrete, to adequately distribute the load stress onto the concrete foundation.

Figure 1: Concrete Foundation

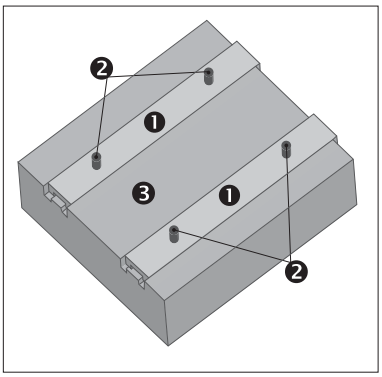

❶ Grouted Structural Steel Mounting Pads
❷ Mounting Bolts
❸ Concrete Foundation

6. Bolt connections for footed & flange mounted units

NORD footed reducers and flange-mount reducers (with B5 flange) have clearance designed into the mounting holes to allow for some minor adjustments in alignment. Bolt size, strength and quantity should be verified to insure proper torque reaction capacity whatever the mounting arrangement. Tightening torque for gear reducer mounting bolts, and recommended fastener grades, are provided in Table 2.

Table 2A: Tightening Torque for Inch Reducer Mounting Bolts

Thread Size	Grade SAE 5 / ASTM A449		Grade SAE 8	
(in)	(lb-ft)	(Nm)	(lb-ft)	(Nm)
1/4-20	7.1	9.6	10.0	13.6
5/16-18	16	21	22	30
3/8-16	28	37	39	53
1/2-13	69	93	98	132
5/8-11	138	188	195	264
3/4-10	247	334	348	472
7/8-9	396	537	558	757
1-8	592	802	833	1,130
1 1/8-7	-	-	1,233	1,672
1 1/4-7	-	-	1,717	2,327
1 3/8-6	-	-	2,267	3,073
1 1/2-6	-	-	2,983	4,045
1 3/4-5	-	-	4,458	6,045

- Calculated tightening torques are based a conventional 60°, clean and dry (un-lubricated) thread, with thread-friction and head-friction equal to 0.15.
- When using inch-fasteners, NORD recommends a minimum Grade SAE 5 (ASTM A-449) for sizes up to 1-8 UNC, and Grade SAE 8 for all larger sizes.

Table 2B: Tightening Torque for Metric Reducer Mounting Bolts

Above	ISO Grade 8.8		ISO Grade 10.9		ISO Grade 12.9	
(mm)	(lb-ft)	(Nm)	(lb-ft)	(Nm)	(lb-ft)	(Nm)
M4	2.4	3.2	3.5	4.7	4.1	5.5
M5	4.7	6.4	6.9	9.3	8.1	11
M6	8	11	12	16	14	19
M8	20	27	29	39	34	46
M10	39	53	58	78	67	91
M12	68	92	100	135	110	155
M14	107	145	159	215	180	250
M16	170	230	247	335	290	390
M18	240	325	343	465	400	540
M20	339	460	487	660	570	770
M22	465	630	664	900	770	1,050
M24	583	790	848	1,150	960	1,300
M27	848	1,150	1,217	1,650	1,440	1,950
M30	1,180	1,600	1,660	2,250	1,950	2,650
M36	2,050	2,780	2,884	3,910	3,470	4,710
M42	3,297	4,470	4,639	6,290	5,560	7,540
M48	4,940	6,700	7,010	9,500	8,260	11,200

- Calculated tightening torques are based on a conventional 60°, clean and dry (un-lubricated) thread, with thread-friction and head-friction equal to 0.15.
- When using metric-fasteners, NORD recommends a minimum ISO Grade 8.8 bolt.

7. Mounting the prime mover

When the motor is not flange mounted or integrally mounted to the gearbox, it is important to properly secure and align the gear drive with respect to the driven machine before attempting to align the prime mover or motor.

A. After the main gear drive is properly aligned and bolted in place, align the prime mover with respect to the reducer input shaft.

B. Use shims under the feet of the prime mover as needed, and secure in place with the proper mounting bolts. Dowel pins may be field-installed to help prevent misalignment and ensure proper realignment if removed for service.

IMPORTANT NOTE

When using a high speed coupling connection between the prime mover and the reducer, check alignment per the coupling manufacturers recommendations. If the coupling is misaligned, the reducer alignment or shimming is incorrect. Re-align the gear reducer and re-check the high-speed coupling alignment before re-aligning the motor.

HELICAL & BEVEL REDUCER LUBRICATION

1. Importance of proper lubrication

Proper gearbox lubrication is essential in order to reduce friction, heat, and component wear. Lubricants reduce heat and wear by inserting a protective "fluid boundary" between mating parts and preventing direct metal to metal contact. Lubricants also help prevent corrosion and oxidation, minimize foam, improve heat transfer, optimize reducer efficiency, absorb shock loads and reduce noise.

Most NORD reducers are shipped from the factory with a pre-determined oil fill level in accordance to the specified reducer size and mounting position.

2. Standard oil type

The following tables indicate the standard oil fill type used. Please see user manual U11000 for more specific information and for optional helical and bevel gear lubricants:

Serviceable Gear Units	
Helical In-line	Standard Oil Fill: ISO VG 220, Mineral Oil
Clincher Parallel-Shaft	
Right-Angle Bevel	
NORDBLOC® Series In-line	
NORDBLOC®.1 Series In-line	
Standard Series In-line	

IMPORTANT NOTE

For shipping purposes, the following large Clincher™ gear units are supplied without oil:
- Clincher™ Sizes SK11282, SK11382, SK11382.1 and SK12382

Maintenance-free / Lubricated For Life Gear Units	
Clincher™ sizes SK0182NB, SK0282NB & SK1382NB	Standard Oil Fill: ISO VG220 SHC/PAO Synthetic Oil
NORDBLOC® Sizes SK172, SK272, SK371F, SK372, SK373, SK320	

IMPORTANT NOTE

Maintenance-free units are supplied as sealed units with no vent-plug. Consult NORD prior to ordering if interested in ordering any of the above sizes as serviceable gear units.

IMPORTANT NOTE

Consult the sticker adjacent to the fill plug to determine the type of lubricant installed at the factory. Some units have special lubricants designed to operate in certain environments or intended to extend the service life or service temperature range of the lubricant. If in doubt about which lubricant is needed for a certain application, please contact NORD Gear.

3. Lubrication replacement

If the gear unit is filled with mineral oil, the lubricant should be replaced at least after every 10,000 operating hours or after every two years. If the gear unit is filled with synthetic oil, the lubricant should be replaced at least after every 20,000 operating hours or after every four years. Often gear reducers are exposed to extreme ambient conditions, hostile environments, wet conditions, or dirty and dusty operating areas. Especially in these situations, it is important to establish a condition-based oil service interval.

4. Oil viscosity

Viscosity, or the oil's resistance to shear under load, is often considered the single most important property of any gear oil.

- Often one will consider making a viscosity correction to the oil to improve the performance when operating the gear unit at low temperature or high temperature.
- In cases of extreme load conditions, gear pairs and antifriction bearings may be more susceptible to sliding or scuffing wear. In these operating conditions, it may also be beneficial to consider an increased lubrication viscosity and/or a lubrication with improved antiwear additive packages.

IMPORTANT NOTE

The user should consult with their primary lubrication supplier before considering changes in oil type or viscosity.

5. Maximum oil sump temperature limit

To prevent reducer overheating, the reducer's maximum oil sump temperature limit must not be exceeded for prolonged periods of operation (up to 3 hours continuous operation depending upon reducer size).

Oil Type	Maximum Oil Temperature Limit	
	NORD	AGMA 9005-D94
Mineral	80-85°C (176-185°F)	95°C (203°F)
Synthetic	105°C (220°F)	107°C (225°F)

IMPORTANT NOTE

Use caution when specifying gear reducers for high temperature service. If there is concern about exceeding the allowable safe operating temperatures, please consult NORD to discuss alternatives.

6. The importance of routine oil analysis

Routine oil analysis, sound lubrication practices, and good tracking of oil performance trends will help establish proper lubrication maintenance and change-out intervals. To maximize equipment reliability, NORD Gear generally recommends a condition-based lubrication maintenance program. One may take exceptions to this general recommendation on sealed-for-life or maintenance-free gear units or smaller and less costly gear units. In these instances, the replacement cost of the gear unit is often small compared to the costs associated with this type of oil analysis program.

NOTICE

NORD suggests replacing the gear oil if oil analysis indicates any of the following. Failure to replace the oil may cause internal damage to gearbox and diminished performance:

- Viscosity has changed by approximately 10% or more.
- Debris particles (silicon, dust, dirt or sand) exceed 25 ppm.
- Iron content exceeds 150-200 ppm.
- Water content is greater than 0.05% (500 ppm).
- The total acid number (TAN) tests indicate a significant level of oxidative break-down of the oil, and a critical reduction in performance; If the TAN number measured changes by more than 5% over the new oil, then an oil change would be recommended.

7. Mounting position and oil fill quantity

All NORD Gear reducers are shipped from the factory with a pre-determined oil fill level in accordance to the specified reducer size and mounting position. ***For additional information, please see the seperate mounting position diagrams and the corresponding oil fill quantity tables for the specified gear unit.***

The gearbox nametag will indicate the mounting position that was provided. ***For mounting orientations other than shown in the mounting position charts, please consult NORD Gear.***

IMPORTANT NOTE

Actual oil volume can vary slightly depending upon the gear case size, mounting and ratio. Prior to commissioning the reducer, check the oil-fill level using the reducer's oil-level plug and drain or add additional oil as needed. The minimum acceptable oil level is 0.15 in (4mm) below the oil level hole.

8. Oil plug locations

All gear units are assembled with the oil fill-level, oil-drain and vent plugs installed in their proper locations, according to the specified mounting position. All standard plugs are metric and utilize sealing gaskets between the head of the plug and the reducer housing.

9. Drain and fill-level plugs

All reducer drain plugs are metric socket head cap screws. For easier identification, it is NORD's standard practice to provide a hex-head screw for the fill-level plug. For ease of draining the used oil from the gear reducer, use the socket head screw located at the lowest part of the gearbox.


Drain Plug

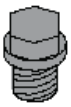
Fill Level Plug

10. Vent plug locations

Reducer venting allows for air pressure differences that occur during operation, between the inner space of the reducer and the atmosphere, while ensuring leak-free operation. The AUTOVENT™ is standard for all vented gear units, unless otherwise noted.

AUTOVENT™ - The AUTOVENT™ helps prevent bearing and gear damage by behaving like a check valve to block the entry of foreign material and prevent lubrication contamination from dust particles, moisture and air-borne process chemicals. The breather opens at approximately 0.3-0.9 psi during operation and closes tightly as the gearbox cools. This option is perfect for humid conditions and wash-down environments, helping to maintain proper oil cleanliness, while reducing foaming and oxidation.

Figure 1 AUTOVENT™ Types

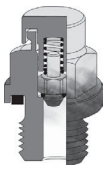
Type 1

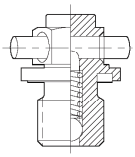

Type 2 with transportation plug

Open Vent - An optional open vent can be supplied by NORD. The open vent comes closed upon delivery with a transportation sealing plug (see Warning).

NOTICE

To prevent build-up of excessive pressure, sealed vents must be activated as shown prior to gear unit start up. Excessive pressure may cause damage to internal components and cause leakage.

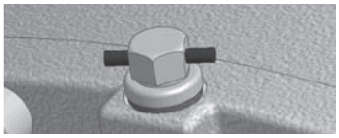
Sealed vent

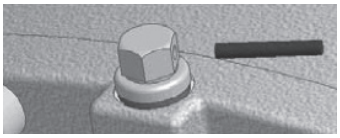
Activated vent

Filtered Vent - NORD may offer an optional filtered vent, which allows gases to permeate, but does not allow dust and debris to pass through the vent.

HELICAL & BEVEL REDUCER LUBRICATION TYPES

Lubrication Tables – Helical and Bevel Gear Units

Standard Oil Lubricants

ISO Viscosity	Oil Type	Ambient Temperature Range	Manufacturer Brand/Type	Notes
VG220	MIN-EP	0 to 40°C (32 to 104°)	Mobilgear 600XP220	♦❶
	PAO-EP	-35 to 60°C (-31 to 140°F)	Mobil SHC Gear 220	♦❷
	FG	-5 to 40°C (23 to 104°F)	Fuchs FM220	♦

Optional Oil Lubricants

ISO Viscosity	Oil Type	Ambient Temperature Range	Manufacturer Brand/Type	Notes
VG460	PAO-EP	-35 to 80°C (-31 to 176°F)	Mobil SHC Gear 460	-
	FG-PAO	-35 to 80°C (-31 to 176°F)	Mobil SHC Cibus 460	-
VG220	FG-PAO	-35 to 60°C (-31 to 140°F)	Mobil SHC Cibus 220	S
VG150	PAO-EP	-35 to 25°C (-31 to 77°F)	Mobil SHC Gear 150	-

Grease Options (applied to greased bearings and seal cavities)

NLGI Grade	Grease Thickener	Grease Base Oil	Ambient Temperature Range	Manufacturer Brand/Type	Notes
NLGI 2	Li-Complex	MIN	-30 to 60°C (-22 to 140°F)	Mobil Grease XHP222	♦❶
	Li-Complex	PAO	-40 to 80°C (-40 to 176°F)	Mobil / Mobilith SHC 220	♦❷
	Polyurea	FG-PAO	-30 to 80°C (-22 to 176°F)	Mobil SHC Polyrex 222	♦

♦ Stocked Lubricants

❶ Standard product on serviceable gear units

❷ Standard product on maintenance free gear units

IMPORTANT NOTE

- The "Ambient Temperature" is intended to be an operation guideline based upon the typical properties of all the lubricant. The viscosity and other properties of the lubricant change based upon load, speed, ambient conditions, and reducer operating temperatures. The user should consult with their lubrication supplier & NORD gear before considering changes in oil type or viscosity.
- To prevent reducer overheating, observe the maximum operating oil temperature limits:
  Mineral Oil: 80-85 °C (176 – 180 °F).
  Synthetic Oil: 105 °C (225 °F).
- In the following instances, please consult NORD for specific recommendations:
  - √ Gear units will operate in high ambient temperature conditions exceeding 40 °C (104 °F).
  - √ Gear units will operate in cold ambient temperature conditions approaching 0 °C (32 °F) or lower.
  - √ Lower than an ISO VG100 viscosity oil is being considered for a cold-temperature service.
  - √ Fluid grease is required for lubricating the gear unit.
- Observe the general lubrication guidelines outlined in user manual U10750.

Oil Formulation Codes

MIN-EP - Mineral Oil with EP Additive
PAO-EP - Synthetic Polyalphaolefin Oil with EP Additive
PAO - Synthetic Polyalphaolefin Oil
PG - Synthetic Polyglycol Oil
FG - Food-Grade Oil
FG-PAO - Food-Grade, Synthetic Poyalphaolefin Oil
FG-PG - Food-Grade, Synthetic Polyglycol Oil

Lubrication Notes

- Avoid using (EP) gear oils in worm gears that contain sulfur-phosphorous chemistries, as these additives can react adversely with bronze worm gears and accelerate wear.
- Food grade lubricants must be in compliance with FDA 212 CFR 178.3570 and qualify as a NSF-H1 lubricant. Please consult with lubrication manufacturer for more information.
- When making a lubrication change, check with the lubrication supplier to assure compatibility and to obtain recommended cleaning or flushing procedures.
- Do not to mix different oils with different additive packages or different base oil formulation types. Polyglycol (PG) oils are not miscible with other oil types and should never be mixed with mineral oil or polyalphaolefin (PAO) synthetic oil.

HELICAL & BEVEL REDUCER LUBRICATION TYPES

Oil Cross-reference Chart

ISO Viscosity	Oil Type	Ambient Temperature Range	Mobil	Shell	Castrol	FUCHS	KLÜBER LUBRICATION
VG150	MIN-EP	0 to 25°C (32 to 77°F)	Mobilgear 600XP150	Omala S2 G 150	Alpha SP150	Renolin EP150	Klüberoil GEM 1-150N
	PAO-EP	-30 to 25 °C (-22 to 77 °F)	Mobil SHC Gear 150	Omala S4 GX 150	Alphasyn EP150	Gearmaster SYN150/NA	Klübersynth EG 4-150
	PAO	-30 to 25°C (-22 to 77°F)	Mobil SHC629	Morlina S4 B 150	Alphasyn T150	N/A	Klübersynth GEM 4-150N
	PG	-25 to 25°C (-13 to 77°F)	Mobil Glygoyle 150	Omala S4 WE 150	Alphasyn PG150	Renolin PG150	Klübersynth GH 6-150
	FG	0 to 25°C (32 to 77°F)	Mobil DTE FM 150	N/A	N/A	N/A	N/A
	FG-PAO	-15 to 25°C (5 to 77°F)	Mobil SHC Cibus 150	N/A	N/A	Cassida GL150	Klüberoil 4 UH 1-150N
	FG-PG	-25 to 25°C (-13 to 77°F)	Mobil Glygoyle 150	N/A	N/A	N/A	Klübersynth UH1 6-150
VG220	MIN-EP	0 to 40°C (32 to 104°)	Mobilgear 600XP220	Omala S2 G 220	Alpha SP220	Renolin EP220	Klüberoil GEM 1-220N
	PAO-EP	-30 to 60 °C (-22 to 140 °F)	Mobil SHC Gear 220	Omala S4 GX 220	Alphasyn EP220	Gearmaster SYN220/NA	Klübersynth EG 4-220
	PAO	-30 to 60°C (-22 to 140°F)	Mobil SHC630	Morlina S4 B 220	Alphasyn T220	N/A	Klübersynth GEM 4-220N
	PG	-25 to 60°C (-13 to 140°F)	Mobil Glygoyle 220	Omala S4 WE 220	Alphasyn PG220	Renolin PG220	Klübersynth GH 6-220
	FG	0 to 40°C (32 to 104°F)	Mobil DTE FM 220	N/A	N/A	Fuchs FM220	N/A
	FG-PAO	-25 to 60°C (-13 to 140°F)	Mobil SHC Cibus 220	N/A	N/A	Cassida GL220	Klüberoil 4 UH 1-220N
	FG-PG	-25 to 60°C (-13 to 140°F)	Mobil Glygoyle 220	N/A	N/A	Cassida WG220	Klübersynth UH1 6-220
VG460	MIN-EP	0 to 40°C (32 to 104°F)	Mobilgear 600XP460	Omala S2 G 460	Alpha SP460	Renolin EP460	Klüberoil GEM 1-460N
	PAO-EP	-20 to 80°C (-4 to 176°F)	Mobil SHC Gear 460	Omala S4 GX 460	Alphasyn EP460	Gearmaster SYN460/NA	Klübersynth EG 4-460
	PAO	-20 to 80°C (-4 to 176°F)	Mobil SHC 634	Morlina S4 B 460	Alphasyn T460	N/A	Klübersynth GEM 4-460N
	PG	-20 to 80°C (-4 to 176°F)	Mobil Glygoyle 460	Omala S4 WE 60	Alphasyn PG460	N/A	Klübersynth GH 6-460
	FG	0 to 40°C (32 to 104°F)	Mobil DTE FM460	N/A	N/A	Fuchs FM460	N/A
	FG-PAO	-20 to 80°C (-4 to 176°F)	Mobil SHC Cibus 460	N/A	N/A	Cassida GL460	Klüberoil 4 UH 1-460N
	FG-PG	-20 to 80°C (-4 to 176°F)	Mobil Glygoyle 460	N/A	N/A	Cassida WG460	Klübersynth UH1 6-460

Low-end service temperature limit may vary for a specific lubricant; Please also see the important notes on Page 1.

92.1/93.1 SERIES HELICAL-BEVEL OIL FILL QUANTITIES

92.1/93.1 Helical-bevel mount lubrication

All NORD Gear reducers are shipped from the factory with a pre-determined oil fill level in accordance to the specified reducer size & mounting position. For additional information, please refer to the "Oil Plug & Vent Locations" documentation for your gear unit.

IMPORTANT NOTE

Actual oil volume can vary slightly depending upon the gear case size, mounting and ratio. Prior to commissioning the reducer, check the oil-fill level using the reducer's oil level plug and drain or add addition oil as needed.

For mounting orientations other than shown please consult NORD Gear. Reducer modifications may be required.

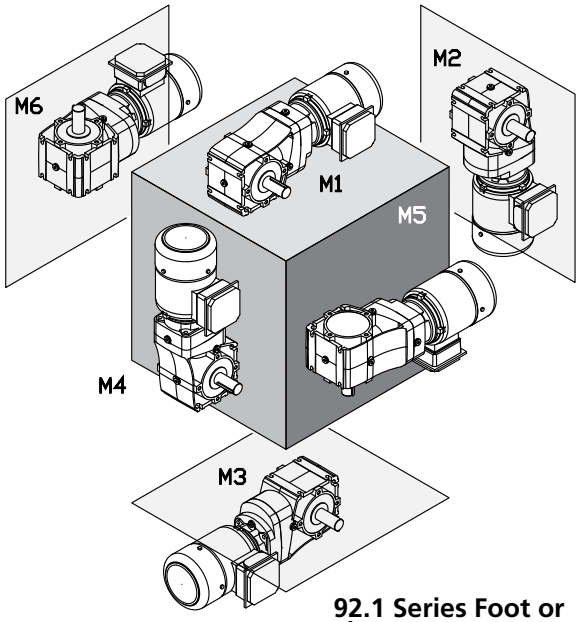

92.1 Series Foot or Flange Mount

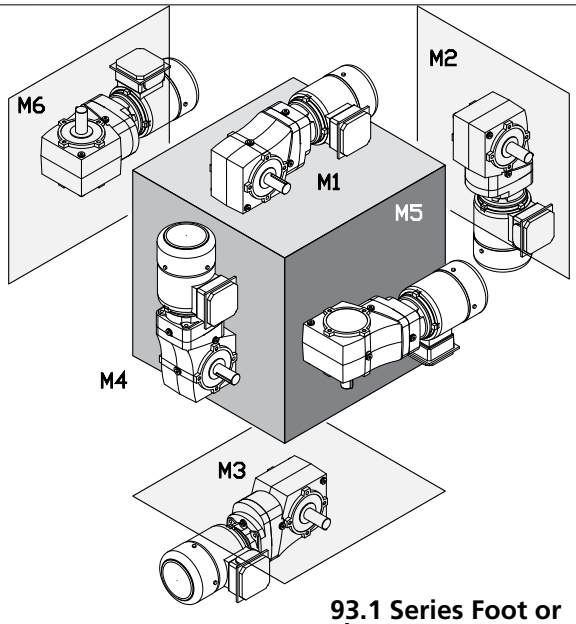

93.1 Series Foot or Flange Mount

92.1 Series Oil Fill

Type	M1		M2		M3		M4		M5		M6	
	Quarts	Liters	Quarts	Liters	Quarts	Liters	Quarts	Liters	Quarts	Liters	Quarts	Liters
SK 920072.1	0.22	0.21	0.50	0.47	0.22	0.36	0.22	0.34	0.22	0.28	0.22	0.28
SK 92072.1	0.28	0.26	0.52	0.49	0.44	0.42	0.57	0.54	0.31	0.29	0.33	0.31
SK 92172.1	0.36	0.34	0.65	0.61	0.55	0.52	0.71	0.67	0.44	0.42	0.51	0.48
SK 92372.1	0.45	0.43	0.97	0.92	0.77	0.73	0.88	0.83	0.58	0.55	0.65	0.61
SK 92672.1	0.90	0.85	1.69	1.60	1.27	1.20	1.59	1.50	1.08	1.02	1.08	1.02
SK 92772.1	1.37	1.30	2.80	2.65	1.97	1.86	2.85	2.70	1.69	1.60	1.69	1.60

Oil levels shown apply to all foot & flange mounted units.

93.1 Series Oil Fill

Type	M1		M2		M3		M4		M5		M6	
	Quarts	Liters	Quarts	Liters	Quarts	Liters	Quarts	Liters	Quarts	Liters	Quarts	Liters
SK 930072.1	0.30	0.28	0.69	0.65	0.22	0.56	0.22	0.54	0.22	0.39	0.22	0.39
SK 93072.1	0.41	0.39	0.98	0.93	0.83	0.79	1.08	1.02	0.52	0.49	0.66	0.62
SK 93172.1	0.63	0.60	1.24	1.17	0.99	0.94	1.29	1.22	0.69	0.65	0.90	0.85
SK 93372.1	1.06	1.00	2.08	1.97	1.74	1.65	2.26	2.14	1.18	1.12	1.42	1.34
SK 93672.1	1.90	1.80	3.41	3.23	2.86	2.71	4.02	3.80	2.13	2.02	2.59	2.45
SK 93772.1	2.87	2.72	4.89	4.63	3.91	3.70	6.13	5.80	3.10	2.93	3.43	3.25

Oil levels shown apply to all foot & flange mounted units.

92.1/93.1 SERIES HELICAL-BEVEL OIL PLUG & VENT LOCATIONS

Oil plug locations

Prior to commissioning the reducer, check the oil-fill level using the reducer's oil-level plug and drain or add additional oil as needed. ***For mounting orientations other than shown please consult NORD Gear. New plug locations may be required.***

92.1 Series

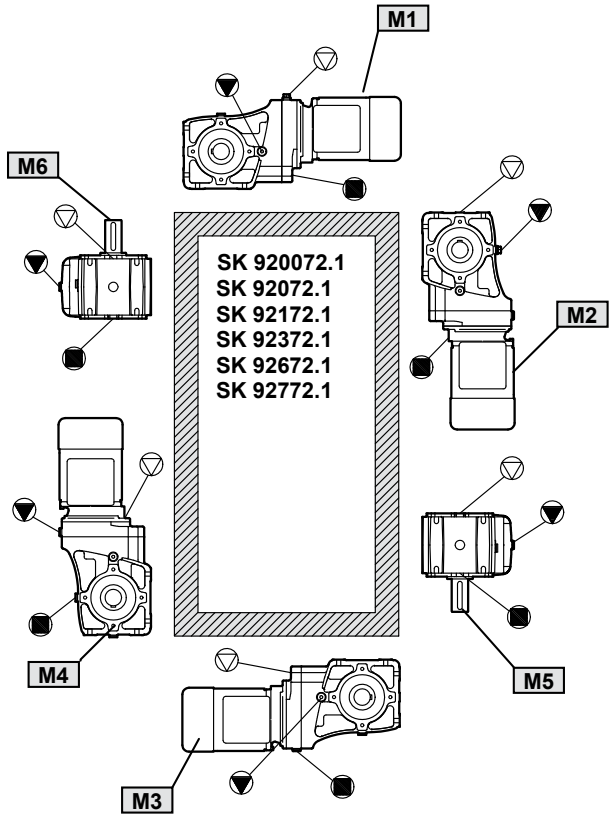

93.1 Series

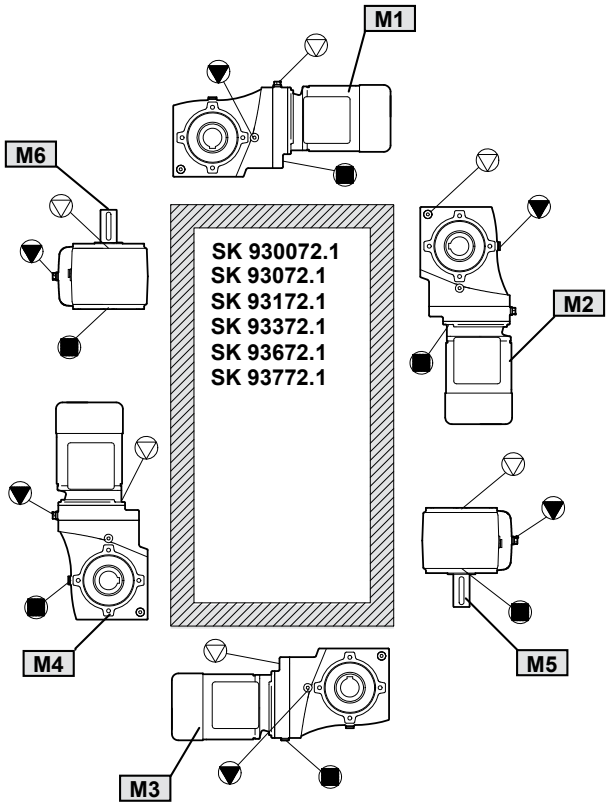

▽ = Vent

▼ = Oil Level

■ = Oil Plug

Intelligent Drivesystems, Worldwide Services

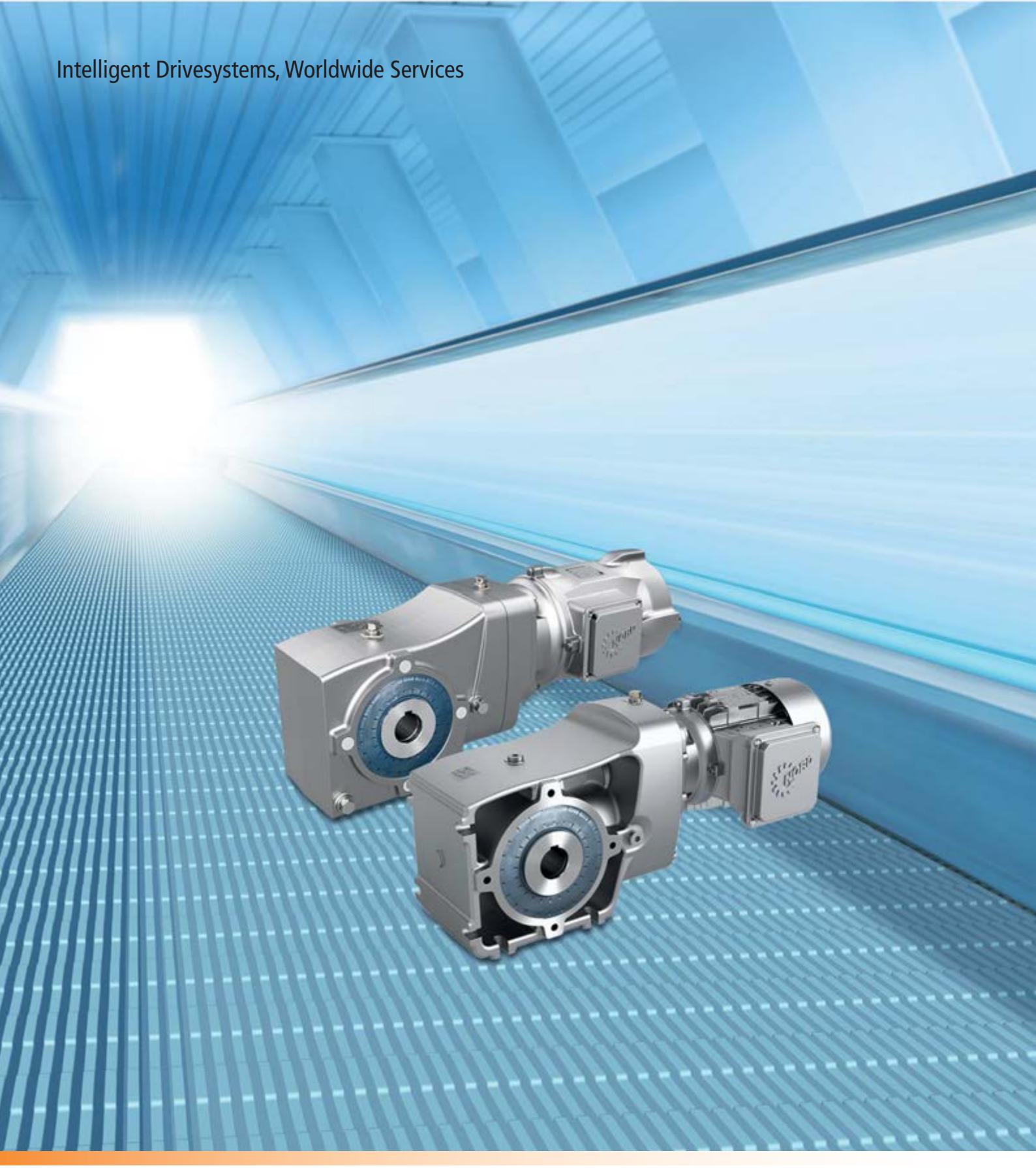

DE EN FR

PL1014

SK 920072.1 - SK 93772.1

Ersatzteilkatalog 2-stufige Kegelradgetriebe
Spare parts catalogue 2-stage helical bevel gear unit
Catalogue de pièces de rechange Couple coniques à 2 trains

NORD DRIVESYSTEMS

Allgemeine Ersatzteile
General parts list
Vues éclatées et nomenclature



2-stuf ge Kegelradgetriebe.....2 - 5
2-stage helical bevel gear unit
Couples coniques à 2 trains



Bestellangaben.....6 - 7
Order details
Informations de commande



2-stufige Kegelradgetriebe
2-stage Helical-Bevel Gear Unit
Couples coniques à 2 trains

EB 6239000-E1 #1

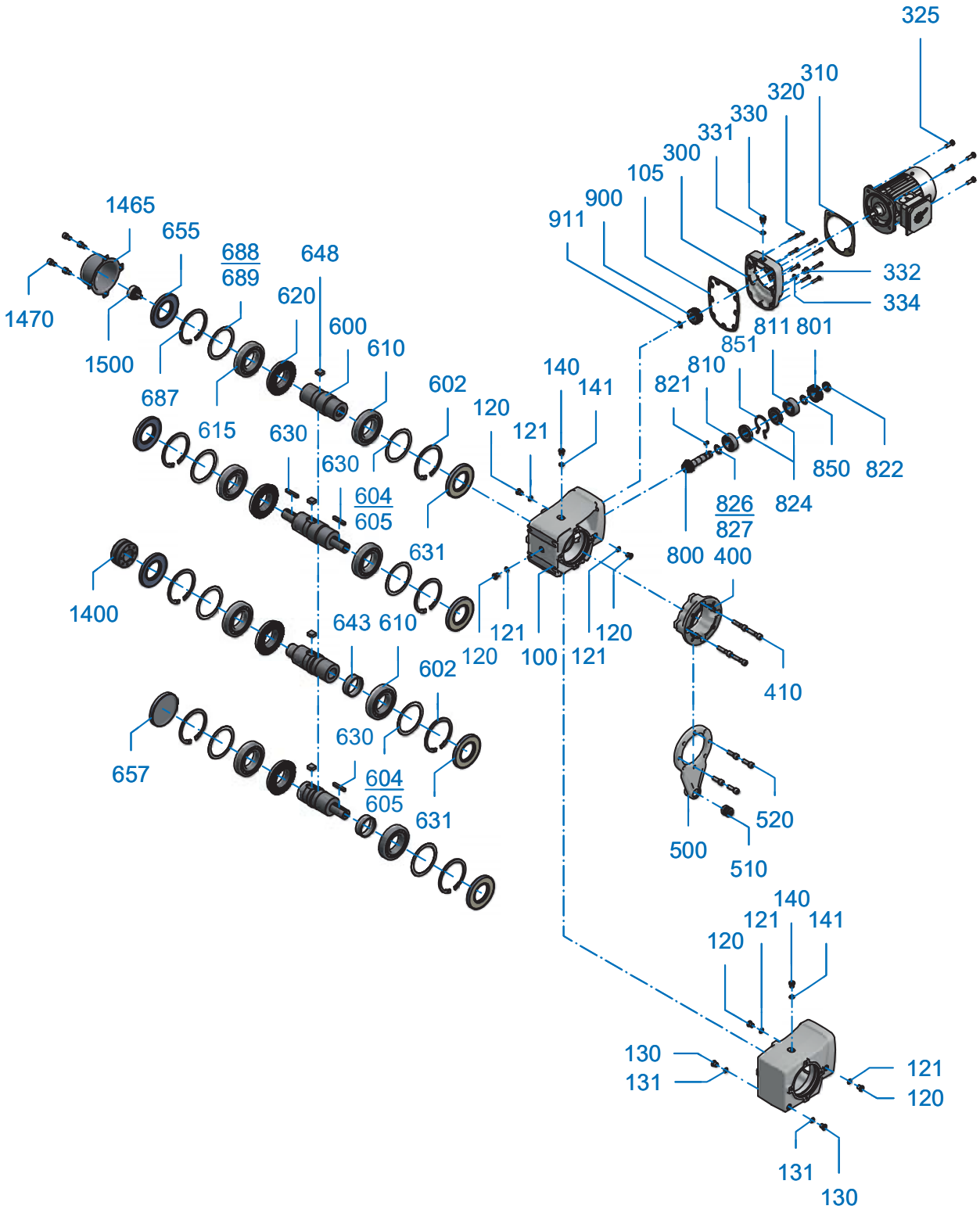



DE		EN		FR	
100	Gehäuse	100	Housing	100	Boîtier
105	Dichtung	105	Seal	105	Bague d’étanchéité
120	Schraube	120	Screw	120	Vis
121	Dichtung	121	Seal	121	Bague d’étanchéité
130	Schraube	130	Screw	130	Vis
131	Dichtung	131	Seal	131	Bague d’étanchéité
140	Schraube	140	Screw	140	Vis
141	Dichtung	141	Seal	141	Bague d’étanchéité
300	Getriebedeckel	300	Gear unit cover	300	Couvercle du réducteur
310	Dichtung	310	Seal	310	Bague d’étanchéité
320	Schraube	320	Screw	320	Vis
325	Schraube	325	Screw	325	Vis
330	Schraube	330	Screw	330	Vis
331	Dichtung	331	Seal	331	Bague d’étanchéité
332	Schraube	332	Screw	332	Vis
334	Dichtung	334	Seal	334	Bague d’étanchéité
400	Flansch	400	Flange	400	Brigde
410	Schraube	410	Screw	410	Vis
500	Drehmomentenstütze	500	Torque arm	500	Bras de réaction
510	Buchse	510	Socket	510	Douille
520	Schraube	520	Screw	520	Vis
600	Abtriebswelle	600	Output shaft	600	Arbre de sortie
610	Wälzlager	610	Roller bearing	610	Palier
615	Wälzlager	615	Roller bearing	615	Palier
620	Abtriebsrad	620	Output gear	620	Roue de sortie
630	Passfeder	630	Key	630	Clavette
631	Wellendichtring	631	Radial shaft seal	631	Bague d’étanchéité de l’arbre
634	Sicherungsring	650	Circlip	650	Circlip
635	Passscheibe	635	Shim	635	Rondelles d’ajustage
636	Passscheibe	636	Shim	636	Rondelles d’ajustage
643	Distanzbuchse	643	Socket	510	Douille
648	Passfeder	648	Key	648	Clavette
650	Sicherungsring	650	Circlip	650	Circlip
652	Passscheibe	652	Shim	652	Rondelle d’ajustage
653	Passscheibe	653	Shim	653	Rondelle d’ajustage
655	Wellendichtring	655	Radial shaft seal	655	Bague d’étanchéité de l’arbre
657	Verschlusskappe	657	Sealing cap	657	Bouchon
↓		↓		↓	



2-stufige Kegelradgetriebe
2-stage Helical-Bevel Gear Unit
Couples coniques à 2 trains

EB 6239000-E1 #1

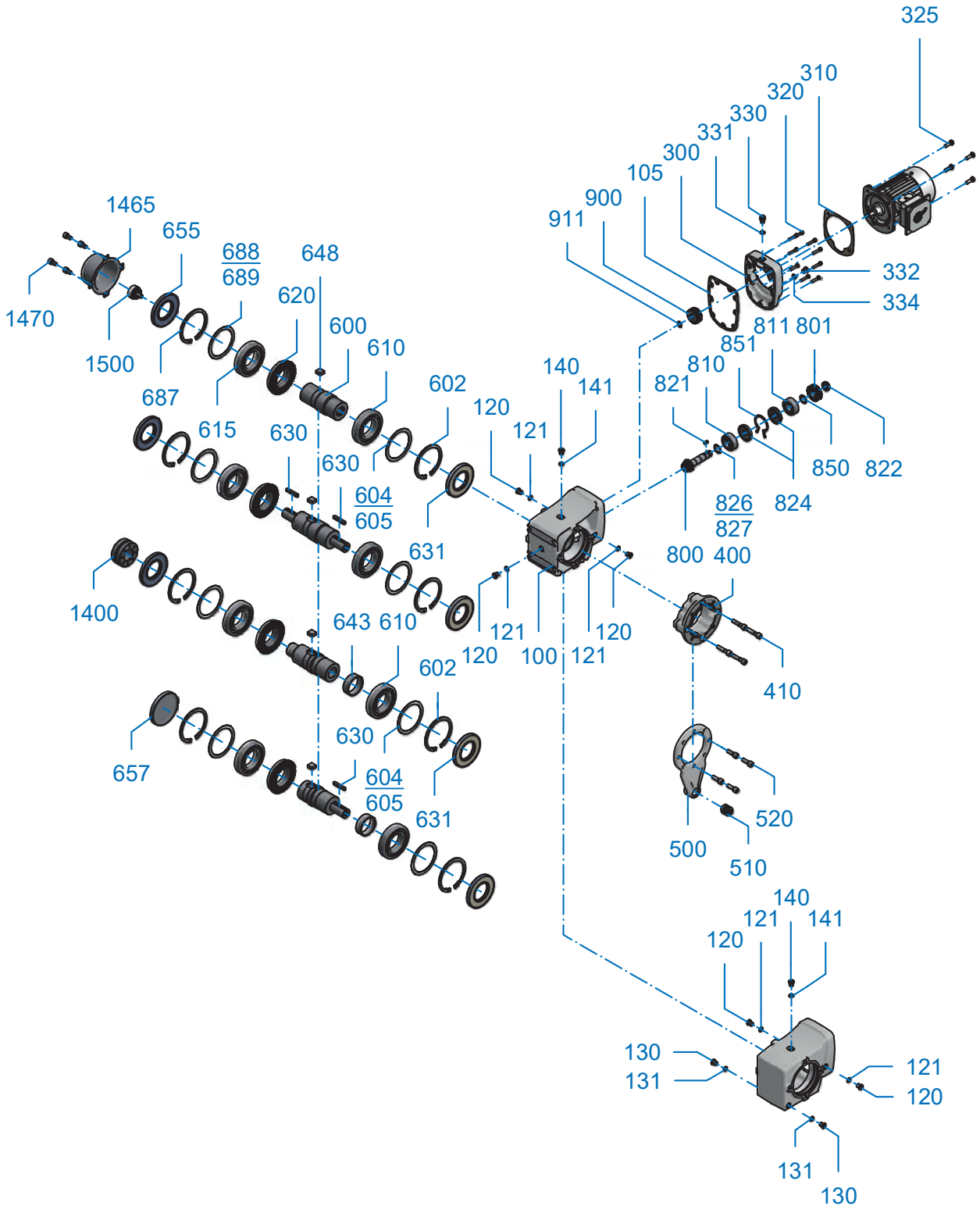



↑	DE	↑	EN	↑	FR
800	Ritzelwelle	800	Pinion shaft	800	Arbre de pignon
801	Antriebsrad	801	Drive gear	801	Roue d’entrée
810	Wälzlager	810	Roller bearing	810	Palier
811	Wälzlager	811	Roller bearing	811	Palier
820	Sicherungsring	820	Circlip	820	Circlip
821	Passfeder	630	Key	630	Clavette
822	Nutmutter	822	Locknut	822	Ecrou à encoches
823	Sicherungsblech	823	Tab washer	823	Rondelle d‘arrêt
824	Buchse	824	Socket	824	Douille
826	Passscheibe	826	Shim	826	Rondelle d’ajustage
827	Passscheibe	827	Shim	827	Rondelle d’ajustage
830	Stützscheibe	830	Supporting disc	830	Rondelle d‘appui
850	Buchse	850	Socket	850	Douille
851	Sicherungsring	851	Circlip	851	Circlip
900	Antriebsritzel	900	Driving pinion	900	Pignon d’entrée
910	Passfeder	910	Key	910	Clavette
911	Sicherungsring	911	Circlip	911	Circlip
1400	Baugruppe Schrumpfscheibe	1400	Shrink disc assembly	1400	Module de frette de serrage
1465	Haube	1465	Cover	1465	Capot
1470	Schraube	1470	Screw	1470	Vis
1500	Befestigungselement	1500	Fixing element	1500	Elément de f xation

Kontaktdaten / Contact details / Contacts:

Firma / Company / Entreprise:

Straße / Street / Rue:

Stadt / Town / Ville:

PLZ / Postcode/
Code postal:

Telefon / Telephone / Téléphone:

Fax:

E-mail:





Getriebebau NORD

Getriebebau-Nord-Straße 1
D-22941 Bargteheide

Telefon +49(0) 4532/289-0
Telefax +49(0) 4532/289-2253
E-Mail info@nord.com
www.nord.com

DE

Diese NORD Ersatzteilliste beinhaltet eine standardisierte Darstellung der NORD Getriebe. Um Ihnen das Finden und Nachbestellen von Ersatzteilen zu erleichtern, finden Sie am Ende der Ersatzteilliste ein Bestellformular mit wichtigen Hinweisen zur Bestimmung der richtigen Teile.

Für Rückfragen stehen wir Ihnen gerne zur Verfügung. Ihren lokalen Ansprechpartner finden Sie unter http://locator.nord.com.

EN

This NORD spare parts list contains a standardised depiction of NORD gear units. In order to enable you to find and re-order replacement parts more easily, you can find an order form and important information regarding the identification of the correct components at the end of this spare parts list.

We will be glad to help you if you have any queries: You can find your local contact partner under http://locator.nord.com.

FR

Cette liste de pièces de rechange NORD contient une représentation standard des réducteurs NORD. Pour faciliter la recherche et la commande de pièces de rechange, un formulaire de commande se trouve à la fin de la liste des pièces de rechange et vous donne toutes les informations essentielles pour déterminer les pièces dont vous avez besoin.

En cas de questions, n'hésitez pas à nous contacter. Pour connaître votre interlocuteur local, veuillez consulter le site http://locator.nord.com.

Erläuterung des Typenschildes
Explanation of the rating plate
Explication de la plaque signalétique

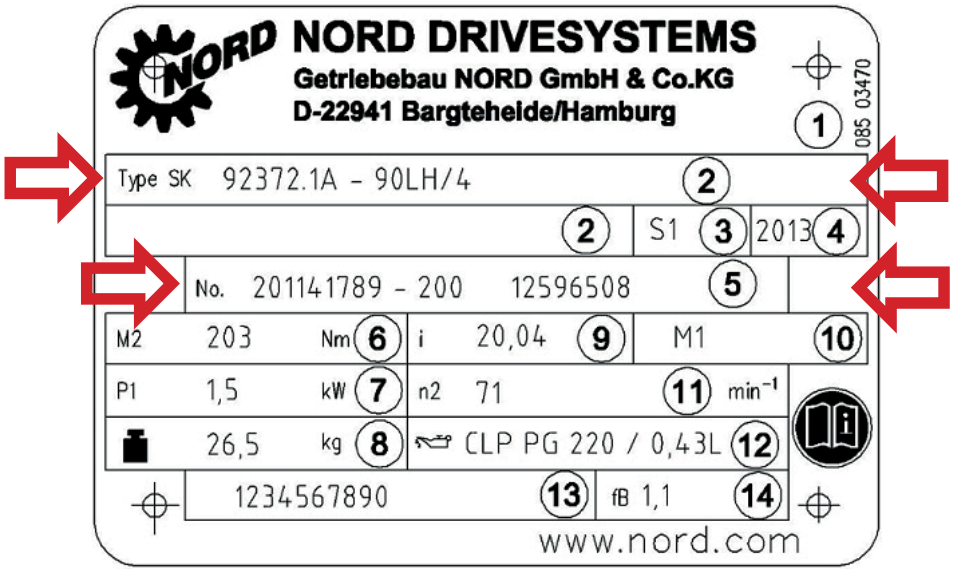

DE

1 Matrix – Barcode
2 NORD - Getriebetyp
3 Herstellungsjahr
4 Fabrikationsnummer
5 Nenndrehmoment der Getriebeabtriebswelle
6 Antriebsleistung
7 Gewicht entsprechend Auftragsausführung
8 Gesamte Getriebeübersetzung
9 Einbaulage
10 Nenndrehzahl der Getriebeabtriebswelle
11 Schmierstoffart, -viskosität und –menge
12 Kundenmaterialnummer
13 Betriebsfaktor

EN

1 Matrix – Barcode
2 NORD gear unit type
3 Year of manufacture
4 Serial number
5 Rated torque of gear unit output shaft
6 Drive power
7 Weight according to ordered version
8 Overall gear unit ratio
9 Installation orientation
10 Rated speed of gear unit output shaft
11 Lubricant type, viscosity and quantity
12 Customer's part number
13 Operating factor

FR

1 Code matriciel, à barres
2 Type de réducteur NORD
3 Année de fabrication
4 Numéro de série
5 Couple nominal de l'arbre de sortie du réducteur
6 Puissance d'entraînement
7 Poids selon l'exécution du contrat
8 Rapport de réduction total
9 Position de montage
10 Vitesse de rotation nominale de l'arbre de sortie du réducteur
12 Type de lubrif ant, viscosité et quantité
12 Numéro d'article client
13 Facteur de service

Ersatzteil-Bestellung / Replacement parts order / Commande de pièces de rechange:

Bezeichnung / Designation / Désignation:

Pos.-Nr. / Item No. / N° pos :

Stückzahl / Pieces / Quantité:

Getriebetyp / Gear unit type / Type de réducteur:

Fabrikationsnummer / Serial No. / Numéro de série:

NORD DRIVESYSTEMS Group

Headquarters and Technology Centre
in Bargteheide, close to Hamburg

Innovative drive solutions
for more than 100 branches of industry

Mechanical products
parallel shaft, helical gear, bevel gear and worm gear units

Electrical products
IE2/IE3/IE4 motors

Electronic products
centralised and decentralised frequency inverters,
motor starters and f eld distribution systems

7 state-of-the-art production plants
for all drive components

Subsidiaries in 36 countries on 5 continents
provide local stocks, assembly, production,
technical support and customer service

More than 3,500 employees throughout the world
create customer oriented solutions

www.nord.com/locator

Headquarters:

Getriebebau NORD GmbH & Co. KG
Getriebebau-Nord-Straße 1
22941 Bargteheide, Germany
Fon.: +49 (0) 4532 / 289 - 0
Fax: +49 (0) 4532 / 289 - 2253

Member of the NORD DRIVESYSTEMS Group

NORD DRIVESYSTEMS

Mat.Nr. 6002699/3117

TROUBLESHOOTING

Troubleshooting

This section identifies some of the most common issues involved with NORD Gear speed reducers , and provides recommendations to assist you in defining and answering your questions as you work with our products. You may also contact our Engineering/Application departments if your questions are not answered in the table below.

Problem With the Reducer		Possible Causes	Suggested Remedy
Runs Hot	Overloading	Load exceeds the capacity of the reducer	Check rated capacity of reducer, replace with unit of sufficient capacity or reduce the load.
	Improper lubrication	Insufficient lubrication	Check lubricant level and adjust up to recommended levels
		Excessive lubrication	Check lubricant level and adjust down to recommended levels.
		Wrong lubrication	Flush out and refill with correct lubricant as recommended
Runs Noisy	Loose foundation bolts	Weak mounting structure	Inspect mounting of reducer. Tighten loose bolts and/or reinforce mounting and structure.
		Loose hold down bolts	Tighten bolts
	Failure of bearings	May be due to lack of lubricant	Replace bearing. Clean and flush reducer and fill with recommended lubricant.
		Overload	Check rated capacity of reducer.
	Insufficient lubricant	Level of lubricant in reducer not properly maintained.	Check lubricant level and adjust to factory recommended level.
Output shaft does not turn	Internal parts are broken or missing	Overloading of reducer can cause damage	Replace broken parts. Check rated capacity of reducer.
		Key missing or sheared off on input shaft.	Replace key.
		Coupling loose or disconnected	Properly allign reducer and coupling. Tighten coupling.
Oil Leakage	Worn seals	Caused by dirt or grit entering seal.	Replace seals. Autovent may be clogged. Replace or clean.
	Unit runs hot or leaks	Overfilled reducer	Check lubricant level and adjust to recommended level.
		Vent clogged.	Clean or replace, being sure to prevent any dirt from falling into the reducer.
	Incorrect fill level	Improper mounting position, such as wall or ceiling mount of horizontal reducer.	Check mounting position on the name tag & verify with mounting chart in manual.

Technical Documentation

PDH00145C

Optim TEFC | AEHH8N

Date: September 27, 2018

TECO Westinghouse
MOTORS (CANADA) INC.

Date: September 27, 2018

Dimensional Drawing

Catalogue	Model	HP	Pole	kW	Rating	Voltage	Hz	RPM
PDH00145C	AEHH8N	1	4	0.75	Continuous	575 V	60	1800

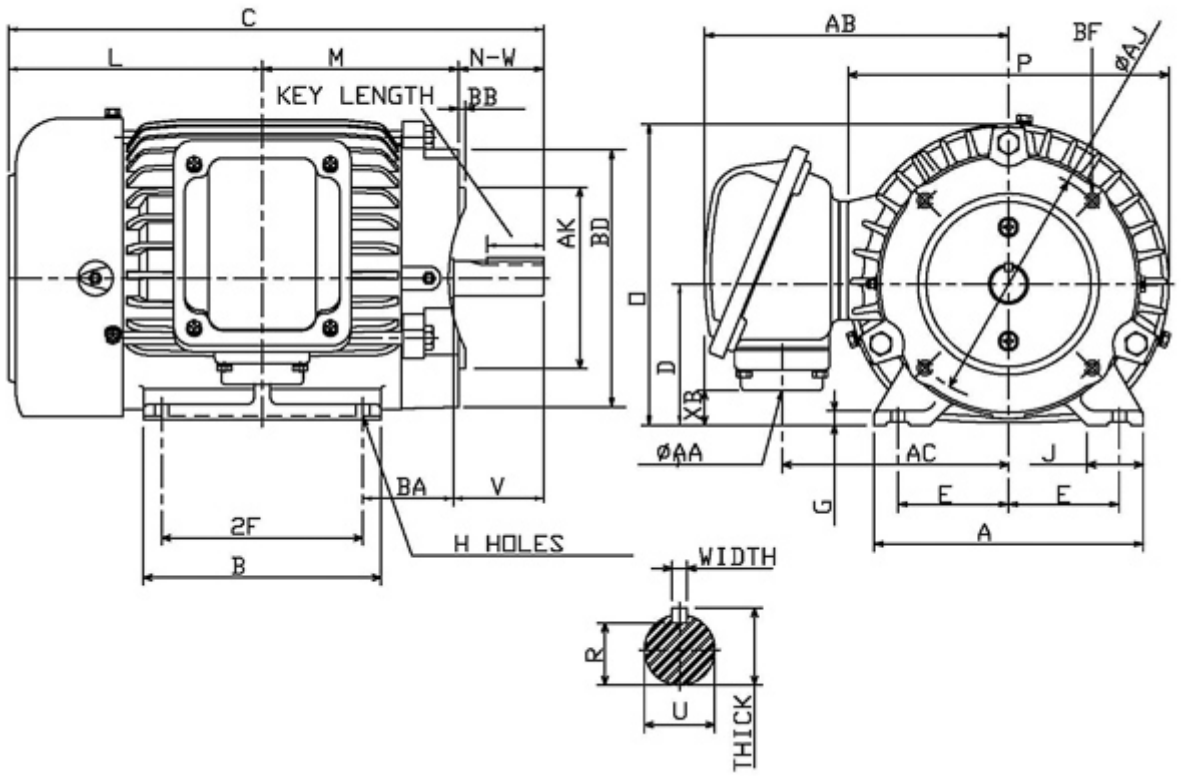

Frame Size	Mounting					A	B	C	CD	D
	E	2F	2F2	H	BA					
143TC	2.75	4		0.34	2.25	6.7	5.1	12.34		3.5

G	J	K	L	M	O	P	T	Key			Keyseat
								Width	Thick	Length	R
0.35	1.4		5.84	4.03	7.48	7.97		0.188	0.188	1.41	0.771

Terminal Housing				Aux Box		C/D Flange					
AA	AB	AC	XB	AE	AX	BB	AH	AK	BD	AJ	BF
3/4 NPT	7.56	5.63	0.86			0.16	2.12	4.5	6.4	5.875	3/8-16UNC

Shaft Extension			Bearings		Approx. Weight Lbs	SPL dBA/3ft	Ins. Class	S.F.	Drive Method	Dimensions
N-W	U	V	DE	NDE						
2.25	0.875	2.2	6205ZZ	6205ZZ	55	49	F	1.15	Direct Coupling / Belt Drive	Inches

TECO Westinghouse MOTORS (CANADA) INC.	
	Date: September 27, 2018

Technical Data Sheet

Motor Type: AEHH8N	Catalogue No: PDH00145C

Nameplate Information

HP	Pole	RPM	Frame	Voltage	Hz	Phase
1	4	1745	143TC	575	60	3
Enclosure	Ins. Class	Service Factor	Time Rating	NEMA Design	Rated Amb.	Rated Altitude
TEFC	F	1.15	Continuous	B	-40 to 40 °C	<3300 ft

Typical Performance

Efficiency (%)				Power Factor (%)		
Full Load		3/4 Load	1/2 Load	Full Load	3/4 Load	1/2 Load
Nom.	Min.					
85.5	82.5	84.0	81.5	73.0	64.5	51.5
Torque				Current (A)		
Full Load (lb-ft)	Locked Rotor (% FLT)	Pull Up (% FLT)	Break Down (% FLT)	No Load	Full Load	Locked Rotor
3.01	310	280	410	0.6	1.2	12
NEMA KVA Code	Inertia (WR^2)			Safe Stall Time (s)		Noise Level Sound Press. dB(A)
	Rotor ($lb\text{-}ft^2$)	NEMA Load ($lb\text{-}ft^2$)	Max. Allowable ($lb\text{-}ft^2$)	Cold	Hot	
N	0.086	5.8	46.0	71	50	49

VFD Duty Information

Speed Range			VFD		S.F.
Constant Torque	Variable Torque	Constant Power	Carrier	Type	
6-60Hz	3-60Hz	60-120Hz	≤ 5 kHz	VPWM or CPWM	1.0 Only

Additional Information

Bearings		Approx. Weight
DE	NDE	lbs
6205ZZ	6205ZZ	55

Hazardous Locations Information

CSA Certified	
Class I, Div 2, Groups B, C & D Class I, Zone 2, Groups IIB+H2, IIB & IIA	
Temp Code (Sinewave / VFD)	T3C / T3C

TECO Westinghouse MOTORS (CANADA) INC.	
	Date: September 27, 2018

Nameplate Drawing

Optim TEFC

TYPE	AEHH8N	CAT. NO.	PDH00145C		
OUTPUT	1 HP 0.75 kW	FRAME	143TC	TEFC	
R.P.M.	1745	POLE	4	INS.	F
VOLTS	575	PHASE	3	Hz	60
AMPS	1.2	CODE	N	S.F.	1.15
AMBIENT	40 °C	NOM. EFF. 85.5		MIN. EFF. 82.5	
BEARINGS	6205ZZ / 6205ZZ			RATING Cont.	

SER. NO.	TBD	DESIGN	B	WT. 55 LBS

PWM VFD DUTY	VT	CT	CP	S.F.
	3-60Hz	6-60Hz	60-120Hz	1.0 Only

Connection Diagram

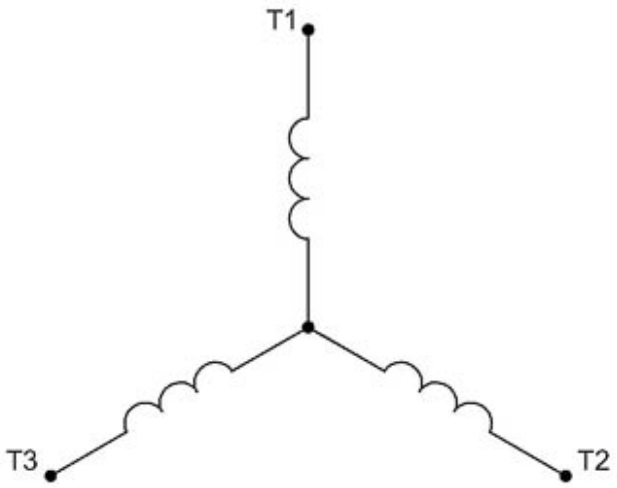

3 LEAD SINGLE VOLTAGE WYE					
VOLTAGE	CONN.	L1	L2	L3	
-	WYE	1	2	3	

WD_3Y

TECO Westinghouse MOTORS (CANADA) INC.	
	Date: September 27, 2018

Thermal Limit Curves

Motor Type: AEHH8N		Catalogue No: PDH00145C		Family: Optim TEFC	
HP	1	Safe Stall Time		Full Load A	0.0 / 1.2 A
Voltage	0 / 575V 60Hz	Hot	50 s	Locked Rotor A	1,000 %
RPM	1800	Cold	71 s	Locked Rotor A	0.0 / 12 A

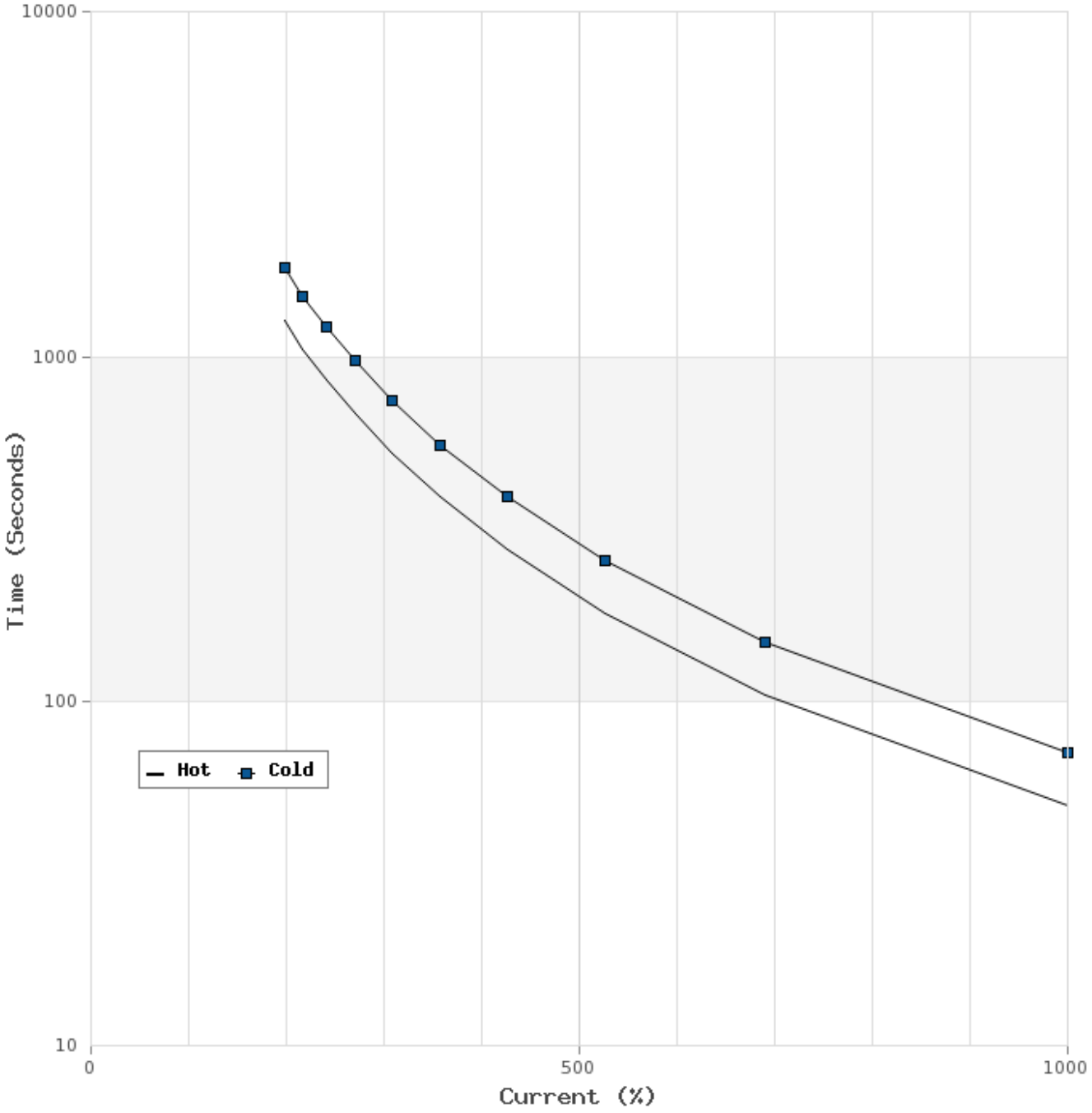

TECO Westinghouse MOTORS (CANADA) INC.	
	Date: September 27, 2018

T-N and I-N Curves

Motor Type: AEHH8N		Catalogue No: PDH00145C		Family: Optim TEFC	
HP	1	Full Load T	3.01 lb-ft	Full Load A	1.2 A
Voltage	575V 60Hz	Locked Rotor T	310 %	Locked Rotor A	12.0 A
RPM	1800	Pull Up T	280 %	Break Down T	410 %

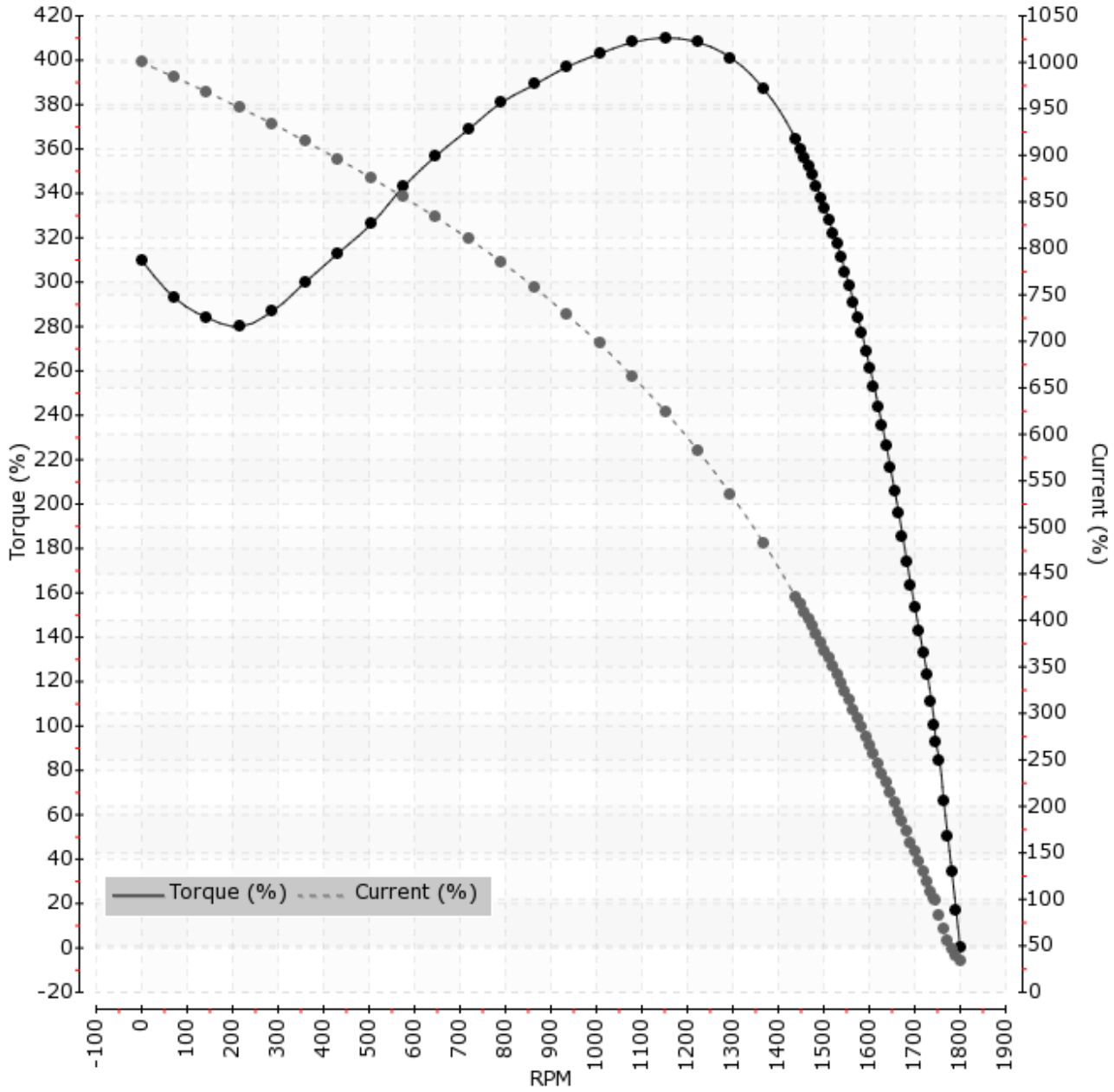

REVIEWED BY CONTRACTOR

Kudlik Construction Ltd.

NAME: Sandra Rousseau P.Eng

DATE: Jan 07, 2019

VEOLIA

SHOP DRAWINGS

General Arrangement Spidflow Date : 2018-12-18

General Information			
Project	**WWTP UPGRADE - IQALUIT**		
Client:	Kudlik Construction Ltd.	Project Number	2018-062
To:	Sandra Rousseau P.Eng., Project Manger	E-mail:	srousseau@kudlik.biz
Contractor	Veolia Water Technologies Canad Inc.	Project Number	5000218036
Address	4105 Sartelon, Ville St. Laurent PQ, H4S 2B3		
Project Manger:	Clément Bekaert	E-mail:	clement.bekaert@veolia.com
Phone:	514-334-7230 x 3243	Cell:	514-246-6232

Information on the Equipment		
Specialty:	Process	
Equipment:	Spidflow	
Drawing Reference:		
Specification reference:	46.71.24	
Article:		
Revision:	Rev03	
Titre:	General Arrangement Spidflow	
Numero client:	DA-Veolia-GA-01-Spidflow	
Numero Veolia	5000218036_GA_0001_GEN_VWT	
Envoyer pour:	Approbation/Information:	Approbation

Consultant Approval

STANTEC PROJECT #: 110126045

This review by Stantec is for general conformance with the design concept of Stantec's design of the:

☑ Process ☐ Electrical
☐ Structural ☐ Other
☐ Mechanical

component(s) only and does not mean that Stantec has verified or approves the shop drawing(s). The Contractor remains solely responsible for the shop drawing(s) and this review by Stantec does not relieve the Contractor of the Contractor's responsibility for errors or omissions in the shop drawing(s) or for meeting all requirements of the contract documents. This review does not mean that Stantec approves the detailed design inherent in the shop drawing, responsibility for which shall remain with the Contractor submitting same, nor does this review mean that Stantec accepts any deviation of the shop drawing(s) from the contract documents. The Contractor is responsible for confirming all dimensions and correlating them at the job site, for all construction means, methods and techniques, and for coordination of construction work of all trades, including coordination of all shop drawings.

SUBMITTAL # DA-Veolia-GA-01_Spidflow-Rev 03.

Stantec

☐ REVIEWED
☑ REVIEWED, AS NOTED
☐ REVISE AND RESUBMIT
☐ NOT REVIEWED

DATE March 20, 2019

BY Alejandro Rojas, P.Eng

STANTEC PROJECT #: 110126045

This review by Stantec is for general conformance with the design concept of Stantec's design of the:

☐ Architectural ☐ Electrical
☑ Structural ☐ Other
☐ Mechanical

component(s) only and does not mean that Stantec has verified or approves the shop drawing(s). The Contractor remains solely responsible for the shop drawing(s) and this review by Stantec does not relieve the Contractor of the Contractor's responsibility for errors or omissions in the shop drawing(s) or for meeting all requirements of the contract documents. This review does not mean that Stantec approves the detailed design inherent in the shop drawing, responsibility for which shall remain with the Contractor submitting same, nor does this review mean that Stantec accepts any deviation of the shop drawing(s) from the contract documents. The Contractor is responsible for confirming all dimensions and correlating them at the job site, for all construction means, methods and techniques, and for coordination of construction work of all trades, including coordination of all shop drawings.

SUBMITTAL # GA-01R3

Stantec

☑ REVIEWED
☐ REVIEWED, AS NOTED
☐ REVISE AND RESUBMIT
☐ NOT REVIEWED

DATE 2019-04-09

BY pclyne

4105 Sartelon
Ville St. Laurent, PQ
H4S-2B3

Phone: 514-334-7230
Fax: 514-334-5070
www.veoliawatertechnologies.ca

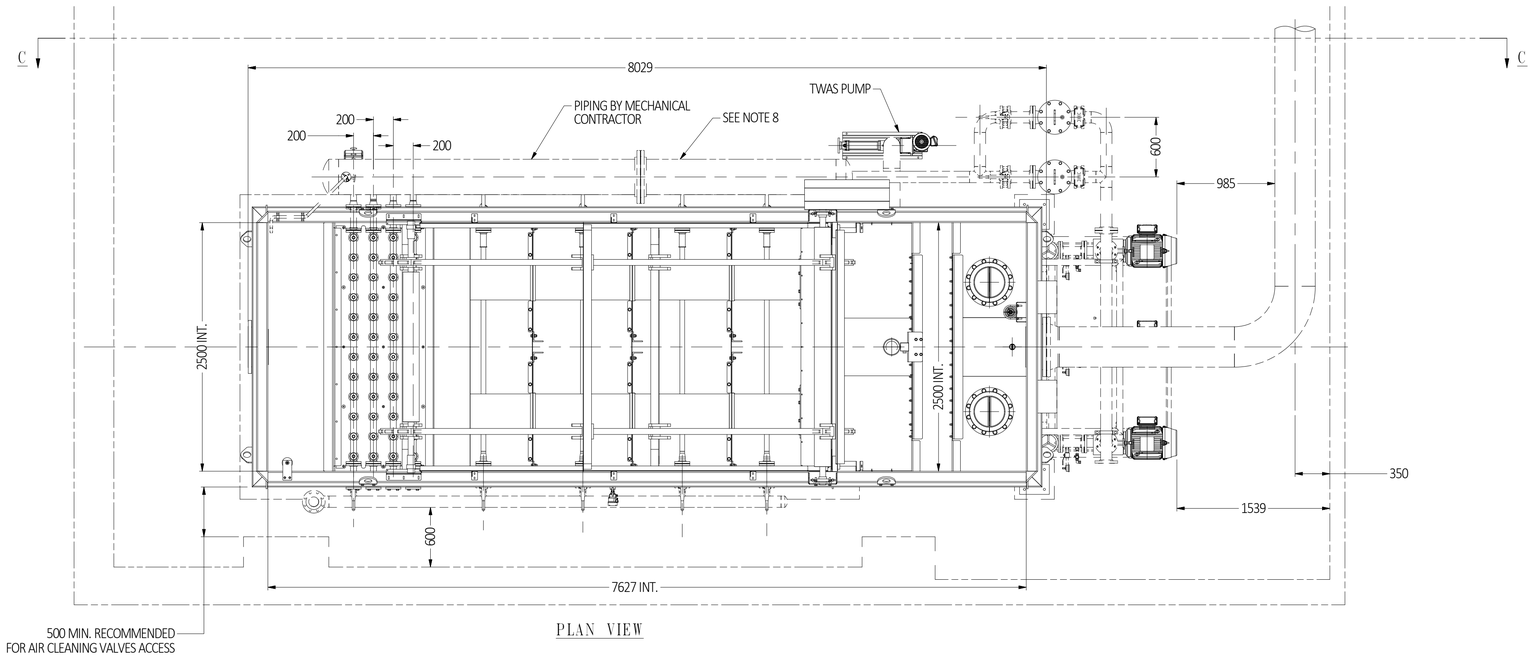

PLAN VIEW

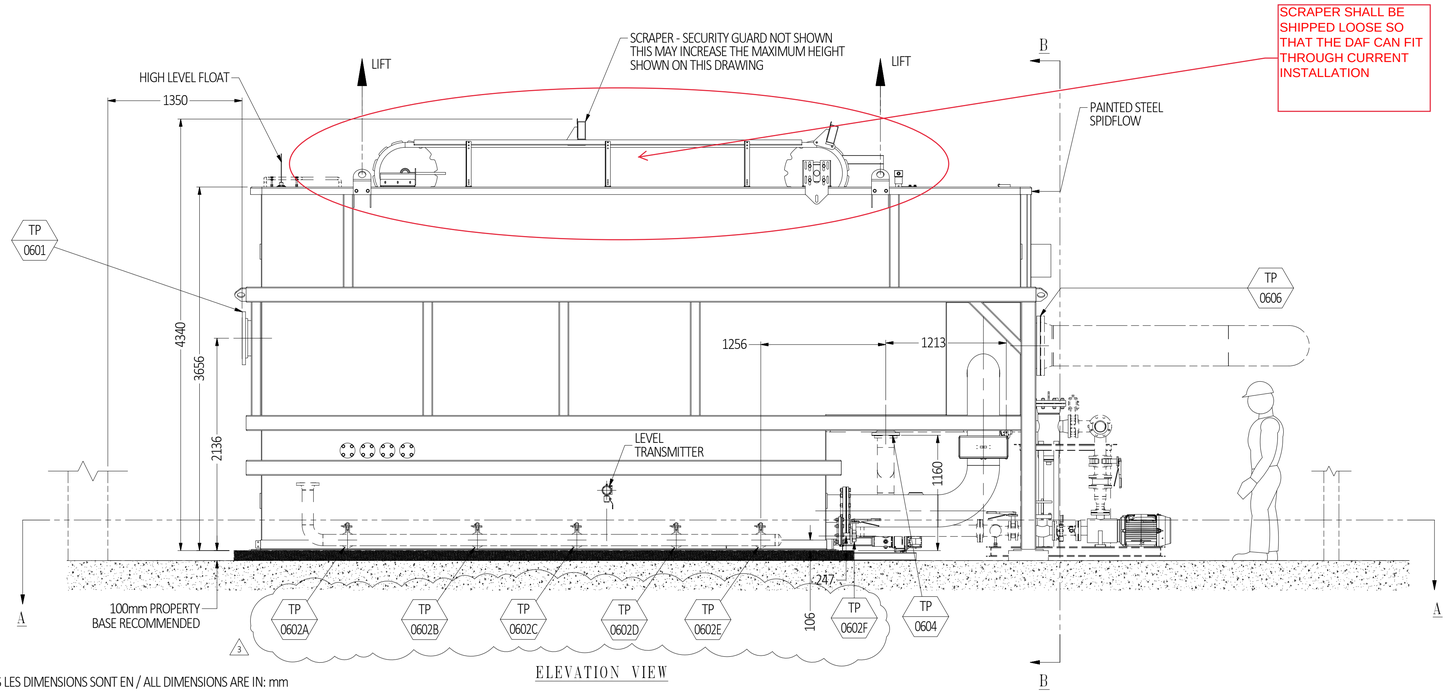

ELEVATION VIEW

TIE-IN POINTS (TP)		
TIE-POINT #	DESCRIPTION	DIMENSION / TYPE
TP-0601	RAW WATER INLET	Ø350 - #150 FLANGE - R.F.
TP-0602A@E	CLEANING AIR INLET	Ø50 - #150 FLANGE - R.F.
TP-0603A@F	DRAINS	Ø50 - #150 FLANGE - R.F.
TP-0604	SLUDGE OUTLET	Ø150 - #150 FLANGE - R.F.
TP-0605	WATER OUTLET TO PUMP	Ø150 - #150 FLANGE - R.F.
TP-0606	CLARIFIED WATER OUTLET	Ø400 - #150 FLANGE - R.F.
TP-0607A / TP-0607B	WHITE WATER INLET - AUTOMATIC VALVE (ON-OFF)	Ø50 - #150 FLANGE - R.F.
TP-0608A / TP-0608B	WHITE WATER INLET - MANUAL VALVE	Ø50 - #150 FLANGE - R.F.
TP-0609	DRAIN - CLARIFIED WATER	Ø50 - #150 FLANGE - R.F.

NOTES:

1- REMOVE LIFTING LUGS AFTER INSTALLATION.

2- ALL EQUIPMENT ON SITE MUST BE SUPPORTED IN AN INDEPENDANT MANNER. NO OTHER EQUIPMENT MAY BE SUPPORTED BY THE SPIDFLOW.

3- NO GRATING SHALL BE INSTALLED ON THE SPIDFLOW

4- SEE OPERATING MANUAL FOR ANY OTHER INFORMATION

5- WEIGHT:
DRY WEIGHT: 26 300 LBS
OPERATION WEIGHT:160 400LBS
RECIRCULATION PIPING WEIGHT NOT INCLUDED (BY MECHANICAL CONTRACTOR)

6- DO NOT USE AS A LIFTING LUG

7- MINIMUM CLEARANCE AROUND THE UNIT: 600mm

8- PIPING AFTER OUTLET OF PUMP MUST BE FABRICATED ACCORDING TO B31.1 (TEMPERATURE: 5°C TO 35°C, PRESSURE 150 PSIG, FLUID AIR MIXED WITH WATER)

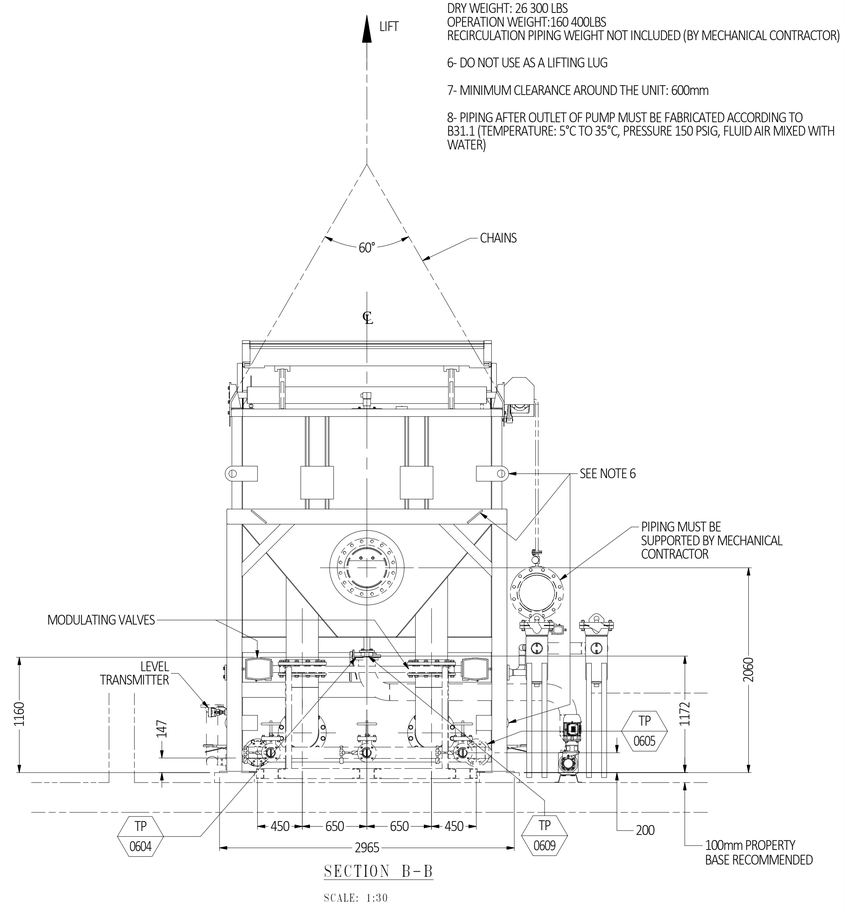

SECTION B-B

SCALE: 1:30

TOUTES LES DIMENSIONS SONT EN / ALL DIMENSIONS ARE IN: mm

REV.	DESCRIPTION	DATE	RÉVISÉ REVISED	VÉRIFIÉ CHECKED	APPROUVÉ APPROVED	ECN
3	FOR APPROVAL III	2018-12-17	M.M.	F.V.	C.B.	N/A
2	FOR APPROVAL II	2018-11-20	M.M.	F.V.	C.B.	N/A
1	FOR APPROVAL	2018-10-22	M.M.	G.H.	C.B.	N/A

AVIS DE CONFIDENTIALITÉ ET DE PROPRIÉTÉ INTELLECTUELLE
L'INFORMATION CONTENUE DANS CE DOCUMENT EST LA PROPRIÉTÉ EXCLUSIVE DE VEOLIA WATER TECHNOLOGIES CANADA INC. ET EST PROTÉGÉE PAR TOUTE LOI APPLICABLE INCLUANT, NOTAMMENT, LES LOIS EN MATIÈRE DE DROITS D'AUTEUR ET DE TOUT AUTRE DROITS DE PROPRIÉTÉ INTELLECTUELLE. LES DESIGN-CONCEPTS ET L'INFORMATION CONTENUS DANS CE DOCUMENT SONT LA PROPRIÉTÉ DE V.W.T. ET SONT SOUMIS DE FAÇON CONFIDENTIELLE. CES DESIGN-CONCEPTS ET CETTE INFORMATION NE SONT PAS TRANSFÉRABLES. ILS DOIVENT ÊTRE UTILISÉS UNIQUEMENT AUX FINS POUR LESQUELLES CE DOCUMENT EST EXPRESSÉMENT SOUMIS ET AUCUNE LICENCE IMPLICITE N'EST OCTROYÉE DE QUELQUE FAÇON PAR LA SOUMISSION DE CE DOCUMENT. ILS CONSTITUENT DE L'INFORMATION DE NATURE CONFIDENTIELLE ET PRIVILÉGIÉE DE V.W.T. ET NE DOIVENT PAS ÊTRE DIVULGUÉS, REPRODUITS, PRÊTÉS, REMIS OU UTILISÉS DE TOUTE AUTRE MANIÈRE SANS LE CONSENTEMENT EXPRÈS ET ÉCRIT DE LA PART DE V.W.T.. V.W.T. DÉCLINE TOUTE RESPONSABILITÉ QUELLE QU'ELLE SOIT EN CE QUI A TRAIT À L'UTILISATION DE CE DOCUMENT AINSI QUE DES DESIGN-CONCEPTS ET DE L'INFORMATION QUI Y SONT CONTENUS DANS LE CADRE D'UN AUTRE PROJET, OU D'UNE MANIÈRE QUI N'EST PAS CONFORME À L'UTILISATION PROJETÉE OU AUX FINS DE CE DOCUMENT. CE DOCUMENT AINSI QUE LES DESIGN-CONCEPTS ET L'INFORMATION QUI Y SONT CONTENUS NE DOIVENT EN AUCUN CAS ÊTRE UTILISÉS D'UNE MANIÈRE QUI POURRAIT ÊTRE PRÉJUDICIABLE AUX INTÉRÊTS DE V.W.T.. TOUT DROITS D'AUTEUR, BREVET AINSI QUE TOUT AUTRE DROITS DE PROPRIÉTÉ INTELLECTUELLE SONT RÉSERVÉS. ACCEPTER QUE CE DOCUMENT LUI SOIT LIVRÉ CONSTITUE POUR CELUI OU CELLE QUI L'A EN SA POSSESSION UN CONTRAT PAR LEQUEL IL OU ELLE S'ENGAGE À SE CONFORMER AUX DISPOSITIONS DES PRÉSENTES.
CONFIDENTIALITY AND INTELLECTUAL PROPERTY NOTICE
ALL INFORMATION CONTAINED IN THIS DOCUMENT IS THE SOLE PROPERTY OF VEOLIA WATER TECHNOLOGIES CANADA INC. AND IS PROTECTED BY ALL APPLICABLE LAWS, INCLUDING BUT NOT LIMITED TO COPYRIGHT AND OTHER INTELLECTUAL PROPERTY LAWS. THE DESIGN CONCEPTS AND INFORMATION CONTAINED HEREIN ARE PROPRIETARY TO IMI AND ARE SUBMITTED IN CONFIDENCE. THEY ARE NOT TRANSFERABLE. THEY MUST BE USED ONLY FOR THE PURPOSE FOR WHICH THE DOCUMENT IS EXPRESSLY SUBMITTED AND NO IMPLICIT LICENCE IS GRANTED OTHERWISE BY THE SUBMISSION OF THIS DOCUMENT. THEY ARE CONFIDENTIAL AND PRIVILEGED INFORMATION OF V.W.T. AND THEY MUST NOT BE DISCLOSED, REPRODUCED, LOANED, REMITTED OR USED IN ANY OTHER MANNER WITHOUT THE EXPRESS WRITTEN CONSENT OF V.W.T.. V.W.T. ASSUMES NO RESPONSIBILITY OR LIABILITY FOR THE USE OF THIS DOCUMENT OR THE DESIGN CONCEPTS AND INFORMATION CONTAINED HEREIN FOR ANOTHER PROJECT, OR IN A MANNER THAT DOES NOT RELATE TO THE FITNESS OR PURPOSE OF THIS DOCUMENT. IN NO EVENT SHALL THIS DOCUMENT OR THE DESIGN CONCEPTS AND INFORMATION CONTAINED HEREIN BE USED IN A MANNER DETRIMENTAL TO THE INTEREST OF V.W.T.. ALL COPYRIGHT, PATENT AND OTHER INTELLECTUAL PROPERTY RIGHTS ARE RESERVED. ACCEPTANCE OF THE DELIVERY OF THIS DOCUMENT CONSTITUTES AGREEMENT TO THESE TERMS AND CONDITIONS.

DESSINÉ PAR DRAWN BY	M.M.
DATE	2018-10-22
VÉRIFIÉ PAR CHECKED BY	N/A
DATE	N/A
INGÉNIERIE PAR ENGINEERING BY	G.H.
DATE	2018-10-22
ÉCHELLE: SCALE:	1:30

TITRE / TITLE: SPIDFLOW 650
DISSOLVED AIR FLOTTATION TANK
GENERAL ARRANGEMENT

CLIENT: IQALUIT WWTP

VEOLIA WATER TECHNOLOGIES CANADA INC. 4105 Sartelon, Saint-Laurent, Qc, Canada. Tel: (514) 334-7230

PROJET - DESSIN PROJECT - DRAWING	NUMÉRO INTERNE INTERNAL NUMBER	FEUILLETS PAGES	RÉV. REV.
5000218036 - GA001	GEN	1 / 3	3

STD: "D" 22 X 34 | REF: N/A | BARRE = 1" À L'ÉCHELLE D'IMPRESSION / BAR = 1" AT PLOT SCALE

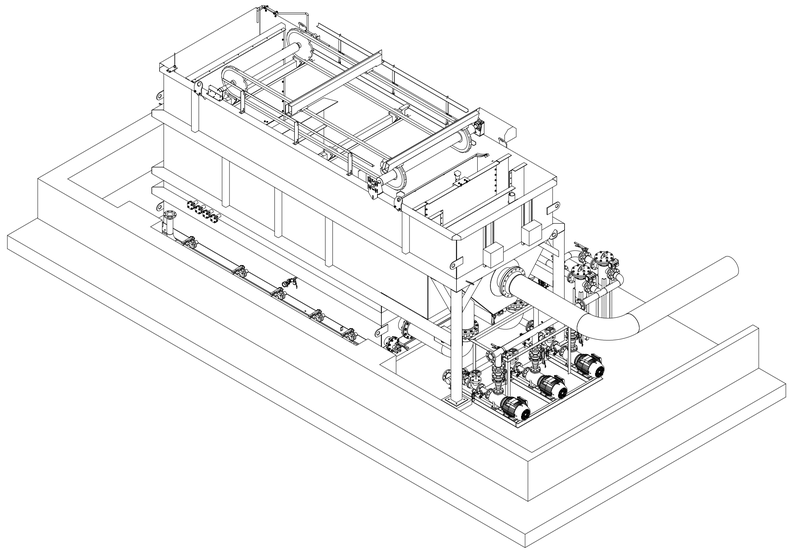

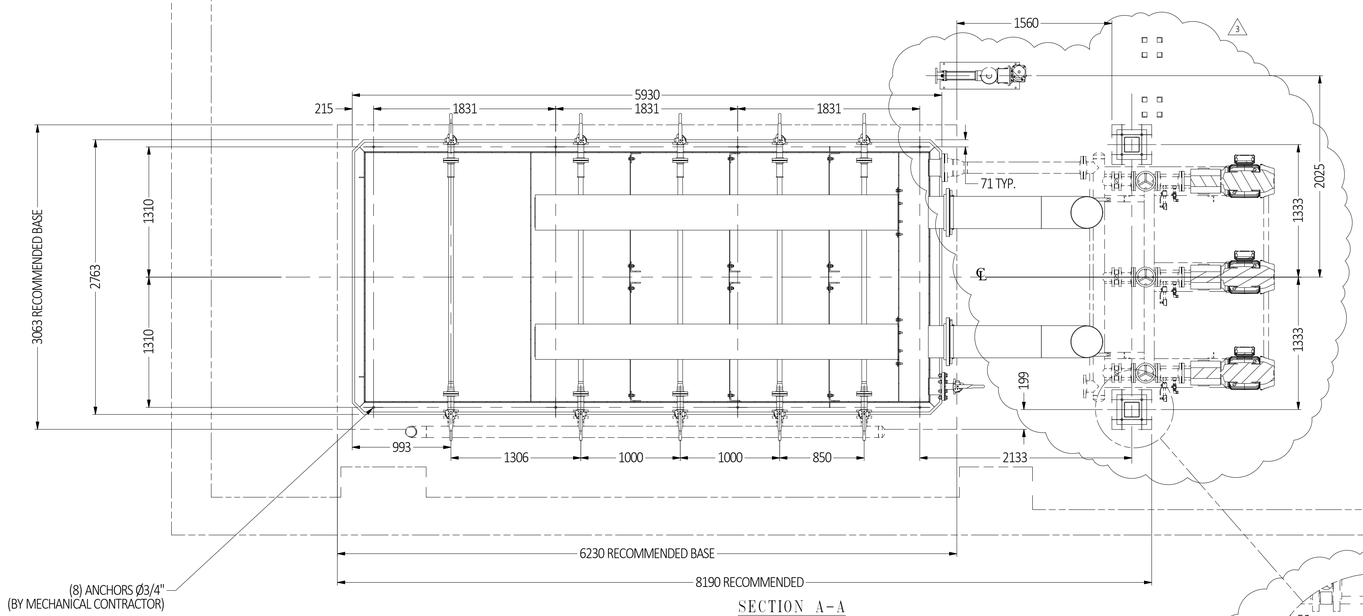

SECTION A-A

SCALE: 1:30

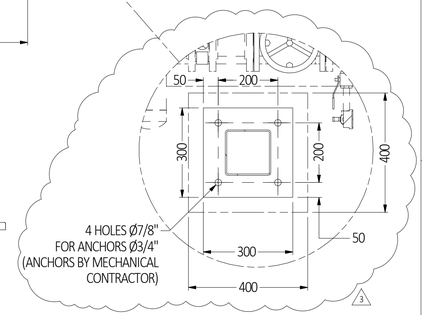

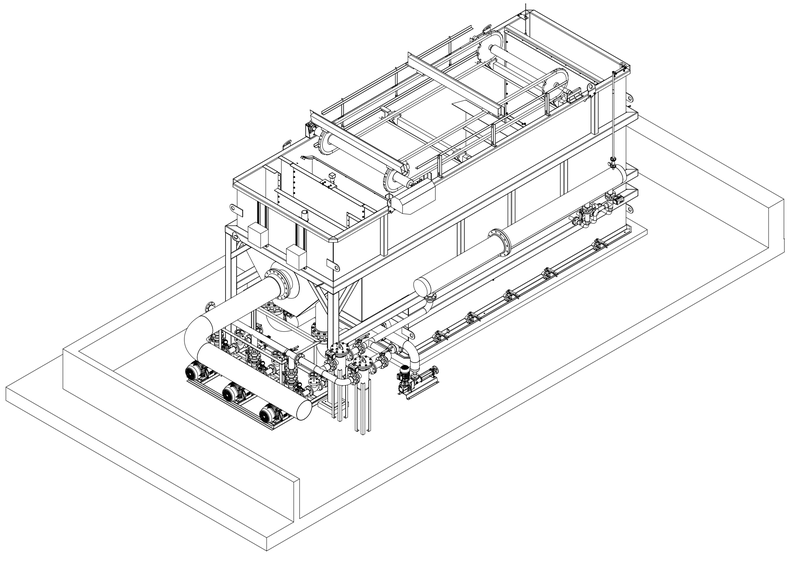

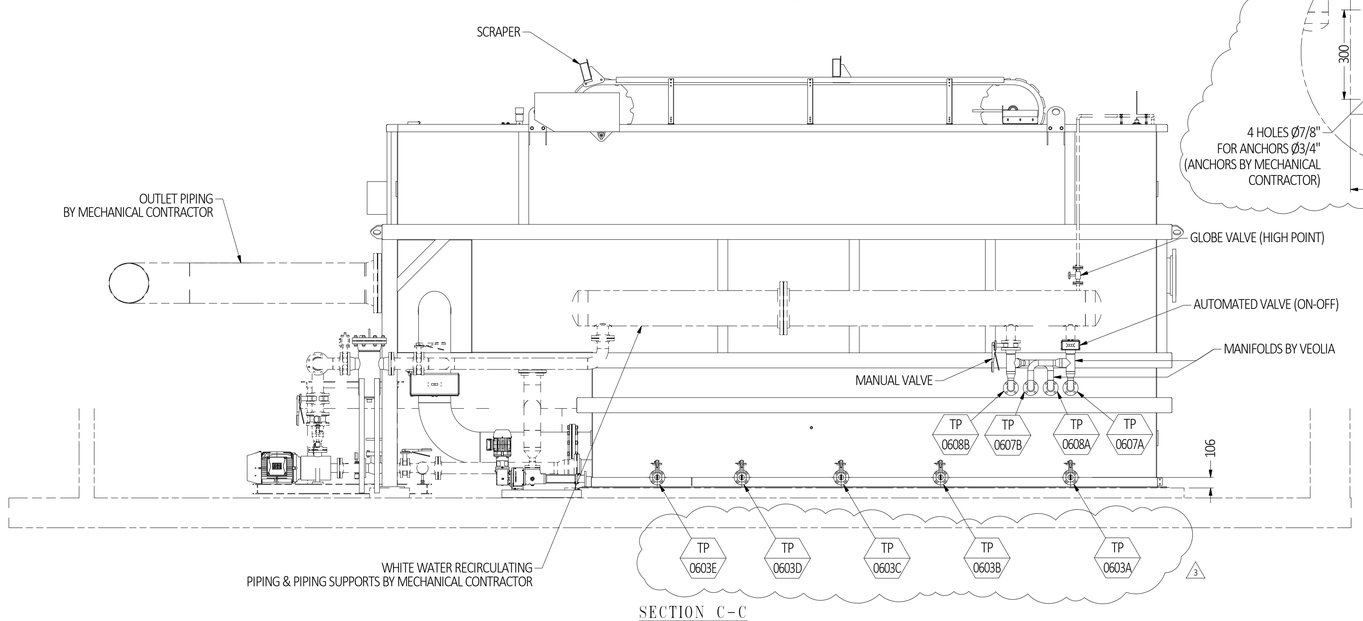

SECTION C-C

SCALE: 1:30

TOUTES LES DIMENSIONS SONT EN / ALL DIMENSIONS ARE IN: mm

REV.	DESCRIPTION	DATE	REVISÉ REVISED	VÉRIFIÉ CHECKED	APPROUVÉ APPROVED	ECN
3	FOR APPROVAL III	2018-12-17	M.M.	F.V.	C.B.	N/A
2	FOR APPROVAL II	2018-11-20	M.M.	F.V.	C.B.	N/A
1	FOR APPROVAL	2018-10-22	M.M.	G.H.	C.B.	N/A

AVIS DE CONFIDENTIALITÉ ET DE PROPRIÉTÉ INTELLECTUELLE
L'INFORMATION CONTENUE DANS CE DOCUMENT EST LA PROPRIÉTÉ EXCLUSIVE DE VEOLIA WATER TECHNOLOGIES CANADA INC. ET EST PROTÉGÉE PAR TOUTE LOI APPLICABLE INCLUANT, NOTAMMENT, LES LOIS EN MATIÈRE DE DROITS D'AUTEUR ET DE TOUT AUTRE DROITS DE PROPRIÉTÉ INTELLECTUELLE. LES DESIGN-CONCEPTS ET L'INFORMATION CONTENUS DANS CE DOCUMENT SONT LA PROPRIÉTÉ DE V.W.T. ET SONT SOUMIS DE FAÇON CONFIDENTIELLE. CES DESIGN-CONCEPTS ET CETTE INFORMATION NE SONT PAS TRANSFÉRABLES. ILS DOIVENT ÊTRE UTILISÉS UNIQUEMENT AUX FINS POUR LESQUELLES CE DOCUMENT EST EXPRESSÉMENT SOUMIS ET AUCUNE LICENCE IMPLICITE N'EST OCTROYÉE DE QUELQUE FAÇON PAR LA SOUMISSION DE CE DOCUMENT. ILS CONSTITUENT DE L'INFORMATION DE NATURE CONFIDENTIELLE ET PRIVILÉGIÉE DE V.W.T. ET NE DOIVENT PAS ÊTRE DIVULGUÉS, REPRODUITS, PRÊTÉS, REMIS OU UTILISÉS DE TOUTE AUTRE MANIÈRE SANS LE CONSENTEMENT EXPRÈS ET ÉCRIT DE LA PART DE V.W.T.. V.W.T. DÉCLINE TOUTE RESPONSABILITÉ QUELLE QU'ELLE SOIT EN CE QUI A TRAIT À L'UTILISATION DE CE DOCUMENT AINSI QUE DES DESIGN-CONCEPTS ET DE L'INFORMATION QUI Y SONT CONTENUS DANS LE CADRE D'UN AUTRE PROJET, OU D'UNE MANIÈRE QUI N'EST PAS CONFORME À L'UTILISATION PROJETÉE OU AUX FINS DE CE DOCUMENT. CE DOCUMENT AINSI QUE LES DESIGN-CONCEPTS ET L'INFORMATION QUI Y SONT CONTENUS NE DOIVENT EN AUCUN CAS ÊTRE UTILISÉS D'UNE MANIÈRE QUI POURRAIT ÊTRE PRÉJUDICIABLE AUX INTÉRÊTS DE V.W.T.. TOUT DROITS D'AUTEUR, BREVET AINSI QUE TOUT AUTRE DROITS DE PROPRIÉTÉ INTELLECTUELLE SONT RÉSERVÉS. ACCEPTER QUE CE DOCUMENT LUI SOIT LIVRÉ CONSTITUE POUR CELUI OU CELLE QUI L'A EN SA POSSESSION UN CONTRAT PAR LEQUEL IL OU ELLE S'ENGAGE À SE CONFORMER AUX DISPOSITIONS DES PRÉSENTES.
CONFIDENTIALITY AND INTELLECTUAL PROPERTY NOTICE
ALL INFORMATION CONTAINED IN THIS DOCUMENT IS THE SOLE PROPERTY OF VEOLIA WATER TECHNOLOGIES CANADA INC. AND IS PROTECTED BY ALL APPLICABLE LAWS, INCLUDING BUT NOT LIMITED TO COPYRIGHT AND OTHER INTELLECTUAL PROPERTY LAWS. THE DESIGN CONCEPTS AND INFORMATION CONTAINED HEREIN ARE PROPRIETARY TO (IM) AND ARE SUBMITTED IN CONFIDENCE. THEY ARE NOT TRANSFERABLE. THEY MUST BE USED ONLY FOR THE PURPOSE FOR WHICH THE DOCUMENT IS EXPRESSLY SUBMITTED AND NO IMPLICIT LICENCE IS GRANTED OTHERWISE BY THE SUBMISSION OF THIS DOCUMENT. THEY ARE CONFIDENTIAL AND PRIVILEGED INFORMATION OF V.W.T. AND THEY MUST NOT BE DISCLOSED, REPRODUCED, LOANED, REMITTED OR USED IN ANY OTHER MANNER WITHOUT THE EXPRESS WRITTEN CONSENT OF V.W.T.. V.W.T. ASSUMES NO RESPONSIBILITY OR LIABILITY FOR THE USE OF THIS DOCUMENT OR THE DESIGN CONCEPTS AND INFORMATION CONTAINED HEREIN FOR ANOTHER PROJECT, OR IN A MANNER THAT DOES NOT RELATE TO THE FITNESS OR PURPOSE OF THIS DOCUMENT. IN NO EVENT SHALL THIS DOCUMENT OR THE DESIGN CONCEPTS AND INFORMATION CONTAINED HEREIN BE USED IN A MANNER DETRIMENTAL TO THE INTEREST OF V.W.T.. ALL COPYRIGHT, PATENT AND OTHER INTELLECTUAL PROPERTY RIGHTS ARE RESERVED. ACCEPTANCE OF THE DELIVERY OF THIS DOCUMENT CONSTITUTES AGREEMENT TO THESE TERMS AND CONDITIONS.

DESSINÉ PAR DRAWN BY	M.M.
DATE	2018-10-22
VÉRIFIÉ PAR CHECKED BY	N/A
DATE	N/A
INGÉNIERIE PAR ENGINEERING BY	G.H.
DATE	2018-10-22
ÉCHELLE: SCALE:	1:30

TITRE / TITLE: SPIDFLOW 650
DISSOLVED AIR FLOTTATION TANK
GENERAL ARRANGEMENT

CLIENT: IQALUIT WWTP

VEOLIA
VEOLIA WATER TECHNOLOGIES CANADA INC. 4105 Sartelon, Saint-Laurent, Qc, Canada. Tel: (514) 334-7230

PROJET - DESSIN PROJECT - DRAWING	NUMÉRO INTERNE INTERNAL NUMBER	FEUILLETS PAGES	RÉV. REV.
5000218036 - GA001	GEN	2 / 3	3

STD: "D" 22 X 34 | REF: N/A | BARRE = 1" À L'ÉCHELLE D'IMPRESSION / BAR = 1" AT PLOT SCALE

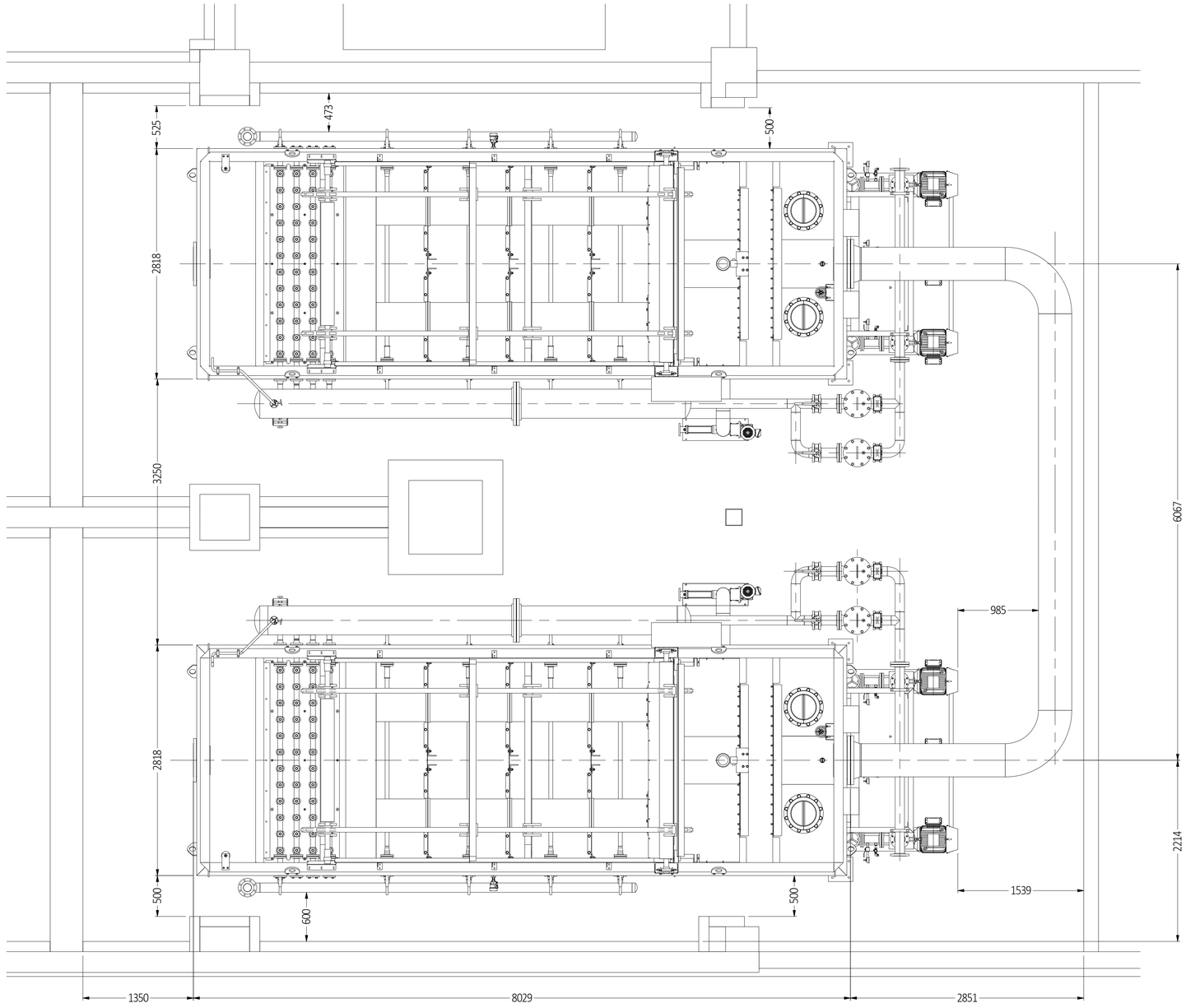

(2) SPIDFLOWS ON CLIENT'S LAYOUT

TOUTES LES DIMENSIONS SONT EN / ALL DIMENSIONS ARE IN: mm

RÉV. REV.	DESCRIPTION	DATE	RÉVISÉ REVISED	VÉRIFIÉ CHECKED	APPROUVÉ APPROVED	ECN
3	FOR APPROVAL III	2018-12-17	M.M.	F.V.	C.B.	N/A
2	FOR APPROVAL II	2018-11-20	M.M.	F.V.	C.B.	N/A
1	FOR APPROVAL	2018-10-22	M.M.	G.H.	C.B.	N/A

AVIS DE CONFIDENTIALITÉ ET DE PROPRIÉTÉ INTELLECTUELLE
L'INFORMATION CONTENUE DANS CE DOCUMENT EST LA PROPRIÉTÉ EXCLUSIVE DE VEOLIA WATER TECHNOLOGIES CANADA INC. ET EST PROTÉGÉE PAR TOUTE LOI APPLICABLE INCLUANT, NOTAMMENT, LES LOIS EN MATIÈRE DE DROITS D'AUTEUR ET DE TOUT AUTRE DROITS DE PROPRIÉTÉ INTELLECTUELLE. LES DESSIN-CONCEPTS ET L'INFORMATION CONTENUS DANS CE DOCUMENT SONT LA PROPRIÉTÉ DE V.W.T. ET SONT SOUMIS DE FAÇON CONFIDENTIELLE. CES DESIGN-CONCEPTS ET CETTE INFORMATION NE SONT PAS TRANSFÉRABLES. ILS DOIVENT ÊTRE UTILISÉS UNIQUEMENT AUX FINS POUR LESQUELLES CE DOCUMENT EST EXPRESSÉMENT SOUMIS ET AUCUNE LICENCE IMPLICITE N'EST OCTROYÉE DE QUELQUE FAÇON PAR LA SOUMISSION DE CE DOCUMENT. ILS CONSTITUENT DE L'INFORMATION DE NATURE CONFIDENTIELLE ET PRIVILÉGIÉE DE V.W.T. ET NE DOIVENT PAS ÊTRE DIVULGUÉS, REPRODUITS, PRÊTÉS, REMIS OU UTILISÉS DE TOUTE AUTRE MANIÈRE SANS LE CONSENTEMENT EXPRÈS ET ÉCRIT DE LA PART DE V.W.T.. V.W.T. DÉCLINE TOUTE RESPONSABILITÉ QUELLE QU'ELLE SOIT EN CE QUI A TRAIT À L'UTILISATION DE CE DOCUMENT AINSI QUE DES DESIGN-CONCEPTS ET DE L'INFORMATION QUI Y SONT CONTENUS DANS LE CADRE D'UN AUTRE PROJET, OU D'UNE MANIÈRE QUI N'EST PAS CONFORME À L'UTILISATION PROJETÉE OU AUX FINS DE CE DOCUMENT. CE DOCUMENT AINSI QUE LES DESIGN-CONCEPTS ET L'INFORMATION QUI Y SONT CONTENUS NE DOIVENT EN AUCUN CAS ÊTRE UTILISÉS D'UNE MANIÈRE QUI POURRAIT ÊTRE PRÉJUDICIABLE AUX INTÉRÊTS DE V.W.T.. TOUT DROITS D'AUTEUR, BREVET AINSI QUE TOUT AUTRE DROITS DE PROPRIÉTÉ INTELLECTUELLE SONT RÉSERVÉS. ACCEPTER QUE CE DOCUMENT LUI SOIT LIVRÉ CONSTITUE POUR CELUI OU CELLE QUI L'A EN SA POSSESSION UN CONTRAT PAR LEQUEL IL OU ELLE S'ENGAGE À SE CONFORMER AUX DISPOSITIONS DES PRÉSENTES.
CONFIDENTIALITY AND INTELLECTUAL PROPERTY NOTICE
ALL INFORMATION CONTAINED IN THIS DOCUMENT IS THE SOLE PROPERTY OF VEOLIA WATER TECHNOLOGIES CANADA INC. AND IS PROTECTED BY ALL APPLICABLE LAWS, INCLUDING BUT NOT LIMITED TO COPYRIGHT AND OTHER INTELLECTUAL PROPERTY LAWS. THE DESIGN CONCEPTS AND INFORMATION CONTAINED HEREIN ARE PROPRIETARY TO V.W.T. AND ARE SUBMITTED IN CONFIDENCE. THEY ARE NOT TRANSFERABLE. THEY MUST BE USED ONLY FOR THE PURPOSE FOR WHICH THE DOCUMENT IS EXPRESSLY SUBMITTED AND NO IMPLICIT LICENCE IS GRANTED OTHERWISE BY THE SUBMISSION OF THIS DOCUMENT. THEY ARE CONFIDENTIAL AND PRIVILEGED INFORMATION OF V.W.T. AND THEY MUST NOT BE DISCLOSED, REPRODUCED, LOANED, REMITTED OR USED IN ANY OTHER MANNER WITHOUT THE EXPRESS WRITTEN CONSENT OF V.W.T.. V.W.T. ASSUMES NO RESPONSIBILITY OR LIABILITY FOR THE USE OF THIS DOCUMENT OR THE DESIGN CONCEPTS AND INFORMATION CONTAINED HEREIN FOR ANOTHER PROJECT, OR IN A MANNER THAT DOES NOT RELATE TO THE FITNESS OF PURPOSE OF THIS DOCUMENT.. IN NO EVENT SHALL THIS DOCUMENT OR THE DESIGN CONCEPTS AND INFORMATION CONTAINED HEREIN BE USED IN A MANNER DETRIMENTAL TO THE INTEREST OF V.W.T.. ALL COPYRIGHT, PATENT AND OTHER INTELLECTUAL PROPERTY RIGHTS ARE RESERVED. ACCEPTANCE OF THE DELIVERY OF THIS DOCUMENT CONSTITUTES AGREEMENT TO THESE TERMS AND CONDITIONS.

DESSINÉ PAR / DRAWN BY	M.M.
DATE	2018-10-22
VÉRIFIÉ PAR / CHECKED BY	N/A
DATE	N/A
INGÉNIERIE PAR / ENGINEERING BY	G.H.
DATE	2018-10-22
ÉCHELLE: / SCALE:	1:30

TITRE / TITLE: SPIDFLOW 650
DISSOLVED AIR FLOTTATION TANK
GENERAL ARRANGEMENT

CLIENT: IQALUIT WWTP

VEOLIA WATER TECHNOLOGIES CANADA INC. 4105 Sartelon, Saint-Laurent, Qc. Canada. Tel: (514) 334-7230

PROJET - DESSIN / PROJECT - DRAWING	NUMÉRO INTERNE / INTERNAL NUMBER	FEUILLETS / PAGES	RÉV. / REV.
5000218036 - GA001	GEN	3 / 3	3

STD: "D" 22 X 34 | REF: N/A | BARRE = 1" À L'ÉCHELLE D'IMPRESSION / BAR = 1" AT PLOT SCALE

REVIEWED BY CONTRACTOR

Kudlik Construction Ltd.

NAME: Sandra Rousseau P.Eng

DATE: Jun 11, 2019

VEOLIA

SHOP DRAWINGS

Hydrapol 500 General Arrangement Date : 2019-06-07

General Information			
Project	**WWTP UPGRADE - IQALUIT**		
Client:	Kudlik Construction Ltd.	Project Number	2018-062
To:	Sandra Rousseau P.Eng., Project Manger	E-mail:	srousseau@kudlik.biz
Contractor	Veolia Water Technologies Canad Inc.	Project Number	5000218036
Address	4105 Sartelon, Ville St. Laurent PQ, H4S 2B3		
Project Manger:	Clément Bekaert	E-mail:	clement.bekaert@veolia.com
Phone:	514-334-7230 x 3243	Cell:	514-246-6232

Information on the Equipment		
Specialty:	Process	
Equipment:	Hydrapol 500	
Drawing Reference:		
Specification reference:	46 36 11	
Article:		
Revision:	Rev02	
Titre:	HP 500 General Arrangement	
Numero client:	DA-Veolia-GA-02-Hydrapol HP-500	
Numero Veolia	5000218038_GA_0002_GEN_VWT	
Envoyer pour:	Approbation/Information:	Approbation

Consultant Approval

STANTEC PROJECT #: 110126045

SUBMITTAL # DA-Veolia-GA-02-Hydrapol HP-500_Rev02

This review by Stantec is for general conformance with the design concept of Stantec's design of the:

☑ Process ☐ Electrical
☐ Structural ☐ Other
☐ Mechanical

component(s) only and does not mean that Stantec has verified or approves the shop drawing(s). The Contractor remains solely responsible for the shop drawing(s) and this review by Stantec does not relieve the Contractor of the Contractor's responsibility for errors or omissions in the shop drawing(s) or for meeting all requirements of the contract documents. This review does not mean that Stantec approves the detailed design inherent in the shop drawing, responsibility for which shall remain with the Contractor submitting same, nor does this review mean that Stantec accepts any deviation of the shop drawing(s) from the contract documents. The Contractor is responsible for confirming all dimensions and correlating them at the job site, for all construction means, methods and techniques, and for coordination of construction work of all trades, including coordination of all shop drawings.

Stantec

☑ REVIEWED

☐ REVIEWED, AS NOTED

☐ REVISE AND RESUBMIT

☐ NOT REVIEWED

DATE Jun 11, 2019

BY Alejandro Rojas, P.Eng

STANTEC PROJECT #: 110126045

SUBMITTAL # DA-Veolia-GA-02 Hydrapol 500

This review by Stantec is for general conformance with the design concept of Stantec's design of the:

☐ Architectural ☐ Electrical
☐ Structural ☑ Other Instrumentation
☐ Mechanical

component(s) only and does not mean that Stantec has verified or approves the shop drawing(s). The Contractor remains solely responsible for the shop drawing(s) and this review by Stantec does not relieve the Contractor of the Contractor's responsibility for errors or omissions in the shop drawing(s) or for meeting all requirements of the contract documents. This review does not mean that Stantec approves the detailed design inherent in the shop drawing, responsibility for which shall remain with the Contractor submitting same, nor does this review mean that Stantec accepts any deviation of the shop drawing(s) from the contract documents. The Contractor is responsible for confirming all dimensions and correlating them at the job site, for all construction means, methods and techniques, and for coordination of construction work of all trades, including coordination of all shop drawings.

Stantec

☐ REVIEWED

☑ REVIEWED, AS NOTED

☐ REVISE AND RESUBMIT

☐ NOT REVIEWED

DATE June 24, 2019

BY Amanda Bron, EIT

4105 Sartelon
Ville St. Laurent, PQ
H4S-2B3

Phone: 514-334-7230
Fax: 514-334-5070
www.veoliawatertechnologies.ca

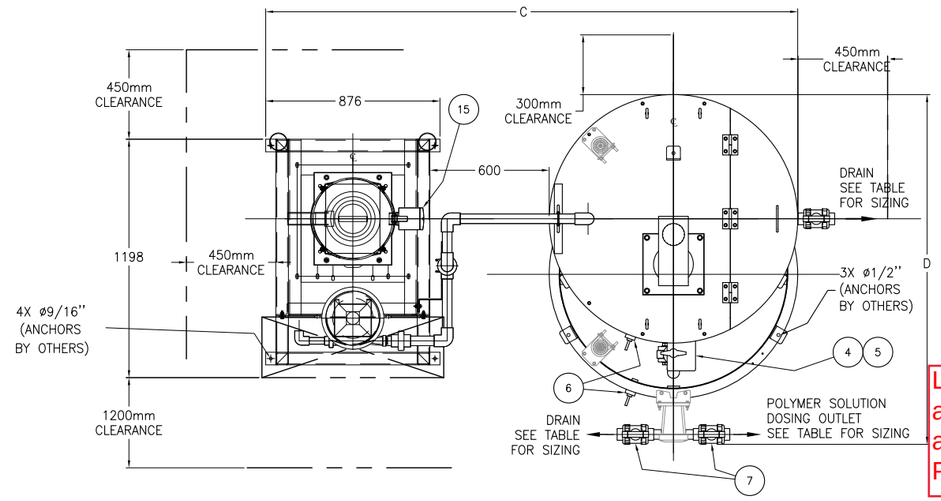

TOP VIEW

LIT and AIT for mixing and aging tank supplied by Veolia are to be wall mounted? Please confirm,

PA X	ITEM	DESCRIPTION	INVENTORY DWG REF	UN. QTY	TOT. QTY	E	S
	1	MIXING TANK FABRICATED SS304		1	1		
	2	STORAGE TANK FABRICATED SS304		1	1		
	3	MIXER		1	1		
	4	BUTTERFLY VALVE		1	1		
	5	ELECTRIC ACTUATOR		1	1		
	6	PRESSURE TRANSDUCER		1	1		
	7	BALL VALVE OUTLET		3	3		
	8	BALL CHECK VALVE		1	1		
	9	STATIC MIXER		1	1		
	10	VACUUM CONVEYOR		1	1		
	11	HOPPER		1	1		
	12	FEEDER		1	1		
	13	EDUCTOR		1	1		
	14	WETTING CONE		1	1		
	15	LEVEL LIMIT SWITCH		1	1		
	16	BALL VALVE INLET		1	1		
	17	PRESSURE SWITCH		1	1		
	18	PRESSURE GAUGE		1	1		
	19	SOLENOID VALVE FOUR WAYS		1	1		
	20	SOLENOID VALVE INLET		1	1		
	21	METERING BALL VALVE		2	2		
	22	CYLINDER AND PISTON		1	1		
	23	CONTROL PANEL		1	1		
	24	CONDUCTIVITY SENSOR (SEE NOTE 1)		2	2		

NOTE:
1–CONDUCTIVITY SENSOR IN PREPARATION TANK AND/OR STORAGE TANK ARE AVAILABLE ON REQUEST ONLY. PLEASE REFER TO QUOTATION.

2–THE HYDRAPOL UNIT IS PRE MOUNTED AS MUCH AS POSSIBLE BUT FREIGHT PURPOSE SOME COMPONENTS HAVE TO BE INSTALLED ON SITE BY THE CLIENT OR HIS INSTALLER. REFER TO THE HANDLING, STORAGE AND INSTALLATION INSTRUCTIONS MANUAL.

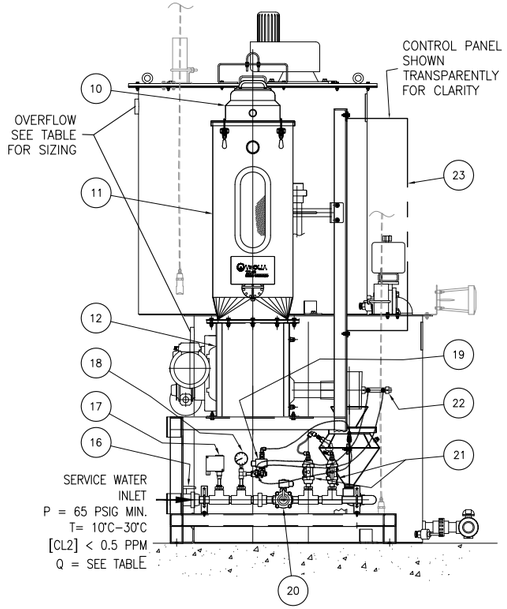

LEFT VIEW

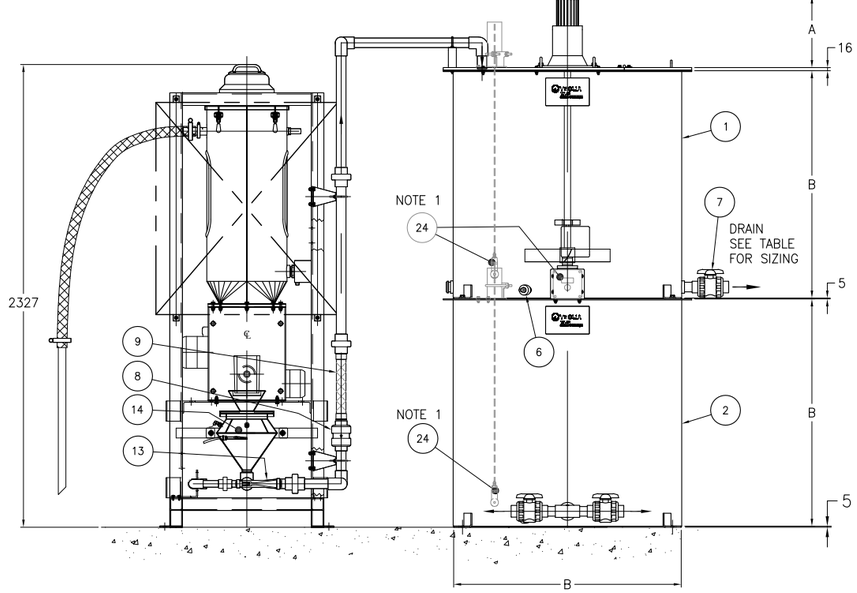

FRONT VIEW

MODEL	A	B	C	D	INLET WATER FLOW RATE	SERVICE WATER INLET	EDUCTOR OUTLET	STORAGE TANK OUTLET	DRAIN	PREPARATION TANK OVERFLOW	STORAGE TANK OVERFLOW	TRANSFER VALVE	APPROX. WEIGHT "EMPTY" (Kg)	APPROX. WEIGHT "FULL" (Kg)
HP 250	358	800	2332	1381	5.2 M3/H	ø1"	ø1½"	ø1½"	ø1½"	ø2"	ø2"	ø2"	534	1338
HP 500	405	915	2447	1556	5.2 M3/H	ø1"	ø1½"	ø1½"	ø1½"	ø2"	ø2"	ø2"	580	1780
HP 750	387	1042	2574	1696	5.2 M3/H	ø1"	ø1½"	ø1½"	ø1½"	ø2"	ø2"	ø2"	648	2424
HP 1000	387	1143	2675	1759	5.2 M3/H	ø1"	ø1½"	ø1½"	ø1½"	ø2"	ø2"	ø2"	707	3053
HP 1250	387	1219	2754	1835	5.2 M3/H	ø1"	ø1½"	ø1½"	ø1½"	ø2"	ø2"	ø2"	754	3600
HP 1500	387	1295	2827	1911	5.2 M3/H	ø1"	ø1½"	ø1½"	ø1½"	ø2"	ø2"	ø2"	803	4215
HP 1750	387	1371	2903	1987	5.2 M3/H	ø1"	ø1½"	ø1½"	ø1½"	ø2"	ø2"	ø2"	849	4897
HP 2000	387	1422	2954	2077	8.0 M3/H	ø1½"	ø2"	ø2"	ø2"	ø3"	ø2"	ø2"	904	5420
HP 2500	503	1524	3056	2141	8.0 M3/H	ø1½"	ø2"	ø2"	ø2"	ø3"	ø2"	ø2"	980	6540
HP 3000	428	1626	3208	2433	8.0 M3/H	ø1½"	ø2"	ø3"	ø3"	ø3"	ø2"	ø2"	1100	7852
HP 3500	510	1702	3284	2525	8.0 M3/H	ø1½"	ø2"	ø3"	ø3"	ø3"	ø2"	ø2"	1171	8915
HP 4000	510	1778	3360	2641	8.0 M3/H	ø1½"	ø2"	ø3"	ø3"	ø3"	ø2"	ø2"	1238	10068

REV	DESCRIPTION	DATE	REV'D	CHK'D	APV'D	ECN
2	CONDUCT. SENSOR QTY - FOR APPROVAL	2019-06-07	N.L.	S.M.	F.V.	
A	FOR APPROVAL	2018-09-27	N.L.	S.M.	G.H.	

CONFIDENTIALITY AND INTELLECTUAL PROPERTY NOTICE
ALL INFORMATION CONTAINED IN THIS DOCUMENT IS THE SOLE PROPERTY OF VEOLIA WATER TECHNOLOGIES CANADA INC. AND IS PROTEGED BY ALL APPLICABLE LAWS, INCLUDING BUT NOT LIMITED TO COPYRIGHT AND OTHER INTELLECTUAL PROPERTY LAWS. THE DESIGN CONCEPTS AND INFORMATION CONTAINED HEREIN ARE PROPRIETARY TO V.W.T. AND ARE SUBMITTED IN CONFIDENCE. THEY ARE NOT TRANSFERRABLE. THEY MUST BE USED ONLY FOR THE PURPOSE FOR WHICH THE DOCUMENT IS EXPRESSLY SUBMITTED AND NO IMPLICIT LICENCE IS GRANTED OTHERWISE BY THE SUBMISSION OF THIS DOCUMENT. THEY ARE CONFIDENTIAL AND PRIVILEGED INFORMATION OF V.W.T. AND THEY MUST NOT BE DISCLOSED, REPRODUCED, LOANED, REWRITTEN OR USED IN ANY OTHER MANNER WITHOUT THE EXPRESS WRITTEN CONSENT OF V.W.T. V.W.T. ASSUMES NO RESPONSIBILITY OR LIABILITY FOR THE USE OF THIS DOCUMENT OR THE DESIGN CONCEPTS AND INFORMATION CONTAINED HEREIN FOR ANOTHER PROJECT, OR IN A MANNER THAT DOES NOT RELATE TO THE FITNESS OR PURPOSE OF THIS DOCUMENT. IN NO EVENT SHALL THIS DOCUMENT OR THE DESIGN CONCEPTS AND INFORMATION CONTAINED HEREIN BE USED IN A MANNER DETRIMENTAL TO THE INTEREST OF V.W.T. ALL COPYRIGHT, PATENT AND OTHER INTELLECTUAL PROPERTY RIGHTS ARE RESERVED. ACCEPTANCE OF THE DELIVERY OF THIS DOCUMENT CONSTITUTES AGREEMENT TO THESE TERMS AND CONDITIONS.

		DATE
DESIGNER	N.L.	2016-09-16
CHECKER	S.M.	2016-09-16
ENGINEER	S.M.	2016-09-16
SCALE:	--	

TITLE
HYDRA–POL HP–500
WAM VACUUM CONVEYOR TYPE WITH TANKS
GENERAL ARRANGEMENT

CLIENT
IQALUIT WWTP
CITY OF IQALUIT

VEOLIA
VEOLIA WATER TECHNOLOGIES CANADA INC. 4105 Sartelon, Saint-Laurent, Qc, Canada, Tel:(514) 334-7230

PROJECT	DRAWING	INTERNAL	SHEET	REV
5000218036 – GA0002		PCH_WAM	1 OF 1	2

STD: "D" 22x34 | REF: N/A | BAR = 1" AT PLOT SCALE

Sep 27, 2018 11:11:29 – W:\2018\5000218036 Iqaluit WWTP (TM95602)\16– Automation\15– Dessins execution_Drawings\6– GA\5000218019_GA_0002_PM_WWT.dwg – hebertga

REVIEWED BY CONTRACTOR

Kudlik Construction Ltd.

NAME: Sandra Rousseau P.Eng

DATE: Jun 11, 2019

SHOP DRAWINGS

Hydrapol 250 General Arrangement Date : 2019-06-07

General Information			
Project	**WWTP UPGRADE - IQALUIT**		
Client:	Kudlik Construction Ltd.	Project Number	2018-062
To:	Sandra Rousseau P.Eng., Project Manger	E-mail:	srousseau@kudlik.biz
Contractor	Veolia Water Technologies Canad Inc.	Project Number	5000218036
Address	4105 Sartelon, Ville St. Laurent PQ, H4S 2B3		
Project Manger:	Clément Bekaert	E-mail:	clement.bekaert@veolia.com
Phone:	514-334-7230 x 3243	Cell:	514-246-6232

Information on the Equipment		
Specialty:	Process	
Equipment:	Hydrapol 250	
Drawing Reference:		
Specification reference:	46 36 11	
Article:		
Revision:	Rev02	
Titre:	HP 250 General Arrangement	
Numero client:	DA-Veolia-GA-03-Hydrapol HP-250	
Numero Veolia	5000218038_GA_0003_GEN_VWT	
Envoyer pour:	Approbation/Information:	Approbation

Consultant Approval

STANTEC PROJECT #: 110126045

SUBMITTAL # DA-Veolia-GA-03-Hydrapol HP-250_Rev02

This review by Stantec is for general conformance with the design concept of Stantec's design of the:

☑ Process ☐ Electrical
☐ Structural ☐ Other
☐ Mechanical

component(s) only and does not mean that Stantec has verified or approves the shop drawing(s). The Contractor remains solely responsible for the shop drawing(s) and this review by Stantec does not relieve the Contractor of the Contractor's responsibility for errors or omissions in the shop drawing(s) or for meeting all requirements of the contract documents. This review does not mean that Stantec approves the detailed design inherent in the shop drawing, responsibility for which shall remain with the Contractor submitting same, nor does this review mean that Stantec accepts any deviation of the shop drawing(s) from the contract documents. The Contractor is responsible for confirming all dimensions and correlating them at the job site, for all construction means, methods and techniques, and for coordination of construction work of all trades, including coordination of all shop drawings.

Stantec

☑ REVIEWED

☐ REVIEWED, AS NOTED

☐ REVISE AND RESUBMIT

☐ NOT REVIEWED

DATE Jun 11, 2019

BY Alejandro Rojas, P.Eng

STANTEC PROJECT #: 110126045

SUBMITTAL # DA-Veolia-GA-03 Hydrapol 250

This review by Stantec is for general conformance with the design concept of Stantec's design of the:

☐ Architectural ☐ Electrical
☐ Structural ☑ Other Instrumentation
☐ Mechanical

component(s) only and does not mean that Stantec has verified or approves the shop drawing(s). The Contractor remains solely responsible for the shop drawing(s) and this review by Stantec does not relieve the Contractor of the Contractor's responsibility for errors or omissions in the shop drawing(s) or for meeting all requirements of the contract documents. This review does not mean that Stantec approves the detailed design inherent in the shop drawing, responsibility for which shall remain with the Contractor submitting same, nor does this review mean that Stantec accepts any deviation of the shop drawing(s) from the contract documents. The Contractor is responsible for confirming all dimensions and correlating them at the job site, for all construction means, methods and techniques, and for coordination of construction work of all trades, including coordination of all shop drawings.

Stantec

☐ REVIEWED

☑ REVIEWED, AS NOTED

☐ REVISE AND RESUBMIT

☐ NOT REVIEWED

DATE June 24, 2019

BY Amanda Bron, EIT

4105 Sartelon
Ville St. Laurent, PQ
H4S-2B3

Phone: 514-334-7230
Fax: 514-334-5070
www.veoliawatertechnologies.ca

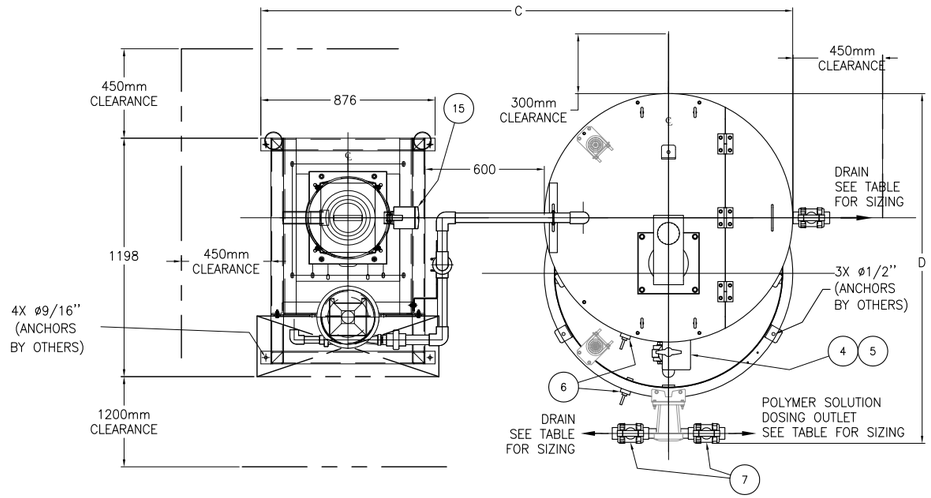

TOP VIEW

LIT and AIT for mixing and aging tank supplied by Veolia are to be wall mounted? Please confirm,

PA X	ITEM	DESCRIPTION	INVENTORY DWG REF	UN. QTY	TOT. QTY	E	S
	1	MIXING TANK FABRICATED SS304		1	1		
	2	STORAGE TANK FABRICATED SS304		1	1		
	3	MIXER		1	1		
	4	BUTTERFLY VALVE		1	1		
	5	ELECTRIC ACTUATOR		1	1		
	6	PRESSURE TRANSDUCER		1	1		
	7	BALL VALVE OUTLET		3	3		
	8	BALL CHECK VALVE		1	1		
	9	STATIC MIXER		1	1		
	10	VACUUM CONVEYOR		1	1		
	11	HOPPER		1	1		
	12	FEEDER		1	1		
	13	EDUCTOR		1	1		
	14	WETTING CONE		1	1		
	15	LEVEL LIMIT SWITCH		1	1		
	16	BALL VALVE INLET		1	1		
	17	PRESSURE SWITCH		1	1		
	18	PRESSURE GAUGE		1	1		
	19	SOLENOID VALVE FOUR WAYS		1	1		
	20	SOLENOID VALVE INLET		1	1		
	21	METERING BALL VALVE		2	2		
	22	CYLINDER AND PISTON		1	1		
	23	CONTROL PANEL		1	1		
	24	CONDUCTIVITY SENSOR (SEE NOTE 1)		2	2		

NOTE:
1–CONDUCTIVITY SENSOR IN PREPARATION TANK AND/OR STORAGE TANK ARE AVAILABLE ON REQUEST ONLY. PLEASE REFER TO QUOTATION.

2–THE HYDRAPOL UNIT IS PRE MOUNTED AS MUCH AS POSSIBLE BUT FREIGHT PURPOSE SOME COMPONENTS HAVE TO BE INSTALLED ON SITE BY THE CLIENT OR HIS INSTALLER. REFER TO THE HANDLING, STORAGE AND INSTALLATION INSTRUCTIONS MANUAL.

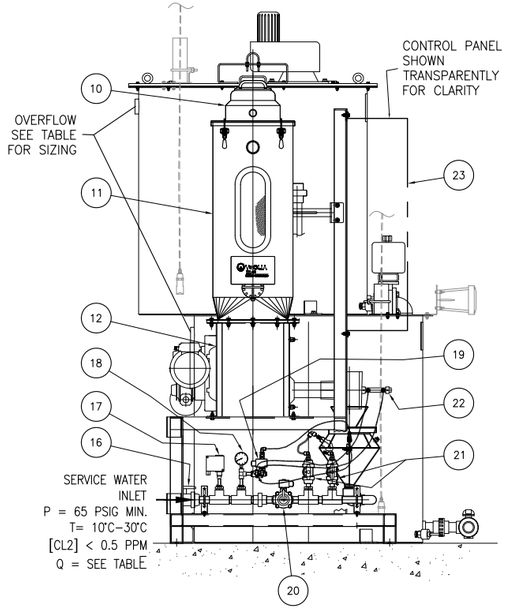

LEFT VIEW

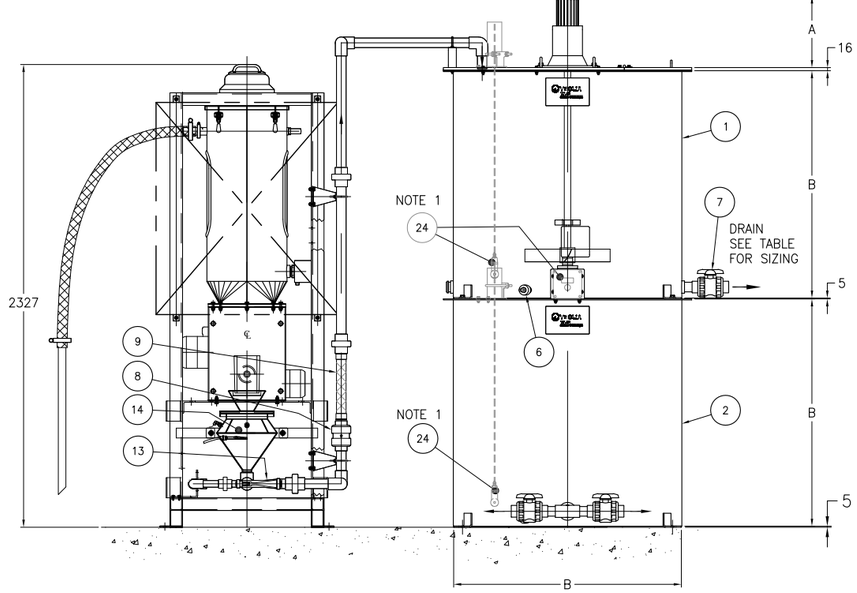

FRONT VIEW

MODEL	A	B	C	D	INLET WATER FLOW RATE	SERVICE WATER INLET	EDUCTOR OUTLET	STORAGE TANK OUTLET	DRAIN	PREPARATION TANK OVERFLOW	STORAGE TANK OVERFLOW	TRANSFER VALVE	APPROX. WEIGHT "EMPTY" (Kg)	APPROX. WEIGHT "FULL" (Kg)
HP 250	358	800	2332	1381	5.2 M3/H	ø1"	ø1½"	ø1½"	ø1½"	ø2"	ø2"	ø2"	534	1338
HP 500	405	915	2447	1556	5.2 M3/H	ø1"	ø1½"	ø1½"	ø1½"	ø2"	ø2"	ø2"	580	1780
HP 750	387	1042	2574	1696	5.2 M3/H	ø1"	ø1½"	ø1½"	ø1½"	ø2"	ø2"	ø2"	648	2424
HP 1000	387	1143	2675	1759	5.2 M3/H	ø1"	ø1½"	ø1½"	ø1½"	ø2"	ø2"	ø2"	707	3053
HP 1250	387	1219	2754	1835	5.2 M3/H	ø1"	ø1½"	ø1½"	ø1½"	ø2"	ø2"	ø2"	754	3600
HP 1500	387	1295	2827	1911	5.2 M3/H	ø1"	ø1½"	ø1½"	ø1½"	ø2"	ø2"	ø2"	803	4215
HP 1750	387	1371	2903	1987	5.2 M3/H	ø1"	ø1½"	ø1½"	ø1½"	ø2"	ø2"	ø2"	849	4897
HP 2000	387	1422	2954	2077	8.0 M3/H	ø1½"	ø2"	ø2"	ø2"	ø3"	ø2"	ø2"	904	5420
HP 2500	503	1524	3056	2141	8.0 M3/H	ø1½"	ø2"	ø2"	ø2"	ø3"	ø2"	ø2"	980	6540
HP 3000	428	1626	3208	2433	8.0 M3/H	ø1½"	ø2"	ø3"	ø3"	ø3"	ø2"	ø2"	1100	7852
HP 3500	510	1702	3284	2525	8.0 M3/H	ø1½"	ø2"	ø3"	ø3"	ø3"	ø2"	ø2"	1171	8915
HP 4000	510	1778	3360	2641	8.0 M3/H	ø1½"	ø2"	ø3"	ø3"	ø3"	ø2"	ø2"	1238	10068

REV	DESCRIPTION	DATE	REV'D	CHK'D	APV'D	ECN
2	CONDUCT. SENSOR QTY - FOR APPROVAL	2019-06-07	N.L.	S.M.	F.V.	
A	FOR APPROVAL	2018-09-27	N.L.	S.M.	G.H.	

CONFIDENTIALITY AND INTELLECTUAL PROPERTY NOTICE
ALL INFORMATION CONTAINED IN THIS DOCUMENT IS THE SOLE PROPERTY OF VEOLIA WATER TECHNOLOGIES CANADA INC. AND IS PROTEGE BY ALL APPLICABLE LAWS, INCLUDING BUT NOT LIMITED TO COPYRIGHT AND OTHER INTELLECTUAL PROPERTY LAWS. THE DESIGN CONCEPTS AND INFORMATION CONTAINED HEREIN ARE PROPRIETARY TO V.W.T. AND ARE SUBMITTED IN CONFIDENCE. THEY ARE NOT TRANSFERABLE. THEY MUST BE USED ONLY FOR THE PURPOSE FOR WHICH THE DOCUMENT IS EXPRESSLY SUBMITTED AND NO IMPLICIT LICENCE IS GRANTED OTHERWISE BY THE SUBMISSION OF THIS DOCUMENT. THEY ARE CONFIDENTIAL AND PRIVILEGED INFORMATION OF V.W.T. AND THEY MUST NOT BE DISCLOSED, REPRODUCED, LOANED, REMITTED OR USED IN ANY OTHER MANNER WITHOUT THE EXPRESS WRITEN CONSENT OF V.W.T. V.W.T. ASSUMES NO RESPONSIBILITY OR LIABILITY FOR THE USE OF THIS DOCUMENT OR THE DESIGN CONCEPTS AND INFORMATION CONTAINED HEREIN FOR ANOTHER PROJECT, OR IN A MANNER THAT DOES NOT RELATE TO THE FITNESS OR PURPOSE OF THIS DOCUMENT. IN NO EVENT SHALL THIS DOCUMENT OR THE DESIGN CONCEPTS AND INFORMATION CONTAINED HEREIN BE USED IN A MANNER DETRIMENTAL TO THE INTEREST OF V.W.T. ALL COPYRIGHT, PATENT AND OTHER INTELLECTUAL PROPERTY RIGHTS ARE RESERVED. ACCEPTANCE OF THE DELIVERY OF THIS DOCUMENT CONSTITUTES AGREEMENT TO THESE TERMS AND CONDITIONS.

		DATE
DESIGNER	N.L.	2016-09-16
CHECKER	S.M.	2016-09-16
ENGINEER	S.M.	2016-09-16
SCALE:	--	

TITLE: HYDRA–POL HP–250
WAM VACUUM CONVEYOR TYPE WITH TANKS
GENERAL ARRANGEMENT

CLIENT: IQALUIT WWTP
CITY OF IQALUIT

VEOLIA
VEOLIA WATER TECHNOLOGIES CANADA INC. 4105 Sartelon, Saint-Laurent, Qc, Canada, Tel:(514) 334-7230

PROJECT	DRAWING	INTERNAL	SHEET	REV
5000218036 – GA003		PCH_WAM	1 OF 1	2

STD: "D" 22x34 | REF: N/A | BAR = 1" AT PLOT SCALE

Sep 27, 2018 11:09:55 – W:\2018\5000218036 Iqaluit WWTP (TM95602)\16– Automation\15– Dessins execution_Drawings\6– GA\5000218019_GA_0003_PM_WWT.dwg – hebertga

REVIEWED BY CONTRACTOR

Kudlik Construction Ltd.

NAME: Sandra Rousseau P.Eng
DATE: Jan 07, 2019

VEOLIA

SHOP DRAWINGS

Dosing skid (duplex) General Arrangement Date : 2018-12-21

General Information			
Project	**WWTP UPGRADE - IQALUIT**		
Client:	Kudlik Construction Ltd.	Project Number	2018-062
To:	Sandra Rousseau P.Eng., Project Manger	E-mail:	srousseau@kudlik.biz
Contractor	Veolia Water Technologies Canad Inc.	Project Number	5000218036
Address	4105 Sartelon, Ville St. Laurent PQ, H4S 2B3		
Project Manger:	Clément Bekaert	E-mail:	clement.bekaert@veolia.com
Phone:	514-334-7230 x 3243	Cell:	514-246-6232

Information on the Equipment		
Specialty:	Process	
Equipment:	Dosing Skid (Duplex)	
Drawing Reference:		
Specification reference:	46 36 11	
Article:		
Revision:	Rev02	
Titre:	BFP Polymer dosing skid	
Numero client:	DA-Veolia-GA-04-Dosing Skid Duplex	
Numero Veolia	5000218036_GA_0004_GEN_VWT	
Envoyer pour:	Approbation/Information:	Approbation

Consultant Approval

STANTEC PROJECT #: 110126045

SUBMITTAL # DA-Veolia-GA-04-Rev02

This review by Stantec is for general conformance with the design concept of Stantec's design of the:

☑ Process ☐ Electrical
☐ Structural ☐ Other
☐ Mechanical

Stantec

☐ REVIEWED
☑ REVIEWED, AS NOTED
☐ REVISE AND RESUBMIT
☐ NOT REVIEWED

component(s) only and does not mean that Stantec has verified or approves the shop drawing(s). The Contractor remains solely responsible for the shop drawing(s) and this review by Stantec does not relieve the Contractor of the Contractor's responsibility for errors or omissions in the shop drawing(s) or for meeting all requirements of the contract documents. This review does not mean that Stantec approves the detailed design inherent in the shop drawing, responsibility for which shall remain with the Contractor submitting same, nor does this review mean that Stantec accepts any deviation of the shop drawing(s) from the contract documents. The Contractor is responsible for confirming all dimensions and correlating them at the job site, for all construction means, methods and techniques, and for coordination of construction work of all trades, including coordination of all shop drawings.

DATE Jan 8, 2019

BY Alejandro Rojas, P.Eng

4105 Sartelon
Ville St. Laurent, P
H4S-2B3

334-7230
334-5070
ologies.ca

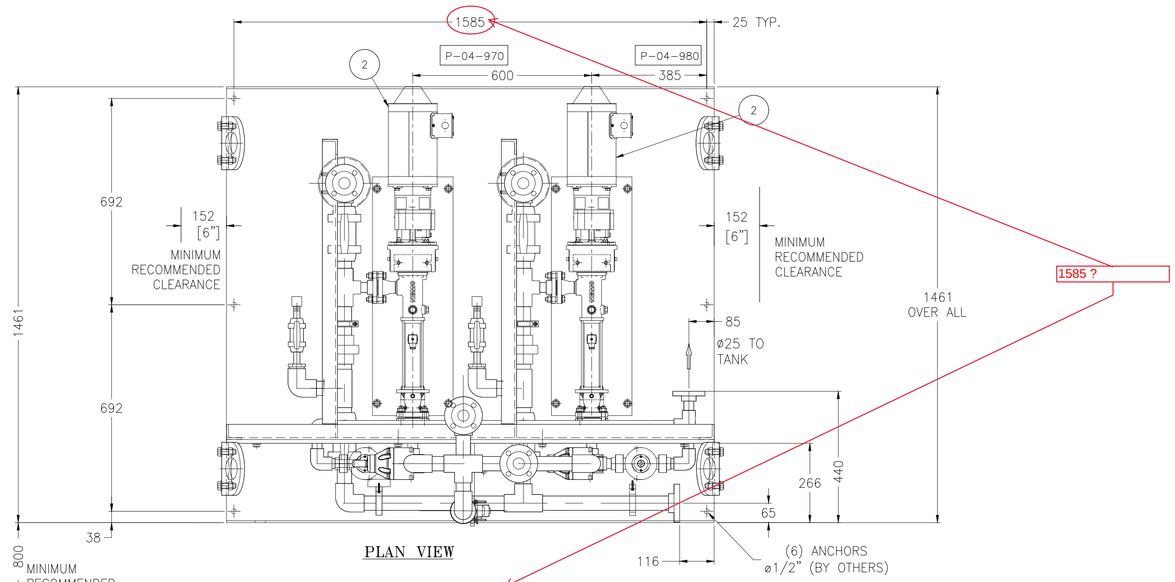

PLAN VIEW

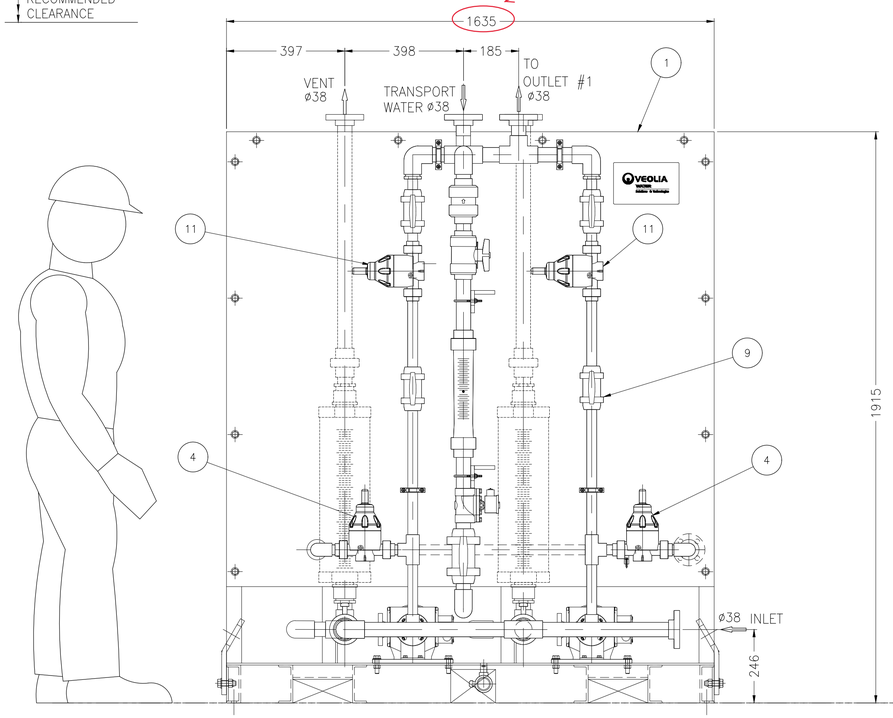

ELEVATION VIEW

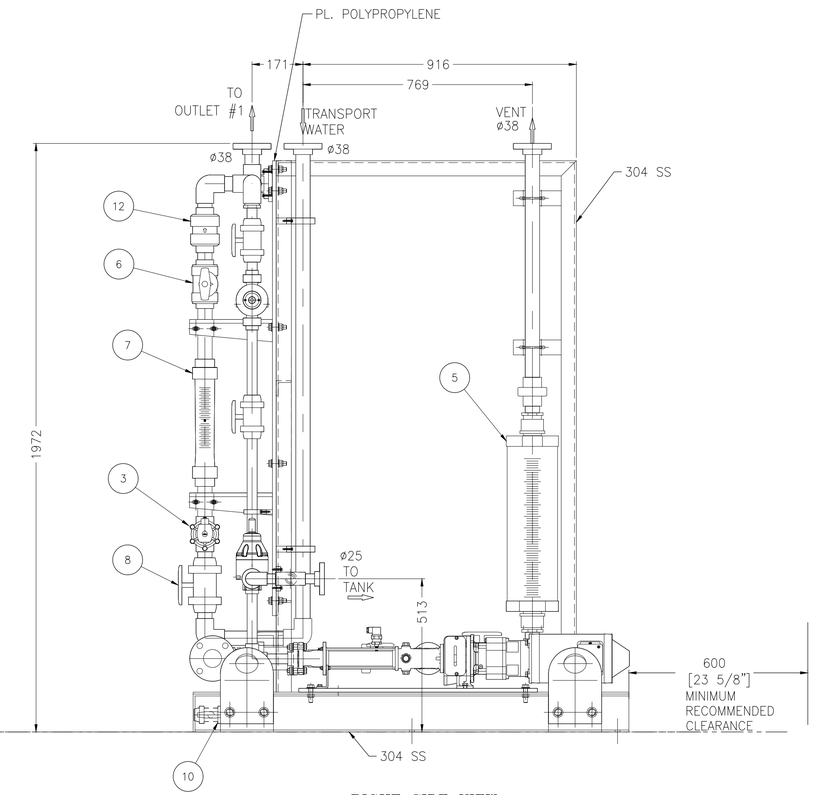

RIGHT SIDE VIEW

ITEM: SKID 620

REFERENCE #1: 5000218036-PI600 SHEET 15
REFERENCE #2: P620
TOTAL QUANTITY: 1
EMPTY WEIGHTS : APPROX. 625 kg/ 1377 Lbs
FLUID: POLYMER
PIPING: PVC SCH80
STRUCTURE: STAINLESS STEEL 304

ENGINEERING					SHOP		
PAX	ITEM	DESCRIPTION	INVENTAIRE PLAN RÉF	QTÉ UN.	QTÉ TOT.	E	S
	1	BASE SUPPORT 304 SS STRUCTURE WITH POLYPROPYLENE COVER PLATE	–	1	1		
x	2	DOSING PUMP	–	2	2		
x	3	SOLENOID VALVE ø1 1/2"	–	1	1		
x	4	RELIEF VALVE ø1"	–	2	2		
x	5	CALIBRATION COLUMN	–	1	1		
	6	METERING BALL VALVE ø1 1/2"	–	1	1		
x	7	ROTAMETER ø1 1/2"	–	1	1		
	8	BALL VALVE "CHEMLINE" ø1 1/2"	–	5	5		
	9	BALL VALVE "CHEMLINE" ø1"	–	6	6		
	10	BALL VALVE "CHEMLINE" ø1/2"	–	3	3		
x	11	BACK PRESSURE VALVE ø1"	–	2	2		
x	12	CHECK VALVE ø1 1/2"	–	1	1		

REV.	DESCRIPTION	DATE	RÉVISÉ REVISED	VÉRIFIÉ CHECKED	APPROUVÉ APPROVED
2	FOR APPROVAL II	2018-12-17	F.C.	F.V.	G.P.
1	FOR APPROVAL	2018-10-02	F.C.	G.H.	G.H.

VEOLIA WATER TECHNOLOGIES

DESSINATEUR/DESIGNER F.C.	DATE 2018-09-27	CLIENT: IQALUIT WWTP
VÉRIFICATEUR/CHECKER S.M.	DATE	
INGÉNIEUR/ENGINEER G.H.	DATE	

TITRE / TITLE

DUPLEX UNIT DOSING SKID
BFP POLYMER
GENERAL ARRANGEMENT

ÉCHELLE / SCALE: 1:10

PROJET / PROJECT	DESSIN No /DRAWING No	INTERNE / INTERNAL	FEUILLET / SHEET	RÉV./REV
5000218036	GA0004	PCH0000	1/1	2

Ce document est la propriété de VEOLIA et ne peut être reproduit sans son autorisation écrite.
This document is the property of VEOLIA and cannot be reproduced without its written authorization

REF: N/A ANSI D

Dec. 20, 2018 8:57:34 – W:\2018\5000218036 Iqaluit WWTP (TM856672)\15- Dessins execution_Drawings\6- GA\5000218036-GA0004-PCH0000.dwg – CotnoirF

REVIEWED BY CONTRACTOR

Kudlik Construction Ltd.

NAME: Sandra Rousseau P.Eng

DATE: Jan 07, 2019

VEOLIA

SHOP DRAWINGS

Dosing skid (triplex) General Arrangement Date : 2018-12-21

General Information			
Project	**WWTP UPGRADE - IQALUIT**		
Client:	Kudlik Construction Ltd.	Project Number	2018-062
To:	Sandra Rousseau P.Eng., Project Manger	E-mail:	srousseau@kudlik.biz
Contractor	Veolia Water Technologies Canad Inc.	Project Number	5000218036
Address	4105 Sartelon, Ville St. Laurent PQ, H4S 2B3		
Project Manger:	Clément Bekaert	E-mail:	clement.bekaert@veolia.com
Phone:	514-334-7230 x 3243	Cell:	514-246-6232

Information on the Equipment		
Specialty:	Process	
Equipment:	Dosing Skid (Triplex)	
Drawing Reference:		
Specification reference:	46 36 11	
Article:		
Revision:	Rev02	
Titre:	DAF polymer dosing skid - General Arrangement	
Numero client:	DA-Veolia-GA-05-Dosing Skid triplex	
Numero Veolia	5000218036_GA_0005_GEN_VWT	
Envoyer pour:	Approbation/Information:	Approbation

Consultant Approval

STANTEC PROJECT #: 110126045

SUBMITTAL # DA-Veolia-GA-05-Rev02

This review by Stantec is for general conformance with the design concept of Stantec's design of the:

- ☑ Process
- ☐ Structural
- ☐ Mechanical
- ☐ Electrical
- ☐ Other

component(s) only and does not mean that Stantec has verified or approves the shop drawing(s). The Contractor remains solely responsible for the shop drawing(s) and this review by Stantec does not relieve the Contractor of the Contractor's responsibility for errors or omissions in the shop drawing(s) or for meeting all requirements of the contract documents. This review does not mean that Stantec approves the detailed design inherent in the shop drawing, responsibility for which shall remain with the Contractor submitting same, nor does this review mean that Stantec accepts any deviation of the shop drawing(s) from the contract documents. The Contractor is responsible for confirming all dimensions and correlating them at the job site, for all construction means, methods and techniques, and for coordination of construction work of all trades, including coordination of all shop drawings.

Stantec

- ☐ REVIEWED
- ☑ REVIEWED, AS NOTED
- ☐ REVISE AND RESUBMIT
- ☐ NOT REVIEWED

DATE Jan 8, 2019

BY Alejandro Rojas, P.Eng

4105 Sartelon
Ville St. Laurent, F
H4S-2B3

34-7230
34-5070
ogies.ca

ENGINEERING					SHOP		
PA X	ITEM	DESCRIPTION	INVENTORY DWG REF	UN. QTY	TOT. QTY	E	S
X	1	PROGRESSIVE CAVITY PUMP	–	3	3		
X	2	CALIBRATION CYLINDER	–	1	1		
X	3	RELIEF VALVE ø1/2" NPT c/w GAUGE	–	3	3		
X	4	BACK PRESSURE ø1/2"	–	2	2		
X	5	CHECK VALVE ø1/2"		2	2		
X	6	SOLENOID VALVE ø1/2" FNPT, NORMALLY CLOSE	–	2	2		
X	7	GLOBE VALVE ø1/2" FNPT	–	2	2		
X	8	ROTAMETER ø1" FNPT	–	2	2		
	9	BASE SUPPORT 304 SS STRUCTURE WITH POLYPROPYLENE COVER PLATE	–	1	1		

ITEM: SKID-616

REFERENCE #1: 5000218036-PI600 SHEET-11
REFERENCE #2: P616
EMPTY WEIGHT: 653 Kg (1438 LB)
TOTAL QUANTITY: 1
PIPING: PVC SCH80
STRUCTURE: STAINLESS STEEL
FLUID:POLYMER

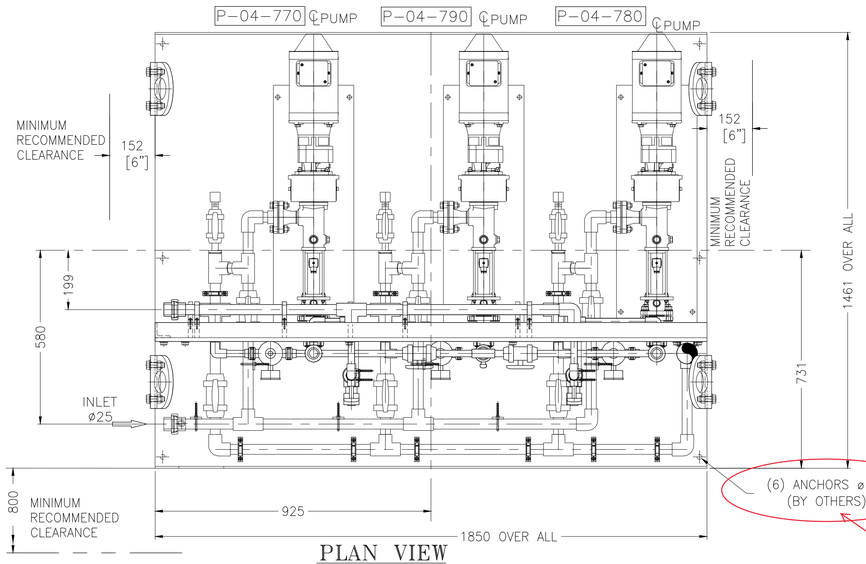

PLAN VIEW

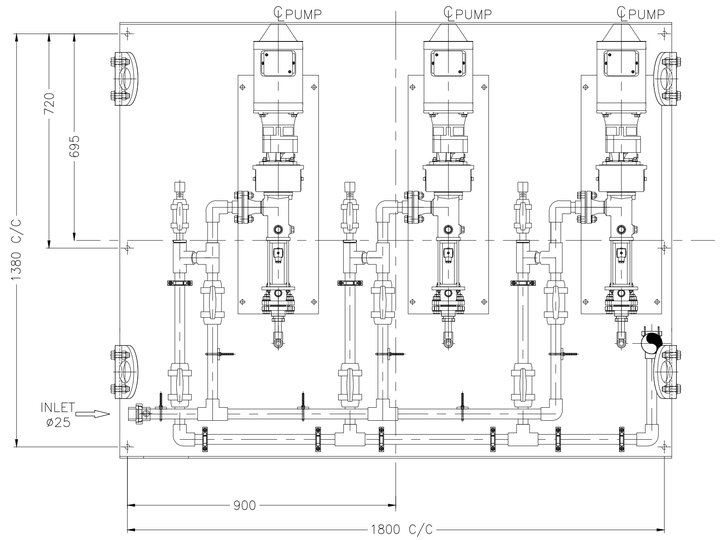

SECTION A

CONTRACTOR TO SUPPLY ALL THE EQUIPMENT ANCHORS AS PER CLAUSE 2.7 OF SECTION 40 05 00 - GENERAL PROCESS PROVISIONS.

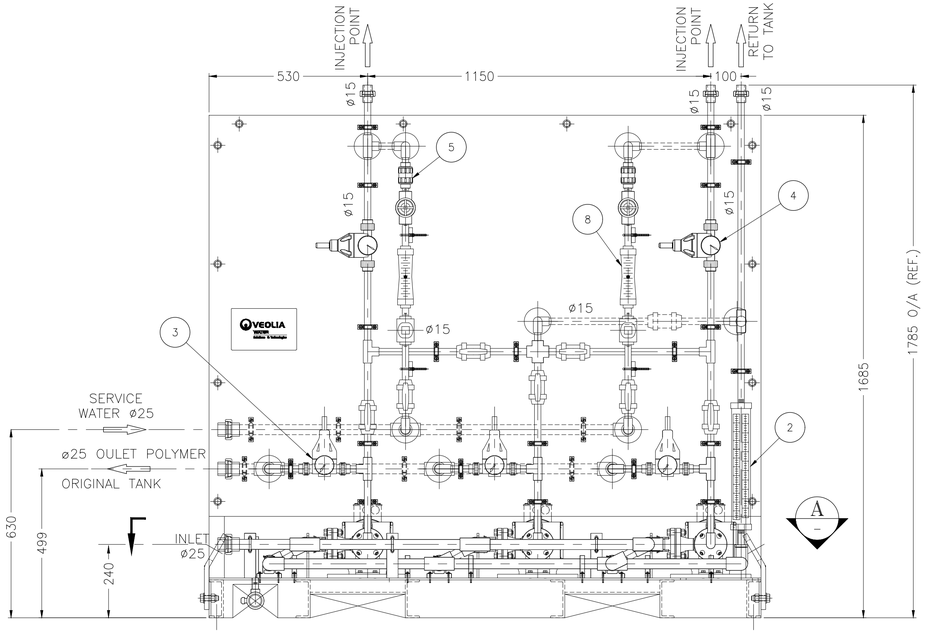

ELEVATION

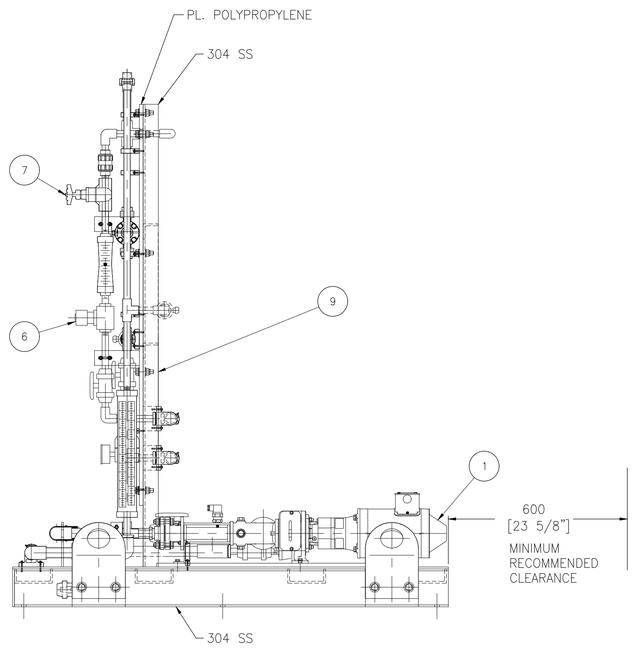

SIDE VIEW

RÉV. REV.	DESCRIPTION	DATE	RÉVISÉ REVISED	VÉRIFIÉ CHECKED	APPROUVÉ APPROVED
2	FOR APPROVAL II	2018-12-11	F.C.	F.V.	G.P.
1	FOR APPROVAL	2018-10-02	F.C.	G.H.	G.,H.

VEOLIA WATER TECHNOLOGIES

DESSINATEUR/DESIGNER F.C.	DATE 2018-09-25	CLIENT IQALUIT WWTP
VÉRIFICATEUR/CHECKER S.M.	DATE	
INGÉNIEUR/ENGINEER G.P.	DATE	

TITRE / TITLE
TRIPLE UNIT DOSING SKID
DAF POLYMER
GENERAL ARRANGEMENT

ÉCHELLE / SCALE: 1:10

PROJET / PROJECT	DESSIN No /DRAWING No	INTERNE / INTERNAL	FEUILLET / SHEET	REV./REV
5000218036 –	GA0005	PCH0000	1/1	2

Ce document est la propriété de VEOLIA et ne peut être reproduit sans son autorisation écrite.
This document is the property of VEOLIA and cannot be reproduced without its written authorization

REF: ANSI D

Dec 20, 2018 8:56:25 - W:\2018\5000218036 Iqaluit WWTP (TM95602)\15- Dessins execution_Drawings\6- GA\5000218036-GA0005-PCH0000_2.dwg - CotnoirF

REVIEWED BY CONTRACTOR

Kudlik Construction Ltd.

NAME: Sandra Rousseau P.Eng

DATE: Jul 24, 2019

VEOLIA

SHOP DRAWINGS

Spidflow Scrapper installation drawing Date : 2019-7-24

General Information			
Project	**WWTP UPGRADE - IQALUIT**		
Client:	Kudlik Construction Ltd.	Project Number	2018-062
To:	Sandra Rousseau P.Eng., Project Manger	E-mail:	srousseau@kudlik.biz
Contractor	Veolia Water Technologies Canad Inc.	Project Number	5000218036
Address	4105 Sartelon, Ville St. Laurent PQ, H4S 2B3		
Project Manger:	Clément Bekaert	E-mail:	clement.bekaert@veolia.com
Phone:	514-334-7230 x 3243	Cell:	514-246-6232

Information on the Equipment		
Specialty:	Process	
Equipment:	Spidflow	
Drawing Reference:		
Specification reference:	46.71.24	
Article:		
Revision:	Rev01	
Titre:	Spidflow Scrapper installation drawing	
Numero client:	DA-Veolia-GA08-Spidflow Scrapper	
Numero Veolia	5000218036-SA500	
Envoyer pour:	Information	Approbation

Consultant Approval

STANTEC PROJECT #: 110126045

SUBMITTAL # DA-Veolia-GA-08 Rev 01

This review by Stantec is for general conformance with the design concept of Stantec's design of the:

- ☑ Process
- ☐ Electrical
- ☐ Structural
- ☐ Other
- ☐ Mechanical

Stantec

component(s) only and does not mean that Stantec has verified or approves the shop drawing(s). The Contractor remains solely responsible for the shop drawing(s) and this review by Stantec does not relieve the Contractor of the Contractor's responsibility for errors or omissions in the shop drawing(s) or for meeting all requirements of the contract documents. This review does not mean that Stantec approves the detailed design inherent in the shop drawing, responsibility for which shall remain with the Contractor submitting same, nor does this review mean that Stantec accepts any deviation of the shop drawing(s) from the contract documents. The Contractor is responsible for confirming all dimensions and correlating them at the job site, for all construction means, methods and techniques, and for coordination of construction work of all trades, including coordination of all shop drawings.

- ☑ REVIEWED
- ☐ REVIEWED, AS NOTED
- ☐ REVISE AND RESUBMIT
- ☐ NOT REVIEWED

DATE July 26, 2019

BY Alejandro Rojas, P.Eng

4105 Sartelon
Ville St. Laurer
H4S-2B3

514-334-7230
514-334-5070
chnologies.ca

ITEM: 5000218036-SA301-22 (1X) △3
ITEM: 5000218036-SA305-22 (1X)
TOTAL QUANTITY : 2
WEIGHT 367 Kg (808 Lbs)

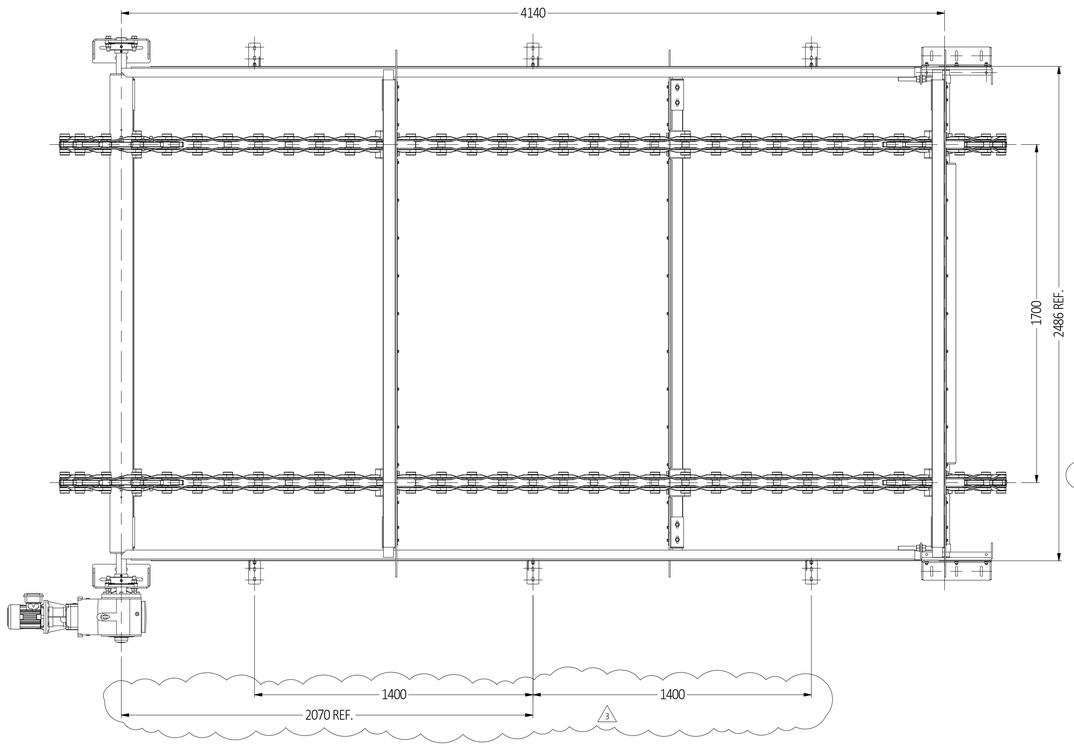

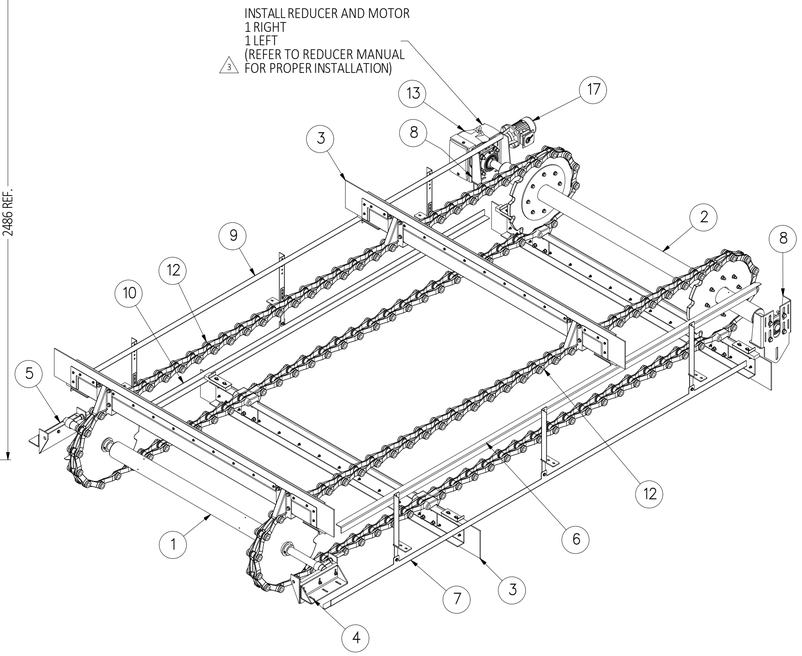

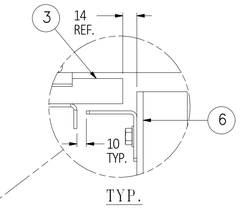

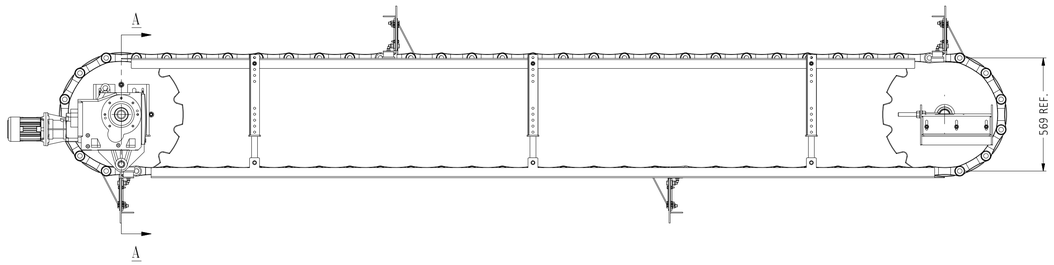

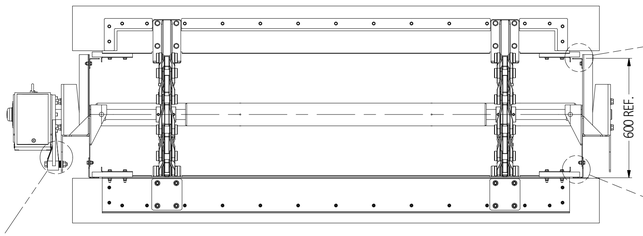

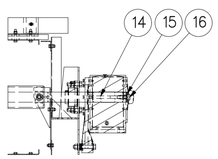

SECTION A-A
SCALE: 1 : 15

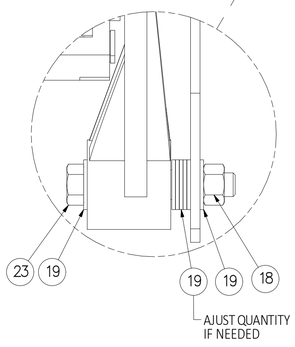

PA X	ITEM	DESCRIPTION	MATÉRIEL MATERIAL	NUMÉRO REF. REF. NUMBER	QTÉ QTY	ATELIER SHOP QTÉ TOT. TOT. QTY	E	S
	1	TENSION SHAFT WITH SPROCKETS		SA501	1	2		
	2	DRIVE SHAFT WITH SPROCKETS		SA502	1	2		
	3	SCRAPER FLIGHTS		SA503	△3 4	8		
	4	TENSIONING DEVICE (RIGHT)		SA504	1	2		
	5	TENSIONING DEVICE (LEFT)		SA505	1	2		
	6	TOP GUIDING RAIL (RIGHT)	Generic	SA506	1	2		
	7	BOTTOM GUIDING RAIL (RIGHT)	Generic	SA507	1	2		
	8	DRIVE SHAFT SUPPORT		SA508	2	4		
	9	TOP GUIDING RAIL (LEFT)	Generic	SA509	1	2		
	10	BOTTOM GUIDING RAIL (LEFT)	Generic	SA510	1	2		
	12	NON METALLIC CHAIN (ALLIED-LOCKE) #NCS720S, LENGTH:10.100m		ST-999-201	2	4		
	13	RIGHT ANGLE HELICAL-BEVEL SPEED REDUCER/GEAR MOTOR (NORD) SK 9033.1 AZBD 56C		ST-999-210	1	2		
	14	KEY 1/2" WIDE X 1/2" HIGH	Generic	ST-999-210	1	2		
	15	FLAT WASHER Ø3/4" TYPE A, THIN	AISI 304	ST-999-210	1	2		
	16	HEX. HEAD BOLT Ø3/4"-10UNC X 1 1/2" LG.	ASTM-F593D-304	ST-999-210	1	2		
	17	MOTOR (NORD) 63L/4	Generic	ST-999-211	1	2		
	18	NUT Ø5/8"-11UNC	ASTM-F594C-304	FXNUYY200221	1	2		
	19	FLAT WASHER Ø5/8" TYPE A, THIN	AISI 304	FXWAYY200674	7	14		
	23	HEX. BOLT. Ø5/8"-11UNC X 4 LG.	ASTM-F593C-304	FXSCYY200501	1	2		

RÉV. REV.	DESCRIPTION	DATE	RÉVISÉ REVISED	VÉRIFIÉ CHECKED	APPROUVÉ APPROVED
3	FOR ASSEMBLY	2019-07-02	A.D.	S.M.	F.V.

OVERALL TOLERANCES :
DIMENSIONS IN mm:
0 @ 600 : ± 0.5
600 @ 4000 : ± 1.0
> 4000 : ± 3.0
DIMENSIONS IN inches:
0 @ 24 : ± 1/32 [± .03]
24 @ 160 : ± 1/16 [± .05]
> 160 : ± 1/8 [± .1]
ANGLES: ± 0° 10'
REMOVE SHARP EDGES
MACHINED SURFACES : 250

VEOLIA WATER TECHNOLOGIES

DESSINATEUR/DESIGNER	A.D.	DATE 2019-03-26
VÉRIFICATEUR/CHECKER	S.M.	DATE 2019-03-26
INGÉNIEUR/ENGINEER	F.V.	DATE 2019-03-26

CLIENT: IQALUIT WWTP

TITRE / TITLE:
SPIDFLOW
SCRAPER
ASSEMBLY

ÉCHELLE / SCALE: 1:15

PROJET / PROJECT - DESSIN No / DRAWING No	INTERNE / INTERNAL	FEUILLET / SHEET	RÉV/REV
5000218036 - SA500	SPF	1 / 1	3

Ce document est la propriété de VEOLIA et ne peut être reproduit sans son autorisation écrite.
This document is the property of VEOLIA and cannot be reproduced without its written authorization.

REF: ANSI D

REVIEWED BY CONTRACTOR

Kudlik Construction Ltd.

NAME: Sandra Rousseau P.Eng

DATE: Nov 13, 2018

VEOLIA

SHOP DRAWINGS

Hydraulic Profile DAF Date : 2018-11-09

General Information			
Project	**WWTP UPGRADE - IQALUIT**		
Client:	Kudlik Construction Ltd.	Project Number	2018-062
To:	Sandra Rousseau P.Eng., Project Manger	E-mail:	srousseau@kudlik.biz
Contractor	Veolia Water Technologies Canad Inc.	Project Number	5000218036
Address	4105 Sartelon, Ville St. Laurent PQ, H4S 2B3		
Project Manger:	Clément Bekaert	E-mail:	clement.bekaert@veolia.com
Phone:	514-334-7230 x 3243	Cell:	514-246-6232

Information on the Equipment			
Specialty:	Process		
Equipment:	Spidflow		
Drawing Reference:			
Specification reference:	GENERAL		
Article:			
Revision:	Rev01		
Titre:	Hydraulic Profile DAF		
Numero client:	DA-Veolia-HY-01-Hydraulic Profile DAF		
Numero Veolia	5000218036_HY_0001_GEN_VWT		
Envoyer pour:	Approbation/Information:	Approbation	

Consultant Approval

STANTEC PROJECT #: 110126045

SUBMITTAL # DA-MP-13R1 Bridge Crane.

This review by Stantec is for general conformance with the design concept of Stantec's design of the:

☑ Process ☐ Electrical
☐ Structural ☐ Other
☐ Mechanical

Stantec

☑ REVIEWED

☐ REVIEWED, AS NOTED

☐ REVISE AND RESUBMIT

☐ NOT REVIEWED

DATE Nov 22, 2018

BY Alejandro Rojas, P.Eng

component(s) only and does not mean that Stantec has verified or approves the shop drawing(s). The Contractor remains solely responsible for the shop drawing(s) and this review by Stantec does not relieve the Contractor of the Contractor's responsibility for errors or omissions in the shop drawing(s) or for meeting all requirements of the contract documents. This review does not mean that Stantec approves the detailed design inherent in the shop drawing, responsibility for which shall remain with the Contractor submitting same, nor does this review mean that Stantec accepts any deviation of the shop drawing(s) from the contract documents. The Contractor is responsible for confirming all dimensions and correlating them at the job site, for all construction means, methods and techniques, and for coordination of construction work of all trades, including coordination of all shop drawings.

4105 Sartelon
Ville St. Laurer
H4S-2B3

34-7230
34-5070
logies.ca

FLOW RATE PER UNIT		ELEVATION (m)						
		TANK HEIGHT	ZONE 1 WATER LEVEL	ZONE 2 WATER LEVEL	ZONE 3 WATER LEVEL	ZONE 4 SAFETY OVERFLOW	ZONE 5 TOP TULIPS WATER LEVEL	ZONE 6 WATER LEVEL
Q Min.@ (5m/h):	(43 m3/h)	3.650	3.298	3.293	3.288	3.388	2.849	2.400
Q Max.A (60m/h):	(520 m3/h)		3.310	3.298			2.934	

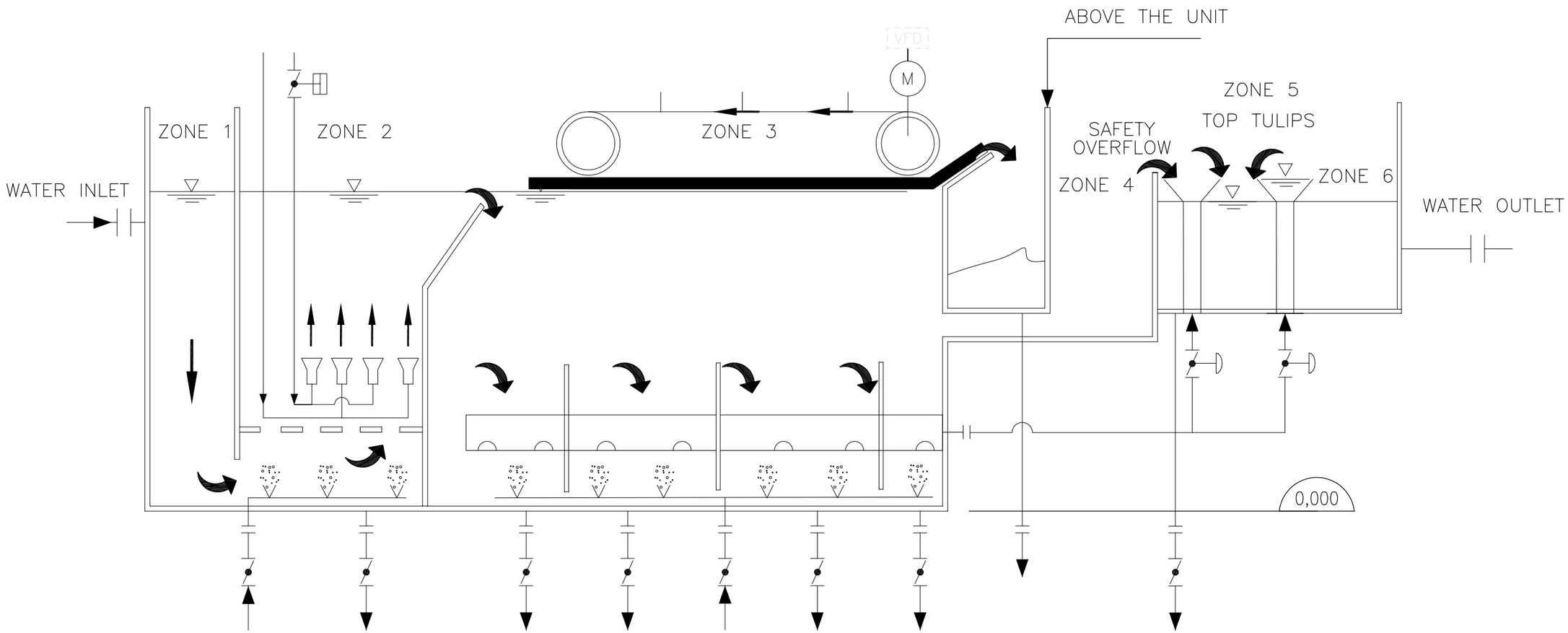

BAR = 1" AT PLOT SCALE

REF: N/A

STD: "B" 11x17

REV	DESCRIPTION	DATE	REVD	CHKD	APVD	ECN
1	FOR APPROVAL	2018-11-05	F.C.	G.H.	G.H.	N/A

CONFIDENTIALITY AND INTELLECTUAL PROPERTY NOTICE
ALL INFORMATION CONTAINED IN THIS DOCUMENT IS THE SOLE PROPERTY OF VEOLIA WATER TECHNOLOGIES CANADA INC. AND IS PROTECTED BY ALL APPLICABLE LAWS, INCLUDING BUT NOT LIMITED TO COPYRIGHT AND OTHER INTELLECTUAL PROPERTY LAWS. THE DESIGN CONCEPTS AND INFORMATION CONTAINED HEREIN ARE PROPRIETARY TO V.W.T AND ARE SUBMITTED IN CONFIDENCE. THEY ARE NOT TRANSFERABLE. THEY MUST BE USED ONLY FOR THE PURPOSE FOR WHICH THE DOCUMENT IS EXPRESSLY SUBMITTED AND NO IMPLICIT LICENCE IS GRANTED OTHERWISE BY THE SUBMISSION OF THIS DOCUMENT. THEY ARE CONFIDENTIAL AND PRIVILEGED INFORMATION OF V.W.T. AND THEY MUST NOT BE DISCLOSED, REPRODUCED, LOANED, REMITTED OR USED IN ANY OTHER MANNER WITHOUT THE EXPRESS WRITTEN CONSENT OF V.W.T. V.W.T. ASSUMES NO RESPONSIBILITY OR LIABILITY FOR THE USE OF THIS DOCUMENT OR THE DESIGN CONCEPTS AND INFORMATION CONTAINED HEREIN FOR ANOTHER PROJECT, OR IN A MANNER THAT DOES NOT RELATE TO THE FITNESS OR PURPOSE OF THIS DOCUMENT. IN NO EVENT SHALL THIS DOCUMENT OR THE DESIGN CONCEPTS AND INFORMATION CONTAINED HEREIN BE USED IN A MANNER DETRIMENTAL TO THE INTEREST OF V.W.T. ALL COPYRIGHT, PATENT AND OTHER INTELLECTUAL PROPERTY RIGHTS ARE RESERVED. ACCEPTANCE OF THE DELIVERY OF THIS DOCUMENT CONSTITUTES AGREEMENT TO THESE TERMS AND CONDITIONS.

DESIGNER	DATE
F.C.	2018-11-05
CHECKER	DATE
G.H.	
ENGINEER	DATE
G.H.	
SCALE:	NTS

TITLE: DAF SFP-650
HYDRAULIC PROFILE

CLIENT: IQALUIT WWTP

VEOLIA
VEOLIA WATER TECHNOLOGIES CANADA INC. 4105 Sartelon, Saint-Laurent, Qc, Canada. Tel: (514) 334-7230

PROJECT	DRAWING	INTERNAL	SHEET	REV
5000218036 – HY0001		DAF	1 OF 1	1

Nov 12, 2018 13:16:22 – W:\2018\5000218036 Iqaluit WWTP (TM95602)\15- Dessins execution_Drawings\7-HY\5000218036-HY100DAF_1.dwg – CotnoirF

REVIEWED BY CONTRACTOR

Kudlik Construction Ltd.

NAME: Sandra Rousseau P.Eng

DATE: Mai 27, 2019

VEOLIA

SHOP DRAWINGS

PID Date : 2019-05-24

General Information			
Project	**WWTP UPGRADE - IQALUIT**		
Client:	Kudlik Construction Ltd.	Project Number	2018-062
To:	Sandra Rousseau P.Eng., Project Manger	E-mail:	srousseau@kudlik.biz
Contractor	Veolia Water Technologies Canad Inc.	Project Number	5000218036
Address	4105 Sartelon, Ville St. Laurent PQ, H4S 2B3		
Project Manger:	Clément Bekaert	E-mail:	clement.bekaert@veolia.com
Phone:	514-334-7230 x 3243	Cell:	514-246-6232

Information on the Equipment			
Specialty:	Process		
Equipment:	ALL		
Drawing Reference:			
Specification reference:	GENERAL		
Article:			
Revision:	Rev03		
Titre:	PID		
Numero client:	DA-Veolia-PI-01-P&ID		
Numero Veolia	5000218036_PI_0600_GEN_VWT.pdf		
Envoyer pour:	Approbation/Information:	Information	

SHOP DRAWINGS ARE REVIEWED UNLESS NOTED OTHERWISE

REVIEWED AS MODIFIED

REVISE & RESUBMIT

SEAL & SIGNATURE REQUIRED

Stantec

DATE June 6, 2019

SIGNATURE

REVIEW BY STANTEC IS FOR THE SOLE PURPOSE OF ASCERTAINING GENERAL CONFORMITY WITH DESIGN. CONTRACTOR IS RESPONSIBLE FOR DIMENSIONS, FABRICATION AND CONSTRUCTION METHODS, COORDINATION OF SUB-TRADES, DETAIL DESIGN OF COMPONENTS, AND ERRORS OR OMISSIONS ON SHOP DRAWINGS.

Consultant Approval

STANTEC PROJECT #: 110126045

SUBMITTAL # DA-Veolia-PI-01-PID.Rev3

This review by Stantec is for general conformance with the design concept of Stantec's design of the:

- ✓ Process
- ☐ Structural
- ☐ Mechanical
- ☐ Electrical
- ☐ Other

component(s) only and does not mean that Stantec has verified or approves the shop drawing(s). The Contractor remains solely responsible for the shop drawing(s) and this review by Stantec does not relieve the Contractor of the Contractor's responsibility for errors or omissions in the shop drawing(s) or for meeting all requirements of the contract documents. This review does not mean that Stantec approves the detailed design inherent in the shop drawing, responsibility for which shall remain with the Contractor submitting same, nor does this review mean that Stantec accepts any deviation of the shop drawing(s) from the contract documents. The Contractor is responsible for confirming all dimensions and correlating them at the job site, for all construction means, methods and techniques, and for coordination of construction work of all trades, including coordination of all shop drawings.

Stantec

- ✓ REVIEWED
- ☐ REVIEWED, AS NOTED
- ☐ REVISE AND RESUBMIT
- ☐ NOT REVIEWED

DATE May 29, 2019

BY Alejandro Rojas, P.Eng

4105 Sartelon
Ville St. Laurent, PQ
H4S-2B3

Phone: 514-334-7230
Fax: 514-334-5070
www.veoliawatertechnologies.ca

EQUIPMENT

- FILTER OR FILTER–SILENCER INLET AIR
- DIFFUSER HEADER
- MIXER HORIZONTAL SURFACE
- HOSE REEL
- CLEANING BRUSH
- MIXER, INLINE STATIC
- VFD — VARIABLE FREQUENCY DRIVE
- MIXER
- MOTOR
- STOP LOG
- WEIR
- LEVEL CONTROL GATE
- COMPRESSOR, PISTON
- PROGRESSIVE CAVITY PUMP
- PUMP, CENTRIFUGAL
- PUMP, ROTARY LOBE
- PUMP, DIAPHRAGM
- PUMP, SUBMERSIBLE
- PUMP, PLUNGER
- PUMP, VERTICAL
- PUMP, GEAR
- PUMP, LINE SHAFT
- PUMP, METERING
- PUMP, METERING
- SUBMERSIBLE PROPELLER PUMP
- SLUICE GATE (NORMALLY CLOSED)
- SLUICE GATE (NORMALLY OPEN)
- WEIR GATE (NORMALLY CLOSED)
- WEIR GATE (NORMALLY OPEN)
- SLIDE GATE (NORMALLY CLOSED)
- SLIDE GATE (NORMALLY OPEN)
- GRINDER / MACERATOR
- HOIST
- SCREW PRESS
- POLYMER DOSING SYSTEM
- ROTARY DRUM THICKENER
- CONVEYOR
- BELT FILTER PRESS
- PRIMARY FILTER
- SHAFTLESS SPIRAL FINE SCREEN
- DAF

EQUIPMENT

- FLAP GATE
- RECEIVER OR PRESSURE VESSEL
- SCREEN, ROTARY OVERFLOW
- TANK, DOUBLE WALLED
- SILENCER
- TANK
- POSITIVE DISPLACEMENT BLOWER
- CONDENSATE TANK
- EXPANSION JOINT (BELLOWS) — EJ EJ
- LIFTING DAVIT SOCKET

PIPE LINE DEVICES

- INJECTOR
- AIR RELEASE VALVE — ARV
- FLAME ARRESTER
- AIR VACUUM VALVE — AVV
- FLAME ARRESTER WITH THERMAL SHUTOFF VALVE
- MANUAL AIR VENT
- FLAME CHECK
- STRAINER
- TRAP — T
- STATIC MIXER
- SEDIMENT TRAP
- FOOT VALVE
- PRESSURE REDUCING ASSEMBLY — PRA
- AIR SEPARATOR
- GAS DRIP TRAP — DT
- DRAIN — D
- LIQUID SEPARATOR
- SPECTACLE BLIND
- BASKET STRAINER
- CALIBRATION CHAMBER
- RUPTURE DISK (VACUUM RELIEF)
- PULSATION DAMPENER
- RUPTURE DISK (PRESSURE RELIEF)
- SIGHT GLASS
- AIR VENT
- THERMOWELL
- STEAM VENT
- SUCTION GUIDE STRAINER
- QUICK CONNECTOR
- FLOW STRAIGHTENING VANES
- PLUG
- M — MOTORIZED CONTROL DAMPER
- CAP
- RECTANGULAR BALANCING DAMPER
- BLIND FLANGE
- REDUCER
- F — FIRE DAMPER
- FLEXIBLE CONNECTION
- AIR FILTER
- B — BACKDRAFT DAMPER
- HC — HEATING COIL
- CC — COOLING COIL
- LOUVRE
- XX — HARD PIPE UTILITY CONNECTION
- ORIFICE PLATE
- WATER SOFTENER

VALVES

- THREE WAY VALVE SOLENOID VALVE
- PUMP DISCHARGE VALVE (TRIPLE DUTY)
- GATE VALVE (NORMALLY OPEN)
- GAUGE OR ROOT VALVE
- GATE VALVE (NORMALLY CLOSED)
- KNIFE GATE VALVE
- PLUG VALVE (NORMALLY OPEN)
- BALANCING COCK
- PLUG VALVE (NORMALLY CLOSED)
- CIRCUIT BALANCING VALVE
- BALL VALVE (NORMALLY OPEN)
- THERMOSTATICALLY CONTROLLED VALVE
- BALL VALVE (NORMALLY CLOSED)
- PRESSURE AND VACUUM RELIEF VALVE
- BUTTERFLY VALVE
- VACUUM RELIEF VALVE
- CIRCULAR BALANCING DAMPER
- PRESSURE SAFETY VALVE
- GLOBE VALVE
- IN–LINE, SPRING LOADED RELIEF VALVE
- DIAPHRAGM VALVE
- MUD VALVE
- ANGLE VALVE
- SPRAY NOZZLE
- FLOAT VALVE
- CAMLOCK
- PINCH VALVE
- Y–STRAINER — ST
- PRESSURE CONTROL VALVE (EXTERNAL SENSING)
- DOUBLE CHECK VALVE BACKFLOW PREVENTER
- PRESSURE CONTROL VALVE (INTERNAL SENSING)
- VEE BALL VALVE
- BLAST GATE
- BACK PRESSURE CONTROL VALVE
- NEEDLE VALVE
- DOUBLE LEAF CHECK VALVE
- DUCKBILL VALVE
- CHECK VALVE
- DRESSER COUPLING (FLEXIBLE CONNECTION)
- BALL CHECK VALVE
- REDUCED PRESSURE BACKFLOW PREVENTER

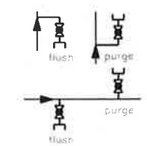

FLUSHING/PURGE CONNECTION

SPEC1 | SPEC2 — SPEC CHANGE

VALVE ACTUATORS

- M — MOTOR ACTUATOR
- S — SOLENOID
- PNEUMATIC ACTUATOR
- DIAPHRAGM (PRESSURE BALANCE)
- DIAPHRAGM (SPRING OPPOSED)

MISCELLANEOUS DEVICES

- UTILITY STATION (NUMBER, IF ANY, DESIGNATES TYPE)
- SS — SAMPLER
- FIRE HYDRANT & VALVE
- C — CONTROL UNIT
- VAB — VACUUM BREAKER (BFP TYPE)
- P — PURGE OR FLUSHING CONNECTION

PROCESS LINES

- NEW PROCESS – PRIMARY
- NEW PROCESS – SECONDARY
- NEW PROCESS – TERTIARY
- EXISTING PROCESS
- FUTURE PROCESS
- FUTURE EQUIPMENT, ETC
- VENDOR PACKAGE BOUNDARY
- BOUNDARY MATCHLINE
- EXISTING PIPING AND EQUIPMENT TO BE REMOVED
- ENCLOSURE BOUNDARY
- INSULATION
- S OR E — INSULATION WITH STEAM OR ELECTRIC HEAT TRACE
- PIPING UNDER STRUCTURE

PROCESS AND SIGNAL CROSS REFERENCE SYSTEM

1. ON DRAWING PXX XX1 CONTINUATION IS SHOWN AS:

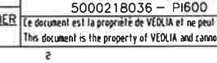

2. ON DRAWING PXX XX2 THIS CONTINUATION IS SHOWN AS:

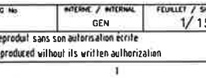

REV.	DESCRIPTION	DATE	REVISE REVISED	VERIFIE CHECKED	APPROUVE APPROVED
3	ISSUED FOR INFORMATION	2019-05-21	A.R.	F.V.	G.P.
2	ISSUED FOR APPROVAL 2	2019-02-14	F.C.	F.V.	G.P.
1	ISSUED FOR APPROVAL	2018-09-14	A.R.	G.H.	N/A

VEOLIA WATER TECHNOLOGIES

DESSINATEUR/DESIGNER	DATE
A.R.	2018-09-14
VERIFICATEUR/CHECKER	DATE
G.H.	2018-09-14
INGENIEUR/ENGINEER	DATE

CLIENT: IQALUIT WWTP

TITRE / TITLE: WASTE WATER TREATMENT PLANT UPGRADE
PROCESS AND INSTRUMENTATTION DIAGRAM
LEGEND

ECHELLE / SCALE: N.T.S.

PROJET / PROJECT	DESSIN No /DRAWING No	INTERNE / INTERNAL	FEUILLET / SHEET	REV / REV
5000218036 – PI600		GEN	1/15	3

REFERENCE NUMBER
DWG. No.: P601

Ce document est la propriété de VEOLIA et ne peut être reproduit sans son autorisation écrite
This document is the property of VEOLIA and cannot be reproduced without its written authorization

REF: 8 7 6 5 4 3 2 1 ANSI D

May 23, 2019 8:55:32 – W:\2018\5000218036 IQALUIT WWTP (TM250601)\15- Dessins execution_Drawings\P- PI\5000218036-PI600_REV 3.dwg – ROMERORA

PROCESS AND MECHANICAL EQUIPMENT ABBREVIATIONS LIST

AB	AERATION BLOWER
AC	AIR COMPRESSOR
ACU	AIR CONDITIONING UNIT
AD	AIR DRYER
ADEQ	ADMINISTRATION EQUIPMENT
AF	AIR FILTER
AG	SUBMERSIBLE MIXER
AHU	AIR HANDLING UNIT
AR	AIR RECEIVER
AS	AIR SEPERATOR
ASD	ADJUSTABLE SPEED DRIVE
B	BLOWER
BFP	BELT FILTER PRESS
BFV	BUTTERFLY VALVE
BG	BLAST GATE
BIOF	BIOFILTER
BLR	BOILER
BR	BRUSH
BRM	BARMINUTOR
BV	BALL VALVE
CBD	COARSE BUBBLE DIFFUSER
CBU	COMPOST BUNKER
CC	CALIBRATION CHAMBER
CDR	CLARIFIER DRIVE
CFG	CENTRIFUGE
CFR	CHEMICAL FEEDER (POLYMER, LIME SLAKER, CHLORINATOR, ETC.)
CH	CHILLER
CLT	CLUTCH
CMP	COMPACTOR
COL	COLLECTOR
CON	CONVEYOR
COV	COVER
CP	COMPRESSOR
CPRU	CONTROLLED PRESSURIZATION UNIT
CPT	COMPACTOR
CRN	CRANE OR HOIST
CTU	COMPOST TUNNEL
CV	CONTROL VALVE
CYL	CYLINDER
DAF	DISSOLVED AIR FLOTATION CLARIFIER
DDR	DAF DRIVE
DIST	ROTARY DISTRIBUTOR
EF	EXHAUST FAN
EPR	EVAPORATOR
ENG	ENGINE
ETNK	EXPANSION TANK
F	FAN
FBD	FINE BUBBLE DIFFUSER
FCV	MODULATING CONTROL VALVE
FDR	FERMENTER DRIVE
FE	FLOW ELEMENT
FLT	FILTER
FM	FLOW METER
GBT	GRAVITY BELT THICKENER
GDR	GRINDER/MACERATOR
GV	GLOBE VALVE
HST	HOIST
HSS	HAULED SEPTAGE SCREEN
INC	INCINERATOR
INJ	INJECTOR
KV	KNIFE GATE
LAG	LAGOONS
LCP	LOCAL CONTROL PANEL
LG	LEVEL SIGHT GLASS
LVR	LOUVRE
MCP	MASTER CONTROL PANEL
ME	MECHANISM
MLWC	MIXED LIQUOR WASTING BOX
MXR	MIXER
MWA	MICROWAVE ANALYZER
MV	ON/OFF VALVE
NV	NEEDLE VALVE
ORT	ODOUR REMOVAL TOWER
P	PUMP
PAG	POLYMER AGITATOR
PDC	POWER DISTRIBUTION CENTRE
PDS	POLYMER DOSING SYSTEM
PF	PRIMARY FILTER
PFH	POLYMER FEEDER HOPPER
PLV	PLUG VALVE
PSF	POLYMER SCREW FEEDER
PRV	PRESSURE REDUCING/ REGULATING VALVE
PSV	PRESSURE/VACUUM RELIEF SAFETY VALVE
PTO	POWER TAKE OFF/REDUCER
PV	PRESSURE VESSEL
RDP	RELIEF DAMPER
RDT	ROTARY DRUM THICKENER
RF	RETURN FAN
RV	RELIEF VALVE/RUPTURE DISC (PROCESS RELIEF DAMPER)
SA	SAMPLER (STATION)
SAF	SAFETY EQUIPMENT
SCRB	SCRUBBER
SC	SPRAYED COIL
SCRN	SCREEN
SCUM	SCUM COLLECTION MECHANISM
SEP	SEPARATOR (CYCLONE, DRIP TRAP, STEAM SEPARATOR, AIR SEPARATOR)
SF	SUPPLY FAN
SG	SITE GLASS
SLR	SILENCER
SM	STATIC MIXER
SP	SCREW PRESS
SSV	SAFETY SHUT OFF VALVE
STR	STRAINER (AUTOMATIC)
SV	SOLENOID VALVE
T	TANK (NON-PRESSURIZED)
TK	HVAC TANK
UH	UNIT HEATER
US	UTILITY STATION
UV	ULTRA VIOLET LAMP BANK
V	VALVE
VAC	VACUUM CONVEYOR
VDR	VORTEX DRIVE
VFD	VARIABLE FREQUENCY DRIVE
VCC	VORTEX GRIT CHAMBER
W	WINCH
WSO	WATER SOFTENER

GENERAL NOTES

1. WHERE INFORMATION RELATING TO THE ORIGINAL PLANT CONDITIONS IS SHOWING ON THE DRAWINGS, IT HAS BEEN OBTAINED OR SCANNED FROM INFORMATION SUPPLIED BY OTHERS. PHASE II UPGRADES, CURRENTLY UNDER CONSTRUCTION AT THE TIME OF TENDER OF THIS PROJECT, WERE BASED ON THIS INFORMATION. NUMEROUS FIELD MODIFICATIONS WERE REQUIRED TO ACCOMMODATE INACCURATE INFORMATION ON THE ORIGINAL PLANT. AS-BUILT DRAWINGS INCORPORATING THESE MODIFICATIONS WERE NOT AVAILABLE AT THE TIME OF TENDER. CONSEQUENTLY, THE CONTRACTOR SHOULD MAKE SUFFICIENT ALLOWANCES IN THE AMOUNT OF WORK REQUIRED TO ACCOMMODATE PHASE II MODIFICATIONS.
   WHERE DIMENSIONS OR ELEVATIONS OF EXISTING FACILITIES ARE SHOWN, THEY ARE NOT INTENDED TO INDICATE PRECISE OR CURRENT CONDITIONS. ALL DIMENSIONS AND ELEVATIONS TO BE CHECKED AND CONFIRMED ON SITE BEFORE FABRICATION AND INSTALLATION OF THE EQUIPMENT.
2. THIS DRAWING IS GENERAL IN NATURE. SOME SYMBOLS SHOWN HERE MAY NOT BE USED ON THE CONTRACT DRAWINGS.
3. SEE DRAWING P602 FOR EQUIPMENT AND PIPE COMMODITY DESIGNATION SYSTEMS.
4. SEE DRAWING P603 FOR INSTRUMENTATION SYMBOLS.
5. SYMBOLS ARE ARRANGED ON DRAWINGS AND IN CATEGORIES FOR CONVENIENCE ONLY; SYMBOLS MAY BE USED ON ANY OF THE CONTRACT DRAWINGS.
6. IN PLAN VIEWS, EXISTING PIPE AND EQUIPMENT THAT MAY BE ABOVE OR BELOW SHOWS THROUGH AS FADED LINES. REFER TO SECTIONS FOR RELATIVE ELEVATION OF PLANT UPGRADE PIPE AND EQUIPMENT COMPARED TO EXISTING PIPE AND EQUIPMENT. ALL DIMENSIONS AND ELEVATIONS TO BE CHECKED AND CONFIRMED ON SITE BY THE CONTRACTOR.
7. THE ROUTING OF PIPES AND ASSOCIATED EQUIPMENT MAY BE SHOWN AS APPROXIMATE. OBTAIN ACCEPTANCE OF THE ENGINEER ON EXACT PIPE ROUTING AND EQUIPMENT LOCATIONS IN CONJUNCTION WITH PIPING ISOMETRICS, PRIOR TO INSTALLATION. SMALL DIAMETER PIPE ROUTING FOR LINES 100mm AND LESS NOT SHOWN ON PIPING LAYOUTS UNLESS OTHERWISE NOTED. REFER TO P&ID'S.
8. P&ID'S DO NOT SHOW ALL DRAIN, VENT, OR SAMPLE CONNECTIONS.
9. PROCESS STANDARD DETAILS: IN GENERAL, ALL EXTERIOR ANCHORS SHOULD BE STAINLESS STEEL. ALL INTERIOR ANCHORS CAN BE EITHER STAINLESS STEEL OR GALVANIZED EXCEPT IN THE HEADWORKS AND SLUDGE TREATMENT AND HANDLING AREAS WHERE THE ANCHORS MUST BE STAINLESS STEEL.

PIPE IDENTIFICATION

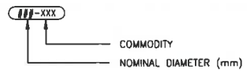

CHANNEL OR CHUTE IDENTIFICATION

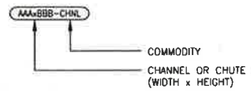

VALVE / EQUIPMENT IDENTIFICATION

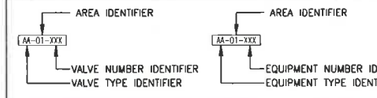

INSTRUMENTATION EQUIPMENT IDENTIFICATION

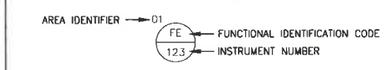

REFER TO DRAWING STD P02, "TYPICAL INSTRUMENT IDENTIFICATION" TABLE FOR FURTHER DETAIL.

NOTES

1. THIS DRAWING IS GENERAL IN NATURE, SOME ABBREVIATIONS SHOWN HERE MAY NOT BE USED ON THE CONTRACT DRAWINGS.
2. SEE DRAWING P00 002 FOR PROCESS EQUIPMENT LEGEND AND PIPING SYMBOLS.
3. SEE DRAWING P00 004 FOR INSTRUMENTATION SYMBOLS.

CHANNEL EQUIPMENT TYPE

BFG	BUTTERFLY GATE
CFL	CUT THROAT FLUME
CG	CHANNEL GATE
FG	FIBREGLASS GATE
FLG	FLAP GATE
FSG	FABRICATED SLIDE GATE
HPG	HAND PULL GATE
LCG	LEVEL CONTROL GATE
PBP	PERFORATED BAFFLE PLATE
PFL	PARSHALL FUME
SLG	SLUICE GATE
SL	STOP LOG
SW	STRAIGHT WEIR (USED TO CONTROL LEVELS)
TSV	TELESCOPIC GATE
WG	WEIR GATE
VW	V-NOTCH WEIR

COMMODITIES

COMMODITY ABBREVIATIONS LIST

AL	LIQUID ALUM
BLD	SCRUBBER BLOWDOWN
BSL	BOTTOM SLUDGE
CEN	CENTRATE
CIA	CITRIC ACID
CON	CONDENSATE
CPA	COMPOST PROCESS AIR
CW	COOLING WATER
DCW	DOMESTIC COLD WATER (POTABLE)
DEW	DEWATERING (UNWATERING)
DHW	DOMESTIC HOT WATER (POTABLE)
DHWR	DOMESTIC HOT WATER RETURN (POTABLE)
DPS	DEWATERED PRIMARY SLUDGE
DR	PROCESS DRAINAGE
DS	DEWATERED SLUDGE
DSC	DEWATERED SCREENINGS
DSE	DISINFECTED SECONDARY EFFLUENT
DSL	DIGESTED SLUDGE
DSUB	DAF SUBNATANT
DWS	DEWATERED SLUDGE
EW	EFFLUENT WATER
FE	FINAL EFFLUENT
FIL	FILTRATE
FOA	FOUL AIR
FPW	FIRE PROTECTION WATER
FL	FLOOR DRAIN
FSL	FERMENTER SLUDGE
FSU	FERMENTER SUPERNATANT
GLR	GLYCOL RETURN
GLS	GLYCOL SUPPLY
GR	GRIT SLURRY
HS	HAULED SEPTAGE
HSSC	HAULED SEPTAGE SCREENING
HWR	HOT WATER RETURN
HWS	HOT WATER SUPPLY
IR	INTERNAL RECYCLE
IA	INSTRUMENT AIR
LO	LUBE OIL
ML	MIXED LIQUOR
MSL	MIXED SLUDGE (WASTE ACTIVATED & PRIMARY)
NG	NATURAL GAS
NML	NITRIFIED MIXED LIQUOR
NPW	NON POTABLE WATER
NPWH	NON POTABLE WATER (HOT)
OVF	OVERFLOW
PA	PROCESS AIR
PAC	POLY ALUMINUM CHLORIDE
PE	PRIMARY EFFLUENT
PER	PERMEATE
PI	PRIMARY INFLUENT
PLY	POLYMER
PS	PRIMARY SLUDGE
PSC	PRIMARY SCUM
PW	POTABLE WATER
PWD	PROCESS WASTE DRAIN
RAS	RETURN ACTIVATED SLUDGE
REC	RECIRCULATED SCRUBBER SOLUTION
RHS	RAW HAULED SEPTAGE
RS	RAW SEWAGE
RSC	RAW SCREENINGS
SAL	SAMPLE LINE
SAN	SANITARY SEWER
SC	SECONDARY SCUM
SCR	WASHED SCREENINGS
SE	SECONDARY EFFLUENT
SI	SECONDARY INFLUENT
SHS	SODIUM HYPOCHLORITE SOLUTION
SPY	SCREENED PRIMARY SCUM
SRS	SCREENED RAW SEWAGE
ST	STORM SEWER
SWD	SUMP WASTE DRAIN
TA	TREATED AIR
TSL	THICKENED SLUDGE
TPS	THICKENED PRIMARY SLUDGE
TWAS	THICKENED WASTE ACTIVATED SLUDGE
UTA	UTILITY AIR
UFE	UTILITY FINAL EFFLUENT WATER
UWS	UTILITY SERVICE WATER
VA	VENTILATION AIR
WAS	WASTE ACTIVATED SLUDGE
WPWW	WATER PLANT WASTEWATER

GENERAL ABBREVIATIONS LIST

BOP	BOTTOM OF PIPE
BM	BENCH MARK
CB/MH	CATCH BASIN MANHOLE
C/L	CENTRE LINE
EL	ELEVATION
IP	IRON PIN
MAX	MAXIMUM
NTS	NOT TO SCALE
R 85.80	RIM ELEVATION (METRES)
T.O.S.	TOP OF STEEL OR SUPPORT
HWL	HIGH WATER LEVEL
LWL	LOW WATER LEVEL
B.C.	BEGINNING OF CURVE
C.B.	CATCH BASIN
C.B.T.	CATCH BASIN TOP
CONC	CONCRETE
E.C.	END OF CURVE
HYD	HYDRANT
INV	INVERT
MH	MANHOLE
MS	MILD STEEL
MIN	MINIMUM
R	RADIUS
SS	STAINLESS STEEL
W.M.	WATERMAIN

PLANT AREA CODES

01	INFLUENT PUMPING / PRELIMINARY TREATMENT / PRIMARY TREATMENT
02	SECONDARY TREATMENT
03	SOLIDS HANDLING
04	CHEMICAL DOSING

TIE-IN POINT IDENTIFICATION

REV.	DESCRIPTION	DATE	REVISÉ REVISED	VÉRIFIÉ CHECKED	APPROUVÉ APPROVED
3	ISSUED FOR INFORMATION	2019-05-21	A.R.	F.V.	G.P.
2	ISSUED FOR APPROVAL II	2019-02-14	F.C.	F.V.	G.P.
1	ISSUED FOR APPROVAL	2018-09-14	A.R.	G.H.	N/A

DESSINATEUR/DESIGNER	A.R.	DATE 2018-09-14
VÉRIFICATEUR/CHECKER	G.H.	DATE 2018-09-14
INGÉNIEUR/ENGINEER		DATE

CLIENT: IQALUIT WWTP

VEOLIA WATER TECHNOLOGIES

TITRE / TITLE:
WASTE WATER TREATMENT PLANT UPGRADE
PROCESS AND INSTRUMENTATTION DIAGRAM
LEGEND

ÉCHELLE / SCALE: N.T.S.

PROJET / PROJECT	DESSIN No /DRAWING No	INTERNE / INTERNAL	FEUILLET / SHEET	REV./REV
5000218036 – P1600		GEN	2/15	3

REFERENCE NUMBER
DWG. No.: P602

Ce document est la propriété de VEOLIA et ne peut être reproduit sans son autorisation écrite
This document is the property of VEOLIA and cannot be reproduced without its written authorization

ANSI B

May 22, 2019 8:53:34 - M:\5218\5000218036 Iqaluit WWTP (5000218036)\15- Design execution\Drawings\P- P1600\P602_R3 2.dwg - RDAUBRON

FUNCTIONAL IDENTIFICATION

	FIRST LETTER (4)		SUCCEEDING-LETTERS (3)			DESCRIPTION
	MEASURED OR INITIATING VARIABLE	MODIFIER	READOUT OR PASSIVE FUNCTION	OUTPUT FUNCTION	MODIFIER	I/O TYPES
						TYPICAL ASSOCIATED CDACS
A	ANALYSIS		ALARM			DI
B	BURNER, COMBUSTION			CLOSE-STOP DECREASE		DO
C	CONDUCTIVITY, pH (ACIDITY)		CLOSE	CONTROL OR CONTROLLER		DI/AO
D	DENSITY	DIFFERENTIAL		OPEN-START-INCREASE		DO
E	VOLTAGE		SENSOR (PRIMARY ELEMENT)			
F	FLOW RATE	RATIO (FRACTION)			FAIL	DI
G	GAS		GLASS VIEWING DEVICE			
H	HAND				H-HIGH-(ALARM) HH-HIGH-(SHUTDOWN)	DI
I	CURRENT (ELECTRICAL)		INDICATE			AI
J	POWER	SCAN				DO/AI
K	TIME, TIME SCHEDULE	TIME RATE OF CHANGE		CONTROL STATION		DO/AO
L	LEVEL		LIGHT		L-LOW-(ALARM) LL-LOW-(SHUTDOWN)	DI
M	MOTOR	MOMENTARY	ON OR OPERATE		MIDDLE, INTERMEDIATE	DI
N	MOISTURE			START		DO
O	UNCLASSIFIED		OPEN ORIFICE, RESTRICTION POINT (TEST) CONNECTION	STOP	OVERLOAD	DO
P	PRESSURE, VACUUM			PNEUMATIC		
Q	QUANTITY	INTEGRATE, TOTALIZED		INTEGRATE OR TOTALIZED		DI/AI
R	RADIATION	REGULATING	RECORD			AI
S	SPEED, FREQUENCY, SOLENOID	SAFETY		SWITCH, OR SAFETY		DI/DO
T	TEMPERATURE			TRANSMIT		AI
U	MULTIVARIABLE		MULTIFUNCTION	MULTIFUNCTION	MULTIFUNCTION	DI
V	VIBRATION, MECHANICAL ANALYSIS			VALVE, DAMPER, LOUVRE		
W	WEIGHT, FORCE		WELL			
X	ON/OFF	X AXIS	UNCLASSIFIED	UNCLASSIFIED	UNCLASSIFIED	DI/DO
Y	EVENT, STATE, PRESENCE	Y AXIS		RELAY, COMPUTE, CONVERT		
Z	POSITION, DIMENSION	Z AXIS		DRIVER, ACTUATOR, UNCLASSIFIED - FINAL CONTROL ELEMENT		

TYPICAL INSTRUMENT IDENTIFICATION

SCHEMATIC IDENTIFICATION

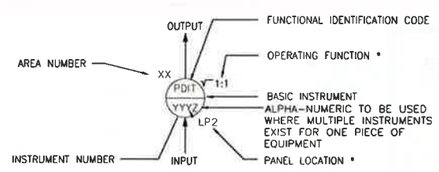

FUNCTIONAL IDENTIFICATION - (UP TO 4 CHARACTER) * OPTIONAL

SEE FUNCTIONAL IDENTIFICATION MATRIX ABOVE

DIGITAL POINT NAMING CONVENTION

NOTE: ALL DEVICES INTERFACED WITH CDACS MUST FOLLOW THE DIGITAL POINT NAMING CONVENTION.

POINT NAMING CONVENTION

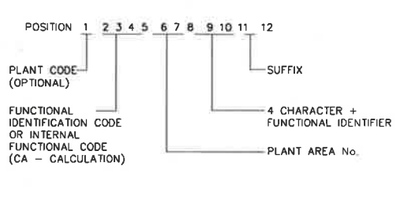

POINT IDENTIFICATION

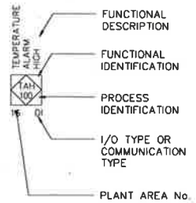

INSTRUMENT OPERATING FUNCTIONS

ANALYTICAL FUNCTIONS

Cl_2	CHLORINE
NH_3	AMMONIA
LEL	LOWER EXPLOSIVE LIMIT
COMB	COMBUSTIBLE GAS
H_2S	HYDROGEN SULFIDE
pH	pH
DO	DISSOLVED OXYGEN
O_2	OXYGEN
VIB	VIBRATION
SS	SUSPENDED SOLIDS (DENSITY)
CO	CARBON MONOXIDE
NO	NITRIC OXIDE
TSS	TOTAL SUSPENDED SOLIDS
NO_2	NITROGEN DIOXIDE
NO_3	NITRATE
PO_4	PHOSPHORUS

SWITCHING FUNCTIONS

HOA	HAND-OFF-AUTO SELECTION
S/S	START-STOP
OCA	OPEN-CLOSE-AUTO SELECTION
OSC	OPEN-STOP-CLOSE SELECTION
SEL	SELECTOR SWITCH
O/O	ON-OFF SELECTION
O/C	OPEN-CLOSE SELECTION
L/R	LOCAL-REMOTE SELECTION
P/R	PANEL-REMOTE SELECTION
ACK	ACKNOWLEDGE (ALARM)
FOR	FORWARD-OFF-REVERSE
LOR	LOCAL-OFF-REMOTE
ESD	EMERGENCY STOP DEVICE
OVR	INTERLOCK OVERRIDE SWITCH
FWD	FORWARD SELECTION
REV	REVERSE SELECTION

INSTRUMENT SIGNAL SYMBOLS

- INSTRUMENT SUPPLY, PROCESS TAPS
- PNEUMATIC SIGNAL
- ELECTRIC SIGNAL
- CAPILLARY TUBE OR FILLED SYSTEM
- ELECTROMAGNETIC OR SONIC SIGNAL (GUIDED)
- ELECTROMAGNETIC OR SONIC SIGNAL (UNGUIDED)
- SOFTWARE OR DATA LINK
- MECHANICAL LINK
- ETHERNET LINK

PRIMARY ELEMENT SYMBOLS

- ORIFICE PLATE
- VENTURI OR FLOW TUBE
- FLUME
- WEIR
- VARIABLE AREA FLOW INDICATOR (ROTAMETER)
- DIAPHRAGM SEAL
- IN-LINE PRESSURE SENSOR
- VORTEX FLOW SENSOR
- IN-LINE CAPACITANCE FLOW ELEMENT
- MAGNETIC FLOWMETER (M)
- PANAMETRICS FLOWMETER (P)
- SONIC FLOWMETER (DOPPLER OR TRANSIT TIME)
- POSITIVE DISPLACEMENT METER
- THERMAL MASS FLOW ELEMENT (T)
- ANNUBAR
- PITOT TUBE
- PROPELLER OR TURBINE METER
- 01 DIT — DENSITY METER
- CORIOLIS MASS FLOWMETER (C)
- FLOAT LEVEL ELEMENT
- DISPLACEMENT LEVEL ELEMENT
- BUBBLER LEVEL TUBE
- 01 LE — ULTRASONIC/MICROWAVE LEVEL ELEMENT
- 01 LE — RADIO FREQUENCY LEVEL ELEMENT
- 01 LS — VIBRATING TUNING FORK LEVEL SWITCH
- 01 TE — THERMAL SENSING RTD STRIP
- 01 LE — HYDROSTATIC PRESSURE LEVEL SENSOR

MISCELLANEOUS SYMBOLS

- HARDWIRED INTERLOCK - SEE CONTROL PHILOSOPHY FOR SOFT INTERLOCK
- R — RESET FOR LATCH-TYPE OPERATOR
- ANNUNCIATOR HORN
- GROUND
- INSTRUMENT LOOP SHIELD GROUND
- BOND
- A. DETAIL OR SECTION NUMBER
- A — SECT
- TARGET DRAWING
- SOURCE DRAWING (FIRST OCCURANCE)
- SEE DETAIL A — A. DETAIL OR SECTION NUMBER
- TARGET DRAWING
- SOURCE DRAWING (FIRST OCCURANCE)
- SP XX-YYY — SPECIALTY PRODUCT XX = AREA NUMBER YYY = TAG NUMBER
- WATER LEVEL
- MCC — MOTOR CONTROL CENTRE

LINE DESIGNATIONS

- ES — ELECTRIC POWER SUPPLY 120 VAC 60 HZ (UNLESS OTHERWISE NOTED)
- IA — INSTRUMENT QUALITY AIR SUPPLY

	PRIMARY LOCATION ***NORMALLY ACCESSIBLE TO OPERATOR	FIELD MOUNTED	AUXILIARY LOCATION ***NORMALLY ACCESSIBLE TO OPERATOR
DISCRETE INSTRUMENTS	1. * IP1**	2.	3.
SHARED DISPLAY SHARED CONTROL	4.	5.	6.
COMPUTER FUNCTION	7.	8.	9.
PROGRAMMABLE LOGIC CONTROL	10.	11.	12.

INSTRUMENT AND FUNCTION SYMBOLS

*SYMBOL SIZE MAY VARY ACCORDING TO THE USER'S NEEDS AND THE TYPE OF DOCUMENT. A SUGGESTED SQUARE AND CIRCLE SIZE FOR LARGER DIAGRAMS IS SHOWN ABOVE. CONSISTENCY IS RECOMMENDED.

**ABBREVIATION OF THE USER'S CHOICE SUCH AS IP1 (INSTRUMENT PANEL #1), IC2 (INSTRUMENT CONSOLE #2), CC3 (COMPUTER CONSOLE #3), ECT., MAY BE USED WHEN IT IS NECESSARY TO SPECIFY INSTRUMENT OR FUNCTION LOCATION.

***NORMALLY INACCESSIBLE OR BEHIND-THE-PANEL DEVICES OR FUNCTIONS MAY BE DEPICTED BY USING THE SAME SYMBOLS BUT WITH DASHED HORIZONTAL BARS, I.E



REV.	DESCRIPTION	DATE	REVISE REVISED	VERIFIE CHECKED	APPROUVE APPROVED
3	ISSUED FOR INFORMATION	2019-05-21	A.R.	F.V.	G.P.
2	ISSUED FOR APPROVAL B	2019-02-14	F.C.	F.V.	G.P.
1	ISSUED FOR APPROVAL	2018-09-14	A.R.	G.H.	N/A

DESSINATEUR/DESIGNER	A.R.	DATE 2018-09-14
VERIFICATEUR/CHECKER	G.H.	DATE 2018-09-14
INGÉNIEUR/ENGINEER		DATE

CLIENT: IQALUIT WWTP

VEOLIA WATER TECHNOLOGIES

TITRE / TITLE: WASTE WATER TREATMENT PLANT UPGRADE PROCESS AND INSTRUMENTATTION DIAGRAM LEGEND

ÉCHELLE / SCALE: N.T.S.

PROJET / PROJECT	DESSIN No /DRAWING No	INTERNE / INTERNAL	FEUILLET / SHEET	REV./REV
5000218036 - P1600		GEN	3/15	2

REFERENCE NUMBER
DWG. No.: P603

Ce document est la propriété de VEOLIA et ne peut être reproduit sans son autorisation écrite
This document is the property of VEOLIA and cannot be reproduced without its written authorization

ANSI B

May 23, 2019 8:55:36 - W:\2018\5000218036 Iqaluit WWTP (Feb)\02\15 - Detailed execution\Drawings\18 - P1\5000218036-P1600_REV 3.dwg - Rohit6986

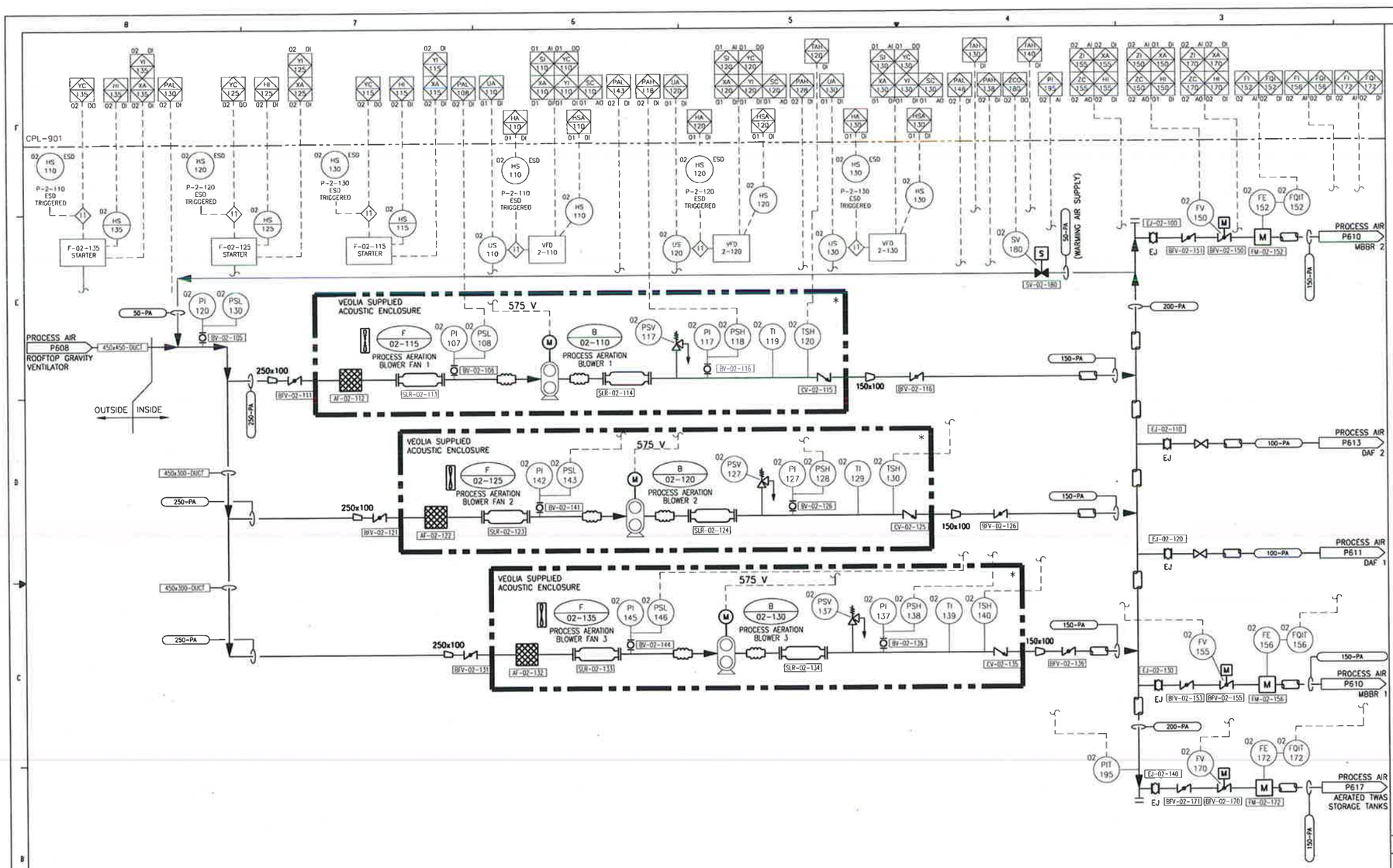

NOTES:

1. VENDOR SUPPLIED AERATION PACKAGE EQUIPMENT TO COME WITH PLANT PLC-A AS WELL AS ETHERNET CONNECTION ALLOWING COMMUNICATION LINK TO NETWORK SWITCH.
2. PROCESS AERATION FAN STARTER TO BE INTERLOCKED WITH RESPECTIVE PROCESS AERATION BLOWER ESD.
3. UNCLASSIFIED AREA.
4. * SUPPLIED BY VEOLIA.
5. SCOPE OF SUPPLY AND DESIGN BY VEOLIA IS LIMITED TO EQUIPMENT LOCATED IN BOXES WITH MIXED, DASHED LINE. THE REST OF THE P&I.D IS SHOWN FOR INFORMATION ONLY AND MAY NOT BE UP TO DATE.

F-02-115/F-02-125/F-02-135
PROCESS AERATION BLOWER FANS 1/2/3

B-02-110/B-02-120/B-02-130
PROCESS AERATION BLOWERS 1/2/3

TYPE:	POSITIVE DISPLACEMENT
CAPACITY:	460 SCFM @ 6.8 psi
MOTOR:	19.0 kW
	575 V

REFERENCE NUMBER
DWG. No.: P609

REV.	DESCRIPTION	DATE	REVISÉ / REVISED	VÉRIFIÉ / CHECKED	APPROUVÉ / APPROVED
3	ISSUED FOR INFORMATION	2019-05-21	A.R.	F.V.	G.P.
2	ISSUED FOR APPROVAL II	2019-02-14	F.C.	F.V.	G.P.
1	ISSUED FOR APPROVAL	2018-09-14	A.R.	G.H.	N/A

DESSINATEUR/DESIGNER A.R.	DATE 2018-09-14	CLIENT
VÉRIFICATEUR/CHECKER G.H.	DATE 2018-09-14	IQALUIT WWTP
INGÉNIEUR/ENGINEER	DATE	

VEOLIA WATER TECHNOLOGIES

TITRE / TITLE
WASTE WATER TREATMENT PLANT UPGRADE
PROCESS AND INSTRUMENTATTION DIAGRAM
AERATION BLOWERS

ÉCHELLE / SCALE N.T.S.

PROJET / PROJECT	DESSIN No /DRAWING No	INTERNE / INTERNAL	FEUILLET / SHEET	REV /REV
5000218036 – P1600		CEN	4/15	3

Ce document est la propriété de VÉOLIA et ne peut être reproduit sans son autorisation écrite
This document is the property of VEOLIA and cannot be reproduced without its written authorization

ANSI D

NOTES:

1. MBBR TANKS ARE EXISTING WITH SOME MODIFICATIONS, REFER TO STRUCTURAL DRAWINGS.
2. INTERNAL ELEMENTS OF MBBR TRAINS INCLUDING INSTRUMENTATION ARE VENDOR SUPPLIED.
3. UNCLASSIFIED AREA.
4. IMPORTANT TO AVOID RETURN OF FLOW FROM ONE MBBR TO THE OTHER.
5. * SUPPLIED BY VEOLIA.
6. SCOPE OF SUPPLY AND DESIGN BY VEOLIA IS LIMITED TO EQUIPMENT LOCATED IN BOXES WITH MIXED, DASHED LINE. THE REST OF THE P&I.D IS SHOWN FOR INFORMATION ONLY AND MAY NOT BE UP TO DATE.

CPL-901

PROCESS AIR
P609
PROCESS AERATION BLOWERS
150-PA

PRIMARY EFFLUENT/OVERFLOW
P607
PRIMARY FILTERS
350-PE

PE SAMPLE POINT

FV 211 — OPEN/CLOSE — KV-02-211 N.O.

FV 221 — OPEN/CLOSE — KV-02-221 N.O.

1A 1.5 SCFM@20PSI

150x100

100-PA

BFV-02-181
BFV-02-182
BFV-02-183
BFV-02-184
BFV-02-191
BFV-02-192
BFV-02-193
BFV-02-194

ø100

120V

AIT 211
AIT 212
AIT 221
AIT 222
AIT 907
AE 211
AE 212
AE 221
AE 222
AE 907
LSH 213
LSH 214
LSH 223
LSH 224

VEOLIA SUPPLIED *

T 02-210 MBBR TANK 1
T 02-220 MBBR TANK 2
x4

NOTE 1 AND 2

CELL 1-1
CELL 1-2
CELL 2-1
CELL 2-2

MBBR H2S GAS DETECTOR

MIXED LIQUOR
P611
DAF 1
350-ML

MIXED LIQUOR
P613
DAF 2
350-ML

KV-02-230
NOTE 4

350-PE

DAF DRAIN
P617
DAF 1
150-DR

DAF DRAIN
P617
DAF 2
150-DR

T-02-210/T-02-220
MBBR TANKS 1/2
VOLUME: 196 m³ x 2

REFERENCE NUMBER
DWG. No.: P610

REV.	DESCRIPTION	DATE	REVISÉ REVISED	VÉRIFIÉ CHECKED	APPROUVÉ APPROVED
3	ISSUED FOR INFORMATION	2019-05-21	A.R.	F.V.	G.P.
2	ISSUED FOR APPROVAL II	2019-02-14	F.C.	F.V.	G.P.
1	ISSUED FOR APPROVAL	2018-09-14	A.R.	G.H.	N/A

DESSINATEUR/DESIGNER	A.R.	DATE	2018-09-14
VÉRIFICATEUR/CHECKER	G.H.	DATE	2018-09-14
INGÉNIEUR/ENGINEER		DATE	

CLIENT: IQALUIT WWTP

VEOLIA WATER TECHNOLOGIES

TITRE / TITLE:
WASTE WATER TREATMENT PLANT UPGRADE
PROCESS AND INSTRUMENTATTION DIAGRAM
MOVING BED BIOFILM REACTORS

ÉCHELLE / SCALE: N.T.S.

PROJET / PROJECT	DESSIN No /DRAWING No	INTERNE / INTERNAL	FEUILLET / SHEET	REV./REV
5000218036	P1600	CEN	5/15	3

Ce document est la propriété de VEOLIA et ne peut être reproduit sans son autorisation écrite
This document is the property of VEOLIA and cannot be reproduced without its written authorization

ANSI D

May 23, 2019 - 8:55:49 - W:\2018\5000218036 Iqaluit WWTP (Tender)\02-Tender execution_Drawings\B- Pid\5000218036-P1600.dgn 3 days - Admin

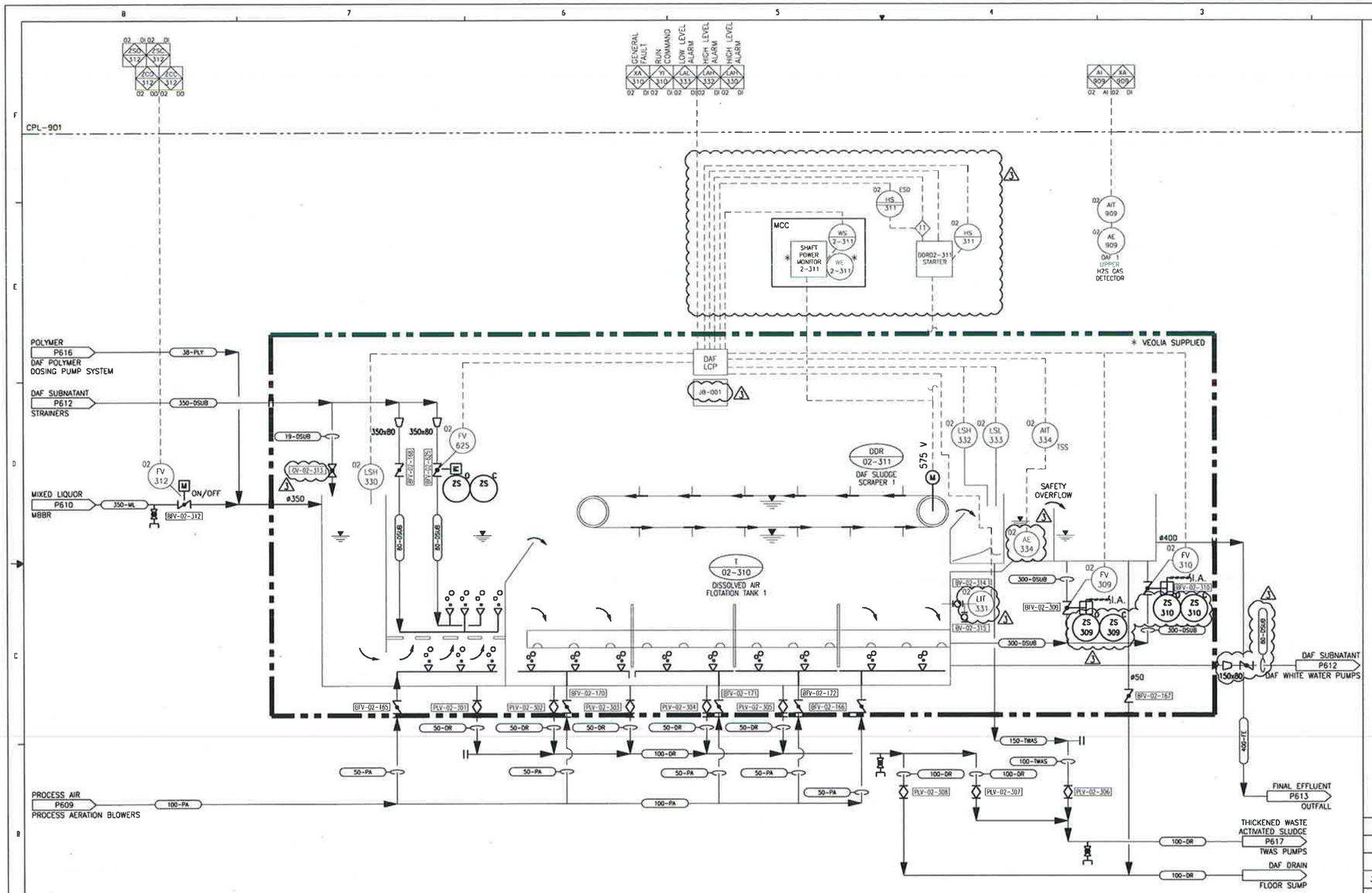

NOTES:

1. UNCLASSIFIED AREA.
2. * SUPPLIED BY VEOLIA.
3. SCOPE OF SUPPLY AND DESIGN BY VEOLIA IS LIMITED TO EQUIPMENT LOCATED IN BOXES WITH MIXED, DASHED LINE. THE REST OF THE P&ID IS SHOWN FOR INFORMATION ONLY AND MAY NOT BE UP TO DATE.

T-02-310
DISSOLVED AIR FLOTATION TANK 1
CAPACITY: 60.4 L/s
PAINTED STEEL

DDR-02-311
DAF SLUDGE SCRAPER 1
MOTOR: 0.18 kW (0.25 HP)
575 V/3PH/60Hz

REV. REV.	DESCRIPTION	DATE	REVISÉ REVISED	VÉRIFIÉ CHECKED	APPROUVÉ APPROVED
3	ISSUED FOR INFORMATION	2019-05-21	A.R.	F.V.	G.P.
2	ISSUED FOR APPROVAL [1]	2019-02-14	F.C.	F.V.	G.P.
1	ISSUED FOR APPROVAL	2018-09-14	A.R.	G.H.	N/A

DESSINATEUR/DESIGNER	DATE
A.R.	2018-09-14
VÉRIFICATEUR/CHECKER	DATE
G.H.	2018-09-14
INGÉNIEUR/ENGINEER	DATE

CLIENT: IQALUIT WWTP

VEOLIA WATER TECHNOLOGIES

TITRE / TITLE: WASTE WATER TREATMENT PLANT UPGRADE
PROCESS AND INSTRUMENTATTION DIAGRAM
DISSOLVED AIR FLOTATION 1

ÉCHELLE / SCALE: N.T.S.

PROJET / PROJECT	DESSIN No. /DRAWING No.	INTERNE / INTERNAL	FEUILLET / SHEET	REV./REV
5000218036 - PI600		GEN	6/15	3

REFERENCE NUMBER
DWG. No.: P611

Ce document est la propriété de VEOLIA et ne peut être reproduit sans son autorisation écrite
This document is the property of VEOLIA and cannot be reproduced without its written authorization

REF: ANSI D

May 22, 2019 - 8:55:54 - W:\2018\5000218036 Iqaluit WWTP (5000218036)\15- Drawing execution\Drawings\P- PI\5000218036-P600.DGN - Jay - REMOVED

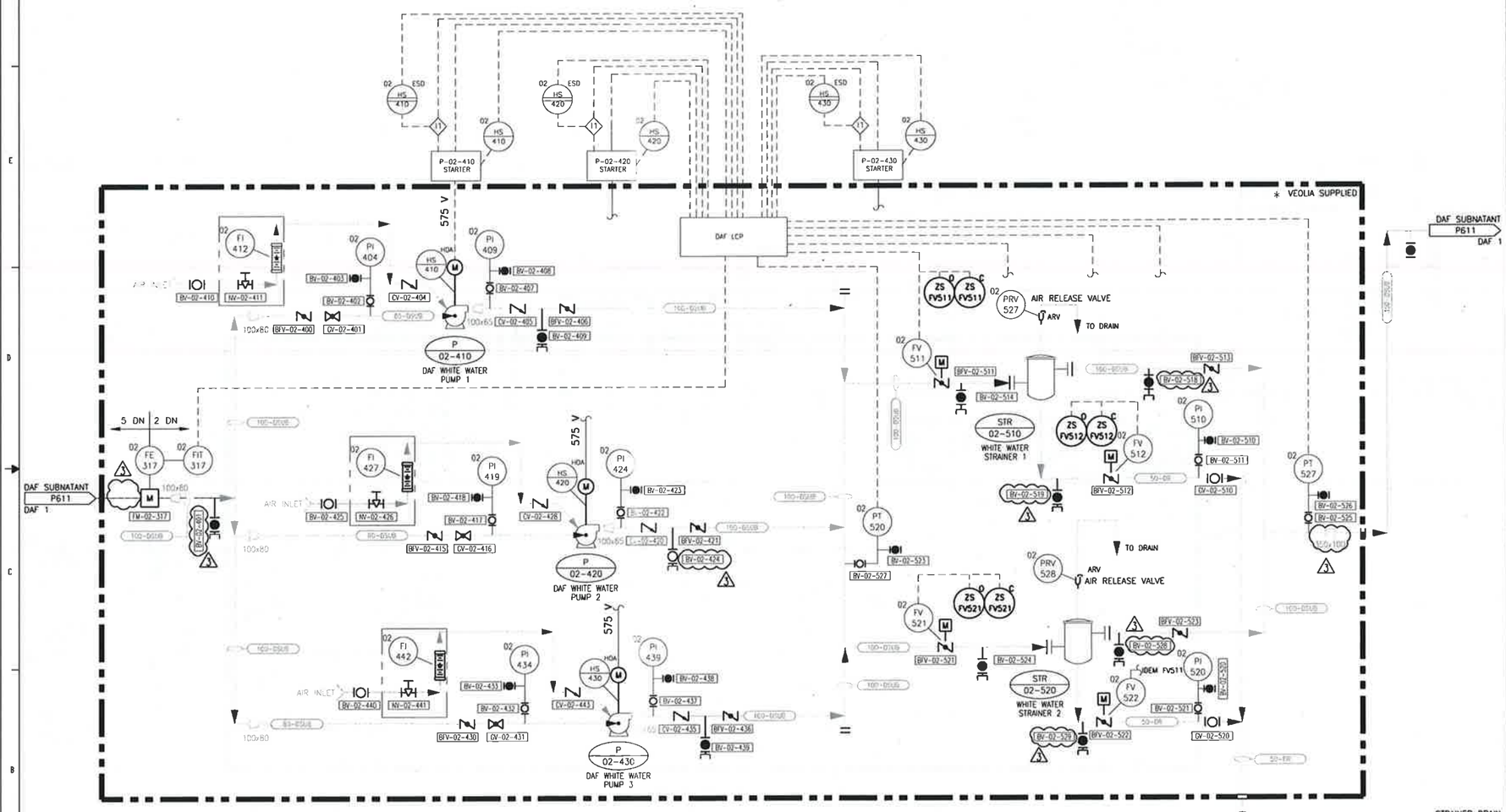

P-02-410/P-02-420/P-02-430
DAF WHITE WATER PUMPS 1/2/3
TYPE: CENTRFUGAL
CAPACITY: 5.5 L/s (20m3/h) @ 108psi.
POWER: 20 HP (15kW)
575 V / 3PH

STR-02-510/P-02-520
WHITE WATER STRAINERS 1/2
TYPE: BASKET
OPENING: 1.0 mm

NOTES:

1. UNCLASSIFIED AREA.
2. ONLY THE VALVE, INSTRUMENTS AND PUMPS ARE SUPPLIESD BY VEOLIA.
3. ALL PIPING IS BY THE MECHANICAL CONTRACTOR.
4. PIPING TO BE FABRICATED ACCORDING TO ASME B31.1
(DESIGN PRESSURE =160 psig, Temp.= 5 TO 40°C, FLUID WATER AND AIR).
5. SCOPE OF SUPPLY AND DESIGN BY VEOLIA IS LIMITED TO EQUIPMENT LOCATED IN BOXES WITH MIXED, DASHED LINE. THE REST OF THE P&I.D IS SHOWN FOR INFORMATION ONLY AND MAY NOT BE UP TO DATE.

REV. REV.	DESCRIPTION	DATE	REVISE REVISED	VERIFIE CHECKED	APPROUVE APPROVED
3	ISSUED FOR INFORMATION	2019-05-21	A.R.	F.V.	G.P.
2	ISSUED FOR APPROVAL II	2019-02-14	F.C.	F.V.	G.P.
1	ISSUED FOR APPROVAL	2018-09-14	A.R.	G.H.	N/A

VEOLIA WATER TECHNOLOGIES

DESSINATEUR/DESIGNER A.R.	DATE 2018-09-14	CLIENT IQALUIT WWTP
VÉRIFICATEUR/CHECKER G.H.	DATE 2018-09-14	
INGÉNIEUR/ENGINEER	DATE	

TITRE / TITLE
WASTE WATER TREATMENT PLANT UPGRADE
PROCESS AND INSTRUMENTATTION DIAGRAM
DISSOLVED AIR FLOTATION 1 – WHITEWATER PUMPPING

ÉCHELLE / SCALE N.T.S.

PROJET / PROJECT	DESSIN No /DRAWING No	INTERNE / INTERNAL	FEUILLET / SHEET	REV /REV
5000218036 – PI600		GEN	7/15	3

REFERENCE NUMBER
DWG. No.: P612

Ce document est la propriété de VEOLIA et ne peut être reproduit sans son autorisation écrite
This document is the property of VEOLIA and cannot be reproduced without its written authorization

REF:
ANSI D

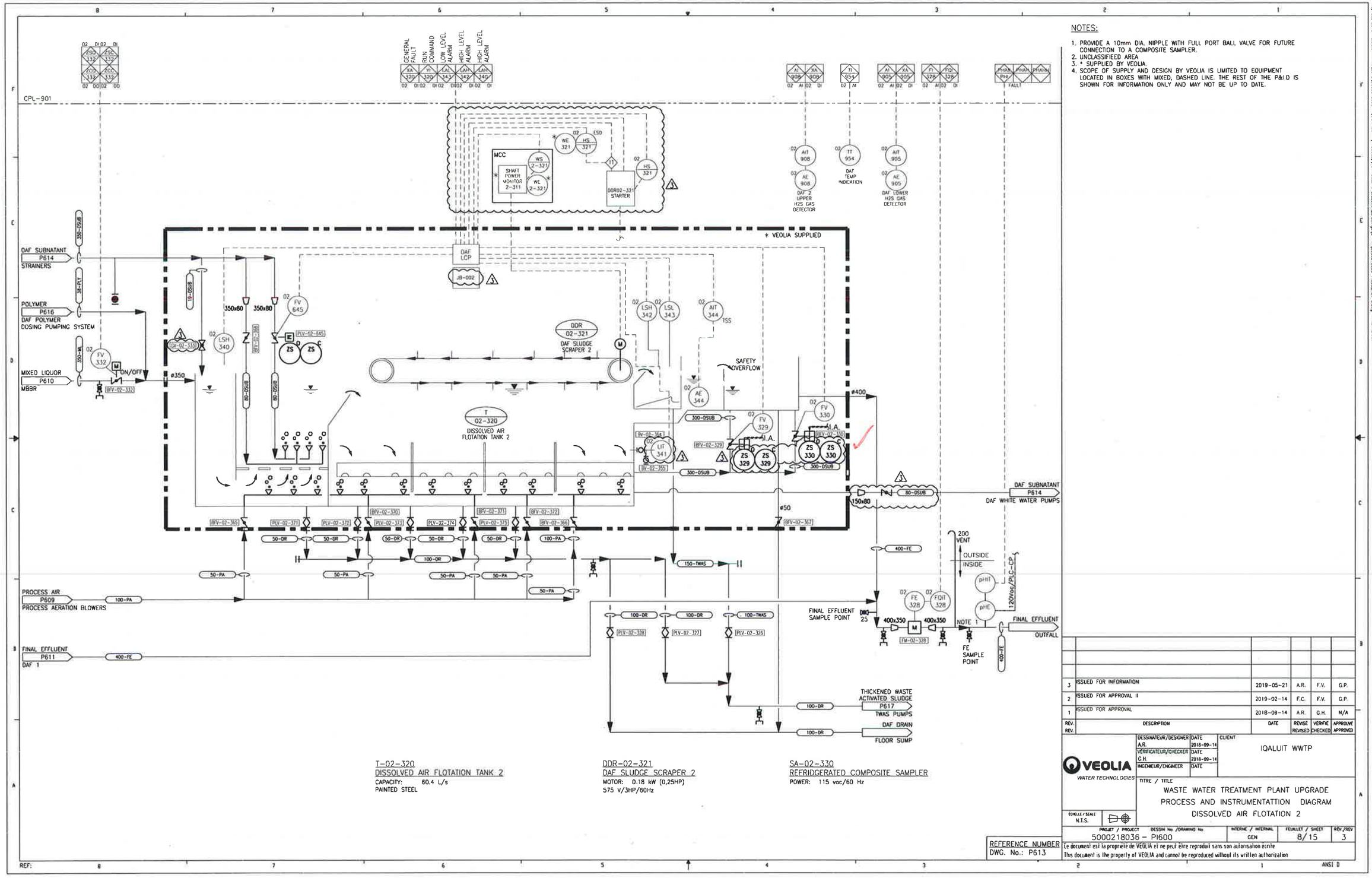
NOTES:
1. PROVIDE A 10mm DIA. NIPPLE WITH FULL PORT BALL VALVE FOR FUTURE CONNECTION TO A COMPOSITE SAMPLER.
2. UNCLASSIFIED AREA
3. * SUPPLIED BY VEOLIA.
4. SCOPE OF SUPPLY AND DESIGN BY VEOLIA IS LIMITED TO EQUIPMENT LOCATED IN BOXES WITH MIXED, DASHED LINE. THE REST OF THE P&ID IS SHOWN FOR INFORMATION ONLY AND MAY NOT BE UP TO DATE.
CPL-901
* VEOLIA SUPPLIED
MCC
SHAFT POWER MONITOR 2-311
DDR02-321 STARTER
DAF LCP
JB-002
DAF SUBNATANT P614 STRAINERS
POLYMER P616
DAF POLYMER DOSING PUMPING SYSTEM
MIXED LIQUOR P610 MBBR
ON/OFF
DDR 02-321
DAF SLUDGE SCRAPER 2
T 02-320
DISSOLVED AIR FLOTATION TANK 2
SAFETY OVERFLOW
DAF SUBNATANT P614
DAF WHITE WATER PUMPS
PROCESS AIR P609
PROCESS AERATION BLOWERS
FINAL EFFLUENT P611
DAF 1
FINAL EFFLUENT SAMPLE POINT
FE SAMPLE POINT
FINAL EFFLUENT OUTFALL
120Vac/PLC-CP
200 VENT
OUTSIDE
INSIDE
THICKENED WASTE ACTIVATED SLUDGE P617
TWAS PUMPS
DAF DRAIN FLOOR SUMP
DAF 3 UPPER H2S GAS DETECTOR
DAF TEMP INDICATION
DAF LOWER H2S GAS DETECTOR
GENERAL FAULT
RUN COMMAND
LOW LEVEL ALARM
HIGH LEVEL ALARM
HIGH LEVEL ALARM
FAULT
T-02-320
DISSOLVED AIR FLOTATION TANK 2
CAPACITY: 60.4 L/s
PAINTED STEEL
DDR-02-321
DAF SLUDGE SCRAPER 2
MOTOR: 0.18 kW (0,25HP)
575 V/3HP/60Hz
SA-02-330
REFRIDGERATED COMPOSITE SAMPLER
POWER: 115 voc/60 Hz
REFERENCE NUMBER
DWG. No.: P613
3 ISSUED FOR INFORMATION 2019-05-21 A.R. F.V. G.P.
2 ISSUED FOR APPROVAL II 2019-02-14 F.C. F.V. G.P.
1 ISSUED FOR APPROVAL 2018-08-14 A.R. G.H. N/A
REV. DESCRIPTION DATE REVISE/REVISED VERIFIE/CHECKED APPROUVE/APPROVED
VEOLIA WATER TECHNOLOGIES
DESSINATEUR/DESIGNER A.R. DATE 2018-09-14
VERIFICATEUR/CHECKER G.H. DATE 2018-09-14
INGENIEUR/ENGINEER DATE
CLIENT
IQALUIT WWTP
TITRE / TITLE
WASTE WATER TREATMENT PLANT UPGRADE
PROCESS AND INSTRUMENTATTION DIAGRAM
DISSOLVED AIR FLOTATION 2
ECHELLE / SCALE N.T.S.
PROJET / PROJECT 5000218036 – P1600
DESSIN No. /DRAWING No GEN
INTERNE / INTERNAL
FEUILLET / SHEET 8/15
REV./REV 3
Le document est la propriété de VEOLIA et ne peut être reproduit sans son autorisation écrite
This document is the property of VEOLIA and cannot be reproduced without its written authorization
ANSI D

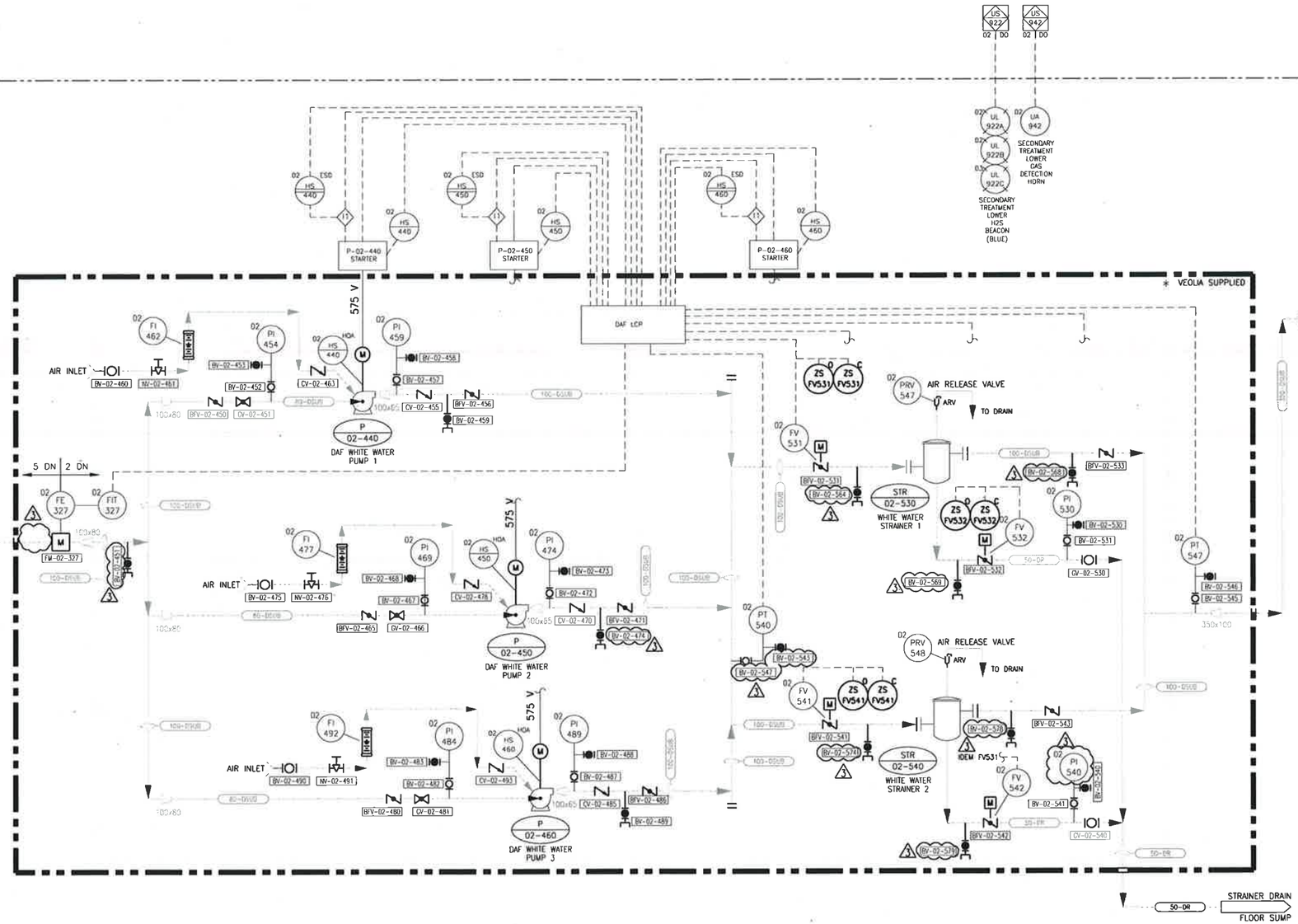

NOTES:

1. UNCLASSIFIED AREA.
2. ONLY THE VALVE, INSTRUMENTS AND PUMPS ARE SUPPLIESD BY VEOLIA.
3. ALL PIPING IS BY THE MECHANICAL CONTRACTOR.
4. PIPING TO BE FABRICATED ACCORDING TO ASME B31.1
   (DESING PRESSURE = 160 psig, Temp.= 5 TO 40°C, FLUID WATER AND AIR).
5. SCOPE OF SUPPLY AND DESIGN BY VEOLIA IS LIMITED TO EQUIPMENT LOCATED IN BOXES WITH MIXED, DASHED LINE. THE REST OF THE P&I.D IS SHOWN FOR INFORMATION ONLY AND MAY NOT BE UP TO DATE.

P-02-440/P-02-450/P-02-460
DAF WHITE WATER PUMPS 1/2/3
TYPE: CENTRFUGAL
CAPACITY: 5.5 L/s (20m3/h) @ (108psi.) 3
POWER: 20 HP (15 kW)
575 V / 3PH

STR-02-530/P-02-540
WHITE WATER STRAINERS 1/2
TYPE: BASKET
OPENING: 1.0 mm

REV.	DESCRIPTION	DATE	REVISE / REVISED	VÉRIFIÉ / CHECKED	APPROUVÉ / APPROVED
3	ISSUED FOR INFORMATION	2019-05-21	A.R.	F.V.	G.P.
2	ISSUED FOR APPROVAL II	2019-02-14	F.C.	F.V.	G.P.
1	ISSUED FOR APPROVAL	2018-09-14	A.R.	G.H.	N/A

VEOLIA WATER TECHNOLOGIES

DESSINATEUR/DESIGNER	DATE
A.R.	2018-09-14
VÉRIFICATEUR/CHECKER	DATE
G.H.	2018-09-14
INGÉNIEUR/ENGINEER	DATE

CLIENT: IQALUIT WWTP

TITRE / TITLE:
WASTE WATER TREATMENT PLANT UPGRADE
PROCESS AND INSTRUMENTATTION DIAGRAM
DISSOLVED AIR FLOTATION 2– WHITEWATER PUMPING

ÉCHELLE / SCALE: N.T.S.

PROJET / PROJECT	DESSIN No /DRAWING No	INTERNE / INTERNAL	FEUILLET / SHEET	REV./REV
5000218036 – PI600		GEN	9/15	3

REFERENCE NUMBER
DWG. No.: P614

Ce document est la propriété de VEOLIA et ne peut être reproduit sans son autorisation écrite.
This document is the property of VEOLIA and cannot be reproduced without its written authorization.

REF: ANSI D

May 21, 2019 8:56:09 – W:\2018\5000218036 Iqaluit WWTP (TM2560)\1-5- Dessins execution_Ecrevisse\[R- PI\5000218036-PI600_REV 3.dwg – ROMIERM

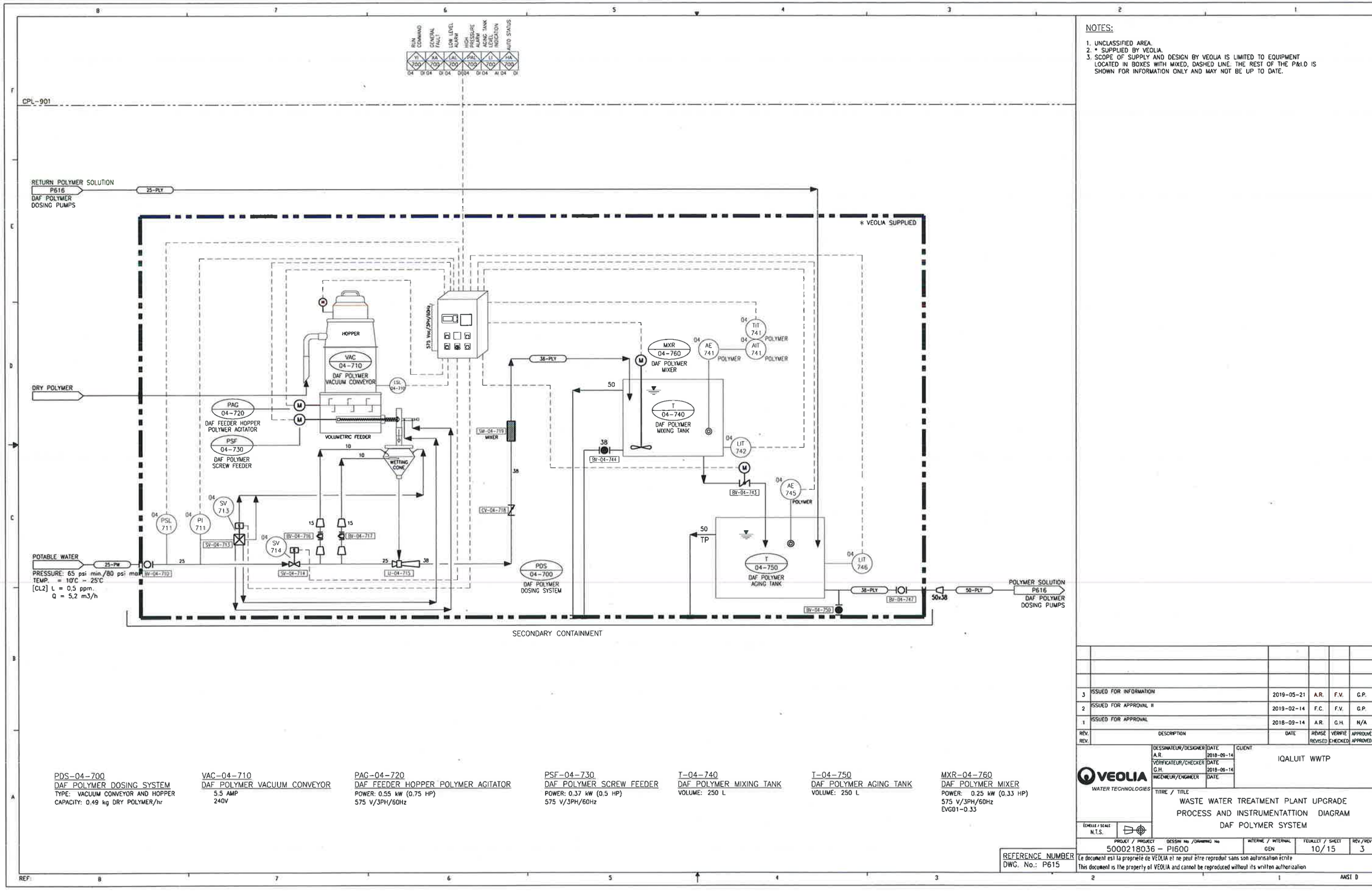
NOTES:
1. UNCLASSIFIED AREA.
2. * SUPPLIED BY VEOLIA.
3. SCOPE OF SUPPLY AND DESIGN BY VEOLIA IS LIMITED TO EQUIPMENT LOCATED IN BOXES WITH MIXED, DASHED LINE. THE REST OF THE P&ID IS SHOWN FOR INFORMATION ONLY AND MAY NOT BE UP TO DATE.
CPL-901
RUN COMMAND
GENERAL FAULT
LOW LEVEL ALARM
HIGH PRESSURE ALARM
ADD TANK LEVEL INDICATION
AUTO STATUS
* VEOLIA SUPPLIED
RETURN POLYMER SOLUTION
P616
DAF POLYMER DOSING PUMPS
25-PLY
DRY POLYMER
HOPPER
VAC 04-710
DAF POLYMER VACUUM CONVEYOR
LSL 04-710
575 Vac/3PH/60Hz
PAG 04-720
DAF FEEDER HOPPER POLYMER AGITATOR
PSF 04-730
DAF POLYMER SCREW FEEDER
VOLUMETRIC FEEDER
WETTING CONE
SM-04-719
MIXER
38-PLY
MXR 04-760
DAF POLYMER MIXER
TIT 741
AE 741
AIT 741
POLYMER
T 04-740
DAF POLYMER MIXING TANK
BV-04-744
LIT 742
BV-04-743
AE 745
CV-04-718
T 04-750
DAF POLYMER AGING TANK
LIT 745
BV-04-750
PDS 04-700
DAF POLYMER DOSING SYSTEM
PSL 711
PI 711
SV 713
SV 714
SV-04-713
BV-04-716
BV-04-717
SV-04-714
POTABLE WATER
25-PW
PRESSURE: 65 psi min./80 psi max.
TEMP. = 10°C - 25°C
[CL2] L = 0.5 ppm.
Q = 5,2 m3/h
BV-04-710
U-04-715
38-PLY
BV-04-747
50x38
50-PLY
POLYMER SOLUTION
P616
DAF POLYMER DOSING PUMPS
SECONDARY CONTAINMENT
PDS-04-700
DAF POLYMER DOSING SYSTEM
TYPE: VACUUM CONVEYOR AND HOPPER
CAPACITY: 0.49 kg DRY POLYMER/hr
VAC-04-710
DAF POLYMER VACUUM CONVEYOR
5.5 AMP
240V
PAG-04-720
DAF FEEDER HOPPER POLYMER AGITATOR
POWER: 0.55 kW (0.75 HP)
575 V/3PH/60Hz
PSF-04-730
DAF POLYMER SCREW FEEDER
POWER: 0.37 kW (0.5 HP)
575 V/3PH/60Hz
T-04-740
DAF POLYMER MIXING TANK
VOLUME: 250 L
T-04-750
DAF POLYMER AGING TANK
VOLUME: 250 L
MXR-04-760
DAF POLYMER MIXER
POWER: 0.25 kW (0.33 HP)
575 V/3PH/60Hz
EVGD1-0.33
3 ISSUED FOR INFORMATION 2019-05-21 A.R. F.V. G.P.
2 ISSUED FOR APPROVAL II 2019-02-14 F.C. F.V. G.P.
1 ISSUED FOR APPROVAL 2018-09-14 A.R. G.H. N/A
REV. REV. DESCRIPTION DATE REVISÉ REVISED VÉRIFIÉ CHECKED APPROUVÉ APPROVED
DESSINATEUR/DESIGNER A.R. 2018-09-14
VÉRIFICATEUR/CHECKER G.H. 2018-09-14
INGÉNIEUR/ENGINEER DATE
CLIENT
IQALUIT WWTP
VEOLIA
WATER TECHNOLOGIES
TITRE / TITLE
WASTE WATER TREATMENT PLANT UPGRADE
PROCESS AND INSTRUMENTATTION DIAGRAM
DAF POLYMER SYSTEM
ÉCHELLE / SCALE N.T.S.
PROJET / PROJECT 5000218036 - P1600
DESSIN No /DRAWING No GEN
INTERNE / INTERNAL 10/15
FEUILLET / SHEET
REV./REV 3
REFERENCE NUMBER
DWG. No.: P615
Ce document est la propriété de VEOLIA et ne peut être reproduit sans son autorisation écrite
This document is the property of VEOLIA and cannot be reproduced without its written authorization
ANSI D

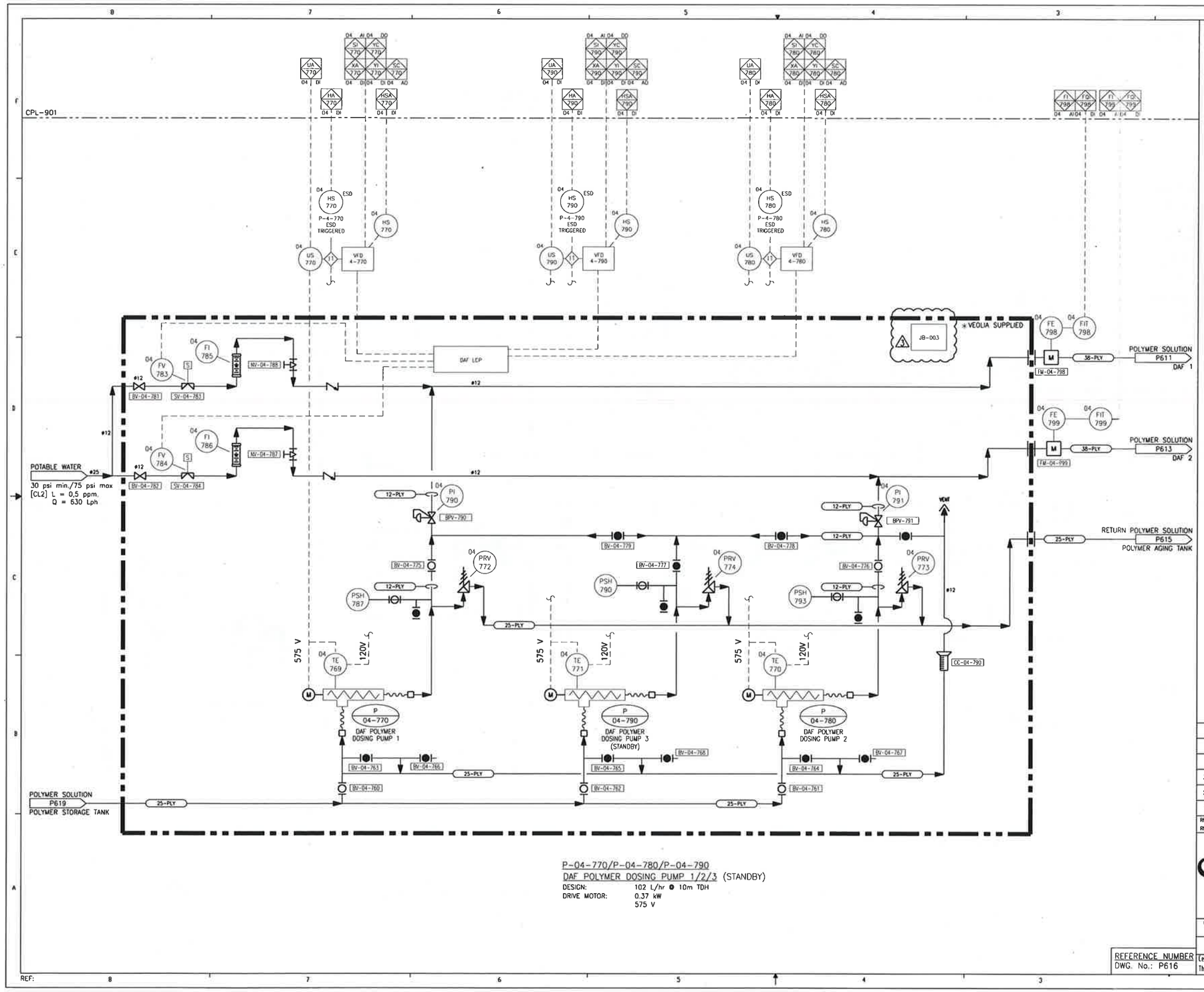

P-04-770/P-04-780/P-04-790
DAF POLYMER DOSING PUMP 1/2/3 (STANDBY)

DESIGN: 102 L/hr @ 10m TDH
DRIVE MOTOR: 0.37 kW
575 V

NOTES:

1. UNCLASSIFIED AREA.
2. * SUPPLIED BY VEOLIA.
3. SCOPE OF SUPPLY AND DESIGN BY VEOLIA IS LIMITED TO EQUIPMENT LOCATED IN BOXES WITH MIXED, DASHED LINE. THE REST OF THE P&I.D IS SHOWN FOR INFORMATION ONLY AND MAY NOT BE UP TO DATE.

REV.	DESCRIPTION	DATE	REVISÉ REVISED	VÉRIFIÉ CHECKED	APPROUVÉ APPROVED
3	ISSUED FOR INFORMATION	2019-05-21	A.R.	F.V.	G.P.
2	ISSUED FOR APPROVAL II	2019-02-14	F.C.	F.V.	G.P.
1	ISSUED FOR APPROVAL	2018-09-14	A.R.	G.H.	N/A

DESSINATEUR/DESIGNER: A.R. DATE: 2018-09-14
VÉRIFICATEUR/CHECKER: G.H. DATE: 2018-09-14
INGÉNIEUR/ENGINEER: DATE:

CLIENT: IQALUIT WWTP

VEOLIA WATER TECHNOLOGIES

TITRE / TITLE:
WASTE WATER TREATMENT PLANT UPGRADE
PROCESS AND INSTRUMENTATTION DIAGRAM
DAF POLYMER DOSING PUMP SYSTEM

ÉCHELLE / SCALE: N.T.S.

PROJET / PROJECT	DESSIN No /DRAWING No	INTERNE / INTERNAL	FEUILLET / SHEET	REV./REV
5000218036 – PI600		GEN	11/15	3

REFERENCE NUMBER
DWG. No.: P616

Le document est la propriété de VEOLIA et ne peut être reproduit sans son autorisation écrite
This document is the property of VEOLIA and cannot be reproduced without its written authorization

ANSI D

May 23, 2019 8:56:19 - W:\2018\5000218036 Iqaluit WWTP (Tender)\15- Drawings\A- PI\5000218036-PI600.dgn J.arp - ROMERIN

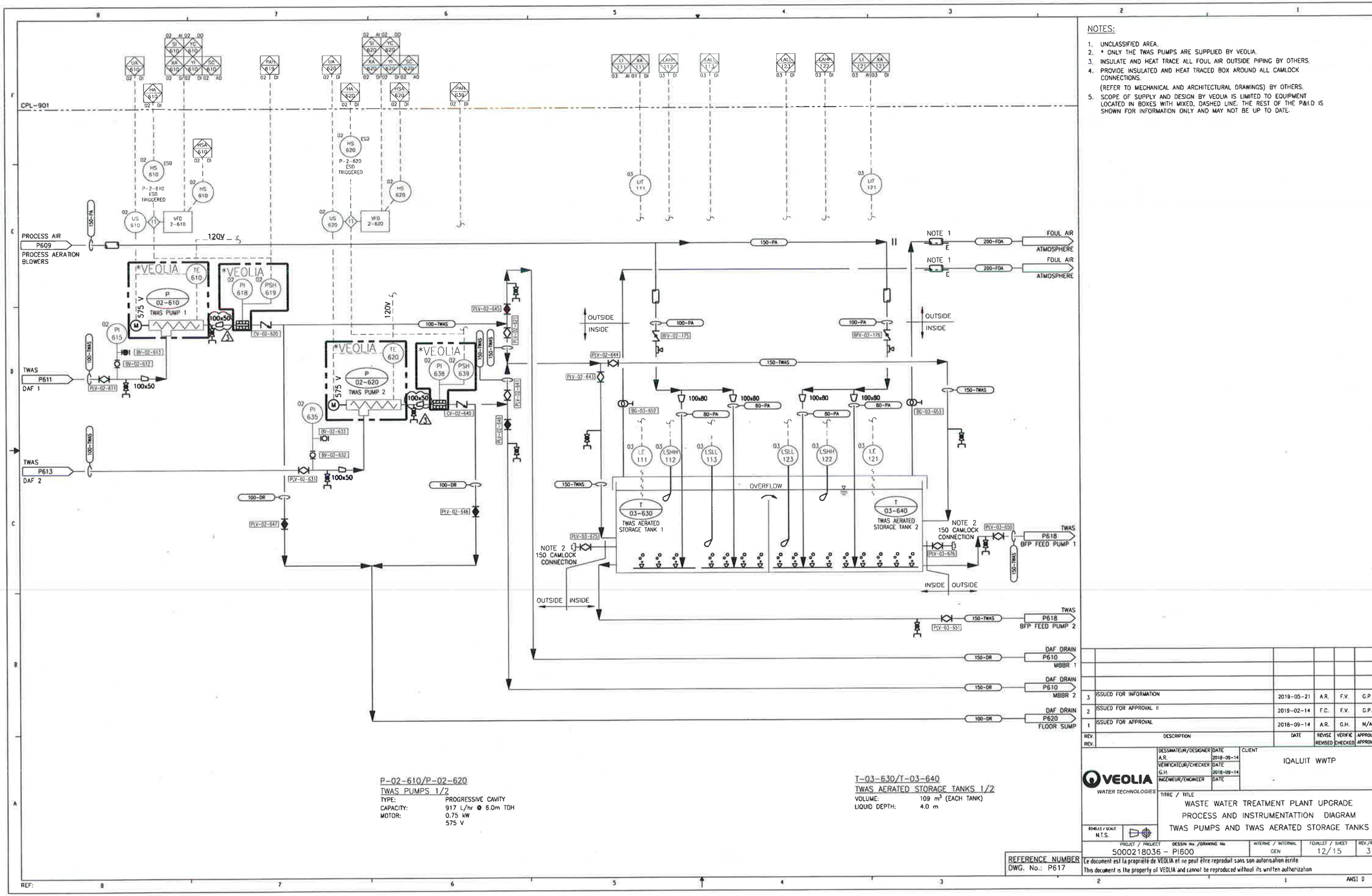

NOTES:

1. UNCLASSIFIED AREA.
2. * ONLY THE TWAS PUMPS ARE SUPPLIED BY VEOLIA.
3. INSULATE AND HEAT TRACE ALL FOUL AIR OUTSIDE PIPING BY OTHERS.
4. PROVIDE INSULATED AND HEAT TRACED BOX AROUND ALL CAMLOCK CONNECTIONS.
   (REFER TO MECHANICAL AND ARCHITECTURAL DRAWINGS) BY OTHERS.
5. SCOPE OF SUPPLY AND DESIGN BY VEOLIA IS LIMITED TO EQUIPMENT LOCATED IN BOXES WITH MIXED, DASHED LINE. THE REST OF THE P&I.D IS SHOWN FOR INFORMATION ONLY AND MAY NOT BE UP TO DATE.

P-02-610/P-02-620
TWAS PUMPS 1/2

TYPE:	PROGRESSIVE CAVITY
CAPACITY:	917 L/hr @ 5.0m TDH
MOTOR:	0.75 kW
	575 V

T-03-630/T-03-640
TWAS AERATED STORAGE TANKS 1/2

VOLUME:	109 m^3 (EACH TANK)
LIQUID DEPTH:	4.0 m

REFERENCE NUMBER
DWG. No.: P617

REV.	DESCRIPTION	DATE	REVISE/REVISED	VERIFIE/CHECKED	APPROUVE/APPROVED
3	ISSUED FOR INFORMATION	2019-05-21	A.R.	F.V.	G.P.
2	ISSUED FOR APPROVAL II	2019-02-14	F.C.	F.V.	G.P.
1	ISSUED FOR APPROVAL	2018-09-14	A.R.	G.H.	N/A

DESSINATEUR/DESIGNER	A.R.	2018-09-14
VERIFICATEUR/CHECKER	G.H.	2018-09-14
INGENIEUR/ENGINEER		DATE

CLIENT: IQALUIT WWTP

VEOLIA WATER TECHNOLOGIES

TITRE / TITLE
WASTE WATER TREATMENT PLANT UPGRADE
PROCESS AND INSTRUMENTATTION DIAGRAM
TWAS PUMPS AND TWAS AERATED STORAGE TANKS

ECHELLE / SCALE N.T.S.

PROJET / PROJECT	DESSIN No /DRAWING No	INTERNE / INTERNAL	FEUILLET / SHEET	REV/REV
5000218036 – PI600		GEN	12/15	3

Le document est la propriété de VEOLIA et ne peut être reproduit sans son autorisation écrite
This document is the property of VEOLIA and cannot be reproduced without its written authorization

ANSI D

May 21, 2019 8:52:4 - W:\2018\5000218036\Work area\Dwg\5000218036-P1600_REV 3.dwg - ROMEYERA

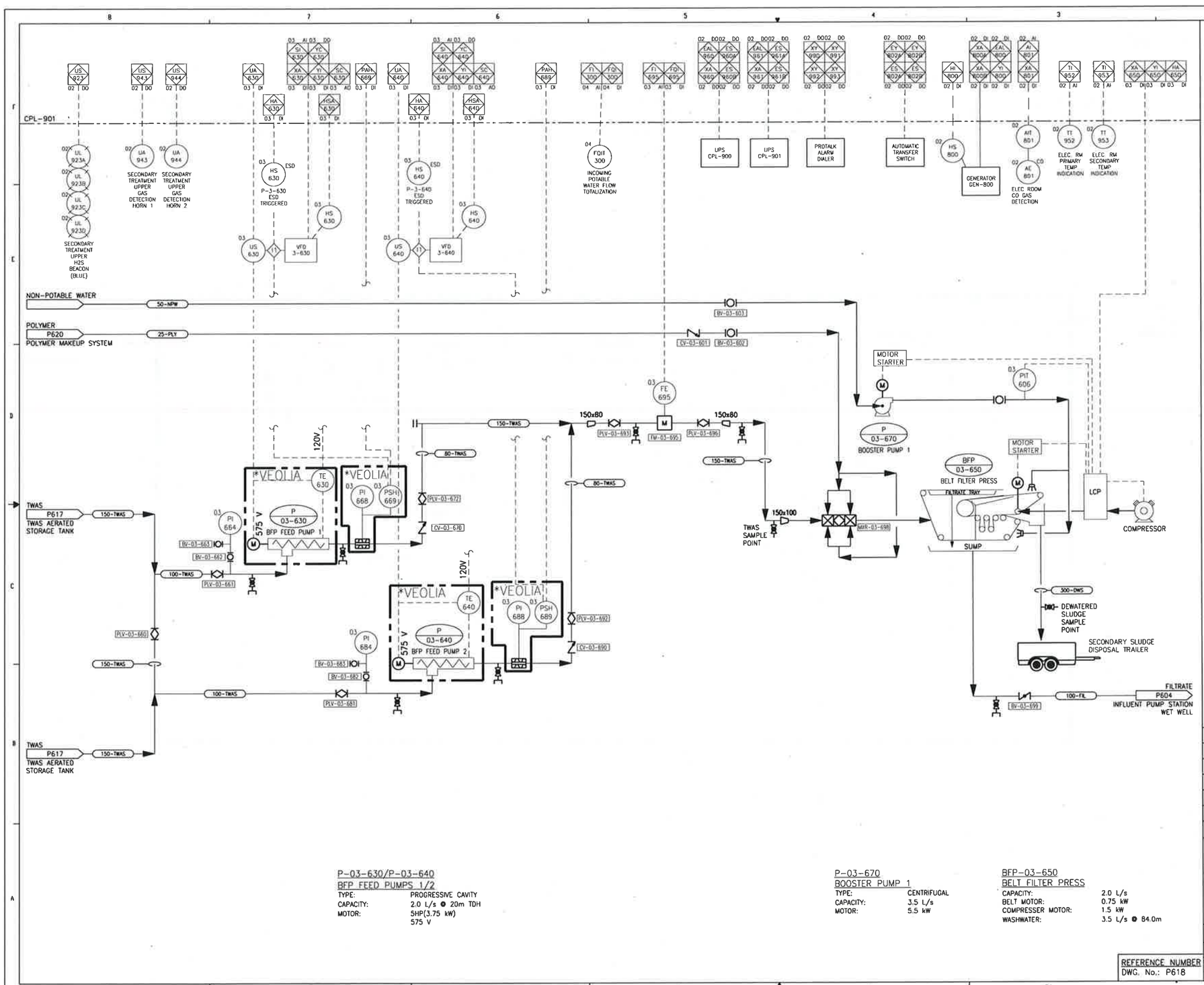

NOTES:

1. UNCLASSIFIED AREA.
2. * ONLY THE BFP PUMPS ARE SUPPLIED BY VEOLIA.
3. SCOPE OF SUPPLY AND DESIGN BY VEOLIA IS LIMITED TO EQUIPMENT LOCATED IN BOXES WITH MIXED, DASHED LINE. THE REST OF THE P&I.D IS SHOWN FOR INFORMATION ONLY AND MAY NOT BE UP TO DATE.

P-03-630/P-03-640
BFP FEED PUMPS 1/2

TYPE:	PROGRESSIVE CAVITY
CAPACITY:	2.0 L/s @ 20m TDH
MOTOR:	5HP(3.75 kW) 575 V

P-03-670
BOOSTER PUMP 1

TYPE:	CENTRIFUGAL
CAPACITY:	3.5 L/s
MOTOR:	5.5 kW

BFP-03-650
BELT FILTER PRESS

CAPACITY:	2.0 L/s
BELT MOTOR:	0.75 kW
COMPRESSER MOTOR:	1.5 kW
WASHWATER:	3.5 L/s @ 84.0m

REFERENCE NUMBER
DWG. No.: P618

REV.	DESCRIPTION	DATE	REVISÉ REVISED	VÉRIFIÉ CHECKED	APPROUVÉ APPROVED
3	ISSUED FOR INFORMATION	2019-05-21	A.R.	F.V.	G.P.
2	ISSUED FOR APPROVAL II	2019-02-14	F.C.	F.V.	G.P.
1	ISSUED FOR APPROVAL	2018-09-14	A.R.	G.H.	N/A

VEOLIA WATER TECHNOLOGIES

DESSINATEUR/DESIGNER	A.R.	DATE 2018-09-14
VÉRIFICATEUR/CHECKER	G.H.	DATE 2018-09-14
INGÉNIEUR/ENGINEER		DATE

CLIENT: IQALUIT WWTP

TITRE / TITLE: WASTE WATER TREATMENT PLANT UPGRADE
PROCESS AND INSTRUMENTATTION DIAGRAM
BEP PUMPS AND BELT FILTER PRESS

ÉCHELLE / SCALE: N.T.S.

PROJET / PROJECT	DESSIN No /DRAWING No	INTERNE / INTERNAL	FEUILLET / SHEET	REV./REV
5000218036 – PI600		GEN	13/15	3

Ce document est la propriété de VEOLIA et ne peut être reproduit sans son autorisation écrite
This document is the property of VEOLIA and cannot be reproduced without its written authorization

ANSI D

May 23, 2019 8:36:28 – W:\5018\5000218036 Iqaluit WWTP (DM26902)\13- Drawings execution_Drawings\13- P\5000218036-P600_REV 3.dwg – RDHOSKIN

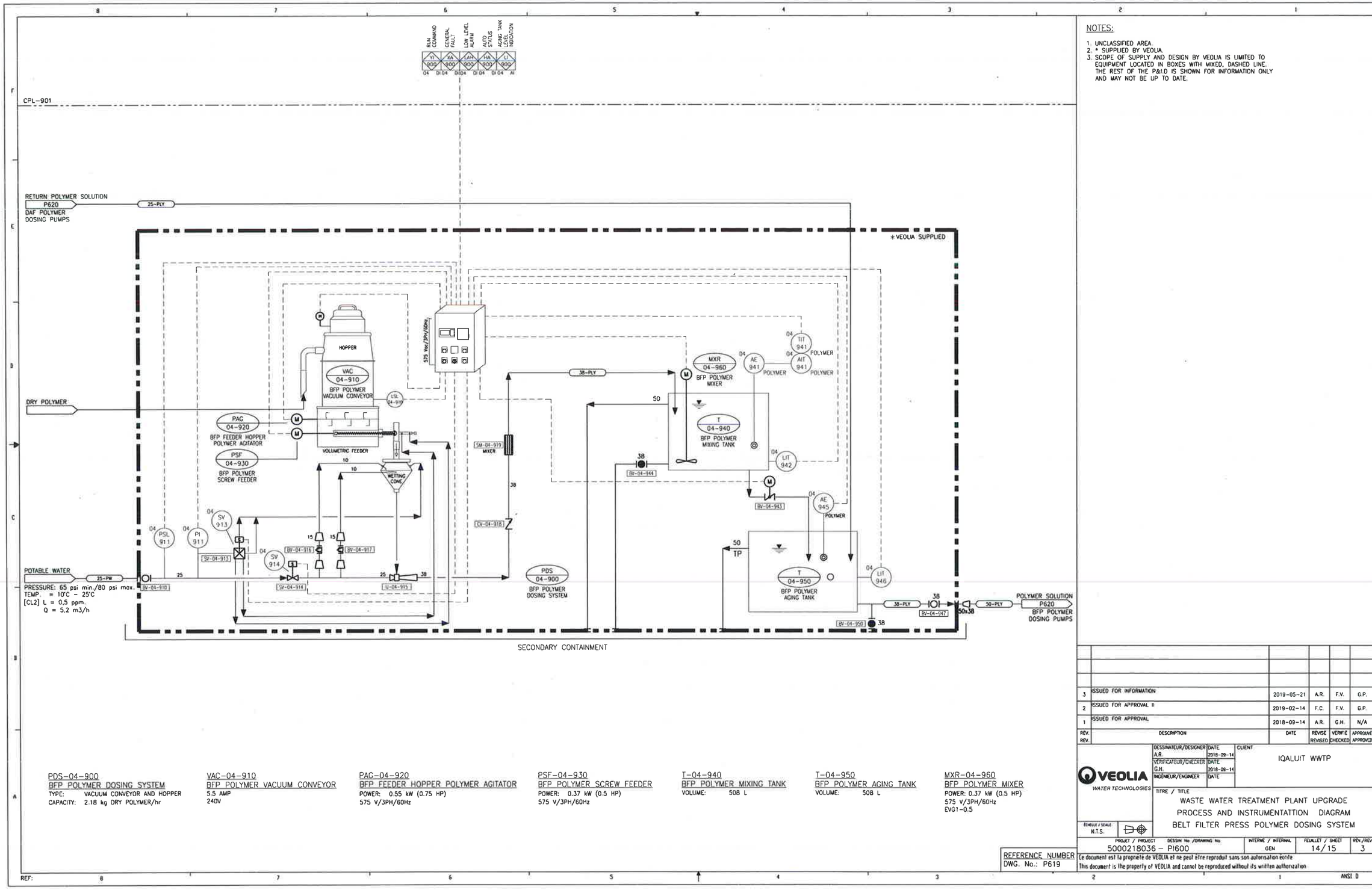

NOTES:

1. UNCLASSIFIED AREA.
2. * SUPPLIED BY VEOLIA.
3. SCOPE OF SUPPLY AND DESIGN BY VEOLIA IS LIMITED TO EQUIPMENT LOCATED IN BOXES WITH MIXED, DASHED LINE. THE REST OF THE P&I.D IS SHOWN FOR INFORMATION ONLY AND MAY NOT BE UP TO DATE.

PDS-04-900
BFP POLYMER DOSING SYSTEM
TYPE: VACUUM CONVEYOR AND HOPPER
CAPACITY: 2.18 kg DRY POLYMER/hr

VAC-04-910
BFP POLYMER VACUUM CONVEYOR
5.5 AMP
240V

PAG-04-920
BFP FEEDER HOPPER POLYMER AGITATOR
POWER: 0.55 kW (0.75 HP)
575 V/3PH/60Hz

PSF-04-930
BFP POLYMER SCREW FEEDER
POWER: 0.37 kW (0.5 HP)
575 V/3PH/60Hz

T-04-940
BFP POLYMER MIXING TANK
VOLUME: 508 L

T-04-950
BFP POLYMER AGING TANK
VOLUME: 508 L

MXR-04-960
BFP POLYMER MIXER
POWER: 0.37 kW (0.5 HP)
575 V/3PH/60Hz
EVG1-0.5

REV.	DESCRIPTION	DATE	REVISÉ / REVISED	VÉRIFIÉ / CHECKED	APPROUVÉ / APPROVED
3	ISSUED FOR INFORMATION	2019-05-21	A.R.	F.V.	G.P.
2	ISSUED FOR APPROVAL II	2019-02-14	F.C.	F.V.	G.P.
1	ISSUED FOR APPROVAL	2018-09-14	A.R.	G.H.	N/A

	DATE
DESSINATEUR/DESIGNER A.R.	2018-09-14
VÉRIFICATEUR/CHECKER G.H.	2018-09-14
INGÉNIEUR/ENGINEER	DATE

CLIENT: IQALUIT WWTP

VEOLIA WATER TECHNOLOGIES

TITRE / TITLE:
WASTE WATER TREATMENT PLANT UPGRADE
PROCESS AND INSTRUMENTATTION DIAGRAM
BELT FILTER PRESS POLYMER DOSING SYSTEM

ÉCHELLE / SCALE: N.T.S.

PROJET / PROJECT	DESSIN No /DRAWING No.	INTERNE / INTERNAL	FEUILLET / SHEET	REV./REV
5000218036 - P1600		GEN	14/15	3

REFERENCE NUMBER
DWG. No.: P619

Ce document est la propriété de VEOLIA et ne peut être reproduit sans son autorisation écrite
This document is the property of VEOLIA and cannot be reproduced without its written authorization

REF:

ANSI D

May 22, 2019 8:54:33 - W:\2018\5000218036 Iqaluit WWTP Phase2\01-Drawings\P-Pid\5000218036-P1600.dwg - Layout: ISSUED

NOTES:

1. UNCLASSIFIED AREA.
2. * SUPPLIED BY VEOLIA.
3. SCOPE OF SUPPLY AND DESIGN BY VEOLIA IS LIMITED TO EQUIPMENT LOCATED IN BOXES WITH MIXED, DASHED LINE. THE REST OF THE P&ID IS SHOWN FOR INFORMATION ONLY AND MAY NOT BE UP TO DATE.

CPL-901

AIT 910 — PRESS ROOM H2S GAS DETECTOR
AE 910
AIT 906 — BFP H2S GAS DETECTOR
AE 906
TT 955 — BFP TEMP INDICATION
HS 970 ESD — P-4-970 ESD TRIGGERED
HS 970
US 970
VFD 4-970
TT 960 — BUILDING SMOKE DETECTION
HS 980 ESD — P-4-980 ESD TRIGGERED
HS 980
US 980
VFD 4-980
FE 999
FIT 999
M FM-04-999

RETURN POLYMER SOLUTION
25-PLY
P619
POLYMER AGING TANK

POLYMER SOLUTION
P618
BELT FILTER PRESS
38-PLY

* VEOLIA SUPPLIED

POTABLE WATER
30 psi min./ 75 psi max.
[CL2] L = 0.5 ppm,
Q = 1500 Lph
40-PW
PRV-04-980
BV-04-981
SV-04-982
SV 982
FV 980
FI 983
NV-04-984
#40
38x25
25-PLY
BV-04-970
BV-04-971
PI 986
PI 989
BPV-990
BPV-991
BV-04-972
BV-04-974
BV-04-975
PSV 968
PSV 969
PSH 987
PSH 990
VENT
CC-04-990
575 V
120V
TE 966
TE 967
P 04-970 POLYMER DOSING PUMP 1
P 04-980 POLYMER DOSING PUMP 2
BV-04-962
BV-04-964
BV-04-960
BV-04-963
BV-04-965
BV-04-961
POLYMER SOLUTION
P619
POLYMER STORAGE TANK
40-PLY

P-04-970/P-04-980
BELT FILTER PRESS POLYMER DOSING PUMP 1/2

TYPE:	PROGRESSIVE CAVITY
DESIGN:	554 L/hr @ 20m TDH
DRIVE MOTOR:	0.50 kW
	575 V

REV.	DESCRIPTION	DATE	REVISÉ REVISED	VÉRIFIÉ CHECKED	APPROUVÉ APPROVED
3	ISSUED FOR INFORMATION	2019-05-21	A.R.	F.V.	G.P.
2	ISSUED FOR APPROVAL II	2019-02-14	F.C.	F.V.	G.P.
1	ISSUED FOR APPROVAL	2018-09-14	A.R.	C.H.	N/A

VEOLIA WATER TECHNOLOGIES

DESSINATEUR/DESIGNER	A.R. DATE 2018-09-14
VÉRIFICATEUR/CHECKER	C.H. DATE 2018-09-14
INGÉNIEUR/ENGINEER	DATE

CLIENT: IQALUIT WWTP

TITRE / TITLE
WASTE WATER TREATMENT PLANT UPGRADE
PROCESS AND INSTRUMENTATTION DIAGRAM
BELT FILTER PRESS POLYMER DOSING PUMP SYSTEM

ÉCHELLE / SCALE N.T.S.

PROJET / PROJECT	DESSIN No /DRAWING No	INTERNE / INTERNAL	FEUILLET / SHEET	REV./REV
5000218036 – P1600		GEN	15/15	3

REFERENCE NUMBER
DWG. No.: P620

Le document est la propriété de VEOLIA et ne peut être reproduit sans son autorisation écrite.
This document is the property of VEOLIA and cannot be reproduced without its written authorization

REF:

ANSI D

May 22, 2019 8:56:38 – M:\501\18\5000218036 Iqaluit WWTP (Tender)\15- Designs execution\Drawings\15- PFD\5000218036-P600_REV 3.dwg – RAMIERA

SUBMITTAL

IQALUIT, NU

PROJECT NO: 480080

IMPORTANT CONTACTS

HEAD OFFICE - CANADA

Trojan Technologies
3020 Gore Road,
London, Ontario,
Canada, N5V 4T7
Tel.: +519 457 3400
Fax: +519 457 3030
http://www.trojanuv.com

TOLL FREE NUMBER:

1-800-291-0218

TOLL FREE FAX NUMBER:

1-800-291-0083

To schedule SERVICE or ORDER PARTS, contact:

1-800-291-0218

If you are unable to reach your Local Representative and have a TECHNICAL EMERGENCY, contact TROJAN TECHNOLOGIES' TECHNICAL ASSISTANCE CENTER:
Toll Free Phone: 1-866-388-0488
Email: TAC@Trojanuv.com

STANTEC PROJECT #: 110126045

SUBMITTAL # Project No. 480080

This review by Stantec is for general conformance with the design concept of Stantec's design of the:

- [x] Process
- [ ] Structural
- [ ] Mechanical
- [ ] Electrical
- [ ] Other

component(s) only and does not mean that Stantec has verified or approves the shop drawing(s). The Contractor remains solely responsible for the shop drawing(s) and this review by Stantec does not relieve the Contractor of the Contractor's responsibility for errors or omissions in the shop drawing(s) or for meeting all requirements of the contract documents. This review does not mean that Stantec approves the detailed design inherent in the shop drawing, responsibility for which shall remain with the Contractor submitting same, nor does this review mean that Stantec accepts any deviation of the shop drawing(s) from the contract documents. The Contractor is responsible for confirming all dimensions and correlating them at the job site, for all construction means, methods and techniques, and for coordination of construction work of all trades, including coordination of all shop drawings.

Stantec

- [x] REVIEWED
- [ ] REVIEWED, AS NOTED
- [ ] REVISE AND RESUBMIT
- [ ] NOT REVIEWED

DATE June 14, 2018

BY Alejandro Rojas, P.Eng

- Even though pneumatic actuators are still being presented in the Revision C of the shop drawing submittal, Salsnes confirmed that the valves are intended to be hydraulically operated using the same actuators as per letter that was attached to the submittal.
- Additional cost generated by inaccurate information provided by Salsnes on the air temperature requirements for the primary filter blower operation to be dealt separately with Stantec Project Management.

Document #: SU480080	Completed By: RLM	Date: 18MY28
Customer Revision: C	Checked By: SPM	Date: 18MY30
	Approved By: DP	Date: 18MY30

Salsnes Filter™ holds several patents for the system and all adaptations/changes that are in conflict with our patents and property rights are illegal without our written consent.

All warranties will be invalid if the customer makes changes on the system without approval.

COPYRIGHT © 2018 by Salsnes Filter
ALL RIGHTS RESERVED

TABLE OF CONTENTS

PART A
OVERVIEW
- **Company Background**
- **Certificates**
  - ISO 9001 Certificate of Registration
  - ISO 14001 Certificate of Registration
  - OHSAS 18001 Certificate of Registration

PART B
PROJECT & SYSTEM DESCRIPTION
- **Project Description**
- **System Description**

PART C
LAYOUT DRAWINGS
- **DR480080S01 - Rev. C**

PART D
PRODUCT INFORMATION
- **Salsnes Filter© SF Series Product Submittal**

PART E
EQUIPMENT DRAWINGS & CUT SHEETS
- **Equipment Component Drawings**
  - SF0025D01 - Left Outlet/Sludge Filter, SF6000 - Rev. C
  - SF0025D02 - Left Outlet/Sludge Filter, SF6000 - Rev. C
  - SF0027D01 - Right Outlet/Sludge Filter, SF6000 - Rev. C
  - SF0027D02 - Right Outlet/Sludge Filter, SF6000 - Rev. C
  - DR480080S02 - Sludge Box, SF6000 - Rev. C
  - DR480080S03 - Outlet Box, SF6000 - Rev. C
  - 26502165 - Spreader, SF6000/SFK6000 - Rev. C
- **Major Component BOM and Cut Sheets**
  - Blower - Kaeser BB69C
  - Drive Motor - Leeson 121919
  - Water Strainer - Commodity Y-Strainer
  - Two Way Water Valve - Parker Solenoid Valve
  - Drain Valve Solenoid - ASCO EV8345G81
  - Drain Valve - Orbinox EB06
  - Level Transmitter - AST Sensor G1/2 2.5PSI
  - Blower Pressure Transmitter - AST Sensor, 1/4BSP 15PSI

PART F
ELECTRICAL DRAWINGS
- **448241 - CPP, SF6000 Iqaluit NU - Rev.** 3
- **448242 - HMI Assy, SF6000 Iqaluit NU - Rev. 2**

PART G
CONTROLS PHILOSOPHY

CP480080 - Rev. 1.0

SCADA List - Rev. 1.0

PART I
WARRANTIES

Salsnes Equipment Warranty

PART J
SAFETY DATA SHEETS (SDS)

Omega FGB 220

PART K
FILTER SPECIFICATION

46 61 23 Primary Filter

Addendum No. 1 - February 14, 2018

PART

A

OVERVIEW

COMPANY BACKGROUND

Trojan Technologies is part of Danaher Corporation's environmental platform. Danaher is a Fortune 200, global science and technology leader.

Trojan Technologies encompasses six businesses: Aquafine, Trojan Marinex, TrojanUV, Salsnes Filter, US Peroxide and VIQUA. The products and services provided by these businesses play vital roles in making various stages of the water treatment process more effective, efficient and sustainable.

Aquafine Aquafine's advanced UV water treatment systems meet the changing requirements and needs of a diverse customer base around the world. They provide UV solutions for TOC reduction, chlorine and chloramine destruction, ozone destruction and disinfection for many applications in the industrial/commercial sector.	Aquafine™
Salsnes Filter Salsnes Filter's patented filter technology removes particles from municipal and industrial process water. Industries such as food, paper, cruise lines and aquaculture use the fully-automated treatment technology to treat effluent, improve the quality of influent or enhance the utilization of raw materials.	salsnes Filter™
Trojan Marinex Trojan Marinex is dedicated to the development of ballast water treatment solutions. Having direct access to decades of industry-defining water treatment expertise has enabled them to develop a suite of systems unlike any other. These systems are purpose-built for the marine environment and provide filtration + ultraviolet disinfection in a single, compact unit.	TROJAN marinex™
TrojanUV TrojanUV designs, manufactures and sells pressurized and open-channel UV disinfection systems for municipal wastewater and drinking water, and UV-oxidation systems for environmental contaminant treatment applications.	TROJAN UV™

US Peroxide US Peroxide provides performance-driven, full-service environmental treatment programs to help purify water, wastewater, soil and air. Applications include turn-key odor and corrosion control solutions for municipal wastewater and drinking water treatment; refinery, gas, oil and petrochemical wastewater applications; industrial wastewater and air quality treatment; in-situ remediation; and UV-oxidation.	USP technologies™ Solutions for a clean environment
VIQUA VIQUA is a leading water treatment technology company focused on providing customers with confidence in their water. In over 100 countries, VIQUA UV systems are disinfecting water in homes, apartment complexes, manufacturing facilities, campgrounds, resorts, hotels and hospitals.	VIQUA

Trojan Technologies continually strives to develop industry-defining technology, making a significant investment each year to ensure unparalleled discovery and development (~5.0% annual investment in R&D).

The Trojan Technologies mission statement:

We enable customers to meet their water quality objectives by providing eco-efficient solutions that reduce and recover costs, energy, resources and space.

Collaboratively solving problems with our customers, we deliver low-risk, innovative technologies that offer sustainable results.

We ensure greater water confidence and environmental stewardship for people, industries and municipalities, improving the lives of over one billion people globally.

CERTIFICATES

The certificates listed below are included on the following pages:

- ISO 9001 Certificate of Registration
- ISO 14001 Certificate of Registration
- OHSAS 18001 Certificate of Registration

bsi.

By Royal Charter

Certificate of Registration

QUALITY MANAGEMENT SYSTEM - ISO 9001:2008

This is to certify that:

Trojan Technologies
3020 Gore Road
London
Ontario
N5V 4T7
Canada

Holds Certificate No: **FM 63961**

and operates a Quality Management System which complies with the requirements of ISO 9001:2008 for the following scope:

Research, design, engineering, and manufacture of ultraviolet (UV) light technologies for wastewater, industrial, and drinking water disinfection applications, and for the destruction of pollutants in liquid streams.

For and on behalf of BSI:

Reg Blake, VP Regulatory Affairs, BSI Group America Inc.

Original Registration Date: 03/27/1998
Effective Date: 07/11/2015
Latest Revision Date: 07/01/2015
Expiry Date: 07/10/2018

...making excellence a habit.™

This certificate remains the property of BSI and shall be returned immediately upon request.
An electronic certificate can be authenticated online. Printed copies can be validated at www.bsigroup.com/ClientDirectory
To be read in conjunction with the scope above or the attached appendix.
Information and Contact: BSI, Kitemark Court, Davy Avenue, Knowlhill, Milton Keynes MK5 8PP. Tel: + 44 845 080 9000
BSI Assurance UK Limited, registered in England under number 7805321 at 389 Chiswick High Road, London W4 4AL, UK.
A Member of the BSI Group of Companies.

By Royal Charter

Certificate of Registration

ENVIRONMENTAL MANAGEMENT SYSTEM - ISO 14001:2004

This is to certify that:

Trojan Technologies
3020 Gore Road
London
Ontario
N5V 4T7
Canada

Holds Certificate No: **EMS 633149**

and operates an Environmental Management System which complies with the requirements of ISO 14001:2004 for the following scope:

The environmental management system for the control of risks associated with the engineering and assembly of ultraviolet (UV) light technologies for wastewater, industrial, and drinking water disinfection applications, and for the destruction of pollutants in liquid streams.

For and on behalf of BSI:

Reg Blake, VP Regulatory Affairs, BSI Group America Inc.

Original Registration Date: 03/08/2016
Effective Date: 03/08/2016
Latest Revision Date: 03/08/2016
Expiry Date: 09/14/2018

...making excellence a habit.™

This certificate remains the property of BSI and shall be returned immediately upon request.
An electronic certificate can be authenticated online. Printed copies can be validated at www.bsigroup.com/ClientDirectory
To be read in conjunction with the scope above or the attached appendix.
Information and Contact: BSI, Kitemark Court, Davy Avenue, Knowlhill, Milton Keynes MK5 8PP. Tel: + 44 845 080 9000
BSI Assurance UK Limited, registered in England under number 7805321 at 389 Chiswick High Road, London W4 4AL, UK.
A Member of the BSI Group of Companies.

bsi.

By Royal Charter

Certificate of Registration

OCCUPATIONAL HEALTH & SAFETY MANAGEMENT SYSTEM

This is to certify that:

Trojan Technologies
3020 Gore Road
London
Ontario
N5V 4T7
Canada

Holds Certificate No: **OHS 633150**

and operates an Occupational Health and Safety Management System which complies with the requirements of BS OHSAS 18001:2007 for the following scope:

The health and safety management system for the control of risks associated with the engineering and assembly of ultraviolet (UV) light technologies for wastewater, industrial, and drinking water disinfection applications, and for the destruction of pollutants in liquid streams.

For and on behalf of BSI:

Reg Blake, VP Regulatory Affairs, BSI Group America Inc.

Original Registration Date: 03/08/2016
Latest Revision Date: 03/08/2016

Effective Date: 03/08/2016
Expiry Date: 09/07/2019

...making excellence a habit.™

This certificate remains the property of BSI and shall be returned immediately upon request.
An electronic certificate can be authenticated online. Printed copies can be validated at www.bsigroup.com/ClientDirectory
To be read in conjunction with the scope above or the attached appendix.
Information and Contact: BSI, Kitemark Court, Davy Avenue, Knowlhill, Milton Keynes MK5 8PP. Tel: + 44 845 080 9000
BSI Assurance UK Limited, registered in England under number 7805321 at 389 Chiswick High Road, London W4 4AL, UK.
A Member of the BSI Group of Companies.

PART

B

PROJECT & SYSTEM DESCRIPTION

PROJECT DESCRIPTION

Project Name	**Iqaluit, NU**
Salsnes Project Number	**480080**
Specification Section	**46 61 23 Primary Filter**
Annual Average Flow (Current)	**38.50 L/S**
Annual Average Flow (Year 2041)	**50.30 L/S**
Maximum Month Flow (Current)	**46.20 L/S**
Maximum Month Flow (Year 2041)	**60.40 L/S**
Peak Hour Flow (Current)	**115.50 L/S**
Peak Hour Flow (Year 2041)	**151.00 L/S**
Influent TSS (Current)	**153 mg/L**
Influent TSS (Year 2041)	**200 mg/L**
Influent BOD Concentration (Current)	**153 mg/L**
Influent BOD Concentration (Year 2041)	**200 mg/L**
TSS Removal (Average)	**50%**
BOD Removal	**25%**

SYSTEM DESCRIPTION

Filter Model - SF6000	
Quantity Required Filter Outlet Configuration	
One (1)	Left Outlet / Overflow, Left Sludge Outlet
One (1)	Right Outlet / Overflow, Right Sludge Outlet
Filter Specifications	
Filter Frame Material	316L SST
Filter Weight (without Water - includes Blower)	2711 lbs /1230 kgs
Filter Weight (with Water - includes Blower)	5732 lbs / 2600 kgs
Filter Mesh Specifications	
Filter Mesh Material	Polyester
Drive Belt Material	Polyurethane with Kevlar reinforced drive ends
Drive Belt Weight	11 lbs / 5 kgs
Total Filter Mesh Area	23.7 ft^2 / 2.2 m^2
Filter Mesh Opening Size	350um
Filter Connection Information	
Inlet Flange Diameter	14 inch / 350mm ANSI
Outlet and Overflow Flange Diameter	16 inch / 400mm ANSI
Bottom Cold Water Drain Flange Connection Diameter (for sediment flush)	4 inch / 100mm ANSI
De-watering Unit Reject Water Connection Diameter	4 inch /100mm with hose coupling
Hot and Cold Water Connections	1/2 inch / 12mm NPT
Hot and Cold Water Supply Requirements	Tap Water Quality (4 - 6 bar pressure)
Volume of Hot Water Tank Recommended (Provided by others)	79.2 gal / 300L
Hot Water Temperature	185°F / 85°C (Maximum) 160°F / 70°C (Minimum)
Hot Water Usage (at 90 PSI / 6 Bar) (mesh cleaning)	8.0 gpm / 30L/min
Volume Required for Cold Water (sediment flush)	0 - 60 L/ Min
Ventilation Flange Diameter	16 inch / 400mm (Inside Diameter) (Common)
Integrated Sludge De-watering System Information	
Integrated Sludge De-watering System Quantity	One (1) press per filter unit
Integrated Sludge De-watering System Materials	Trough and Lid - 316L Stainless Steel Screw - Carbon Steel
Instrumentation Information	
Pressure Sensor Quantity	One (1) per filter unit

Filter Model - SF6000	
Pressure Sensor Material	Ceramic sensing element / ASTM A-316L Stainless Steel Housing / Vented Polyurethane insulated Cable
Control Power Panel (CPP) Information	
Quantity of Control Power Panels Required	One (1) per Filter Unit
Controller Type	Allen Bradley Compact Logix L16ER
Operator Interface Terminal (OIT) Type	Allen Bradley PanelView 700 (In Seperate Class 1 Div 2 Nema 4X Enclosure)
Network Interface	Ethernet / IP
Environmental Rating	Type 4X / IP65
Mounting	Wall Mounted
Material	Painted Mild Steel
UPS	15 Minute
Variable Frequency Drives (for Filter & Screw Rotation Motor)	Included
Electrical - Voltages	480/277V, 3 Phase, 3 Wire + Ground, 60 Hz
Maximum Distance Between Filter and Control Power Panel	115 feet / 35.0 meters
Control Power Panel Weight	132 lbs / 60 kgs
Control Panel Accreditations	UL
Blower Information	
Quantity of Blowers Required	One (1) per Filter Unit
Blower Model	Kaeser BB69C
Blower Location	Standalone from Filter Unit
Blower Motor Rating	10 hp / 197 CFM
Connected Power	12.0 kW
Rated Power	7.5 kW
Air Knife Pressure	0.32 bar (maximum 0.65 bar)
Blower Weight (with sound enclosure)	672 lbs / 305 kgs
Sludge Box and Sludge Hopper Information	
Sludge Box and Sludge Hopper Quantity	One (1) per two (2) Filter Units

Miscellaneous Equipment	
1	Operator Kit
1	Double-sided Outlet Box
1	Double-sided Sludge Box
1 Set	Anchor Bolts

Spare Parts List	
Quantity	Part Name
1	Spare Filter Mesh
2	Spare Blower Air Filter
1 Set	Spare Bearings
1 Set	Anchor Bolts

PART

C

LAYOUT DRAWINGS

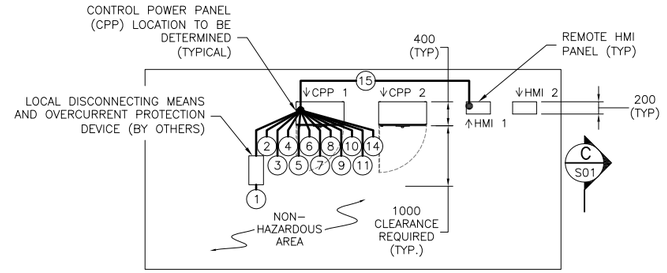

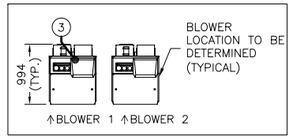

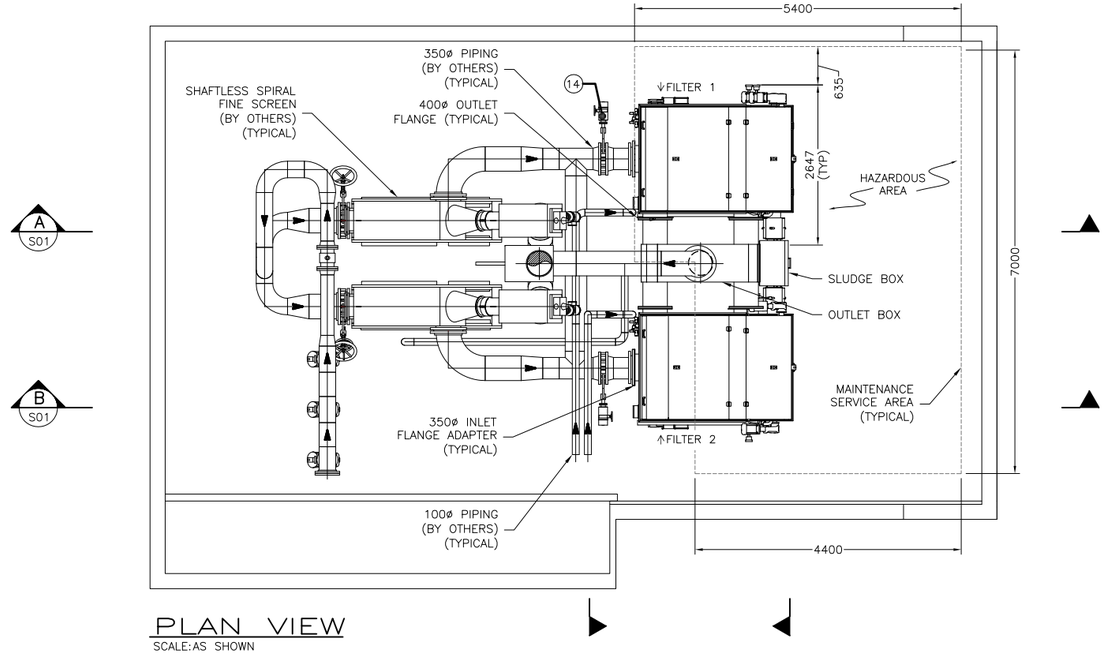

PLAN VIEW

SCALE:AS SHOWN

NOTE: INTERCONNECTS SHOWN ARE TYPICAL FOR EACH FILTER, CPP AND BLOWER.

. : BLOWER PIPING (BY OTHERS), HOT AND COLD WATER SUPPLY PIPING (BY OTHERS) NOT SHOWN.

. : ALL PIPES (BY OTHERS) TO BE ABOVE EXISTING FLOOR. FILTERS ELEVATES ON CONCRETE PEDESTALS (BY OTHERS).

. : ALL DRAINS TO BE DIRECTED TO OUTLET PIPE (BY OTHERS).

. : FEED PIPE (BY OTHERS) RUN OVERHEAD FROM THE PUMPS.

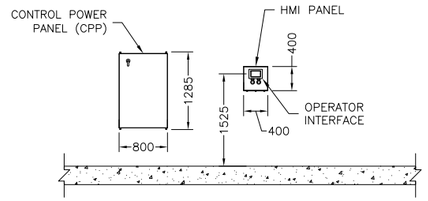

FRONT VIEW OF CPP & HMI PANEL

SCALE:AS SHOWN

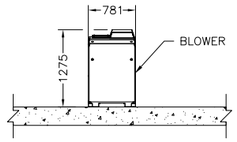

FRONT VIEW OF BLOWER

SCALE:AS SHOWN

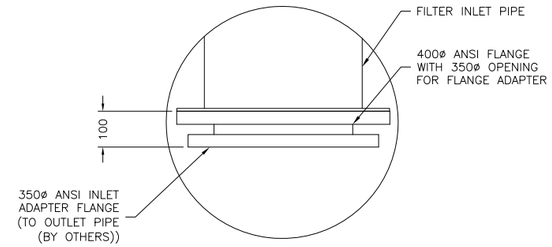

DETAIL A

SCALE:NOT TO SCALE

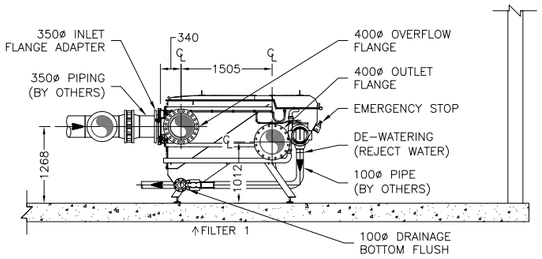

A S01 SECTION

SCALE:AS SHOWN

NOTE: SLUDGE BOX AND OUTLET BOX NOT SHOWN FOR CLARITY.

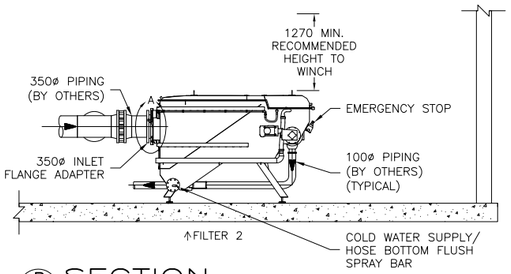

B S01 SECTION

SCALE:AS SHOWN

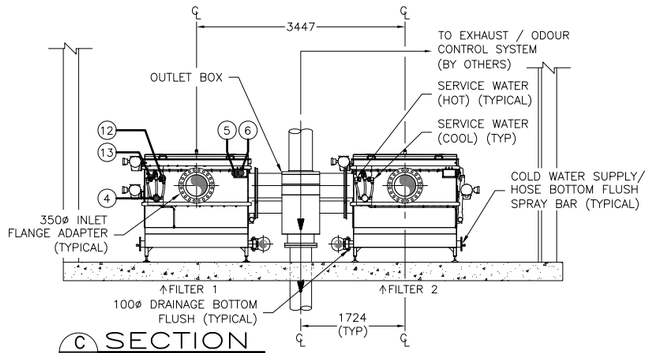

C S01 SECTION

SCALE:AS SHOWN

NOTE: INTERCONNECTS SHOWN ARE TYPICAL FOR EACH FILTER, CPP AND BLOWER.

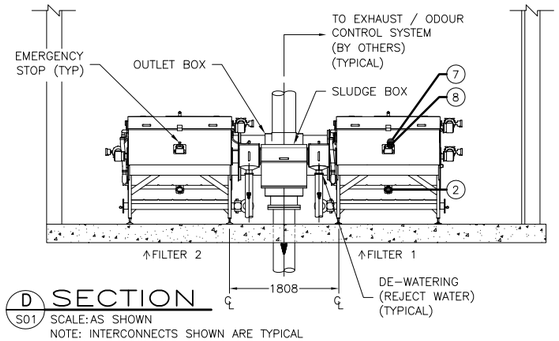

D S01 SECTION

SCALE:AS SHOWN

NOTE: INTERCONNECTS SHOWN ARE TYPICAL FOR EACH FILTER, CPP AND BLOWER.

A TROJAN TECHNOLOGIES BUSINESS

salsnes Filter™

EQUIPMENT INTERCONNECTIONS

No.	DESCRIPTION	FROM	TO
1	CONTROL POWER PANEL (CPP) POWER SUPPLY 480Y/277V, 3 PHASE, 3 WIRE + GROUND, 60Hz, 16.6 kVA / 20.0 AMPS PER PHASE	DISTRIBUTION PANEL (DP) (BY OTHERS) (NOT SHOWN)	CONTROL POWER PANEL (CPP)
2	FILTER BELT & AUGER MOTOR/GEAR BOX POWER SUPPLY 480V, 3 PHASE, 3 WIRE + GROUND, 60Hz, 1.0Hp/0.75kW (FILTER BELT) + 1.0Hp/0.75kW (AUGER)	CONTROL POWER PANEL (CPP)	MOTOR JUNCTION BOX
3	BLOWER POWER SUPPLY 480V, 3 PHASE, 3 WIRE + GROUND, 60Hz, 10Hp/7.5kW (MOTOR) + ¾ Hp/0.18kW (FAN)	CONTROL POWER PANEL (CPP)	BLOWER
4	SOLENOID VALVE JUNCTION BOX POWER SUPPLY 24 VDC, 6 WIRE + GROUND	CONTROL POWER PANEL (CPP)	SOLENOID VALVE JUNCTION BOX
5	FILTER LEVEL SIGNAL 4–20 mA ANALOG INPUT SIGNAL	LOW VOLTAGE JUNCTION BOX	CONTROL POWER PANEL (CPP)
6	AIR PRESSURE SIGNAL 4–20 mA ANALOG INPUT SIGNAL	LOW VOLTAGE JUNCTION BOX	CONTROL POWER PANEL (CPP)
7	DISCRETE EMERGENCY STOP SIGNAL 2 CONDUCTORS	EMERGENCY STOP	CONTROL POWER PANEL (CPP)
8	DISCRETE EMERGENCY STOP SIGNAL 2 CONDUCTORS	CONTROL POWER PANEL (CPP)	EMERGENCY STOP
9	DISCRETE REMOTE PERMISSIVE RUN 2 CONDUCTORS	CONTROL POWER PANEL (CPP)	PLANT SCADA (BY OTHERS) (NOT SHOWN)
10	DISCRETE REMOTE RESET 2 CONDUCTORS	CONTROL POWER PANEL (CPP)	PLANT SCADA (BY OTHERS) (NOT SHOWN)
11	ETHERNET/IP COMMUNICATION SHIELDED CAT5E CABLE CONNECTORS RJ45 (OR OPTIONAL FIBER OPTIC)	CONTROL POWER PANEL (CPP)	PLANT SCADA (BY OTHERS) (NOT SHOWN)
12	HOT WATER SUPPLY PRESSURE: 90 PSI (6 BAR) / 8 GPM (30 LPM) TEMP: 160°F (70°C) MIN. / 185°F (85°C) IDEAL	WATER HEATER (BY OTHERS)	FILTER HOT WATER CONNECTION PORT
13	COLD WATER SUPPLY PRESSURE: 60–90 PSI (4–6 BAR)/16 GPM (60L/min)	LOCAL TAP WATER SUPPLY (BY OTHERS) (NOT SHOWN)	FILTER COLD WATER CONNECTION PORT
14	DISCRETE INLET VALVE OPEN CONTROL OUTPUT – 2 CONDUCTORS DISCRETE INLET VALVE CLOSE CONTROL OUTPUT – 2 CONDUCTORS DISCRETE INLET VALVE OPEN STATUS INPUT – 2 CONDUCTORS DISCRETE INLET VALVE CLOSE STATUS INPUT – 2 CONDUCTORS DISCRETE INLET VALVE OVERLOAD TRIPPED STATUS – 2 CONDUCTORS	CPP CPP INLET VALVE (BY OTHERS) INLET VALVE (BY OTHERS) INLET VALVE (BY OTHERS)	INLET VALVE (BY OTHERS) INLET VALVE (BY OTHERS) CPP CPP CPP
15	ETHERNET + – 10 CONDUCTORS + GROUND	CPP	REMOTE HMI PANEL

NOTES:

: HARDWARE AND GASKETS FOR INTERCONNECTION PIPING TO BE SUPPLIED BY CONTRACTOR. HARDWARE AND GASKETS RELATED TO THE PRIMARY FILTER ITSELF WILL BE SUPPLIED BY SALSNES.

: SYSTEM CONDUIT, WIRING, DISTRIBUTION PANELS & INTERCONNECTIONS BY OTHERS.

: FILTER UNIT TO BE POSITIONED ON A FOUNDATION (CONCRETE, STEEL OR ALUMINUM) A MINIMUM LOAD CAPACITY OF 2000kgs.

: FOUNDATION FLOOR MUST BE FIRM AND LEVEL.

: ELECTRICAL REQUIREMENTS SHOWN ARE TO SUPPLY SALSNES FILTER EQUIPMENT ONLY.

: CONTRACTOR TO REVIEW ALL SALSNES FILTER INSTALLATION INSTRUCTIONS PRIOR TO EQUIPMENT INSTALLATION.

: CONTROL POWER PANEL (CPP) TO BE MAXIMUM 275' CABLE RUN FROM INTERCONNECTING FILTER UNIT.

DESIGN CRITERIA		
	PEAK FLOW	115.50 L/S
	PEAK HYDRAULIC FLOW	121.00 L/S
	INFLUENT T.S.S.	153 mg/L
	INFLUENT B.O.D	153 mg/L

A TROJAN TECHNOLOGIES BUSINESS

salsnes Filter™

CONFIDENTIALITY NOTICE
Copyright© 2018 by Salsnes Filter™. All rights reserved. No part of this document may be reproduced, stored in a retrieval system, or transmitted in any form, without the written permission of Salsnes Filter™.

DESCRIPTION: LAYOUT, SALSNES SF6000 IQALUIT NU

QUOTE NO. 210636

PROJECT NO. 480080

DRAWN BY : CC/RLM	DATE : 18MY29
CHECKED BY : SPM	DATE : 18MY30
APPROVED BY : DP	DATE : 18MY30
SCALE (279x432): 1:100	LOG NUMBER : N/A

DWG NO. S01 REV. C

PART D

PRODUCT INFORMATION

A TROJAN TECHNOLOGIES BUSINESS

Salsnes Filter System©

SF Series

Submittal Manual
Original Instructions
Edition 6

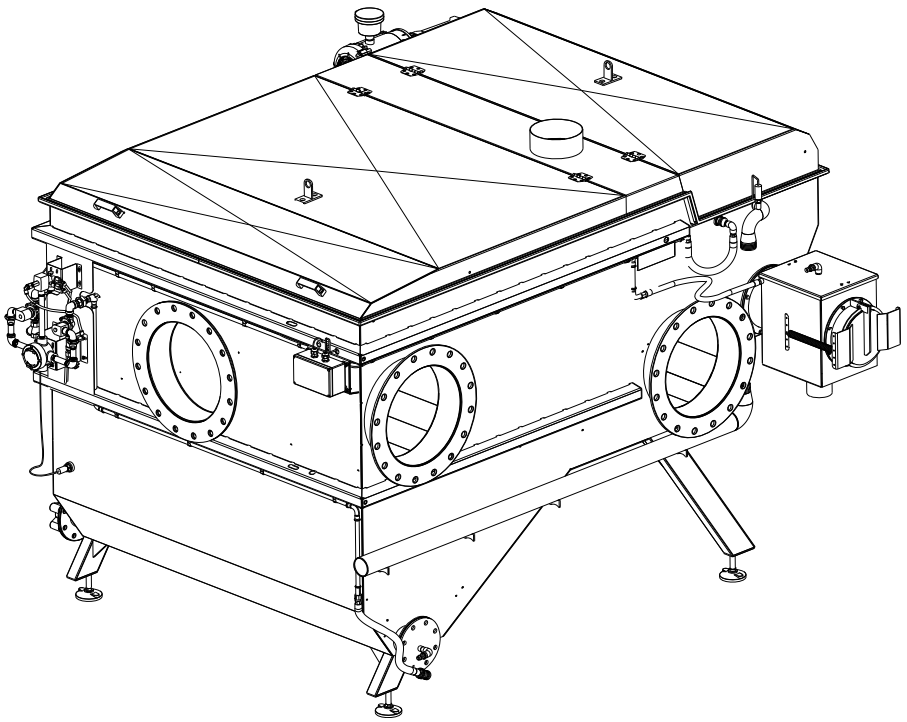

© Salsnes Filter, 2016. All rights reserved. Printed in Norway

DC700201-06-01

Table of Contents

Section 1 Specifications 5
Section 2 Safety Information 9
2.1 Use of Hazard Information 9
2.2 Precautionary Labels 9
2.3 Safety Precautions 11
2.4 Safety Features 13
Section 3 General Information 15
3.1 System Overview 15
3.1.1 System Components 15
3.2 Filter Components 17
3.3 Control Power Panel (CPP) 18
3.4 Air Blower 18
3.5 Acceptable Noise Levels 19
3.6 Patents and Permissions 19
3.7 Abbreviations and Acronyms 19
Section 4 Operation 21
4.1 Overview of Sequence and Principle 21
4.2 Basic Setup Data 21
4.3 Switches and Indicators 22
4.4 Control Modes 22
4.5 Navigate Operator Interface Terminal 23
4.5.1 System Settings 23
4.6 Control Power Panel Operation 23
4.6.1 Filter Screen 24
4.6.2 Auxiliary Screen 25
4.6.3 Settings Screens 26
4.6.4 Accumulated Screen 33
4.6.5 Trends Screen 34
4.6.6 Alarms Screen 35
Section 5 Replacement Parts 37
5.1 Filter 37
5.1.1 Filter (Internal) Components 37
5.1.2 Filter (External) Components 39
5.2 Dewater Unit Components 39
5.3 Air Knife Components 40
5.4 Instrumentation Components 40
5.5 Operator Kit Components 40
5.6 Miscellaneous Parts 40
5.7 Blower 41

Section 1 Specifications

Specifications are subject to change without notice.

SF: 2000	
General	
Environment ambient Temperature	0ºC - 40ºC (32ºF - 104ºF)
Maximum Hydraulic Flow (clean water, filter)	144 m³/hr (0.92 MGD)
Air Knife	
Air Knife Operating Pressure	0,15 -0,25 bar (max 0,4 bar) / 2.1 -3.6 psi (max 5.8 psi)
Filter	
Weight of the filter unit: (may vary based on specific design)	690 kg (1,521 lbs)
Weight with water	1210 kg (2,660 lbs)
Sludge Auger Weight	16 kg (35 lbs)
Typical design flow rate for municipal wastewater	20 liters per second (250 mg per litre)
Water Supply Requirements	Tap Water Quality, 4-6 bar pressure (58-88 psi)
Bottom Drain Flushing Frequency	3 minutes every 24 hours (field adjustable from 1 - 60 minutes between 1 - 24 hours)
Hot and Cold water connection sizes / types	1/2 inch NPT 1/2 inch BSP
Grease	SKF LGWA 2 According to DIN 51825, code KP2N-30 (lithium based)
Control Power Panel	
Environmental	Cooling Fans, Mild Painted Steel, IP54 (Type 12) Cooling Fans, 304 SST, IP54 (Type 12) Air Conditioner, Mild Painted Steel, IP66 (Type 4) Air Conditioner, 304 SST, IP66 (Type 4X)
Cabinet Ambient Temperature Limit	Cooling Fans: 35ºC (95ºF) Air Conditioner: 40ºC (104ºF)
Panel Weight	With Cooling Fans: 60 kgs (132 lbs) With Air Conditioner: 97 kgs (214 lbs)
Electrical	480/277V 3 ph, 3 wire + gnd, 60 Hz 400/230V 3 ph, 3 wire + gnd, 50 Hz
Surge Protection	TVSS
Peak Power for filter unit	13 kVA
Distance Between Filter and Panel	35m (115 ft)

SF: 4000	
General	
Environment ambient Temperature	0ºC - 40ºC (32ºF - 104ºF)
Maximum Hydraulic Flow (clean water, filter)	288 m³/hr (1.82 MGD)
Air Knife	
Air Knife Operating Pressure	0,15 -0,25 bar (max 0,4 bar) / 2.1 -3.6 psi (max 5.8 psi)
Filter	
Weight of the filter unit: (may vary based on specific design)	1,020 kg (2,248 lbs)
Weight with water	1,910 kg (4,200 lbs)
Sludge Auger Weight	34kg (75 lbs)
Typical design flow rate for municipal wastewater	40 liters per second (250 mg per litre)
Water Supply Requirements	Tap Water Quality, 4-6 bar pressure (58-88 psi)
Bottom Drain Flushing Frequency	3 minutes every 24 hours (field adjustable from 1 - 60 minutes between 1 - 24 hours)

SF: 4000	
Hot and Cold water connection sizes / types	1/2 inch NPT 1/2 inch BSP
Grease	SKF LGWA 2 According to DIN 51825, code KP2N-30 (lithium based)
Control Power Panel	
Environmental	Cooling Fans, Mild Painted Steel, IP54 (Type 12) Cooling Fans, 304 SST, IP54 (Type 12) Air Conditioner, Mild Painted Steel, IP66 (Type 4) Air Conditioner, 304 SST, IP66 (Type 4X)
Cabinet Ambient Temperature Limit	Cooling Fans: 35ºC (95ºF) Air Conditioner: 40ºC (104ºF)
Panel Weight	With Cooling Fans: 60 kgs (132 lbs) With Air Conditioner: 97 kgs (214 lbs)
Electrical	480/277V 3 ph, 3 wire + gnd, 60 Hz 400/230V 3 ph, 3 wire + gnd, 50 Hz
Surge Protection	TVSS
Peak Power for filter unit	16.8 kVA
Distance Between Filter and Panel	35m (115 ft)

SF: 6000	
General	
Environment ambient Temperature	0ºC - 40ºC (32ºF - 104ºF)
Maximum Hydraulic Flow (clean water, filter)	576 m³/hr (3.65 MGD)
Air Knife	
Air Knife Operating Pressure	0,15 -0,25 bar (max 0,4 bar) / 2.1 -3.6 psi (max 5.8 psi)
Filter	
Weight of the filter unit: (may vary based on specific design)	1,120 kg (2,469 lbs)
Weight with water	2,450 kg (5390 lbs)
Sludge Auger Weight	53 kg (117 lbs)
Typical design flow rate for municipal wastewater	75 liters per second (250 mg per litre)
Water Supply Requirements	Tap Water Quality, 4-6 bar pressure (58-88 psi)
Bottom Drain Flushing Frequency	3 minutes every 24 hours (field adjustable from 1 - 60 minutes between 1 - 24 hours)
Hot and Cold water connection sizes / types	1/2 inch NPT 1/2 inch BSP
Grease	SKF LGWA 2 According to DIN 51825, code KP2N-30 (lithium based)
Control Power Panel	
Environmental	Cooling Fans, Mild Painted Steel, IP54 (Type 12) Cooling Fans, 304 SST, IP54 (Type 12) Air Conditioner, Mild Painted Steel, IP66 (Type 4) Air Conditioner, 304 SST, IP66 (Type 4X)
Cabinet Ambient Temperature Limit	Cooling Fans: 35ºC (95ºF) Air Conditioner: 40ºC (104ºF)
Panel Weight	With Cooling Fans: 60 kgs (132 lbs) With Air Conditioner: 97 kgs (214 lbs)
Electrical	480/277V 3 ph, 3 wire + gnd, 60 Hz 400/230V 3 ph, 3 wire + gnd, 50 Hz

SF: 6000	
Surge Protection	TVSS
Peak Power for filter unit	16.8 kVA
Distance Between Filter and Panel	35m (115 ft)

Certification	
All Models	CE and UL available

Please read this entire manual before operating this equipment. Pay attention to all danger, warning and caution statements in this manual. Failure to do so could result in serious personal injury or damage to the equipment.

Make sure that the protection provided by this equipment is not impaired. Do not use or install this equipment in any manner other than that specified in installation manual.

2.1 Use of Hazard Information

⚠ DANGER
Indicates a potentially or imminently hazardous situation which, if not avoided, will result in death or serious injury.

⚠ WARNING
Indicates a potentially or imminently hazardous situation which, if not avoided, could result in death or serious injury.

⚠ CAUTION
Indicates a potentially hazardous situation which, if not avoided, could result in minor or moderate injury.

NOTICE
Indicates a situation that is not related to personal injury.

2.2 Precautionary Labels

Read all labels and tags attached to the instrument. Personal injury or damage to the instrument could occur if not observed.

	Electrical equipment marked with this symbol may not be disposed of in European public disposal systems. In conformity with European local and national regulations (EU Directive 2002/96/EC), European electrical equipment users must now return old or end-of life equipment to the Producer for disposal at no charge to the user. ***Note:*** *For recycling, please contact the equipment producer or supplier for instructions on how to return end-of-life equipment, producer-supplied electrical accessories, and all auxiliary items for proper disposal. No equipment is to be returned without authorization. Local recycling programs may be used.*
	This is the safety alert symbol. Obey all safety messages that follow this symbol to avoid potential injury. If on the instrument, refer to the instruction manual for operation or safety information.
	This symbol indicates a risk of electrical shock and/or electrocution exists.
	This symbol indicates that the marked item has stored energy. Obey procedures to wait 5 (five) minutes after disconnecting main power to allow stored energy to dissipate.
	This symbol indicates machine may start automatically without warning.
	This symbol indicates the components of the system have been exposed to biohazardous waste and / or bioaerosols.
	This symbol indicates a rotational pinch hazard.

	This symbol indicates auger entanglement and should stay clear.
	This symbol indicates a belt entanglement hazard. Stay clear of moving/rotating parts.
	This symbol indicates a body crush hazard. People should stay clear from under overhead loads.
	This symbol indicates surfaces may be slippery or there is a potential fall hazard.
	This symbol indicates surfaces may be slippery and there is a potential fall hazard.
	This symbol indicates the marked item could be hot and should not be touched without gloves.
	This symbol indicates the marked item should not be touched.
	This symbol indicates a risk of electrical shock and/or electrocution exists, and that all appropriate lockout tag out procedures must be obeyed.
	This symbol indicates a physical lock is required during operation.
	This symbol indicates to secure the device with a safety device / hook.
	This symbol indicates safety glasses with side protection must be worn as a minimum added protection.
	This symbol indicates a full face shield is required for protection against airborne aerosols.
	This symbol indicates gloves must be worn.
	This symbol indicates safety boots must be worn.
	This symbol indicates respiratory protection is required.

	This symbol indicates hearing protection is required.
	This symbol indicates a hard hat must be worn.
	This symbol indicates the operator must read all available documentation to perform the required procedures.

2.3 Safety Precautions

Read the safety precautions in this section before doing maintenance, service or repair. Obey the instructions in the safety precautions. Failure to follow the instructions in the safety precautions can result in serious injury or death.

⚠ DANGER







Automated Machinery Hazard.

Auger Entanglement and Rotational Pinch Hazard.

- Failure to follow these instructions will result in serious injury or death due to AUTO START, entanglement, or rotational pinch.
- ALWAYS stay clear. This unit may start at any time.
- ALWAYS follow lockout tag out procedures, as required by ***Operation and Maintenance Manual*** before opening lid.
- NEVER operate equipment with lid open.

  Exception: *Inspection and cleaning performed in compliance with* ***Operation and Maintenance Manual*** *by competent personnel only.*

⚠ DANGER






Arc Flash and Shock Hazard - Live Electrical Circuit Present.

Hazardous Voltage.

- Failure to follow these instructions will result in electrical shock, injury or death from electrocution.
- Equipment should be accessed by competent personnel only.
- Uninterruptible Power Supply (UPS) outputs are still live after main disconnect is off and some circuits may continue to be energized.
- Turn off UPS and disconnect plugs from UPS outputs before performing any inspection, repair, service or maintenance.
- Lockout tag out all sources of power before performing any inspection, repair, or maintenance. ***There may be more than one source of power!***

⚠ WARNING




Body Crush Hazard.

- Failure to follow these instructions could result in serious injury or death due to improper lifting procedures and under rated lifting equipment.
- Inspection, repair and maintenance must be performed by competent personnel only.
- ALWAYS secure with safety device.
- ALWAYS stay clear of elevated loads.

⚠ WARNING






Biohazard.

- Failure to follow these instructions could result in serious injury or death due to contact with biohazardous materials.
- Inspection, repair and maintenance must be performed by competent personnel only.
- ALWAYS wear safety glasses and gloves when working on or around the equipment.
- ALWAYS wear respirator when working on or around the equipment when bioaerosols are present.

⚠ CAUTION




Burn Hazard.

- Failure to follow these instructions may result in minor or moderate injury due to burns.
- NEVER touch hot surface.

NOTICE








PPE Required.

Contamination of components is expected within this application due to effluent water. The manufacturer requires operators take all necessary precautions when working around, operating, or working on this equipment.

- ALWAYS use appropriate hearing protection when in an area with airborne noise emissions, A-weighted emission sound pressure, are above 70dB(A). Hearing protection is recommended when working around an operating air blower, air conditioner, or dewatering unit.
- ALWAYS use appropriate eye, hand, and foot protection.
- ALWAYS wear a face shield when inspecting open running equipment.
- ALWAYS wear respirator and appropriate clothing including thick gloves when bioaerosols are present.
- ALWAYS wear appropriate PPE as required by applicable regulations, depending on system application and plant procedures, to protect face, hands, and body from the process liquids, solids, and aerosols.
- ALWAYS follow plant safety procedures and protocols.
- Dispose of contaminated parts/components as per country requirements.

NOTICE



Avoid Injury.

- Read and understand the ***Operation and Maintenance Manual*** before operating this equipment.
- Use personal protective equipment appropriate to work being performed as required by local regulations and ***Operation and Maintenance Manual***.

NOTICE

Only competent personnel should undertake operation, repairs, maintenance, or servicing of equipment described in this manual. Maintain the continuity of the lockout tag out between shifts. If you do not understand the information or procedure explanations in this manual, STOP and contact your Service Provider for assistance.

2.4 Safety Features

The system has safety features that prevent personal injury:

- Emergency shut off
- Keyed Lid Lock
- Disconnects

The information in this manual has been carefully checked and is believed to be accurate. However, the manufacturer assumes no responsibility for any inaccuracies that may be contained in this manual. In no event will the manufacturer be liable for direct, indirect, special, incidental or consequential damages resulting from any defect or omission in this manual, even if advised of the possibility of such damages. In the interest of continued product development, the manufacturer reserves the right to make improvements in this manual and the products it describes at any time, without notice or obligation.

3.1 System Overview

The system is used for primary filtering of municipal wastewater effluent, and for industrial applications such as the fishing industry, fish net laundry facilities, pulp and paper industry, breweries, food processing industry, textile industry, tanneries, cruise ships, etc. The different models all perform the same function, but are scaled for different volumes of water.

3.1.1 System Components

The system is designed and produced to reduce the total suspended solids and consists of the following components.

- Filter - separates liquid from solids
- Air blower - produces air for cleaning the filter mesh
- Control Power Panel (CPP) - provides power and controls to the filter. For certain installations, the functionality of the CPP will be an integrated part of the main control system for the whole plant.

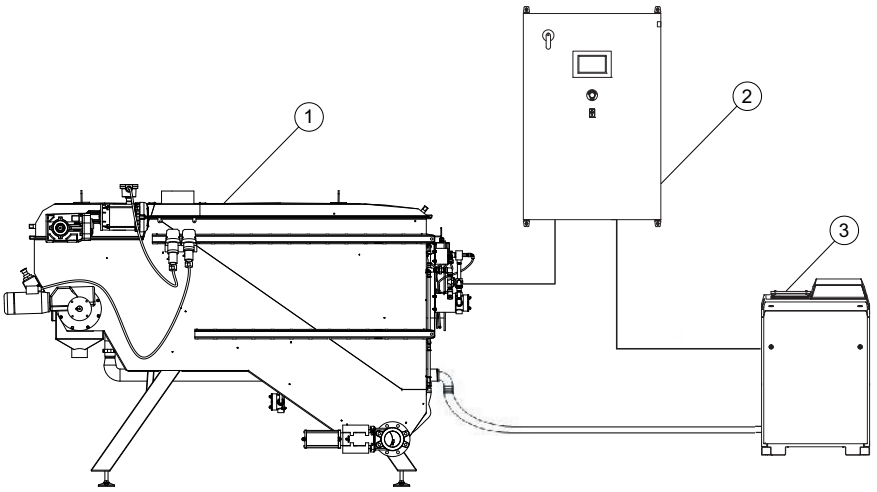

Figure 1 System Major Components

1	Filter Unit	**2**	Control Power Panel (CPP)
3	Air Blower		

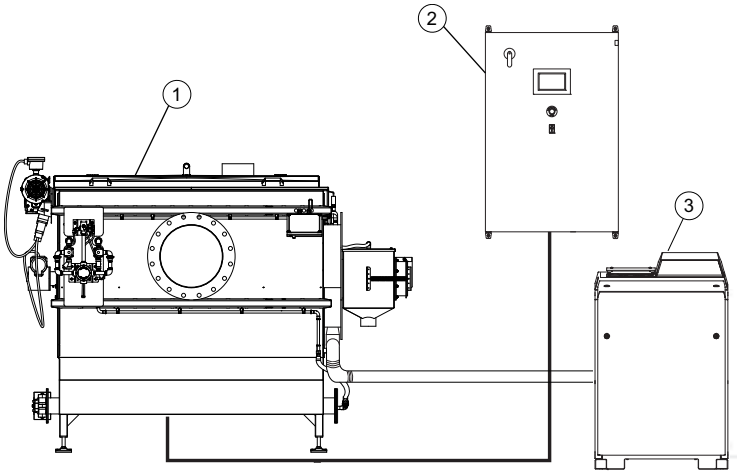

Figure 2 System Major Components

1	Filter Unit	**2**	Control Power Panel (CPP)
3	Air Blower		

3.2 Filter Components

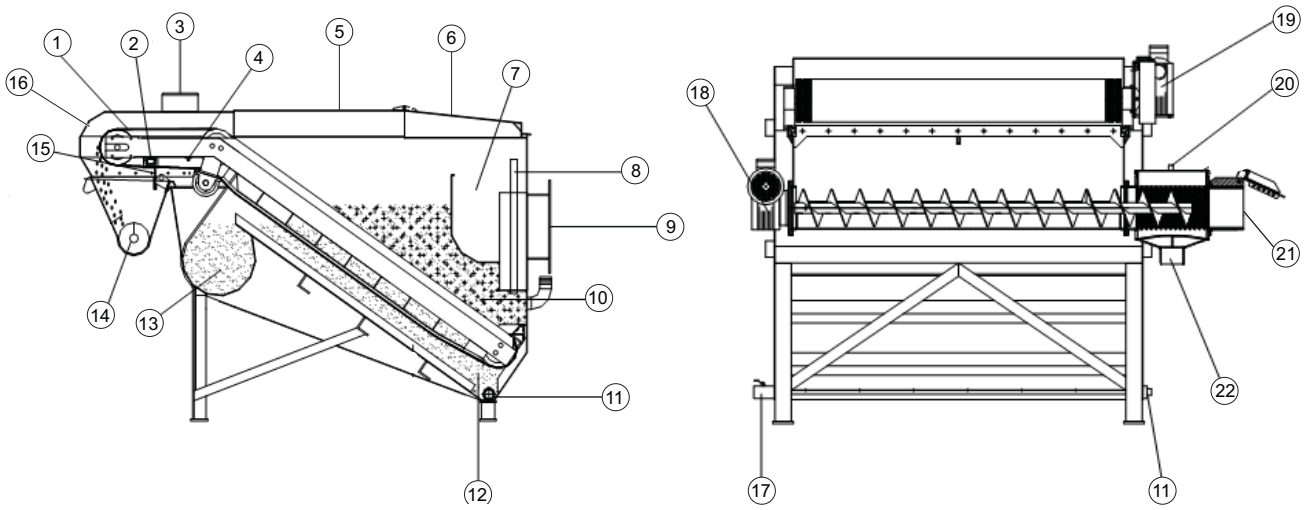

Figure 3 Filter Unit - Details

1	Filter Mesh	**2**	Air Knife
3	Ventilation	**4**	Flushing Nozzle
5	Center Lid	**6**	Inlet Lid
7	Overflow	**8**	Level Transmitter
9	Inlet	**10**	Untreated wastewater
11	Bottom Flush	**12**	Filtered Wastewater
13	Outlet	**14**	Sludge Auger
15	Tension Bar	**16**	Sludge Auger Lid
17	Drain	**18**	Motor, Sludge Screw
19	Motor, Filter Mesh	**20**	Dewatering Unit Lid (optional)
21	Dewatering Unit sludge outlet (optional)	**22**	Outlet, Dewatering Unit Wastewater (optional)

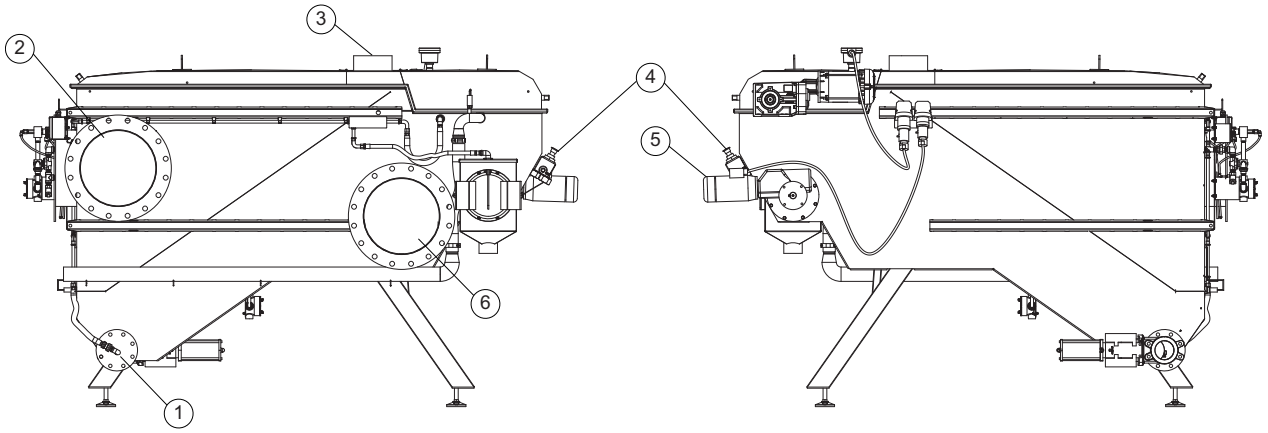

Figure 4 Filter Unit - Details

1	Cold Water Flush	**2**	Outlet
3	Vent (optional)	**4**	Emergency Stop
5	Sludge Conveyor Motor	**6**	Overflow

Filter Mesh
The filter mesh is a holed material that rotates on a belt. The solids above the filter mesh create a “filter mat”. The mat enhances separation performance as particles buildup on the mesh, creating progressively smaller holes that retain increasingly smaller particles. Water that is filtered past the mesh exits through the outlet.

Water Level Sensor
The Water Level Sensor measures the wastewater influent to a certain level allowing the filter mesh to start rotating and creating the filter mat.

Air Knife
The Air Knife is first initiated, air pressure is sensed and the filter mesh begins to rotate. Air Knife uses blower air to remove the filter mat from the filter mesh into the Sludge Conveyor compartment.

Sludge Conveyor
The Sludge Conveyor transports the filter mat out of the filter unit.

Dewatering Unit (Optional)
The Dewatering Unit is used to further reduce the moisture content from the filter mat.

Knife Gate Drain Valve
The Knife Gate Drain Valve opens to remove sediment from the filter during the flush procedure.

3.3 Control Power Panel (CPP)

The CPP houses a Programmable Logic Controller that makes this a completely automated system. A water pressure sensor tells the unit when to rotate the filter mesh (and at what speed), while the PLC simultaneously starts the Air Knife and sludge conveyor.

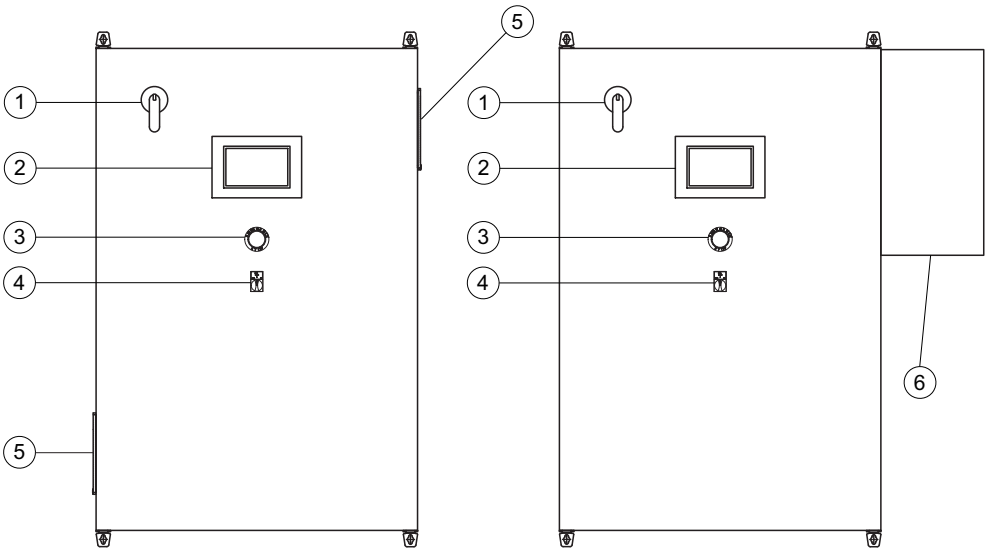

Figure 5 CPP Main Components

1	Disconnect Handle	**2**	Operator Interface Terminal (OIT)
3	Emergency Stop	**4**	Filter Mode Selector Switch
5	Cooling Fan	**6**	Air Conditioner

3.4 Air Blower

The Air Blower works with the Air Knife on the filter unit to clean the filter mesh.

3.5 Acceptable Noise Levels

NOTICE



Hearing protection is recommended when working around an operating air blower, air conditioner, or dewatering unit. Follow plant procedures.

The airborne noise emissions, A-weighted emission sound pressure level is above 70 dB(A) and less than 85 dB(A).

3.6 Patents and Permissions

The system in this manual may be protected by one or more patents in Norway and/or other countries. For a list of patents owned by Salsnes Filter®, go to www.trojantechnologies.com/patents.

No part of this publication may be reproduced, stored in a retrieval system, or transmitted in any form or by any means without written permission of Salsnes Filter®.

3.7 Abbreviations and Acronyms

Table 1 describes the abbreviations and acronyms included in this manual.

Table 1 Abbreviations and Acronyms

Abbreviation/Acronyms	Description
CPP	Control Power Panel
D gain	Derivative gain
HMI	Human Machine Interface
I gain	Integral gain
OIT	Operator Interface Terminal
P gain	Proportional gain
P mode	Proportional mode
PID mode	Proportional Integral Derivative mode
PLC	Programmable Logic Controller
PPE	Personal Protection Equipment
UPS	Uninterrupted Power Supply
VFD	Variable Frequency Drive

⚠ DANGER



Obey all warning and caution statements. Refer to Section 2.

Read and understand this Operation and Maintenance Manual before operating this equipment. Read all user documentation before performing operations, inspections, repair, or maintenance on this equipment.



Only competent personnel should undertake operation, repairs, maintenance, or servicing of equipment described in this section of the manual. If you do not understand the information or procedure explanations in this manual, STOP and contact your Service Provider for assistance.

The parameter values of the control system are set by the manufacturer. These values can be modified according to the current plant conditions in order to achieve optimized operations. These parameters are adjusted on the OIT. Refer to Table 2.

The water flush is set to operate in intervals and for a preset time. Depending on the fat/grease content in the wastewater, which tends to clog the filter mesh, flush interval is adjusted.

The dewatering sludge auger is controlled by a variable frequency drive and is run at a fixed speed depending on the application requirements. It is important that the conveyor screw runs for a certain time after the filter mesh is stopped to empty the tray.

4.1 Overview of Sequence and Principle

The system is controlled by the Control Power Panel (CPP).

1. Raw wastewater enters the system through the inlet.
2. The filter mesh filters the raw wastewater. Filtered water then flows through the outlet.
3. The sludge accumulated on the filter mesh is removed by the air knife device into the sludge outlet.
4. Sludge is transferred by auger through an (optional) dewatering unit.
5. Sludge is then transferred to a sludge collection system (sludge transfer system not supplied).

4.2 Basic Setup Data

The following setup parameters are valid for all units as shown in Table 2.

The CPP supplied has all the default values pre-programmed.

Water levels have the outlet threshold as a reference point zero (0) (Refer to Table 2). A ruler is mounted on the sidewall of the unit to read the actual levels above or below the 0 level.

Table 2 Water levels

	Level pressure transmitter (bottom of level sensor referencing outlet threshold as zero)	Water level - Start (initial value)	Max drive speed level** (initial value)	Water level - Stop (initial value)	Water level - Overflow
SF: 2000	- 45 mm (-1.8 in)	140 mm (5.9 in)	260 mm (10.2 in)	100 mm (3.9 in)	300 mm (11.8 in)
SF: 4000	- 145 mm (- 5.7 in)	160 mm (6.3 in)	280 mm (11.0 in)	120 mm (4.7 in)	320 mm (12.6 in)
SF: 6000	- 145 mm (-5.7 in)	165 mm (6.5 in)	290 mm (11.4 in)	125 mm (4.9 in)	345 mm (13.5 in)

** The motor has reached 60 Hz at this water level. For example, SF: 2000 water level 130mm above 0 will mean the motor is at 50% or 30 Hz.

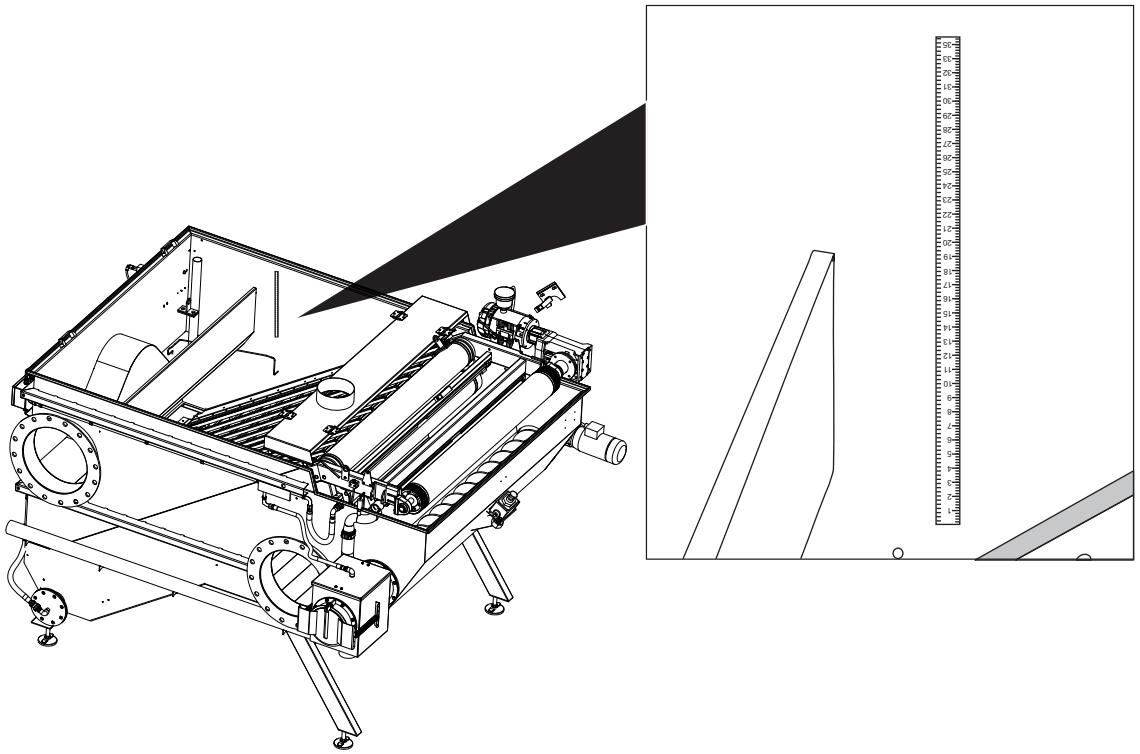

Figure 6 Ruler for Level Measurement

4.3 Switches and Indicators

The following control switches and indicators are needed in the control system for operation of the system. The Filter Mode Selector Switch can be found on the CPP. Refer to Figure 5.

Switch/Indicator	Functions	Description
Filter Mode Selector Switch	Local	Allows filter to run at last pre-set settings. Settings can be adjusted on variable frequency drives.
	Off	Turns system off.
	OIT Mode	Controlled from the Control Power Panel OIT screen.

4.4 Control Modes

The system can run in the following types of Control Modes:

Automatic Control Mode

This mode is used for normal operation, where the filter mesh, sludge auger and water flushing is automatic.

In this mode, the water level sensor provides the inputs to the PLC which are used to control the speed of the filter mesh. The PLC controls the filter mesh, air blower, sludge auger and water flushing. Refer to Table 2 for initial water level settings.

Manual Control Mode

This mode is used for maintenance, test and service purposes of:

- Air Blower Control
- Motor Control
- Valve Control

Local Control Mode

In this mode, the filter mesh and sludge auger both run at the manually entered device speed. The air blower will run continuously. The flush valves and drain valves will not operate.

Off Mode

In this mode, no devices are able to run.

4.5 Navigate Operator Interface Terminal

The OIT on the CPP uses touchscreen technology. Do not use the writing tips of pens or pencils or other sharp objects to make selections on the screen. Use only a clean, dry fingertip or the eraser tip of a pencil.

4.5.1 System Settings

The configuration settings for the system are accessed, reviewed or changed through the System Settings Screens. Push the numeric entry box, enter the value, then push ENTER. Use the pop-up numeric touch pad to enter the desired value.

4.5.1.1 Login Screen

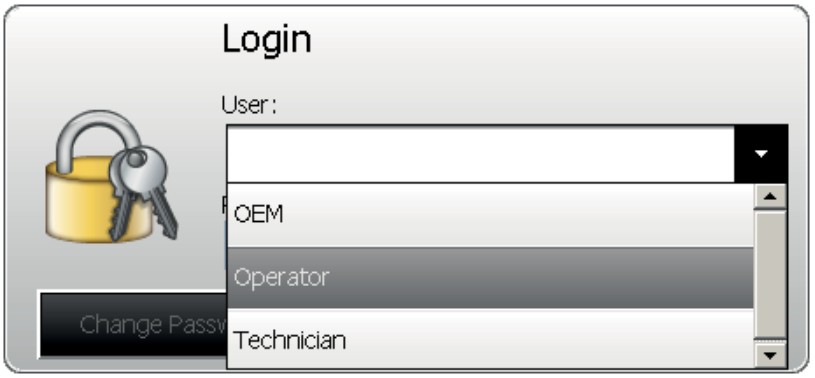

Figure 7 Login Screen

Table 3 Passwords

User	Password
OEM	Access used by Manufacturer only
Technician	Contact your Service Provider
Operator	3333

4.6 Control Power Panel Operation

The CPP contains the control program for the Filter system. The CPP is configured at the factory with inputs and outputs as required for each system. The manufacturer configures the functionality of each of the signals in the control strategy. Daily operation includes monitoring the system functions, and may occasionally require the operator to manually initiate or control processes.

4.6.1 Filter Screen

All OIT screens show navigation buttons around the system. Refer to Figure 8.

	Motor Running (Grey circle with Green Triangle)		Motor Stopped (Grey circle with White Triangle)	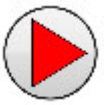	Motor Faulted (Grey circle with Red Triangle)
	Valve Open (Grey Valve with Green Rectangle)		Valve Closed (Grey Valve with White Rectangle)		Valve Faulted (Grey Valve with Red Rectangle)

Figure 8 Screen Navigation Buttons

The OIT screens use color codes to help identify types of data. The colored line at the bottom of each screen corresponds with the colored tab currently on display. The Filter Screen displays system status information, system fault indicators and provides the Operator control access.

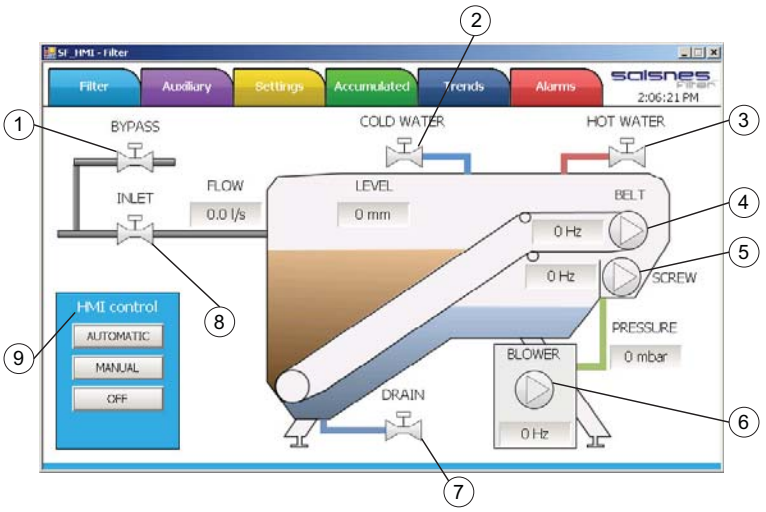

Figure 9 Filter Screen

1	Bypass button	**2**	Cold water button
3	Hot water button	**4**	Belt button
5	Screw button	**6**	Blower button
7	Drain button	**8**	Inlet button
9	OIT (HMI) control (Automatic, Manual, Off) buttons		

Note: *Not all buttons will be active, depending on the systems components.*

The Filter Screen buttons are accessed by selecting the  or  on the Filter Screen located on each device or component.

Note: *The following Filter Screen buttons are displayed below when the unit is set to Manual Mode. Local control buttons are not available when the system is in Automatic Mode.*

Table 4 Filter Screen Buttons

Screen	Description	Screen	Description
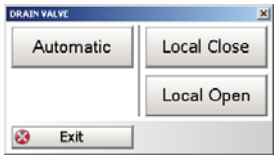	DRAIN VALVE	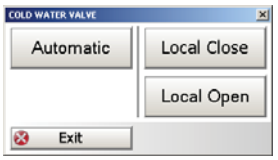	COLD WATER VALVE
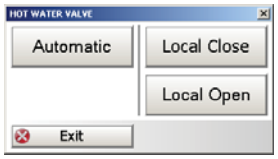	HOT WATER VALVE		FILTER MOTOR
	SLUDGE SCREW MOTOR		AIR BLOWER
	BYPASS VALVE	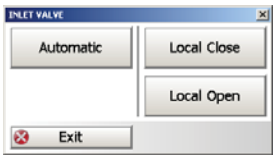	INLET VALVE

4.6.2 Auxiliary Screen

The Auxiliary screen is used to show the external equipment that is not standard on the system such as augers, sludge bins, pump stations etc.



Figure 10 Auxiliary Screen

4.6.3 Settings Screens

The Settings Screens are divided into two levels of access.

General Access screens are available at any time using the Operator level Password. Refer to Table 3.

Technician Access screens require the Technician password.

4.6.3.1 Level Control

The Level Control setting screen is used to configure the basic settings for how the system controls the water level.

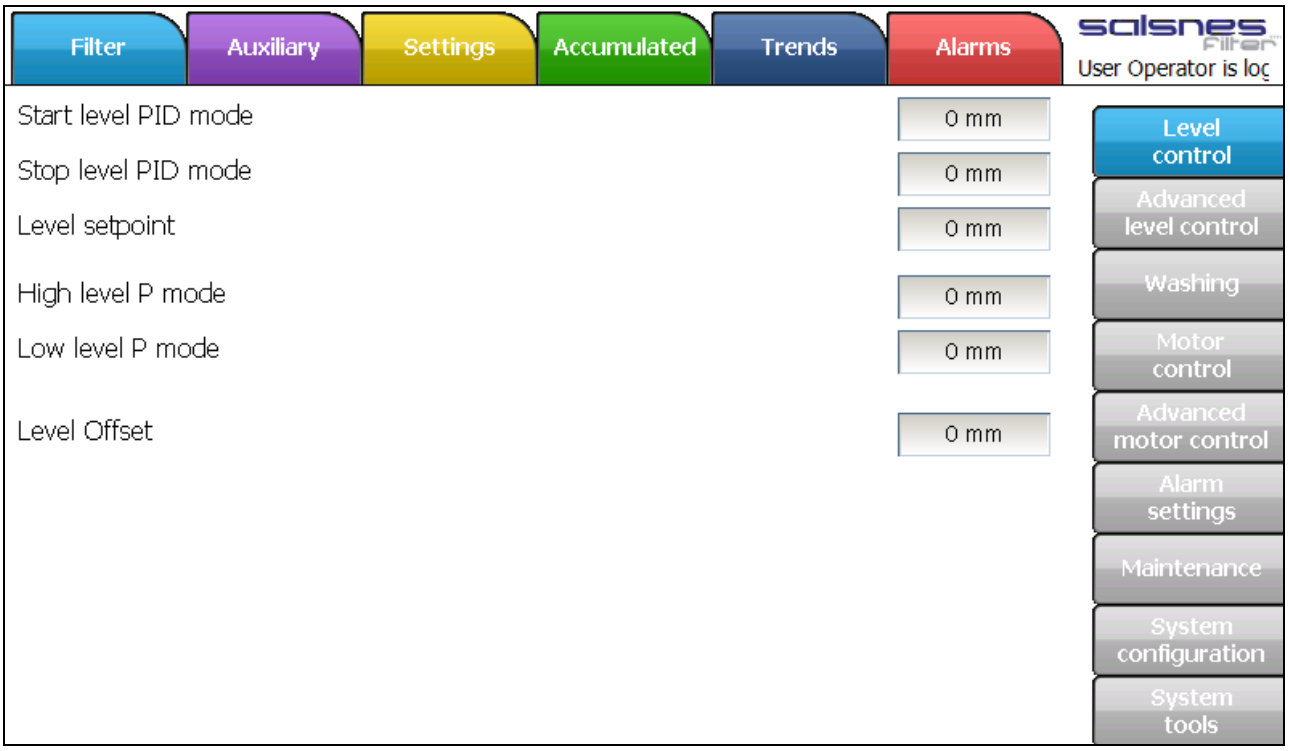

Figure 11 Level Control

Setting	Description	Units	Entry Limits	Security Level
Start Level PID mode	The filter will start when the water level is above this level and the system is in PID mode	mm	None	Operator
Stop Level PID mode	The filter will stop when the water level is below this level and the system is in PID mode. This level must be below the start level.			
Level Setpoint	The water level that the filter will try to maintain when in PID mode			
High level P mode	The water level at which the filter will run at the maximum frequency when in P mode			
Low level P mode	The water level at which the filter will run at the minimum frequency when in P mode			
Level Offset	The correction offset value to apply to the current level sensor reading.			

4.6.3.2 Advanced Level Control

The Advanced Level Control settings screen is used to control how the system responds to changes in level.

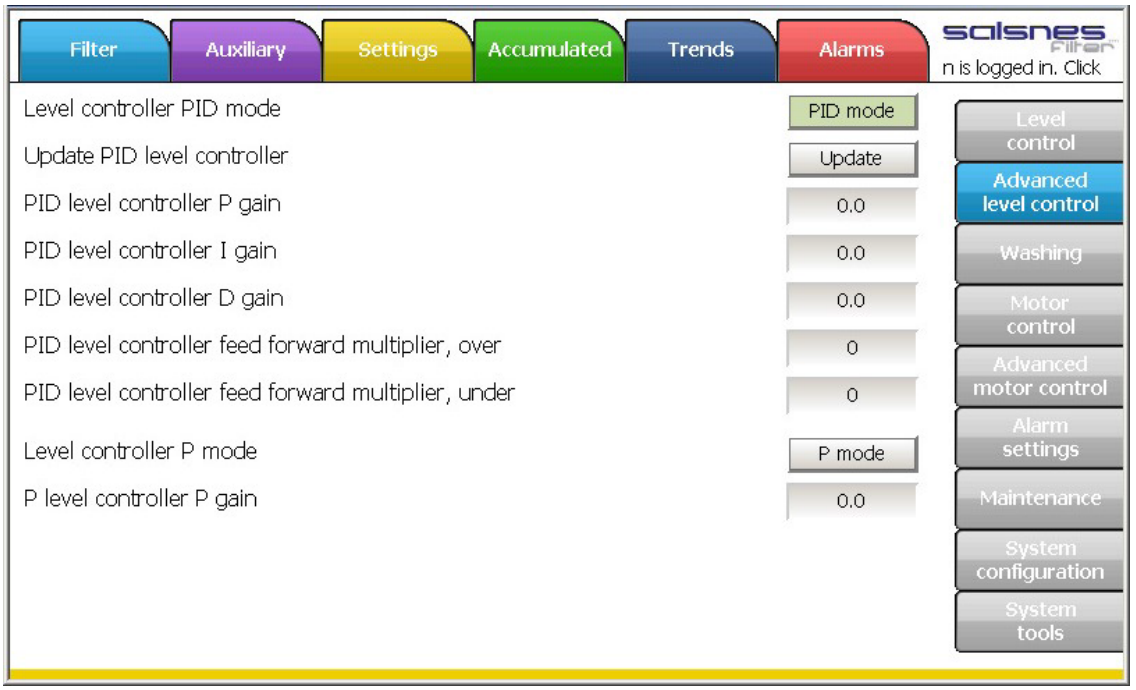

Figure 12 Advanced Level Control

Setting	Description	Units	Entry Limits	Security Level
Level controller PID mode	Sets the controller to use PID level control mode to target a specific water level setpoint using the PID controller to adjust belt speed	None	None	Technician
Update PID level controller	Triggers an update of the PID controller to accept any changes in PID parameters			
PID level controller P gain	Proportional gain of the PID controller			
PID level controller I gain	Integral gain of the PID controller			
PID level controller D gain	Derivative gain of the PID controller			
PID level controller feed forward multiplier, over	Feed forward multiplier of the PID controller when the level is above the target			
PID level controller feed forward multiplier, under	Feed forward multiplier of the PID controller when the level is below the target			
Level controller P mode	Sets the controller to use P level control mode to adjust belt speed as water level changes			
P level controller P gain	Proportional gain of the P controller			

4.6.3.3 Washing

The Washing Setting screen is used to configure the washing frequency and duration. Refer to Section 1 for operational ranges.



Figure 13 Washing

Setting	Description	Units	Entry Limits	Security Level
Cold water wash duty time	Duration that the cold water wash will run for	Seconds	None	Operator
Hot water wash duty time	Duration that the hot water wash will run for			
Cold water wash standby time	Duration between cold water washes	Minutes		
Hot water wash standby time	Duration between hot water washes			

4.6.3.4 Motor Control

The Motor Control Setting screen is used to configure basic motor operation settings and sequences.

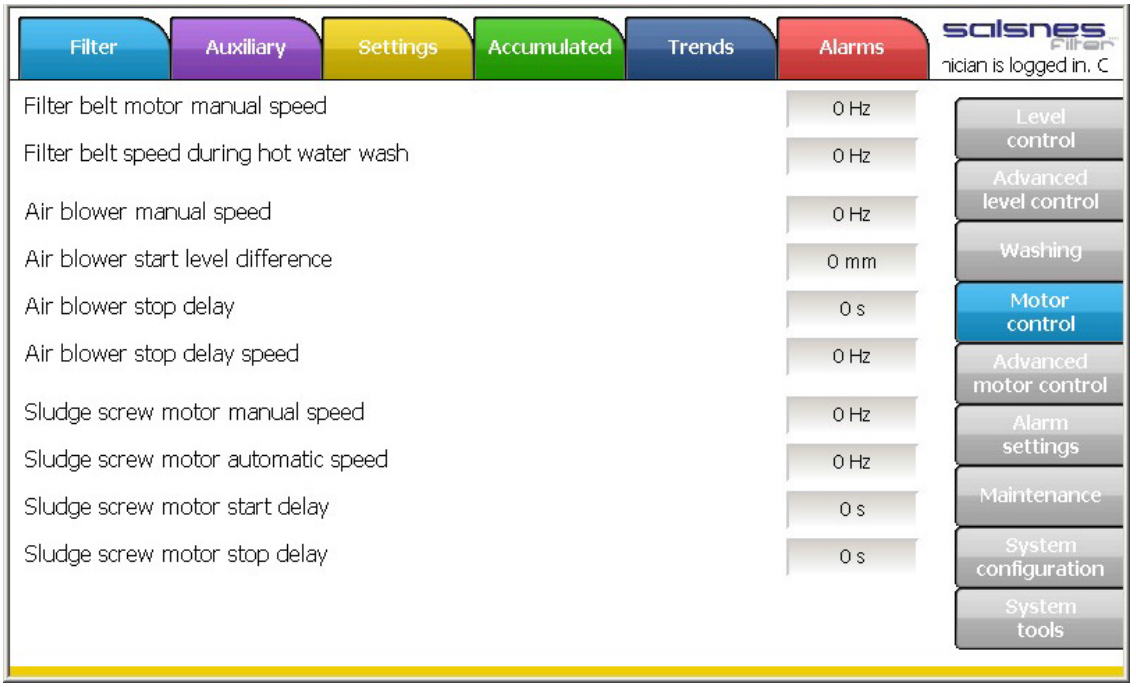

Figure 14 Motor Control

Setting	Description	Units	Entry Limits	Security Level
Filter belt motor manual speed	The speed the filter belt runs when in Manual control mode. This can be adjusted on the filter belt motor popup screen as well. This value is used for speed control when the control mode selector switch is set to Local	Hz	None	Operator
Filter belt speed during hot water wash	The speed the filter belt runs during a hot water wash.			
Air blower manual speed	The speed the air blower runs when in manual control mode. This can be adjusted on the air blower motor popup screen as well. This setting only applies when a VFD is used to control the air blower.			
Air blower start level difference	The distance below the start level setpoint that the air blower starts. The air blower must be running before the filter belt can start.			
Air blower stop delay	The amount of time the air blower remains running once the filter belt stops. This is used to reduce the number of start cycles for the blower.			
Air blower stop delay speed	The speed the air blower runs when the stop delay timer is running. This setting only applies when a VFD is used to control the air blower.			
Sludge screw motor manual speed	The speed the auger runs when in Manual control mode. This can be adjusted on the auger motor popup screen as well. This value is used for speed control when the control mode selector switch is set to Local			
Sludge screw motor manual speed	The speed the auger runs when in Automatic control mode.			

Setting	Description	Units	Entry Limits	Security Level
Sludge screw motor automatic speed	The speed the auger runs when in Automatic control mode.	Hz	None	Operator
Sludge screw motor start delay	The amount of time the filter belt must be running before the auger starts.			
Sludge screw motor stop delay	The amount of time the filter belt must be stopped before the auger stops.			

4.6.3.5 Advanced Motor Control

The Advanced Motor Control Setting screen is used to configure the advanced motor settings and limits.

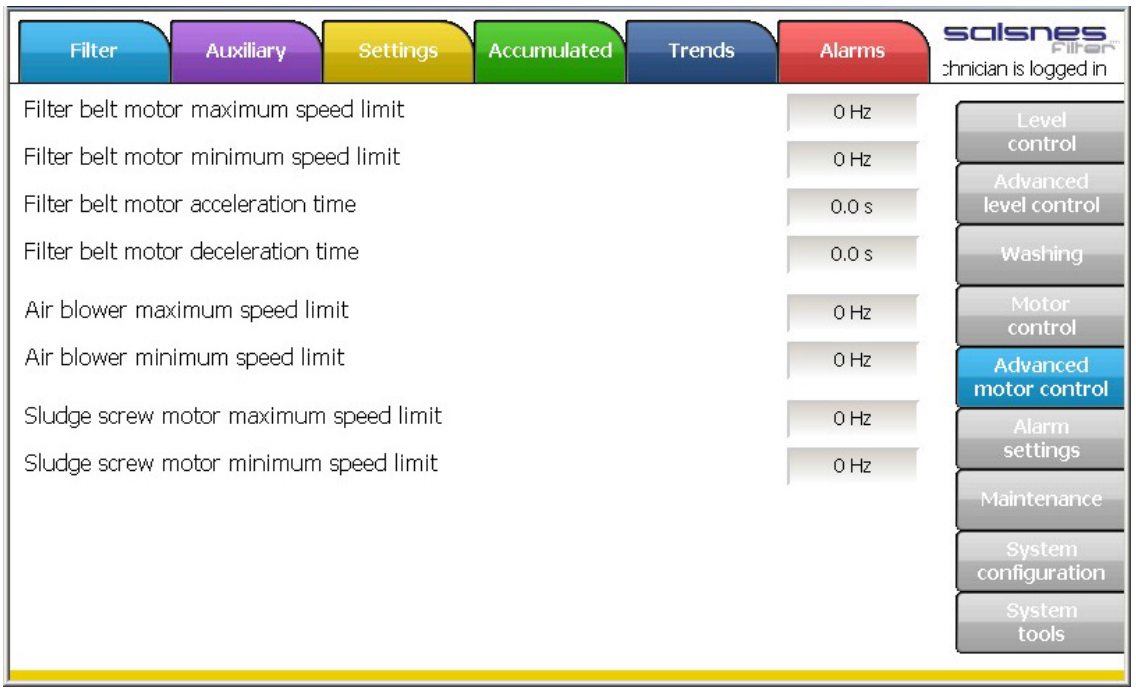

Figure 15 Advanced Motor Control

Setting	Description	Units	Entry Limits	Security Level
Filter belt motor maximum speed limit	The maximum frequency the filter belt motor can run at.	Hz	None	Technician
Filter belt motor minimum speed limit	The minimum frequency the filter belt motor can run at.	Hz		
Filter belt motor acceleration time	The filter belt motor acceleration time	Seconds		
Filter belt motor deceleration time	The filter belt motor deceleration time	Seconds		
Air blower maximum speed limit	The maximum frequency the air blower motor can run at. This setting only applies when a VFD is used to control the air blower.	Hz		
Air blower minimum speed limit	The minimum frequency the air blower motor can run at. This setting only applies when a VFD is used to control the air blower.	Hz		

Setting	Description	Units	Entry Limits	Security Level
Sludge screw motor maximum speed limit	The maximum frequency the auger motor can run at.	Hz	None	Technician
Sludge screw motor minimum speed limit	The minimum frequency the auger motor can run at.			

4.6.3.6 Alarm Settings

The Alarm Setting screen is used to configure operation alarm limits and delay times.

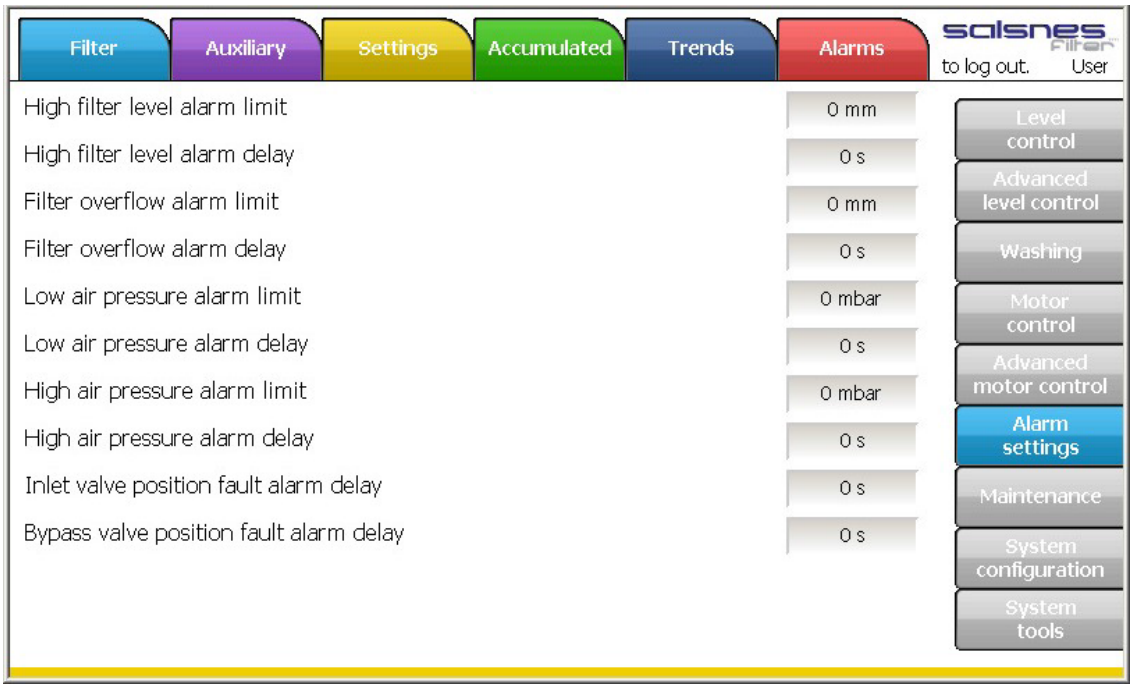

Figure 16 Alarms Settings

Setting	Description	Units	Entry Limits	Security Level
High filter level alarm limit	The alarm will occur if the water level is above this level for the delay time	mm	None	Technician
High filter level alarm delay	The alarm will occur if the water level is above the high limit for this delay time	Seconds		
Filter overflow alarm limit	The alarm will occur if the water level is above this level for the delay time	mm		
Filter overflow alarm delay	The alarm will occur if the water level is above the overflow limit for this delay time	Seconds		
Low air pressure alarm limit	The alarm will occur if the air pressure is below this level for the delay time	mbar		
Low air pressure alarm delay	The alarm will occur if the air pressure is below the low limit for this delay time	Seconds		
High air pressure alarm limit	The alarm will occur if the air pressure is above this level for the delay time	mbar		
High air pressure alarm delay	The alarm will occur if the air pressure is above the high limit for this delay time	Seconds		

Setting	Description	Units	Entry Limits	Security Level
Inlet valve position fault alarm delay	The alarm will occur if the valve has been requested to move to a position and the feedback for that position has not been received for this delay time	Seconds	None	Technician
Bypass valve position fault alarm delay	The alarm will occur if the valve has been requested to move to a position and the feedback for that position has not been received for this delay time	Seconds		

4.6.3.7 Maintenance

The Maintenance Setting screen is used to configure maintenance interval time reminders.

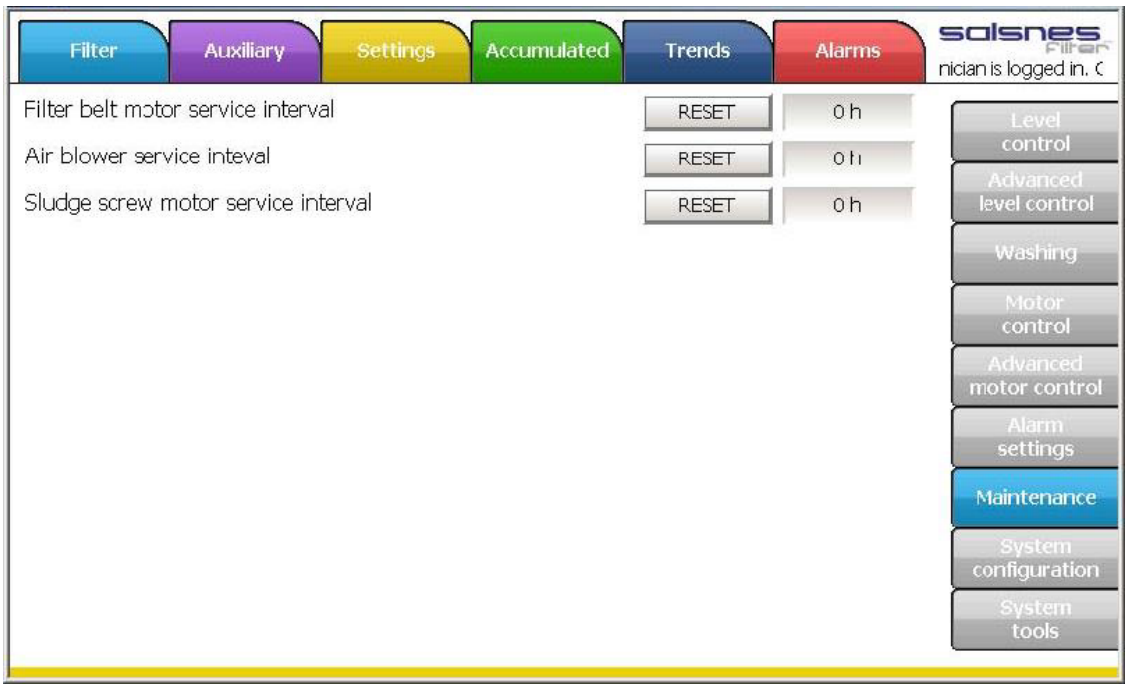

Figure 17 Maintenance

Setting	Description	Units	Entry Limits	Security Level
Filter belt motor service interval	A minor alarm service reminder will occur after the motor has been running for this time	Hours	None	Technician
Air blower service interval	A minor alarm service reminder will occur after the motor has been running for this time			
Sludge screw motor service interval	A minor alarm service reminder will occur after the motor has been running for this time			

4.6.3.8 System Configuration

This feature is for manufacturing Service Providers only.

4.6.3.9 System Tools

The System Tools screen is used to perform control hardware functions and view control hardware operating information.

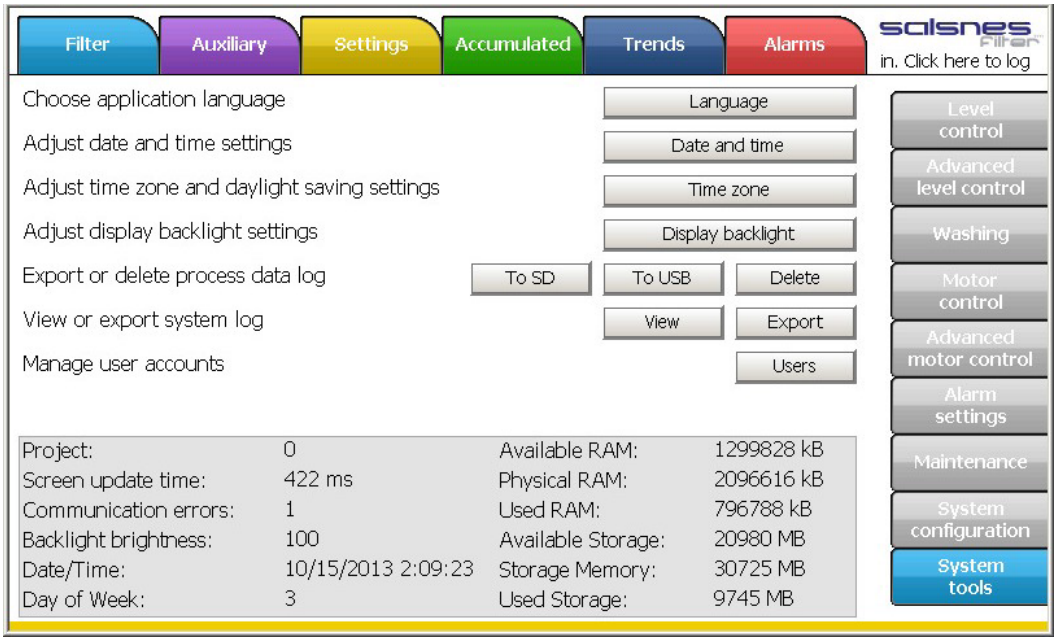

Figure 18 System Tools

Setting	Description	Units	Entry Limits	Security Level
Choose application language	Select the project language for the region	None	None	Technician
Adjust date and time settings	Adjust the data and time for the region			
Adjust time zone and daylight saving setting	Adjust the time zone and daylight saving options for the region			
Adjust display backlight settings	Adjust the backlight settings of the OIT			
Export or delete process data log	Choose which storage method to export the log files to (SD or USB) or delete the log files			
View or export system log	View or export the system logs			
Manage user accounts	Add/remove, change passwords, change security level of user accounts			

4.6.4 Accumulated Screen

The Accumulated Screen displays the runtime status and cycle counts for various filter components for the present day, the previous day and provides a total value. It also displays the number of Filter Overflow events and event duration.

The values are reset by selecting the “RESET” button.



Figure 19 Accumulated screen

4.6.5 Trends Screen

The Trend screen shows trend lines of data logged to an installed user interface Compact Flash card. Each line in the trending window represents the variables that are tracked, and shows the current value for each at the right hand side of the screen. Each line is color-coded.

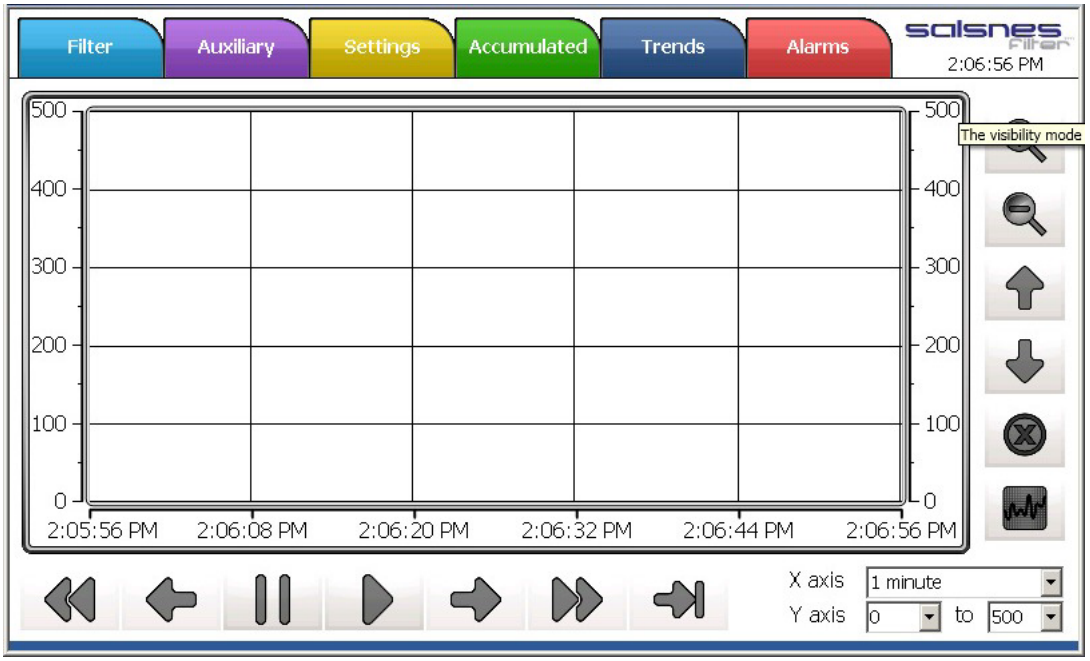

Figure 20 Trends screen

To view Trends:

1. Select  .
2. The Trend legend screen will pop up.

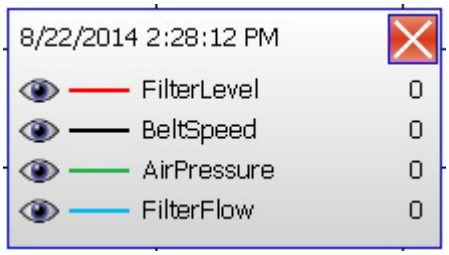

Figure 21 Trend Legend screen

3. Select  to turn the trend on or off from the trend display.

Note: *The value to the right of the trend list displays the current value.*

4.6.6 Alarms Screen

The Alarm screen is used to display any alarm messages for currently active alarm conditions. This screen is displayed first when the alarm button is pushed, on the Screen Navigation bar. The Alarm screen provides an overview of the current active system alarms. The one hundred (100) most recent alarms are displayed on the Alarm screen. When an alarm condition is rectified and no longer active, it is removed from the Alarm screen.

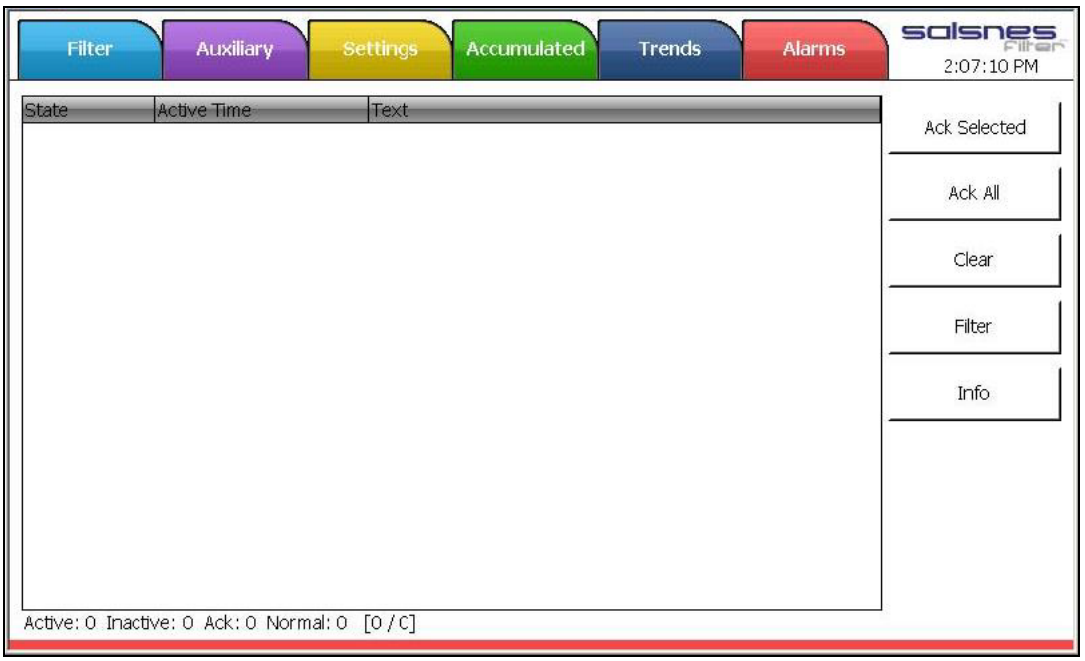

Figure 22 Alarms screen

To acknowledge individual alarms:

1. Touch the alarm on the OIT screen to be cleared.
2. Touch the 

Icon

To acknowledge all active alarms:

1. Touch Ack All Icon.

To Filter Alarms displayed:

1. Touch Filter .
2. The Alarm Event Filter Screen will pop up.

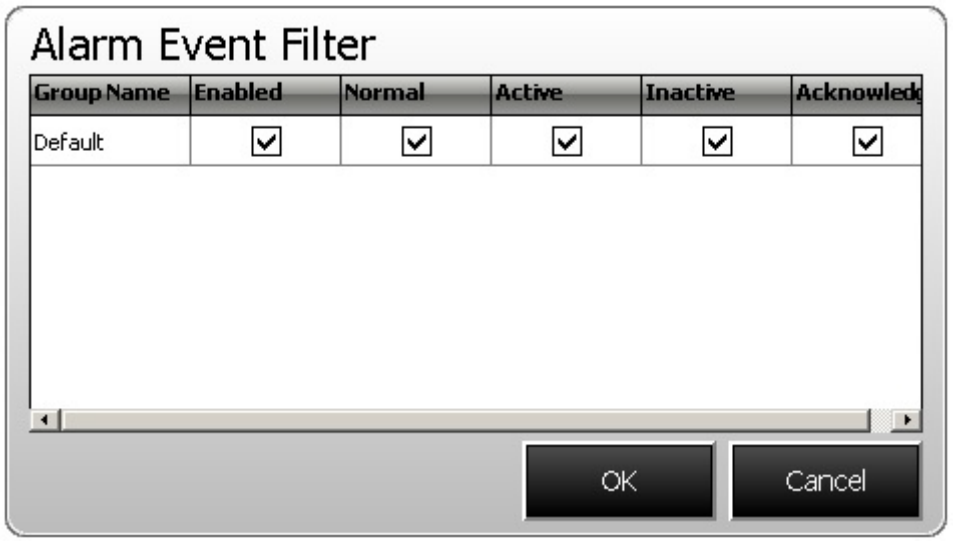

Figure 23 Alarm Event Filter screen

3. Select or deselect alarms to be displayed.

Contact Salsnes Filter™ with the listed information to order replacement parts.

Provide the:

- Product name and model number (refer to the front of this manual)
- Part number and description of the replacement part or accessory

If a replacement part is not listed, contact Salsnes Filter™.

5.1 Filter

5.1.1 Filter (Internal) Components

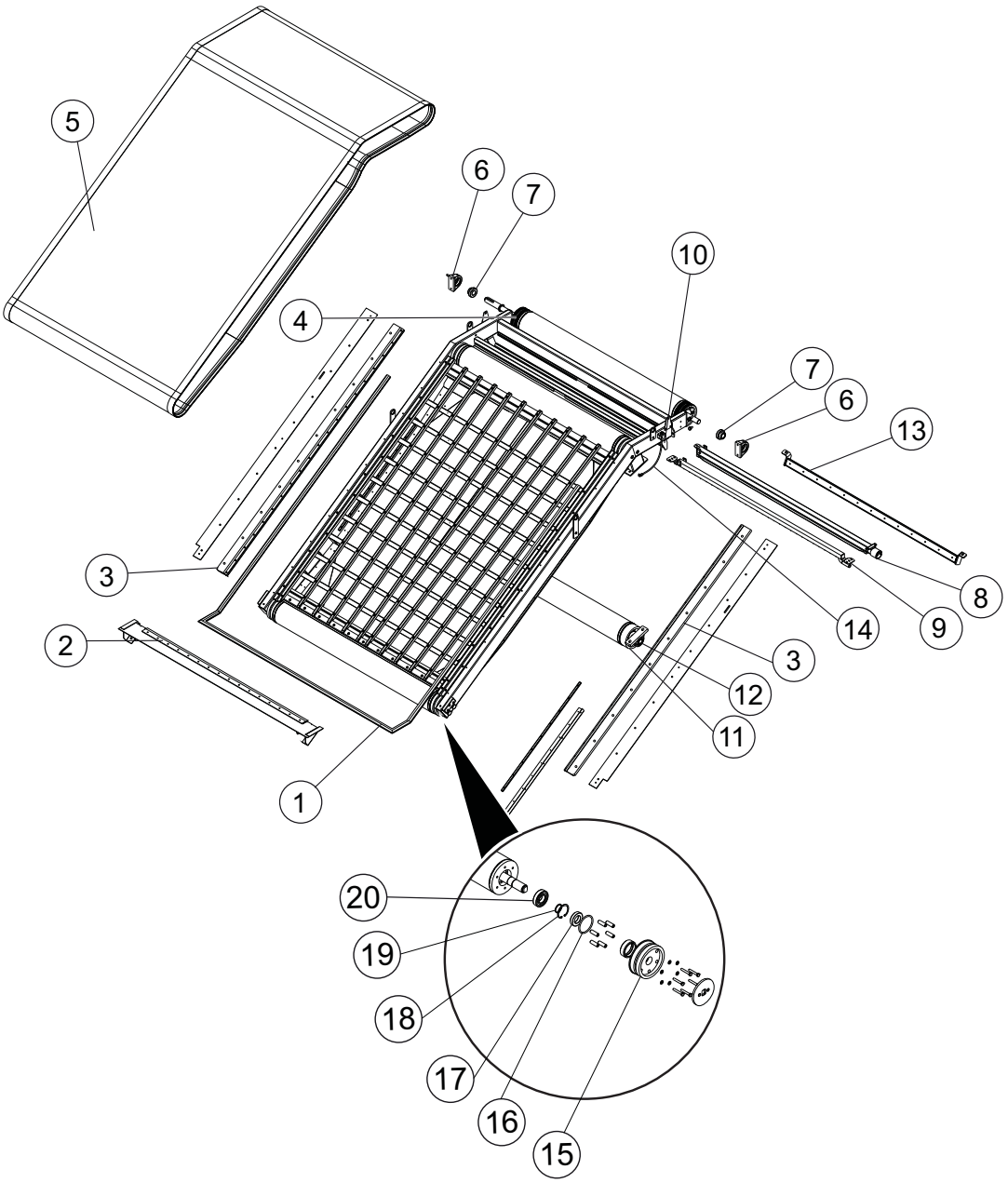

Figure 24 Filter Mesh Assembly

Item	Description	Part Number
1	Filter Gasket	
	SF: 2000- Length 3217 mm	20005011
	SF: 4000- Length 4230 mm	20005011

Item	Description	Part Number
	SF: 6000- Length 5658 mm	20005011
2	Wiper, Sealing Beam (not detailed)	
	SF: 2000	22504836
	SF: 4000	24504836
	SF: 6000	26504836
3	Wiper, Seal Bar	
	SF: 2000(Left Side)	22504812
	SF: 2000(Right Side)	22504811
	SF: 4000(Left Side)	26504812
	SF: 4000(Right Side)	26504811
	SF: 6000(Left Side)	26504812
	SF: 6000(Right Side)	26504811
4	Drive Roller Wheel	20504406
5	Filter Mesh	Contact Service Provider
6	Bearing Housing, Drive Roller	20006053
7	Bearing, Drive Roller	20006030
8	Air Knife	Refer to Section 5.3
9	Spray Bar Nozzle (Hot Water) (not detailed)	20012152
	Spray Bar Nozzle (Cold Water) (not detailed)	10202149
10	Wiper, Sludge Compartment (not detailed)	
	SF: 2000- Length 705 mm	22304102
	SF: 4000- Length 1000 mm	24304102
	SF: 6000- Length 1500 mm	26304102
11	Under Roller Bearing Assembly	
	SF: 2000;SF: 4000; SF: 6000	20006026
12	Under Roller Bearing	
	SF: 2000;SF: 4000; SF: 6000	20006030
13	Under Roller Wiper (not detailed)	
	SF: 2000- Length 705 mm	22304102
	SF: 4000- Length 1000 mm	24304102
	SF: 6000- Length 1500 mm	26304102
14	Grease Tube	20007016
15	Wheel, Guide Roller	20504202
16	O-ring, Guide Roller	421000138
17	Seal, Shaft 35X60X13	421000136
18	Circlip, 60mm	421000141
19	Circlip, 35mm	421000140
20	Bearing	421000139

5.1.2 Filter (External) Components

Description	Part Number
Auger Drive Motor - UL Class 1, Division 1	
SF: 2000; SF: 4000; SF: 6000	508072-001
Drive Motor - UL Class 1, Division 1	
SF: 2000; SF: 4000 SF: 6000	508072-001
Auger Drive Motor - UL	
SF: 2000; SF: 4000 SF: 6000	916865-001
Drive Motor - UL	
SF: 2000; SF: 4000; SF: 6000	916865-001
Auger Gear Box - UL Class 1, Division 1	
SF: 2000	448087-004
SF: 4000;SF: 6000	448041-003
Drive Motor Gear Box - UL Class 1, Division 1	
SF: 2000	448087-001
SF: 4000;SF: 6000	448041-001
Drive Motor - CE	
SF: 2000	20110102
SF: 4000;SF: 6000	20110103
Auger Motor Gear Box - CE	
SF: 2000	20110119
SF: 4000;SF: 6000	20110120
Drive Motor Gear Box - CE	
SF: 2000	20110117
SF: 4000;SF: 6000	20110118

5.2 Dewater Unit Components

Item	Description	Part Number
1	Wedge Wire Screen	
	SF: 2000	22302202
	SF: 4000	24302202
	SF: 6000	26302202
2	Nozzle, 1/8” Flat Spray	20012152
3	Insert	21304211
4	Gasket, Dewatering Unit	
	SF: 2000	22304001
	SF: 4000	24304001
	SF: 6000	20304002
5	Spring	20314201

5.3 Air Knife Components

Item	Description	Part Number
1	Air Knife Assembly	
	SF: 2000	448143
	SF: 4000	448160
	SF: 6000	448124
2	Air Knife O-Ring	20504609
3	Air Knife Plastic	
	SF: 2000	448145
	SF: 4000	448162
	SF: 6000	448126

5.4 Instrumentation Components

Item	Description	Part Number
1	Level Sensor (CE)	421000142
1	Level Sensor (UL)	448173
2	Pressure Transmitter (UL Class 1 / Division 1)	508055
2	Pressure Transmitter (UL / CE)	20215203
3	Solenoid Valve - 2 Way (UL Class 1 / Division 1)	508081
3	Solenoid Valve - 2 Way (UL / CE) - 1/2”	20012175
3	Solenoid Valve - 2 Way (UL / CE) - 1/4”	20012293
3	Solenoid Valve - 2 Way (UL / CE) - 3/4”	20012060
4	Solenoid Valve - 4 Way (UL Class 1 / Division 1)	508082

5.5 Operator Kit Components

Item	Description	Part Number
1	Manual Scraper	20032009
2	Lid Key	Contact Manufacturer

5.6 Miscellaneous Parts

Item	Description	Part Number
1	Grease	1073
2	Seal, Auger Shaft	448067
3	Bearing, Auger Shaft	448068-4060
4	Insert, Sludge Compartment	
	SF: 2000	22304104
	SF: 4000	24304104
	SF: 6000	26304101
5	Sealing, Rubber Edge Housing	
	SF: 2000 - Length = 6m	20005012

Item	Description	Part Number
	SF: 4000- Length = 8m	20005012
	SF: 6000- Length = 9m	20005012
6	Sealing, Rubber Cover	
	SF: 2000- Length = 6m	20005013
	SF: 4000- Length = 8m	20005013
	SF: 6000- Length = 9m	20005013

5.7 Blower

Refer to the Blower Manufacturer’s Operational and Maintenance manual for replacement parts.

PART

E

EQUIPMENT DRAWINGS & CUT SHEETS

SALSNES FILTER© SF SERIES
EQUIPMENT COMPONENT DRAWINGS
SF0025D01 - LEFT OUTLET/SLUDGE FILTER, SF6000 - REV. C
SF0025D02 - LEFT OUTLET/SLUDGE FILTER, SF6000 - REV. C
SF0027D01 - RIGHT OUTLET/SLUDGE FILTER, SF6000 - REV. C
SF0027D02 - RIGHT OUTLET/SLUDGE FILTER, SF6000 - REV. C
DR480080S02 - SLUDGE BOX, SF6000 - REV. C
DR480080S03 - OUTLET BOX, SF6000 - REV. C
26502165 - SPREADER, SF6000/SFK6000 - REV. C

A TROJAN TECHNOLOGIES BUSINESS

salsnes Filter™

EQUIPMENT LIST

No.	DESCRIPTION	No.	DESCRIPTION
A	INLET FLANGE	J	DEWATERED SLUDGE OUTLET
B	OVERFLOW FLANGE	K	REJECT WATER CONNECTION
C	OUTLET FLANGE	L	FILTER MESH MOTOR & GEARBOX
D	HOT WATER CONNECTION VALVE	M	ELECTRICAL CONNECTION BOX
E	COLD WATER CONNECTION VALVE	N	MOTOR CONNECTION BOX
F	KNIFE GATE VALVE	O	BLOWER CONNECTION PIPE
G	BOTTOM FLUSH SPRAY BAR	P	AIR KNIFE
H	DEWATER UNIT (OPTIONAL)	Q	VENT (OPTIONAL) – SEE NOTES
I	AUGER MOTOR & GEARBOX	R	E–STOP

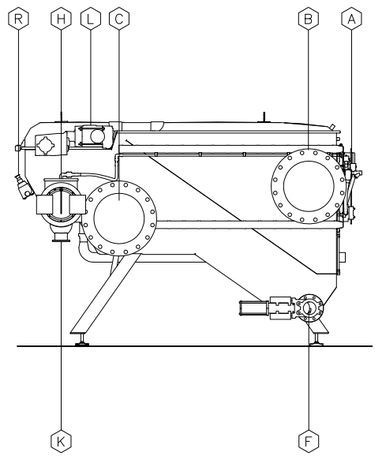

LEFT SIDE VIEW
SCALE: NOT TO SCALE

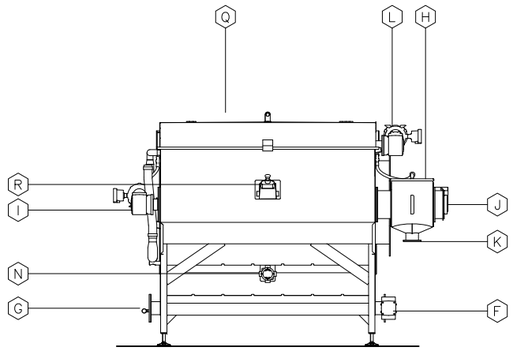

END VIEW
SCALE: NOT TO SCALE

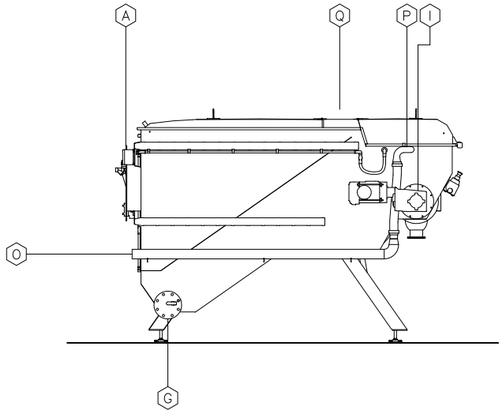

RIGHT SIDE VIEW
SCALE: NOT TO SCALE

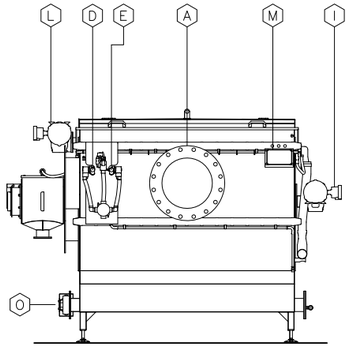

FRONT VIEW / INLET
SCALE: NOT TO SCALE

NOTES:
: FILTER ENCLOSURE MATERIAL TO BE 316L STAINLESS STEEL.
: HARDWARE AND GASKETS FOR INTERCONNECTION PIPING TO BE SUPPLIED BY CONTRACTOR. HARDWARE AND GASKETS RELATED TO THE PRIMARY FILTER ITSELF WILL BE SUPPLIED BY SALSNES.
: SYSTEM CONDUIT, WIRING, DISTRIBUTION PANELS & INTERCONNECTIONS BY OTHERS.
: FILTER UNIT TO BE POSITIONED ON A FOUNDATION (CONCRETE, STEEL OR ALUMINUM)
: FOUNDATION FLOOR MUST BE FIRM AND LEVEL.
: MAXIMUM CABLE DISTANCE TO CONTROL POWER PANEL (CPP) (NOT SHOWN) IS 260'.
: ELECTRICAL REQUIREMENTS SHOWN ARE TO SUPPLY SALSNES FILTER EQUIPMENT ONLY. ELECTRICAL INRUSH FACTOR TO BE ADDED AS PER LOCAL CODE.
: CONTRACTOR TO REVIEW ALL SALSNES FILTER INSTALLATION INSTRUCTIONS PRIOR TO EQUIPMENT INSTALLATION.
: WHEN THE OPTIONAL ONBOARD FILTER VENT IS USED, THE CONTRACTOR MUST PROVIDE FLEXIBLE OR REMOVABLE PIPING TO ALLOW FOR FILTER MAINTENANCE.

A TROJAN TECHNOLOGIES BUSINESS

salsnes Filter™

CONFIDENTIALITY NOTICE
Copyright© 2018 by Salsnes Filter™. All rights reserved. No part of this document may be reproduced, stored in a retrieval system, or transmitted in any form, without the written permission of Salsnes Filter™.

DESCRIPTION: STD, SALSNES FILTER SF6000
LEFT OUTLET OVERFLOW, LEFT SLUDGE OUTLET (UL EX)

STD. DRAWING NO. SF0025

DRAWN BY : SAH/RLM	DATE : 18MY29
CHECKED BY : SPM	DATE : 18MY30
APPROVED BY : DP	DATE : 18MY30
SCALE (11x17) : NOT TO SCALE	LOG NUMBER : N/A

REFERENCE NO. N/A

DWG NO. D01 | REV. C

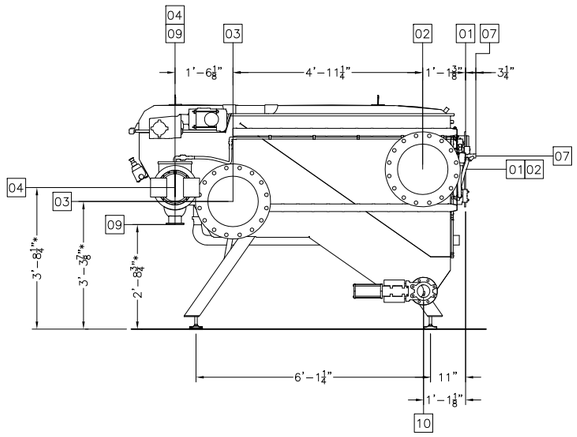

LEFT SIDE VIEW
SCALE: NOT TO SCALE

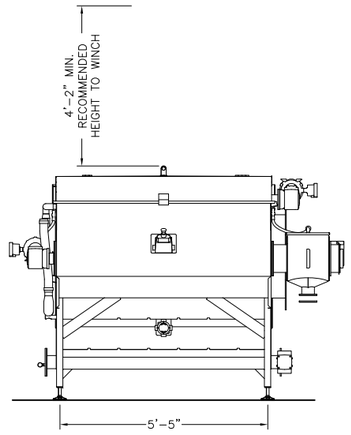

END VIEW
SCALE: NOT TO SCALE

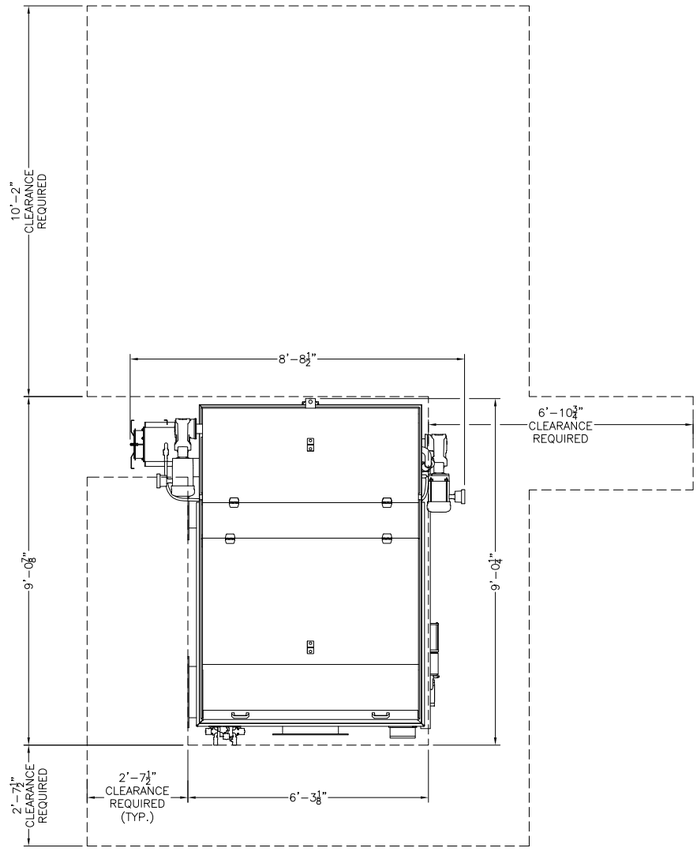

PLAN VIEW
SCALE: NOT TO SCALE

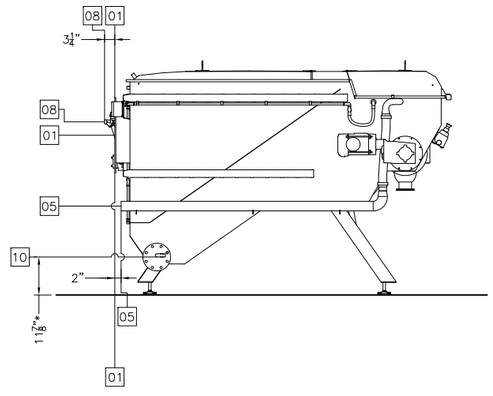

RIGHT SIDE VIEW
SCALE: NOT TO SCALE

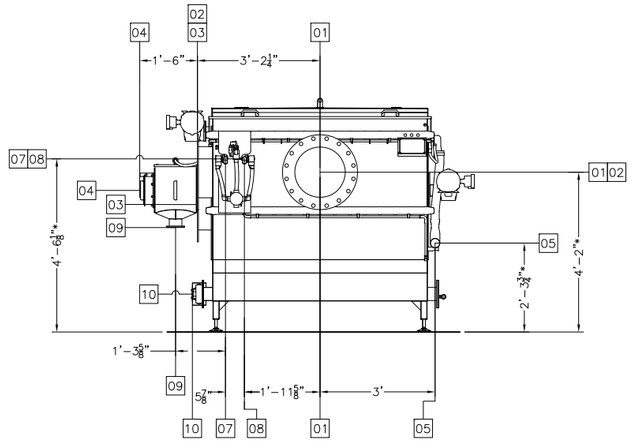

FRONT VIEW / INLET
SCALE: NOT TO SCALE

TERMINATION POINTS			
TP#	**SIZE**	**CONNECTION**	**FUNCTION**
01	14"	150# FLG FF	INFLUENT
02	16"	150# FLG FF	OVERFLOW
03	16"	150# FLG FF	DRAIN/EFFLUENT OUTLET
04	N/A	FREE DISCHARGE	SOLIDS WASTE
05	3"	PLAIN PIPE	BLOWER
06			
07	1/2"	FNPT	SERVICE WATER (HOT)
08	1/2"	FNPT	SERVICE WATER (COOL)
09	4"	FLANGE	REJECT WATER (DEWATER) (OPT.)
10	4"	150# LUG VALVE	WASTE (SLUDGE)

NOTES:
: * DIMENSIONS SPECIFIED ARE ± 2" DUE TO ADJUSTABLE FILTER LEG.
: FILTER ENCLOSURE MATERIAL TO BE 316L STAINLESS STEEL.
: HARDWARE AND GASKETS FOR INTERCONNECTION PIPING TO BE SUPPLIED BY CONTRACTOR. HARDWARE AND GASKETS RELATED TO THE PRIMARY FILTER ITSELF WILL BE SUPPLIED BY SALSNES.
: SYSTEM CONDUIT, WIRING, DISTRIBUTION PANELS & INTERCONNECTIONS BY OTHERS.
: FILTER UNIT TO BE POSITIONED ON A FOUNDATION (CONCRETE, STEEL OR ALUMINUM)
: FOUNDATION FLOOR MUST BE FIRM AND LEVEL.
: MAXIMUM CABLE DISTANCE TO CONTROL POWER PANEL (CPP) (NOT SHOWN) IS 260'.
: ELECTRICAL REQUIREMENTS SHOWN ARE TO SUPPLY SALSNES FILTER EQUIPMENT ONLY. ELECTRICAL INRUSH FACTOR TO BE ADDED AS PER LOCAL CODE.
: CONTRACTOR TO REVIEW ALL SALSNES FILTER INSTALLATION INSTRUCTIONS PRIOR TO EQUIPMENT INSTALLATION.

A TROJAN TECHNOLOGIES BUSINESS
salsnes Filter™

CONFIDENTIALITY NOTICE
Copyright© 2018 by Salsnes Filter™. All rights reserved. No part of this document may be reproduced, stored in a retrieval system, or transmitted in any form, without the written permission of Salsnes Filter™.

DESCRIPTION: STD, SALSNES FILTER SF6000
LEFT OUTLET OVERFLOW, LEFT SLUDGE OUTLET (UL EX)

DRAWN BY : SAH/RLM	DATE : 18MY29	STD. DRAWING NO. SF0025
CHECKED BY : SPM	DATE : 18MY30	REFERENCE NO. N/A
APPROVED BY : DP	DATE : 18MY30	DWG NO. D02 / REV. C
SCALE (11x17) : NOT TO SCALE	LOG NUMBER : N/A	

A TROJAN TECHNOLOGIES BUSINESS

salsnes Filter™

EQUIPMENT LIST

No.	DESCRIPTION	No.	DESCRIPTION
A	INLET FLANGE	J	DEWATERED SLUDGE OUTLET
B	OVERFLOW FLANGE	K	REJECT WATER CONNECTION
C	OUTLET FLANGE	L	FILTER MESH MOTOR & GEARBOX
D	HOT WATER CONNECTION VALVE	M	ELECTRICAL CONNECTION BOX
E	COLD WATER CONNECTION VALVE	N	MOTOR CONNECTION BOX
F	KNIFE GATE VALVE	O	BLOWER CONNECTION PIPE
G	BOTTOM FLUSH SPRAY BAR	P	AIR KNIFE
H	DEWATER UNIT (OPTIONAL)	Q	VENT (OPTIONAL) – SEE NOTES
I	AUGER MOTOR & GEARBOX	R	E-STOP

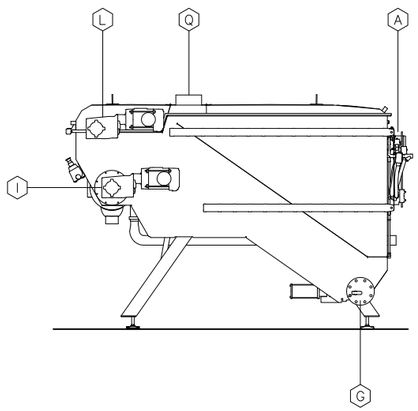

LEFT SIDE VIEW
SCALE: NOT TO SCALE

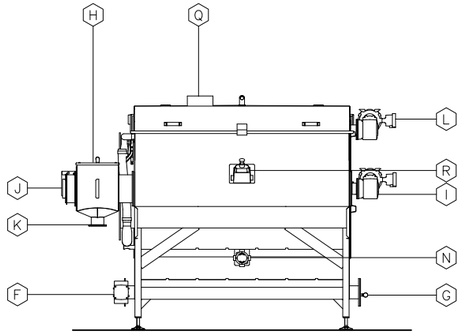

END VIEW
SCALE: NOT TO SCALE

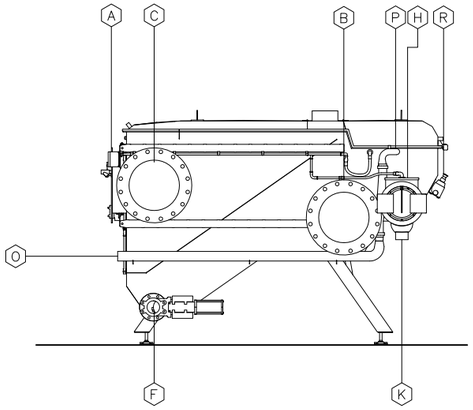

RIGHT SIDE VIEW
SCALE: NOT TO SCALE

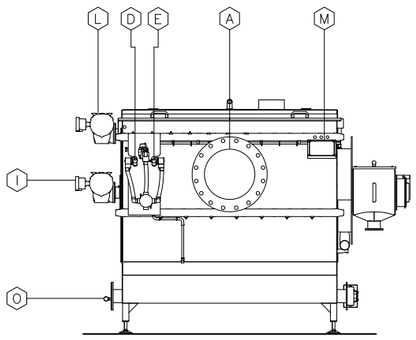

FRONT VIEW / INLET
SCALE: NOT TO SCALE

NOTES:

: FILTER ENCLOSURE MATERIAL TO BE 316L STAINLESS STEEL.
: HARDWARE AND GASKETS FOR INTERCONNECTION PIPING TO BE SUPPLIED BY CONTRACTOR. HARDWARE AND GASKETS RELATED TO THE PRIMARY FILTER ITSELF WILL BE SUPPLIED BY SALSNES.
: SYSTEM CONDUIT, WIRING, DISTRIBUTION PANELS & INTERCONNECTIONS BY OTHERS.
: FILTER UNIT TO BE POSITIONED ON A FOUNDATION (CONCRETE, STEEL OR ALUMINUM)
: FOUNDATION FLOOR MUST BE FIRM AND LEVEL.
: MAXIMUM CABLE DISTANCE TO CONTROL POWER PANEL (CPP) (NOT SHOWN) IS 260'.
: ELECTRICAL REQUIREMENTS SHOWN ARE TO SUPPLY SALSNES FILTER EQUIPMENT ONLY. ELECTRICAL INRUSH FACTOR TO BE ADDED AS PER LOCAL CODE.
: CONTRACTOR TO REVIEW ALL SALSNES FILTER INSTALLATION INSTRUCTIONS PRIOR TO EQUIPMENT INSTALLATION.
: WHEN THE OPTIONAL ONBOARD FILTER VENT IS USED, THE CONTRACTOR MUST PROVIDE FLEXIBLE OR REMOVABLE PIPING TO ALLOW FOR FILTER MAINTENANCE.

A TROJAN TECHNOLOGIES BUSINESS

salsnes Filter™

CONFIDENTIALITY NOTICE
Copyright© 2018 by Salsnes Filter™. All rights reserved. No part of this document may be reproduced, stored in a retrieval system, or transmitted in any form, without the written permission of Salsnes Filter™.

DESCRIPTION: STD, SALSNES FILTER SF6000
RIGHT OUTLET OVERFLOW, RIGHT SLUDGE OUTLET (UL EX)

DRAWN BY :	SAH/RLM	DATE :	18MY29
CHECKED BY :	SPM	DATE :	18MY30
APPROVED BY :	DP	DATE :	18MY30
SCALE (11x17) :	NOT TO SCALE	LOG NUMBER :	N/A

STD. DRAWING NO. SF0027
REFERENCE NO. N/A
DWG NO. D01
REV. C

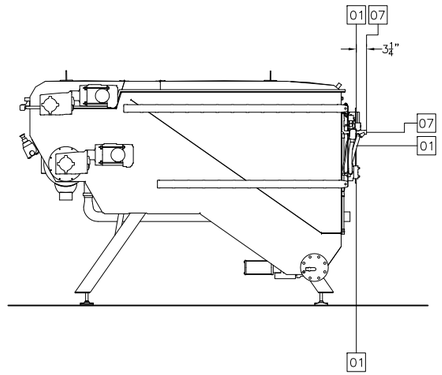

LEFT SIDE VIEW
SCALE: NOT TO SCALE

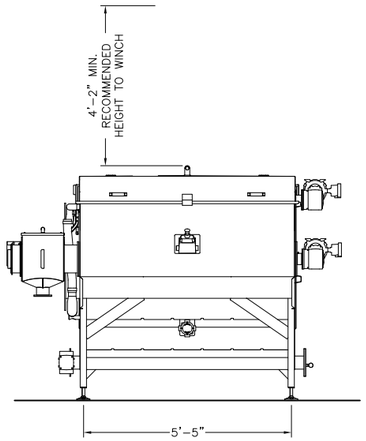

END VIEW
SCALE: NOT TO SCALE

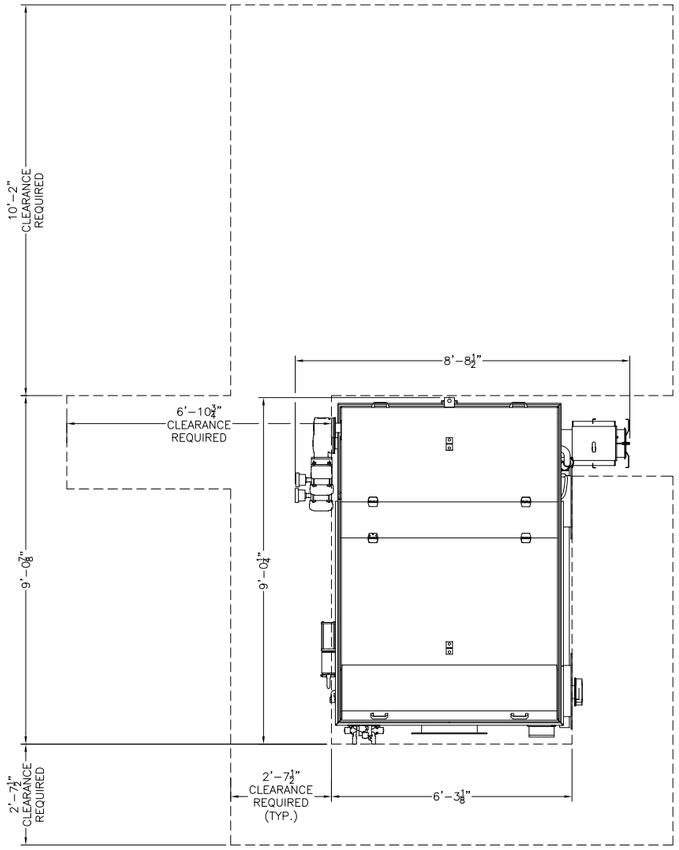

PLAN VIEW
SCALE: NOT TO SCALE

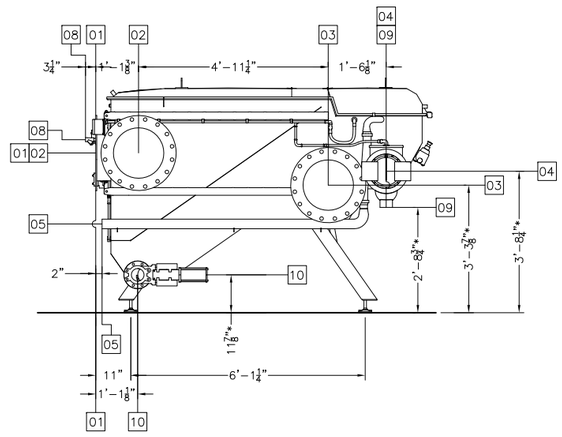

RIGHT SIDE VIEW
SCALE: NOT TO SCALE

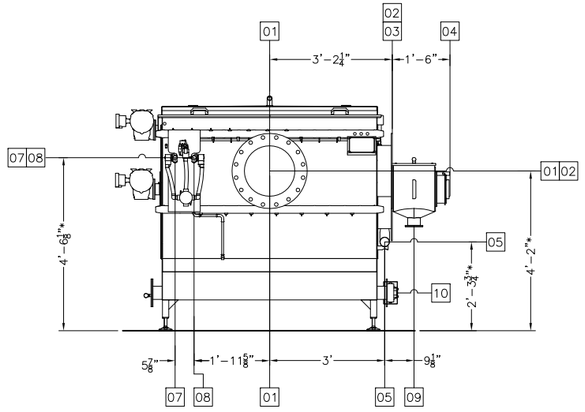

FRONT VIEW / INLET
SCALE: NOT TO SCALE

TERMINATION POINTS			
TP#	SIZE	CONNECTION	FUNCTION
01	14"	150# FLG FF	INFLUENT
02	16"	150# FLG FF	OVERFLOW
03	16"	150# FLG FF	DRAIN/EFFLUENT OUTLET
04	N/A	FREE DISCHARGE	SOLIDS WASTE
05	3"	PLAIN PIPE	BLOWER
06			
07	1/2"	FNPT	SERVICE WATER (HOT)
08	1/2"	FNPT	SERVICE WATER (COOL)
09	4"	FLANGE	REJECT WATER (DEWATER) (OPT.)
10	4"	150# LUG VALVE	WASTE (SLUDGE)

NOTES:
: * DIMENSIONS SPECIFIED ARE ± 2" DUE TO ADJUSTABLE FILTER LEG.
: FILTER ENCLOSURE MATERIAL TO BE 316L STAINLESS STEEL.
: HARDWARE AND GASKETS FOR INTERCONNECTION PIPING TO BE SUPPLIED BY CONTRACTOR. HARDWARE AND GASKETS RELATED TO THE PRIMARY FILTER ITSELF WILL BE SUPPLIED BY SALSNES.
: SYSTEM CONDUIT, WIRING, DISTRIBUTION PANELS & INTERCONNECTIONS BY OTHERS.
: FILTER UNIT TO BE POSITIONED ON A FOUNDATION (CONCRETE, STEEL OR ALUMINUM)
: FOUNDATION FLOOR MUST BE FIRM AND LEVEL.
: MAXIMUM CABLE DISTANCE TO CONTROL POWER PANEL (CPP) (NOT SHOWN) IS 260'.
: ELECTRICAL REQUIREMENTS SHOWN ARE TO SUPPLY SALSNES FILTER EQUIPMENT ONLY. ELECTRICAL INRUSH FACTOR TO BE ADDED AS PER LOCAL CODE.
: CONTRACTOR TO REVIEW ALL SALSNES FILTER INSTALLATION INSTRUCTIONS PRIOR TO EQUIPMENT INSTALLATION.

A TROJAN TECHNOLOGIES BUSINESS
salsnes Filter™

CONFIDENTIALITY NOTICE
Copyright© 2018 by Salsnes Filter™. All rights reserved. No part of this document may be reproduced, stored in a retrieval system, or transmitted in any form, without the written permission of Salsnes Filter™.

DESCRIPTION: STD, SALSNES FILTER SF6000
RIGHT OUTLET OVERFLOW, RIGHT SLUDGE OUTLET (UL EX)

DRAWN BY : SAH/RLM	DATE : 18MY29	STD. DRAWING NO.	SF0027
CHECKED BY : SPM	DATE : 18MY30	REFERENCE NO.	N/A
APPROVED BY : DP	DATE : 18MY30	DWG NO.	D02
SCALE (11x17) : NOT TO SCALE	LOG NUMBER : N/A	REV.	C

NOTES:

: HARDWARE AND GASKETS FOR INTERCONNECTION PIPING TO BE SUPPLIED BY CONTRACTOR. HARDWARE AND GASKETS RELATED TO THE PRIMARY FILTER ITSELF WILL BE SUPPLIED BY SALSNES.

: SYSTEM CONDUIT, WIRING, DISTRIBUTION PANELS & INTERCONNECTIONS BY OTHERS.

: ELECTRICAL REQUIREMENTS SHOWN ARE TO SUPPLY SALSNES FILTER EQUIPMENT ONLY. ELECTRICAL INRUSH FACTOR TO BE ADDED AS PER LOCAL CODE.

: CONTRACTOR TO REVIEW ALL SALSNES FILTER INSTALLATION INSTRUCTIONS PRIOR TO EQUIPMENT INSTALLATION.

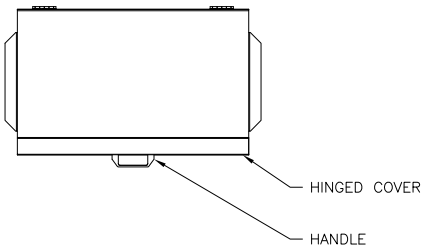

TOP VIEW

SCALE:AS SHOWN

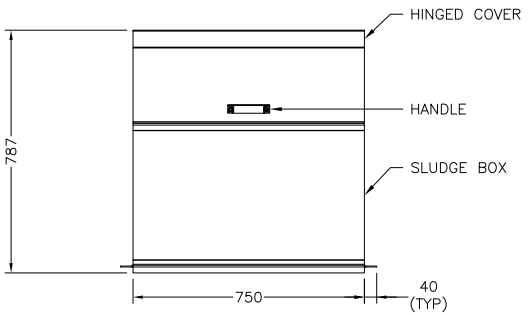

FRONT VIEW

SCALE:AS SHOWN

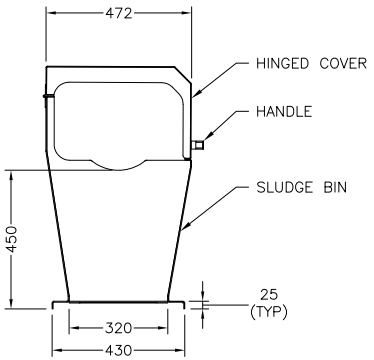

SIDE VIEW

SCALE:AS SHOWN

A TROJAN TECHNOLOGIES BUSINESS

CONFIDENTIALITY NOTICE
Copyright@ 2018 by Salsnes Filter™. All rights reserved. No part of this document may be reproduced, stored in a retrieval system, or transmitted in any form, without the written permission of Salsnes Filter™.

DESCRIPTION: DOUBLE SIDED SLUDGE BOX, SF600 IQALUIT NU			QUOTE NO. 210636
DRAWN BY :	CC/RLM	DATE : 18MY29	PROJECT NO. 480080
CHECKED BY :	SPM	DATE : 18MY30	
APPROVED BY :	DP	DATE : 18MY30	DWG NO. S02 / REV. C
SCALE (215x280): 1:25		LOG NUMBER : N/A	

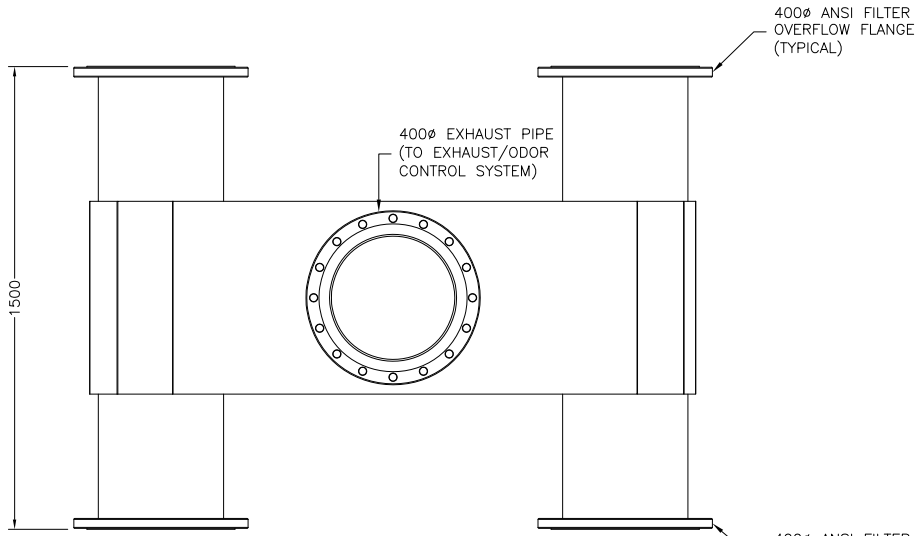

TOP VIEW

SCALE:AS SHOWN

NOTES:

: HARDWARE AND GASKETS FOR INTERCONNECTION PIPING TO BE SUPPLIED BY CONTRACTOR. HARDWARE AND GASKETS RELATED TO THE PRIMARY FILTER ITSELF WILL BE SUPPLIED BY SALSNES.

: SYSTEM CONDUIT, WIRING, DISTRIBUTION PANELS & INTERCONNECTIONS BY OTHERS.

: ELECTRICAL REQUIREMENTS SHOWN ARE TO SUPPLY SALSNES FILTER EQUIPMENT ONLY. ELECTRICAL INRUSH FACTOR TO BE ADDED AS PER LOCAL CODE.

: CONTRACTOR TO REVIEW ALL SALSNES FILTER INSTALLATION INSTRUCTIONS PRIOR TO EQUIPMENT INSTALLATION.

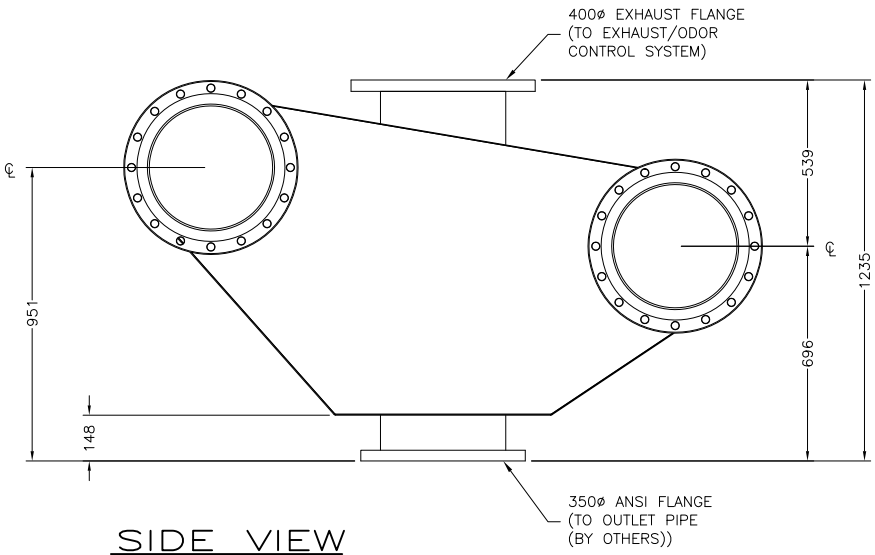

SIDE VIEW

SCALE:AS SHOWN

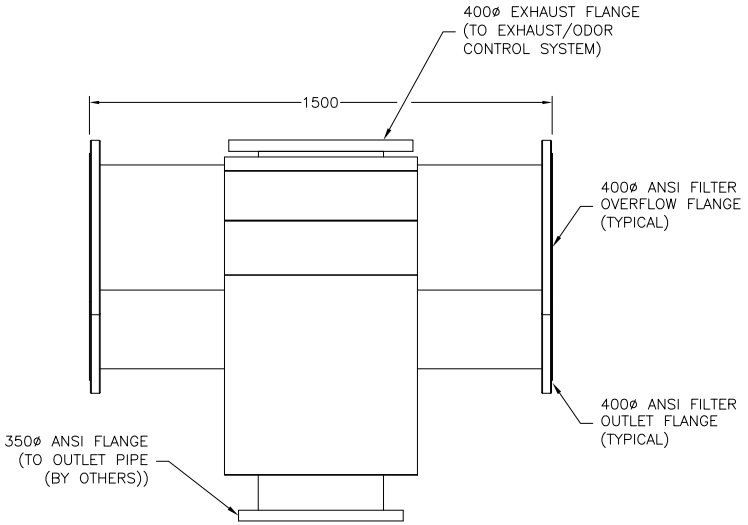

FRONT VIEW

SCALE:AS SHOWN

A TROJAN TECHNOLOGIES BUSINESS

salsnes Filter™

CONFIDENTIALITY NOTICE
Copyright@ 2018 by Salsnes Filter™. All rights reserved. No part of this document may be reproduced, stored in a retrieval system, or transmitted in any form, without the written permission of Salsnes Filter™.

DESCRIPTION: OUTLET BOX, SF600 IQALUIT NU

DRAWN BY :	CC/RLM	DATE :	18MY29
CHECKED BY :	SPM	DATE :	18MY30
APPROVED BY :	DP	DATE :	18MY30
SCALE (215x280): 1:25		LOG NUMBER :	N/A

QUOTE NO. 210636

PROJECT NO. 480080

DWG NO. S03

REV. C

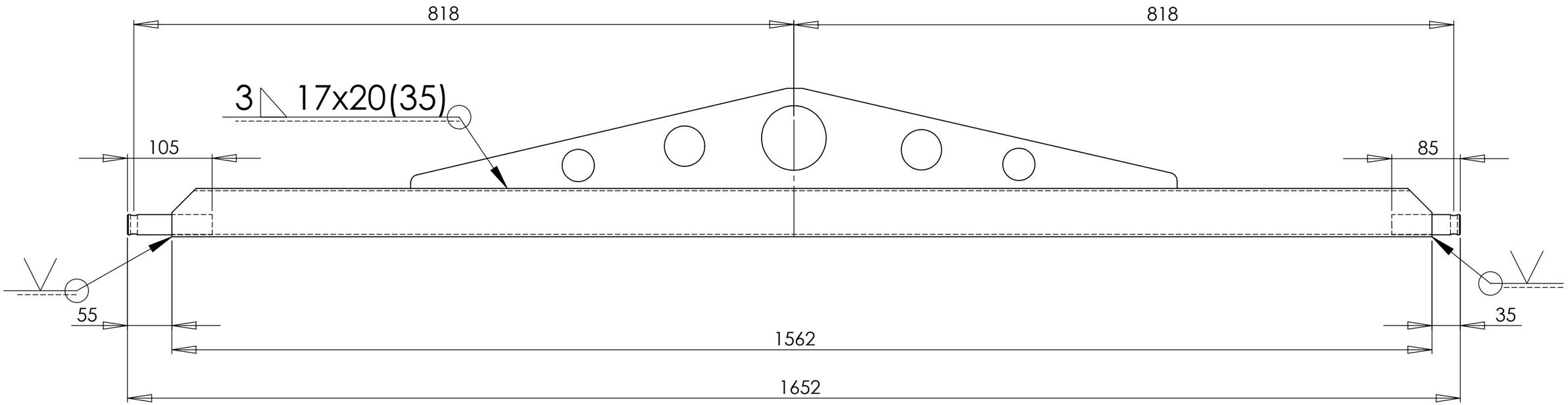

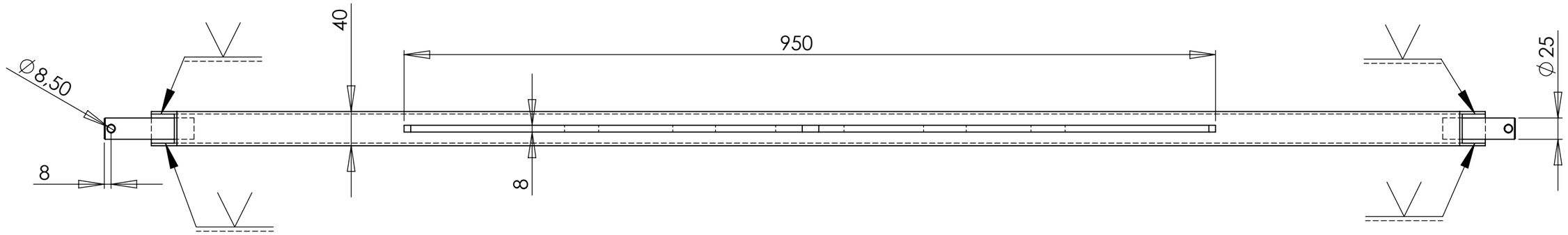

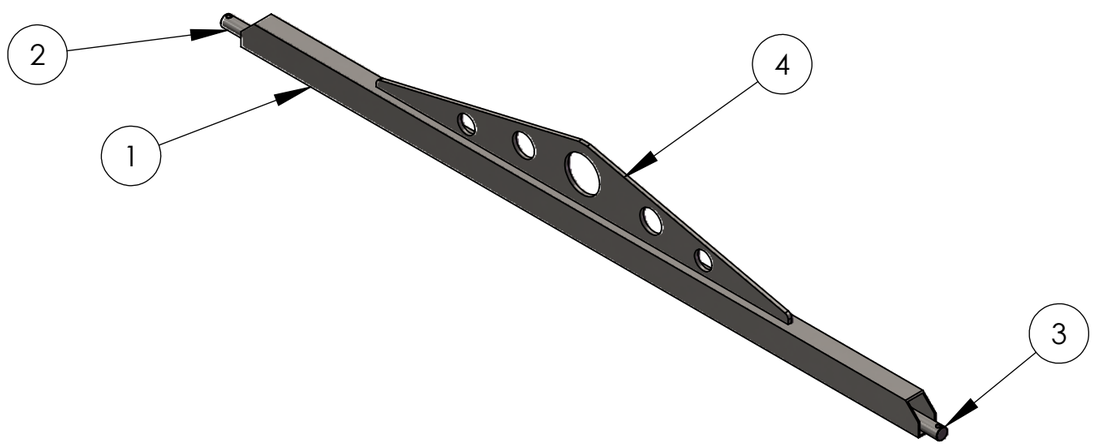

ITEM NO.	PART NUMBER	DESCRIPTION	MATERIAL	QTY.
1	16502180	Tube 60x40x3	AISI Type 316L stainless steel	1
2	12502164	Bolt Ø25	AISI Type 316L stainless steel	1
3	12502165	Bolt Ø25	AISI Type 316L stainless steel	1
4	26502166	Lifting Plate	AISI Type 316L stainless steel	1

UNLESS OTHERWISE SPECIFIED:
DIMENSIONS ARE IN MILLIMETERS
TOLERANCE: NS ISO 2768-M

FINISH:

DEBUR AND BREAK SHARP EDGES

FIRST ANGLE PROJECTION

salsnes Filter

	NAME	SIGNATURE	DATE
DRAWN	SRD		17.10.2011
APPV'D	Admin		21.01.2013

MATERIAL: Material <not specified>

WEIGHT: 11311.74Kg

TITLE: Spreader, SF6000/SFK600

DWG NO. 26502165

A3

REV C

SCALE:1:5

SHEET 1 OF 1

SALSNES FILTER© SF6000

MAJOR COMPONENT BOM AND CUT SHEETS

Part Number	Qty	Item	Description	Tag #	Manufacturer/Model
42100009	1	Blower	7,5 kW UL/CSA, 460/3ph/60Hz, 5.63^3/min @ 0.52 bar	B-330 PSV-330 PI-330	Kaeser BB69C
508072-001	1	Auger Drive Motor	NEMA Explosion Proof Motor, 0.75kW, 480V, 60Hz, 143/145TC	M-350	Leeson 121919
	1	Mesh Drive Motor		M-320	
013341-08432	1	Hot Water Strainer	Y-Strainer, 1/2" NPT 100 Mesh	STR-362A	Commodity
	1	Cold Water Strainer		STR-351	
508081	1	Hot Water Valve	Two way internal pilot operated normally closed solenoid valve, 24VDVC, 1/2"FNPT, 316 stainless steel, EPDM Seal, 100PSI	SV-360	Parker 08F22C6340A3FEC80
	1	Cold Water Valve		SV-351	
508082	1	Drain Valve Solenoid	Four way , two position solenoid valve, 24VDC, 1/4"FNPT, 316 stainless steel, NBR Seal, 100PSI	SV-351B	ASCO EV8345G81 24VDC
20012241	1	Drain Valve	Valve, Gate valve, 150lb ANSI 4", Cast Iron Body (CF8M), 304SS Gate. Hydraulic Actuator Orbinox Standard D/A Cylinder, 100mm DN bore size.	FV-351B	Orbinox EB06
508086	1	Level Transmitter	Intrinsically safe low pressure transmitter, 0-2.5PSI, 10ft cable	LIT-300	American Sensor Technology (AST) AST44LPT00069H4D1413
508055	1	Blower Pressure Transmitter	Intrinsically safe low pressure transmitter, 10-28VDC, 0-15PSI	PT-331	American Sensor Technology (AST) AST44LPC00015P4D1000

Project: Salsnes SF6000 460/60 **User:** Viggo Sandberg

INPUT DATA:

Operating mode:	Gauge pressure		Flow medium:	dry air	
Kind of package:	Compact- Package		Kappa:	1,40	
Inlet temperature :	20	°C	Specific weight at standard conditions:	1,293	kg/m³
Inlet pressure :	1013	mbar	Pressure difference:	520	mbar
	101,3	kPa	Discharge pressure:	1533	mbar
				153,3	kPa

Technical data:

Package: **BB 69C** Blower speed(60Hz): 5435 1/min

Motor power: 7,5 kW x1,05 SF Connection DN: 65

Operating voltage: 460V/60Hz

Operation data:	**max. load**		**design point**			
Blower : OMEGA 22P						
Pressure difference Δp:	610	mbar	520	mbar		
Inlet air flow Q_1*	5,17	m³/min	5,25	m³/min	315	m³/h
Inlet flow Q1 Standard : RELATED TO 0°C AND 1013 mbar			4,89	Nm³/min	293	Nm³/h
Discharge temperature:***	80	°C	71	°C		
Required motor power:	7,9	kW	6,9	kW		
Motor shaft power*:			6,5	kW		
Blower shaft power*:			6,3	kW		
			<u>without sound enclosure</u>		<u>with sound enclosure</u>	
Sound pressure level** :			82	dB(A)	70	dB(A)
Sound power level** :			96	dB(A)	86	dB(A)
Dimension (depends on motor supplier!)						
(W x L x H)	660 x		890 x 960	mm	780 x 960 x 1200	mm
Weight			ca. 175	kg	ca. 305	kg

* Performance data to DIN ISO 1217, part 1, annex C

** Measured to DIN EN ISO 2151, Figures ± 3dB(A), with sound insulated pipework.

*** non-binding theoretical value of calculation

Project: Salsnes SF6000 460/60 **User:** Viggo Sandberg

Kind of package: Compact- Package
Operating mode: Gauge pressure
Inlet temperature : 20 °C
Valve set pressure: 720 mbar
Inlet pressure : 1013 mbar/ 101,3 kPa
Input inlet flow: 5,5 m³/min

Package: **BB 69C**
Motor power: 7,5 kW x1,05 SF
Operating voltage: 460V/60Hz
Blower speed (60Hz) : 5435 1/min
Connection DN: 65
Fan voltage: 400V/3Ph/50Hz

NOTE: ACCESSORIES SHOWN ARE INTENDED FOR AIR USE ONLY.

Accessories:	**yes**	**no**
Unloaded start up valve: AFE15	☐	☒
Check plate: DN 65	☒	☐
Instruments/ sensor:		
Temperature gauge with switch point:	☒	☐
Pressure gauge:	☒	☐
Filter differential pressure switch:	☐	☒
oil level sensor:	☐	☒
speed monitor:	☐	☒

	yes	**no**
Sound enclosure:	☒	☐
Suction from ambient:	☒	☐
Suction from pipe:	☐	☒
Optional for package with sound enclosure		
Sound enclosure for outdor installation:	☐	☒
Auxiliary heating	☐	☒
Omega P-GRD	☐	☒

Standard equipment with s. encl.: 1x 337-H Blowoff valve, pressure gauge, filter with maintenance indicator
Standard equipment without s. encl.: 1x 337-H Blowoff valve, filter with maintenance indicator

Remarks for project:

Die Zeichnung bleibt unser ausschließliches Eigentum. Sie wird nur zu dem vereinbarten Zweck anvertraut und darf zu keinem anderen Zweck verwendet werden. Kopien oder sonstige Vervielfältigungen einschließlich Speicherung, Verarbeitung oder Verbreitung unter Verwendung elektronischer Systeme dürfen nur zu dem vereinbarten Zweck angefertigt werden. Weder Original noch Vervielfältigungen dürfen Dritten ausgehändigt oder in sonstiger Weise zugänglich gemacht werden.
Drawings remain our exclusive property. They are entrusted only for the agreed purpose. Copies or any other reproduction, including storage, treatment and dissemination by use of electronic systems must not be made for any other than the agreed purpose. Neither originals nor reproductions may be given to or made available to third parties.
Entwicklungsbedingte Änderungen vorbehalten. Zeichnung darf nur über CAD geändert werden.

Dimensional drawing

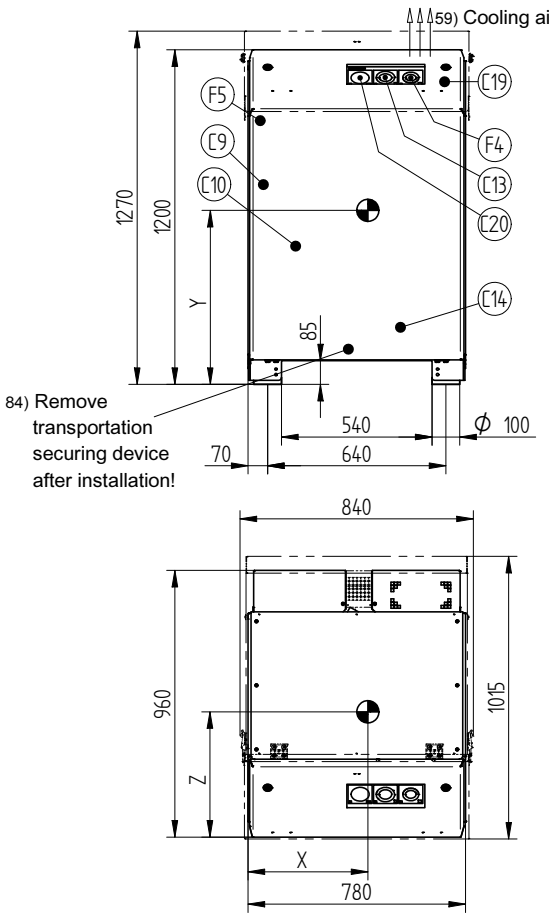

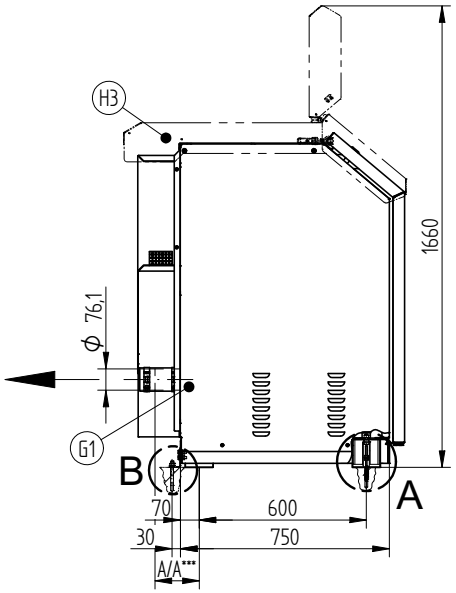

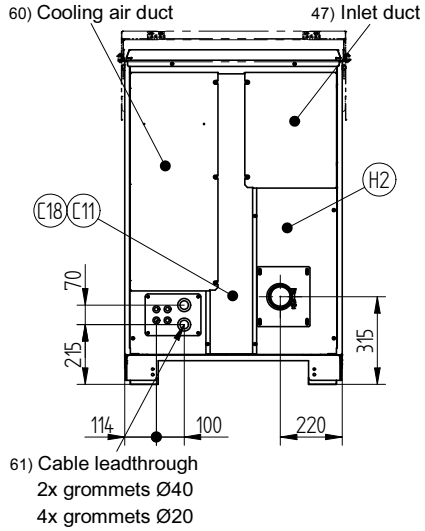

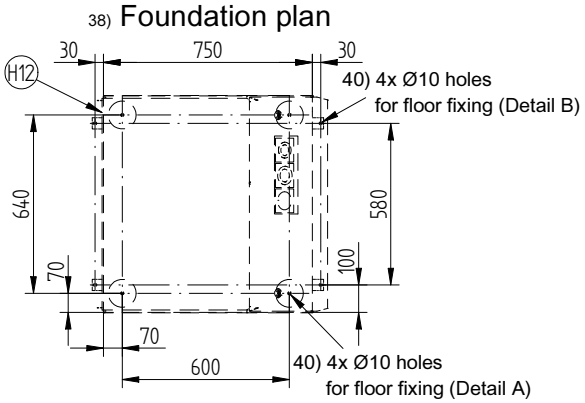

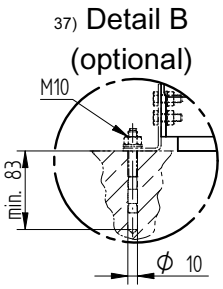

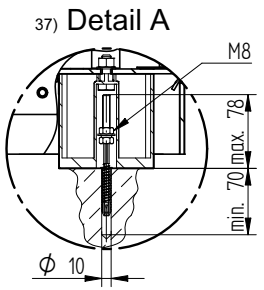

7) Option	22) Option code
24) Pressure switch	C9
25) Speed monitor	C10
26) Unloaded start valve	C11
27) Temperature gauge switch	C13
28) Pressure sensor	C14
67) Pressure control start valve	C18
29) Thermostat	C19
30) Pressure gauge	C20
31) Filter maintenance indicator	F4
32) Filter pressure differential switch	F5
33) Check valve	G1
34) Auxiliary heating	H2
35) Outdoor installation	H3
36) Sound enclosure	H12

1) Translation of texts in the installation/operating instructions

17) Model	18) Motor	A/A***	X*	Y*	Z*	19) Weight**
BB 69 C pr	4 kW	160/75	390	600	420	~ 285 kg
	5,5 kW		400	610	430	~ 295 kg
	7,5 kW		410			~ 305 kg
	11 kW		420	625	440	~ 320 kg
	15 kW		430		450	~ 325 kg
BB 89 C pr	4 kW		390	590	430	~ 290 kg
	5,5 kW		400			~ 300 kg
	7,5 kW		410	600	440	~ 310 kg
	11 kW		430	625	450	~ 325 kg
	15 kW					~ 330 kg

20) * Center of gravity coordinates are approximate !
21) ** Guide value, actual weight can vary according to manufacturer.
81) ***Dimensions without check plate (optional)

Änderungs-Nr.	Projektion	Maßstab		Datum	Name	KAESER KOMPRESSOREN
		1:17	Gez.	10.12.2012	MYSIK1	
Dokument TZM 10237725 E 00		Original A3	Bearb.	11.12.2012	MYSIK1	Sprache E / Blatt 1 von 1
			Freigeg.	11.12.2012	MYSIK1	
Dokument TZD 10237725 D 00		Bezeichnung BBC.2 pr H12 Dimension and connection dim.				
Status FREIGEGEBEN						02.02.2012

COMPONENT SPECIFICATION

DESCRIPTION:MOTOR, EXPLOSION PROOF NEMA **DOC # 508072G**

1. SPECIFICATION:

Description:

NEMA EXPLOSION PROOF MOTOR

Pictorial Representation:



Applicable Documents / Standards:

ANSI/NEMA	MG 1-2011
UL LISTED FILE #:	E12044
CSA FILE #:	LR47504

Recommended Manufacturer:

Regal Beloit – Leeson

2. PART NUMBER CODE:

PART #	DESCRIPTION	MANUF. PART #	POWR (KW)	LOCK ROTOR TORQUE	MOTOR SIZE	EXLOSION PROOF CLASS
508072-001	MOTOR, EXPL PROOF 145TC 0.75KW (1hp)	121919	0.75	18.6Nm @480V 60Hz	143/145TC	DIV 1, CL1 GP C&D, CL2, GP F&G
508072-002	MOTOR, EXPL PROOF 56C 0.37KW (.5hp)	116190	0.37	8.4Nm @480V 60Hz	56C	DIV 1, CL1 GP C&D, CL2, GP F&G
508072-003	MOTOR, EXPL PROOF 56C 0.55KW (.75hp)	**116191**	0.55	11.1 Nm @480V 60Hz	56C	DIV 1, CL1 GP C&D, CL2, GP F&G

REV	LOG NO.	REV HISTORY: YY-XXXX	REV BY	CHK BY	APPD BY	DATE YYYY-MM-DD
B	14-246	ADDED 508072-003	RC	KB	GD	14.03.2014

COPYRIGHT BY TROJAN TECHNOLOGIES 2013. ALL RIGHTS RESERVED.

COMPONENT SPECIFICATION

DESCRIPTION: MOTOR, EXPLOSION PROOF NEMA **DOC # 508072G**

3. REFERENCES:

Regal Beloit – Leeson

NOTE: NO SUBSTITUTION WITHOUT SALSNES ENGINEERING APPROVAL

AC Motors

LEESON

EXPLOSION-PROOF MOTORS

SINGLE PHASE

EXPLOSION-PROOF

FOR HAZARDOUS LOCATIONS

Underwriters Laboratories and Canadian Standards Association Listed



General Specifications:

These explosion proof motors are designed and approved for application in hazardous environments having certain explosive gases or materials present.

Features:

Rugged mechanical construction meeting all requirements for safety. UL and CSA listed.



Double shielded, pre-lubricated ball bearings are standard. All motors have inherent automatic overload protection. NEMA 1.0 Service Factor except as noted. Explosion-proof conduit box included at no extra cost.

Capacitors on single phase designs are mounted inside the motor frame.

Application Notes:

These motors must be applied in accordance with the National Electrical Code, Article #500. A partial listing of explosive agents is noted below. Consult NFPA Publication 497M for a complete listing. No LEESON motors are listed for Class I, Group A or B. Please note subheads above each column for qualifications of LEESON motors.



Class I

Group A: Acetylene

Group B: Butadiene, ethylene oxide, hydrogen, propylene oxide, manufactured gases containing more than 30% hydrogen by volume.

Group C: Acetaldehyde, cyclopropane, diethyl ether, ethylene.

Group D: Acetone, acrylonitrile, ammonia, benzene, butane, ethanol, ethylene dichloride, gasoline, hexane, isoprene, methane (natural gas), methanol, naphtha, propane, propylene, styrene, toluene, vinyl acetate, vinyl chloride, xylene.

Class II

Group E: Aluminum, magnesium and other metal dusts with similar characteristics.

Group F: Carbon black, coke or coal dust.

Group G: Flour, starch or grain dust.

EXCEPT AS NOTED, STEEL FRAME EXPLOSION-PROOF MOTORS ARE *NOT* INVERTER-RATED AND MUST *NOT* BE USED WITH AN INVERTER

CAST IRON EXPLOSION-PROOF – SEE PAGE 50

SINGLE PHASE • RIGID BASE

CLASS I, GROUPS C & D—CLASS II, GROUPS F & G • W/CONDUIT BOX

HP	RPM 60 Hz	NEMA Frame	Catalogue Number	App. Wgt. (lbs.)	Voltage	Over-load Prot.	F.L. Amps 230V	% F.L. Eff.	"C" Dim. (in.)
1/3	1800	56	111074●	35	115/208-230	Auto.	2.9	63.0	12.97
1/2	1800	56H	111084□	41	115/208-230	Auto.	4.4	65.0	13.58
3/4	1800	56H	110934□	46	115/208-230	Auto.	5.5	70.0	14.08
1	1800	56H	110961□	47	115/208-230	Auto.	6.7	75.0	14.08

Explosion Proof Motors have 1.0 Service Factor.

SINGLE PHASE • C FACE • RIGID BASE

CLASS I, GROUPS C & D—CLASS II, GROUPS F & G • W/CONDUIT BOX

HP	RPM 60 Hz	NEMA Frame	Catalogue Number	App. Wgt. (lbs.)	Voltage	Over-load Prot.	F.L. Amps 230V	% F.L. Eff.	"C" Dim. (in.)
1/3	3600	56C	116605	39	115/208-230	Auto.	2.6	65.0	13.44
	1800	56C	116606	42	115/208-230	Auto.	3.3	62.0	13.44
	1200	56C	116607□	45	115/208-230	Auto.	3.9	58.0	13.94
1/2	3600	56C	116608□	36	115/208-230	Auto.	3.8	63.0	13.44
	1800	56C	116609□	46	115/208-230	Auto.	4.4	66.0	13.94
	1200	56C	116610□	56	115/208-230	Auto.	4.7	64.0	14.94
3/4	3600	56C	116611□	41	115/208-230	Auto.	5.3	65.0	13.94
	1800	56C	116612□	51	115/208-230	Auto.	5.5	70.0	14.44
1	3600	56C	116613□	50	115/208-230	Auto.	6.3	70.0	14.44
	1800	56C	116614□	54	115/208-230	Auto.	6.7	75.0	14.44
1½	3600	56C	116615□	45	115/208-230	Auto.	8.5	72.0	14.94
2	3600	56C	116616□	58	115/208-230	Auto.	10.5	74.0	14.94

Explosion Proof Motors have 1.0 Service Factor.

SINGLE PHASE • C FACE LESS BASE

CLASS I, GROUPS C & D—CLASS II, GROUPS F & G • W/CONDUIT BOX

HP	RPM 60 Hz	NEMA Frame	Catalogue Number	App. Wgt. (lbs.)	Voltage	Over-load Prot.	F.L. Amps 230V	% F.L. Eff.	"C" Dim. (in.)
1/3	3600	56C	111095●	38	115/208 230	Auto.	2.2	65.0	13.44
	1800	56C	111075●	41	115/208-230	Auto.	2.9	70.0	12.97
1/2	3600	56C	111098	35	115/208-230	Auto.	4.2	63.0	13.44
	3600	56J	116188	35	115/208-230	Auto.	3.8	63.0	13.96
	1800	56C	111085	45	115/208-230	Auto.	4.4	65.0	13.94
3/4	3600	56C	111097	40	115/208-230	Auto.	5.0	64.0	13.96
	3600	56J	116186	40	115/208-230	Auto.	5.0	64.0	14.46
	1800	56C	111086	50	115/208-230	Auto.	5.5	70.0	14.44
1	3600	56C	111096	49	115/208-230	Auto.	6.2	40.0	14.44
	3600	56J	116185	49	115/208-230	Auto.	6.0	70.0	14.96
	1800	56C	110852	53	115/208-230	Auto.	6.7	75.0	14.44
1½	3600	56C	114424	54	115/208-230	Auto.	8.5	72.0	14.96
	3600	56J	116183	54	115/208-230	Auto.	8.5	72.0	14.95
2	3600	56C	114425	54	115/208-230	Auto.	10.5	74.0	14.94
	3600	56J	116181	54	115/208-230	Auto.	10.5	74.0	15.45

Explosion Proof Motors have 1.0 Service Factor.

● These motors are totally enclosed, non-ventilated—Others are fan cooled.
□ Motors have mounting holes for NEMA 56 and NEMA 143-5T and a standard NEMA 56 shaft.
▲ These motors are satisfactory for operation on 50 Hz power supply at full rated horsepower.

Specifications are subject to change without notice

NEMA Premium

EXPLOSION-PROOF MOTORS

THREE PHASE

LEESON





THREE PHASE • RIGID BASE

CLASS I, GROUPS C & D—CLASS II, GROUPS F & G • W/CONDUIT BOX

HP	RPM 60 Hz	NEMA Frame	Catalogue Number	App. Wgt. (lbs.)	Voltage	Over-load Prot.	F.L. Amps 230V	% F.L. Eff.	"C" Dim. (in.)
1/3	3600	56	117571●	33	575	Auto.	0.5	77.0	11.97
	1800	56	111932●▲	28	208-230/460	Auto.	1.3	76.0	10.97
	1200	56H	111940●	39	208-230/460	Auto.	1.5	70.0	13.97
1/2	3600	56	117572●	39	575	Auto.	0.6	76.0	12.47
	3600	56	111934●	39	208-230/460	Auto.	1.6	76.0	12.47
	1800	56	111929●▲	32	208-230/460	Auto.	1.7	75.0	11.38
	1200	56H	111938□	44	208-230/460	Auto.	2.0	71.0	13.47
3/4	3600	56	117573	37	575	Auto.	1.3	75.5	13.44
	3600	56	111937	37	208-230/460	Auto.	3.2	75.5	13.44
	1800	56	111923	38	208-230/460	Auto.	3.0	75.0	13.94
1	3600	56	117574	34	575	Auto.	1.4	77.0	13.44
	3600	56	111942▲	34	208-230/460	Auto.	3.6	77.0	13.44
	1800	56H	111922□	45	208-230/460	Auto.	3.6	78.0	13.94
1½	3600	143T	121961 Ⓦ	49	575	Auto.	1.6	84.0	14.41
	3600	143T	G120489▲	46	208-230/460	Auto.	4.0	82.5	14.41
	3600	143T	121914 Ⓦ	49	208-230/460	Auto.	4.0	84.0	14.41
	1800	145T	G120490	56	208-230/460	Auto.	4.4	84.0	14.41
	1800	145T	121915 Ⓦ	59	208-230/460	Auto.	4.8	86.5	14.41
	1800	145T	120524	52	575	Auto.	1.8	80.0	14.91
	1800	145T	121953 Ⓦ	59	575	Auto.	1.9	86.5	14.41
2	3600	145T	121962 Ⓦ	55	575	Auto.	1.9	85.5	14.41
	3600	145T	G120491	46	208-230/460	Auto.	5.2	84.0	15.41
	3600	145T	121916 Ⓦ	55	208-230/460	Auto.	4.8	85.5	15.41
	1800	145T	G120391	56	208-230/460	Auto.	6.0	84.0	16.91
	1800	145T	121917 Ⓦ	60	208-230/460	Auto.	5.8	86.5	15.41
	1800	145T	G120523	59	575	Auto.	2.0	81.0	15.91
	1800	145T	121954 Ⓦ	60	575	Auto.	2.3	86.5	15.41
3	3600	145T	121963 Ⓦ	56	575	Auto.	1.9	86.5	15.41
	3600	145T	G120387	60	208-230/460	Auto.	7.4	85.5	15.91
	3600	145T	121918 Ⓦ	56	208-230/460	Auto.	4.8	86.5	15.91

Explosion Proof Motors have 1.0 Service Factor.

THREE PHASE • C FACE WITH BASE

CLASS I, GROUPS C & D—CLASS II, GROUPS F & G • W/CONDUIT BOX

HP	RPM 60 Hz	NEMA Frame	Catalogue Number	App. Wgt. (lbs.)	Voltage	Over-load Prot.	F.L. Amps 230V	% F.L. Eff.	"C" Dim. (in.)
1/3	3600	56C	117564●	33	575	Auto.	0.5	77.0	11.97
	3600	56C	114625●▲	33	208-230/460	Auto.	1.2	77.0	11.97
	1800	56C	111214●	38	575	Auto.	0.5	76.0	12.00
	1800	56C	114626●▲	38	208-230/460	Auto.	1.3	76.0	12.00
1/2	3600	56C	117565●	39	575	Auto.	0.6	76.0	12.47
	3600	56C	114627●★	35	208-230/460	Auto.	1.6	82.5	12.47
	1800	56C	111157●	35	575	Auto.	0.6	80.0	12.47
	1800	56C	114628●▲	35	208-230/460	Auto.	1.7	80.0	12.47
	1800	56C	116190#	34	208-230/460	T-stat	2.4	68.0	13.44
3/4	3600	56C	117566	37	575	Auto.	1.3	75.5	13.44
	3600	56C	114629	33	208-230/460	Auto.	2.4	75.5	13.44
	1800	56C	111216	42	575	Auto.	1.1	72.0	13.94
	1800	56C	114630	42	208-230/460	Auto.	2.6	75.0	13.94
	1800	56C	116191#	38	208-230/460	T-stat	3.0	75.5	13.44
1	3600	56C	117567	34	575	Auto.	1.4	77.0	13.44
	3600	56C	114631	34	208-230/460	Auto.	3.2	77.0	13.44
	1800	56C	111160	48	575	Auto.	1.4	85.5	14.50
	1800	56C	114632	48	208-230/460	Auto.	3.2	85.5	14.50
	1800	145TC	G121541#	44	208-230/460	T-stat	3.0	82.5	14.50
	1800	145TC	121919 Ⓦ	44	208-230/460	T-Stat	3.0	82.5	14.50
1½	3600	56C	117568	42	575	Auto.	1.7	81.5	13.94
	3600	56C	114633	42	208-230/460	Auto.	4.2	81.5	13.94
	1800	56C	112101	45	575	Auto.	1.8	80.0	15.94
	1800	56HC	114634	45	208-230/460	Auto.	4.4	80.0	15.94
	1800	145TC	G121542#	54	208-230/460	T-stat	4.4	84.0	16.00
	1800	145TC	121920 Ⓦ	58	208-230/460	T-Stat	4.8	86.5	16.00
2	3600	56C	117569	51	575	Auto.	2.2	78.8	13.94
	3600	56HC	114635▲	51	208-230/460	Auto.	5.6	78.8	13.94
	1800	145TC	121964 Ⓦ	59	575	Auto.	2.2	84.0	15.53
	1800	145TC	G121543#	65	208-230/460	T-stat	5.6	84.0	16.50
	1800	145TC	121922	66	208-230/460	T-Stat	5.8	86.5	16.50
	1800	145TC	G121182	59	208-230/460	Auto.	5.6	84.0	15.53
	1800	145TC	121921 Ⓦ	62	208-230/460	T-Stat	5.8	86.5	15.02
3	3600	56C	117570	62	575	Auto.	3.0	84.0	15.44
	3600	56HC	114636③	62	208-230/460	Auto.	7.6	84.0	15.44

③ **Catalogue #114636 is approved for Class I, Group C & D – Class II, Group F service only.**

● These motors are totally enclosed, non-ventilated—Others are fan cooled.
□ Combination 56H base motors have mounting holes for NEMA 56 and NEMA 143-5T and a standard NEMA 56 shaft.
▲ These motors are satisfactory for operation on 50 Hz power supply at full rated horsepower.
★ These motors have a 1.15 S.F.
These motors are inverter rated a suitable for use with an inverter. Others are not!
Ⓦ Premium efficiency WATTSAVERe® Motors meet NEMA efficiency requirements.

CAST IRON EXPLOSION-PROOF – SEE PAGE 50

COMPONENT SPECIFICATION

DESCRIPTION:Y-STRAINER, SST 600 CLASS **DOC # 013341G**

1. SPECIFICATION:

Description: Y-STRAINER

Material: 316 STAINLESS STEEL

Connection Type: THREADED

Class: 600

Operating Pressure and Temperatures for Water, Oil, Gas: 1400 psi at 100ºF (96.5 BAR at 37.8ºC)

Operating Pressure and Temperatures for Steam: 600 psi at 488ºF (41.4 BAR at 253ºC)

Pictorial Representation:

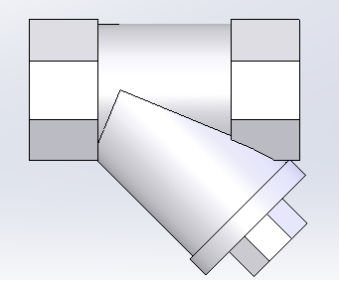

Applicable Documents / Standards:

DESIGN	ANSI B16.34
TESTING	API 598

2. PART NUMBER CODE:

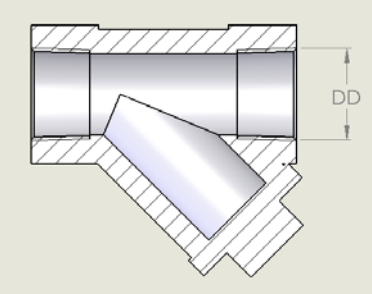

REV	LOG NO.	REV HISTORY: YY-XXXX	REV BY	CHK BY	APPD BY	DATE YYYY-MM-DD
A	13-1026	CS RELEASED	RC	DP	GD	13.01.2014

COPYRIGHT BY TROJAN TECHNOLOGIES 2013. ALL RIGHTS RESERVED.

COMPONENT SPECIFICATION

DESCRIPTION: Y-STRAINER, SST 600 CLASS **DOC # 013341G**

013341-	DD	S	MM
Standard **Y-STRAINER,**	**Female Thread Size** **04** = ¼” **08** = ½” **12** = ¾” **16** = 1” **24** = 1 ½” **32** = 2” **48** = 3” **Note:** Size code is in increments of 1/16. Example: 08 = 8/16= 1/2	**Thread Type** **4 =** NPT **8 =** BSP	**Filter Mesh Size** **32** = 100 (Perforation 1/32’) **16** = 40 (Perforation 1/16’) **08** = 20 (Perforation 1/8’)

3. PART DESCRIPTION CODE:

Y-STRAINER,	DDDDD”	SSS	MMM MESH
	Fitting Size **1/4** =¼” **1/2** = ½” **3/4** = ¾” **1** = 1” **1-1/2** = 1 ½” **2** = 2” **3** = 3”	**Thread Type** **NPT =** NPT **BSP =** BSP	**Filter Mesh Size** **100** = 100 (Perforation 1/32’) **040** = 40 (Perforation 1/16’) **020** = 20 (Perforation 1/8’)

Example: 1/ 2” NPT Y-Strainer with a fine mesh
Part number: 013341-08432
Part description: Y-STRAINER, 1/2” NPT 100MESH

Note: Additional spaces may be inserted between fields if mandatory field information does not exceed 30 characters

4. REFERENCES:

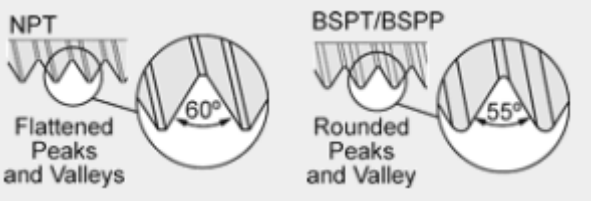

Pictures Courtesy of McMaster Carr

COMPONENT SPECIFICATION

DESCRIPTION: VALVE, SST SOL 24VDC 1/2NPT **DOC # 508081**

1. SPECIFICATION:

Description: Two way internal pilot operated normally closed solenoid valve.

Pictorial Representation:

Valve:



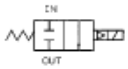

2-Way Normally Closed
Port Identification:
In-In/Out-Out

Coil:



Applicable Documents / Standards:

Voltage:	24VDC
Port Size:	1/2 NPT
Orifice Size:	5/8 Inch
Flow Factor CV:	4.00
Operating Diff. Pressure:	100 PSI (water)
Watts:	11.5W
Max Media Temperature:	85°C (185°F)
Seal:	EPDM
Body Material:	316 Stainless Steel
Certification:	**Coil Only (P/N 3FEC80)** **UL (VAPT.E145105)** **cUL (VAPT7.E145105)** **Class I, Groups C and D** **Class II, Groups E, F and G**

Manufacturer:

Manufacturer:	Parker
Manufacturer Part Number:	08F22C6340A3FEC80

2. REFERENCES:

Parker Hannifin Corporation

NOTE: NO SUBSTITUTIONS WITHOUT ENGINEERING APPROVAL.

REV	LOG NO.	REV HISTORY: YY-XXXX	REV BY	CHK BY	APPD BY	DATE YYYY-MM-DD
A	14-133	CS RELEASED	SC	RC	KB	06.03.2014

COPYRIGHT BY TROJAN TECHNOLOGIES 2013. ALL RIGHTS RESERVED.

salsnes Filter

COMPONENT SPECIFICATION

DESCRIPTION: VALVE, SST SOL 24VDC 1/2NPT **DOC # 508081**

2-Way

Direct Lift, Pilot & Remote Operated Valves
1/4"–2" NPT



General Description:

2-Way Direct Lift, Pilot & Remote Operated valves are designed for higher flow and medium to high pressure applications. Pilot operated valves require the minimum pressure differential specified for proper valve operation.

Installation
Valves should be mounted with solenoid coil vertical and upright.

Standard Materials of Construction
Please refer to page A55

Compatible Fluids
Lubricated Air, Inert Gases, Water and Light Oil (300 SSU). Additional fluids compatible with alternate materials of construction (consult factory).

Use of non-lubricated gaseous media can affect valve life.

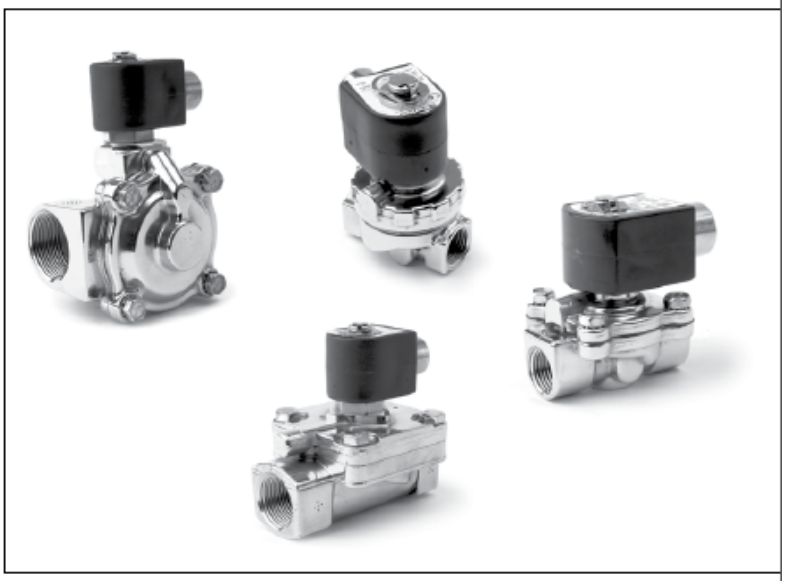

Electrical Characteristics:

Standard Voltages:
AC –24/60
120/60–110/50
240/60–220/50
DC –12, 24 & 120
For other voltages – consult factory

Coil Classification:
Class F standard
Class H available

Agency Approvals:
Standard valves with NEMA 4X or explosion proof solenoid enclosures are UL Listed and CSA Certified. For additional details, consult factory.

Maximum Ambient Temperature
150°F
Please refer to page A55 for details.

Applications:

- Irrigation systems
- Fire suppression equipment
- Molding equipment
- Cooling of machine tools
- Sterilizers
- Car wash
- Water treatment and purification
- Air compressors and dryers
- Floor cleaning equipment
- Hospital equipment
- Automated systems
- Food processing

Parker Hannifin Corporation
Fluid Control Division
1 800 825 8305 (1 800 Valve05)
www.parker.com/fcd

Parker

salsnes Filter

COMPONENT SPECIFICATION

C spec.

DESCRIPTION: VALVE, SST SOL 24VDC 1/2NPT

DOC # 508081

Part Number Information

1 & 2 Connection Size		3 Connection Type	4 Construction		5 Construction		6 Operation		7 Body Material		8 Trim		9 & 10 Orifice Size	11 Current Design Series Designation
02	1/8"	F Female Pipe Thread NPT	2	2-way	0	Direct Acting	C	Normally Closed	1	Brass (Bar Stock)	1	NBR	Valve orifice diameter in 1/64-inch increments. Example: a 1/2-inch orifice diameter has an orifice size designation of 32.	
04	1/4"		3	3-way	2	Diaphragm Center pilot	O	Normally Open	2	Brass (Forging)	2	FKM		
06	3/8"		4	4-way	3	Diaphragm Hung	U	Universal	3	303 Stainless Steel (Bar)	3	EPDM	40	
08	1/2"		H	Diaphragm, Hung	4	Diaphragm Offset pilot	S	4-Way Single Solenoid	5	Brass Nickel Plate	4	TFE		
12	3/4"		5	Diaphragm, Pivoted Edge	5	Diaphragm Pivoted Edge			6	316 Stainless Steel (Cast)	5	Urethane		
16	1"		S	Steam	6	Piston			7	Aluminum (Bar Stock)	6	CR		
20	1 1/4"				8	Piston piloted			8	316 Stainless Steel (Bar)	8	FDA EPR		
24	1 1/2"								9	Bronze (Cast)	9	Kalrez		
32	2"										D	Delrin		
48	3"										K	KEL F		

12 Coil Wattage AC (nominal)		12 Coil Wattage DC (nominal)		13 Coil Class	14 Solenoid Enclosure	15 Coil Termination	16 & 17 Coil Voltage AC		16 & 17 Coil Voltage DC	
A	6 Watts	1	9.5 Watts	F Standard (Class 155)	E Explosion-Proof/Watertight	B 6" Leads	01	24/60	70	6
B	10.2 Watts	3	11.5 Watts	H High Temperature (Class 180)	G Type 1 Gen. Purpose	C 18" Leads (Standard)	02	24/50	75	12
C	11 Watts				M 316 SS Explosion-Proof/Watertight	D 24" Leads	05	110/50 120/60	80	24
D	16 Watts				O Open Frame	E 36" Leads	10	208/60	90	120
					P Epoxy Encapsulated	H DIN	15	220/50 240/60	95	125
					S Type 1 Splice Box	K Screw	20	440/50 480/60		
					U 316 SS Explosion-Proof/Watertight	S Spade	41	24/60 rectified		
					W Submersible Splice Box		42	120/60 rectified		
					Y Explosion-Proof/Watertight with Ground Lead		44	240/60 rectified		
					Z Grounded M		51	120-240/60		
					4 Type 4, 4X		53	240-480/60		

Type 7: Explosion-Proof for Indoor Hazardous Locations
Type 9: Dust-Ignition Proof

Type 7 Explosion-Proof enclosures are designed for use in gas or vapor atmospheres. **Type 9** enclosures prevent explosive amounts of dust from metal, coal, coke, flour, starch or grain from entering the enclosure.

Material Specifications:
Splice Box or Explosion-Proof
Aluminum Cast: ASTM SC84A
Black Epoxy Coating
Explosion-Proof: 316 Stainless Steel
Investment Cast: ACI CF-8M
NEMA Classifications: Type 7
Class 1 Division 1 Group C and D
Type 9 Class 2 Division 1
Group E,F,G

Type 7, 9



Type 7, 9 Stainless Steel



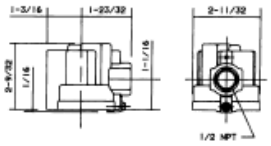

salsnes Filter

COMPONENT SPECIFICATION

DESCRIPTION: VALVE, SST SOL 24VDC 1/2NPT

DOC # 508081



AFEC01*	18" Leaded Coil for NEMA 7/9 hazardous location enclosure	24/60	6	F
AFEC05		120/60, 110/50	6	F
AFEC15		240/60, 220/50	6	F
BFEC01	18" Leaded Coil for NEMA 7/9 hazardous location enclosure	24/60	10.2	F
BFEC05		120/60, 110/50	10.2	F
BFEC15		240/60, 220/50	10.2	F
CFEC01*	18" Leaded Coil for NEMA 7/9 hazardous location enclosure	24/60	11	F
CFEC05		120/60, 110/50	11	F
CFEC15		240/60, 220/50	11	F
DFEC01*	18" Leaded Coil for NEMA 7/9 hazardous location enclosure	24/60	16	F
DFEC05		120/60, 110/50	16	F
DFEC15		240/60, 220/50	16	F
1FEC75*	18" Leaded Coil for NEMA 7/9 hazardous location enclosure	12 VDC	9.5	F
1FEC80		24 VDC	9.5	F
3FEC75	18" Leaded Coil for NEMA 7/9 hazardous location enclosure	12 VDC	11.5	F
3FEC80		24 VDC	11.5	F

Coil Reference Coil Charts 1-6

* Not in list price book. Minimum order quantities may apply. Consult factory.

COMPONENT SPECIFICATION

DESCRIPTION: VALVE, SST SOL 24VDC 4-WAY **DOC # 508082**

1. SPECIFICATION:

Description: 4-way 2 position single solenoid valve.

Pictorial Representation:



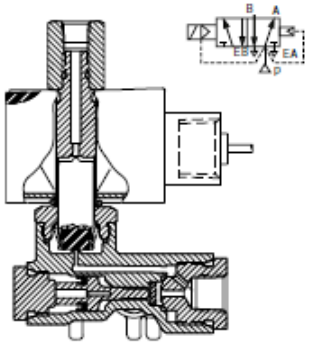

Applicable Documents / Standards:

Voltage:	24VDC
Pipe Size:	1/4 NPT
Orifice Size In:	1/16 Inch
Orifice Size Exh:	3/32 Inch
Flow Factor CV:	0.09
Operating Diff. Pressure:	100 PSI
Watts:	11.6
Max Media Temperature:	40°C (104°F)
Seal:	NBR
Body Material:	316 Stainless Steel
Certification:	**Coil Only (P/N EV8007G1)** **UL (VAPT.E12264)** **CSA (013976_0_000)** **Class I, Groups A, B, C and D** **Class II, Groups E, F and G**

Manufacturer:

Manufacturer:	ASCO
Manufacturer Part Number:	EV8345G81 24VDC

2. REFERENCES:

ASCO Valve Inc. (USA)

NOTE: NO SUBSTITUTIONS WITHOUT ENGINEERING APPROVAL.

REV	LOG NO.	REV HISTORY: YY-XXXX	REV BY	CHK BY	APPD BY	DATE YYYY-MM-DD
A	14-133	CS RELEASED	SC	RC	KB	06.03.2014

COPYRIGHT BY TROJAN TECHNOLOGIES 2013. ALL RIGHTS RESERVED.

salsnes Filter

COMPONENT SPECIFICATION

C spec.

DESCRIPTION: VALVE, SST SOL 24VDC 4-WAY **DOC # 508082**

ASCO® RedHat®

Pilot Operated
General Service Solenoid Valves
Brass and 316 Stainless Steel Bodies • 1/4" NPT

4/2 SERIES 8345

4-WAY

Features

- Compact valves for general service applications
- Low-cost, 4-way valve when low flow is sufficient
- Mountable in any position

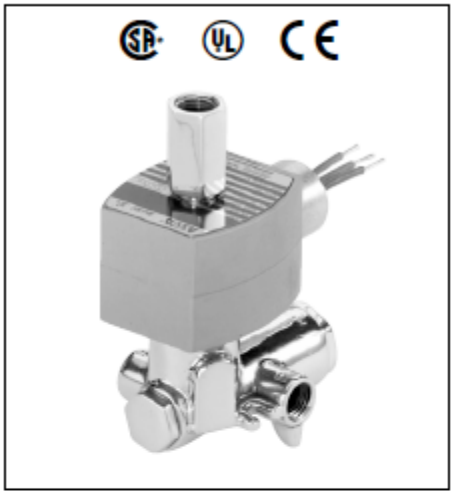

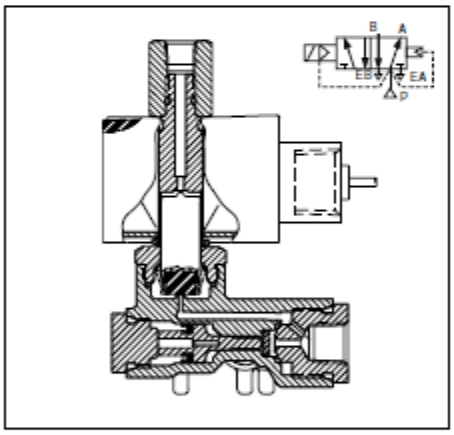

Construction

Valve Parts in Contact with Fluids		
Body	Brass	316 Stainless Steel
Seals and Disc	NBR and PA	
Core Tube	305 Stainless Steel	
Core and Plugnut	430F Stainless Steel	
Springs	302 Stainless Steel	
Shading Coil	Copper	Silver
Piston	PA	

Electrical

Standard Coil and Class of Insulation	Watt Rating and Power Consumption				Spare Coil Part Number					
		AC			General Purpose		Explosionproof (EF)		Explosionproof (EV)	
	DC Watts	Watts	VA Holding	VA Inrush	AC	DC	AC	DC	AC	DC
F	11.6	10.1	25	50	238610	238710	238614	238714	274614	274714

Standard Voltages: 24, 120, 240, 480 volts AC, 60 Hz (or 110, 220 volts AC, 50 Hz). 6, 12, 24, 120, 240 volts DC. Must be specified when ordering.
Other voltages are available when required.

Solenoid Enclosures

Standard: Watertight, Types 1, 2, 3, 3S, 4, and 4X.

Optional: Explosionproof and Watertight, Types 3, 3S, 4, 4X, 6, 6P, 7, and 9. (To order, add prefix "EF" or, for Explosionproof Stainless Steel trim and hub on Brass-Bodied valves, add "EV" to catalog number.)

See Optional Features Section for other available options.

Nominal Ambient Temp. Ranges

AC: 32°F to 125°F (0°C to 52°C)
DC: 32°F to 104°F (0°C to 40°C)

Refer to Engineering Section for details.

Approvals

CSA certified. UL listed as General Purpose Valve.
EV8345G081 solenoid only UL approved.
Meets applicable CE directives.

Refer to Engineering Section for details.

Important

A Minimum Operating Pressure Differential must be maintained between the pressure and exhaust ports. Supply and exhaust piping must be full area, unrestricted. ASCO flow controls and other similar components must be installed in the cylinder lines only.

Refer to Engineering Section for details.

salsnes Filter

COMPONENT SPECIFICATION

DESCRIPTION: VALVE, SST SOL 24VDC 4-WAY **DOC # 508082**

4/2 SERIES 8345

ASCO®

Specifications (English units)

Pipe Size (In)	Orifice Size (In) Press.	Orifice Size (In) Exh.	Cv Flow Factor Inlet	Cv Flow Factor Exh.	Operating Pressure Differential (psi) Max. AC Min.	Max. AC Air-Inert Gas	Max. AC Water	Max. AC Lt. Oil @ 50 SSU	Max. DC Air-Inert Gas	Max. DC Water	Max. DC Lt. Oil @ 50 SSU	Max. Fluid Temp. °F AC	Max. Fluid Temp. °F DC	Brass Body Catalog Number	Stainless Steel Body Catalog Number	Stainless Steel Body Const. Ref.	Watt Rating/ Class of Coil Insulation AC	Watt Rating/ Class of Coil Insulation DC
SINGLE SOLENOID																		
1/4	1/16	3/32	.09	.09	10	150	150	150	100	100	100	180	104	8345G001	EVB345G081	1	10.1/F	11.6/F
SINGLE SOLENOID AIR-ONLY CONSTRUCTION - Exhaust to Atmosphere																		
1/4	1/16	3/32	.09	.09	10	150	-	-	100	-	-	180	104	8345H003	-	1	10.1/F	11.6/F

4-WAY

Specifications (Metric units)

Pipe Size (In)	Orifice Size (mm) Press.	Orifice Size (mm) Exh.	Kv Flow Factor (m^3/h) Inlet	Kv Flow Factor (m^3/h) Exh.	Operating Pressure Differential (bar) Max. AC Min.	Max. AC Air-Inert Gas	Max. AC Water	Max. AC Lt. Oil @ 50 SSU	Max. DC Air-Inert Gas	Max. DC Water	Max. DC Lt. Oil @ 50 SSU	Max. Fluid Temp. °C AC	Max. Fluid Temp. °C DC	Brass Body Catalog Number	Stainless Steel Body Catalog Number	Stainless Steel Body Const. Ref.	Watt Rating/ Class of Coil Insulation AC	Watt Rating/ Class of Coil Insulation DC
SINGLE SOLENOID																		
1/4	2	2	.08	.08	0.7	10	10	10	7	7	7	82	40	8345G001	EVB345G081	1	10.1/F	11.6/F
SINGLE SOLENOID AIR-ONLY CONSTRUCTION - Exhaust to Atmosphere																		
1/4	2	2	.08	.08	0.7	10	-	-	7	-	-	82	40	8345H003	-	1	10.1/F	11.6/F

Dimensions inches (mm)

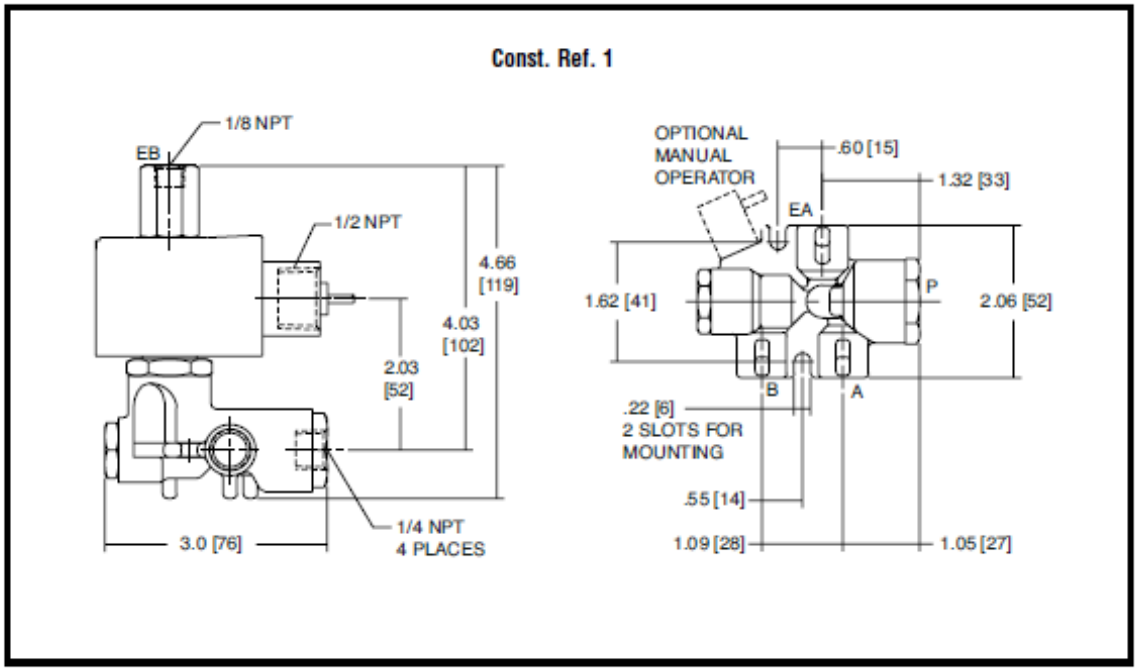

MODEL EB

ORBINOX
VALVE SOLUTIONS IN MORE THAN 70 COUNTRIES

BI-DIRECTIONAL KNIFE GATE VALVE



The **EB** model knife gate is a bi-directional valve designed for general industrial service applications. The design of the body and seat assures non-clogging shut off on suspended solids in industries such as:

- Wastewater treatment plants
- Chemical plants
- Food and Beverage
- etc.

Sizes: DN 50 to DN 1200 (larger diameters on request)

Working pressure:

DN 50	to	DN 250:	10 kg/cm²
DN 300	to	DN 400:	6 kg/cm²
DN 450:			5 kg/cm²
DN 500	to	DN 600:	4 kg/cm²
DN 700	to	DN 1200:	2 kg/cm²

Standard flange connection: DIN PN 10
Other flange connections: on request

Directives: DIR 2006/42/CE (MACHINES)
DIR 97/23/CE (PED) Fluid: Group 1(b), 2 (Cat. I, mod. A)
DIR 94/9/CE (ATEX) Ex

Face to face dimensions acc. to EN558-1 serie 20 (replaces K1 DIN3202) up to DN500.

All valves are tested prior to shipping in accordance with the standard developed by the Quality Control Department at ORBINOX.

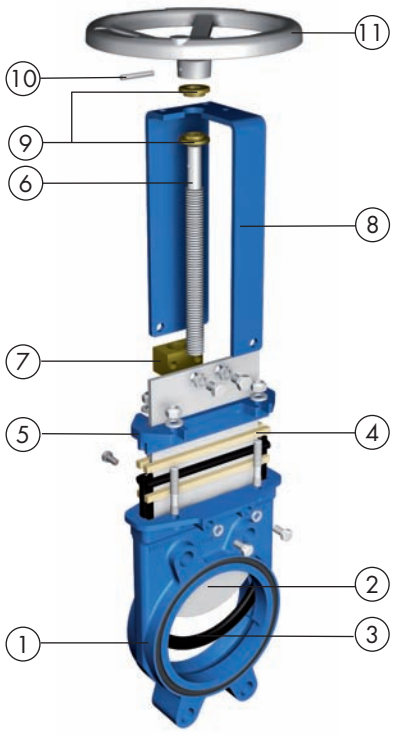

STANDARD PARTS LIST

Part:	Cast Iron:
1- Body	GJL250(GG25)
2- Gate	AISI 304
3- Seat	EPDM / Nitrile
4- Packing	PTFE Impreg. Synth. Fibre (ST)+O-ring
5- Gland Follower	GJS400 (GGG40)
6- Stem	AISI 430
7- Stem Nut	Brass
8- Yoke	Carbon Steel - Epoxy Coated
9- Bushing	Brass
10- Spring Pin	AISI 1070 (ISO 8752)
11- Handwheel	DN50-300: Aluminium (L2520)/ DN≥350: GJS400 (GGG40)

Reserves the right to change specifications without notice

ORBINOX S.A. Pol. Ind. s/n-20270 ANOETA (Spain) Tel.: +34 943 698030 - Fax: +34 943 653066 e-mail:orbinox@orbinox.com
ORBINOX CANADA, ORBINOX USA, ORBINOX BRAZIL, ORBINOX COMERCIAL, ORBINOX UK, ORBINOX FRANCE, ORBINOX GERMANY, ORBINOX INDIA, ORBINOX CHINA, ORBINOX S.E.A.
www.orbinox.com

MODEL EB

ORBINOX
VALVE SOLUTIONS IN MORE THAN 70 COUNTRIES

DESIGN FEATURES

BODY:
Wafer style cast **monoblock** design internally machined up to DN 500 with reinforced ribs in larger diameters for extra body strength. It allows its installation as end of line from DN50 to DN300.
The design has been developed by a new manufacturing process that machines the inside part of the body, allowing more control in the different dimension tolerances. This allows a perfect adjustment of the body-gate-seal, reducing the torque that keeps the tightness and avoiding any build up of solids that would prevent valve from closing.
The design changes to two part bolted body internally machined from DN 600.
Full port design for greater flow capacity and minimal pressure drop.
The gate guides on full stroke ensure bi-directional shutoff.
Standard EPDM o-ring on flange connection of the valve for sealing.



GATE:
Stainless steel gate, as standard.
Gate is polished on both sides for a greater seal between the gate with both packing and seat.
Gate is fully guided in the body allowing for bi-directional service.

PACKING:
Standard PTFE impregn.synth fibre (ST) with EPDM o-ring for better shut-off.
Long-life braided packing is available in a wide range of materials.

NON RISING STEM:
The standard stainless steel stem offers a high and long corrosion resistant life.

ACTUATORS:
All actuators supplied by **ORBINOX** are interchangeable, and supplied with an standard mounting kit for easy installation on site.

YOKE or ACTUATOR SUPPORT:
Made of EPOXY coated steel (stainless steel available on request).
Compact design makes it extremely robust even under the most severe conditions.

EPOXY COATING:
The epoxy coating on all **ORBINOX** cast iron and carbon steel valve bodies and components is electrostatically applied making the valves to be corrosion resistant with a high quality finished product.
The **ORBINOX** standard colour is RAL-5015 blue.

GATE SAFETY PROTECTION:
ORBINOX automated valves are provided with gate guards in accordance with EU Safety Standards.
The design feature prevents any objects from being caught accidentally while the gate is moving.

OTHER MATERIALS
On request, following materials can be also supplied:

Body:
- Ductile Iron (GGG-40)
- CF8M on some sizes

Gate:
- AISI 316 or 316Ti

Stem:
- AISI 316 or 316 Ti

MODEL EB

ORBINOX
VALVE SOLUTIONS IN MORE THAN 70 COUNTRIES

ACTUATOR TYPES

Manual:

Handwheel (non-rising stem)
Chainwheel (non-rising stem)
Lever
Bevel Gear (non-rising stem)
Handwheel (rising stem)
Others (square nut...)

Automatic:

Double Acting Pneumatic
Electric (rising or non-rising stem)
Single Acting Pneumatic
Hydraulic

All actuators supplied by ORBINOX are interchangeable.

FAIL SAFE SYSTEMS

Used on pneumatic actuated valves

SINGLE ACTING / SPRING RETURN

Available from DN 50 to DN 200

Supply pressure: minimun 5Kg/cm^2-maximum 10Kg/cm^2

Options:
- Fail open
- Fail closed

SINGLE ACTING / VOLUME TANK

Available for all sizes (DN>200)

Options:
- Pneumatic Failsafe
- Pneumatic or Electric Failsafe

ACCESSORIES

Mechanical stops
Locking device
Manual override
Solenoid valves
Positioners
Limit switches
Proximity switches
Floor stands
Stem extensions

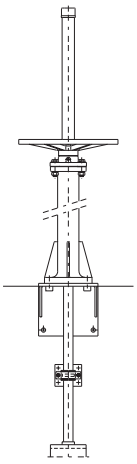

Wide range of valve extensions available.

For further information about fail safe systems and valve extensions, please see EX chapter.

We recommend consultation with our technical department.

MODEL EB

ORBINOX
VALVE SOLUTIONS IN MORE THAN 70 COUNTRIES

TEMPERATURE CHART

SEAT / SEALS

Material	Max.Temp.(°C)	Applications
EPDM (E)	120	Acid and non mineral oils.
Nitrile (N)	120	Resistance to petroleum products.
On request:		
Viton (V)	200	General chemical service High temperature

More details and other materials on request.

PACKING

Material	Max. Temp. (°C)	pH
PTFE impregn.synth fibre (ST)	240	2 - 13
Dynapack (DP)	270	2 - 14
Dry cotton (AS)	50	6 - 8
Braided PTFE (TH)	260	0 - 14

NOTE:
All types include an elastomere O-ring (same material as seal), excluding TH.
Standard packing: ST

SEAT TYPES

RESILIENT SEAT
This is the standard seat. The joint is seated on the body, fitted with a metallic core, in contact with the gate all over its perimeter. This layout provide an adequate watertightness and seamless liquid flow on both ways, avoiding at the same time any build-up of solids that would prevent the valve from closing. The o-ring is protected by the body itself.

* DN50-500: Moulded seal with an internal steel core.

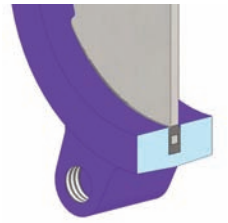

* DN ≥ 600: Extruded seal with an internal steel wire.

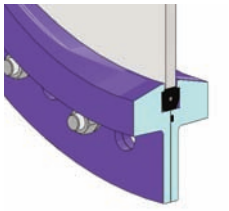

ATEX

Please contact our Orbinox representative for info and availability. Some considerations:

- Hand operated EB valves have been subjected to an ignition risk assessment according to DIN EN 13463: 1-5 and they are out the scope of application of ATEX Directive. Therefore hand operated valves are suitable for ALL ATEX zones.
- Electrical, pneumatical and hydraulically operated valves must be subjected to a conformity assesment of their own and also of the whole unit valve-actuator to get EC Type Approval to Directive 94/9.

MODEL EB

ORBINOX
VALVE SOLUTIONS IN MORE THAN 70 COUNTRIES

PNEUMATIC CYLINDER

- The standard pneumatic actuator (double acting on-off cylinder) consists of:
  - DN 50-250: Aluminum barrels
  - DN≥ 300: Composite barrels
  - Aluminum end caps
  - Stainless Steel (AISI 304) piston rod
  - Nitrile coated steel piston
- Available from DN 50 to DN 800
- Supply Pressure: minimum 3.5 kg/cm² - maximum 10 kg/cm²
  Actuator designed with 6 kg/cm² air supply
- For valves installed in a horizontal position, we recommend U-type support plates and/or actuator support.

- Options (on request):
  - Hard anodized jacket and covers
  - Over / Undersized cylinder
  - Stainless Steel jacket and covers
  - Manual override
  - Fail safe system
  - Travel stops
- Instrumentation (on request):
  - Positioners
  - Solenoid valves
  - Flow regulators
  - Air preparation units

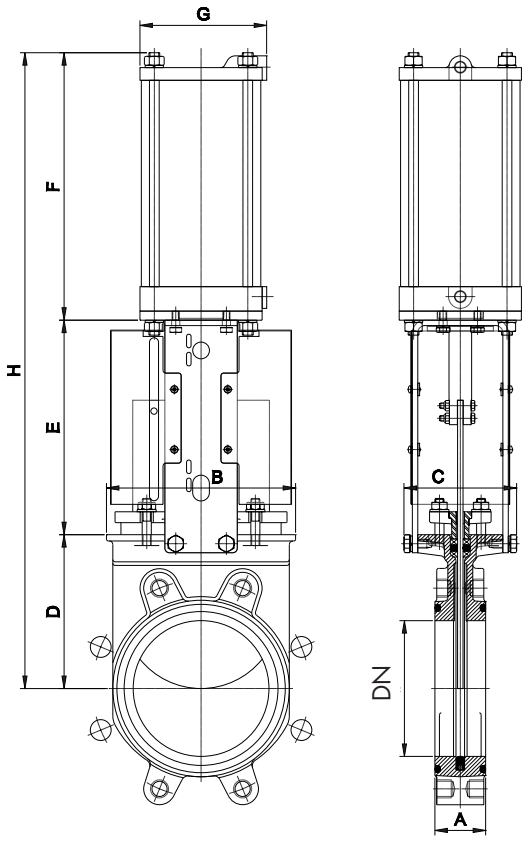

DN	A	B	C	D	E	F	G	H	Weight (kg.)	Standard Cyl	Connect.
50	43	113	124	105	129	178	115	412	9	C100/54	1/4" G
65	46	128	124	115	146	193	115	454	10	C100/69	1/4" G
80	46	143	124	124	162	211	115	497	11	C100/84	1/4" G
100	52	162	124	140	187	231	115	558	13.5	C100/104	1/4" G
125	56	181	124	150	211	271	140	632	19	C125/129	1/4" G
150	56	209	124	170	237	296	140	703	22	C125/154	1/4" G
200	60	263	142	205	309	358	175	872	47	C160/204	1/4" G
250	68	315	142	250	364	428	220	1042	58	C200/254	3/8" G
300	78	370	142	290	414	478	220	1182	84	C200/304	3/8" G
350	78	420	197	325	500	549	277	1374	130	C250/354	3/8" G
400	102	478	197	360	550	599	277	1509	181	C250/404	3/8" G
450	114	530	270	410	598	680	382	1688	235	C300/454	1/2" G
500	127	584	270	450	658	730	382	1838	302	C300/504	1/2" G
600	110	762	270	510	758	830	382	2098	315	C300/607	1/2" G
700	110	890	380	601	875	985	444	2461	480	C350/713	3/4" G
800	110	1012	320	695	974	1085	444	2754	585	C350/813	3/4" G

A: EN558-1 serie 20 up to DN500

MODEL EB

ORBINOX
VALVE SOLUTIONS IN MORE THAN 70 COUNTRIES

FLANGE AND BOLTING DETAILS

EN 1092-2 PN 10

DN	K	nº	M	T	⌖ ⊕ ⌖
50	125	4	M-16	10	4 - 0 - 0
65	145	4	M-16	10	4 - 0 - 0
80	160	8	M-16	12	4 - 4 - 0
100	180	8	M-16	12	4 - 4 - 0
125	210	8	M-16	14	4 - 4 - 0
150	240	8	M-20	14	4 - 4 - 0
200	295	8	M-20	14	4 - 4 - 0
250	350	12	M-20	18	8 - 4 - 0
300	400	12	M-20	21	8 - 4 - 0
350	460	16	M-20	21	6 - 4 - 6
400	515	16	M-24	28	6 - 4 - 6
450	565	20	M-24	30	12 - 4 - 4
500	620	20	M-24	40	8 - 4 - 8
600	725	20	M-27	26	12 - 8 - 0
700	840	24	M-27	20	16 - 8 - 0
800	950	24	M-30	20	16 - 8 - 0
900	1050	28	M-30	20	20 - 8 - 0
1000	1160	28	M-33	20	20 - 8 - 0
1200	1380	32	M-36	35	22 -10 - 0

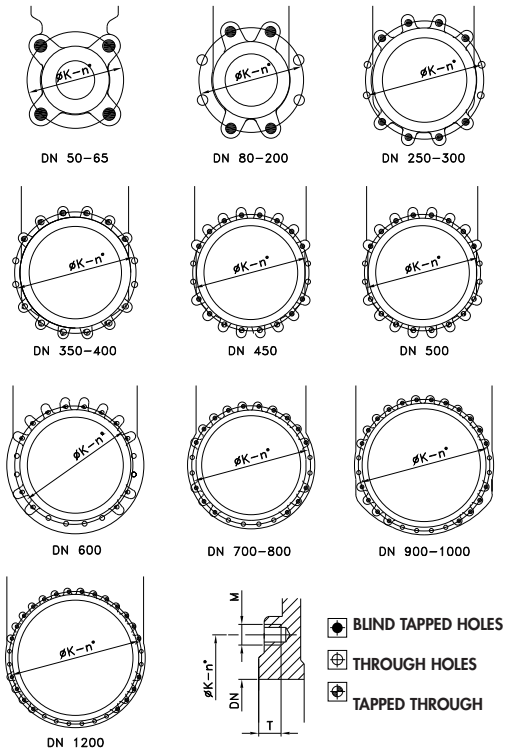

ANSI B16.5, class 150

DN	K	nº	M	T	⌖ ⊕ ⌖
2″	4 3/4″	4	5/8″ UNC	3/8″	4 - 0 - 0
2 1/2″	5 1/2″	4	5/8″ UNC	3/8″	4 - 0 - 0
4″	7 1/2″	8	5/8″ UNC	3/8″	4 - 4 - 0
5″	8 1/2″	8	3/4″ UNC	3/8″	4 - 4 - 0
6″	9 1/2″	8	3/4″ UNC	1/2″	4 - 4 - 0
8″	11 3/4″	8	3/4″ UNC	1/2″	4 - 4 - 0
10″	14 1/4″	12	7/8″ UNC	3/4″	8 - 4 - 0
12″	17″	12	7/8″ UNC	3/4″	8 - 4 - 0
14″	18 3/4″	12	1″ UNC	7/8″	4 - 4 - 4
16″	21 1/4″	16	1″ UNC	1″	8 - 4 - 4
18″	22 3/4″	16	1 1/8″ UNC	1″	12 - 4 - 4
20″	25″	20	1 1/8″ UNC	1″	18 - 10 - 0
30″	36″	28	1 1/4″ UNC	3/4″	20 - 8 - 0
42″	49 1/2″	36	1 1/2″ UNC	3/4″	24 -12 - 0

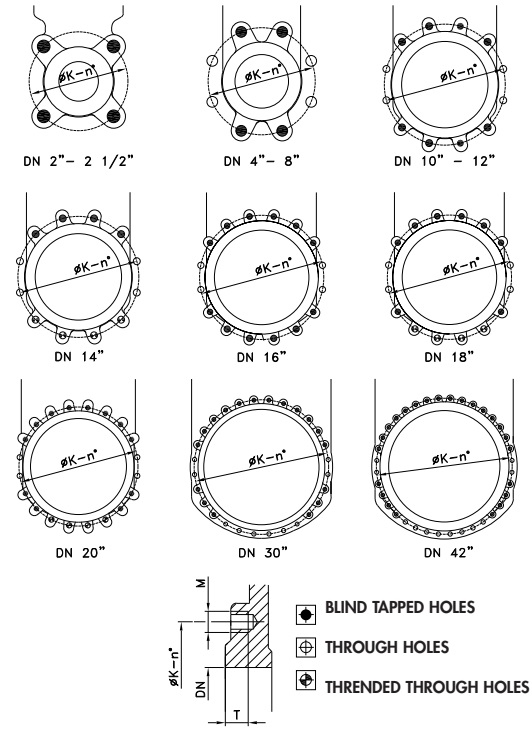

DATA SHEET

STANDARD D/A PNEUMATIC CYLINDER

ORBINOX
VALVE SOLUTIONS IN MORE THAN 70 COUNTRIES

BORE SIZES 100 - 300

Orbinox standard double acting pneumatic cylinders are specifically designed to suit Orbinox knife gate valves.

Main features:

- End caps and barrels up to bore 250mm are made of aluminium
- Barrels with bore 300mm are made of composite*
- Piston rod in stainless steel
- Air supply can vary from 3,5bar up to maximun 10 bar

Options:

- Magnetic limit switches available with special magnetic kit under the piston
- Single acting (up to 200mm bore)
- Manual override system (two piston rods)

Bore sizes (mm):

DN 100, 160, 200, 250, 300

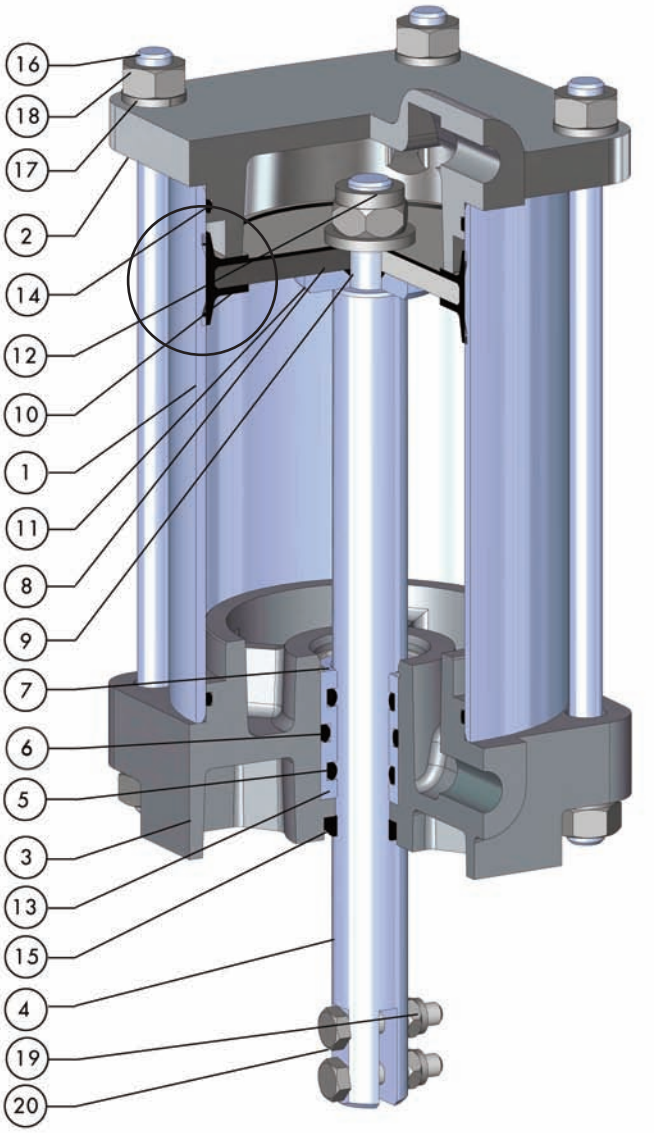

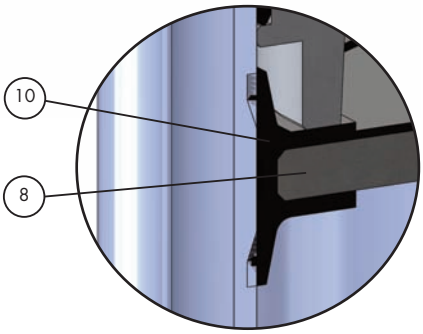

PART LIST

Item:	Description:	Material:
1	Barrel	Aluminium/ Composite*
2	Cap	Aluminium
3	Head	Aluminium
4	Piston Rod	AISI - 304
5	'O'-Ring	Nitrile
6	'O'-Ring	Nitrile
7	Circlip DIN472	Steel
8	Piston support plate	Steel
9	O-ring	Nitrile
10	Piston seal	Nitrile
11	Piston support plate	Carbon Steel
12	Self locking nut	AISI - 304
13	Bushing	Nylon
14	O-ring	Nitrile
15	Scrapper	Steel + Nitrile
16	Tie rods	Carbon Steel - Zn plated
17	Washer DIN127	Carbon Steel - Zn plated
18	Nut DIN934	Carbon Steel - Zn plated
19	Bolt DIN933	AISI - 304
20	Self locking nut	AISI - 304

ORBINOX reserves the right to change specifications without notice.
ORBINOX SPAIN, ORBINOX UK, ORBINOX FRANCE, ORBINOX GERMANY, ORBINOX CANADA, ORBINOX USA, ORBINOX BRAZIL, ORBINOX INDIA, ORBINOX CHINA, ORBINOX S.E.A.
www.orbinox.com

DATA SHEET

STANDARD D/A PNEUMATIC CYLINDER

ORBINOX
VALVE SOLUTIONS IN MORE THAN 70 COUNTRIES

BORE SIZES 100 - 300

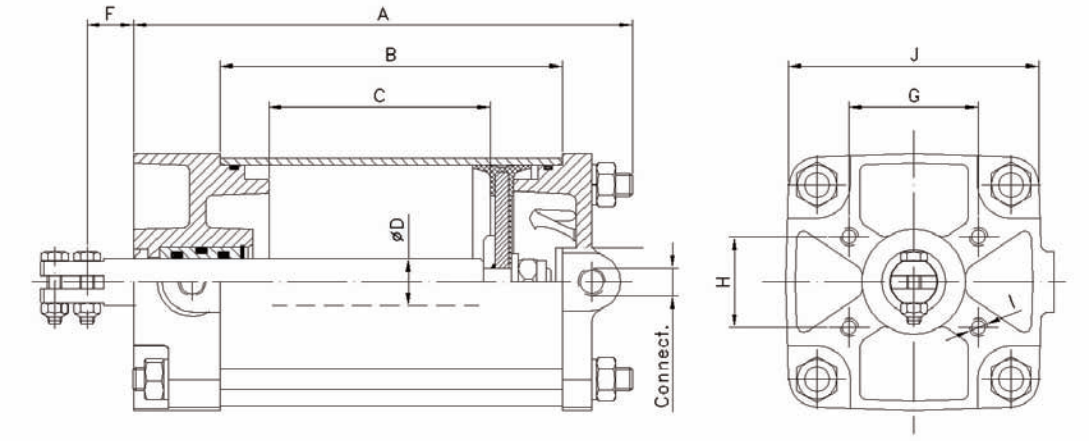

Ø Barrel - Valve size	A	B	C	ØD	F	G	H	I	J	Air Connections	Weight (kg)	Air (litre)
~~Ø 100 - 50~~	~~163~~	~~114~~	~~62~~	~~20~~	~~20~~	~~55.44~~	~~38.82~~	~~M8~~	~~110~~	~~1/4"G~~	~~2~~	~~4~~
~~Ø 100 - 65~~	~~178~~	~~129~~	~~77~~	~~20~~	~~20~~	~~55.44~~	~~38.82~~	~~M8~~	~~110~~	~~1/4"G~~	~~2,25~~	~~5~~
~~Ø 100 - 58~~	~~196~~	~~147~~	~~95~~	~~20~~	~~20~~	~~55.44~~	~~38.82~~	~~M8~~	~~110~~	~~1/4"G~~	~~2,25~~	~~6~~
Ø 100 - 100	216	167	115	20	20	55.44	38.82	M8	110	1/4"G	3	7
~~Ø 125 - 125~~	~~243~~	~~203~~	~~143~~	~~25~~	~~29~~	~~55.5~~	~~39~~	~~M8~~	~~135~~	~~1/4"G~~	~~4~~	~~13~~
~~Ø 125 - 150~~	~~268~~	~~228~~	~~168~~	~~25~~	~~29~~	~~55.5~~	~~39~~	~~M8~~	~~135~~	~~1/4"G~~	~~5~~	~~15~~
~~Ø 160 - 200~~	~~326~~	~~280~~	~~220~~	~~30~~	~~43~~	~~100~~	~~50~~	~~M10~~	~~170~~	~~1/4"G~~	~~9~~	~~31~~
~~Ø 200 - 250~~	~~393~~	~~341~~	~~270~~	~~30~~	~~43~~	~~100~~	~~50~~	~~M10~~	~~215~~	~~3/8"G~~	~~15~~	~~59~~
~~Ø 200 - 300~~	~~443~~	~~391~~	~~320~~	~~30~~	~~43~~	~~100~~	~~50~~	~~M10~~	~~215~~	~~3/8"G~~	~~16~~	~~70~~
~~Ø 250 - 350~~	~~505~~	~~448~~	~~375~~	~~40~~	~~84~~	~~99~~	~~99~~	~~M16~~	~~274~~	~~3/8"G~~	~~36~~	~~127~~
~~Ø 250 - 350~~	~~555~~	~~498~~	~~425~~	~~40~~	~~84~~	~~99~~	~~99~~	~~M16~~	~~274~~	~~3/8"G~~	~~37~~	~~144~~
~~Ø 300 - 450~~	~~645~~	~~554~~	~~475~~	~~45~~	~~77.5~~	~~99~~	~~99~~	~~M16~~	~~382~~	~~1/2"G~~	~~38~~	~~232~~
~~Ø 300 - 500~~	~~695~~	~~604~~	~~525~~	~~45~~	~~77.5~~	~~99~~	~~99~~	~~M16~~	~~382~~	~~1/2"G~~	~~40~~	~~257~~
~~Ø 300 - 600~~	~~795~~	~~654~~	~~625~~	~~45~~	~~77.5~~	~~99~~	~~99~~	~~M16~~	~~382~~	~~1/2"G~~	~~42~~	~~266~~

Recommended cylinder bore size for standard Orbinox valves considering 6 bar of air supply:

ORBINOX VALVES (DN in mm)	EX, EK, EB, ET, EB,XC,DT, AT	TL,TK	VG
	Cyl.100	Cyl.100	Cyl.100
~~65~~			
~~80~~			Cyl.125
100			
	Cyl.125	Cyl.125	Cyl.160
~~150~~			
~~200~~	~~Cyl.160~~	~~Cyl.160~~	~~Cyl.200~~
——	~~Cyl.200~~	~~Cyl.200~~	~~Cyl.250~~
~~300~~			~~Cyl.300~~
——	~~Cyl.300~~	~~Cyl.300~~	~~Cyl.350~~
~~400~~			~~Cyl.400~~
~~450~~			
~~500~~			
~~600~~		~~Cyl.350~~	-
——	~~Cyl.350~~		
~~750~~			
~~800~~			
——	~~Cyl.400~~	~~Cyl.400~~	
~~1000~~		-	
~~1200~~	-		

ORBINOX reserves the right to change specifications without notice.
ORBINOX SPAIN, ORBINOX UK, ORBINOX FRANCE, ORBINOX GERMANY, ORBINOX CANADA, ORBINOX USA, ORBINOX BRAZIL, ORBINOX INDIA, ORBINOX CHINA, ORBINOX S.E.A.
www.orbinox.com

DATA SHEET

STANDARD D/A PNEUMATIC CYLINDER

ORBINOX
VALVE SOLUTIONS IN MORE THAN 70 COUNTRIES

MAIN ACCESSORIES

- Magnetic limit switches set (fig.1) available for all bore sizes with special magnetic kit under the piston.
- Single acting up to 200mm bore (fig.2).
- Manual override system with two piston rods (fig.3).

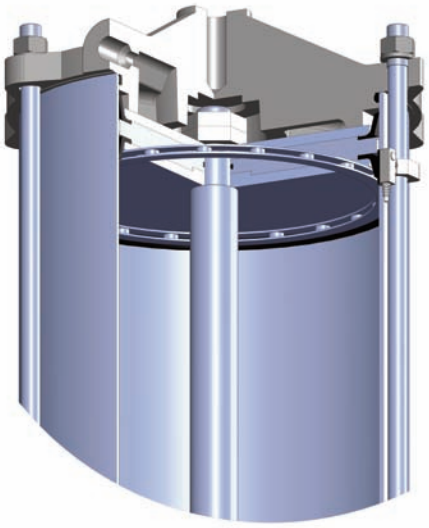

Fig. 1

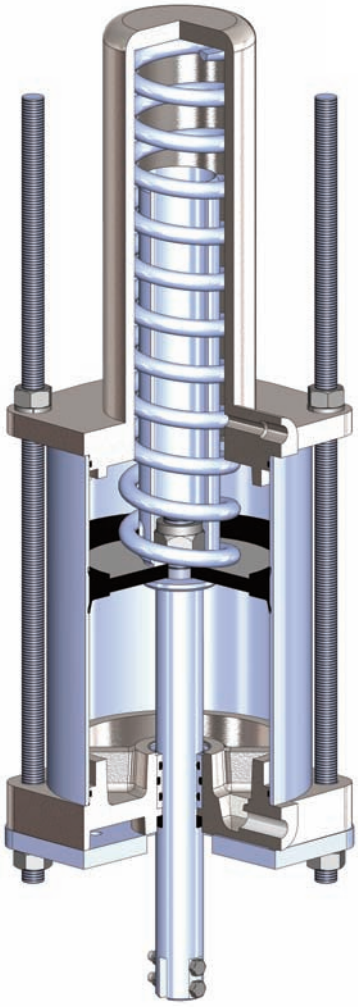

Fig. 2

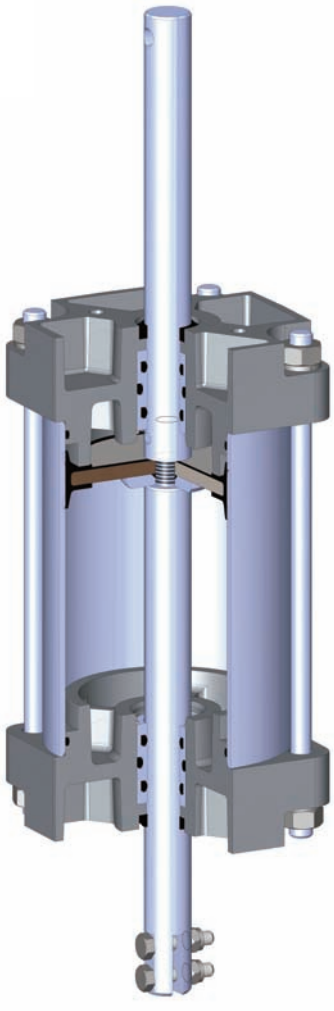

Fig. 3

ORBINOX reserves the right to change specifications without notice.
ORBINOX SPAIN, ORBINOX UK, ORBINOX FRANCE, ORBINOX GERMANY, ORBINOX CANADA, ORBINOX USA, ORBINOX BRAZIL, ORBINOX INDIA, ORBINOX CHINA, ORBINOX S.E.A.
www.orbinox.com

Salsnes Filter AS
v/ Jon Lennart Ness

Moss, 16-08-2012

Statement: Water hydraulic actuated Orbinox Knife gate valves

Fagerberg AS as Orbinox official representative for Norway hereby guaranties that Salsnes Filter AS can use water as supply pressure in order to operate the Orbinox EB-valve with aluminum cylinder. Max water supply pressure is 10 bar, normal 6 bar.

for Fagerberg Norge AS

Fredrik von Wachenfeldt
Managing director

Adresse/Address
Fagerberg Norge AS
Årvollskogen 33
1529 Moss

Telefon/Telephone
+ 47 69 35 55 30
Telefax/Telecopy
+ 47 69 35 55 31

E-post/E-mail
post@fagerberg.no
Hjemmeside/Web-site
www.fagerberg.no

Bankonto/Bank account
NO65 - 9490.05.41249
Foretaksnr./Reg. No.
NO 856 326 942 MVA

COMPONENT SPECIFICATION

DESCRIPTION: SENSOR, PRESSURE G1/2 2.5PSI **DOC # 508086**

1. SPECIFICATION:

Description: Intrinsically safe low pressure transmitter

Pictorial Representation:



Applicable Documents / Standards:

Wetted Material:	316L Stainless Steel
Excitation Voltage:	10-28VDC
Cable Length:	10ft
Pressure Range:	0-2.5PSI (69 inches of H20)
Process Connection:	G1/2 Flush Diaphragm
Output Load:	0-800 Ohms @10-28VDC
Output:	4-20mA
Accuracy:	<±0.25%BFSL
Operating Temperature:	-40 to 85°C (-40 to 185°F)
Compensated Range:	0 to 70°C (32 to 158°F)
Rating:	IP-66
Certifications:	**cULus (QUZW.E210825)** **Class 1, Division 1, Groups C, D with approved barrier** **CE**

Manufacturer:

Manufacturer:	American Sensor Technology (AST)
Manufacturer Part Number:	AST44LPT00069H4D1413

2. REFERENCES:

American Sensor Technologies Inc.

NOTE: NO SUBSITUTIONS WITHOUT ENGINEERING APPROVAL.

REV	LOG NO.	REV HISTORY: YY-XXXX	REV BY	CHK BY	APPD BY	DATE YYYY-MM-DD
A	14-297	CS RELEASED	SC	KB	GD	24.03.2014

COPYRIGHT BY TROJAN TECHNOLOGIES 2013. ALL RIGHTS RESERVED.

COMPONENT SPECIFICATION

DESCRIPTION: SENSOR, PRESSURE G1/2 2.5PSI

DOC # 508086

Intrinsically Safe Low Pressure Transmitter

AST44LP

SUBMIT YOUR REQUIREMENTS



The AST44LP is a low pressure **Class I Division 1 intrinsically safe pressure transmitter / pressure transducer** Groups C, D when installed with an approved barrier. With its rugged construction and the best price-to-performance ratio in the industry, the AST44LP is the solution for low pressure measurement for a variety of applications. The AST44LP iss also now available with CSA Single Seal Approval.

Design Benefits

- UL/cUL 913 (CSA 157) Class 1 Div 1 Groups C,D when installed with an approved barrier
- ABS (American Bureau of Shipping) Approved
- High Strength Stainless Steel Construction
- From 0-1 to 0-15 PSI
- Low Static and Thermal Errors
- Unparalleled Price and Performance
- Wide Variety of Liquids and Gases
- EMI/RFI Protection
- Excellent Low Cost Option for External Tank Level Monitoring

Applications / Industries

- Industrial OEM Equipment
- HVAC/R Equipment
- Water Management
- Control Panels
- Pneumatics
- Hydraulic Systems
- Vapor Recovery
- Data Loggers
- External Tank Levels

Similar Products

Performance @ 25°C (77°F)	
Accuracy[1]	<±0.25% BFSL (<±0.5% BFSL for 0-1 PSI)
Stability (1 Year)	± 0.25%FS, typ
Proof Pressure	2X Rated Pressure
Burst Pressure	5X Rated Pressure
Pressure Cycles	>10 Million

[1] Accuracy includes: Non-linearity, Hysteresis and Non-repeatability

Environmental Data	
Temperature	
Operating	-40 to 85°C (-40 to 185°F)
Storage	-40 to 125°C (-40 to 257°F)
Thermal Limits	
Compensated Range	0 to 70°C (32 to 158°F)
TC Zero	<±1.5% of FS (<±2.5%, typ. for 1PSI)
TC Span	<±1.5% of FS(<±2.5%, typ. for 1PSI)
Other	
Shock	EN 60068-2-27
Vibration	EN 60068-2-6, 60068-2-64, and IEC 68-2-32
EMI/RFI Protection	Yes
Rating	IP-66

Electrical Data			
Output	**4-20mA**	**1-5VDC, 1-6VDC**	
Excitation	10-28VDC	10-28VDC	
Output Impedance	>10k Ohms	<100 Ohms, Nominal	
Current Consumption	20mA, typ.	5mA, typical	
Bandwidth	(-3dB): DC to 250 Hz	(-3dB): DC to 1kHz	
Output Noise	-	<2mV RMS	
Zero Offset	<±1% of FS <±4%(1PSI)	<±1% of FS <±4%(1PSI)	
Span Tolerance	<±2% of FS <±4%(1PSI)	<±1.5% of FS <±4%(1PSI)	
Output Load	0-800 Ohms @10-28VDC	10k Ohms, Min.	
Reverse Polarity	N/A	Yes	Yes

salsnes Filter

COMPONENT SPECIFICATION

DESCRIPTION: SENSOR, PRESSURE G1/2 2.5PSI **DOC # 508086**

AST44LP Pressure Transducer Ordering Information

AST44LP	A	00005	P	4	E	1	000	SS

Series Type

Process Connection
A= 1/4" NPT Male
C= 1/4" BSPP Male
I= 1/4" NPT Female
P= 1/2" NPT Male
T = G1/2 Male with Flush Diaphragm (see option codes)

Pressure Measurement
Insert 5-digit pressure measurement code

Pressure Unit
H= Inches H2O
P= PSI

Outputs
3= 1-5V
4= 4-20mA (2 wire loop powered)
6= 1-6V

Electrical
A= 2 ft. (0.6 m)
B= 4 ft. (1.2 m)
C= 6 ft. (1.8 m)
D= 10 ft. (3.0 m)
E= Mini DIN 43650
F= Packard Metripack 150 3-Pin Conn.
I= DIN 43650A
L= Conduit fitting, Cable 2 ft.(0.6m)
M= Conduit fitting, Cable 4 ft.(1.2m)
N= Conduit fitting, Cable 6 ft.(1.8m)
P= Conduit fitting, Cable 10 ft.(3.0m)
R= 6 Pin Bendix
4= Mini-Fast (CSA Only)

Wetted Material
1= 316L

Options
000= No Special Options
421= Bi-Directional Output*
413= G1/2 Male with Flush Diaphragm (only available with process connection "T")

Single Seal *(add SS if you require CSA Single Seal Approval)*

*Consult Factory on standard ranges and availability.

Gauge PSIG	Pressure Measurement Code
0-1	00001
0-2.5	00069**
0-5	00005
0-7.5	00208**
0-10	00010
0-15	00015

**2.5 and 7.5 PSI Sensor must be ordered in inches of H2O.

A TROJAN TECHNOLOGIES COMPANY

COMPONENT SPECIFICATION

DESCRIPTION: SENSOR, PRESSURE 1/4BSP 15PSI **DOC # 508055**

1. SPECIFICATION:

Description: Intrinsically safe low pressure transmitter

Pictorial Representation:



Applicable Documents / Standards:

Wetted Material:	Stainless Steel
Excitation Voltage:	10-28VDC
Cable Length:	10ft
Pressure Range:	0-15PSI
Process Connection:	1/4" BSPP Male
Output Load:	0-800 Ohms @10-28VDC
Output:	4-20mA
Accuracy:	<±0.25%BFSL (< ±0.5% BFSL for 0-1 PSI)
Operating:	-40 to 85°C (-40 to 185°F)
Compensated Range:	0 to 55°C (30 to 130°F)
Rating:	IP-66
Certifications:	**cULus (QUZW.E210825)** **Class 1, Division 1, Groups C, D with approved barrier** **CE**

Manufacturer:

Manufacturer:	American Sensor Technology (AST)
Manufacturer Part Number:	AST44LPC00015P4D1000

2. REFERENCES:

American Sensor Technologies Inc.

NOTE: NO SUBSITUTIONS WITHOUT ENGINEERING APPROVAL.

REV	Log NO.	Log REV HISTORY:	REV BY	CHK BY	APPD BY	DATE YYYY-MM-DD
A	13-832	NEW RELEASE	CHS	PAG	JJS	2013-11-29

COPYRIGHT BY TROJAN TECHNOLOGIES 2013. ALL RIGHTS RESERVED.

A TROJAN TECHNOLOGIES COMPANY

COMPONENT SPECIFICATION

DESCRIPTION: SENSOR, PRESSURE 1/4BSP 15PSI **DOC # 508055**

AST44LP *Intrinsically Safe Low Pressure Transducers / Transmitters*

Class I Division 1 Groups C, D IS with Approved Barrier

OVERVIEW

The AST44LP is a stainless steel pressure transducer with a wide variety of options. With its rugged construction and the best price-to-performance ratio in the industry, the AST44LP is the solution for low pressure measurement in Intrinsically Safe areas.



BENEFITS

- **UL/cUL 913 (CSA 157) Class 1 Div 1 Groups C,D** when installed with an approved barrier
- High Strength Stainless Steel Construction
- No Welds or Internal O-rings
- Wide Operating Temperature
- Pressures from 0-1 to 0-15 PSI
- Low Static and Thermal Errors
- Unparalleled Price and Performance
- Compatible with Liquids and Gases
- EMI/RFI Protection

APPLICATIONS

- Industrial OEM Equipment
- Water Management
- Pneumatics
- Vapor Recovery
- External Tank Levels
- HVAC/R Equipment
- Control Panels
- Hydraulic Systems
- Data Loggers

Performance @ 25°C (77°F)

Accuracy*	< ±0.25% BFSL (< ±0.5% BFSL for 0-1 PSI)
Stability (1 year)	±0.25% FS, typical
Over Range Protection	2X Rated Pressure
Burst Pressure	5X or 75 PSI (whichever is less)
Pressure Cycles	> 100 Million

* Accuracy includes non-linearity, hysteresis & non-repeatability

Environmental Data

Temperature	
Operating	-40 to 85°C (-40 to 185°F)
Storage	-40 to 100°C (-40 to 212°F)
Thermal Limits	
Compensated Range	0 to 55°C (30 to 130°F)
TC Zero	<±1.5% of FS
TC Span	<±1.5% of FS
Other	
Shock	EN 60068-2-27
Vibration	EN 60068-2-6, 60068-2-64, and IEC 68-2-32
EMI/RFI Protection:	Yes
Rating:	IP-66

Electrical Data

Output	**4-20mA**	**1-5VDC, 1-6VDC**
Excitation	10-28VDC	10-28VDC
Output Impedance	>10k Ohms	<100 Ohms, Nominal
Current Consumption:	20mA, typical	5mA, typical
Bandwidth	(-3dB): DC to 250 Hz	(-3dB): DC to 1kHz
Output Noise:	-	<2mV RMS
Zero Offset:	<±1% of FS	<±1% of FS
Span Tolerance:	<±2% of FS	<±1.5% of FS
Output Load:	0-800 Ohms@10-28VDC	10k Ohms, Min.
Reverse Polarity Protection	Yes	Yes

A TROJAN TECHNOLOGIES COMPANY

COMPONENT SPECIFICATION

DESCRIPTION: SENSOR, PRESSURE 1/4BSP 15PSI

DOC # 508055

Ordering Information

AST44LP A 00005 P 4 E 1 000

Series Type

Process Connection
A= 1/4" NPT Male
C= 1/4 BSPP Male
I= 1/4" NPT Female
P= 1/2 MNPT

Pressure Range
Insert pressure code from chart

Pressure Unit
H= Inches H_2O P= PSI

Outputs
3= 1-5V 6= 1-6V
4= 4-20mA (2 wire loop powered)

Electrical*
A= 2 ft. (0.6 m) I= DIN 43650A
B= 4 ft. (1.2 m) L= Conduit, Cable 2 ft.
C= 6 ft. (1.8 m) M= Conduit, Cable 4 ft.
D= 10 ft. (3.0 m) N= Conduit, Cable 6 ft.
E= Mini DIN 43650C P= Conduit, Cable 10 ft.
F= Packard Metripack 150 R= 6 Pin Bendix

Wetted Material
1=316 L

Options
000 = No special options
421 = Bi-Directional Output*

*Consult factory for ranges and availability.
* Wiring information available at: http://www.astsensors.com/wiring.php

Pressure Ranges

Gauge PSIG	Pressure Code
0-1	00001
0-2.5	00069*
0-5	00005
0-7.5	00208*
0-10	00010
0-15	00015

*2.5 and 7.5 PSI Sensor must be ordered in inches of H_2O.

Barrier Installation

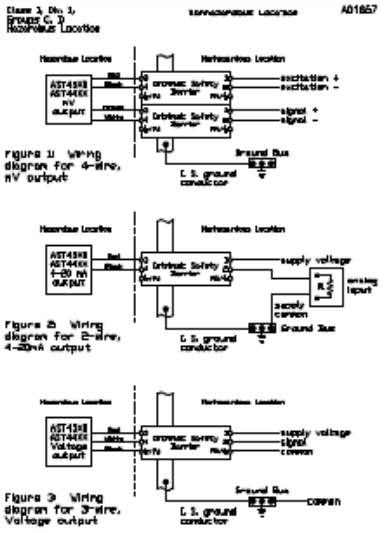

The transducers listed below are designed for installation in a Class I, Division 1, Groups C and D, Division 1 hazardous location when connected to Associated Apparatus as described in note 1.

Entity Parameters
Vmax = 28Vdc
Imax = 175mA
Ci = 1.44uF
Li = 0

Imax is the total current available from the Associated Apparatus under any condition.

Notes
1 Associated Apparatus shall provide intrinsically safe connections which meet the following parameters.
Voc or Vt ≤ Vmax Ca ≥ Ci + Ccable
Isc or It ≤ Imax La ≥ Li + Lcable

2. Control Room apparatus shall not generate in excess of 250V (Um).

3. Installation should be in accordance with Article 504 in the National Electrical Code, ANSI/NFPA 70.

Dimensional Data

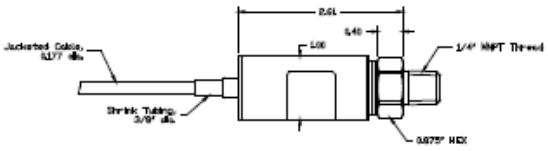

Warranty

Workmanship - AST, Inc. pressure transmitters have a limited one-year warranty to the original purchaser. AST, Inc. will replace or repair, free of charge, any defective transmitter. This warranty does not apply to any units that have been modified, misused, neglected or installed where the application exceeds published ratings. AST44LP is not recommended for use with hydrogen. For hydrogen applications, contact the factory for AST4300, AST4401, & AST4600 model information. AST's sensors are made with pride in New Jersey, USA. If in the area please feel free to stop by for a visit!

Installation/Applications - The purchaser is responsible for media compatibility, functional adequacy, and correct installation of the transmitter.

© 2013 American Sensor Technologies Inc. AST44LP 04/26/13.
All specifications subject to change without notice.

PART F

ELECTRICAL DRAWINGS & CUT SHEETS

REV	REVISION DESCRIPTION	LOG NO.	REV'D BY	CHK'D BY	APPRV'D BY	DATE YYYY-MM-DD
3	SUBMITTAL		HHG			2018-05-29

SALSNES FILTER
SF6000

WIRE COLOR SPECIFICATION

DESCRIPTION	DESIGNATION	WIRE
AC POWER	L1	BLACK
	L2	BLACK
	L3	BLACK
	N	WHITE
AC CONTROL	L	RED
	N	WHITE
DC CONTROL	24VDC	BLUE
	0VDC	WHITE/BLUE
GROUND	GND OR ⏚	GREEN/YELLOW
EXTERNAL POWER		YELLOW

NOTES:

1) ELECTRICAL ASSEMBLY TO BE ASSEMBLED UNDER THE MINIMUM REQUIREMENTS OUTLINED IN ES0127. WHERE THERE IS A CONFLICT BETWEEN THIS DOCUMENT AND THE REQUIREMENTS OF ES0127, THE INFORMATION PRESENTED IN THIS DOCUMENT WILL BE USED.

2) ELECTRICAL ASSEMBLY TO BE ASSEMBLED UNDER THE MINIMUM REQUIREMENTS OUTLINED IN UL508A.

DRAWING INDEX	
00	PROJECT INFORMATION
01	SYMBOLS LEGEND
02	MAINS POWER PROTECTION & 24VDC PS
03	FILTER, AUGER AND BLOWER CONTROL
04	OPTIONAL EQUIPMENT
05	24VDC CIRCUITS
06	SOLENOIDS AND LOCAL MODE CONTROL
07	PLC - DISCRETE INPUTS
08	PLC - DISCRETE OUTPUTS & 24VDC CIRCUITS
09	PLC - ANALOG INPUTS
10	BACKPLATE LAYOUT
11	TERMINAL LABEL DETAILS 2xACTUAL
12	ENCLOSURE LAYOUT
13	BILL OF MATERIALS
14	LABEL SCHEDULE

UNLESS OTHERWISE SPECIFIED:
DIMENSIONS ARE IN INCHES
TOLERANCES: 2 PL DEC ± N/A
3 PL DEC ± N/A
ANGLE DEG ± N/A
REMOVE ALL BURRS
ALL CORNERS R 0.010 OR BREAK
ID> – CRITICAL CHARACTERISTIC

A TROJAN TECHNOLOGIES COMPANY
salsnes filter
N-7801 NAMSOS, NORWAY, PO BOX 279

COPYRIGHT © TROJAN TECHNOLOGIES, 2018 . ALL RIGHTS RESERVED.

DESCRIPTION: CPP, SF6000 IQALUIT NU
PROJECT INFORMATION

THIRD ANGLE PROJECTION

0 0.5 1.0
1.0" ON ORIGINAL DWG

DWG NO. 448241
REV 3
SCALE: NTS
SHEET 00 OF 14
SIZE D

TEST–DISCONNECT TERMINAL

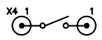

DOUBLE FERRULE CONNECTION



END OF WIRE



WIRES CROSSING WITHOUT CONNECTION



WIRES CONNECTED



WIRE AND TERMINAL



TERMINAL AND WIRE NUMBER ARE THE SAME

GROUND



NON–FUSED DISCONNECT SWITCH

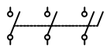

DISCONNECT SWITCH 01DISC

PAGE REFERENCE FROM SHEET SHEET.COORDINATE



PAGE REFERENCE TO SHEET SHEET.COORDINATE



CIRCUIT BREAKER – 3 POLE

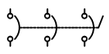

CIRCUIT BREAKER – 1 POLE



TRANSFORMER

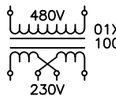

CONTACTOR CONTACTS – 3 POLE NORMALLY OPEN (NO)

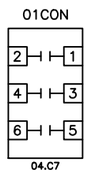

RELAY CONTACT NO



RELAY CONTACT NC



TERMINAL JUMPER



LIMIT SWITCH NO



PRESSURE SWITCH NO



SELECTOR SWITCH WITH TARGET TABLE

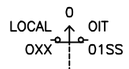

SELECTOR SWITCH NO ADDER BLOCK WITH TARGET TABLE

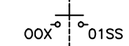

SELECTOR SWITCH NC ADDER BLOCK WITH TARGET TABLE

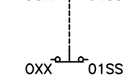

TEMPERATURE SWITCH – NC



MOTOR PROTECTION CIRCUIT BREAKER WITH AUX CONTACTS – OVERLINED = NC

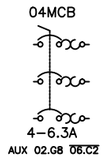

SWITCH – NO



EMERGENCY STOP TWIST TO RELEASE



ILLUMINATED SELECTOR SWITCH



ETHERNET CABLE



CONTACTOR COIL – UNDERLINED = NC



MAIN CONTACTOR (01.C3, 01.C3, 01.C3)

RELAY COIL – UNDERLINED = NC



AUGER MOTOR ENABLE (02.D3)

SOLENOID



MOTOR – 1 PHASE



DEVICE PIN LABEL



SHIELDED CABLE WITH DRAIN CONNECTION SHOWN

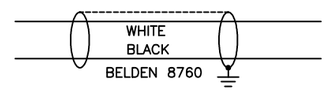

FIELD WIRE

COPYRIGHT © TROJAN TECHNOLOGIES, 2018 . ALL RIGHTS RESERVED.

A TROJAN TECHNOLOGIES COMPANY
salsnes filter
N–7801 NAMSOS, NORWAY, PO BOX 279

DESCRIPTION: CPP, SF6000 IQALUIT NU
SYMBOLS LEGEND

REVISED BY	HHG	DWG NO.	REV
CHECKED BY		448241	3
APPROVED BY			
APPROVAL DATE YYYY–MM–DD	2018–05–29	SHEET 01 OF 14	SIZE D

0 0.5 1.0
1.0" ON ORIGINAL DWG
SCALE: NTS

3 WIRE + GND CUSTOMER SUPPLY
480VAC 3 PHASE 60HZ 20.2A 16.8kVA
SHORT CIRCUIT CURRENT RATING 10kA RMS SYMMETRICAL @480VAC MAX.
LOCAL OVERCURRENT PROTECTION DEVICE PROVIDED BY OTHERS

L1 L2 L3 GND

GND

DISCONNECT SWITCH
01DISC

1L1 1L2 1L3

01SP

1L1 1L2 1L3

01CB

#14AWG 01CB01
#14AWG 01CB02
#14AWG 01CB03

15A

01TVSS

L1 L2 L3

11 14

24VDC-A 07.G2
DI2 07.G2

TVSS ALARM

01PMR

L1 L2 L3

11 12 14 21 22 24

01SRLY04 05.D9
DI4 07.F2
01PMR01
DI3 07.G2
01PMR02 05.C6

PHASE MONITORING RELAY

VOLTAGE ERROR ALARM

PHASE ERROR ALARM

PHASE MONITORING RELAY SETTINGS

DIP SWITCH SETTINGS

ON

1 2 3 4

DIAL SETTINGS

OVER VOLTAGE: +5%
UNDER VOLTAGE: -10%
TIME: 5 SEC.

02CB

#10AWG 02CB01
#10AWG 02CB02
#10AWG 02CB03

30A

01CON

2 1 4 3 6 5

01CON01 03.H1
01CON02 03.H1
01CON03 03.H1

05.C7

PROTECTED POWER

1L1 1L2 1L3

02.H6 02.H6 02.H6

480VAC

02.A1 02.A1 02.A1

1L1 1L2 1L3

03CB

03CB01
03CB02
03CB03

6A

01PS

L1 L2 L3

+ - I<IN 13 14

01PS01
01PS02
I<IN
24VDC-A 07.E2
DI8 07.E2

24VDC POWER SUPPLY ERROR

01UPS

+ - I<IN 13 14 23 24 SIG - +

01UPS01 05.H1
0VDC 05.H5
24VDC-A 07.D2
DI9 07.D2
24VDC-A 07.D2
DI10 07.D2
01UPS02
01UPS03
01UPS04

POWER SUPPLY 24VDC, 5A

UPS ERROR ALARM

UPS ACTIVE BATTERY MODE

01BATT

+ - SIG

BATTERY 3.4Ah

1L1 1L2 1L3

A TROJAN TECHNOLOGIES COMPANY
N-7801 NAMSOS, NORWAY, PO BOX 279
COPYRIGHT © TROJAN TECHNOLOGIES, 2018 . ALL RIGHTS RESERVED.

DESCRIPTION: CPP, SF6000 IQALUIT NU
MAINS POWER PROTECTION & 24VDC PS

REVISED BY	HHG	DWG NO.	REV
CHECKED BY		448241	3
APPROVED BY			
APPROVAL DATE YYYY-MM-DD	2018-05-29	SHEET 02 OF 14	SIZE D

0 0.5 1.0
1.0" ON ORIGINAL DWG
SCALE: NTS

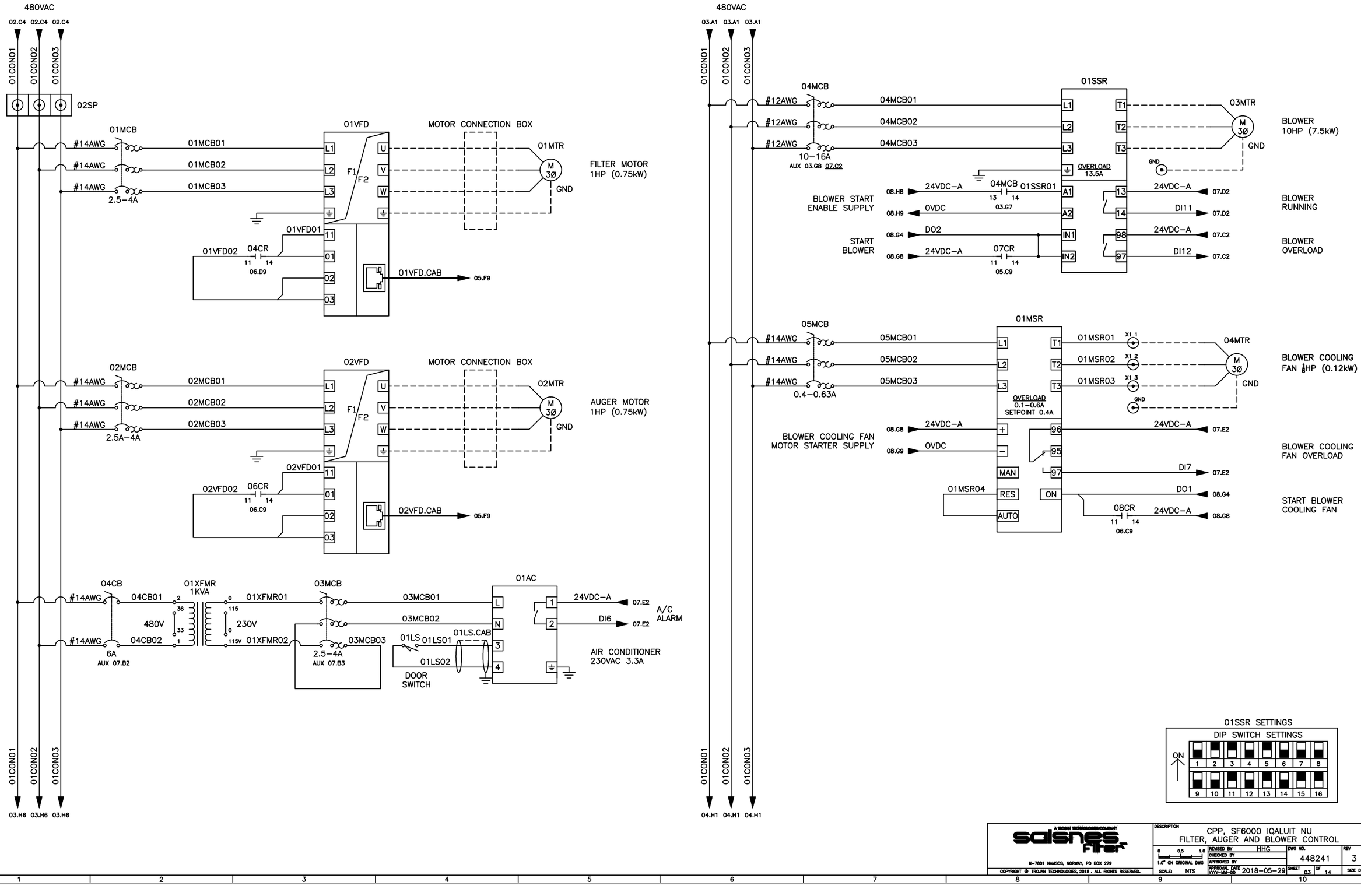

A TROJAN TECHNOLOGIES COMPANY
salsnes filter
N-7801 NAMSOS, NORWAY, PO BOX 279
COPYRIGHT © TROJAN TECHNOLOGIES, 2018 . ALL RIGHTS RESERVED.

DESCRIPTION
CPP, SF6000 IQALUIT NU
FILTER, AUGER AND BLOWER CONTROL

REVISED BY	HHG	DWG NO.	REV
CHECKED BY		448241	3
APPROVED BY			
APPROVAL DATE YYYY-MM-DD	2018-05-29	SHEET 03 OF 14	SIZE D

0 0.5 1.0
1.0" ON ORIGINAL DWG
SCALE: NTS

480VAC

03.A6 03.A6 03.A6

01CON01 01CON02 01CON03

RESERVED

01CON01 01CON02 01CON03

04.H6 04.H6 04.H6

480VAC

04.A1 04.A1 04.A1

01CON01 01CON02 01CON03

RESERVED

01CON01 01CON02 01CON03

A TROJAN TECHNOLOGIES COMPANY

salsnes filter

N-7801 NAMSOS, NORWAY, PO BOX 279

COPYRIGHT © TROJAN TECHNOLOGIES, 2018 . ALL RIGHTS RESERVED.

DESCRIPTION: CPP, SF6000 IQALUIT NU
OPTIONAL EQUIPMENT

REVISED BY	HHG	DWG NO. 448241	REV 3
CHECKED BY			
APPROVED BY			
APPROVAL DATE YYYY-MM-DD	2018-05-29	SHEET 04 OF 14	SIZE D

0 0.5 1.0
1.0" ON ORIGINAL DWG
SCALE: NTS

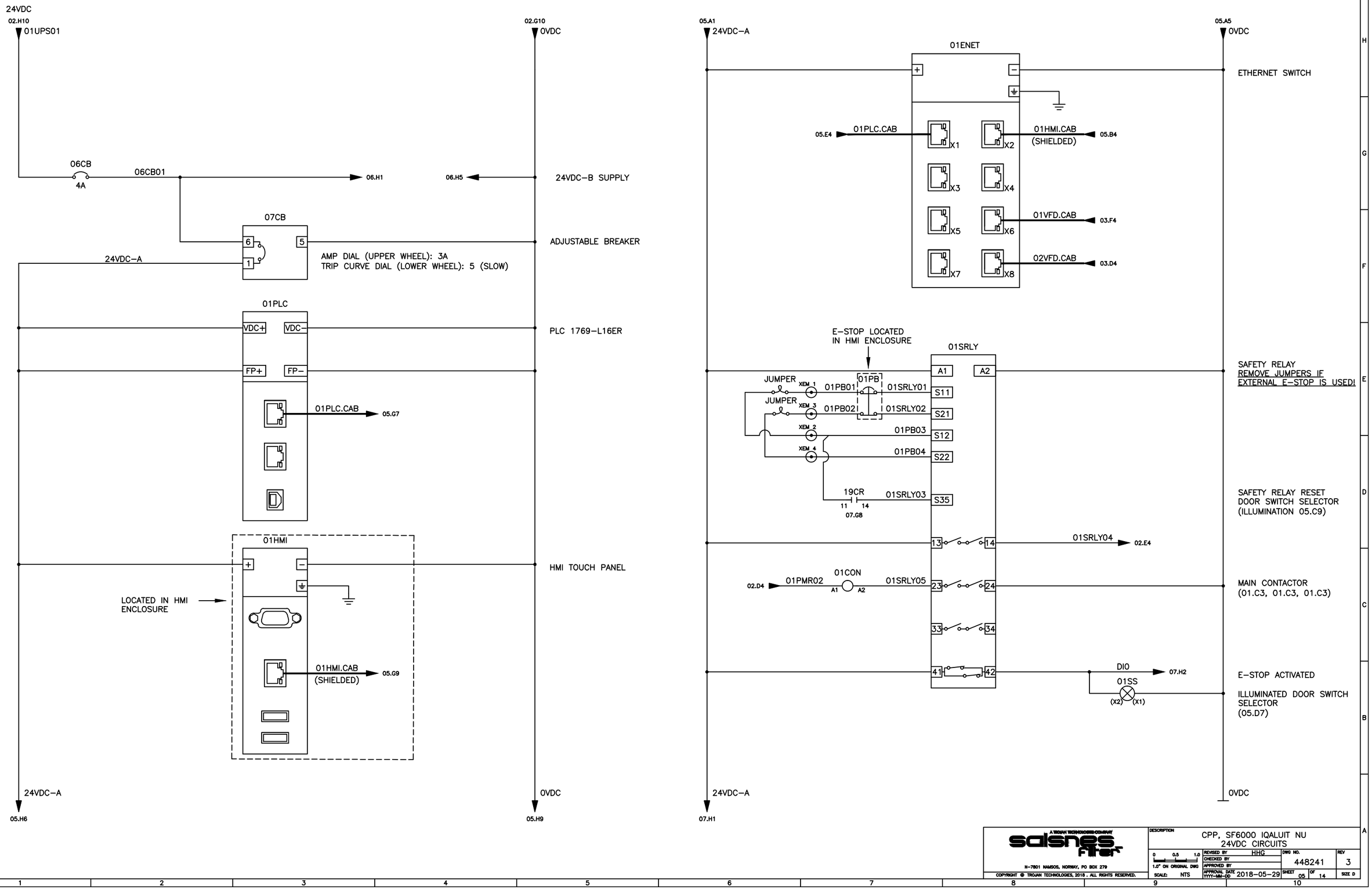

A TROJAN TECHNOLOGIES COMPANY
salsnes filter
N–7801 NAMSOS, NORWAY, PO BOX 279
COPYRIGHT © TROJAN TECHNOLOGIES, 2018 . ALL RIGHTS RESERVED.

DESCRIPTION: CPP, SF6000 IQALUIT NU
24VDC CIRCUITS

REVISED BY	HHG	DWG NO.	REV
CHECKED BY		448241	3
APPROVED BY			
APPROVAL DATE YYYY–MM–DD	2018–05–29	SHEET 05 OF 14	SIZE D

0 0.5 1.0
1.0" ON ORIGINAL DWG
SCALE: NTS

24VDC
05.G3
06CB01

08CB
6
5
1
24VDC–B
AMP DIAL (UPPER WHEEL): 1A
TRIP CURVE DIAL (LOWER WHEEL): 5 (SLOW)

05.G4
0VDC
ADJUSTABLE BREAKER

01CR
A1 A2
01CR01
X3_5
JUMPER
X3_6
REMOTE PERMISSIVE RUN (07.G7)

02CR
A1 A2
02CR02
X3_7
X3_8
REMOTE RESET (07.F7)

11CR
11 14
08.G4
11CR01
X3_17
01SOL
X3_18
HOT WATER VALVE

12CR
11 14
08.F4
12CR01
X3_19
02SOL
X3_20
COLD WATER VALVE

13CR
11 14
08.F4
13CR01
X3_21
03SOL
X3_22
DRAIN VALVE

14CR
11 14
08.E4
14CR01
X3_23
04SOL
X3_24
OPEN INLET VALVE

10CR
11 14
06.B9

24VDC–B
06.H6

0VDC
06.H9

06.A1
24VDC–B
07.H1

06.A5
0VDC
07.H5

LOCAL MODE CONTROL RELAYS

07.G8
24VDC–L

07.G9
0VDC

03CR A1 A2 — SPARE

04CR A1 A2 — FILTER MOTOR ENABLE (03.F3)

05CR A1 A2 — SPARE

06CR A1 A2 — AUGER MOTOR ENABLE (03.D3)

07CR A1 A2 — START AIR BLOWER (03.F8)

08CR A1 A2 — START BLOWER COOLING FAN (03.D9)

09CR A1 A2 — RESERVED

10CR A1 A2 — OPEN INLET VALVE (06.D1)

24VDC–A

0VDC

A TROJAN TECHNOLOGIES COMPANY
salsnes filter
N–7801 NAMSOS, NORWAY, PO BOX 279
COPYRIGHT © TROJAN TECHNOLOGIES, 2018 . ALL RIGHTS RESERVED.

DESCRIPTION: CPP, SF6000 IQALUIT NU
SOLENOIDS AND LOCAL MODE CONTROL

REVISED BY	HHG	DWG NO.	REV
CHECKED BY		448241	3
APPROVED BY			
APPROVAL DATE YYYY–MM–DD	2018–05–29	SHEET 06 OF 14	SIZE D
SCALE:	NTS	0 0.5 1.0 1.0" ON ORIGINAL DWG	

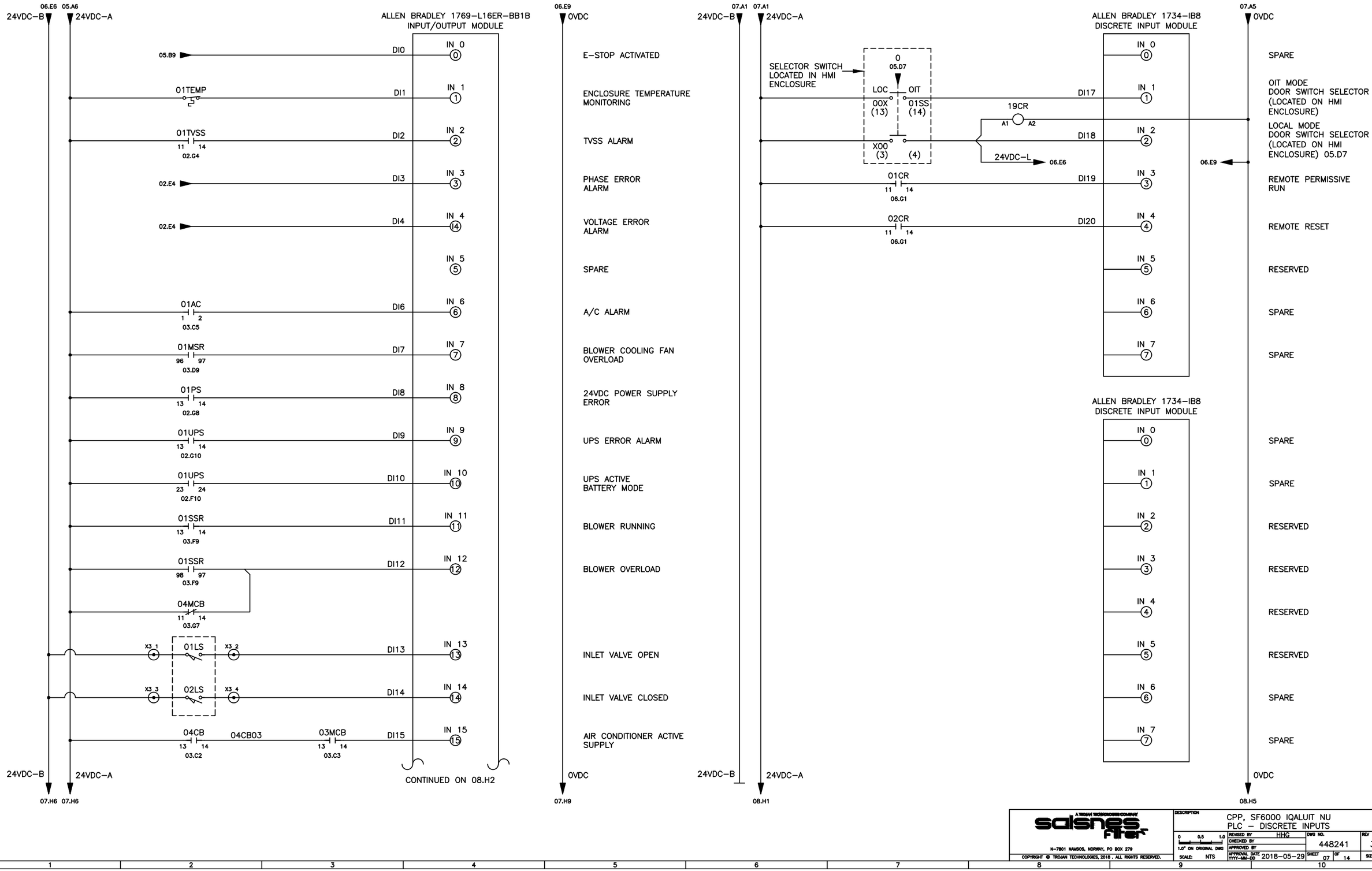
24VDC–B
24VDC–A
ALLEN BRADLEY 1769–L16ER–BB1B
INPUT/OUTPUT MODULE
05.B9
01TEMP
01TVSS
11 14
02.G4
02.E4
02.E4
01AC
1 2
03.C5
01MSR
96 97
03.D9
01PS
13 14
02.G8
01UPS
13 14
02.G10
01UPS
23 24
02.F10
01SSR
13 14
03.F9
01SSR
98 97
03.F9
04MCB
11 14
03.G7
X3_1
01LS
X3_2
X3_3
02LS
X3_4
04CB
13 14
03.C2
04CB03
03MCB
13 14
03.C3
DI0
DI1
DI2
DI3
DI4
DI6
DI7
DI8
DI9
DI10
DI11
DI12
DI13
DI14
DI15
IN 0
IN 1
IN 2
IN 3
IN 4
IN 5
IN 6
IN 7
IN 8
IN 9
IN 10
IN 11
IN 12
IN 13
IN 14
IN 15
CONTINUED ON 08.H2
07.H6 07.H6
0VDC
E–STOP ACTIVATED
ENCLOSURE TEMPERATURE MONITORING
TVSS ALARM
PHASE ERROR ALARM
VOLTAGE ERROR ALARM
SPARE
A/C ALARM
BLOWER COOLING FAN OVERLOAD
24VDC POWER SUPPLY ERROR
UPS ERROR ALARM
UPS ACTIVE BATTERY MODE
BLOWER RUNNING
BLOWER OVERLOAD
INLET VALVE OPEN
INLET VALVE CLOSED
AIR CONDITIONER ACTIVE SUPPLY
07.H9
SELECTOR SWITCH LOCATED IN HMI ENCLOSURE
0
05.D7
LOC
OIT
00X
(13)
01SS
(14)
X00
(3)
(4)
19CR
A1 A2
24VDC–L
06.E6
01CR
11 14
06.G1
02CR
11 14
06.G1
ALLEN BRADLEY 1734–IB8
DISCRETE INPUT MODULE
DI17
DI18
DI19
DI20
IN 0
IN 1
IN 2
IN 3
IN 4
IN 5
IN 6
IN 7
08.H1
06.E9
SPARE
OIT MODE DOOR SWITCH SELECTOR (LOCATED ON HMI ENCLOSURE)
LOCAL MODE DOOR SWITCH SELECTOR (LOCATED ON HMI ENCLOSURE) 05.D7
REMOTE PERMISSIVE RUN
REMOTE RESET
RESERVED
SPARE
SPARE
SPARE
SPARE
RESERVED
RESERVED
RESERVED
RESERVED
SPARE
SPARE
08.H5
salsnes filter
A TROJAN TECHNOLOGIES COMPANY
N–7801 NAMSOS, NORWAY, PO BOX 279
COPYRIGHT © TROJAN TECHNOLOGIES, 2018 . ALL RIGHTS RESERVED.
DESCRIPTION
CPP, SF6000 IQALUIT NU
PLC – DISCRETE INPUTS
REVISED BY HHG
CHECKED BY
APPROVED BY
APPROVAL DATE YYYY–MM–DD 2018–05–29
DWG NO. 448241
REV 3
SHEET 07 OF 14
SIZE D
SCALE: NTS
1.0" ON ORIGINAL DWG

07.A6
24VDC–A

ALLEN BRADLEY 1769–L16ER–BB1B
DISCRETE OUTPUT MODULE
CONTINUED FROM SHEET 07 REF. A3

07.A9
0VDC

OUT 0	0			SPARE
OUT 1	1	DO1		START BLOWER COOLING FAN
OUT 2	2	DO2		START BLOWER
OUT 3	3	DO3	11CR	OPEN HOT WATER VALVE (06.F1)
OUT 4	4	DO4	12CR	OPEN COLD WATER VALVE (06.F1)
OUT 5	5	DO5	13CR	OPEN DRAIN VALVE (06.E1)
OUT 6	6	DO6	14CR	OPEN INLET VALVE (06.E1)
OUT 7	7			SPARE
OUT 8	8			SPARE
OUT 9	9			RESERVED
OUT 10	10			RESERVED
OUT 11	11	DO11	15CR	SPARE
OUT 12	12			SPARE
OUT 13	13	DO13	16CR	STATUS 1 CONFIGURABLE STATUS BIT (08.C8)
OUT 14	14	DO14	17CR	STATUS 2 CONFIGURABLE STATUS BIT (08.B8)
OUT 15	15	DO15	18CR	STATUS 3 CONFIGURABLE STATUS BIT (08.B8)
COM	C			

24VDC–A
08.H6

0VDC
08.H9

08.A1
24VDC–A

SPARE	03.G7
START BLOWER COOLING FAN	03.F7
START BLOWER	03.E7
OPEN HOT WATER VALVE (06.F1)	03.D9

24VDC–A
09.H1

08.A5
0VDC

03.F7	BLOWER START ENABLE SUPPLY
	START BLOWER LOCAL MODE SUPPLY
03.D7	BLOWER COOLING FAN MOTOR STARTER SUPPLY
	BLOWER COOLING FAN MOTOR STARTER LOCAL MODE SUPPLY

0VDC
09.H5

INTERCONNECTS

X3_27	16CR01	16CR (11, 14) 08.C4	16CR02	X3_28
X3_29	17CR01	17CR (11, 14) 08.B4	17CR02	X3_30
X3_31	18CR01	18CR (11, 14) 08.B4	18CR02	X3_32

STATUS 1 CONFIGURABLE STATUS BIT	
STATUS 2 CONFIGURABLE STATUS BIT	
STATUS 3 CONFIGURABLE STATUS BIT	

A TROJAN TECHNOLOGIES COMPANY
salsnes filter
N–7801 NAMSOS, NORWAY, PO BOX 279
COPYRIGHT © TROJAN TECHNOLOGIES, 2018 . ALL RIGHTS RESERVED.

DESCRIPTION: CPP, SF6000 IQALUIT NU
PLC– DISCRETE OUTPUTS & 24VDC CIRCUITS

REVISED BY	HHG	DWG NO.	REV
CHECKED BY		448241	3
APPROVED BY			
APPROVAL DATE YYYY–MM–DD	2018–05–29	SHEET 08 OF 14	SIZE D

0 0.5 1.0
1.0" ON ORIGINAL DWG
SCALE: NTS

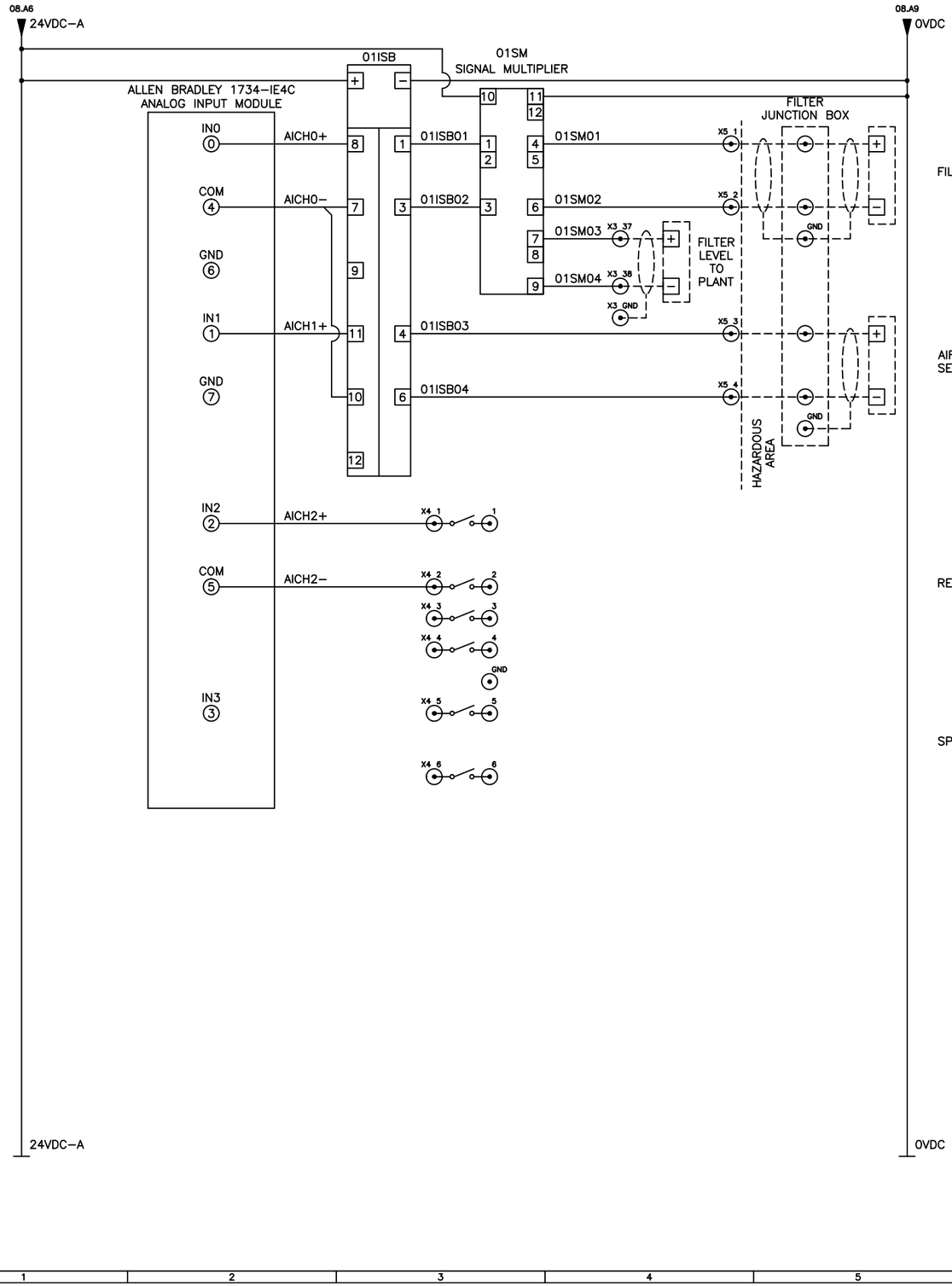

01SM SIGNAL MULTIPLIER (PHOENIX CONTACT 2814854)

USING A SCREWDRIVER, RELEASE THE SNAP FITTINGS OF THE UPPER PART OF THE HOUSING ON BOTH SIDES ①. THE UPPER PART OF THE HOUSING AND THE ELECTRONICS CAN NOW BE PULLED OUT BY APPROXIMATELY 1.3" (3cm) ②.

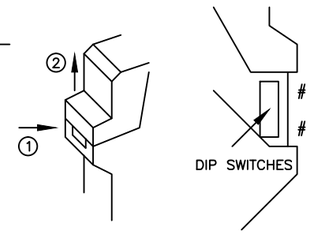

SIGNAL MULTIPLIER
DIP SWITCH SETTINGS

	SWITCH #	SETTING
INPUT	10	OFF
	9	OFF
	8	OFF
OUT 1	7	ON
	6	OFF
	5	OFF
OUT 2	4	ON
	3	OFF
	2	ON
	1	OFF

SWITCH #	FUNCTION
10	OFF = ACTIVATE DIP SWITCHES ON = AS ORDERED
9	OUT 2
8	SETTING THE OUTPUT RANGES
7	
6	OUT 1
5	SETTING THE OUTPUT RANGES
4	
3	INPUT
2	SETTING THE INPUT RANGES
1	

CONFIGURATION TABLE INPUT SIGNAL	INPUT DIP SWITCH		
	1	2	3
0–20mA	OFF	OFF	OFF
0–10mA	OFF	OFF	ON
4–20mA	OFF	ON	OFF
2–10mA	OFF	ON	ON
0–10V	ON	OFF	OFF
1–5V	ON	OFF	ON
0–5V	ON	ON	OFF
2–10V	ON	ON	ON

CONFIGURATION TABLE OUTPUT SIGNALS CURRENT / VOLTAGE	OUTPUT 1 DIP SWITCH			OUTPUT 2 DIP SWITCH		
	4	5	6	7	8	9
0–20mA / 0–10V	OFF	OFF	OFF	OFF	OFF	OFF
0–20mA / 1–5V	OFF	OFF	ON	OFF	OFF	ON
0–20mA / 0–5V	OFF	ON	OFF	OFF	ON	OFF
0–10mA / 0–5V	OFF	ON	ON	OFF	ON	ON
4–20mA / 0–10V	ON	OFF	OFF	ON	OFF	OFF
4–20mA / 1–5V	ON	OFF	ON	ON	OFF	ON
4–20mA / 0–5V	ON	ON	OFF	ON	ON	OFF
4–20mA / 2–10V	ON	ON	ON	ON	ON	ON

PIN #	FUNCTION
1	OUT I2
2	OUT U2
3	GND 2
4	IN I
5	IN U
6	GND 3
7	OUT I1
8	OUT U1
9	GND 1
10	+24VDC
11	GND 4
12	GND 4

A TROJAN TECHNOLOGIES COMPANY
salsnes filter
N–7801 NAMSOS, NORWAY, PO BOX 279
COPYRIGHT © TROJAN TECHNOLOGIES, 2018 . ALL RIGHTS RESERVED.

DESCRIPTION: CPP, SF6000 IQALUIT NU
PLC – ANALOG INPUTS

REVISED BY	HHG	DWG NO.	REV
CHECKED BY		448241	3
APPROVED BY			
APPROVAL DATE YYYY–MM–DD	2018–05–29	SHEET 09 OF 14	SIZE D

0 0.5 1.0 — 1.0" ON ORIGINAL DWG
SCALE: NTS

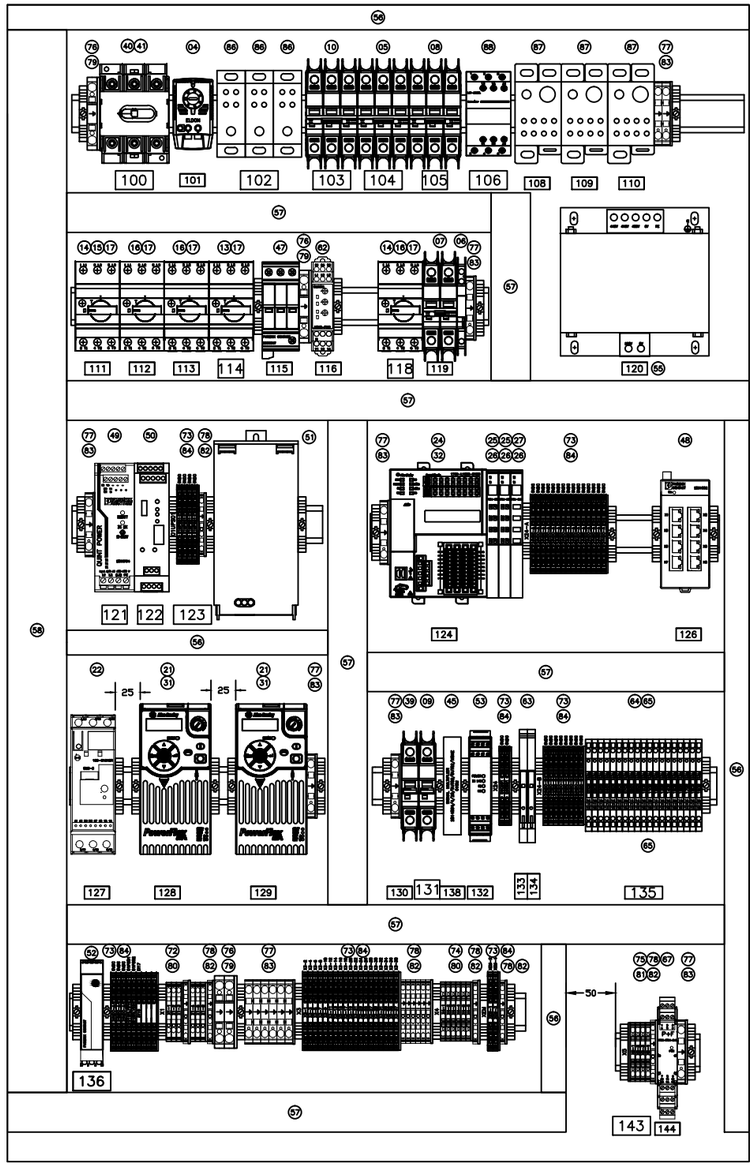

A TROJAN TECHNOLOGIES COMPANY

salsnes filter

N-7801 NAMSOS, NORWAY, PO BOX 279

COPYRIGHT © TROJAN TECHNOLOGIES, 2018 . ALL RIGHTS RESERVED.

DESCRIPTION: CPP, SF6000 IQALUIT NU BACKPLATE LAYOUT

REVISED BY	HHG
CHECKED BY	
APPROVED BY	
APPROVAL DATE YYYY-MM-DD	2018-05-29
SCALE:	NTS
1.0" ON ORIGINAL DWG	0 0.5 1.0
DWG NO.	448241
REV	3
SHEET	10 OF 14
SIZE	D

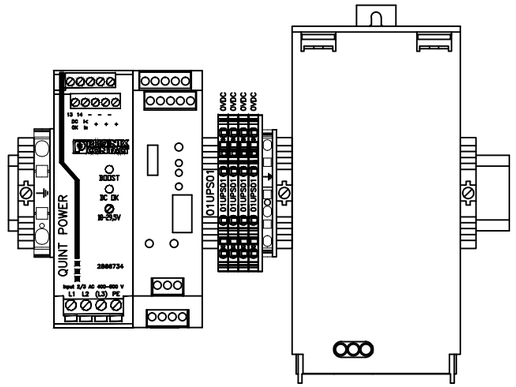

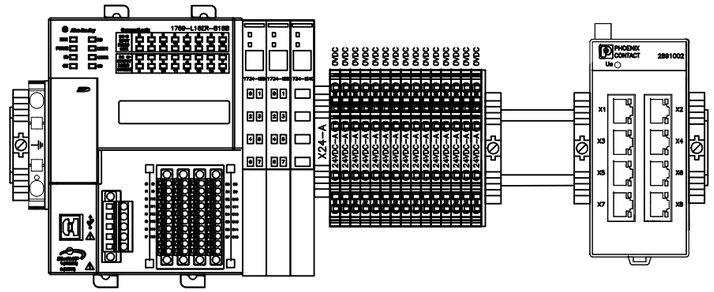

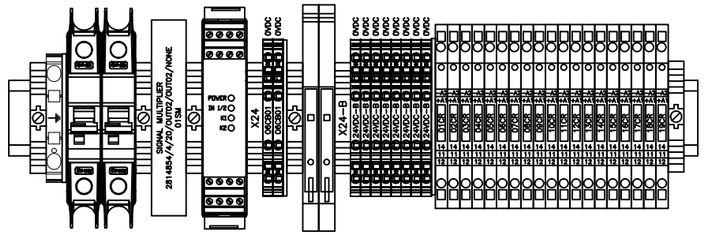

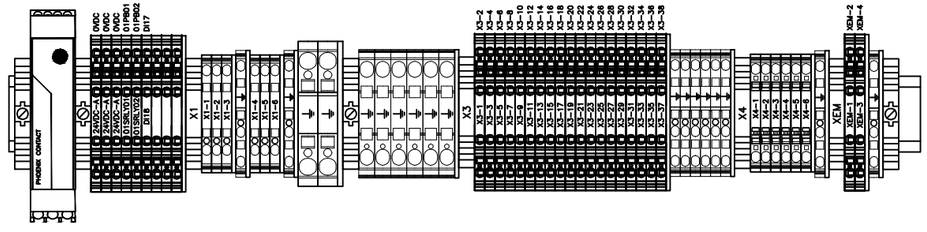

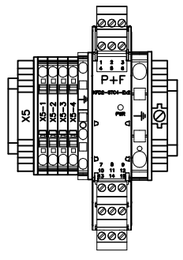

COPYRIGHT © TROJAN TECHNOLOGIES, 2018 . ALL RIGHTS RESERVED.

A TROJAN TECHNOLOGIES COMPANY
salsnes filter
N-7801 NAMSOS, NORWAY, PO BOX 279

DESCRIPTION
CPP, SF6000 IQALUIT NU
TERMINAL LABEL DETAILS 2xACTUAL

REVISED BY	HHG	DWG NO.	REV
CHECKED BY		448241	3
APPROVED BY			
APPROVAL DATE YYYY-MM-DD	2018-05-29	SHEET 11 OF 14	SIZE D

0 0.5 1.0
1.0" ON ORIGINAL DWG
SCALE: NTS

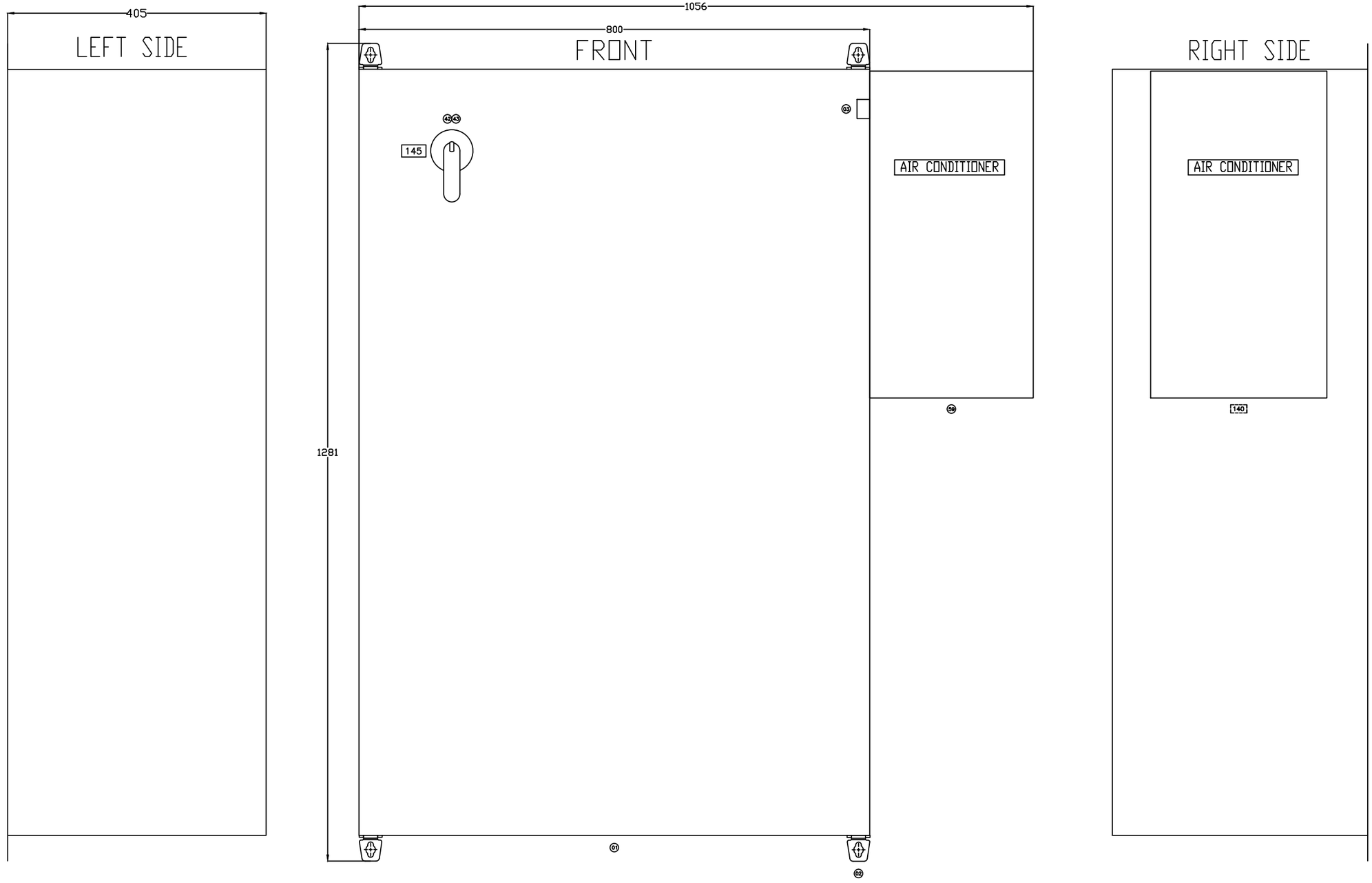

A TROJAN TECHNOLOGIES COMPANY
salsnes filter
N-7801 NAMSOS, NORWAY, PO BOX 279

COPYRIGHT © TROJAN TECHNOLOGIES, 2018 . ALL RIGHTS RESERVED.

DESCRIPTION: CPP, SF6000 IQALUIT NU ENCLOSURE LAYOUT

0 0.5 1.0 1.0" ON ORIGINAL DWG	REVISED BY: HHG	DWG NO. 448241	REV 3
SCALE: NTS	CHECKED BY:		
	APPROVED BY:		
	APPROVAL DATE YYYY-MM-DD: 2018-05-29	SHEET 12 OF 14	SIZE D

NOTES:
1 – 2814854/I/4.0/20.0/OUT02/OUT02/NONE

54					
53	1	SAFETY RELAY, 1–2 CHANNEL	PHOENIX CONTACT	2900510	
52	1	MOTOR STARTER, 0.6A 550VAC 3P	PHOENIX CONTACT	2900542	
51	1	UPS, IQ BATTERY 24V 3.4Ah	PHOENIX CONTACT	2320306	916905–306
50	1	UPS, QUINT IQ 24V 5A	PHOENIX CONTACT	2320212	913905–212
49	1	PS, 24VDC 3P QUINT 5A	PHOENIX CONTACT	2866734	916283–734
48	1	SWITCH, ENET SFNB 8TX	PHOENIX CONTACT	2891002	916397–1002
47	1	TVSS,120kA DIN MOUNT 350VAC	PHOENIX CONTACT	2905339	
46					
45	1	SIGNAL MULTIPLIER MODULE 4–20mA	PHOENIX CONTACT	SEE NOTE 1	914872
44					
43	1	DISC, ALIGNMENT RING ABB	ABB	OHZX10	
42	1	DISC, HANDLE ON/OFF 6mm 4X ABB	ABB	OHB80LH6	
41	1	DISC, SHAFT 6x6x400mm ABB	ABB	OXP6X430	912786–406
40	1	DISC, NON FU 60A 3P 600V ABB	ABB	OT60F3	912798–062
39					
38					
37					
36					
35					
34					
33					
32	1	CABLE, ENET RJ45 1m	ALLEN BRADLEY	1585J–M8EBJM–1	
31	2	CABLE, ENET RJ45 2m	ALLEN BRADLEY	1585J–M8EBJM–2	
30					
29					
28					
27					
27	1	PLC, AB POINT I/O 24VDC 4AI	ALLEN BRADLEY	1734–IE4C	
26	3	PLC, AB POINT I/O BASE SPRING	ALLEN BRADLEY	1734–TBS	
25	2	PLC, AB POINT I/O 24VDC DI8	ALLEN BRADLEY	1734–IB8	914301
24	1	PLC, L1 16DI/16DO 24VDC AB	ALLEN BRADLEY	1769–L16ER–BB1B	
23					
22	1	SOFT STARTER, 6.3–19A 3P 480V	ALLEN BRADLEY	150–C19NBR	
21	2	VFD, 480V EMC 3PH 1HP AB	ALLEN BRADLEY	25B–D2P3N114	
20					
19					
18					
17	5	SPACING ADAPTER, TERMINAL 140M	ALLEN BRADLEY	140M–C–TE1	
16	3	BREAKER, O/L 2.5–4A 3P AB	ALLEN BRADLEY	140M–C2E–B40	
15	1	BREAKER, O/L 10–16A 3P AB	ALLEN BRADLEY	140M–C2E–C16	
14	2	BREAKER, O/L AUX CONTACT 1NO 1NC	ALLEN BRADLEY	140M–C–AFA11	
13	1	BREAKER, O/L 0.4–0.63A 3P AB	ALLEN BRADLEY	140M–C2E–A63	
12					
11					
10	1	BREAKER, 30A 3P C 480VAC AB	ALLEN BRADLEY	1489–M3C300	
09	1	BREAKER, 4A 1P C 480VAC AB	ALLEN BRADLEY	1489–M1C040	
08	1	BREAKER, 6A 3P C 480VAC AB	ALLEN BRADLEY	1489–M3C060	
07	1	BREAKER, 6A 2P C 480VAC AB	ALLEN BRADLEY	1489–M2C060	
06	1	BREAKER, AUX CONTACT 1NO 1NC	ALLEN BRADLEY	1489–AMRA3	
05	1	BREAKER, 15A 3P C 480VAC AB	ALLEN BRADLEY	1489–M3C150	
04	1	THERMOSTAT, 6A NC	ELDON	ETR202	
03	1	SWITCH, DOOR 230VAC 6A	ELDON	ADSW01	
02	1	BRACKET, ENCL MOUNTING	ELDON	AWS41	
01	1	ENCL, TYPE 4 120X80X40CM	ELDON	MAS1208040R5	
ITEM	QTY	DESCRIPTION	MANUFACTURER	PART NUMBER	TROJAN NUMBER

88	1	CONTACTOR, 32A 3P 24VDC COIL	TELEMECANIQUE	LC1–D32BL	
87	3	DIST BLOCK, FINGER SAFE 3C	MERSON	FSPDB3C	913314–006
86	3	DIST BLOCK, FINGER SAFE 2C	MERSON	FSPDB2C	913314–004
85	A/R	TERM BLK, JUMPER 20CONN	WEIDMULLER	ZQV 2.5/20 1908960000	
84	7	TERM BLK, END PLT 4CONN Z2.5	WEIDMULLER	ZAP/TW ZDK2.5 1674730000	
83	8	TERM BLK, END PLT 2CONN Z6	WEIDMULLER	ZAP/TW5 1608830000	
82	7	TERM BLK, END PLT 3CONN GN	WEIDMULLER	ZAP/TW2GN 1683760000	
81	1	TERM BLK, END PLT 2 CONN BL	WEIDMULLER	ZAP/TW1 BL 1608750000	
80	3	TERM BLK, END PLT 2CONN Z2.5	WEIDMULLER	ZAP/TW1 1608740000	
79	3	TERM BLK, END PLT 2CON Z10	WEIDMULLER	ZAP/TW ZDU10 1748660000	
78	12	TERM BLK, 30–12AWG 3CON PE	WEIDMULLER	ZPE 2.5/3AN 1608650000	
77	14	TERM BLK, 22–8AWG 2CONN PE	WEIDMULLER	ZPE6 1608670000	
76	4	TERM BLK, 16–6AWG 2CONN PE	WEIDMULLER	ZPE 10 1746770000	
75	4	TERM BLK, 25A 2CONN 1CCT	WEIDMULLER	ZDU 2.5 BL 1608520000	
74	6	TERM BLK, DISC 20A 2CONN 1CCT	WEIDMULLER	ZTR 2.5 1831280000	
73	59	TERM BLK, 15A 4CONN 2CCT	WEIDMULLER	ZDK 2.5 1674300000	
72	6	TERM BLK, 25A 2CONN 1CCT	WEIDMULLER	ZDU 2.5 1608510000	
71					
70	A/R	TERM BLK, END STOP	WEIDMULLER	WEW 35/2 1061200000	
69	A/R	TERM BLK, LABEL 33.8x8mm	WEIDMULLER	WAD 8 MC NE WS	
68	A/R	TERM BLK, LABEL 5x5mm	WEIDMULLER	DEK 5/5 MC–10 NE WS	
67	1	IS MODULE, AI 2CH 24VDC	PEPPERL FUCHS	KFD2–STC4–Ex2	508038
66					
65	2	RELAY, BRIDGE JUMPER 8 POLE	LUTZE	762824	
64	19	RELAY, 24VDC 6A 1 NO 1NC	LUTZE	761020.1000	
63	2	BREAKER, ADJUST 1–10A 24VDC	LUTZE	716401	
62	1	PHASE RELAY, 380–480VAC 2NO	OMRON	K8AB–PM2	
61					
60					
59	1	A/C, 230VAC 680W NEMA 3R/4 DTS3061	PFANNENBERG	13382341355 OR EQUAL	
58	A/R	WIRE DUCT, TYPE G LT GRY 2x3	PANDUIT OR EQU	G2X3LG6 / C2LG6	913437–010
57	A/R	WIRE DUCT, TYPE G LT GRY1.5x3	PANDUIT OR EQU	G1.5X3LG6 / C1.5LG6	913437–006
56	A/R	WIRE DUCT, TYPE G LT GRY 1x3	PANDUIT OR EQU	G1X3LG6 / C1LG6	913437–004
55	1	XFMR, MULTI–INPUT 230VAC 1kVA	BLOCK	USTE 1000/2x115	
ITEM	QTY	DESCRIPTION	MANUFACTURER	PART NUMBER	TROJAN NUMBER

A TROJAN TECHNOLOGIES COMPANY
salsnes filter
N–7801 NAMSOS, NORWAY, PO BOX 279

COPYRIGHT © TROJAN TECHNOLOGIES, 2018 . ALL RIGHTS RESERVED.

DESCRIPTION: CPP, SF6000 IQALUIT NU
BILL OF MATERIAL

REVISED BY	HHG	DWG NO.	REV
CHECKED BY		448241	3
APPROVED BY			
APPROVAL DATE YYYY–MM–DD	2018–05–29	SHEET 13 OF 14	SIZE D

0 0.5 1.0 — 1.0" ON ORIGINAL DWG — SCALE: NTS

145	1	915433-1500753A	DO NOT	OPERATE	UNDER LOAD
144	1	915433-1000501A	01ISB		
143	1	915433-1500753A	INTRINSICALLY	SAFE WIRING	ONLY
142					
141					
140	1	915433-1000501A	01AC		
139					
138	1	915433-1000501A	01SM		
137					
136	1	915433-1500753A	01MSR	BLOWER	COOLING
135	1	915433-1500501A	01CR-18CR		
134	1	915433-1000502A	08CB	24VDC-B	
133	1	915433-1000502A	07CB	24VDC-A	
132	1	915433-1000501A	01SRLY		
131	1	915433-1000753A	06CB	24VDC	4A
130					
129	1	915433-1000502A	02VFD	AUGER	
128	1	915433-1000502A	01VFD	FILTER	
127	1	915433-1000502A	01SSR	BLOWER	
126	1	915433-1000501A	01ENET		
125					
124	1	915433-1000501A	01PLC		
123	1	915433-1500752A	01BATT	24VDC 3.4Ah	
122	1	915433-1000753A	01UPS	24VDC	5A MAX
121	1	915433-1000753A	01PS	24VDC	5A
120	1	915433-1000502A	01XFMR	1KVA	
119	1	915433-1000502A	04CB	01XFMR	
118	1	915433-1000502A	03MCB	A/C	
117					
116	1	915433-1000501A	01PMR		
115	1	915433-1000501A	01TVSS		
114	1	915433-1000753A	05MCB	BLOWER	COOLING
113	1	915433-1000502A	02MCB	AUGER	
112	1	915433-1000502A	01MCB	FILTER	
111	1	915433-1000502A	04MCB	BLOWER	
110	1	915433-1000502A	02SP	01CON03	
109	1	915433-1000502A	02SP	01CON02	
108	1	915433-1000502A	02SP	01CON01	
107					
106	1	915433-1500753A	01CON	E-STOP	CONTACTOR
105	1	915433-1000752A	03CB	01PS	
104	1	915433-1500753A	01CB	PHASE	PROTECTION
103	**1**	**915433-1500752A**	**02CB**	**MOTORS, A/C**	
102	1	915433-1500752A	01SP	L1 L2 L3	
101	1	915433-1000501A	01TEMP		
100	1	915433-1500753A	01DISC	MAINS	DISCONNECT
ITEM	QTY	NAMEPLATE NUMBER	DESCRIPTION 1	DESCRIPTION 2	DESCRIPTION 3

A TROJAN TECHNOLOGIES COMPANY
salsnes filter
N-7801 NAMSOS, NORWAY, PO BOX 279

COPYRIGHT © TROJAN TECHNOLOGIES, 2018. ALL RIGHTS RESERVED.

DESCRIPTION: CPP, SF6000 IQALUIT NU
LABEL SCHEDULE

0 0.5 1.0
1.0" ON ORIGINAL DWG
SCALE: NTS

REVISED BY HHG
CHECKED BY
APPROVED BY
APPROVAL DATE YYYY-MM-DD 2018-05-29

DWG NO. 448241
REV 3
SHEET 14 OF 14
SIZE D

REV	REVISION DESCRIPTION	LOG NO.	REV'D BY	CHK'D BY	APPRV'D BY	DATE YYYY-MM-DD
2	SUBMITTAL		HHG			2018-03-29

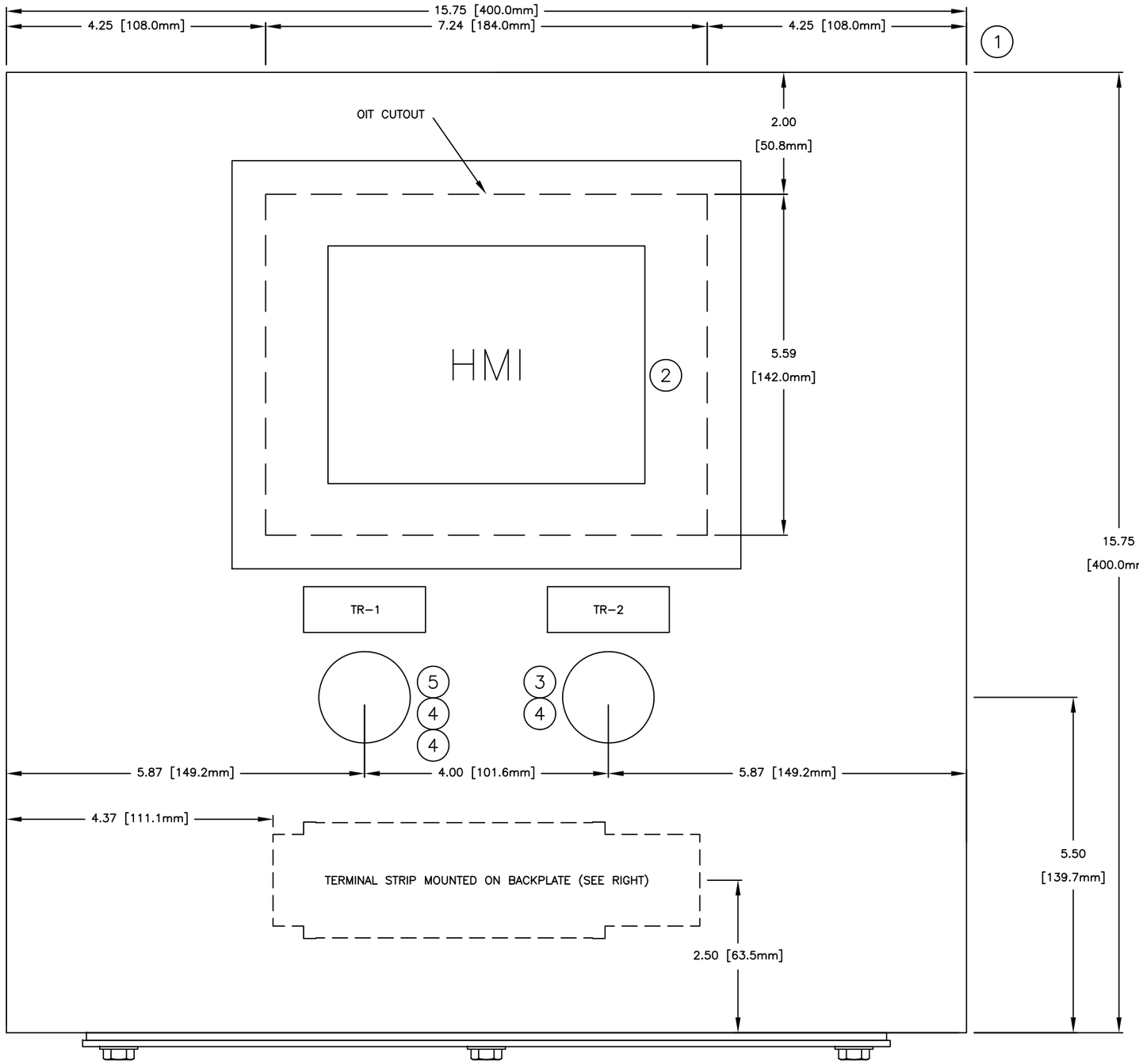

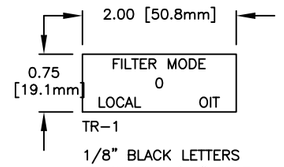

1/8" BLACK LETTERS
ON WHITE 1/16" SELF-
ADHESIVE BACKED LAMICOID

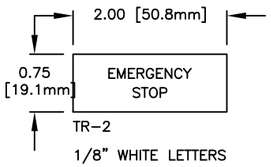

1/8" WHITE LETTERS
ON RED 1/16" SELF-
ADHESIVE BACKED LAMICOID

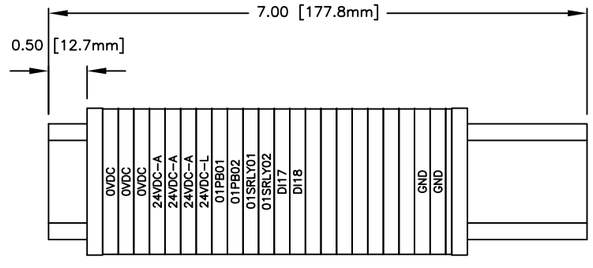

NOTES:
1. SPECIAL INSPECTION MAY BE REQUIRED FOR CLASS 1 DIV 2 UL APPROVAL

ITEM	QTY	DESCRIPTION	MANUFACTURER	PART NUMBER	TROJAN NUMBER
20					
19					
18					
17					
16					
15					
14					
13					
12					
11					
10					
09					
08					
07					
06					
05					
04	1	SELECTOR 3 POSITION	R. STAHL	8003/133-726-3-rr	
03	1	MUSHROOM PUSH BUTTON TWIST RELEASE - RED 1NC+1NC	R. STAHL	8003/123-015-6	
02	1	OPERATOR INTERFACE +7 LCD 7" TOUCH SCREEN 24VDC	ALLEN BRADLEY	2711P-T7C22D9P	917408-007
01	1	ENCL 16Hx16Wx8D 4X GRP1 DIV2 316SS BOTTOM GLAND PLT	R. STAHL	8150/1-0400-0400-230-	
		WITH 20 TERMINALS		3321-A020-GPD	

UNLESS OTHERWISE SPECIFIED:
DIMENSIONS ARE IN INCHES
TOLERANCES: 2 PL DEC ± N/A
3 PL DEC ± N/A
ANGLE DEG ± N/A
REMOVE ALL BURRS
ALL CORNERS R 0.010 OR BREAK
▱ - CRITICAL CHARACTERISTIC

A TROJAN TECHNOLOGIES COMPANY
salsnes filter
N-7801 NAMSOS, NORWAY, PO BOX 279

COPYRIGHT © TROJAN TECHNOLOGIES, 2018. ALL RIGHTS RESERVED.

DESCRIPTION
HMI ASSY, SF6000 IQALUIT NU
HUMAN MACHINE INTERFACE ASSEMBLY

THIRD ANGLE PROJECTION

0 0.5 1.0
1.0" ON ORIGINAL DWG

DWG NO. 448242
REV 2
SCALE: 1
SHEET 01 OF 01
SIZE D

FSPDB

FINGER-SAFE/POWER DISTRIBUTION BLOCKS



SAFETY EVOLVING FINGER-SAFE POWER DISTRIBUTION BLOCKS

Ferraz Shawmut FSPDBs introduce a new level of safety and ease for installing power distribution blocks. An IP20 level of finger safe protection is achieved using FSPDBs, eliminating the need for special covers or custom plexiglass sheets to protect your panels. FSPDBs (sizes 1 to 4) simply snap onto 35mm DIN rail to provide the quickest installation. Modular design also allows for multi pole applications by use of assembly pins. FSPDBs provide a safe, convenient way of splicing cables, splitting primary power into a variety of secondary circuits or providing a fixed junction tap-off point.

Features/Benefits

- **Finger-Safe**
  Fully insulated block ensures touch safe isolation of live parts. Recessed termination screws and wire openings provide IP20 grade protection and qualify as “finger-safe” per IEC 529.
- **Compact Modularity**
  Single or multiple pole configurations in the most compact footprint. Allows users to build smaller or higher density panels.
- **Snap on DIN Rail Mounting**
  Sizes 1 to 4 feature integral DIN rail adaptors allowing for quick and easy installations on 35mm DIN rail yielding lower installed costs.
- **Captive Termination Screws**
  Unique channel design ensures captive metric wire termination screws. Screws can never be lost.
- **Available Accessories**
  For multi-pole panel mounting, simply snap in pins for rigid fit. Cap plugs provide the ability to maintain touch safety on unused openings. Circuit identification markers simply snap into blocks to ID circuits. End anchors provide rigid end stops.
- **Multiple Wire Ratings**
  Provide users more versatility by offering capability of using multiple conductors in #2 and 2/0 openings.

Ratings

- Ampere ratings from 175 to 840A
- 600V rated
- Short Circuit Current Rating 100kA with proper fuse. Contact Technical Services for instruction sheet.

Approvals

- UL Recognized Component - Guide XCFR2, File E73571
- CSA Certified: Class 6228, File 69363

FSPDB FINGER-SAFE/POWER DISTRIBUTION BLOCKS

Catalog Numbers and Ratings

CATALOG NUMBER		AMPERE RATING (Based on NEC Table 310-16 for 75° C Cu wire)	LINE			LOAD			SHORT CIRCUIT CURRENT RATING
			WIRE RANGE			WIRE RANGE			
ALUMINUM (Connector rated for 90° C Cu/AL wire)	COPPER (Connector rated for 75° C Cu wire only)		AWG/ KCMIL	MM²	OPENINGS PER POLE	AWG/ KCMIL	MM²	OPENINGS PER POLE	
FSPDB1A	FSPDB1C	175	2/0-#14	70-2.5	1	2/0-#14	70-2.5	1	*100kA
FSPDB2A	FSPDB2C	175	2/0-#14	70-2.5	1	#2-#14	35-2.5	4	*100kA
FSPDB3A	FSPDB3C	310	350-#6 2/0-#14	185-16 70-2.5	1	#2-#14	35-2.5	8	*100kA
FSPDB4A	FSPDB4C	335	400-#6	185-16	1	400-#6	185-16	1	*100kA
FSPDB5A	FSPDB5C	840	600-#4	300-25	2	600-#4	300-25	2	*100kA

* Contact Ferraz Shawmut technical services for fuse type and maximum ampere required.

MULTIPLE WIRE RATINGS (SAME SIZE & TYPE WIRES ONLY)			
2/0 OPENINGS		#2 OPENINGS	
(2) #4 AWG	(2) #10 AWG	(2) #6 AWG	(2-4) #12 AWG
(2) #6 AWG	(2) #12 AWG	(2) #8 AWG	(2-4) #14 AWG
(2) #8 AWG	(2) #14 AWG	(2-4) #10 AWG	

Outline Dimensions

	FSPDB1A FSPDB1C Figure 1		FSPDB2A FSPDB2C Figure 1		FSPDB3A FSPDB3C Figure 2		FSPDB4A FSPDB4C Figure 1		FSPDB5A FSPDB5C Figure 2	
Dimension	mm	in	mm	in	mm	in	mm	in	mm	in
A	25.4	1.00	28.4	1.12	46.9	1.85	39	1.54	72	2.84
B	43.3	1.70	57.8	2.28	64.3	2.53	108	4.25	91	3.58
C	49.5	1.95	56.0	2.21	64.3	2.53	80	3.15	80	3.15
D	45.1	1.78	51.6	2.03	59.8	2.36	75.5	2.97	-	-
E	39.4	1.55	39.4	1.55	51.5	2.03	50.1	1.97	50.1	1.97
F	72.6	2.86	87.7	3.45	100.8	3.97	145.5	5.73	145	5.71
G	59.6	2.35	74.6	2.94	82.4	3.24	120.6	4.75	127.5	5.02
H	5.3	0.21	5.1	0.20	6.5	0.26	7	0.28	3	0.12
I	-	-	-	-	31.5	1.24	-	-	52	2.04
J	5.3	0.21	6.4	0.25	6.5	0.26	6.5	0.26	6.5	0.26
K	10	0.40	11.7	0.46	8.9	0.35	16	0.63	8.5	0.34

Accessories

CATALOG NO.	DESCRIPTION
FSPIN1	Accessory pin to form multiple pole block
FSCIM1	Circuit identification marker for 2/0 & #2 max. conductors
FSCIM2	Circuit identification marker for 350, 400 & 600 kcmil max. conductors
FSCAP1	Cap plug for spare 2/0 openings
FSCAP2	Cap plug for spare 350 kcmil openings
FSCP3	Cap plug for spare 600 kcmil opening
FSEA	Pair of end anchors

Figure 1

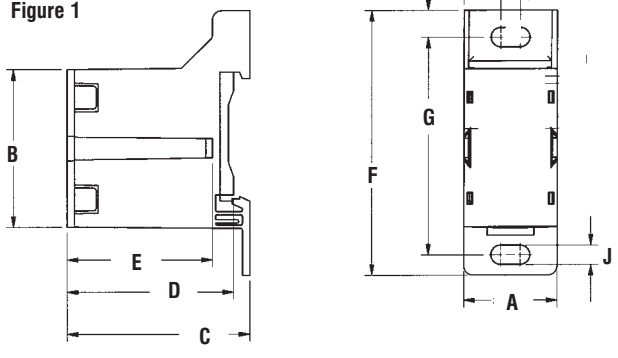

Figure 2

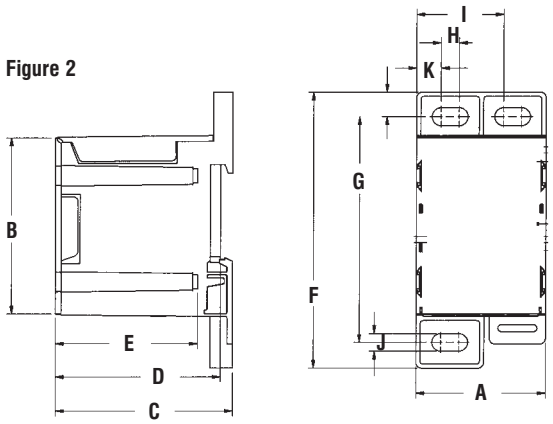

FSPDB

FINGER-SAFE/POWER DISTRIBUTION BLOCKS



SAFETY EVOLVING FINGER-SAFE POWER DISTRIBUTION BLOCKS

Ferraz Shawmut FSPDBs introduce a new level of safety and ease for installing power distribution blocks. An IP20 level of finger safe protection is achieved using FSPDBs, eliminating the need for special covers or custom plexiglass sheets to protect your panels. FSPDBs (sizes 1 to 4) simply snap onto 35mm DIN rail to provide the quickest installation. Modular design also allows for multi pole applications by use of assembly pins. FSPDBs provide a safe, convenient way of splicing cables, splitting primary power into a variety of secondary circuits or providing a fixed junction tap-off point.

Features/Benefits

- **Finger-Safe**
  Fully insulated block ensures touch safe isolation of live parts. Recessed termination screws and wire openings provide IP20 grade protection and qualify as “finger-safe” per IEC 529.
- **Compact Modularity**
  Single or multiple pole configurations in the most compact footprint. Allows users to build smaller or higher density panels.
- **Snap on DIN Rail Mounting**
  Sizes 1 to 4 feature integral DIN rail adaptors allowing for quick and easy installations on 35mm DIN rail yielding lower installed costs.
- **Captive Termination Screws**
  Unique channel design ensures captive metric wire termination screws. Screws can never be lost.
- **Available Accessories**
  For multi-pole panel mounting, simply snap in pins for rigid fit. Cap plugs provide the ability to maintain touch safety on unused openings. Circuit identification markers simply snap into blocks to ID circuits. End anchors provide rigid end stops.
- **Multiple Wire Ratings**
  Provide users more versatility by offering capability of using multiple conductors in #2 and 2/0 openings.

Ratings

- Ampere ratings from 175 to 840A
- 600V rated
- Short Circuit Current Rating 100kA with proper fuse. Contact Technical Services for instruction sheet.

Approvals

- UL Recognized Component - Guide XCFR2, File E73571
- CSA Certified: Class 6228, File 69363

FSPDB FINGER-SAFE/POWER DISTRIBUTION BLOCKS

Catalog Numbers and Ratings

CATALOG NUMBER		AMPERE RATING (Based on NEC Table 310-16 for 75° C Cu wire)	LINE			LOAD			SHORT CIRCUIT CURRENT RATING
			WIRE RANGE			WIRE RANGE			
ALUMINUM (Connector rated for 90° C Cu/AL wire)	COPPER (Connector rated for 75° C Cu wire only)		AWG/ KCMIL	MM²	OPENINGS PER POLE	AWG/ KCMIL	MM²	OPENINGS PER POLE	
FSPDB1A	FSPDB1C	175	2/0-#14	70-2.5	1	2/0-#14	70-2.5	1	*100kA
FSPDB2A	FSPDB2C	175	2/0-#14	70-2.5	1	#2-#14	35-2.5	4	*100kA
FSPDB3A	FSPDB3C	310	350-#6 2/0-#14	185-16 70-2.5	1	#2-#14	35-2.5	8	*100kA
FSPDB4A	FSPDB4C	335	400-#6	185-16	1	400-#6	185-16	1	*100kA
FSPDB5A	FSPDB5C	840	600-#4	300-25	2	600-#4	300-25	2	*100kA

* Contact Ferraz Shawmut technical services for fuse type and maximum ampere required.

MULTIPLE WIRE RATINGS (SAME SIZE & TYPE WIRES ONLY)			
2/0 OPENINGS		#2 OPENINGS	
(2) #4 AWG	(2) #10 AWG	(2) #6 AWG	(2-4) #12 AWG
(2) #6 AWG	(2) #12 AWG	(2) #8 AWG	(2-4) #14 AWG
(2) #8 AWG	(2) #14 AWG	(2-4) #10 AWG	

Outline Dimensions

	FSPDB1A FSPDB1C Figure 1		FSPDB2A FSPDB2C Figure 1		FSPDB3A FSPDB3C Figure 2		FSPDB4A FSPDB4C Figure 1		FSPDB5A FSPDB5C Figure 2	
Dimension	mm	in	mm	in	mm	in	mm	in	mm	in
A	25.4	1.00	28.4	1.12	46.9	1.85	39	1.54	72	2.84
B	43.3	1.70	57.8	2.28	64.3	2.53	108	4.25	91	3.58
C	49.5	1.95	56.0	2.21	64.3	2.53	80	3.15	80	3.15
D	45.1	1.78	51.6	2.03	59.8	2.36	75.5	2.97	-	-
E	39.4	1.55	39.4	1.55	51.5	2.03	50.1	1.97	50.1	1.97
F	72.6	2.86	87.7	3.45	100.8	3.97	145.5	5.73	145	5.71
G	59.6	2.35	74.6	2.94	82.4	3.24	120.6	4.75	127.5	5.02
H	5.3	0.21	5.1	0.20	6.5	0.26	7	0.28	3	0.12
I	-	-	-	-	31.5	1.24	-	-	52	2.04
J	5.3	0.21	6.4	0.25	6.5	0.26	6.5	0.26	6.5	0.26
K	10	0.40	11.7	0.46	8.9	0.35	16	0.63	8.5	0.34

Accessories

CATALOG NO.	DESCRIPTION
FSPIN1	Accessory pin to form multiple pole block
FSCIM1	Circuit identification marker for 2/0 & #2 max. conductors
FSCIM2	Circuit identification marker for 350, 400 & 600 kcmil max. conductors
FSCAP1	Cap plug for spare 2/0 openings
FSCAP2	Cap plug for spare 350 kcmil openings
FSCP3	Cap plug for spare 600 kcmil opening
FSEA	Pair of end anchors

Figure 1

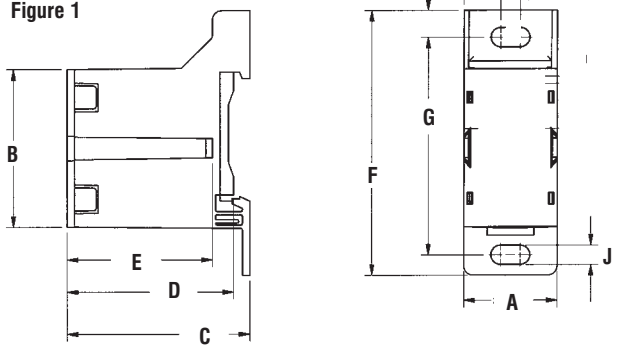

Figure 2

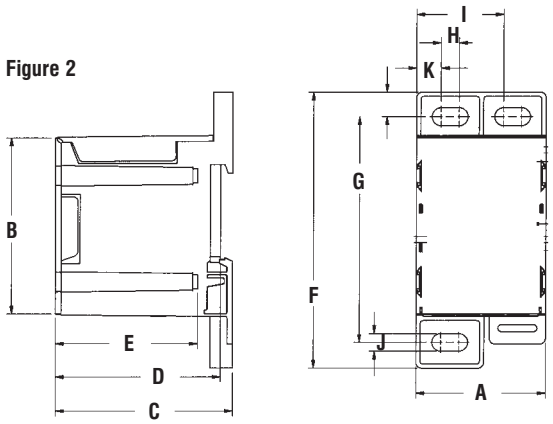

Z-series
ZQV 2.5/20

Weidmüller Interface GmbH & Co. KG
Klingenbergstraße 16
D-32758 Detmold
Germany
Fon: +49 5231 1429-0
Fax: +49 5231 14292083
www.weidmueller.com



Spring connection with tension clamp Technology
Tension clamp technology is a universal contact system for all common conductor connection types. Its fantastic level of flexibility makes the tension clamp a profitable alternative connection.

General ordering data

Type	ZQV 2.5/20
Order No.	1908960000
Version	Z-series, Cross-connector, For the terminals, No. of poles: 20
GTIN (EAN)	4032248535293
Qty.	20 pc(s).

Z-series
ZQV 2.5/20

Weidmüller Interface GmbH & Co. KG
Klingenbergstraße 16
D-32758 Detmold
Germany
Fon: +49 5231 1429-0
Fax: +49 5231 14292083
www.weidmueller.com

Technical data

Dimensions and weights

Width	2.8 mm	Width (inches)	0.11 inch
Height	100.3 mm	Height (inches)	3.949 inch
Depth	27.6 mm	Depth (inches)	1.087 inch
Net weight	13.785 g		

Temperatures

Continuous operating temp., min.	-50 °C	Continuous operating temp., max.	120 °C

Material data

Material	Wemid	Colour	Yellow
UL 94 flammability rating	V-0		

System specifications

Version	For the terminals	Mounting rail	none

Additional technical data

Installation advice	Direct mounting	Type of fixing	Plugged

Dimensions

Pitch in mm (P)	5.1 mm

Rating data

Rated current	24 A

Classifications

ETIM 3.0	EC000489	ETIM 4.0	EC000489
ETIM 5.0	EC000489	ETIM 6.0	EC000489
UNSPSC	30-21-18-01	eClass 5.1	27-14-11-40
eClass 6.2	27-14-11-40	eClass 7.1	27-14-11-40
eClass 8.1	27-14-11-40	eClass 9.0	27-14-11-40
eClass 9.1	27-14-11-40		

Approvals

ROHS	Conform

Downloads

Engineering Data	EPLAN, WSCAD, Zuken E3.S
User Documentation	Beipackzettel_ZDU1.5-ZDU35_ZQV.pdf

Z-series
ZAP/TW ZDK2.5

Weidmüller Interface GmbH & Co. KG
Klingenbergstraße 16
D-32758 Detmold
Germany
Fon: +49 5231 1429-0
Fax: +49 5231 14292083
www.weidmueller.com



Spring connection with tension clamp Technology
Tension clamp technology is a universal contact system for all common conductor connection types. Its fantastic level of flexibility makes the tension clamp a profitable alternative connection.

General ordering data

Type	ZAP/TW ZDK2.5
Order No.	1674730000
Version	Z-series, End plate, Seperation plate
GTIN (EAN)	4008190444891
Qty.	20 pc(s).

Z-series
ZAP/TW ZDK2.5

Weidmüller Interface GmbH & Co. KG
Klingenbergstraße 16
D-32758 Detmold
Germany
Fon: +49 5231 1429-0
Fax: +49 5231 14292083
www.weidmueller.com

Technical data

Dimensions and weights

Width	1.5 mm	Width (inches)	0.059 inch
Height	79 mm	Height (inches)	3.11 inch
Depth	43 mm	Depth (inches)	1.693 inch
Net weight	4.365 g		

Temperatures

Continuous operating temp., min.	-50 °C	Continuous operating temp., max.	120 °C

Material data

Material	Wemid	Colour	Dark Beige
UL 94 flammability rating	V-0		

System specifications

Version	End and intermediate plate	Mounting rail	none

Additional technical data

Installation advice	Direct mounting	Snap-on	Yes

Classifications

ETIM 3.0	EC000886	ETIM 4.0	EC000886
ETIM 5.0	EC000886	ETIM 6.0	EC000886
UNSPSC	30-21-18-27	eClass 5.1	27-14-11-33
eClass 6.2	27-14-11-33	eClass 7.1	27-14-11-33
eClass 8.1	27-14-11-33	eClass 9.0	27-14-11-33
eClass 9.1	27-14-11-33		

Approvals

ROHS	Conform

Downloads

Engineering Data	EPLAN, WSCAD, Zuken E3.S

Z-series
ZAP/TW 5

Weidmüller Interface GmbH & Co. KG
Klingenbergstraße 16
D-32758 Detmold
Germany
Fon: +49 5231 1429-0
Fax: +49 5231 14292083
www.weidmueller.com



Spring connection with tension clamp Technology
Tension clamp technology is a universal contact system for all common conductor connection types. Its fantastic level of flexibility makes the tension clamp a profitable alternative connection.

General ordering data

Type	ZAP/TW 5
Order No.	1608830000
Version	Z-series, End plate, Seperation plate
GTIN (EAN)	4008190207045
Qty.	50 pc(s).

Z-series
ZAP/TW 5

Weidmüller Interface GmbH & Co. KG
Klingenbergstraße 16
D-32758 Detmold
Germany
Fon: +49 5231 1429-0
Fax: +49 5231 14292083
www.weidmueller.com

Technical data

Dimensions and weights

Width	2 mm	Width (inches)	0.079 inch
Height	65 mm	Height (inches)	2.559 inch
Depth	37 mm	Depth (inches)	1.457 inch
Net weight	3.501 g		

Temperatures

Continuous operating temp., min.	-50 °C	Continuous operating temp., max.	120 °C

Material data

Material	Wemid	Colour	Dark Beige
UL 94 flammability rating	V-0		

System specifications

Version	End and intermediate plate	Mounting rail	none

Additional technical data

Installation advice	Direct mounting	Snap-on	Yes

Classifications

ETIM 3.0	EC000886	ETIM 4.0	EC000886
ETIM 5.0	EC000886	ETIM 6.0	EC000886
UNSPSC	30-21-18-27	eClass 5.1	27-14-11-33
eClass 6.2	27-14-11-33	eClass 7.1	27-14-11-33
eClass 8.1	27-14-11-33	eClass 9.0	27-14-11-33
eClass 9.1	27-14-11-33		

Approvals

ROHS	Conform

Downloads

Engineering Data	EPLAN, WSCAD, Zuken E3.S

Z-series
ZAP/TW 2 GN

Weidmüller Interface GmbH & Co. KG
Klingenbergstraße 16
D-32758 Detmold
Germany
Fon: +49 5231 1429-0
Fax: +49 5231 14292083
www.weidmueller.com



Spring connection with tension clamp Technology
Tension clamp technology is a universal contact system for all common conductor connection types. Its fantastic level of flexibility makes the tension clamp a profitable alternative connection.

General ordering data

Type	ZAP/TW 2 GN
Order No.	1683760000
Version	Z-series, End plate, Seperation plate
GTIN (EAN)	4008190477257
Qty.	50 pc(s).

Z-series
ZAP/TW 2 GN

Weidmüller Interface GmbH & Co. KG
Klingenbergstraße 16
D-32758 Detmold
Germany
Fon: +49 5231 1429-0
Fax: +49 5231 14292083
www.weidmueller.com

Technical data

Dimensions and weights

Width	2 mm	Width (inches)	0.079 inch
Height	66 mm	Height (inches)	2.598 inch
Depth	30.5 mm	Depth (inches)	1.201 inch
Net weight	3.02 g		

Temperatures

Continuous operating temp., min.	-50 °C	Continuous operating temp., max.	120 °C

Material data

Material	Wemid	Colour	Green
UL 94 flammability rating	V-0		

System specifications

Version	End and intermediate plate	Mounting rail	none

Additional technical data

Installation advice	Direct mounting	Snap-on	Yes

Classifications

ETIM 3.0	EC000886	ETIM 4.0	EC000886
ETIM 5.0	EC000886	ETIM 6.0	EC000886
UNSPSC	30-21-18-27	eClass 5.1	27-14-11-33
eClass 6.2	27-14-11-33	eClass 7.1	27-14-11-33
eClass 8.1	27-14-11-33	eClass 9.0	27-14-11-33
eClass 9.1	27-14-11-33		

Approvals

ROHS	Conform

Downloads

Engineering Data	EPLAN, WSCAD, Zuken E3.S

Z-series, Accessories
ZAP/TW 1 BL

Weidmüller Interface GmbH & Co. KG
Klingenbergstraße 16
D-32758 Detmold
Germany
Fon: +49 5231 1429-0
Fax: +49 5231 14292083
www.weidmueller.com

Spring connection with tension clamp Technology
Tension clamp technology is a universal contact system for all common conductor connection types. Its fantastic level of flexibility makes the tension clamp a profitable alternative connection.

General ordering data

Type	ZAP/TW 1 BL
Order No.	1608750000
Version	Z-series, Accessories, End plate, Seperation plate
GTIN (EAN)	4008190190866
Qty.	50 pc(s).

Z-series, Accessories
ZAP/TW 1 BL

Weidmüller Interface GmbH & Co. KG
Klingenbergstraße 16
D-32758 Detmold
Germany
Fon: +49 5231 1429-0
Fax: +49 5231 14292083
www.weidmueller.com

Technical data

Dimensions and weights

Width	2 mm	Width (inches)	0.079 inch
Height	59.5 mm	Height (inches)	2.343 inch
Depth	30.5 mm	Depth (inches)	1.201 inch
Net weight	2.831 g		

Temperatures

Continuous operating temp., min.	-50 °C	Continuous operating temp., max.	120 °C

Material data

Material	Wemid	Colour	Blue
UL 94 flammability rating	V-0		

System specifications

Version	End and intermediate plate	Mounting rail	none

Additional technical data

Installation advice	Direct mounting	Snap-on	Yes

Classifications

ETIM 3.0	EC000886	ETIM 4.0	EC000886
ETIM 5.0	EC000886	ETIM 6.0	EC000886
UNSPSC	30-21-18-27	eClass 5.1	27-14-11-33
eClass 6.2	27-14-11-33	eClass 7.1	27-14-11-33
eClass 8.1	27-14-11-33	eClass 9.0	27-14-11-33
eClass 9.1	27-14-11-33		

Approvals

ROHS	Conform

Downloads

Engineering Data	EPLAN, WSCAD, Zuken E3.S

Z-series, Accessories
ZAP/TW 1

Weidmüller Interface GmbH & Co. KG
Klingenbergstraße 16
D-32758 Detmold
Germany
Fon: +49 5231 1429-0
Fax: +49 5231 14292083
www.weidmueller.com



Spring connection with tension clamp Technology
Tension clamp technology is a universal contact system for all common conductor connection types. Its fantastic level of flexibility makes the tension clamp a profitable alternative connection.

General ordering data

Type	ZAP/TW 1
Order No.	1608740000
Version	Z-series, Accessories, End plate, Seperation plate
GTIN (EAN)	4008190190859
Qty.	50 pc(s).

Z-series, Accessories
ZAP/TW 1

Weidmüller Interface GmbH & Co. KG
Klingenbergstraße 16
D-32758 Detmold
Germany
Fon: +49 5231 1429-0
Fax: +49 5231 14292083
www.weidmueller.com

Technical data

Dimensions and weights

Width	2 mm	Width (inches)	0.079 inch
Height	59.5 mm	Height (inches)	2.343 inch
Depth	30.5 mm	Depth (inches)	1.201 inch
Net weight	2.952 g		

Temperatures

Continuous operating temp., min.	-50 °C	Continuous operating temp., max.	120 °C

Material data

Material	Wemid	Colour	Dark Beige
UL 94 flammability rating	V-0		

System specifications

Version	End and intermediate plate	Mounting rail	none

Additional technical data

Installation advice	Direct mounting	Snap-on	Yes

Classifications

ETIM 3.0	EC000886	ETIM 4.0	EC000886
ETIM 5.0	EC000886	ETIM 6.0	EC000886
UNSPSC	30-21-18-27	eClass 5.1	27-14-11-33
eClass 6.2	27-14-11-33	eClass 7.1	27-14-11-33
eClass 8.1	27-14-11-33	eClass 9.0	27-14-11-33
eClass 9.1	27-14-11-33		

Approvals

ROHS	Conform

Downloads

Engineering Data	EPLAN, WSCAD, Zuken E3.S

Z-series
ZAP/TW ZDU10

Weidmüller Interface GmbH & Co. KG
Klingenbergstraße 16
D-32758 Detmold
Germany
Fon: +49 5231 1429-0
Fax: +49 5231 14292083
www.weidmueller.com



Spring connection with tension clamp Technology
Tension clamp technology is a universal contact system for all common conductor connection types. Its fantastic level of flexibility makes the tension clamp a profitable alternative connection.

General ordering data

Type	ZAP/TW ZDU10
Order No.	1748660000
Version	Z-series, End plate, Seperation plate
GTIN (EAN)	4008190996741
Qty.	20 pc(s).

Z-series
ZAP/TW ZDU10

Weidmüller Interface GmbH & Co. KG
Klingenbergstraße 16
D-32758 Detmold
Germany
Fon: +49 5231 1429-0
Fax: +49 5231 14292083
www.weidmueller.com

Technical data

Dimensions and weights

Width	2.7 mm	Width (inches)	0.106 inch
Height	74 mm	Height (inches)	2.913 inch
Depth	42.8 mm	Depth (inches)	1.685 inch
Net weight	5.735 g		

Temperatures

Continuous operating temp., min.	-50 °C	Continuous operating temp., max.	120 °C

Material data

Material	Wemid	Colour	Dark Beige
UL 94 flammability rating	V-0		

System specifications

Version	End and intermediate plate	Mounting rail	none

Additional technical data

Installation advice	Direct mounting	Snap-on	Yes

Classifications

ETIM 3.0	EC000886	ETIM 4.0	EC000886
ETIM 5.0	EC000886	ETIM 6.0	EC000886
UNSPSC	30-21-18-27	eClass 5.1	27-14-11-33
eClass 6.2	27-14-11-33	eClass 7.1	27-14-11-33
eClass 8.1	27-14-11-33	eClass 9.0	27-14-11-33
eClass 9.1	27-14-11-33		

Approvals

ROHS	Conform

Downloads

Engineering Data	EPLAN, WSCAD, Zuken E3.S

Z-series
ZPE 2.5/3AN

Weidmüller Interface GmbH & Co. KG
Klingenbergstraße 16
D-32758 Detmold
Germany
Fon: +49 5231 1429-0
Fax: +49 5231 14292083
www.weidmueller.com



Spring connection with tension clamp Technology
Tension clamp technology is a universal contact system for all common conductor connection types. Its fantastic level of flexibility makes the tension clamp a profitable alternative connection.

General ordering data

Type	ZPE 2.5/3AN
Order No.	1608650000
Version	PE terminal, Tension clamp connection, 2.5 mm², 300 A (2.5 mm²), green / yellow
GTIN (EAN)	4008190076559
Qty.	100 pc(s).

Z-series
ZPE 2.5/3AN

Weidmüller Interface GmbH & Co. KG
Klingenbergstraße 16
D-32758 Detmold
Germany
Fon: +49 5231 1429-0
Fax: +49 5231 14292083
www.weidmueller.com

Technical data

Dimensions and weights

Width	5.1 mm	Width (inches)	0.201 inch
Height	64.5 mm	Height (inches)	2.539 inch
Depth	38.5 mm	Depth (inches)	1.516 inch
Depth including DIN rail	39.5 mm	Net weight	12.84 g

Temperatures

Continuous operating temp., min.	-50 °C	Continuous operating temp., max.	120 °C

Material data

Material	Wemid	Colour	green / yellow
UL 94 flammability rating	V-0		

Rating data IECEx/ATEX

Certificate No. (ATEX)	KEMA97ATEX2521U	ATEX certificate	KEMA97ATEX2521U_d.pdf
ATEX certificate	KEMA97ATEX2521U_e.pdf	Certificate No. (IECEX)	IECEXULD05.0009U
IEC Ex certificate	IECEXULD05.0009U_e.pdf	Wire cross section max. (ATEX)	2.5 mm²
Wire cross section max. (IECEX)	2.5 mm²	Voltage, cross-connection	CrossConnectionGuide.pdf
Operating temperature range	For operating temperature range see EC Design Test Certificate / IEC Ex-Certificate of Conformity	Marking EN 60079-7	Ex e II
Ex 2014/34/EU label	II 2 G D		

System specifications

Version	Tension-clamp connection, With PE connection, One end without connector	End cover plate required	Yes
Number of levels	1	No. of clamping points per level	3
Levels cross-connected internally	No	PE connection	Yes
Mounting rail	TS 35	PEN function	No

Additional technical data

Explosion-tested version	Yes	Installation advice	Direct mounting
Number of similar terminals	1	Open sides	right
Type of mounting	Snap-on		

CSA rating data

Certificate No. (CSA)	200039-1152892	Wire cross section max. (CSA)	12 AWG
Wire cross section min. (CSA)	26 AWG		

Z-series
ZPE 2.5/3AN

Weidmüller Interface GmbH & Co. KG
Klingenbergstraße 16
D-32758 Detmold
Germany
Fon: +49 5231 1429-0
Fax: +49 5231 14292083
www.weidmueller.com

Technical data

Conductors for clamping (rated connection)

Blade size	0.6 x 3.5 mm	Clamping range, rated connection, max.	4 mm²
Clamping range, rated connection, min.	0.05 mm²	Connection direction	top
Cross-section for connected conductor, finely stranded with wire-end ferrules and plastic collars DIN 46228/4, rated connection, min.	0.5 mm²	Gauge to IEC 60947-1	A3
Number of connections	3	Stripping length	10 mm
Type of connection	Tension clamp connection	Wire connection cross section AWG, max.	AWG 12
Wire connection cross section AWG, min.	AWG 30	Wire connection cross section, finely stranded with wire-end ferrules DIN 46228/1, rated connection, max.	2.5 mm²
Wire connection cross section, finely stranded with wire-end ferrules DIN 46228/1, rated connection, min.	0.5 mm²	Wire connection cross section, finely stranded, max.	4 mm²
Wire connection cross section, solid core max. rated connection	4 mm²	Wire connection cross section, solid core, min. rated connection	0.5 mm²
Wire connection cross-section, finely stranded with wire-end ferrules and plastic collars DIN 46228/4, rated connection, max.	2.5 mm²	Wire connection cross-section, finely stranded, min.	0.5 mm²

PE rating data

Rated short-time current	300 A (2.5 mm²)	PEN function	No

Rating data

Rated cross-section	2.5 mm²	Rated voltage to adjoining terminal	800 V
Standards	IEC 60947-7-2	Volume resistance according to IEC 60947-7-x	1.33 mΩ
Rated impulse withstand voltage to adjacent terminal	8 kV	Pollution severity	3

UL rating data

Certificate No. (UR)	E60693	Conductor size Factory wiring max. (UR)	12 AWG
Conductor size Factory wiring min. (UR)	30 AWG	Conductor size Field wiring max. (UR)	12 AWG
Conductor size Field wiring min. (UR)	30 AWG		

Classifications

ETIM 3.0	EC000901	ETIM 4.0	EC000491
ETIM 5.0	EC000491	ETIM 6.0	EC000901
UNSPSC	30-21-18-11	eClass 5.1	27-14-03-05
eClass 6.2	27-14-03-05	eClass 7.1	27-14-03-05
eClass 8.1	27-14-11-41	eClass 9.0	27-14-11-41
eClass 9.1	27-14-11-41		

Z-series
ZPE 2.5/3AN

Weidmüller Interface GmbH & Co. KG
Klingenbergstraße 16
D-32758 Detmold
Germany
Fon: +49 5231 1429-0
Fax: +49 5231 14292083
www.weidmueller.com

Technical data

Approvals

Approvals	
ROHS	Conform

Downloads

Approval/Certificate/Document of Conformity	CFAT_ZPE 2.5_3AN.pdf DE_PT1102_20160418_1388_ISSUE01.pdf
Engineering Data	EPLAN, WSCAD, Zuken E3.S

Safety note

Safety notice	Safety Information

Z-series
ZPE 2.5/3AN

Weidmüller Interface GmbH & Co. KG
Klingenbergstraße 16
D-32758 Detmold
Germany
Fon: +49 5231 1429-0
Fax: +49 5231 14292083
www.weidmueller.com

Drawings

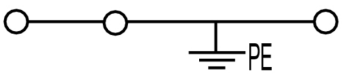

Z-series
ZPE 6

Weidmüller Interface GmbH & Co. KG
Klingenbergstraße 16
D-32758 Detmold
Germany
Fon: +49 5231 1429-0
Fax: +49 5231 14292083
www.weidmueller.com



Spring connection with tension clamp Technology
Tension clamp technology is a universal contact system for all common conductor connection types. Its fantastic level of flexibility makes the tension clamp a profitable alternative connection.

General ordering data

Type	ZPE 6
Order No.	1608670000
Version	PE terminal, Tension clamp connection, 6 mm², 720 A (6 mm²), green / yellow
GTIN (EAN)	4008190259242
Qty.	50 pc(s).

Z-series
ZPE 6

Weidmüller Interface GmbH & Co. KG
Klingenbergstraße 16
D-32758 Detmold
Germany
Fon: +49 5231 1429-0
Fax: +49 5231 14292083
www.weidmueller.com

Technical data

Dimensions and weights

Width	8.1 mm	Width (inches)	0.319 inch
Height	65 mm	Height (inches)	2.559 inch
Depth	45 mm	Depth (inches)	1.772 inch
Depth including DIN rail	45.5 mm	Net weight	21.63 g

Temperatures

Continuous operating temp., min.	-50 °C	Continuous operating temp., max.	120 °C

Material data

Material	Wemid	Colour	green / yellow
UL 94 flammability rating	V-0		

Rating data IECEx/ATEX

Certificate No. (ATEX)	KEMA97ATEX2521U	ATEX certificate	KEMA97ATEX2521U_d.pdf
ATEX certificate	KEMA97ATEX2521U_e.pdf	Certificate No. (IECEX)	IECEXULD05.0009U
IEC Ex certificate	IECEXULD05.0009U_e.pdf	Wire cross section max. (ATEX)	6 mm²
Wire cross section max. (IECEX)	6 mm²	Voltage, cross-connection	CrossConnectionGuide.pdf
Operating temperature range	For operating temperature range see EC Design Test Certificate / IEC Ex-Certificate of Conformity	Marking EN 60079-7	Ex e II
Ex 2014/34/EU label	II 2 G D		

System specifications

Version	Tension-clamp connection, With PE connection, One end without connector	End cover plate required	Yes
Number of levels	1	No. of clamping points per level	2
Levels cross-connected internally	No	PE connection	Yes
Mounting rail	TS 35	PEN function	No

Additional technical data

Explosion-tested version	Yes	Number of similar terminals	1
Open sides	right	Type of mounting	Snap-on

CSA rating data

Certificate No. (CSA)	200039-1152892	Wire cross section max. (CSA)	8 AWG
Wire cross section min. (CSA)	20 AWG		

Z-series
ZPE 6

Weidmüller Interface GmbH & Co. KG
Klingenbergstraße 16
D-32758 Detmold
Germany
Fon: +49 5231 1429-0
Fax: +49 5231 14292083
www.weidmueller.com

Technical data

Conductors for clamping (rated connection)

Blade size	0.6 x 3.5 mm	Clamping range, rated connection, max.	10 mm²
Clamping range, rated connection, min.	0.22 mm²	Connection direction	top
Cross-section for connected conductor, finely stranded with wire-end ferrules and plastic collars DIN 46228/4, rated connection, min.	0.5 mm²	Gauge to IEC 60947-1	A5
Number of connections	2	Stripping length	13 mm
Type of connection	Tension clamp connection	Wire connection cross section AWG, max.	AWG 8
Wire connection cross section AWG, min.	AWG 22	Wire connection cross section, finely stranded with wire-end ferrules DIN 46228/1, rated connection, max.	6 mm²
Wire connection cross section, finely stranded with wire-end ferrules DIN 46228/1, rated connection, min.	0.5 mm²	Wire connection cross section, finely stranded, max.	10 mm²
Wire connection cross section, solid core max. rated connection	10 mm²	Wire connection cross section, solid core, min. rated connection	0.5 mm²
Wire connection cross section, stranded, rated connection, max.	10 mm²	Wire connection cross section, stranded, rated connection, min.	1.5 mm²
Wire connection cross-section, finely stranded with wire-end ferrules and plastic collars DIN 46228/4, rated connection, max.	6 mm²	Wire connection cross-section, finely stranded, min.	0.5 mm²

Dimensions

TS 35 offset	39 mm

PE rating data

Rated short-time current	720 A (6 mm²)	PEN function	No

Rating data

Rated cross-section	6 mm²	Rated voltage to adjoining terminal	800 V
Standards	IEC 60947-7-2	Volume resistance according to IEC 60947-7-x	0.78 mΩ
Rated impulse withstand voltage to adjacent terminal	8 kV	Pollution severity	3

UL rating data

Certificate No. (UR)	E60693	Conductor size Factory wiring max. (UR)	8 AWG
Conductor size Factory wiring min. (UR)	22 AWG	Conductor size Field wiring max. (UR)	8 AWG
Conductor size Field wiring min. (UR)	22 AWG		

Classifications

ETIM 3.0	EC000901	ETIM 4.0	EC000491
ETIM 5.0	EC000491	ETIM 6.0	EC000901
UNSPSC	30-21-18-11	eClass 5.1	27-14-03-05
eClass 6.2	27-14-03-05	eClass 7.1	27-14-03-05
eClass 8.1	27-14-11-41	eClass 9.0	27-14-11-41
eClass 9.1	27-14-11-41		

Z-series
ZPE 6

Weidmüller Interface GmbH & Co. KG
Klingenbergstraße 16
D-32758 Detmold
Germany
Fon: +49 5231 1429-0
Fax: +49 5231 14292083
www.weidmueller.com

Technical data

Approvals

Approvals	
ROHS	Conform

Downloads

Approval/Certificate/Document of Conformity	CFAT_ZPE 6.pdf DE_PT1102_20160418_1405_ISSUE01.pdf
Engineering Data	EPLAN, WSCAD, Zuken E3.S

Safety note

Safety notice	Safety Information

Z-series
ZPE 6

Weidmüller Interface GmbH & Co. KG
Klingenbergstraße 16
D-32758 Detmold
Germany
Fon: +49 5231 1429-0
Fax: +49 5231 14292083
www.weidmueller.com

Drawings

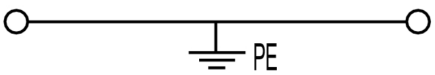

Z-series
ZPE 10

Weidmüller Interface GmbH & Co. KG
Klingenbergstraße 16
D-32758 Detmold
Germany
Fon: +49 5231 1429-0
Fax: +49 5231 14292083
www.weidmueller.com



Spring connection with tension clamp Technology
Tension clamp technology is a universal contact system for all common conductor connection types. Its fantastic level of flexibility makes the tension clamp a profitable alternative connection.

General ordering data

Type	ZPE 10
Order No.	1746770000
Version	PE terminal, Tension clamp connection, 10 mm², 1200 A (10 mm²), green / yellow
GTIN (EAN)	4008190996734
Qty.	25 pc(s).

Z-series
ZPE 10

Weidmüller Interface GmbH & Co. KG
Klingenbergstraße 16
D-32758 Detmold
Germany
Fon: +49 5231 1429-0
Fax: +49 5231 14292083
www.weidmueller.com

Technical data

Dimensions and weights

Width	10.1 mm	Width (inches)	0.398 inch
Height	73.5 mm	Height (inches)	2.894 inch
Depth	49.5 mm	Depth (inches)	1.949 inch
Depth including DIN rail	50.5 mm	Net weight	31.14 g

Temperatures

Continuous operating temp., min.	-50 °C	Continuous operating temp., max.	120 °C

Material data

Material	Wemid	Colour	green / yellow
UL 94 flammability rating	V-0		

Rating data IECEx/ATEX

Certificate No. (ATEX)	KEMA99ATEX5514U	ATEX certificate	KEMA99ATEX5514U_d.pdf
ATEX certificate	KEMA99ATEX5514U_e.pdf	Certificate No. (IECEX)	IECEXULD05.0009U
IEC Ex certificate	IECEXULD05.0009U_e.pdf	Wire cross section max. (ATEX)	10 mm²
Wire cross section max. (IECEX)	10 mm²	Voltage, cross-connection	CrossConnectionGuide.pdf
Operating temperature range	For operating temperature range see EC Design Test Certificate / IEC Ex-Certificate of Conformity	Marking EN 60079-7	Ex e II
Ex 2014/34/EU label	II 2 G D		

System specifications

Version	Tension-clamp connection, With PE connection, One end without connector	End cover plate required	Yes
Number of levels	1	No. of clamping points per level	2
Levels cross-connected internally	No	PE connection	Yes
Mounting rail	TS 35	PEN function	No

Additional technical data

Explosion-tested version	Yes	Number of similar terminals	1
Open sides	right	Type of mounting	Snap-on

CSA rating data

Certificate No. (CSA)	200039-1152892	Wire cross section max. (CSA)	6 AWG
Wire cross section min. (CSA)	16 AWG		

Z-series
ZPE 10

Weidmüller Interface GmbH & Co. KG
Klingenbergstraße 16
D-32758 Detmold
Germany
Fon: +49 5231 1429-0
Fax: +49 5231 14292083
www.weidmueller.com

Technical data

Conductors for clamping (rated connection)

Blade size	1.0 x 5.5 mm	Clamping range, rated connection, max.	16 mm²
Clamping range, rated connection, min.	1.31 mm²	Connection direction	top
Cross-section for connected conductor, finely stranded with wire-end ferrules and plastic collars DIN 46228/4, rated connection, min.	1.5 mm²	Gauge to IEC 60947-1	A6
Number of connections	2	Stripping length	18 mm
Type of connection	Tension clamp connection	Wire connection cross section AWG, max.	AWG 6
Wire connection cross section AWG, min.	AWG 16	Wire connection cross section, finely stranded with wire-end ferrules DIN 46228/1, rated connection, max.	10 mm²
Wire connection cross section, finely stranded with wire-end ferrules DIN 46228/1, rated connection, min.	1.5 mm²	Wire connection cross section, finely stranded, max.	10 mm²
Wire connection cross section, solid core max. rated connection	16 mm²	Wire connection cross section, solid core, min. rated connection	1.5 mm²
Wire connection cross section, stranded, rated connection, max.	16 mm²	Wire connection cross section, stranded, rated connection, min.	1.5 mm²
Wire connection cross-section, finely stranded with wire-end ferrules and plastic collars DIN 46228/4, rated connection, max.	10 mm²	Wire connection cross-section, finely stranded, min.	1.5 mm²

PE rating data

Rated short-time current	1200 A (10 mm²)	PEN function	No

Rating data

Rated cross-section	10 mm²	Rated voltage to adjoining terminal	800 V
Standards	IEC 60947-7-2	Volume resistance according to IEC 60947-7-x	0.56 mΩ
Rated impulse withstand voltage to adjacent terminal	8 kV	Pollution severity	3

UL rating data

Certificate No. (cURus)	E60693	Conductor size Factory wiring max. (cURus)	6 AWG
Conductor size Factory wiring min. (cURus)	16 AWG	Conductor size Field wiring max. (cURus)	6 AWG
Conductor size Field wiring min. (cURus)	16 AWG		

Classifications

ETIM 3.0	EC000901	ETIM 4.0	EC000491
ETIM 5.0	EC000491	ETIM 6.0	EC000901
UNSPSC	30-21-18-11	eClass 5.1	27-14-03-05
eClass 6.2	27-14-03-05	eClass 7.1	27-14-03-05
eClass 8.1	27-14-11-41	eClass 9.0	27-14-11-41
eClass 9.1	27-14-11-41		

Z-series
ZPE 10

Weidmüller Interface GmbH & Co. KG
Klingenbergstraße 16
D-32758 Detmold
Germany
Fon: +49 5231 1429-0
Fax: +49 5231 14292083
www.weidmueller.com

Technical data

Approvals

Approvals	
ROHS	Conform

Downloads

Approval/Certificate/Document of Conformity	CFAT_ZPE 10.pdf DE_PT1102_20160418_1379_ISSUE01.pdf
Engineering Data	EPLAN, WSCAD, Zuken E3.S

Safety note

Safety notice	Safety Information

Z-series
ZPE 10

Weidmüller Interface GmbH & Co. KG
Klingenbergstraße 16
D-32758 Detmold
Germany
Fon: +49 5231 1429-0
Fax: +49 5231 14292083
www.weidmueller.com

Drawings

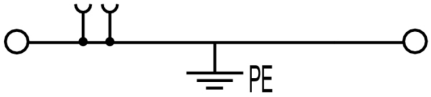

Z-series
ZDU 2.5 BL

Weidmüller Interface GmbH & Co. KG
Klingenbergstraße 16
D-32758 Detmold
Germany
Fon: +49 5231 1429-0
Fax: +49 5231 14292083
www.weidmueller.com

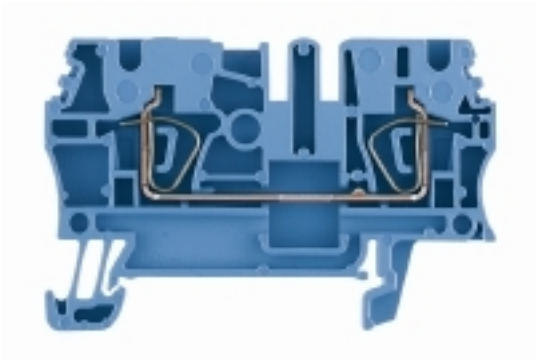

Spring connection with tension clamp Technology
Tension clamp technology is a universal contact system for all common conductor connection types. Its fantastic level of flexibility makes the tension clamp a profitable alternative connection.

General ordering data

Type	ZDU 2.5 BL
Order No.	1608520000
Version	Feed-through terminal, Tension clamp connection, 2.5 mm², 800 V, 24 A, Blue
GTIN (EAN)	4008190077501
Qty.	100 pc(s).

Z-series
ZDU 2.5 BL

Weidmüller Interface GmbH & Co. KG
Klingenbergstraße 16
D-32758 Detmold
Germany
Fon: +49 5231 1429-0
Fax: +49 5231 14292083
www.weidmueller.com

Technical data

Dimensions and weights

Width	5.1 mm	Width (inches)	0.201 inch
Height	59.5 mm	Height (inches)	2.343 inch
Depth	38.5 mm	Depth (inches)	1.516 inch
Depth including DIN rail	39.5 mm	Net weight	7.16 g

Temperatures

Continuous operating temp., min.	-50 °C	Continuous operating temp., max.	120 °C

Material data

Material	Wemid	Colour	Blue
UL 94 flammability rating	V-0		

Rating data IECEx/ATEX

Certificate No. (ATEX)	KEMA97ATEX2521U	ATEX certificate	KEMA97ATEX2521U_d.pdf
ATEX certificate	KEMA97ATEX2521U_e.pdf	Certificate No. (IECEX)	IECEXULD05.0009U
IEC Ex certificate	IECEXULD05.0009U_e.pdf	Max. voltage (ATEX)	550 V
Current (ATEX)	21 A	Wire cross section max. (ATEX)	2.5 mm²
Max. voltage (IECEX)	550 V	Current (IECEX)	20 A
Wire cross section max. (IECEX)	2.5 mm²	Voltage, cross-connection	CrossConnectionGuide.pdf
Operating temperature range	For operating temperature range see EC Design Test Certificate / IEC Ex-Certificate of Conformity	Marking EN 60079-7	Ex e II
Ex 2014/34/EU label	II 2 G D		

System specifications

Version	Tension-clamp connection, for plug-in cross-connector, One end without connector	End cover plate required	Yes
Number of levels	1	No. of clamping points per level	2
Number of potentials per tier	1	Levels cross-connected internally	No
PE connection	No	Mounting rail	TS 35

Additional technical data

Explosion-tested version	Yes	Number of similar terminals	1
Open sides	right	Type of mounting	Snap-on

CSA rating data

Certificate No. (CSA)	200039-1152892	Current size B (CSA)	27 A
Current size C (CSA)	27 A	Current size D (CSA)	5 A
Voltage size B (CSA)	600 V	Voltage size C (CSA)	600 V
Voltage size D (CSA)	600 V	Wire cross section max. (CSA)	12 AWG
Wire cross section min. (CSA)	26 AWG		

Z-series
ZDU 2.5 BL

Weidmüller Interface GmbH & Co. KG
Klingenbergstraße 16
D-32758 Detmold
Germany
Fon: +49 5231 1429-0
Fax: +49 5231 14292083
www.weidmueller.com

Technical data

Conductors for clamping (rated connection)

Blade size	0.6 x 3.5 mm	Clamping range, rated connection, max.	4 mm²
Clamping range, rated connection, min.	0.05 mm²	Connection direction	top
Cross-section for connected conductor, finely stranded with wire-end ferrules and plastic collars DIN 46228/4, rated connection, min.	0.5 mm²	Gauge to IEC 60947-1	A3
Number of connections	2	Stripping length	10 mm
Type of connection	Tension clamp connection	Wire connection cross section AWG, max.	AWG 12
Wire connection cross section AWG, min.	AWG 30	Wire connection cross section, finely stranded with wire-end ferrules DIN 46228/1, rated connection, max.	2.5 mm²
Wire connection cross section, finely stranded with wire-end ferrules DIN 46228/1, rated connection, min.	0.5 mm²	Wire connection cross section, finely stranded, max.	4 mm²
Wire connection cross section, solid core max. rated connection	4 mm²	Wire connection cross section, solid core, min. rated connection	0.5 mm²
Wire connection cross-section, finely stranded with wire-end ferrules and plastic collars DIN 46228/4, rated connection, max.	2.5 mm²	Wire connection cross-section, finely stranded, min.	0.5 mm²

Rating data

Rated cross-section	2.5 mm²	Rated voltage	800 V
Rated current	24 A	Current at maximum wires	31 A
Standards	IEC 60947-7-1	Volume resistance according to IEC 60947-7-x	1.33 mΩ
Rated impulse withstand voltage	8 kV	Pollution severity	3

UL rating data

Certificate No. (UR)	E60693	Conductor size Factory wiring max. (UR)	12 AWG
Conductor size Factory wiring min. (UR)	30 AWG	Conductor size Field wiring max. (UR)	12 AWG
Conductor size Field wiring min. (UR)	30 AWG	Current size C (UR)	25 A
Voltage size C (UR)	600 V		

Classifications

ETIM 3.0	EC000897	ETIM 4.0	EC000897
ETIM 5.0	EC000897	ETIM 6.0	EC000897
UNSPSC	30-21-18-11	eClass 5.1	27-14-11-20
eClass 6.2	27-14-11-20	eClass 7.1	27-14-11-20
eClass 8.1	27-14-11-20	eClass 9.0	27-14-11-20
eClass 9.1	27-14-11-20		

Product information

Descriptive text ordering data	Rated voltage is reduced to 400 V when using the cross-connector.

Z-series
ZDU 2.5 BL

Weidmüller Interface GmbH & Co. KG
Klingenbergstraße 16
D-32758 Detmold
Germany
Fon: +49 5231 1429-0
Fax: +49 5231 14292083
www.weidmueller.com

Technical data

Approvals

Approvals	
ROHS	Conform

Downloads

Approval/Certificate/Document of Conformity	CFAT_ZDU 2.5.pdf DE_PT1101_20160418_1172_ISSUE01.pdf
Engineering Data	EPLAN, WSCAD, Zuken E3.S

Safety note

Safety notice	Safety Information

Z-series
ZDU 2.5 BL

Weidmüller Interface GmbH & Co. KG
Klingenbergstraße 16
D-32758 Detmold
Germany
Fon: +49 5231 1429-0
Fax: +49 5231 14292083
www.weidmueller.com

Drawings

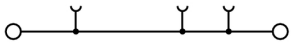

Z-series
ZTR 2.5

Weidmüller Interface GmbH & Co. KG
Klingenbergstraße 16
D-32758 Detmold
Germany
Fon: +49 5231 1429-0
Fax: +49 5231 14292083
www.weidmueller.com

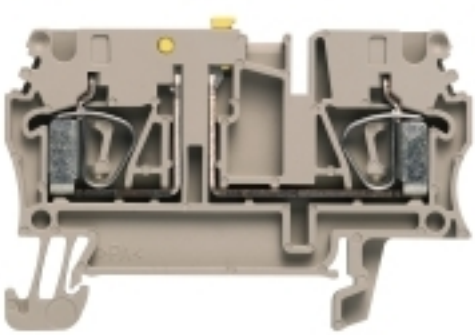

Spring connection with tension clamp Technology
Tension clamp technology is a universal contact system for all common conductor connection types. Its fantastic level of flexibility makes the tension clamp a profitable alternative connection.

General ordering data

Type	ZTR 2.5
Order No.	1831280000
Version	Test-disconnect terminal, Tension clamp connection, 2.5 mm², 500 V, 20 A, Pivoting, Dark Beige
GTIN (EAN)	4032248422036
Qty.	100 pc(s).

Z-series
ZTR 2.5

Weidmüller Interface GmbH & Co. KG
Klingenbergstraße 16
D-32758 Detmold
Germany
Fon: +49 5231 1429-0
Fax: +49 5231 14292083
www.weidmueller.com

Technical data

Dimensions and weights

Width	5.1 mm	Width (inches)	0.201 inch
Height	59.5 mm	Height (inches)	2.343 inch
Depth	38.5 mm	Depth (inches)	1.516 inch
Depth including DIN rail	41 mm	Net weight	8.67 g

Temperatures

Continuous operating temp., min.	-50 °C	Continuous operating temp., max.	120 °C

Material data

Material	Wemid	Colour	Dark Beige
UL 94 flammability rating	V-0		

System specifications

Version	Tension-clamp connection, Disconnection element, for plug-in cross-connector, One end without connector	End cover plate required	Yes
Number of potentials	1	Number of levels	1
No. of clamping points per level	2	Number of potentials per tier	1
Levels cross-connected internally	No	PE connection	No
Mounting rail	TS 35	N-function	No
PE function	No	PEN function	No

Additional technical data

Explosion-tested version	No	Installation advice	Direct mounting
Number of similar terminals	2	Open sides	right
Type of mounting	Snap-on		

CSA rating data

Certificate No. (CSA)	200039-1152892	Current size C (CSA)	20 A
Voltage size C (CSA)	600 V	Wire cross section max. (CSA)	12 AWG
Wire cross section min. (CSA)	30 AWG		

Conductors for clamping (additional connection)

Conductor cross-section, flexible plus plastic collar DIN 46228/1, further connection, max.	2.5 mm²

Z-series
ZTR 2.5

Weidmüller Interface GmbH & Co. KG
Klingenbergstraße 16
D-32758 Detmold
Germany
Fon: +49 5231 1429-0
Fax: +49 5231 14292083
www.weidmueller.com

Technical data

Conductors for clamping (rated connection)

Blade size	0.6 x 3.5 mm	Clamping range, rated connection, max.	4 mm²
Clamping range, rated connection, min.	0.05 mm²	Connection direction	top
Cross-section for connected conductor, finely stranded with wire-end ferrules and plastic collars DIN 46228/4, rated connection, min.	0.5 mm²	Gauge to IEC 60947-1	A3
Number of connections	2	Stripping length	10 mm
Type of connection	Tension clamp connection	Wire connection cross section AWG, max.	AWG 12
Wire connection cross section AWG, min.	AWG 30	Wire connection cross section, finely stranded with wire-end ferrules DIN 46228/1, rated connection, max.	2.5 mm²
Wire connection cross section, finely stranded with wire-end ferrules DIN 46228/1, rated connection, min.	0.5 mm²	Wire connection cross section, finely stranded, max.	4 mm²
Wire connection cross section, solid core max. rated connection	4 mm²	Wire connection cross section, solid core, min. rated connection	0.5 mm²
Wire connection cross-section, finely stranded with wire-end ferrules and plastic collars DIN 46228/4, rated connection, max.	2.5 mm²	Wire connection cross-section, finely stranded, min.	0.5 mm²

Disconnect terminals

Cross-disconnect	without	Integral test socket	Yes
Slitting	Pivoting		

Rating data

Rated cross-section	2.5 mm²	Rated voltage	500 V
Rated current	20 A	Current at maximum wires	20 A
Standards	IEC 60947-7-1	Volume resistance according to IEC 60947-7-x	1.33 mΩ
Rated impulse withstand voltage	6 kV	Pollution severity	3

UL rating data

Certificate No. (UR)	E60693	Conductor size Factory wiring max. (UR)	12 AWG
Conductor size Factory wiring min. (UR)	30 AWG	Conductor size Field wiring max. (UR)	12 AWG
Conductor size Field wiring min. (UR)	30 AWG	Current size C (UR)	20 A
Voltage size C (UR)	600 V		

Classifications

ETIM 3.0	EC000902	ETIM 4.0	EC000902
ETIM 5.0	EC000902	ETIM 6.0	EC000902
UNSPSC	30-21-18-11	eClass 5.1	27-14-11-26
eClass 6.2	27-14-11-26	eClass 7.1	27-14-11-26
eClass 8.1	27-14-11-26	eClass 9.0	27-14-11-26
eClass 9.1	27-14-11-26		

Product information

Descriptive text technical data	2.5 mm² flexible wires with wire-end ferrules are crimped with the Weidmüller PZ 6/5 crimping tool.
Descriptive text accessories	If the disconnect lever is replaced by the SIHA 3, a fused terminal is created.

Z-series
ZTR 2.5

Weidmüller Interface GmbH & Co. KG
Klingenbergstraße 16
D-32758 Detmold
Germany
Fon: +49 5231 1429-0
Fax: +49 5231 14292083
www.weidmueller.com

Technical data

Approvals

Approvals	
ROHS	Conform

Downloads

Approval/Certificate/Document of Conformity	DE_PT1102_20160414_291_ISSUE01.pdf
Engineering Data	EPLAN, WSCAD, Zuken E3.S
Engineering Data	1831280000_36238_ZTR_2_5_STP.stp 36283_ZTR_2.5_DXF.dxf

Safety note

Safety notice	Safety Information

Z-series
ZTR 2.5

Weidmüller Interface GmbH & Co. KG
Klingenbergstraße 16
D-32758 Detmold
Germany
Fon: +49 5231 1429-0
Fax: +49 5231 14292083
www.weidmueller.com

Drawings

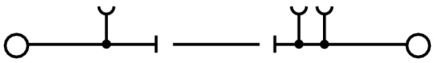

Z-series
ZDK 2.5

Weidmüller Interface GmbH & Co. KG
Klingenbergstraße 16
D-32758 Detmold
Germany
Fon: +49 5231 1429-0
Fax: +49 5231 14292083
www.weidmueller.com

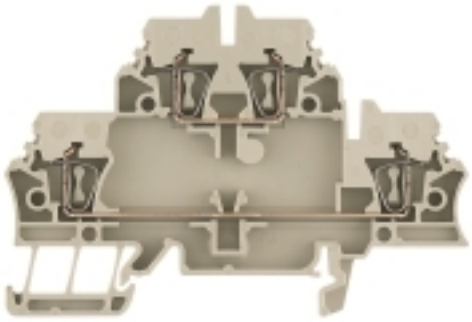

Spring connection with tension clamp Technology
Tension clamp technology is a universal contact system for all common conductor connection types. Its fantastic level of flexibility makes the tension clamp a profitable alternative connection.

General ordering data

Type	ZDK 2.5
Order No.	1674300000
Version	Feed-through terminal, Double-tier terminal, Tension clamp connection, 2.5 mm², 500 V, 20 A, Beige
GTIN (EAN)	4008190444884
Qty.	50 pc(s).

Z-series
ZDK 2.5

Weidmüller Interface GmbH & Co. KG
Klingenbergstraße 16
D-32758 Detmold
Germany
Fon: +49 5231 1429-0
Fax: +49 5231 14292083
www.weidmueller.com

Technical data

Dimensions and weights

Width	5.1 mm	Width (inches)	0.201 inch
Height	79.5 mm	Height (inches)	3.13 inch
Depth	53 mm	Depth (inches)	2.087 inch
Depth including DIN rail	54 mm	Net weight	9.79 g

Temperatures

Continuous operating temp., min.	-50 °C	Continuous operating temp., max.	120 °C

Material data

Material	Wemid	Colour	Beige
UL 94 flammability rating	V-0		

Rating data IECEx/ATEX

Certificate No. (ATEX)	KEMA97ATEX4677U	ATEX certificate	KEMA97ATEX4677U_d.pdf
ATEX certificate	KEMA97ATEX4677U_e.pdf	Certificate No. (IECEX)	IECEXULD05.0009U
Max. voltage (ATEX)	275 V	Current (ATEX)	18 A
Wire cross section max. (ATEX)	2.5 mm²	Max. voltage (IECEX)	550 V
Current (IECEX)	20 A	Wire cross section max. (IECEX)	2.5 mm²
Voltage, cross-connection	CrossConnectionGuide.pdf	Operating temperature range	For operating temperature range see EC Design Test Certificate / IEC Ex-Certificate of Conformity
Marking EN 60079-7	Ex e II	Ex 2014/34/EU label	II 2 G D

System specifications

Version	Tension-clamp connection, for plug-in cross-connector, One end without connector	End cover plate required	Yes
Number of levels	2	No. of clamping points per level	2
Levels cross-connected internally	No	PE connection	No
Mounting rail	TS 35		

Additional technical data

Explosion-tested version	Yes	Number of similar terminals	1
Open sides	right	Type of mounting	Snap-on

CSA rating data

Certificate No. (CSA)	12400-367	Current size C (CSA)	25 V
Current size D (CSA)	10 A	Voltage size C (CSA)	300 V
Voltage size D (CSA)	300 V	Wire cross section max. (CSA)	12 AWG
Wire cross section min. (CSA)	26 AWG		

Z-series
ZDK 2.5

Weidmüller Interface GmbH & Co. KG
Klingenbergstraße 16
D-32758 Detmold
Germany
Fon: +49 5231 1429-0
Fax: +49 5231 14292083
www.weidmueller.com

Technical data

Conductors for clamping (rated connection)

Blade size	0.6 x 3.5 mm	Clamping range, rated connection, max.	2.5 mm²
Clamping range, rated connection, min.	0.05 mm²	Connection direction	top
Cross-section for connected conductor, finely stranded with wire-end ferrules and plastic collars DIN 46228/4, rated connection, min.	0.5 mm²	Gauge to IEC 60947-1	A2
Number of connections	4	Stripping length	10 mm
Type of connection	Tension clamp connection	Wire connection cross section AWG, max.	AWG 14
Wire connection cross section AWG, min.	AWG 24	Wire connection cross section, finely stranded with wire-end ferrules DIN 46228/1, rated connection, max.	2.5 mm²
Wire connection cross section, finely stranded with wire-end ferrules DIN 46228/1, rated connection, min.	0.5 mm²	Wire connection cross section, finely stranded, max.	2.5 mm²
Wire connection cross section, solid core max. rated connection	2.5 mm²	Wire connection cross section, solid core, min. rated connection	0.5 mm²
Wire connection cross-section, finely stranded with wire-end ferrules and plastic collars DIN 46228/4, rated connection, max.	2.5 mm²	Wire connection cross-section, finely stranded, min.	0.5 mm²

Dimensions

TS 35 offset	39 mm

Rating data

Rated cross-section	2.5 mm²	Rated voltage	500 V
Rated current	20 A	Current at maximum wires	20 A
Standards	IEC 60947-7-1	Volume resistance according to IEC 60947-7-x	1.83 mΩ
Rated impulse withstand voltage	6 kV	Pollution severity	3

UL rating data

Certificate No. (UR)	E60693	Conductor size Factory wiring max. (UR)	14 AWG
Conductor size Factory wiring min. (UR)	26 AWG	Conductor size Field wiring max. (UR)	14 AWG
Conductor size Field wiring min. (UR)	26 AWG	Current size C (UR)	15 A
Voltage size C (UR)	300 V		

Classifications

ETIM 3.0	EC000897	ETIM 4.0	EC000897
ETIM 5.0	EC000897	ETIM 6.0	EC000897
UNSPSC	30-21-18-01	eClass 5.1	27-14-11-18
eClass 6.2	27-14-11-20	eClass 7.1	27-14-11-20
eClass 8.1	27-14-11-20	eClass 9.0	27-14-11-20
eClass 9.1	27-14-11-20		

Product information

Descriptive text ordering data	ZBS 1 component plug ZBS 1 can be used for LED (1764550000).
Descriptive text technical data	2.5 mm² flexible wires with wire-end ferrules are crimped with the Weidmüller PZ 6/5 crimping tool.
Descriptive text accessories	ZVQ 2.5/1.5 (1720700000) connects the upper and lower layer.

Z-series
ZDK 2.5

Weidmüller Interface GmbH & Co. KG
Klingenbergstraße 16
D-32758 Detmold
Germany
Fon: +49 5231 1429-0
Fax: +49 5231 14292083
www.weidmueller.com

Technical data

Approvals

Approvals	
ROHS	Conform

Downloads

Approval/Certificate/Document of Conformity	CFAT_ZDK 2,5.pdf DE_PT1101_20160415_106_ISSUE01.pdf
Engineering Data	EPLAN, WSCAD, Zuken E3.S

Safety note

Safety notice	Safety Information

Z-series
ZDK 2.5

Weidmüller Interface GmbH & Co. KG
Klingenbergstraße 16
D-32758 Detmold
Germany
Fon: +49 5231 1429-0
Fax: +49 5231 14292083
www.weidmueller.com

Drawings

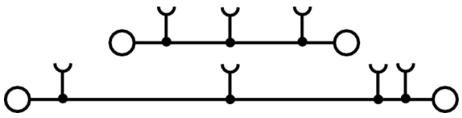

Z-series
ZDU 2.5

Weidmüller Interface GmbH & Co. KG
Klingenbergstraße 16
D-32758 Detmold
Germany
Fon: +49 5231 1429-0
Fax: +49 5231 14292083
www.weidmueller.com

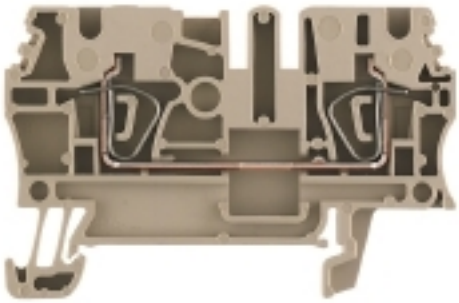

Spring connection with tension clamp Technology
Tension clamp technology is a universal contact system for all common conductor connection types. Its fantastic level of flexibility makes the tension clamp a profitable alternative connection.

General ordering data

Type	ZDU 2.5
Order No.	1608510000
Version	Feed-through terminal, Tension clamp connection, 2.5 mm², 800 V, 24 A, Dark Beige
GTIN (EAN)	4008190077969
Qty.	100 pc(s).

Z-series
ZDU 2.5

Weidmüller Interface GmbH & Co. KG
Klingenbergstraße 16
D-32758 Detmold
Germany
Fon: +49 5231 1429-0
Fax: +49 5231 14292083
www.weidmueller.com

Technical data

Dimensions and weights

Width	5.1 mm	Width (inches)	0.201 inch
Height	59.5 mm	Height (inches)	2.343 inch
Depth	38.5 mm	Depth (inches)	1.516 inch
Depth including DIN rail	39.5 mm	Net weight	6.925 g

Temperatures

Continuous operating temp., min.	-50 °C	Continuous operating temp., max.	120 °C

Material data

Material	Wemid	Colour	Dark Beige
UL 94 flammability rating	V-0		

Rating data IECEx/ATEX

Certificate No. (ATEX)	KEMA97ATEX2521U	ATEX certificate	KEMA97ATEX2521U_d.pdf
ATEX certificate	KEMA97ATEX2521U_e.pdf	Certificate No. (IECEX)	IECEXULD05.0009U
IEC Ex certificate	IECEXULD05.0009U_e.pdf	Max. voltage (ATEX)	550 V
Current (ATEX)	21 A	Wire cross section max. (ATEX)	2.5 mm²
Max. voltage (IECEX)	550 V	Current (IECEX)	20 A
Wire cross section max. (IECEX)	2.5 mm²	Voltage, cross-connection	CrossConnectionGuide.pdf
Operating temperature range	For operating temperature range see EC Design Test Certificate / IEC Ex-Certificate of Conformity	Marking EN 60079-7	Ex e II
Ex 2014/34/EU label	II 2 G D		

System specifications

Version	Tension-clamp connection, for plug-in cross-connector, One end without connector	End cover plate required	Yes
Number of levels	1	No. of clamping points per level	2
Number of potentials per tier	1	Levels cross-connected internally	No
PE connection	No	Mounting rail	TS 35

Additional technical data

Explosion-tested version	Yes	Number of similar terminals	1
Open sides	right	Type of mounting	Snap-on

CSA rating data

Certificate No. (CSA)	200039-1152892	Current size B (CSA)	27 A
Current size C (CSA)	27 A	Current size D (CSA)	5 A
Voltage size B (CSA)	600 V	Voltage size C (CSA)	600 V
Voltage size D (CSA)	600 V	Wire cross section max. (CSA)	12 AWG
Wire cross section min. (CSA)	26 AWG		

Z-series
ZDU 2.5

Weidmüller Interface GmbH & Co. KG
Klingenbergstraße 16
D-32758 Detmold
Germany
Fon: +49 5231 1429-0
Fax: +49 5231 14292083
www.weidmueller.com

Technical data

Conductors for clamping (rated connection)

Blade size	0.6 x 3.5 mm	Clamping range, rated connection, max.	4 mm²
Clamping range, rated connection, min.	0.05 mm²	Connection direction	top
Cross-section for connected conductor, finely stranded with wire-end ferrules and plastic collars DIN 46228/4, rated connection, min.	0.5 mm²	Gauge to IEC 60947-1	A3
Number of connections	2	Stripping length	10 mm
Type of connection	Tension clamp connection	Wire connection cross section AWG, max.	AWG 12
Wire connection cross section AWG, min.	AWG 30	Wire connection cross section, finely stranded with wire-end ferrules DIN 46228/1, rated connection, max.	2.5 mm²
Wire connection cross section, finely stranded with wire-end ferrules DIN 46228/1, rated connection, min.	0.5 mm²	Wire connection cross section, finely stranded, max.	4 mm²
Wire connection cross section, solid core max. rated connection	4 mm²	Wire connection cross section, solid core, min. rated connection	0.5 mm²
Wire connection cross-section, finely stranded with wire-end ferrules and plastic collars DIN 46228/4, rated connection, max.	2.5 mm²	Wire connection cross-section, finely stranded, min.	0.5 mm²

Rating data

Rated cross-section	2.5 mm²	Rated voltage	800 V
Rated current	24 A	Current at maximum wires	31 A
Standards	IEC 60947-7-1	Volume resistance according to IEC 60947-7-x	1.33 mΩ
Rated impulse withstand voltage	8 kV	Pollution severity	3

UL rating data

Certificate No. (UR)	E60693	Conductor size Factory wiring max. (UR)	12 AWG
Conductor size Factory wiring min. (UR)	30 AWG	Conductor size Field wiring max. (UR)	12 AWG
Conductor size Field wiring min. (UR)	30 AWG	Current size C (UR)	25 A
Voltage size C (UR)	600 V		

Classifications

ETIM 3.0	EC000897	ETIM 4.0	EC000897
ETIM 5.0	EC000897	ETIM 6.0	EC000897
UNSPSC	30-21-18-11	eClass 5.1	27-14-11-20
eClass 6.2	27-14-11-20	eClass 7.1	27-14-11-20
eClass 8.1	27-14-11-20	eClass 9.0	27-14-11-20
eClass 9.1	27-14-11-20		

Product information

Descriptive text ordering data	Rated voltage is reduced to 400 V when using the cross-connector.

Z-series
ZDU 2.5

Weidmüller Interface GmbH & Co. KG
Klingenbergstraße 16
D-32758 Detmold
Germany
Fon: +49 5231 1429-0
Fax: +49 5231 14292083
www.weidmueller.com

Technical data

Approvals

Approvals	
ROHS	Conform

Downloads

Approval/Certificate/Document of Conformity	CFAT_ZDU 2.5.pdf DE_PT1101_20160418_1171_ISSUE01.pdf
Engineering Data	EPLAN, WSCAD, Zuken E3.S

Safety note

Safety notice	Safety Information

Z-series
ZDU 2.5

Weidmüller Interface GmbH & Co. KG
Klingenbergstraße 16
D-32758 Detmold
Germany
Fon: +49 5231 1429-0
Fax: +49 5231 14292083
www.weidmueller.com

Drawings

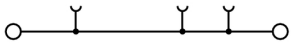

W-Series
WEW 35/2

Weidmüller Interface GmbH & Co. KG
Klingenbergstraße 16
D-32758 Detmold
Germany
Fon: +49 5231 1429-0
Fax: +49 5231 14292083
www.weidmueller.com



Klippon® Connect with clamping yoke Technology
The high reliability and variety of designs of the terminal blocks with clamping yoke connections make planning easer and optimises operational safety. Klippon® Connect provides a proven response to a range of different requirements.

General ordering data

Type	WEW 35/2
Order No.	1061200000
Version	W-Series, End bracket
GTIN (EAN)	4008190030230
Qty.	100 pc(s).

W-Series
WEW 35/2

Weidmüller Interface GmbH & Co. KG
Klingenbergstraße 16
D-32758 Detmold
Germany
Fon: +49 5231 1429-0
Fax: +49 5231 14292083
www.weidmueller.com

Technical data

Dimensions and weights

Width	8 mm	Width (inches)	0.315 inch
Height	56 mm	Height (inches)	2.205 inch
Depth	46.5 mm	Depth (inches)	1.831 inch
Net weight	14.26 g		

Temperatures

Continuous operating temp., min.	-50 °C	Continuous operating temp., max.	100 °C

Material data

Material	PA 66 GF 30	Colour	Dark Beige
UL 94 flammability rating	HB		

System specifications

Version	For the terminals	Mounting rail	TS 35

Additional technical data

Installation advice	Direct mounting	Interlock	for screw fixing
Snap-on	No	Type of mounting	Screwed
With snap-in pegs	No		

Conductors for clamping (rated connection)

Tightening torque, max.	1 Nm	Tightening torque, min.	0.5 Nm

Dimensions

TS 35 offset	28 mm

Classifications

ETIM 3.0	EC001041	ETIM 4.0	EC001041
ETIM 5.0	EC001041	ETIM 6.0	EC001041
UNSPSC	30-21-18-01	eClass 5.1	27-08-10-03
eClass 6.2	27-08-10-03	eClass 7.1	27-08-10-03
eClass 8.1	27-14-11-35	eClass 9.0	27-14-11-35
eClass 9.1	27-14-11-35		

Product information

Descriptive text ordering data	For busbar cross-section 10 x 3, 6 x 6

Approvals

ROHS	Conform

Downloads

Engineering Data	EPLAN, WSCAD, Zuken E3.S

Features

- 2-channel isolated barrier
- 24 V DC supply (Power Rail)
- Input 2-wire SMART transmitters
- Output 0/4 mA ... 20 mA
- Terminals with test points
- Up to SIL2 acc. to IEC 61508

Function

This isolated barrier is used for intrinsic safety applications.

The device supplies 2-wire SMART transmitters in a hazardous area.

It transfers the analog input signal to the safe area as an isolated current value.

Digital signals may be superimposed on the input signal in the hazardous or safe area and are transferred bi-directionally.

If the HART communication resistance in the loop is too low, the internal resistance of 250 Ω between terminals 8, 9 and 11, 12 can be used.

Test sockets for the connection of HART communicators are integrated into the terminals of the device.

Application

The device supports the following SMART protocols:

- HART
- BRAIN
- Foxboro

Assembly

Front view

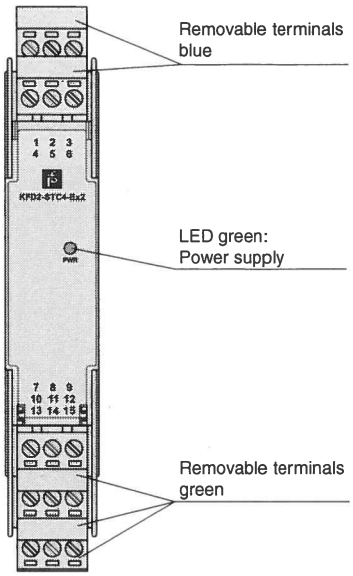

CE Ex SIL2

Connection

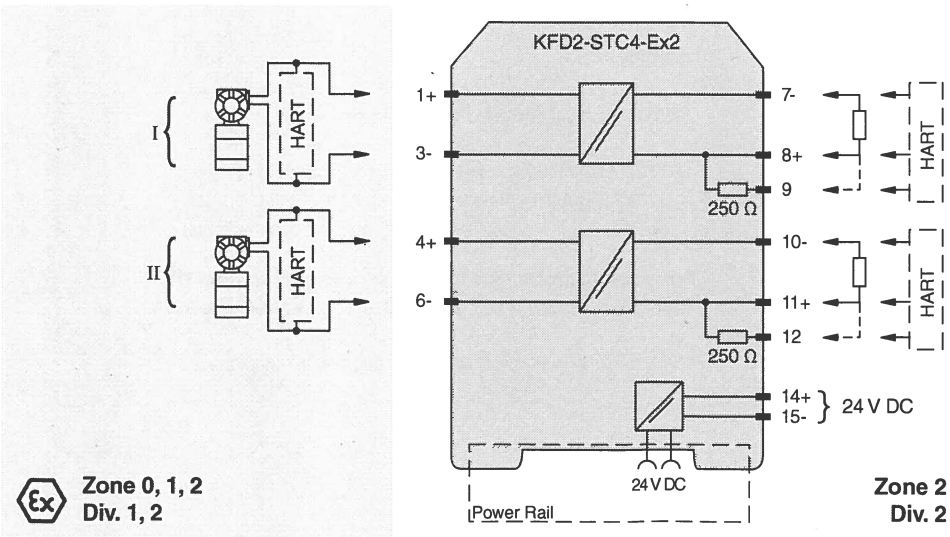

Release date 2010-10-29 09:53 Date of issue 2010-10-29 132952_ENG.xml

Subject to reasonable modifications due to technical advances. Copyright Pepperl+Fuchs, Printed in Germany

General specifications		
Signal type		Analog input
Supply		
Connection		Power Rail or terminals 14+, 15-
Rated voltage		20 ... 35 V DC
Ripple		within the supply tolerance
Power loss		1.9 W
Power consumption		≤ 2.8 W
Input		
Connection		terminals 1+, 3-; 4+, 6-
Input signal		0/4 ... 20 mA
Available voltage		≥ 16 V at 20 mA, terminals 1+, 3
Output		
Connection		terminals 7-, 8+; 10-, 11+
Load		0 ... 550 Ω
Output signal		0/4 ... 20 mA (overload > 25 mA)
Ripple		≤ 50 µA $_{rms}$
Transfer characteristics		
Deviation		at 20 °C (68 °F), 0/4 ... 20 mA ≤ 10 µA incl. calibration, linearity, hysteresis, loads and fluctuations of supply voltage
Influence of ambient temperature		0.25 µA/K
Frequency range		hazardous area into the safe area: band width with 1 V_{pp} signal 0 ... 7.5 kHz (-3 dB) safe area to hazardous area: band width with 1 V_{SS} signal 0.3 ... 7.5 kHz (-3 dB)
Rise time		20 µs
Start-up time		200 µs
De-energized delay		20 µs
Electrical isolation		
Output/power supply		functional insulation, rated insulation voltage 50 V AC
Output/Output		functional insulation, rated insulation voltage 50 V AC
Directive conformity		
Electromagnetic compatibility		
Directive 2004/108/EC		EN 61326-1:2006
Conformity		
Electromagnetic compatibility		NE 21
Protection degree		IEC 60529
Ambient conditions		
Ambient temperature		-20 ... 60 °C (-4 ... 140 °F)
Mechanical specifications		
Protection degree		IP20
Mass		approx. 150 g
Dimensions		20 x 124 x 115 mm (0.8 x 4.9 x 4.5 in) , housing type B2
Data for application in connection with Ex-areas		
EC-Type Examination Certificate		BAS 99 ATEX 7025 , for additional certificates see www.pepperl-fuchs.com
Group, category, type of protection		⟨Ex⟩ II (1)GD [EEx ia] IIC (-20 °C ≤ T_{amb} ≤ 60 °C) [circuit(s) in zone 0/1/2]
Input		EEx ia IIC
Voltage	U_o	25.2 V
Current	I_o	93 mA
Power	P_o	0.586 W
Supply		
Maximum safe voltage U_m		250 V (Attention! The rated voltage can be lower.)
Type of protection [EEx ia]		
Statement of conformity		TÜV 99 ATEX 1499 X , observe statement of conformity
Group, category, type of protection, temperature classification		⟨Ex⟩ II 3G Ex nA II T4 [device in zone 2]
Electrical isolation		
Input/Output		safe galvanic isolation acc. to EN 50020, voltage peak value 375 V
Input/power supply		safe galvanic isolation acc. to EN 50020, voltage peak value 375 V
Directive conformity		
Directive 94/9/EC		EN 50014, EN 50020, EN 50021, EN 60079-0, EN 60079-15
International approvals		
UL approval		
Control drawing		116-0173 (cULus)
General information		

Release date 2010-10-29 09:53 Date of issue 2010-10-29 132952_ENG.xml

Subject to reasonable modifications due to technical advances. Copyright Pepperl+Fuchs, Printed in Germany

Supplementary information	EC-Type Examination Certificate, Statement of Conformity, Declaration of Conformity, Attestation of Conformity and instructions have to be observed where applicable. For information see www.pepperl-fuchs.com.

Accessories

Power feed module KFD2-EB2

The power feed module is used to supply the devices with 24 V DC via the Power Rail. The fuse-protected power feed module can supply up to 100 individual devices depending on the power consumption of the devices. A galvanically isolated mechanical contact uses the Power Rail to transmit collective error messages.

Power Rail UPR-03

The Power Rail UPR-03 is a complete unit consisting of the electrical inset and an aluminium profile rail 35 mm x 15 mm. To make electrical contact, the devices are simply engaged.

Profile Rail K-DUCT with Power Rail

The profile rail K-DUCT is an aluminum profile rail with Power Rail insert and two integral cable ducts for system and field cables. Due to this assembly no additional cable guides are necessary.



Attention

Power Rail and Profile Rail must not be fed via the device terminals of the individual devices!

Release date 2010-10-29 09:53 Date of issue 2010-10-29 132952_ENG.xml

Copyright Pepperl+Fuchs, Printed in Germany

Technical data sheet ·

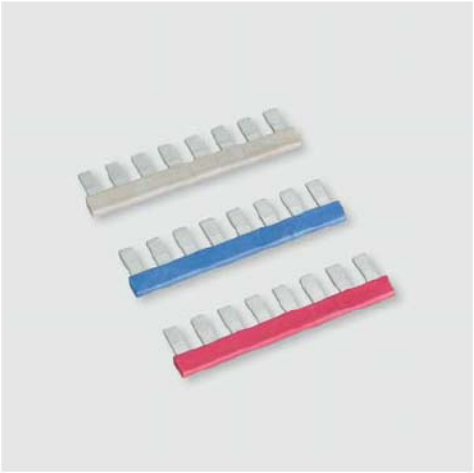

Jumper comb

Identification	Type	BK 7-2824 bl 8-polig
	Part-No.	762824

Description	
	blue

Technical data	
Rated current	DC 6 A
Pole number	8

General	
Connection device	plug-in
Contact design	Flat contact 0.5 mm Ribbing on the sides
Pin spacing	6.2 mm
Contact material	CuZn
Material	Vectra C 1330
Color	blue
Flamability according to UL 94	V0
Operation temperature range	-40 °C … +80 °C
Storage temperature range	-40 °C … +80 °C
Weight	0.0030 kg/piece
PU	10

USA: LUTZE INC.
13330 South Ridge Drive • Charlotte, NC 28273, USA
Tel. +1 (704) 504-0222 • Fax +1 (704) 504-0223
www.lutze.com • info@lutze.com

United Kingdom: LÜTZE Ltd.
Unit 3, Sandy Hill Park
Sandy Way, Amington • GB-Tamworth, Staffs B77 4DU
Tel. +44 (0)1827 31333-0 • Fax +44 (0)1827 31333-2
www.lutze.com • sales.gb@lutze.co.uk

LUTZE SYSTEMATIC TECHNOLOGY

Technical data sheet · Interface Technology



LCIS Relay Module

Identification	Type	LCIS-RS24DC-PI-1U
	Part-No.	761020.1000

Description	
	Output Relay Interface, relay with 1 directional contact, pluggable AC/DC 250 V, 6 A, 1500 VA

Input	
Rated voltage U_N	DC 24 V
Input voltage range	19.2 – 30 V
Rated current I_N	11 mA
Interrupting voltage	<1.7 V
Protection device	Reverse diode
Max. length of connecting lead	DC: 1000 m / AC: 500 m
Status display input	LED green
Interrupting voltage	<1.7 V

Output	
Contact type	1 changeover contacts
Switching element	Relays
Min. switching voltage	AC/DC 17 V
Max. switching voltage	AC/DC 250 V
Min. switching current	AC/DC 5 mA

USA: LUTZE INC.
13330 South Ridge Drive • Charlotte, NC 28273, USA
Tel. +1 (704) 504-0222 • Fax +1 (704) 504-0223
www.lutze.com • info@lutze.com

United Kingdom: LÜTZE Ltd.
Unit 3, Sandy Hill Park
Sandy Way, Amington • GB-Tamworth, Staffs B77 4DU
Tel. +44 (0)1827 31333-0 • Fax +44 (0)1827 31333-2
www.lutze.com • sales.gb@lutze.co.uk

LUTZE SYSTEMATIC TECHNOLOGY

Technical data sheet · Interface Technology

Max. switching current	AC/DC 6 A
Switching capacity DC 13	1 A @ 24 V 200 mA @ 125 V 100 mA @ 250 V
Switching capacity AC 15	3 A
Max. switching capacity	1500 VA, 30 W
Contact material	$AgSnO_2$
Mechanical service life	> 5 x 10^7 operations
Switch-on delay	6 ms
Shutdown delay	13 ms
Clearance/creep. dist. (control/load side)	>5.5 mm
Protection device	none

General	
Housing material	PA 6.6 (UL 94 V-0)
Colour of the housing	RAL 7012 basalt grey
Protection class	IP20
Mounting	Can be snapped onto hat profile TS35 (EN 60715)
Installation position	any
Insulation voltage input / output	AC 4.0 kV_{eff}
Safe isolation	ja
Operation temperature range	-25 °C … +60 °C
Storage temperature range	-40 °C … +80 °C
Dimensions (w × h × d)	6.2 × 90.0 × 76.0 × mm
Weight	0.035 kg/piece
Connection device	Push-In single wire 0.25 mm^2–2.5 mm^2 / AWG 20–14 fine stranded wire with ferrule 0.25 mm^2–1.5 mm^2 / AWG 20–16
Standards	EN 60947-5-1
Approvals	cULus GL

USA: LUTZE INC.
13330 South Ridge Drive • Charlotte, NC 28273, USA
Tel. +1 (704) 504-0222 • Fax +1 (704) 504-0223
www.lutze.com • info@lutze.com

United Kingdom: LÜTZE Ltd.
Unit 3, Sandy Hill Park
Sandy Way, Amington • GB-Tamworth, Staffs B77 4DU
Tel. +44 (0)1827 31333-0 • Fax +44 (0)1827 31333-2
www.lutze.com • sales.gb@lutze.co.uk

SYSTEMATIC TECHNOLOGY

Technical data sheet · Interface Technology

Dimensions

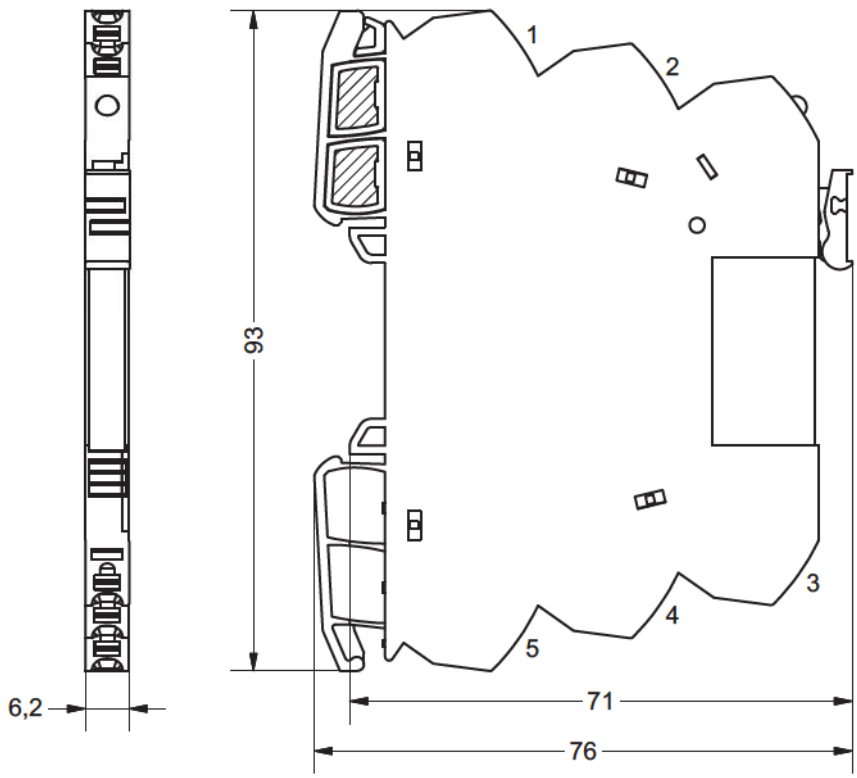

PIN assignment

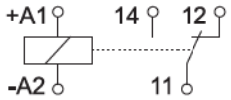

USA: LUTZE INC.
13330 South Ridge Drive • Charlotte, NC 28273, USA
Tel. +1 (704) 504-0222 • Fax +1 (704) 504-0223
www.lutze.com • info@lutze.com

United Kingdom: LÜTZE Ltd.
Unit 3, Sandy Hill Park
Sandy Way, Amington • GB-Tamworth, Staffs B77 4DU
Tel. +44 (0)1827 31333-0 • Fax +44 (0)1827 31333-2
www.lutze.com • sales.gb@lutze.co.uk

LUTZE SYSTEMATIC TECHNOLOGY

Three-phase Phase-sequence Phase-loss Relay
K8AB-PM

Ideal for monitoring 3-phase power supplies for industrial facilities and equipment.

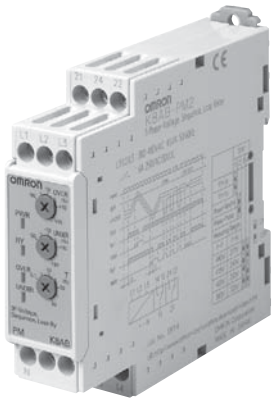

- Monitor overvoltages, undervoltages, phase sequence, and phase loss for three-phase 3-wire or 4-wire power supplies with just one Unit.
  Switch setting for 3-phase 3-wire or 3-phase 4-wire power supply.
- Two SPDT output relays, 6 A at 250 VAC (resistive load).
  Separate outputs possible for overvoltages and undervoltages.
- World-wide power specifications supported by one Unit (switchable).
- Relay warning status easily monitoring using LED indicator.
- Easy wiring with ferrules
  2×2.5 mm^2 solid or 2×1.5 mm^2 standard ferrules.
- CE mark compliance certified by third party.
  UL certification pending.

Model Number Structure

■ Model Number Legend

K8AB-□□
1 2 3

1. Basic Model
K8AB: Measuring and Monitoring Relays

2. Functions
PM: Three-phase Phase-sequence Phase-loss Relay (Simultaneous upper and lower monitoring)

3. Rated Input Voltage
1: 115, 127, 133, 138, 200, 220, 230, 240 VAC
2: 220, 230, 240, 277, 380, 400, 415, 480 VAC

Ordering Information

■ List of Models

Three-phase Phase-sequence Phase-loss Relay	Rated input (See note 2.)		Model
	3-phase 3-wire mode	200, 220, 230, 240 VAC	**K8AB-PM1**
	3-phase 4-wire mode	115, 127, 133, 138 VAC	
	3-phase 3-wire mode	380, 400, 415, 480 VAC	**K8AB-PM2**
	3-phase 4-wire mode	220, 230, 240, 277 VAC	

Note: 1. Three-phase 3-wire or 4-wire and the input range are switched using a switch.
2. The power supply is shared with the rated input voltage.

Ratings and Specifications

■ Ratings

Rated input voltage	**K8AB-PM1**	Three-phase, three-wire mode: 200, 220, 230, 240 VAC Three-phase, four-wire mode: 115, 127, 133, 138 VAC
	K8AB-PM2	Three-phase, three-wire mode: 380, 400, 415, 480 VAC Three-phase, four-wire mode: 220, 230, 240, 277 VAC
Operation (overvoltage or undervoltage)	**Operating value setting range**	Overvoltage = –30% to 25% of maximum rated input voltage Undervoltage = –30% to 25% of maximum rated input voltage Note: The rated input voltage is switched with a switch.
	Operating value	100% operation at set value
Reset (HYS.)	**Hysteresis**	5% of operating value (fixed)
	Resetting method	Automatic reset
Operating time (T)	**Overvoltage/undervoltage**	0.1 to 30 s (Value when input rapidly changes from 0% to 120%.)
	Phase sequence, phase loss	0.1 max. (Value when input rapidly changes from 0% to 100%.)
Power ON lock (LOCK)		1 s or 5 s error ±0.5 s (Value when input rapidly changes from 0% to 100%. The operating time is the shortest at this point.)
Setting accuracy		±10% of full scale
Time error		±10% of set value (Minimum error: 50 ms)
Input frequency		45 to 65 Hz
Input impedance		100 kΩ min.
Indicators		Power (PWR): Green LED, Relay output (RY): Yellow LED, Alarm outputs (ALM1/2): Red LED
Output relays		Two SPDT relays (6 A at 250 VAC, resistive load), Normally closed operation (normally ON) (separate outputs possible for overvoltages and undervoltages)

■ Specifications

Ambient operating temperature		–20 to 60°C (with no condensation or icing)
Storage temperature		–40 to 70°C (with no condensation or icing)
Ambient operating humidity		25% to 85%
Storage humidity		25% to 85%
Altitude		2,000 m max.
Voltage fluctuation range		85% to 110% of rated input voltage
Input frequency		50/60 Hz ±5 Hz (AC power supply)
Output relays	**Resistive load**	6 A at 250 VAC (cos ϕ = 1) 6 A at 30 VDC (L/R = 0 ms)
	Inductive load	1 A at 250 VAC (cos ϕ = 0.4) 1 A at 30 VDC (L/R = 7 ms)
	Minimum load	10 mA at 5 VDC
	Maximum contact voltage	250 VAC
	Maximum contact current	6 A AC
	Maximum switching capacity	1,500 VA
	Mechanical life	10,000,000 operations
	Electrical life	Make: 50,000 times, Break: 30,000 times
Terminal screw tightening torque		1.2 N·m
Crimp terminals		Two solid wires of 2.5 mm^2, two crimp terminals of 1.5 mm^2 with insulation sleeves, can be tightened together
Insulation resistance		20 MΩ (at 500 V) between charged terminals and exposed uncharged parts 20 MΩ (at 500 V) between any charged terminals (i.e., between input, output, and power supply terminals)
Degree of protection		Terminal section: IP20, Rear case: IP40
Case color		Munsell 5Y8/1 (ivory)
Case material		ABS resin (self-extinguishing resin) UL94-V0
Weight		200 g
Mounting		Mounted to DIN Track or via M4 screws
Dimensions		22.5 (W) x 90 (H) x 100 (D) mm
Installation environment		Overvoltage Category III, Pollution Degree 2
Application standards		EN60255-5/-6
Safety standards		EN60664-1
EMC		EMI: EN61326 Industrial applications Electromagnetic interference wave CISPR11 Group 1, Class A: CISPR16-1/-2 Terminal interference wave voltage CISPR11 Group 1, Class A: CISPR16-1/-2 EMS: EN61326 Industrial applications Electrostatic discharge EN61000-4-2: 8 kV (in air) Radiating radio-frequency electromagnetic field EN61000-4-3: 10 V/m 1 kHz sine wave amplitude modulation (80 MHz to 1 GHz) Burst EN61000-4-4: 1 kV (I/O signal line), 2 kV (power line) Surge EN61000-4-5: 1 kV with line (power line), 2 kV with ground (power line) Conducted RF EN61000-4-6: 3 V (0.15 to 80 MHz) Power frequency magnetic field immunity EN61000-4-8: 30 A/m Voltage dip/short interruptions EN61000-4-11: 0.5 cycle, 0.180° each, polarity 100% (rated voltage)

Connections

■ Wiring Diagram

Overvoltage/Undervoltage and Phase Sequence/Phase Loss Operation Diagram

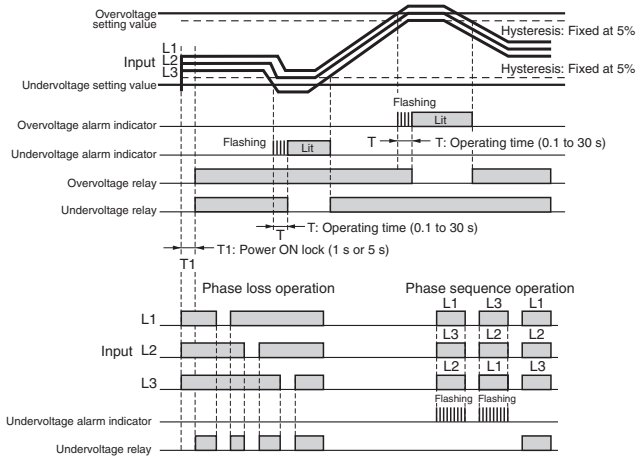

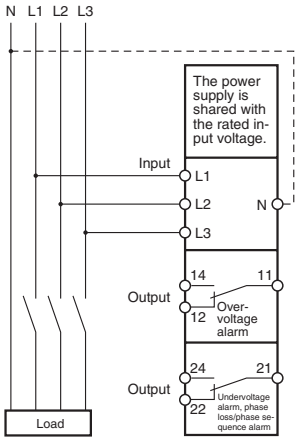

Note: 1. The K8AB-PM output relay is normally operative.

2. The power ON lock prevents unnecessary alarms from being generated during the instable period when the power is first turned on. There is no relay output during timer operation.

Nomenclature

■ Front

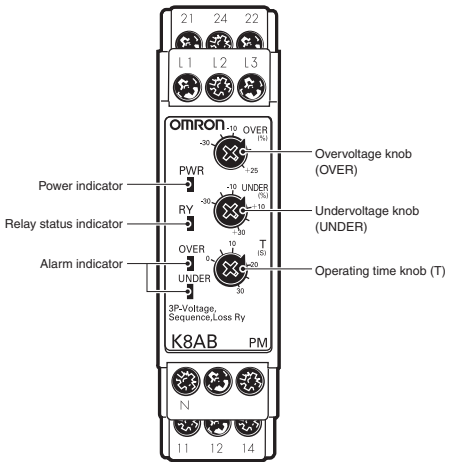

Indicators

Item		Meaning
Power indicator (PWR: Green)		Lit when power is being supplied.
Relay status indicator (RY: Yellow)		Lit when relay is operating (normally lit).
Alarm indicator (ALM: Red)	Overvoltage: Red	Lit for overvoltage. The indicator flashes to indicate the error status after the overvoltage has exceeded the threshold value while the operating time is being clocked.
	Undervoltage: Red	• Lit for an undervoltage or phase loss. The indicator flashes to indicate the error status after the undervoltage has exceeded the threshold value while the operating time is being clocked. • Lit for phase sequence error.

Setting Knobs

Item	Usage
Overvoltage knob (OVER)	Used to set the voltage to –30% to 25% of the rated input voltage.
Undervoltage knob (UNDER)	Used to set the voltage to –30% to 25% of the rated input voltage.
Operating time knob (T)	Used to set the operating time to 0.1 to 30 s.

■ Function Selection DIP Switch

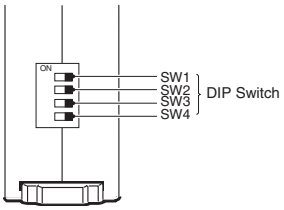

DIP Switch Functions

	Function			Default
SW1	Power ON lock time	OFF	1 s	OFF
		ON	5 s	
SW2	Monitoring mode selector	OFF	3-phase 3-wire power monitoring mode	OFF
		ON	3-phase 4-wire power monitoring mode	

SW3	SW4	Function	3-phase 3-wire mode	3-phase 4-wire mode	Default SW3	Default SW4
OFF	OFF	Rated input voltage switch (K8AB-PM1)	200 VAC	115 VAC	OFF	OFF
ON	OFF		220 VAC	127 VAC		
OFF	ON		230 VAC	133 VAC		
ON	ON		240 VAC	138 VAC		
OFF	OFF	Rated input voltage switch (K8AB-PM2)	380 VAC	220 VAC	OFF	OFF
ON	OFF		400 VAC	230 VAC		
OFF	ON		415 VAC	240 VAC		
ON	ON		480 VAC	277 VAC		

Dimensions

K8AB-PM



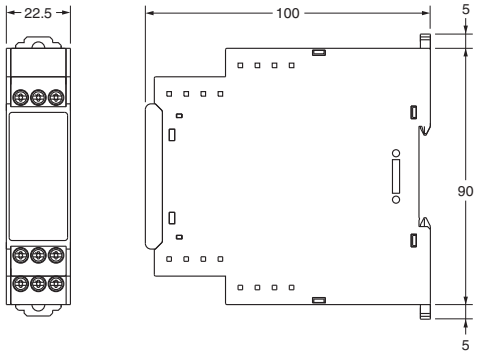

Panduct® Type G Wide Slot Wiring Duct

- Wide slot/finger design provides greater sidewall rigidity and can be used with a wide range of wire bundle sizes
- Material: Lead-free PVC
- UL recognized continuous use temperature: 122°F (50°C)
- UL 94 flammability rating of V-0
- Conforms with NFPA 79-2007 section 13.3.1 requirement for flame retardant material
- Provided with mounting holes
- Base and cover length is 6 feet

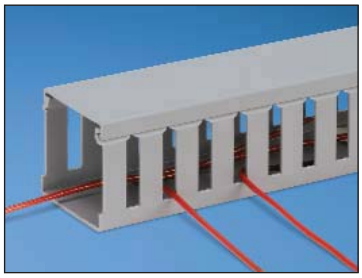

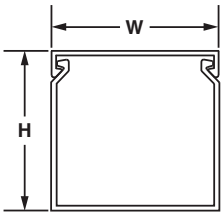

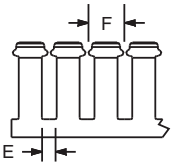

	E	F
For .5" duct height:	0.37" [9.4]	0.80" [20.3]
0.75" to 2" duct height:	0.31" [7.9]	0.80" [20.3]
3" to 4" duct height:	0.31" [7.9]	1.00" [25.4]
5" duct height:	0.38" [9.4]	1.33" [33.8]

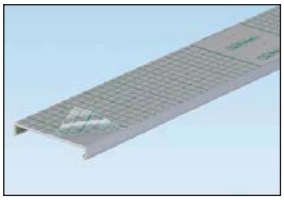

To order cover with protective film add "-F" to part number. 6" cover not available with film.

Base Part Number	Duct Size (W x H)* In.	Duct Size (W x H)* mm	Slot Width In.	Slot Width mm	Cover Part Number	Std. Pkg. Qty.	Base Ctn. Qty.	Cover Ctn. Qty.
G.5X.5LG6	0.69 x 0.60	17.5 x 15.2	0.38	9.7	C.5LG6	6	120	120
G.5X1LG6	0.69 x 1.06	17.5 x 26.9	0.31	7.9	C.5LG6	6	120	120
G.5X2LG6	0.69 x 2.03	17.5 x 51.6	0.31	7.9	C.5LG6	6	120	120
G.75X.75LG6	0.93 x 0.82	23.6 x 20.8	0.31	7.9	C.75LG6	6	120	120
G.75X1LG6	0.93 x 1.06	23.6 x 26.9	0.31	7.9	C.75LG6	6	120	120
G.75X1.5LG6	0.93 x 1.57	23.6 x 39.9	0.31	7.9	C.75LG6	6	120	120
G.75X2LG6	0.93 x 2.03	23.6 x 51.7	0.31	7.9	C.75LG6	6	120	120
G1X1LG6	1.26 x 1.12	32.0 x 28.4	0.31	7.9	C1LG6	6	120	120
G1X1.5LG6	1.26 x 1.62	32.0 x 41.1	0.31	7.9	C1LG6	6	120	120
G1X2LG6	1.26 x 2.12	32.0 x 53.8	0.31	7.9	C1LG6	6	120	120
G1X3LG6	1.26 x 3.12	32.0 x 79.2	0.31	7.9	C1LG6	6	120	120
G1X4LG6	1.26 x 4.10	32.0 x 104.1	0.31	7.9	C1LG6	6	60	120
G1.5X1LG6	1.75 x 1.12	44.5 x 28.4	0.31	7.9	C1.5LG6	6	120	120
G1.5X1.5LG6	1.75 x 1.62	44.5 x 41.1	0.31	7.9	C1.5LG6	6	120	120
G1.5X2LG6	1.75 x 2.12	44.5 x 53.8	0.31	7.9	C1.5LG6	6	120	120
G1.5X3LG6	1.75 x 3.12	44.5 x 79.2	0.31	7.9	C1.5LG6	6	120	120
G1.5X4LG6	1.75 x 4.10	44.5 x 104.1	0.31	7.9	C1.5LG6	6	60	120
G2X1LG6	2.25 x 1.12	57.2 x 28.4	0.31	7.9	C2LG6	6	120	120
G2X1.5LG6	2.25 x 1.62	57.2 x 41.1	0.31	7.9	C2LG6	6	120	120
G2X2LG6	2.25 x 2.12	57.2 x 53.8	0.31	7.9	C2LG6	6	120	120
G2X3LG6	2.25 x 3.12	57.2 x 79.2	0.31	7.9	C2LG6	6	60	120
G2X4LG6	2.25 x 4.10	57.2 x 104.1	0.31	7.9	C2LG6	6	60	120
G2X5LG6	2.25 x 5.10	57.2 x 129.5	0.38	9.7	C2LG6	6	60	120
G2.5X3LG6	2.75 x 3.12	69.9 x 79.2	0.31	7.9	C2.5LG6	6	120	120
G3X1LG6	3.25 x 1.12	82.6 x 28.4	0.31	7.9	C3LG6	6	120	120
G3X2LG6	3.25 x 2.12	82.6 x 53.8	0.31	7.9	C3LG6	6	120	120
G3X3LG6	3.25 x 3.12	82.6 x 79.2	0.31	7.9	C3LG6	6	60	120
G3X4LG6	3.25 x 4.10	82.6 x 104.1	0.31	7.9	C3LG6	6	60	120
G3X5LG6	3.25 x 5.10	82.6 x 129.5	0.38	9.7	C3LG6	6	60	120
G4X1.5LG6	4.25 x 1.62	108.0 x 41.1	0.31	7.9	C4LG6	6	120	120
G4X2LG6	4.25 x 2.12	108.0 x 53.8	0.31	7.9	C4LG6	6	60	120
G4X3LG6	4.25 x 3.12	108.0 x 79.2	0.31	7.9	C4LG6	6	60	120
G4X4LG6	4.25 x 4.10	108.0 x 104.1	0.31	7.9	C4LG6	6	60	120
G4X5LG6	4.25 x 5.10	108.0 x 129.5	0.38	9.7	C4LG6	6	60	120
G6X4LG6	6.25 x 4.15	158.8 x 105.4	0.31	7.9	C6LG6	6	60	120

Part number shown for LG (Light Gray). For other color availability see color selection guide, page C1.48.
Base and cover sold separately.
*"H" dimension includes duct and cover.

Safety relays - PSR-SPP- 24UC/ESAM4/3X1/1X2/B - 2900510

Please be informed that the data shown in this PDF Document is generated from our Online Catalog. Please find the complete data in the user's documentation. Our General Terms of Use for Downloads are valid (http://phoenixcontact.com/download)



The figure shows a version with a screw connection

Safety relay for emergency stop and safety door monitoring up to SIL 3 or Cat. 4, PL e according to EN ISO 13849, single or two-channel operation, 3 enabling current paths, nominal input voltage of 24 V AC/DC, plug-in spring-cage terminal block

Why buy this product

- Up to Cat.4/PL e according to EN ISO 13849-1, SILCL 3 according to EN 62061, SIL 3 according to IEC 61508
- Manually monitored and automatic activation in a single device
- Basic insulation
- Single and two-channel control
- 3 enabling current paths, 1 signaling current path

Key Commercial Data

Packing unit	1 STK
Weight per Piece (excluding packing)	137.480 g
Custom tariff number	85364100
Country of origin	Germany

Technical data

Note

Utilization restriction	EMC: class A product, see manufacturer's declaration in the download area

Dimensions

Width	22.5 mm
Height	112 mm
Depth	114.5 mm

Ambient conditions

Ambient temperature (operation)	-20 °C ... 55 °C
Ambient temperature (storage/transport)	-40 °C ... 70 °C

Safety relays - PSR-SPP- 24UC/ESAM4/3X1/1X2/B - 2900510

Technical data

Ambient conditions

Max. permissible relative humidity (operation)	75 % (on average, 85% infrequently, non-condensing)
Max. permissible humidity (storage/transport)	75 % (on average, 85% infrequently, non-condensing)
Shock	15g
Vibration (operation)	10 Hz ...150 Hz, 2g
Maximum altitude	≤ 2000 m (Above sea level)

Input data

Nominal input voltage U_N	24 V AC/DC
Input voltage range in reference to U_N	0.85 ... 1.1
Typical input current at U_N	140 mA AC
	65 mA DC
Voltage at input/start and feedback circuit	approx. 24 V DC
Typical response time	20 ms (man. start)
Typical release time	45 ms (single-channel)
	10 ms (two-channel)
Concurrence input 1/2	∞
Recovery time	1 s
Status display	Green LED
Max. permissible overall conductor resistance	approx. 50 Ω (Input and start circuits at U_N)

Output data

Contact type	3 enabling current paths
	1 signaling current path
Contact material	$AgSnO_2$, + 0.2 µm Au
Minimum switching voltage	10 V AC/DC
Maximum switching voltage	250 V AC/DC
Limiting continuous current	6 A (N/O contact)
	5 A (N/C contact)
Inrush current, minimum	10 mA
Maximum inrush current	6 A
Sq. Total current	72 A^2 ($I_{TH}^2 = I_1^2 + I_2^2 + I_3^2$)
Interrupting rating (ohmic load) max.	144 W (24 V DC, τ = 0 ms)
	288 W (48 V DC, τ = 0 ms)
	77 W (110 V DC, τ = 0 ms)
	88 W (220 V DC, τ = 0 ms)
	1500 VA (250 V AC, τ = 0 ms)
Maximum interrupting rating (inductive load)	48 W (24 V DC, τ = 40 ms)
	40 W (48 V DC, τ = 40 ms)
	35 W (110 V DC, τ = 40 ms)
	33 W (220 V DC, τ = 40 ms)
Switching capacity min.	100 mW

Safety relays - PSR-SPP- 24UC/ESAM4/3X1/1X2/B - 2900510

Technical data

Output data

Output fuse	10 A gL/gG NEOZED (N/O contact)
	6 A gL/gG NEOZED (N/C contact)

General

Relay type	Electromechanical relay with forcibly guided contacts in accordance with EN 50205
Mechanical service life	Approx. 10^7 cycles
Nominal operating mode	100% operating factor
Net weight	137.48 g
Mounting type	DIN rail mounting
Mounting position	any
Degree of protection	IP54
	IP20
Min. degree of protection of inst. location	IP54
Housing color	yellow

Connection data

Connection method	Spring-cage connection
pluggable	Yes
Conductor cross section solid min.	0.2 mm²
Conductor cross section solid max.	1.5 mm²
Conductor cross section flexible min.	0.2 mm²
Conductor cross section flexible max.	1.5 mm²
Conductor cross section AWG min.	24
Conductor cross section AWG max.	16
Stripping length	8 mm

Safety-related characteristic data

Stop category	0
Designation	IEC 61508 - High demand
Safety Integrity Level (SIL)	3
Designation	IEC 61508 - Low demand
Safety Integrity Level (SIL)	3
Designation	EN ISO 13849
Performance level (PL)	e
Category	4
Designation	EN 62061
Safety Integrity Level Claim Limit (SIL CL)	3
Designation	EN 50156
Safety Integrity Level (SIL)	3

Standards and Regulations

Shock	15g

Safety relays - PSR-SPP- 24UC/ESAM4/3X1/1X2/B - 2900510

Technical data

Standards and Regulations

Designation	Air clearances and creepage distances between the power circuits
Standards/regulations	DIN EN 50178/VDE 0160
Rated insulation voltage	250 V
Rated surge voltage/insulation	4 kV / Basic isolation, (safe isolation, reinforced insulation and 6 kV between input circuit and enabling current paths.)
Degree of pollution	2
Overvoltage category	III
Vibration (operation)	10 Hz ...150 Hz, 2g

Environmental Product Compliance

China RoHS	Environmentally friendly use period: unlimited = EFUP-e
	No hazardous substances above threshold values

Drawings

Circuit diagram

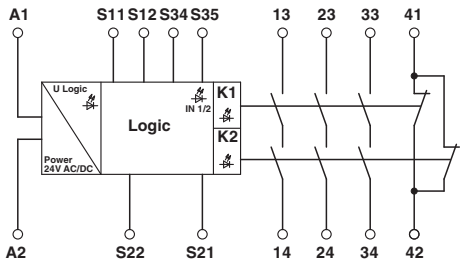

Safety relays - PSR-SPP- 24UC/ESAM4/3X1/1X2/B - 2900510

Circuit diagram

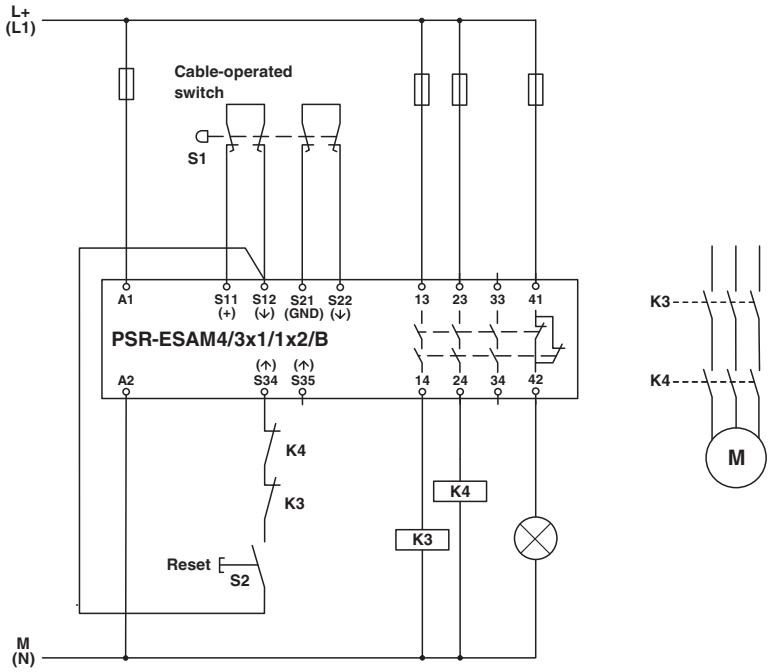

Cable-operated switch

Circuit diagram

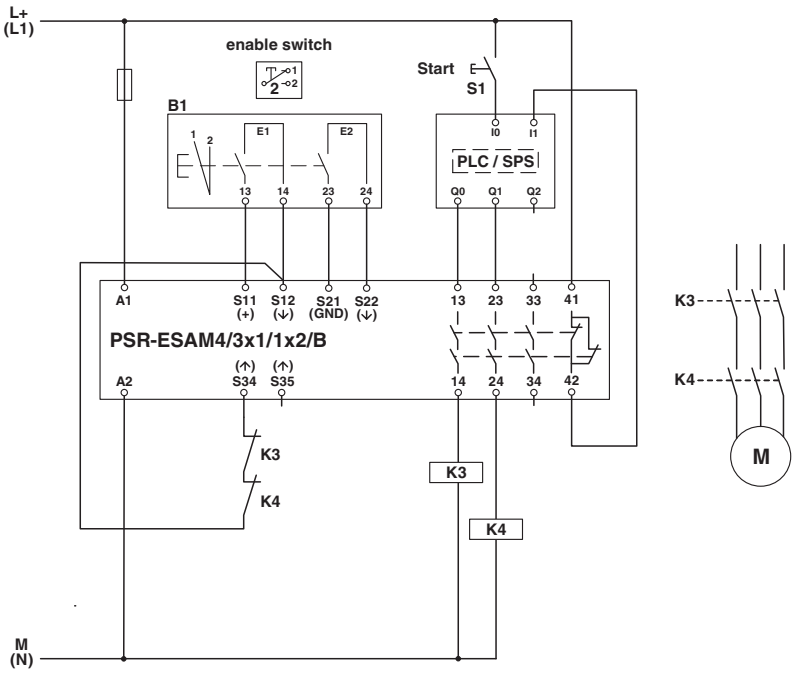

2-stage enable switch

Hybrid motor starter - ELR H3-I-SC- 24DC/500AC-0,6 - 2900542

Please be informed that the data shown in this PDF Document is generated from our Online Catalog. Please find the complete data in the user's documentation. Our General Terms of Use for Downloads are valid (http://phoenixcontact.com/download)



The figure shows the 9 A version

Hybrid motor starter for starting 3~ AC motors up to 500 V AC and 0.6 A output current, with 24 V DC control voltage, adjustable overload shutdown, and screw connection.

Why buy this product

- 22.5 mm wide
- Low-wear switching
- Space saving
- Reduction in wiring
- Long service life
- Adjustable current for bimetal function
- 3-phase loop bridges

RoHS



Key Commercial Data

Packing unit	1 STK
Weight per Piece (excluding packing)	217.180 g
Custom tariff number	85365040
Country of origin	Germany

Technical data

Device supply

Rated control circuit supply voltage U_S	24 V DC
Control supply voltage range	19.2 V DC ... 30 V DC
Rated control supply current I_S	40 mA
Type of protection	Surge protection
	Reverse polarity protection

Input data

Input name	Control input
Rated actuating voltage U_C	24 V DC
Triggering voltage range	19.2 V DC ... 30 V DC

Hybrid motor starter - ELR H3-I-SC- 24DC/500AC-0,6 - 2900542

Technical data

Input data

Rated actuating current I_C	5 mA (Input type 1)
Switching threshold	9.6 V (“0” signal)
	19.2 V (“1” signal)
Typical turn-off time	< 30 ms
Type of protection	Reverse polarity protection

Output data load output

Output name	AC output
Rated operating voltage U_e	500 V AC
Operating voltage range	42 V AC ... 550 V AC
Rated operating current I_e	0.6 A (AC-51)
	0.6 A (AC-53a)
Mains frequency	50/60 Hz
Load current range	75 mA ... 600 mA (see to derating)
Trigger characteristic in acc. with IEC 60947-4-2	Class 10A
Cooling time	20 min. (for auto reset)
Leakage current	0 mA
Type of protection	Surge protection

Output data reply output

Output name	Acknowledge output
Note	Confirmation: floating change-over contact, signal contact
Contact type	1 PDT
Switching capacity according to IEC 60947-5-1	3 A (230 V, AC15)
	2 A (24 V, DC13)

General

Switching frequency	≤ 2 Hz (Load-dependent)
Mounting position	vertical (horizontal DIN rail, motor output below)
Mounting type	DIN rail mounting
Assembly instructions	alignable, for spacing see derating
Operating mode	100% operating factor
Maximum power dissipation	2.5 W
Minimum power dissipation	0.88 W
Operating voltage display	Green LED
Status display	Yellow LED
Indication	Red LED

Connection data, input side

Connection name	Control circuits
Connection method	Screw connection
Stripping length	8 mm
Screw thread	M3

Hybrid motor starter - ELR H3-I-SC- 24DC/500AC-0,6 - 2900542

Technical data

Connection data, input side

Conductor cross section solid	0.2 mm² ... 2.5 mm²
Conductor cross section flexible	0.2 mm² ... 2.5 mm²
Conductor cross section AWG	24 ... 14
Torque	0.5 Nm ... 0.6 Nm

Connection data, output side

Connection name	Load circuit
Connection method	Screw connection
Stripping length	8 mm
Screw thread	M3
Conductor cross section solid	0.2 mm² ... 2.5 mm²
Conductor cross section flexible	0.2 mm² ... 2.5 mm²
Conductor cross section AWG	24 ... 14
Torque	0.5 Nm ... 0.6 Nm

Ambient conditions

Ambient temperature (operation)	-25 °C ... 70 °C (observe derating)
Ambient temperature (storage/transport)	-40 °C ... 80 °C
Degree of protection	IP20

Dimensions

Width	22.5 mm
Height	99 mm
Depth	114.5 mm

UL data

SCCR	100 kA (500 V AC (fuse: 30 A class CC/30 A class J (high fault)))
	5 kA (500 V AC (fuse: 20 A RK5 (standard fault)))
FLA	0.6 A (500 V AC)
Group installation	20 A (class RK5, SCCR 5kA, #24 - 14 AWG max. solid and stranded)
	30 A (class CC or J, SCCR 100kA, #24 - 14 AWG max, solid and stranded)
Category code	NLDX / NRNT

Insulation characteristics

Rated insulation voltage	500 V
Rated surge voltage	6 kV
Overvoltage category	III
Degree of pollution	2
Designation	Insulation characteristics between the control input and control supply voltage, and auxiliary circuit to the main circuit
Insulation	Safe isolation (IEC 60947-1) at operating voltage ≤ 300 V AC (e.g., 230/400 V AC, 277/480 V AC)
	Safe isolation (EN 50178) at operating voltage ≤ 300 V A (e.g., 230/400 V AC, 277/480 V AC)

Hybrid motor starter - ELR H3-I-SC- 24DC/500AC-0,6 - 2900542

Technical data

Insulation characteristics

	Basic isolation (IEC 60947-1) at operating voltage 300 ... 500 V AC
	Safe isolation (EN 50178) at operating voltage 300 ... 500 V AC
Designation	Isolation characteristics between the control input and control supply voltage to auxiliary circuit
Insulation	Safe isolation (IEC 60947-1) in the auxiliary circuit ≤ 300 V AC
	Safe isolation (EN 50178) in the auxiliary circuit ≤ 300 V AC

Standards and Regulations

Designation	Standards/regulations
Standards/regulations	IEC 60947-1
	IEC 60947-4-2
	IEC 61508
	ISO 13849

Approvals/conformities

UL certificate	NLDX.E228652

Environmental Product Compliance

China RoHS	Environmentally Friendly Use Period = 50
	For details about hazardous substances go to tab “Downloads”, Category “Manufacturer's declaration”

Drawings

Block diagram

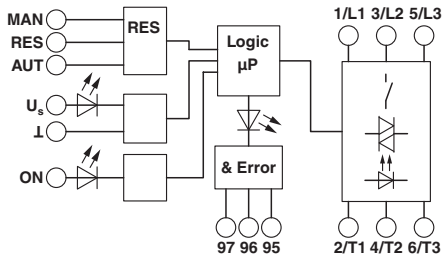

Diagram

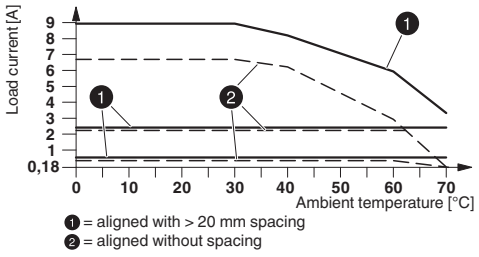

Derating diagram

Hybrid motor starter - ELR H3-I-SC- 24DC/500AC-0,6 - 2900542

Circuit diagram

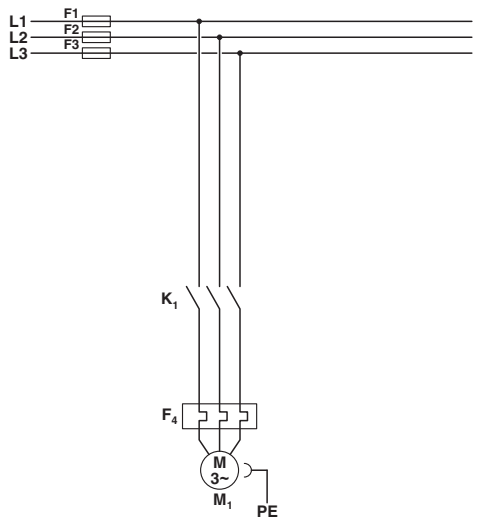

Conventional structure
Main current path reversing contactor
K1 = Right contactor
F4 = Motor protection relay

Circuit diagram

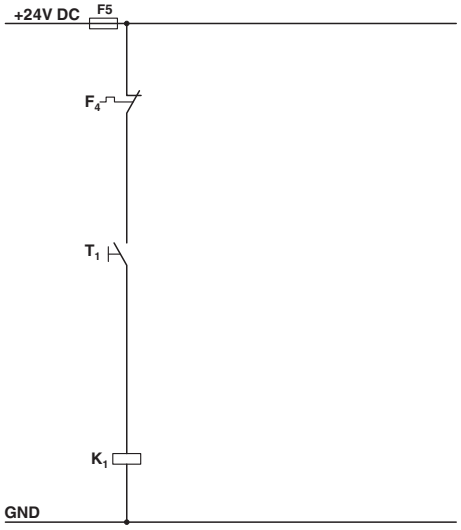

Conventional structure
Control current path contactor
K1 = Right contactor
T1 = Right
F4 = Motor protection relay

Circuit diagram

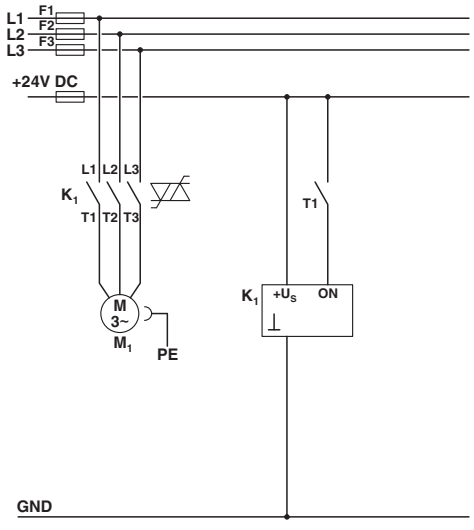

Structure with CONTACTRON
Main and control current path for '2 in 1' hybrid motor starter
K1 = '2 in 1' hybrid motor starter
T1 = Right

Energy storage - UPS-BAT/VRLA/ 24DC/ 3.4AH - 2320306

Please be informed that the data shown in this PDF Document is generated from our Online Catalog. Please find the complete data in the user's documentation. Our General Terms of Use for Downloads are valid (http://phoenixcontact.com/download)



Energy storage device, lead AGM, VRLA technology, 24 V DC, 3.4 Ah, tool-free battery replacement, automatic detection, and communication with QUINT UPS-IQ

Product Description

For continuous monitoring and intelligent management, there is constant communication with the QUINT UPS. Thanks to automatic detection of the energy storage, and tool-free switching during operation, quick installation is possible. The QUINT UPS with IQ technology energy storage leaves the warehouse fully charged.

Why buy this product

- Maximum buffer times
- Lead AGM (Absorbent Glass Mat) technology

Key Commercial Data

Packing unit	1 STK
Weight per Piece (excluding packing)	444.440 g
Custom tariff number	85072080
Country of origin	China

Technical data

Dimensions

Width	85 mm
Height	191 mm
Depth	110 mm

Ambient conditions

Degree of protection	IP20
Ambient temperature (operation)	0 °C ... 40 °C
Ambient temperature (storage/transport)	0 °C ... 40 °C
Max. permissible relative humidity (operation)	≤ 95 %

Input data

Nominal input voltage	24 V DC
Buffer period	4.5 min. (20 A)

Energy storage - UPS-BAT/VRLA/ 24DC/ 3.4AH - 2320306

Technical data

Input data

	3 min. (25 A)

Output data

Nominal output voltage	24 V DC
Output current I_{max}	25 A
Connection in parallel	5
Connection in series	No
Output fuse	1x 25 A

General

IQ technology	Yes
Disposal	Used batteries must not be thrown away with household waste, they should instead be disposed of in accordance with applicable national regulations. They can also be returned to Phoenix Contact or the manufacturer.
Net weight	3.3 kg
Memory medium	Lead rechargeable battery module
Protection class	III
Mounting position	horizontal DIN rail NS 35, EN 60715

Standards and Regulations

Shock	18 ms, 30g, in each space direction (according to IEC 60068-2-27)
Connection in acc. with standard	CUL
Standard - Electrical safety	EN 60950-1/VDE 0805 (SELV)
Standard – Electronic equipment for use in electrical power installations and their assembly into electrical power installations	EN 50178/VDE 0160 (PELV)
Shipbuilding approval	Germanischer Lloyd (EMC 2), ABS, DNV
UL approvals	UL/C-UL listed UL 508
	UL/C-UL Recognized UL 60950
	UL ANSI/ISA-12.12.01 Class I, Division 2, Groups A, B, C, D (Hazardous Location)
Vibration (operation)	< 15 Hz, amplitude ±2.5 mm, 15 - 150 Hz, 2.3g/2.3g according to IEC 60068-2-6
	15 Hz ... 150 Hz, 2.3g, 90 min.

Approvals

Approvals

Approvals

UL Recognized / UL Listed / cUL Recognized / cUL Listed / EAC / ABS / BV / DNV GL / PRS / LR / cULus Recognized / cULus Listed

Energy storage - UPS-BAT/VRLA/ 24DC/ 3.4AH - 2320306

Approvals

Ex Approvals

UL Listed / cUL Listed / cULus Listed

Approval details

UL Recognized	http://database.ul.com/cgi-bin/XYV/template/LISEXT/1FRAME/index.htm	FILE E 211944
UL Listed	http://database.ul.com/cgi-bin/XYV/template/LISEXT/1FRAME/index.htm	FILE E 123528
cUL Recognized	http://database.ul.com/cgi-bin/XYV/template/LISEXT/1FRAME/index.htm	FILE E 211944
cUL Listed	http://database.ul.com/cgi-bin/XYV/template/LISEXT/1FRAME/index.htm	FILE E 123528
EAC		EAC-Zulassung
ABS	http://www.eagle.org/eagleExternalPortalWEB/	15-GD1438179-PDA
BV	http://www.veristar.com/portal/veristarinfo/generalinfo/approved/approvedProducts/equipmentAndMaterials	41516/A0 BV
DNV GL	http://exchange.dnv.com/tari/	61457-13 HH

mm²/AWG/kcmil	6
Nominal current IN	41 A
Nominal voltage UN	500 V

PRS	http://www.prs.pl/	TE/2103/880590/16

Energy storage - UPS-BAT/VRLA/ 24DC/ 3.4AH - 2320306

Approvals

LR	Lloyd's Register	http://www.lr.org/en	17/20032

cULus Recognized	c UL us	http://database.ul.com/cgi-bin/XYV/template/LISEXT/1FRAME/index.htm

cULus Listed

Phoenix Contact 2017 © - all rights reserved
http://www.phoenixcontact.com

Uninterruptible power supply - QUINT-UPS/ 24DC/ 24DC/ 5 - 2320212

Please be informed that the data shown in this PDF Document is generated from our Online Catalog. Please find the complete data in the user's documentation. Our General Terms of Use for Downloads are valid (http://phoenixcontact.com/download)



Uninterruptible power supply with IQ technology for DIN rail mounting, input: 24 V DC, output: 24 V DC/5 A, including mounted universal DIN rail adapter UTA 107/30

Product Description

The UPS module for 24 V DC with output currents ranging from 5 to 40 A allows you to create a custom solution combining a power supply, UPS module, and energy storage.

Why buy this product

- Easy handling thanks to automatic battery detection, tool-free battery replacement during operation, and communication via the IFS interface
- Optimum use of the buffer time and preventive monitoring of the energy storage
- Rapid battery charging
- Comprehensive signaling and parameterization
- Fast tripping of standard circuit breakers with SFB (selective fuse breaking) technology
- Reliable starting of difficult loads with the static POWER BOOST power reserve with up to 1.5 times the nominal current permanently

RoHS



Key Commercial Data

Packing unit	1 STK
Weight per Piece (excluding packing)	444.440 g
Custom tariff number	85044070
Country of origin	China

Technical data

Dimensions

Width	35 mm
Height	130 mm
Depth	125 mm
Width with alternative assembly	123 mm
Height with alternative assembly	130 mm
Depth with alternative assembly	39 mm

Ambient conditions

Degree of protection	IP20

Uninterruptible power supply - QUINT-UPS/ 24DC/ 24DC/ 5 - 2320212

Technical data

Ambient conditions

Ambient temperature (operation)	-25 °C ... 70 °C
Ambient temperature (storage/transport)	-40 °C ... 85 °C
Max. permissible relative humidity (operation)	≤ 95 % (25°C, non-condensing)
Noise immunity	EN 61000-6-2:2005

Input data

Input voltage	24 V DC
Nominal input voltage	24 V DC
Input voltage range	18 V DC ... 30 V DC
Current consumption (maximum)	9.4 A (Maximum, mains operation)
Current consumption (charging process)	1.8 A (Charging, mains operation)
Fixed connect threshold	≤ 22 V DC
Variable connect threshold	1 V/0.1 s

Output data (24 V DC mains operation)

Nominal output voltage	24 V DC
Output voltage range (depends on the input voltage)	18 V DC ... 30 V DC
Nominal output current (I_N)	5 A (-25 °C ... 60 °C)
POWER BOOST (I_{Boost})	7.5 A (-25°C ... 40°C)
Selective Fuse Breaking (I_{SFB})	30 A (-25 °C ... 60 °C)

Output data (24 V DC battery operation)

Nominal output voltage	24 V DC
Output voltage range (depends on the input voltage)	19.2 V DC ... 27.6 V DC (U_{OUT} = U_{BAT} - 0.5 V DC)
Nominal output current (I_N)	5 A (-25 °C ... 60 °C)
POWER BOOST (I_{Boost})	7.5 A (-25°C ... 40°C)
Selective Fuse Breaking (I_{SFB})	32.5 A (-25 °C ... 60 °C)

General output data

Efficiency	> 98 % (Mains operation, with charged power storage)

General

IQ technology	Yes
Net weight	0.5 kg
Protection class	III
MTBF (IEC 61709, SN 29500)	> 500000 h (25 °C)
	> 500000 h (40 °C)
Mounting position	horizontal DIN rail NS 35, EN 60715
Assembly instructions	Can be aligned: horizontal 5 mm, vertical 50 mm

Connection data, input

Connection method	Pluggable screw connection
Conductor cross section solid min.	0.2 mm²
Conductor cross section solid max.	2.5 mm²

Uninterruptible power supply - QUINT-UPS/ 24DC/ 24DC/ 5 - 2320212

Technical data

Connection data, input

Conductor cross section flexible min.	0.2 mm²
Conductor cross section flexible max.	2.5 mm²
Conductor cross section AWG min.	20
Conductor cross section AWG max.	12
Stripping length	7 mm
Screw thread	M4

Connection data, output

Connection method	Pluggable screw connection
Conductor cross section solid min.	0.2 mm²
Conductor cross section solid max.	2.5 mm²
Conductor cross section flexible min.	0.2 mm²
Conductor cross section flexible max.	2.5 mm²
Conductor cross section AWG min.	20
Conductor cross section AWG max.	12
Stripping length	7 mm
Screw thread	M4

Connection data for signaling

Conductor cross section solid min.	0.2 mm²
Conductor cross section solid max.	2.5 mm²
Conductor cross section flexible min.	0.2 mm²
Conductor cross section flexible max.	2.5 mm²
Conductor cross section AWG min.	24
Conductor cross section AWG max.	12
Screw thread	M4

Standards and Regulations

Electromagnetic compatibility	Conformance with EMC Directive 2014/30/EU
Shock	18 ms, 30g, in each space direction (according to IEC 60068-2-27)
Noise immunity	EN 61000-6-2:2005
Connection in acc. with standard	CUL
Standards/regulations	EN 61000-4-2
Contact discharge	4 kV (Test Level 2)
Standards/regulations	EN 61000-4-3
Frequency range	80 MHz ... 1 GHz
Test field strength	10 V/m
Frequency range	1.4 GHz ... 2 GHz
Test field strength	3 V/m
Standards/regulations	EN 61000-4-4
Comments	Criterion B
Standards/regulations	EN 61000-4-5

Uninterruptible power supply - QUINT-UPS/ 24DC/ 24DC/ 5 - 2320212

Technical data

Standards and Regulations

Signal	1 kV (Test Level 2 - asymmetrical)
Standards/regulations	EN 61000-6-3
	EN 61000-4-6
Frequency range	0.15 MHz ... 80 MHz
Voltage	10 V (Test Level 3)
Standard - Electrical safety	EN 60950-1/VDE 0805 (SELV)
Standard – Electronic equipment for use in electrical power installations and their assembly into electrical power installations	EN 50178/VDE 0160 (PELV)
UL approvals	UL Listed UL 508
	UL/C-UL Recognized UL 60950
	UL ANSI/ISA-12.12.01 Class I, Division 2, Groups A, B, C, D (Hazardous Location)
Vibration (operation)	< 15 Hz, amplitude ±2.5 mm (according to IEC 60068-2-6)
	15 Hz ... 150 Hz, 2.3g t_v = 90 min.
Low Voltage Directive	Conformance with LV directive 2006/95/EC
Rail applications	EN 50121-4

Approvals

Approvals

Approvals

UL Recognized / UL Listed / cUL Recognized / cUL Listed / EAC / EAC / ABS / BV / DNV GL / PRS / cULus Recognized / cULus Listed

Ex Approvals

UL Listed / cUL Listed / cULus Listed

Approval details

UL Recognized	http://database.ul.com/cgi-bin/XYV/template/LISEXT/1FRAME/index.htm	FILE E 211944
UL Listed	http://database.ul.com/cgi-bin/XYV/template/LISEXT/1FRAME/index.htm	FILE E 123528
cUL Recognized	http://database.ul.com/cgi-bin/XYV/template/LISEXT/1FRAME/index.htm	FILE E 211944

Uninterruptible power supply - QUINT-UPS/ 24DC/ 24DC/ 5 - 2320212

Approvals

cUL Listed	http://database.ul.com/cgi-bin/XYV/template/LISEXT/1FRAME/index.htm	FILE E 123528

EAC	EAC-Zulassung

EAC	RU C-DE.A*30.B.01082

ABS	http://www.eagle.org/eagleExternalPortalWEB/	15-GD1438179-PDA

BV	http://www.veristar.com/portal/veristarinfo/generalinfo/approved/approvedProducts/equipmentAndMaterials	41516/A0 BV

DNV GL	http://exchange.dnv.com/tari/	61457-13 HH

mm²/AWG/kcmil	6
Nominal current IN	41 A
Nominal voltage UN	500 V

PRS	http://www.prs.pl/	TE/2103/880590/16

cULus Recognized	http://database.ul.com/cgi-bin/XYV/template/LISEXT/1FRAME/index.htm

cULus Listed

Phoenix Contact 2017 © - all rights reserved
http://www.phoenixcontact.com

Power supply unit - QUINT-PS/3AC/24DC/ 5 - 2866734

Please be informed that the data shown in this PDF Document is generated from our Online Catalog. Please find the complete data in the user's documentation. Our General Terms of Use for Downloads are valid (http://phoenixcontact.com/download)



Primary-switched QUINT POWER power supply for DIN rail mounting with SFB (Selective Fuse Breaking) Technology, input: 3-phase, output: 24 V DC/5 A

Product Description

QUINT POWER power supplies with maximum functionality
QUINT POWER circuit breakers magnetically and therefore quickly trip at six times the nominal current, for selective and therefore cost-effective system protection. The high level of system availability is additionally ensured, thanks to preventive function monitoring, as it reports critical operating states before errors occur.
Reliable starting of heavy loads takes place via the static power reserve POWER BOOST. Thanks to the adjustable voltage, all ranges between 5 V DC ... 56 V DC are covered.

Why buy this product

- High level of system availability even in the event of permanent phase failure
- Reliable starting of difficult loads
- Preventive function monitoring

Key Commercial Data

Packing unit	1 pc
GTIN	4 046356 155441
Weight per Piece (excluding packing)	939.6 GRM
Custom tariff number	85044070
Country of origin	Thailand

Technical data

Dimensions

Width	40 mm
Height	130 mm
Depth	125 mm
Width with alternative assembly	122 mm
Height with alternative assembly	130 mm
Depth with alternative assembly	43 mm

Power supply unit - QUINT-PS/3AC/24DC/ 5 - 2866734

Technical data

Ambient conditions

Degree of protection	IP20
Ambient temperature (operation)	-25 °C ... 70 °C (> 60 °C Derating: 2,5 %/K)
Ambient temperature (storage/transport)	-40 °C ... 85 °C
Max. permissible relative humidity (operation)	≤ 95 % (at 25 °C, non-condensing)
Noise immunity	EN 61000-6-2:2005
Maximum altitude	5000 m

Input data

Nominal input voltage range	3x 400 V AC ... 500 V AC
Input voltage range	3x 320 V AC ... 575 V AC
	2x 360 V AC ... 575 V AC
	450 V DC ... 800 V DC
AC frequency range	45 Hz ... 65 Hz
Frequency range DC	0 Hz
Discharge current to PE	< 3.5 mA
Inrush surge current	< 15 A (typical)
Power failure bypass	> 20 ms (400 V AC)
	> 30 ms (500 V AC)
Choice of suitable circuit breakers	6 A ... 16 A (AC: Characteristics B, C, D, K)
Type of protection	Transient surge protection
Protective circuit/component	Varistor, gas-filled surge arrester

Output data

Nominal output voltage	24 V DC ±1 %
Setting range of the output voltage	18 V DC ... 29.5 V DC (> 24 V DC, constant capacity restricted)
Nominal output current	5 A (-25°C ... 60°C, U_{OUT} = 24 V DC)
POWER BOOST	7.5 A (-25°C ... 40°C permanent, U_{OUT} = 24 V DC)
SFB technology current reserve	30 A (12 ms)
Derating	60 °C ... 70 °C (2.5%/K)
Connection in parallel	Yes, for redundancy and increased capacity
Connection in series	Yes
Residual ripple	< 20 mV_{PP} (with nominal values)
Output power	120 W
Typical response time	< 0.06 s
Peak switching voltages nominal load	< 20 mV_{PP} (at nominal values, 20 MHz)
Maximum power dissipation in no-load condition	4 W
Power loss nominal load max.	14 W

General

Net weight	0.7 kg
Operating voltage display	Green LED
Efficiency	> 89 % (at 400 V AC and nominal values)

Power supply unit - QUINT-PS/3AC/24DC/ 5 - 2866734

Technical data

General

Insulation voltage input/output	4 kV AC (type test)
	2 kV AC (routine test)
Protection class	I
MTBF (IEC 61709, SN 29500)	> 1290000 h (25 °C)
	> 680000 h (40°C)
	> 290000 h (60°C)
Mounting position	horizontal DIN rail NS 35, EN 60715
Assembly instructions	Alignable: 5 mm horizontally, 15 mm next to active components, 50 mm vertically

Connection data, input

Connection method	Pluggable screw connection
Conductor cross section solid min.	0.2 mm²
Conductor cross section solid max.	2.5 mm²
Conductor cross section flexible min.	0.2 mm²
Conductor cross section flexible max.	2.5 mm²
Conductor cross section AWG min.	20
Conductor cross section AWG max.	12
Stripping length	7 mm
Screw thread	M3

Connection data, output

Connection method	Pluggable screw connection
Conductor cross section solid min.	0.2 mm²
Conductor cross section solid max.	2.5 mm²
Conductor cross section flexible min.	0.2 mm²
Conductor cross section flexible max.	2.5 mm²
Conductor cross section AWG min.	20
Conductor cross section AWG max.	12
Stripping length	7 mm
Screw thread	M3

Connection data for signaling

Conductor cross section solid min.	0.2 mm²
Conductor cross section solid max.	2.5 mm²
Conductor cross section flexible min.	0.2 mm²
Conductor cross section flexible max.	2.5 mm²
Conductor cross section AWG min.	20
Conductor cross section AWG max.	12
Screw thread	M3

Standards and Regulations

Order No.	2866734

Power supply unit - QUINT-PS/3AC/24DC/ 5 - 2866734

Technical data

Standards and Regulations

Product key	CMPQ33
Electromagnetic compatibility	Conformance with EMC Directive 2004/108/EC
Shock	30g in each direction, according to IEC 60068-2-27
Noise immunity	EN 61000-6-2:2005
Connection in acc. with standard	CSA
Standards/regulations	EN 61000-4-3
	EN 61000-4-4
	EN 61000-4-6
Standard – Electrical equipment of machines	EN 60204-1
Standard - Electrical safety	IEC 60950-1/VDE 0805 (SELV)
Standard – Electronic equipment for use in electrical power installations and their assembly into electrical power installations	EN 50178/VDE 0160 (PELV)
Standard – Safety extra-low voltage	IEC 60950-1 (SELV) and EN 60204-1 (PELV)
Standard - Safe isolation	DIN VDE 0100-410
Standard – Protection against shock currents, basic requirements for protective separation in electrical equipment	EN 50178
Standard – Limitation of mains harmonic currents	EN 61000-3-2
Standard - Equipment safety	GS (tested safety)
Standard - Approval for medical use	IEC 60601-1, 2 x MOOP
Shipbuilding approval	Germanischer Lloyd (EMC 2), ABS, LR, RINA, NK, DNV, BV
UL approvals	UL Listed UL 508
	UL/C-UL Recognized UL 60950-1 (3-wire + PE, star net)
	UL ANSI/ISA-12.12.01 Class I, Division 2, Groups A, B, C, D (Hazardous Location)
Vibration (operation)	< 15 Hz, amplitude ±2.5 mm (according to IEC 60068-2-6)
Low Voltage Directive	Conformance with LV directive 2006/95/EC
Approval - requirement of the semiconductor industry with regard to mains voltage dips	SEMI F47-0706 Compliance Certificate
Information technology equipment - safety (CB scheme)	CB Scheme
Rail applications	EN 50121-4

Classifications

eCl@ss

eCl@ss 4.0	27040702
eCl@ss 4.1	27040702
eCl@ss 5.0	27049002
eCl@ss 5.1	27049002
eCl@ss 6.0	27049002
eCl@ss 7.0	27049002
eCl@ss 8.0	27049002
eCl@ss 9.0	27040701

Power supply unit - QUINT-PS/3AC/24DC/ 5 - 2866734

Classifications

ETIM

ETIM 2.0	EC001039
ETIM 3.0	EC001039
ETIM 4.0	EC000599
ETIM 5.0	EC002540

UNSPSC

UNSPSC 6.01	30211502
UNSPSC 7.0901	39121004
UNSPSC 11	39121004
UNSPSC 12.01	39121004
UNSPSC 13.2	39121004

Approvals

Approvals

Approvals

CSA / UL Recognized / UL Listed / cUL Recognized / LR / GL / BV / ABS / NK / RINA / IECEE CB Scheme / SEMI F47 / IECEE CB Scheme / EAC / CSA / EAC / GL / BV / NK / RINA / cULus Recognized

Ex Approvals

UL Listed / cUL Listed / cULus Listed

Approvals submitted

Approval details

CSA

UL Recognized

UL Listed

Power supply unit - QUINT-PS/3AC/24DC/ 5 - 2866734

Approvals

cUL Recognized

LR

GL

BV

ABS

NK

RINA

IECEE CB Scheme

SEMI F47

IECEE CB Scheme

EAC

CSA

EAC

GL

BV

NK

RINA

Industrial Ethernet Switch - FL SWITCH SFNB 8TX - 2891002

Please be informed that the data shown in this PDF Document is generated from our Online Catalog. Please find the complete data in the user's documentation. Our General Terms of Use for Downloads are valid (http://phoenixcontact.com/download)



Ethernet switch, 8 TP RJ45 ports, automatic detection of data transmission speed of 10/100 Mbps (RJ45), autocrossing function

Why buy this product

- Auto negotiation and autocrossing detection simplifies installation and setup
- Local diagnostic indicators with LEDs
- RJ45 ports support a transmission speed of 10/100 Mbps

Ethernet

Key Commercial Data

Packing unit	1 pc
Weight per Piece (excluding packing)	444.0 GRM
Custom tariff number	85176200
Country of origin	Taiwan

Technical data

Note

Utilization restriction	EMC: class A product, see manufacturer's declaration in the download area

Dimensions

Width	50 mm
Height	110 mm
Depth	70 mm

Ambient conditions

Degree of protection	IP20
Ambient temperature (operation)	-10 °C ... 60 °C
Ambient temperature (storage/transport)	-20 °C ... 85 °C
Permissible humidity (operation)	5 % ... 95 % (non-condensing)
Permissible humidity (storage/transport)	5 % ... 95 % (non-condensing)
Air pressure (operation)	86 kPa ... 108 kPa (up to 1500 m above mean sea level)

Interfaces

Industrial Ethernet Switch - FL SWITCH SFNB 8TX - 2891002

Technical data

Interfaces

Interface 1	Ethernet (RJ45)
No. of ports	8 (RJ45 ports)
Connection method	RJ45
Note on connection method	Auto negotiation and autocrossing
Transmission physics	Ethernet in RJ45 twisted pair
Transmission speed	10/100 MBit/s

Function

Basic functions	Unmanaged switch / auto negotiation, complies with IEEE 802.3, store and forward switching mode
Status and diagnostic indicators	LEDs: U_S, link and activity per port

Network expansion parameters

Cascading depth	Network, linear, and star structure: any
Maximum conductor length (twisted pair)	100 m

Supply voltage

Supply voltage	24 V DC
Residual ripple	3.6 V_{PP} (within the permitted voltage range)
Supply voltage range	9 V DC ... 32 V DC
Typical current consumption	140 mA (at U_S = 24 V DC)
Max. current consumption	380 mA (@9 V DC)

General

Mounting type	DIN rail
Type AX	Block design
Net weight	385 g
Housing material	Aluminum

Standards and Regulations

Order No.	2891002
Product key	CNN113
Electromagnetic compatibility	Conformance with EMC Directive 2004/108/EC
Noise emission	EN 61000-6-4
Noise immunity	EN 61000-6-2:2005

Classifications

eCl@ss

eCl@ss 4.0	27250501
eCl@ss 4.1	27250501
eCl@ss 5.0	19030117
eCl@ss 5.1	19030117
eCl@ss 6.0	19170106

Industrial Ethernet Switch - FL SWITCH SFNB 8TX - 2891002

Classifications

eCl@ss

eCl@ss 7.0	19170106
eCl@ss 8.0	19170106

ETIM

ETIM 2.0	EC000734
ETIM 3.0	EC000734
ETIM 4.0	EC000734
ETIM 5.0	EC000734

UNSPSC

UNSPSC 6.01	43172901
UNSPSC 7.0901	43201404
UNSPSC 11	43172015
UNSPSC 12.01	43201410
UNSPSC 13.2	43201410

Approvals

Approvals

Approvals

UL Listed / cUL Listed / EAC / EAC / KC / cULus Listed

Ex Approvals

UL Listed / cUL Listed / UL Listed / cUL Listed / UL Listed / cUL Listed / cULus Listed

Approvals submitted

Approval details

UL Listed

cUL Listed

EAC

Industrial Ethernet Switch - FL SWITCH SFNB 8TX - 2891002

Approvals

EAC

KC

cULus Listed

Phoenix Contact 2016 © - all rights reserved
http://www.phoenixcontact.com

Type 2 surge arrester - VAL-CP-3C-350 - 2859547

Please be informed that the data shown in this PDF Document is generated from our Online Catalog. Please find the complete data in the user's documentation. Our General Terms of Use for Downloads are valid (http://phoenixcontact.com/download)



Plug-in surge arrester for 3-phase power supply networks with N and PE in a common conductor (4-conductor system: L1, L2, L3, PEN), with remote indication contact.

Why buy this product

- Plugs can be checked with CHECKMASTER
- With or without floating remote indication contact
- High continuous voltage of 350 V AC for 230/400 V AC networks with high voltage fluctuations
- Modular arrester blocks with ultra-narrow design
- Use of varistors with a low leakage current
- Mechanical coding of all slots
- Optical, mechanical status indication for the individual arresters
- Disconnect device on each individual plug
- Type 2 consistent plug-in surge arresters

Key Commercial Data

Packing unit	1 STK
GTIN	4 017918 960827
GTIN	4017918960827
Weight per Piece (excluding packing)	329.100 g
Custom tariff number	85363080
Country of origin	Germany

Technical data

Dimensions

Height	98 mm
Width	37.25 mm
Depth	71.5 mm
Horizontal pitch	2 Div.

Type 2 surge arrester - VAL-CP-3C-350 - 2859547

Technical data

Ambient conditions

Degree of protection	IP20
Ambient temperature (operation)	-40 °C ... 80 °C
Ambient temperature (storage/transport)	-40 °C ... 80 °C
Altitude	≤ 2000 m (amsl (above mean sea level))
Permissible humidity (operation)	5 % ... 95 %
Shock (operation)	30g (half sinus / 11 ms / 3x ±X, ±Y, ±Z)
Vibration (operation)	5g (10 ... 500 Hz / 2.5 h / X, Y, Z)

General

IEC test classification	II
	T2
EN type	T2
IEC power supply system	TN-C
Mode of protection	L-PEN
Mounting type	DIN rail: 35 mm
Color	gray/blue
	black
Housing material	PBT-FR
Degree of pollution	2
Flammability rating according to UL 94	V-0
Type	DIN rail module, two-section, divisible
Number of positions	3
Surge protection fault message	Optical, remote indicator contact

Protective circuit

Nominal voltage U_N	240/415 V AC (TN-C)
Nominal frequency f_N	50 Hz (60 Hz)
Maximum continuous operating voltage U_C (L-PEN)	350 V AC
Rated load current I_L	40 A (Biconnect M4 fork-type cable lug 6 mm²)
	63 A (TWIN ferrule 2 x 10 mm²)
Nominal discharge current I_n (8/20) µs (L-PEN)	20 kA
Maximum discharge current I_{max} (8/20) µs (L-PEN)	40 kA
Short-circuit current rating I_{SCCR}	25 kA
Voltage protection level U_p (L-PEN)	≤ 1.5 kV
Residual voltage U_{res} (L-PEN)	≤ 1.5 kV (at I_n)
	≤ 1.3 kV (at 10 kA)
	≤ 1.2 kV (at 5 kA)
	≤ 1.1 kV (at 4 kA)
	≤ 1 kV (at 2 kA)
TOV behavior at U_T (L-PEN)	415 V AC (5 s / withstand mode)
	440 V AC (120 min / safe failure mode)

Type 2 surge arrester - VAL-CP-3C-350 - 2859547

Technical data

Protective circuit

Response time t_A (L-PEN)	≤ 25 ns
Max. backup fuse with branch wiring	315 A (gG)
Max. backup fuse with V-type through wiring	40 A (gG / Biconnect M4 fork-type cable lug, 6 mm²)
	63 A (gG / TWIN ferrule 2x 10mm²)

Indicator/remote signaling

Switching function	PDT contact
Operating voltage	5 V AC ... 250 V AC
	125 V DC (200 mA DC)
Operating current	5 mA AC ... 1 A AC
	1 A DC (30 V DC)
Connection method	Pluggable screw connection
Screw thread	M2
Tightening torque	0.25 Nm
Stripping length	7 mm
Conductor cross section flexible	0.14 mm² ... 1.5 mm²
Conductor cross section solid	0.14 mm² ... 1.5 mm²
Conductor cross section AWG	28 ... 16

Connection data

Connection method	Screw connection
Screw thread	M5
Tightening torque	4.5 Nm
Stripping length	16 mm
Conductor cross section flexible	2.5 mm² ... 16 mm²
Conductor cross section solid	2.5 mm² ... 25 mm²
Conductor cross section AWG	12 ... 4

UL specifications

SPD Type	4CA
Maximum continuous operating voltage MCOV (L-L)	700 V AC
Maximum continuous operating voltage MCOV (L-N)	350 V AC
Nom. voltage	277/480 V AC
Mode of protection	L-L
	L-N
Power distribution system	3Y
Nominal frequency	50/60 Hz
Measured limiting voltage MLV (L-L)	3280 V
Measured limiting voltage MLV (L-N)	2000 V
Nominal discharge current I_n (L-L)	20 kA
Nominal discharge current I_n (L-N)	20 kA

Environmental Product Compliance

Type 2 surge arrester - VAL-CP-3C-350 - 2859547

Technical data

Environmental Product Compliance

China RoHS	Environmentally Friendly Use Period = 50
	For details about hazardous substances go to tab “Downloads”, Category “Manufacturer's declaration”

Drawings

Dimensional drawing

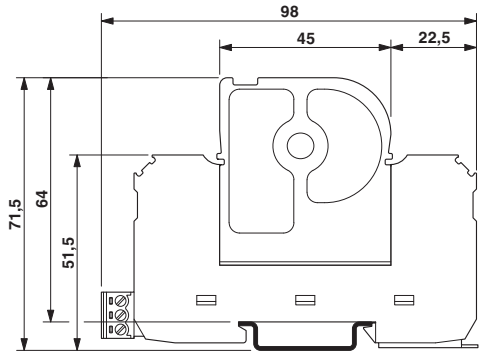

Circuit diagram

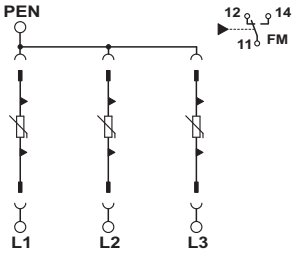

Phoenix Contact 2017 © - all rights reserved
http://www.phoenixcontact.com

CPP Item 43
Disc, Alignment Ring - ABB OHZX10 / Page 1/1

General Information

Extended Product Type:	OHZX10
Product ID:	1SCA022661R3610
EAN:	6417019214733
Catalog Description:	OHZX10 Alignment ring
Long Description:	OHZX10 ALIGNMENT RING

Categories

Products » Low Voltage Products and Systems » Switches » DC Switch-Disconnectors Accessories

Products » Low Voltage Products and Systems » Switches » Switch Disconnectors Accessories

Products » Low Voltage Products and Systems » Switches » Switch Fuses Accessories » Accessories for Switch Fuses

Ordering

Minimum Order Quantity:	10 piece
Customs Tariff Number:	85389099

Popular Downloads

Data Sheet, Technical Information:	1SCC301020C0201

Dimensions

Product Net Width:	50 mm
Product Net Height:	10 mm
Product Net Depth:	50 mm
Product Net Weight:	0.23 kg

Container Information

Package Level 1 Units:	10 piece
Package Level 1 Width:	50 mm
Package Level 1 Length:	50 mm
Package Level 1 Height:	10 mm
Package Level 1 Gross Weight:	0.23 kg
Package Level 1 EAN:	6417019214733

Classifications

Object Classification Code:	N/A
ETIM 5:	EC000229 - Handle for power circuit breaker
ETIM 6:	EC000229 - Handle for power circuit breaker



CPP Item 42
Disc, Handle On/Off 6mm 4X - ABB OHB80LH6 / Page 1/1

General Information

Extended Product Type:	OHB80LH6
Product ID:	1SCA127410R1001
EAN:	6417019646176
Catalog Description:	OHB80LH6 HANDLE
Long Description:	PISTOL HANDLE, BLACK FOR 6MM SHAFT

Additional Information

Color:	Black
Country of Origin:	Finland (FI)
Customs Tariff Number:	85389099
Degree of Protection:	IP65
EAN:	6417019646176
ETIM 5:	EC000229 - Handle for power circuit breaker
ETIM 6:	EC000229 - Handle for power circuit breaker
Handle Length:	80 mm
Handle Type:	Pistol
IIT Publishing Status:	Level 0 - Information enabled
Industrial IT Certification Level:	0
Invoice Description:	OHB80LH6 HANDLE
Minimum Order Quantity:	1 piece
Object Classification Code:	N/A
Order Multiple:	1 piece
Package Level 1 EAN:	6417019646176
Package Level 1 Gross Weight:	0.12 kg
Package Level 1 Units:	1 piece
Product Main Type:	OHB80
Product Name:	Handle
Product Net Depth:	45 mm
Product Net Height:	66 mm
Product Net Length:	80 mm
Product Net Weight:	0.12 kg
Product Type:	OHB
Selling Unit of Measure:	piece
Short Description:	HANDLE
Special Functions:	LH6
Suitable For:	OT200-250, OS32G-250
Suitable for Product Class:	Switches

Accessories

OHP6X_
S00050A



OHP_X_-45
S00669A



Extended shafts

Units/type = 1 piece

Shaft length [mm]	Front operated H [mm]	Side operated H [mm]	Type	Order number	Delivery batch [pcs]	Weight/ unit [kg]
For OS 16...35 (Mini)[2], shaft diameter 6 mm						
150	135...210	154...166	OXP6X150[5]	1SCA022295R5600	10	0.05
170	155...230	174...186	OXP6X170	1SCA108224R1001	10	0.05
265	250...325	269...281	OXP6X265	1SCA108225R1001	10	0.08
400	385...460	404...416	OXP6X400	1SCA108226R1001	10	0.12
150	135...210	154...166	OXP6X150-45[1]	1SCA022294R4400	10	0.05
170	155...230	174...186	OXP6X170-45[1]	1SCA108227R1001	10	0.05
265	380...460	269...281	OXP6X265-45[1]	1SCA108228R1001	10	0.08
400	380...460	404...416	OXP6X400-45[1]	1SCA108229R1001	10	0.12
For OS 40 (Mini)[2], shaft diameter 6 mm						
150	135...210	235...243	OXP6X150[5]	1SCA022295R5600	10	0.05
170	155...230	255...363	OXP6X170	1SCA108224R1001	10	0.05
265	250...325	352...360	OXP6X265	1SCA108225R1001	10	0.08
400	385...460	487...495	OXP6X400	1SCA108226R1001	10	0.12
150	135...210	235...243	OXP6X150-45[1]	1SCA022294R4400	10	0.05
170	155...230	255...363	OXP6X170-45[1]	1SCA108227R1001	10	0.05
265	250...325	352...360	OXP6X265-45[1]	1SCA108228R1001	10	0.08
400	385...460	487...495	OXP6X400-45[1]	1SCA108229R1001	10	0.12
For OS 32G...63G[4] , shaft diameter 6 mm						
63		161...167	OXP6X63	1SCA111010R1001	10	0.02
90		188...194	OXP6X90	1SCA022064R1180	10	0.03
130	127...174[6]	228...234	OXP6X130	1SCA022057R0570	10	0.04
161	138...205		OXP6X161[3]	1SCA022067R1760	10	0.05
210	187...254		OXP6X210	1SCA022295R6080	10	0.06
290	267...334		OXP6X290	1SCA022042R6370	10	0.08
360	337...404		OXP6X360	1SCA022042R6530	10	0.10
430	407...474		OXP6X430	1SCA022056R6030	10	0.12
210	187...254		OXP6X210-45[1]	1SCA022294R4230	10	0.06
290	267...334		OXP6X290-45[1]	1SCA022304R4290	10	0.08
360	337...404		OXP6X360-45[1]	1SCA022341R4640	10	0.10

[1] The shaft position is rotated 45 degrees
[2] Side operated, 4-pole: add 36 mm
[3] Included as standard in P-types
[4] Side operated 3-pole OS60GJ: add 33mm, 4-pole types: OS32...63GD/GB: add 23.5 mm, OS60GJ: add 68mm
[5] Included as standard in front operated types
[6] OS32...63GB/GF: 115...174

Accessories

OHP6X_
S00050A



OHP_X_-45
S00669A



OHP12X_
S00047A

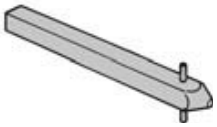

Extended shafts

Units/type = 1 piece

Shaft length [mm]	Front operated H [mm]	Side operated H [mm]	Type	Order number	Delivery batch [pcs]	Weight/ unit [kg]
For OS100G...160G[2], shaft diameter 6 mm						
63		196…202	OXP6X63	1SCA111010R1001	10	0.02
90		223…229	OXP6X90	1SCA022064R1180	10	0.03
130	137…174[4]	263…269	OXP6X130	1SCA022057R0570	10	0.04
161	138…205		OXP6X161[3]	1SCA022067R1760	10	0.05
210	187…254		OXP6X210	1SCA022295R6080	10	0.06
290	267…334		OXP6X290	1SCA022042R6370	10	0.08
360	337…404		OXP6X360	1SCA022042R6530	10	0.10
430	407…474		OXP6X430	1SCA022056R6030	10	0.12
210	187…254		OXP6X210-45[1]	1SCA022294R4230	10	0.06
290	267…334		OXP6X290-45[1]	1SCA022304R4290	10	0.08
360	337…404		OXP6X360-45[1]	1SCA022341R4640	10	0.10
For OS 200...250 DIN-type, shaft diameter 6 mm						
161	160...205		OXP6X161	1SCA022067R1760	10	0.05
210	189...254		OXP6X210[3]	1SCA022295R6080	10	0.06
290	269...334		OXP6X290	1SCA022042R6370	10	0.08
For OS 200...250 BS-type, shaft diameter 6 mm						
161	140...205		OXP6X161	1SCA022067R1760	10	0.05
210	189...254		OXP6X210[3]	1SCA022295R6080	10	0.06
290	269...334		OXP6X290	1SCA022042R6370	10	0.08
For OS 315...400, shaft diameter 12 mm						
250	230…325		OXP12X250[3]	1SCA022325R6980	1	0.30
280	260…355		OXP12X280	1SCA022137R5140	1	0.30
325	305…400		OXP12X325	1SCA022042R5810	1	0.36
395	375…470		OXP12X395	1SCA022042R5990	1	0.43
465	445…540		OXP12X465	1SCA022042R6020	1	0.51
535	515…610		OXP12X535	1SCA022042R6110	1	0.59

[1] The shaft position is rotated 45 degrees
[2] Side operated 4-pole types: add 35mm
[3] Included as standard in P-types
[4] OS100GJ: 113…174, OS100GB…160GB: 121…174

General Information

Extended Product Type:	OT60F3
Product ID:	1SCA105076R1001
EAN:	6417019392066
Catalog Description:	OT60F3 switch-disconnector
Long Description:	Front operated switch-disconnector. Types OT 16...125 include protected terminal clamps, IP 20.

Categories

Products » Low Voltage Products and Systems » Switches » Switch Disconnectors

Ordering

EAN:	6417019392066
Minimum Order Quantity:	10 piece
Customs Tariff Number:	85365080

Dimensions

Product Net Width:	70 mm
Product Net Height:	74 mm
Product Net Depth:	100 mm
Product Net Weight:	0.36 kg

Container Information

Package Level 1 Units:	1 piece
Package Level 1 Width:	81 mm
Package Level 1 Height:	86 mm
Package Level 1 Length:	112 mm
Package Level 1 Gross Weight:	0.36 kg
Package Level 1 EAN:	6417019392066

Environmental

RoHS Status:	Planned to follow EU Directive 2002/95/EC August 18, 2005 and amendment after 2009 Q3

Technical UL/CSA

Ampere Rating UL/CSA:	60 A
Horsepower Rating UL/CSA:	(acc. to UL 200 V) 20 Hp (acc. to UL 208 V) 20 Hp (acc. to UL 240 V) 20 Hp (acc. to UL 480 V) 40 Hp (acc. to UL 600 V) 40 Hp

Additional Information

Cable Cross-Section:	2.5…25 mm²
Earthing Switch Type:	No Additional Type
Handle Type:	None
IIT Publishing Status:	Level 0 - Information enabled
Includes:	None
Mounting Type:	Modular
Number of Poles:	3
Operating Mechanism:	Mechanism on top of the switch
Operating Mode:	Front Operated
Order Multiple:	10 piece
Pollution Degree:	3
Position of Line Terminals:	Top In - Bottom Out
Power Loss:	at Rated Operating Conditions per Pole 0.36 W
Product Main Type:	OT30
Product Name:	Switch-disconnector
Rated Operational Current AC-21A (I_e):	(380 ... 415 V) 63 A (690 V) 63 A (500 V) 63 A
Rated Operational Current AC-22A (I_e):	(380 ... 415 V) 63 A (500 V) 63 A (690 V) 63 A

Rated Operational Current AC-23A (I_e):	(380 ... 415 V) 45 A (690 V) 40 A (500 V) 63 A
Rated Short-time Withstand Current (I_{cw}):	for 1 s 2.5 kiloampere rms
Special Functions:	No
Standards:	IEC
Terminal Type:	Screw Terminals

Certificates and Declarations (Document Number)

Data Sheet, Technical Information:	1SCC301020C0201
Declaration of Conformity - CE:	1SCC301010D0201
RoHS Information:	1SCC301183D0201

Classifications

ETIM 5.0:	EC000216 - Switch disconnector
Object Classification Code:	Q

CPP Item 25
PLC, AB Point I/O - Allen Bradley 1734-IB8 / Trojan P/N 914301 Page 1/2

Rockwell Automation

1734 POINT I/O

Digital I/O Modules

The 1734 digital I/O modules support:

- A wide variety of voltage interface capabilities.
- Isolated and non-isolated module types.
- Point-level output fault states for short-circuit and wire-off diagnostics.
- Choice of direct-connect or rack-optimized communications.
- Field-side diagnostics on select modules.
- Safety applications up to and including SIL 3, Cat. 4, PL(e), when using 1734-IB8S or 1734-OB8S with a GuardLogix, SmartGuard 600, or GuardPLC controller.

POINT Digital AC Input Modules

Cat. No.	Inputs	Voltage Category	Input Delay Time, On to Off	On-State Current, Min.	Input Impedance, Nom.	Off-State Current, Max.	PointBus Current (mA)	Power Dissipation, Max.	Terminal Base Unit
1734-IA2	2 Non-isolated, current sinking	120V AC (65V AC...132V AC)	20.0 ms hardware + (0...65 ms selectable)	4.0 mA @ 65V AC, 60 Hz	10.6 kΩ	2.7 mA @ 43V AC	75 mA	0.1 W at 132V AC	1734-TB, 1734-TBS, 1734-TOP, or 1734-TOPS
1734-IA4	4 Non-isolated, current sinking								
1734-IM2	2 Non-isolated, current sinking	220V AC (159V AC...264V AC)		6.2 mA @ 159V AC, 60 Hz	22.3 kΩ	2.9 mA @43V AC			
1734-IM4	4 Non-isolated, current sinking								

CPP Item 25
PLC, AB Point I/O - Allen Bradley 1734-IB8 / Trojan P/N 914301 Page 1/2

POINT Digital AC Output Modules

Cat. No.	Outputs	Voltage Category	Output Current Rating	PointBus Current (mA)	Power Dissipation, Max.	Terminal Base Unit
1734-OA2	2 Non-isolated, current sourcing	120/220V AC (74V AC...264V AC)	1.5 A (2 channels @ 0.75 A each)	75 mA	2 W at 264V AC	1734-TB, 1734-TBS, 1734-TOP, or 1734-TOPS
1734-OA4	4 Non-isolated, current sourcing		2.0 A (750 mA per output)		3.5 W at 264V AC	

POINT Digital DC Input Modules

The 1734-IB4D module is a 4-channel 24V DC input module with short-circuit and open-wire diagnostics. Catalog numbers ending with "S" are safety-rated.

Cat. No.	Inputs	Voltage Category	Input Delay Time, On to Off	On-State Current, Min.	On-State Current, Max.	Off-State Current, Max.	PointBus Current (mA)	Power Dissipation, Max.	Terminal Base Unit
1734-IB2	2 current sinking	24V DC (10V DC... 28.8V DC)	0.5 ms hardware + (0...65 ms selectable)	2 mA	5 mA	1.5 mA	75 mA	0.7 W at 28.8V DC	1734-TB or 1734-TBS
1734-IB4	4 current sinking							1.0 W at 28.8V DC	1734-TB, 1734-TBS, 1734-TB3, or 1734-TB3S★
1734-IB4D	4 Sink, diagnostic	24V DC (11V DC... 28.8V DC)	—	2 mA	15 mA	—	50 mA	0.6 W at 28.8V DC	1734-TB, 1734-TBS, 1734-TOP, or 1734-TOPS
1734-IB8	8 current sinking	24V DC (10V DC... 28.8V DC)	0.5 ms hardware + (0...65 ms selectable)	2 mA	5 mA	1.5 mA	75 mA	1.6 W at 28.8V DC	1734-TB or 1734-TBS
1734-IB8S	8 current sinking, safety-rated	24V DC (11V DC... 28.8V DC)	—	3.3 mA	5 mA	1.3 mA	175 mA	2.44 W	1734-TB, 1734-TOP, 1734-TOP3
1734-IV2	2 current sourcing	24V DC (10V DC... 28.8V DC)	0.5 ms hardware + (0...65 ms selectable)	2 mA	5 mA	1.5 mA	75 mA	0.7 W at 28.8V DC	1734-TB or 1734-TBS
1734-IV4	4 current sourcing							1.0 W at 28.8V DC	1734-TB, 1734-TBS, 1734-TB3, or 1734-TB3S★
1734-IV8	8 current sourcing							1.6 W at 28.8V DC	1734-TB or 1734-TBS

★ 1734-TB3 or 1734-TB3S recommended.

POINT Digital DC Output Modules

CompactLogix™ 5370 L1 Programmable Automation Controllers

L16ER-BB1B, -L18ER-BB1B, -L18ERM-BB1B

Features and Benefits

The CompactLogix 5370 L1 controllers combine the power of the Logix architecture with the flexibility of POINT I/O in a compact and affordable package. Ideal for small to mid-size machines, these controllers provide customers the benefits of Integrated Architecture in a lower cost system.

Machine builders and end users can build a better machine by taking advantage of the following features of these controllers:

- Ideal for applications that require low axis motion and I/O point counts
- Support for Integrated Motion on EtherNet/IP
- Support for Device Level Ring (DLR) network topologies
- Built-in energy storage eliminates the need for lithium batteries
- Support for a wide variety of granular POINT I/O modules
- Removable 1GB secure digital (SD) card for fast program save and restore
- Smaller form factor conserves space in control cabinet
- Support for 2 axes Kinematics for simple articulated robotics
- Open socket capability allows support for Modbus TCP as well as devices such as printers, barcode readers and servers

Reduce cost and time to market with CompactLogix 5370 L1 Programmable Automation Controllers.



Expanding on the scalability of the Logix family of controllers, the CompactLogix 5370 L1 programmable automation controllers (PAC) are designed to meet the growing need for a higher performance controller in a compact and affordable package. Offering a reduction in required panel space, the L1 controllers truly enable you to build a high performance, more cost-effective machine.

As part of the Integrated Architecture system, the CompactLogix 5370 L1 controllers use the same programming software, network protocol, and information capabilities as all Logix controllers, providing a common development environment for all control disciplines. Consistent tools and features allow users to lower the cost engineering investment, ease diagnostics and troubleshooting, and speed time to market.

Integrated Motion on EtherNet/IP

The CompactLogix 5370 L1 controller meets the needs of customers looking for performance and cost competitive motion solutions.

- Supports up to 2 axes of integrated motion
- Together with the Kinetix 350, offers cost-effective, scalable motion solution

Network Capabilities

With dual Ethernet ports and an integrated Ethernet switch, these controllers now support Device Level Ring (DLR) network topologies, simplifying integration of components in your control system and reducing system cost. Deploying as a DLR provides resiliency from loss of one network connection and allows replacement of devices one at a time without stopping production. A daisy chain connection reduces the number of Ethernet switches in the control system.

	1769-L16ER -BB1B	1769-L18ER-BB1B	1769-L18ERM-BB1B
User memory[1]	0.375 MB	0.5 MB	0.5 MB
Controller tasks	32	32	32
Programs per task	100	100	100
Integrated Motion	--	--	2 axis CIP motion position loop axis
Package Size	100mm wide x 130mm high x 105mm deep		
Certifications	cULH (Class I Division 2), KCC / UL (UL 508), ULH (Class I & II, Division 2 and Class III, Divisions 1 & 2) / ATEX, CE, C-Tick / Marine and GOST certifications in 2012		
Local Expansion I/O Points[2]	80	96	96
Local Expansion Modules	6	8	8
Embedded I/O	16 digital inputs, 16 digital outputs		
Servo Drives (Position Loop CIP)	--	--	2
Flash Memory Card	Industrially rated and certified Secure Digital (SD) memory card (1 and 2 GB options); all controllers shipped with 1 GB card		
Ethernet I/O IP nodes	4	8	8
Virtual axes	100	100	100
Feedback only, torque, velocity, Vhz (max CIP motion drives)	--	--	8
Axes/ms	--	--	2
Kinematics support	--	--	yes
Software / Firmware	RSLogix 5000 V20 and RSLinx Classic V2.58 Firmware v20.1x or later		

[1] Check controller memory estimator to ensure there is enough memory to execute the controller program for your application.

[2] Based on six 8 point digital modules (48 pts.) and embedded 32 points (16 digital inputs, 16 digital outputs)

CompactLogix, Integrated Architecture, Kinetix, RSLogix, Integrated Motion on EtherNet/IP are trademarks of Rockwell Automation, inc.
Trademarks not belonging to Rockwell Automation are property of their respective companies.

www.rockwellautomation.com

Power, Control and Information Solutions Headquarters

Americas: Rockwell Automation, 1201 South Second Street, Milwaukee, WI 53204-2496 USA, Tel: (1) 414.382.2000, Fax: (1) 414.382.4444
Europe/Middle East/Africa: Rockwell Automation NV, Pegasus Park, De Kleetlaan 12a, 1831 Diegem, Belgium, Tel: (32) 2 663 0600, Fax: (32) 2 663 0640
Asia Pacific: Rockwell Automation, Level 14, Core F, Cyberport 3, 100 Cyberport Road, Hong Kong, Tel: (852) 2887 4788, Fax: (852) 2508 1846

Publication 1769-PP012A-EN-E – November 2011

Copyright © 2011 Rockwell Automation, Inc. All Rights Reserved. Printed in USA.

CPP Item 22
Soft Starter, 6.3-19A 3P 480V - Allen Bradley 150-C19NBR / Page 1/1

Product: 150-C19NBR
Description: 150 SMC-3 Open Smart Motor Controller



Representative Photo Only (actual product may vary based on configuration selections)

CONTROLLER DATA

Line Voltage	480V 60Hz
Starting Duty	350%
Current Rating	19A
Enclosure Type	Open
Control Voltage	24V AC/DC

CPP Item 21
VFD, 480V EMC 3PH 1HP - Allen Bradley 25B-D2P3N114 / Page 1/1

Product: 25B-D2P3N114
Description: PowerFlex 520-Series



Representative Photo Only (actual product may vary based on configuration selections)

BASE DRIVE INFORMATION

Bulletin Number	PowerFlex 525 AC Drive, with Embedded EtherNet/IP and Safety
Voltage Class	480 VAC, 3 Phase
Output Current	2.3 Amps
Enclosure Type	IP20 NEMA / Open Type
Frame Size	Frame A
Interface Module	Standard
EMC Filtering Options	Filter

GENERAL CABLE CABLING ASSISTANCE

Disclaimer:

Article 310, Table 310.15(B) 16 Allowable Ampacities for Insulated Conductors up to 2000V, Correction Factors, and Other Possible Constraints. It is the responsibility of the Designer, Installer and End User to verify that all NEC, CEC and Local Codes/Standards are strictly adhered too. Consult Rockwell Automation Drive Family Motor Cable Length Restrictions Tables (Rockwell Automation Publication DRIVES-IN001L-EN-P for maximum VFD cable lengths). To protect the motor from reflective waves, limit the length of the motor cables from the drive to the motor. General Cable can provide some direction as to what cables could be considered for use with these drives since NEC Article 430 Motors, Motor Circuits and Controllers would be the minimum guidelines for review. General Cable cannot recommend a specific cable for a specific drive system since we do not know all drive system parameters and customer's applications. Nothing herein is intended to modify, alter or extend any warranties for General Cable products.

Additional Details

Input	Three Phase 380-480V

CPP Item 16
Breaker, O/L 2.5-4A 3P - Allen Bradley 140M-C2E-B40 / Page 1/1

Product: 140M-C2E-B40
Description: 140M MPCBs and MCPs



Representative Photo Only (actual product may vary based on configuration selections)

SYSTEM VOLTAGE DATA	
Supply Voltage	480V 60Hz
Maximum Available Fault Current	5
CIRCUIT BREAKER	
Circuit Breaker Type	Motor Protection Circuit Breaker
Adj. Thermal Current Range (A)	2.5 - 4A
Application	Standard Magnetic Trip (Fixed at 13 x Ie)
Frame Size	Frame Size C
Breaking Capacity	Standard Breaking Capacity
UL Listed Application Ratings	UL 508 - Manual Motor Controller UL 508 Manual Self-Protected (Type E) Combination Motor Controller
SHORT CIRCUIT COORDINATION	
Coordination Type	Type 1
OPTIONS	
Side Mount Shunt Trip and Undervoltage Release	None
Front Mount Auxiliary and Trip Contacts	None
Side Mount Auxiliary and Trip Contacts (TESTDESC)	None

CPP Item 15
Breaker, O/L 10-16A 3P - Allen Bradley 140M-C2E-C16 / Page 1/1

Product: 140M-C2E-C16
Description: 140M MPCBs and MCPs



Representative Photo Only (actual product may vary based on configuration selections)

SYSTEM VOLTAGE DATA	
Supply Voltage	480V 60Hz
Maximum Available Fault Current	5
CIRCUIT BREAKER	
Circuit Breaker Type	Motor Protection Circuit Breaker
Adj. Thermal Current Range (A)	10 - 16A
Application	Standard Magnetic Trip (Fixed at 13 x Ie)
Frame Size	Frame Size C
Breaking Capacity	Standard Breaking Capacity
UL Listed Application Ratings	UL 508 - Manual Motor Controller UL 508 Manual Self-Protected (Type E) Combination Motor Controller
SHORT CIRCUIT COORDINATION	
Coordination Type	Type 1
OPTIONS	
Side Mount Shunt Trip and Undervoltage Release	None
Front Mount Auxiliary and Trip Contacts	None
Side Mount Auxiliary and Trip Contacts (TESTDESC)	None

Signal conditioner - MCR-FL-C-UI-2UI-DCI - 2814854

Please be informed that the data shown in this PDF Document is generated from our Online Catalog. Please find the complete data in the user's documentation. Our General Terms of Use for Downloads are valid (http://phoenixcontact.com/download)



MCR signal multiplier, for doubling and electrical isolation of analog signals, unconfigured

Why buy this product

- Calibrated selectable input and output signals
- 4-way isolation

Key Commercial Data

Packing unit	1 STK
Weight per Piece (excluding packing)	139.400 g
Custom tariff number	85437096
Country of origin	Germany
Note	Made to Order (non-returnable)

Configuration

Input signal	Current [I]
Starting value of input signal	4.0
End value of input signal	20.0
Output signal output 1	4...20 mA [OUT02]
Output signal output 2	4...20 mA [OUT02]
Plant calibration certificate	No plant calibration certific. [NONE]

Technical data

Note

Utilization restriction	EMC: class A product, see manufacturer's declaration in the download area

Dimensions

Width	17.5 mm
Height	99 mm
Depth	114.5 mm

Signal conditioner - MCR-FL-C-UI-2UI-DCI - 2814854

Technical data

Ambient conditions

Ambient temperature (operation)	-25 °C ... 55 °C

Input data

Description of the input	Current input
Number of inputs	1
Configurable/programmable	Yes, preconfigured
Current input signal	0 mA ... 24 mA (freely selectable in 0.1 mA steps)
Max. input current	50 mA
Input resistance current input	50 Ω
Description of the input	Voltage input
Configurable/programmable	Yes, preconfigured
Voltage input signal	0 V ... 12 V (freely selectable in 0.1 V steps)
max. input voltage	30 V
Input resistance of voltage input	200 kΩ

Output data

Output name	Voltage output
Number of outputs	2
Configurable/programmable	Yes, preconfigured
Voltage output signal	0 V DC ... 10 V DC (refer to the order key)
	2 V DC ... 10 V DC
	0 V DC ... 5 V DC
	1 V DC ... 5 V DC
Max. output voltage	15 V
Load/output load voltage output	≥ 10 kΩ
Output name	Current output
Configurable/programmable	Yes, preconfigured
Current output signal	0 mA ... 20 mA (refer to the order key)
	4 mA ... 20 mA
	0 mA ... 10 mA
Max. output current	35 mA
Load/output load current output	≤ 600 Ω

Power supply

Supply voltage range	20 V DC ... 30 V DC
Max. current consumption	< 25 mA

Connection data

Connection method	Screw connection
Conductor cross section solid min.	0.2 mm²
Conductor cross section solid max.	2.5 mm²
Conductor cross section AWG min.	24
Conductor cross section AWG max.	14

Signal conditioner - MCR-FL-C-UI-2UI-DCI - 2814854

Technical data

Connection data

Conductor cross section flexible min.	0.2 mm²
Conductor cross section flexible max.	2.5 mm²
Stripping length	8 mm
Screw thread	M3

General

No. of channels	2
Maximum transmission error	≤ 0.15 % (of final value)
Transmission error, typical	0.05 % (of final value)
Maximum temperature coefficient	< 0.015 %/K
Temperature coefficient, typical	0.0075 %/K
Limit frequency (3 dB)	30 Hz
Step response (10-90%)	12 ms
Protective circuit	Transient protection
Test voltage, input/output/supply	1.5 kV (50 Hz, 1 min.)
Color	green
Housing material	Polyamide PA non-reinforced
Mounting position	any
Conformance	CE-compliant
UL, USA/Canada	Class I, Div. 2, Groups A, B, C, D or Non-Hazardous Locations

Standards and Regulations

Connection in acc. with standard	CUL
Conformance	CE-compliant
UL, USA/Canada	Class I, Div. 2, Groups A, B, C, D or Non-Hazardous Locations

Environmental Product Compliance

China RoHS	Environmentally Friendly Use Period = 50
	For details about hazardous substances go to tab “Downloads”, Category “Manufacturer's declaration”

Drawings

Signal conditioner - MCR-FL-C-UI-2UI-DCI - 2814854

Dimensional drawing

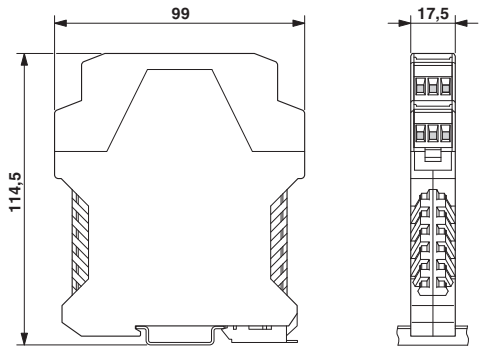

Circuit diagram

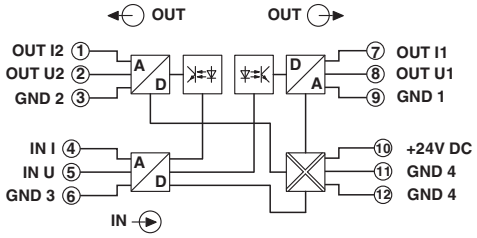

Application drawing

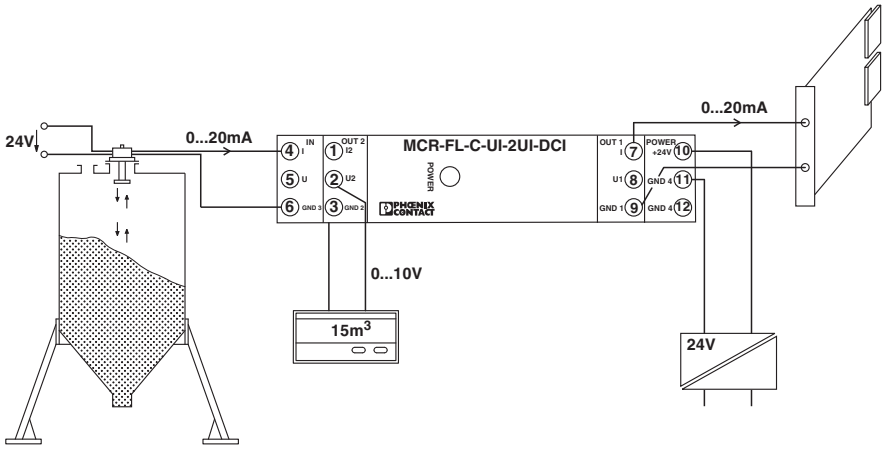

Application example: - Level measurement with subsequent signal multiplication
1 = filling level sensor
2 = control
3 = mains voltage

Classifications

eCl@ss

eCl@ss 4.0	27210120
eCl@ss 4.1	27210120
eCl@ss 5.0	27210120
eCl@ss 5.1	27210120
eCl@ss 6.0	27210120
eCl@ss 7.0	27210120
eCl@ss 8.0	27210120
eCl@ss 9.0	27210120

ETIM

ETIM 4.0	EC002653

Signal conditioner - MCR-FL-C-UI-2UI-DCI - 2814854

Classifications

ETIM

ETIM 5.0	EC002653
ETIM 6.0	EC002653

UNSPSC

UNSPSC 6.01	30211506
UNSPSC 7.0901	39121008
UNSPSC 11	39121008
UNSPSC 12.01	39121008
UNSPSC 13.2	39121008

Approvals

Approvals

Approvals

UL Recognized / cUL Recognized / EAC / cULus Recognized

Ex Approvals

UL Listed / cUL Listed / cULus Listed

Approval details

UL Recognized	http://database.ul.com/cgi-bin/XYV/template/LISEXT/1FRAME/index.htm	FILE E 238705
cUL Recognized	http://database.ul.com/cgi-bin/XYV/template/LISEXT/1FRAME/index.htm	FILE E 238705
EAC		EAC-Zulassung
cULus Recognized	http://database.ul.com/cgi-bin/XYV/template/LISEXT/1FRAME/index.htm	

Phoenix Contact 2018 © - all rights reserved
http://www.phoenixcontact.com

1489-M Circuit Breakers



Bulletin 1489-M thermal magnetic Circuit Breakers are approved for branch circuit protection in the United States and Canada, and are certified as Miniature Circuit Breakers for IEC applications.

These branch protectors are compatible with many accessories to meet diverse application needs, including UL 508 Listed bus bars for convenience in panel assembly, auxiliary contacts, signal contacts and shunt trips for versatility, and lock out attachments for safety during maintenance.

Features

- Current limiting
- Fast breaking time
- High rated voltage
- Superior shock and vibration resistance to help prevent nuisance tripping
- Dual terminals allow the connection of two wires, or both a wire and bus bar (self declared)
- Terminal design helps prevent wiring misses by directing wires into the terminal openings, even while tightening
- Reversible line and load connections
- Single and multi-pole toggle mount lock out attachments available for Lock Out Tag Out (LOTO)
- RoHS compliant and fully-recyclable device
- Suitable for extreme ambient conditions

1489-M Circuit Breakers	
Rated Voltage	UL/CSA: Max. 480Y/277V AC IEC: Ue 230/400V AC
Interrupting Capacity	UL/CSA: 10 kA IEC: 15 kA
Current Ratings	0.5...63 A
Poles	1, 2, 3
Trip Curves	C, D
Standards Compliance	UL 489 CSA C22.2 No. 5.1 EN 60947-2 GB 14048.2
Certifications	UL Listed, File No. E197878 CSA Certified CE Marked VDE Certified CCC Certified RoHS Compliant

Catalog Number Explanation

Note: Examples given in this section are for reference purposes. This basic explanation should not be used for product selection; some combinations may not produce a valid catalog number.

1489	-	M	1	C	005
		a	*b*	*c*	*d*

a

Voltage Type	
Code	**Description**
M	AC Circuit Breaker

b

Poles	
Code	**Description**
1	1-Pole
2	2-Pole
3	3-Pole

c

Trip Curve	
Code	**Trip Curve**
C	Trip Curve C
D	Trip Curve D

d

Rated Current (I_n)	
Code	**Current [A]**
005	0.5
010	1
016	1.6
020	2
030	3
040	4
050	5
060	6
070	7
080	8
100	10
130	13
150	15
160	16
200	20
250	25
300	30
320	32
350	35
400	40
500	50
600	60
630	63

CPP Item 04
Thermostat, 6A NC - Eldon ETR202 / Page 1/1



Description: Thermostat with NC/NO contacts to manage temperature in panels. ETR202 with a normally closed contact for regulating heaters. ETR201 with a normally open contact for regulating cooling devices or signal devices. Sensor element thermostatic bimetal. Mounting clip for 35 mm DIN rail (EN 60715).

Material: Plastic according to UL94 V-0.

Setting range: 0ºC to 60ºC. Switching temperature difference less than 7ºK, and switching point tolerance ±4ºK.

Switch capacity: 240V AC, 10(2)A. 120V AC, 15(2)A. 24V DC, 30W. Value in brackets for inductive load.

Operating temperature: -20 to +80°C.

Service life: > 100,000 cycles.

Connection: Screw terminal for cable (0.5 to 2.5 mm^2).

	Description	Item no.
	Normally opened contact	ETR201
	Normally closed contact	ETR202



Description: Mounting brackets for safe wall fixing. It includes the sealing washers to guarantee the IP rating. In stainless steel machining is required.

Pack quantity: 4 brackets with mounting accessories.

Material	Item no.
3 mm stainless steel 304	AWS41-304
3 mm stainless steel 316	AWS41-316

Technical Data

Allen-Bradley

PanelView Plus 7 Performance Terminals

Catalog Numbers 2711P-T7C22D9P, 2711P-T7C22D9P-B, 2711P-T7C22A9P, 2711P-T7C22A9P-B, 2711P-B7C22D9P, 2711P-B7C22D9P-B, 2711P-B7C22A9P, 2711P-B7C22A9P-B, 2711P-T9W22D9P, 2711P-T9W22D9-B, 2711P-T9W22A9P, 2711P-T9W22A9P-B, 2711P-T10C22D9P, 2711P-T10C22D9P-B, 2711P-T10C22A9P, 2711P-T10C22A9P-B, 2711P-B10C22D9P, 2711P-B10C22D9P-B, 2711P-B10C22A9P, 2711P-B10C22A9-B, 2711P-T12W22D9P, 2711P-T12W22D9P-B, 2711P-T12W22A9P, 2711P-T12W22A9P-B, 2711P-T15C22D9P, 2711P-T15C22D9P-B, 2711P-T15C22A9P, 2711P-T15C22A9P-B, 2711P-B15C22D9P, 2711P-B15C22D9P-B, 2711P-B15C22A9P, 2711P-B15C22A9P-B, 2711P-T19C22D9P, 2711P-T19C22D9P-B, 2711P-T19C22A9P, 2711P-T19C22A9P-B

Topic	Page
Environmental Specifications	2
Certifications	3
Technical Specifications	4
Product Dimensions	7
Accessories	8
HMI Software	9
Additional Resources	10

Summary of Changes

Topic	Page
Updated system memory to 512 MB RAM and 512 MB storage. Updated user memory to 80 MB, approx, nonvolatile storage for applications.	4, 5, 6

The PanelView™ Plus 7 Performance terminals are operator interface devices. They monitor and control devices that are attached to ControlLogix® and CompactLogix™ 5370 controllers on an EtherNet/IP network. Animated graphic and text displays provide operators a view into the operating state of a machine or process. Operators interact with the control system by using touch screen or keypad input.



Features include the following:

- FactoryTalk® View Machine Edition software, version 8.1, provides a familiar environment for creating HMI applications
- Windows CE operating system with desktop access for configuration and third-party applications
- Connection to ControlLogix or CompactLogix 5370 controllers
- Ethernet communication that can support Device Level Ring (DLR), linear, or star network topologies
- Web browser, Microsoft file viewers, text editor, PDF viewer, remote desktop connection, and media player on the terminal desktop

Environmental Specifications

This table lists environmental specifications for the PanelView Plus 7 Performance terminals.

Attribute	Value
Temperature, operating (1)	0…55 °C (32…131 °F)
Temperature, nonoperating	-25…+70 °C (-13…+158 °F)
Heat dissipation (2)	7-in. DC (touch, and touch with keypad), 51 BTU (typical) 7-in. AC (touch, and touch with keypad), 53 BTU (typical) 9-in. DC, 55 BTU (typical) 9-in. AC, 58 BTU (typical) 10-in. DC (touch, and touch with keypad), 51 BTU (typical) 10-in. AC (touch, and touch with keypad), 56 BTU (typical) 12-in. DC, 60 BTU (typical) 12-in. AC, 67 BTU (typical) 15-in. DC (touch, and touch with keypad), 61 BTU (typical) 15-in. AC (touch, and touch with keypad), 68 BTU (typical) 19-in. DC, 114 BTU (typical) 19-in. AC, 119 BTU (typical)
Altitude, operating	2000M
Relative humidity	5…95% without condensation
Vibration	0.012 pk-pk, 10…57 Hz 2 g peak at 57…500 Hz (3)
Shock, operating	15 g at 11 ms
Shock, nonoperating	30 g at 11 ms
Enclosure ratings	NEMA and UL Type 12, 13, 4X, also rated IP66 as Classified by UL

(1) The 19-inch terminals (2711P-T19C22D9P, 2711P-T19C22D9P-B, 2711P-T19C22A9P, and 2711P-T19C22A9P-B) are rated up to 50 °C (122 °F) operating temperature.
(2) Typical BTU measurements were taken at 25 °C (77 °F).
(3) The 15-inch and 19-inch terminals (2711P-T15C22D9P, 2711P-T15C22D9P-B, 2711P-T15C22A9P, 2711P-T15C22A9P-B, 2711P-B15C22D9P, 2711P-B15C22D9P-B, 2711P-B15C22A9P, 2711P-B15C22A9P-B, 2711P-T19C22D9P, 2711P-T19C22D9P-B, 2711P-T19C22A9P, 2711P-T19C22A9P-B) are rated to: 0.006 in. pk-pk, 10...57 Hz, 1 g peak at 57...640 Hz.

Certifications

This table lists certifications for the PanelView Plus 7 Performance terminals.

Certification[1]	Value
cULus	cULus Listed Industrial Control Equipment for use in Hazardous Locations (E10314) per standards ANSI / ISA 12.12.01 and CSA C22.2 No. 213. rated: • Class I, Div 2, Groups A, B, C, D Enclosure type ratings per UL50 and CSA C22.2 No. 94.2-07. Enclosure ingress protection classified by UL per IEC 60529.
CE (EMC)	European Union 2004/108/EC EMC Directive, compliant with: • EN 61000-6-2; Industrial Immunity • EN 61000-6-4; Industrial Emissions • EN 61131-2; Programmable Controllers
CE (LVD)	European Union 2006/95/EC Low Voltage Directive, compliant with: • EN 61131-2; Programmable Controllers
RCM	Australian Radiocommunications Act, compliant with: • AS/NZS CISPR 11; Industrial Emissions
RoHS	China RoHS, Turkey RoHS, European RoHS
KCC	Certificate of compliance
EtherNet/IP	ODVA conformance tested to EtherNet/IP specifications

(1) When marked. See the Product Certification link at http://www.rockwellautomation.com/global/certification/overview.page for Declarations of Conformity, Certificates, and other certification details.

Technical Specifications

The tables in this section provide technical specifications for the PanelView Plus 7 Performance terminals.

PanelView Plus 7 Performance 7-in and 9-in Terminals

Attribute	7-in. Touch 2711P--T7C22D9P, 2711P--T7C22D9P-B (1) 2711P-T7C22A9P, 2711P-T7C22A9P-B	7-in. Touch with Keypad 2711P-B7C22D9P, 2711P-B7C22D9P-B (1) 2711P-B7C22A9P, 2711P-B7C22A9P-B	9-in. Touch 2711P-T9W22D9P, 2711P-T9W22D9P-B (1) 2711P-T9W22A9P, 2711P-T9W22A9P-B
Operator input	Touch	Touch with keypad	Touch
Display type	TFT Color		
Display size, diagonal	6.5-in.		9-in. widescreen
Viewing area (W x H)	132 x 99 mm (5.2 x 3.9 in.)		196 x 118 mm (7.7 x 4.6 in.)
Display resolution	640 x 480 VGA, 18-bit color graphics		800 x 480 WVGA, 18-bit color graphics
Aspect ratio	4:3		5:3
Brightness, typical	300 cd/m^2 (Nits)		
Backlight life	White light-emitting diode, solid-state Life: 50,000 h min at 40 °C (104 °F) to half-brightness, backlight is not replaceable		
Touch screen	Analog resistive Actuation rating: 1 million presses Operating force: 100 grams		
Battery (real-time clock backup)	Accuracy: +/-2 minutes per month. Battery life: 4 years min at 25 °C (77 °F) Replacement: CR2032 lithium coin cell		
Memory: • System • User	• 512 MB RAM and 512 MB storage • 80 MB, approx, nonvolatile storage for applications		
Secure Digital (SD) card slot	One SD card slot for external storage; supports cat. no. 1784-SD*x* cards		
USB ports: • Host • Device	• Two USB high-speed 2.0 host ports (type A) support removable flash drives for external storage • One high-speed 2.0 device port (type B) that will be functional in a future release		
Operating system	Windows CE with Extended Features and MS Office Viewers (includes FTP, VNC client server, ActiveX controls, PDF reader, third-party device support)		
Ethernet ports	Two 10/100Base-T, Auto MDI/MDI-X Ethernet ports that support Device Level Ring (DLR), linear, or star network topologies		
Software	FactoryTalk View Studio for Machine Edition, FactoryTalk ViewPoint, version 2.6 or later		
Electrical			
Input voltage	24V DC nom (18…30V DC)	100…240V AC	24V DC nom (18…30V DC)	100…240V AC	24V DC nom (18…30V DC)	100…240V AC
Power consumption	50 W max (2.1 A at 24V DC)	105VA	50 W max (2.1 A at 24V DC)	105VA	50 W max (2.1 A at 24V DC)	105VA
Power supply	Supports (SELV) and (PELV) 24V DC supplies (2)	—	Supports (SELV) and (PELV) 24V DC supplies (2)	—	Supports (SELV) and (PELV) 24V DC supplies (2)	—
Mechanical						
Weight, approx	1.2 kg (2.65 lb)		1.47 kg (3.25 lb)		1.58 kg (3.48 lb)	
Dimensions, approx (H x W x D)	170 x 212 x 69.6 mm 6.69 x 8.35 x 2.74 in.		179 x 285 x 69.6 mm 7.05 x 11.22 x 2.74 in.		190 x 280 x 69.6 mm 7.48 x 11.02 x 2.74 in.	
Cutout dimensions, approx (H x W)	142 x 184 mm 5.59 x 7.24 in.		142 x 237 mm 5.59 x 9.33 in.		162 x 252 mm 6.38 x 9.92 in.	

(1) Catalog numbers with a -B extension denote terminals that exclude the Allen-Bradley brand marking. Customers can put their own brand labels on these terminals.
(2) DC-powered terminals support safety extra low voltage (SELV) and protective extra low voltage (PELV) 24V DC power supplies such as cat. nos. 1606-XLP95E, 1606-XLP100E, 2711P-RSACDIN.

PART

G

CONTROLS PHILOSOPHY

CONTROLS PHILOSOPHY Salsnes Filter Iqaluit, NU

CONTROLS PHILOSOPHY Salsnes Filter Iqaluit, NU 1
1.0 Salsnes Filter System 3
1.1 Glossary 3
1.2 System Overview 3
1.3 Control Strategy Priorities 3
1.4 Safety Features 3
1.5 Alarm Classifications 4
2.0 CPP IO Layout 4
2.1 Discrete Inputs – Embedded I/O 5
2.2 Discrete Outputs – Embedded I/O 6
2.3 Discrete Inputs – I/O Module 1 7
2.4 Discrete Inputs – I/O Module 2 7
2.5 Analog Inputs – I/O Module 3 7
2.6 Communications Layout 8
3.0 CPP 8
3.1 Standard Operation 8
3.2 Operation Modes 10
3.3 Alarms 11
3.4 Operator Interface 11
4.0 Filter Belt 11
4.1 Control Architecture 11
4.2 Operation Modes 12
4.3 Alarms 12
4.4 Operator Interface 12
5.0 Blower 13
5.1 Control Architecture 13
5.1 Operation Modes 13
5.2 Alarms 14
5.3 Operator Interface - Overview 14
6.0 Sludge Screw 15
6.1 Control Architecture 15

6.2 Operation Modes 15
6.3 Alarms 16
6.4 Operator Interface 16
7.0 Level Transmitter 16
7.1 Control Architecture 16
7.2 Alarms 17
7.3 Operator Interface 17
8.0 Blower Pressure Transmitter 18
8.1 Control Architecture 18
8.2 Alarms 18
8.3 Operator Interface 18
9.0 Hot Water Valve 18
9.1 Control Architecture 18
9.2 Operation Modes 19
9.3 Operator Interface 19
10.0 Cold Water Valve 20
10.1 Control Architecture 20
10.2 Operation Modes – Off, On, Remote Off, Remote Manual, Auto 20
10.3 Operator Interface 20
11.0 Operator Interface 21
11.1 Alarms 21
11.2 Passwords 21
11.3 Data logging/Trending Screen 21
12.0 Interface with Plant Control System 22
12.1 Hardwired Status Signals 22
12.2 SF System interface tag list 23

1.0 *Salsnes Filter System*

The objective of this document is to provide details regarding the control strategy for the Salsnes Filter (SF) System. The control philosophy outlines the major hardware components, system status, alarm conditions, and modes of operation of the System.

1.1 Glossary

SF	Salsnes Filter
PLC	Programmable Logic Controller
IO	Inputs/Outputs
CPP	Control Power Panel. The CPP contains the local power distribution components for each system. It also houses the PLC, IO, and the Operator Interface Terminal
OIT	Operator Interface Terminal
VFD	Variable Frequency Drive

1.2 System Overview

The SF System uses a PLC based control system that provides optimized control of a mesh Filter Belt. Each SF System is powered by a CPP that houses the PLC, IO, and OIT which provides local control and monitoring. The PLC will control the Filter Belt rotational speed to obtain optimum separation of the incoming material. The speed will be varied by a Filter Motor to maintain a specified water level in the inlet well. The solids are deposited off of the belt into an outlet well, where optional dewatering may be performed by the Sludge Screw.

1.3 Control Strategy Priorities

The strategic operational priorities of the SF System controls are as follows (arranged in order of priority):

- Operator and equipment safety
- Maximize Separation, Thickening, and Dewatering Efficiency

1.4 Safety Features

The SF System control strategy employs an equipment protection interlock and monitors a number of alarm conditions that will result in control actions designed to maximize efficiency.

There is one critical interlock signal that is hardwired to the CPP that will disable the motors in the SF System. This critical interlock is:

- Emergency Stop Push Button
- Dewatering Screw Failure
- Options: Air Pressure Not Present, Ventilation Differential Pressure Alarm, External Sludge Bin Fault

Certain other alarm conditions will trigger a control action that will result in the filter motor running at a fixed high speed. Examples of these types of alarm conditions are more fully described later in this document.

1.5 Alarm Classifications

1.5.1 *Critical*

A critical alarm will cause an immediate system shutdown. Any inlet water will flow from the inlet to the security overflow and no filtration is expected.

1.5.2 *Major*

A major alarm will not stop the filtration process, but the machine will change to a fixed speed (that is adjustable manually) on the Filter Belt to ensure that the system will cope with the flow. Reduced filtration performance is expected.

1.5.3 *Minor*

A minor alarm will have no impact on the system. This alarm is intended to provide warning and maintenance information.

2.0 *CPP IO Layout*

Type	Details	Model
CPU	Allen Bradley Compact Logix Controller	1769-L16ER-BB1B
HMI	Allen Bradley PV +700	2711P-T7C4D8
Embedded Discrete Input	16 Input, 24VDC	Embedded Processor I/O
Embedded Discrete Output	16 Output, 24VDC	Embedded Processor I/O
Discrete Input	8 Input, 24VDC	1734-IB8
Discrete Input	8 Input, 24VDC	1734-IB8
Analog Input	4 Input 0-20mA	1734-IE4C

2.1 Discrete Inputs – Embedded I/O

Channel	Description	Tagname	Range
In0	Emergency Stop Pressed	07-HS303	1=Estop Pressed
In1	Panel Temperature OK		0=High Temperature
In2	Surge Protection Tripped	07-YA307	1=Protection Error
In3	Phase Monitoring Relay: Phase Error	07-JA304B	1=Phase Error
In4	Phase Monitoring Relay: Voltage Error	07-EA304A	1=Voltage Error
In5	Spare		
In6	Spare		
In7	Air Blower Cooling Fan Running	07-M330A	1=Motor Running
In8	24VDC Power Supply OK		0=Power Supply Error
In9	UPS Main Supply Faulted	07-YA308A	1=UPS Active
In10	UPS Battery Faulted	07-YA308B	1=Battery Error
In11	Air Blower Running	07-M330	1=Motor Running
In12	Air Blower Overload Tripped	07-M330	1=Overload Tripped
In13	Inlet Valve Opened	07-ZSO310	1=Valve Open
In14	Inlet Valve Closed	07-ZSO310	1=Valve Closed
In15	Spare		

2.2 Discrete Outputs – Embedded I/O

Channel	Description	Tagname	Range
Out0	Spare		
Out1	Air Blower Start Cooling Fan	07-M330A	1=Start Motor
Out2	Start Air Blower	07-M330	1=Start Motor
Out3	Open Hot Water Valve	07-SV360	1=Open Valve
Out4	Open Cold Water Valve	07-SV351	1=Open Valve
Out5	Open Drain Valve	07-SV340	1=Open Valve
Out6	Open Inlet Valve	07-FV310	1=Open Valve
Out7	Close Inlet Valve	07-FV310	1=Close Valve
Out8	Spare		
Out9	Spare		
Out10	Spare		
Out11	Spare		
Out12	Spare		
Out13	Status Bit 1 - Configurable	07-YA390A	1=Configured Condition True
Out14	Status Bit 2 – Configurable	07-YA390B	1=Configured Condition True
Out15	Status Bit 3 - Configurable	07-YA390C	1=Configured Condition True

2.3 Discrete Inputs – I/O Module 1

Channel	Description	Tagname	Range
In0	Spare		
In1	HMI Mode (switch in cabinet door)	07-HS301A	1=HMI mode
In2	Local On Mode (switch in cabinet door)	07-HS301B	1=Local mode
In3	Remote Permissive Run (customer)	07-YA391	1=OK to run
In4	Remote Reset (customer)	07-YA392	1=Reset
In5	Spare		
In6	Inlet Valve Overload Tripped		1=Overload Tripped
In7	Spare		

2.4 Discrete Inputs – I/O Module 2

Channel	Description	Tagname	Range
In0	Spare		
In1	Spare		
In2	Spare		
In3	Spare		
In4	Spare		
In5	Spare		
In6	Spare		
In7	Spare		

2.5 Analog Inputs – I/O Module 3

Channel	Description	Tagname	Range
In0	Filter level	07-LT300	TBD
In1	Air pressure	07-PT331	0-15 psi
In2	*Spare*		
In3	*Spare*		

2.6 Communications Layout

Device Description	Address	Subnet Mask	Gateway	Tagname
CPP PLC	192.168.3.11	255.255.255.0	192.168.3.1	
CPP OIT	192.168.3.12	255.255.255.0	192.168.3.1	
CPP Modem	192.168.3.10	255.255.255.0	192.168.3.1	
CPP Filter VFD	192.168.3.13	255.255.255.0	192.168.3.1	07-M320
CPP Sludge Screw VFD	192.168.3.14	255.255.255.0	192.168.3.1	07-M350

3.0 *CPP*

3.1 Standard Operation

3.1.1 *Startup*

The startup sequence is as follows (system in HMI mode, all devices in Automatic):

- If PLC is configured to control the inlet valve, this valve will be opened when the filter is Local On or in HMI mode and a filter Start is requested either through a HMI start request or by a remote SCADA or hardwired Permissive Run request
- System remains idle until the water level in the inlet well reaches the start level set-point
- Once the water level in the inlet well reaches the start level set-point, the following motors will start:
    - Blower Motor (starts at adjustable water level before filter)
    - Blower Motor Cooling Fan
    - Filter Motor
    - Sludge Screw Motor – (after adjustable time delay)
- The Blower Motor must be at full speed in Auto before the Filter Motor will be allowed to start – the blower start level may be adjusted in order to optimize the system
- The filter belt speed may be set using the following configurable modes:
    - PID controlled to maintain a target water level set-point
    - Directly proportional to the water level
    - Fixed speed manual mode
- The Filter Motor will stop if the water level drops below the stop level set-point

3.1.2 *Controlled Shutdown*

The controlled shutdown sequence is as follows:

- System remains running while the water level in the inlet well stays above the stop level set-point
- Once the water level drops below the stop level set-point, the Filter Motor will stop immediately
- The Sludge Screw Motor will stop after a configurable time delay, after the Filter Motor has stopped
- The Blower Motor will then stop after the stop delay time expires
- The Blower Motor Cooling Fan will stop after a hard coded 1-minute time delay, after the Blower Motor has stopped
- Optionally the filter stop sequence may also be triggered by the loss of the plant permissive digital input signal which will also result in the inlet valve being closed (if applicable)
- If system is shutting down due to an operator request to put the filter out of operation (HMI Stop command or SCADA/hardwired loss of permissive run), a Cold Water Washing procedure will trigger before Blower shut-down

3.1.3 *Critical Shutdown*

The critical shutdown sequence is as follows:

- System shutdown signal is issued due to a critical alarm
- The Blower Motor turns off
- The Blower Motor Cooling Fan turns off
- The Filter Motor turns off
- The Sludge Screw Motor turns off
- Inlet valve close (if applicable)
- All valves and motors will shut down simultaneously
- System will not re-start until the critical alarm has been cleared

3.1.4 *Hot Water Flush*

Automatic Hot Water Flushing of the filter mesh and dewatering basin is performed as follows:

- System must be in HMI mode with selected to Automatic Mode, and no critical or major alarms are present
- Cold Water Flush cannot be occurring
- The Hot Water Flush interval time, which is set from the OIT, expires
- The Hot Water Flush Valve opens
- The Filter Motor runs at a constant speed
- The Hot Water Flush Valve closes after the flush duration time expires
- The Filter Motor speed regulation mode goes back to normal control

3.1.5 *Cold Water Flush*

Automatic Cold Water Flushing (not available on the SF1000) of the filtered water basin is performed as follows:

- System must be in HMI mode and all Motors and Valves in Automatic Mode, and no critical or major alarms are present
- System does not need to be moving but must be requested to operate
- Hot Water Flush cannot be occurring
- The Cold Water Flush interval time, which is set from the OIT, expires
- The Cold Water Flush Valve opens
- The Filtered Water Drain Valve, if equipped, opens
- The Cold Water Flush Valve and Filtered Water Drain Valve close after the flush duration time expires
- A Cold Water Flush sequence will also be triggered at the end of a controlled shutdown sequence as described in section 3.1.2

3.2 Operation Modes

3.2.1 *Off*

When the Filter Control Switch is in the “Off” position, the CPP PLC will have no control of the motors or valves.

3.2.2 *On*

When the Filter Control Switch is in the “On” position, the CPP PLC will have no control of the motors or valves. In this mode the filter starters and drives will all be electrically activated and will operate at a fixed speed using the manual speed set-points on the HMI.

3.2.3 *HMI Mode*

When the filter control mode switch is in the “HMI” position the CPP PLC has control of all motors in the system based on the configuration set in the CPP OIT. From the OIT, the filter system HMI mode can be set to “Off”, “Manual”, or “Auto” modes. When the filter system is set to HMI-Manual mode, each motor and valve may be individually requested to be started/opened or stopped/closed. When the filter control mode switch transitions to the “HMI” position, the PLC will automatically set the HMI mode to Automatic and all valves and motors will be automatically controlled by the PLC. The HMI mode must be switched to OFF or Manual if direct operator control of the devices is required.

Normal Operation of the SF System is to have all Motors and valves automatically controlled with the system in HMI Auto mode. Fully automatic operation of the system is described in section ‘3.1 – Standard Operation’. HMI Manual Operation of individual Motors is described later in this document.

3.3 Alarms

Each CPP alarm condition will generate a corresponding system level alarm.

Alarm Description	Alarm Condition	Delay	Classification		
			Minor	Major	Critical
Main Power Supply Failure	The Phase Monitoring relay detected a loss of main input power on one or more phases.				Enabled
UPS Supply Activated	The UPS has detected a loss of main power and the PLC is now operating on UPS power.	Critical			Enabled
UPS Battery Fault	The UPS has detected that the battery pack is faulted.	None	Enabled		
Emergency Stop Activated	The Emergency Stop located at the Filter is activated. Key Switch Reset is required to enable the system.	None			Enabled
Motor Failure	The Filter Motor, Blower Motor, or Sludge Screw Motor has failed to respond to a control command (start/stop) within a certain amount of time	Critical			Enabled
Service is due (Blower, Sludge Screw, Filter)	Indicates that service is required based on run time of equipment (should be 300 hours initially on blower, then 3000 hours)	None	Enabled		

3.4 Operator Interface

3.4.1 *Display Data*

The OIT will have a System Overview screen that will be used to display system status information and to provide operator control functions.

The System Overview screen will contain the following information:

- System status
- System fault indicators

4.0 *Filter Belt*

4.1 Control Architecture

The Filter Belt, which contains a filter mesh mounted on a removable cartridge, is used to draw waste material from the inlet to outlet sludge conveyor. Water is separated from the material as it is transported on the mesh towards the outlet well.

A Filter Motor, which rotates the Filter Belt, is driven by a VFD that regulates the speed based on a PID control algorithm. The speed is continually regulated in order to maintain an enterable inlet water level set-point. Optionally the system may be configured to operate the filter speed in a proportional mode so that the speed of the filter is proportionally increased as the filter water level increases, but a target water level is not maintained.

The VFD is controlled by a network communication signal controlled from the CPP PLC.

4.2 Operation Modes

4.2.1 *System Mode - Off*

When the System Mode selector switch is set to OFF, the Filter Belt Motor will not start.

4.2.2 *System Mode – On*

When the System Mode selector switch is set to ON, the Filter Belt Motor will be started by an electrical interlock that will force the motor to run at a fixed speed configured by the manual HMI set-points.

4.2.3 *System Mode HMI - Off*

When the System Mode selector switch is in the “HMI” position, and the HMI mode is set to “Off”, the CPP PLC will keep motor turned off and will not automatically start the Filter Motor, regardless of Filter level.

4.2.4 *System Mode HMI - Manual*

When the System Mode selector switch is in the “HMI” position, and the HMI mode is set to “Manual”, the CPP PLC will start and run Filter Motor according to requests by the operator from the HMI. The speed of the Filter Motor will be controlled by an operator entry on the OIT.

NOTE: This mode should not be used when the filter inlet valve is open unless the blower and sludge screw is also operating.

4.2.5 *System Mode HMI - Auto*

When the System Mode selector switch is in the “HMI” position, and the HMI mode is set to “Auto”, the CPP PLC has control of the Filter Belt. See section ‘3.1 – Standard Operation’.

4.3 Alarms

Each Filter Belt alarm condition will generate a corresponding system level alarm.

Alarm Description	Alarm Condition	Delay	Classification		
			Minor	Major	Critical
07-M320 Fault Filter Cloth	The VFD for the Filter Motor has reported a fault condition				Enabled

4.4 Operator Interface

4.4.1 *Display Data - Overview*

The OIT will have a System Overview screen that will be used to display Filter Belt status information and to provide operator control functions.

The screen will contain the following information:

- Filter Motor status
- Filter Motor fault indicators
- Filter Motor manual control

4.4.2 *Display Data - Information*

- Filter Motor running time (today, yesterday, total)
- Filter Motor starts (today, yesterday, total)

4.4.3 *Operator Settings*

Users will have access to screens which will allow them to view and modify the following Filter Belt options and settings:

- Adjust the Mode of the Filter Belt Motor
- Adjust the Start and Stop Level of the Filter Belt Motor
- Level set-point for Filter
- High level alarm set-point
- Minimum and maximum speed
- Filter Acceleration and Deceleration time
- Adjust the speed set-point of the Filter Belt Motor when it is in Manual

5.0 *Blower*

5.1 Control Architecture

The Blower is used to provide air for the Air Knife – Mesh Cleaning System, which is used to blow material off of the filter mesh into the sludge conveyor.

The Blower Motor is driven by a soft starter and maintains a fixed speed based on the selected blower specification.

The soft starter is controlled by a signal communicated from the CPP PLC.

A Blower Cooling Fan is mounted in the Blower enclosure. It will run when the Blower Motor is on, and it will stop when the Blower Motor stops after a hard coded 1 minute time delay.

5.1 Operation Modes

5.1.1 *System Mode - Off*

When the System Mode selector switch is set to OFF, the Blower Motor and Cooling Motor will not start.

5.1.2 *System Mode – On*

When the System Mode selector switch is set to ON, the Blower Motor and Cooling Motors will be started by an electrical interlock.

5.1.3 *System Mode HMI - Off*

When the System Mode selector switch is in the “HMI” position, and the HMI mode is set to “Off”, the CPP PLC will keep motor turned off and will not automatically start the Blower Motor and Blower Cooling Motor, regardless of Filter level.

5.1.4 *System Mode HMI - Manual*

When the System Mode selector switch is in the “HMI” position, and the HMI mode is set to “Manual”, the CPP PLC will start and run Blower Motor and Blower Cooling Motor according to requests by the operator from the HMI.

5.1.5 *System Mode HMI - Auto*

When the Filter Control Switch is in the “HMI” position, and the HMI mode is set to “Auto”, the CPP PLC has control of the Blower. See section ‘3.1 – Standard Operation’.

5.2 Alarms

Each Blower Motor alarm condition will generate a corresponding system level alarm.

Alarm Description	Alarm Condition	Delay	Classification		
			Minor	Major	Critical
07-M330 Fault Blower	The Blower Motor has reported a fault condition				Enabled
07-M330A Fault Blower Cooling Fan	The Blower Motor Cooling Fan has reported a fault condition		Enabled		

5.3 Operator Interface - Overview

5.3.1 *Display Data*

The OIT will have a System Overview screen that will be used to display Blower status information and to provide operator control functions.

The screen will contain the following information:

- Blower Motor status
- Blower Motor fault indicators
- Blower Motor manual control

5.3.2 *Display Data - Information*

- Blower Motor running time (today, yesterday, total)
- Blower Motor starts (today, yesterday, total)

5.3.3 *Operator Settings*

Users will have access to screens which will allow them to view and modify the following Blower Motor options and settings:

- Adjust the Mode of the Blower Motor
- Start and Stop blower motor in manual mode
- Adjust the Stop Delay time of the Blower Motor
- Adjust the Stop Delay speed of the Blower Motor
- Adjust the speed set-point of the Blower Motor

6.0 *Sludge Screw*

6.1 Control Architecture

The Sludge Screw is used to dewater and/or convey the Sludge that has been transported by the filter mesh. The Sludge is collected and conveyed by the screw where it is optionally pressed and dewatered before exiting the SF System.

The Sludge Screw Motor is driven by a VFD that maintains a fixed speed target based on a configurable setting from the CPP OIT. The Sludge Screw may be operated in forward or reverse direction in manual mode.

The VFD is controlled by a signal communicated from the CPP PLC.

6.2 Operation Modes

6.2.1 *System Mode - Off*

When the System Mode selector switch is set to OFF, the Sludge Screw will not start.

6.2.2 *System Mode – On*

When the System Mode selector switch is set to ON, the Sludge Screw will be started by an electrical interlock.

6.2.3 *System Mode HMI - Off*

When the System Mode is in the “HMI” position, and the HMI mode is set to “Off”, the CPP PLC will keep the motor turned off and will not automatically start the Sludge Screw, regardless of Filter level.

6.2.4 *System Mode HMI - Manual*

When the System Mode selector switch is in the “HMI” position, and the HMI mode is set to “Manual”, the CPP PLC will start and run the Sludge Screw according to requests by the operator from the HMI. The speed of the Sludge Screw will be controlled by an operator entry on the OIT.

6.2.5 *System Mode HMI - Auto*

When the System Mode selector switch is in the “HMI” position, and the HMI mode is set to “Auto”, the CPP PLC has control of the Sludge Screw. See section ‘3.1 – Standard Operation’.

6.3 Alarms

Each Sludge Screw Motor alarm condition will generate a corresponding system level alarm.

Alarm Description	Alarm Condition	Delay	Classification		
			Minor	Major	Critical
07-M350 Fault Sludge Screw	The VFD for the Sludge Screw Motor has reported a fault condition				Enabled

6.4 Operator Interface

6.4.1 *Display Data - Overview*

The OIT will have a System Overview screen that will be used to display Sludge Screw status information and to provide operator control functions.

The screen will contain the following information:

- Sludge Screw Motor status
- Sludge Screw Motor fault indicators
- Sludge Screw Motor manual control

6.4.2 *Display Data - Information*

- Sludge Screw Motor running time (today, yesterday, total)
- Sludge Screw Motor starts (today, yesterday, total)

6.4.3 *Operator Settings*

Users will have access to screens which will allow them to view and modify the following Sludge Screw Motor options and settings:

- Adjust the Mode of the Sludge Screw Motor
- Adjust the Stop Delay time of the Sludge Screw Motor
- Adjust the speed set-point of the Sludge Screw Motor

7.0 *Level Transmitter*

7.1 Control Architecture

An inlet well water level transmitter is required in order to determine when to start and stop the SF System. The water level is also used to control the speed of the Filter Belt. The value is supplied to the CPP PLC via a 4-20 mA analog signal that is passed through a smoothing

algorithm to reduce noise. This signal is then scaled to engineering units based on a full scale level set-point.

7.2 Alarms

Each level transmitter alarm condition will generate a corresponding system level alarm.

Alarm Description	Alarm Condition	Delay	Classification		
			Minor	Major	Critical
07-LT300 HL Level Filter	The level is greater than the High Level Alarm value		Enabled		
07-LT300 Overflow Filter	The level is greater than the Overflow limit.		Enabled		
07-LT300 Defect	The level transmitter is not within the allowable 4-20mA range			Enabled	

7.3 Operator Interface

7.3.1 *Display Data - Overview*

The OIT will have a System Overview screen that will be used to display Level Transmitter status information and to provide operator control functions.

The screen will contain the following information:

- Level Transmitter status
- Level Transmitter fault indicators

7.3.2 *Display Data - Information*

- Overflow time (today and yesterday)
- Overflow time total
- # of overflows (today and yesterday)
- Total number of overflows

7.3.3 *Operator Settings*

Users will have access to screens which will allow them to view and modify the following Level Transmitter options and settings:

- Adjust the Inlet Well water level set-point
- Adjust the start and stop water level limit
- Adjust the High Level alarm limit
- Adjust the Overflow alarm limit

8.0 *Blower Pressure Transmitter*

8.1 Control Architecture

A pressure transmitter is required in order to determine if the Blower is operating correctly. The value is supplied to the CPP PLC via a 4-20 mA analog signal that is passed through a smoothing algorithm to reduce noise. This signal is then scaled to engineering units based on a full scale pressure set-point.

8.2 Alarms

Each pressure transmitter alarm condition will generate a corresponding system level alarm.

Alarm Description	Alarm Condition	Delay	Classification		
			Minor	Major	Critical
07-PT331 LL Pressure Blower	The pressure is less than the Low Level Alarm value				Enabled
07-PT331 HL Pressure Blower	The pressure is greater than the High Level Alarm value		Enabled		
07-PT331 Defect	The pressure transmitter is not within the allowable 4-20mA range				Enabled

8.3 Operator Interface

8.3.1 *Display Data*

The OIT will have a System Overview screen that will be used to display Pressure Transmitter status information and to provide operator control functions.

The screen will contain the following information:

- Pressure Transmitter status
- Pressure Transmitter fault indicators

9.0 *Hot Water Valve*

9.1 Control Architecture

Hot Water is used for filter belt cleaning. All motors must be operating and in Automatic mode before a Hot Water flush will occur. The hot water valve is controlled by the CPP PLC via a discrete open signal, or the OIT in manual mode.

The CPP PLC will automatically perform a Hot Water flush based on a configurable time delay.

The Blower Motor, Blower Motor Cooling Fan, Filter Motor, and Sludge Screw Motor will start when the Hot Water Valve is being commanded to open via the in Auto mode.

9.2 Operation Modes

9.2.1 *System Mode - Off*

When the System Mode selector switch is set to OFF, the Hot Water valve will not open.

9.2.2 *System Mode – On*

When the System Mode selector switch is set to ON, the Hot Water valve will remain closed.

9.2.3 *System Mode HMI - Off*

When the System Mode is in the “HMI” position, and the HMI mode is set to “Off”, the CPP PLC will keep the Hot Water valve closed and will not automatically open the Hot Water valve.

9.2.4 *System Mode HMI - Manual*

When the System Mode selector switch is in the “HMI” position, and the HMI mode is set to “Manual”, the CPP PLC will open and close the Hot Water valve according to requests by the operator from the HMI.

9.2.5 *System Mode HMI - Auto*

When the System Mode selector switch is in the “HMI” position, and the HMI mode is set to “Auto”, the CPP PLC has control of the Hot Water valve. See section ‘3.1 – Standard Operation’. The Hot Water flush timer will count down to control the operation of the valve only in HMI-Auto mode. In all other modes, the Hot Water flush timer will be reset and suspended.

9.3 Operator Interface

9.3.1 *Display Data*

The OIT will have System Overview and Flushing screens that will be used to display Hot Water Valve status information and to provide operator control functions.

The screens will contain the following information:

- Valve status
- Adjust the Remote Mode of the Hot Water Valve
- Manual flush one control

9.3.2 *Operator Settings*

Users will have access to screens which will allow them to view and modify the following Hot Water Valve options and settings:

- Adjust the automatic Hot Water Flush interval delay time
- Adjust the automatic Hot Water Flush duration time

10.0 *Cold Water Valve*

10.1 Control Architecture

Cold Water is used for flushing of the filtered water basin. The cold water valve is controlled by the CPP PLC via a discrete open signal, or a manual Cold Water Control Switch.

The CPP PLC will automatically perform a Cold Water flush based on a configurable time delay.

10.2 Operation Modes – Off, On, Remote Off, Remote Manual, Auto

10.2.1 *System Mode - Off*

When the System Mode selector switch is set to OFF, the Cold Water valve will not open.

10.2.2 *System Mode – On*

When the System Mode selector switch is set to ON, the Cold Water valve will remain closed.

10.2.3 *System Mode HMI - Off*

When the System Mode is in the “HMI” position, and the HMI mode is set to “Off”, the CPP PLC will keep the Cold Water valve closed and will not automatically open the Cold Water valve.

10.2.4 *System Mode HMI - Manual*

When the System Mode selector switch is in the “HMI” position, and the HMI mode is set to “Manual”, the CPP PLC will open and close the Cold Water valve according to requests by the operator from the HMI.

10.2.5 *System Mode HMI - Auto*

When the System Mode selector switch is in the “HMI” position, and the HMI mode is set to “Auto”, the CPP PLC has control of the Cold Water valve. See section ‘3.1 – Standard Operation’. The Cold Water flush timer will count down to control the operation of the valve only in HMI-Auto mode. In all other modes, the Cold Water flush timer will be reset and suspended.

10.3 Operator Interface

10.3.1 *Display Data*

The OIT will have System Overview and Flushing screens that will be used to display Cold Water Valve status information and to provide operator control functions.

The screens will contain the following information:

- Valve status

- Adjust the Remote Mode of the Cold Water Valve
- Manual flush one control

10.3.2 *Operator Settings*

Users will have access to screens which will allow them to view and modify the following Cold Water Valve options and settings:

- Adjust the automatic Cold Water Flush interval delay time
- Adjust the automatic Cold Water Flush duration time

11.0 *Operator Interface*

11.1 Alarms

Alarms generated by the CPP PLC will be logged and displayed on the local OIT Alarm screen, as well as being passed to the Plant Control System. Each alarm generated will be time and date stamped at the OIT. The most recent alarms are recorded and displayed in the alarm history register of the OIT.

11.2 Passwords

The OIT for the equipment described within this document will each contain 3 levels of password protection; Operator, Technician and OEM level. Operator level has less user privileges for accessing and changing parameters for the system. Technician level has a higher level of user privileges and OEM level has full system configuration privileges. Users will be prompted to log in if trying to view or operate items with insufficient user privileges. Unique user passwords will not be provided for this system. A system log will record a history of the user log in access.

11.3 Data logging/Trending Screen

The OIT will store data points into a datalog file for retrieval for offline analysis, or for display on a Trend screen. The following data will be stored:

- Filter Level
- Filter Belt Speed
- Blower Air Pressure
- Filter Flow
- Filter Motor Voltage
- Filter Motor Current
- Sludge Screw Motor Voltage
- Sludge Screw Motor Current

12.0 *Interface with Plant Control System*

12.1 Hardwired Status Signals

The filter PLC will provide 3 discrete outputs (Status Bit 1 to 3) which can be configured as desired to provide alarm or operating status information. Multiple outputs may also be assigned to the same alarm output such that if any of the assigned conditions are present, the output contact will be closed. The following signals are available for assignment to these outputs:

- Filter motor running
- Sludge screw running
- Air blower running
- Water sampler pulse
- Cold water flush active
- Hot water flush active
- Drain valve open
- Filter in Automatic mode
- Common Critical Alarm
- Common Major Alarm
- Common Minor Alarm

12.2 SF System interface tag list

SF System interface tag list (SCADA list) will be developed at time of program development and will be provided as a separate “SCADA List” document.

RSLogix 5000 Symbolic Address	RSLogix 5000 Mapped Address	Tag Description	Units

From Salsnes to SCADA

	PLC Tag Name	Data Type	Description	Units	Range	Scaling
Heartbeat	Scada_Read[0]	Integer	Heartbeat to SCADA		0-32767	x1
Mode	Scada_Read[1]	Integer	System Mode	0-Off, 1-Manual, 2-Auto		
Filter Data	Scada_Read[2].0	Bool	Filter Motor Auto	1=Auto	0-1	
	Scada_Read[2].1	Bool	Filter Motor Running	1=Running	0-1	
	Scada_Read[2].2	Bool	Filter Motor Faulted	1=Faulted	0-1	
	Scada_Read[2].3	Bool	Spare			
	Scada_Read[2].4	Bool	Spare			
	Scada_Read[2].5	Bool	Spare			
	Scada_Read[2].6	Bool	Spare			
	Scada_Read[2].7	Bool	Spare			
	Scada_Read[2].8	Bool	Filter Level Sensor Faulted	1=Faulted	0-1	
	Scada_Read[2].9	Bool	Spare			
	Scada_Read[2].10	Bool	Spare			
	Scada_Read[2].11	Bool	Spare			
	Scada_Read[2].12	Bool	Spare			
	Scada_Read[2].13	Bool	Spare			
	Scada_Read[2].14	Bool	Spare			
	Scada_Read[2].15	Bool	Spare			
	Scada_Read[3]	Integer	Filter Mesh Speed	15-80 Hz	0-80	x1
	Scada_Read[4]	Integer	Filter Level	(-1000)-1000 mm	(-1000)-1000	x1
	Scada_Read[5]	Integer	Spare			
Air Blower Data	Scada_Read[6].0	Bool	Air Blower Motor Auto	1=Auto	0-1	
	Scada_Read[6].1	Bool	Air Blower Motor Running	1=Running	0-1	
	Scada_Read[6].2	Bool	Air Blower Motor Faulted	1=Faulted	0-1	
	Scada_Read[6].3	Bool	Spare			
	Scada_Read[6].4	Bool	Spare			
	Scada_Read[6].5	Bool	Spare			
	Scada_Read[6].6	Bool	Spare			
	Scada_Read[6].7	Bool	Spare			
	Scada_Read[6].8	Bool	Air Blower Pressure Sensor Faulted	1=Faulted	0-1	
	Scada_Read[6].9	Bool	Spare			
	Scada_Read[6].10	Bool	Spare			
	Scada_Read[6].11	Bool	Spare			
	Scada_Read[6].12	Bool	Spare			
	Scada_Read[6].13	Bool	Spare			
	Scada_Read[6].14	Bool	Spare			
	Scada_Read[6].15	Bool	Spare			
	Scada_Read[7]	Integer	Air Blower Pressure	0-600 mbar	0-600	x1
	Scada_Read[8]	Integer	Spare			
	Scada_Read[9]	Integer	Spare			
Sludge Screw Data	Scada_Read[10].0	Bool	Sludge Screw Motor Auto	1=Auto	0-1	
	Scada_Read[10].1	Bool	Sludge Screw Motor Running	1=Running	0-1	
	Scada_Read[10].2	Bool	Sludge Screw Motor Faulted	1=Faulted	0-1	
	Scada_Read[10].3	Bool	Spare			
	Scada_Read[10].4	Bool	Spare			
	Scada_Read[10].5	Bool	Spare			
	Scada_Read[10].6	Bool	Spare			
	Scada_Read[10].7	Bool	Spare			
	Scada_Read[10].8	Bool	Spare			
	Scada_Read[10].9	Bool	Spare			
	Scada_Read[10].10	Bool	Spare			
	Scada_Read[10].11	Bool	Spare			
	Scada_Read[10].12	Bool	Spare			
	Scada_Read[10].13	Bool	Spare			
	Scada_Read[10].14	Bool	Spare			
	Scada_Read[10].15	Bool	Spare			
	Scada_Read[11]	Integer	Sludge Screw Speed	15-80 Hz	0-80	x1
	Scada_Read[12]	Integer	Spare			
	Scada_Read[13]	Integer	Spare			
	Scada_Read[14]	Integer	Spare			
Valve Data	Scada_Read[15].0	Bool	Inlet Valve Auto	1=Auto	0-1	
	Scada_Read[15].1	Bool	Inlet Valve Opened	1=Opened	0-1	
	Scada_Read[15].2	Bool	Inlet Valve Closed	1=Closed	0-1	
	Scada_Read[15].3	Bool	Inlet Valve Faulted	1=Faulted	0-1	
	Scada_Read[15].4	Bool	Spare			
	Scada_Read[15].5	Bool	Spare			
	Scada_Read[15].6	Bool	Spare			
	Scada_Read[15].7	Bool	Spare			
	Scada_Read[15].8	Bool	Drain Valve Auto	1=Auto	0-1	
	Scada_Read[15].9	Bool	Drain Valve Opened	1=Opened	0-1	
	Scada_Read[15].10	Bool	Drain Valve Closed	1=Closed	0-1	
	Scada_Read[15].11	Bool	Drain Valve Faulted	1=Faulted	0-1	
	Scada_Read[15].12	Bool	Spare			
	Scada_Read[15].13	Bool	Spare			
	Scada_Read[15].14	Bool	Spare			
	Scada_Read[15].15	Bool	Spare			
	Scada_Read[16].0	Bool	Hot Water Valve Auto	1=Auto	0-1	
	Scada_Read[16].1	Bool	Hot Water Valve Opened	1=Opened	0-1	
	Scada_Read[16].2	Bool	Hot Water Valve Closed	1=Closed	0-1	
	Scada_Read[16].3	Bool	Hot Water Valve Faulted	1=Faulted	0-1	
	Scada_Read[16].4	Bool	Spare			
	Scada_Read[16].5	Bool	Spare			
	Scada_Read[16].6	Bool	Spare			
	Scada_Read[16].7	Bool	Spare			
	Scada_Read[16].8	Bool	Cold Water Valve Auto	1=Auto	0-1	
	Scada_Read[16].9	Bool	Cold Water Valve Opened	1=Opened	0-1	
	Scada_Read[16].10	Bool	Cold Water Valve Closed	1=Closed	0-1	
	Scada_Read[16].11	Bool	Cold Water Valve Faulted	1=Faulted	0-1	
	Scada_Read[16].12	Bool	Spare			
	Scada_Read[16].13	Bool	Spare			
	Scada_Read[16].14	Bool	Spare			
	Scada_Read[16].15	Bool	Spare			
	Scada_Read[17]	Integer	Spare			
	Scada_Read[18]	Integer	Spare			
	Scada_Read[19]	Integer	Spare			
	Scada_Read[20]	Integer	Filter Motor Running Time Today	Minutes	0-32767	x1
	Scada_Read[21]	Integer	Filter Motor Running Time Yesterday	Minutes	0-32767	x1
	Scada_Read[22]	Integer	Filter Motor Running Time Total	Hours	0-32767	x1

From Salsnes to SCADA

	PLC Tag Name	Data Type	Description	Units	Range	Scaling
Accumulated	Scada_Read[23]	Integer	Filter Motor Starts Today		0-32767	x1
	Scada_Read[24]	Integer	Filter Motor Starts Yesterday		0-32767	x1
	Scada_Read[25]	Integer	Filter Motor Starts Total		0-32767	x1
	Scada_Read[26]	Integer	Air Blower Motor Running Time Today	Minutes	0-32767	x1
	Scada_Read[27]	Integer	Air Blower Motor Running Time Yesterday	Minutes	0-32767	x1
	Scada_Read[28]	Integer	Air Blower Motor Running Time Total	Hours	0-32767	x1
	Scada_Read[29]	Integer	Air Blower Motor Starts Today		0-32767	x1
	Scada_Read[30]	Integer	Air Blower Motor Starts Yesterday		0-32767	x1
	Scada_Read[31]	Integer	Air Blower Motor Starts Total		0-32767	x1
	Scada_Read[32]	Integer	Sludge Screw Motor Running Time Today	Minutes	0-32767	x1
	Scada_Read[33]	Integer	Sludge Screw Motor Running Time Yesterday	Minutes	0-32767	x1
	Scada_Read[34]	Integer	Sludge Screw Motor Running Time Total	Hours	0-32767	x1
	Scada_Read[35]	Integer	Sludge Screw Motor Starts Today		0-32767	x1
	Scada_Read[36]	Integer	Sludge Screw Motor Starts Yesterday		0-32767	x1
	Scada_Read[37]	Integer	Sludge Screw Motor Starts Total		0-32767	x1
	Scada_Read[38]	Integer	Filter Overflow Time Today	Minutes	0-32767	x1
	Scada_Read[39]	Integer	Filter Overflow Time Yesterday	Minutes	0-32767	x1
	Scada_Read[40]	Integer	Filter Overflow Time Total	Hours	0-32767	x1
	Scada_Read[41]	Integer	Filter Overflow Count Today		0-32767	x1
	Scada_Read[42]	Integer	Filter Overflow Count Yesterday		0-32767	x1
	Scada_Read[43]	Integer	Filter Overflow Count Total		0-32767	x1
	Scada_Read[44]	Integer	Spare			
	Scada_Read[45]	Integer	Spare			
	Scada_Read[46]	Integer	Spare			
	Scada_Read[47]	Integer	Spare			
	Scada_Read[48]	Integer	Spare			
	Scada_Read[49]	Integer	Spare			
Alarms	Scada_Read[50].0	Bool	Supply Voltage Level error			
	Scada_Read[50].1	Bool	Emergency Stop active			
	Scada_Read[50].2	Bool	Phase Sequence error			
	Scada_Read[50].3	Bool	Hot Water low pressure			
	Scada_Read[50].4	Bool	Hot Water low temperature			
	Scada_Read[50].5	Bool	Surge Protection active			
	Scada_Read[50].6	Bool	Power Supply Control Circuit fault			
	Scada_Read[50].7	Bool	UPS active			
	Scada_Read[50].8	Bool	UPS replace batteries			
	Scada_Read[50].9	Bool	Level Offset Setting Out Of Range			
	Scada_Read[50].10	Bool	High level in filter			
	Scada_Read[50].11	Bool	Overflow			
	Scada_Read[50].12	Bool	Low air pressure			
	Scada_Read[50].13	Bool	High air pressure			
	Scada_Read[50].14	Bool	Flow Meter short circuit			
	Scada_Read[50].15	Bool	Flow Meter open circuit			
	Scada_Read[51].0	Bool	Level Transmitter short circuit			
	Scada_Read[51].1	Bool	Level Transmitter open circuit			
	Scada_Read[51].2	Bool	Pressure Transmitter short circuit			
	Scada_Read[51].3	Bool	Pressure Transmitter open circuit			
	Scada_Read[51].4	Bool	PLC IO fault			
	Scada_Read[51].5	Bool	Filter Belt Inverter communication fault			
	Scada_Read[51].6	Bool	Sludge Screw Inverter communication fault			
	Scada_Read[51].7	Bool	Spare			
	Scada_Read[51].8	Bool	High temperature in enclosure			
	Scada_Read[51].9	Bool	Spare			
	Scada_Read[51].10	Bool	Spare			
	Scada_Read[51].11	Bool	Filter Belt Motor overload tripped			
	Scada_Read[51].12	Bool	Filter Belt Inverter fault			
	Scada_Read[51].13	Bool	Filter Belt Motor failed to start			
	Scada_Read[51].14	Bool	Filter Belt Motor service due			
	Scada_Read[51].15	Bool	Air Blower Overload tripped			
	Scada_Read[52].0	Bool	Air Blower Inverter fault			
	Scada_Read[52].1	Bool	Air Blower failed to start			
	Scada_Read[52].2	Bool	Air Blower service due			
	Scada_Read[52].3	Bool	Sludge Screw Motor overload tripped			
	Scada_Read[52].4	Bool	Sludge Screw Inverter fault			
	Scada_Read[52].5	Bool	Sludge Screw Motor failed to start			
	Scada_Read[52].6	Bool	Sludge Screw Motor service due			
	Scada_Read[52].7	Bool	Spare			
	Scada_Read[52].8	Bool	Spare			
	Scada_Read[52].9	Bool	Spare			
	Scada_Read[52].10	Bool	Spare			
	Scada_Read[52].11	Bool	Spare			
	Scada_Read[52].12	Bool	Spare			
	Scada_Read[52].13	Bool	Spare			
	Scada_Read[52].14	Bool	Spare			
	Scada_Read[52].15	Bool	Spare			

PART I

WARRANTIES

Salsnes Equipment Limited Warranty

January 23, 2013

The following terms and conditions will govern the equipment warranty provided by Salsnes to the Owner/Operator:

Period of Coverage: Salsnes warrants to the Owner/Operator noted above (the "Customer") that if within 12 calendar months from Substantial Completion (as defined below) or 18 calendar months from the date of delivery, whichever comes first, (the "Warranty Period") equipment manufactured by Salsnes (the "Equipment") will be free from defects in material and workmanship and will function in accordance with the specifications agreed to by Salsnes for the Equipment.

"Substantial Completion" is the date on which the Equipment commissioning and start-up is sufficiently completed such that the Equipment is capable of being put into operation by Owner for its intended use.

This warranty applies only to the Salsnes Filter unit and equipment supplied with and included in the purchase agreement and under the following conditions:

- Salsnes Filter ("SF") shall receive the Startup report signed by customer and representative within 30 days of Equipment Startup.
- Any part of the SF unit that fails or is damaged under normal use within the warranty period will be replaced or, at Salsnes Filter's option repaired.
- Any defective items shall be promptly returned to Trojan/Salsnes.

Technical performance: The Salsnes Technical Reliability and Performance Guarantee apply only under the following conditions:

- The application is as per Salsnes recommendations, and designed in a manner that not allows large or heavy particles, stones, etc. to enter into the SF unit and cause damage.
- The technical performance guarantee is contingent upon proper care and maintenance of the unit as detailed within the Operation and Maintenance Manual, and using Salsnes approved parts.
- Ensuring that appropriate maintenance is completed based on type of influent. This may require, but it is not limited to, utilizing a wash system for removal of Fats, Oil and Grease (above 80 mg/l), manual cleaning of mesh, COG's, equipment, etc.

Limitations: This warranty shall not apply to any failure or defect which results from:

- the Equipment not being operated and maintained in strict accordance with instructions specified in the Operation and Maintenance manual or Product Bulletin or which results from mishandling, misuse, neglect, improper storage, improper operation of the Equipment with other equipment furnished by the Customer or by other third parties or from defects in designs or specifications furnished by or on behalf of the Customer by a person other than Salsnes.
- Equipment that has been altered or repaired after start-up by anyone except: (a) authorized representatives of Salsnes, or (b) Customer acting under specific written instructions from Salsnes.
- Use of parts not supplied or approved by Salsnes.

This warranty does not cover:

- Normal wear and tear of the product
- Consumable components
- Corrosion
- Salsnes supplied components that are the subject of a separate warranty
- Costs related to removal, installation, or troubleshooting of a component
- Physical damage
- Improper installation
- Acts of God, terrorism, biological infestations, or input voltage that create operating conditions beyond the minimum or maximum limits listed in the Operations Manual including high input voltage from generators and lightning strikes
- Damage caused by improper return packaging
- Taxes, duties or brokerage fees (if any)
- Failure or damage caused by the use of the SF unit for any purposes or application other than that intended and communicated to Salsnes at time of sale
- Equipment components manufactured by third parties but furnished to Customer by Salsnes are warranted by the original manufacturer, only to the extent of the original manufacturer's warranty

PART

J

SAFETY DATA SHEETS (SDS)

SAFETY DATA SHEET

KAESER OMEGA LUBRICANT FGB-220

KAESER COMPRESSORS
Built for a lifetime.

Section 1. Identification

GHS product identifier : KAESER OMEGA LUBRICANT FGB-220

Product code : KSROFGB220

Other means of identification : Synthetic Air Compressor Fluid.

Product type : Liquid.

Relevant identified uses of the substance or mixture and uses advised against

Identified uses	
Not available.	
Uses advised against	**Reason**
Not available.	

Supplier's details : Manufactured for Kaeser Compressors Canada Inc.
3760 La Verandrye
Boisbriand, QC Canada J7H 1R5
Phone: 450-971-1414

Emergency telephone number (with hours of operation) : 24 hr. CHEMTREC 1-800-424-9300 / International 1-703-527-3887

Section 2. Hazards identification

OSHA/HCS status : While this material is not considered hazardous by the OSHA Hazard Communication Standard (29 CFR 1910.1200), this SDS contains valuable information critical to the safe handling and proper use of the product. This SDS should be retained and available for employees and other users of this product.

Classification of the substance or mixture : Not classified.

GHS label elements

Signal word : No signal word.

Hazard statements : No known significant effects or critical hazards.

Precautionary statements

Prevention : Not applicable.

Response : Not applicable.

Storage : Not applicable.

Disposal : Not applicable.

Hazards not otherwise classified : None known.

Section 3. Composition/information on ingredients

Substance/mixture : Mixture

Other means of identification : Not available.

CAS number/other identifiers

CAS number : Not applicable.

Section 3. Composition/information on ingredients

Ingredient name	%	CAS number
Butene, homopolymer (products derived from either/or But-1-ene/But-2-ene)	≥25 - <50	9003-29-6

Any concentration shown as a range is to protect confidentiality or is due to batch variation.

There are no additional ingredients present which, within the current knowledge of the supplier and in the concentrations applicable, are classified as hazardous to health or the environment and hence require reporting in this section.

Occupational exposure limits, if available, are listed in Section 8.

Section 4. First aid measures

Description of necessary first aid measures

Eye contact : Immediately flush eyes with plenty of water, occasionally lifting the upper and lower eyelids. Check for and remove any contact lenses. Get medical attention if irritation occurs.

Inhalation : Remove victim to fresh air and keep at rest in a position comfortable for breathing. Get medical attention if symptoms occur.

Skin contact : Flush contaminated skin with plenty of water. Remove contaminated clothing and shoes. Get medical attention if symptoms occur.

Ingestion : Wash out mouth with water. Remove victim to fresh air and keep at rest in a position comfortable for breathing. If material has been swallowed and the exposed person is conscious, give small quantities of water to drink. Do not induce vomiting unless directed to do so by medical personnel. Get medical attention if symptoms occur.

Most important symptoms/effects, acute and delayed

Potential acute health effects

Eye contact : No known significant effects or critical hazards.

Inhalation : No known significant effects or critical hazards.

Skin contact : No known significant effects or critical hazards.

Ingestion : No known significant effects or critical hazards.

Over-exposure signs/symptoms

Eye contact : No specific data.

Inhalation : No specific data.

Skin contact : No specific data.

Ingestion : No specific data.

Indication of immediate medical attention and special treatment needed, if necessary

Notes to physician : Treat symptomatically. Contact poison treatment specialist immediately if large quantities have been ingested or inhaled.

Specific treatments : No specific treatment.

Protection of first-aiders : No action shall be taken involving any personal risk or without suitable training.

See toxicological information (Section 11)

Section 5. Fire-fighting measures

Extinguishing media

Suitable extinguishing media : Use an extinguishing agent suitable for the surrounding fire.

Unsuitable extinguishing media : Do not use water jet.

Specific hazards arising from the chemical : In a fire or if heated, a pressure increase will occur and the container may burst.

Section 5. Fire-fighting measures

Hazardous thermal decomposition products : Decomposition products may include the following materials:
carbon dioxide
carbon monoxide

Special protective actions for fire-fighters : Promptly isolate the scene by removing all persons from the vicinity of the incident if there is a fire. No action shall be taken involving any personal risk or without suitable training.

Special protective equipment for fire-fighters : Fire-fighters should wear appropriate protective equipment and self-contained breathing apparatus (SCBA) with a full face-piece operated in positive pressure mode.

Section 6. Accidental release measures

Personal precautions, protective equipment and emergency procedures

For non-emergency personnel : No action shall be taken involving any personal risk or without suitable training. Evacuate surrounding areas. Keep unnecessary and unprotected personnel from entering. Do not touch or walk through spilled material. Put on appropriate personal protective equipment.

For emergency responders : If specialised clothing is required to deal with the spillage, take note of any information in Section 8 on suitable and unsuitable materials. See also the information in "For non-emergency personnel".

Environmental precautions : Avoid dispersal of spilled material and runoff and contact with soil, waterways, drains and sewers. Inform the relevant authorities if the product has caused environmental pollution (sewers, waterways, soil or air).

Methods and materials for containment and cleaning up

Small spill : Stop leak if without risk. Move containers from spill area. Absorb with an inert dry material and place in an appropriate waste disposal container. Dispose of via a licensed waste disposal contractor.

Large spill : Stop leak if without risk. Move containers from spill area. Prevent entry into sewers, water courses, basements or confined areas. Wash spillages into an effluent treatment plant or proceed as follows. Contain and collect spillage with non-combustible, absorbent material e.g. sand, earth, vermiculite or diatomaceous earth and place in container for disposal according to local regulations (see Section 13). Dispose of via a licensed waste disposal contractor. Note: see Section 1 for emergency contact information and Section 13 for waste disposal.

Section 7. Handling and storage

Precautions for safe handling

Protective measures : Put on appropriate personal protective equipment (see Section 8).

Advice on general occupational hygiene : Eating, drinking and smoking should be prohibited in areas where this material is handled, stored and processed. Workers should wash hands and face before eating, drinking and smoking. Remove contaminated clothing and protective equipment before entering eating areas. See also Section 8 for additional information on hygiene measures.

Conditions for safe storage, including any incompatibilities : Store in accordance with local regulations. Store in original container protected from direct sunlight in a dry, cool and well-ventilated area, away from incompatible materials (see Section 10) and food and drink. Keep container tightly closed and sealed until ready for use. Containers that have been opened must be carefully resealed and kept upright to prevent leakage. Do not store in unlabeled containers. Use appropriate containment to avoid environmental contamination.

Section 8. Exposure controls/personal protection

Control parameters

Occupational exposure limits

None.

Appropriate engineering controls : Good general ventilation should be sufficient to control worker exposure to airborne contaminants.

Environmental exposure controls : Emissions from ventilation or work process equipment should be checked to ensure that they are working properly. Use hydrocarbon absorbing respirator if misting.

Individual protection measures

Hygiene measures : Wash hands, forearms and face thoroughly after handling chemical products, before eating, smoking and using the lavatory and at the end of the working period. Appropriate techniques should be used to remove potentially contaminated clothing. Wash contaminated clothing before reusing. Ensure that eyewash stations and safety showers are close to the workstation location.

Eye/face protection : Safety eyewear complying with an approved standard should be used when a risk assessment indicates this is necessary to avoid exposure to liquid splashes, mists, gases or dusts. If contact is possible, the following protection should be worn, unless the assessment indicates a higher degree of protection: safety glasses with side-shields.

Skin protection

Hand protection : Chemical-resistant, impervious gloves complying with an approved standard should be worn at all times when handling chemical products if a risk assessment indicates this is necessary.

Body protection : Personal protective equipment for the body should be selected based on the task being performed and the risks involved and should be approved by a specialist before handling this product.

Other skin protection : Appropriate footwear and any additional skin protection measures should be selected based on the task being performed and the risks involved and should be approved by a specialist before handling this product.

Respiratory protection : Use a properly fitted, air-purifying or air-fed respirator complying with an approved standard if a risk assessment indicates this is necessary. Respirator selection must be based on known or anticipated exposure levels, the hazards of the product and the safe working limits of the selected respirator.

Section 9. Physical and chemical properties

Appearance

Physical state : Liquid.

Color : Golden.

Odor : Mild hydrocarbon.

Odor threshold : Not available.

pH : Not applicable.

Pour point : -45°C (-49°F).

Boiling point : >371°C (700°F).

Flash point : Closed cup: 229°C (445°F)

Evaporation rate : Negligible.

Flammability (solid, gas) : Not available.

Lower and upper explosive (flammable) limits : Not available.

Vapor pressure : Not available.

Vapor density : Not available.

Section 9. Physical and chemical properties

Relative density : 0.65.

Solubility : Insoluble in water.

Partition coefficient: n-octanol/water : Not available.

Auto-ignition temperature : Not available.

Decomposition temperature : Not available.

Viscosity : Kinematic (40°C (104°F)): 2.2 cm^2/s (220 cSt)

Section 10. Stability and reactivity

Reactivity : No specific test data related to reactivity available for this product or its ingredients.

Chemical stability : The product is stable.

Possibility of hazardous reactions : Under normal conditions of storage and use, hazardous reactions will not occur.

Conditions to avoid : No specific data.

Incompatible materials : No specific data.

Hazardous decomposition products : Under normal conditions of storage and use, hazardous decomposition products should not be produced.

Section 11. Toxicological information

Information on toxicological effects

Acute toxicity

Product/ingredient name	Result	Species	Dose	Exposure
Butene, homopolymer (products derived from either/or But-1-ene/But-2-ene)	LD50 Dermal	Rabbit	>10250 mg/kg	-
	LD50 Oral	Rat	>34600 mg/kg	-

Irritation/Corrosion

Not available.

Sensitization

Not available.

Mutagenicity

Not available.

Carcinogenicity

Not available.

Reproductive toxicity

Not available.

Teratogenicity

Not available.

Specific target organ toxicity (single exposure)

Not available.

Specific target organ toxicity (repeated exposure)

Not available.

Section 11. Toxicological information

Aspiration hazard

Not available.

Information on the likely routes of exposure : Not available.

Potential acute health effects

Eye contact : No known significant effects or critical hazards.

Inhalation : No known significant effects or critical hazards.

Skin contact : No known significant effects or critical hazards.

Ingestion : No known significant effects or critical hazards.

Symptoms related to the physical, chemical and toxicological characteristics

Eye contact : No specific data.

Inhalation : No specific data.

Skin contact : No specific data.

Ingestion : No specific data.

Delayed and immediate effects and also chronic effects from short and long term exposure

Short term exposure

Potential immediate effects : Not available.

Potential delayed effects : Not available.

Long term exposure

Potential immediate effects : Not available.

Potential delayed effects : Not available.

Potential chronic health effects

Not available.

General : No known significant effects or critical hazards.

Carcinogenicity : No known significant effects or critical hazards.

Mutagenicity : No known significant effects or critical hazards.

Teratogenicity : No known significant effects or critical hazards.

Developmental effects : No known significant effects or critical hazards.

Fertility effects : No known significant effects or critical hazards.

Numerical measures of toxicity

Acute toxicity estimates

Not available.

Section 12. Ecological information

Toxicity

Not available.

Persistence and degradability

Section 12. Ecological information

Product/ingredient name	Aquatic half-life	Photolysis	Biodegradability
Butene, homopolymer (products derived from either/ or But-1-ene/But-2-ene)	-	-	Readily

Bioaccumulative potential

Product/ingredient name	$LogP_{ow}$	BCF	Potential
Butene, homopolymer (products derived from either/ or But-1-ene/But-2-ene)	7.6 to 7.8	314 to 1882	high

Mobility in soil

Soil/water partition coefficient (K_{OC}) : Not available.

Other adverse effects : No known significant effects or critical hazards.

Section 13. Disposal considerations

Disposal methods : The generation of waste should be avoided or minimized wherever possible. Disposal of this product, solutions and any by-products should at all times comply with the requirements of environmental protection and waste disposal legislation and any regional local authority requirements. Dispose of surplus and non-recyclable products via a licensed waste disposal contractor. Waste should not be disposed of untreated to the sewer unless fully compliant with the requirements of all authorities with jurisdiction. Waste packaging should be recycled. Incineration or landfill should only be considered when recycling is not feasible. This material and its container must be disposed of in a safe way. Empty containers or liners may retain some product residues. Avoid dispersal of spilled material and runoff and contact with soil, waterways, drains and sewers.

Section 14. Transport information

	DOT Classification	TDG Classification	IMDG	IATA
UN number	Not regulated.	Not regulated.	Not regulated.	Not regulated.

Special precautions for user : **Transport within user's premises:** always transport in closed containers that are upright and secure. Ensure that persons transporting the product know what to do in the event of an accident or spillage.

Transport in bulk according to Annex II of MARPOL 73/78 and the IBC Code : Not available.

Section 15. Regulatory information

U.S. Federal regulations : **TSCA 8(a) CDR Exempt/Partial exemption**: Not determined

All components are listed or exempted.

Clean Air Act Section 112 (b) Hazardous Air Pollutants (HAPs) : Not listed

Clean Air Act Section 602 Class I Substances : Not listed

Section 15. Regulatory information

Clean Air Act Section 602 Class II Substances : Not listed

DEA List I Chemicals (Precursor Chemicals) : Not listed

DEA List II Chemicals (Essential Chemicals) : Not listed

SARA 302/304

Composition/information on ingredients

No products were found.

SARA 304 RQ : Not applicable.

SARA 311/312

Classification : Not applicable.

Composition/information on ingredients

Name	%	Fire hazard	Sudden release of pressure	Reactive	Immediate (acute) health hazard	Delayed (chronic) health hazard
Butene, homopolymer (products derived from either/or But-1-ene/ But-2-ene)	≥25 - <50	No.	No.	No.	Yes.	No.

State regulations

Massachusetts : None of the components are listed.

New York : None of the components are listed.

New Jersey : None of the components are listed.

Pennsylvania : None of the components are listed.

California Prop.65

This product is not known to contain any chemicals currently listed as carcinogens or reproductive toxins.

International lists

National inventory

Australia : Not determined.

Canada : All components are listed or exempted.

China : Not determined.

Europe : Not determined.

Japan : Not determined.

Malaysia : Not determined.

New Zealand : Not determined.

Philippines : Not determined.

Republic of Korea : Not determined.

Taiwan : Not determined.

Section 16. Other information

Procedure used to derive the classification

Classification	Justification
Not classified.	

History

Date of issue/Date of revision : 12/30/2015

Version : 2

Section 16. Other information

Key to abbreviations : ATE = Acute Toxicity Estimate
BCF = Bioconcentration Factor
GHS = Globally Harmonized System of Classification and Labelling of Chemicals
IATA = International Air Transport Association
IBC = Intermediate Bulk Container
IMDG = International Maritime Dangerous Goods
LogPow = logarithm of the octanol/water partition coefficient
MARPOL 73/78 = International Convention for the Prevention of Pollution From Ships, 1973 as modified by the Protocol of 1978. ("Marpol" = marine pollution)
UN = United Nations

Indicates information that has changed from previously issued version.

Noticetoreader

To the best of our knowledge, the information contained herein is accurate. However, neither the above-named supplier, nor any of its subsidiaries, assumes any liability whatsoever for the accuracy or completeness of the information contained herein.
Final determination of suitability of any material is the sole responsibility of the user. All materials may present unknown hazards and should be used with caution. Although certain hazards are described herein, we cannot guarantee that these are the only hazards that exist.

PART K

FILTER SPECIFICATION

Part 1 General

1.1 SECTION INCLUDES

.1 Requirements for supply, delivery, installation, and commissioning of the following, as required for complete and proper installation:

.1 Two (2) primary filters equipped with continuous loop moving belts with integrated solids dewatering and all ancillary components, including the primary filter blowers, for primary filtration of screened and de-gritted raw wastewater. Supply the primary filters as one complete package from a single Manufacturer. Coordinate dimensions to ensure all equipment fits in the allocated space as indicated in the Drawings.

1.2 RELATED SECTIONS

.1 Section 01 33 00 - Submittal Procedures

.2 Section 01 61 00 – Common Product Requirements

.3 Section 01 78 00 – Closeout Submittals

.4 Section 01 79 00 – Demonstration and Training

.5 Section 01 91 13 – General Commissioning Requirements

.6 Section 40 05 00 – General Provisions Process

.7 Section 40 05 13 – Process Piping

.8 Section 40 05 13.01 – Detailed Process Piping

.9 Section 40 05 23 – Process Valves

.10 Section 40 05 30 – Process Piping and Coating Systems

.11 Section 40 05 40 – Process Identification

1.3 REFERENCES

.1 The instruments panels and related electrical and controls components for the primary filters that are to be installed in the new Headworks Building are to be certified for installation in a Class 1, Zone 2 rated area.

.2 All equipment to be CSA approved.

.3 American Society for Testing and Materials International (ASTM International)

.4 American Gear Manufacturers Association (AGMA)

.5 American Society of Mechanical Engineers (ASME)

.6 American National Standards Institute (ANSI)

.7 Institute of Electrical and Electronics Engineers (IEEE)

.8 National Electrical Code (NEC)

.9 American Bearing Manufacturers Association (ABMA)

1.4 SUBMITTALS

.1 Product Data:

.1 Provide product data: in accordance with Section 01 33 00 - Submittal Procedures.

.2 A copy of this section indicating conformance or acceptance of each clause. Non-conformance or variation must be indicated by a cross ('X').

.3 A Letter of Compliance, which confirms any variances with the Contract Plans and Specifications, and provides further explanations where necessary to adequately define the scope of supply.

.2 Shop Drawings:

.1 Provide shop drawings: in accordance with Section 01 33 00 - Submittal Procedures.

.2 Dimensional plan and section drawings of the equipment mounted in the structure, showing all utility connections and requirements, and anchor bolt locations. Where applicable, drawings will show connection to associated equipment provided by others.

.3 Approximate weight of each component or piece of equipment.

.4 Manufacturers' catalog information, descriptive literature, specifications, and identifications of material of construction.

.5 Power and control wiring diagrams, including terminal layout with numbers, panel construction and panel layout drawings, and control schematics diagrams. Control diagrams will also include a description of operation.

.6 Manufacturers' performance data for all drives.

.7 Process equipment control philosophy, control system hardware details, I/O list and memory map with addresses for status and control variable points to be made available to Plant Control System (PCS) via communications link.

.8 List of spare parts to be furnished

.3 Operation and Maintenance Data:

.1 Supply maintenance data in accordance with Section 01 78 00 - Closeout Submittals.

1.5 DELIVERY, STORAGE AND HANDLING

.1 Deliver, store and handle materials in accordance with Section 01 61 00 - Common Product Requirements.

.2 Delivery:

.1 Deliver materials to the project in original, unopened packages and labeled to clearly identify product name and manufacturer.

.2 Items to be shipped as complete assemblies expect where partial disassembly is required by transportation regulations or for protection of components.

.3 Wooden crates must not exceed 2.4 m in width x 2.4 m in height so that the equipment can be put in the headworks building utilizing the existing removable wall (2.4 m W x 2.4 m H).

.4 Materials must be packaged to minimize or eliminate the possibility of damage during shipping.

.5 Sequence deliveries to avoid delays, but minimize on site storage.

.3 Storage and Handling:

.1 Store and handle in strict compliance with manufacturer's recommendations.

.2 All materials to be thoroughly inspected upon receipt and all discrepancies, deficiencies, and/or damages to be immediately reported, in writing, to the supplier.

.3 All damages incurred during shipment to be noted on the carrier's Bill of Lading and immediately reported, in writing, to the supplier.

.4 All materials to be properly stored on planks or dunnage, out of water and covered to protect from damage from any cause

1.6 QUALITY ASSURANCE

.1 Contractor responsible for coordination and installation of products provided under this Section.

.2 Furnish all equipment covered by this specification by one Manufacturer, and furnish complete with motor and appurtenances. Equipment to be supplied as a product from a single Manufacturer regularly engaged in the production of equipment for the specified use. The Manufacturer must have the sole responsibility for the proper functioning of the equipment as furnished.

.3 The equipment will include all necessary safety devices, such as machinery guards, emergency stops, warning labels, and similar items.

.4 The equipment must be factory assembled and tested for a minimum of four (4) hours at the factory prior to delivery. Certified results of the testing must be provided to the Engineer.

1.7 WARRANTY

.1 The manufacturer must warrant against any defects in material or workmanship to the equipment and coating for a period of 12 months from start-up.

Part 2 Products

2.1 SYSTEM DESCRIPTION

.1 The primary filters (PF-01-310/PF-01-320) must filter screened raw wastewater prior to the treatment in the MBBR trains. Each primary filter must be equipped with: continuous loop filter belt, compartment access covers, air knife assembly, hot water spray system, a cold-water flush system to maintain filtered water compartment cleanliness and level transmitter for monitoring and belt speed control. Each unit must have an integrated sludge thickening and dewatering system through the utilization of a screw press.

.2 The two primary filters will discharge primary effluent into a common effluent, and overflow box.

.3 The filters will be self-cleaning using process air supplied from two primary filter blowers.

2.2 CAPACITY AND PERFORMANCE REQUIREMENTS

.1 The equipment must be sized for continuous operation (24 hour/day, 365 days/year) and for simultaneous solids separation and thickening.

.2 The primary filter equipment must operate automatically so that at low raw wastewater flows to the plant, one primary filter must operate while the second one must remain in standby. At high raw wastewater flows to the plant, both filters must operate simultaneously and automatically on a duty/assist configuration to be able to treat plant peak hour flows.

.3 The primary filters must be designed to operate within the design conditions specified herein:

.1 Annual Average Flow (current): 38.5 L/s

.2 Annual Average Flow (year 2041): 50.3 L/s

.3 Maximum Month Flow (current): 46.2 L/s

.4 Maximum Month Flow (year 2041): 60.4 L/s
.5 Peak Hour Flow (current): 115.5 L/s
.6 Peak Hour Flow (year 2041): 151 L/s
.7 Influent TSS concentration (current): 153 mg/L
.8 Influent TSS concentration (year 2041): 200 mg/L
.9 Influent BOD concentration (current): 153 mg/L
.10 Influent BOD concentration (year 2041): 200 mg/L

.4 Each primary filter must be designed to filter 121 L/s of raw wastewater proceeding from fine screens.

.5 The primary filters must meet the following performance criteria:

.1 TSS removal required: 50% of the influent TSS (average)
.2 BOD removal required: 25% of the influent BOD (average)
.3 Minimum dewatered sludge solids concentration: 20% TS

2.3 ACCEPTABLE MANUFACTURERS

.1 Salsnes

.2 Approved alternative

2.4 PRIMARY FILTER COMPONENTS

.1 General

.1 Each primary filter must sufficiently be automated to require minimal operator attention.
.2 Each filter unit must be freestanding and designed for installation on the concrete floor of the Headworks building.
.3 The primary filters must be installed as a twin configuration as presented on the drawings. A twin primary filter outlet assembly must be supplied for such a purpose.
.4 The available space for installation of the primary filters in the upper floor of the Headworks building is very limited. The primary filters dimensions must be exactly as presented in the drawings. Files in CAD version of the drawings are being provided for verification.
.5 The scope of supply for the primary filters and associated elements is presented in these technical specifications and in the preliminary PIDs provided with the RFQ.

.2 Each filter unit must be supplied with the following connections:

.1 Inlet: 350 mm diameter, flanged

.2 Outlet: 400 mm diameter, flanged

.3 Overflow: 400 mm diameter, flanged

.4 Drain from filter: 100 mm diameter, flanged

.5 Centrate drain from dewatered sludge effluent: 100 mm diameter, flanged

.6 Air: 100 mm diameter, flanged

.7 Cold water: 12 mm diameter, NPT connection

.8 Hot water: 12 mm diameter, NPT connection

.3 The twin primary filter outlet assembly must be supplied with the following connections:

.1 Connections to primary filter outlets: 400 mm diameter, flanged

.2 Connections to primary filter overflows: 400 mm diameter, flanged

.3 Primary effluent / Overflow outlet: 350 mm diameter, flanged

.4 Common vent on top: 400 mm flanged

.4 Each filter unit must contain one (1) rotating belt filter, air knife belt cleaning system, hot water spray system, cold water flush system, water level sensor, integrated sludge collection and dewatering screw press.

.5 Materials

.1 The filter unit and all welded metal components in contact with effluent must be constructed of 316L stainless steel. No other materials of construction are acceptable.

.6 Primary Filter Internals

.1 The filter belt must be contained in the filter compartment. The filter mesh screen must be constructed of polyethylene with Kevlar-reinforced drive ends. The mesh screen porosity (opening size) must be 350 microns.

.2 A level sensor for monitoring the water level in the influent compartment must be provided. The level sensor must be suitable for use in wastewater applications. The level sensor must have ASTM A-316L stainless steel housing.

.3 An air knife assembly suitable for continuous operation must be provided for removal of solids from the surface of filter belt. The air cleaning device must be fabricated of ASTM A-316L stainless steel and HDPE. The device must be piped to the exterior of the filter compartment for supply air connection.

.4 Filter mesh cleaning is to be performed by forced air. Water can be supplied to the air knife for periodic maintenance purposes only.

.5 Hot water spray nozzles must be provided for cleaning of filter belt and screw press. Spray nozzles and manifolds must be constructed

of 316 stainless steel. A solenoid valve must be provided for automated control of the hot water stream. Manifolds for the hot water supply connection must combine and terminate at a strainer on the exterior of the filter compartment.

.6 A cold water flush manifold must be provided for automated cleaning of the filtered water compartment. A solenoid valve must be provided for automated flush control. Manifold for the cold water supply connection will terminate at a strainer on the exterior of the filter compartment. Drainage of the filtered water compartment must occur via operation of a solenoid valve. Energizing the solenoid valve must vent a hydraulic actuator on a gate valve allowing draining of the filtered water compartment during the cold water flush.

.7 All internal primary filter components must be installed by the Manufacturer prior to the primary filter units being shipped to the job site.

2.5 FILTER UNIT FITTINGS

.1 Flange drilling and bolting patterns for flange connections will be in accordance with ANSI/ASME B-16.5 class 150 (UL)

.2 All threaded connectors to the primary filter unit(s) must be NPT (UL).

2.6 HOT WATER SUPPLY FOR FOG CLEANING

.1 The primary filters must be able to be sprayed with hot water at a flow of 0.5 L/s and at a continuous pressure between 400 to 600 kPa for FOG cleaning.

.2 Hot water temperature at the Filter System is to be at least 70°C and will not exceed 90°C.

.3 Frequency of hot water flush operation must be field-adjustable through the primary filter HMI.

2.7 SLUDGE DEWATERING (INTEGRATED SYSTEM)

.1 The Manufacturer must supply a sludge dewatering system integrated to each primary filter including a wedge wire screen and screw press system.

.2 Provide the dewatering system enclosure of ASTM-A-316L stainless steel and

.3 Provide the screw press (auger) of carbon steel.

.4 The dewatering system must contain an outlet to drain reject water.

2.8 PRIMARY FILTER BLOWERS

.1 Process air for cleaning the filter belt cleaning system must be provided by the primary filter blowers.

.2 Blowers must be provided by the primary filter supplier as part of the overall process package.

.3 Blowers must be sized appropriately for the operation of the primary filters' air knife assemblies.

.4 Each primary filter must operate with an independent primary filter blower.

.5 Operation of the blowers must be automated based on the operation of the primary filters and controlled from the primary filter HMI.

.6 Provide primary filter blowers in enclosures for sound attenuation with all the elements (air filters, suction and discharge silencers, suction and discharge flexible connections, check valves, pressure safety valves, pressure indicators, fans, etc.) as presented in PID P608.

.7 Provide blowers with waterproof enclosures suitable for installation in wet area.

.8 Provide blowers to be able to connect to air ducts. Air ducts will suck air from outside of the building at Iqaluit temperatures.

.9 Supply sound dampening enclosure for blower. Ensure ambient room noise does not exceed 85 dB when enclosure is sealed. Provide a list of predicted sound power levels for the blower and for the blower package when operating at design operating capacity. The predicted sound power levels must be reported in a standard format conforming to the requirements of the Acoustical Engineering Institute.

.10 Provide a cooling fan complete with temperature control.

.11 Acceptable Manufacturers

- .1 Kaeser
- .2 Aerezen
- .3 Gardner Denver (Robuschi)
- .4 Approved alternative

2.9 ANCHOR BOLTS, FASTENERS AND LIFTING LUGS

.1 All anchor bolts must be specified by the primary filter manufacturer and made of stainless steel. The equipment supplier must furnish all anchor bolts, nuts, and washers required for the equipment.

.2 All fasteners must be type stainless steel. The equipment supplier must furnish all fasteners required for the assembly of the equipment.

.3 Provide stainless steel 316L lifting lugs for appropriate lifting of the primary filters for installation and removal at the field.

2.10 CARTRIDGE LIFTING

.1 Cartridges lifting and removal from the primary filters is critical due to reduced space in the Headworks building. The vertical space above the primary filters is limited.

.2 With the answer to the RFQ, Manufacturer must provide a detailed drawing with vertical dimensions presenting the sequence of cartridge lifting that would be accomplished in the field minimizing the required vertical free space above the primary filters. Manufacturer to inform the maximum vertical lifting space required above the primary filters.

.3 Provide four lifting lugs distributed uniformly on the upper side of the cartridge to be able to install two spreader bar systems to balance horizontally the weight of the cartridge on the air when lifted by a hoist. Exact location of lifting lugs from the edges of the cartridge to be recommended by the manufacturer.

.4 Provide two spreader bars for cartridge lifting and all the special elements, devices and tools required for appropriate lifting of the cartridges from the primary filters.

2.11 ELECTRICAL AND CONTROLS

.1 Provide primary filter equipment and primary filter blowers and other applicable elements of the package to be power operated at 480 volts, 3 phases, 60 Hz. Controls to be operated at 120 Volts, single phase.

.2 Primary filters and HMI(s) must be installed in the Headworks building. HMI(s) and all drives and electrical installations located inside the Headworks building must meet requirements for a Class 1, Zone 2 area. All equipment wiring, fittings, devices and terminations inside the Headworks building must be explosion proof.

.3 The control panels for the primary filters and primary filter blowers will be located in the electrical room so the explosion proof requirement is not applicable for such panels.

.4 The primary filter blowers will be installed in a wet area above the MBBR train 1. Provide NEMA 3R waterproof enclosures.

2.12 CONTROLS

.1 The Filter System operation will be controlled from Manufacturer-supplied Control Panels. All equipment controllers, motor starters, drives, etc. must be housed within these panels.

.2 The System Control Panel(s) must each include the following:

.1 Human Machine Interface (HMI): Allen Bradley Panelview Plus HMI terminals must be supplied

.2 Programmable Logic Controller (PLC): Allen-Bradley must be supplied.

.3 Belt filter Variable Frequency Drives (VFD): Allen-Bradley Powerflex

.4 Blower Motor Starter: Allen-Bradley SMC-3

.5 Other starters, as required, for automatic operation of the filter unit(s).

.3 The HMI must be located at the front enclosure door. The panels will have an unfused main disconnect operated from the front of the panel.

.4 Each Control Panel must include an Ethernet switch for communications to the plant SCADA system. Control Panels must be shipped pre-assembled and pre-tested for field wire connections.

.5 The Filter System controls must be completely self-contained and capable of automatic operation. All system control parameters must be accessible at the HMI.

.6 The filter belt speed is to be regulated by the level transmitter located in the inlet compartment. The PLC must automatically control the filter belt speed based on the water level in the inlet compartment.

.7 Hot water spray must be controlled via operator adjustable frequency and duration timers at the HMI.

.8 Cold water flush must be controlled via operator adjustable frequency and duration timers at the HMI.

.9 Blower control must be undertaken through the HMI.

.10 A pressure transducer must be mounted on the air knife bayonet coupling. The PLC must monitor high and low pressure alarms.

2.13 SPARE PARTS

.1 Provide all spare parts (except lubricants) that would be normally required for one (1) year of operation of the primary filters and primary filter blowers.

.2 Provide one (1) filter mesh, 350 microns, for the primary filters.

.3 Provide one set of any special tools required to assemble, disassemble, or maintain the equipment.

Part 3 Execution

3.1 MANUFACTURER'S REPRESENTATIVE

.1 Arrange for a technically qualified Manufacturer's Representative to attend the installation work, certify correct installation, train operating and maintenance staff and undertake the testing of the system for sufficient periods, to ensure the equipment is installed, operated, and maintained in accordance with the manufacturer's recommended procedures.

.2 The minimum periods of site attendance are identified in the following table along with the form to be completed on each of these trips. A "day" is defined as eight working hours on site.

.3 The total number of trips will depend on the Contractor's schedule. The cost of additional trips, to be determined by the Engineer, will be borne by the Contractor.

Item	Description	Total number of days	Form
1	Equipment Delivery		100
2	Installation Assistance (combined with Item 3)		101
3	Witnessing of Equipment Installation	1	102
4	Operator and Maintenance Training (combined with Item 3)	0.5	T1
5	Process Performance Testing	1	103
6	Operator and Maintenance Training (combined with Item 5)	0.5	T2
7	Commissioning	0.5	104
8	Follow-up Inspection	0.5	Report
9	End of Warranty Inspection	0.5	Report

3.2 INSTALLATION

.1 Verify satisfactory delivery of the equipment by completing Form 100, illustrated in Section 01 79 00.

.2 Instruct installer in the methods and precautions to be followed in the installation of the equipment. Certify the Contractor's understanding by completing Form 101, illustrated in Section 01 79 00.

3.3 INSTALLATION WITNESSING

.1 The Contractor must ensure that equipment is installed plumb, square and true within tolerances specified by the Manufacturer and as indicated in the Contract Documents.

.2 The Contractor must ensure the equipment is installed as required to provide satisfactory service.

.3 The Manufacturer's Representative must cooperate with the Contractor to deliver a successful installation as documented by Form 102 illustrated in Section 01 79 00.

3.4 PROCESS PERFORMANCE TESTING

.1 General

.1 Except as modified by this section, conduct testing in accordance with the general requirements of Section 01 79 00.

.2 Submit a report summarizing the operating parameters assessed during the test period, recommending optimal setpoints and listing final testing data in concise tabular form at the conclusion of the test period.

.3 Upon the successful completion of the testing procedure, Form 103 in Section 01 79 00 will be signed.

.2 Start-up

.1 Submit a detailed start-up procedure for approval.

.2 Provide site services of the equipment Manufacturer's Representative for the tuning, monitoring, inspecting, and starting of the equipment during the entire start-up procedure.

.3 Unless otherwise specified water, and electric power will be provided by the Contractor for the start-up period

.4 Subsequent to proper tuning, perform an initial thorough inspection of all system components, including electrical and instrumentation controls

.3 Testing

.1 TSS removal, BOD removal and Dewatered Sludge Solids Concentration must be continuously tested during the Process Performance Testing to ensure equipment compliance with process performance as specified in this technical specification. Equipment Manufacturer must submit a detailed procedure and schedule of sampling and testing for approval.

.2 Begin testing only after completing the start-up procedure.

.1 In the event of unacceptable performance, perform any supplemental testing, analysis, equipment adjustments, modifications, changes, or additions and request a retest of the unacceptable system at no additional cost.

3.5 COMMISSIONING

.1 Contractor and Manufacturer's Representative to be in attendance during commissioning of the process system that includes the equipment specified in this section to ensure the equipment functions as intended in the process system as documented by Form 104, illustrated in Section 01 79 00. Cooperate with the Commissioning Team in developing the Commissioning Plan for this equipment. Provide assistance as required for system programming, start-up and troubleshooting.

3.6 TRAINING

.1 The Manufacturer’s Representative must provide training to the Owner’s Designated Staff in the proper operation and maintenance of the equipment as documented by Forms T1 and T2 in Section 01 79 00.

3.7 FOLLOW-UP INSPECTION

.1 After a period designated by the Owner (approximately 6 months after commissioning), a qualified Manufacturer’s Representative will provide a follow-up inspection of the installation.

.2 Manufacturer’s Representative to submit a report summarizing the performance of the equipment, recommending optimal set points and any operational recommendations.

3.8 END OF WARRANTY INSPECTION

.1 After a period designated by the Owner (approximately 12 months after commissioning), a qualified Manufacturer’s Representative will provide a follow-up inspection of the installation.

.2 Manufacturer’s Representative to submit a report summarizing the performance of the equipment, recommending optimal set points and any operational recommendations.

END OF SECTION

NUNAMI STANTEC

Iqaluit

City of Iqaluit
Request for Quotation
WASTEWATER TREATMENT PLANT UPGRADE
Primary Filter Supply

Addendum No. 01
February 14, 2018

This Addendum forms part of the Tender Documents and modifies them as stated herein. Addendum issued to active tenderers with documents on record (2 pages not including attachments).

A. CONTRACT SPECIFICATIONS

00 21 00 – Instructions to Bidders

1. **4.1** Add copied to Eslam.Maher@colliersprojectleaders.com.

2. **13.2 Approved Manufacturers**

   Question: Since there is no contractor at this point, please confirm any additional engineering costs for alternative products will be factored into the evaluation and added to the manufacturers' capital costs?

   Response: The Contractor, in this case the Supplier, shall be responsible for any additional engineering costs and others as a result of providing a product which does not conform to the design drawings and specifications, and requires redesign to accommodate.

46 61 23 – Primary Filter:

1. **1.3.1 Clarification:** All equipment installed in the classified area needs to be C1Z2 rated. If all individual components are C1Z2 rated, then the assembled product doesn't need a separate rating, but it's critical that ALL components, connections, etc. be rated appropriately.
2. **2.2.5.1 Clarification:** 50% TSS removal (average) at maximum month flow (60.4 L/s) considering 50% of TSS is greater than filter pore size of 350 microns.
3. **2.2.5.2 Clarification:** 25% TSS removal (average) at maximum month flow (60.4 L/s) considering 50% of TSS is greater than filter pore size of 350 microns.
4. **2.4.2.5 Clarification:** Connection must be 100 mm 125# flanged.
5. **2.4.2.6 Clarification:** 75 mm threaded connection is acceptable.
6. **2.8.6 Clarification:** Reference drawing P608 attached.

7. **2.10.2 Clarification:** It is acceptable to remove the additional spreader bar system and additional lifting lugs requested based on the improvements on the location of the lifting lugs.
8. **2.12.3 Clarification:** One HMI per filter is acceptable.

END OF ADDENDUM N0. 01

ORIGINAL SHEET - ISO A1

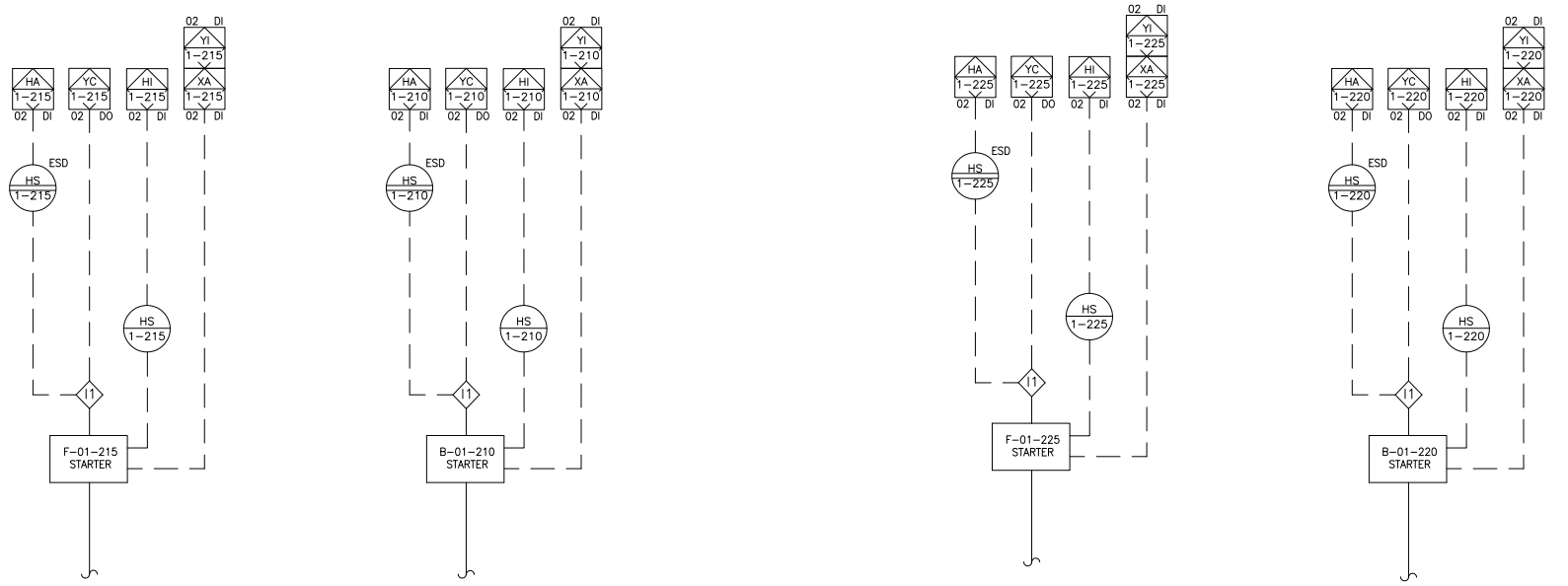

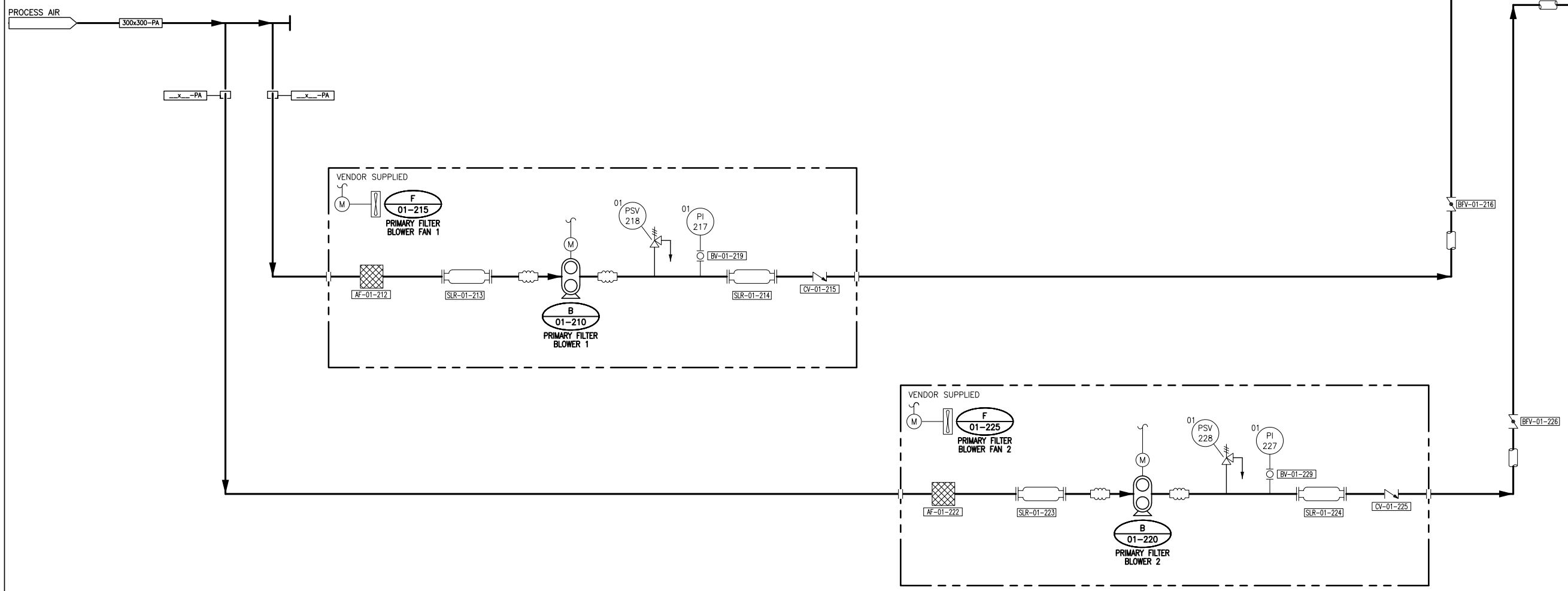

F-01-215/F-01-225
PRIMARY FILTER BLOWER FANS 1/2
MOTOR: 0.18 kW

B-01-210/B-01-220
PRIMARY FILTER AERATION BLOWERS 1/2
TYPE: POSITIVE DISPLACEMENT
CAPACITY: 5.6 m^3/min @ 40 kPa
MOTOR: 7.5 kW

Revision	By	Appd.	YY.MM.DD
50% DESIGN REVEW	–	–	18.01.08
Issued	By	Appd.	YY.MM.DD

Consultants

NOT FOR CONSTRUCTION

Permit-Seal

NUNAMI
STANTEC LIMITED

1088C Noble House
Iqaluit NU
www.stantec.com

The Contractor shall verify and be responsible for all dimensions. DO NOT scale the drawing - any errors or omissions shall be reported to Stantec without delay.
The Copyrights to all designs and drawings are the property of Stantec. Reproduction or use for any purpose other than that authorized by Stantec is forbidden.

Client/Project
Iqaluit
ᐃᖃᓗᐃᑦ
IQALUIT WASTEWATER TREATMENT PLANT UPGRADE
City of Iqaluit, Nunavut

File Name: P608 | TRohl Dwn. | _ Chkd. | _ Dsgn. | 2017.10.03 YY.MM.DD

Title
PROCESS
PIPING AND INSTRUMENTATION DIAGRAM
PRIMARY FILTER BLOWERS

Project No.	Scale	
110126045	NTS	
Drawing No.	Sheet	Revision
P608	_ of _	0

V:\1107\active\110126045\drawings\04-process\current\P608.dwg
2018/02/09 10:52 AM By: Rohl, Thomas

ORIGINAL SHEET - ISO A1

All comments attaced to the last page have been addressed

STANTEC PROJECT #: 110126045

SUBMITTAL # Enviro-Care

This review by Stantec is for general conformance with the design concept of Stantec's design of the:

- ☐ Architectural
- ☑ Structural
- ☐ Mechanical
- ☐ Electrical
- ☐ Other

component(s) only and does not mean that Stantec has verified or approves the shop drawing(s). The Contractor remains solely responsible for the shop drawing(s) and this review by Stantec does not relieve the Contractor of the Contractor's responsibility for errors or omissions in the shop drawing(s) or for meeting all requirements of the contract documents. This review does not mean that Stantec approves the detailed design inherent in the shop drawing, responsibility for which shall remain with the Contractor submitting same, nor does this review mean that Stantec accepts any deviation of the shop drawing(s) from the contract documents. The Contractor is responsible for confirming all dimensions and correlating them at the job site, for all construction means, methods and techniques, and for coordination of construction work of all trades, including coordination of all shop drawings.

Stantec

- ☐ REVIEWED
- ☐ REVIEWED, AS NOTED
- ☑ REVISE AND RESUBMIT
- ☐ NOT REVIEWED

DATE 2018-05-28

BY pclyne

Structural comments attached to last page of this document. Please address comments and revise and resubmit this part of the document.

Enviro-Care

A WAMGROUP® Company

Revision: B

Project No.: WEC217259Z

Project Name: Iqaluit WWTP Upgrade

High Current will be used to detect motor over-torque

Torque switch comment was not addressed. So if planning on using high curent to detect motor over-torque, that should be communicated for our review. David Hutchison

STANTEC PROJECT #: 110126045

SUBMITTAL # WEC217259Z

This review by Stantec is for general conformance with the design concept of Stantec's design of the:

- ☐ Architectural
- ☑ Structural
- ☐ Mechanical
- ☐ Electrical
- ☐ Other

component(s) only and does not mean that Stantec has verified or approves the shop drawing(s). The Contractor remains solely responsible for the shop drawing(s) and this review by Stantec does not relieve the Contractor of the Contractor's responsibility for errors or omissions in the shop drawing(s) or for meeting all requirements of the contract documents. This review does not mean that Stantec approves the detailed design inherent in the shop drawing, responsibility for which shall remain with the Contractor submitting same, nor does this review mean that Stantec accepts any deviation of the shop drawing(s) from the contract documents. The Contractor is responsible for confirming all dimensions and correlating them at the job site, for all construction means, methods and techniques, and for coordination of construction work of all trades, including coordination of all shop drawings.

Stantec

- ☑ REVIEWED
- ☐ REVIEWED, AS NOTED
- ☐ REVISE AND RESUBMIT
- ☐ NOT REVIEWED

DATE 2018-06-15

BY Paul Clyne

SPECO Wastemaster® Tank Mounted Screw Screen (2)

Model GCPC600

All references to the motor have been updated to indicate that a 2.0HP motor

STANTEC PROJECT #: 110126045

SUBMITTAL # Enviro-Care project WEC217259Z -Rev B

This review by Stantec is for general conformance with the design concept of Stantec's design of the:

- ☑ Process
- ☐ Structural
- ☐ Mechanical
- ☐ Electrical
- ☐ Other

component(s) only and does not mean that Stantec has verified or approves the shop drawing(s). The Contractor remains solely responsible for the shop drawing(s) and this review by Stantec does not relieve the Contractor of the Contractor's responsibility for errors or omissions in the shop drawing(s) or for meeting all requirements of the contract documents. This review does not mean that Stantec approves the detailed design inherent in the shop drawing, responsibility for which shall remain with the Contractor submitting same, nor does this review mean that Stantec accepts any deviation of the shop drawing(s) from the contract documents. The Contractor is responsible for confirming all dimensions and correlating them at the job site, for all construction means, methods and techniques, and for coordination of construction work of all trades, including coordination of all shop drawings.

Stantec

- ☑ REVIEWED
- ☐ REVIEWED, AS NOTED
- ☐ REVISE AND RESUBMIT
- ☐ NOT REVIEWED

DATE May 15, 2018

BY Alejandro Rojas, P.Eng

Even though some of the documents within Shop Drawing Submittal Revision B were not updated (see samples below), it is understood that the Supplier will provide 2.0 kW motors and respective drives for the fine screens.

Submittal

1570 St. Paul Avenue - Gurnee IL 6003
P: 815.636.8306 - www.enviro-care.com

Enviro-Care
A WAMGROUP® Company

Scope of Supply

SECTION: 46 21 33
ADDENDA: 1

See General Arrangement drawing WEC217259Z for Process Design Information

ITEM: "A" – Two (2) SPECO WasteMaster® Tank Mounted Screw Screens, Model GCPC600 **(EACH)** to include:

- Integral screen tank with hinged access door from type 316L stainless steel. Tank supplied with mounting flange for ultrasonic level sensor, vent and hinged access door.
- Tank shall be sized to allow screen to pivot to an angle parallel with the mounting floor.
- Semi-cylindrical screenings basket from type 316L stainless steel
- Conveyor tube with wear bars from type 316L stainless steel bolted to the transport tube using 316 stainless steel bolts.
- Neoprene side seals fastened to basket to prevent bypass around the screen.
- Shaftless spiral screw from high strength alloy steel with protective primer coating and brushes attached in the basket area. Brushes are supplied in individually replaceable sections each covering 180° of the spiral and shall have nylon bristles molded into a plastic core and attached to the screw with 316 stainless steel fasteners.
- Basket mounted spray bar from type 316L stainless steel.
- Dual chambered dewatering and discharge zone from type 316L stainless steel with hinged access door.
- Dewatering zone drain flush spray system from type 316L stainless steel with manual ball valve.
- Plastic hose for drain connection to direct pressate back into the channel.
- Centralized washing system with type 316 stainless steel piping and rubber reinforced hose, connecting all unit spray locations to single point for customer connection. Includes manual ball valves and solenoids.
- Drive unit with ~~1.5~~ 2 HP TEFC (Class 1, Division 2) motor suitable for 575/3/60 electrical supply.
- Fasteners – 316 stainless steel.
- A stand from type 316L stainless steel is supplied to support the fine screen unit.

2 HP

HARDWARE

- Assembly fasteners from type 316 stainless steel.

CONTROL PANEL AND INSTRUMENTATION

- One (1) NEMA 4X type 316L stainless steel wall mount main control panel suitable for 600/3/60 electrical supply.
- One (1) NEMA 4X Emergency Stop pushbutton station with sealed contacts for use in a Class 1, Zone 2 area.
- Two (2) NEMA 4/7 safety microswitches mounted to tank access door and dewatering/discharge access door (Class 1, Zone 2).
- One (1) NEMA 4x 120V 304SS Body solenoid valve to control water spray functions, suitable for installation in a Class 1, Zone 2 area.
- One (1) Ultrasonic Level Controller: A 120V single point level controller shall be provided in a windowed NEMA 4X polycarbonate enclosure suitable for wall mounting, to receive and interpret a

Q:\Projects-EC Active\WEC217259Z Iqaluit\7 Product Drawings\Submittal Drawings\WEC217259Z REV C

NOTES:

1. UNIT MATERIAL: SCREEN: 316L SS
   SCREENINGS PRESS: 316L SS
   SPIRAL MATERIAL: HI-STRENGTH ALLOY STEEL
2. AREA CLASSIFICATION:
   INSIDE TANK - HAZARDOUS - CLASS 1, ZONE 1.
   OUTSIDE TANK - HAZARDOUS - CLASS 1, ZONE 2
3. SCREEN DRIVE MOTOR: 1.5 HP, 575 V, 3 PH, 60 HZ
4. SCREEN WEIGHT - 1750 LB [793.8 Kg]
   MOTOR WEIGHT - 41 LB [19 Kg]
   GEAR BOX - 101 LB [46 Kg]
5. WATER REQUIREMENTS:
   SCREEN SPRAY WASH: 24 GPM @ 40 - 60 PSI [1.5L/s @ 275 - 414 kPa]
6. NOT SHOWN: ITEMS 119 - 125. REFER TO PARTS LISTS FOR DESCRIPTIONS, MATERIAL, AND QUANTITIES.
7. PROVIDE SUFFICIENT FLEXIBILITY IN WATER AND ELECTRICAL CONNECTIONS TO ALLOW THE UNIT TO PIVOT OUT OF CHANNEL . ALL INTER CONNECTING PIPING, WIRING, AND CONDUIT FROM UNIT-MOUNTED DEVICES WILL BE SUPPLIED BY OTHERS.
8. CUSTOMER MUST PROVIDE LIFTING DEVICE TO PIVOT UNIT OUT OF TANK LIFTING CAPABILITY MUST EQUAL A MINIMUM OF 60% ON UNIT WEIGHT, APPLIED AT LIFTING POINT SHOWN. TANK MUST BE EMPTY, AND SCREEN BASKET MUST BE CLEAR OF SOLIDS PRIOR TO PIVOTING.
9. BOTTOM OF SCREEN MUST REST FLUSH TO THE TANK FLOOR, TO PREVENT MATERIAL FROM BYPASSING THE SCREEN. SIDE SEALS MUST REST ALONG TANK WALL ON BOTH SIDES TO PREVENT MATERIAL FROM BYPASSING THE SCREEN.
10. STRAINER, SOLENOID VALVES AND WATER HAMMER (SHIPPED LOOSE) TO BE INSTALLED IN WASHWATER SUPPLY LINE.
11. EQUIPMENT MUST BE PROTECTED TO PREVENT SURFACE CONTAMINATION. CONTAMINATION CAN COME FROM WELDING CUTTING, PAINTING AND OTHER SUCH ACTIVITIES IN THE AREA OF THE EQUIPMENT. STAINLESS STEEL SURFACES CONTAMINATED WITH ANY IRON, CHLORIDE CONTAINING MATERIAL AND OTHER SUBSTANCES CAN EXPERIENCE ACCELERATED SURFACE CORROSION AND PITTING.
12. DESIGN IS BASED ON FLOW PARAMETERS PROVIDED. IF THERE ARE SITE SPECIFIC HYDRAULIC REQUIREMENTS (SUCH AS MAXIMUM AND MINIMUM FLOWS), PLEASE CONSULT ENVIRO-CARE REPRESENTATIVE TO ENSURE THAT THE EQUIPMENT CAN MEET ALL REQUIREMENTS. IN SOME CASES, ENVIRO-CARE MAY RECOMMEND A DOWNSTREAM WEIR FOR AVERAGE FLOWS THAT ARE EXTREMELY LOW.
13. THE FOLLOWING DEVICES NEED TO BE FIELD WIRED BY ELECTRICAL CONTRACTOR
    - SCREEN DRIVE MOTOR: ITEM 104 (QTY 2)
    - MOTOR CUT OUT SWITCH: ITEM 111 (QTY 4)
    - SOLENOID VALVES: ITEM 112 (QTY 2), ITEM 113 (QTY 2)
    - CONTROL PANEL: ITEM 117 (QTY 1), ITEM 118 (QTY 1)
    - LEVEL SENSOR ITEM 114 (QTY 2)
    - LEVEL CONTROLLER ITEM 121 (QTY 2), MOUNT NEAR SCREEN MAIN CONTROL PANEL
    - NEMA 4X LOCAL E-STOP (SUITABLE FOR CLASS 1, ZONE 2): ITEM 120 (QTY 2),

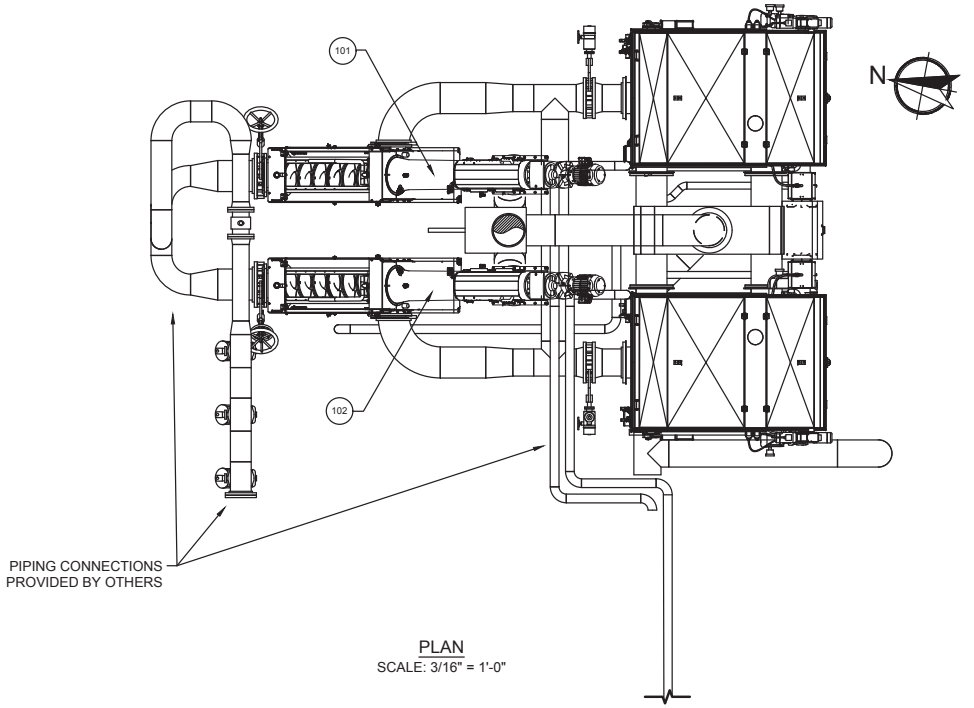

PLAN
SCALE: 3/16" = 1'-0"

PROCESS DESIGN INFORMATION:

APPLICATION:	CONTINOUS RAW WASTEWATER SCREENING
ANNUAL AVERAGE FLOW:	38.5 L/s
PEAK HOURLY FLOW PER SCREEN:	151 L/s
TANK LENGTH:	78.35 INCHES (1990mm)
TANK WIDTH:	25 INCHES (635mm)
TANK DEPTH:	54 INCHES (1370mm)
SCREEN OPENING / TYPE:	.236 INCHES (6mm) PERFORATED
ANGLE OF INCLINATION:	35 DEGREES
MAXIMUM UPSTREAM WATER LEVEL:	27.2 INCHES (692mm)
INFLUENT FLANGE SIZE:	16 INCHES (400mm)
EFFLUENT FLANGE SIZE:	16 INCHES (400mm)
SCREENINGS DISCHARGE:	16 INCHES (400mm)
DISCHARGE HEIGHT:	60.6 INCHES (1540mm) FROM MOUNTING FLOOR
SCREENINGS CAPTURE RATE (SRC):	52%

Rev	Revision Description	Date	Rev By	Approver
-				
C	SHEETS 3 & 4, 1370mm WAS 1297mm PER CUSTOMER REQUEST	05/02/2018	EV29	SE33
B	ADDED DIM'S SHEETS 3 & 4, PER CUSTOMER REQUEST	04/16/2018	EV29	SE33
A	ADDED DIM'S SHTS 3 & 4 PER CUSTOMER REQUEST	04/06/2018	EV29	SE33

Project Information
IQALUIT WASTEWATER TREATMENT PLANT UPGRADE
NORTH CANADA
SPECIFICATION # 46 21 33
PROJECT # IQA15-4964-C

Status: FOR APPROVAL

Title
IQALUIT WWTP
MODEL: GCPC600-LC3500 SPECO SCREW SCREEN IN A TANK

Enviro-Care
A WAMGROUP® Company

PROPERTY OF ENVIRO-CARE COMPANY. ALL RIGHTS RESERVED. NO PART OF THIS DRAWING MAY BE REPRODUCED IN ANY FORM WITHOUT WRITTEN PERMISSION FROM ENVIRO-CARE. ENVIRO-CARE COMPANY RESERVES THE RIGHT TO ALTER DATA OR THE DESIGN OF ITS EQUIPMENT AT ANY TIME WITHOUT PRIOR NOTICE AND WITHOUT ANY OBLIGATION WHATSOEVER.

Designer	Checker	Date	Sheet
EV29	SE33	03-12-2018	1 of 5

Third Angle Projection

Drawing Number: WEC217259Z

Revision: C

Q:\Projects-EC Active\WEC217259Z (qaluit\7 Product Drawings\Submittal Drawings\WEC217259Z

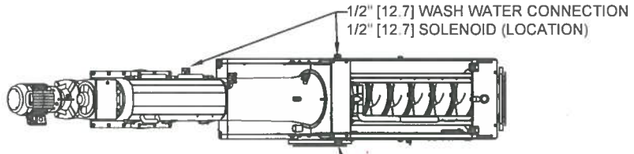

TOP VIEW

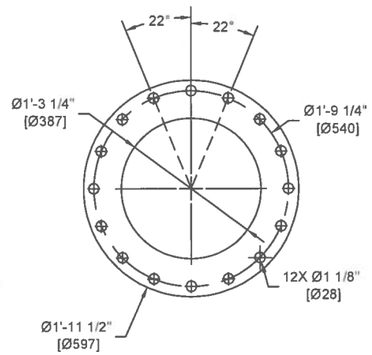

16" [406] FLANGE CONNECTION
SCALE: 3/4" = 1'-0"

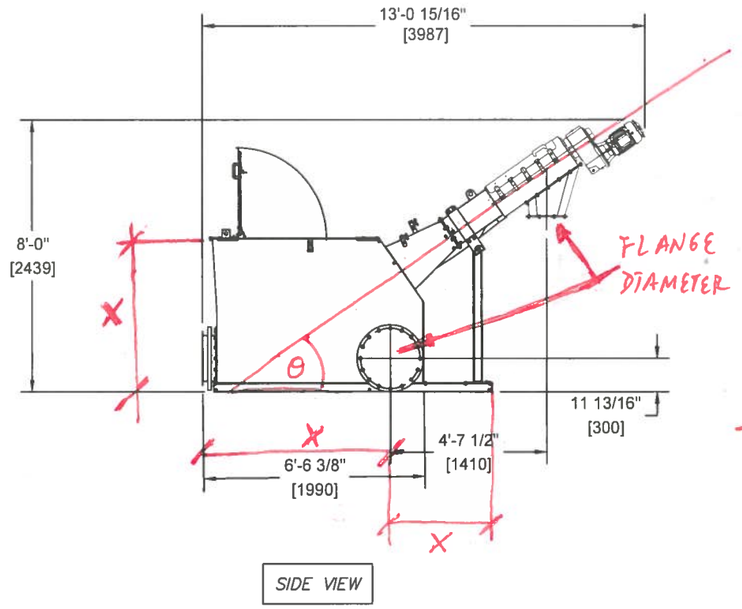

SIDE VIEW

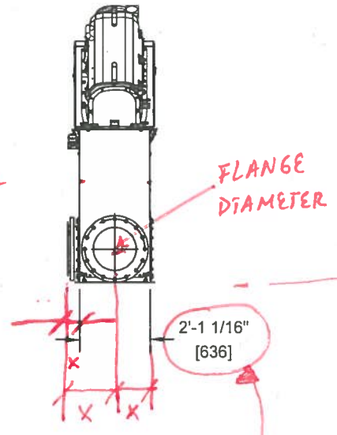

FRONT VIEW

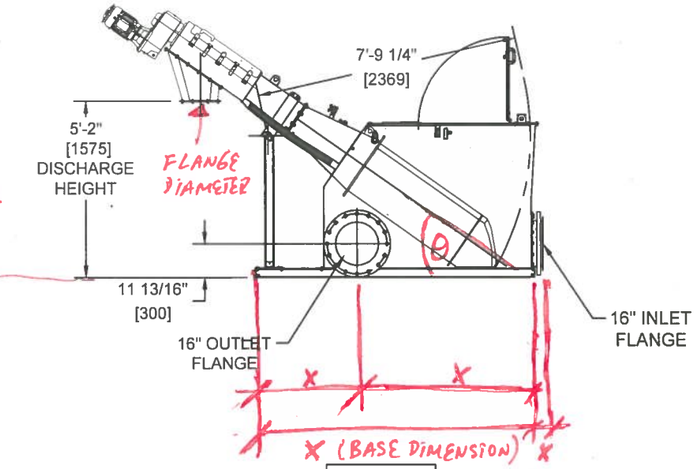

SIDE VIEW

WHAT DIMENSION IS CORRECT?

- IN ADDITION TO DIMENSIONS PRESENTED, PRESENT ALL DIMENSIONS MARKED UP WITH AN "X".
- PRESENT SCREEN INCLINATION ANGLE θ

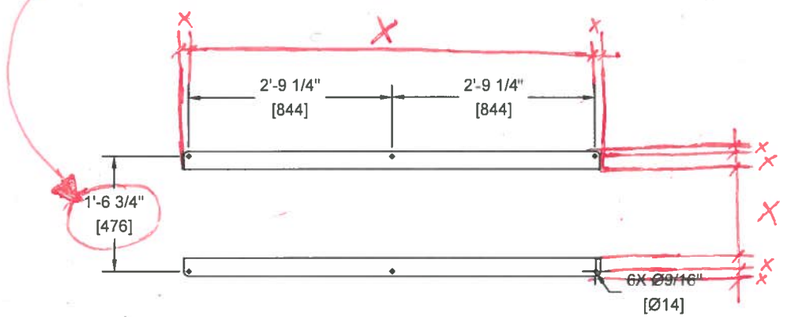

ANCHOR DETAIL
SCALE: 1/2" = 1' -0"
(BOTH SCREENS)

Structural Comments - Paul Clyne 09/04/2018
Please include:
- anchor bolt specification.
- Design reaction forces at equipment support locations.

Structural Comments - Paul Clyne 28/05/2018
Please see previous comments and address.

Rev	Revision Description	Date	Rev By	Approver
-				
-				
-				
-				

Enviro-Care
A WAMGROUP[3] Company

PROPERTY OF ENVIRO-CARE COMPANY. ALL RIGHTS RESERVED. NO PART OF THIS DRAWING MAY BE REPRODUCED IN ANY FORM WITHOUT WRITTEN PERMISSION FROM ENVIRO-CARE. ENVIRO-CARE COMPANY RESERVES THE RIGHT TO ALTER DATA OR THE DESIGN OF ITS EQUIPMENT AT ANY TIME WITHOUT PRIOR NOTICE AND WITHOUT ANY OBLIGATION WHATSOEVER

Status: FOR APPROVAL

Title
IQALUIT WWTP
MODEL: GCPC600-LC3500 SPECO SCREW SCREEN IN A TANK

Designer	Checker	Date	Sheet
EV29	SE33	03-12-2018	3 of 5

Third Angle Projection

Drawing Number: WEC217259Z

Revision: -

Enviro-Care

A WAMGROUP® Company

Revision: C

Project No.: WEC217259Z

Project Name: Iqaluit WWTP Upgrade

SPECO Wastemaster® Tank Mounted Screw Screen (2)

Model GCPC600

Submittal

1570 St. Paul Avenue - Gurnee IL 60031
P: 815.636.8306 - www.enviro-care.com

This page left intentionally blank

Section Two: Scope of Supply

This page left intentionally blank

Scope of Supply

SECTION: 46 21 33
ADDENDA: 1

See General Arrangement drawing WEC217259Z for Process Design Information

ITEM: "A" – Two (2) SPECO WasteMaster® Tank Mounted Screw Screens, Model GCPC600 **(EACH)** to include:

- Integral screen tank with hinged access door from type 316L stainless steel. Tank supplied with mounting flange for ultrasonic level sensor, vent and hinged access door.
- Tank shall be sized to allow screen to pivot to an angle parallel with the mounting floor.
- Semi-cylindrical screenings basket from type 316L stainless steel
- Conveyor tube with wear bars from type 316L stainless steel bolted to the transport tube using 316 stainless steel bolts.
- Neoprene side seals fastened to basket to prevent bypass around the screen.
- Shaftless spiral screw from high strength alloy steel with protective primer coating and brushes attached in the basket area. Brushes are supplied in individually replaceable sections each covering 180° of the spiral and shall have nylon bristles molded into a plastic core and attached to the screw with 316 stainless steel fasteners.
- Basket mounted spray bar from type 316L stainless steel.
- Dual chambered dewatering and discharge zone from type 316L stainless steel with hinged access door.
- Dewatering zone drain flush spray system from type 316L stainless steel with manual ball valve.
- Plastic hose for drain connection to direct pressate back into the channel.
- Centralized washing system with type 316 stainless steel piping and rubber reinforced hose, connecting all unit spray locations to single point for customer connection. Includes manual ball valves and solenoids.
- Drive unit with 2 HP TEFC (Class 1, Division 2) motor suitable for 575/3/60 electrical supply.
- Fasteners – 316 stainless steel.
- A stand from type 316L stainless steel is supplied to support the fine screen unit.

HARDWARE

- Assembly fasteners from type 316 stainless steel.

CONTROL PANEL AND INSTRUMENTATION

- One (1) NEMA 4X type 316L stainless steel wall mount main control panel suitable for 600/3/60 electrical supply.
- One (1) NEMA 4X Emergency Stop pushbutton station with sealed contacts for use in a Class 1, Zone 2 area.
- Two (2) NEMA 4/7 safety microswitches mounted to tank access door and dewatering/discharge access door (Class 1, Zone 2).
- One (1) NEMA 4x 120V 304SS Body solenoid valve to control water spray functions, suitable for installation in a Class 1, Zone 2 area.
- One (1) Ultrasonic Level Controller: A 120V single point level controller shall be provided in a windowed NEMA 4X polycarbonate enclosure suitable for wall mounting, to receive and interpret a

4-20mA scaled signal from an upstream transducer. The controller shall have 6 internal relays and provide an LCD display.

- One (1) ultrasonic level transducer shall be provided. Sensor shall have an ETFE housing with an integral sensor to provide compensation for acoustic variations due to temperature. Sensor shall have a range of 1-33 ft and be supplied with a 33 ft integral cable. Sensor shall be suitable for installation in a Class 1, Division 1, Group D area.

SPARE PARTS (TOTAL)

- One (1) set of spare brushes for each screen.
- No special tools required

FIELD SERVICE (TOTAL)

- Five (5) trips for a total of six (6) days onsite for installation inspection, start-up and operator training.

Q:\Projects-EC Active\WEC217259Z Iqaluit\7 Product Drawings\Submittal Drawings\WEC217259Z REV C

NOTES:

1. UNIT MATERIAL: SCREEN: 316L SS
   SCREENINGS PRESS: 316L SS
   SPIRAL MATERIAL: HI-STRENGTH ALLOY STEEL

2. AREA CLASSIFICATION:
   INSIDE TANK - HAZARDOUS - CLASS 1, ZONE 1.
   OUTSIDE TANK - HAZARDOUS - CLASS 1, ZONE 2

3. SCREEN DRIVE MOTOR: 2 HP, 575 V, 3 PH, 60 HZ

4. SCREEN WEIGHT - 1750 LB [793.8 Kg]
   MOTOR WEIGHT - 41 LB [19 Kg]
   GEAR BOX - 101 LB [46 Kg]

5. WATER REQUIREMENTS:
   SCREEN SPRAY WASH: 24 GPM @ 40 - 60 PSI [1.5L/s @ 275 - 414 kPa]

6. NOT SHOWN: ITEMS 119 - 125. REFER TO PARTS LISTS FOR DESCRIPTIONS, MATERIAL, AND QUANTITIES.

7. PROVIDE SUFFICIENT FLEXIBILITY IN WATER AND ELECTRICAL CONNECTIONS TO ALLOW THE UNIT TO PIVOT OUT OF CHANNEL . ALL INTER CONNECTING PIPING, WIRING, AND CONDUIT FROM UNIT-MOUNTED DEVICES WILL BE SUPPLIED BY OTHERS.

8. CUSTOMER MUST PROVIDE LIFTING DEVICE TO PIVOT UNIT OUT OF TANK LIFTING CAPABILITY MUST EQUAL A MINIMUM OF 60% ON UNIT WEIGHT, APPLIED AT LIFTING POINT SHOWN. TANK MUST BE EMPTY, AND SCREEN BASKET MUST BE CLEAR OF SOLIDS PRIOR TO PIVOTING.

9. BOTTOM OF SCREEN MUST REST FLUSH TO THE TANK FLOOR, TO PREVENT MATERIAL FROM BYPASSING THE SCREEN. SIDE SEALS MUST REST ALONG TANK WALL ON BOTH SIDES TO PREVENT MATERIAL FROM BYPASSING THE SCREEN.

10. STRAINER, SOLENOID VALVES AND WATER HAMMER (SHIPPED LOOSE) TO BE INSTALLED IN WASHWATER SUPPLY LINE.

11. EQUIPMENT MUST BE PROTECTED TO PREVENT SURFACE CONTAMINATION. CONTAMINATION CAN COME FROM WELDING CUTTING, PAINTING AND OTHER SUCH ACTIVITIES IN THE AREA OF THE EQUIPMENT. STAINLESS STEEL SURFACES CONTAMINATED WITH ANY IRON, CHLORIDE CONTAINING MATERIAL AND OTHER SUBSTANCES CAN EXPERIENCE ACCELERATED SURFACE CORROSION AND PITTING.

12. DESIGN IS BASED ON FLOW PARAMETERS PROVIDED. IF THERE ARE SITE SPECIFIC HYDRAULIC REQUIREMENTS (SUCH AS MAXIMUM AND MINIMUM FLOWS), PLEASE CONSULT ENVIRO-CARE REPRESENTATIVE TO ENSURE THAT THE EQUIPMENT CAN MEET ALL REQUIREMENTS. IN SOME CASES, ENVIRO-CARE MAY RECOMMEND A DOWNSTREAM WEIR FOR AVERAGE FLOWS THAT ARE EXTREMELY LOW.

13. THE FOLLOWING DEVICES NEED TO BE FIELD WIRED BY ELECTRICAL CONTRACTOR
    - SCREEN DRIVE MOTOR: ITEM 104 (QTY 2)
    - MOTOR CUT OUT SWITCH: ITEM 111 (QTY 4)
    - SOLENOID VALVES: ITEM 112 (QTY 2), ITEM 113 (QTY 2)
    - CONTROL PANEL: ITEM 117 (QTY 1), ITEM 118 (QTY 1)
    - LEVEL SENSOR ITEM 114 (QTY 2)
    - LEVEL CONTROLLER ITEM 121 (QTY 2), MOUNT NEAR SCREEN MAIN CONTROL PANEL
    - NEMA 4X LOCAL E-STOP (SUITABLE FOR CLASS 1, ZONE 2): ITEM 120 (QTY 2),

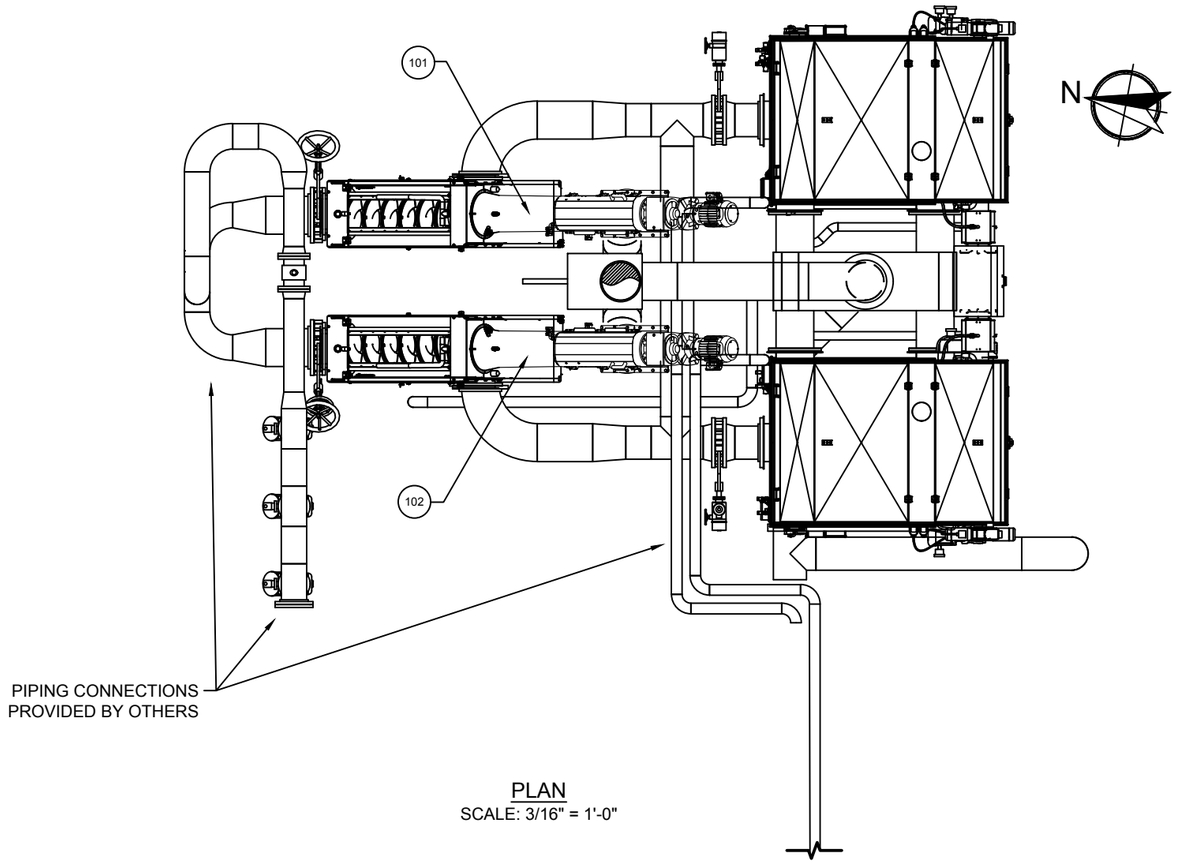

PLAN
SCALE: 3/16" = 1'-0"

PROCESS DESIGN INFORMATION:

APPLICATION:	CONTINOUS RAW WASTEWATER SCREENING
ANNUAL AVERAGE FLOW:	38.5 L/s
PEAK HOURLY FLOW PER SCREEN:	151 L/s
TANK LENGTH:	78.35 INCHES (1990mm)
TANK WIDTH:	25 INCHES (635mm)
TANK DEPTH:	54 INCHES (1370mm)
SCREEN OPENING / TYPE:	.236 INCHES (6mm) PERFORATED
ANGLE OF INCLINATION:	35 DEGREES
MAXIMUM UPSTREAM WATER LEVEL:	27.2 INCHES (692mm)
INFLUENT FLANGE SIZE:	16 INCHES (400mm)
EFFLUENT FLANGE SIZE:	16 INCHES (400mm)
SCREENINGS DISCHARGE:	16 INCHES (400mm)
DISCHARGE HEIGHT:	60.6 INCHES (1540mm) FROM MOUNTING FLOOR
SCREENINGS CAPTURE RATE (SRC):	52%

Rev	Revision Description	Date	Rev By	Approver
-				
C	SHEETS 3 & 4, 1370mm WAS 1297mm PER CUSTOMER REQUEST	05/02/2018	EV29	SE33
B	ADDED DIM'S SHEETS 3 & 4, PER CUSTOMER REQUEST	04/16/2018	EV29	SE33
A	ADDED DIM'S SHTS 3 & 4 PER CUSTOMER REQUEST	04/06/2018	EV29	SE33

Project Information
IQALUIT WASTEWATER TREATMENT PLANT UPGRADE
NORTH CANADA
SPECIFICATION # 46 21 33
PROJECT # IQA15-4964-C

Status: FOR APPROVAL

Title
IQALUIT WWTP
MODEL: GCPC600-LC3500 SPECO SCREW SCREEN IN A TANK

Enviro-Care
A WAMGROUP® Company

PROPERTY OF ENVIRO-CARE COMPANY. ALL RIGHTS RESERVED. NO PART OF THIS DRAWING MAY BE REPRODUCED IN ANY FORM WITHOUT WRITTEN PERMISSION FROM ENVIRO-CARE. ENVIRO-CARE COMPANY RESERVES THE RIGHT TO ALTER DATA OR THE DESIGN OF ITS EQUIPMENT AT ANY TIME WITHOUT PRIOR NOTICE AND WITHOUT ANY OBLIGATION WHATSOEVER.

Designer	Checker	Date	Sheet
EV29	SE33	03-12-2018	1 of 5

Third Angle Projection

Drawing Number: WEC217259Z

Revision: C

This page intentionally left blank

Q:\Projects-EC Active\WEC217259Z Iqaluit\7 Product Drawings\Submittal Drawings\WEC217259Z REV C

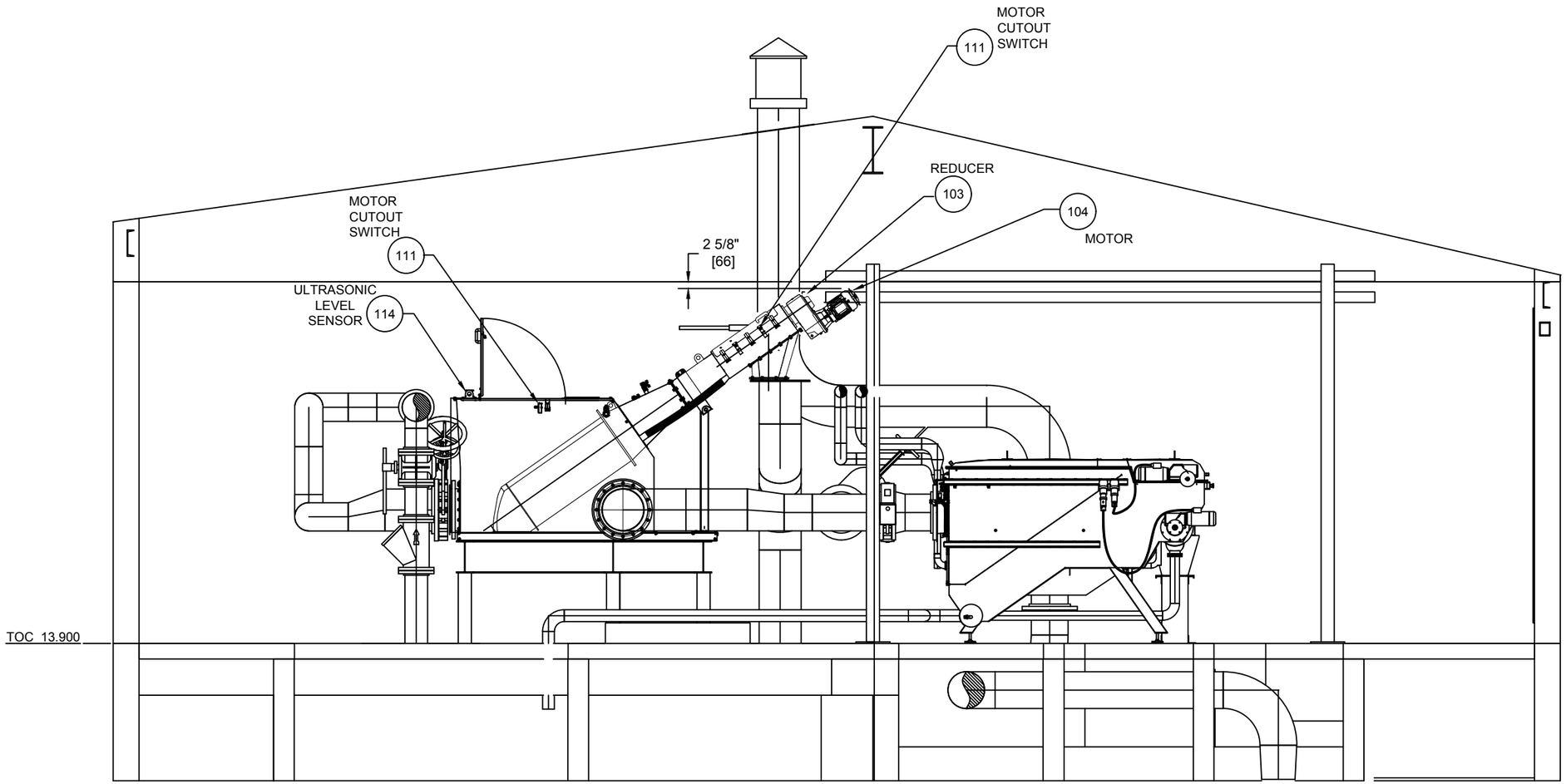

FRONT VIEW
SCALE: 1/4" = 1'-0"

-				
C	SHEETS 3 & 4, 1370mm WAS 1297mm PER CUSTOMER REQUEST	05/02/2018	EV29	SE33
B	ADDED DIM'S SHEETS 3 & 4, PER CUSTOMER REQUEST	04/16/2018	EV29	SE33
A	ADDED DIM'S SHTS 3 & 4 PER CUSTOMER REQUEST	04/06/2018	EV29	SE33
Rev	Revision Description	Date	Rev By	Approver

Enviro-Care
A WAMGROUP® Company

PROPERTY OF ENVIRO-CARE COMPANY. ALL RIGHTS RESERVED. NO PART OF THIS DRAWING MAY BE REPRODUCED IN ANY FORM WITHOUT WRITTEN PERMISSION FROM ENVIRO-CARE. ENVIRO-CARE COMPANY RESERVES THE RIGHT TO ALTER DATA OR THE DESIGN OF ITS EQUIPMENT AT ANY TIME WITHOUT PRIOR NOTICE AND WITHOUT ANY OBLIGATION WHATSOEVER.

Status: FOR APPROVAL

Title
IQALUIT WWTP
MODEL: GCPC600-LC3500 SPECO SCREW SCREEN IN A TANK

Designer	Checker	Date	Sheet
EV29	SE33	03-12-2018	2 of 5

Third Angle Projection

Drawing Number: WEC217259Z

Revision: C

This page intentionally left blank

Q:\Projects-EC Active\WEC217259Z Iqaluit\7 Product Drawings\Submittal Drawings\WEC217259Z REV C

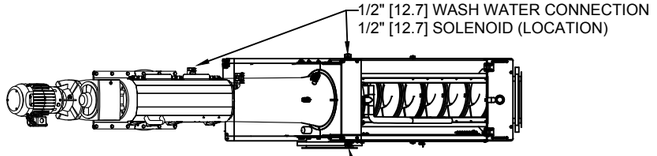

TOP VIEW

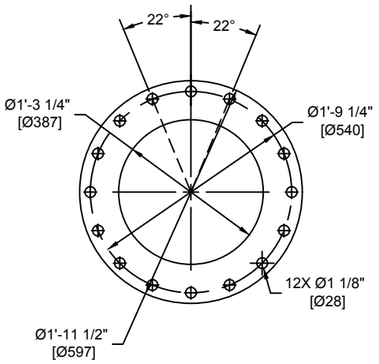

16" [406] FLANGE CONNECTION
SCALE: 3/4" = 1'-0"

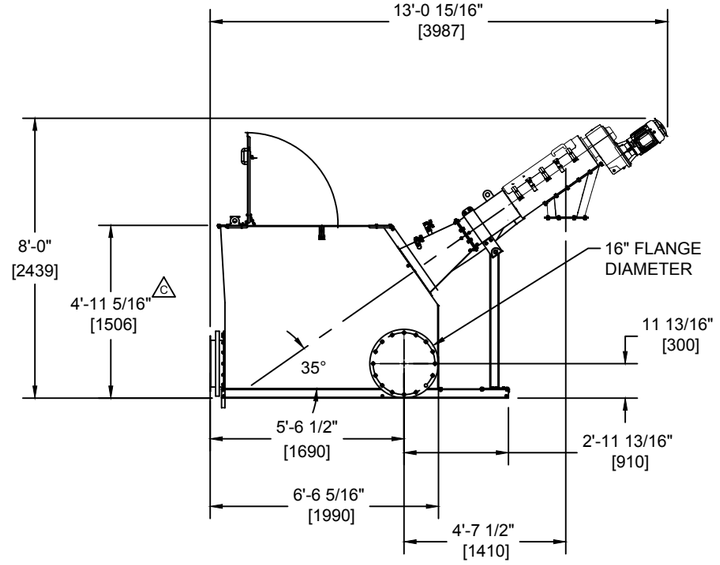

SIDE VIEW

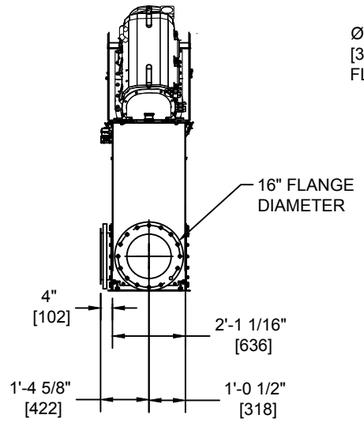

FRONT VIEW

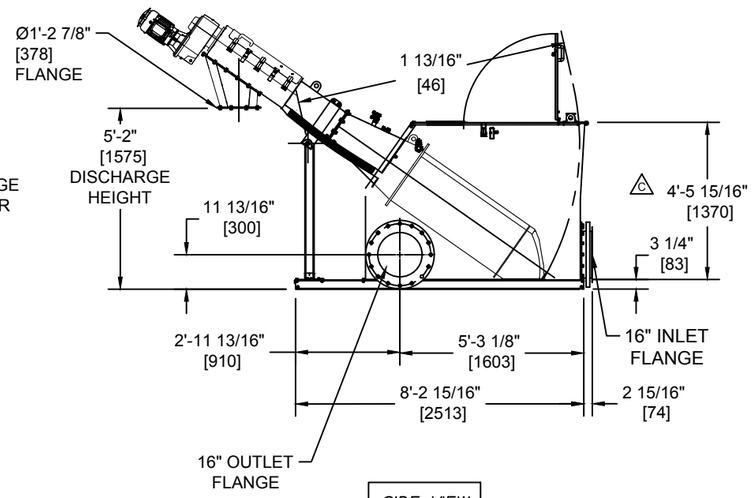

SIDE VIEW

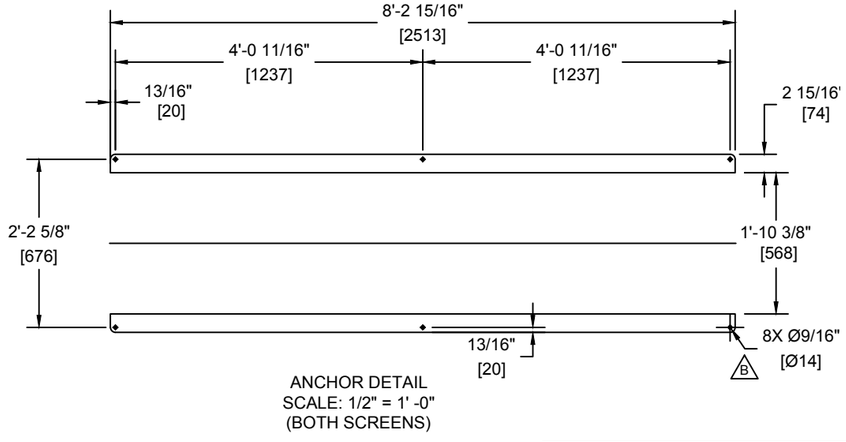

ANCHOR DETAIL
SCALE: 1/2" = 1' -0"
(BOTH SCREENS)

Rev	Revision Description	Date	Rev By	Approver
-				
C	SHEETS 3 & 4, 1370mm WAS 1297mm PER CUSTOMER REQUEST	05/02/2018	EV29	SE33
B	ADDED DIM'S SHEETS 3 & 4, PER CUSTOMER REQUEST	04/16/2018	EV29	SE33
A	ADDED DIM'S SHTS 3 & 4 PER CUSTOMER REQUEST	04/06/2018	EV29	SE33

Enviro-Care
A WAMGROUP® Company

PROPERTY OF ENVIRO-CARE COMPANY. ALL RIGHTS RESERVED. NO PART OF THIS DRAWING MAY BE REPRODUCED IN ANY FORM WITHOUT WRITTEN PERMISSION FROM ENVIRO-CARE. ENVIRO-CARE COMPANY RESERVES THE RIGHT TO ALTER DATA OR THE DESIGN OF ITS EQUIPMENT AT ANY TIME WITHOUT PRIOR NOTICE AND WITHOUT ANY OBLIGATION WHATSOEVER.

Status: FOR APPROVAL

Title
IQALUIT WWTP
MODEL: GCPC600-LC3500 SPECO SCREW SCREEN IN A TANK

Designer	Checker	Date	Sheet
EV29	SE33	03-12-2018	3 of 5

Third Angle Projection

Drawing Number: WEC217259Z

Revision: C

This page intentionally left blank

Q:\Projects-EC Active\WEC217259Z Iqaluit\7 Product Drawings\Submittal Drawings\WEC217259Z REV C

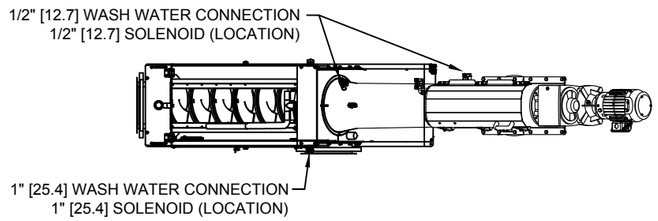

TOP VIEW

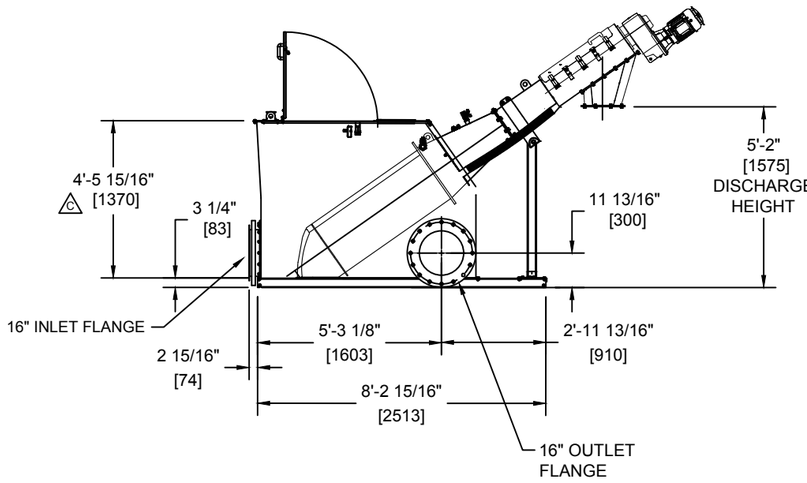

SIDE VIEW

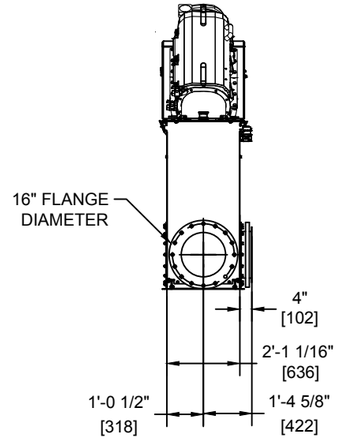

FRONT VIEW

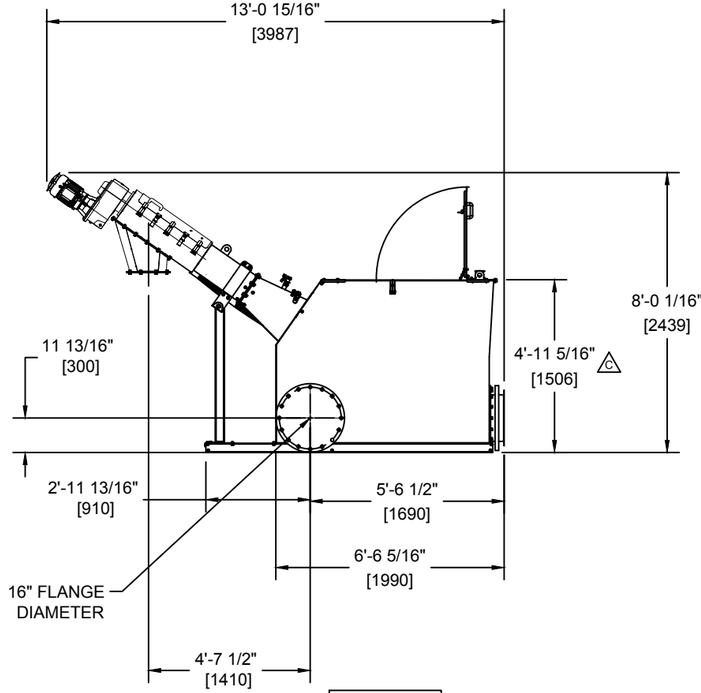

SIDE VIEW

Rev	Revision Description	Date	Rev By	Approver
-				
C	SHEETS 3 & 4, 1370mm WAS 1297mm PER CUSTOMER REQUEST	05/02/2018	EV29	SE33
B	ADDED DIM'S SHEETS 3 & 4, PER CUSTOMER REQUEST	04/16/2018	EV29	SE33
A	ADDED DIM'S SHTS 3 & 4 PER CUSTOMER REQUEST	04/06/2018	EV29	SE33

Enviro-Care
A WAMGROUP® Company

PROPERTY OF ENVIRO-CARE COMPANY. ALL RIGHTS RESERVED. NO PART OF THIS DRAWING MAY BE REPRODUCED IN ANY FORM WITHOUT WRITTEN PERMISSION FROM ENVIRO-CARE. ENVIRO-CARE COMPANY RESERVES THE RIGHT TO ALTER DATA OR THE DESIGN OF ITS EQUIPMENT AT ANY TIME WITHOUT PRIOR NOTICE AND WITHOUT ANY OBLIGATION WHATSOEVER.

Status: FOR APPROVAL

Title
IQALUIT WWTP
MODEL: GCPC600-LC3500 SPECO SCREW SCREEN IN A TANK

Designer	Checker	Date	Sheet
EV29	SE33	03-12-2018	4 of 5

Third Angle Projection

Drawing Number: WEC217259Z

Revision: C

This page intentionally left blank

Q:\Projects-EC Active\WEC217259Z Iqaluit\7 Product Drawings\Submittal Drawings\WEC217259Z REV C

1. ENVIRO-CARE RESERVES PROPRIETARY RIGHTS TO THIS DRAWING AND THE DATA SHOWN THEREON, WHICH IS SUBMITTED IN CONFIDENCE.

2. IF APPLICABLE, A STAR DENOTES VARIANCE FROM CONTRACT DOCUMENTS AND SHOULD BE PARTICULARLY NOTED.

3. IF APPLICABLE, A CLOUD DENOTES DIMENSIONS WHICH ARE CRITICAL TO THE DESIGN OF THE EQUIPMENT, BUT NOT CLEAR AND/OR NOT PROVIDED IN THE CONTRACT DOCUMENTS.

4. THE FOLLOWING DEFINES THE RESPONSIBILITY OF ENVIRO-CARE WITH REGARD TO THE INFORMATION SHOWN ON THIS DRAWING.

   A. THIS DRAWING IS NOT TO BE USED FOR CONSTRUCTION OR INSTALLATION PURPOSES UNTIL IT HAS BEEN APPROVED BY THE OWNER, THE ENGINEER OR AN AUTHORIZED REPRESENTATIVE.

   B. DIMENSIONS, WEIGHTS, AND OTHER INFORMATION ARE PROVIDED TO ACCOMMODATE THE STRUCTURE TO THE EQUIPMENT AS SHOWN.

   C. ENVIRO-CARE IS NOT RESPONSIBLE FOR ANY CONCRETE STRUCTURE DESIGN. THE ENGINEER IS TO DETERMINE SIZES TO SUIT LOCAL REQUIREMENTS.

   D. ENVIRO-CARE IS NOT RESPONSIBLE FOR DAMAGE, INJURY OR LOSS RESULTING FROM USE OF THE SUPPLIED EQUIPMENT.

   E. CHARGES FOR MODIFICATIONS OR ADDITIONS TO THE EQUIPMENT WILL NOT BE ACCEPTED BY ENVIRO-CARE, UNLESS PRIOR APPROVAL HAS BEEN OBTAINED IN WRITING FROM AN AUTHORIZED ENVIRO-CARE REPRESENTATIVE.

5. ALL CONCRETE, GROUT, CONCRETE REINFORCING, SLIDE GATES, PIPING, VALVES, PIPE SUPPORTS OR FITTINGS, WALL BRACKETS, ELECTRICAL WIRING, CONDUIT, OR ELECTRICAL EQUIPMENT, ERECTION, FIELD PAINTING OR PAINT, FIELD WELDING OR WELD ROD, GREASE, OR LUBRICATING OIL, EXCEPT AS SPECIFICALLY NOTED IS TO BE BY OTHERS, NOT BY ENVIRO-CARE.

6. ALL ONSITE WELDING MUST CONFORM TO THE LATEST STANDARDS OF THE AMERICAN WELDING SOCIETY.

7. SEE PARTS LIST FOR ITEM IDENTIFICATION.

Rev	Revision Description	Date	Rev By	Approver
-				
C	SHEETS 3 & 4, 1370mm WAS 1297mm PER CUSTOMER REQUEST	05/02/2018	EV29	SE33
B	ADDED DIM'S SHEETS 3 & 4, PER CUSTOMER REQUEST	04/16/2018	EV29	SE33
A	ADDED DIM'S SHTS 3 & 4 PER CUSTOMER REQUEST	04/06/2018	EV29	SE33

Enviro-Care
A WAMGROUP® Company

PROPERTY OF ENVIRO-CARE COMPANY. ALL RIGHTS RESERVED. NO PART OF THIS DRAWING MAY BE REPRODUCED IN ANY FORM WITHOUT WRITTEN PERMISSION FROM ENVIRO-CARE. ENVIRO-CARE COMPANY RESERVES THE RIGHT TO ALTER DATA OR THE DESIGN OF ITS EQUIPMENT AT ANY TIME WITHOUT PRIOR NOTICE AND WITHOUT ANY OBLIGATION WHATSOEVER.

Title
IQALUIT WWTP
MODEL: GCPC600-LC3500 SPECO SCREW SCREEN IN A TANK

Designer	Checker	Date	Sheet
EV29	SE33	03/12/2018	5 of 5

Third Angle Projection

Drawing Number: WEC217259Z

Revision: C

This page intentionally left blank

Enviro-Care
A WAMGROUP® Company

Hex Head Cap Screw

This page intentionally left blank

McMASTER-CARR®

Super-Corrosion-Resistant 316 Stainless Steel Hex Head Screw

1/2"-13 Thread Size, 2" Long, Fully Threaded

93190A720

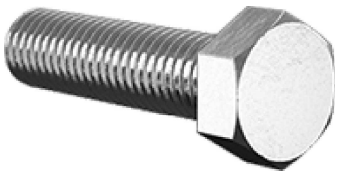

Thread Size	1/2"-13
Length	2"
Threading	Fully Threaded
Head Width	3/4"
Head Height	5/16"
Material	316 Stainless Steel
Hardness	Rockwell B70
Tensile Strength	70,000 psi
Screw Size Decimal Equivalent	0.500"
Thread Type	UNC
Thread Spacing	Coarse
Thread Fit	Class 2A
Thread Direction	Right Hand
Head Type	Hex
Hex Head Profile	Standard
Drive Style	External Hex
Specifications Met	ASME B18.2.1
System of Measurement	Inch
RoHS	Compliant

More corrosion resistant than 18-8 stainless steel screws, these screws have excellent resistance to chemicals and salt water. They may be mildly magnetic. Length is measured from under the head.

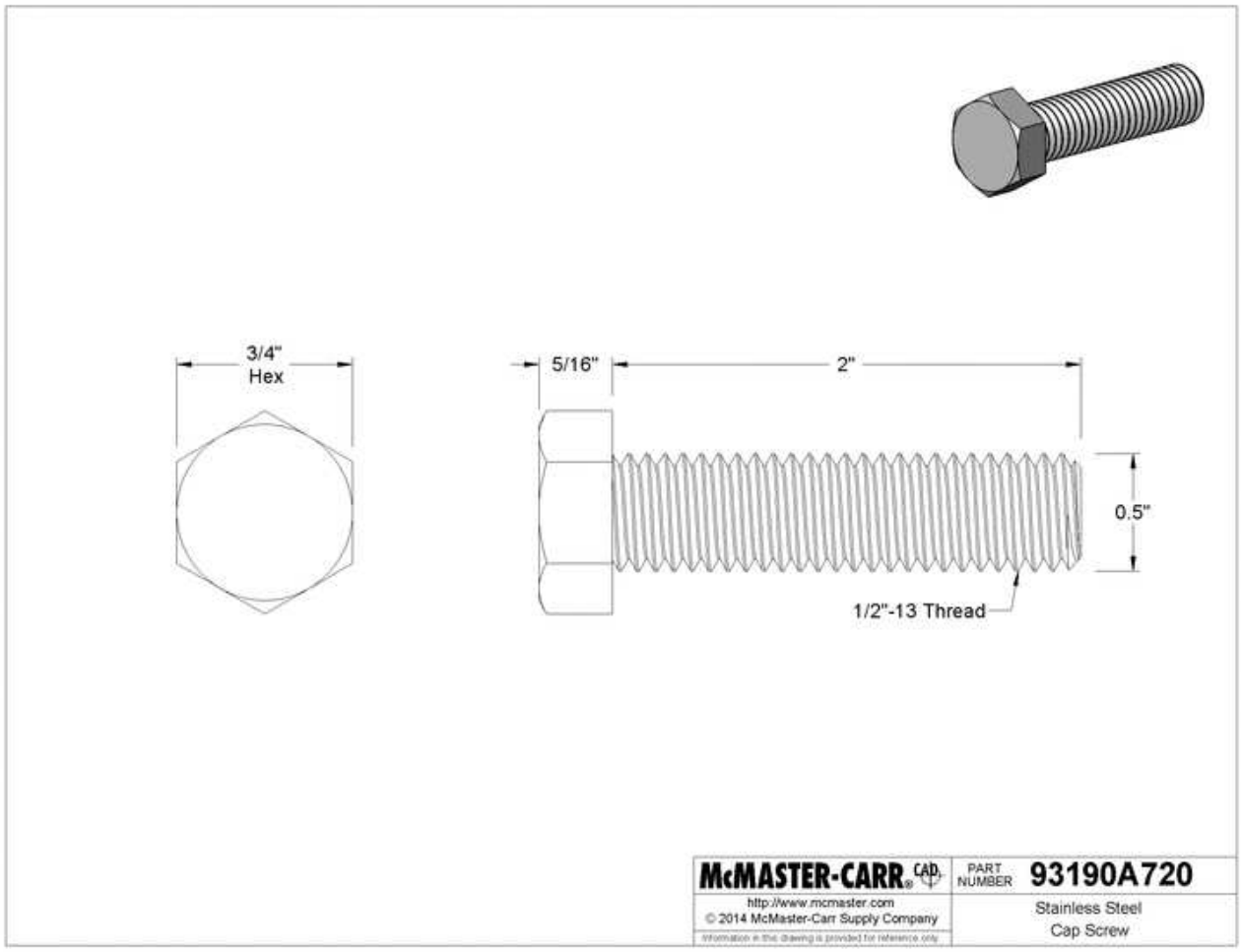

The information in this 3-D model is provided for reference only.

Enviro-Care
A WAMGROUP® Company

Equipment Force Calculations

This page intentionally left blank

Enviro-Care
A WAMGROUP® Company

Force Calculations- Screens

This page intentionally left blank

The following calculations show all loads applied during normal operation of the equipment. The supplied screen will be tank mounted and secured in such a manner to resist any shear and overturning forces. Only one piece of Enviro-Care supplied equipment will require anchoring to the tank support base will be the spiral screen pivoting support stand. The following tension calculations are performed on the farthest upstream bolt if the support stand were to start tipping from the force of the upstream water and the weight of the unit. These calculations are calculated if the screen is only supported by the pivoting stand, and if the screen is 100% blinded (worst case scenario). Please note that the bottom of the tank may also support some of the weight of the screen when it is in the tank, but that additional support is ignored.

This page intentionally left blank

Determine Worst Case Shear Force from Influent Wastewater

Unit Definitions

$\boldsymbol{W_s}$ – is the weight of the Spiral Screen

$\boldsymbol{\rho_{ww}}$ – is the density of raw sewage from ACI 350, Code Requirements for Environmental Engineering Concrete Structures.

$\boldsymbol{h_d}$ – is the maximum upstream water level, from Figure 1: Operation Level and General Arrangement Drawing WEC217259Z

$\boldsymbol{w_t}$ – is the width of the tank, from General Arrangement Drawing WEC217259Z

$\boldsymbol{A_{hydro}}$ – is the area that the force of the influent water acts upon

$\boldsymbol{g}$ – is the acceleration due to gravity

$\boldsymbol{P_{hydro}}$ – is the hydrostatic pressure on the screen if the screen is fully blinded

$\boldsymbol{F_{hydro}}$ – is the hydrostatic force on the pivoting stand if screen is fully blinded

$\boldsymbol{V_{shear}}$ – is the shear force on each bolt that anchors pivoting stand (divided by 5 because the pivoting stand has 5 hex head cap screws)

Calculations

$$W_s = 500kg$$

$$\rho_{ww} = \frac{63lbs}{ft^3} \approx 1010\frac{kg}{m^3}$$

$$h_d = 692mm = 692mm \cdot \frac{m}{1000mm} = 0.692m$$

$$w_t = 635mm = 635mm \cdot \frac{m}{1000mm} = 0.635m$$

$$A_{hydro} = h_d \cdot w_t = 0.692m \cdot 0.635m = 0.43942m^2$$

$$g = 9.81\ \frac{m}{s^2}$$

$$cf = 1N = \frac{1kg \cdot m}{s^2}$$

$$P_{hydro} = \frac{h_d \cdot \rho_{ww} \cdot g}{cf} = 0.692m \cdot 1010\frac{kg}{m^3} \cdot 9.81\frac{m}{s^2} \cdot \frac{1N}{\frac{1kg \cdot m}{s^2}} = \frac{6856.4052N}{m^2} \cdot \frac{1Pa}{\frac{1N}{m^2}} = [\mathbf{6856.4Pa}]$$

$$F_{hydro} = (P_{hydro} \cdot A_{hydro}) = \frac{6856.4N}{m^2} \cdot 0.43942m^2 = [\mathbf{3012.8N}]$$

$$V_{shear} = \frac{F_{hydro}}{5} = \frac{3012.8N}{5} = [\mathbf{602.6N}]$$

Determine Worst Case Shear Force from Influent Wastewater

Unit Definitions

$\boldsymbol{d_b}$ – is the measurement from the downstream edge of the mounting plate to the centerline of the upstream bolt, from General Arrangement drawing WEC217259Z

$\boldsymbol{d_s}$ – is the measurement from the downstream edge of the mounting plate to the centerline of the support stand riser, from General Arrangement drawing WEC217259Z

$\boldsymbol{d_h}$ – is the measurement from the downstream edge of the mounting plate to the location of the support stand riser where the horizontal force is applied **($\boldsymbol{F_{hydro}}$)**, from General Arrangement drawing WEC217259Z

$\boldsymbol{FW_s}$ – is the force of the weight of the Spiral Screen

Calculations

$$d_b = 116\text{mm} = 166\text{mm} \cdot \frac{1m}{1000mm} = 0.116m$$

$$d_s = 100\text{mm} = 100\text{mm} \cdot \frac{1m}{1000mm} = 0.100m$$

$$d_h = 1248\text{mm} = 1248\text{mm} \cdot \frac{1m}{1000mm} = 1.248m$$

$$FW_s = 500kg \cdot 9.81\frac{m}{s^2} = 4905N$$

To determine maximum tensile forces, the sum of the moments about the downstream edge of the pivoting stand mounting plate should equal zero when the screen is 100% blinded and screen is in the tank.

$$\sum M_{O1} = 0$$

$$\left(F_{hydro} \cdot d_h\right) + \left(-FW_s \cdot d_s\right) + \left(T_y \cdot d_b\right) = 0 \text{ So:}$$

$$T_y = \frac{\left(\left(F_{hydro} \cdot d_h\right) + \left(W_s \cdot d_s\right)\right)}{d_b} = \frac{\left(\left(3012.8N \cdot 1.248m\right) + \left(4905N \cdot 0.100m\right)\right)}{0.116m} = \frac{3760N \cdot m + 490.5N \cdot m}{0.116m} = \boldsymbol{[36640N]}$$

$$T_{anchor} = \frac{T_y}{5} = \frac{36640N}{5} = \boldsymbol{[7328N]}$$

L1 = Minimum operation level

L2 = Maximum operation level

L3 = Alarm level

L4 = Overflow level

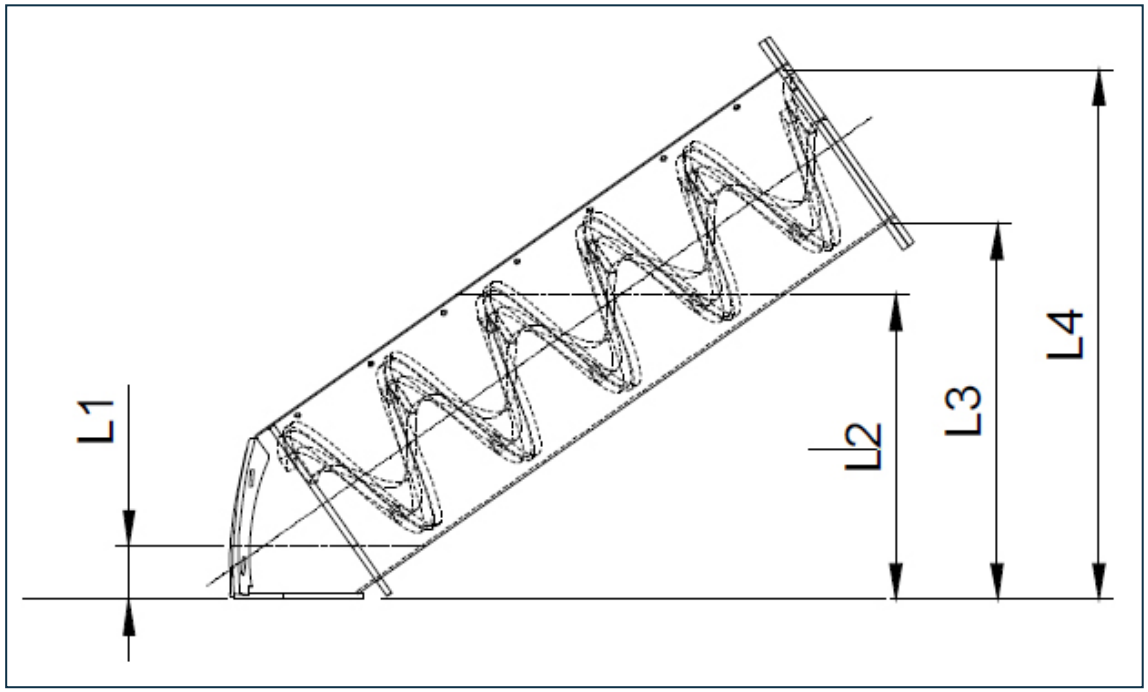

EQUIPMENT	L1	L2	L3	L4
GCP 300	65	374	460	650
GCP 400	65	422	518	787
GCP 500	100	505	627	968
GCP 600	100	541	692	1112
GCP 700	100	615	795	1287

Figure 1: Operation Levels

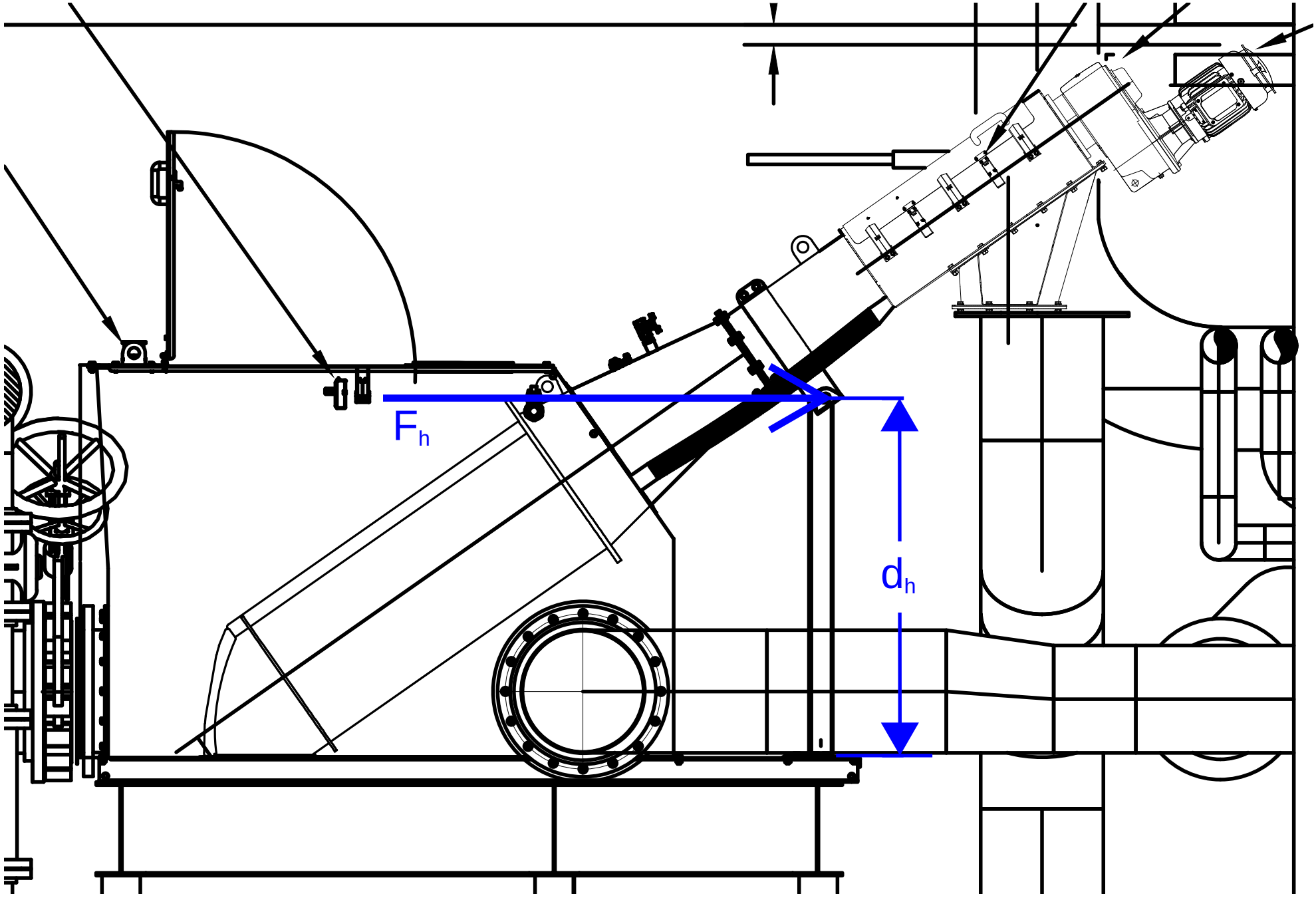

Figure 2: d_h Dimension and F_h

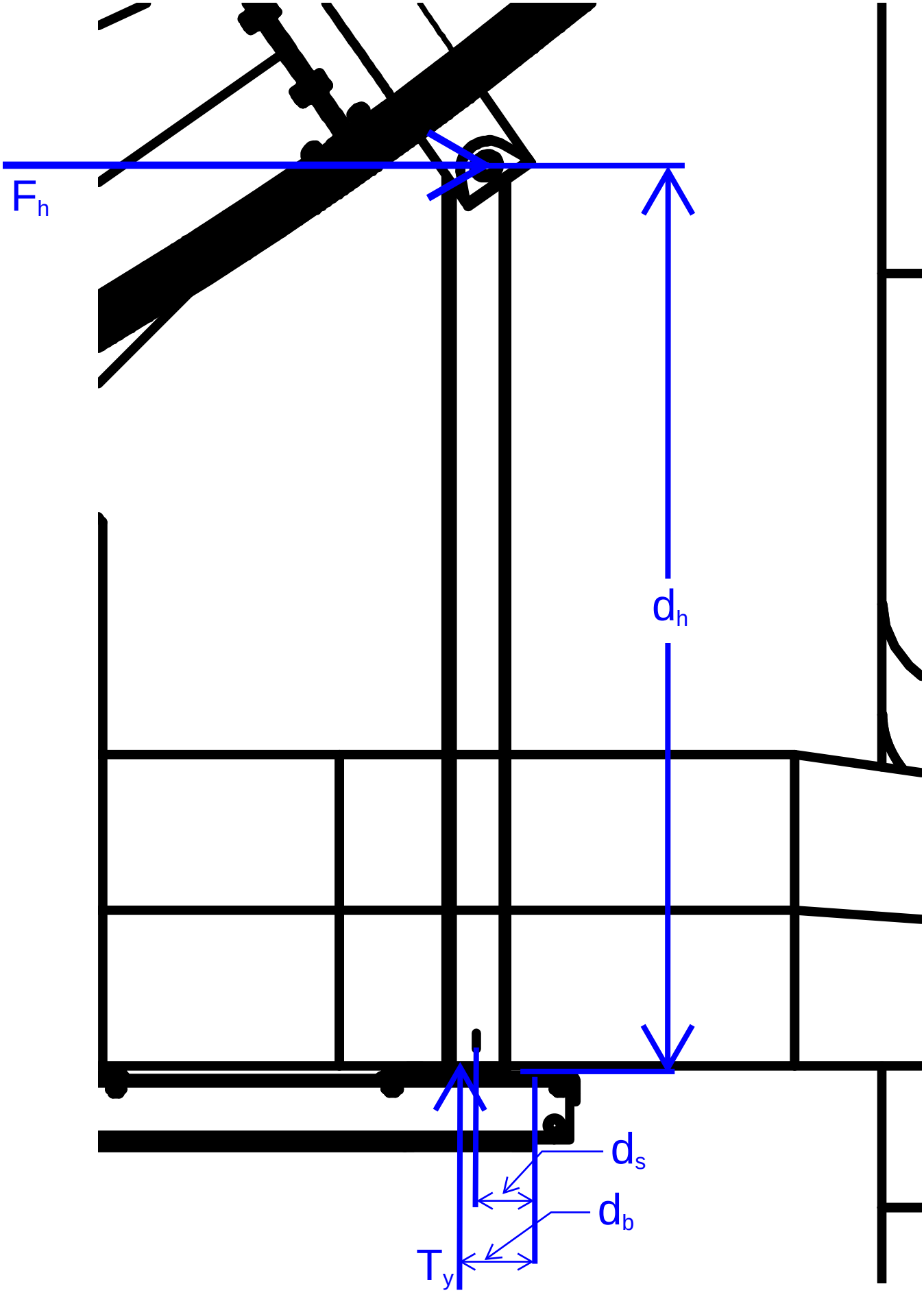

Figure 3: Dimension Details

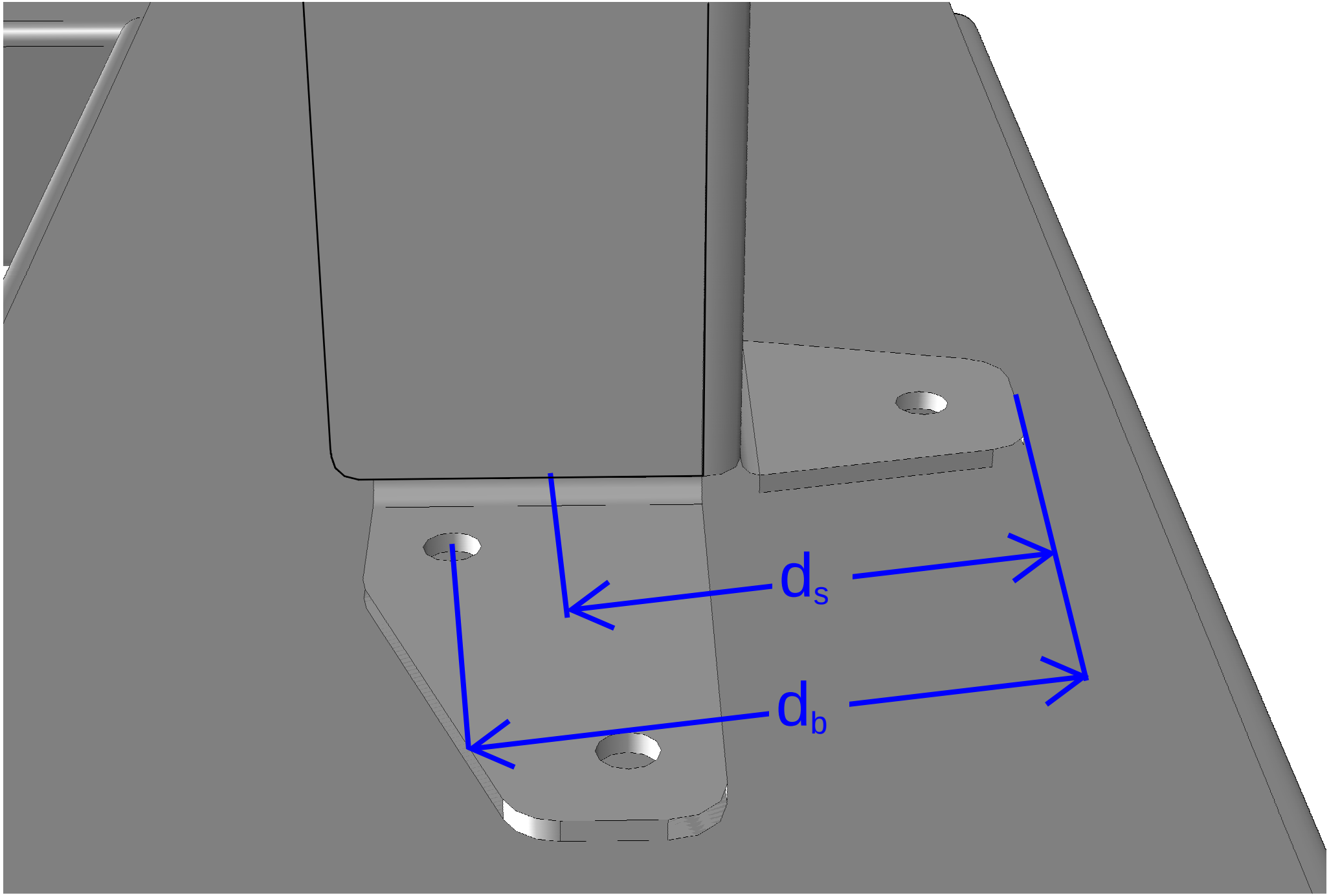

Figure 4: Support Details

Q:\Projects-EC Active\WEC217259Z Iqaluit\7 Product Drawings\Submittal Drawings\WEC217259Z REV C

NOTES:

1. UNIT MATERIAL: SCREEN: 316L SS
   SCREENINGS PRESS: 316L SS
   SPIRAL MATERIAL: HI-STRENGTH ALLOY STEEL

2. AREA CLASSIFICATION:
   INSIDE TANK - HAZARDOUS - CLASS 1, ZONE 1.
   OUTSIDE TANK - HAZARDOUS - CLASS 1, ZONE 2

3. SCREEN DRIVE MOTOR: 1.5 HP, 575 V, 3 PH, 60 HZ

4. SCREEN WEIGHT - 1750 LB [793.8 Kg]
   MOTOR WEIGHT - 41 LB [19 Kg]
   GEAR BOX - 101 LB [46 Kg]

5. WATER REQUIREMENTS:
   SCREEN SPRAY WASH: 24 GPM @ 40 - 60 PSI [1.5L/s @ 275 - 414 kPa]

6. NOT SHOWN: ITEMS 119 - 125. REFER TO PARTS LISTS FOR DESCRIPTIONS, MATERIAL, AND QUANTITIES.

7. PROVIDE SUFFICIENT FLEXIBILITY IN WATER AND ELECTRICAL CONNECTIONS TO ALLOW THE UNIT TO PIVOT OUT OF CHANNEL . ALL INTER CONNECTING PIPING, WIRING, AND CONDUIT FROM UNIT-MOUNTED DEVICES WILL BE SUPPLIED BY OTHERS.

8. CUSTOMER MUST PROVIDE LIFTING DEVICE TO PIVOT UNIT OUT OF TANK LIFTING CAPABILITY MUST EQUAL A MINIMUM OF 60% ON UNIT WEIGHT, APPLIED AT LIFTING POINT SHOWN. TANK MUST BE EMPTY, AND SCREEN BASKET MUST BE CLEAR OF SOLIDS PRIOR TO PIVOTING.

9. BOTTOM OF SCREEN MUST REST FLUSH TO THE TANK FLOOR, TO PREVENT MATERIAL FROM BYPASSING THE SCREEN. SIDE SEALS MUST REST ALONG TANK WALL ON BOTH SIDES TO PREVENT MATERIAL FROM BYPASSING THE SCREEN.

10. STRAINER, SOLENOID VALVES AND WATER HAMMER (SHIPPED LOOSE) TO BE INSTALLED IN WASHWATER SUPPLY LINE.

11. EQUIPMENT MUST BE PROTECTED TO PREVENT SURFACE CONTAMINATION. CONTAMINATION CAN COME FROM WELDING CUTTING, PAINTING AND OTHER SUCH ACTIVITIES IN THE AREA OF THE EQUIPMENT. STAINLESS STEEL SURFACES CONTAMINATED WITH ANY IRON, CHLORIDE CONTAINING MATERIAL AND OTHER SUBSTANCES CAN EXPERIENCE ACCELERATED SURFACE CORROSION AND PITTING.

12. DESIGN IS BASED ON FLOW PARAMETERS PROVIDED. IF THERE ARE SITE SPECIFIC HYDRAULIC REQUIREMENTS (SUCH AS MAXIMUM AND MINIMUM FLOWS), PLEASE CONSULT ENVIRO-CARE REPRESENTATIVE TO ENSURE THAT THE EQUIPMENT CAN MEET ALL REQUIREMENTS. IN SOME CASES, ENVIRO-CARE MAY RECOMMEND A DOWNSTREAM WEIR FOR AVERAGE FLOWS THAT ARE EXTREMELY LOW.

13. THE FOLLOWING DEVICES NEED TO BE FIELD WIRED BY ELECTRICAL CONTRACTOR
    - SCREEN DRIVE MOTOR: ITEM 104 (QTY 2)
    - MOTOR CUT OUT SWITCH: ITEM 111 (QTY 4)
    - SOLENOID VALVES: ITEM 112 (QTY 2), ITEM 113 (QTY 2)
    - CONTROL PANEL: ITEM 117 (QTY 1), ITEM 118 (QTY 1)
    - LEVEL SENSOR ITEM 114 (QTY 2)
    - LEVEL CONTROLLER ITEM 121 (QTY 2), MOUNT NEAR SCREEN MAIN CONTROL PANEL
    - NEMA 4X LOCAL E-STOP (SUITABLE FOR CLASS 1, ZONE 2): ITEM 120 (QTY 2),

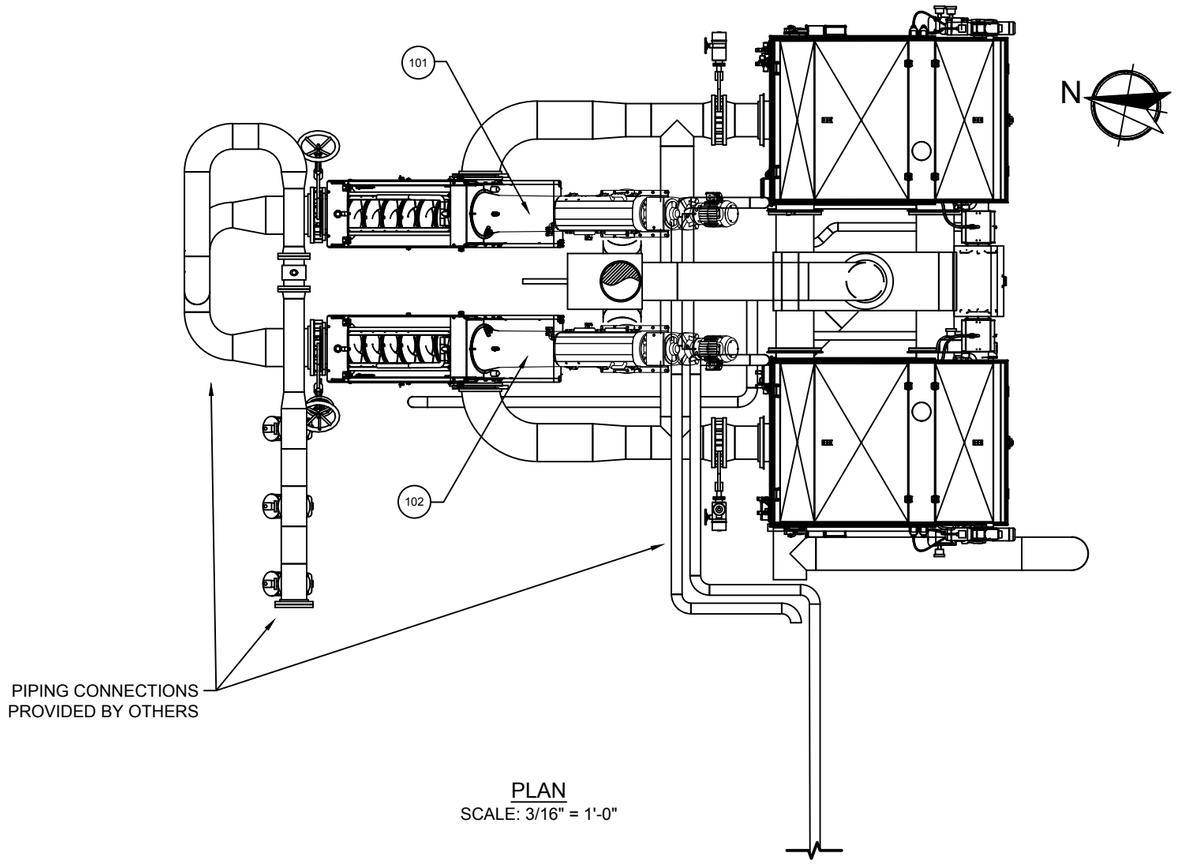

PLAN
SCALE: 3/16" = 1'-0"

PROCESS DESIGN INFORMATION:

APPLICATION:	CONTINOUS RAW WASTEWATER SCREENING
ANNUAL AVERAGE FLOW:	38.5 L/s
PEAK HOURLY FLOW PER SCREEN:	151 L/s
TANK LENGTH:	78.35 INCHES (1990mm)
TANK WIDTH:	25 INCHES (635mm)
TANK DEPTH:	54 INCHES (1370mm)
SCREEN OPENING / TYPE:	.236 INCHES (6mm) PERFORATED
ANGLE OF INCLINATION:	35 DEGREES
MAXIMUM UPSTREAM WATER LEVEL:	27.2 INCHES (692mm)
INFLUENT FLANGE SIZE:	16 INCHES (400mm)
EFFLUENT FLANGE SIZE:	16 INCHES (400mm)
SCREENINGS DISCHARGE:	16 INCHES (400mm)
DISCHARGE HEIGHT:	60.6 INCHES (1540mm) FROM MOUNTING FLOOR
SCREENINGS CAPTURE RATE (SRC):	52%

Rev	Revision Description	Date	Rev By	Approver
-				
C	SHEETS 3 & 4, 1370mm WAS 1297mm PER CUSTOMER REQUEST	05/02/2018	EV29	SE33
B	ADDED DIM'S SHEETS 3 & 4, PER CUSTOMER REQUEST	04/16/2018	EV29	SE33
A	ADDED DIM'S SHTS 3 & 4 PER CUSTOMER REQUEST	04/06/2018	EV29	SE33

Project Information
IQALUIT WASTEWATER TREATMENT PLANT UPGRADE
NORTH CANADA
SPECIFICATION # 46 21 33
PROJECT # IQA15-4964-C

Status: FOR APPROVAL

Title
IQALUIT WWTP
MODEL: GCPC600-LC3500 SPECO SCREW SCREEN IN A TANK

Enviro-Care
A WAMGROUP® Company

PROPERTY OF ENVIRO-CARE COMPANY. ALL RIGHTS RESERVED. NO PART OF THIS DRAWING MAY BE REPRODUCED IN ANY FORM WITHOUT WRITTEN PERMISSION FROM ENVIRO-CARE. ENVIRO-CARE COMPANY RESERVES THE RIGHT TO ALTER DATA OR THE DESIGN OF ITS EQUIPMENT AT ANY TIME WITHOUT PRIOR NOTICE AND WITHOUT ANY OBLIGATION WHATSOEVER.

Designer	Checker	Date	Sheet
EV29	SE33	03-12-2018	1 of 5

Third Angle Projection

Drawing Number: WEC217259Z

Revision: C

This page intentionally left blank

Q:\Projects-EC Active\WEC217259Z Iqaluit\7 Product Drawings\Submittal Drawings\WEC217259Z REV C

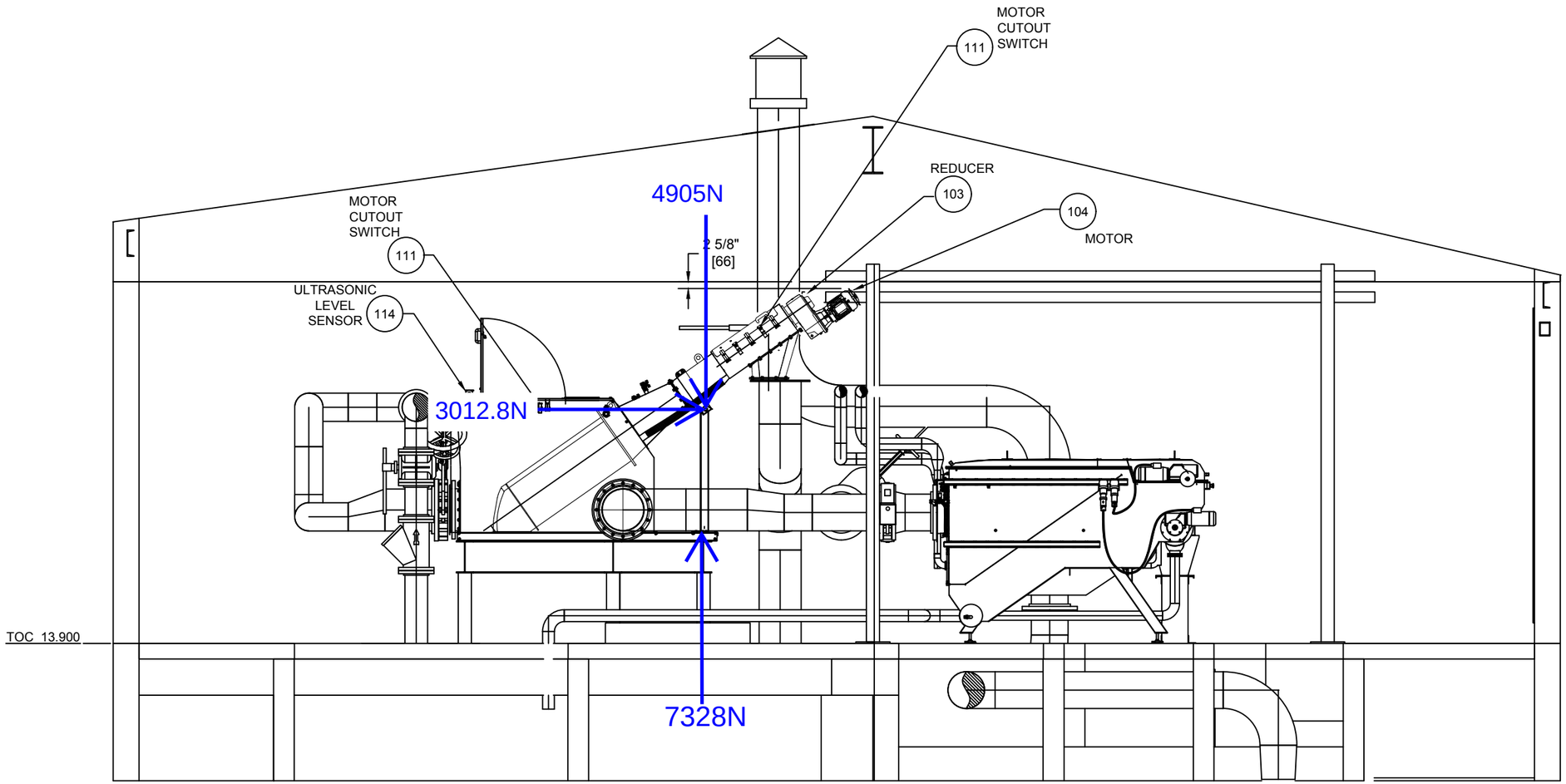

FRONT VIEW
SCALE: 1/4" = 1'-0"

-				
C	SHEETS 3 & 4, 1370mm WAS 1297mm PER CUSTOMER REQUEST	05/02/2018	EV29	SE33
B	ADDED DIM'S SHEETS 3 & 4, PER CUSTOMER REQUEST	04/16/2018	EV29	SE33
A	ADDED DIM'S SHTS 3 & 4 PER CUSTOMER REQUEST	04/06/2018	EV29	SE33
Rev	Revision Description	Date	Rev By	Approver

Enviro-Care
A WAMGROUP® Company

PROPERTY OF ENVIRO-CARE COMPANY. ALL RIGHTS RESERVED. NO PART OF THIS DRAWING MAY BE REPRODUCED IN ANY FORM WITHOUT WRITTEN PERMISSION FROM ENVIRO-CARE. ENVIRO-CARE COMPANY RESERVES THE RIGHT TO ALTER DATA OR THE DESIGN OF ITS EQUIPMENT AT ANY TIME WITHOUT PRIOR NOTICE AND WITHOUT ANY OBLIGATION WHATSOEVER.

Status: FOR APPROVAL

Title
IQALUIT WWTP
MODEL: GCPC600-LC3500 SPECO SCREW SCREEN IN A TANK

Designer	Checker	Date	Sheet
EV29	SE33	03-12-2018	2 of 5

Third Angle Projection

Drawing Number: WEC217259Z

Revision: C

This page intentionally left blank

Enviro-Care
A WAMGROUP® Company

Force Calculations- Tank

This page intentionally left blank

The following calculations show all loads applied during normal operation of the equipment. The supplied tank will be mounted to a metal platform (by others not Enviro-Care) and secured in such a manner to resist any shear and overturning forces. Only one piece of Enviro-Care supplied equipment will require anchoring to the metal platform and will be the tank. The following tension calculations are performed on each of the support stand anchors if the maximum allowed tensile force is applied. This will allow for the calculation of the maximum amount of force that would have to be applied to the GCPC600 for the hex head cap screws to fail. These calculations verify the ability of the selected GCPC600 hex head cap screws used to anchor the tank to the metal platform will withstand all loads applied during the normal operation of the equipment and only under extreme circumstances will the selected hex head cap screws fail. Any additional support from the connection to piping is ignored.

This page intentionally left blank

Determine Worst Case Shear Force from Any Force on the GCPC600 Setup Calculations

Unit Definitions

l_t – is the length of the screenings transport tube

r_t – is the radius of the screenings transport tube

A_t – is the area of the screenings transport tube

l_c – is the length of the screenings transport cone

r_{c1} – is the lower radius of the screenings transport cone

r_{c2} – is the radius of the screenings transport cone

l_b – is the length of the screenings basket

A_b – is the area of the screenings basket

r_b – is the radius of the screenings basket

W_{GCPC} – is the weight of the Unit

W_M – is the weight of the motor

W_R – is the weight of the reducer

ρ_{ws} – is the density of wet screenings

V_{tr} – is the volume of the GCPC600 transport tube multiplied by 2/3 because of spiral in the transport tube

V_c – is the volume of the GCPC600 transport cone multiplied by 2/3 because of spiral in the transport cone

V_b – is the volume of the GCPC600 basket multiplied by 2/3 because of spiral in the basket

V_T – is the total volume

W_{ws} – is the weight of the wet screenings

W_T – is the total weight of the GCPC600 when 100% full of wet screenings

Enviro-Care
A WAMGROUP® Company

Setup Calculations

$l_{tr} = 1054mm = \mathbf{1.054m}$

$D_{tr} = 250mm = \mathbf{0.250m}$

$A_{tr} = \pi r^2 = \pi\left(\frac{0.250m}{2}\right)^2 = \mathbf{0.049m^2}$

$l_c = 741mm = \mathbf{0.741m}$

$D_{c1} = 530mm = \mathbf{0.530m}$

$D_{c2} = 250mm = \mathbf{0.250m}$

$l_b = 1130mm = \mathbf{1.130m}$

$D_b = 530mm = \mathbf{0.530m}$

$A_b = \pi r^2 = \pi\left(\frac{0.530m}{2}\right)^2 = \mathbf{0.221m^2}$

$W_{GCPC} = \mathbf{793.8kg}$

$W_M = \mathbf{19kg}$

$W_R = \mathbf{46kg}$

$$\rho_{ws} = \frac{70lbs}{ft^3} \cdot \frac{16.0185\frac{kg}{m^3}}{\frac{lbs}{ft^3}} \approx \mathbf{1121.29\frac{kg}{m^3}}$$

$$V_{tr} = (A_{tr} \cdot l_{tr}) \cdot \frac{2}{3} = (0.049m^2 \cdot 1.054m) \cdot \frac{2}{3} = \mathbf{0.035m^3}$$

$$V_c = \left(\frac{1}{3}\pi \cdot \left(\left(\frac{D_{c1}}{2}\right)^2 + \left(\left(\frac{D_{c1}}{2}\right) \cdot \left(\frac{D_{c2}}{2}\right)\right) + \left(\frac{D_{c2}}{2}\right)^2\right)\right) \cdot \frac{2}{3} \cdot l_c$$

$$= \left(\frac{1}{3}\pi \cdot \left(\left(\frac{0.530m}{2}\right)^2 + \left(\left(\frac{0.530m}{2}\right) \cdot \left(\frac{0.250m}{2}\right)\right) + \left(\frac{0.250m}{2}\right)^2\right)\right) \cdot \frac{2}{3} \cdot 0.741m$$

$$= \left(\frac{1}{3}\pi \cdot (0.070m^2 + 0.033m^2 + 0.016m^2)\right) \cdot \frac{2}{3} = (0.125m^2) \cdot \frac{2}{3} \cdot 0.741m = \mathbf{0.062m^3}$$

$$V_b = (A_b \cdot l_b) \cdot \frac{2}{3} = (0.221m^2 \cdot 0.530m) \cdot \frac{2}{3} = \mathbf{0.078m^3}$$

$$V_T = V_{tr} + V_c + V_b = 0.035m^3 + 0.741m^3 + 0.062m^3 = \mathbf{0.838m^3}$$

$$W_{ws} = \rho_{ws} \cdot V_t = 1121.29\frac{kg}{m^3} \cdot 0.838m^3 = \mathbf{939.64kg}$$

$$W_T = W_{GCPC} + W_M + W_R + W_{ws} = 793.8kg + 19kg + 46kg + 939.64kg = \mathbf{1798.44kg}$$

Determine Worst Case Shear Force from Any Force on the GCPC600

Unit Definitions

S_T – is the Tensile strength of the ½" hex head cap screw from the cut sheets

A_S – is the tensile stress area from Appendix A

T_L – is the maximum tensile load that the ½" hex head cap screw can withstand

d_{Fh} – is the measurement from the bottom edge of the anchor base to the center of gravity where the horizontal force is applied **(F_h)**, from Figure 5

d_c – is the measurement from one edge of the anchor base to the centerline of the center line of the equipment, from Figure 6 and Figure 7

d_{hh} – is the measurement from one edge of the anchor base to the centerline of the opposite hex head cap screw, from Figure 6 and Figure 7

F_h – is the maximum horizontal force before hex head cap screw failure

FW_E – is the force of the weight of the equipment

T_B – is the maximum tensile load that acts on each bolt

V_{shear} – is the shear force on each bolt

Calculations

$$S_T = 70000psi = 70000psi \cdot \frac{6894.76\frac{N}{m^2}}{psi} = 482633200\frac{N}{m^2} = \mathbf{482.6}\frac{\boldsymbol{MN}}{\boldsymbol{m^2}}$$

$$A_S = 0.142\text{in}^2 = 0.142\text{in}^2 \cdot \frac{645.16mm^2}{in^2} = 91.613mm^2 = \mathbf{0.000091613}\boldsymbol{m^2}$$

First, we must find the maximum allowed tension force.

We use the formula $T_L = S_T \cdot A_S$

$$T_L = S_T \cdot A_S = 482633200\frac{\text{N}}{m^2} \cdot 0.000091613\text{m}^2 = 44215.48N = \mathbf{44.215}\boldsymbol{kN}$$

$$d_{Fh} = 1560\text{mm} = 1560\text{mm} \cdot \frac{1m}{1000mm} = \mathbf{1.560}\boldsymbol{m}$$

$$d_c = 358mm = 358\text{mm} \cdot \frac{1m}{1000mm} = \mathbf{0.358}\boldsymbol{m}$$

$$d_{hh} = 696\text{mm} = 696\text{mm} \cdot \frac{1m}{1000mm} = \mathbf{0.696}\boldsymbol{m}$$

$$FW_E = W_T \cdot 9.81\frac{m}{s^2} = 1798.44kg \cdot 9.81\frac{m}{s^2} = \mathbf{17643}\boldsymbol{N}$$

The maximum tension force acting on one bolt is:

$$T_L = \mathbf{44.215}\boldsymbol{kN}$$

The maximum shear force on 1 bolt is calculated with the formula below:

$$V_{shear} = S_T \cdot 0.60 \cdot A_S = 70000psi \cdot 0.60 \cdot 0.000091613\text{m}^2 = 42000psi$$
$$= 42000psi \cdot \frac{6894.76\frac{N}{m^2}}{psi} \cdot 0.000091613\text{m}^2 = 289579920\frac{N}{m^2} \cdot 0.000091613\text{m}^2$$
$$= [\mathbf{26.530}\boldsymbol{kN}]$$

In this case, we will be determining the maximum amount of force needed before the anchor rods fail. The sum of the moments about the edge of the mounting plate should equal zero when the SAVI VFA is operating normally and is full of wet screenings.

$$\sum M_{O1} = 0$$

$(F_h \cdot d_{Fh}) + (-FW_E \cdot d_c) + (T_L \cdot d_{hh}) = 0$ So:

$$F_h = \frac{\big((T_L \cdot d_{hh}) + (FW_E \cdot d_C)\big)}{d_{Fh}} = \frac{\big((44.215kN \cdot 0.696m) + (1798.44kN \cdot 0.358m)\big)}{1.56m}$$
$$= \frac{(30.774kN \cdot m + 643.842kn \cdot m)}{1.56m} = [\mathbf{432.446}\boldsymbol{kN}]$$

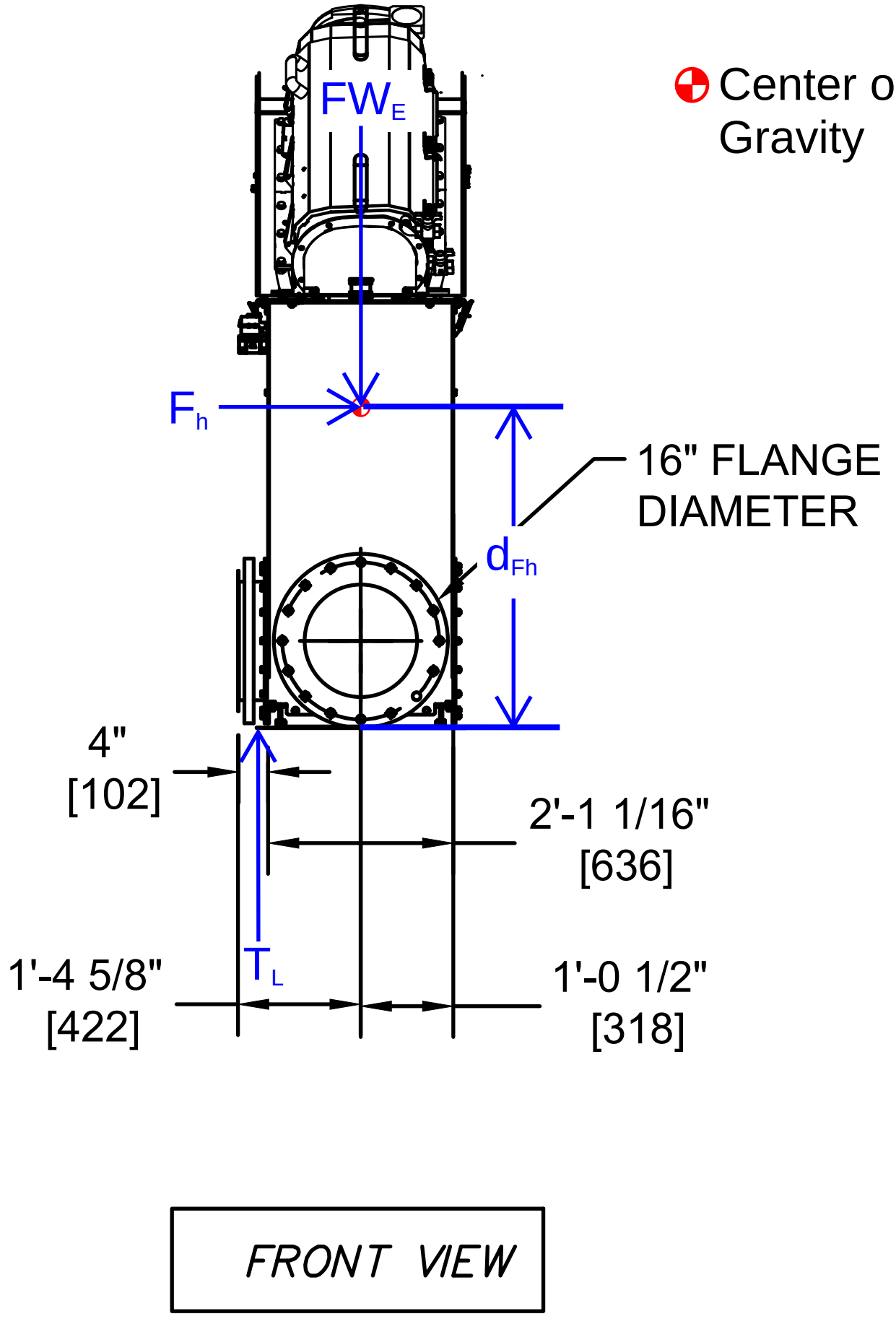

Figure 5: Equipment Center of Gravity and Forces Applied

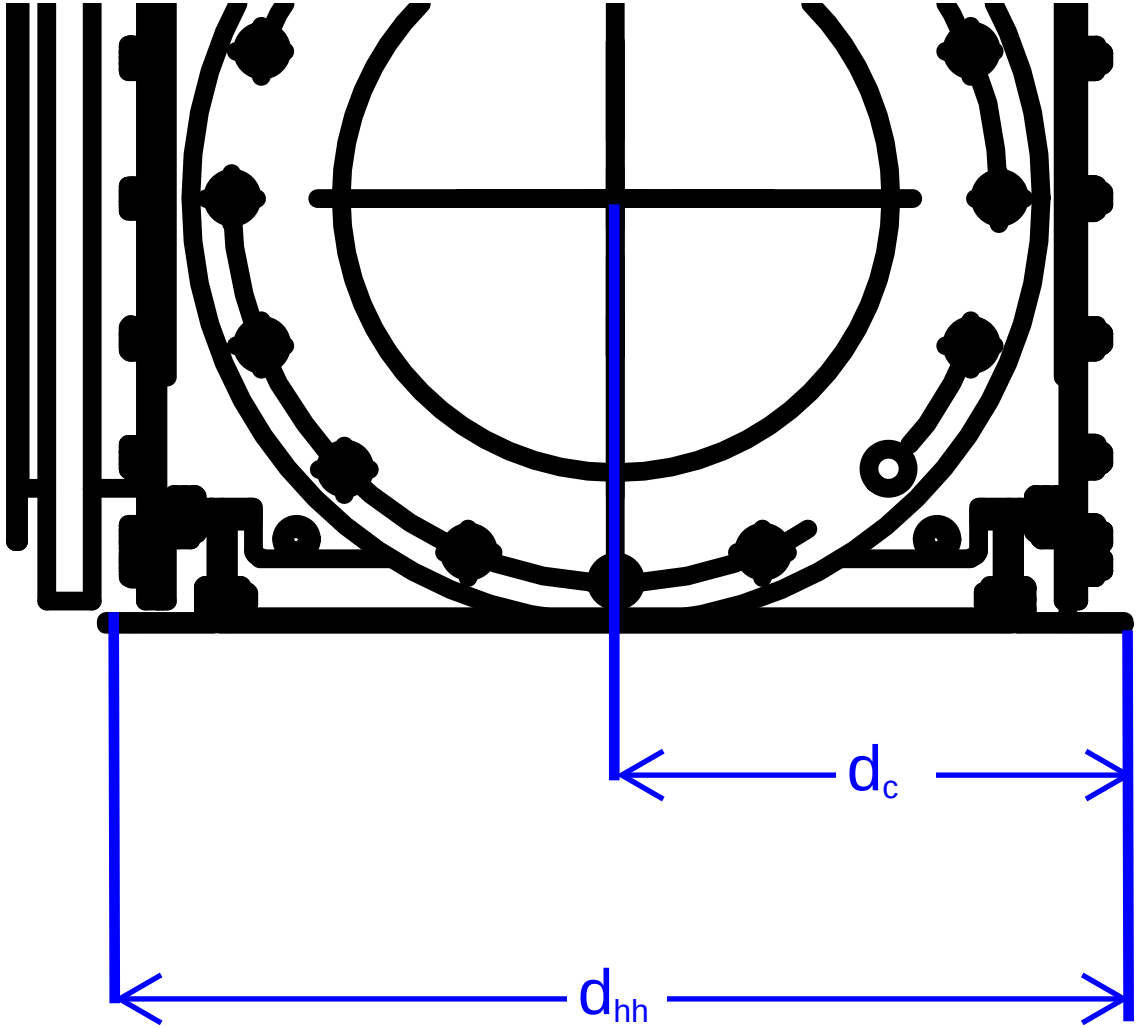

Figure 6: Front View Details

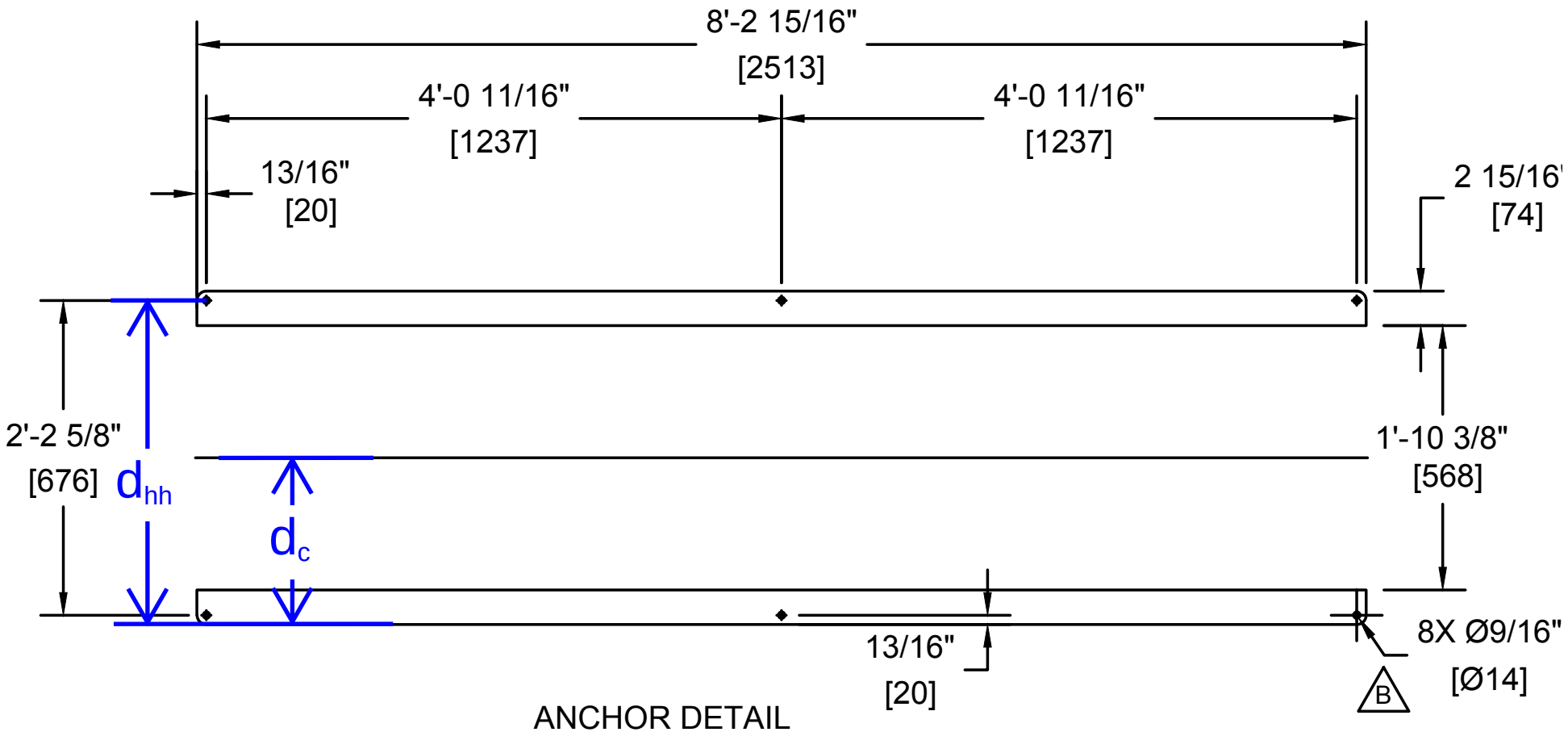

ANCHOR DETAIL

(BOTH SCREENS)

Figure 7: Anchor Details

This page intentionally left blank

Q:\Projects-EC Active\WEC217259Z Iqaluit\7 Product Drawings\Submittal Drawings\WEC217259Z REV C

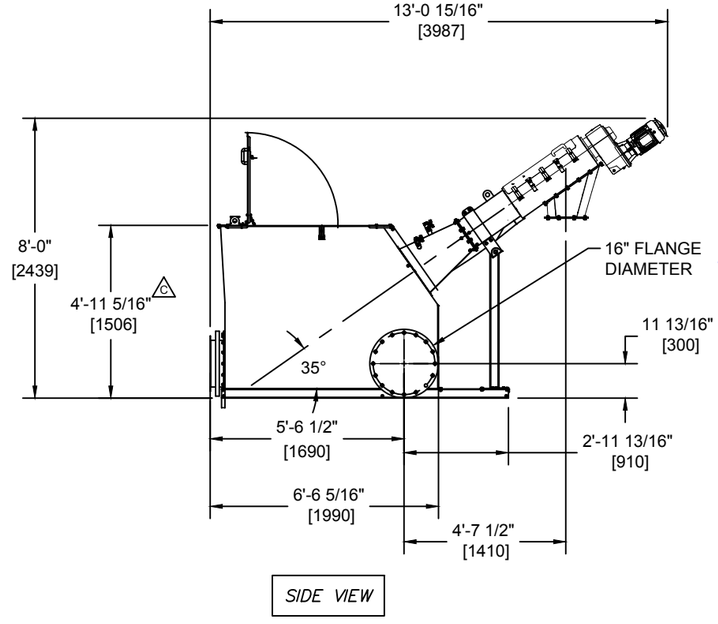

SIDE VIEW

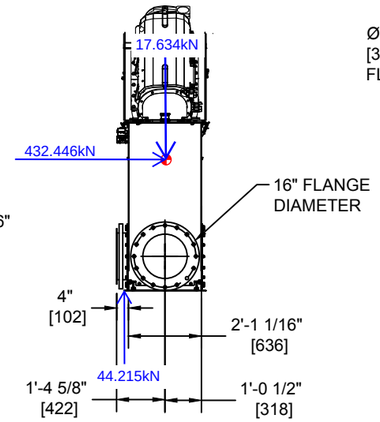

FRONT VIEW

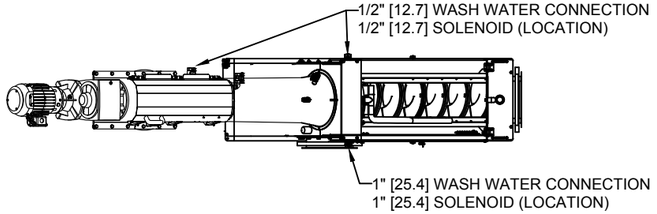

TOP VIEW

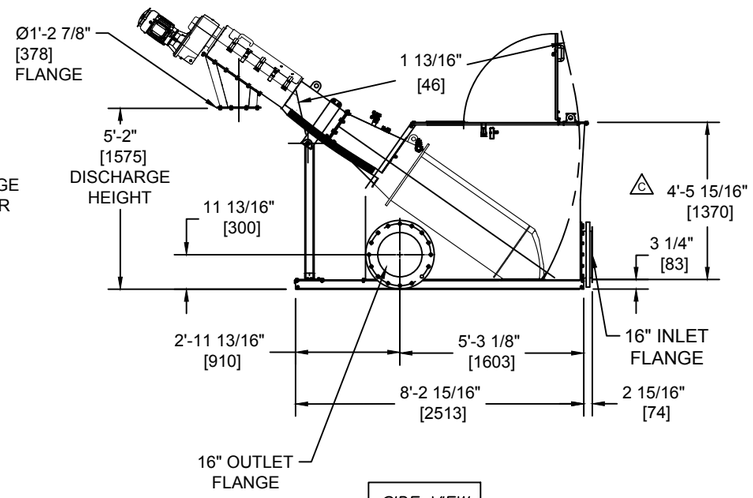

SIDE VIEW

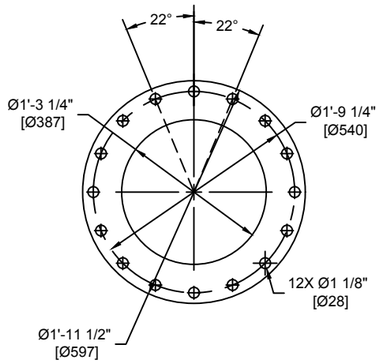

16" [406] FLANGE CONNECTION
SCALE: 3/4" = 1'-0"

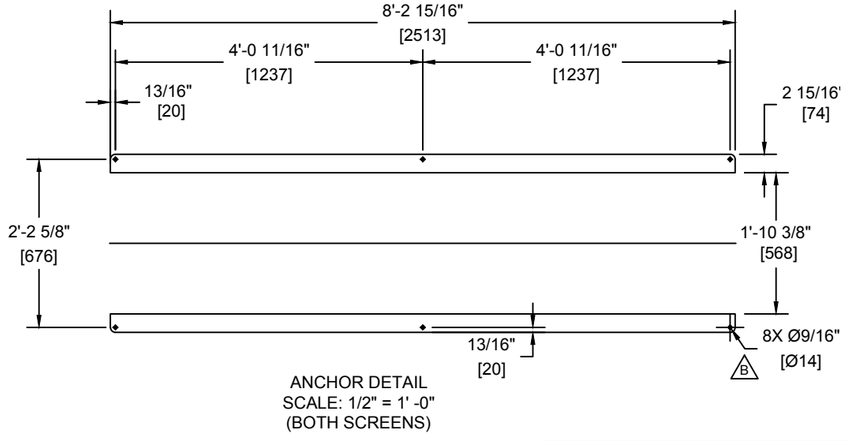

ANCHOR DETAIL
SCALE: 1/2" = 1' -0"
(BOTH SCREENS)

Rev	Revision Description	Date	Rev By	Approver
-				
C	SHEETS 3 & 4, 1370mm WAS 1297mm PER CUSTOMER REQUEST	05/02/2018	EV29	SE33
B	ADDED DIM'S SHEETS 3 & 4, PER CUSTOMER REQUEST	04/16/2018	EV29	SE33
A	ADDED DIM'S SHTS 3 & 4 PER CUSTOMER REQUEST	04/06/2018	EV29	SE33

Enviro-Care
A WAMGROUP® Company

PROPERTY OF ENVIRO-CARE COMPANY. ALL RIGHTS RESERVED. NO PART OF THIS DRAWING MAY BE REPRODUCED IN ANY FORM WITHOUT WRITTEN PERMISSION FROM ENVIRO-CARE. ENVIRO-CARE COMPANY RESERVES THE RIGHT TO ALTER DATA OR THE DESIGN OF ITS EQUIPMENT AT ANY TIME WITHOUT PRIOR NOTICE AND WITHOUT ANY OBLIGATION WHATSOEVER.

Status: FOR APPROVAL

Title
IQALUIT WWTP
MODEL: GCPC600-LC3500 SPECO SCREW SCREEN IN A TANK

Designer	Checker	Date	Sheet
EV29	SE33	03-12-2018	3 of 5

Third Angle Projection

Drawing Number: WEC217259Z

Revision: C

This page intentionally left blank

Enviro-Care
A WAMGROUP® Company

Appendix A

This page intentionally left blank

Unified National Thread Tensile Stress Area (As)

Nominal Size		Coarse Thread		8 Thread Series		Fine Thread	
		Thread Pitch (tpi)	Tensile Stress Area (sq in.)	Thread Pitch (tpi)	Tensile Stress Area (sq in.)	Thread Pitch (tpi)	Tensile Stress Area (sq in)
0	0.060					80	0.00180
1	0.073	64	0.00262			72	0.00278
2	0.086	56	0.00370			64	0.00394
3	0.099	48	0.00487			56	0.00523
4	0.112	40	0.00604			48	0.00661
5	0.125	40	0.00796			44	0.00831
6	0.138	32	0.00909			40	0.01015
8	0.164	32	0.0140			36	0.0147
10	0.190	24	0.0175			32	0.0200
12	0.216	24	0.0242			28	0.0258
1/4	0.250	20	0.0318			28	0.0364
5/16	0.313	18	0.0525			24	0.0581
3/8	0.375	16	0.0775			24	0.0878
7/16	0.438	14	0.106			20	0.119
1/2	0.500	13	0.142			20	0.160
9/16	0.563	12	0.182			18	0.203
5/8	0.625	11	0.226			18	0.256
3/4	0.750	10	0.335			16	0.373
7/8	0.875	9	0.462			14	0.510
1	1.000	8	0.606	8	0.606	12 UNF	0.663
1	1.000					14 UNS	0.680
1 1/8	1.125	7	0.763	8	0.791	12	0.856
1 1/4	1.250	7	0.969	8	1.000	12	1.073
1 3/8	1.375	6	1.155	8	1.234	12	1.315
1 1/2	1.500	6	1.406	8	1.492	12	1.581

The tensile stress area is calculated as follows:

$$As = 0.7854\ [D - (0.9743/n)]^2$$

where
As = stress area (in sq.)
D = nominal bolt size (in.)
n = threads per inch

Metric (SI) System Thread Tensile Stress Area (As)

Nom Dia. (mm)	Coarse Thread		Fine Thread	
	Thread Pitch (mm)	Tensile Stress Area (mm sq.)	Thread Pitch (mm)	Tensile Stress Area (mm sq.)
3	0.5	5.03		
3.5	0.6	6.78		
4	0.7	8.78		
5	0.8	14.2		
6	1	20.1		
7	1	28.9		
8	1.25	36.6	1	39.2
10	1.5	58.0	1.25	61.2
12	1.75	84.3	1.25	92.1
14	2	115	1.5	125
16	2	157	1.5	167
18	2.5	192	1.5	216
20	2.5	245	1.5	272
22	2.5	303	1.5	333
24	3	353	2	384
27	3	459	2	496
30	3.5	561	2	621
33	3.5	694	2	761
36	4	817	3	865
39	4	976	3	1030

The tensile stress area is calculated as follows:

$$A_S = 0.7854\ [D - (0.9743P)]^2$$

where
A_S = stress area (mm sq.)
D = nominal bolt size (mm)
P = thread pitch (mm)

U.S./Metric Conversion Equivalents

Quantity	To Convert	Into	Multiply By		To Convert	Into	Multiply By
Length	inch (in.) feet (ft)	millimeter(mm) millimeter(mm)	25.4 304.8		mm mm	inch feet	0.03937 0.00328
Area	square inch (sq.in)	square millimeter (sq. mm)	645.16		sq. mm	sq. in.	0.00155
Volume	gallon cubic inch cubic foot	liter cubic centimeter cubic meter	3.785 16.3871 0.0283		liter	gal	0.2642
Force	pound (lb.)	Newton(N)	4.448		N	lb.	0.2248
Pressure	pound/sq.in(psi)	Pascal(Pa) Mega Pascal(MPa)	6895 0.006895		MPa	psi	145.1
Torque	inch pound(in-lb) foot pound(ft-lb)	Newton meter(N m) Newton meter(N m)	0.113 1.356		N m N m	in-lb ft-lb	8.851 0.738

Other common conversions: $1N = 1\ kg\ m/s^2$: $1Pa = 1N/m^2$: $1MPa = 1N/mm^2$
Example: to convert length to mm, multiply inches by 25.4

APPENDIX C

MAINTENANCE SCHEDULE

IQALUIT WWTP UPGRADE
PROCESS EQUIPMENT MAINTENANCE SCHEDULE

TAGS	EQUIPMENT	MAINTENANCE TASK	RECOMMENDED MAINTENANCE SCHEDULE
P-01-110/120/130	**Raw Wastewater Pumps**		
	Cable	If the outer jacket is damaged, replace the cable Check that cables do not have any sharp bends and are not pinched	Within the first year of operation, annually thereafter Anually or 4000 hours, whichever comes first
	Connections to Power	Check that the connections are properly secured	Anually or 4000 hours, whichever comes first
	Electrical Cabinets	Check that they are clean and dry	Anually or 4000 hours, whichever comes first
	Impeller	Check the impeller clearance Adjust, the impeller if necessary	Anually or 4000 hours, whichever comes first Depending on running conditions
	Inspection Chamber	Check that resistance between the ground earth and phase lead is more than 5 megohms. Conduct a phase-to-phase resistance check	Anually or 4000 hours, whichever comes first Anually or 4000 hours, whichever comes first
	Junction Box	Check that is clean and dry	Anually or 4000 hours, whichever comes first
	Level Sensors	Check the condition and functionality	Within the first year of operation, frequency of inspection will depend on running conditions and type of sensors.
	Lifting Device	Check that the local safety regulations are followed	Within the first year of operation, annually thereafter
	Lifting Handle	Check the screws Check the condition of lifting handle and chain If necessary, replace.	Within the first year of operation, annually thereafter Within the first year of operation, annually thereafter As required
	O-rings	Replace the oil plug O-rings Replace the O-rings at the entrance or junction cover Grease the new2 o-rings	Anually or 4000 hours, whichever comes first Anually or 4000 hours, whichever comes first
	Overload Protection and other Protections	Check the correct settings	Anually or 4000 hours, whichever comes first
	Personnel Safety Devices	Check the guardrails, covers and other protections	Anually or 4000 hours, whichever comes first
	Rotation Direction	Check the impeller rotation	When pump is returned to service, after any maintenance
	Seal Housing	Fill with new coolant if necessary. Check that the freezing point is lower than 13 Celsius deg.	Up to 24,000 hours or six years, whichever comes first Up to 12,000 hours or three years, whichever comes first
	Terminal Board	Check that the connections are properly secured	Anually or 4000 hours, whichever comes first
	Thermal Contacts	Normally closed circuit; interval 0-1 ohm	Anually or 4000 hours, whichever comes first
	Thermistor	Check the resistance is between 20-250 ohms and the measured voltage is maximum 2 VDC	Anually or 4000 hours, whichever comes first
	Voltage and Amperage	Check the sunning levels	Weekly
SCRN-01-210/220	**Fine Screens**		
	Screen Basket	Clogging	Daily
	Screenings Discharge	Clogging	Daily
	Liquid Return Pipe	Clogging	Daily
	Spray Wash	Clogging of Nozzles	Weekly
	Compaction Zone	Clogging and cleanliness	Weekly
	Screw Reducer and Motor	Vibration & noise - repair or replace	Monthly
	Brushes	Wear - replace if required	100 hours
	Screen Basket	Wear	100 hours
	Fasteners	Tightness	100 hours
	Wear Bars	Wear - replace if required	3 months
	Motor	Lubrication - lubricate if required	Yearly
	Painted Equipment	Corrosion - remove rust and paint as required	Yearly
	Primary Filters		
	Sludge Auger	Inspect and unblock sludge auger.	Weekly
		Clean inside sludge auger area	Monthly
		Inspect liner for wear	Monthly
		Inspect and maintain sludge auger shear bolts	Monthly
		Lubricate gear flange	As needed
	Drive Motors	Inspect gear box and motor	Monthly
		Clean motors	As needed
	Dewatering Unit	Inspect and clean wedge wire screen and spray nozzle	As needed

IQALUIT WWTP UPGRADE
PROCESS EQUIPMENT MAINTENANCE SCHEDULE

TAGS	EQUIPMENT	MAINTENANCE TASK	RECOMMENDED MAINTENANCE SCHEDULE
PF-01-310/320	Dewatering Unit	Replace the wedge wire screen	As needed
	Air Knife	Inspect air knife pressure gauge	Daily and as needed
		Inspect for even cleaning of the filter mesh	Daily and as needed
		Clean air knife	As needed
	Filter	Check the belt tension and alignment	Monthly
		Test the E-stop on the filter unit	Annually
		Inspect the cover lift seal	Annually
		Inspect the hot water spray nozzles for clogging and cleaning performance	Annually
		Inspect filter mesh for wearing, holes or tears	Weekly
		Clean filter mesh	Monthly and as needed
		Lubricate drive roller and under roller	Annually and as needed
	Level Sensor	Check level sensor offset	Monthly
	Control Power Panel (CPP)	Test E-stop	Annually
		Inspect and resolve active alarms	Daily
		Inspect and clean air filter	Monthly and as needed
		Clean inside and outside of the CPP	As needed
HST-01-350	**Bridge Crane**		
	Header Clap Plate Hardware	Check for full compression of lockwasher. Bolt should be tightened to manufacturer's specifications	Every 2,000 hours or yearly
	Spine Clamp Hardware	Check for full compression of lockwasher. Bolt should be tightened to manufacturer's specifications	Every 2,000 hours or yearly
	Truss Splice Plate	Check for full compression of lockwasher. Bolt should be tightened to manufacturer's specifications	Every 2,000 hours or yearly
	Splice Joint	All bolts should be in contact with track. Check track for alignment and that wheel; rolling surface is flush	Every 2,000 hours or yearly
	Hoist Trolley	Check clevis pin. Check cotter pin. (cotter pin should be fully wrapped around clevis pin). Check clevis bolt and hardware.	Every 2,000 hours or yearly
	End Stops (both runway and bridge)	Check for full compression of lockwasher. If thru bolt is exposed, replace end stops.	Every 2,000 hours or yearly
	Festoon Cable Clamp or Vacuum Hoist Clamp	Check for full compression of lockwasher.	Every 2,000 hours or yearly
	Wheels	Check for cracks, puts, and/or grooves: all of these increase pull forces. If any of these conditions exist, wheels should be replaced.	Every 2,000 hours or yearly
	Aluminum Bridge Assembly Hardware	Check that lockwashers are compressed and nuts tightened to torque specifications. Ensure sheer lug hardware is in required position and tight.	Every 2,000 hours or yearly
	End Trucks	Check for proper clamping hardware attachment. Ensure correct position on bridge to match specified cantilever's. Inspect end truck wheels following instructions for wheels. Standard End Truck: Make sure body is free of any bent materials, cracked or broken welds. Extended End Truck: Check overall condition of tubes. Examine supports for bent materials, cracked or broken welds. Inspect hardware attaching end truck support to tubes. Check wheel plate attachment bolts for any wear and make sure the nylock nut is still in the correct position.	Every 2,000 hours or yearly
B-02-210/220	**Primary Filter Aeration Blowers**		
	Belts	Check belt tension	24 hours after initial commissioning
		Check belt tension	Up to 500 hours or monthly
	Electrical Connections	Check all electrical connections and tighten if necessary	50 hours after initial commissioning
		Check all electrical connections and tighten if necessary	Annually
	Oil	Change lubrication oil	500 hours after initial commissioning
		Check oil level	Up to 500 hours or monthly
		Change lubrication oil FGB 220	Up to 3000 Hours. At least once a year
		Change lubrication oil SB 220	Up to 6000 Hours. At least every two years
	Air Filter	Check oil filter	Up to 3000 Hours. At least once a year

IQALUIT WWTP UPGRADE
PROCESS EQUIPMENT MAINTENANCE SCHEDULE

TAGS	EQUIPMENT	MAINTENANCE TASK	RECOMMENDED MAINTENANCE SCHEDULE
	Safety Relief Valve	Check safety relief valve	Annually
	Drive Belts	Replace drive belts	Up to 12000 Hours. At least every 4 years
B-02-110/120/130	**Process Aeration Blowers**		
	Belts	Check belt tension	24 hours after initial commissioning
		Check belt tension	Up to 500 hours or monthly
	Electrical Connections	Check all electrical connections and tighten if necessary	50 hours after initial commissioning
		Check all electrical connections and tighten if necessary	Annually
	Oil	Change lubrication oil	500 hours after initial commissioning
		Check oil level	Up to 500 hours or monthly
		Change lubrication oil FGB 220	Up to 3000 Hours. At least once a year
		Change lubrication oil SB 220	Up to 6000 Hours. At least every two years
	Air Filter	Check oil filter	Up to 3000 Hours. At least once a year
	Safety Relief Valve	Check safety relief valve	Annually
	Drive Belts	Replace drive belts	Up to 12000 Hours. At least every 4 years
T-02-210/220	**MBBR Trains**		
	DO Sensor	Cleaning sensor Replacing wear and tear materials (sealing ring, electrolyte, membrane cap) as necessary Check the measuring function Recalibration	Every month
T-02-310/311	**DAF Units and Associated Equipment**		
	Tank	Drain unit	Monthly
	Tank	Drain unit and inspect interior coatings. Touch up as necessary	Yearly
	Skimmer-Drive Unit	Visual inspection - control of oil leakage	Every 3 months
	Skimmer - Chain	Visual inspection - tenseness and elongation	Every 3 months
	Skimmer - Oil Level of Gear Motor	Sight glass	12 months
	Skimmer - Wear Shoe	Visual inspection - fastening and wearing	12 months
	Skimmer - Drive and Driven Sprocket	Visual inspection - fastening and wearing (position)	24 months
	Skimmer - Tension System / Non-metallic Chain	Visual inspection - tenseness and elongation	First inspection after 3 months; all other inspections after 6 months
	Skimmer - Drive and Idler Sprocket	Wearing, possible to turn on time	24 months
	Skimmer - Slide Bearing	Wearing of slide bearing / fastening of bearing blocks	First inspection after 12 months; all other inspections after 24 months
	Skimmer - Slide Rail	Wearing of rail / fastening of support bracket	24 months
	Skimmer - Bottom Rail	Fastening / wear of bottom rails	36 months
P-02-610/620	**TWAS Pumps**		
	Drive Unit	Strip down the drive unit	every 5000 operating hours
	Bearings	Remove the bearings	every 5000 operating hours
	All parts	Clean all parts	every 5000 operating hours
	Drive Unit	Renew the lubricant	Refer to O&M manual for drive lubricant renewal interval and amount
	Motor	Lubrication - relubricate if required	Refer to Motor O&M manual for relubrication time interval and amounts
T-03-630/640	**TWAS Storage Tanks Aeration System**		
	Air Diffusers	Air plumbing	Weekly
	Air Diffusers	Visual inspection	Daily
	Air Main	Air main inspection	Weekly
	Aeration System	Operating Pressure and Airflow	Daily
	Aeration System	Drain down each tank Remove excess settle solids if any have accumulated Clean diffusers (Refer to O&M manual for diffuser cleaning procedures) Inspect support hardware to ensure all components are intact and tight Inspect diffuser retaining rings to make sure all rings are in place and tight Inspect fixed and expansion joint retaining rings to make sure all rings are tight	Yearly
	Air Diffusers	Lubrication during repairs	Dependent on repairs required

IQALUIT WWTP UPGRADE
PROCESS EQUIPMENT MAINTENANCE SCHEDULE

TAGS	EQUIPMENT	MAINTENANCE TASK	RECOMMENDED MAINTENANCE SCHEDULE
P-04-630/640	**BFP Feed Pumps**		
	Drive Unit	Strip down the drive unit	every 5000 operating hours
	Bearings	Remove the bearings	every 5000 operating hours
	All parts	Clean all parts	every 5000 operating hours
	Drive Unit	Renew the lubricant	Refer to O&M manual for drive lubricant renewal interval and amount
	Motor	Lubrication - relubricate if required	Refer to Motor O&M manual for relubrication time interval and amounts
BFP-03-650	**Belt Filter Press**		
	Pump	Check pump oil level	Daily
	Pump	Oil leak inspection	Daily
	Air Tanks	Drain condensation	Daily
	BFP	Unusual noise/vibration	Daily
	Compressor	Air leaks	Daily
	Belts	Inspect belts	Daily
	Filters	Inspect filters. Clean and repair if necessary	Weekly
	Compressor	Clean exterior of compressor	Weekly
	Safety Relief Valve	Check safety relief valve	Monthly
	Belt	Check belt adjustment	Monthly
	Bolts	Check and tighten all bolts	Monthly
	Air Connections and Compressor	Check connections and compressor joints for leaks	Monthly
	Pump/engine	Change pump/engine oil	Annually
PDS-04-700	**DAF Polymer Dosing System and Associated Equipment**		
	Mixer	Gearbox visual inspection and noise	Weekly
		Check gearbox oil level	Weekly
	Preparation Tank and Storage Tank	Empty storage and preparation tanks Check the presence of foreign matter at the bottom Clean if necessary	Every six months. Dispose of chemical residues appropriately
	Piping	Check for leaks	Weekly
		Rinse pipes with lukewarm water	Every 6 months
	Level Transmitter	Calibrate on a regular basis and / or when readings become inaccurate (specific tom each type of use)	Every 6 months
	Static Mixer	Visual Check Clean if required	Weekly
	Feeder	Check shaft seals Grease lubrication	Monthly
	Dissolver Cone	Inspect the cone for the presence of polymer agglomeration. In case of loss of suction, remove and clean eductor with hot water. Inspect weekly to ensure there is no accumulation of polymer or fouling and, if necessary, clean by draining the cone and the eductor with water	Weekly
	Valves	Inspect and clean if required. Refer to supplier's maintenance manual	Every 6 months
	Dosing skid frame or bulk bag unloader	Check the appearance of the structure, paying particular attention to the state of the welds	Monthly
		Check that all bolts are correctly tightened, in particular the vibrator fixing bolts	Monthly
P-04-770/780/790	**DAF Polymer Dosing Pumps**		
	Drive Unit	Strip down the drive unit	every 5000 operating hours
	Bearings	Remove the bearings	every 5000 operating hours
	All parts	Clean all parts	every 5000 operating hours
	Drive Unit	Renew the lubricant	Refer to O&M manual for drive lubricant renewal interval and amount
	Motor	Lubrication - relubricate if required	Refer to Motor O&M manual for relubrication time interval and amounts
	BFP Polymer Dosing System and Associated Equipment		
	Mixer	Gearbox visual inspection and noise	Weekly
		Check gearbox oil level	Weekly

IQALUIT WWTP UPGRADE
PROCESS EQUIPMENT MAINTENANCE SCHEDULE

TAGS	EQUIPMENT	MAINTENANCE TASK	RECOMMENDED MAINTENANCE SCHEDULE
PDS-04-700	Preparation Tank and Storage Tank	Empty storage and preparation tanks Check the presence of foreign matter at the bottom Clean if necessary	Every six months. Dispose of chemical residues appropriately
	Piping	Check for leaks	Weekly
		Rinse pipes with lukewarm water	Every 6 months
	Level Transmitter	Calibrate on a regular basis and / or when readings become inaccurate (specific tom each type of use)	Every 6 months
	Static Mixer	Visual Check Clean if required	Weekly
	Feeder	Check shaft seals Grease lubrication	Monthly
	Dissolver Cone	Inspect the cone for the presence of polymer agglomeration. In case of loss of suction, remove and clean eductor with hot water. Inspect weekly to ensure there is no accumulation of polymer or fouling and, if necessary, clean by draining the cone and the eductor with water	Weekly
	Valves	Inspect and clean if required. Refer to supplier's maintenance manual	Every 6 months
	Dosing skid frame or bulk bag unloader	Check the appearance of the structure, paying particular attention to the state of the welds	Monthly
		Check that all bolts are correctly tightened, in particular the vibrator fixing bolts	Monthly
P-04-970/980	**BFP Polymer Dosing Pumps**		
	Drive Unit	Strip down the drive unit	every 5000 operating hours
	Bearings	Remove the bearings	every 5000 operating hours
	All parts	Clean all parts	every 5000 operating hours
	Drive Unit	Renew the lubricant	Refer to O&M manual for drive lubricant renewal interval and amount
	Motor	Lubrication - relubricate if required	Refer to Motor O&M manual for relubrication time interval and amounts

Note: Refer to equipment Operation & Maintenance Manuals for more detailed information on equipment maintenance schedule.

APPENDIX D

EQUIPMENT MAINTENANCE AND OPERATION MANUALS

Installation, Operation,
and Maintenance Manual



Flygt 3171

FLYGT
a xylem brand

Table of Contents

1 Introduction and Safety....3
1.1 Introduction....3
1.2 Safety terminology and symbols....3
1.3 User safety....4
1.4 Ex-approved products....4
1.5 Special hazards....5
1.6 Protecting the environment....6
1.7 Spare parts....6
1.8 Warranty....6

2 Transportation and Storage....7
2.1 Inspect the delivery....7
2.1.1 Inspect the package....7
2.1.2 Inspect the unit....7
2.2 Transportation guidelines....7
2.2.1 Lifting....7
2.3 Temperature ranges for transportation, handling and storage....8
2.4 Storage guidelines....8

3 Product Description....10
3.1 Pump design....10
3.2 Monitoring equipment....12
3.3 The data plate....12
3.4 Approvals....13
3.5 Product denomination....14

4 Installation....16
4.1 Install the pump....16
4.1.1 Install with P-installation....17
4.1.2 Install with S-installation....18
4.1.3 Install with T/Z-installation....19
4.2 Make the electrical connections....20
4.2.1 Prepare the SUBCAB® cables....22
4.2.2 Connect the motor cable to the pump....23
4.2.3 Connect the motor cable to the starter and monitoring equipment....24
4.2.4 Cable charts....24
4.2.5 Sensor connection....30
4.3 T-installation: Bleed air before starting pump....32
4.4 Check the impeller rotation....32

5 Operation....34
5.1 Precautions....34
5.2 Estimate zinc anode replacement intervals....34
5.3 Start the pump....35

6 Maintenance....36
6.1 Torque values....36
6.2 Change the coolant....37
6.2.1 Empty the coolant....37
6.2.2 Fill with coolant....40

6.3 Service the pump....41
6.3.1 Inspection....41
6.3.2 Major overhaul....42
6.3.3 Service in case of alarm....42
6.4 Replace the impeller....43
6.4.1 Replace the impeller for wet installation....43
6.4.2 Replace the impeller for dry installation....49

7 Troubleshooting....58
7.1 The pump does not start....58
7.2 The pump does not stop when a level sensor is used....59
7.3 The pump starts-stops-starts in rapid sequence....59
7.4 The pump runs but the motor protection trips....59
7.5 The pump delivers too little or no water....60

8 Technical Reference....62
8.1 Application limits....62
8.2 Motor data....62

1 Introduction and Safety

1.1 Introduction

Purpose of the manual

The purpose of this manual is to provide necessary information for working with the unit. Read this manual carefully before starting work.

Read and keep the manual

Save this manual for future reference, and keep it readily available at the location of the unit.

Intended use



WARNING:

Operating, installing, or maintaining the unit in any way that is not covered in this manual could cause death, serious personal injury, or damage to the equipment and the surroundings. This includes any modification to the equipment or use of parts not provided by Xylem. If there is a question regarding the intended use of the equipment, please contact a Xylem representative before proceeding.

Other manuals

See also the safety requirements and information in the original manufacturer's manuals for any other equipment furnished separately for use in this system.

1.2 Safety terminology and symbols

About safety messages

It is extremely important that you read, understand, and follow the safety messages and regulations carefully before handling the product. They are published to help prevent these hazards:

- Personal accidents and health problems
- Damage to the product and its surroundings
- Product malfunction

Hazard levels

Hazard level	Indication
 DANGER:	A hazardous situation which, if not avoided, will result in death or serious injury
 WARNING:	A hazardous situation which, if not avoided, could result in death or serious injury
 CAUTION:	A hazardous situation which, if not avoided, could result in minor or moderate injury
NOTICE:	Notices are used when there is a risk of equipment damage or decreased performance, but not personal injury.

Special symbols

Some hazard categories have specific symbols, as shown in the following table.

Electrical hazard	Magnetic fields hazard
 Electrical Hazard:	 CAUTION:

1.3 User safety

All regulations, codes, and health and safety directives must be observed.

The site

- Observe lockout/tagout procedures before starting work on the product, such as transportation, installation, maintenance, or service.
- Pay attention to the risks presented by gas and vapors in the work area.
- Always be aware of the area surrounding the equipment, and any hazards posed by the site or nearby equipment.

Qualified personnel

This product must be installed, operated, and maintained by qualified personnel only.

Protective equipment and safety devices

- Use personal protective equipment as needed. Examples of personal protective equipment include, but are not limited to, hard hats, safety goggles, protective gloves and shoes, and breathing equipment.
- Make sure that all safety features on the product are functioning and in use at all times when the unit is being operated.

1.4 Ex-approved products

Follow these special handling instructions if you have an Ex-approved unit.

Personnel requirements

These are the personnel requirements for Ex-approved products in potentially explosive atmospheres:

- All work on the product must be carried out by certified electricians and Xylem authorized mechanics. Special rules apply to installations in explosive atmospheres.
- All users must know about the risks of electric current and the chemical and physical characteristics of the gas, the vapor, or both present in hazardous areas.
- Any maintenance for Ex-approved products must conform to international and national standards (for example, IEC/EN 60079-17).

Xylem disclaims all responsibility for work done by untrained and unauthorized personnel.

Product and product handling requirements

These are the product and product handling requirements for Ex-approved products in potentially explosive atmospheres:

- Only use the product in accordance with the approved motor data.
- The Ex-approved product must never run dry during normal operation. Dry running during service and inspection is only permitted outside the classified area.
- Before you start work on the product, make sure that the product and the control panel are isolated from the power supply and the control circuit, so they cannot be energized.
- Do not open the product while it is energized or in an explosive gas atmosphere.
- Make sure that thermal contacts are connected to a protection circuit according to the approval classification of the product, and that they are in use.

- Intrinsically safe circuits are normally required for the automatic level-control system by the level regulator if mounted in zone 0.
- The yield stress of fasteners must be in accordance with the approval drawing and the product specification.
- Do not modify the equipment without approval from an Ex-approved Xylem representative.
- Only use parts that are provided by an Ex-approved Xylem representative.
- The thermal detectors fitted to the stator windings shall be connected into the motor control circuit in such a manner as to disconnect the supply to the motor in order to prevent the Temperature Class T3.
- The width of flameproof joints is more than the values specified in the tables of the IEC 60079–1 standard.
- The gap of flameproof joints is less than the values specified in Table 1 of the IEC 60079–1 standard.
- The equipment must be submerged during normal operation.

Guidelines for compliance

Compliance is fulfilled only when you operate the unit within its intended use. Do not change the conditions of the service without the approval of an Ex-approved Xylem representative. When you install or maintain explosion proof products, always comply with the directive and applicable standards (for example, IEC/EN 60079–14).

Minimum permitted liquid level

See the dimensional drawings of the product for the minimum permitted liquid level according to the approval for explosion proof products. If the information is missing on the dimensional drawing, the product must be fully submerged. Level-sensing equipment must be installed if the product can be operated at less than the minimum submersion depth.

Monitoring equipment

For additional safety, use condition-monitoring devices. Condition-monitoring devices include but are not limited to the following:

- Level indicators
- Temperature detectors

1.5 Special hazards

Biological hazards

The product is designed for use in liquids that can be hazardous to your health. Observe these rules when you work with the product:

- Make sure that all personnel who may come into contact with biological hazards are vaccinated against diseases to which they may be exposed.
- Observe strict personal cleanliness.



WARNING: Biological Hazard

Infection risk. Rinse the unit thoroughly with clean water before working on it.

Wash the skin and eyes

Follow these procedures for chemicals or hazardous fluids that have come into contact with your eyes or your skin:

Condition	Action
Chemicals or hazardous fluids in eyes	1. Hold your eyelids apart forcibly with your fingers. 2. Rinse the eyes with eyewash or running water for at least 15 minutes. 3. Seek medical attention.

Condition	Action
Chemicals or hazardous fluids on skin	1. Remove contaminated clothing. 2. Wash the skin with soap and water for at least 1 minute. 3. Seek medical attention, if necessary.

1.6 Protecting the environment

Emissions and waste disposal

Observe the local regulations and codes regarding:

- Reporting of emissions to the appropriate authorities
- Sorting, recycling and disposal of solid or liquid waste
- Clean-up of spills

Exceptional sites



CAUTION: Radiation Hazard

Do NOT send the product to Xylem if it has been exposed to nuclear radiation, unless Xylem has been informed and appropriate actions have been agreed upon.

1.7 Spare parts



CAUTION:

Only use the manufacturer's original spare parts to replace any worn or faulty components. The use of unsuitable spare parts may cause malfunctions, damage, and injuries as well as void the warranty.

1.8 Warranty

For information about warranty, see the sales contract.

2 Transportation and Storage

2.1 Inspect the delivery

2.1.1 Inspect the package

1. Inspect the package for damaged or missing items upon delivery.
2. Note any damaged or missing items on the receipt and freight bill.
3. File a claim with the shipping company if anything is out of order.
   If the product has been picked up at a distributor, make a claim directly to the distributor.

2.1.2 Inspect the unit

1. Remove packing materials from the product.
   Dispose of all packing materials in accordance with local regulations.
2. Inspect the product to determine if any parts have been damaged or are missing.
3. If applicable, unfasten the product by removing any screws, bolts, or straps.
   For your personal safety, be careful when you handle nails and straps.
4. Contact the local sales representative if there is any issue.

2.2 Transportation guidelines

Precautions



DANGER: Crush Hazard

Moving parts can entangle or crush. Always disconnect and lock out power before servicing to prevent unexpected startup. Failure to do so could result in death or serious injury.

Position and fastening

The unit can be transported either horizontally or vertically. Make sure that the unit is securely fastened during transportation, and cannot roll or fall over.

2.2.1 Lifting

Always inspect the lifting equipment and tackle before starting any work.



WARNING: Crush Hazard

1) Always lift the unit by its designated lifting points. 2) Use suitable lifting equipment and ensure that the product is properly harnessed. 3) Wear personal protective equipment. 4) Stay clear of cables and suspended loads.

NOTICE:

Never lift the unit by its cables or hose.

Lifting equipment

Lifting equipment is always required when handling the unit. It must fulfill the following requirements:

- The minimum height (contact your local sales and service representative for information) between the lifting hook and the floor must be sufficient to lift the unit.
- The lifting equipment must be able to hoist the unit straight up and down, preferably without the need for resetting the lifting hook.
- The lifting equipment must be securely anchored and in good condition.

- The lifting equipment must support the weight of the entire assembly and must only be used by authorized personnel.
- Two sets of lifting equipment must be used to lift the unit for repair work.
- The lifting equipment must be dimensioned to lift the unit with any remaining pumped media in it.
- The lifting equipment must not be oversized.



CAUTION: Crush Hazard

Over-dimensioned lifting equipment can lead to injury. A site-specific risk analysis must be done.

2.3 Temperature ranges for transportation, handling and storage

Handling at freezing temperature

At temperatures below freezing, the product and all installation equipment, including the lifting gear, must be handled with extreme care.

Make sure that the product is warmed up to a temperature above the freezing point before starting up. Avoid rotating the impeller/propeller by hand at temperatures below the freezing point. The recommended method to warm the unit up is to submerge it in the liquid which will be pumped or mixed.

NOTICE:

Never use a naked flame to thaw the unit.

Unit in as-delivered condition

If the unit is still in the condition in which it left the factory - all packing materials are undisturbed - then the acceptable temperature range during transportation, handling and storage is: –50°C (–58°F) to +60°C (+140°F).

If the unit has been exposed to freezing temperatures, then allow it to reach the ambient temperature of the sump before operating.

Lifting the unit out of liquid

The unit is normally protected from freezing while operating or immersed in liquid, but the impeller/propeller and the shaft seal may freeze if the unit is lifted out of the liquid into a surrounding temperature below freezing.

Units equipped with an internal cooling system are filled with a mixture of water and 30% glycol. This mixture remains a flowing liquid at temperatures down to –13°C (9°F). Below –13°C (9°F), the viscosity increases such that the glycol mixture will lose its flow properties. However, the glycol-water mixture will not solidify completely and thus cannot harm the product.

Follow these guidelines to avoid freezing damage:

1. Empty all pumped liquid, if applicable.
2. Check all liquids used for lubrication or cooling, both oil and water-glycol mixtures, for the presence of unacceptable amounts of water. Change if needed.

2.4 Storage guidelines

Storage location

The product must be stored in a covered and dry location free from heat, dirt, and vibrations.

NOTICE:

Protect the product against humidity, heat sources, and mechanical damage.

NOTICE:
Do not place heavy weights on the packed product.

Freezing precautions

The unit is frost-proof while operating or immersed in liquid, but the impeller/propeller and the shaft seal may freeze if the unit is lifted out of the liquid into a surrounding temperature below freezing.

Follow these guidelines to avoid freezing damage:

When	Guideline
Before storage	• The unit must be allowed to run for a short time after raising it to discharge remaining pumped liquid. This does not apply to impeller/propeller units. • The discharge opening must be covered in a suitable way, or placed facing down so that any still remaining pumped liquid runs out. • If present, the cooling jacket must be drained manually by opening the air vent screws at the top of the cooling jacket.
After storage	If the impeller/propeller is frozen, it must be thawed by immersing the unit in liquid before operating the unit. NOTICE: Never use a naked flame to thaw the unit.

Long-term storage

If the unit is stored more than six months, then the following apply:

- Before operating the unit after storage, it must be inspected with special attention to the seals and the cable entry.
- The impeller/propeller must be rotated every other month to prevent the seals from sticking together.

Packaging material stacking limit

If the packaging material has an indicated stacking limit, then it is valid for 23°C (73°F) and 50% relative humidity. Depending on the material, other temperature and humidity ranges can reduce the stacking limit.

3 Product Description

3.1 Pump design

The pump is submersible, and driven by an electric motor.

Intended use

The product is intended for moving wastewater, sludge, raw and clean water. Always follow the limits that are given in *Technical Reference* (page 62). If there is a question regarding the intended use of the equipment, please contact a local sales and service representative before proceeding.



DANGER: Explosion/Fire Hazard

Special rules apply to installations in explosive or flammable atmospheres. Do not install the product or any auxiliary equipment in an explosive zone unless it is rated explosion-proof or intrinsically-safe. If the product is EN/ATEX-, MSHA- or FM-approved, then see the specific EX information in the Safety chapter before taking any further actions.

NOTICE:

Do NOT use the unit in highly corrosive liquids.

Spare parts

- Modifications to the unit or installation should only be carried out after consulting with Xylem.
- Original spare parts and accessories that are authorized by Xylem are essential for compliance. The use of other parts can invalidate any claims for warranty or compensation. For more information contact your Xylem representative.

Pressure class

LT	Low head
MT	Medium head
HT	High head
SH	Super high head

Experior® product concept

Experior® is a product concept including N-technology, Premium efficiency motor, and the intelligent control SmartRun®.

Parts

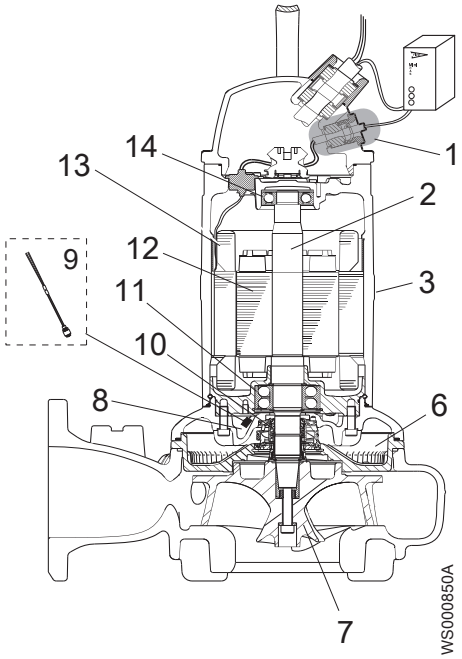

Figure 1: Without cooling jacket

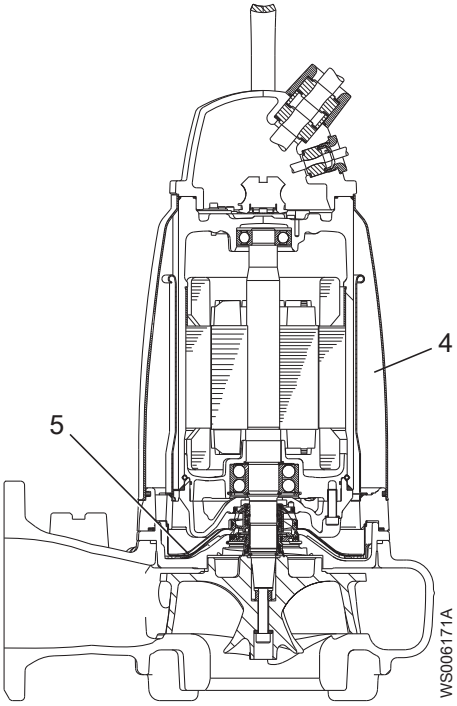

Figure 2: With cooling jacket

Position	Denomination	Description
1	Monitoring sensor	Optional sensor. For information about sensors, see *Monitoring equipment* (page 12).
2	Shaft	Stainless steel, with an integrated rotor
3	Cooling without jacket	The pump is cooled by the ambient liquid.
4	Cooling with jacket	The motor is cooled by a closed loop system. An integrated coolant pump circulates the coolant whenever the pump is operated.
5	Flow diffuser	Provides heat transfer from the coolant to the pumped fluid.
6	Seal housing	Includes a coolant that lubricates and cools the seals; the housing acts as a buffer between the pumped fluid and the electric motor
7	Impeller	N-impeller, a semi-open, two-vane impeller
8	Inspection chamber	Equipped with an FLS10 leakage sensor to prevent damages to the motor
9	FLS10	For information about FLS10, see *Monitoring equipment* (page 12).
10	Mechanical seals	Made of one of the following alternatives: • Alternative 1 – Inner seal: corrosion-resistant cemented carbide WCCR/WCCR – Outer seal: corrosion-resistant cemented carbide WCCR/WCCR • Alternative 2 – Inner seal: corrosion-resistant cemented carbide WCCR/WCCR – Outer seal: silicon carbide RSiC/RSiC
11	Main bearings	Consisting of a two-row angular contact ball bearing
12	Motor	For information about the motor, see *Technical Reference* (page 62).
13	Thermal contact/ Thermistors	For information about the thermal contact and thermistors, see *Monitoring equipment* (page 12).

Position	Denomination	Description
14	Support bearing	Consisting of a two-row ball bearing

3.2 Monitoring equipment

The following applies to the monitoring equipment of the pump:

- The stator incorporates three thermal contacts connected in series that activate the alarm and stops the pump at overtemperature
- The thermal contacts open at 140°C (285°F).
- Ex-approved pumps must have thermal contacts connected to the control panel.
- The sensors must be connected to either the MiniCAS II monitoring equipment or an equivalent equipment.
- The monitoring equipment must be of a design that makes automatic restart impossible.
- The pump is supplied with an inspection sensor FLS 10 for sensing the presence of any liquid in the inspection chamber.
- Information in the junction box shows if the pump is equipped with optional sensors.

Optional sensors

Thermistor Thermistors are optional sensors for measuring the temperature. They are connected in series in the stator and activate the alarm at overtemperature. Thermistors are not applicable to Ex-approved pumps.

NOTICE:

Thermistors must never be exposed to voltages higher than 2.5 V. If the voltage exceeds this value, for example when the control circuit is tested, then the thermistors will be destroyed.

3.3 The data plate

The data plate is a metal label that is located on the main body of the products. The data plate lists key product specifications. Specially approved products also have an approval plate.

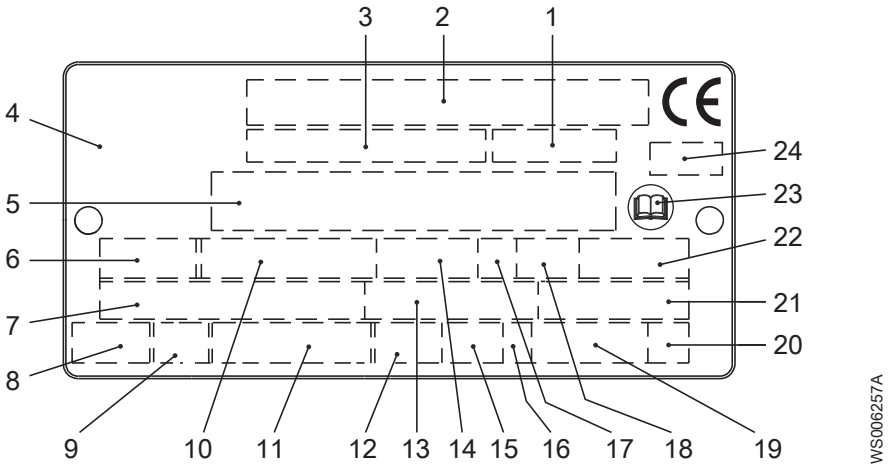

1. Curve code or Propeller code
2. Serial number
3. Product number
4. Country of origin
5. Additional information
6. Phase; type of current; frequency
7. Rated voltage
8. Thermal protection
9. Thermal class
10. Rated shaft power

11. International standard
12. Degree of protection
13. Rated current
14. Rated speed
15. Maximum submergence
16. Direction of rotation: L=left, R=right
17. Duty class
18. Duty factor
19. Product weight
20. Locked rotor code letter
21. Power factor
22. Maximum ambient temperature
23. Read installation manual
24. Notified body, only for EN-approved Ex products

Figure 3: The data plate

3.4 Approvals

Product approvals for hazardous locations

Pump	Approval
• 3171.091 • 3171.095 • 3171.390 • 3171.670 • 3171.810 • 3171.830 • 3171.850 • 3171.870	European Norm (EN) • ATEX Directive • EN 60079-0:2012/A11:2013, EN 60079-1:2007, EN 13463-1:2009, EN 13463-5:2011 • Ⓔx I M2 c Ex d I Mb • Ⓔx II 2 G c Ex d IIB T3 Gb
	IEC • IECEx scheme • IEC 60079-0, IEC 60079-1 • Ex d I Mb • Ex d IIB T3 Gb
	FM (FM Approvals) • Explosion proof for use in Class I, Div. 1, Group C and D • Dust ignition proof for use in Class II, Div. 1, Group E, F and G • Suitable for use in Class III, Div. 1, Hazardous Locations
	CSA Ex • Explosion proof for use in Class I, Div. 1, Group C and D

EN approval plate

This illustration describes the EN approval plate and the information that is contained in its fields.

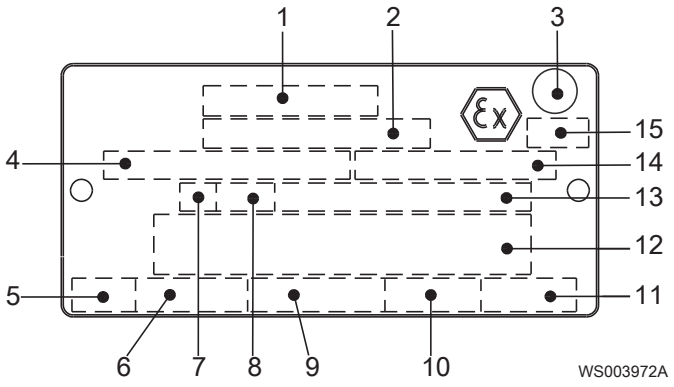

1. Approval
2. Approval authority and Approval number
3. Approval for Class I
4. Approved for drive unit
5. Stall time
6. Starting current or Rated current
7. Duty class
8. Duty factor
9. Input power
10. Rated speed
11. Controller
12. Additional information
13. Maximum ambient temperature
14. Serial number
15. ATEX marking

IEC approval plate

This illustration describes the IEC approval plate and the information that is contained in its fields.

International Norm; not for EU member countries.

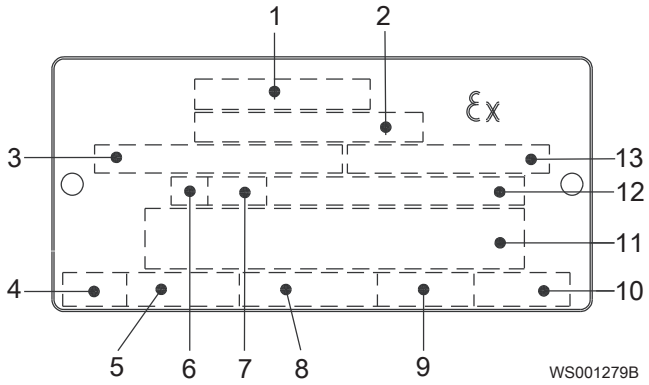

1. Approval
2. Approval authority and Approval number
3. Approved for drive unit
4. Stall time
5. Starting current or Rated current
6. Duty class
7. Duty factor
8. Input power
9. Rated speed
10. Controller
11. Additional information
12. Maximum ambient temperature
13. Serial number

FM approval plate

This illustration describes the FM approval plate and the information that is contained in its fields.

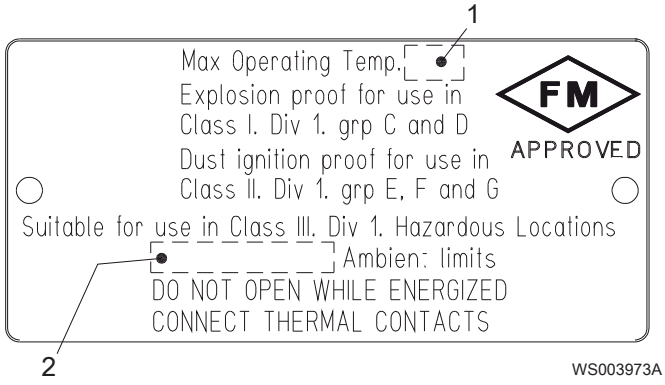

1. Temperature class
2. Maximum ambient temperature

CSA approval plate

This illustration describes the CSA approval plate and the information that is contained in its fields.

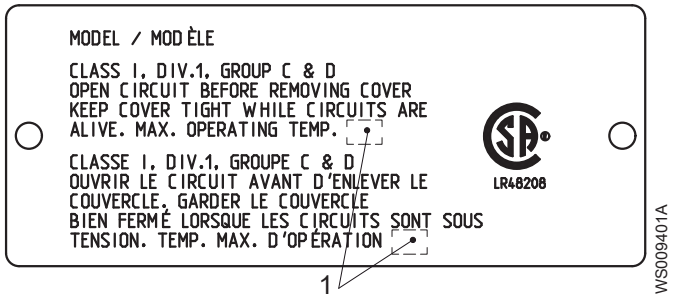

1. Temperature class

3.5 Product denomination

Reading instruction

In this section, code characters are illustrated accordingly:

X = letter

Y = digit

The different types of codes are marked up with a, b and c. Code parameters are marked up with numbers.

Codes and parameters

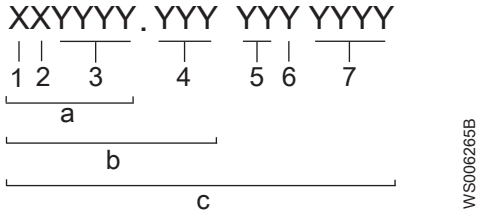

Type of Callout	Number	Indication
Type of code	a	Sales denomination
	b	Product code
	c	Serial number
Parameter	1	Hydraulic end
	2	Type of installation
	3	Sales code
	4	Version
	5	Production year
	6	Production cycle
	7	Running number

4 Installation

4.1 Install the pump

Before starting work, make sure that the safety instructions in the chapter *Introduction and Safety* (page 3) have been read and understood.



DANGER: Electrical Hazard

Before starting work on the unit, make sure that the unit and the control panel are isolated from the power supply and cannot be energized. This applies to the control circuit as well.



DANGER: Inhalation Hazard

Before entering the work area, make sure that the atmosphere contains sufficient oxygen and no toxic gases.

Hazardous atmospheres



DANGER: Explosion/Fire Hazard

Special rules apply to installations in explosive or flammable atmospheres. Do not install the product or any auxiliary equipment in an explosive zone unless it is rated explosion-proof or intrinsically-safe. If the product is EN/ATEX-, MSHA- or FM-approved, then see the specific EX information in the Safety chapter before taking any further actions.



WARNING: Explosion/Fire Hazard

Do not install CSA-approved products in locations that are classified as hazardous in the National Electric Code(TM), ANSI/NFPA 70-2005.

General requirements

These requirements apply:

- Use the pump dimensional drawing in order to ensure proper installation.
- In S-, T-, and Z-installations the pump must be equipped with cooling jacket

Before installing the pump, do the following:

- Provide a suitable barrier around the work area, for example, a guard rail.
- Make sure that equipment is in place so that the unit cannot roll or fall over during the installation process.
- Check the explosion risk before you weld or use electric hand tools.
- Check that the cable and cable entry have not been damaged during transport.
- Always remove all debris and waste material from the sump, inlet piping, and discharge connection, before you install the pump.
- Always check the impeller rotation before lowering the pump into the pumped liquid.

NOTICE:

Do not run the pump dry.

NOTICE:

Never force piping to make a connection with a pump.

Authority regulation

Vent the tank of a sewage station in accordance with local plumbing codes.

Fasteners

- Only use fasteners of the correct size and material.
- Replace all corroded or damaged fasteners.
- Make sure that all the fasteners are correctly tightened and that there are no missing fasteners.

4.1.1 Install with P-installation

In the P-installation, the pump is installed on a stationary discharge connection, and operates either completely or partially submerged in the pumped liquid. These requirements and instructions only apply when the installation is made according to the dimensional drawing.

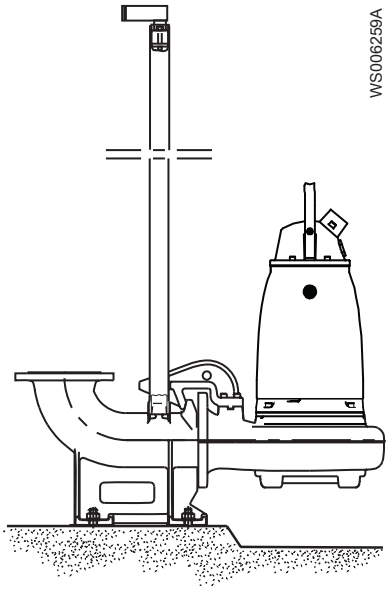

Figure 4: P-installation

These items are required:

- Guide bars
- Guide bar bracket for attaching the guide equipment to the access frame or to the upper part of the sump
- Level regulators or other control equipment for start, stop, and alarm
- Cable holder for holding the cable and regulating the height of the level regulators
- Access frame (with covers) to which the upper guide bar bracket and cable holder can be attached
- Discharge connection for connecting the pump to the discharge line

  The discharge connection has a flange which fits the pump housing flange and a bracket for attaching the guide equipment.
- Fasteners for the discharge connection
- Anchor bolts

1. Run a cable between the sump and the stator and monitoring equipment.

   Make sure that the cable is not sharply bent or pinched.
2. Install the access frame:

   a) Place the access frame in position and align it horizontally.

   b) Grout the frame in place.
3. Grout the anchor bolts in place.

   Be careful when you align and position the discharge connection in relation to the access frame.
4. Place the discharge connection in position, and tighten the nuts.

5. Install the guide bars:
   a) Secure the guide bars in the bracket.
   b) Check that the guide bars are placed vertically. Use a level or a plumb line.
6. Connect the discharge pipe to the discharge connection.
7. Prepare for the level regulator:
   a) Bolt the cable holder to the access frame.
   b) Attach the level regulator cable to the cable holder and adjust the height of the level regulator.
   c) Protect bolts and nuts with a corrosion-preventive compound.
8. Lower the pump along the guide bars.
9. Secure the motor cable:
   a) Fasten the permanent lifting device to the pump and to the access frame. For example, you can use a stainless-steel lifting chain with shackles.
   b) Fasten the cable to the cable holder.

      Make sure that the cable cannot be sucked into the pump inlet or that it is neither sharply bent, or pinched. Support straps are required for deep installations.
   c) Connect the motor cable and the starter and monitoring equipment according to the separate instructions.

      Make sure that the impeller rotation is correct. For more information, see *Check the impeller rotation* (page 32).

Clean all debris from the sump before starting the pump.

4.1.2 Install with S-installation

In the S-installation, the pump is transportable and intended to operate either completely or partially submerged in the pumped liquid. The pump is equipped with a connection for hose or pipe and stands on a base stand.

These requirements and instructions only apply when the installation is made according to the dimensional drawing. For information about the different installation types, see Parts List.

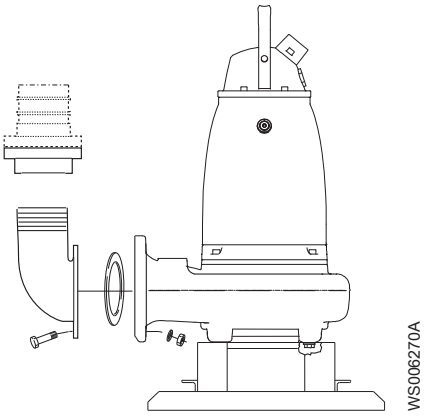

Figure 5: S-installation

1. Run the cable so that it has no sharp bends. Make sure that it is not pinched, and cannot be sucked into the pump inlet.
2. Connect the discharge line.
3. Lower the pump into the sump.
4. Place the pump on the base and make sure it cannot fall over or sink.

Alternatively, the pump can be suspended with a lifting chain just above the sump bottom. Make sure that the pump cannot rotate at start-up or during operation.

5. Connect the motor cable and the starter and monitoring equipment according to the separate instructions.

   Make sure that the impeller rotation is correct. For more information, see *Check the impeller rotation* (page 32).

4.1.3 Install with T/Z-installation

In the T-installation, the pump is installed in a vertical position in a dry well next to the wet sump. These requirements and instructions only apply when the installation is made according to the dimensional drawing.

In the Z-installation, the pump is installed in a horizontal position on a support stand in a dry well next to the wet sump, and a bell-mouth is connected to the inlet pipe. These requirements and instructions are for Z-installations that comply to the dimensional drawing.

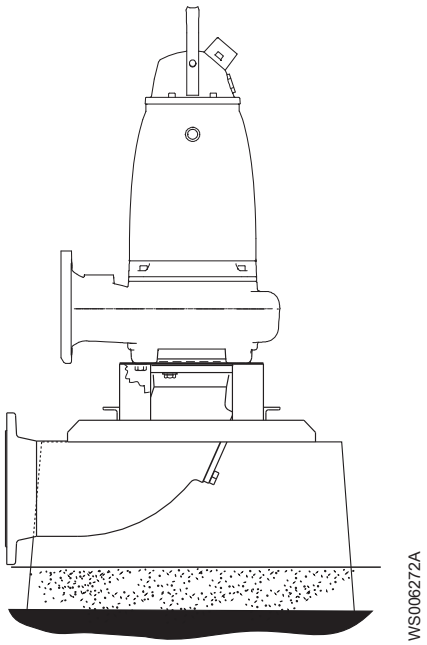

Figure 6: T-installation

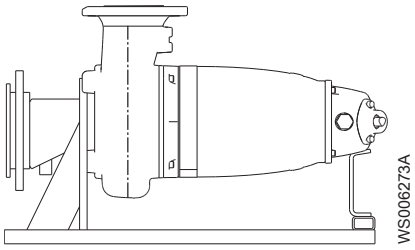

Figure 7: Z-installation

These items are required:

- Support stand and anchor bolts for anchoring the pump to a base
- Inlet elbow for connecting the suction line and discharge line
- Shut-off valves that allow you to remove the pump from service

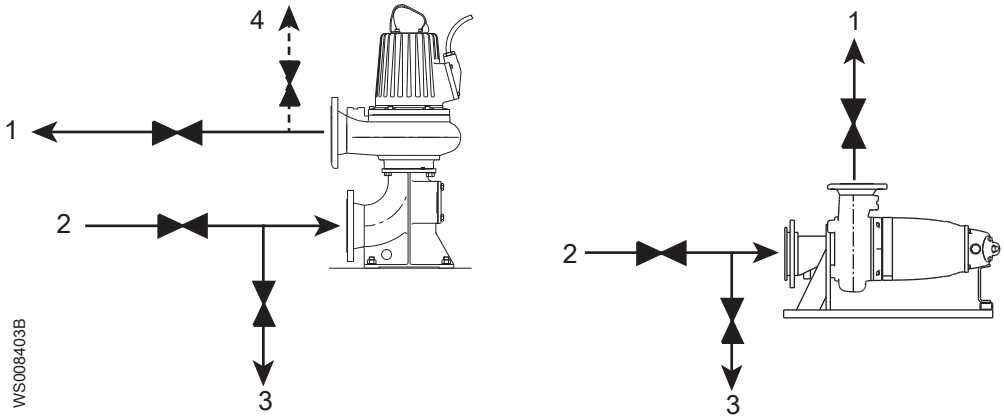

1. Outlet line
2. Inlet line
3. Line to drain
4. Air vent

Figure 8: T-, Z-installation shutoff and air vent valves (generic pumps shown)

- Air vent on the discharge side between the pump and the check valve
- Level regulators or other control equipment for start, stop, and alarm

NOTICE:

The risk of freezing is particularly high in T- or Z-installations.

1. Fasten the pump:
   a) Use the anchor bolts to bolt the support stand to the concrete base.
   b) Bolt the pump to the support stand and the suction connection.
2. Make sure that the pump is vertical for the T-installation or horizontal for the Z-installation.
3. Connect the suction line and discharge line.
4. Connect the motor cable and the starter and monitoring equipment according to the separate instructions.

   Make sure that the impeller rotation is correct. For more information, see *Check the impeller rotation* (page 32).
5. Make sure that the weight of the pump does not put strain on the piping.

4.2 Make the electrical connections

General precautions



DANGER: Electrical Hazard

Before starting work on the unit, make sure that the unit and the control panel are isolated from the power supply and cannot be energized. This applies to the control circuit as well.





WARNING: Electrical Hazard

Risk of electrical shock or burn. A certified electrician must supervise all electrical work. Comply with all local codes and regulations.



WARNING: Electrical Hazard

There is a risk of electrical shock or explosion if the electrical connections are not correctly carried out, or if there is fault or damage on the product. Visually inspect equipment for damaged cables, cracked casings or other signs of damage. Make sure that electrical connections have been correctly made.



WARNING: Crush Hazard

Risk of automatic restart.



CAUTION: Electrical Hazard

Prevent cables from becoming sharply bent or damaged.

NOTICE:

Leakage into the electrical parts can cause damaged equipment or a blown fuse. Keep the cable ends dry at all times.

Requirements

These general requirements apply for electrical installation:

- The supply authority must be notified before installing the pump if it will be connected to the public mains. When the pump is connected to the public power supply, it may cause flickering of incandescent lamps when started.
- The mains voltage and frequency must agree with the specifications on the data plate. If the pump can be connected to different voltages, then the connected voltage is specified by a yellow sticker close to the cable entry.
- The fuses and circuit breakers must have the proper rating, and the pump overload protection (motor protection breaker) must be connected and set to the rated current according to the data plate and if applicable the cable chart. The starting current in direct-on-line start can be up to six times higher than the rated current.
- The fuse rating and the cables must be in accordance with the local rules and regulations.
- If intermittent operation is prescribed, then the pump must be provided with monitoring equipment supporting such operation.
- If stated on the data plate, then the motor is convertible between different voltages.
- The thermal contacts/thermistors must be in use.
- For FM-approved pumps, a leakage sensor must be connected and in use in order to meet approval requirements.

Cables

These are the requirements to follow when you install cables:

- The cables must be in good condition, not have any sharp bends, and not be pinched.
- The cables must not be damaged and must not have indentations or be embossed (with markings, etc.) at the cable entry.
- The cable entry seal sleeve and washers must conform to the outside diameter of the cable.
- The minimum bending radius must not be below the accepted value.
- If using a cable which has been used before, a short piece must be peeled off when refitting it so that the cable entry seal sleeve does not close around the cable at the same point again. If the outer sheath of the cable is damaged, then replace the cable. Contact a local sales and service representative.
- The voltage drop in long cables must be taken into account. The drive unit's rated voltage is the voltage measured at the cable connection point in the pump.
- The screened cable must be used according to the European CE and EMC requirements if a Variable Frequency Drive (VFD) is used. For more information, contact your local sales and service representative (VFD-supplier).
- Make sure that the cable is long enough for maintenance work.
- For SUBCAB® cables, the twisted pair copper foil must be trimmed.
- All unused conductors must be insulated.

Grounding (earthing)

Grounding (earthing) must be done in compliance with all local codes and regulations.



DANGER: Electrical Hazard

All electrical equipment must be grounded (earthed). Test the ground (earth) lead to verify that it is connected correctly and that the path to ground is continuous.

WARNING: Electrical Hazard

If the power cable is jerked loose, then the ground (earth) conductor must be the last conductor to come loose from its terminal. Make sure that the ground (earth) conductor is longer than the phase conductors at both ends of the cable.

WARNING: Electrical Hazard

Risk of electrical shock or burn. You must connect an additional ground- (earth-) fault protection device to the grounded (earthed) connectors if persons are likely to come into contact with liquids that are also in contact with the pump or pumped liquid.

4.2.1 Prepare the SUBCAB® cables

This section applies to SUBCAB® cables with twisted-pair control cores.

The prepared SUBCAB® cable

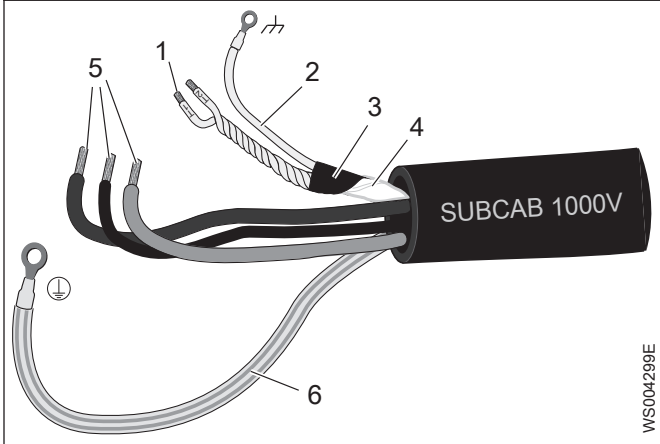

1. T1+T2 twisted pairs in control element
2. Drain wire in control element (bare copper wire)
3. Screened copper pt-foil
4. Insulation sheath (jacket) or PT-foil for control element
5. Power cores
6. Ground (earth) core

The prepared screened SUBCAB® cable

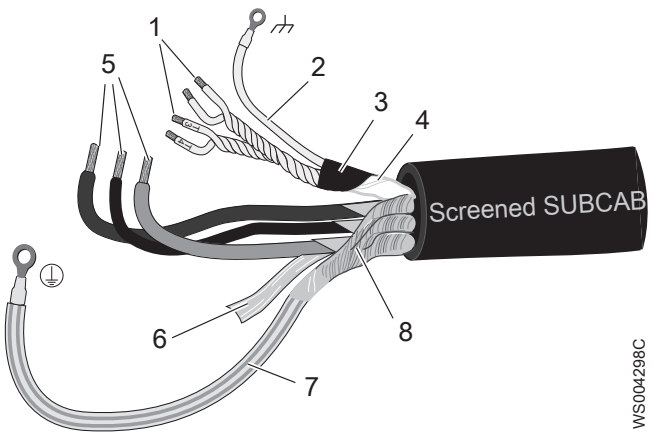

1. T1+T2 and T3+T4 twisted pairs in control element
2. Drain wire in control element (bare copper wire)
3. Screened copper pt-foil
4. Insulation sheath (jacket) for control element
5. Power cores
6. Aluminum foil
7. Ground (earth) core with green/yellow shrink hose
8. Uncovered screen/braided wire

1. Peel off the outer sheath at the end of the cable.
2. Prepare the control element:
   a) Peel the sheath (if applicable) and the copper foil.

      The copper foil is a screen and is conductive. Do not peel more than necessary, and remove the peeled foil.

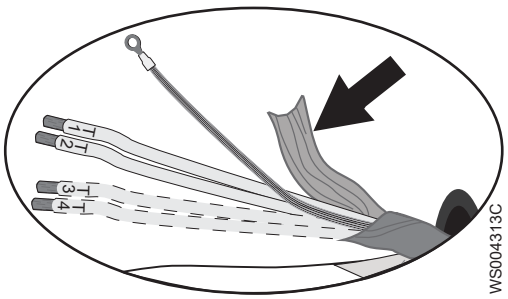

Figure 9: Copper foil on control element.

   b) Put a white shrink hose over the drain wire and the cable terminal.
   c) Fit a cable lug on the drain wire.
   d) Twist T1+T2 and T3+T4.
   e) Put a shrink hose over the control element.

Make sure that the conductive copper foil and drain wire is covered.

3. Prepare the ground (earth) core for SUBCAB™ cable:
   a) Peel the yellow-green insulation from the ground (earth) core.
   b) Check that the ground (earth) core is at least 10% longer than the phase cores in the cabinet.
   c) If applicable, put a cable lug on the ground core.
4. Prepare the ground (earth) core for screened SUBCAB™ cable:
   a) Untwist the screens around the power cores.
   b) Put a yellow-green shrink hose over the ground (earth) core.
      Leave a short piece uncovered.
   c) If applicable, put a cable lug on the screened ground core.
   d) Twist all power core screens together to create a ground (earth) core and fit a cable terminal to the end.
   e) Check that the ground (earth) core is at least 10% longer than the phase cores in the cabinet.
5. How is the connection to ground (earth) made?
   - Screw: Fit cable terminals to the ground (earth) core and the power cores.
   - Terminal block: Leave the core ends as they are.
6. Prepare the main leads:
   a) Remove the aluminum foil around each power core.
   b) Peel the insulation from each power core.

4.2.2 Connect the motor cable to the pump

NOTICE:

Leakage into the electrical parts can cause damaged equipment or a blown fuse. Keep the end of the motor cable dry at all times.

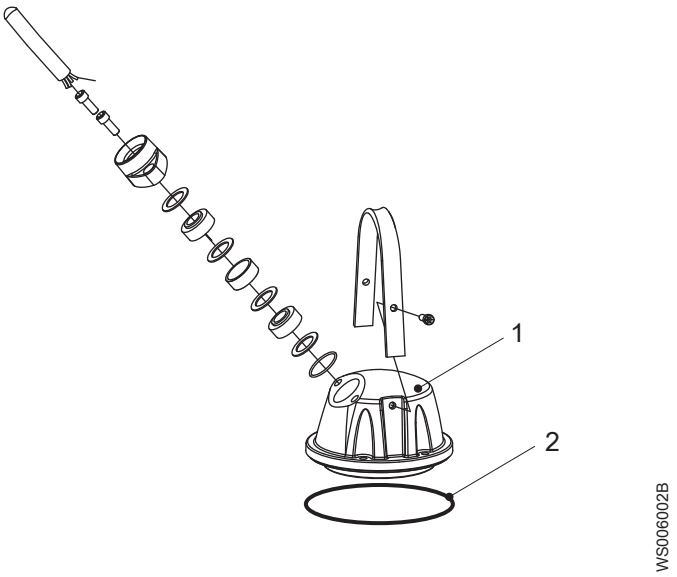

1. Entrance cover
2. O-ring

For more information about the cable entry, see the Parts list.

1. Remove the entrance cover and the O-ring from the stator housing.
   This provides access to the terminal board.
2. Check the data plate to see which connections are required for the power supply.
3. Arrange the connections on the terminal board in accordance with the required power supply.

Links (jumper strips) are not used with the Y/D start.

4. Connect the mains leads (L1, L2, L3, and ground (earth)) according to applicable cable chart.

   The ground (earth) lead must be100 mm (4.0 in.) longer than the phase leads in the junction box of the unit.
5. Make sure that the pump is correctly connected to ground (earth).
6. Connect the control leads to the applicable terminal board.
7. Make sure that any thermal contacts incorporated in the pump are properly connected to the terminal board.
8. Install the entrance cover and the O-ring on the stator housing.
9. Fasten the screws on the entrance flange so that the cable insertion assembly bottoms out.

4.2.3 Connect the motor cable to the starter and monitoring equipment

If there are two power cables, then the cable that is connected to T1 and T2 is labeled. If a separate control cable is used, then the control leads in the power cable are never connected.



DANGER: Explosion/Fire Hazard

Special rules apply to installations in explosive or flammable atmospheres. Do not install the product or any auxiliary equipment in an explosive zone unless it is rated explosion-proof or intrinsically-safe. If the product is EN/ATEX-, MSHA- or FM-approved, then see the specific EX information in the Safety chapter before taking any further actions.

NOTICE:

Either thermal contacts or thermistors are incorporated in the pump.

NOTICE:

Thermal contacts must never be exposed to voltages higher than 250 V, breaking current maximum 5 A. It is recommended that they are connected to 24 V over separate fuses to protect other automatic equipment.

1. If thermal contacts are included in the pump installation, then connect the T1 and T2 control conductors to the MiniCAS II monitoring equipment.

   NOTICE:

   The thermal contacts are incorporated in the stator. Connect them to 24 V over separate fuses to protect other automatic equipment.
2. If thermistors are included in the pump installation, and screened or auxiliary cable is used, then connect T1(1) and T2(2) to the thermistor relay or MAS 711, and T3(3) and T4 (4) to MiniCAS II or MAS 711.
3. Connect the mains leads (L1, L2, L3, and ground (earth)) to the starter equipment.

   For information about the phase sequence and the color codes of the leads, see Cable charts.
4. Check the functionality of the monitoring equipment:

   a) Check that the signals and the tripping function work properly.

   b) Check that the relays, lamps, fuses, and connections are intact.

   Replace any defective equipment.

4.2.4 Cable charts

Description

This topic contains general connection information. It also provides cable charts that show connection alternatives for use with different cables and power supply.

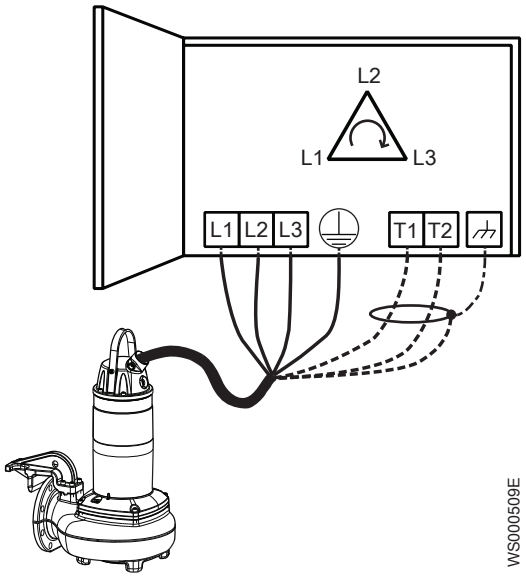

Figure 10: Phase sequence

Connection locations

The figures in this section illustrate how to interpret the connection strip symbols.

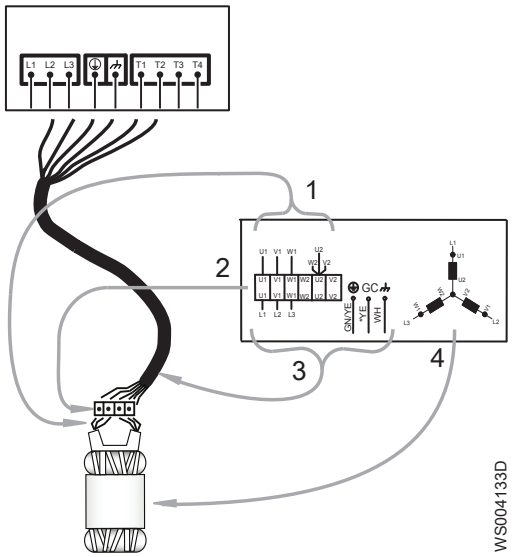

1. Stator leads
2. Terminal board
3. Power cable leads
4. Stator (internal connection illustrated)

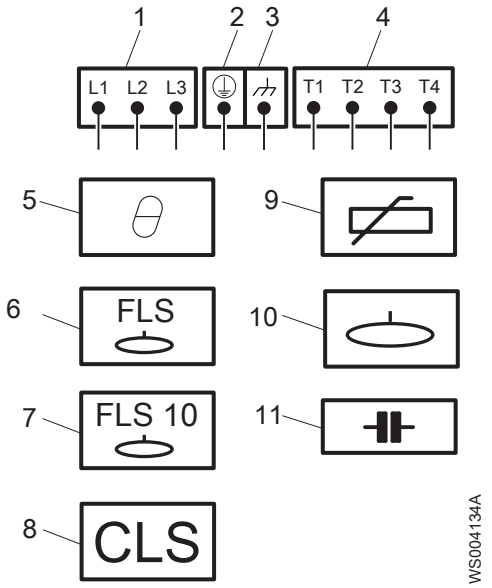

1. Starter equipment and mains leads (L1, L2, L3)
2. ground (earth)
3. Functional ground
4. Control leads (T1, T2, T3, T4)
5. Thermal contact
6. FLS
7. FLS 10
8. CLS
9. Thermistor
10. Level sensor
11. Capacitor

4.2.4.1 Colors and markings of leads

Motor Connection

COLOR STANDARD

BN = Brown
BK = Black
WH = White
OG = Orange
GN = Green
GN/YE = Green-Yellow
RD = Red
GY = Grey
BU = Blue
YE = Yellow

STATOR LEADS

U1,U5 = RD
U2 = GN
V1,V5 = BN
V2 = BU
W1,W5 = YE
W2 = BK
T1,T2 = WH or YE

*SUBCAB AWG
* * Ground conductor is stranded around core
GC=Ground check

773 29 00 (REV6)

Colors and marking of the main leads

Mains 3 ~	SUBCAB 7GX Screenflex 7GX	SUBCAB 4GX Screenflex 4GX	SUBCAB AWG	SUBCAB Screened
L1	BK 1	BN	RD	BN
L2	BK 2	BK	BK	BK
L3	BK 3	GY	WH	GY
L1	BK 4	-	-	-
L2	BK 5	-	-	-
L3	BK 6	-	-	-
⏚	GN/YE	GN/YE	GN/YE	**Screen/PE from cores
⏚	Screen (WH)	Screen (WH)	-	Screen (WH)
GC	-	-	YE	-

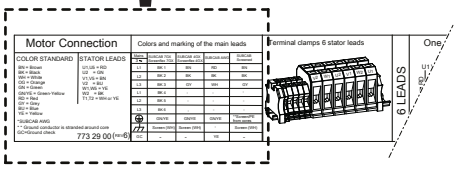

Color code standard

Code	Description
BN	Brown
BK	Black
WH	White
OG	Orange
GN	Green
GNYE	Green-Yellow
RD	Red
GY	Grey
BU	Blue

Code	Description
YE	Yellow

4.2.4.2 Motor connection

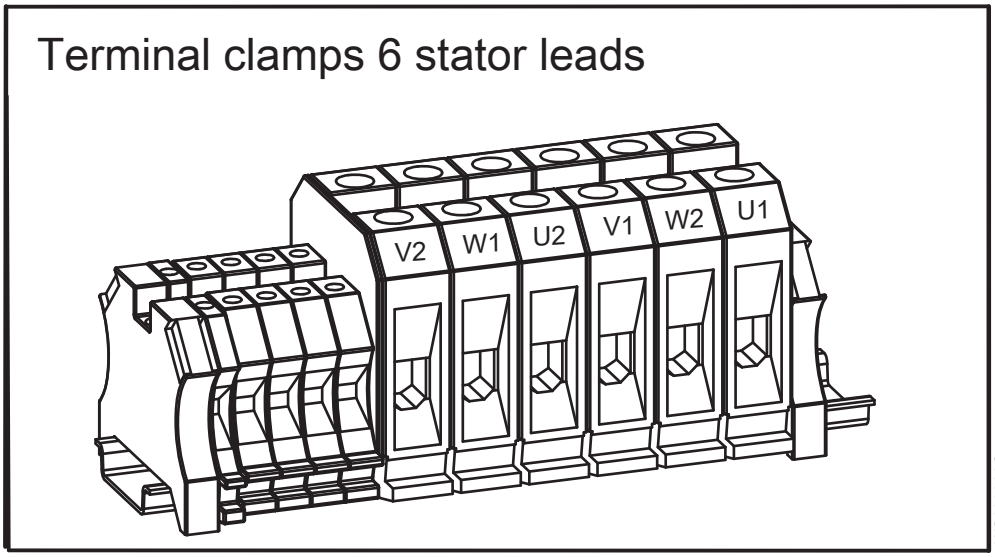

Figure 11: Terminal clamps, 6 stator leads

4.2.4.3 Connections included

- *6-leads connection* (page 27)
- *9-leads connection* (page 29)
- *Screened cable connection* (page 29)

6-leads connection

One cable (left) and two cables (right) Y-connection. For 3171, only the one-cable diagram applies.

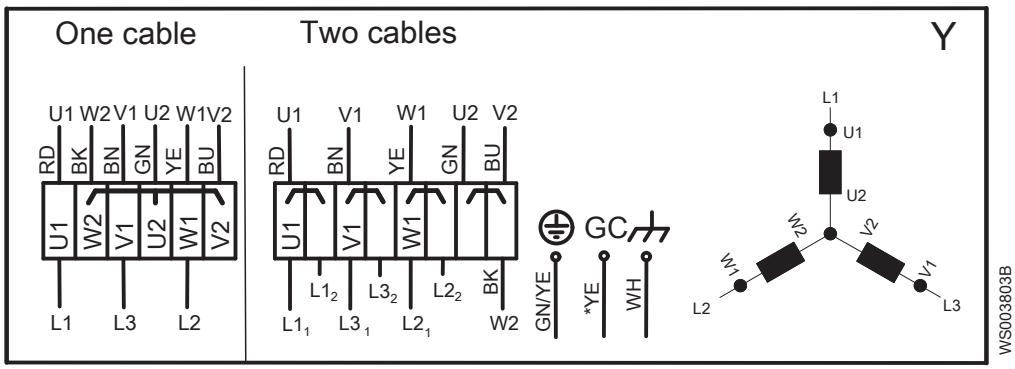

Figure 12: Y-connection

One cable (left) and two cables (right) D-connection. For 3171, only the one-cable diagram applies.

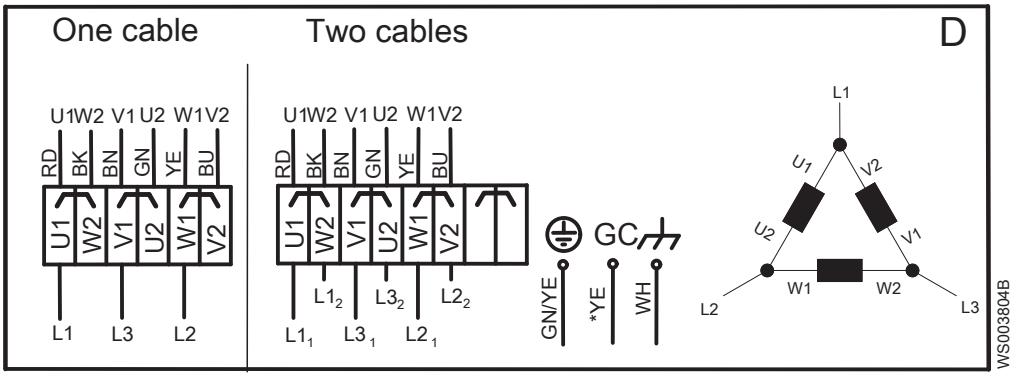

Figure 13: D-connection

One cable (left) and two cables (right)Y/ D-connection. For 3171, only the one-cable diagram applies.

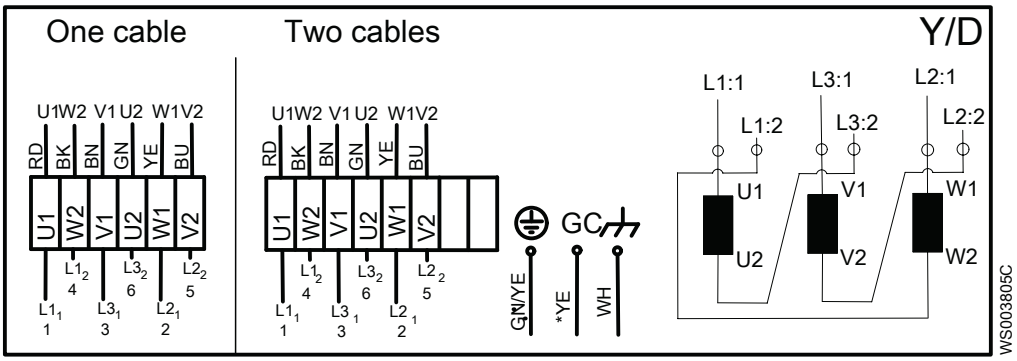

Figure 14: Y/D-connection

Y and D-connection, only applicable to 70 mm^2 terminal clamp.

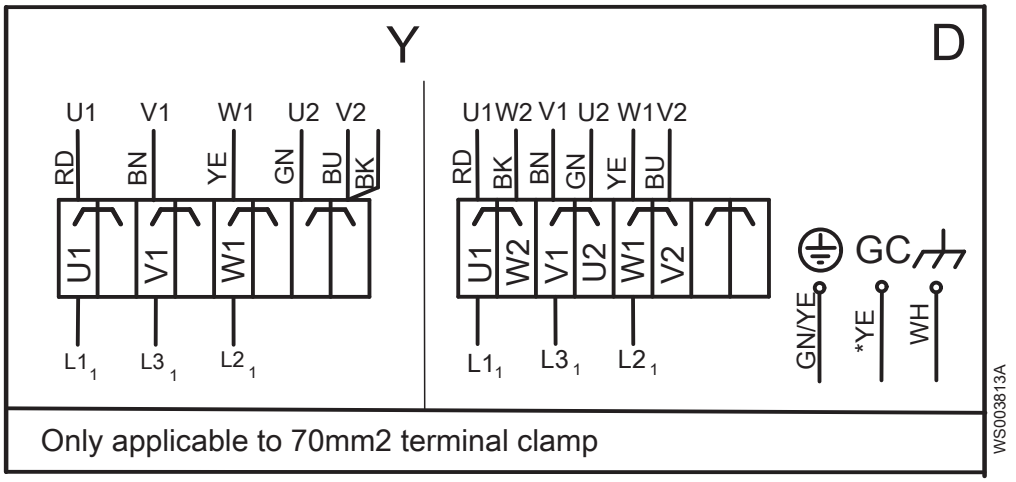

Figure 15: Y or D-connection

9-leads connection

One cable (left) and two cables (right) Y-parallel connection. For 3171, only the one-cable diagram applies.

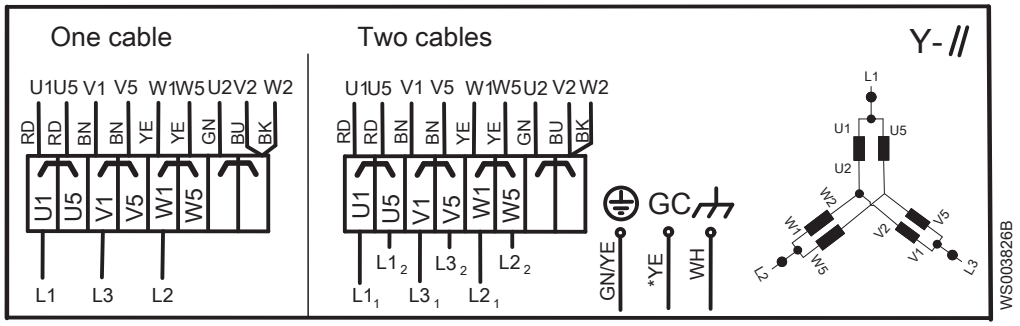

Figure 16: Y-parallel connection

One cable (left) and two cables (right) Y-serial connection. For 3171, only the one-cable diagram applies.

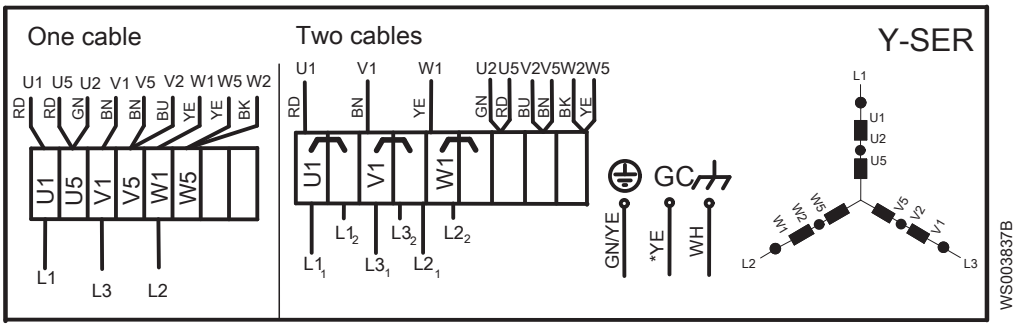

Figure 17: Y-serial connection

Screened cable connection

Cable without separate ground conductor. Screen as ground conductor.

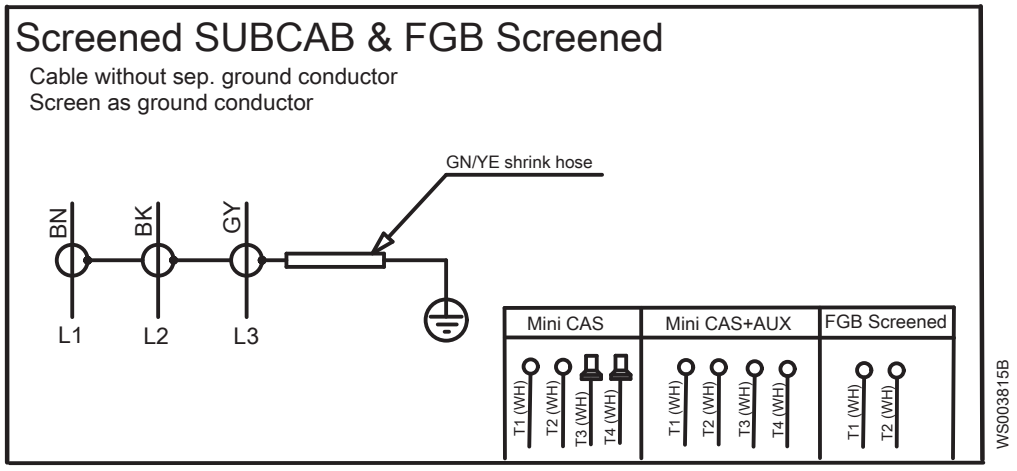

Figure 18: Screened SUBCAB and FGB Screened

* For screened SUBCAB T3 and T4 shall also be twisted separately.

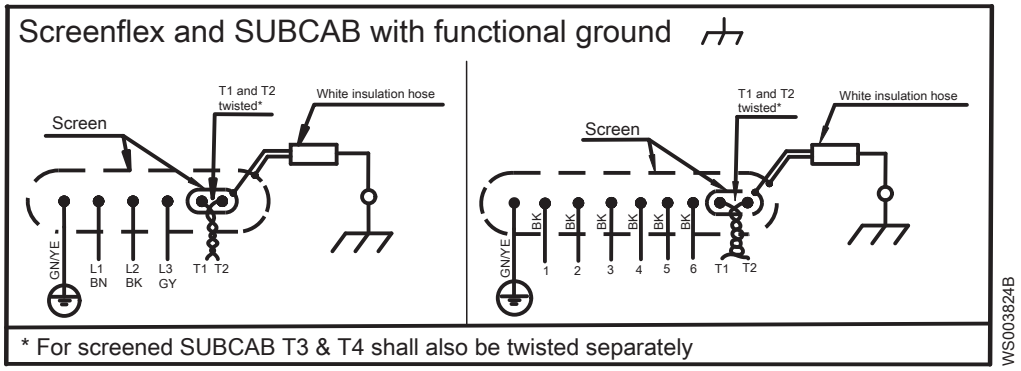

Figure 19: Screenflex and SUBCAB with functional ground

4.2.5 Sensor connection

4.2.5.1 Connection to the pump

Color and marking of control leads

Control	SUBCAB 4GX/7G and Screenflex	SUBCAB AWG	SUBCAB Screened
T1	WH T1	OG	WH T1
T2	WH T2	BU	WH T2
T3	-	-	WH T3
T4	-	-	WH T4

WS003843B

Figure 20: Color and marking of control leads

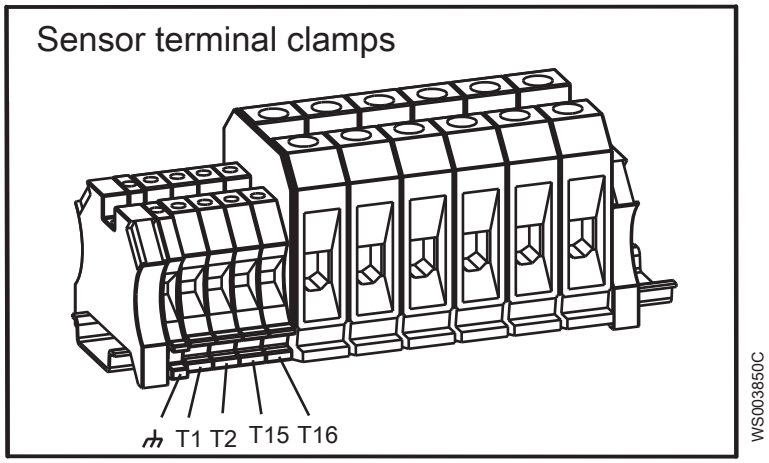

Figure 21: Sensor terminal clamps

FLS 10 and Thermal detectors

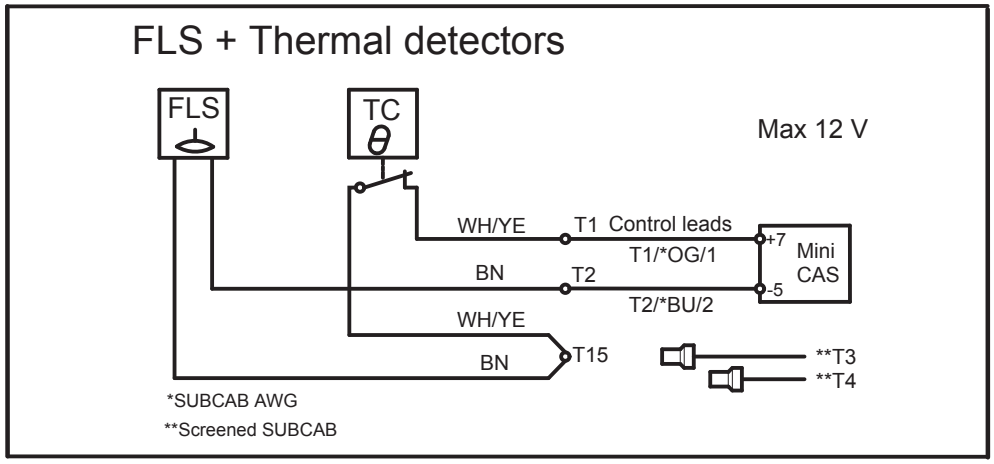

∞ Ohm	Overtemperature
1200 Ohm	OK
430 Ohm	Leakage

FLS 10 and Thermistor

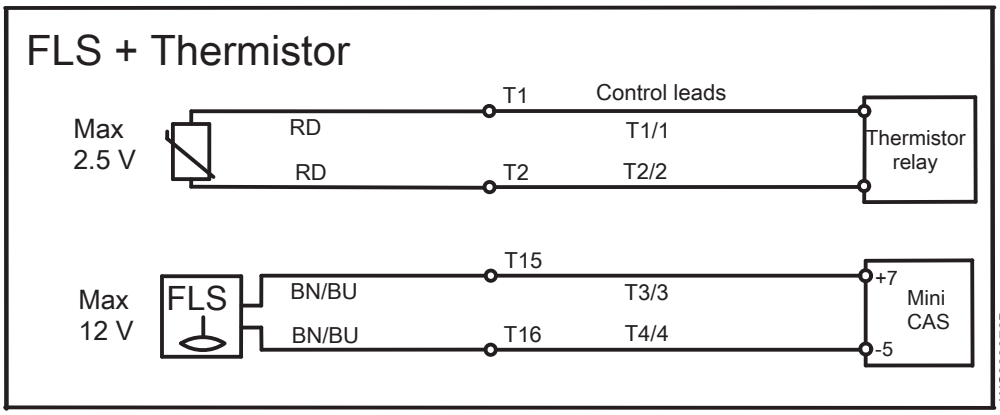

T=25°C (77°F)	R ≤ 100 Ohm
T=135°C (275°F) (T_{REF} –5°C (23°F))	R ≤ 550 Ohm
T=145°C (293°F) (T_{REF} +5°C (41°F))	R ≤ 1330 Ohm

Thermal detectors, FLS disconnected

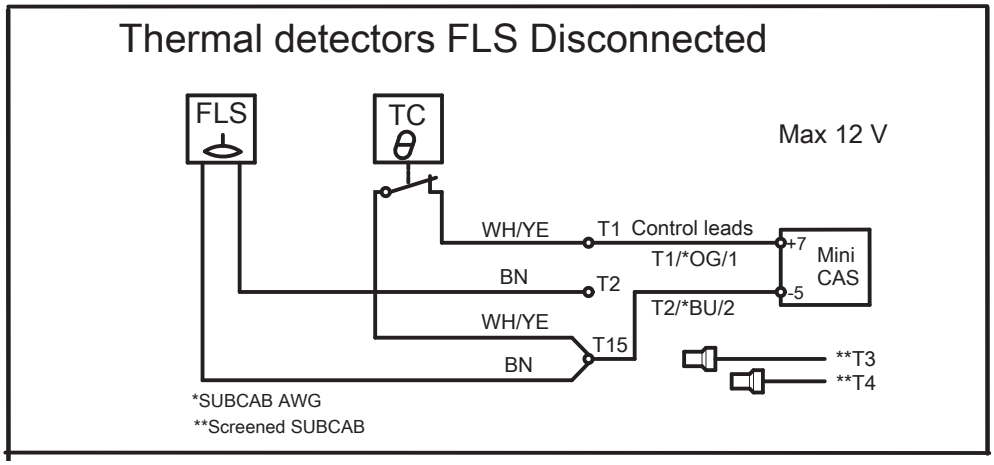

4.2.5.2 Connection to the monitoring equipment

MiniCAS II

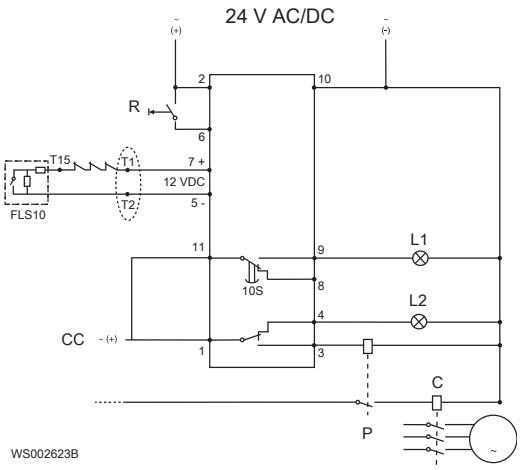

C Pump contactor
CC Control circuit
L1 Caution light (leakage)
L2 Caution light (stator over-temperature)
P Pump main supply
R Reset switch

4.3 T-installation: Bleed air before starting pump

1. Open valve D and bleed out the air. See the following figure.

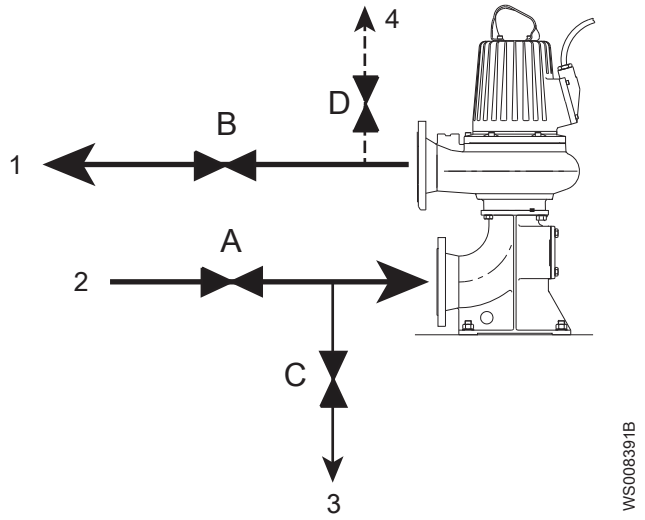

1. Outlet line
2. Inlet line
3. Line to drain
4. Air vent

Figure 22: T-installation, valves A–D

2. Close valve D before the pump is started.

4.4 Check the impeller rotation



CAUTION: Crush Hazard

The starting jerk can be powerful. Make sure nobody is close to the unit when it is started.

1. Start the motor.
2. Stop the motor after a few seconds.
3. Check that the impeller rotates according to this illustration.

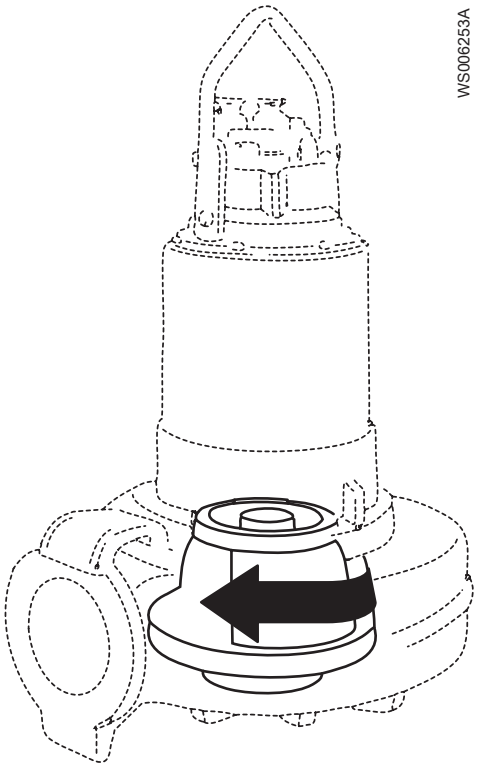

The correct direction of impeller rotation is clockwise when you look at the pump from above.

4. If the impeller rotates in the wrong direction, then transpose two phase leads (3-phase) and do this procedure again.

5 Operation

5.1 Precautions

Before taking the unit into operation, check the following:

- All recommended safety devices are installed.
- The cable and cable entry have not been damaged.
- All debris and waste material has been removed.

NOTICE:

Never operate the pump with the discharge line blocked, or the discharge valve closed.



WARNING: Crush Hazard

Risk of automatic restart.

Distance to wet areas



WARNING: Electrical Hazard

Risk of electrical shock or burn. You must connect an additional ground- (earth-) fault protection device to the grounded (earthed) connectors if persons are likely to come into contact with liquids that are also in contact with the pump or pumped liquid.



CAUTION: Electrical Hazard

Risk of electrical shock or burn. The equipment manufacturer has not evaluated this unit for use in swimming pools. If used in connection with swimming pools then special safety regulations apply.

Noise level

NOTICE:

The sound power level of the product is lower than 70 dB(A). However, in some installations the resulting sound pressure level may exceed 70 dB(A) at certain operating points on the performance curve. Make sure that you understand the noise level requirements in the environment where the product is installed. Failure to do so may result in hearing loss or violation of local laws.

5.2 Estimate zinc anode replacement intervals

The mass and surface area of the zinc anodes are designed to protect the pump surface for 1 year in sea water with an average temperature of 20°C (68°F). Shorter inspection intervals and anode replacement can be required, depending upon the water temperature and the chemical composition as well as the presence of other metals in the vicinity of the pump.

The rate of zinc consumption, and the appropriate inspection intervals, can be estimated by measuring how much zinc is consumed during the first two months following installation.

Anodes are replaced when the anode mass is reduced to a selected fraction of its initial mass. The recommended interval for the selection fraction is 0.25–0.50 (25–50%).

1. Remove, weigh, and reinstall one or more of the exterior zinc anodes before starting up the pump.
2. After two months, remove and weigh the same zinc anode or anodes again.

3. Divide the lapsed time in days (between steps 1 and 2) by the anode weight loss in grams to get the calculated anode consumption rate (days/gram).

   If multiple anodes were weighed, then use the anode which has lost the most weight for this calculation.
4. Calculate future replacement intervals so that they occur when the selected fraction of zinc is remaining.

5.3 Start the pump



CAUTION: Crush Hazard

The starting jerk can be powerful. Make sure nobody is close to the unit when it is started.

NOTICE:

Make sure that the rotation of the impeller is correct. For more information, see Check the impeller rotation.

1. Remove the fuses or open the circuit breaker, and check that the impeller can rotate freely.



WARNING: Crush Hazard

Never put your hand into the pump housing.

2. Conduct insulation test phase to ground. To pass, the value must exceed 5 megaohms.
3. Check that the monitoring equipment works.
4. Start the pump.

6 Maintenance

Precautions

Before starting work, make sure that the safety instructions in the chapter *Introduction and Safety* (page 3) have been read and understood.

DANGER: Crush Hazard

Moving parts can entangle or crush. Always disconnect and lock out power before servicing to prevent unexpected startup. Failure to do so could result in death or serious injury.



WARNING: Biological Hazard

Infection risk. Rinse the unit thoroughly with clean water before working on it.

CAUTION: Crush Hazard

Make sure that the unit cannot roll or fall over and injure people or damage property.

Make sure that you follow these requirements:

- Check the explosion risk before you weld or use electrical hand tools.
- Allow all system and pump components to cool before you handle them.
- Make sure that the product and its components have been thoroughly cleaned.
- Make sure that the work area is well-ventilated before you open any vent or drain valves, remove any plugs, or disassemble the unit.
- Do not open any vent or drain valves or remove any plugs while the system is pressurized. Make sure that the pump is isolated from the system and that pressure is relieved before you disassemble the pump, remove plugs, or disconnect piping.

Ground continuity verification

A ground (earth) continuity test must always be performed after service.

Maintenance guidelines

During the maintenance and before reassembly, always remember to perform these tasks:

- Clean all parts thoroughly, particularly O-ring grooves.
- Change all O-rings, gaskets, and seal washers.
- Lubricate all springs, screws, O-rings with grease.

During the reassembly, always make sure that existing index markings are in line.

The reassembled drive unit must always be insulation-tested and the reassembled pump must always be test-run before normal operation.

6.1 Torque values

All screws and nuts must be lubricated to achieve correct tightening torque. Screws that are screwed into stainless steel must have the threads coated with suitable lubricants to prevent seizing.

If there is a question regarding the tightening torques, please contact the local sales and service representative.

Screws and nuts

Table 1: Stainless steel, A2 and A4, torque Nm (ft-lbs)

Property class	M4	M5	M6	M8	M10	M12	M16	M20	M24	M30
50	1.0 (0.74)	2.0 (1.5)	3.0 (2.2)	8.0 (5.9)	15 (11)	27 (20)	65 (48)	127 (93.7)	220 (162)	434 (320)
70, 80	2.7 (2)	5.4 (4)	9.0 (6.6)	22 (16)	44 (32)	76 (56)	187 (138)	364 (268)	629 (464)	1240 (915)
100	4.1 (3)	8.1 (6)	14 (10)	34 (25)	66 (49)	115 (84.8)	248 (183)	481 (355)	–	–

Table 2: Steel, torque Nm (ft-lbs)

Property class	M4	M5	M6	M8	M10	M12	M16	M20	M24	M30
8.8	2.9 (2.1)	5.7 (4.2)	9.8 (7.2)	24 (18)	47 (35)	81(60)	194 (143)	385 (285)	665 (490)	1310 (966.2)
10.9	4.0 (2.9)	8.1 (6)	14 (10)	33 (24)	65 (48)	114 (84)	277 (204)	541 (399)	935 (689)	1840 (1357)
12.9	4.9 (3.6)	9.7 (7.2)	17 (13)	40 (30)	79 (58)	136 (100)	333 (245)	649 (480)	1120 (825.1)	2210 (1630)

Hexagon screws with countersunk heads

For hexagon socket head screws with countersunk head, maximum torque for all property classes must be 80% of the values for property class 8.8 above.

6.2 Change the coolant

This image shows the plugs that are used to change the coolant.

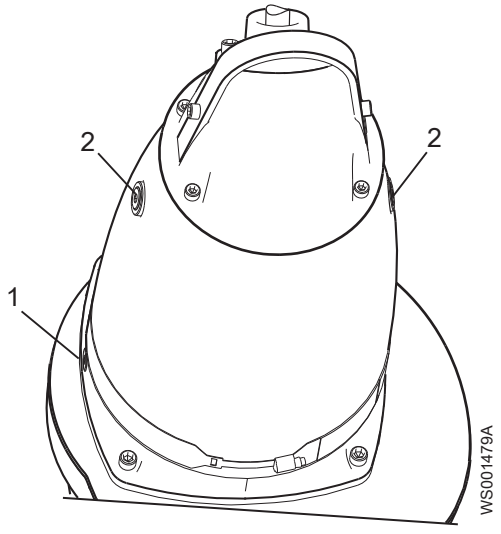

Figure 23: With a cooling jacket

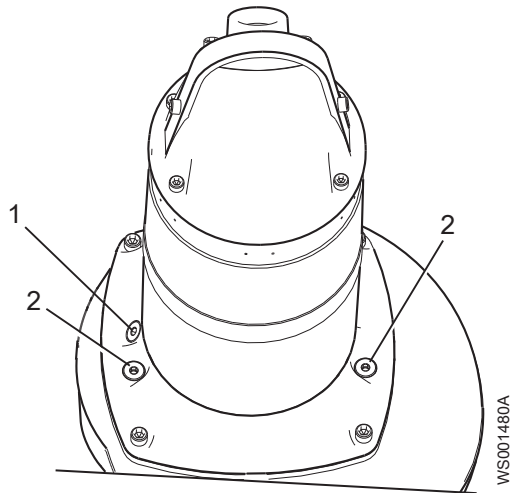

Figure 24: Without a cooling jacket

1. Inspection plug
2. Coolant plugs

6.2.1 Empty the coolant

CAUTION: Compressed Gas Hazard

Air inside the chamber may cause parts or liquid to be propelled with force. Be careful when opening. Hold a rag over the plug to prevent liquid from spraying out.

1. Empty the coolant in the inspection chamber:

a) Remove the inspection plug.

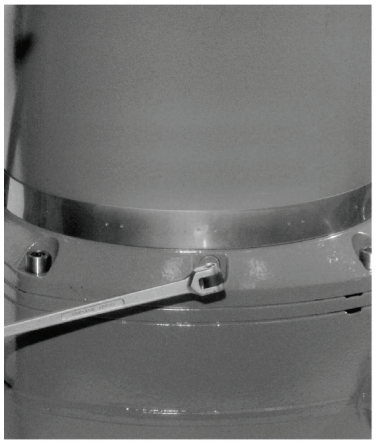

Figure 25: With a cooling jacket

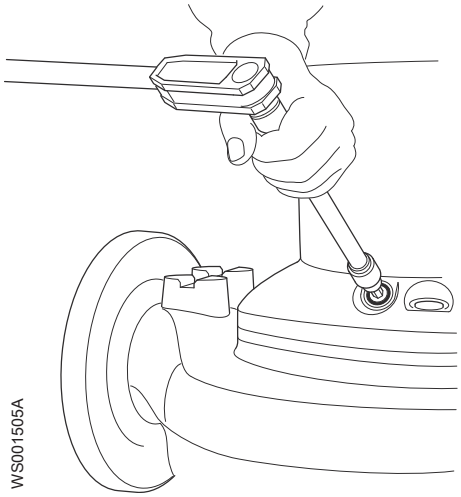

Figure 26: Without a cooling jacket

b) Pump out any coolant from the inspection chamber, as shown here.

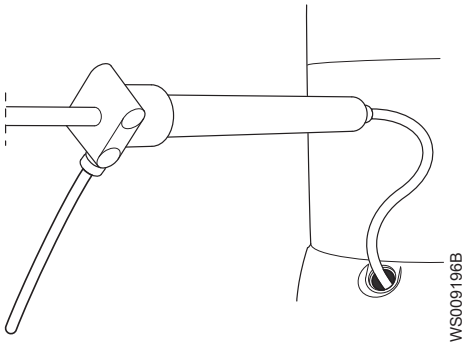

Figure 27: With a cooling jacket

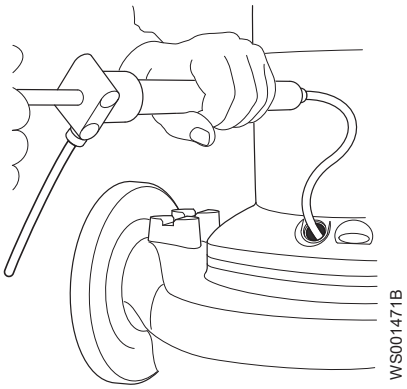

Figure 28: Without a cooling jacket

c) Fit a new O-ring and re-install the inspection plug. Tighten the plug.
Tightening torque: 44 Nm (33 ft-lbs)

2. To empty the coolant with the pump upright, do the following:
This method is applicable only for pumps without cooling jackets.
a) Remove the coolant plugs.



CAUTION: Compressed Gas Hazard

Air inside the chamber may cause parts or liquid to be propelled with force. Be careful when opening. Hold a rag over the plug to prevent liquid from spraying out.

b) Use a pump to remove the coolant.

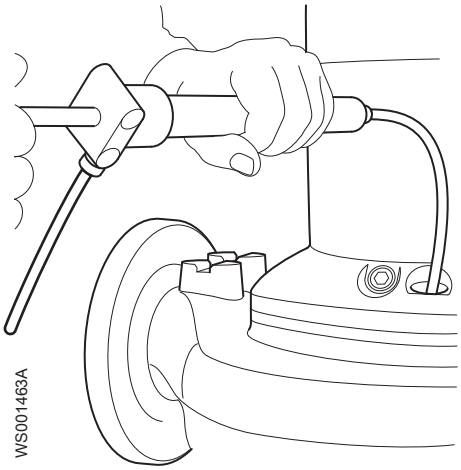

3. If it is necessary to separate the drive unit from the hydraulic unit, then do the following:
   a) Carefully open the coolant plugs to relieve any built-up pressure inside the cooling jacket.

   CAUTION: Compressed Gas Hazard

   Air inside the chamber may cause parts or liquid to be propelled with force. Be careful when opening. Hold a rag over the plug to prevent liquid from spraying out.

   b) After venting any built-up pressure in the cooling jacket, re-install the coolant plugs.
   c) Remove the pump housing screws.
   d) Remove the drive unit from the pump housing.

   NOTICE:

   Do not allow the weight of the pump to rest on any portion of the impeller. The impeller must not be allowed to make contact with the concrete floor or other hard or rough surfaces.

4. To empty the coolant with the pump in a horizontal position, do the following:
   a) Place the pump horizontally, so that one of the coolant plugs is at the lowest point of the pump, to ensure that the coolant will drain completely.

      It is important to empty all of the coolant.
   b) Place a container under the pump.
   c) Remove the coolant plugs and empty the coolant.

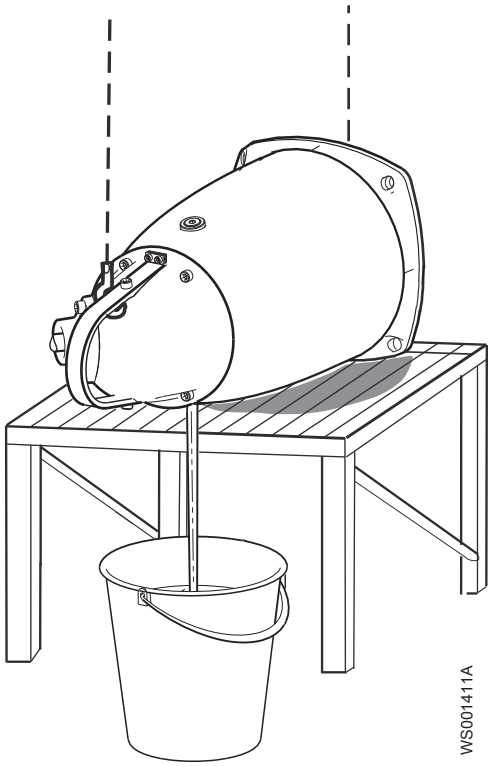

Figure 29: With a cooling jacket

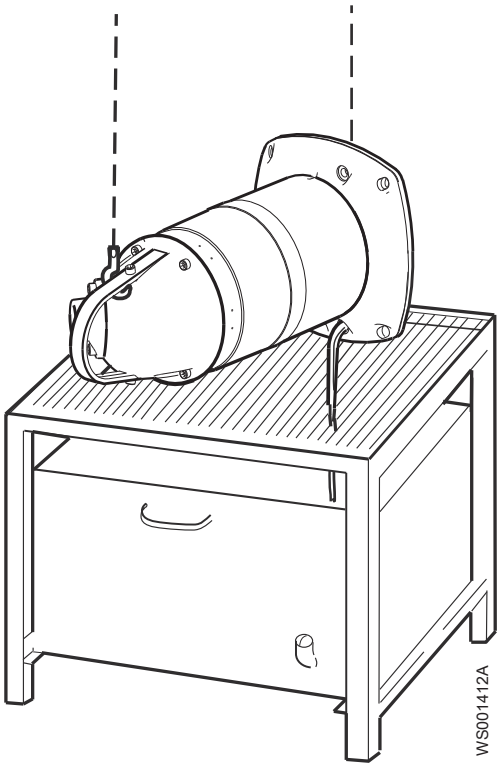

Figure 30: Without a cooling jacket

6.2.2 Fill with coolant

Use a coolant that is a mixture of 70% deionized or distilled water, and 30% DOWCAL 200™ monopropylene glycol. If DOWCAL 200™ from Dow Chemical Company is not available, then contact your local Xylem representative. The monopropylene glycol must fulfill the Xylem material standard M0800.82.0002.

NOTICE:

Deionized or distilled water must be used in the water-glycol mixture.

If the pumped liquid includes potable water or substances to be ingested, then contact your local Xylem sales representative.

1. Fill with coolant until it overflows through the opposite hole, as shown here.

Pump	Quantity, L (qt.)	
	With cooling jacket	Without cooling jacket
3171.091/.095/.181/.185/.350/.390/.660/.670	16.7 (17.6)	4.6 (4.9)
3171.800/.810/.820/.830/.840/.850/.860/.870	24 (25.4)	4.6 (4.9)

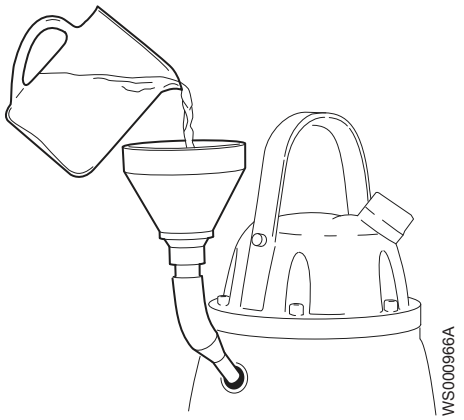

Figure 31: With cooling jacket

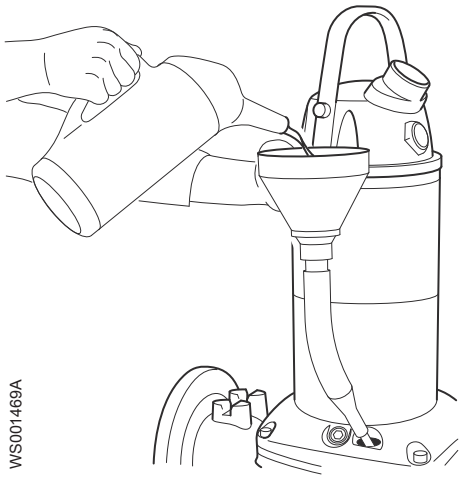

Figure 32: Without cooling jacket

2. Fit new O-rings and re-install the coolant plugs. Tighten the plugs.
   Tightening torque: 44 Nm (33 ft-lb)

6.3 Service the pump

Type of service	Purpose	Inspection interval
Initial inspection	A Xylem-authorized personnel checks the pump condition. From the results, the personnel recommends the intervals for the periodical inspection and major overhaul for the installation.	Within the first year of operation.
Periodical inspection	The inspection prevents operational interruptions and machine breakdowns. The measures to increase performance and pump efficiency are decided for each application. They can include such things as impeller trimming, wear part control and replacement, control of zinc-anodes and control of the stator.	Up to 12,000 hours or three years, whichever comes first. Applies to normal applications and operating conditions at media (liquid) temperatures <40°C (104°F).
Major overhaul	The overhaul lengthens the operating lifetime of the product. It includes the replacement of key components and the measures that are taken during an inspection.	Up to 24,000 hours or six years, whichever comes first. Applies to normal applications and operating conditions at media (liquid) temperatures <40°C (104°F).

NOTICE:

Shorter intervals may be required when the operating conditions are extreme, for example with very abrasive or corrosive applications or when the liquid temperatures exceed 40°C (104°F).

6.3.1 Inspection

Service item	Action
Cable	1. If the outer jacket is damaged, replace the cable. 2. Check that the cables do not have any sharp bends and are not pinched.
Connection to power	Check that the connections are properly secured.
Electrical cabinets	Check that they are clean and dry.
Impeller	1. Check the impeller clearance. 2. Adjust the impeller, if necessary.

Service item	Action
Inspection chamber	1. Drain all liquid, if any. 2. Check the resistance of the leakage sensor. Normal value approximately1200 ohms, alarm approximately 430 ohms.
Insulation	Use a megger maximum 1000 V. 1. Check that the resistance between the ground (earth) and phase lead is more than 5 megohms. 2. Conduct a phase-to-phase resistance check.
Junction box	Check that it is clean and dry.
Level regulators	Check the condition and functionality.
Lifting device	Check that the local safety regulations are followed.
Lifting handle	1. Check the screws. 2. Check the condition of the lifting handle and the chain. 3. If necessary, replace.
O-rings	1. Replace the oil plug O-rings. 2. Replace the O-rings at the entrance or junction cover. 3. Grease the new O-rings.
Overload protection and other protections	Check the correct settings.
Personnel safety devices	Check the guard rails, covers, and other protections.
Rotation direction	Check the impeller rotation.
Seal housing	1. Fill with new coolant, if necessary. 2. Check that the freezing point is lower than -13°C (9°F).
Terminal board	Check that the connections are properly secured.
Thermal contacts	Normally closed circuit; interval 0–1 ohm.
Thermistor	Check the resistance is between 20–250 ohms and the measured voltage is maximum 2 V DC.
Voltage and amperage	Check the running values.

6.3.2 Major overhaul

The basic repair kit includes O-rings, seals, and bearings.

For a major overhaul, do the following in addition to the tasks listed under Inspection.

Service item	Action
Support and main bearing	Replace the bearings with new bearings.
Mechanical seal	Replace with new seal units.

6.3.3 Service in case of alarm

For information about indication values for sensors, see *Sensor connection* (page 30).

Alarm source	Action
FLS10	1. Drain the fluid in the inspection chamber. 2. Check the coolant level. Fill with new coolant if necessary. 3. Check the freezing point (lower than -13°C or 9°F). Check the inspection chamber again after one week of operation. If leakage has occurred, then do the following: 1. Drain the fluid. 2. Change the mechanical seal unit. 3. Replace with new coolant.

Alarm source	Action
The thermistor/Thermal contact	1. Check the coolant level (pump with cooling jacket). 2. Check the start and stop levels.
The overload protection	Check that the impeller can rotate freely.

6.4 Replace the impeller

Required tools:

- 12 mm hexagon bit adapter with an extension of at least a 100 mm (4 in)
- Rod (wood or plastic) for locking the impeller in place

CAUTION: Cutting Hazard

Worn parts can have sharp edges. Wear protective clothing.

NOTICE:

When laying the pump on its side, do not allow the weight of the pump to rest on any portion of the impeller. The impeller must not be allowed to make contact with the concrete floor or other hard and rough surfaces.

NOTICE:

If you fail with the impeller installation, you must redo the installation procedure from the beginning.

6.4.1 Replace the impeller for wet installation

6.4.1.1 Remove the impeller: wet installation

CAUTION: Cutting Hazard

Sharp edges. Wear protective clothing.

1. Place the pump in a horizontal position.
2. Remove the impeller:
   a) Remove the flush valve cover and its O-ring.
   b) Lock the impeller in place by inserting a rod through the hole.
   c) Remove the impeller screw.

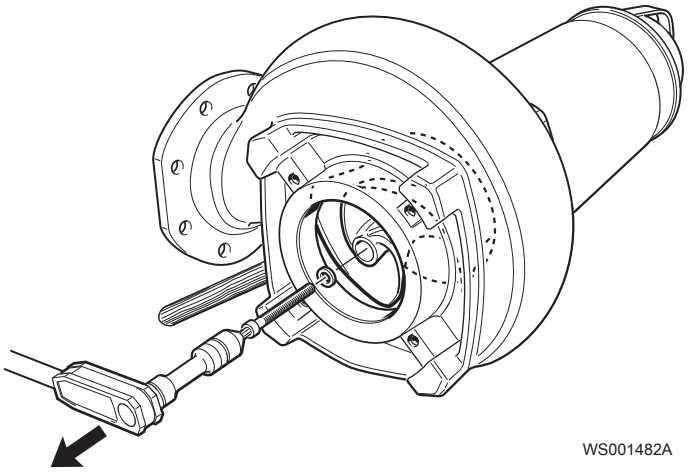

   d) Turn the adjustment screw counterclockwise until the impeller breaks free from the shaft.

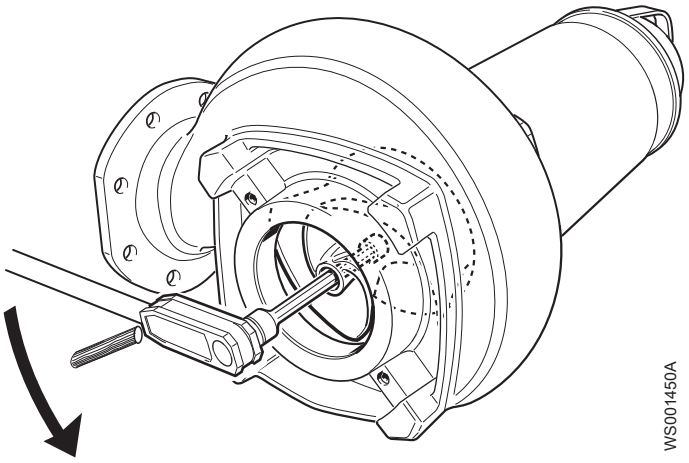

e) Hand-tighten the impeller screw to prevent it from falling off.

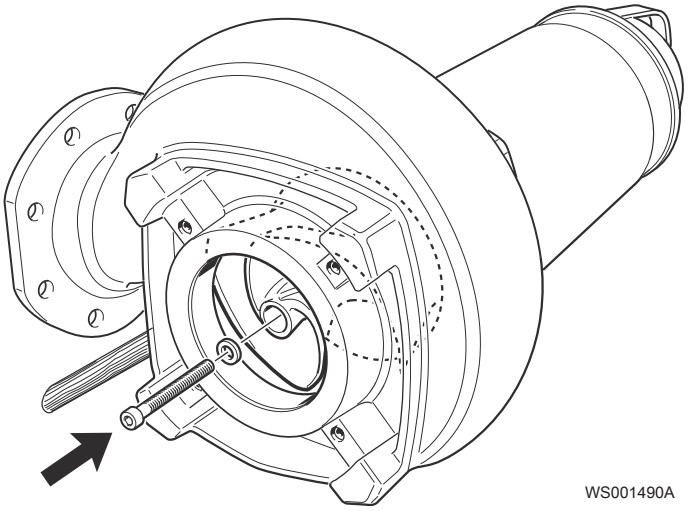

f) Remove the rod.

3. Raise the pump.
4. Remove the drive unit from the pump housing:
   a) Remove the pump housing screws.

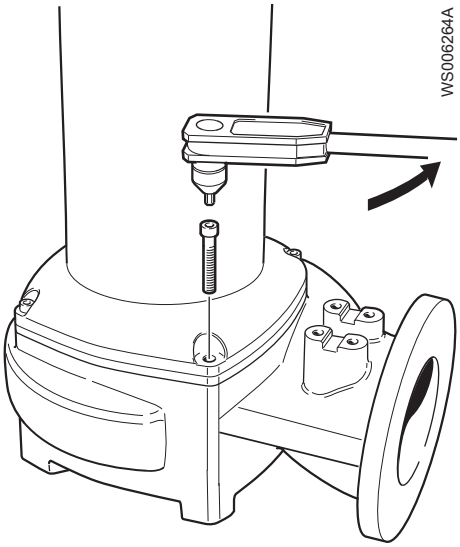

b) Remove the drive unit from the pump housing.

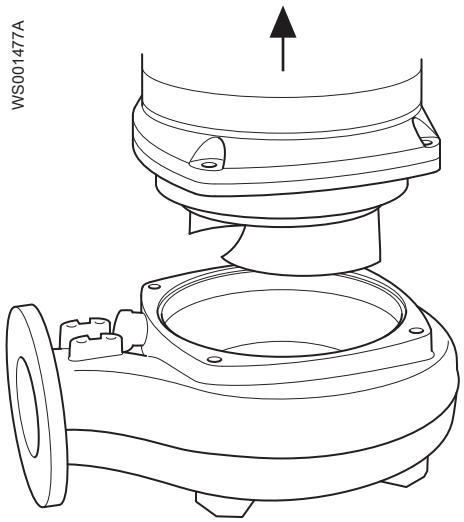

5. Remove the impeller:
   a) Place the drive unit horizontally.
   b) Remove the impeller screw.

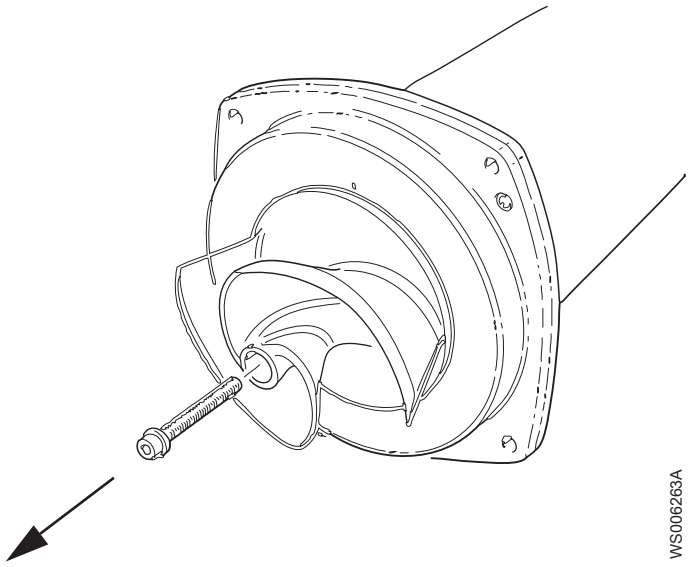

   c) Remove the impeller and the conical sleeve.

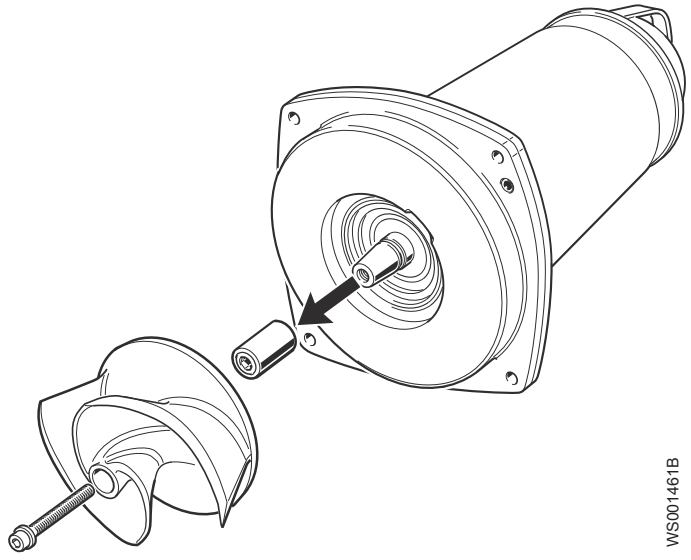

6.4.1.2 Install the impeller: wet installation

1. Prepare the shaft:
   a) Polish off any flaws with a fine emery cloth.
      The end of the shaft must be clean and free from burrs.
   b) Coat the inner conic, the outer cylindrical surfaces, and the thread of the conical sleeve with a thin layer of grease.
      The proper lubrication is grease for bearings, for example Exxon Mobil Unirex N3, Mobil Mobilith SHC 220 or equivalent.

   NOTICE:
   Surplus grease can cause the impeller to become loose. Remove surplus grease from conical and/or cylindrical surfaces of shafts and/or sleeves.

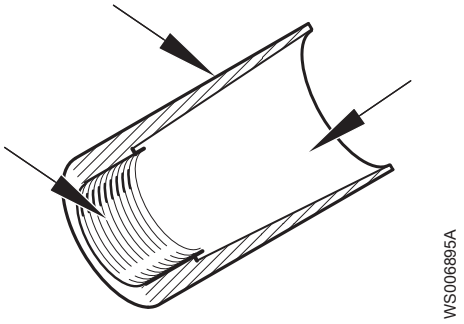

2. Mount the impeller:
   a) Lubricate the threads of the impeller screw and the washer.
      Always use a new impeller screw.
   b) Adjust the adjustment screw so that it is flush with the sleeve.

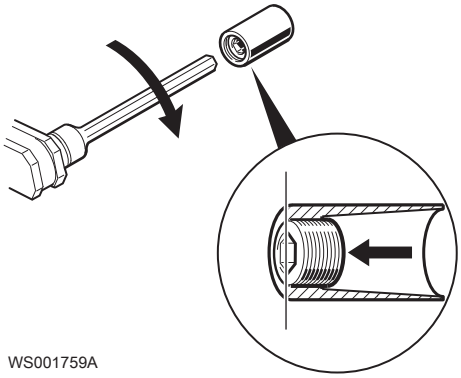

   c) Fit the sleeve and impeller to the shaft.
   d) Hand-tighten the impeller screw to prevent it from falling off.

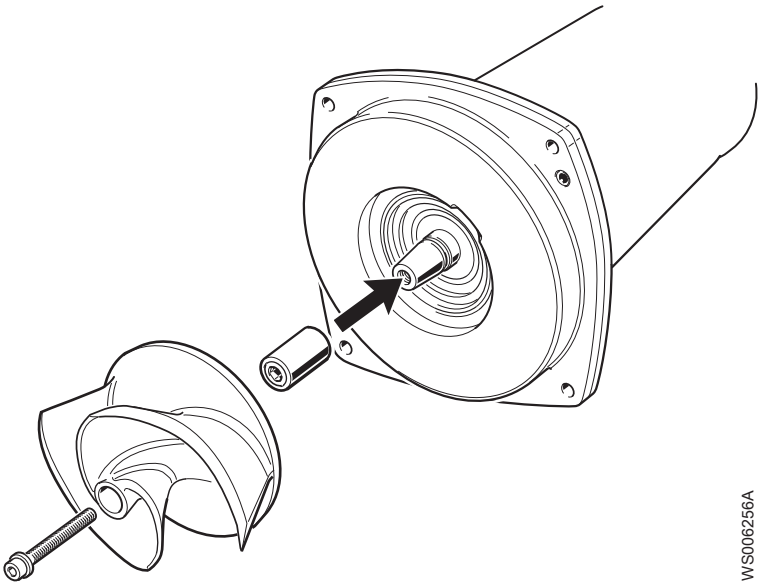

3. Fit the pump housing:
   a) Fit a new and lubricated O-ring on the seal housing cover.
   b) Lubricate the pump housing screws.
   c) Raise the drive unit.
   d) Place the drive unit into the pump housing.
   e) Adjust its position so that the inspection hole is on the same side as the flush valve.
   f) Tighten the screws in diagonal sequence.
      For tightening torque, see *Torque values* (page 36).

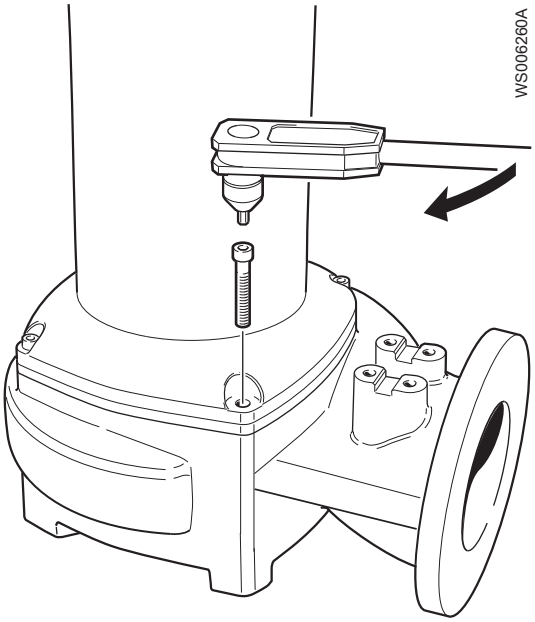

4. Remove the impeller screw:
   a) Place the pump horizontally.
   b) Lock the impeller in place by inserting a rod through the hole.
   c) Remove the impeller screw and the washer.

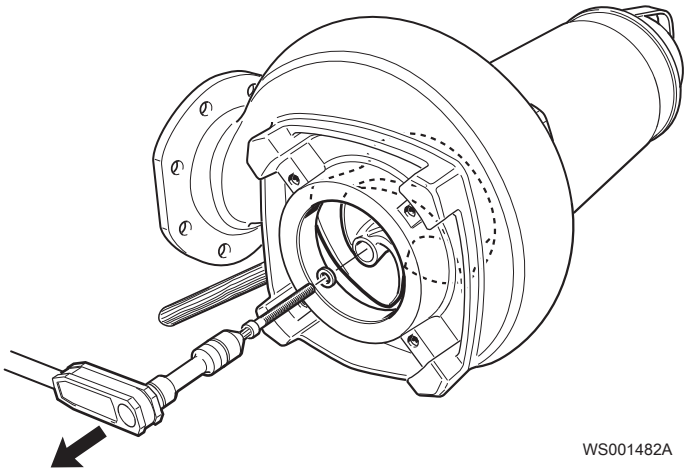

5. Adjust the impeller:
   a) Using a hexagon-bit adapter, turn the adjustment screw clockwise until the impeller makes contact with the pump housing.
      For tightening torque, see *Torque values* (page 36).
   b) Tighten it a further 1/8 turn (45°).

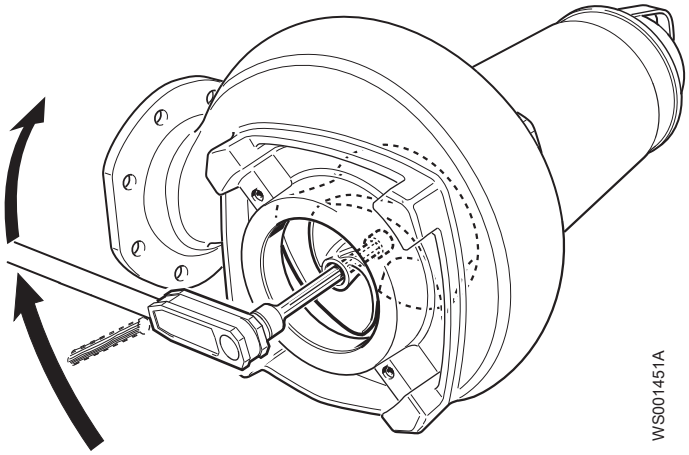

6. Fasten the impeller:
   a) Fit the lubricated washer and impeller screw.
   b) Tighten the impeller screw.
      For tightening torque, see *Torque values* (page 36).
   c) Tighten it a further 1/8 turn (45°).

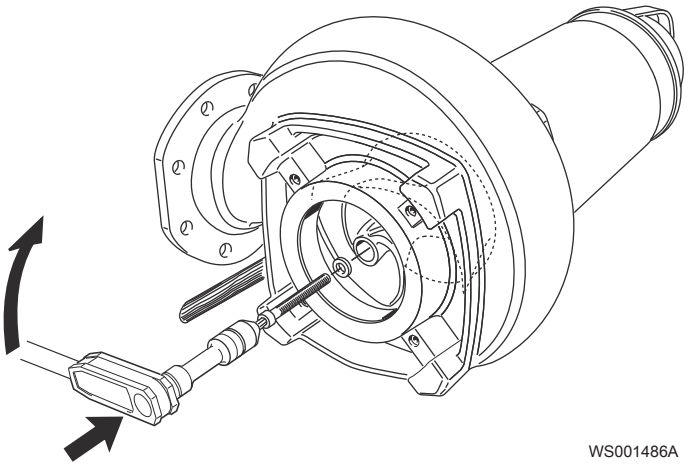

   d) Remove the rod that is used to lock the impeller.

e) Fit the O-ring and flush valve cover and fasten it with screws.
For tightening torque, see *Torque values* (page 36).
f) Check that the impeller can rotate freely.

WARNING: Crush Hazard
Beware of the pinch point hazard between the rotating impeller and the guide pin.

7. Check that the clearance between the impeller and the insert ring is 0.1–0.5 mm (0.004–0.02 in).

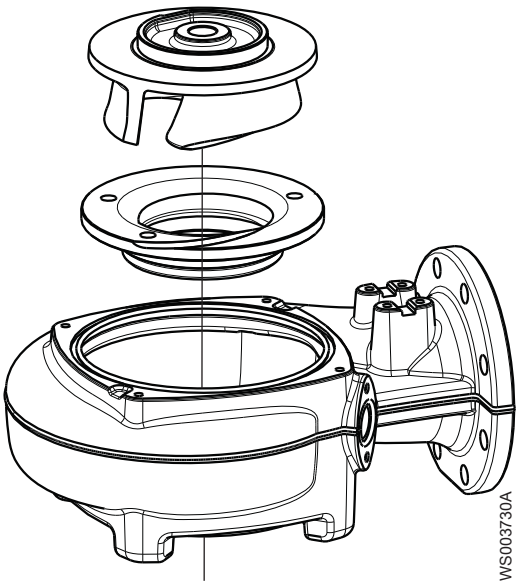

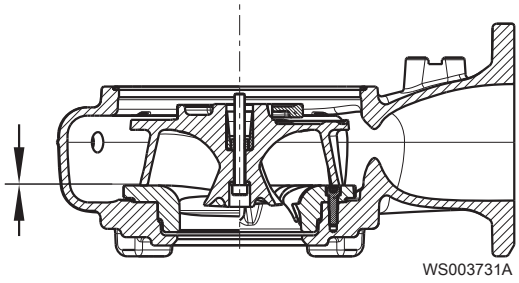

8. If applicable, adjust the clearance to 0.1–0.5 mm (0.004–0.02 in) between the guide pin and the impeller.

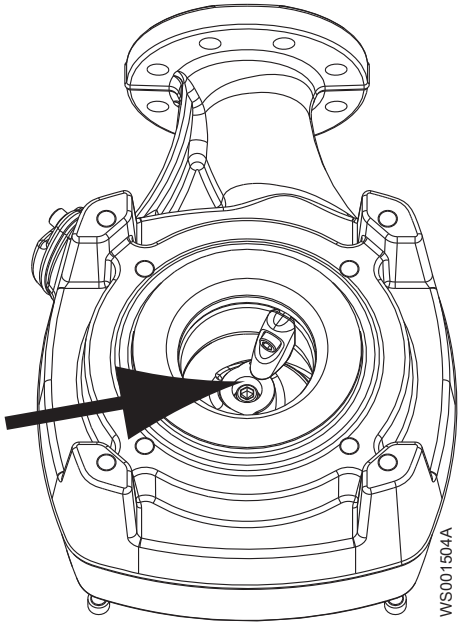

6.4.2 Replace the impeller for dry installation

6.4.2.1 Remove the impeller: dry installation

1. Remove the drive unit from the pump housing:

a) Remove the pump housing screws.

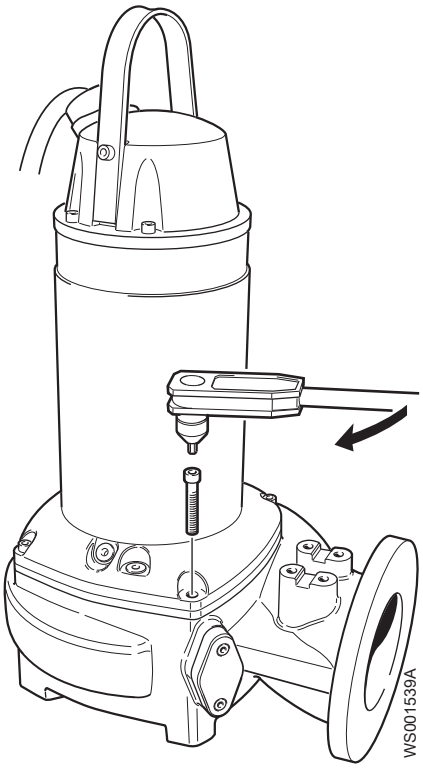

b) Remove the drive unit from the pump housing.

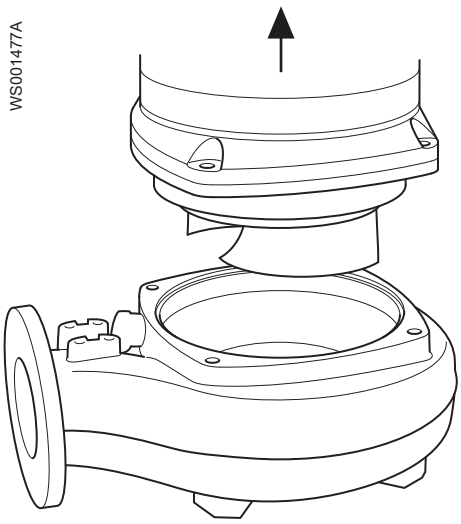

2. Remove the impeller:
   a) Place the drive unit horizontally.
   b) Lock the impeller as shown in the figure.
   c) Remove the impeller screw.

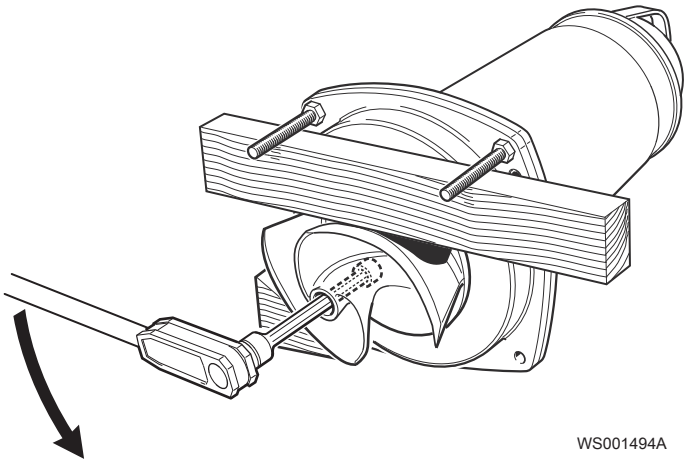

d) Turn the adjustment screw counterclockwise until the impeller breaks free from the shaft.
e) Remove the impeller and the conical sleeve.

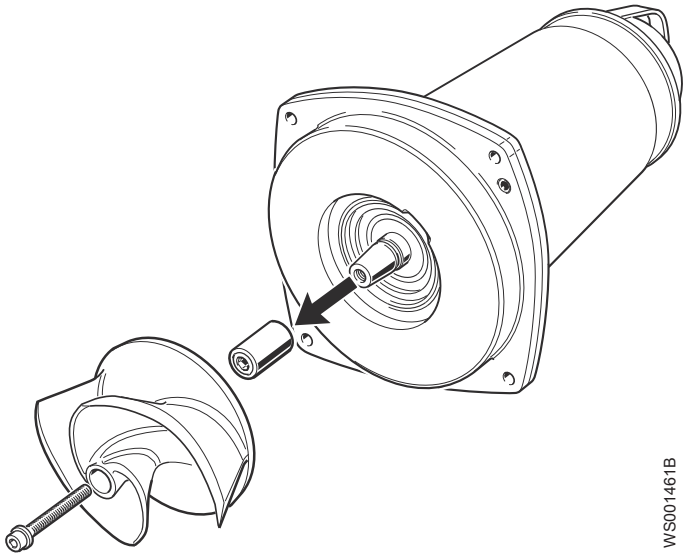

6.4.2.2 Install the impeller: dry installation

1. Prepare the shaft:
   a) Polish off any flaws with a fine emery cloth.

      The end of the shaft must be clean and free from burrs.
   b) Coat the inner conic, the outer cylindrical surfaces, and the thread of the conical sleeve with a thin layer of grease.

      The proper lubrication is grease for bearings, for example Exxon Mobil Unirex N3, Mobil Mobilith SHC 220 or equivalent.

      NOTICE:

      Surplus grease can cause the impeller to become loose. Remove surplus grease from conical and/or cylindrical surfaces of shafts and/or sleeves.

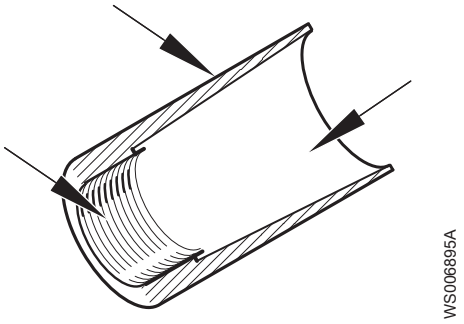

2. Mount the impeller:
   a) Lubricate the threads of the impeller screw and the washer. Always use a new impeller screw.
   b) Unscrew the adjustment screw approximately 5 mm (0.2 in.).



   c) Measure and note the distance A.

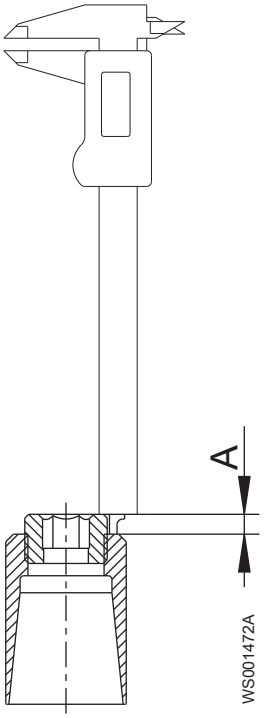

   d) Fit the sleeve and the impeller to the shaft.

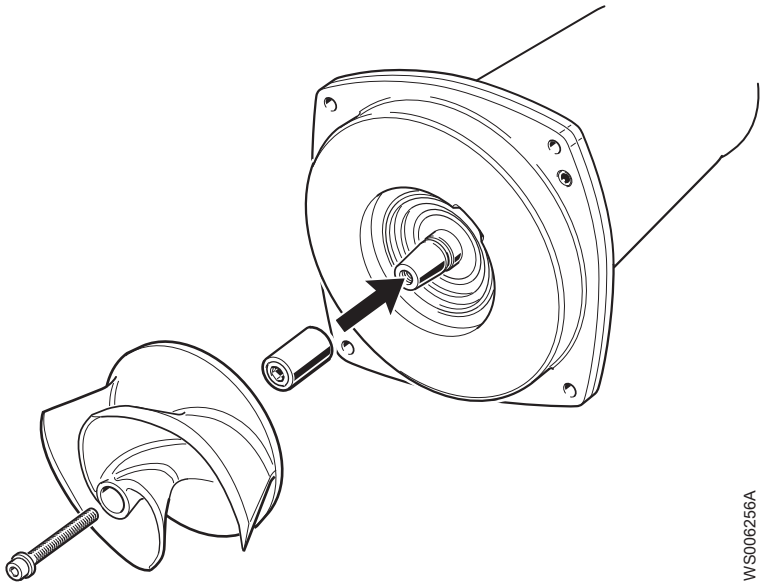

e) Fit the impeller screw and washer and tighten.

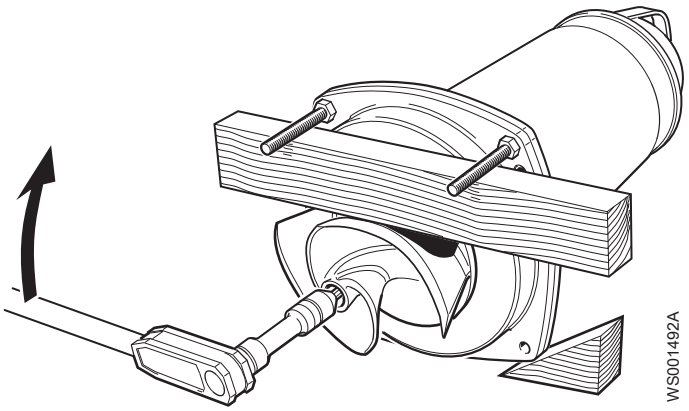

3. Make sure that the O-ring is removed from the seal housing cover.

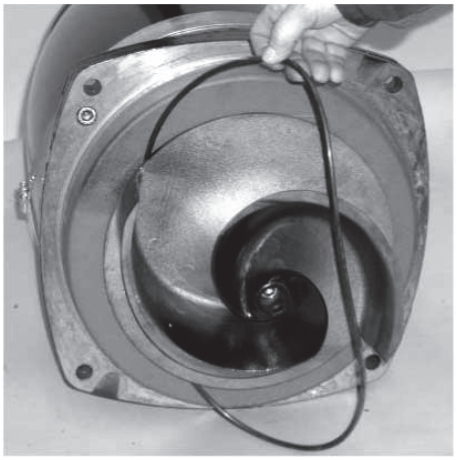

4. Measure the trim distance:
   a) Place the drive unit in the pump housing.

      Make sure that the drive unit is parallel with the pump housing by hand-tightening the pump housing screws.

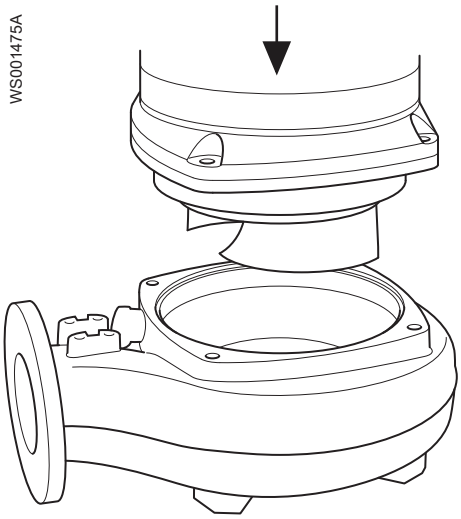

b) Check the distance between the seal housing cover and the pump housing with a feeler gauge.

Check diagonally at four points.

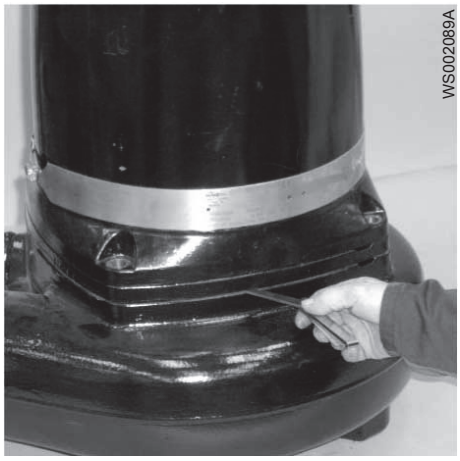

c) Note the largest distance B.

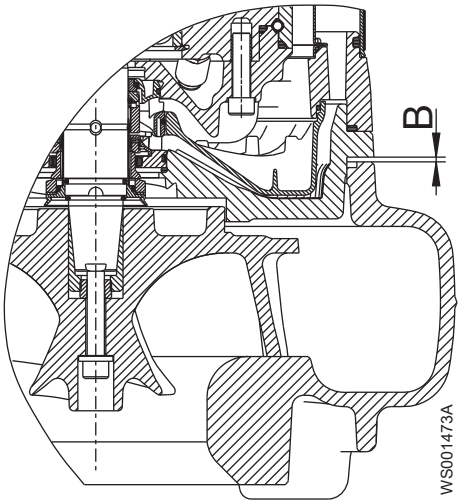

d) Lift the drive unit out of the pump housing and remove the impeller and conical sleeve.

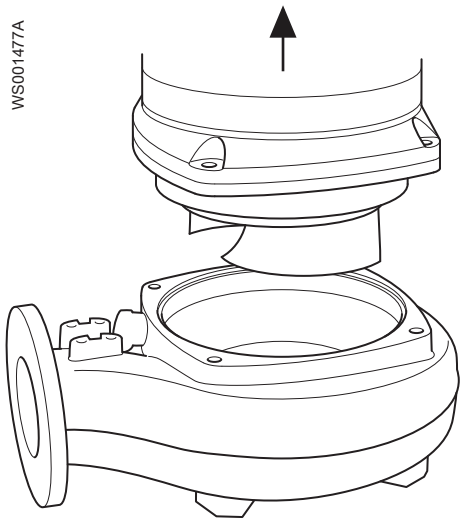

5. Trim to the correct distance:
   a) Calculate the measure C according to the formula shown in the image.

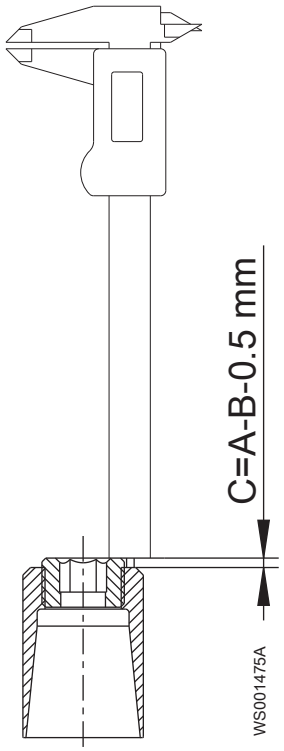

   b) Turn the adjustment screw until C is reached.
6. Fasten the impeller:
   a) Fit the sleeve, impeller, lubricated washer with a lubricated impeller screw.
   b) Tighten the impeller screw.
      For tightening torque, see *Torque values* (page 36).
   c) Tighten it further 1/8 turn (45°).

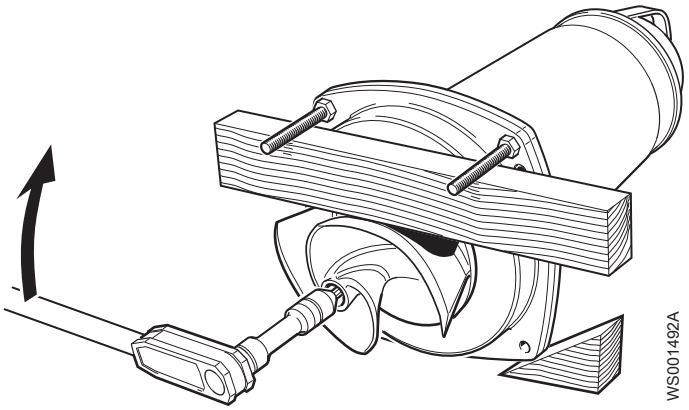

7. Install the drive unit in the pump housing:
   a) Fit a new and lubricated O-ring to the seal housing cover.

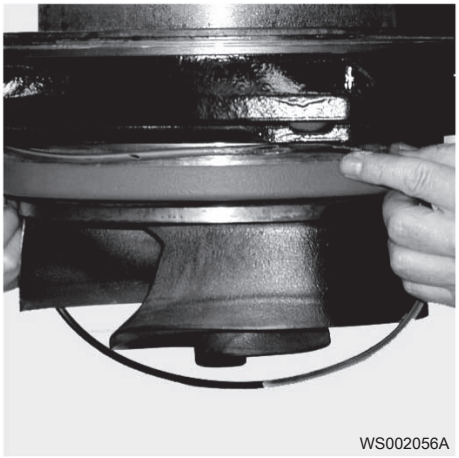

   b) Place the drive unit in the pump housing.

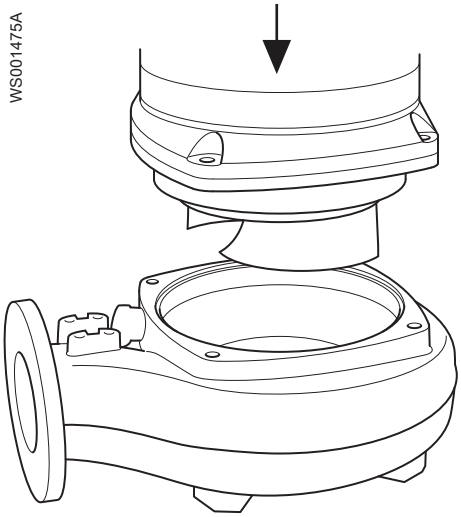

   c) Adjust the position of the drive unit so that the inspection hole is on the same side as the flush valve.
   d) Tighten the lubricated screws diagonally.
      For tightening torque, see *Torque values* (page 36).

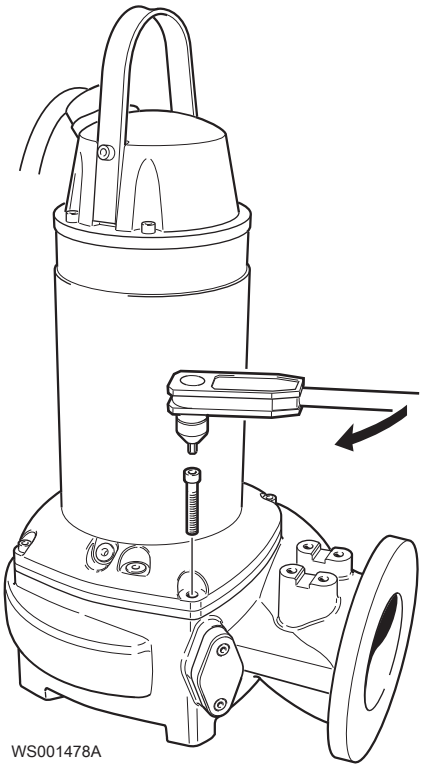

If you need to adjust the impeller, redo the replace the impeller procedure from the beginning.

7 Troubleshooting

Introduction



DANGER: Electrical Hazard

Troubleshooting a live control panel exposes personnel to hazardous voltages. Electrical troubleshooting must be done by a qualified electrician.

Follow these guidelines when troubleshooting:

- Disconnect and lock out the power supply except when conducting checks that require voltage.
- Make sure that no one is near the unit when the power supply is reconnected.
- When troubleshooting electrical equipment, use the following:
  - Universal instrument multimeter
  - Test lamp (continuity tester)
  - Wiring diagram

7.1 The pump does not start



DANGER: Crush Hazard

Moving parts can entangle or crush. Always disconnect and lock out power before servicing to prevent unexpected startup. Failure to do so could result in death or serious injury.

NOTICE:

Do NOT override the motor protection repeatedly if it has tripped. Doing so may result in equipment damage.

Cause	Remedy
An alarm signal has been triggered on the control panel.	Check that: • The impeller rotates freely. • The sensor indicators do not indicate an alarm. • The overload protection is not tripped. If the problem still persists: Contact the local sales and service representative.
The pump does not start automatically, but can be started manually.	Check that: • The start level regulator is functioning. Clean or replace if necessary. • All connections are intact. • The relay and contactor coils are intact. • The control switch (Man/Auto) makes contact in both positions. Check the control circuit and functions.
The installation is not receiving voltage.	Check that: • The main power switch is on. • There is control voltage to the start equipment. • The fuses are intact. • There is voltage in all phases of the supply line. • All fuses have power and that they are securely fastened to the fuse holders. • The overload protection is not tripped. • The motor cable is not damaged.

Cause	Remedy
The impeller is stuck.	Clean: • The impeller • The sump in order to prevent the impeller from clogging again.

Always state the serial number of your product, see *Product Description* (page 10).

7.2 The pump does not stop when a level sensor is used



DANGER: Crush Hazard

Moving parts can entangle or crush. Always disconnect and lock out power before servicing to prevent unexpected startup. Failure to do so could result in death or serious injury.

Cause	Remedy
The pump is unable to empty the sump to the stop level.	Check that: • There are no leaks from the piping and/or discharge connection. • The impeller is not clogged. • The non-return valve(s) are functioning properly. • The pump has adequate capacity. For information: Contact the local sales and service representative.
There is a malfunction in the level-sensing equipment.	• Clean the level regulators. • Check the functioning of the level regulators. • Check the contactor and the control circuit. • Replace all defective items.
The stop level is set too low.	Raise the stop level.

Always state the serial number of your product, see *Product Description* (page 10).

7.3 The pump starts-stops-starts in rapid sequence

Cause	Remedy
The pump starts due to back-flow which fills the sump to the start level again.	Check that: • The distance between the start and stop levels is sufficient. • The non-return valve(s) work(s) properly. • The length of the discharge pipe between the pump and the first non-return valve is sufficiently short.
The self-holding function of the contactor malfunctions.	Check: • The contactor connections. • The voltage in the control circuit in relation to the rated voltages on the coil. • The functioning of the stop-level regulator. • Whether the voltage drop in the line at the starting surge causes the contactor's self-holding malfunction.

Always state the serial number of your product, see *Product Description* (page 10).

7.4 The pump runs but the motor protection trips



DANGER: Crush Hazard

Moving parts can entangle or crush. Always disconnect and lock out power before servicing to prevent unexpected startup. Failure to do so could result in death or serious injury.

NOTICE:

Do NOT override the motor protection repeatedly if it has tripped. Doing so may result in equipment damage.

Cause	Remedy
The motor protection is set too low.	Set the motor protection according to the data plate and if applicable the cable chart.
The impeller is difficult to rotate by hand.	• Clean the impeller. • Clean out the sump. • Check that the impeller is properly trimmed.
The drive unit is not receiving full voltage on all three phases.	• Check the fuses. Replace fuses that have tripped. • If the fuses are intact, then notify a certified electrician.
The phase currents vary, or they are too high.	Contact the local sales and service representative.
The insulation between the phases and ground in the stator is defective.	1. Use an insulation tester. With a 1000 V DC megger, check that the insulation between the phases and between any phase and ground is > 5 megaohms. 2. If the insulation is less, then do the following: Contact the local sales and service representative.
The density of the pumped fluid is too high.	Make sure that the maximum density is 1100 kg/m3 (9.2 lb/US gal) • Change the impeller, or • Change to a more suitable pump • Contact the local sales and service representative.
There is a malfunction in the overload protection.	Replace the overload protection.

Always state the serial number of your product, see *Product Description* (page 10).

7.5 The pump delivers too little or no water



DANGER: Crush Hazard

Moving parts can entangle or crush. Always disconnect and lock out power before servicing to prevent unexpected startup. Failure to do so could result in death or serious injury.

NOTICE:

Do NOT override the motor protection repeatedly if it has tripped. Doing so may result in equipment damage.

Cause	Remedy
The impeller rotates in the wrong direction.	• If it is a 3-phase pump, then transpose two phase leads. • If it is a 1-phase pump, then do the following: Contact the local sales and service representative.
One or more of the valves are set in the wrong positions.	• Reset the valves that are set in the wrong position. • Replace the valves, if necessary. • Check that all valves are correctly installed according to media flow. • Check that all valves open correctly.
The impeller is difficult to rotate by hand.	• Clean the impeller. • Clean out the sump. • Check that the impeller is properly trimmed.
The pipes are obstructed.	To ensure a free flow, clean out the pipes.
The pipes and joints leak.	Find the leaks and seal them.

Cause	Remedy
There are signs of wear on the impeller, pump, and casing.	Replace the worn parts.
The liquid level is too low.	• Check that the level sensor is set correctly. • Depending on the installation type, add a means for priming the pump, such as a foot valve.

Always state the serial number of your product, see *Product Description* (page 10).

8 Technical Reference

8.1 Application limits

Data	Description
Liquid temperature	40°C (104°F) maximum For P- and S-installations without a cooling jacket, the pump can be operated only when the sump level is at least 10 mm above the stator housing. Warm-liquid version: 70°C (158°F) maximum Warm-liquid version must have cooling jacket.
pH of the pumped media (liquid)	5.5–14
Liquid density	1100 kg/m³ (9.2 lb per US gal) maximum
Depth of immersion	Maximum 20 m (65 ft)
Other	For the specific weight, current, voltage, power ratings, and speed of the pump, see the data plate of the pump.

8.2 Motor data

Feature	Description
Motor type	Squirrel-cage induction motor
Frequency	50 Hz or 60 Hz
Supply	3-phase
Starting method	• Direct on-line • Star-delta • Soft starter • Variable Frequency Drive (VFD)
Maximum starts per hour	30 evenly spaced starts per hour
Code compliance	IEC 60034-1
Voltage variation without overheating	±10%, if it does not run continuously at full load
Voltage imbalance tolerance	2%
Stator insulation class	H (180°C [360°F])

Motor encapsulation

Motor encapsulation is in accordance with IP68.

Xylem |'zīləm|

1) The tissue in plants that brings water upward from the roots
2) A leading global water technology company

We're a global team unified in a common purpose: creating innovative solutions to meet our world's water needs. Developing new technologies that will improve the way water is used, conserved, and re-used in the future is central to our work. We move, treat, analyze, and return water to the environment, and we help people use water efficiently, in their homes, buildings, factories and farms. In more than 150 countries, we have strong, long-standing relationships with customers who know us for our powerful combination of leading product brands and applications expertise, backed by a legacy of innovation.

For more information on how Xylem can help you, go to xyleminc.com

Refer to www.xylemwatersolutions.com/contacts/ for contact details of your local sales and service representative.

xylem
Let's Solve Water

Xylem Water Solutions Global Services AB
361 80 Emmaboda
Sweden
Tel: +46-471-24 70 00
Fax: +46-471-24 47 01
http://tpi.xyleminc.com

Visit our Web site for the latest version of this document and more information

The original instruction is in English. All non-English instructions are translations of the original instruction.

© 2012 Xylem Inc

895383_18.0_en-US_2016-08_IOM.3171

O & M

Wastemaster®
Screen in Tank
GCPC

Model GCPC600

OPERATIONS AND MAINTENANCE MANUAL

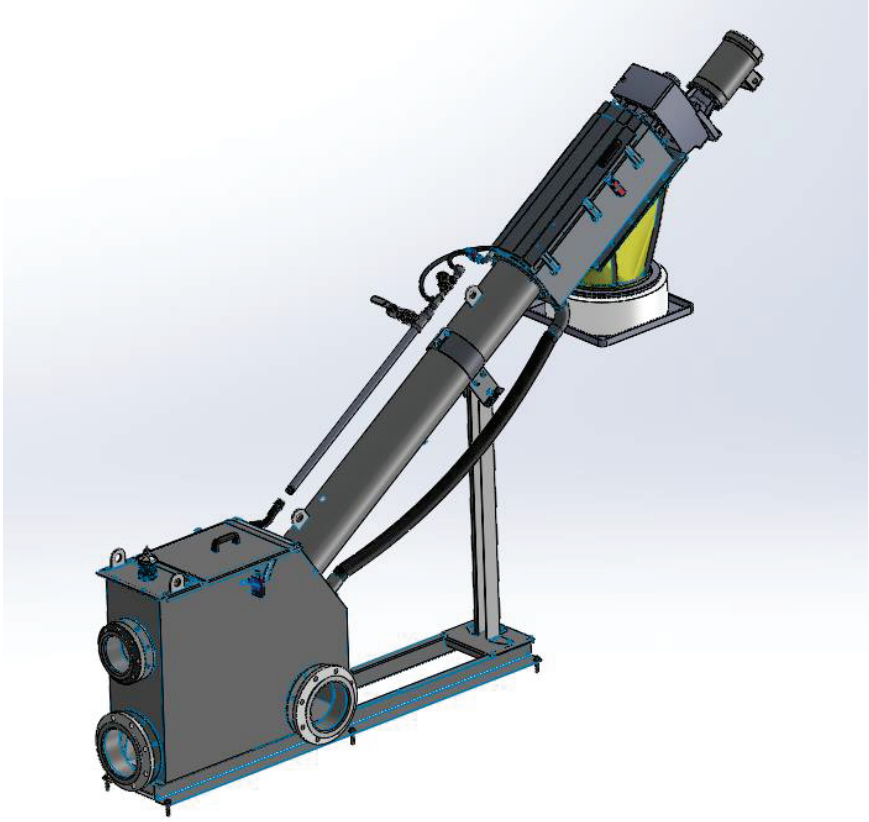

Project No.: WEC217259Z
Project Name: Iqaluit WWTP
Revision: -

WAMGROUP S.p.A.
Via Cavour, 338
I-41030 Ponte Motta
Cavezzo (MO) – ITALY
☎ + 39 / 0535 / 618111
Fax: + 39 / 0535 / 618226
Web: www.wamgroup.com

Enviro-Care
1570 St. Paul Ave
Gurnee IL 60031
☎ 815-636-8306
Fax: 847-672-7968
Web: www.enviro-care.com

For:
Iqaluit WWTP Upgrade
Canada

Equipment:
SPECO Tank Mounted Screw Screen
Model GCPC600

Engineer:
Nunami Stantec Limited
Edmonton, AB T5K 2L6, Canada
Contact: Glenn Prosko
Phone: (780) 969-3258
Email: N/A

Contractor:
Kudlik Construction Ltd.
1519 Federal Road, P.O. Box 727
Iqaluit, Nunavut
X0A 0H0
Contact: Sandra Rousseau P. E.
Phone: 418-871-3368 ext 257
Email: srousseau@kudlik.biz

Manufacturer:
Enviro-Care
1570 St. Paul Ave
Gurnee IL 60031
Phone: (815) 636-8306
Fax: (847) 672-7968

Enviro-Care Contact:
Project Manager: Steven Eismin
Phone: (224) 302-0328
Email: seismin@enviro-care.com

Enviro-Care Project Number: WEC217259Z
August 2018

Enviro-Care
A WAMGROUP® Company

Table of Contents

Section One: Equipment Information 1-1
- Technical Information 1-1
  - Symbols 1-3
- Technical Service Statement 1-4
  - Name Plate 1-4
  - Warranty 1-5
- Periodic Maintenance Form – SCRN-01-210 1-7
- Periodic Maintenance Form – SCRN-01-220 1-9
- General Description 1-11
- General Precautions 1-14
- Shortages, Discrepancies and Field Charges 1-16
- Structural Lifting Precautions 1-17
- Explanation of Parts List 1-18
- Procedure for Ordering Spare or Replacement Parts 1-19
  - Recommended Spare Parts 1-20

Section Two: Installation Instructions 2-1
- Basic Installation 2-1
- Final Check for Level 2-4

Section Three: Startup and Operation 3-1
- Safety Instructions 3-1
  - Labels and Warnings 3-3
  - Location of Labels and Warnings 3-3
- Pre-Startup Instructions 3-4
- Field Service Request 3-5
- Equipment Start-Up Request Form 3-7
- Video Agreement Form 3-9
- Start-Up Instructions 3-11

Section Four: Maintenance and Parts 4-1
- Equipment Maintenance 4-1
- Wastemaster® GCPC Screen Maintenance 4-2
  - Replacement of the Cleaning Brushes 4-3
  - Replacement of the Screen Basket 4-4
  - Replacement of the Lateral Flaps on the Basket 4-5
  - Replacement of Wear Bars 4-6
  - Replacement of Reducer 4-8
- Recommended Equipment Maintenance Schedule 4-11
- Lubrication Schedule 4-12
- Equipment Troubleshooting Guide 4-13
- Motor Troubleshooting Guide 4-14
- Typical Motor Burnout Patterns 4-16
- Storage and Shutdown Precautions 4-17
  - Shutdown of Wastemaster® GCPC Screen 4-17
  - Storing before Installation 4-17
  - Dismantling and Disposal of the Equipment 4-18

Section Five: Accessory Equipment 5-1
- Reducer
- Motor
- Motor Cutout Switch
- Solenoid Valve – ½”
- Solenoid Valve – 1”
- Ultrasonic Level Sensor
- Water Strainer
- Water Hammer Eliminator
- Control Panel Components

Section Six: Enclosures 6-1
- WEC217259Z - Parts List

WEC217259Z - General Arrangement Drawing
WEC217259Z - Control Panel Parts List
WEC217259Z CP01/CP02 - Control Panel Drawing

Section One: Equipment Information

Technical Information

The Wastemaster® GCPC screen is provided by WAM North America | Enviro-Care Company WAM Group in Cavezzo, Italy. The equipment was designed for safe operation under the specified conditions. Disassembling the protection supplied by the manufacturer can jeopardize the equipment's safety features. The system must be used in the application described by the manufacturer and clearly stated in this manual. Read this manual before moving, installing or performing maintenance on this equipment.

The manufacturer shall not be held responsible for equipment damage or accidents due to the failure to observe the instructions in this manual or for misapplication of the equipment. Unauthorized alterations, changes and the installation of unapproved accessories may void the equipment warranty and any resulting damage will not be the responsibility of the manufacturer.

This Operation and Maintenance manual is an integral part of the machine. It is necessary to keep it complete, available to operating personnel and in a safe place during the service life of the machine. Should you need further copies or revisions of the manual, do not hesitate to contact WAM North America | Enviro-Care.

WAM North America | Enviro-Care Company
1570 St. Paul Avenue
Gurnee, Illinois 60031
Ph: 815-636-8306, Fax: 815-636-8302
www.enviro-care.com

All equipment, including standard "Buyout" items, must be maintained according to each respective manufacturer's operation and maintenance procedures enclosed within this manual to ensure coverage of possible failures while the unit is still under warranty, along with ensuring trouble-free operation for the life of the equipment.

Since the enclosed information is based upon the instructions available at the time of printing,

WAM North America | Enviro-Care reserves the right to make subsequent changes to the manual without obligation to update existing copies.

The contents of this manual are the confidential property of WAM North America | Enviro-Care Inc. Circulation, distribution, or reproduction of this manual in whole or in part without written permission is prohibited by law. Possession of this manual neither confers nor transfers any rights which may be detrimental to WAM North America | Enviro-Care's interests.

This OPERATION and MAINTENANCE MANUAL must be thoroughly read and understood, to ensure compliance with the warranty. All procedures must be followed before erecting and operating the equipment. WAM North America | Enviro-Care will not accept responsibility for damage to the equipment that has not been handled in accordance with the manufacturer's instructions. A brief summary of the warnings and instructions are listed below. For additional information, please refer to the related sections.

- Anti-seize compound MUST be used on all stainless steel fasteners to prevent galling or seizing.
- If grouting is necessary (see general arrangement drawings), do not grout under support stands until final levelling is completed and verified.
- In order to avoid corrosion, touch-up any paint or galvanizing damaged during installation.
- To prevent personal injury, the Wastemaster® GCPC screen **must be shut down before any maintenance or adjustments requiring personal contact are made.** If the unit is opened for inspection, cleaning, or observation, the motor must be locked out electrically in such a manner that it cannot be restarted by anyone during the inspection, cleaning, or observation.
- All fasteners should be checked regularly and tightened as required.
- The equipment must be routinely lubricated according to the Lubrication Schedule and the accessory item instructions enclosed. **Failure to do so will shorten the lifetime of the equipment and void the equipment warranty.**
- Regularly check the wear bars for wear. They should be replaced when approaching 1/8" thick. Failure to maintain wear bars will void warranty.
- If the reducer is removed, keep driveshaft clean of all debris and dirt. Any contamination will make replacing the reducer more difficult and possibly inoperative.
- Equipment must be protected to prevent surface contamination. Contamination can come from welding, cutting, painting and other such activities in the area of the equipment. Stainless steel surfaces contaminated with any iron, chloride containing material and other substances can experience accelerated surface corrosion and pitting.



Danger - Warning

Operating and maintaining this equipment has inherent risks. It is your responsibility to read and understand the Operation and Maintenance Manual prior to working with the equipment. This page is intended to summarize the warnings associated with Enviro-Care's equipment. Where equipment manufactured by others have been provided in conjunction with Enviro-Care's equipment, additional warnings specific to that piece of equipment may only be contained in that section of the manual. Please read and understand all warnings provided in the Manual.

Symbols



Danger - Warning

Indicates situations of serious danger which, if ignored, can be risky for the health and safety of persons.



Caution

Indicates that appropriate behavior must be adopted to avoid posing risk for the health and safety of persons and avoid causing economic damage.



Information

Indicates particularly important technical information which must not be ignored.

Technical Service Statement

If, after following the maintenance instructions in SECTION 4 of this O&M Manual, you require assistance, contact the service department shown below. Please provide the Model and Serial Number of the equipment. Both of these can be found on the name plate attached to the equipment.

Service Department, WAM North America | Enviro-Care
1570 St. Paul Ave.
Gurnee, Illinois 60031
Phone: 815-636-8306, Fax: 815-636-8302

Name Plate

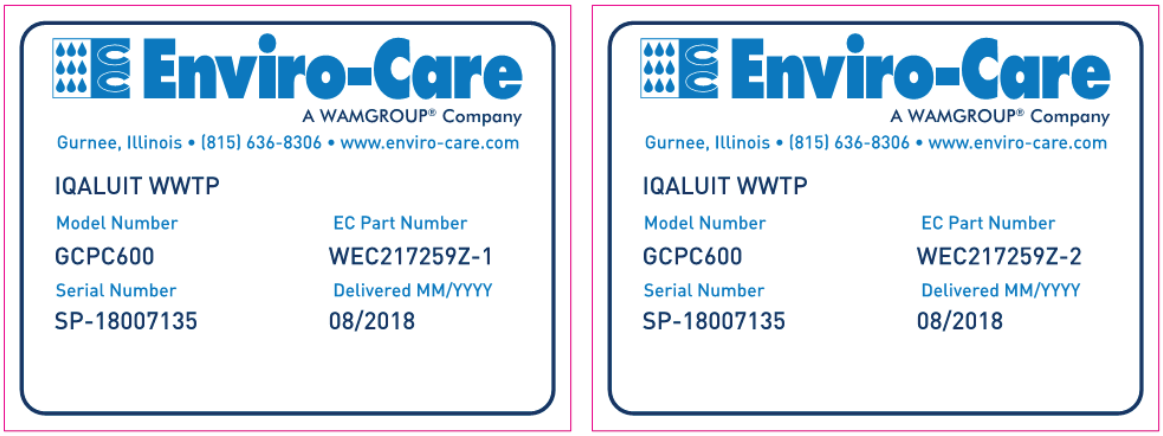

NOTE:
Data on the name plate cannot be modified or removed.

Enviro-Care One-Year Warranty

Warranty Statement and Term:

WAM North America | Enviro-Care Company, Inc. warrants the supplied equipment to the original end user against defects in workmanship or material under normal use and service in compliance with the original design specifications and the maintenance requirements and instructions as found in the Operations & Maintenance Manual.

All WAM North America | Enviro-Care supplied equipment is warranted for twelve (12) months from date of start-up or eighteen (18) months from date of shipment, whichever occurs first.

Warranty Exclusions:

This warranty does not cover costs for labor, standard and/or scheduled maintenance performed, nor does it cover consumables and WAM North America | Enviro-Care parts that, by virtue of their operation, require replacement through normal wear (aka: wear parts), unless a defect in material or workmanship can be determined by WAM North America | Enviro-Care.

Wear parts are defined as brushes, rollers, spray nozzles, drum seals and other items specifically identified in the Operations & Maintenance Manual.

Warranty Coverage:

WAM North America | Enviro-Care's liability is limited to the supply or repair of defective parts returned, freight prepaid by buyer to a location specified by WAM North America | Enviro-Care. Repaired or replacement parts will be shipped to buyer prepaid via standard ground freight. Express or expedited shipments will be at the expense of the buyer.

Exclusions and Exceptions:

This Warranty excludes damage or wear to equipment caused by misapplication of product, improper maintenance, accident, abuse, unauthorized alteration or repair, Acts of God, or installation or operation that is non-compliant with WAM North America | Enviro-Care installation and operations instructions.

WAM North America | Enviro-Care shall not under any circumstances be liable for any incidental or consequential damages arising from loss, damage to property, personal injury or other damage or losses owing to the failure of WAM North America | Enviro-Care's equipment. The liability of WAM North America | Enviro-Care Company, Inc. is limited as set forth above within the time period set forth above.

This page intentionally left blank

Enviro-Care
A WAMGROUP® Company

Periodic Maintenance Form – SCRN-01-210

Wastemaster® GCPC Screen

Enviro-Care Project No.	Equipment ID No.	Date
WEC217259Z-1	SP-18007135	_____/_____/_____

Motor Load:
Date Read: _____/_____/_____
Amps: #1 _____ #2 _____ #3 _____ Line voltage: _____
Date Lubricated: _____/_____/_____ Type of Grease used: _____

Reducer:
Date Lubricated: _____/_____/_____
Brand of Oil: _____ Weight of Oil: _____

Spray Wash (Optional):
Solenoid ok: Yes ☐ No ☐ Timer Setting: On _____ Off _____

Compaction Flush (Optional):
Solenoid ok: Yes ☐ No ☐ Timer Setting: On _____ Off _____

Wear Bars:
Date Checked: _____/_____/_____
Number replaced: _____

Fasteners:
Date Checked: _____/_____/_____

Brushes:
Date Checked: _____/_____/_____
Number replaced: _____

Fasteners:
Date Checked: _____/_____/_____

Basket:
Date Checked: _____/_____/_____

Fasteners:
Date Checked: _____/_____/_____

General Fasteners:
Date: _____/_____/_____

Compaction Zone:
Checked: Yes ☐ No ☐

Any other observations or comments:

_____

_____

_____



Information

For owner use to be filled in and kept as part of recording keeping.

This page intentionally left blank

Enviro-Care
A WAMGROUP® Company

Periodic Maintenance Form – SCRN-01-220

Wastemaster® GCPC Screen

Enviro-Care Project No.	Equipment ID No.	Date
WEC217259Z-2	SP-18007135	_____/_____/_____

Motor Load:
Date Read: _____/_____/_____
Amps: #1 _____ #2 _____ #3 _____ Line voltage: _____
Date Lubricated: _____/_____/_____ Type of Grease used: _____

Reducer:
Date Lubricated: _____/_____/_____
Brand of Oil: _____ Weight of Oil: _____

Spray Wash (Optional):
Solenoid ok: Yes ☐ No ☐ Timer Setting: On _____ Off _____

Compaction Flush (Optional):
Solenoid ok: Yes ☐ No ☐ Timer Setting: On _____ Off _____

Wear Bars:
Date Checked: _____/_____/_____
Number replaced: _____

Fasteners:
Date Checked: _____/_____/_____

Brushes:
Date Checked: _____/_____/_____
Number replaced: _____

Fasteners:
Date Checked: _____/_____/_____

Basket:
Date Checked: _____/_____/_____

Fasteners:
Date Checked: _____/_____/_____

General Fasteners:
Date: _____/_____/_____

Compaction Zone:
Checked: Yes ☐ No ☐

Any other observations or comments:

_____

_____

_____



Information

For owner use to be filled in and kept as part of recording keeping.

This page intentionally left blank

General Description

The WAM North America | Enviro-Care Wastemaster® GCPC Screen provides screening, dewatering, conveying and compacting all in one unit. The unit mounts directly in the tank or (optional installed in a tank) where material larger than the screen openings will be captured in the screen basket. The screenings are then washed and conveyed up the conveyor tube through the compacting/dewatering zone before they are discharged into a suitable receptacle.
To perform as described, the Wastemaster® GCPC will consist of the following:

Screening Section

The screening section consists of a semi-cylindrical, perforated screen basket of durable stainless steel. A shaftless helical screw rotates in the screen basket to transport the screenings to the conveying section. The lower flights are fitted with brushes that clean the screen with every rotation of the screw. Near the top of the screening basket, a spray wash system (if provided) with a ball valve, automatic solenoid valve and spray nozzles direct water to help separate organics from the screenings. To prevent flow from bypassing the screen, elastomeric flaps seal the gap between the screen basket and the tank wall.

Conveying Section

The conveying section consists of a shaftless helical auger housed inside a conveyor tube to dewater and convey the screenings to the compacting/dewatering section. This shaftless screw rides on four replaceable wear bars that run the length of the conveying section. If provided, an optional secondary spray wash system in the conveyor section flushes additional water on to the screenings to further separate the organic material from the screenings.

Compacting/Dewatering Section

The compacting/dewatering section consists of a perforated cylindrical plate mounted at the end of the conveying section. A spray flush is provided to keep the compacting section drain clear. The compacting / dewatering section housing includes a hinged access hatch; an inspection cover with quick opening latches and a safety motor cutout switch to stop the unit whenever the hatch is opened.
For units provided without a compaction zone, a bolted cover without an interlock switch will be provided – please refer to the General Arrangement Drawing for further details.

Drive Unit

The Spiral Screen drive unit consists of an electric motor directly driving a flange-mounted, hollow shaft, helical gear reducer. This unit attaches to the upper end of the compacting/dewatering housing and is bolted to the drive shaft.

Heat Tracing/Freeze Protection **(Optional, Not Provided)**

On heat traced units, the Wastemaster® GCPC wash water lines are fitted with 120V, single phase, 60 Hz flexible self-regulating heat tracing wire to prevent freezing. If required, the transport tube and/or the compaction zone can also be heat-traced. The heat trace system shall have an integral thermostat to regulate the heating element. The heater and thermostat shall be terminated in a NEMA 4X junction box.

The heat traced components are insulated with closed-cell foam insulation and wrapped with foil tape or stainless steel or PVC jacketing.

The control panel shall include integrated heat trace circuits rated for the appropriate wattage as determined by the manufacturer.

Bagger System **(Optional, Not Provided)**

A Longofill bagger system can be provided for containment, odor control and sanitary handling of screenings.

Level Sensor

If provided, a level sensor or float switch monitors water depth in the tank to maximize the efficiency of the spiral screen. Upon detecting a designated high water level, the sensor activates the Spiral Screen unit. The screen will then operate for a designated amount of time to clear the screenings. It is recommended that if the water level reaches a designated critical point, an alarm will be activated. The designated settings are to be established and set in the field.

Spray Wash Assembly

A centralized washing system shall be provided to connect all spray wash systems to a common service connection point. The piping manifold shall be constructed from stainless steel. Washwater solenoids and manual ball valves shall be factory installed with the manifold assembly.

A spray bar is installed inside the compaction enclosure to keep the compaction zone clear and rinse any residual solids from the drain area of the enclosure. Spray bar wash system has been furnished with control solenoid valve, stainless steel piping and fittings and flexible reinforced hoses.

The basket can be provided with a spray bar mounted near the top. Spray bar wash system is furnished with control solenoid valve, stainless steel piping and fittings, flexible reinforced hoses and spray nozzles.

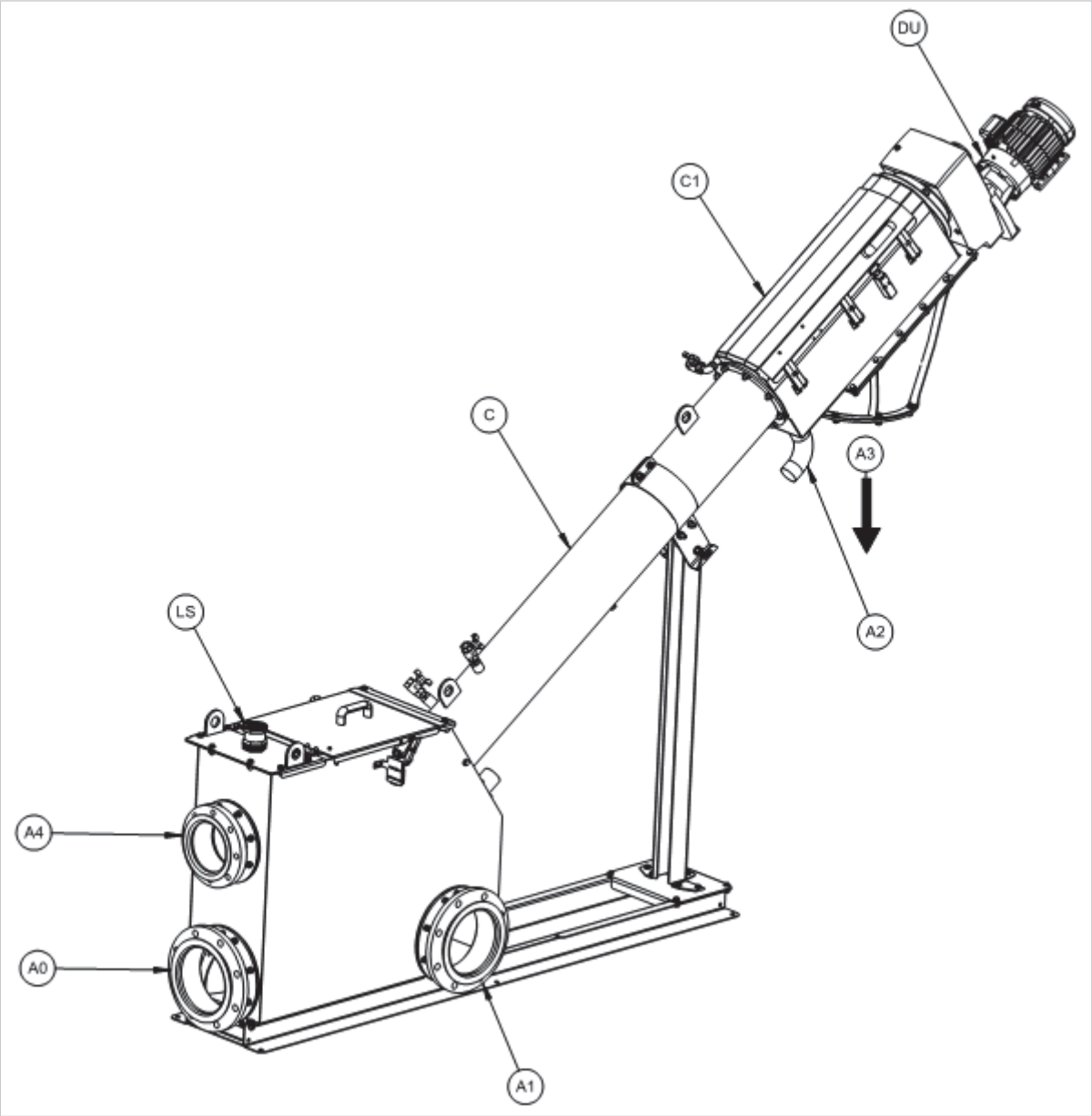

Figure 1-1: Wastemaster® GCPC Screen Components

A0	Influent
A1	Effluent
A2	Compaction zone drain
A3	Screenings Discharge
A4	Overflow
C	Transport tube & Shaftless Auger
C1	Compaction Zone
DU	Drive Unit
LS	Level Sensor Coupling

Table 1-1: Wastemaster® GCPC Components

General Precautions

Receiving Material

The equipment pieces and components received may have been shipped from:

1. WAM North America | Enviro-Care, Gurnee, IL.
2. A fabricator acting under WAM North America | Enviro-Care Inc. instructions.
3. A “buy-out” distributor such as a motor or pump manufacturer.

Since there will often be more than one shipment to the job site, it is important to coordinate the receiving and storage of all items accordingly. All material has been thoroughly checked and inspected before shipment. However, there may be times when equipment is missing, damaged in transit or received with broken packaging. When receiving equipment, it is necessary to properly acknowledge receipt and any shortage or damage on the shipping documents. This must be done in a manner that helps assign responsibility to the proper party for the various parts of shipping and receiving equipment.

When receiving a shipment, the following procedures must be followed. These procedures are also listed on the Bill of Lading the shipping company provides and must be signed to prove delivery of the goods. If the following procedures are not followed, WAM North America | Enviro-Care will not be liable for any shortages or damage on your shipments.

Receiving Procedure

Before signing the Bill of Lading (BOL) in receipt of the goods shown thereon, and **before** the driver leaves, do the following:

1. After inspecting the shipment, **note** any damage or shortages (according to what is listed on the BOL). Be as detailed as necessary.
2. Have the driver sign the notation in acknowledgment.
3. Retain a copy (of the notated BOL) for use in filing a freight claim.
4. If there is damage, **notify** WAM North America | Enviro-Care (call 815-636-8306 **immediately** so that arrangements can be made with the carrier, if necessary, to have the damaged goods inspected by their agent.

After signing the BOL and receiving the shipment, do the following:

1. Use the attached/enclosed packing list to further inspect the entire shipment for shortages and/or damage and retain this list for future reference.
2. **Notify** WAM North America | Enviro-Care within **three** (3) working days from date of receipt, of any further shortages or concealed damage. If certain items are missing or damaged, make notes of this on the shipping papers to protect all interests and notify WAM North America | Enviro-Care (815) 636-8306 **immediately.**

Handling and Storage

Please handle the equipment properly when unloading and erecting. All cartons, electrical equipment, and gear drives should be stored under cover and protected from moisture, grit, and mud. All rolled steel sections must be stored on edge or blocked up to prevent distortion. If allowed to lie flat, these items may lose their shape which could hinder erection and proper alignment of the equipment.

Fasteners

All stainless steel erection fasteners shall incorporate anti-seize during assembly. Failure to utilize this will cause significant extra time by the erection and maintenance crews.

Foundation anchor bolts

Notify WAM North America | Enviro-Care immediately if anchor bolts are not received.

Anchor bolts must be placed accurately to avoid future erection difficulties. Where applicable and upon request, WAM North America | Enviro-Care can furnish a template for positioning the anchor bolts. If a template has not been furnished, remember that the location and projection of all anchorage is critical. The specified amount of projection and location are shown on the general arrangement drawings. Prior to equipment installation, clean the threads of all anchorage bolts and oil them.

If using epoxy anchors, confirm the expiration date of the epoxy, typically posted on the packing, prior to mixing and application. Epoxy adhesives have a limited shelf life and shall therefore be provided by the installing contractor, not by WAM North America | Enviro-Care. Installer to adhere to epoxy installation procedures noted on packaging.

Shortages, Discrepancies and Field Charges

Please notify WAM North America | Enviro-Care immediately if any apparent manufacturing discrepancies or shortages are encountered with machinery, since no field charges for alterations or shortages will be accepted unless authorized in writing by our authorized representative.

Fabricated steel parts and assemblies furnished by WAM North America | Enviro-Care are manufactured following best shop practices and standards. However, some misfits and imperfect work may arise. In such cases, the American Institute of Steel Construction Manual, Thirteenth Edition, “Code of Standard Practice”, will apply to erection of this equipment. It reads as follows:

Corrections and Errors

“The correction of minor misfits by moderate amounts of reaming, grinding, welding or cutting, and the drawing of elements into line with drift pins, shall be considered normal erection operations. Errors that cannot be corrected using the foregoing means, or that require major changes in member or Connection configuration, shall be promptly reported to the Owner’s Designated Representatives for Design and Construction and the Fabricator by the Erector, to enable the responsible entity to either correct the error or approve the most efficient and economical method of correction to be used by others.”

Company policy dictates that **no field charges will be allowed without prior approval.** Written authority must be given in the form of a WAM North America | Enviro-Care Field Change Authorization with an associated warranty tracking number, if applicable. The warranty tracking number will be issued when the extent of such modifications and the price for performing these modifications have been agreed upon. In general, when parts require replacement, and WAM North America | Enviro-Care agrees that replacement is necessary, WAM North America | Enviro-Care will furnish the parts. The contractor will remove the defective parts and install the replacement parts at a cost agreed upon by both parties.

Structural Lifting Precautions

All structural components should be lifted and handled as instructed below. Proper handling is necessary to protect special coverings and to ensure ease of assembly during equipment installation.

1. Make sure the equipment being lifted or the lifting equipment cannot come into contact with overhead electrical cables, etc.
2. The lifting and transport of the equipment can be done by means of a suitable lifting system verified for the weight and dimensions of the equipment.
3. All rigging and lifting should be done by experienced personnel.
4. Before the equipment is removed from the delivery trucks, check to be sure the blocking, bracing, and banding securing it to the carrier have been removed and is ready for moving.
5. Use multiple point lifting whenever possible.
6. Always lift and handle the equipment using the eyebolt fixed on the equipment.
7. Always attach the lifting eyebolt by means of hooks with safety fasteners.
8. When lifting structural members of this equipment, avoid twisting or bending the members. Use spreader beams, as necessary, to fully support the pieces as they are lifted.
9. Before lifting the machine from the ground entirely preassembled, make sure that all the nuts and bolts for connection are tight, some attachments could loosen due to transportation.
10. Lift the equipment an inch or two off the trailer to be sure it is free to be moved and balanced correctly. Adjust as necessary.
11. Check the component balance until it is entirely hoisted.

    Hoisting has to be carried out steadily (without jerks and thrusts), never allow it to strike the ground, tank or other equipment.



Danger - Warning

Do not pull, drag, push or dump the structural components off the delivery trucks.
Stand clear as the equipment is lifted.

Explanation of Parts List

Item Numbers

Item numbers identify a part shown on an erection or assembly drawing and correspond to the parts list item number. Item numbers are in balloons on the drawing with an arrow pointing to the part. On the parts list, items numbers are found in the left most column of the Parts List. Item numbers are three-digit numbers.

Part Numbers

Part numbers identify inventory I.D. numbers or drawing numbers of the fabrication drawings. Fabrication drawings are not included in this Operation and Maintenance Manual.

General

Refer to the Enclosure section of this manual for the job specific Parts List(s).

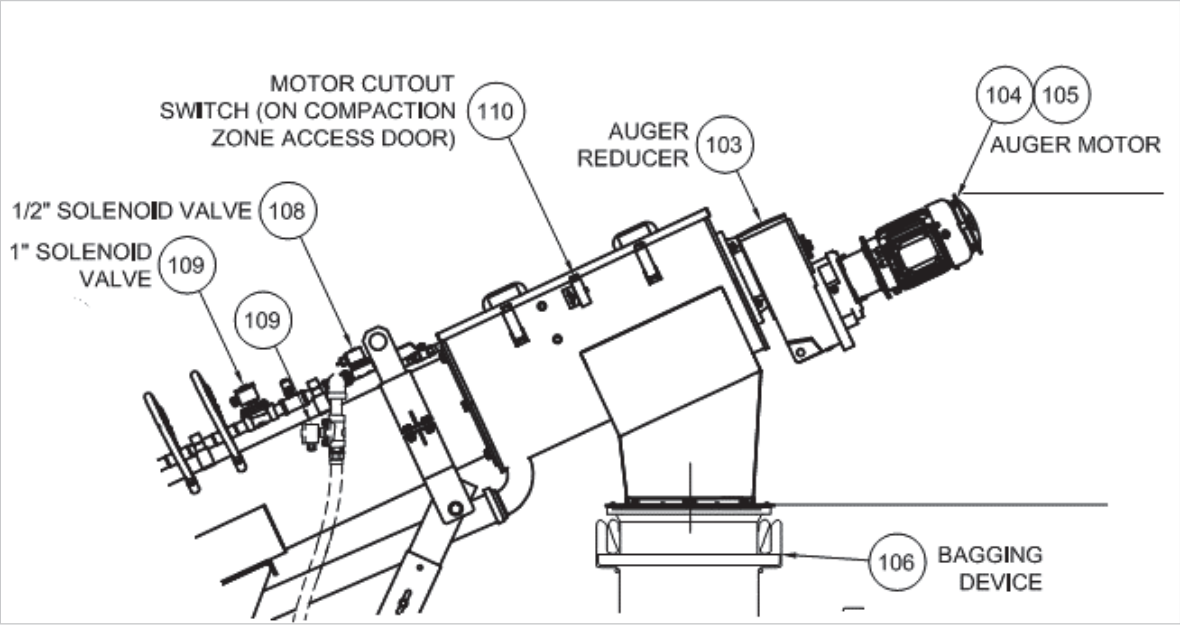

Figure 1-2: Example of item number balloon callouts on General Arrangement Drawings

Job Number: WEC214130
Job Name: HUNTINGTON, WV
Revision: A
Approval Date: 11-Sep-15 ɔproved JW06 Created By SO12

Line	Part Number	Part Name	Rev	Qty	Unit of Measure	Material	Notes
101	WEC214130A-1	Flo-Septage Station FSR-1200 DM		1	EA	316SS	Main Unit
102	RD-SK9016.1AF-N140TC	Reducer, Drum - NORD, Ratio 26.29:1		1	EA	CI	Drum Drive
103	RD-SK4282AF-N140TC	Reducer, Auger - NORD, Ratio 90.52:1		1	EA	CI	Auger Drive
104	MTR-EPV0024C	Motor - TECO, 2HP, 230-460V, 60HZ, 145TC Frame		2	EA	STL	
105	HCSC-3/8"-0100-316S	3/8" capscrew x 1" LG		8	EA	316SS	
106	BGGR-LFVCS-15-304S	Bagger Adapter Plate, I.D.=15.00"		1	EA	304SS	
107	ANCR-1/2"-0750-316S	Anchor rod, 1/2" x 7 1/2" LG		6	EA	316SS	Epoxy and applicator by others, not by EC
108	SOV-8210G94	Solenoid valve, ASCO, 1/2", 120VAC		1	EA	BRS	
109	SOV-8210G54	Solenoid valve, ASCO, 1", 120VAC		2	EA	BRS	
110	MCS-FR693-D	Motor Cutout Switch, Pizzato		1	EA	RESIN	Ordered w/ main unit

Figure 1-3: Example of Parts List

Procedure for Ordering Spare or Replacement Parts

Spare or replacement parts may be ordered from the Aftermarket Sales Department at:

Enviro-Care
1570 St. Paul Ave
Gurnee, IL 60031
Phone: (815) 636-8306
Fax: (847) 672-7968

E-Mail: parts@enviro-care.com
Web: www.enviro-care.com

If you would like to talk directly to an Aftermarket Sales representative during normal business hours (8:00 am to 4:30 pm CST), dial (224) 302-0327.

If you would like to e-mail a spare parts order, simply e-mail your request to us at parts@enviro-care.com and an Enviro-Care representative will process your order and follow up with an Order Acknowledgment.

For convenience, a 'Recommended Spare Parts List' is provided in this manual. This is a guide for the appropriate level of spares to keep on hand minimizing lost time due to unscheduled breakdowns. Each item listed in the Recommended Spare Parts List is identified within one of the following categories:

- Normal Maintenance and wear items
- Long Lead items (minimum downtime)

Should you require further assistance in determining which spare parts are appropriate for your particular situation please contact Enviro-Care's Aftermarket Sales Department.

To avoid unnecessary delays in obtaining the correct spare or replacement parts for your equipment, be sure to give the following information with each order.

1. Identify equipment using the Enviro-Care Project Number. Your equipment is identified as follows:

   Enviro-Care Project Number: WEC217259Z
   Enviro-Care Model Number: GCPC600

2. Identify the part by name and give the number of the drawing on which this part or assembly appears.
3. Identify the part number.
4. Identify the size and include all pertinent dimensions (such as diameter, length, thickness, bore, pitch, etc.) whenever possible.
5. If parts being ordered are electrical in nature, give all pertinent data such as: voltage, amperage, wattage, cycles, speed, power factor, or other information given on the parts nameplate or included in the parts brochure.
6. Submit your written purchase order or request for a quotation, both signing and printing your full name so that Enviro-Care will know whom to contact should further clarification of the inquiry be necessary. All verbal orders must be verified in writing.
7. Give a return address and a shipping address.
8. Give a preferred method of shipping: ie. UPS, truck freight, rail freight, air express, etc..
9. Indicate the quantity desired.
10. Provide instructions for proper invoicing.

Recommended Spare Parts

Quantity	Description
1	Motor cutout switch
1	Set of wear bars with fasteners
1	Set of brushes with fasteners
1	Solenoid valve rebuild kit
1	Set of spray nozzles

Section Two: Installation Instructions

Basic Installation

The sequence and procedures listed below are suggested and should not take precedence over the experience of the erector if, due to special circumstances or available equipment, he should decide to vary the given steps.

If installation is not immediately started upon delivery of the equipment, the appropriate storage procedure must be followed, as described in the ***Storage and Shutdown Precautions*** of this manual.

The Wastemaster® GCPC screen is partially disassembled for shipment. The motor, support leg and discharge chute (if supplied) are typical components that may require field assembly.

1. Open tank cover and remove tank panel (see Figure 2-1) so screw screen can be inserted.



Figure 2-1: Tank panel for screw screen insertion

2. Lift screw screen using the eyebolts welded on body and place in tank (see Figure 2-2). Resecure tank panel and tighten bolts at panel and transport tube support bracket.

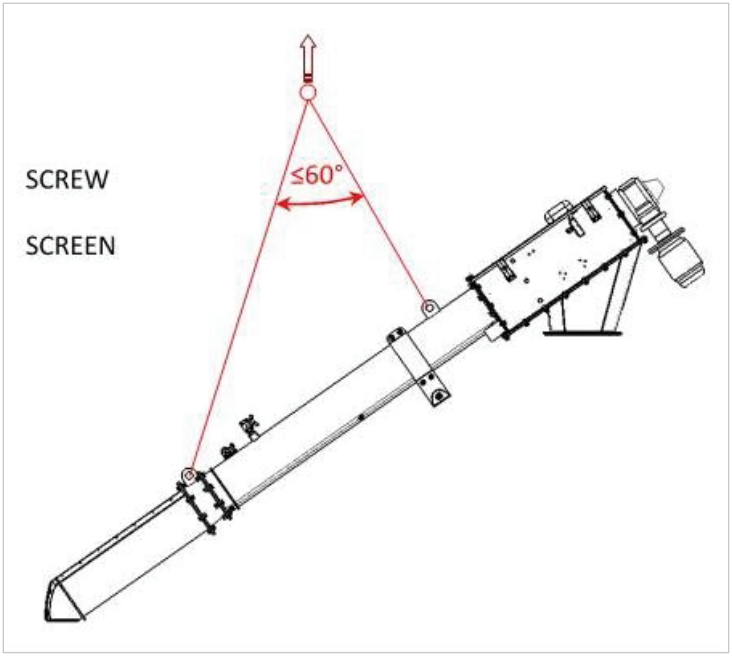

Figure 2-2: Lifting Configuration

3. The bottom of the screen should lay flush with the bottom of the tank and the rubber flaps should seal securely against the sides of the tank as indicated on the general arrangement drawing(s). Tighten all the fasteners for the support frame.
4. Position the machine to obtain position by lifting at lift points on the general arrangement drawing(s). (see Section Six – Enclosures)
5. Position the screens frame in its final location to support unit and anchor to concrete tank.
6. If a spray wash system is provided, connect facility spray wash piping to the pipe connection(s) located as shown on the general arrangement drawing(s).

   Three possible spray zones are contained within the system. One to clean the screen basket surface, another to periodically clean the compaction zone drainage area, and a third to wash the solids as they are conveyed up the transport tube (not typically included on Enviro-Care units).



Figure 2-3: Washing Connections

7. If provided, mount the level sensor or float switch as indicated on the general arrangement drawing(s).

8. Connect the return hose to dewatering zone outlet and place the other end of the hose to direct it in the effluent tank.
9. Install electrical control panel and connect to supply power.
10. A qualified electrician should wire the Wastemaster® GCPC screen drive motor, the motor safety cut-out switch, the level sensor/float switch, the solenoid valve(s), and E-Stop push button. Jog the drive motor. Ensure that the drive shaft rotates in the proper direction, causing the screw to convey material up the basket.
11. Ensure proper screenings receptacle is in place.
12. Unless specifically mentioned in this manual, all piping for connecting spray wash is by others.
13. All wiring external to motors and controls is by others.



Information

Anti-seize compound must be used on all stainless steel fasteners to prevent gailing or seizing.

Final Check for Level

Ensure that the Wastemaster® GCPC screen is level.

1. Leveling nuts are supplied with the anchor rods (two nuts per anchor).
2. Use a carpenter's level to check level of support frame base.
3. If adjustment is necessary, lower or raise the corresponding leveling nuts, as required.
4. When the Wastemaster® GCPC screen is level and properly located, secure the support frame base with top locking nut and grout with a non-shrink grout (not by Enviro-Care).



Caution

Before proceeding with the start/stop of the equipment, check that nothing is obstructing the operation of the equipment.

Before proceeding to start/stop of the equipment, check that all the safety guards and devices are present and in correct working order.



Information

For pivoting units, flexible wiring to electrical connections on the machine is recommended to allow for maintenance.

Section Three: Startup and Operation

Safety Instructions

The equipment is provided with safety devices in areas where it is necessary to clean, check or service the equipment. Do not operate the Machine without the safety devices in operation. The screening's outlet cannot be closed.

1. Only operators who have been trained in safety procedures should be allowed to work on or around this equipment. Exercise caution at all times. Limit access to authorized personnel.
2. In hand mode, avoid rapid successive screen starts/stops.
3. Anyone entering the area should wear adequate safety equipment, such as safety glasses, safety shoes, hard hats, etc. Long hair and loose clothing must be tied back, and jewelry must be removed.
4. Before starting the equipment make sure that all the safety devices are connected and in operation and in as built condition.
5. If the faults do not allow the use of the equipment under full safety conditions, the equipment must be stopped.
6. The equipment can only be used for the purpose for which it was developed.
7. Any modification that can affect the operation of the equipment or the safety condition must be done by WAM North America | Enviro-Care personnel only.
8. WAM North America | Enviro-Care declines all responsibilities for any unauthorized modifications and all the damages caused from those modifications.
9. Do not override the automatic safety devices with manual devices.
10. All the checks, service, etc. operation must be done by authorized and trained/qualified personnel only.
11. Disconnect the power before carrying out any operation or service on the equipment.
12. To avoid any accidental starting of the equipment during inspection, cleaning or servicing of the equipment, the power switch must be in OFF position.
13. The manufacturer declines all responsibilities for any damage to objects and harm to persons caused from the absence and or tampering of safety guards and devices.
14. Periodically check that the safety labels are in good readable condition.
15. Place "Warning" signs in the area of moving parts.
16. Keep all flammable or explosive materials away from the equipment area at all times.
17. Never permit people who have been drinking alcohol, using drugs, taking medication or are otherwise impaired to maintain or repair unit.
18. Inspect equipment frequently for loose bolts or malfunctioning equipment. Fix problems immediately.
19. Do not intervene with material in the conveyor unless the drive is off and power has been locked-out.
20. The helical auger will act as a torsional spring and store a tremendous amount of energy if it becomes caught or jammed in the basket. This could cause serious injury or death if released suddenly. Ensure that no energy is stored in the auger before performing any maintenance on the equipment.
21. It is important that operator safety be stressed. Do not perform maintenance or repairs on moving parts.
22. All the connections must be done by qualified personnel only.
23. The equipment and its components should be properly grounded.

24. When the equipment is operating the personnel must stay at a safe distance from it.



Caution

Do not introduce hands, objects, etc. into the screenings outlet. Suitable notices must be displayed in the area to inform the personnel.

When the equipment is installed in a tank it is mandatory to close the area of the screen basket with a proper cover. If this is not possible it will be necessary to enclose the area with a proper railing system.

Labels and Warnings

The following are labels represent hazards, warnings and information. That may be applied to the machine. Do not remove.

Replace labels if they are not legible.

Contact the manufacturer shown below for replacement. The replacement labels must be applied in the same location on the machine.

Service Department, WAM North America | Enviro-Care
1570 St. Paul Ave.
Gurnee, Illinois 60031
Phone: 815-636-8306, Fax: 815-636-8302

Following are Labels that may be shown on equipment.

a. Residual danger of "high voltage" (yellow and black).
b. Connection to a circuit" (yellow and black).
c. General danger label
d. Residual danger of "crushing" or injury (red and black).
e. Lifting point.

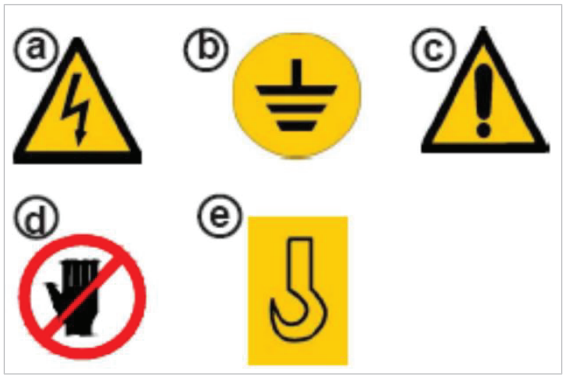

Figure 3-1: Label Icons

Location of Labels and Warnings

Labels may be applied to the machine in locations as indicated in the following figure.

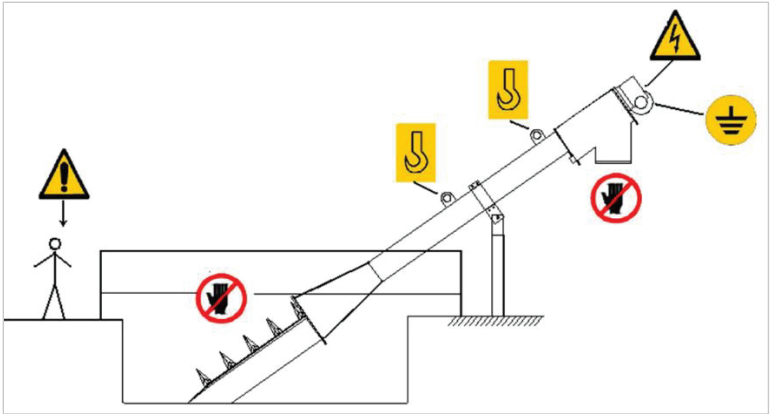

Figure 3-2: GCPC Label Locations

Pre-Startup Instructions

The following is a checklist of items that should be in place and verified as correct prior to the arrival of an Enviro-Care representative, if field service and start-up services have been arranged.

- ☐ Confirm the angle of screen inclination (see assembly drawing(s) for correct angle).
- ☐ Confirm the rubber flaps seal securely against the tank walls.
- ☐ If provided, verify that the ultrasonic level sensor or float switch is installed and wired correctly.
- ☐ If supplied, ensure electrical controls are fully operational.
- ☐ Have wastewater available to witness successful operation of the screen.
- ☐ Carefully read all the OPERATION and MAINTENANCE MANUAL.
- ☐ Check the positioning, the installation and the anchoring of the equipment.
- ☐ Check all the water connections.
- ☐ Check the power supply connections and the cable box: it must be perfectly sealed.
- ☐ Check that the access cover is closed and secured.
- ☐ Check that the direction of rotation of the screw is as per the arrow installed on the equipment.
- ☐ Check that all the safety protection at the inlet and at the outlet are present.
- ☐ Check that all the warning notices are present on the equipment.



Caution

On initial starting, check for conditions that may indicate a faulty functioning such as: vibration, high noise level, irregular rotation, etc.

The above procedure must be applied each time the equipment is starting after a prolonged stop (more than 1 week time).

Field Service Request

Enviro-Care typically requires 2 to 3 weeks' notice to schedule field service personnel for the torque test, installation certification, start-up and training. Advise Enviro-Care of acceptable dates for field service as soon as possible.

Verify all items are ready for inspection (all start-up functions and tests can be performed with temporary power except for confirmation of proper wiring). Any requested changes in the scheduled flight for a field service trip could result in additional charges.

Our field service personnel are to perform the following:

1. Verification of drive unit rotation and lubrication. These procedures are described in the Installation and Lubrication sections of the Operation & Maintenance Manual.
2. Check general clearances and alignments. Verify any installation angles.
3. Confirm proper wiring. This will include any controls or switches.
4. Conduct classroom and field instruction for the facility personnel and the Engineer. Instruction will include operation and maintenance of the equipment. This will take approximately three to four hours. Please schedule with Enviro-Care and advise all necessary facility personnel and the Engineer to attend this instruction.

This page intentionally left blank

Enviro-Care
A WAMGROUP® Company

Equipment Start-Up Request Form

Project Number: **WE217259Z** Requested Date On-Site: / /

Project Name: **Iqaluit WWTP** Alternate Date(s): / /

Contact at Site: _____ Phone / Email: _____

Equipment Type / Model **SPECO Tank Mounted Screen, Model GCPC600**

Yes	No	
☐	☐	Has the mechanical equipment been installed and anchored securely as shown on the General Arrangement Drawings?
☐	☐	Has all mechanical equipment been properly lubricated per Enviro-Care O&M manual (bearings greased, gearboxes filled, remove reducer breather ply O-ring or shipping gasket, etc.)
☐	☐	Have the controls been properly installed and all field wiring completed to the equipment?
☐	☐	Is power available to operate the equipment?
☐	☐	Has all field piping to the equipment (process, washwater supply, air supply, etc.) been completed as shown on the General Arrangement Drawing?
☐	☐	Are all service utilities (washwater, air, etc.) available?
☐	☐	Is all required concrete work complete?
☐	☐	Is process flow available? If flow is not available, Enviro-Care can provide a future trip to adjust equipment for actual operating conditions at an additional charge per our standard field service rate.

We will try to accommodate all requests; however, field service trips are scheduled on a first-come, first-served basis. We encourage you to submit requests with as much advance notice as possible. A **minimum of two weeks notice** is necessary prior to trip departure date to arrange our schedule.

- **Any charges incurred as the result of a customer's request to cancel or change a service trip that has already been scheduled will be added to the invoice.**
- **Any additional time or trips required for Enviro-Care to fulfill the contract obligation as a result of improper or incomplete installation will be added to the invoice.**

Enviro-Care policy requires that startup cannot be performed until payment received is equal to 90% of the contract amount.

Additional field service is available please call to confirm current rates.

I certify and agree that the above items are complete and that the equipment/installation is ready for startup on the requested date

_____ _____ ____
Printed Name Signature Date

_____ _____
Title Phone Number

Please send this form to the attention of: Randy Vinyard
Email: rvinyard@enviro-care.com or Fax: 847-672-7968

****Please Call To Confirm Receipt****
Phone: 224-302-0322

This page intentionally left blank

Enviro-Care
A WAMGROUP® Company

Video Agreement Form

This agreement is made this _____ day of _____, 20__, by and between Enviro-Care (hereinafter referred to as “Enviro-Care”), a WAMGroup Company, and _____ _____ (hereinafter referred to as “Owner-Operator”).

In consideration for allowing Owner/operator to videotape Enviro-Care personnel performing maintenance or service, or demonstrating the operation of Enviro-Care supplied equipment, the Owner-Operator and Enviro-Care agree as follows:

1. The videotape is used to aid the Owner-Operator and is not intended to be used as a substitute for safe operating procedure in accord with industry standard(s), training, safety instruction or the operation and maintenance manuals. Enviro-Care assumes no liability for the completeness or accuracy of the videotape alone.

2. Any claim for injury or property damage which arises out of or in connection with the use of the videotape by the Owner-Operator, its employees, or Agents is the sole responsibility of the Owner-Operator.

3. This videotape is for the Owner-Operator’s own use, and the Owner agrees not to sell or transfer the tape to any other party.

4. Upon request, the Owner-Operator must provide Enviro-Care with a copy of the videotape.

5. Owner-Operator must affix the following statement to ALL videotapes and read the following statement at each presentation:

   “THIS VIDEOTAPE IS USED TO AID THE OWNER-OPERATOR AND IS NOT INTENDED TO BE USED AS A SUBSTITUTE FOR SAFE OPERATING PROCEDURE IN ACCORD WITH INDUSTRY STANDARDS, TRAINING, SAFETY-INSTRUCTION OR THE OPERATION AND MAINTENANCE MANUALS. ENVIRO-CARE ASSUMES NO LIABILITY FOR THE COMPLETENESS OR ACCURACY OF THE VIDEOTAPE ALONE.”

6. By signing this, the signer is verifying they understand the above agreement.

Not withstanding the reasonableness of the agreements herein, in the event that a court of competent jurisdiction determines that any part of the agreement be held invalid or unenforceable, the remaining parts shall be valid and enforceable as though the invalid and unenforceable parts had not been included in the agreement.

Accepted by:

_____
Signature

_____
Position

This page intentionally left blank

Start-Up Instructions

1. Ensure components are lubricated in accordance with the lubrication instructions found in the *Maintenance and Parts* section of this manual.
2. Before the equipment is operated, a final mechanical checkout should be performed. Verify:
   - All fasteners are tightened.
   - All moving parts are properly aligned.
   - To ensure that there is no binding or misalignment in the systems, rotate the conveyor slowly by hand, apply power only momentarily, and check for any problems.
3. Initial start-up of the unit;
   - Operate several minutes empty as a break-in period.
   - Observe any abnormal heat build-up, unusual noises, or drive misalignment. Should any of these occur, refer to the Recommended Equipment Maintenance Schedule in the MAINTENANCE section of this manual and take necessary corrective steps.
4. **Begin normal operation**. Do not overload the conveyor. Do not exceed conveyor speed, capacity, material density, or rate of flow for which the conveyor and drive were designed.
5. **Normal operation**: The unit will remove screenings from the waste stream and allow the flow to pass through the screen basket. After a period of time, the screen basket will collect material causing the flow to back up in front of the unit. At this point the level sensor or float switch will start the auger. The screw auger will then run for an adjustable amount of time (typically for 30-60 seconds) to clear screenings from the screen basket and transport them towards the solids discharge. The water level will return to a normal level and the basket will again accumulate screenings.
6. If Enviro-Care has provided controls, refer to control panel drawings in the *Enclosures* section to review all control functions for the supplied equipment.

This page intentionally left blank

Section Four: Maintenance and Parts

Equipment Maintenance

1. All fasteners should be checked regularly and tightened as required.
2. Regularly examine all moving parts, including the auger, brushes, and discharge area, to check for excessive wear or misalignment. See maintenance schedule for suggested intervals.
3. Keep the equipment and surroundings clean.
4. Inspect all painted and galvanized surfaces frequently to check for corrosion. Remove any rust found and apply touch-up paint. All painted steel should be inspected once every year and repainted if required.
5. Corrosion may start to appear even on high-grade stainless steels due to external rust or rust films, dirt, chemical or similar residues that settle on the surface and corrode. Dirty stainless steel surfaces should be cleaned regularly as part of regular maintenance. Stainless steel surfaces should be treated with Stainless Shine™ surface cleaner/protector or an equivalent agent that **does not** contain hydrochloric acid and/or chlorides.
6. If the mechanism is to be shut down for an extended period of time, the appropriate *Storage and Shutdown Precautions* must be followed.
7. The equipment must be routinely lubricated according to the *Lubrication Schedule* and the *Accessory Item* instructions enclosed. **Failure to do so will shorten the lifetime of the equipment and void the equipment warranty.**
8. The equipment should be checked regularly for unusual sounds, irregular motion, or other signs of improper operation. If any of these symptoms are discovered, it must be investigated immediately to determine the source of the problem. The mechanism must not be allowed to operate if such problems exist.

Wastemaster® GCPC Screen Maintenance

Prior to working on equipment, power supply to the motor is to be disconnected in a manner which will disallow anyone from reconnecting power without the knowledge of the person who is performing the maintenance.

1. Divert influent away from the Wastemaster® GCPC screen.
2. Run the screen until solids have been conveyed up the auger and the screen is free from screenings.
3. If maintenance requires pivoting from tank, remove grating and any other interferes that would prevent pivoting.
4. (If supplied with a pivoting leg attachment) Attach lifting devices to the lower lifting eyes of the unit. Loosen one bolt on the top of each support leg bracket so the pins are free to pivot when raising unit out of tank.
5. Pivot the screen.
6. Place beams (wood) across the tank and let lower end of unit rest on these.
7. Perform necessary maintenance.
8. When maintenance is completed, lower the screen carefully into the tank and it operating position.
9. Replace or tighten the bolt on the support leg brackets.
10. Ensure that all side seals contact the tank walls and are tightly sealed.
11. Before putting the unit in operation, perform and inspect in accordance with the start-up procedures.
12. Reconnect power supply to motor.
13. Restore full influent flow to screen.

Replacement of the Cleaning Brushes

Prior to working on equipment, disconnect power supply to the motor that will prevent reconnecting power, without the knowledge of the person who is performing the maintenance.

1. Divert flow away from screen tank.
2. Pivot or orient the screen to a safe and convenient working configuration.
3. Shore up and stabilize the screen.
4. Remove fasteners (01) which connect the brush sectors to the spiral section.
5. Remove old wear shoes (02) (if included) and brush sectors (03) and replace with new wear shoes (if included) and brush sectors.
6. Secure new wear shoes and brush sectors with old fasteners (01), or install new fasteners if required.

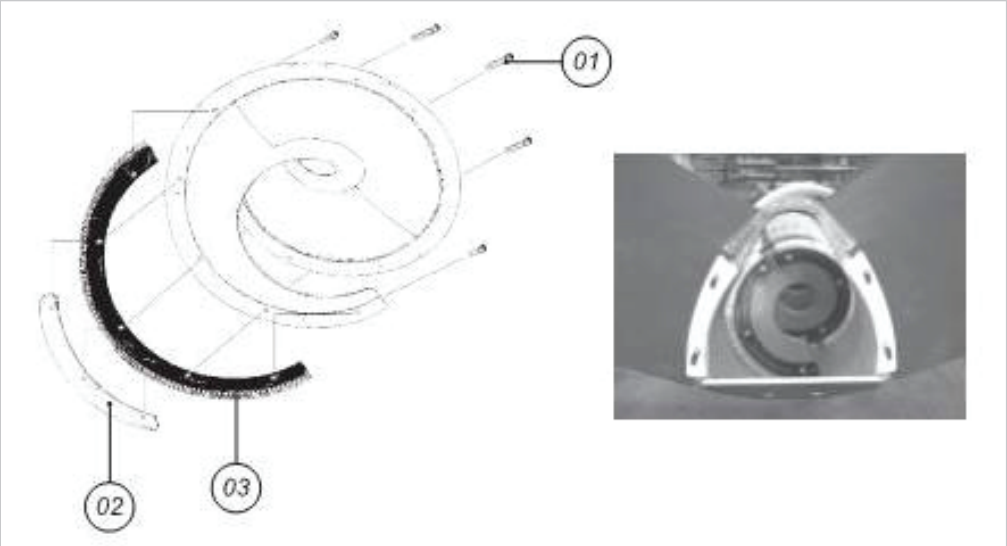

Figure 4-1: Cleaning Brush Assembly

Replacement of the Screen Basket

Prior to working on equipment, disconnect power supply to the motor that will prevent reconnecting power, without the knowledge of the person who is performing the maintenance.

1. Divert flow away from screen tank.
2. Pivot or orient the screen to a safe and convenient working configuration.
3. Shore up and stabilize the screen.
4. Remove fasteners “A” which connect the screen basket to the transport tube.
5. Remove old screen basket “B” and replace with new screen basket “B”.
6. Secure new screen basket to transport tube with existing fasteners, “A”, or new fasteners if required.

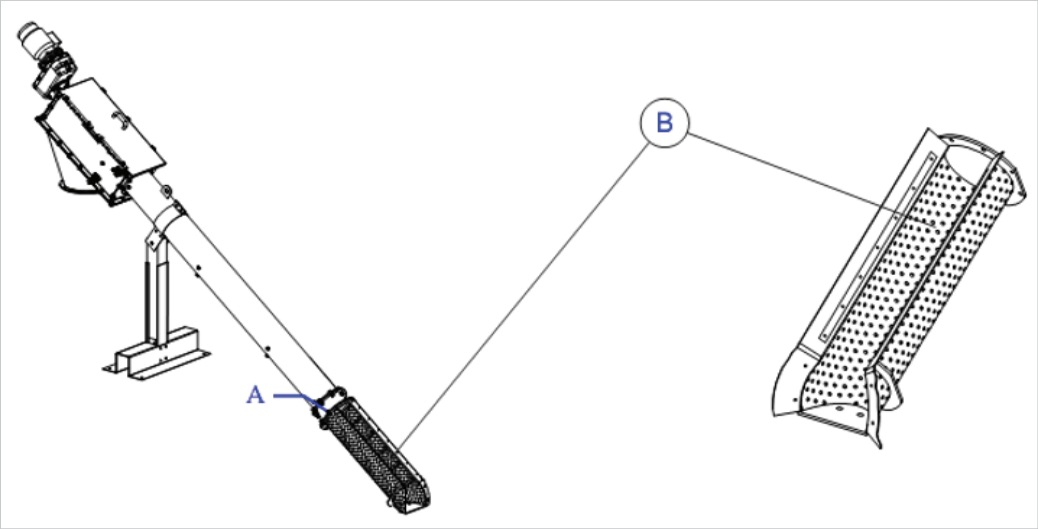

Figure 4-2: Screen Basket

Replacement of the Lateral Flaps on the Basket

Prior to working on equipment, disconnect power supply to the motor that will prevent reconnecting power, without the knowledge of the person who is performing the maintenance.

1. Divert flow away from screen tank.
2. Pivot or orient the screen to a safe and convenient working configuration.
3. Shore up and stabilize the screen.
4. Remove fasteners “A” which connect the elastomer flaps to the screen basket.
5. Remove the flat bar, “B” and the elastomeric flaps, “C” and replace the old elastomeric flaps.
6. Secure new elastomer flaps to the screen basket by replacing the flat bar, “B” and tightening with existing fasteners, “A”, or new fasteners if required.

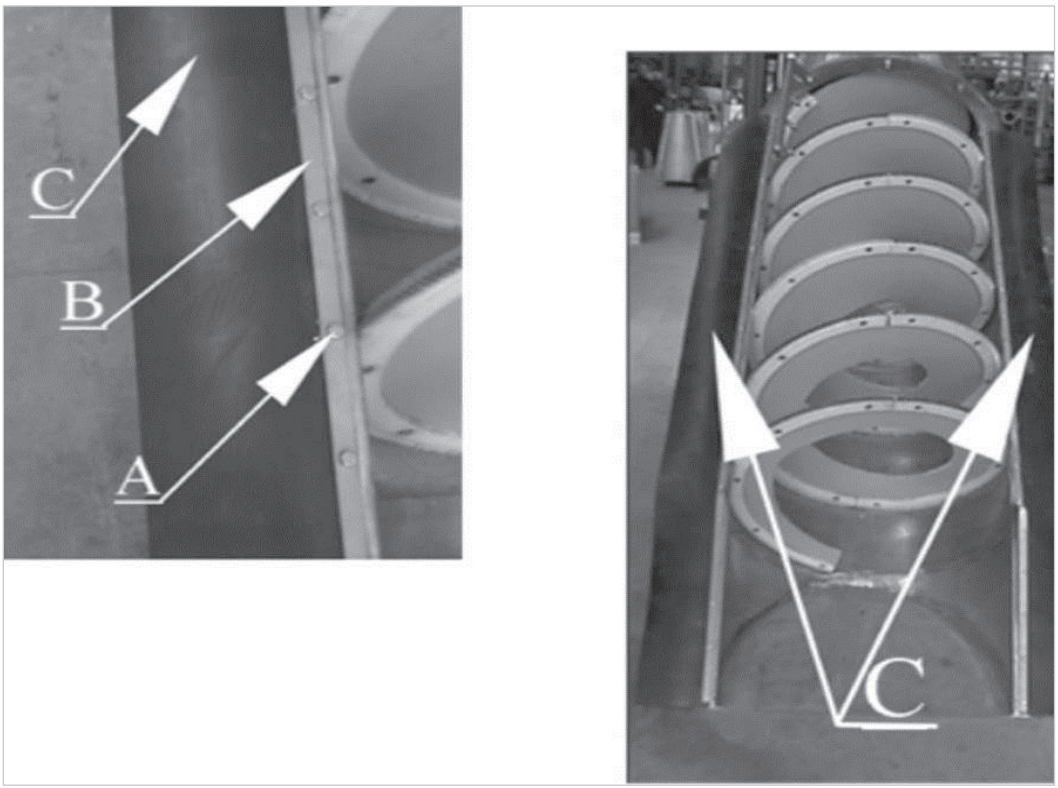

Figure 4-3: Lateral Flaps

Replacement of Wear Bars

Prior to working on equipment, disconnect power supply to the motor that will prevent reconnecting power, without the knowledge of the person who is performing the maintenance.

Wear bars ensure correct movement of shaftless auger and are located in the screen transport tube.

1. Remove the screen basket as described in previous section.
2. Remove blades (fixed and spinning) from the upper box of the screw screen compacting conveyor. (see Figure 4-4)

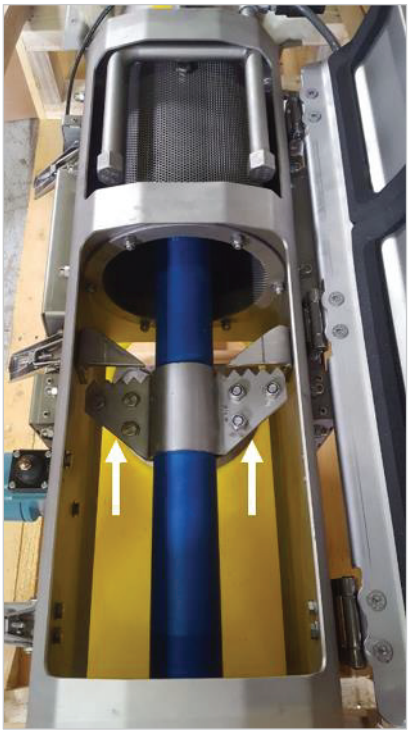

Figure 4-4: Blades to be removed in compaction zone

3. Disconnect the auger shaft from the gear reducer by removing shaft retainer bolt and washer. (see Figure 4-5) If there is a protective cover over the bolt, remove cover first. (see Figure 4-6)

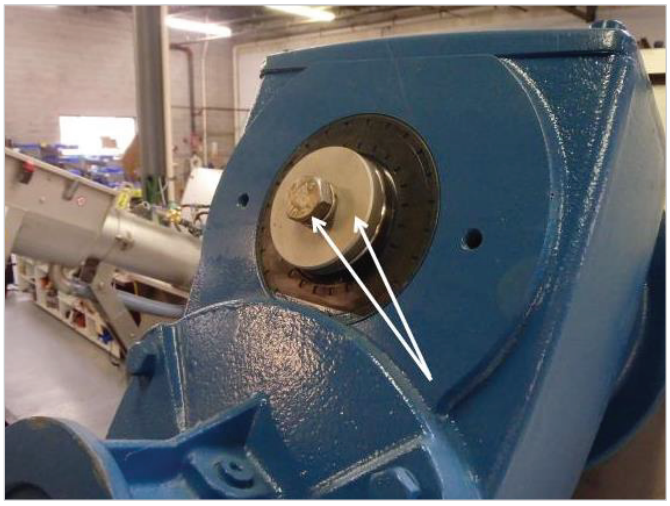

Figure 4-5: Shaft retainer bolt and washer



Figure 4-6: Shaft retainer bolt cover (if included)

4. Extract the auger. Ensure that during extraction the auger doesn't bend; it may cause permanent deformations of the auger shape.



Figure 4-7: Auger removal

5. Replace the wear bars. Take special care not to overtighten the bolts.
6. For assembly, carry out the steps described above in reverse order.

Replacement of Reducer

For the replacement of reducer and support weight of reducer prior to disconnecting.

1. Disconnect all electrical wires from the motor 1. Take special care not damage the internal parts of the machine, especially the brushes located at zone 2.



Figure 4-8: Preparation for reducer removal

2. Secure the auger to prevent movement of auger when reducer is disconnected.
3. Disconnect the auger shaft from the gear reducer by removing the shaft retainer bolt and washer. (see Figure 4-9) If there is a protective cover over the bolt, remove cover first. (see Figure 4-10)

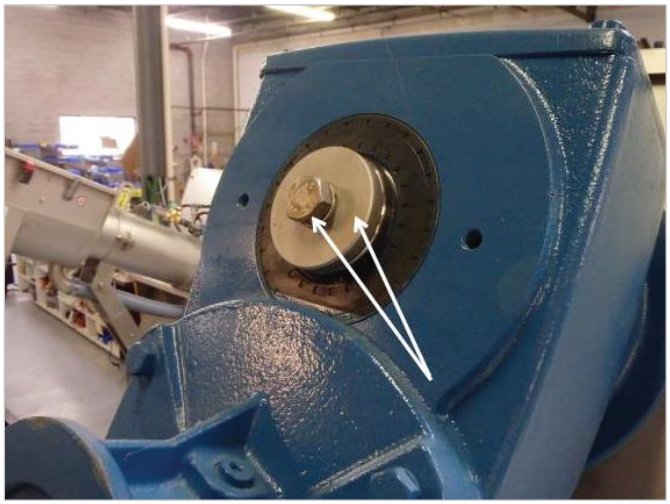

Figure 4-9: Shaft retainer bolt and washer



Figure 4-10: Shaft retainer bolt cover

4. Remove bolts to disconnect reducer from transport tube end plate. (see Figure 4-11)



Figure 4-11: Reducer to end plate fasteners

5. Disconnect the motor from reducer.
6. Replace the reducer.

7. Install motor as follows:

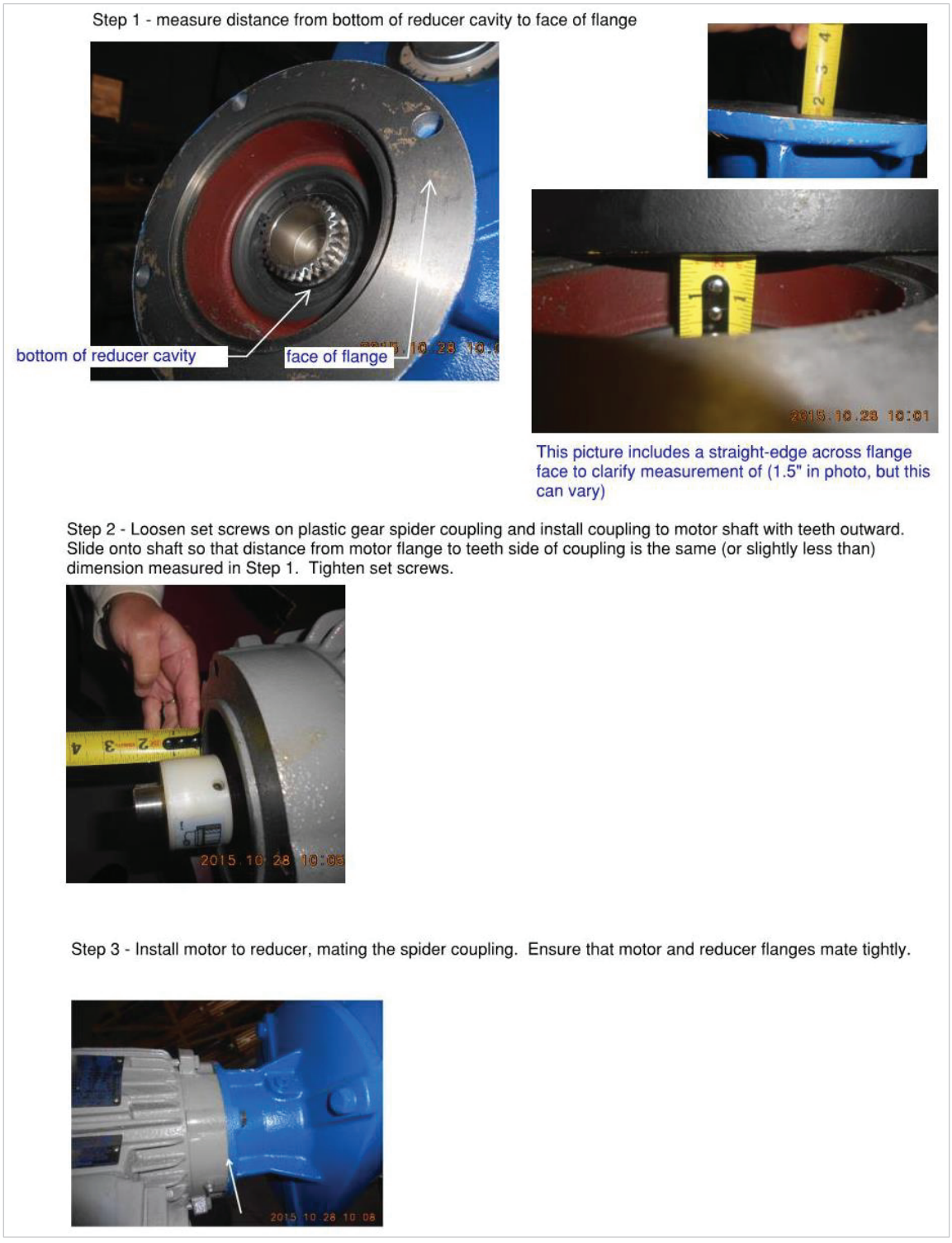

Figure 4-12: Motor installation steps

8. Perform above steps in reverse order to reassemble screen. Ensure all tools are removed from equipment prior to putting it back in service.

Recommended Equipment Maintenance Schedule

Description	Check For	Interval	Action	Tools
Screen Basket	Clogging	Daily		
Screenings Discharge	Clogging	Daily		
Liquid Return Pipe	Clogging	Daily		
Spray Wash	Clogging of Nozzles	Weekly		
Compaction Zone	Clogging & Cleanliness	Weekly		
Screw, Reducer & Motor	Vibration & Noise	Monthly	Repair or Replace	Wrench
Brushes	Wear	100 hours	Replace (if required)	Wrench
Screen Basket	Wear	100 hours		
Fasteners	Tightness	100 hours	Tighten	Wrench
Wear Bars	Wear	3 months	Replace (if required)	Wrench
Reducer	Lubrication	Yearly	Lubricate (if required) (See *Accessory Equipment* section)	Wrench
Motor	Lubrication	Yearly	Lubricate (if required) (See *Accessory Equipment* section)	Wrench, Screwdriver

- If the mechanism is to be shut down for an extended period of time, the **Storage and Shutdown Precautions** must be followed.
- The equipment must be routinely lubricated according to the schedule on the following page and the accessory item instructions enclosed. **Failure to do so will shorten the lifetime of the equipment and void the equipment warranty.**
- The equipment should be checked regularly for unusual sounds, irregular motion, or other signs of improper operation. If any of these symptoms are discovered, it must be investigated immediately to determine the source of the problem. The mechanism must not be allowed to operate if such problems exist
- Inspect all painted and galvanized surfaces frequently to check for corrosion. Remove any rust found and apply touch-up paint. All painted steel should be inspected once every year and repainted if required.
- Regularly examine all wearing parts, including the conveyor, wear bars and screening basket cleaning brushes, to check for excessive wear or misalignment. See **Recommended Equipment Maintenance Schedule** for suggested intervals.

Lubrication Schedule

Description	Lube Type	Fill Amount	Check / Change
Gear Reducer	Mobil SHC 630, or equivalent	7.08 Quarts 6.70 Liters	Yearly
Motor	See specific motor cutsheet	See specific motor cutsheet	See specific motor cutsheet

Equipment Troubleshooting Guide

Symptoms	Cause	Remedy
Spiral does not turn	No power to motor	Check motor troubleshooting guide
	Motor coupler	Install new motor coupler
	Jammed spiral	Check overload and overcurrent device. Check reset pushbutton
Screen does not handle flow rate	Spiral not operating	Inspect screen for large obstructions
	Solids plugging screen basket	Replace brushes
	Confirm downstream water level is at design level	Confirm hydraulics and consult Enviro-Care if necessary
Not discharging solids	Check rotation direction	Put screen in forward. Reverse leads if necessary
	Plugged discharge	Unplug discharge
Excessive solids in effluent	Side seals not sealing	Replace side seals
	Basket not flush with tank floor	Set screen flush with tank floor
	Screen basket damaged	Replace screen basket
Wet solids discharge	Compaction flush runs too frequently	Adjust time “off” settings. Do not run more than 10 seconds
	Compaction zone drain plugged	Unplug drain

Motor Troubleshooting Guide

Symptoms	Cause	Result	Remedy
Motor does not start	Incorrectly connected	Burnout	Connect correctly per diagram on motor
	Incorrect power supply	Burnout	Use only with correct rated power supply
	Fuse out, loose, or open connection	Burnout	Correct open circuit condition
	Open control circuit	None	Correct open circuit condition
	Rotating parts of motor may be jammed mechanically	Burnout	Check and correct: • Bent shaft • Broken housing • Damaged bearing • Foreign material in motor
	Driven machine may be jammed	Burnout	Correct jammed condition
	No power supply	None	Check for voltage at motor and work back to power supply
Motor starts but does not come up to speed	Incorrectly connected	Burnout	Connect correctly per diagram on motor
	Incorrect power supply	Burnout	Use only with correct rated power supply
	Fuse out, loose, or open connection	Burnout	Correct open circuit condition
	Overload	Burnout	Reduce load to bring current to rated limit. Use proper fuses and overload protection
Motor noisy electrically	Incorrectly connected	Burnout	Connect correctly per diagram on motor
	Incorrect power supply	Burnout	Use only with correct rated power supply
	Fuse out, loose, or open connection	Burnout	Correct open circuit condition
Motor runs hot (exceeds rating)	Incorrectly connected	Burnout	Connect correctly per diagram on motor
	Incorrect power supply	Burnout	Use only with correct rated power supply
	Fuse out, loose, or open connection	Burnout	Correct open circuit condition
	Overload	Burnout	Reduce load
	Impaired ventilation	Burnout	Remove obstruction
	Frequent start or stop	Burnout	• Reduce numbers of starts or reversals • Secure proper motor for this duty
	Misalignment between rotor and stator limitations	Burnout	Realign
Noisy mechanically	Misalignment of coupling or sprocket	Bearing failure, broken shaft, stator burnout due to motor drag	Correct misalignment

Symptoms	Cause	Result	Remedy
	Mechanical imbalance of rotating parts	Bearing failure, broken shaft, stator burnout due to motor drag	Find unbalanced part, then balance
	Lack of or improper lubricant	Bearing failure	Use correct lubricant, replace parts as necessary
	Foreign material in lubricant	Bearing failure	Clean out and replace bearings
	Overload	Bearing failure	Remove overload condition, replace damaged parts
	Shock loading	Bearing failure	Correct causes and replace damaged parts
	Mounting acts as amplifier of normal noise	Annoying noise	Isolate motor from base
	Rotor dragging due to worn bearings, shaft, or bracket	Burnout	Replace bearings, shaft, or bracket as needed
Bearing failure	• Misalignment of coupling or sprocket • Mechanical imbalance of rotating parts • Lack of or improper lubricant • Foreign material in lubricant • Overload	Burnout, damaged shaft, damaged housing	• Replace bearings • Correct misalignment • Find unbalanced part, then balance • Use correct **lubricant**, replace parts as necessary • Clean out and replace bearings • Remove overload condition, replace damaged parts
	Entry of water or foreign material into bearing housing	Burnout, damaged shaft, damaged housing	Replace bearings and shield against entry of foreign material (water, dust, etc.) Use proper motor

Typical Motor Burnout Patterns

Symptom	Caused by	Appearance
Shorted coil	Moisture, chemicals, foreign material in motor, damaged windings	Black or burned coil with remainder of winding good
100% failure	• Overload • Stalled • Impaired ventilation • Frequent reversal or starting • Incorrect power	Equally burned all around winding
Single phase condition	Open circuit in one line. The most common causes are loose connections, one fuse out, loose contact in switch	• If 1800 rpm - four equally burned groups at 90 degree intervals • If 1200 rpm - six equally burned groups at 60 degree intervals • If 3600 rpm - two equally burned groups at 180 degrees
	Note: if Y connected, each burned group will consist of two adjacent phase groups. If delta connected, each burned group will consist of one phase group	
Other	• Improper connection • Ground	Irregular burned groups or spot burns

Storage and Shutdown Precautions

Shutdown of Wastemaster® GCPC Screen

To shut down the Wastemaster® GCPC screen, stop flow to the unit and lock out power to drive. If the conveyor is to be inoperative for a prolonged period of time, operate conveyor until cleared of all material and open drain valve to drain unit of all liquid. This is particularly important when the material conveyed tends to harden or become more viscous or sticky, if allowed to stand for a period of time.

Check that all valves and drains are tightly closed and that the drive is operating normally.

Storing before Installation

It is preferable to store mechanical and electrical items indoors in a dry, well-ventilated enclosure with a temperature as constant as possible. The equipment should also be adequately supported to prevent distortion and undue stresses. It should be at least six inches off the floor.

The following instructions also apply if there is to be a period of time between installation and start-up or between start-up and the equipment going on stream. These steps are required to protect against corrosion and assure operating condition.

Whether stored indoors or outdoors, the following steps should be taken:

Short Term Storage or Shutdown (From 30 to 120 days)

1. Cover with a tarpaulin that allows adequate ventilation, drainage, and inspection access in an area protected against wind, direct sunlight, rain, and snow.

2. At least once a month, re-lubricate all items that are grease lubricated and grease exterior surfaces of all seals. Inspect all of the equipment for signs of corrosion and take corrective steps as required.

3. Control Panels and electrical components must be stored inside a clean, dry location.

Long Term Storage or Shutdown (Over 120 days)

1. In addition to those steps shown under "Short Term", the following steps should be taken whether storage is indoors or outdoors:

2. Periodic checks, frequency dependent upon ambient conditions, must be made of painted surfaces for deterioration of paint. Wide variations in ambient temperatures are conducive to condensation with its resultant oxidation. Steps should be taken to protect the affected surfaces. Increasing ventilation and reducing humidity are frequently required. Where equipment is well covered and protected, inspection doors, covers, etc. should be blocked open slightly to increase ventilation. Relatively small areas and shafts can be coated with a waterproof grease or rust inhibitor.

3. Control Panels and electrical components must be stored inside a clean, dry location.

Dismantling and Disposal of the Equipment

In case of dismantling and disposal of the equipment separate the different kinds of material composing the equipment.

1. The plastic, brushes and seals must be separated and disposed in a proper area.
2. The other parts must be recycled as metallic materials.
3. The oil in the gear reducer must be disposed in a proper area.



Information

The dismantling and disposal of the equipment must be done according to the general safety rules and the local environmental laws.

Section Five: Accessory Equipment

Reducer

Motor

Motor Cutout Switch

Solenoid Valve – ½”

Solenoid Valve – 1”

Ultrasonic Level Sensor

Water Strainer

Water Hammer Eliminator

Control Panel Components

This page intentionally left blank

Enviro-Care
A WAMGROUP® Company

Gear Reducer

This page intentionally left blank

Right-angle Helical-bevel Reducers
Selection & Combinations

Selection

- SK 92072
- SK 92172
- SK 92372
- SK 92672
- SK 9012.1
- SK 9013.1
- SK 9016.1
- SK 9017.1
- SK 92772
- SK 9022.1
- SK 9023.1
- SK 9032.1
- SK 9033.1
- SK 9042.1
- SK 9043.1
- SK 9052.1
- SK 9053.1
- SK 9072.1
- SK 9072.1/32
- SK 9072.1/42
- SK 9082.1
- SK 9082.1/42
- SK 9082.1/52
- SK 9086.1
- SK 9086.1/52
- SK 9092.1
- SK 9092.1/52
- SK 9096.1
- SK 9096.1/62
- SK 9096.1/63

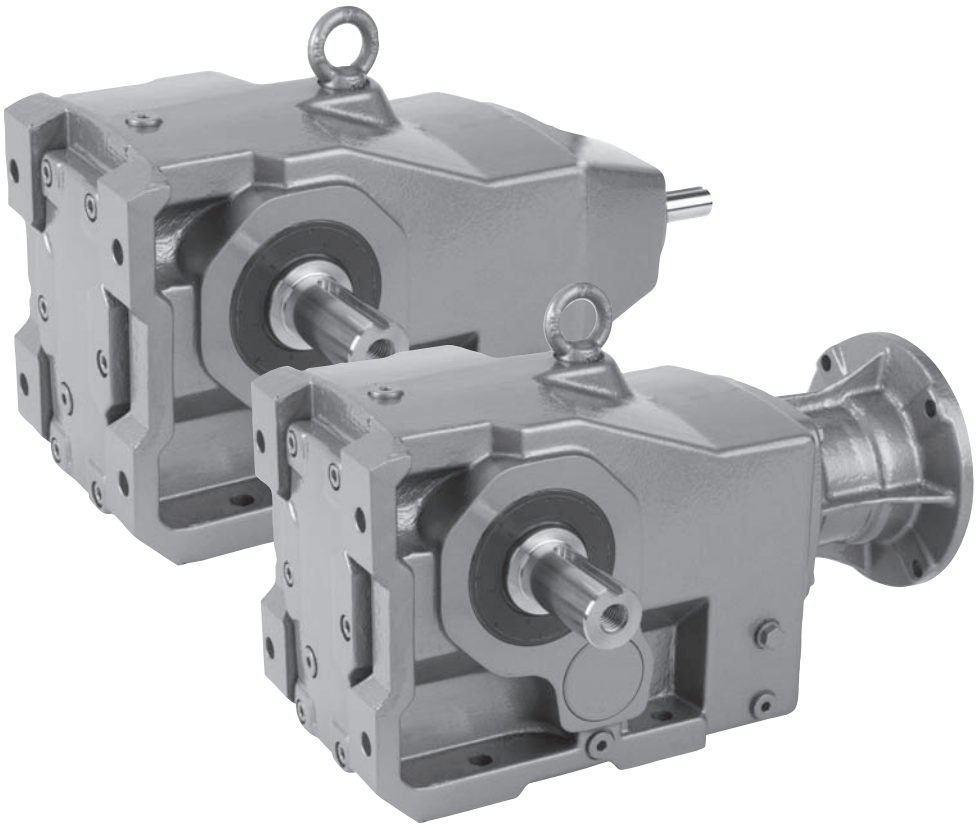

NORD DRIVESYSTEMS

www.nord.com

UNICASE™

Model Type	Gear Ratio i_{tot}	Output Speed n_2 1750 rpm [rpm]	Output Torque* $T_{2\,max}$ [lb-in]	Max. Solid in 1750 rpm [hp]
SK 92772	4.81	364	3629	7.50
	5.43	322	3761	7.50
	6.11	286	3717	7.50
	6.41	273	3983	7.50
	7.60	230	4204	7.50
	8.55	205	4381	7.50
	9.63	182	4381	7.50
	10.88	161	4558	7.50
	12.43	141	4558	7.50
	13.91	126	4735	7.50
	15.60	112	5177	7.50
	17.83	98	5177	7.50
	19.73	89	5310	7.50
	22.22	79	5487	6.88
	25.39	69	5753	6.30





Helical-Bevel Ordering Guide





DRIVESYSTEMS

	Gear Unit	Shaft/Mounting	Reducer Options		Motor/Input	Motor Options
SK	❶ 9032.1	❷ AF	❸ BH	-	❹	
					see page 816	see page 816

❶

Gear Unit			
92072	9012.1	9013.1	9072.1/32
92172	9016.1	9017.1	9072.1/42
92372	9022.1	9023.1	9082.1/42
92672	9032.1	9033.1	9082.1/52
92772	9042.1	9043.1	9086.1/52
	9052.1	9053.1	9092.1/52
	9072.1		9096.1/62
	9082.1		
	9086.1		
	9092.1		
	9096.1		

❷

Shaft/Mounting		
- Solid Shaft/Foot Mount	**VXZ -** Solid Shaft/Foot/B14 Flange	**AZ** - Hollow Shaft/B14 Flange
VZ - Solid Shaft/B14 Flange	**VXF -** Solid Shaft/Foot/B5 Flange	**AF** - Hollow Shaft/B5 Flange
VF - Solid Shaft/B5 Flange	**LXZ -** Double Solid Shaft/Foot/ B14 Flange	**AX** - Hollow Shaft/Foot Mount
LX - Double Solid Shaft/Foot		**AXZ -** Hollow Shaft/Footed/B14 Flange
		AXF - Hollow Shaft/Footed/B5 Flange

❸

Reducer Options		
❒ **B -** Fixing Element Kit	❒ **VL -** Heavy Duty Output Bearings	❒ **FKM -** Flouro-rubber Seals
❒ **H -** Hollow Shaft Cover	❒ **VL2 -** Spread Bearing Design	❒ **OSG -** Oil Sight Glass
❒ **H66 -** IP66 Hollow Shaft Cover	❒ **VL3 -** Oil Safe Spread Bearings	❒ **OA -** Oil Expansion Chamber
❒ **D -** Torque Arm	❒ **VL4 -** Drywell	❒ **OC -** Oil Cooler
❒ **K -** Bottom Mount Torque Arm	❒ **SM5 -** Stainless Steel Shaft	❒ **WC -** Water Cooling Cover
❒ **PR -** Flange Pilot Removal	❒ **SWA -** Special Hollow Shaft	❒ **LL -** Long Term Storage
❒ **SH -** Shrink Disc & Cover	❒ **SWV -** Special Solid Shaft	❒ **MDP -** Magnetic Drain Plug
❒ **VSH -** Heavy Duty Shrink Disc & Cover	❒ **R -** Backstop	❒ **ADP -** Additional Drain Plug
❒ **M -** GRIPMAXX™		

❹

Input Shaft	NEMA Adapter	IEC Adapter	Integral Motors		Integral Energy Efficent Motors		Scoop	Motor Platform	Servo Adapter (Keyed)
W	N56C	IEC 63	**63S/4** - 0.16hp	**160L/4** - 20hp	**80LH/4** - 1hp	**200LH/4** - 40hp	S56	MKN056	SEP 100
	N140TC	IEC 71	**63L/4** - 0.25hp	**180MX/4** - 25hp	**90SH/4** - 1.5hp	**225SH/4** - 50hp	S140T	MKN140	SEP 130
	N180TC	IEC 80	**71S/4** - 0.33hp	**180LX/4** - 30hp	**90LH/4** - 2hp	**2525MH/4** - 60hp	S180T	MKN180	SEP 165
	N210TC	IEC 90	**71L/4** - 0.50hp	**200L/4** - 40hp	**100LH/4** - 3hp	**250MH/4** - 75hp	S210T	MKN210	SEP 215
	N250TC	IEC 100	**80S/4** - 0.75hp	**225S/4** - 50hp	**112MH/4** - 5hp	**280SH/4** - 100hp	S250T	MKN250	SEP 300
	N280TC	IEC 112	**80L/4** - 1hp	**2525M/4** - 60hp	**132SH/4** - 7.5hp	**280MH/4** - 125hp	S280T	MKN280	**Servo Adapter (Clamp)**
	N320TC	IEC 132	**90S/4** - 1.5hp	**250M/4** - 75hp	**132MH/4** - 10hp	**315SH/4** - 150hp	S320T	MKN320	
	N360TC	IEC 160	**90L/4** - 2hp	**280S/4** - 100hp	**160MH/4** - 15hp	**315MH/4** - 175hp	S360T	MKN360	SEK 100
	N400TC	IEC 180	**100L/4** - 3hp	**280M/4** - 125hp	**160LH/4** - 20hp	**315MAH/4** - 200hp	S400T	MKN400	SEK 130
		IEC 200	**100LA/4** - 5hp	**315S/4** - 150hp	**180MH/4** - 25hp	**315LH/4** - 250hp			SEK 165
		IEC 225	**112M/4** - 5.4hp	**315M/4** - 175hp	**180LH/4** - 30hp				SEK 215
		IEC 250	**132S/4** - 7.5hp	**315MA/4** - 200hp					SEK 300
		IEC 280	**132M/4** - 10hp	**315L/4** - 250hp					
		IEC 315	**160M/4** - 15hp	Other Speeds Available		Other Speeds Available			

Product Specifications

Ratio

158.74 :1

see pages 466 - 515

OR

Output Speed

rpm

see pages 466 - 515

Mounting Position

- ❍ M1
- ❍ M2
- ❍ M3
- ❍ M4
- ❍ M5
- ❍ M6
- ❍ Special M2 35 M5

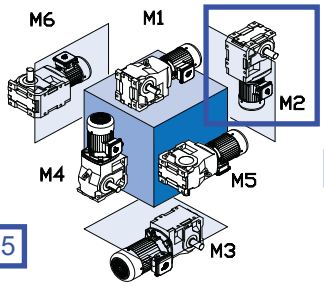

Paint

- ❍ Standard Stainles Steel Paint
- ❍ NSD+ (gray)
- ❍ NSD+W (white)
- ❍ NSD-X3 (gray)
- ❍ NSD-X3W (white)
- ❍ Casting Primed
- ❍ Special _____

Lubricant

- ❍ Standard
- ❍ Synthetic
- ❍ Food Grade
- ❍ Other _____

Solid Shaft Side (if required)

- ❍ Shaft Side A
- ❍ Shaft Side B
- ❍ Shaft Side A&B

see page 23

Shaft Diameter (if required)

50mm

see pages 682 - 694

B5 Flange Side (if required)

- ❍ Flange Side A
- ❍ Flange Side B
- ❍ Flange Side A&B

see page 23

B5 Flange Diameter (if required)

300mm

Torque Arm Side & Location (if required)

- ❍ Side A
- ❍ Side B

Location

see page 23

Shrink Disc Side (if required)

- ❍ Side A
- ❍ Side B

see page 23

H66 Side (if required)

- ❍ H66 Side A
- ❍ H66 Side B

see page 23

Gearmotor Only Details

Voltage & Frequency

- ❍ 230/460V-60Hz (460V only ≥ 40 hp)
- ❍ 575V-60Hz
- ❍ 208V-60Hz
- ❍ 400V-50Hz
- ❍ 115/230V-60Hz, 1 ph.
- ❍ Other _____

Terminal Box Pos.

- ❍ TB1
- ❍ TB2
- ❍ TB3
- ❍ TB4

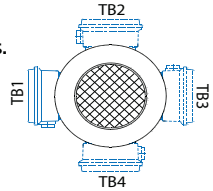

Mtg. Pos. M1 Shown

Conduit Entry Loc.

- ❍ CE I *
- ❍ CE II
- ❍ CE III *
- ❍ CE IV

* Brakemotor

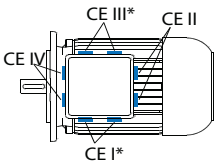

Mtg. Pos. M1 Shown



Gearbox Selection

A number of factors are considered when selecting a gear unit, including gearbox rating, service factor, speed and speed variation, horsepower, thermal capacity, ratio, physical size, ambient conditions and cost. Below are some guideline steps to help aid in the gear unit selection.

1. Determine the speed and/or gear ratio
2. Determine the required power or torque
3. Determine Service Factor
4. Select the basic gearbox type and input
5. Determine the required mounting position
6. Select options
7. Checks – overhung load, thrust load, NEMA motor weight, thermal considerations, and other application considerations

1. Speed and Gear Ratio

The first step in selecting a gear unit is determining the final output speed or speeds you need. This speed is normally described in revolutions per minute (rpm). This output speed or speeds is determined by the input speed to the gear unit divided by its gear ratio. Their relationship is described by the following formulas.

$$\text{i (gear ratio)} = \frac{\text{Input speed [rpm]}}{\text{Output speed [rpm]}}$$

$$\text{Output speed [rpm]} = \frac{\text{Input speed [rpm]}}{\text{i (gear ratio)}}$$

To specify a gear unit, you can identify either gear ratio needed or the output speed (rpm) if the input speed is known.

2. Power and Torque

The second step for selecting a gear unit is the required power or torque needed to power the load. Torque in this catalog is normally expressed in pound-inches [lb-in].

$$\text{Power [hp]} = \frac{\text{Torque [lb-in] x speed [rpm]}}{63025}$$

$$\text{Torque [lb-in]} = \frac{\text{Power [hp] x 63025}}{\text{speed [rpm]}}$$

For a proper selection you must ensure that the motor or other prime mover can produce enough torque or power and that the gear unit has adequate torque or power capacity. You must also consider if the power or torque is specified at the input or output of the gear unit. The Helical-worm gear units have lower efficiency than in-line or bevel gear units, therefore helical-worm products efficiency may need to be considered in the selection.

To specify a gear unit you can identify torque or power.

3. Service Factor or Service Class

In addition to power or torque, service factor must also be considered. A service factor is essentially the ratio of extra capacity in a gear unit compared to the power or torque that is needed to run that application. The goal of selecting a gear unit with extra capacity (service factor) is to provide adequate service life in operation.

One reason to apply a larger service factor is if a unit operates more hours per day. If a unit runs 24 hours per day it should normally have a higher service factor than a unit that runs 8 hours per day if you expect the same calendar life.

A second reason for applying a larger service factor is to cope with a more difficult application. Even if it takes the same power and speed to operate a rock crusher as a fan, the rock crusher needs a stronger gearbox (higher service factor) to give the same operating life as the gear unit powering the fan.

The real question is how to determine the proper service factor for a gear unit in an application. Following are four possible methods.

Customer or User Specification

Many customers will have their own service factor guidelines or specifications.

AGMA Service Factoring

American Gear Manufacturers Association (AGMA) publishes lists of recommended service factors for different applications. These service factor recommendations have been determined form the experience of many gear manufactures and are in AGMA standard 6010. See page 68 for additional detail.

AGMA Service Classes

American Gear Manufactures Association (AGMA) has another method for selecting gear units service factors. AGMA standard 6009 lists many applications by a service class (I, II, III) with class I being the simplest applications and class III being the hardest. These application service classes are associated with a range of service factors by the following table.

AGMA Service Class	Service Factor
I	1.00 to 1.39
II	1.40 to 1.99
III	2.00 and above

In the gearmotors selection table each unit is also classified by an AGMA service class. See page 64 for additional detail.

Selection Information



DRIVESYSTEMS

NORD Mass Acceleration Service Factoring

NORD often uses a calculation based system to properly assign a service factor. This system considers hours of operation per day, the severity of the application and the number of times the equipment is cycled. See page 72 for additional detail.

4. Gearbox Type & Input

NORD gear drives are available in a number of mechanical configurations including:

- Helical in-line
- Clincher™ shaft mount
- Right-angle helical-bevel
- Right-angle helical-worm

NORD's modular design allows for a number of different inputs to be added to NORD reducers including:

- Integral motor
- NEMA-C and IEC motor adapter
- Solid input shaft
- Servo motor adapter
- Sugar scoop mount
- Top motor mount platform
- NORDISC™ variable speed friction drives
- Titan™ variable speed belt boxes

5. Mounting Position

The gearbox mounting position is an important and often overlooked specification. The mounting position determines how much oil the gear reducer requires, in addition to determining the position of the oil drain, oil fill and vent on the gear drive. NORD offers six basic mounting positions. If your application requires a variation from the six basic mounting positions, please contact NORD.

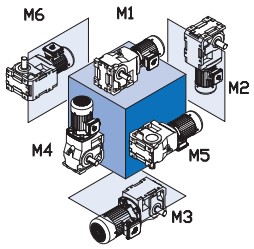

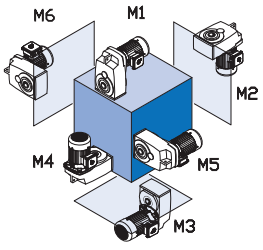

Many gearbox and motor options require a location designation. For example a right-angle helical-bevel unit with a single solid shaft extension requires a shaft extension side location. Please see page 23 for additional options that require location designation.

6. Options

NORD offers a number of mechanical, protective, paint & lubrication options for gear reducers & motors. Please see page 25 for gear unit options & refer to the motor section (Section G) for motor options.

7. Checks

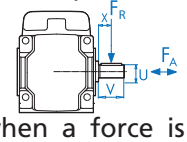

Overhung Load

An overhung or radial load exists when a force is applied at right-angles to a shaft beyond the shaft's outermost bearing. Pulleys, sheaves and sprockets will cause an overhung load when used as a power take-off. The amount of overhung load will vary, depending on the type of power take-off used and where it is located on the shaft.

Overhung load [FQ] can be found in the gearmotor rating tables and input shaft overhung load ratings [FQ1] can be found on pages 58 - 69. Overhung load capacities should not exceed the values in the table to ensure long bearing life. Overhung load capacities are to be applied at the midpoint of the shaft extension and without thrust loads.

To calculate overhung load see page 58.

Thrust Loads (Axial)

Loads that are directed towards or away from the gearbox along the axis of the shaft are called thrust or axial loads. Output shaft thrust capacity [FA] can be found in the gearmotor rating tables. Input shaft capacity [FA1] can be found on pages 68. Thrust load capacities should not exceed the values listed in the tables to ensure long bearing life. Thrust load capacities are listed for pure axial loads with no overhung load. Contact NORD for combination loads or a more exact examination of the application.

NEMA C-face Motor Weight Limits

When mounting a motor to a NORD NEMA C-face motor adapter it is important to consider the motor's weight. Following is a table that includes the maximum motor weight the NEMA adapter can support. If the motor exceeds the listed weight it must be externally supported. When a C-face mounted motor is externally supported care must be taken to ensure that the support system does not impose additional pre-loads on the NEMA motor adapter.

NEMA Weights

Motor FRAME	56C	143TC	145TC	182TC	184TC	210TC
Max Weight [lb]	66	88	110	130	175	220
Motor FRAME	**250TC**	**280TC**	**324TC**	**326TC**	**365TC**	
Max Weight [lb]	440	550	770	1100	1540	

Selection Information

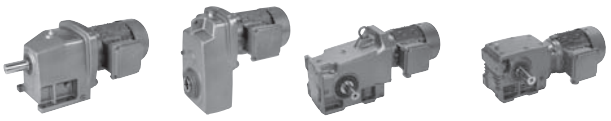

Gear Reducer Ratings

The permissible continuous power limit of gear reducers is limited by both the mechanical rating and the thermal rating. The mechanical rating depends upon the material strength of the gear reducer's gears, bearings, housing, shafts, etc. The mechanical input power limit to the reducer is also a function of the mechanical power rating divided by the relevant reducer service factor.

The thermal rating or thermal limit depends upon the amount heat generated within the reducer and is influenced by a variety of factors including:

- Churning or splashing losses in the lubricant which depend upon reducer type, ratio, input style, mounting position or oil fill-level, and the circumferential travel velocities of the gear wheels.
- The actual speed and load conditions. These factors determine load-dependent losses in the gears and frictional losses in the gears, bearings and seal areas.
- Ambient Conditions:
  - Ambient Temperature.
  - Amount of free air circulation around the drive.
  - Possible near-by heat sources.
  - Heat dissipation or the ability of the reducer to transfer heat through the housing, shafts, and the mating sub-structure or mounting surface.

Observing the Reducer's Thermal Limit

When to Contact NORD

Through computer program analysis NORD can evaluate application conditions and the impact they have on a reducer's thermal capacity.

When applying helical in-line, Clincher™ shaft mount, & helical-bevel gear units of case sizes 6 & larger (SK62, SK6282 and SK9072.1 and larger), consult NORD if any two or more of the following conditions apply:

- Gear ratio, $i_{total} \leq 24{:}1$ or $\leq 48{:}1$ for helical-bevel units
- Input power, $P_1 \geq 60$ hp (45 kw)
- Input speed, $n_1 > 1800$
- Vertical positioning (mounting position M2 or M4)
- Input configuration: NEMA C-face, IEC, servo adapter or solid-shaft input (Type-W)
- Elevated ambient temperature ≥ 86° F (30 °C)

When applying helical worm or worm gear units, please consult NORD if one of the following conditions applies:

- Input speed, $n_1 > 1800$
- Vertical positioning (mounting position M2 or M4)
- Input configuration: NEMA C-face, IEC, servo adapter or solid-shaft input (Type-W)
- Elevated ambient temperature ≥ 86° F (30 °C)

Advise NORD of any special application considerations:

- Confined space or limited air circulation
- Exposure to other near-by radiant heat sources
- Dirty or dusty environments
- High altitude operation > 3,280 ft (1000 m) a.s.l.

Dangers of Reducer Overheating

The following problems may result when a reducer's thermal capacity or maximum oil sump temperatures are exceeded:

- Lubrication oxidation, breakdown & deterioration.
- A decrease in lubrication viscosity & film thickness.
- Loss of critical bearing and gear clearances required for proper lubrication.
- Increased contact pressures & increased operating temps. in the critical load zones of the gearing and bearings.
- An increased possibility for metal-to-metal contact and premature component wear.
- A significant reduction in the lubricant's ability to prevent scuffing, pitting, and in extreme cases galling or welding.

Maximum Oil Sump Temperature Limit

To prevent reducer overheating, the reducer's maximum oil sump temperature limit must not be exceeded for prolonged periods of operation (up to 3 hours continuous operation, depending upon reducer size).

Oil Type	Maximum Oil Temperature Limit	
	NORD	AGMA 9005-D94
Mineral	80-85 °C (176-185 °F)	95 °C (203 °F)
Synthetic	105 °C (220 ° F)	107 ° C (225 ° F)

Measures to Expand the Application Range

There are a variety of measures that may be taken in order to protect against thermal overload and expand the application range of the gear reducer. Common examples include the following:

- Recommending a change in lubrication viscosity and/or a specific synthetic lubricant type.
- Applying high-temperature seals.
- Increasing air flow around the gear unit.
- Protecting the reducer from high heat sources.
- Considering an integral motor instead of the bolt-on input assembly covers. In many cases the motor fan will substantially increase air-flow around the gear unit.
- Add an Oil Expansion/Overflow Chamber (Option "OA") or an Oil Reservoir (Option "OT").
- Oil Cooler (Option "OC").
- Water Cooling Cover (Option "WC")

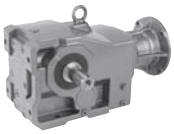

Helical-Bevel Weights - Reducer

Approximate Weights [lb]

Type	W	56C	140TC	180TC	210TC	250TC	280TC	320TC	360TC
SK 92072	15	24	24	–	–	–	–	–	–
SK 92172	26	35	35	–	–	–	–	–	–
SK 92372	40	49	49	60	–	–	–	–	–
SK 92672	79	86	86	97	112	–	–	–	–
SK 9012.1 **SK 9013.1**	75 86	86 90	86 –	101 –	– –	– –	– –	– –	– –
SK 9016.1 **SK 9017.1**	77 88	88 93	88 –	104 –	– –	– –	– –	– –	– –
SK 92772	99	101	101	112	128	128	–	–	–
SK 9022.1 **SK 9023.1**	93 104	104 108	104 –	119 –	– –	– –	– –	– –	– –
SK 9032.1 **SK 9033.1**	150 154	154 165	154 165	163 –	183 –	– –	– –	– –	– –
SK 9042.1 **SK 9043.1**	276 287	265 291	265 291	280 300	311 –	333 –	– –	– –	– –
SK 9052.1 **SK 9053.1**	441 459	430 463	430 463	445 472	476 –	498 –	498 –	– –	– –
SK 9072.1 **SK 9072.1/32** **SK 9072.1/42**	794 803 862	– 807 –	– 807 851	767 816 897	796 836 919	851 – 942	851 – –	882 – –	915 – –
SK 9082.1 **SK 9082.1/42** **SK 9082.1//52**	1532 1435 1491	– 1424 –	– 1424 –	1338 1440 1495	1369 1471 1526	1424 1493 1548	1424 – 1548	1455 – –	1488 – –
SK 9086.1 **SK 9086.1/52**	2084 2042	– 2031	– 2031	1890 2046	1921 2077	1976 2099	1976 2099	2007 –	2040 –
SK 9092.1 **SK 9092.1/52**	3341 3299	– 3288	– 3288	3147 3303	3177 3334	3233 3356	3233 3356	3263 –	3296 –
SK 9096.1 **SK 9096.1/62** **SK 9096.1/63**	4221 4298 4315	– 4287 4304	– 4287 4304	– 4302 4319	4057 4333 4350	4113 4355 4372	4113 4355 4372	4143 – –	4176 – –

Above weights are approximate. Depending upon ratio, oil quantity and optional equipment, reducer weights may be different than shown.

Exact weights can be obtained after the unit is fully asembled.

SK 9032.1, SK 9033.1
NEMA-C + W
Ratings & Combinations

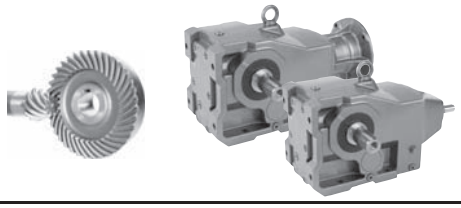

DRIVESYSTEMS

Model Type	Gear Ratio	Output Speed	Output Torque*	Maximum input power◈ Solid input shafts type "W"				NEMA C-Face* Available Combinations							
				Input Speed											
	i_{tot}	n_2 1750 rpm	$T_{2\,max}$	1750 rpm	1150 rpm	875 rpm	580 rpm								
		[rpm]	[lb-in]	[hp]	[hp]	[hp]	[hp]	56C	140TC	180TC	210TC	250TC	280TC	320TC	360TC
SK 9032.1	8.48	206	7788	10.00	6.60	5.00	3.30	X	X	X	X				
	10.73	163	7965	10.00	6.60	5.00	3.30	X	X	X	X				
	12.68	138	8850	10.00	6.60	5.00	3.30	X	X	X	X				
	13.49	130	11948	10.00	6.60	5.00	3.30	X	X	X	X				
	16.04	109	12390	10.00	6.60	5.00	3.30	X	X	X	X				
	17.08	102	12833	10.00	6.60	5.00	3.30	X	X	X	X				
	20.23	87	13275	10.00	6.60	5.00	3.30	X	X	X	X				
	23.91	73	13718	10.00	6.60	5.00	3.30	X	X	X	X				
	25.03	70	13275	10.00	6.60	5.00	3.30	X	X	X	X				
	29.66	59	13275	10.00	6.60	5.00	3.30	X	X	X	X				
	35.61	49	13718	10.00	6.60	5.00	3.30	X	X	X	X				
	38.05	46	13718	10.00	6.60	5.00	3.30	X	X	X	X*				
	40.36	43	13718	9.36	6.18	4.68	3.09	X	X	X	X*				
	47.70	37	13718	8.05	5.32	4.03	2.66	X	X	X	X*				
	49.94	35	13718	7.62	5.03	3.81	2.51	X	X	X	X*				
	59.17	30	13718	6.53	4.31	3.26	2.15	X	X	X	X*				
	64.08	27	13718	5.88	3.88	2.94	1.94	X	X	X	X*				
	75.91	23	13718	5.01	3.30	2.50	1.65	X	X	X*	X*				
	84.17	21	13718	4.57	3.02	2.29	1.51	X	X	X*	X*				
	93.50	19	13718	4.14	2.73	2.07	1.36	X	X	X*					
	110.77	16	13718	3.48	2.30	1.74	1.15	X	X	X*					
	117.70	15	13718	3.26	2.15	1.63	1.08	X	X						
	139.44	13	13718	2.83	1.87	1.41	0.93	X	X						
	158.74	11	13718	2.39	1.58	1.20	0.79	X	X	X*					
	188.06	9.3	13718	2.02	1.34	1.01	0.67	X	X*	X*					
	197.45	8.9	13718	1.94	1.28	0.97	0.64	X	X*						
	233.92	7.5	13718	1.63	1.08	0.82	0.54	X	X*						
	249.72	7.0	13718	1.52	1.01	0.76	0.50	X	X*						
	295.85	5.9	13718	1.28	0.85	0.64	0.42	X	X*						
SK 9033.1	167.45	10	13718	1.50	0.99	0.75	0.50	X	X*	X*					
	214.83	8.1	13718	1.50	0.99	0.75	0.50	X	X*	X*					
	267.65	6.5	13718	1.41	0.93	0.71	0.47	X	X*						
	352.25	5.0	13718	1.09	0.72	0.54	0.36	X	X*						
	398.77	4.4	13718	0.96	0.63	0.48	0.32	X*	X*						
	539.10	3.2	13718	0.70	0.46	0.35	0.23	X*							
	691.55	2.5	13718	0.54	0.36	0.27	0.18	X*							
	873.65	2.0	13718	0.44	0.29	0.22	0.14	X*							
	1149.80	1.5	13718	0.33	0.22	0.16	0.11	X*							
	1361.37	1.3	13718	0.28	0.19	0.14	0.09	X*							
	1822.00	0.96	13718	0.21	0.14	0.10	0.07	X*							
	2428.14	0.72	13718	0.16	0.10	0.08	0.05	X*							
	3635.95	0.48	13718	0.10	0.07	0.05	0.03	X*							

* Caution - The motor power may exceed the gear unit's mechanical torque capacity
◈ The mechanical power limit of the solid input shaft type "W" may limit the reducer rating.
All ratings are mechanical. See page 14 for thermal considerations.

lb	W	56C	140TC	180TC	210TC
SK 9032.1	150	154	154	163	183
SK 9033.1	154	165	165	-	-



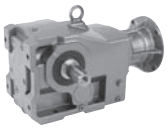

SK 9032.1

SK 9032.1AX

NEMA Input

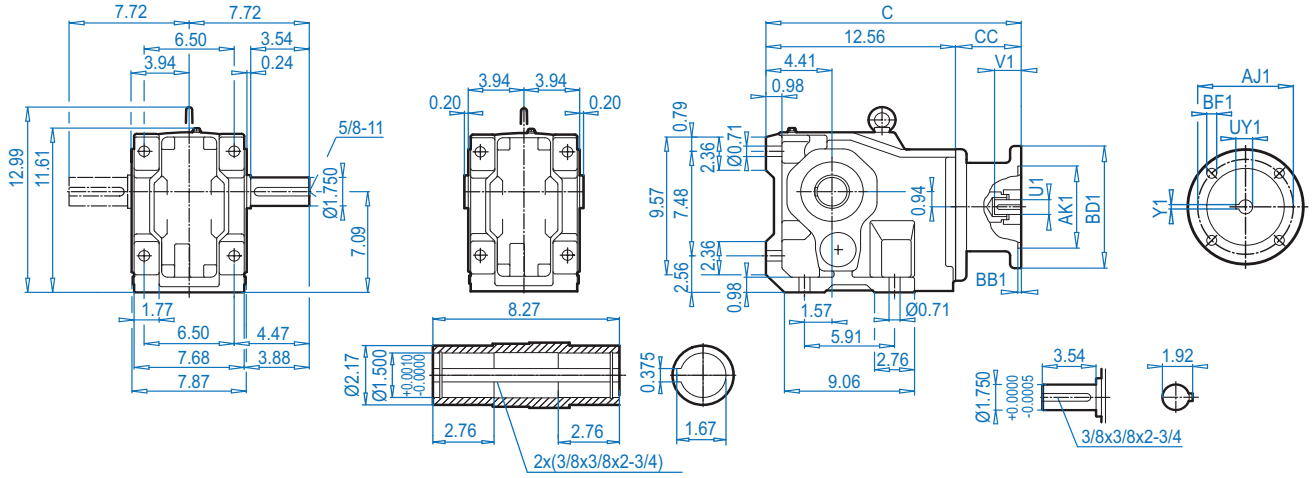

SK 9032.1VF

SK 9032.1AF

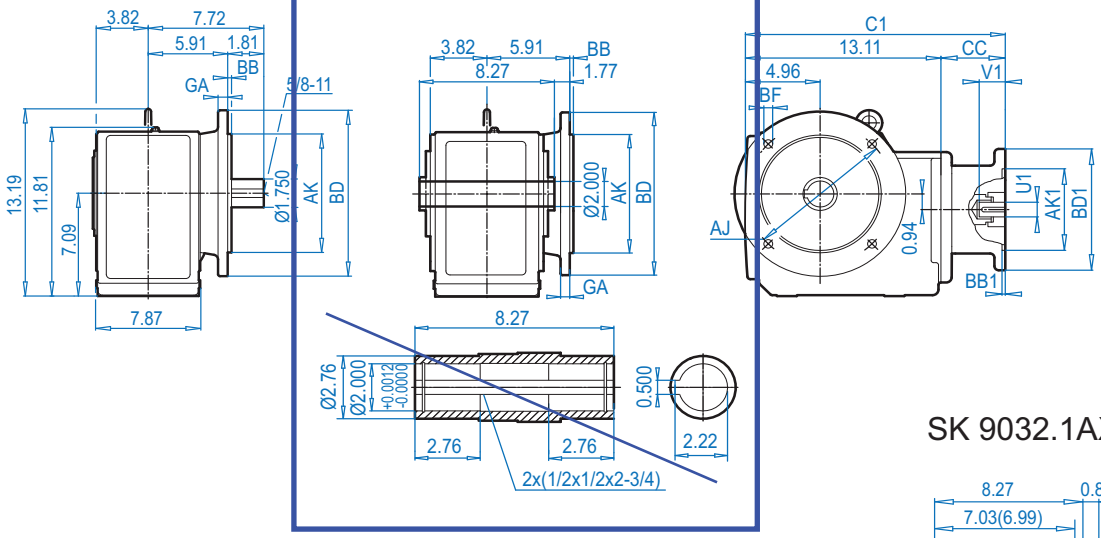

SK 9032.1AX**B**(AF**B**) ⇨📖 574

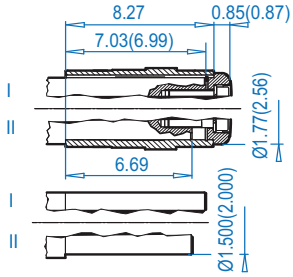

Mounting flange

BD (mm)	AJ	AK	BB	BF	GA
9.84 (250)	8.47	7.087 + 0.0005 - 0.0004	0.16	0.55	0.63
11.81 (300)	10.43	9.055 + 0.0006 - 0.0005	0.16	0.55	0.79

NEMA Dimensions

Type	AJ1	AK1	BB1	BD1	BF1	U1	V1	UY1	Y1	C	C1	CC
56C	5.88	4.500	0.18	6.54	0.43	0.625	2.06	0.71	0.188	17.16	17.71	4.60
140TC	5.88	4.500	0.18	6.54	0.43	0.875	2.12	0.96	0.188	17.16	17.71	4.60
180TC	7.25	8.500	0.23	9.17	0.59	1.125	2.62	1.24	0.250	19.16	19.71	6.65
210TC	7.25	8.500	0.23	9.17	0.59	1.375	3.12	1.52	0.312	19.16	19.71	6.65

Lubrication



The Importance of Proper Lubrication

Proper gearbox lubrication is essential in order to reduce friction and component wear, and protect against corrosion and rust. Gear lubricants reduce heat and wear by inserting a load-sharing "protective fluid film" between mating parts and preventing direct metal to metal contact. Properly selected lubricants will operate under various film conditions, improve heat transfer, optimize reducer efficiency, absorb shock loads, reduce noise, inhibit foaming, and separate water readily.

Design Considerations

Along with many other factors, the gear designer must consider the type of gearing (helical, bevel, worm, etc.), the gear load and speed conditions, and the expected operating oil temperatures. These factors help determine a generally suitable oil category, a desired additive package, preferred base-oil type, and oil viscosity.

It is important that the consumer be aware of these many design factors before making any changes in the critical areas (oil category, base-oil type, viscosity, etc.) One should consult their preferred lubrication supplier or NORD Gear when questions arise.

Gear Oil Types, Categorized by Base Oil

Mineral Oil with an EP Additive (DIN 51517, Type CLP)

High performance mineral gear oils are carefully engineered and manufactured to improve aging characteristics, minimize friction, offer good wear protection, provide corrosion and oxidation resistance, minimize foam, and separate water. Mineral gear oils are classified as API Group I or II oils, depending upon viscosity.

The standard NORD mineral gear oil has an extreme pressure (EP) additive ISO Viscosity Grade EP220 (AGMA 5 EP) and is generally acceptable for helical and helical-bevel gear units. Good quality mineral oil should have the ability to operate at moderate sump temperatures (up to 80-85 °C) without losing viscosity or thickness. A minimum viscosity index (VI) of 93 or higher is suggested. The oil must also have good film strength to handle shock loads, high torque, and start-up conditions. A minimum FZG Scuffing Load Stage 12 is desirable.

Advantages:

- Most economical of all the gear oil types.
- Generally offers good compatibility with shaft seals, gaskets, paint finishes, etc.
- Offers good corrosion and oxidation protection.
- Effectively reduces internal friction and wear.

When Synthetic Oils Are Used

Synthetic gear oils are suggested when mineral gear oils have reached their performance limit or when they no longer meet certain application requirements. NORD may recommend synthetic oil for any one of the following conditions:

- Severe duty applications or when gears are exposed to frequent starts and stops, high-load or shock.
- For applications in low or high temperature service.
- To extend oil service interval requirements.
- To eliminate the necessity for seasonal oil changes.
- To extend service life of factory-sealed or maintenance-free gear units.
- To take advantage of performance benefits: shear resistance, low traction coefficient, reduced internal friction, improved lubricity, reduced operating temperatures, improved gear efficiency, etc.

Performance Advantages of Synthetic Oil

Compared to mineral oils, synthetic oils provide a number of performance advantages including:

- Ability to operate at higher temperatures without losing viscosity or thickness, due to a much improved viscosity index.
- Improved low-temperature stability due to a lower pour point
- Increased oil change intervals due to superior oxidative and wear resistance
- Lower tendency to form residues and increased resistance to foaming.
- Other benefits may include: very good shear resistance, low traction coefficient, reduced internal friction, improved lubricity, reduced operating temperatures, improved gear efficiency, and extended component life and wear protection.

When application conditions warrant the use of synthetic oil, NORD may suggest a particular type of synthetic oil, depending upon the gear unit type and the application.



Lubrication

Synthetic Hydrocarbon/Polyalphaolefin (SHC/PAO) Oil (DIN 51517, Type CLP-HC)

Synthetic Hydrocarbons (SHC) or Polyalphaolefin (PAO) synthetic base oils offer good miscibility with mineral base oils and are very readily available. SHC/PAO oils are classified as API Group IV oils. The can be formulated with or without anti-wear (AW) or extreme pressure (EP) additives. They can also be formulated for acceptance in food-grade applications.

Advantages:

- Higher viscosity index and therefore greater high-temperature stability than mineral oil.
- Better low-temperature stability and lower pour point than mineral type gear oils
- High surface tension and lower tendency to foam compared to mineral oil, and water-soluble polyglycol gear oils.
- Compatible (miscible) with mineral oil.
- Better water seperability demulsibility than PG oils.

Polyalkylene Glycol or Polyglycol Synthetic Oil (DIN 51517, Type CLP-PG)

Polyalkylene glycol or polyglycol (PAG or PG) synthetic gear oils are made readily available through many lubrication suppliers. PG oils are classified as API Group V gear oils. They can also be formulated for acceptance in food-grade applications.

PG gear oils possess extremely low traction coefficients and a viscosity index higher than any of the other synthetics (often greater than 220 VI), resulting in excellent heat resistant, shear stability, and natural anti-wear properties.

Typical PG gear oils are formulated with a 1:1 or higher ratio of ethylene oxide to propylene oxide (50:50 or 60:40 is common); this makes PG gear oils water soluble, providing them with very good corrosion resistance even when water is present in concentrations that are higher then what is normally allowed.

Advantages:

- PG oils offer the highest viscosity index of any other synthetic resulting in excellent heat resistant, shear stability, and superior natural anti-wear properties without requiring EP-additives.
- PG gears oils minimize internal friction and often result in improved gear efficiency.
- PG oils have significantly higher film strength than mineral and SHC/PAO oils and out perform these oils at higher operating oil temperatures (approaching 80°C or higher).

⚠ CAUTIONS ⚠

Polyglycol (PG) oils are not miscible with other oil types and should never be mixed with mineral oil, hydrosynthesized synthetic or PAO synthetic oils.

Food-Grade Lubricants

Food-grade lubricants should be manufactured in compliance with FDA 212 CFR 178.3570 and should either satisfy the former 1998 USDA Guidelines as an H1 lubricant or currently qualify as a NSF-H1 lubricant. Please consult with lubrication manufacture for more information or visit www.nsf.org

H1 food grade oil can only contain additives which appear on the FDA "approved list" for food safe compounds. H1 oils are generally absent of common zinc-based AW additives, and sulfur-phosphorus based, EP chemistries, commonly found in many industrial gear oils.

Food manufactures control risk and liability by following detailed guidelines outlined by the HACCP (Hazard Analysis and Critical Control Point) program, which includes food-grade H1 lubricants.

Food grade H1 lubricants may be formulated as highly refined mineral oils (white oils), SHC/PAO synthetic oils or PG synthetic oils.

The highly refined nature of good-quality food-grade white-oils provides good long-term oxidative stability and in most cases adequate lubrication under high-load (boundary) conditions. So long as food-grade white oils meet the minimum anti-wear requirements of the normally specified non-food grade oil, they are often acceptable.

Both food-grade white oils and PAO's have an inherent "purity" and absence of polar compounds, making them better than the average mineral oil or even PG oil in terms of demulsibility (water seperability).

Compared to food-grade white-oils, food-grade synthetic PAO or PG oils typically provide:

- Better wear and oxidation resistance.
- Improved high-temperature characteristics.
- Better cold-temperature behavior.

Lubrication



The Importance of Oil Viscosity

Viscosity or the oil's resistance to shear under load, is often considered the single most important property of any gear oil.

NORD Gear Designers have selected the most appropriate ISO viscosity grade of oil, for each type or class of gear reducer. Gear oil viscosity is selected by assuming typical ambient conditions, at rated speed and load conditions.

Important Considerations:

- The correct viscosity selection helps provide proper lubrication and assures that a minimum film thickness is maintained between interacting surfaces.
- The degree to which viscosity changes with temperature or the viscosity index, varies from oil to oil, and depends upon the type of lubricant and additive agents used.
- Selecting too low of a viscosity can result in mixed-boundary (partial metal-to-metal contact) or boundary lubrication (full metal-to-metal contact) conditions, in creasing internal friction heat build-up and wear.
- Selecting too high of a viscosity results in increased churning and squeezing losses in the load zone and excessive heat (especially when peripheral gear speeds are high); Ultimately, this causes the oil temperature to rise and the viscosity to go down, decreasing the effectiveness of the lubricant.

Considering an Oil Viscosity Change

There are three primary reasons to consider a lubrication viscosity change as follows:

1. Low temperature gear oils should be selected so that the pour point is at least 9°F (5°C) lower than the expected minimum ambient temperature. In extreme cases, consider a lower ISO Viscosity rating and test the critical performance of the gear box under cold start-up.

2. High temperature applications may require an increase in the lubricants viscosity to assure proper lubrication conditions in the critical load zones of the gear unit. NORD also recommends switching to synthetic oil if oil sump temperatures exceed 176-185 °F (80-85 °C).

3. In cases of extreme load conditions, gear pairs and antifriction bearings may be more susceptible to scuffing wear. In these operating conditions, it may be beneficial to consider an increased lubrication viscosity and/or lubrication with improved antiwear additive packages.

NORD recommends that the user consult with their primary lubrication supplier when considering changes in oil viscosity.

Maximum Oil Sump Temperature Limit

To prevent reducer overheating, the reducer's maximum oil sump temperature limit must not be exceeded for prolonged periods of operation (up to 3 hours continuous operation, depending upon reducer size).

Oil Type	Maximum Oil Temperature Limit	
	NORD	AGMA 9005-D94
Mineral	80-85 °C (176-185 °F)	95 °C (203 °F)
Synthetic	105 °C (220 ° F)	107 ° C (225 ° F)

Lubrication



Lubrication Types

Proper gearbox lubrication is essential in order to reduce friction, heat, and component wear. Lubricants reduce heat and wear by inserting a protective "fluid boundary" between mating parts and preventing direct metal to metal contact. Lubricants also help prevent corrosion and oxidation, minimize foam, improve heat transfer, optimize reducer efficiency, absorb shock loads and reduce noise.

Mounting position not only determines the proper fill-level but may also have some effect on final reducer assembly. If considering any mounting positions that are not shown as catalog-standard options, it is critical that the customer consult with NORD prior to ordering. Unless otherwise specified, NORD supplies most all gear units (*) factory-filled with the standard lubrication type and the appropriate amount of lubricating oil.

* Gear units SK10282, SK10382, SK11282, SK11382, SK12382, and SK9096.1 are supplied without oil.

Standard Oil Lubricants

Gear Unit Type	Ambient Temperature	Oil Type	ISO Viscosity	Manufacturer Brand / Type
Helical-Inline, Parallel-Shaft, & Helical-Bevel	-4 to 104 °F (-20 to 40 °C)	MIN-EP	VG 220	Shell / Omala 220 ♦
	-40 to 140 °F (-40 to 60 °C)	PAO	VG 220	Mobil SHC 630 ♦
	23 to 104 °F (-5 to 40 °C)	FG	VG 220	Shell / FM 220 ♦
Helical-Worm	-22 to 122 °F (-30 to 50 °C)	PAO	VG 680	Mobil SHC 636 ♦

Optional Oil Lubricants

Gear Unit Type	Ambient Temperature	Oil Type	ISO Viscosity	Manufacturer Brand / Type
Helical-Inline, Parallel-Shaft, & Helical-Bevel	-31 to 176 °F (-35 to 80 °C)	PAO	VG 460	Mobil SHC 634
	-40 to 77 °F (-40 to 25 °C)	PAO	VG 150	Mobil SHC 629
	-40 to 140 °F (-40 to 60 °C)	FG-PAO	VG 220	Shell / Cassida GL 220
Helical-Worm	-40 to 122 °F (-40 to 50 °C)	FG-PAO	VG 460	Shell / Cassida GL 460

Standard Bearing Grease Lubricants

Grease Type / Thickener	Ambient Temperature	NLGI Grade	Manufacturer Brand / Type
Standard (Li-Complex)	-22 to 140 °F (-30 to 60 °C)	NLGI 2	Shell Albida EP LC2 ♦
High Temp (Polyurea)	-13 to 176 °F (-25 to 80 °C)	NLGI 2	Mobil Polyrex EP 2 ♦
Food-Grade (Al-Complex)	-13 to 104 °F (-25 to 40 °C)	NLGI 2	Mobil Grease FM 222 ♦

♦ Stocked Lubricant

Oil Formulation Codes

MIN-EP	Mineral Oil with EP Additive
PAO	Synthetic Polyalphaolefin Oil
PG	Synthetic Polyglycol Oil
FG	Food-Grade Oil
FG-PAO	Food-Grade, Synthetic Polyalphaolefin Oil

Important Notes

- In worm gears avoid using (EP) gear oils that contain sulfur-phosphorous chemistries, as these additives can react adversely with bronze worm gears and accelerate wear.
- Food grade lubricants must be in compliance with FDA 212 CFR 178.3570 and qualify as a NSF-H1 lubricant. Please consult with lubrication manufacture for more information.
- When making a lubrication change, check with the lubrication supplier to assure compatibility and to obtain recommended cleaning or flushing procedures.
- Do not mix different oils with different additive packages or different base oil formulation types. Polyglycol (PG) oils are not miscible with other oil types and should never be mixed with mineral oil, or Polyalphaolefin (PAO) oil.
- Please Consult NORD if considering cold-temperature oils below an ISO Viscosity VG100 or lower.

Helical-Bevel Foot Mount Positions & Oil Fill Quantities



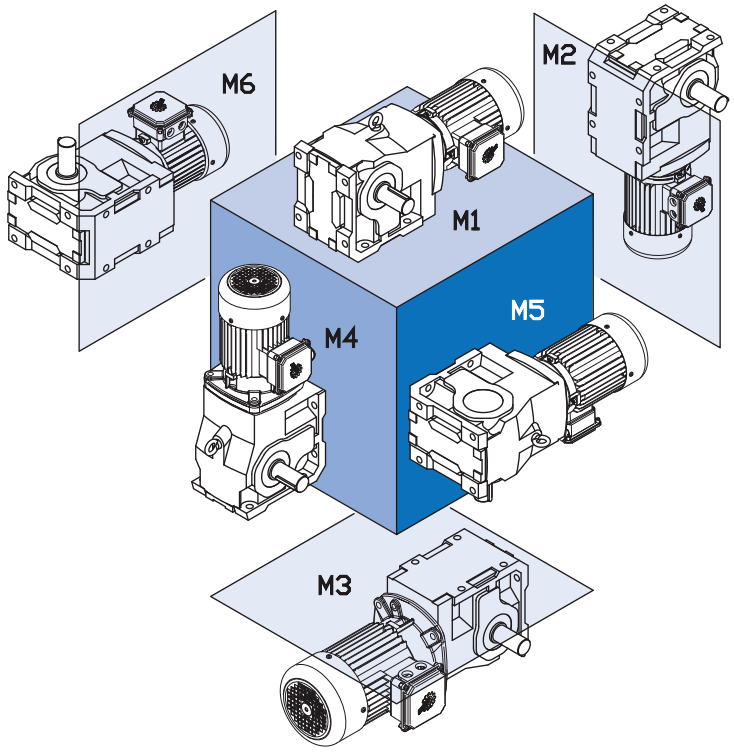

Mounting Position	M1		M2		M3		M4		M5		M6	
	Quarts	Liters	Quarts	Liters	Quarts	Liters	Quarts	Liters	Quarts	Liters	Quarts	Liters
SK92072	0.42	0.40	0.63	0.60	0.53	0.50	0.53	0.50	0.42	0.40	0.42	0.40
SK92172	0.58	0.55	0.95	0.90	1.00	0.95	1.16	1.10	0.79	0.75	0.66	0.62
SK92372	0.95	0.90	1.37	1.30	1.53	1.45	1.69	1.60	1.27	1.20	1.27	1.20
SK92672	1.90	1.80	3.70	3.50	3.38	3.20	3.59	3.40	2.75	2.60	2.75	2.60
SK92772	2.43	2.30	4.76	4.50	4.86	4.60	5.60	5.30	4.33	4.10	4.33	4.10
SK9012.1	0.74	0.70	1.69	1.60	2.01	1.90	2.54	2.40	1.27	1.20	1.80	1.70
SK9013.1	1.27	1.20	2.11	2.00	2.33	2.20	3.17	3.00	1.48	1.40	2.01	1.90
SK9016.1	0.74	0.70	1.69	1.60	2.01	1.90	2.54	2.40	1.27	1.20	1.80	1.70
SK9017.1	1.27	1.20	2.11	2.00	2.33	2.20	3.17	3.00	1.48	1.40	2.01	1.90
SK9022.1	1.37	1.30	2.75	2.60	3.70	3.50	4.44	4.20	2.11	2.00	2.96	2.80
SK9023.1	2.54	2.40	3.17	3.00	4.02	3.80	5.60	5.30	2.33	2.20	3.28	3.10
SK9032.1	1.80	1.70	5.07	4.80	6.76	6.40	7.08	6.70	4.33	4.10	5.39	5.10
SK9033.1	3.49	3.30	6.98	6.60	7.40	7.00	8.24	7.80	4.55	4.30	5.39	5.10
SK9042.1	4.65	4.40	9.20	8.70	10.6	10.0	10.4	9.80	7.19	6.80	7.93	7.50
SK9043.1	4.86	4.60	10.8	10.2	11.3	10.7	13.5	12.8	5.50	5.20	7.08	6.70
SK9052.1	6.87	6.50	16.9	16.0	20.1	19.0	22.7	21.5	11.6	11.0	16.4	15.5
SK9053.1	10.6	10.0	18.0	17.0	21.1	20.0	25.6	24.2	12.2	11.5	17.4	16.5
SK9072.1	10.6	10.0	29.1	27.5	33.8	32.0	38.1	36.0	19.0	18.0	25.4	24.0
SK9082.1	18.0	17.0	54.4	51.5	66.1	62.5	75.6	71.5	34.9	33.0	49.2	46.5
SK9086.1	30.7	29.0	77.2	73.0	89.8	85.0	108	102	50.7	48.0	65.5	62.0
SK9092.1	38.1	36.0	166	157	180	170	182	172	84.6	80.0	95.1	90.0
SK9096.1	74.0	70.0	198	187	205	194	268	254	115	109	161	152

HELICAL & BEVEL REDUCER LUBRICATION

1. Importance of proper lubrication

Proper gearbox lubrication is essential in order to reduce friction, heat, and component wear. Lubricants reduce heat and wear by inserting a protective "fluid boundary" between mating parts and preventing direct metal to metal contact. Lubricants also help prevent corrosion and oxidation, minimize foam, improve heat transfer, optimize reducer efficiency, absorb shock loads and reduce noise.

Most NORD reducers are shipped from the factory with a pre-determined oil fill level in accordance to the specified reducer size and mounting position.

2. Standard oil type

The following tables indicate the standard oil fill type used. Please see user manual U11000 for more specific information and for optional helical and bevel gear lubricants:

Serviceable Gear Units	
Helical In-line	Standard Oil Fill: ISO VG 220, Mineral Oil
Clincher Parallel-Shaft	
Right-Angle Bevel	
NORDBLOC® Series In-line	
NORDBLOC®.1 Series In-line	
Standard Series In-line	

IMPORTANT NOTE

For shipping purposes, the following large Clincher™ gear units are supplied without oil:
• Clincher™ Sizes SK11282, SK11382 and SK12382

Maintenance-free / Lubricated For Life Gear Units	
Clincher™ sizes SK0182NB, SK0282NB & SK1382NB	Standard Oil Fill: ISO VG220 SHC/PAO Synthetic Oil
NORDBLOC® Sizes SK172, SK272, SK371F, SK372, SK373, SK320	

IMPORTANT NOTE

Maintenance-free units are supplied as sealed units with no vent-plug. Consult NORD prior to ordering if interested in ordering any of the above sizes as serviceable gear units.

IMPORTANT NOTE

Consult the sticker adjacent to the fill plug to determine the type of lubricant installed at the factory. Some units have special lubricants designed to operate in certain environments or intended to extend the service life or service temperature range of the lubricant. If in doubt about which lubricant is needed for a certain application, please contact NORD Gear.

3. Lubrication replacement

If the gear unit is filled with mineral oil, the lubricant should be replaced at least after every 10,000 operating hours or after every two years. If the gear unit is filled with synthetic oil, the lubricant should be replaced at least after every 20,000 operating hours or after every four years. Often gear reducers are exposed to extreme ambient conditions, hostile environments, wet conditions, or dirty and dusty operating areas. Especially in these situations, it is important to establish a condition-based oil service interval.

4. Oil viscosity

Viscosity, or the oil's resistance to shear under load, is often considered the single most important property of any gear oil.

- Often one will consider making a viscosity correction to the oil to improve the performance when operating the gear unit at low temperature or high temperature.
- In cases of extreme load conditions, gear pairs and antifriction bearings may be more susceptible to sliding or scuffing wear. In these operating conditions, it may also be beneficial to consider an increased lubrication viscosity and/or a lubrication with improved antiwear additive packages.

IMPORTANT NOTE

The user should consult with their primary lubrication supplier before considering changes in oil type or viscosity.

5. Maximum oil sump temperature limit

To prevent reducer overheating, the reducer's maximum oil sump temperature limit must not be exceeded for prolonged periods of operation (up to 3 hours continuous operation depending upon reducer size).

Oil Type	Maximum Oil Temperature Limit	
	NORD	AGMA 9005-D94
Mineral	80-85°C (176-185°F)	95°C (203°F)
Synthetic	105°C (220°F)	107°C (225°F)

IMPORTANT NOTE

Use caution when specifying gear reducers for high temperature service. If there is concern about exceeding the allowable safe operating temperatures, please consult NORD to discuss alternatives.

HELICAL & BEVEL REDUCER LUBRICATION

6. The importance of routine oil analysis

Routine oil analysis, sound lubrication practices, and good tracking of oil performance trends will help establish proper lubrication maintenance and change-out intervals. To maximize equipment reliability, NORD Gear generally recommends a condition-based lubrication maintenance program. One may take exceptions to this general recommendation on sealed-for-life or maintenance-free gear units or smaller and less costly gear units. In these instances, the replacement cost of the gear unit is often small compared to the costs associated with this type of oil analysis program.

HARMFUL SITUATION

NORD suggests replacing the gear oil if oil analysis indicates any of the following:

- Viscosity has changed by approximately 10% or more.
- Debris particles (silicon, dust, dirt or sand) exceed 25 ppm.
- Iron content exceeds 150-200 ppm.
- Water content is greater than 0.05% (500 ppm).
- The total acid number (TAN) tests indicate a significant level of oxidative break-down of the oil, and a critical reduction in performance; If the TAN number measured changes by more than 5% over the new oil, then an oil change would be recommended.

7. Mounting position and oil fill quantity

All NORD Gear reducers are shipped from the factory with a pre-determined oil fill level in accordance to the specified reducer size and mounting position. ***For additional information, please see the seperate mounting position diagrams and the corresponding oil fill quantity tables for the specified gear unit.***

The gearbox nametag will indicate the mounting position that was provided. ***For mounting orientations other than shown in the mounting position charts, please consult NORD Gear.***

HARMFUL SITUATION

Actual oil volume can vary slightly depending upon the gear case size, mounting and ratio. Prior to commissioning the reducer, check the oil-fill level using the reducer's oil-level plug and drain or add additional oil as needed.

8. Oil plug locations

All gear units are assembled with the oil fill-level, oil-drain and vent plugs installed in their proper locations, according to the specified mounting position. All standard plugs are metric and utilize sealing gaskets between the head of the plug and the reducer housing.

9. Drain and fill-level plugs

All reducer drain plugs are metric socket head cap screws. For easier identification, it is NORD's standard practice to provide a hex-head screw for the fill-level plug. For ease of draining the used oil from the gear reducer, use the socket head screw located at the lowest part of the gearbox.



Drain Plug

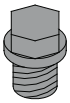

Fill Level Plug

10. Vent plug locations

Reducer venting allows for air pressure differences that occur during operation, between the inner space of the reducer and the atmosphere, while ensuring leak-free operation. The AUTOVENT™ is standard for all vented gear units, unless otherwise noted.

AUTOVENT™ - The AUTOVENT™ helps prevent bearing and gear damage by behaving like a check valve to block the entry of foreign material (water, dust, corrosives, etc.). The breather opens at approximately 2-3 psi during operation and closes tightly as the gearbox cools. This option is perfect for humid conditions and wash-down environments, helping to maintain proper oil cleanliness, and reducing foaming and oxidation. NORD may choose to offer one of two style options as shown in Figure 1. The Type 2 AUTOVENT™ comes closed upon delivery with a transportation sealing plug (see Warning).

Figure 1 AUTOVENT™ Types



Type 1

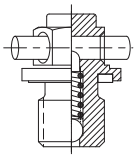



Type 2 with transportation plug

Open Vent - An optional open vent can be supplied by NORD. The open vent comes closed upon delivery with a transportation sealing plug (see Warning).

WARNING

To prevent build-up of excessive pressure, sealed vents must be activated as shown prior to gear unit start up.

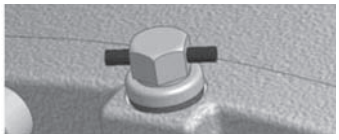

Sealed vent

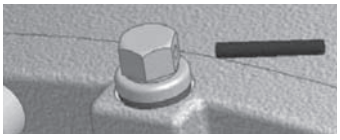

Activated vent

Filtered Vent - NORD may offer an optional filtered vent, which allows gases to permeate, but does not allow dust and debris to pass through the vent.

HELICAL & BEVEL REDUCER LUBRICATION TYPES

Lubrication Tables – Helical and Bevel Gear Units

Standard Oil Lubricants

ISO Viscosity	Oil Type	Ambient Temperature Range	Manufacturer Brand / Type
VG220	MIN-EP	0 to 40 °C (32 to 104 °F)	Mobil / Spartan EP220 ♦ ❶
	PAO	-35 to 60 °C (-31 to 140 °F)	Mobil / SHC630 ♦ ❷
	FG	-5 to 40 °C (23 to 104 °F)	Shell / FM220 ♦

Optional Oil Lubricants

ISO Viscosity	Oil Type	Ambient Temperature Range	Manufacturer Brand / Type
VG460	PAO	-35 to 80 °C (-31 to 176 °F)	Mobil / SHC634
	FG-PAO	-35 to 80 °C (-31 to 176 °F)	Mobil / Cibus SHC460
VG220	FG-PAO	-34 to 60 °C (-29 to 140 °F)	Mobil / Cibus SHC220
VG150	PAO	-35 to 25 °C (-30 to 77 °F)	Mobil / SHC629

Grease Options (applied to greased bearings and seal cavities)

NLGI Grade	Grease Type / Thickener	Ambient Temperature Range	Manufacturer Brand / Type
NLGI 2	Standard / Li-Complex	-30 to 60 °C (-22 to 140 °F)	Mobil Grease XHP222 ♦ ❶
	High-Temperature / Polyurea	-25 to 80 °C (-13 to 176 °F)	Mobil Polyrex EP 2 ♦ ❷
	Food-Grade / Al-Complex	-25 to 40 °C (-13 to 104 °F)	Mobil Grease FM222 ♦

♦ Stocked Lubricants

❶ Standard product on serviceable gear units

❷ Standard product on maintenance free gear units

IMPORTANT NOTES

- The "Ambient Temperature" is intended to be an operation guideline based upon the typical properties of all the lubricant. The viscosity and other properties of the lubricant change based upon load, speed, ambient conditions, and reducer operating temperatures. The user should consult with their lubrication supplier & NORD gear before considering changes in oil type or viscosity.
- To prevent reducer overheating, observe the maximum operating oil temperature limits:
  Mineral Oil: 80-85 °C (176 – 180 °F).
  Synthetic Oil: 105 °C (225 °F).
- In the following instances, please consult NORD for specific recommendations:
  - √ Gear units will operate in high ambient temperature conditions exceeding 40 °C (104 °F).
  - √ Gear units will operate in cold ambient temperature conditions approaching 0 °C (32 °F) or lower.
  - √ Lower than an ISO VG100 viscosity oil is being considered for a cold-temperature service.
  - √ Fluid grease is required for lubricating the gear unit.
- Observe the general lubrication guidelines outlined in user manual U10750.

Oil Formulation Codes

MIN-EP - Mineral Oil with EP Additive
PAO-EP - Synthetic Polyalphaolefin Oil with EP Additive
PAO - Synthetic Polyalphaolefin Oil
PG - Synthetic Polyglycol Oil
FG - Food-Grade Oil
FG-PAO - Food-Grade, Synthetic Poyalphaolefin Oil
FG-PG - Food-Grade, Synthetic Polyglycol Oil

Lubrication Notes

- Avoid using (EP) gear oils in worm gears that contain sulfur-phosphorous chemistries, as these additives can react adversely with bronze worm gears and accelerate wear.
- Food grade lubricants must be in compliance with FDA 212 CFR 178.3570 and qualify as a NSF-H1 lubricant. Please consult with lubrication manufacturer for more information.
- When making a lubrication change, check with the lubrication supplier to assure compatibility and to obtain recommended cleaning or flushing procedures.
- Do not to mix different oils with different additive packages or different base oil formulation types. Polyglycol (PG) oils are not miscible with other oil types and should never be mixed with mineral oil or polyalphaolefin (PAO) synthetic oil.

NORD Gear Limited
Toll Free in Canada: 800.668.4378

NORD Gear Corporation
Toll Free in the United States: 888.314.6673

HELICAL & BEVEL REDUCER LUBRICATION TYPES

Oil Cross-reference Chart

ISO Viscosity	Oil Type	Ambient Temperature Range	Mobil	Shell	Castrol	FUCHS	KLÜBER LUBRICATION
VG460	MIN-EP	0 to 40 °C (32 to 104 °F)	Spartan EP460	Omala 460	Alpha SP460	Renolin EP460	Klüberoil GEM 1-460N
	PAO-EP	-20 to 80 °C (-4 to 176 °F)	Mobilgear SHC460	Omala HD460	Alphasyn EP460	Gearmaster SYN460/NA	Klübersynth EG 4-460
	PAO	-20 to 80 °C (-4 to 176 °F)	Mobil SHC634	Omala RL460	Alphasyn T460	Geralyn SF460	Klübersynth GEM 4-460N
	PG	-20 to 80 °C (-15 to 176 °F)	Mobil Glygoyle 460	Tivela S460	Alphasyn PG460	Renolin PG460	Klübersynth GH 6-460
	FG	0 to 40 °C (32 to 104 °F)	Mobil DTE FM460	Shell FM460	N/A	Geralyn AW 460	N/A
	FG-PAO	-20 to 80 °C (-4 to 176 °F)	Mobil Cibus SHC460	Cassida GL460	N/A	Geralyn SF460	Klüberoil 4 UH 1-460N
	FG-PG	-20 to 80 °C (-4 to 176 °F)	Mobil Glygoyle 460	Cassida WG460	N/A	N/A	Klübersynth UH1 6-460
VG220	MIN-EP	0 to 40 °C (32 to 104 °F)	Spartan EP220	Omala 220	Alpha SP220	Renolin EP220	Klüberoil GEM 1-220N
	PAO-EP	-30 to 60 °C (-22 to 140 °F)	Mobilgear SHC220	Omala HD220	Alphasyn EP220	Gearmaster SYN220/NA	Klübersynth EG 4-220
	PAO	-30 to 60 °C (-22 to 140 °F)	Mobil SHC630	Omala RL220	Alphasyn T220	Geralyn SF220	Klübersynth GEM 4-220N
	PG	-25 to 60 °C (-13 to 140 °F)	Mobil Glygoyle 220	Tivela S220	Alphasyn PG220	Renolin PG220	Klübersynth GH 6-220
	FG	0 to 40 °C (32 to 104 °F)	Mobil DTE FM 220	Shell FM220	N/A	Geralyn AW220	N/A
	FG-PAO	-25 to 60 °C (-13 to 140 °F)	Mobil Cibus SHC220	Cassida GL220	N/A	Geralyn SF220	Klüberoil 4 UH 1-220N
	FG-PG	-25 to 60 °C (-13 to 140 °F)	Mobil Glygoyle 220	Cassida WG220	N/A	N/A	Klübersynth UH1 6-220
VG150	MIN-EP	0 to 25 °C (32 to 77 °F)	Spartan EP150	Omala 150	Alpha SP150	Renolin EP150	Klüberoil GEM 1-150N
	PAO-EP	-30 to 25 °C (-22 to 77 °F)	Mobilgear SHC150	Omala HD150	Alphasyn EP150	Gearmaster SYN150/NA	Klübersynth EG 4-150
	PAO	-30 to 25 °C (-22 to 77 °F)	Mobil SHC629	Omala RL150	Alphasyn T150	Geralyn SF150	Klübersynth GEM 4-150N
	PG	-25 to 25 °C (-13 to 77 °F)	Mobil Glygoyle 150	Tivela S150	Alphasyn PG150	Renolin PG150	Klübersynth GH 6-150
	FG	0 to 25 °C (32 to 77 °F)	Mobil DTE FM 150	N/A	N/A	N/A	N/A
	FG-PAO	-25 to 25 °C (-13 to 77 °F)	N/A	Cassida GL150	N/A	Geralyn SF150	Klüberoil 4 UH 1-150N
	FG-PG	-25 to 25 °C (-13 to 77 °F)	Mobil Glygoyle 150	N/A	N/A	N/A	Klübersynth UH1 6-150

Low-end service temperature limit may vary for a specific lubricant; Please also see the important notes on Page 1.

90.1 HELICAL-BEVEL FLANGED OIL FILL QUANTITIES

90.1 Helical-bevel flanged lubrication

Unless otherwise noted below, the following NORD Gear reducers are shipped from the factory with a pre-determined oil fill level in accordance to the specified reducer size and mounting position. For additional information, please refer to the "Oil Plug & Vent Locations" documentation for your gear unit.

HARMFUL SITUATION

Actual oil volume can vary slightly depending upon the gear case size, mounting and ratio. Prior to commissioning the reducer, check the oil-fill level using the reducer's oil level plug and drain or add addition oil as needed. The minimum acceptable oil level is 0.15 in (4mm) below the oil level hole.

For mounting orientations other than shown please consult NORD Gear. Reducer modifications may be required.

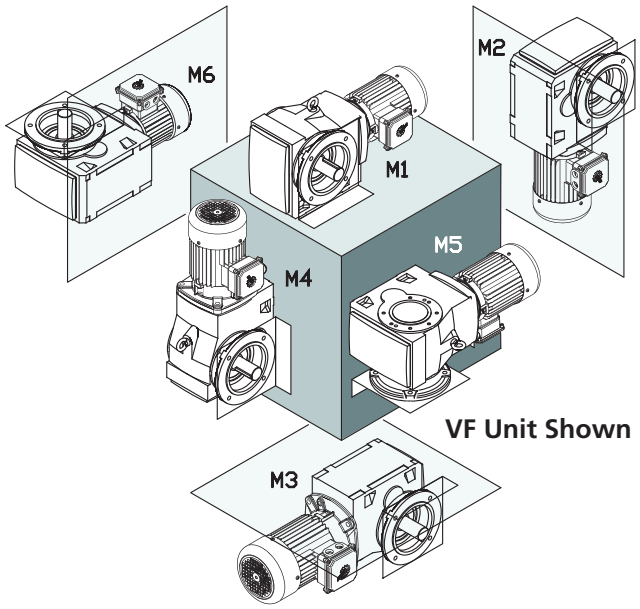

VF Unit Shown

Type	M1		M2		M3		M4		M5		M6	
	Quarts	Liters	Quarts	Liters	Quarts	Liters	Quarts	Liters	Quarts	Liters	Quarts	Liters
SK 9012.1	0.740	0.700	2.01	1.90	2.01	1.90	2.54	2.40	1.27	1.20	1.80	1.70
SK 9013.1	1.27	1.20	2.43	2.30	2.32	2.20	3.17	3.00	1.48	1.40	2.01	1.90
SK 9016.1	0.740	0.700	2.01	1.90	2.01	1.90	2.54	2.40	1.27	1.20	1.80	1.70
SK 9017.1	1.27	1.20	2.43	2.30	2.32	2.20	3.17	3.00	1.48	1.40	2.01	1.90
SK 9022.1	1.37	1.30	2.75	2.60	3.70	3.50	4.44	4.20	2.11	2.00	2.96	2.80
SK 9023.1	2.54	2.40	3.17	3.00	4.02	3.80	5.60	5.30	2.32	2.20	3.28	3.10
SK 9032.1	2.01	1.90	5.49	5.20	6.76	6.40	7.71	7.30	3.49	3.30	5.39	5.10
SK 9033.1	4.02	3.80	6.02	5.70	7.29	6.90	8.98	8.50	3.80	3.60	5.92	5.60
SK 9042.1	3.80	3.60	10.25	9.70	12.05	11.40	12.15	11.50	6.87	6.50	8.66	8.20
SK 9043.1	6.02	5.70	10.78	10.20	15.53	14.70	15.53	14.70	6.97	6.60	10.14	9.60
SK 9052.1	7.93	7.50	17.44	16.50	21.13	20.00	23.78	22.50	12.15	11.50	19.02	18.00
SK 9053.1	13.21	12.50	19.02	18.00	22.72	21.50	28.00	26.50	13.74	13.00	17.96	17.00
SK 9062.1	12.68	12.00	29.06	27.50	34.87	33.00	40.68	38.50	20.08	19.00	27.47	26.00
SK 9072.1	12.68	12.00	29.06	27.50	34.87	33.00	40.68	38.50	20.08	19.00	27.47	26.00
SK 9082.1	22.19	21.00	57.06	54.00	69.74	66.00	84.54	80.00	40.15	38.00	54.95	52.00
SK 9086.1	38.04	36.00	82.42	78.00	96.16	91.00	106.73	101.00	56.00	53.00	80.31	76.00
SK 9092.1	42.27	40.00	137.37	130.00	162.73	154.00	184.92	175.00	86.65	82.00	96.16	91.00
SK 9096.1	84.54	80.00	197.60	187.00	203.94	193.00	271.57	257.00	119.41	113.00	164.84	156.00

Oil Levels shown apply to base models and gear units ending in AZ, AF, VZ, & VF.

90.1 HELICAL-BEVEL OIL PLUG & VENT LOCATIONS

Oil plug connections

Prior to commissioning the reducer, check the oil-fill level using the reducer's oil-level plug and drain or add additional oil as needed. The minimum acceptable oil level is 0.15 in (4mm) below the oil level hole. ***For mounting orientations other than shown please consult NORD Gear. New plug locations may be required.***

Foot Mount

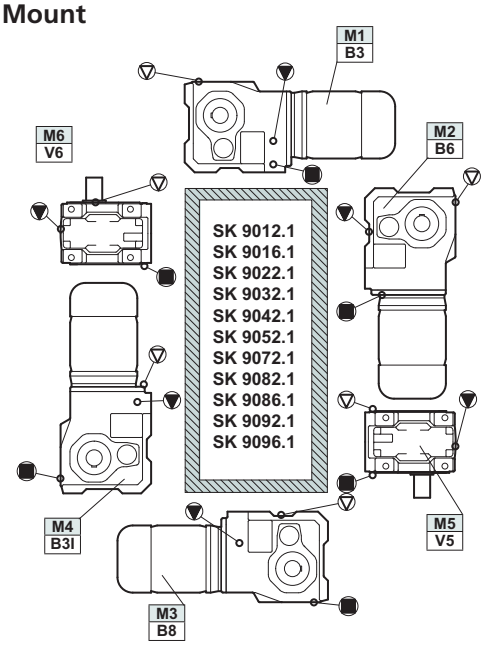

Foot Mount

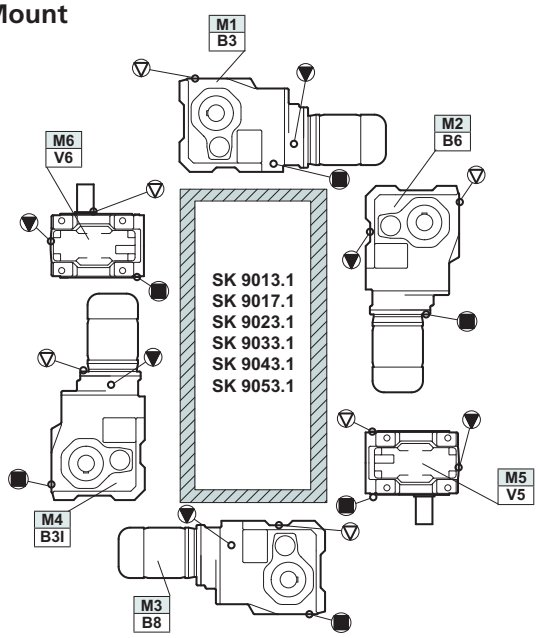

Shaft/Flange Mount

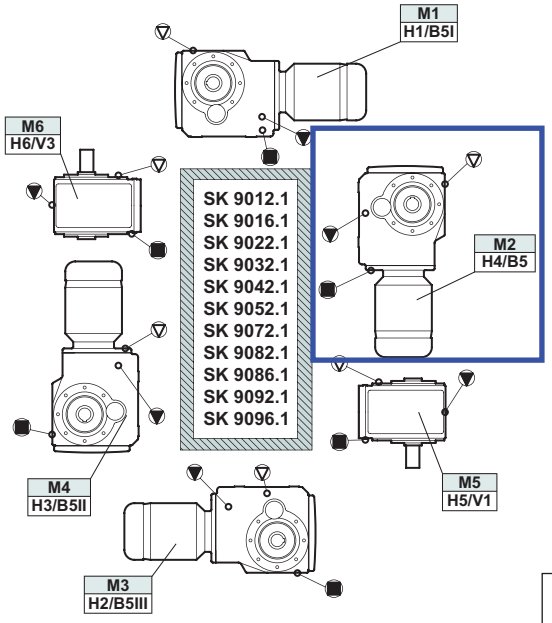

Shaft/Flange Mount

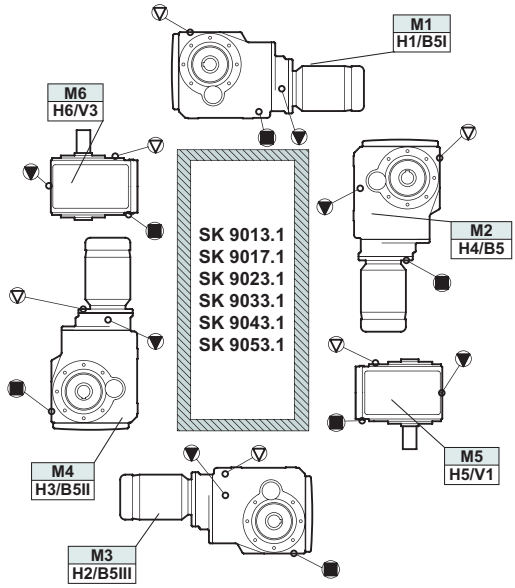

▽ = Vent

▼ = Oil Level

■ = Oil Plug

NORD Gear Limited
Toll Free in Canada: 800.668.4378

NORD Gear Corporation
Toll Free in the United States: 888.314.6673

90.1 HELICAL-BEVEL PARTS LIST DRAWINGS

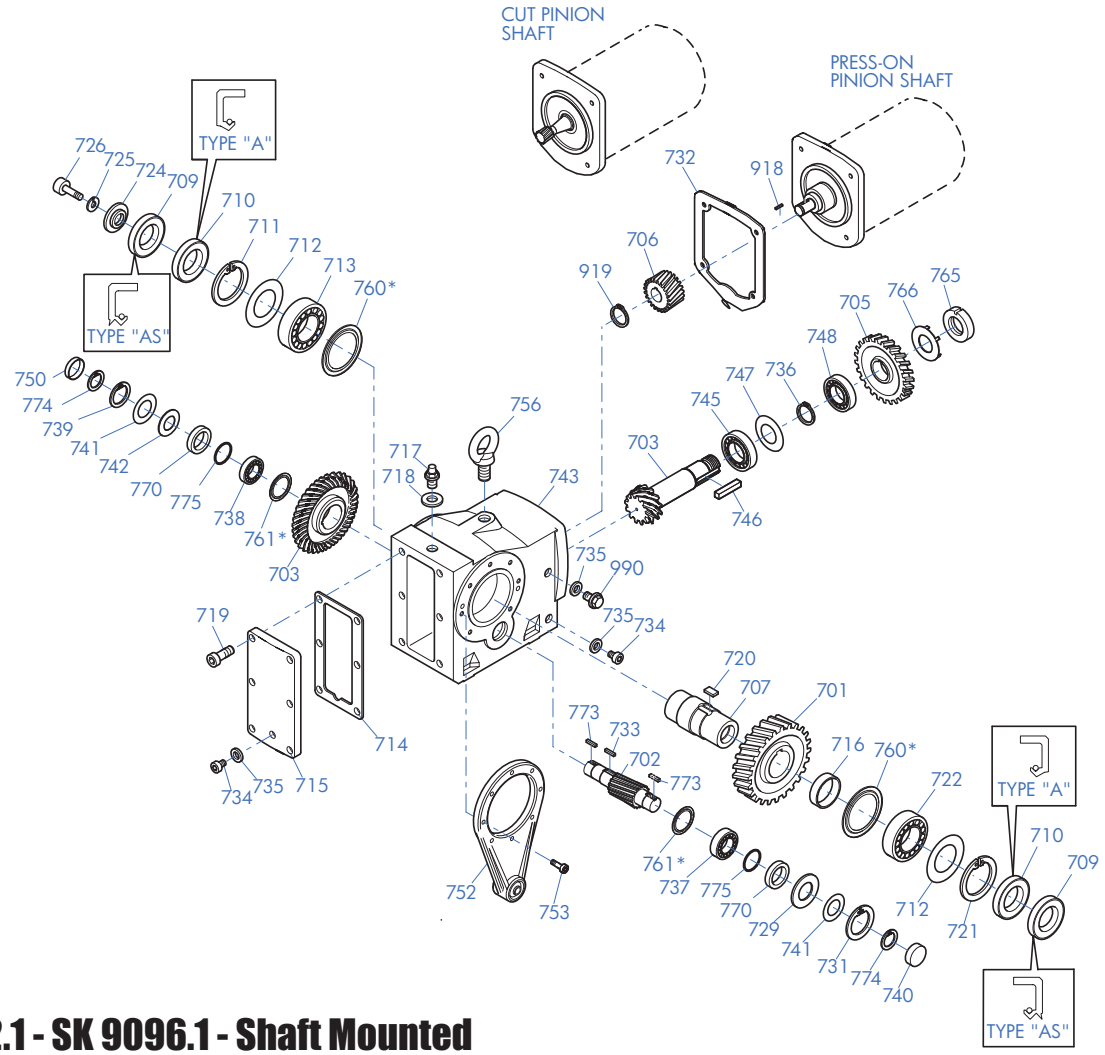

SK 9012.1 - SK 9096.1 - Shaft Mounted

701 Gear
702 Pinion Shaft
703 Bevel Gearset
705 Gear
706 Pinion
707 Output Shaft
709 Oil Seal
710 Oil Seal
711 Snap Ring
712 Shim
713 Anti-Friction Bearing
714 Gasket
715 Inspection Cover
716 Spacer
717 Vent Plug
718 Gasket
719 Bolt
720 Key
721 Snap Ring
722 Anti-Friction Bearing
724 Retaining Washer
725 Lock Washer
726 Bolt
729 Thrust Washer
731 Snap Ring
732 Gasket
733 Key
734 Oil plug
735 Gasket
736 Snap Ring
737 Anti-Friction Bearing
738 Anti-Friction Bearing
739 Snap Ring
740 Bore Plug
741 Shim
742 Thrust Washer
743 Gearcase
745 Anti-Friction Bearing
746 Key
747 Shim
748 Anti-Friction Bearing
750 Bore Plug
752 Torque Arm
753 Bolt
756 Flanged Eye Bolt
760 Nilos Ring*
761 Nilos Ring*
765 Slotted Round Nut
766 Tab Lock Washer
770 Backstop (If Equipped)
773 Key (w/Backstop)
774 Snap Ring (w/Backstop)
775 Thrust Washer (w/Backstop)
918 Key
919 Snap Ring
990 Oil Level Plug

* Conditionally used part

NORD Gear Limited
Toll Free in Canada: 800.668.4378

NORD Gear Corporation
Toll Free in the United States: 888.314.6673

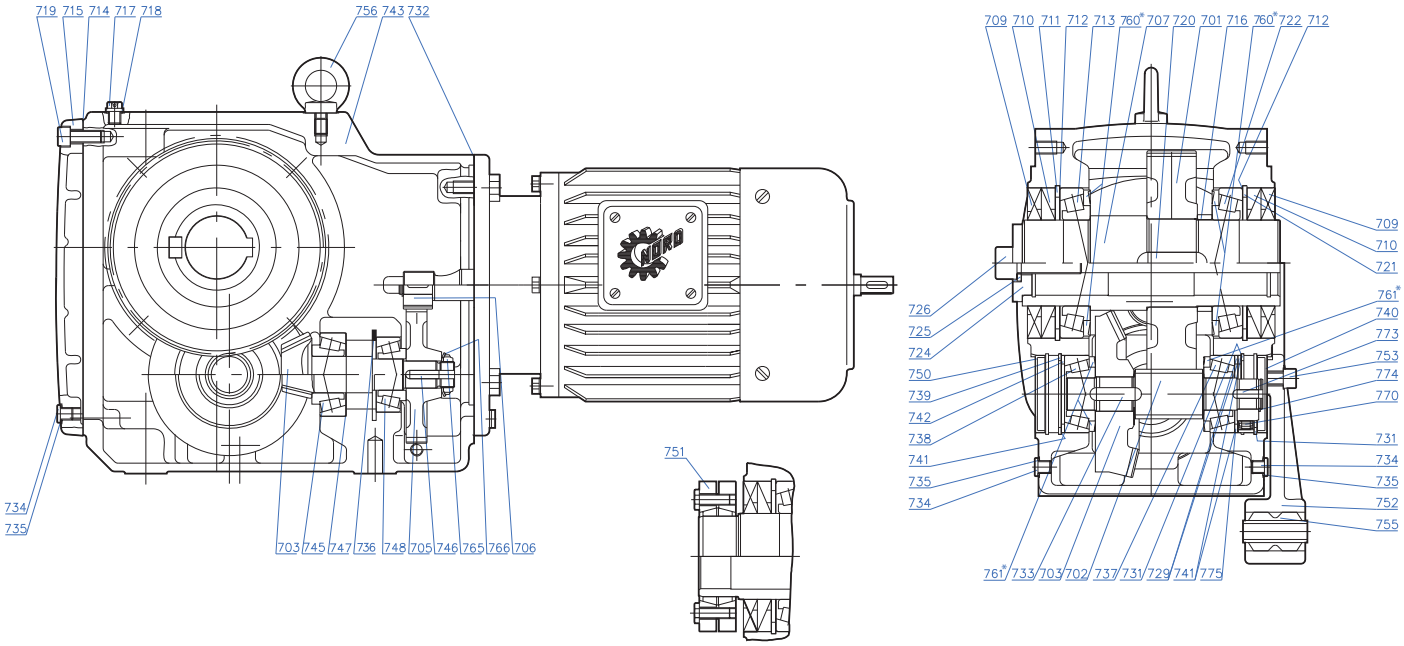

SK 9012.1 - SK 9096.1 - Shaft Mounted

701 Gear
702 Pinion Shaft
703 Bevel Gearset
705 Gear
706 Pinion
707 Output Shaft
709 Oil Seal
710 Oil Seal
711 Snap Ring
712 Shim
713 Anti-Friction Bearing
714 Gasket
715 Inspection Cover
716 Spacer
717 Vent Plug
718 Seal
719 Bolt
720 Key
721 Snap Ring
722 Anti-Friction Bearing
724 Washer
725 Lock Washer
726 Bolt
729 Thrust Washer
731 Snap Ring
732 Gasket
733 Key
734 Oil plug
735 Gasket
736 Snap Ring
737 Anti-Friction Bearing
738 Anti-Friction Bearing
739 Snap Ring
740 Bore Plug
741 Shim
742 Thrust Washer
743 Gearcase
745 Anti-Friction Bearing
746 Key
747 Shim
748 Anti-Friction Bearing
750 Bore Plug
751 Shrink Disc
752 Torque Arm
753 Bolt
755 Rubber Buffer
756 Flanged Eye Bolt
760 Nilos Ring*
761 Nilos Ring*
765 Slotted Round Nut
766 Tab Lock Washer
770 Backstop*
773 Key (w/Backstop)
774 Snap Ring (w/Backstop)
775 Thrust Washer (w/Backstop)

* Conditionally used part

Troubleshooting

This section identifies some of the most common issues involved with NORD Gear speed reducers , and provides recommendations to assist you in defining and answering your questions as you work with our products. You may also contact our Engineering/Application departments if your questions are not answered in the table below.

Problem With the Reducer		Possible Causes	Suggested Remedy
Runs Hot	Overloading	Load exceeds the capacity of the reducer	Check rated capacity of reducer, replace with unit of sufficient capacity or reduce the load.
	Improper lubrication	Insufficient lubrication	Check lubricant level and adjust up to recommended levels
		Excessive lubrication	Check lubricant level and adjust down to recommended levels.
		Wrong lubrication	Flush out and refill with correct lubricant as recommended
Runs Noisy	Loose foundation bolts	Weak mounting structure	Inspect mounting of reducer. Tighten loose bolts and/or reinforce mounting and structure.
		Loose hold down bolts	Tighten bolts
	Failure of bearings	May be due to lack of lubricant	Replace bearing. Clean and flush reducer and fill with recommended lubricant.
		Overload	Check rated capacity of reducer.
	Insufficient lubricant	Level of lubricant in reducer not properly maintained.	Check lubricant level and adjust to factory recommended level.
Output shaft does not turn	Internal parts are broken or missing	Overloading of reducer can cause damage	Replace broken parts. Check rated capacity of reducer.
		Key missing or sheared off on input shaft.	Replace key.
		Coupling loose or disconnected	Properly allign reducer and coupling. Tighten coupling.
Oil Leakage	Worn seals	Caused by dirt or grit entering seal.	Replace seals. Autovent may be clogged. Replace or clean.
	Unit runs hot or leaks	Overfilled reducer	Check lubricant level and adjust to recommended level.
		Vent clogged.	Clean or replace, being sure to prevent any dirt from falling into the reducer.
	Incorrect fill level	Improper mounting position, such as wall or ceiling mount of horizontal reducer.	Check mounting position on the name tag & verify with mounting chart in manual.

Enviro-Care
A WAMGROUP® Company

Motor

This page intentionally left blank

BALDOR • RELIANCE

Product Information Packet

VEM3558T-5

2HP,1755RPM,3PH,60HZ,145TC,3528M,TEFC,F1

Copyright © All product information within this document is subject to ABB Motors and Mechanical Inc. copyright © protection, unless otherwise noted.

Part Detail

Revision:	H	**Status:**	PRD/A	**Change #:**		**Proprietary:**	No
Type:	AC	**Elec. Spec:**	35WGN956	**CD Diagram:**	CD0006	**Mfg Plant:**	
Mech. Spec:	35AA003	**Layout:**	35LYAA003	**Poles:**	04	**Created Date:**	06-21-2013
Base:	N	**Eff. Date:**	03-13-2018	**Leads:**	3#18		

Specs

Catalog Number:	VEM3558T-5	**Inverter Code:**	Inverter Ready
Enclosure:	TEFC	**KVA Code:**	L
Frame:	145TC	**Lifting Lugs:**	No Lifting Lugs
Frame Material:	Steel	**Locked Bearing Indicator:**	Locked Bearing
Output @ Frequency:	2.000 HP @ 60 HZ	**Motor Lead Quantity/Wire Size:**	3 @ 18 AWG
Synchronous Speed @ Frequency:	1800 RPM @ 60 HZ	**Motor Lead Exit:**	Ko Box
Voltage @ Frequency:	575.0 V @ 60 HZ	**Motor Lead Termination:**	Flying Leads
XP Class and Group:	None	**Motor Type:**	3528M
XP Division:	Not Applicable	**Mounting Arrangement:**	F1
Agency Approvals:	CSA	**Power Factor:**	75
	CSA EEV	**Product Family:**	General Purpose
	UR	**Pulley End Bearing Type:**	Ball
Auxillary Box:	No Auxillary Box	**Pulley Face Code:**	C-Face
Auxillary Box Lead Termination:	None	**Pulley Shaft Indicator:**	Standard
Base Indicator:	No Mounting	**Rodent Screen:**	None
Bearing Grease Type:	Polyrex EM (-20F +300F)	**Shaft Extension Location:**	Pulley End
Blower:	None	**Shaft Ground Indicator:**	No Shaft Grounding
Current @ Voltage:	2.300 A @ 575.0 V	**Shaft Rotation:**	Reversible

Design Code:	B	**Shaft Slinger Indicator:**	No Slinger
Drip Cover:	No Drip Cover	**Speed Code:**	Single Speed
Duty Rating:	CONT	**Motor Standards:**	NEMA
Electrically Isolated Bearing:	Not Electrically Isolated	**Starting Method:**	Direct on line
Feedback Device:	NO FEEDBACK	**Thermal Device - Bearing:**	None
Front Face Code:	Standard	**Thermal Device - Winding:**	None
Front Shaft Indicator:	None	**Vibration Sensor Indicator:**	No Vibration Sensor
Heater Indicator:	No Heater	**Winding Thermal 1:**	None
Insulation Class:	F	**Winding Thermal 2:**	None

Nameplate NP3441L

CAT.NO.	VEM3558T-5							
SPEC.	35AA003N956G1							
HP	2							
VOLTS	575							
AMP	2.3							
RPM	1755							
FRAME	145TC	**HZ**	60			**PH**	3	
SER.F.	1.15	**CODE**	L	**DES**	B	**CL**	F	
NEMA-NOM-EFF	86.5	**PF**	75					
RATING	40C AMB-CONT							
CC	010A			**USABLE AT 208V**				
DE	6205	**ODE**	6203					
ENCL	TEFC	**SN**						
VPWM INVERTER READY								
CT6-60H(10:1)VT3-60H(20:1								

Parts List

Part Number	Description	Quantity
SA265143	SA 35AA003N956G1	1.000 EA
RA251847	RA 35AA003N956G1	1.000 EA
34FN3002B01	EXTERNAL FAN, PLASTIC, .637/.639 HUB W/	1.000 EA
NS2512A01	INSULATOR, CONDUIT BOX X	1.000 EA
35CB3009	35 CB W/1.09 DIA. LEAD HOLE @ 6:	1.000 EA
36GS1000SP	GASKET-CONDUIT BOX, .06 THICK #SV-330 LE	1.000 EA
51XB1016A07	10-16 X 7/16 HXWSSLD SERTYB	2.000 EA
11XW1032G06	10-32 X .38, TAPTITE II, HEX WSHR SLTD U	1.000 EA
35EP3122A00	MASTER ODE,203 BRG,.683SH,#26 DRN,GRSR,F	1.000 EA
HW4500A01	1641B(ALEMITE)400 UNIV, GREASE FITT	1.000 EA
HW5100A03	WAVY WASHER (W1543-017)	1.000 EA
35EP3307D00	MASTER DE,205 BRG,.998SH,#26 DRN,GRSR	1.000 EA
HW4500A01	1641B(ALEMITE)400 UNIV, GREASE FITT	1.000 EA
51XN1032A20	10-32 X 1 1/4 HX WS SL SR	2.000 EA
35FH4005A84SP	IEC FH W/GRSR, NO DIMPLES PRIMED	1.000 EA
51XW1032A06	10-32 X .38, TAPTITE II, HEX WSHR SLTD S	3.000 EA
35CB4521GX	CONDUIT BOX LID KIT	1.000 EA
51XW0832A07	8-32 X .44, TAPTITE II, HEX WSHR SLTD SE	4.000 EA
HW2501D13	KEY, 3/16 SQ X 1.375	1.000 EA
HA7000A01	KEY RETAINER 7/8" DIA SHAFT	1.000 EA
85XU0407S04	4X1/4 U DRIVE PIN STAINLESS	2.000 EA
MJ1000A02	GREASE, POLYREX EM EXXON (USe 4824-15A)	0.050 LB
51XB1214A16	12-14X1.00 HXWSSLD SERTYB	1.000 EA
MG1000Y03	MUNSELL 2.53Y 6.70/ 4.60, GLOSS 20,	0.017 GA

Parts List (continued)

Part Number	Description	Quantity
HA3100A15	THRUBOLT 10-32 X 8.375	4.000 EA
LB1119N	WARNING LABEL	1.000 EA
LC0006	CONNECTION LABEL	1.000 EA
NP3441L	ALUM SUPER-E VPWM INVERTER READY UL	1.000 EA
36PA1000	PKG GRP, PRINT PK1016A06	1.000 EA
PK3082	STYROFOAM CRADLE	1.000 EA
MN416A01	TAG-INSTAL-MAINT no wire (1200/bx) 5/18	1.000 EA
PE-0000001	ZRTG PE ASSEMBLY	1.000 EA
FE-0000001	ZRTG FE ASSEMBLY	1.000 EA

AC Induction Motor Performance Data

Record # 42575 - Typical performance - not guaranteed values

Winding: 35WGN956-R001	**Type:** 3528M	**Enclosure:** TEFC

Nameplate Data				575 V, 60 Hz: Single Voltage Motor	
Rated Output (HP)	2			Full Load Torque	5.98 LB-FT
Volts	575			Start Configuration	direct on line
Full Load Amps	2.3			Breakdown Torque	26 LB-FT
R.P.M.	1755			Pull-up Torque	16.6 LB-FT
Hz	60	Phase	3	Locked-rotor Torque	18 LB-FT
NEMA Design Code	B	KVA Code	L	Starting Current	19.6 A
Service Factor (S.F.)	1.15			No-load Current	1.48 A
NEMA Nom. Eff.	86.5	Power Factor	75	Line-line Res. @ 25ºC	11.9 Ω
Rating - Duty	40C AMB-CONT			Temp. Rise @ Rated Load	62°C
S.F. Amps				Temp. Rise @ S.F. Load	74°C
				Locked-rotor Power Factor	50
				Rotor inertia	0.165 LB-FT2

Load Characteristics 575 V, 60 Hz, 2 HP

% of Rated Load	25	50	75	100	125	150	S.F.
Power Factor	32	52	65	74	79	82	77
Efficiency	76	84.4	86.9	87	86.6	85.3	86.8
Speed	1790	1780	1769	1757	1744	1729	1749
Line amperes	1.54	1.71	1.99	2.34	2.73	3.2	2.57

Performance Graph at 575V, 60Hz, 2.0HP Typical performance - Not guaranteed values

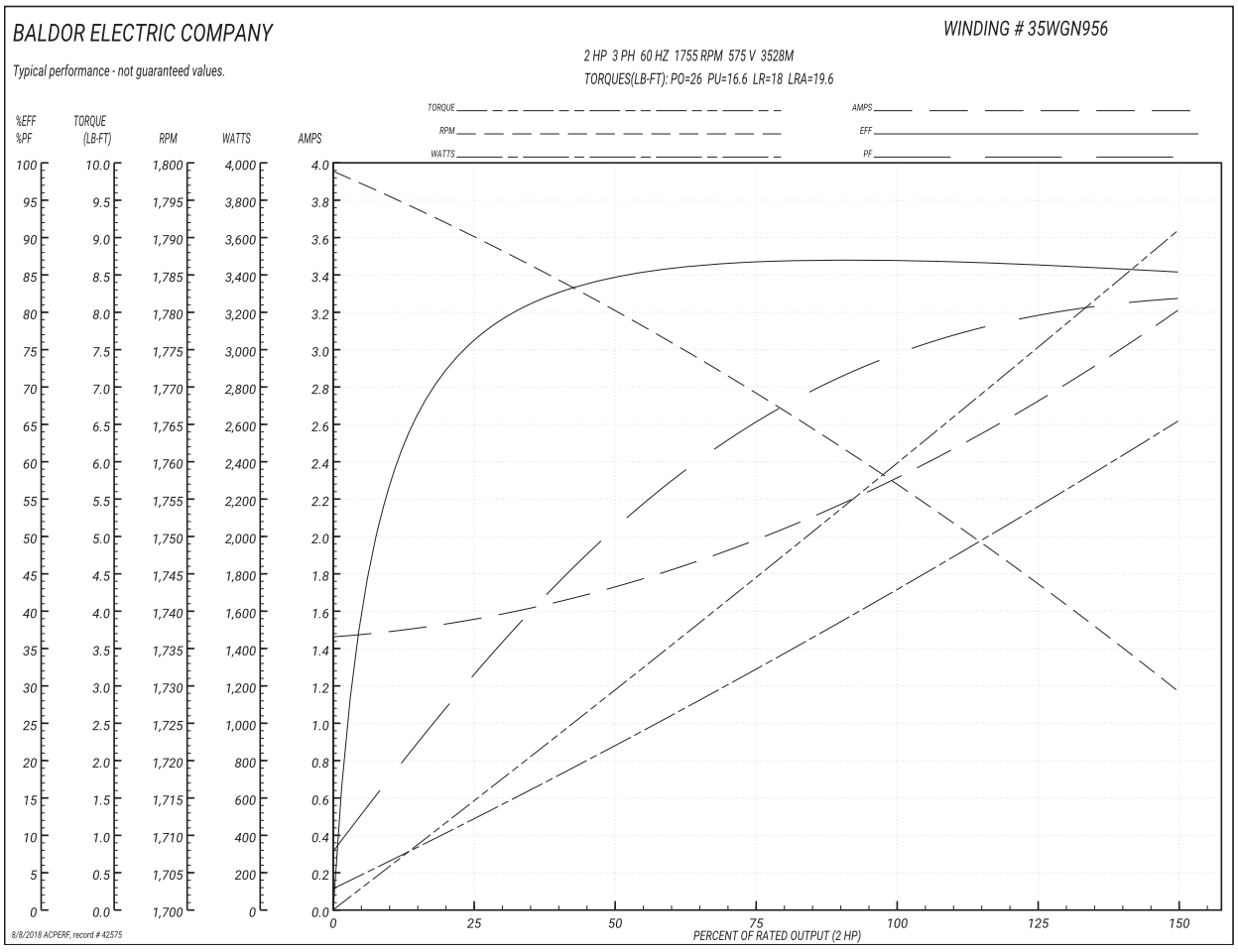

35LYAA003

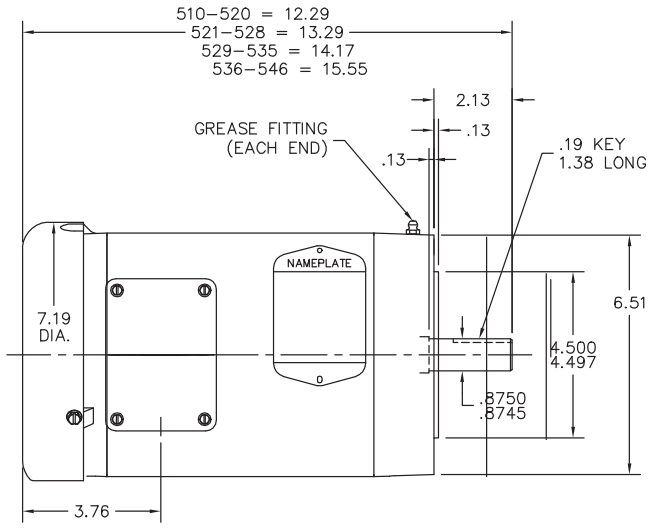

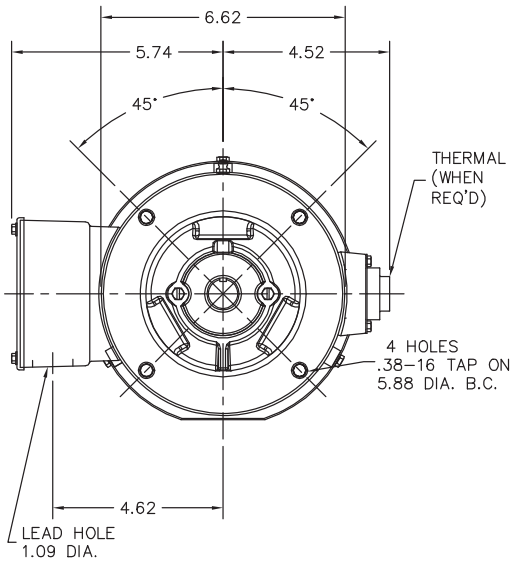

35LYAA003

CUSTOMER IS RESPONSIBLE FOR DETERMINING THAT BALDOR'S PRODUCT WILL PERFORM SUITABLY IN THE INTENDED APPLICATION.

REV. DESC: REPLACE ENDPLATES		
REV. LTR: A	VERSION: 01	TDR: 000001063670
FILE: \AAA\00172\065	REVISED: 01:40:00 03/12/2018	BY: FGCHAH1
MTL: –		

BALDOR

STD VERT 143–5TC TEFC 35M

SH 1 of 1

CD0006

TYPICAL WYE–CONNECTED MOTOR

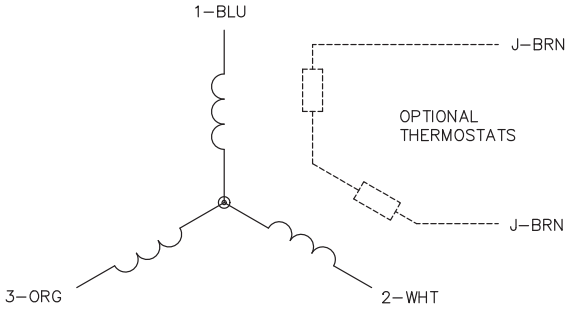

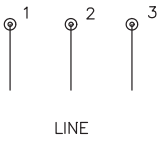

TYPICAL DELTA–CONNECTED MOTOR

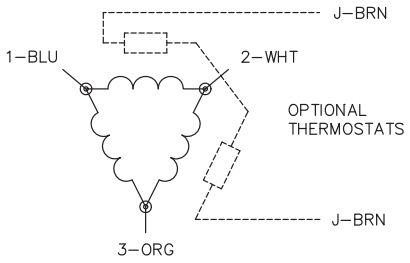

NOTES:

1. THREE LEAD MOTOR MAY BE EITHER WYE CONNECTED OR DELTA CONNECTED.
2. INTERCHANGE ANY TWO LINE LEADS TO REVERSE ROTATION.
3. OPTIONAL THERMOSTATS ARE PROVIDED WHEN SPECIFIED.
4. ACTUAL NUMBER OF INTERNAL PARALLEL CIRCUITS MAY VARY.
5. LEAD COLORS ARE OPTIONAL. LEADS MUST BE NUMBERED AS SHOWN.

REV. DESC: REVISE TO SHOW OPTIONAL COLORS			BALDOR ELECTRIC Co.
REV. LTR: D	BY: JLP	REVISED: 01/21/99 4:02	TDR: 0171435
9000Ɔ		FILE: AAA00005141	MDL: –
		MTL: –	3PH, SV, 3 LEADS, WYE OR DELTA CONNECTED

CD0006

BALDOR®
MOTORS AND DRIVES

Integral Horsepower
AC Induction Motors
ODP Enclosure
TEFC Enclosure
Explosion Proof

Installation & Operating Manual

7/01 **MN400**

Table of Contents

Section 1
General Information 1-1
Overview 1-1
Limited Warranty 1-1
Safety Notice 1-2
Receiving 1-4
Storage 1-4
Unpacking 1-4
Handling 1-4
Section 2
Installation & Operation 2-1
Overview 2-1
Location 2-1
Mounting 2-1
Alignment 2-1
Doweling & Bolting 2-2
Power Connection 2-2
Conduit Box 2-2
AC Power 2-2
First Time Start Up 2-4
Coupled Start Up 2-4
Jogging and Repeated Starts 2-4
Section 3
Maintenance & Troubleshooting 3-1
General Inspection 3-1
Lubrication & Bearings 3-1
Type of Grease 3-1
Lubrication Intervals 3-1
Lubrication Procedure 3-3
Accessories 3-4
Troubleshooting Chart 3-5

Section 1
General Information

Overview This manual contains general procedures that apply to Baldor Motor products. Be sure to read and understand the Safety Notice statements in this manual. For your protection, do not install, operate or attempt to perform maintenance procedures until you understand the Warning and Caution statements. A Warning statement indicates a possible unsafe condition that can cause harm to personnel. A Caution statement indicates a condition that can cause damage to equipment.

Important: **This instruction manual is not intended to include a comprehensive listing of all details for all procedures required for installation, operation and maintenance. This manual describes general guidelines that apply to most of the motor products shipped by Baldor. If you have a question about a procedure or are uncertain about any detail, Do Not Proceed. Please contact your Baldor distributor for more information or clarification.**

Before you install, operate or perform maintenance, become familiar with the following:

- NEMA Publication MG-2, Safety Standard for Construction and guide for Selection, Installation and Use of Electric Motors and Generators.
- The National Electrical Code
- Local codes and Practices

Limited Warranty

1. Baldor Electric motors are warranted for a period of one (1) year, from date of shipment from the factory or factory warehouse against defects in material and workmanship. To allow for stocking and/or fabrication period and to provide one year of actual service, the warranty period is extended for an additional period of six (6) months for a total of eighteen (18) months from the original date of shipment from the factory or factory warehouse stock. In no case will the warranty period be extended for a longer period. Baldor extends this limited warranty to each buyer of the electric motor for the purpose of resale and to the original purchaser for use.
2. Baldor will, at its option repair or replace a motor which fails due to defects in material or workmanship during the warranty period if:
   a. the purchaser presents the defective motor at or ships it prepaid to, the Baldor plant in Fort Smith, Arkansas or one of the Baldor Authorized Service Centers and
   b. the purchaser gives written notification concerning the motor and the claimed defect including the date purchased, the task performed by the Baldor motor and the problem encountered.
3. Baldor will not pay the cost of removal of any electric motor from any equipment, the cost of delivery to Fort Smith, Arkansas or a Baldor Authorized Service Center, or the cost of any incidental or consequential damages resulting from the claimed defects. (Some states do not allow the exclusion or limitation of incidental or consequential damages, so the above exclusion may not apply to you.) Any implied warranty given by laws shall be limited to the duration of the warranty period hereunder. (Some states do not allow limitations on how long an implied warranty lasts, so the above limitation may not apply to you.)
4. Baldor Authorized Service Centers, when convinced to their satisfaction that a Baldor motor developed defects in material or workmanship within the warranty period, are authorized to proceed with the required repairs to fulfill Baldor's warranty when the cost of such repairs to be paid by Baldor does not exceed Baldor's warranty repair allowance. Baldor will not pay overtime premium repair charges without prior written authorization.
5. The cost of warranty repairs made by centers other than Baldor Authorized Service Centers **WILL NOT** be paid unless first authorized in writing by Baldor.
6. Claims by a purchaser that a motor is defective even when a failure results within one hour after being placed into service are not always justified. Therefore, Baldor Authorized Service Centers must determine from the condition of the motor as delivered to the center whether or not the motor is defective. If in the opinion of a Baldor Authorized Service Center, a motor did not fail as a result of defects in material or workmanship, the center is to proceed with repairs only if the purchaser agrees to pay for such repairs. If the decision is in dispute, the purchaser should still pay for the repairs and submit the paid invoice and the Authorized Service Center's signed service report to Baldor for further consideration.
7. This warranty gives you specific legal rights, and you may also have other rights which vary from state to state.

   Note that **Baldor Super–E® Premium Efficiency** electric motors are warranted for a period of three (3) years. All other terms and conditions of the Limited Warranty statement apply.

Safety Notice:

This equipment contains high voltage! Electrical shock can cause serious or fatal injury. Only qualified personnel should attempt installation, operation and maintenance of electrical equipment.

Be sure that you are completely familiar with NEMA publication MG-2, safety standards for construction and guide for selection, installation and use of electric motors and generators, the National Electrical Code and local codes and practices. Unsafe installation or use can cause conditions that lead to serious or fatal injury. Only qualified personnel should attempt the installation, operation and maintenance of this equipment.

WARNING: Do not touch electrical connections before you first ensure that power has been disconnected. Electrical shock can cause serious or fatal injury. Only qualified personnel should attempt the installation, operation and maintenance of this equipment.

WARNING: Be sure the system is properly grounded before applying power. Do not apply AC power before you ensure that all grounding instructions have been followed. Electrical shock can cause serious or fatal injury. National Electrical Code and Local codes must be carefully followed.

WARNING: Avoid extended exposure to machinery with high noise levels. Be sure to wear ear protective devices to reduce harmful effects to your hearing.

WARNING: This equipment may be connected to other machinery that has rotating parts or parts that are driven by this equipment. Improper use can cause serious or fatal injury. Only qualified personnel should attempt to install operate or maintain this equipment.

WARNING: Do not by-pass or disable protective devices or safety guards. Safety features are designed to prevent damage to personnel or equipment. These devices can only provide protection if they remain operative.

WARNING: Avoid the use of automatic reset devices if the automatic restarting of equipment can be hazardous to personnel or equipment.

WARNING: Be sure the load is properly coupled to the motor shaft before applying power. The shaft key must be fully captive by the load device. Improper coupling can cause harm to personnel or equipment if the load decouples from the shaft during operation.

WARNING: Use proper care and procedures that are safe during handling, lifting, installing, operating and maintaining operations. Improper methods may cause muscle strain or other harm.

WARNING: Before performing any motor maintenance procedure, be sure that the equipment connected to the motor shaft cannot cause shaft rotation. If the load can cause shaft rotation, disconnect the load from the motor shaft before maintenance is performed. Unexpected mechanical rotation of the motor parts can cause injury or motor damage.

WARNING: Disconnect all electrical power from the motor windings and accessory devices before disassembly of the motor. Electrical shock can cause serious or fatal injury.

WARNING: Do not use these motors in the presence of flammable or combustible vapors or dust. These motors are not designed for atmospheric conditions that require explosion proof operation.

Safety Notice Continued

WARNING: **Motors that are to be used in flammable and/or explosive atmospheres must display the UL label on the nameplate.**

Specific service conditions for these motors are defined in NEC 70-599.

WARNING: **UL rated motors must only be serviced by authorized Baldor Service Centers if these motors are to be returned to a flammable and/or explosive atmosphere.**

Caution: **To prevent premature equipment failure or damage, only qualified maintenance personnel should perform maintenance.**

Caution: **Do not lift the motor and its driven load by the motor lifting hardware. The motor lifting hardware is adequate for lifting only the motor. Disconnect the load from the motor shaft before moving the motor.**

Caution: **If eye bolts are used for lifting a motor, be sure they are securely tightened. The lifting direction should not exceed a 20° angle from the shank of the eye bolt or lifting lug. Excessive lifting angles can cause damage.**

Caution: **To prevent equipment damage, be sure that the electrical service is not capable of delivering more than the maximum motor rated amps listed on the rating plate.**

Caution: **If a HI POT test (High Potential Insulation test) must be performed, follow the precautions and procedure in NEMA MG-1 and MG-2 standards to avoid equipment damage.**

If you have any questions or are uncertain about any statement or procedure, or if you require additional information please contact your Baldor distributor or an Authorized Baldor Service Center.

Receiving

Each Baldor Electric Motor is thoroughly tested at the factory and carefully packaged for shipment. When you receive your motor, there are several things you should do immediately.

1. Observe the condition of the shipping container and report any damage immediately to the commercial carrier that delivered your motor.
2. Verify that the part number of the motor you received is the same as the part number listed on your purchase order.

Storage

If the motor is not put into service immediately, the motor must be stored in a clean, dry and warm location. Several precautionary steps must be performed to avoid motor damage during storage.

1. Use a “Megger” periodically to ensure that the integrity of the winding insulation has been maintained. Record the Megger readings. Immediately investigate any significant drop in insulation resistance.
2. Do not lubricate bearings during storage. Motor bearings are packed with grease at the factory. Excessive grease can damage insulation quality.
3. Rotate motor shaft at least 10 turns every two months during storage (more frequently if possible). This will prevent bearing damage due to storage.
4. If the storage location is damp or humid, the motor windings must be protected from moisture. This can be done by applying power to the motors’ space heater (if available) while the motor is in storage.

Unpacking

Each Baldor motor is packaged for ease of handling and to prevent entry of contaminants.

1. To avoid condensation inside the motor, do not unpack until the motor has reached room temperature. (Room temperature is the temperature of the room in which it will be installed). The packing provides insulation from temperature changes during transportation.
2. When the motor has reached room temperature, remove all protective wrapping material from the motor.

Handling

The motor should be lifted using the lifting lugs or eye bolts provided.

1. Use the lugs or eye bolts provided to lift the motor. Never attempt to lift the motor and additional equipment connected to the motor by this method. The lugs or eye bolts provided are designed to lift only the motor. Never lift the motor by the motor shaft.
2. If the motor must be mounted to a plate with the driven equipment such as pump, compressor etc., it may not be possible to lift the motor alone. For this case, the assembly should be lifted by a sling around the mounting base. The entire assembly can be lifted as an assembly for installation. Do not lift using the motor lugs or eye bolts provided.

   If the load is unbalanced (as with couplings or additional attachments) additional slings or other means must be used to prevent tipping. In any event, the load must be secure before lifting.

Section 2
Installation & Operation

Overview

Installation should conform to the National Electrical Code as well as local codes and practices. When other devices are coupled to the motor shaft, be sure to install protective devices to prevent future accidents. Some protective devices include, coupling, belt guard, chain guard, shaft covers etc. These protect against accidental contact with moving parts. Machinery that is accessible to personnel should provide further protection in the form of guard rails, screening, warning signs etc.

Location

The motor should be installed in an area that is protected from direct sunlight, corrosives, harmful gases or liquids, dust, metallic particles, and vibration. Exposure to these can reduce the operating life and degrade performance. Be sure to allow clearance for ventilation and access for cleaning, repair, service and inspections. Ventilation is extremely important. Be sure the area for ventilation is not obstructed. Obstructions will limit the free passage of air. Motors get warm and the heat must be dissipated to prevent damage.

These motors are not designed for atmospheric conditions that require explosion proof operation. They must NOT be used in the presence of flammable or combustible vapors or dust.

1. ODP motors are suitable only for indoor applications.
2. TEFC motors are suitable for indoor or outdoor standard service applications.

Mounting

The motor must be securely installed to a rigid foundation or mounting surface to minimize vibration and maintain alignment between the motor and shaft load. Failure to provide a proper mounting surface may cause vibration, misalignment and bearing damage.

Foundation caps and sole plates are designed to act as spacers for the equipment they support. If these devices are used, be sure that they are evenly supported by the foundation or mounting surface.

After installation is complete and accurate alignment of the motor and load is accomplished, the base should be grouted to the foundation to maintain this alignment.

The standard motor base is designed for horizontal or vertical mounting. Adjustable or sliding rails are designed for horizontal mounting only. Consult your Baldor distributor or authorized Baldor Service Center for further information.

Alignment

Accurate alignment of the motor with the driven equipment is extremely important.

1. **Direct Coupling**
   For direct drive, use flexible couplings if possible. Consult the drive or equipment manufacturer for more information. Mechanical vibration and roughness during operation may indicate poor alignment. Use dial indicators to check alignment. The space between coupling hubs should be maintained as recommended by the coupling manufacturer.
2. **End-Play Adjustment**
   The axial position of the motor frame with respect to its load is also extremely important. The motor bearings are not designed for excessive external axial thrust loads. Improper adjustment will cause failure.
3. **Pulley Ratio**
   The pulley ratio should not exceed 8:1.
4. **Belt Drive**
   Align sheaves carefully to minimize belt wear and axial bearing loads (see End-Play Adjustment). Belt tension should be sufficient to prevent belt slippage at rated speed and load. However, belt slippage may occur during starting.

Caution: Do not over tension belts.

Doweling & Bolting

After proper alignment is verified, dowel pins should be inserted through the motor feet into the foundation. This will maintain the correct motor position should motor removal be required. (Baldor motors are designed for doweling.)

1. Drill dowel holes in diagonally opposite motor feet in the locations provided.
2. Drill corresponding holes in the foundation.
3. Ream all holes.
4. Install proper fitting dowels.
5. Mounting bolts must be carefully tightened to prevent changes in alignment. Use a flat washer and lock washer under each nut or bolt head to hold the motor feet secure. Flanged nuts or bolts may be used as an alternative to washers.

Power Connection

Motor and control wiring, overload protection, disconnects, accessories and grounding should conform to the National Electrical Code and local codes and practices.

Conduit Box

For ease of making connections, an oversize conduit box is provided. The box can be rotated 360° in 90° increments. Auxiliary conduit boxes are provided on some motors for accessories such as space heaters, RTD's etc.

AC Power

Connect the motor leads as shown on the connection diagram located on the name plate or inside the cover on the conduit box. Be sure the following guidelines are met:

1. AC power is within ±10% of rated voltage with rated frequency. (See motor name plate for ratings).
   OR
2. AC power is within ±5% of rated frequency with rated voltage.
   OR
3. A combined variation in voltage and frequency of ±10% (sum of absolute values) of rated values, provided the frequency variation does not exceed ±5% of rated frequency.

Performance within these voltage and frequency variations are shown in Figure 2-1.

First Time Start Up

Be sure that all power to motor and accessories is off. Be sure the motor shaft is disconnected from the load and will not cause mechanical rotation of the motor shaft.

1. Make sure that the mechanical installation is secure. All bolts and nuts are tightened etc.
2. If motor has been in storage or idle for some time, check winding insulation integrity with a Megger.
3. Inspect all electrical connections for proper termination, clearance, mechanical strength and electrical continuity.
4. Be sure all shipping materials and braces (if used) are removed from motor shaft.
5. Manually rotate the motor shaft to ensure that it rotates freely.
6. Replace all panels and covers that were removed during installation.
7. Momentarily apply power and check the direction of rotation of the motor shaft.
8. If motor rotation is wrong, be sure power is off and change the motor lead connections. Verify rotation direction before you continue.
9. Start the motor and ensure operation is smooth without excessive vibration or noise. If so, run the motor for 1 hour with no load connected.
10. After 1 hour of operation, disconnect power and connect the load to the motor shaft. Verify all coupling guards and protective devices are installed. Ensure motor is properly ventilated.

Coupled Start Up

This procedure assumes a coupled start up. Also, that the first time start up procedure was successful.

1. Check the coupling and ensure that all guards and protective devices are installed.
2. Check that the coupling is properly aligned and not binding.
3. The first coupled start up should be with no load. Apply power and verify that the load is not transmitting excessive vibration back to the motor though the coupling or the foundation. Vibration should be at an acceptable level.
4. Run for approximately 1 hour with the driven equipment in an unloaded condition.

The equipment can now be loaded and operated within specified limits. Do not exceed the name plate ratings for amperes for steady continuous loads.

Jogging and Repeated Starts Repeated starts and/or jogs of induction motors generally reduce the life of the motor winding insulation. A much greater amount of heat is produced by each acceleration or jog than than by the same motor under full load. If it is necessary to to repeatedly start or jog the motor, it is advisable to check the application with your local Baldor distributor or Baldor Service Center.

Heating - Duty rating and maximum ambient temperature are stated on the motor name plate. Do not exceed these values. If there is any question regarding safe operation, contact your local Baldor distributor or Baldor Service Center.

Section 3
Maintenance & Troubleshooting

WARNING: **UL rated motors must only be serviced by authorized Baldor Service Centers if these motors are to be returned to a flammable and/or explosive atmosphere.**

General Inspection

Inspect the motor at regular intervals, approximately every 500 hours of operation or every 3 months, whichever occurs first. Keep the motor clean and the ventilation openings clear. The following steps should be performed at each inspection:

WARNING: **Do not touch electrical connections before you first ensure that power has been disconnected. Electrical shock can cause serious or fatal injury. Only qualified personnel should attempt the installation, operation and maintenance of this equipment.**

1. Check that the motor is clean. Check that the interior and exterior of the motor is free of dirt, oil, grease, water, etc. Oily vapor, paper pulp, textile lint, etc. can accumulate and block motor ventilation. If the motor is not properly ventilated, overheating can occur and cause early motor failure.
2. Use a “Megger” periodically to ensure that the integrity of the winding insulation has been maintained. Record the Megger readings. Immediately investigate any significant drop in insulation resistance.
3. Check all electrical connectors to be sure that they are tight.

Lubrication & Bearings

Bearing grease will lose its lubricating ability over time, not suddenly. The lubricating ability of a grease (over time) depends primarily on the type of grease, the size of the bearing, the speed at which the bearing operates and the severity of the operating conditions. Good results can be obtained if the following recommendations are used in your maintenance program.

Type of Grease

A high grade ball or roller bearing grease should be used. Recommended grease for standard service conditions is Polyrex EM (Exxon Mobil).

Equivalent and compatible greases include:
Texaco Polystar, Rykon Premium #2, Pennzoil Pen 2 Lube and Chevron SRI.

– Maximum operating temperature for standard motors = 110° C.
– Shut–down temperature in case of a malfunction = 115° C.

Lubrication Intervals

Recommended lubrication intervals are shown in Table 3-1. It is important to realize that the recommended intervals of Table 3-1 are based on average use.

Refer to additional information contained in Tables 3-2 and 3-3.

Table 3-1 Lubrication Intervals *

NEMA / (IEC) Frame Size	Rated Speed - RPM					
	10000	6000	3600	1800	1200	900
Up to 210 incl. (132)	**	2700 Hrs.	5500 Hrs.	12000 Hrs.	18000 Hrs.	22000 Hrs.
Over 210 to 280 incl. (180)			3600 Hrs.	9500 Hrs.	15000 Hrs.	18000 Hrs.
Over 280 to 360 incl. (225)			* 2200 Hrs.	7400 Hrs.	12000 Hrs.	15000 Hrs.
Over 360 to 5800 incl. (300)			*2200 Hrs.	3500 Hrs.	7400 Hrs.	10500 Hrs.

* Lubrication intervals are for ball bearings. For roller bearings, divide the listed lubrication interval by 2.

** For 6205 and 6806 bearings. For 6807 bearings, consult oil mist lubrication (MN401).
Relubrication interval for 6205 bearing bearing is 1550Hrs. (using grease lubrication).
Relubrication interval for 6806 bearing bearing is 720Hrs. (using grease lubrication).

Table 3-2 Service Conditions

Severity of Service	Ambient Temperature Maximum	Atmospheric Contamination	Type of Bearing
Standard	40° C	Clean, Little Corrosion	Deep Groove Ball Bearing
Severe	50° C	Moderate dirt, Corrosion	Ball Thrust, Roller
Extreme	>50° C* or Class H Insulation	Severe dirt, Abrasive dust, Corrosion	All Bearings
Low Temperature	<–30° C **		

* Special high temperature grease is recommended (Dow Corning DC44). Note that Dow Corning DC44 grease does not mix with other grease types. Thoroughly clean bearing & cavity before adding grease.

** Special low temperature grease is recommended (Aeroshell 7).

Table 3-3 Lubrication Interval Multiplier

Severity of Service	Multiplier
Standard	1.0
Severe	0.5
Extreme	0.1
Low Temperature	1.0

Table 3-4 Bearings Sizes and Types

Frame Size NEMA (IEC)	Bearing Description (These are the "Large" bearings (Shaft End) in each frame size)					
	Bearing	OD D mm	Width B mm	Weight of Grease to add * oz (Grams)	Volume of grease to be added	
					in^3	tea-spoon
Up to 210 incl. (132)	6307	80	21	0.30 (8.4)	0.6	2.0
Over 210 to 280 incl. (180)	6311	120	29	0.61 (17)	1.2	3.9
Over 280 to 360 incl. (225)	6313	140	33	0.81 (23)	1.5	5.2
Over 360 to 449 incl. (280)	NU319	200	45	2.12 (60)	4.1	13.4
Over 5000 to 5800 incl. (355)	NU328	300	62	4.70 (130)	9.2	30.0
Spindle Motors						
76 Frame	6207	72	17	0.22 (6.1)	0.44	1.4
77 Frame	6210	90	20	0.32 (9.0)	0.64	2.1
80 Frame	6213	120	23	0.49 (14.0)	0.99	3.3

* Weight in grams = .005 DB

Lubrication Procedure

Be sure that the grease you are adding to the motor is compatible with the grease already in the motor. Consult your Baldor distributor or an authorized service center if a grease other than the recommended type is to be used.

Caution: To avoid damage to motor bearings, grease must be kept free of dirt. For an extremely dirty environment, contact your Baldor distributor or an authorized Baldor Service Center for additional information.

With Grease Outlet Plug

1. Clean all grease fittings.
2. Remove grease outlet plug.
3. If motor is stopped, add the recommended amount of grease.

   If motor is to be greased while running, a slightly greater quantity of grease will have to be added. Add grease slowly until new grease appears at shaft hole in the endplate or purge outlet plug.
4. Re-install grease outlet plug.

Without Grease Outlet Plug

1. Disassemble motor.
2. Add recommended amount of grease to bearing and bearing cavity. (Bearing should be about 1/3 full of grease and outboard bearing cavity should be about 1/2 full of grease.)

Note: Bearing is 1/3 full when only one side of bearing is completely full of grease.

3. Assemble motor.

Sample Lubrication Determination

Assume - NEMA 286T (IEC 180), 1750 RPM motor driving an exhaust fan in an ambient temperature of 43° C and the atmosphere is moderately corrosive.

1. Table 3-1 list 9500 hours for standard conditions.
2. Table 3-2 classifies severity of service as “Severe”.
3. Table 3-3 lists a multiplier value of 0.5 for Severe conditions.
4. Table 3-4 shows that 1.2 in^3 or 3.9 teaspoon of grease is to be added.

Note: Smaller bearings in size category may require reduced amounts of grease.

Accessories

The following is a partial list of accessories available from Baldor.
Contact your Baldor distributor for availability and pricing information.

Note: Space heaters and RTD's are standard on some motors.

Bearing RTD
RTD (Resistance Temperature Detector) devices are used to measure or monitor the temperature of the motor bearing during operation.

Bearing Thermocouples
Used to measure or monitor bearing temperatures.

Bearing Thermostat
Temperature device that activates when bearing temperatures are excessive. Used with an external circuit to warn of excessive bearing temperature or to shut down a motor.

Conduit Boxes
Optional conduit boxes are available in various sizes to accommodate accessory devices.

Cord & Plug Assembly
Adds a line cord and plug for portable applications.

Drains and Breathers
Stainless steel drains with separate breathers are available.

Drip Covers
Designed for use when motor is mounted in a vertical position. Contact your Baldor distributor to confirm that the motor is designed for vertical mounting.

Fan Cover & Lint Screen
To prevent build-up of debris on the cooling fan.

Nameplate
Additional stainless steel nameplates are available.

Roller Bearings
Recommended for belt drive applications with a speed of 1800 RPM or less.

Rotation Arrow Labels
Rotation arrows are supplied on motors designed to operate in one direction only. Additional rotation arrows are available.

Space Heater
Added to prevent condensation of moisture within the motor enclosure during periods of shut down or storage.

Stainless Hardware
Stainless steel hardware is available. Standard hardware is corrosion resistant zinc plated steel.

Winding RTD
RTD (Resistance Temperature Detector) devices are used to measure or monitor the temperature of the motor winding during operation.

Winding Thermocouples
Used to measure or monitor winding temperatures.

Winding Thermostat
Temperature device that activates when winding temperatures are excessive. Used with an external circuit to warn of excessive winding temperature or to shut down a motor.

Note: On some motors, leads for accessory devices are brought out to a separate conduit box located on the side of the motor housing (unless otherwise specified).

Table 3-5 Troubleshooting Chart

Symptom	Possible Causes	Possible Solutions
Motor will not start	Usually caused by line trouble, such as, single phasing at the starter.	Check source of power. Check overloads, fuses, controls, etc.
Excessive humming	High Voltage.	Check input line connections.
	Eccentric air gap.	Have motor serviced at local Baldor service center.
Motor Over Heating	Overload. Compare actual amps (measured) with nameplate rating.	Locate and remove source of excessive friction in motor or load. Reduce load or replace with motor of greater capacity.
	Single Phasing.	Check current at all phases (should be approximately equal) to isolate and correct the problem.
	Improper ventilation.	Check external cooling fan to be sure air is moving properly across cooling fins. Excessive dirt build-up on motor. Clean motor.
	Unbalanced voltage.	Check voltage at all phases (should be approximately equal) to isolate and correct the problem.
	Rotor rubbing on stator.	Check air gap clearance and bearings.
		Tighten “Thru Bolts”.
	Over voltage or under voltage.	Check input voltage at each phase to motor.
	Open stator winding.	Check stator resistance at all three phases for balance.
	Grounded winding.	Perform dielectric test and repair as required.
	Improper connections.	Inspect all electrical connections for proper termination, clearance, mechanical strength and electrical continuity. Refer to motor lead connection diagram.
Bearing Over Heating	Misalignment.	Check and align motor and driven equipment.
	Excessive belt tension.	Reduce belt tension to proper point for load.
	Excessive end thrust.	Reduce the end thrust from driven machine.
	Excessive grease in bearing.	Remove grease until cavity is approximately $^3/_4$ filled.
	Insufficient grease in bearing.	Add grease until cavity is approximately $^3/_4$ filled.
	Dirt in bearing.	Clean bearing cavity and bearing. Repack with correct grease until cavity is approximately $^3/_4$ filled.
Vibration	Misalignment.	Check and align motor and driven equipment.
	Rubbing between rotating parts and stationary parts.	Isolate and eliminate cause of rubbing.
	Rotor out of balance.	Have rotor balance checked are repaired at your Baldor Service Center.
	Resonance.	Tune system or contact your Baldor Service Center for assistance.
Noise	Foreign material in air gap or ventilation openings.	Remove rotor and foreign material. Reinstall rotor. Check insulation integrity. Clean ventilation openings.
Growling or whining	Bad bearing.	Replace bearing. Clean all grease from cavity and new bearing. Repack with correct grease until cavity is approximately $^3/_4$ filled.



BALDOR ELECTRIC COMPANY
P.O. Box 2400
Ft. Smith, AR 72902–2400
(501) 646–4711
Fax (501) 648–5792

© Baldor Electric Company
MN400

Printed in USA
7/01 C&J10000

This page intentionally left blank

Enviro-Care
A WAMGROUP® Company

Motor Cutout Switch

This page intentionally left blank

MICRO SWITCH™ Hazardous Location Limit Switches — EX Series

The smallest UL-listed housing available for use in hazardous locations. The compact size allow for multiple applications such as explosive gas/dust environments or valve and valve actuator.

Stock No.	Mfr.'s Type	Description	O.F.	P.T. (Inches)	D. T. (Inches)	
70120103	EX-AR	SPDT, Roller Lever, CW Actuation	0.50-1.25 lbs.	0.249	0.007	90°
70120104	EX-Q	SPDT, Pin Plunger	3.0 lbs.	0.078	0.004	0.188"
70119222	EX-AR20	SPDT, No Lever	31.25"-oz.	0.219	0.007	90°
70119224	EX-AR800*	SPDT, Side Rotary	0.50-1.25 lbs.	0.219	0.007	90°
70118618	EX-AR30	SPDT, CCW Roller	2.5 lbs.	0.065	0.007	25°
70119225	EX-N15	SPDT, Top Plunger	0.75-2.00 lbs.	0.078	0.004	—
70119226	EXA-AR	SPDT, Side Rotary	0.75-2.00 lbs.	0.219	0.012	25°
70119227	EXA-Q	SPDT, Top Plunger	2.0 lbs.	0.050	0.009	—
70119229	EXD-AR-3	SPDT, CCW Roller	0.5-1.5 lb.	0.250	0.109	25°
70119230	EXD-Q-3	DPDT, Top Plunger	3.0 lbs.	0.219	0.012	25°

*UL/CSA certified for Class 1, Group B Hydrogen atmosphere.

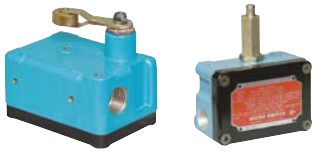

EX-AR EX-Q

Features
- Non-Sparking Actuators
- Mounts from Four Sides
- Roller Arm Adjustable Through 360°
- ATEX Certified II 2GE EXd11B+H_2 T6, IFCE Certified

Specifications
- 10-20 A @ 125, 250, 480 VAC
- ½ A @ 125 VDC, ¼ A @ 250 VDC
- ⅛ HP @ 125 VAC, ¼ HP @ 250 VAC
- UL Recognized, File #E14274
- CSA Certified, File #LR57324
- Sealing: NEMA 1, 7 (Class I DIV I Groups A, B, C, D) 9 (Class I DIV I Groups E, F, G), (DIV II Groups F, G)
- Operating Temperature: –40°C to 71°C (–90°F to 160°F)

MICRO SWITCH™ Hazardous Location Limit Switches — LSX Series

LSX switches are for use either indoors or outdoors in hazardous atmospheres as they are a completely sealed explosion-proof device. An optional mounting plate provides the same tracking and mounting as the standard HDLS. The majority of HDLS operating heads and circuitry options are available on the LSX. Standard HDLS levers are used, but because of explosion-proof requirements, only nylon rollers or other non-sparking material can be selected. Plunger and cat whisker types listed in the LSX order guide are of non-sparking material. Application proven HDLS head seals are retained to seal the top of the LSX. The circular cover on the front is easily unscrewed to expose the switching elements for wiring or replacement. A screwdriver or bar used on the wrenching lugs extending from the front of the cover allows easy removal or tightening. An o-ring seal is located between the housing and cover. The LSX withstands pressure of an internal explosion and cools the exploding gases below the kindling temperature of the explosive atmosphere. Flame paths are provided by the cover-housing threads and an extended plunger between the switch cavity and head.

Stock No.	Mfr.'s Type	Head Style Actuator	Conduit	Contact Form	O.F.	P.T.	D. T.	O.T.
70120043	LSXA3K	Side Rotary, Momentary	½"-14 NPT	SPDT	0.45 Nm	15°	5°	60°
70118674	LSXA4L	Side Rotary, Momentary	¾"-14 NPT	DPDT	0.45 Nm	15°	7°	60°
70118675	LSXM4N	Side Rotary, Cntr Neutral	¾"-14 NPT	DPDT	0.45 Nm	18°	10°	57°
[illegible]	[illegible]	[illegible]	[illegible]	[illegible]	[illegible]	[illegible]	[illegible]	[illegible]
70119234	LSXV7L	Top Plunger, Momentary	½"-14 NPT	DPDT	17.8 N	—	—	—
[illegible]	[illegible]	[illegible]	[illegible]	[illegible]	[illegible]	[illegible]	[illegible]	[illegible]
70119497	LSXP7L	Side Rotary, Momentary	½"-14 NPT	DPDT	0.45 Nm	9°	4°	66°



Features
- Electrical: 10 Amp Thermal
- Single Pole: AC15, A600; DC13, R300
- Double Pole: AC15, B600; DC13, R300
- Variety of Heads and Non-Sparking Actuators
- Field Adjustability Matches Switch to Application
- Momentary, Maintained, or Center Neutral Action
- Choice of Silver or Gold Contacts
- ½ or ¾ Inch Conduit Opening
- UL Listed (File #E61730) and CSA Certified (File #LR57327)
- NEMA/UL 1, 3, 4, 6, 7 (Class 1, Division 1 and 2) Groups B, C, D, 9 (Class 2, Division H2) Groups E, F, G, 13
- Operating Temperature: –12°C to 121°C (–10°F to 250°F), Optional –40°C (90°F)

MICRO SWITCH™ Hazardous Location Limit Switches — BX Series

The BX Series limit switch is similar to the LSX Series except it carries ATEX certification which is required for European applications. These enclosures also meet the European Hazardous Locations Designation: EExd IIC T6 category II 2 GD, SIRA 00ATEX 1037X. The entire series BX complies with the European Directive on Equipment and Protective Systems Intended for Use in Potentially Explosive Atmospheres (94/9/EC) commonly referred to as the ATEX Directive. Compliance with the Essential Health and Safety Requirements has been assessed by compliance with EN50014 1997 and EN50018 1994. BX products with conduit types ½-14 NPT, ¾-14 NPT also meet the **North American Hazardous Locations Designation:** Class I, Groups B, C and D; Class II, Groups E, F and G comply with **UL Standard:** UL 894, **CSA Standard:** C22.2 No. 25-1966, C22.2 No. 30-M1986.

Features
- UL, CSA, ATEX and IEC Ex
- Sealing — Applicable Portions of IP67 and NEMA 1, 3, 4, 6, 7, 9 and 13
- Durable Metal Housing Provides Enhanced Corrosion Resistance
- Tracking Interchangeability with MICRO SWITCH ML-E1 and HDLS
- Electrical Features Similar to LSX Series
- 10 A Thermal
- Gold Contacts Available for Low Energy Switching
- Fluorocarbon Sealing Available
- –40°C Standard Low Temperature
- Ideal for Petrochemical and Marine Environment

Stock No.	Mfr.'s Type*	Head Style Actuator	Conduit	Contact Form	O.F.	P.T.	D. T.	O.T.
70118676	BXA3K	Side Rotary	½"-14 NPT	SPDT	0.45 N	15°	7°	60°
70118677	BXA4L	Side Rotary	¾"-14 NPT	DPDT	0.45 N	15°	7°	60°
70119432	BX2C4L	Top Plunger	¾"-14 NPT	DPDT	0.45 N	1.78 mm	0.51 mm	4.83 mm
70119433	BX2P4L	Side Rotary	¾"-14 NPT	DPDT	0.45 N	9°	4°	68°

*The standard BX listings have an aluminum die cast housing. BX2 listings are 316L stainless steel.



[illegible] BX2C4L BX2P4L

MICRO SWITCH™ Hazardous Location Limit Switches — CX Series

CX switches are built especially for outdoor use in hazardous atmospheres. These enclosures are constructed to withstand the pressure of an internal explosion. Flame paths cool the exploded gases to a point less than the lowest safe operating temperature of the surrounding gas. O-ring seals make the enclosure weatherproof but are outside of required flame paths so explosion proof requirements are maintained.

Features
- Sealing — Applicable Portions of NEMA 1, 3, 4, 4x, 6, 6p, 7, 9 and 13
- Watertight and Dust-Tight for Outdoor Use
- 4-20 mA Analog Output Available
- UL Listed, File #E14274
- Analog UL File #E68247
- CSA Certified, File #LR57324
- Rugged Cast Aluminum Housing Accepts ¾"-14 NPT Conduit
- Preset Overtravel and Actuating Sequence Can Be Field Adjusted without Tools (All Switches Individually)
- Rotary Types Convert in Seconds to Clockwise, Counterclockwise or Two-Way Operation
- ATEX and IEC Ex Certified Versions Available



Stock No.	Mfr.'s Type	Head Style Actuator	Circuits	O.F.	R.F	P.T.	D. T.	O.T.	Type	Supply Voltage	Current Rating (AC)
70119237	11CX1	Side Rotary	1 Basic switch (SPDT)	1.25 Nm	0.113 Nm	15°	10°	90°	Short 104 mm	120/240/480 VAC or 125/250 VDC	15 A Ind.
70118678	11CX2	Side Rotary	2 Basic switches (each SPDT)	1.25 Nm	0.113 Nm	15°	10°	90°	Short 104 mm	120/240/480 VAC or 125/250 VDC	10 A Ind.
70119238	11CX12	Side Rotary	2 Basic switches (each SPDT)	0.50 Nm	—	15°	10°	90°	Short 104 mm	120/240/480 VAC or 125/250 VDC	15 A Ind.
70363939	12CX200	Side Rotary	2 Basic switches (each SPDT)	1.25 Nm	0.113 Nm	15°	10°	90°	Short 104 mm	120/240/480 VAC or 125/250 VDC	20 A Ind.
70118679	24CX2	Side Rotary	2 Basic switches (each DPDT)	1.25 Nm	0.113 Nm	30°	25°	75°	Standard 145 mm	120/240 VAC or 125/250 VDC	10 A Ind.

Note: See HDLS limit switches for optional non-sparking (nylon or delrin rollers or rods) lever actuators. Call your Allied Sales Representative for details.

MICRO SWITCH™ Hazardous Area Limit Switches

TOP PLUNGER • MICRO SWITCH™ LSX SERIES ORDER GUIDE/RECOMMENDED LISTINGS

All top plungers are momentary action.



	Plain (LSXC)	Roller (LSXD)	Adjustable (LSXV)
			
Description	Top plain plunger for in-line operating motion	Top roller plunger – can be set at 90° increments to accept cam or slide actuation	Adjustable top plain plunger simplifies installation since operating point can be adjusted from 65,66 mm min.; 72,0 mm max. [2.585 in min; 2.835 in max.]
	SPDT / **DPDT**	**SPDT** / **DPDT**	**SPDT** / **DPDT**
Contact closed ■ Contact open □	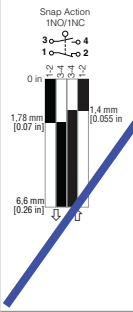 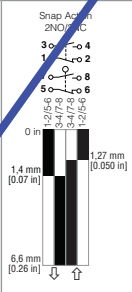	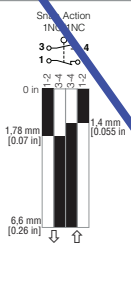 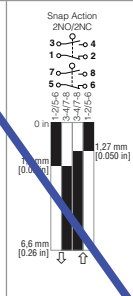	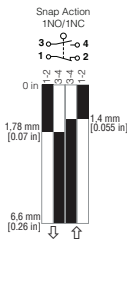 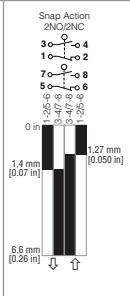
Pretravel	1,78 mm [0.07 in]		
Differential travel	0,38 mm [0.015 in] / 0,51 mm [0.02 in]	0,38 mm [0.015 in] / 0,51 mm [0.02 in]	0,38 mm [0.015 in] / 0,51 mm [0.02 in]
Overtravel	4,83 mm [0.19 in]		
Operting force	17,8 N [4 lb] max.		
Operating point	58,55 mm ±0,76 mm [2.305 in ±0.030 in]	68,58 mm ±1,02 mm [2.70 in ±0.040 in]	65,66 mm min.; 72,0 mm max. [2.585 in min; 2.835 in max.]
Operating temp. range[2]	-12 °C to 93 °C [10 °F to 200 °F] (for low temp or high temp versions, see page 9)		

		Contacts	Conduit (NPT)			
SPDT	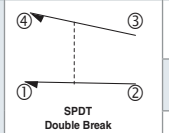 SPDT Double Break	Silver	0.5 in	**LSXC3K**	**LSXD3K**	**LSXV3K**
		Silver	0.75 in	**LSXC4K**	**LSXD4K**	**LSXV4K**
		Gold[1]	0.5 in	**LSXC3E**	**LSXD3E**	**LSXV3E**
DPDT	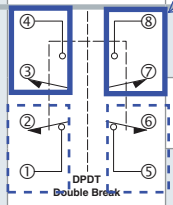 DPDT Double Break	Silver	0.5 in	**LSXC7L**	**LSXD7L**	**LSXV7L**
		Silver	0.75 in	**LSXC4L**	**LSXD4L**	**LSXV4L**
		Gold[1]	0.75 in	**LSXC4S**	**LSXD4S**	**LSXV4S**

if circuit calls for normally open, terminate on 4 & 3 or 8 & 7

if circuit calls for normally closed, terminate on 1 & 2 or 6 & 5

if no control power w closed hatch, try to open hatch and see if you get control power

[1] Gold-plated contacts
[2] Completely fluorocarbon sealed switches are preferred for use in temperatures above 93 °C [200 °F]
For low temperature or high temperature versions, see page 9.

LSX Series

MICRO SWITCH™ LSX SERIES OPERATING HEADS

TOP PLUNGERS: Available with 4,83 mm [0.19 in] minimum overtravel. Top pin plungers are offered in pin plunger, an adjustable plunger, and a roller plunger.



LSXC - Top pin plunger: A copper alloy plunger for in-line actuating motion. Oil-tight seals on plunger and between the operating head and housing are designed to keep out coolant, dust, and chips. Momentary action.



LSXD - Top roller plunger: A copper alloy roller plunger is adjustable to 90° angles to accept cam or slide operation from any of two directions. Boot seal on the plunger. Momentary action.



LSXV - Adjustable top pin plunger: A copper alloy adjustable plunger is designed to simplify the application and decreases installation time. The operating points of the switch can be adjusted from 65,66 mm to 72,0 mm [2.585 in to 2.535 in]. Seals are the same as the pin plunger. Momentary action.

WOBBLE LEVER ACTUATING HEADS: Heads come with either a Delrin® plastic rod or a copper alloy cat whisker. Any movement of the lever (except pull) will actuate the switch.



LSXJ - Plastic rod: Recommended where possible scratching or marring by the actuator is to be avoided.



LSXK - Cat whisker: Copper alloy actuator designed for low operating force applications.

SIDE PLUNGERS: Made of non-sparking copper alloy. Available with 4,83 mm [0.19 in] minimum overtravel. Side plungers are offered in plain plunger, an adjustable pin plunger, and a roller plunger.



LSXE - Side pin plunger: A copper alloy plunger for actuating motion inline with the plunger travel. Actuating head may be rotated in any of four positions, 90° apart. A boot seal on the plunger and a gasket seal between the head and housing is designed to keep out coolant, dust, and chips. Momentary action.



LSXF - Side roller plunger: A copper alloy roller plunger fits close quarters under cams and slides. The head may be rotated in any of four positions, 90° apart. The roller can be turned vertical or horizontal to the switch. Boot seal on plunger. Momentary action.



LSXW - Adjustable side pin plunger: Has the same features of the side plain plunger plus the means to adjust the operating points of the switch from 41 mm to 47,4 mm [1.615 in to 1.865 in]. Momentary action.

Figure 6. MICRO SWITCH™ LSX SERIES TOP ROTARY, HEAD CODE B • mm [in]

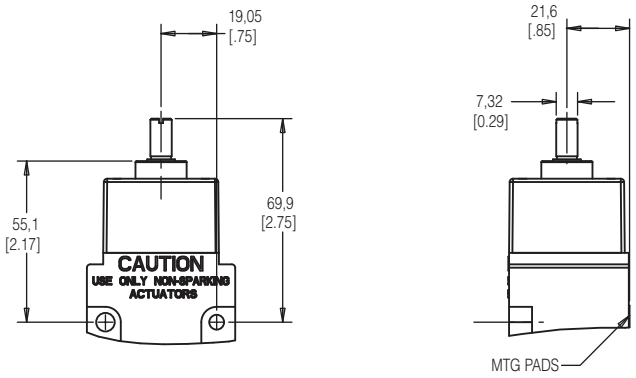

Figure 7. MICRO SWITCH™ LSX SERIES TOP PIN PLUNGER, HEAD CODE C • mm [in]

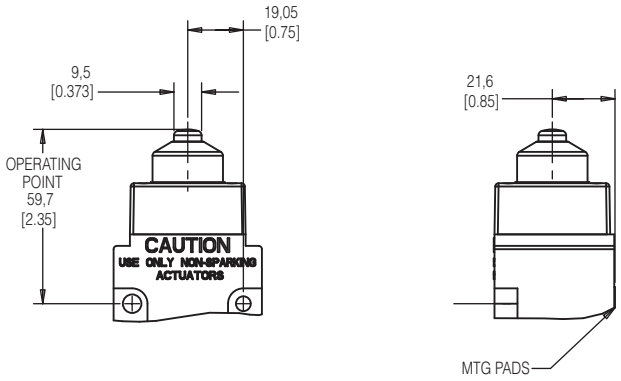

Figure 8. MICRO SWITCH™ LSX SERIES TOP ROLLER PLUNGER, HEAD CODE D • mm [in]

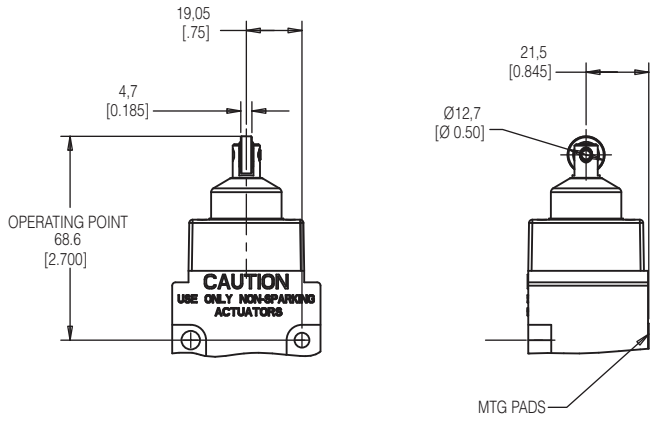

Figure 9. MICRO SWITCH™ LSX SERIES SIDE PLUNGER, HEAD CODE E • mm [in]

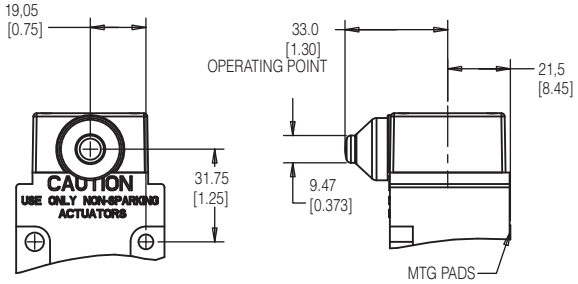

Figure 10. MICRO SWITCH™ LSX SERIES ADJUSTABLE TOP PIN PLUNGER, HEAD CODE V • mm [in]

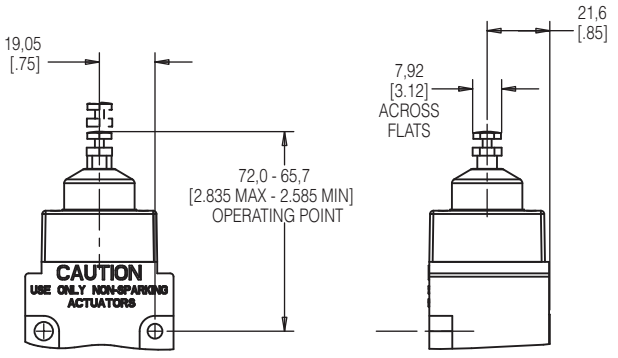

Figure 11. MICRO SWITCH™ LSX SERIES SIDE ROLLER PLUNGER, HEAD CODE F • mm [in]

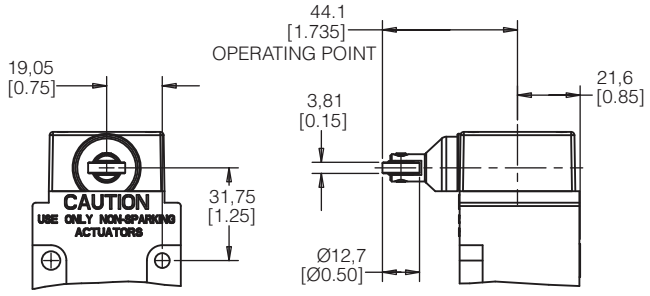

Figure 12. MICRO SWITCH™ LSX SERIES ADJUSTABLE SIDE PIN PLUNGER, HEAD CODE W • mm [in]

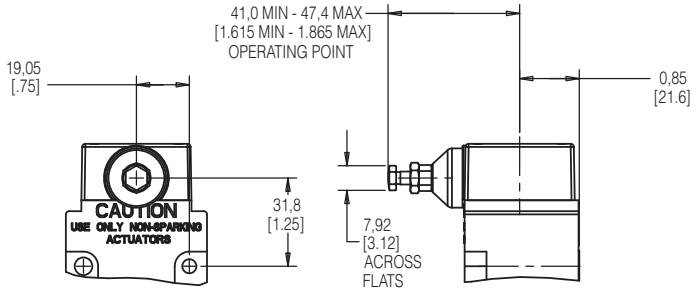

Enviro-Care
A WAMGROUP® Company

Solenoid Valve – ½”

This page intentionally left blank

Features

- Wide range of pressure ratings, sizes, and resilient materials provide long service life and low internal leakage
- High Flow Valves for liquid, corrosive, and air/inert gas service
- Industrial applications include:
  - Car wash
  - Laundry equipment
  - Air compressors
  - Industrial water control
  - Pumps

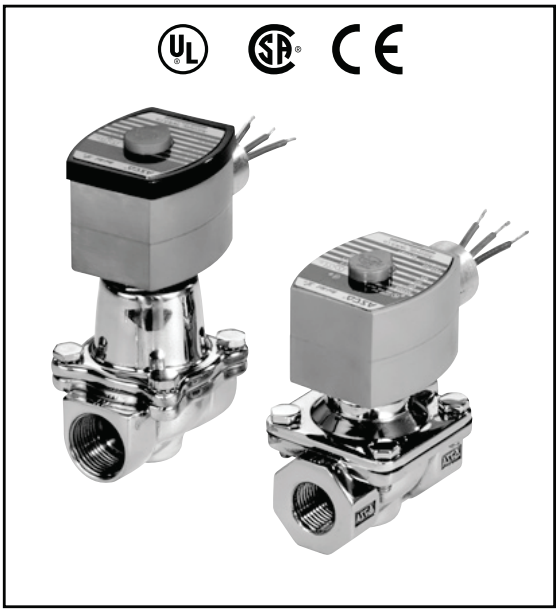

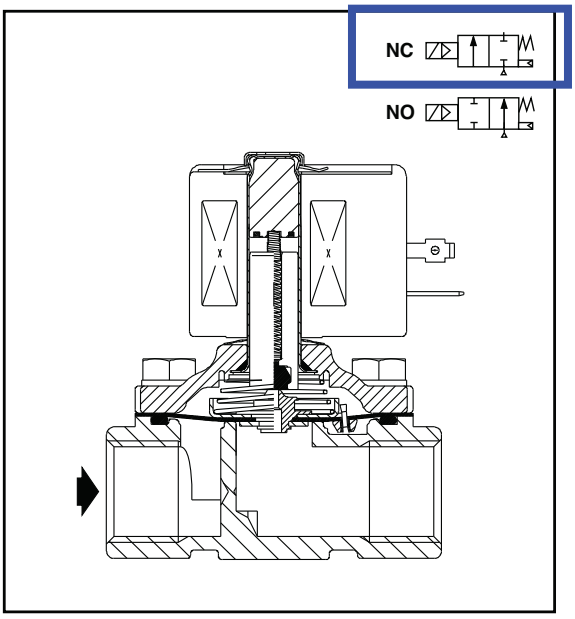

Construction

Valve Parts in Contact with Fluids		
Body	Brass	304 Stainless Steel
Seals and Discs	NBR or PTFE	
Disc-Holder	PA	
Core Tube	305 Stainless Steel	
Core and Plugnut	430F Stainless Steel	
Springs	302 Stainless Steel	
Shading Coil	Copper	Silver

Electrical

Standard Coil and Class of Insulation	Watt Rating and Power Consumption				Spare Coil Part Number			
		AC			General Purpose		Explosionproof	
	DC Watts	Watts	VA Holding	VA Inrush	AC	DC	AC	DC
F	-	6.1	16	40	238210	-	238214	-
F	11.6	10.1	25	70	238610	~~238710~~	~~238614~~	~~238714~~
F	16.8	16.1	35	180	272610	97617	272614	97617
F	-	17.1	40	93	238610	-	238614	-
F	-	20	43	240	99257	-	99257	-
F	-	20.1	48	240	272610	-	272614	-
H	30.6	-	-	-	-	74073	-	74073
H	40.6	-	-	-	-	238910	-	238914

Standard Voltages: 24, 120, 240, 480 volts AC, 60 Hz (or 110, 220 volts AC, 50 Hz). 6, 12, 24, 120, 240 volts DC. Must be specified when ordering.
Other voltages available when required.

Solenoid Enclosures

Standard: RedHat II - Watertight, Types 1, 2, 3, 3S, 4, and 4X; RedHat - Type I.

Optional: RedHat II - Explosionproof and Watertight, Types 3, 3S, 4, 4X, 6, 6P, 7, and 9; Red-Hat - Explosionproof and Watertight, Types 3, 4, 4X, 7, and 9.

(To order, add prefix "EF" to catalog number, except Catalog Numbers 8210B057, 8210B058, and 8210B059, which are not available with Explosionproof enclosures.)
See Optional Features Section for other available options.

Nominal Ambient Temp. Ranges

RedHat II/
RedHat AC: 32˚F to 125˚F (0˚C to 52˚C)

RedHat II DC: 32˚F to 104˚F (0˚C to 40˚C)
RedHat DC: 32˚F to 77˚F (0˚C to 25˚C)
(104˚F/40˚C occasionally)

8210G227 AC: 32˚F to 130˚F (0˚C to 54˚C)
DC: 32˚F to 90˚F (0˚C to 32˚C)

Refer to Engineering Section for details.

Approvals

UL listed as indicated. CSA certified.
RedHat II meets applicable CE directives.
Refer to Engineering Section for details.

ASCO®

Specifications (English units)

Pipe Size (ins.)	Orifice Size (ins.)	Cv Flow Factor	Operating Pressure Differential (psi)							Max. Fluid Temp. °F		Brass Body			Stainless Steel Body			Watt Rating/ Class of Coil Insulation ⑦	
				Max. AC			Max. DC												
			Min.	Air-Inert Gas	Water	Light Oil @ 300 SSU	Air-Inert Gas	Water	Light Oil @ 300 SSU	AC	DC	Catalog Number	Constr. Ref. No. ④	UL ⑤ Listing	Catalog Number	Constr. Ref. No. ④	UL ⑤ Listing	AC	DC
NORMALLY CLOSED (Closed when de-energized), NBR or PTFE ② Seating																			
3/8	3/8	1.5	①	150	125	-	40	40	-	180	150	8210G73 ③	1P	●	8210G36 ③	1P	●	6.1/F	11.6/F
3/8	5/8	3	0	150	150		40	40	-	180	150	8210G93	5D	❍	-	-	-	10.1/F	11.6/F
3/8	5/8	3	5	200	150	135	125	100	100	180	150	8210G1	6D	❍	-	-	-	6.1/F	11.6/F
3/8	5/8	3	5	300	300	300	-	-	-	175	-	8210G6	5D	❍	-	-	-	17.1/F	-
1/2	7/16	2.2	①	150	125	-	40	40	-	180	150	8210G15 ③	2P	●	8210G37 ③	2P	●	6.1/F	11.6/F
1/2	5/8	4	0	150	150	-	40	40	-	180	150	EF 8210G94	5D	❍	-	-	-	10.1/F	11.6/F
1/2	5/8	4	0	150	150	125	40	40	-	175	150	-	-	-	8210G87	7D	●	17.1/F	11.6/F
1/2	5/8	4	5	200	150	135	125	100	100	180	150	8210G2	6D	❍	-	-	-	6.1/F	11.6/F
1/2	5/8	4	5	300	300	300	-	-	-	175	-	8210G7	5D	❍	-	-	-	17.1/F	-
1/2	5/8	4	5	300	300	-	300	300	-	180	125	8210G227	5D	❍	-	-	-	17.1/F	40.6/H
3/4	5/8	4.5	0	150	150	125	40	40	-	175	150	-	-	-	8210G88	7D	●	17.1/F	11.6/F
3/4	3/4	5	5	125	125	125	100	90	75	180	150	8210G9	9D	❍	-	-		6.1/F	11.6/F
3/4	3/4	5	0	150	150	-	40	40	-	180	150	8210G95	8D	❍	-	-	-	10.1/F	11.6/F
3/4	3/4	6.5	5	250	150	100	125	125	125	180	150	8210G3	11D	❍	-	-	-	6.1/F	11.6/F
3/4	3/4	6	0	-	-	-	200	180	180	-	77	8210B26 ② ‡	10P	-	-	-	-	-	30.6/H
3/4	3/4	6	0	350	300	200	-	-	-	200	-	8210G26 ② ‡	40P	●	-	-	-	16.1F	-
1	1	13	0	-	-	-	100	100	80	-	77	8210B54 ‡	31D	-	8210D89	15D	-	-	30.6/H
1	1	13	0	150	125	125	-	-	-	180	-	8210G54	41D	●	8210G89	45D	●	16.1/F	-
1	1	13	5	150	150	100	125	125	125	180	150	8210G4	12D	❍	-	-	-	6.1/F	11.6/F
1	1	13.5	0	300	225	115	-	-	-	200	-	8210G27 ‡	42P	●	-	-	-	20.1/F	-
1	1	13.5	10	300	300	300	-	-	-	175	-	8210G78 ②	13P	-	-	-	-	17.1/F	-
1 1/4	1 1/8	15	0	-	-	-	100	100	80	-	77	8210B55 ‡	32D	-	-	-	-	-	30.6/H
1 1/4	1 1/8	15	0	150	125	125	-	-	-	180	-	8210G55	43D	●	-	-	-	16.1/F	-
1 1/4	1 1/8	15	5	150	150	100	125	125	125	180	150	8210G8	16D	❍	-	-	-	6.1/F	11.6/F
1 1/2	1 1/4	22.5	0	-	-	-	100	100	80	-	77	8210B56 ‡	33D	-	-	-	-	-	30.6/H
1 1/2	1 1/4	22.5	0	150	125	125	-	-	-	180	-	8210G56 ‡	44D	●	-	-	-	16.1/F	-
1 1/2	1 1/4	22.5	5	150	150	100	125	125	125	180	150	8210G22	18D	●	-	-	-	6.1/F	11.6/F
2	1 3/4	43	5	150	125	90	50	50	50	180	150	8210G100	20P	●	-	-	-	6.1/F	11.6/F
2 1/2	1 3/4	45	5	150	125	90	50	50	50	180	150	8210G101	21P	●	-	-	-	6.1/F	11.6/F
NORMALLY OPEN (Open when de-energized), NBR Seating (PA Disc-Holder, except as noted)																			
3/8	5/8	3	0	150	150	125	125	125	80	180	150	8210G33	23D	●	-	-	-	10.1/F	11.6/F
3/8	5/8	3	5	250	200	200	250	200	200	180	180	8210G11 ⑧ ⑨	39D	●	-	-	-	10.1/F	11.6/F
1/2	5/8	4	0	150	150	125	125	125	80	180	150	8210G34	23D	●	-	-	-	10.1/F	11.6/F
1/2	5/8	3	0	150	150	100	125	125	80	180	150		-	-	8210G30	37D	●	10.1/F	11.6/F
1/2	5/8	4	5	250	200	200	250	200	200	180	180	8210G12 ⑧ ⑨	39D	●	-	-	-	10.1/F	11.6/F
3/4	3/4	5.5	0	150	150	125	125	125	80	180	150	8210G35	25D	●	-	-	-	10.1/F	11.6/F
3/4	5/8	3	0	150	150	100	125	125	80	180	150	-	-	-	8210G38	38D	●	10.1/F	11.6/F
3/4	3/4	6.5	5	-	-	-	250	200	200	-	180	8210C13	24D	●	-	-	-	-	16.8/F
3/4	3/4	6.5	5	250	200	200	-	-	-	180	-	8210G13	46D	●	-	-	-	16.1/F	-
1	1	13	0	125	125	125	-	-	-	180	-	8210B57 ⑥ ⑩	34D	●	-	-	-	20/F	-
1	1	13	5	-	-	-	125	125	125	-	180	8210D14	26D	●	-	-	-	-	16.8/F
1	1	13	5	150	150	125	-	-	-	180	-	8210G14	47D	●	-	-	-	16.1/F	-
1 1/4	1 1/8	15	0	125	125	125	-	-	-	180	-	8210B58 ⑥ ⑩	35D	●	-	-	-	20/F	-
1 1/4	1 1/8	15	5	-	-	-	125	125	125	-	180	8210D18	28D	●	-	-	-	-	16.8/F
1 1/4	1 1/8	15	5	150	150	125	-	-	-	180	-	8210G18	48D	●	-	-	-	16.1/F	-
1 1/2	1 1/4	22.5	0	125	125	125	-	-	-	180	-	8210B59 ⑥ ⑩	36D	●	-	-	-	20/F	-
1 1/2	1 1/4	22.5	5	-	-	-	125	125	125	-	180	8210D32	29D	●	-	-	-	-	16.8/F
1 1/2	1 1/4	22.5	5	150	150	125	-	-	-	180	-	8210G32	49D	●	-	-	-	16.1/F	-
2	1 3/4	43	5	-	-	-	125	125	125	-	150	8210103	30P	●	-	-	-	-	16.8/F
2	1 3/4	43	5	125	125	125	-	-	-	180	-	8210G103	50P	●	-	-	-	16.1/F	-
2 1/2	1 3/4	45	5	-	-	-	125	125	125	-	150	8210104	27P	●	-	-	-	-	16.8/F
2 1/2	1 3/4	45	5	125	125	125	-	-	-	180	-	8210G104	51P	●	-			16.1/F	-

Notes: ① 5 psi on Air; 1 psi on Water.
② Valve provided with PTFE main disc.
③ Valve includes Ultem (G.E. trademark) piston.
④ Letter "D" denotes diaphragm construction; "P" denotes piston construction.
⑤ ❍ Safety Shutoff Valve; ● General Purpose Valve. Refer to Engineering Section (Approvals) for details.
⑥ Valves not available with Explosionproof enclosures.
⑦ On 50 hertz service, the watt rating for the 6.1/F solenoid is 8.1 watts.
⑧ AC construction also has PA seating.
⑨ No disc-holder.
⑩ Stainless Steel disc-holder.
‡ Must have solenoid mounted vertical and upright.

Dimensions: inches (mm)

Constr. Ref. No.		H	K	L	P	W
1*	ins.	3.85	3.00	1.91	3.41	1.69
	mm	98	76	49	87	43
2*	ins.	4.17	3.25	2.28	3.63	1.69
	mm	106	83	58	92	43
13	ins.	4.44	3.22	3.75	4.19	5.81
	mm	113	82	95	106	147
5	ins.	3.84	2.31	2.75	3.28	2.28
	mm	98	59	70	83	58
[illegible]	ins.	[illegible]	[illegible]	[illegible]	[illegible]	[illegible]
	mm	86	49	70	71	58
7	ins.	4.19	2.50	2.81	3.47	2.39
	mm	106	64	71	88	61
8	ins.	4.13	2.47	2.81	3.44	2.29
	mm	105	63	71	87	58
9*	ins.	3.66	2.10	2.81	2.96	2.28
	mm	93	53	71	75	58
10*①	ins.	5.25	X	2.81	4.59	2.31
	mm	133	X	71	117	59
11*	ins.	4.16	2.66	3.84	3.52	2.75
	mm	106	68	98	89	70
12	ins.	5.64	3.15	3.75	4.01	3.36
	mm	143	80	95	102	85
15*	ins.	5.34	X	3.75	4.47	3.84
	mm	136	X	95	114	98
16	ins.	5.64	3.15	3.66	4.01	3.56
	mm	143	80	93	102	90
18	ins.	6.11	3.30	4.38	4.16	3.92
	mm	155	84	111	106	100
20*	ins.	7.33	3.71	5.06	4.57	4.87
	mm	186	94	129	116	124
21*	ins.	7.33	3.71	5.50	4.57	4.87
	mm	186	94	140	116	124
23	ins.	4.35	2.65	2.75	3.79	2.28
	mm	110	67	70	96	58
24	ins.	5.06	X	3.78	4.44	2.75
	mm	129	X	96	113	70
25	ins.	4.64	2.81	2.81	3.94	2.28
	mm	118	71	71	100	58
26	ins.	6.53	X	3.75	4.91	3.19
	mm	166	X	95	125	81
27	ins.	8.22	X	5.50	5.47	4.87
[illegible]	[illegible]	[illegible]	[illegible]	[illegible]	[illegible]	[illegible]
28	ins.	6.53	X	3.66	4.91	3.19
	mm	166	X	93	125	81
29	ins.	7.03	X	4.38	5.06	4.40
	mm	179	X	111	129	112

① Valves must be mounted with solenoid vertical and upright.
* DC dimensions slightly larger.

Constr. Refs. 1, 2

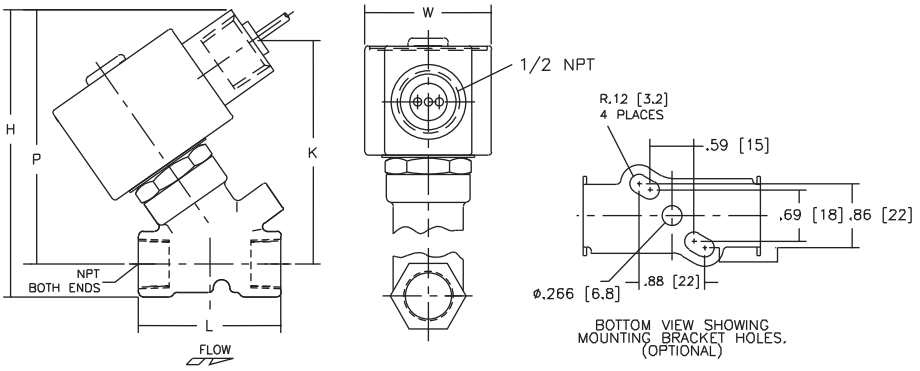

Constr. Ref. 13

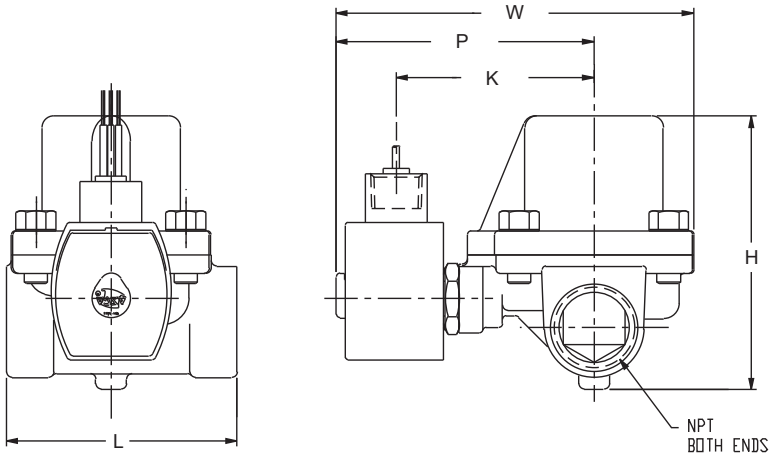

Constr. Refs. 5-9, 11, 20, 21, 23 , 25, 37,38

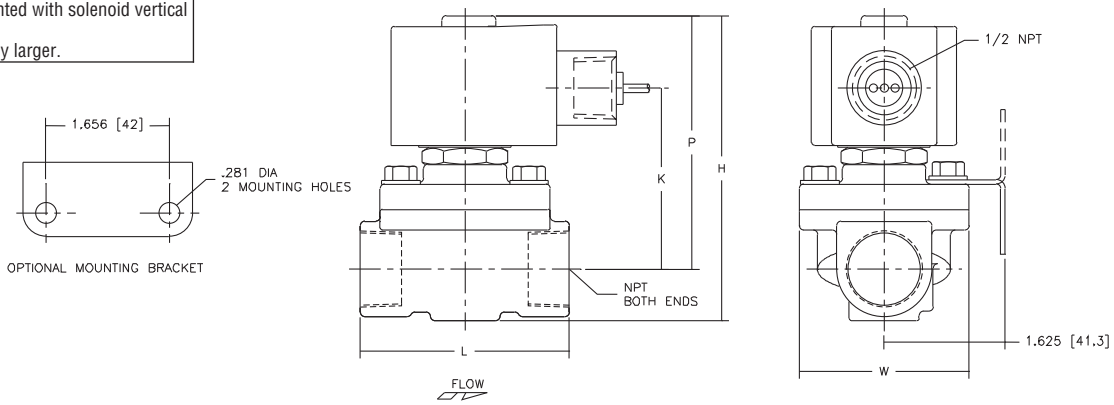

Installation & Maintenance Instructions

2-WAY INTERNAL PILOT-OPERATED SOLENOID VALVES
HUNG DIAPHRAGM — 3/8, 1/2 AND 3/4 NPT
NORMALLY CLOSED OPERATION

BULLETINS
8210
8211

Form No.V5825R1

DESCRIPTION

Bulletin 8210's are 2-way, normally closed, internal pilot operated solenoid valves. Valve body and bonnet are of brass construction. Standard valves have a General Purpose, NEMA Type 1 Solenoid Enclosure.

Bulletin 8211's are the same as Bulletin 8210's except the solenoids are equipped with an enclosure which is designed to meet NEMA Type 4 Watertight, NEMA Type 7 (C or D) Hazardous Locations - Class I, Group C or D, and NEMA Type 9 (E, F or G) Hazardous Locations - Class II, Group E, F or G. The explosion-proof/watertight solenoid enclosure is shown on a separate sheet of Installation and Maintenance Instructions, Form No. V-5380.

Bulletin 8210 and 8211 valves with suffix 'HW' in the catalog number are specifically designed for hot water service.

OPERATION

Normally Closed: Valve is closed when solenoid is de-energized and opens when solenoid is energized.

MANUAL OPERATOR (Optional)

Valves with suffix 'MO' in catalog number are provided with a manual operator which allows manual operation when desired or during an interruption of electrical power. To operate valve manually, push in knurled cap and rotate clockwise 180°. Disengage manual operator by rotating knurled cap counterclockwise 180° before operating electrically.

MANUAL OPERATOR LOCATION (Refer to Figure 3)

Manual operator (when shipped from factory) will be located over the valve outlet. Manual operator may be relocated at 90° increments by rotating valve bonnet. Remove bonnet screws (4) and rotate valve bonnet with solenoid to desired position. Replace bonnet screws (4) and torque in a crisscross manner to 110 ± 10 inch pounds.

If valve is installed in system and is operational, proceed in the following manner:

WARNING: Depressurize valve and turn off electrical power supply.

1. Remove retaining cap or clip and slip the entire solenoid enclosure off the solenoid base sub-assembly. CAUTION: When metal retaining clip disengages, it will spring upwards.
2. Remove bonnet screws (4) and rotate valve bonnet to desired position.
3. Replace bonnet screws (4) and torque in a crisscross manner to 110 ± 10 inch pounds.
4. Replace solenoid enclosure and retaining clip or cap.

INSTALLATION

Check nameplate for correct catalog number, pressure, voltage and service.

TEMPERATURE LIMITATIONS

For maximum valve ambient and fluid temperatures refer to chart. The temperature limitations listed are for UL applications. For non UL applications, higher ambient and fluid temperature limitations are available. Consult factory. Check catalog number on nameplate to determine maximum temperatures.

Construction	Coil Class	Catalog Number Prefix	Maximum Ambient Temp. °F.	Maximum Fluid Temp. °F.
A-C Construction (Alternating Current)	A	None or DA	77	180
	F	DF or FT	122	180
	H	HT	140	180
D-C Construction (Direct Current)	A, F or H	None, FT or HT	77	150
Catalog Numbers Suffixed 'HW' A-C Construction (Alternating Current)	A	None or DA	77	210
	F	DF or FT	77	210
	H	HT	122	210

POSITIONING/MOUNTING

Valve may be mounted in any position. For mounting bracket (optional feature) dimensions, refer to Figure 1.

PIPING

Connect piping to valve according to markings on valve body. Apply pipe compound sparingly to male pipe threads only; if applied to valve threads, it may enter the valve and cause operational difficulty. Pipe strain should be avoided by proper support and alignment of piping. When tightening the pipe do not use valve as a lever. Wrenches applied to valve body or piping are to be located as close as possible to connection point. **IMPORTANT: Valves with suffix 'HW' in the catalog number have a special diaphragm material which is specifically compounded for hot water service. This material can be attacked by oil and grease. Wipe the pipe threads clean of cutting oils and use teflon tape to seal pipe joints.**

IMPORTANT: For the protection of the solenoid valve, install a strainer or filter suitable for the service involved in the inlet side as close to the valve as possible. Periodic cleaning is required depending on the service conditions. See Bulletins 8600, 8601 and 8602 for strainers.

WIRING

Wiring must comply with Local and National Electrical Codes. Housings for all solenoids are provided with connections for 1/2 inch conduit. The general purpose solenoid enclosure may be rotated to facilitate wiring by removing the retaining cap or clip. CAUTION: When metal retaining clip disengages it will spring upwards. Rotate to desired position. Replace retaining cap or clip before operating.

NOTE: Alternating Current (A-C) and Direct Current (D-C) Solenoids are built differently. To convert from one to the other, it is necessary to change the complete solenoid including the solenoid base sub-assembly and core assembly.

SOLENOID TEMPERATURE

Standard catalog valves are supplied with coils designed for continuous duty service. When the solenoid is energized for a long period, the solenoid enclosure becomes hot and can be touched with the hand for only an instant. This is a safe operating temperature. Any excessive heating will be indicated by the smoke and odor of burning coil insulation.

MAINTENANCE

WARNING: Turn off electrical power and depressurize valve before making repairs. It is not necessary to remove valve from pipe line for repairs.

© ASCO MM All Rights Reserved. Printed in U.S.A.

50 Hanover Road, Florham Park, New Jersey 07932 www.ascovalve.com

CLEANING

A periodic cleaning of all solenoid valves is desirable. The time between cleanings will vary, depending on media and service conditions. In general, if the voltage to the coil is correct, sluggish valve operation, excessive leakage or noise will indicate that cleaning is required.

PREVENTIVE MAINTENANCE

1. Keep the medium flowing through the valve as free from dirt and foreign material as possible.
2. While in service, operate valve at least once a month to insure proper opening and closing.
3. Periodic inspection (depending on media and service conditions) of internal valve parts for damage or excessive wear is recommended. Thoroughly clean all parts. Replace any parts that are worn or damaged.

IMPROPER OPERATION

1. **Faulty Control Circuit:** Check electrical system by energizing solenoid. A metallic click signifies the solenoid is operating. Absence of the click indicates loss of power supply. Check for loose or blown-out fuses, open circuited or grounded coil, broken lead wires or splice connections.
2. **Burned-Out Coil:** Check for open circuited coil. Replace coil if necessary.
3. **Low Voltage:** Check voltage across coil leads. Voltage must be at least 85% of nameplate rating.
4. **Incorrect Pressure:** Check valve pressure. Pressure to the valve must be within range specified on nameplate.
5. **Excessive Leakage:** Disassemble valve and clean all parts. Replace worn or damaged parts with a complete Spare Parts Kit for best results.

COIL REPLACEMENT (Refer to Figure 2)

Turn off electrical power supply and disconnect coil leads. Proceed in the following manner:

1. Remove retaining cap or clip, nameplate and cover. CAUTION: When metal retaining clip disengages, it will spring upwards.
2. Remove spring washer, insulating washer and coil. Insulating washers are omitted when a molded coil is used.
3. Reassemble in reverse order of disassembly paying careful attention to exploded view provided for identification and placement of parts.

CAUTION: Solenoid must be fully reassembled as the housing and internal parts are part of and complete the magnetic circuit. Place insulating washer at each end of coil if required.

VALVE DISASSEMBLY (Refer to Figures 2 and 3)

Depressurize valve and turn off electrical power supply. Proceed in the following manner:

1. Remove retaining cap or clip and slip the entire solenoid enclosure off the solenoid base sub-assembly. CAUTION: When metal retaining clip disengages, it will spring upwards.
2. Unscrew solenoid base sub-assembly and remove bonnet gasket.
3. Remove valve bonnet screws (4) and valve bonnet.
4. For normal maintenance, it is not necessary to disassemble the manual operator (optional feature) unless external leakage is evident. To disassemble remove stem pin, manual operator stem, stem spring and stem gasket.
5. Remove core spring, core/diaphragm sub-assembly and body gasket. CAUTION: Do not damage or distort hanger spring between core/diaphragm sub-assembly.
6. All parts are now accessible for cleaning or replacement. Replace worn or damaged parts with a complete Spare Parts Kit for best results.

VALVE REASSEMBLY

1. Reassemble in reverse order of disassembly paying careful attention to exploded views provided for identification and placement of parts.
2. Replace body gasket and core/diaphragm sub-assembly. Locate the bleed hole in core/diaphragm sub-assembly approximately 45° from the valve outlet.
3. Replace core spring with wide end in core first; closed end protrudes from top of core.
4. If removed, replace manual operator stem, stem spring, stem gasket and stem pin.
5. Replace valve bonnet and bonnet screws (4). Torque bonnet screws (4) in a crisscross manner to 110 ± 10 inch pounds.
6. Replace bonnet gasket and solenoid base sub-assembly. Put solenoid base sub-assembly to 175 ± 25 inch pounds.
7. Replace solenoid enclosure and retaining cap or clip.
8. After maintenance, operate the valve a few times to be sure of proper opening and closing.

SPARE PARTS KITS

Spare Parts Kits and Coils are available for ASCO valves.
Parts marked with an asterisk (*) are supplied in Spare Parts Kits.

ORDERING INFORMATION FOR SPARE PARTS KITS
When Ordering Spare Parts Kits or Coils Specify Valve Catalog Number, Serial Number and Voltage.

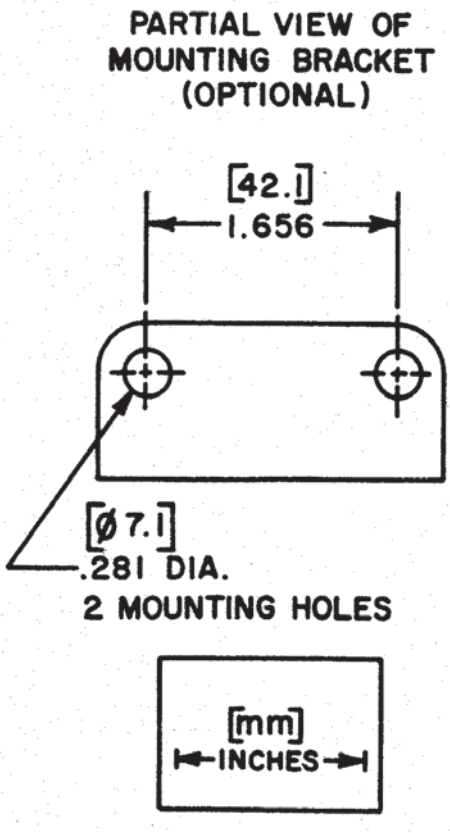

Figure 1. Dimensions For Mounting Bracket (Optional Feature)

ASCO® 50 Hanover Road, Florham Park, New Jersey 07932 www.ascovalve.com

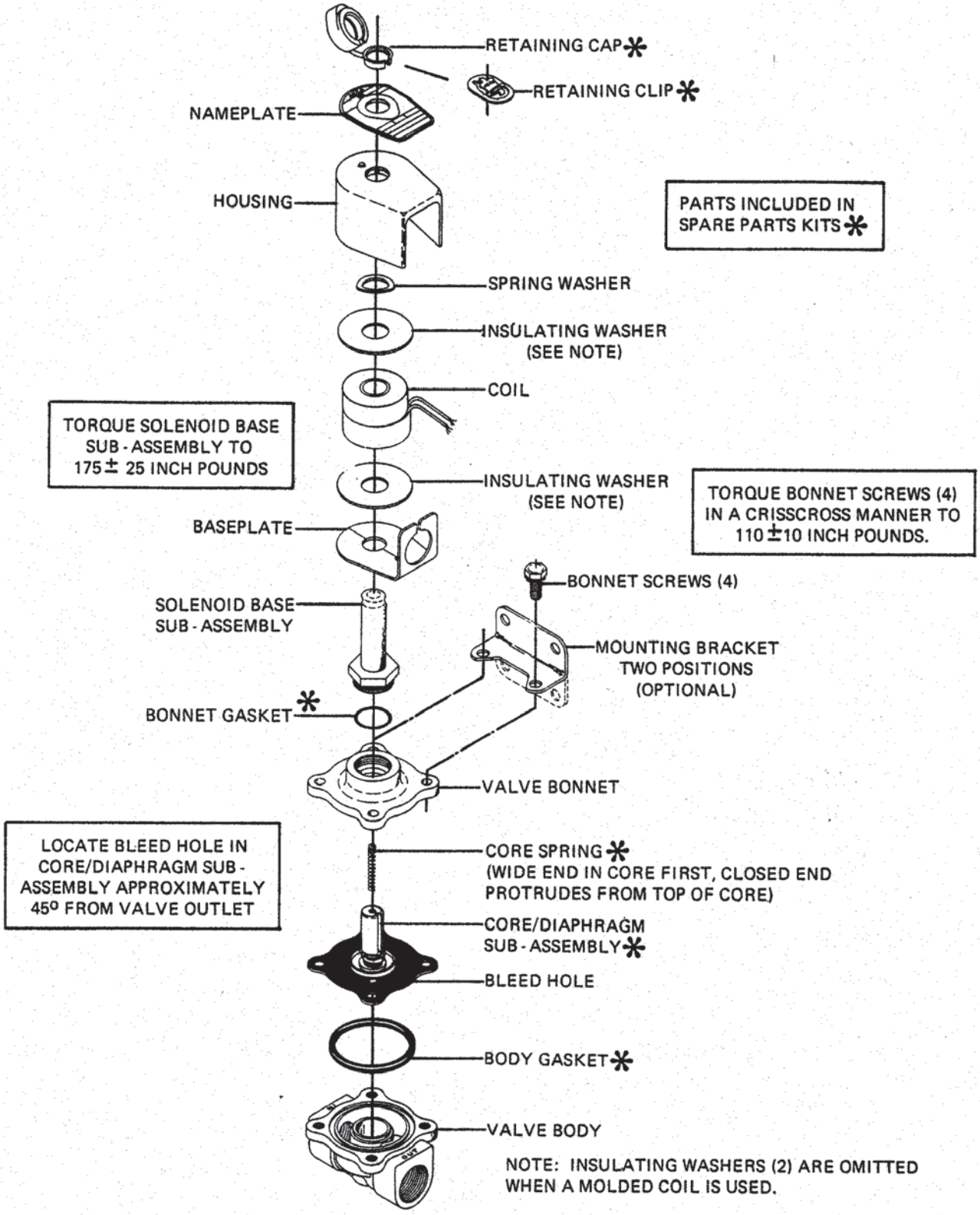

Bulletin 8210 — 3/8, 1/2 & 3/4 N.P.T. — A-C Construction
General purpose solenoid enclosure shown.
For explosion-proof/watertight solenoid enclosure used on Bulletin 8211, see Form No. V-5380.

Figure 2.

ASCO® 50 Hanover Road, Florham Park, New Jersey 07932 www.ascovalve.com

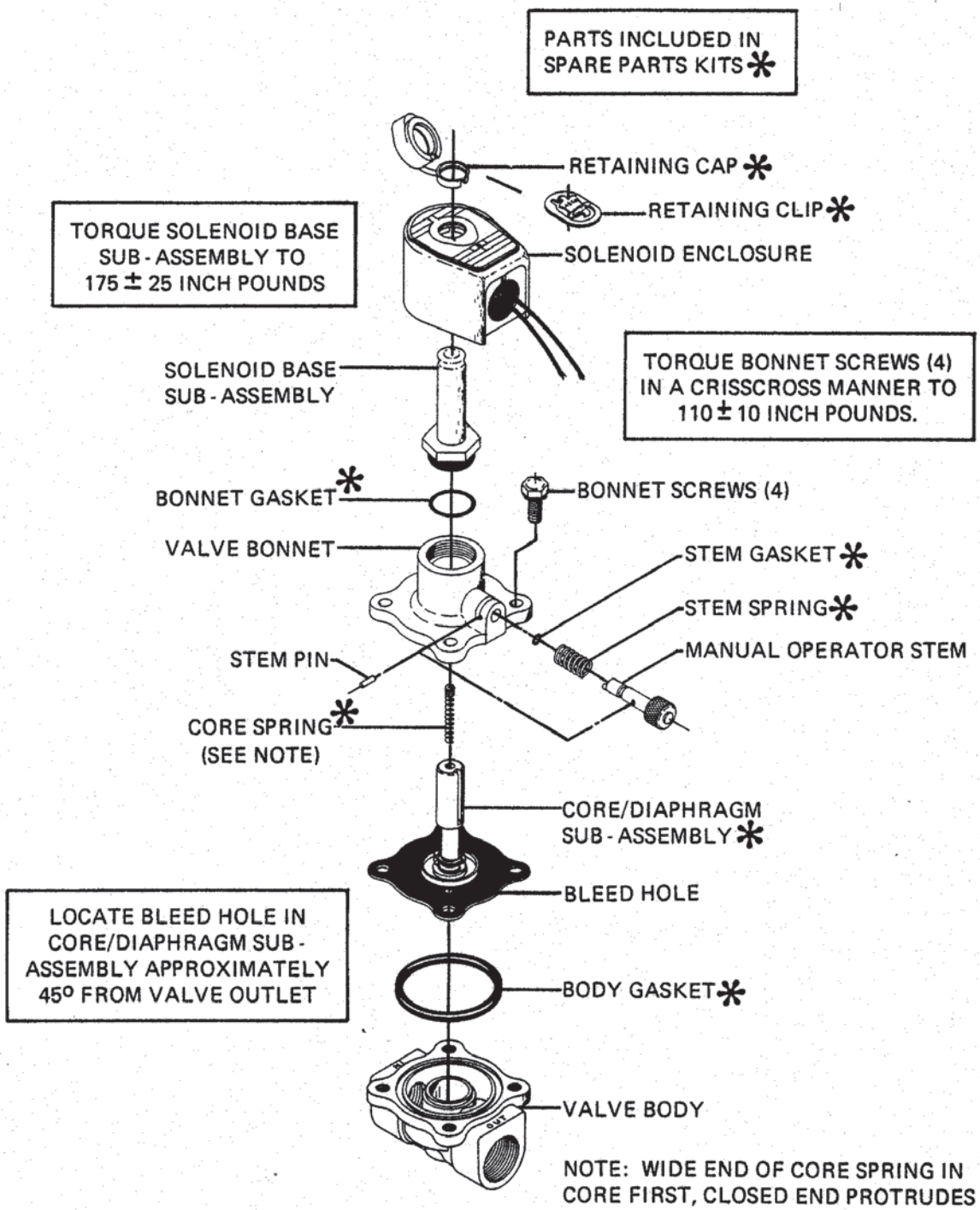

Bulletin 8210 — Manual Operator
General purpose solenoid enclosure shown.
For explosion-proof/watertight solenoid enclosure used on Bulletin 8211, see Form No. V-5380.

Figure 3.

ASCO® 50 Hanover Road, Florham Park, New Jersey 07932 www.ascovalve.com

Installation&Maintenance Instructions

ASCO Red-Hat II™

OPEN-FRAME, GENERAL PURPOSE, WATERTIGHT/EXPLOSIONPROOF SOLENOIDS

SERIES 8016G/H

— SERVICE NOTICE —

ASCO™ solenoid valves with design change letter "G" or "H" in the catalog number (ex. 8210G1) have an epoxy encapsulated ASCO Red Hat II® solenoid. This solenoid replaces some of the solenoids with metal enclosures and open-frame constructions. Follow these installation and maintenance instructions if your valve or operator uses this solenoid.

DESCRIPTION

Catalog numbers 8016G/H1 and 8016G/H2 are epoxy encapsulated pull-type solenoids. The green solenoid with lead wires and 1/2 conduit connection is designed to meet Enclosure Type 1-General Purpose, Type 2-Dripproof, Types 3 and 3S-Raintight, and Types 4 and 4X-Watertight. The black solenoid on catalog numbers prefixed "EF" is designed to meet Enclosure Types 3 and 3S-Raintight, Types 4 and 4X-Watertight, Types 6 and 6P-Submersible, Type7, Explosionproof Class I, Division1 Groups A, B, C, & D and Type 9, -Dust-Ignitionproof Class II, Division1 Groups E, F & G. The Class II, Groups F & G Dust Locations designation is not applicable for solenoids or solenoid valves used for steam service or when a class "H" solenoid is used. See *Temperature Limitations* section for solenoid identification and nameplate/retainer for service. When installed just as a solenoid and not attached to an ASCO valve, the core has a 0.250-28 UNF-2B tapped hole, 0.38 minimum full thread.

Series 8016G/H are available in:

- **Open-Frame Construction:** The green solenoid may be supplied with 1/4″ spade, screw or DIN terminals. (Refer to Figure 4)
- **Panel Mounted Construction:** These solenoids are specifically designed to be panel mounted by the customer through a panel having a .062 to .093 maximum wall thickness. (Refer to Figure 3 and section on *Installation of Panel Mounted Solenoid*).

Optional Features For Type 1 - General Purpose Construction Only

- **Junction Box:** This junction box construction meets Enclosure Types 2, 3, 3S, 4, and 4X. Only solenoids with 1/4″ spade or screw terminals may have a junction box. The junction box provides a 1/2″ conduit connection, grounding and spade or screw terminal connections within the junction box (See Figure 5).
- **DIN Plug Connector Kit No. K236034:** Use this kit only for solenoids with DIN terminals. The DIN plug connector kit provides a two pole with grounding contact DIN Type 43650 construction (See Figure 6).

OPERATION

When the solenoid is energized, the core is drawn into the solenoid base sub-assembly.

IMPORTANT: When the solenoid is de-energized, the initial return force for the core, whether developed by spring, pressure, or weight, must exert a minimum force to overcome residual magnetism created by the solenoid. Minimum return force for AC construction is 0.69lbs (3.1N) and 0.31 lbs (1.38N) for DC.

INSTALLATION

Check nameplate for correct catalog number, service, and wattage. Check front of solenoid for voltage and frequency.

⚠ WARNING: Electrical hazard from the accessibility of live parts. To prevent the possibility of death, serious injury or property damage, install the open - frame solenoid in an enclosure.

FOR BLACK ENCLOSURE TYPES 7 AND 9 ONLY

⚠CAUTION: To prevent fire or explosion, do not install solenoid and/or valve where ignition temperature of hazardous atmosphere is less than 165°C. On valves used for steam service or when a class "H" solenoid is used, do not install in hazardous atmosphere where ignition temperature is less than 180°C. See nameplate/retainer for service.

NOTE: These solenoids have an internal non-resetable thermal fuse to limit solenoid temperature in the event that extraordinary conditions occur which could cause excessive temperatures. These conditions include high input voltage, a jammed core, excessive ambient temperature or a shorted solenoid, etc. This unique feature is a standard feature only in solenoids with black explosionproof/dust-ignitionproof enclosures (Types 7 & 9).

⚠CAUTION: To protect the solenoid valve or operator, install a strainer or filter, suitable for the service involved in the inlet side as close to the valve or operator as possible. Clean periodically depending on service conditions. See ASCO Series 8600 and 8601 for strainers.

Temperature Limitations

For maximum valve ambient temperatures, refer to chart. The temperature limitations listed, only indicate maximum application temperatures for field wiring rated at 90°C. Check catalog number prefix and watt rating on nameplate to determine maximum ambient temperature. See valve installation and maintenance instructions for maximum fluid temperature.

 All Rights Reserved.

©ASCO Valve, Inc.® 50 Hanover Road, Florham Park, New Jersey 07932

NOTE: For steam service, refer to *Wiring* section, *Junction Box* for temperature rating of supply wires.

Temperature Limitations For Series 8016G Solenoids for use on Valves Rated at 6.1, 8.1, 9.1, 10.6 or 11.1 Watts			
Watt Rating	Catalog Number Coil Prefix	Class of Insulation	Maximum § Ambient Temp.
6.1, 8.1, 9.1 & 11.1	None, FB, KF, KP, SC, SD, SF & SP	F	125°F (52°C)
6.1, 8.1, 9.1 & 11.1	HB, HT, KB, KH, SS, ST & SU	H	140°F (60°C)
10.6**	None, KF, SF, SC, HT, KH, ST & SU	F & H	104°F (40°C)
7.1 @ 60Hz (8.1 @ 50Hz)		F & H	175°F (79°C)*
10.6**		F & H	140°F (60°C)

§ Minimum ambient temperature -40°F (-40°C).

* When used with watertight aluminum junction boxers (screw or spade) max. ambient and fluid temperature will be reduced to 157°F (69.4°C)

** 10.6 Watt solenoids rated for 104°F are 8030, 8260, 8316, 8321, 8320, 8360 & 8344 valves while those rated for 140°F are 8040 valves

Temperature Limitations for Series 8003H, 8007H and 8202H solenoids						
		Watt Ratings			Maximum Ambient Temperature	
Prefix ①	Coil Class	AC		DC		
		60 Hz	50 Hz		°C	°F
EF	FT	6.1	8.1	-	52	125
EF	FB	9.1	11.1	-		
	FT	6.1	8.1	-	55	131
	FB	9.1	11.1	-		
	HT	-	-	10.6	40 ②	104②
	HB	-	-	18.6		
EF	HT	-	-	10.6		
EF	HB	-	-	18.6		
	HT	6.1	8.1	-	60 ③	140 ③
	HB	9.1	11.1	-		
EF	HT	6.1	8.1	-		
EF	HB	9.1	11.1	-		

①= EF data applies to Explosionproof coils only.

②= Some DC solenoid valves can be operated at maximum ambient temperature of 55°C / 131°F with reduced pressure ratings. See valve I&M for maximum operating pressure differential ratings.

③= Steam Service Valves have a maximum ambient temperature of 55° C/ 131°F.

Positioning

This solenoid is designed to perform properly when mounted in any position. However, for optimum life and performance, the solenoid should be mounted vertically and upright to reduce the possibility of foreign matter accumulating in the solenoid base sub-assembly area.

Wiring

Wiring must comply with local codes and the National Electrical Code. All solenoids supplied with lead wires are provided with a grounding wire which is green or green with yellow stripes and a 1/2″ conduit connection. To facilitate wiring, the solenoid may be rotated 360°. For the watertight and explosionproof solenoid, electrical fittings must be approved for use in the approved hazardous locations.

Additional Wiring Instructions For Optional Features:

- **Open-Frame solenoid with 1/4″ spade terminals.**

For solenoids supplied with screw terminal connections use #12-18 AWG stranded copper wire rated at 90°C or greater. Torque terminal block screws to10±2 in-lbs [1,0±1,2 Nm]. A tapped hole is provided in the solenoid for grounding, use a #10-32 machine screw. Torque grounding screw to 15-20 in-lbs [1,7-2,3 Nm]. On solenoids with screw terminals, the socket head screw holding the terminal block to the solenoid is the grounding screw. Torque the screw to 15-20 in-lbs [1,7-2,3 Nm] with a 5/32″ hex key wrench.

- **Junction Box**

The junction box is used with spade or screw terminal solenoids only and is provided with a grounding screw and a 1/2″ conduit connection. Connect #12-18 AWG standard copper wire only to the screw terminals. Within the junction box use field wire that is rated 90°C or greater for connections. For steam service use 105°C rated wire up to 50 psi or use 125°C rated wire above 50 psi. After electrical hookup, replace cover gasket, cover, and screws. Tighten screws evenly in a crisscross manner.

- **DIN Plug Connector Kit No. K236034**

1. The open-frame solenoid is provided with DIN terminals to accommodate the plug connector kit.
2. Remove center screw from plug connector. Using a small screwdriver, pry terminal block from connector cover.
3. Use #12-18 AWG stranded copper wire rated at 90°C or greater for connections. Strip wire leads back approximately 1/4″ for installation in socket terminals. The use of wire-end sleeves is also recommended for these socket terminals. Maximum length of wire-end sleeves to be approximately 1/4″. Tinning of the ends of the lead wires is not recommended.
4. Thread wire through gland nut, gland gasket, washer and connector cover.

NOTE: Connector housing may be rotated in 90° increments from position shown for alternate positioning of cable entry.

5. Check DIN connector terminal block for electrical markings. Then make electrical hookup to terminal block according to markings on it. Snap terminal block into connector cover and install center screw.
6. Position connector gasket on solenoid and install plug connector. Torque center screw to 5±1 in-lbs [0,6±1,1 Nm].

NOTE: Alternating current (AC) and direct current (DC) solenoids are built differently and cannot be converted from one to the other by changing the coil.

©ASCO Valve, Inc. 50 Hanover Road, Florham Park, New Jersey 07932 www.ascovalve.com

Installation of Solenoid

Solenoids may be assembled as a complete unit. Tightening is accomplished by means of a hex flange at the base of the solenoid.

Installation of Panel Mounted Solenoid (See Figure 3)

Disassemble solenoid following instruction under *Solenoid Replacement* then proceed.

3/4" Valve Bonnet Construction

1. Install retainer (convex side to solenoid) in 1.312 diameter mounting hole in customer panel.
2. Position spring washer over plugnut/core tube sub-assembly.
3. Install plugnut/core tube sub-assembly through retainer in customer panel then replace solenoid, nameplate and red cap.

15/16" Valve Bonnet Construction

1. Install solenoid base sub-assembly through 0.69 diameter mounting hole in customer panel.
2. Position spring washer on opposite side of panel over solenoid base sub-assembly then replace.

Solenoid Temperature

Standard solenoids are designed for continuous duty service. When the solenoid is energized for a long period, the solenoid becomes hot and can be touched by hand only for an instant. This is a safe operating temperature.

MAINTENANCE

⚠ WARNING: To prevent the possibility of death, serious injury or property damage, turnoff electrical power, depressurize solenoid operator and/or valve, and vent fluid to a safe area before servicing.

Cleaning

All solenoid operators and valves should be cleaned periodically. The time between cleaning will vary depending on medium and service conditions. In general, if the voltage to the solenoid is correct, sluggish valve operation, excessive noise or leakage will indicate that cleaning is required. Clean strainer or filter when cleaning the valve.

Preventive Maintenance

- Keep the medium flowing through the solenoid operator or valve as free from dirt and foreign material as possible.
- Periodic exercise of the valve should be considered if ambient or fluid conditions are such that corrosion, elastomer degradation, fluid contamination build up, or other conditions that could impede solenoid valve shifting are possible. The actual frequency of exercise necessary will depend on specific operating conditions. A successful operating history is the best indication of a proper interval between exercise cycles.
- Depending on the medium and service conditions, periodic inspection of internal valve parts for damage or excessive wear is recommended. Thoroughly clean all parts. Replace any worn or damaged parts.

Causes of Improper Operation

- **Faulty Control Circuit:** Check the electrical system by energizing the solenoid. A metallic *click* signifies that the solenoid is operating. Absence of the *click* indicates loss of power supply. Check for loose or blown fuses, open-circuited or grounded solenoid, broken leadwires or splice connections.
- **Burned-Out Solenoid:** Check for open-circuited solenoid. Replace if necessary. Check supply voltage; it must be the same as specified on nameplate/retainer and marked on the solenoid. Check ambient temperature and check that the core is not jammed.
- **Low Voltage:** Check voltage across the solenoid leads. Voltage must be at least 85% of rated voltage.

Solenoid Replacement

1. On solenoids with lead wires disconnect conduit, coil leads, and grounding wire.

NOTE: Any optional parts attached to the old solenoid must be reinstalled on the new solenoid.

2. Disassemble solenoids with optional features as follows:
   - **Spade or Screw Terminals**

   Remove terminal connections, grounding screw, grounding wire, and terminal block (screw terminal type only).

NOTE: For screw terminals, the socket head screw holding the terminal block serves as a grounding screw.

   - **Junction Box**

   Remove conduit and socket head screw (use 5/32″ hex key wrench) from center of junction box. Disconnect junction box from solenoid.

   - **DIN Plug Connector**

   Remove center screw from DIN plug connector. Disconnect DIN plug connector from adapter. Remove socket head screw (use 5/32″ hex key wrench), DIN terminal adapter, and gasket from solenoid.

3. Snap off red cap from top of solenoid base sub-assembly.
4. Push down on solenoid. Then using a suitable screwdriver, insert blade in slot provided between solenoid and nameplate/retainer. Pry up slightly and push to remove. Then remove solenoid from solenoid base sub-assembly.
5. Reassemble using exploded views for parts identifcation and placement.

Disassembly and Reassembly of Solenoids

1. Remove solenoid, see *Solenoid Replacement*.
2. Remove spring washer from solenoid base sub-assembly.
3. Unscrew solenoid base sub-assembly.

NOTE: Some solenoid constructions have a plugnut/core tube sub-assembly, bonnet gasket and bonnet in place of the solenoid base sub-assembly. To remove bonnet use special wrench adapter supplied in ASCO Rebuild Kit. For wrench adapter only, order ASCO Wrench Kit No. K218948.

4. The core is now accessible for cleaning or replacement.
5. If the solenoid is part of a valve, refer to basic valve installation and maintenance instructions for further disassembly.
6. Reassemble using exploded views for identification and placement of parts.

©ASCO Valve, Inc. 50 Hanover Road, Florham Park, New Jersey 07932 www.ascovalve.com

Enviro-Care
A WAMGROUP® Company

Solenoid Valve - 1”

This page intentionally left blank

ASCO® Red-Hat®

Pilot Operated
General Service Solenoid Valves
Brass or Stainless Steel Bodies
3/8" to 2 1/2" NPT

NC
NO

2/2
SERIES
8210

Features

- Wide range of pressure ratings, sizes, and resilient materials provide long service life and low internal leakage.
- High Flow Valves for liquid, corrosive, and air/inert gas service.
- Industrial applications include:
  - Car wash
  - Laundry equipment
  - Air compressors
  - Industrial water control
  - Pumps

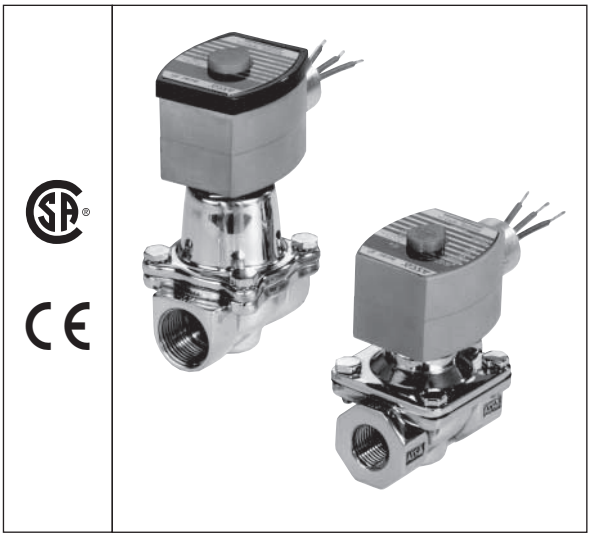

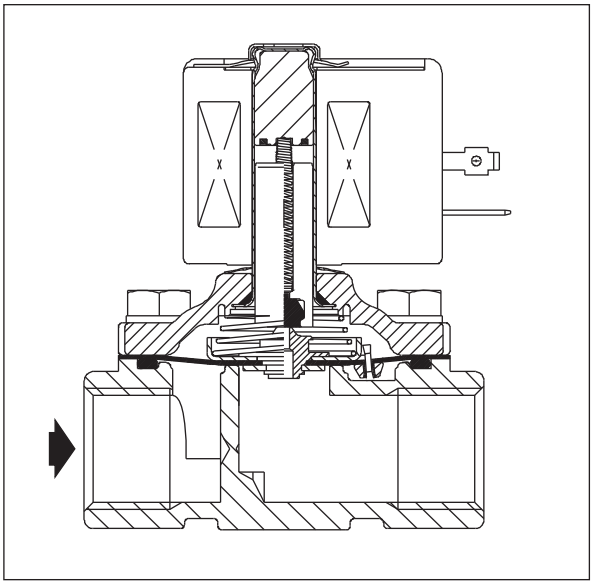

Construction

Valve Parts in Contact with Fluids		
Body	Brass	304 Stainless Steel
Seals and Discs	NBR or PTFE	
Disc-Holder	PA	
Core Tube	305 Stainless Steel	
Core and Plugnut	430F Stainless Steel	
Springs	302 Stainless Steel	
Shading Coil	Copper	Silver

Electrical

Standard Coil and Class of Insulation	Watt Rating and Power Consumption				Spare Coil Part Number			
		AC			General Purpose		Explosionproof	
	DC Watts	Watts	VA Holding	VA Inrush	AC	DC	AC	DC
F	-	6.1	16	40	238210	-	238214	-
F	11.6	10.1	25	70	238610	238710	238614	238714
F	16.8	16.1	35	180	272610	97617	272614	97617
F	-	17.1	40	93	238610	-	238614	-
F	-	20	43	240	99257	-	99257	-
F	-	20.1	48	240	272610	-	272614	-
H	30.6	-	-	-	-	74073	-	74073
F	40.6	-	-	-	-	238910		238914

Standard Voltages: 24, 120, 240, 480 volts AC, 60 Hz (or 110, 220 volts AC, 50 Hz). 6, 12, 24, 120, 240 volts DC. Must be specified when ordering. Other voltages available when required.

Solenoid Enclosures

Standard: Red-Hat II - Watertight, Types 1, 2, 3, 3S, 4, and 4X; Red-Hat - Type 1.

Optional: Red-Hat II - Explosionproof and Watertight, Types 3, 3S, 4, 4X, 6, 6P, 7, and 9; Red-Hat - Explosionproof and Watertight, Types 3, 4, 4X, 7, and 9.
(To order, add prefix "EF" to catalog number, except Catalog Numbers 8210B57, 8210B58, and 8210B59. Valves not available with Explosionproof enclosures.)
See Optional Features Section for other available options.

Nominal Ambient Temperature Ranges:

Red-Hat II/
Red-Hat AC: 32˚F to 125˚F (0˚C to 52˚C)
Red-Hat II DC: 32˚F to 104˚F (0˚C to 40˚C)
Red-Hat DC: 32˚F to 77˚F (0˚C to 25˚C)
(104˚F/40˚C occasionally)
Refer to Engineering Section for details.

Approvals:

CSA certified. Red-Hat II meets applicable CE directives.
Refer to Engineering Section for details.

ASCO®

Specifications (English units)

Pipe Size (ins.)	Orifice Size (ins.)	Cv Flow Factor	Operating Pressure Differential (psi)							Max. Fluid Temp. °F		Brass Body			Stainless Steel Body			Watt Rating/ Class of Coil Insulation ⑦	
				Max. AC			Max. DC												
			Min.	Air-Inert Gas	Water	Light Oil @ 300 SSU	Air-Inert Gas	Water	Light Oil @ 300 SSU	AC	DC	Catalog Number	Constr. Ref. No. ④	UL ⑤ Listing	Catalog Number	Constr. Ref. No. ④	UL ⑤ Listing	AC	DC
NORMALLY CLOSED (Closed when de-energized), NBR or PTFE ② Seating																			
3/8	3/8	1.5	①	150	125	-	40	40	-	180	150	8210G73 ③	1P	●	8210G36 ③	1P	●	6.1/F	11.6/F
3/8	3/8	3	0	150	150	-	40	40	-	180	150	8210G93	5D	❍	-	-	-	10.1/F	11.6/F
3/8	5/8	3	5	200	150	135	125	100	100	180	150	8210G1	6D	❍	-	-	-	6.1/F	11.6/F
3/8	5/8	3	5	300	300	300	-	-	-	175	-	8210G6	5D	❍		-	-	17.1/F	-
1/2	7/16	2.2	①	150	125	-	40	40	-	180	150	8210G15 ③	2P	●	8210G37 ③	2P	●	6.1/F	11.6/F
1/2	5/8	4	0	150	150	-	40	40	-	180	150	8210G94	5D	❍	-	-	-	10.1/F	11.6/F
1/2	5/8	4	0	150	150	125	40	40	-	175	150		-	-	8210G87	7D	●	17.1/F	11.6/F
1/2	5/8	4	5	200	150	135	125	100	100	180	150	8210G2	6D	❍	-	-	-	6.1/F	11.6/F
1/2	5/8	4	5	300	300	300	-	-	-	175	-	8210G7	5D	❍	-	-	-	17.1/F	-
1/2	5/8	4	5	300	300	-	300	300	-	180	125	8210G227	5D	❍	-	-	-	17.1/F	40.6/H
3/4	5/8	4.5	0	150	150	125	40	40	-	175	150	-	-	-	8210G88	7D	●	17.1/F	11.6/F
3/4	3/4	5	5	125	125	125	100	90	75	180	150	8210G9	9D	❍	-	-	-	6.1/F	11.6/F
3/4	3/4	5	0	150	150	-	40	40	-	180	150	8210G95	8D	❍	-	-	-	10.1/F	11.6/F
3/4	3/4	6.5	5	250	150	100	125	125	125	180	150	8210G3	11D	❍	-	-	-	6.1/F	11.6/F
3/4	3/4	6	0	-	-	-	200	180	180	-	77	8210B26 ② ‡	10P	-	-	-	-	-	30.6/H
3/4	3/4	6	0	350	300	200	-	-	-	200	-	8210G26 ② ‡	40P	●	-	-	-	16.1/F	-
1	1	13	0	150	125	125	-	-	-	180	-	EF8210G54	41D	●	8210G83	45D	●	16.1/F	-
1	1	13	5	150	150	100	125	125	125	180	150	8210G4	12D	❍	-	-	-	6.1/F	11.6/F
1	1	13.5	0	300	225	115	-	-	-	200	-	8210G27 ‡	42P	●	-	-	-	20.1/F	-
1	1	13.5	0	300	300	300	-	-	-	175	-	8210G78 ②	13P	-	-	-	-	17.1/F	-
1 1/4	1 1/8	15	0	-	-	-	100	100	80	-	77	8210B55 ‡	32D	-	-	-	-	-	30.6/H
1 1/4	1 1/8	15	0	150	125	125	-	-	-	180	-	8210G55	43D	●	-	-	-	16.1/F	-
1 1/4	1 1/8	15	5	150	150	100	125	125	125	180	150	8210G8	16D	❍	-	-	-	6.1/F	11.6/F
1 1/2	1 1/4	22.5	0	-	-	-	100	100	80	-	77	8210B56 ‡	33D	-	-	-	-	-	30.6/H
1 1/2	1 1/4	22.5	0	150	125	125	-	-	-	180	-	8210G56 ‡	44D	●	-	-	-	16.1/F	-
1 1/2	1 1/4	22.5	5	150	150	100	125	125	125	180	150	8210G22	18D	●		-	-	6.1/F	11.6/F
2	1 3/4	43	5	150	125	90	50	50	50	180	150	8210G100	20P	●	-	-	-	6.1/F	11.6/F
2 1/2	1 3/4	45	5	150	125	90	50	50	50	180	150	8210G101	21P	●	-	-	-	6.1/F	11.6/F
NORMALLY OPEN (Open when de-energized), NBR Seating (PA Disc-Holder, except as noted)																			
3/8	5/8	3	0	150	150	125	125	125	80	180	150	8210G33	23D	●	-	-	-	10.1/F	11.6/F
3/8	5/8	3	5	250	200	200	250	200	200	180	180	8210G11 ⑧ ⑨	39D	●	-	-	-	10.1/F	11.6/F
1/2	5/8	4	0	150	150	125	125	125	80	180	150	8210G34	23D	●	-	-	-	10.1/F	11.6/F
1/2	5/8	3	0	150	150	100	125	125	80	180	150	-	-	-	8210G30	37D	●	10.1/F	11.6/F
1/2	5/8	4	5	250	200	200	250	200	200	180	180	8210G12 ⑧ ⑨	39D	●	-	-	-	10.1/F	11.6/F
3/4	3/4	5.5	0	150	150	125	125	125	80	180	150	8210G35	25D	●	-	-	-	10.1/F	11.6/F
3/4	5/8	3	0	150	150	100	125	125	80	180	150	-	-	-	8210G38	38D	●	10.1/F	11.6/F
3/4	3/4	6.5	5	-	-	-	250	200	200	-	180	8210C13	24D	●	-	-	-	-	16.8/F
3/4	3/4	6.5	5	250	200	200	-	-	-	180	-	8210G13	46D	●	-	-	-	16.1/F	-
1	1	13	0	125	125	125	-	-	-	180	-	8210B57 ⑥ ⑩	34D	●	-	-	-	20/F	-
1	1	13	5	-	-	-	125	125	125	-	180	8210D14	26D	●	-	-	-	-	16.8/F
1	1	13	5	150	150	125	-	-	-	180	-	8210G14	47D	●	-	-	-	16.1/F	-
1 1/4	1 1/8	15	0	125	125	125	-	-	-	180	-	8210B58 ⑥ ⑩	35D	●	-	-	-	20/F	-
1 1/4	1 1/8	15	5	-	-	-	125	125	125	-	180	8210D15	28D	●	-	-	-	-	16.8/F
1 1/4	1 1/8	15	5	150	150	125	-	-	-	180	-	8210G18	48D	●	-	-	-	16.1/F	-
1 1/2	1 1/4	22.5	0	125	125	125	-	-	-	180	-	8210B59 ⑥ ⑩	36D	●	-	-	-	20/F	-
1 1/2	1 1/4	22.5	5	-	-	-	125	125	125	-	180	8210D32	29D	●	-	-	-	-	16.8/F
1 1/2	1 1/4	22.5	5	150	150	125	-	-	-	180	-	8210G32	49D	●	-	-	-	16.1/F	-
2	1 3/4	43	5	-	-	-	125	125	125	-	150	8210103	30P	●	-	-	-	-	16.8/F
2	1 3/4	43	5	125	125	125	-	-	-	180	-	8210G103	50P	●	-	-	-	16.1/F	-
2 1/2	1 3/4	45	5	-	-	-	125	125	125	-	150	8210104	27P	●	-	-	-		16.8/F
2 1/2	1 3/4	45	5	125	125	125	-	-	-	180	-	8210G104	51P	●	-			16.1/F	

Notes: ① 5 psi on Air; 1 psi on Water.
② Valve provided with PTFE main disc.
③ Valve includes Ultem (G.E. trademark) piston.
④ Letter "D" denotes diaphragm construction; "P" denotes piston construction.
⑤ ❍ Safety Shutoff Valve; ● General Purpose Valve. Refer to Engineering Section (Approvals) for details.
⑥ Valves not available with Explosionproof enclosures.
⑦ On 50 hertz service, the watt rating for the 6.1/F solenoid is 8.1 watts.
⑧ AC construction also has PA seating.
⑨ No disc-holder.
⑩ Stainless Steel disc-holder.
‡ Must have solenoid mounted vertical and upright.

EF

Dimensions: inches (mm)

Constr. Ref. No.		H	K	L	P	W
30	ins.	8.22	X	5.06	5.47	4.87
	mm	209	X	129	139	124
31	ins.	5.25	X	3.75	4.44	3.25
	mm	133	X	95	113	83
32	ins.	5.69	X	3.66	4.69	3.25
	mm	145	X	93	119	83
33	ins.	6.06	X	4.38	4.94	3.91
	mm	154	X	111	125	99
34	ins.	6.91	X	3.75	6.09	3.25
	mm	176	X	95	155	83
35	ins.	7.34	X	3.66	6.34	3.25
	mm	186	X	93	161	83
36	ins.	7.66	X	4.38	6.56	3.91
	mm	1.95	X	111	167	99
37	ins.	4.61	2.75	2.81	3.89	2.39
	mm	117	70	71	99	61
38	ins.	4.61	2.75	2.81	3.89	2.39
	mm	117	70	71	99	61
39	ins.	5.42	2.31	2.75	4.86	3.80
	mm	138	59	70	123	97
40	ins.	5.20	3.29	2.81	4.50	2.28
	mm	132	83	71	114	58
41	ins.	5.13	3.10	3.75	4.32	3.25
	mm	130	79	95	110	83
42	ins.	6.42	4.40	3.03	5.62	3.25
	mm	163	112	100	143	83
43	ins.	5.57	3.35	3.66	4.57	3.75
	mm	142	85	93	116	83
44	ins.	5.90	3.57	4.38	4.76	3.91
	mm	150	91	111	122	99
45	ins.	5.26	3.17	3.75	4.38	3.84
	mm	134	81	95	111	98
46	ins.	4.95	3.10	3.84	4.31	2.75
	mm	126	79	98	110	70
47	ins.	6.43	3.59	3.75	4.81	3.52
	mm	163	91	95	122	90
48	ins.	6.43	3.59	3.66	4.81	3.73
	mm	163	91	93	122	95
49	ins.	6.91	3.75	4.38	4.96	4.40
	mm	176	95	111	126	112
50	ins.	8.13	4.15	5.06	5.37	4.87
	mm	207	105	129	136	124
51	ins.	8.13	4.15	5.50	5.37	5.18
	mm	207	105	140	136	132

IMPORTANT: Valves may be mounted in any position, except as noted in specifications table.

Constr. Refs. 10, 15, 24, 26-36

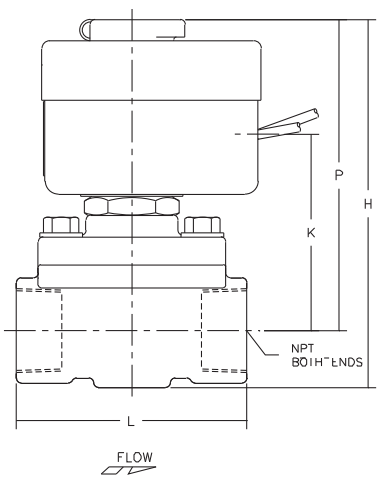

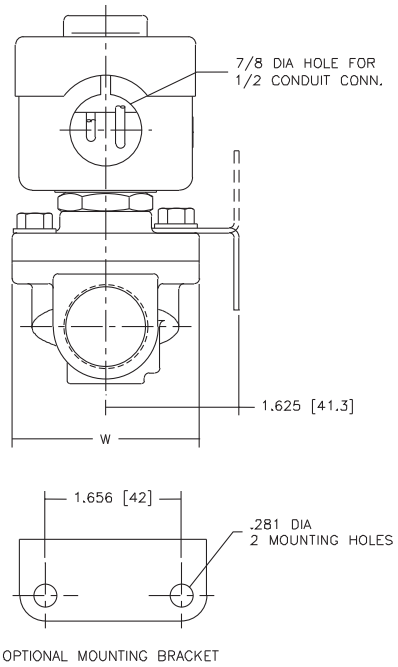

Constr. Refs. 12, 16, 18

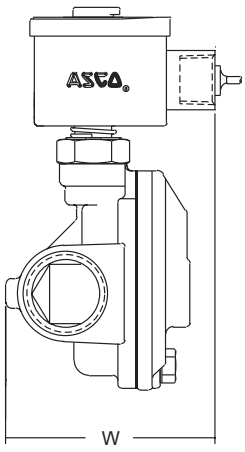

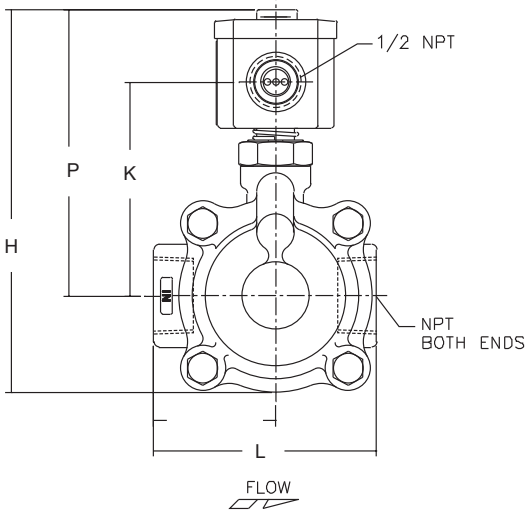

Note: Valve must be mounted with solenoid vertical and upright.

Dimensions: inches (mm)

Constr. Refs. 39

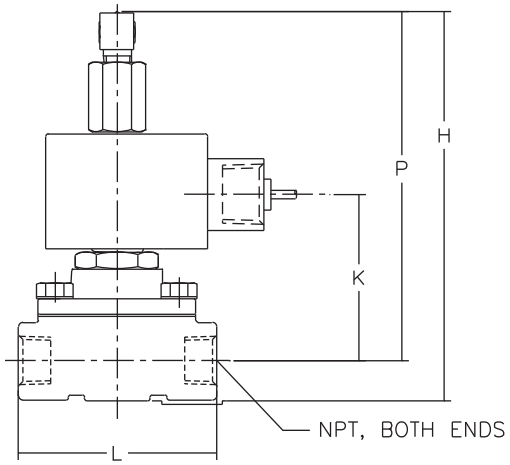

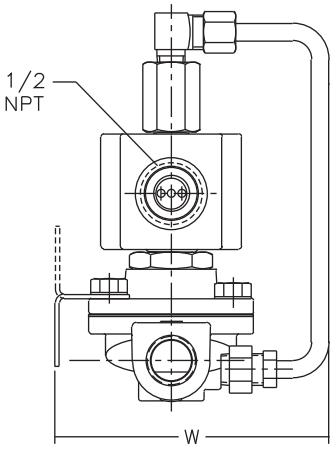

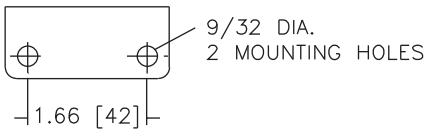

SHOWING MOUNTING
BRACKET ONLY

Constr. Refs. 40-51

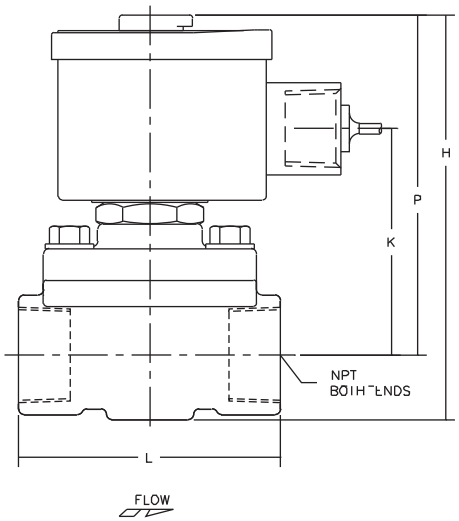

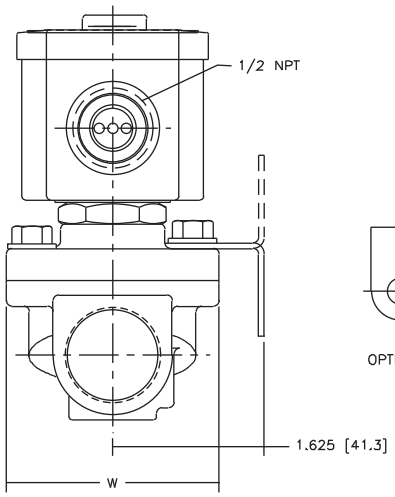

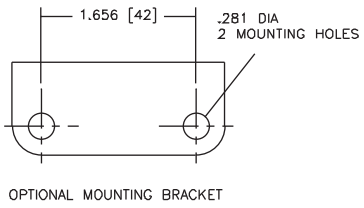

OPTIONAL MOUNTING BRACKET

Installation & Maintenance Instructions

2–WAY INTERNAL PILOTED–OPERATED SOLENOID VALVES
BRASS AND STAINLESS STEEL CONSTRUCTION
NORMALLY CLOSED OPERATION — 1″, 1 1/4″, & 1 1/2″ NPT

SERIES
8210
8211

Form No.V5455R5

NOTICE: See separate solenoid installation and maintenance instructions for information on: Wiring, Solenoid Temperature, Cause of Improper Operation, Coil or Solenoid Replacement.

DESCRIPTION

Series 8210 valves are 2–way normally closed internal pilot–operated solenoid valves designed for general service. Valves are made of rugged forged brass or stainless steel. Series 8210 valves are provided with a general purpose solenoid enclosure.
Series EF8210 and 8211 are the same as Series 8210 except they are provided with an explosionproof or explosionproof/watertight solenoid enclosure.

OPERATION

Normally Closed: Valve is closed when solenoid is de–energized; open when energized.

NOTE: No minimum operating pressure differential required.

Manual Operator (optional feature)

Manual operator allows manual operation when desired or during an electrical power outage. To engage manual operator (open the valve), remove operator cap and gasket base of valve. Turn manual operator stem clockwise as far as possible. Do not force operator stem. Valve will then be in the same position as when the solenoid is energized. To disengage manual operator, turn stem counterclockwise as far as possible.

⚠ CAUTION: Stem must be fully retracted counterclockwise before operating valve electrically.

Replace manual operator cap gasket and cap.

INSTALLATION

Check nameplate for correct catalog number, pressure, voltage, frequency, and service. Never apply incompatible fluids or exceed pressure rating of the valve. Installation and valve maintenance to be performed by qualified personnel.

Future Service Considerations

Provision should be made for performing seat leakage, external leakage, and operational tests on the valve with a nonhazardous, noncombustible fluid after disassembly and reassembly.

Temperature Limitations

For maximum valve ambient and fluid temperatures, refer to chart below. Check catalog number prefix and watt rating on nameplate.

Watt Rating AC/DC	Catalog Number Prefix	Coil Class	Maximum Ambient Temp.	Maximum Fluid Temp.
15.1 & 16.1 AC	None, KF, SF or SC	F	125°F (51.7°C)	180°F (82°C)
	HT, KH, ST or SU	H	140°F (60°C)	180°F (82°C)
30.6 DC	HT	H	104°F (40°C)	77°F (25°C)

Positioning

AC Construction (Alternating Current): Valve is designed to perform properly when mounted in any position. However, for optimum life and performance, the solenoid should be mounted vertical and upright so as to reduce the possibility of foreign matter accumulating in the solenoid base sub–assembly area.

DC Construction (Direct Current): Valve must be mounted with solenoid vertical and upright.

Piping

Connect piping to valve according to markings on valve body. Apply pipe compound sparingly to male pipe threads only. If applied to valve threads, the compound may enter the valve and cause operational difficulty. Avoid pipe strain by properly supporting and aligning piping. When tightening the pipe, do not use valve or solenoid as a lever. Locate wrenches applied to valve body or piping as close as possible to connection point.

⚠ CAUTION: To protect the solenoid valve, install a strainer or filter suitable for the service involved in the inlet side as close to the valve as possible. Clean periodically depending on service conditions. See ASCO Series 8600, 8601 and 8602 for strainers.

MAINTENANCE

⚠ WARNING: To prevent the possibility of death, serious injury or property damage, turn off electrical power, depressurize valve, and vent fluid to a safe area before servicing the valve.

NOTE: It is not necessary to remove the valve from the pipeline for repairs.

Cleaning

All solenoid valves should be cleaned periodically. The time between cleanings will vary depending on the medium and service conditions. In general, if the voltage to the coil is correct, sluggish valve operation, excessive noise or leakage will indicate that cleaning is required. In the extreme case, faulty valve operation will occur and the valve may fail to open or close. Clean strainer or filter when cleaning the valve.

Preventive Maintenance

- Keep the medium flowing through the valve as free from dirt and foreign material as possible.
- While in service, the valve should be operated at least once a month to insure proper opening and closing.
- Depending on the medium and service conditions, periodic inspection of internal valve parts for damage or excessive wear is recommended. Thoroughly clean all parts. If parts are worn or damaged, install a complete ASCO Rebuild Kit.

Causes of Improper Operation

- **Incorrect Pressure:** Check valve pressure. Pressure to valve must be within range specified on nameplate.
- **Excessive Leakage:** Disassemble valve and clean all parts. If parts are worn or damaged, install a complete ASCO Rebuild Kit.

© ASCO® MM All Rights Reserved. Printed in U.S.A.

50 Hanover Road, Florham Park, New Jersey 07932 www.ascovalve.com

Valve Disassembly

1. Disassemble valve in an orderly fashion using exploded views for identification and placement of parts. Refer to Figure 2 for AC construction; Figure 3 for DC construction.
2. Remove solenoid enclosure. See separate instructions.
3. Unscrew solenoid base sub−assembly. For DC construction, a special wrench is supplied in ASCO Rebuild Kit. For wrench only, Order ASCO Wrench Kit No. K168146−001.
4. Remove bonnet screws, valve bonnet,bonnet gasket, spring retainer (AC construction only) core spring, core/diaphragm sub−assembly and body gasket.
5. For valves equipped with a manual operator, remove cap, cap gasket, bonnet and bonnet gasket. Remove stem assembly with stem gasket from bonnet.
6. All parts are now accessible for cleaning or replacement. If parts are worn or damaged, install a complete ASCO Rebuild Kit.

Valve Reassembly

1. Lubricate all gaskets and the disc at the base of the core /diaphragm sub−assembly with DOW CORNING 111® Compound lubricant or an equivalent high−grade silicone grease.
2. Replace body gasket and core/diaphragm sub−assembly. Locate bleed hole in core/diaphragm sub−assembly directly over valve outlet. For 1 1/2″ NPT construction, locate bleed hole in core/diaphragm sub−assembly approximately 30° from valve outlet.
3. Replace core spring and spring retainer (AC construction only). Install small end of core spring in core first, wide end protruding from top of core. For DC construction, install core spring, small end down toward valve body.
4. Replace valve bonnet and bonnet screws. Hand tighten bonnet screws as far as possible.

IMPORTANT: Press firmly down on core/diaphragm sub−assembly to seat diaphragm assembly against valve seat. While holding this position, torque bonnet screws in a crisscross manner to 144 ± 15 in−lbs [16,3 ± 1,7 Nm].

5. Replace bonnet gasket and solenoid base sub−assembly. Torque solenoid base sub−assembly to 175 ± 25 in−lbs [19,8 ± 2,8 Nm]. For DC construction, the solenoid base sub−assembly must be placed inside the housing before assembling into the valve body. Before doing this, read separate lubrication instructions in ***Solenoid Installation & Maintenance Instructions.***
6. For valves provided with a manual operator, replace stem assembly and bonnet (with gaskets). Torque bonnet to 75 ± 10 in−lbs [8,5 ± 1,1 Nm]. Replace cap gasket and cap.
7. Install solenoid. See separate instructions.

⚠ **WARNING: To prevent the possibility of death, serious injury or property damage, check valve for proper operation before returning to service. Also perform internal seat and external leakage tests with a nonhazardous, noncombustible fluid.**

8. Restore line pressure and electrical power supply to valve.
9. After maintenance is completed, operate the valve a few times to be sure of proper operation. A metallic *click* signifies the solenoid is operating.

ORDERING INFORMATION

FOR ASCO REBUILD KITS

Parts marked with an asterisk (*) in the exploded view are supplied in Rebuild Kits. When Ordering Rebuild Kits for ASCO valves, order the Rebuild Kit number stamped on the valve nameplate. If the number of the kit is not visible, order by indicating the number of kits required, and the Catalog Number and Serial Number of the valve(s) for which they are intended.

Torque Chart

Part Name	Torque Value Inch−Pounds	Torque Value Newton−Meters
Manual operator bonnet	75 ± 10	8,5 ± 1,1

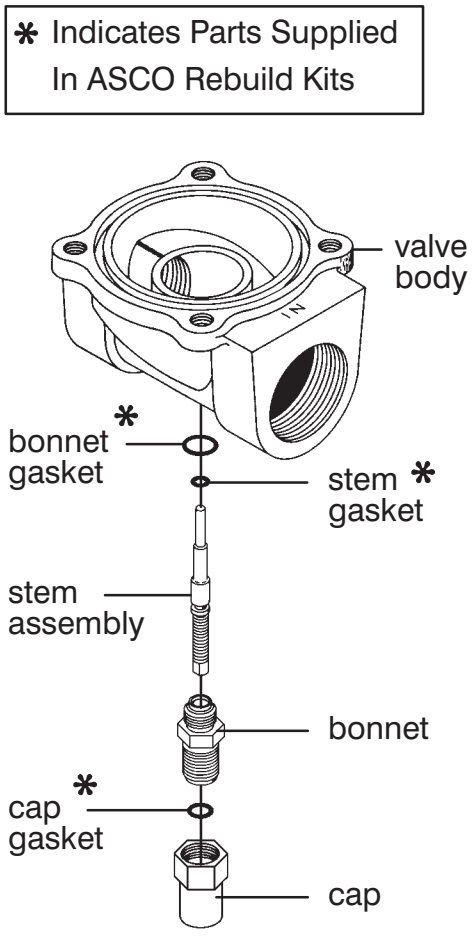

Figure 1. Manual operator (optional feature)

ASCO® 50 Hanover Road, Florham Park, New Jersey 07932 www.ascovalve.com

Torque Chart

Part Name	Torque Value Inch–Pounds	Torque Value Newton–Meters
Solenoid base sub–assembly	175 ± 25	19,8 ± 2,8
Bonnet screw	144 ± 15	16,3 ± 1,7

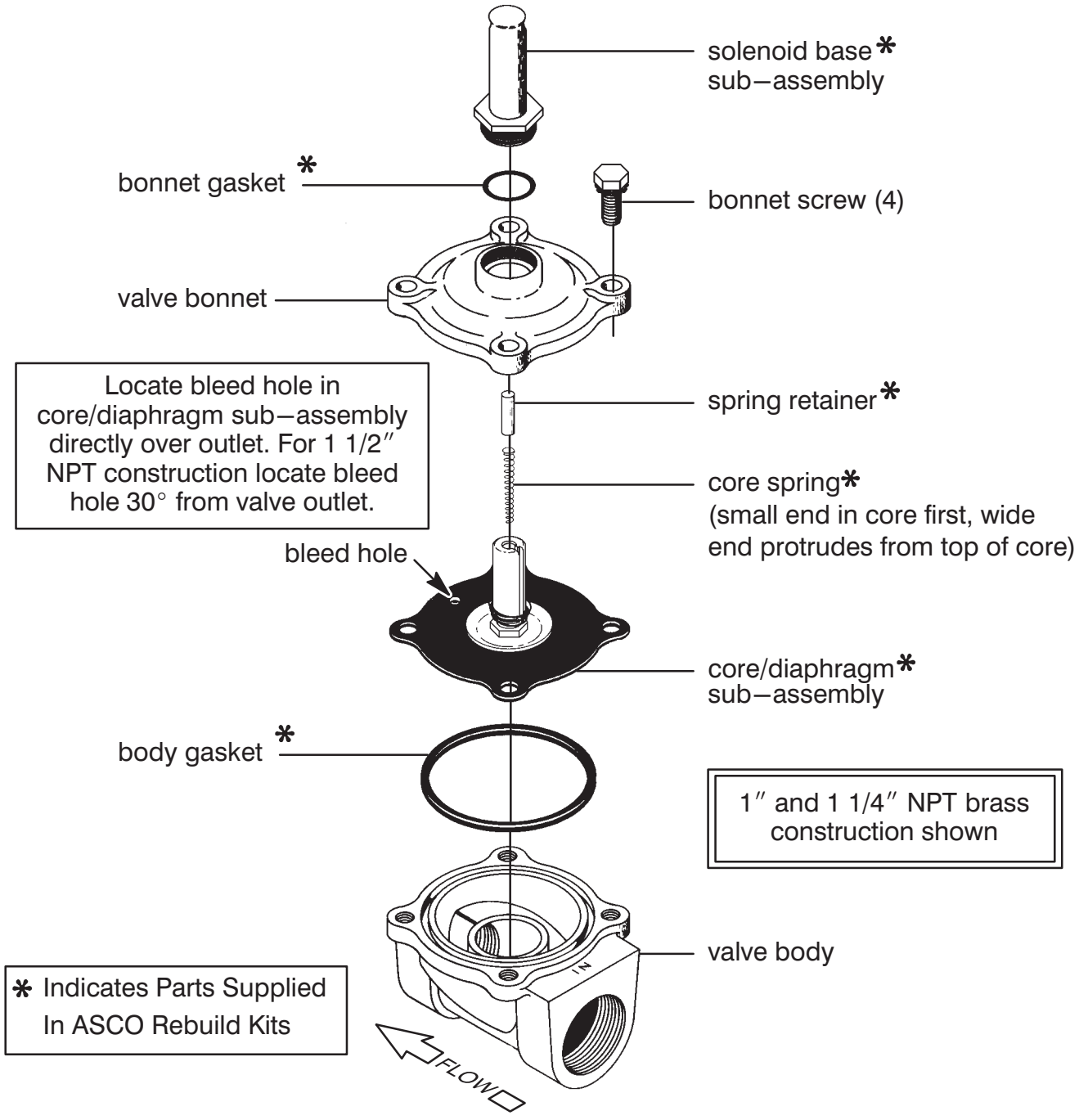

Figure 2. Series 8210 valve without solenoid (AC construction shown).

ASCO® 50 Hanover Road, Florham Park, New Jersey 07932 www.ascovalve.com

Torque Chart

Part Name	Torque Value Inch–Pounds	Torque Value Newton–Meters
Solenoid base sub–assembly	175 ± 25	19,8 ± 2,8
Bonnet screw	144 ± 15	16,3 ± 1,7

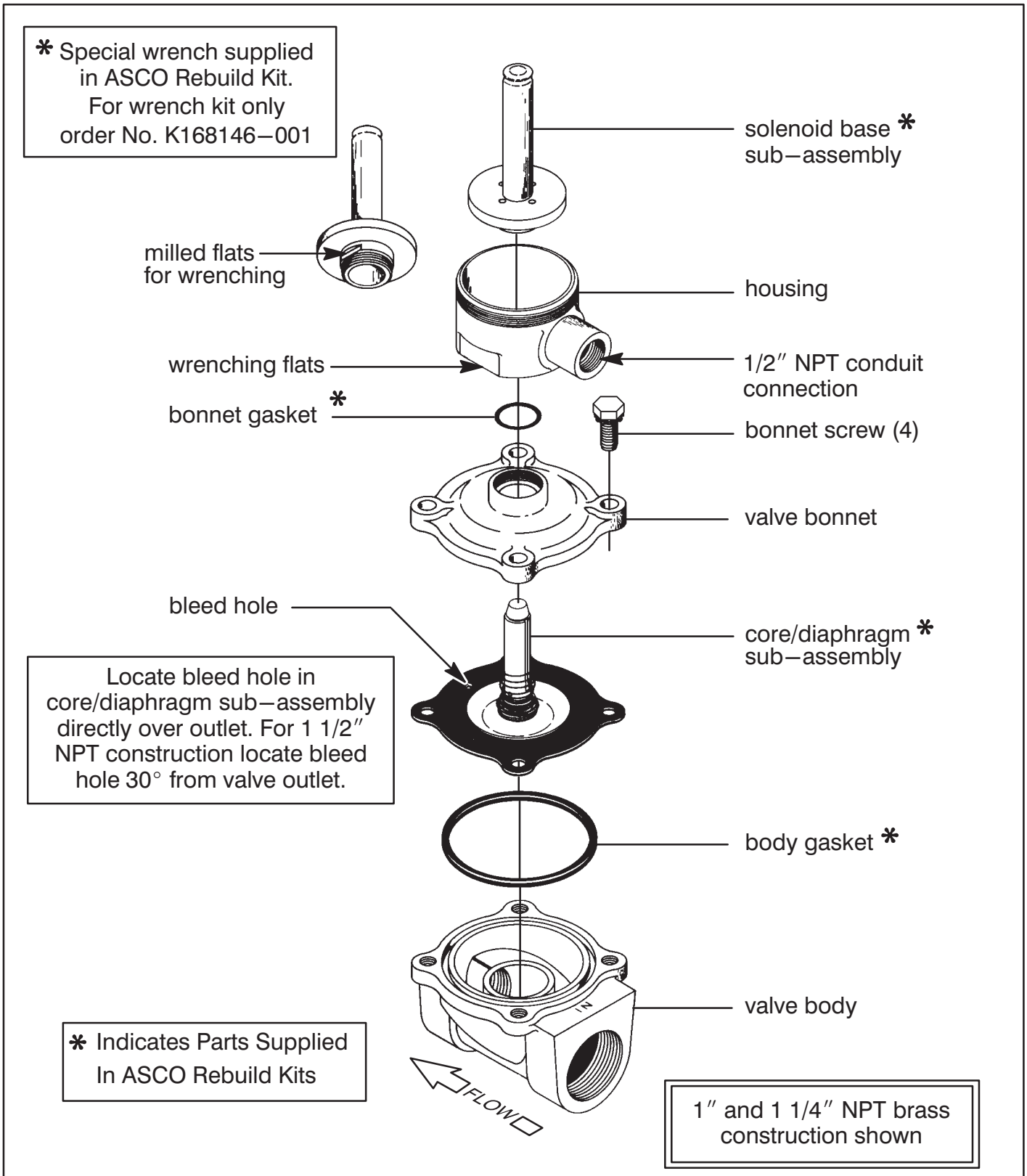

Figure 3. Series 8210 valve without solenoid (DC construction shown).

ASCO® 50 Hanover Road, Florham Park, New Jersey 07932 www.ascovalve.com

Installation&Maintenance Instructions

ASCO Red-Hat II™

OPEN-FRAME, GENERAL PURPOSE, WATERTIGHT/EXPLOSIONPROOF SOLENOIDS

SERIES 8016G/H

— SERVICE NOTICE —

ASCO™ solenoid valves with design change letter "G" or "H" in the catalog number (ex. 8210G1) have an epoxy encapsulated ASCO Red Hat II® solenoid. This solenoid replaces some of the solenoids with metal enclosures and open-frame constructions. Follow these installation and maintenance instructions if your valve or operator uses this solenoid.

DESCRIPTION

Catalog numbers 8016G/H1 and 8016G/H2 are epoxy encapsulated pull-type solenoids. The green solenoid with lead wires and 1/2 conduit connection is designed to meet Enclosure Type 1-General Purpose, Type 2-Dripproof, Types 3 and 3S-Raintight, and Types 4 and 4X-Watertight. The black solenoid on catalog numbers prefixed "EF" is designed to meet Enclosure Types 3 and 3S-Raintight, Types 4 and 4X-Watertight, Types 6 and 6P-Submersible, Type7, Explosionproof Class I, Division1 Groups A, B, C, & D and Type 9, -Dust-Ignitionproof Class II, Division1 Groups E, F & G. The Class II, Groups F & G Dust Locations designation is not applicable for solenoids or solenoid valves used for steam service or when a class "H" solenoid is used. See *Temperature Limitations* section for solenoid identification and nameplate/retainer for service. When installed just as a solenoid and not attached to an ASCO valve, the core has a 0.250-28 UNF-2B tapped hole, 0.38 minimum full thread.

Series 8016G/H are available in:

- **Open-Frame Construction:** The green solenoid may be supplied with 1/4″ spade, screw or DIN terminals. (Refer to Figure 4)
- **Panel Mounted Construction:** These solenoids are specifically designed to be panel mounted by the customer through a panel having a .062 to .093 maximum wall thickness. (Refer to Figure 3 and section on *Installation of Panel Mounted Solenoid*).

Optional Features For Type 1 - General Purpose Construction Only

- **Junction Box:** This junction box construction meets Enclosure Types 2, 3, 3S, 4, and 4X. Only solenoids with 1/4″ spade or screw terminals may have a junction box. The junction box provides a 1/2″ conduit connection, grounding and spade or screw terminal connections within the junction box (See Figure 5).
- **DIN Plug Connector Kit No. K236034:** Use this kit only for solenoids with DIN terminals. The DIN plug connector kit provides a two pole with grounding contact DIN Type 43650 construction (See Figure 6).

OPERATION

When the solenoid is energized, the core is drawn into the solenoid base sub-assembly.

IMPORTANT: When the solenoid is de-energized, the initial return force for the core, whether developed by spring, pressure, or weight, must exert a minimum force to overcome residual magnetism created by the solenoid. Minimum return force for AC construction is 0.69lbs (3.1N) and 0.31 lbs (1.38N) for DC.

INSTALLATION

Check nameplate for correct catalog number, service, and wattage. Check front of solenoid for voltage and frequency.

⚠ WARNING: Electrical hazard from the accessibility of live parts. To prevent the possibility of death, serious injury or property damage, install the open - frame solenoid in an enclosure.

FOR BLACK ENCLOSURE TYPES 7 AND 9 ONLY

⚠CAUTION: To prevent fire or explosion, do not install solenoid and/or valve where ignition temperature of hazardous atmosphere is less than 165°C. On valves used for steam service or when a class "H" solenoid is used, do not install in hazardous atmosphere where ignition temperature is less than 180°C. See nameplate/retainer for service.

NOTE: These solenoids have an internal non-resetable thermal fuse to limit solenoid temperature in the event that extraordinary conditions occur which could cause excessive temperatures. These conditions include high input voltage, a jammed core, excessive ambient temperature or a shorted solenoid, etc. This unique feature is a standard feature only in solenoids with black explosionproof/dust-ignitionproof enclosures (Types 7 & 9).

⚠CAUTION: To protect the solenoid valve or operator, install a strainer or filter, suitable for the service involved in the inlet side as close to the valve or operator as possible. Clean periodically depending on service conditions. See ASCO Series 8600 and 8601 for strainers.

Temperature Limitations

For maximum valve ambient temperatures, refer to chart. The temperature limitations listed, only indicate maximum application temperatures for field wiring rated at 90°C. Check catalog number prefix and watt rating on nameplate to determine maximum ambient temperature. See valve installation and maintenance instructions for maximum fluid temperature.

 All Rights Reserved.

©ASCO Valve, Inc.® 50 Hanover Road, Florham Park, New Jersey 07932

NOTE: For steam service, refer to *Wiring* section, *Junction Box* for temperature rating of supply wires.

Temperature Limitations For Series 8016G Solenoids for use on Valves Rated at 6.1, 8.1, 9.1, 10.6 or 11.1 Watts			
Watt Rating	Catalog Number Coil Prefix	Class of Insulation	Maximum § Ambient Temp.
6.1, 8.1, 9.1 & 11.1	None, FB, KF, KP, SC, SD, SF & SP	F	125°F (52°C)
6.1, 8.1, 9.1 & 11.1	HB, HT, KB, KH, SS, ST & SU	H	140°F (60°C)
10.6**	None, KF, SF, SC, HT, KH, ST & SU	F & H	104°F (40°C)
7.1 @ 60Hz (8.1 @ 50Hz)		F & H	175°F (79°C)*
10.6**		F & H	140°F (60°C)

§ Minimum ambient temperature -40°F (-40°C).

* When used with watertight aluminum junction boxers (screw or spade) max. ambient and fluid temperature will be reduced to 157°F (69.4°C)

** 10.6 Watt solenoids rated for 104°F are 8030, 8260, 8316, 8321, 8320, 8360 & 8344 valves while those rated for 140°F are 8040 valves

Temperature Limitations for Series 8003H, 8007H and 8202H solenoids						
		Watt Ratings			Maximum Ambient Temperature	
Prefix ①	Coil Class	AC		DC		
		60 Hz	50 Hz		°C	°F
EF	FT	6.1	8.1	-	52	125
EF	FB	9.1	11.1	-		
	FT	6.1	8.1	-	55	131
	FB	9.1	11.1	-		
	HT	-	-	10.6	40 ②	104②
	HB	-	-	18.6		
EF	HT	-	-	10.6		
EF	HB	-	-	18.6		
	HT	6.1	8.1	-	60 ③	140 ③
	HB	9.1	11.1	-		
EF	HT	6.1	8.1	-		
EF	HB	9.1	11.1	-		

①= EF data applies to Explosionproof coils only.

②= Some DC solenoid valves can be operated at maximum ambient temperature of 55°C / 131°F with reduced pressure ratings. See valve I&M for maximum operating pressure differential ratings.

③= Steam Service Valves have a maximum ambient temperature of 55° C/ 131°F.

Positioning

This solenoid is designed to perform properly when mounted in any position. However, for optimum life and performance, the solenoid should be mounted vertically and upright to reduce the possibility of foreign matter accumulating in the solenoid base sub-assembly area.

Wiring

Wiring must comply with local codes and the National Electrical Code. All solenoids supplied with lead wires are provided with a grounding wire which is green or green with yellow stripes and a 1/2″ conduit connection. To facilitate wiring, the solenoid may be rotated 360°. For the watertight and explosionproof solenoid, electrical fittings must be approved for use in the approved hazardous locations.

Additional Wiring Instructions For Optional Features:

- **Open-Frame solenoid with 1/4″ spade terminals.**

For solenoids supplied with screw terminal connections use #12-18 AWG stranded copper wire rated at 90°C or greater. Torque terminal block screws to10±2 in-lbs [1,0±1,2 Nm]. A tapped hole is provided in the solenoid for grounding, use a #10-32 machine screw. Torque grounding screw to 15-20 in-lbs [1,7-2,3 Nm]. On solenoids with screw terminals, the socket head screw holding the terminal block to the solenoid is the grounding screw. Torque the screw to 15-20 in-lbs [1,7-2,3 Nm] with a 5/32″ hex key wrench.

- **Junction Box**

The junction box is used with spade or screw terminal solenoids only and is provided with a grounding screw and a 1/2″ conduit connection. Connect #12-18 AWG standard copper wire only to the screw terminals. Within the junction box use field wire that is rated 90°C or greater for connections. For steam service use 105°C rated wire up to 50 psi or use 125°C rated wire above 50 psi. After electrical hookup, replace cover gasket, cover, and screws. Tighten screws evenly in a crisscross manner.

- **DIN Plug Connector Kit No. K236034**

1. The open-frame solenoid is provided with DIN terminals to accommodate the plug connector kit.
2. Remove center screw from plug connector. Using a small screwdriver, pry terminal block from connector cover.
3. Use #12-18 AWG stranded copper wire rated at 90°C or greater for connections. Strip wire leads back approximately 1/4″ for installation in socket terminals. The use of wire-end sleeves is also recommended for these socket terminals. Maximum length of wire-end sleeves to be approximately 1/4″. Tinning of the ends of the lead wires is not recommended.
4. Thread wire through gland nut, gland gasket, washer and connector cover.

NOTE: Connector housing may be rotated in 90° increments from position shown for alternate positioning of cable entry.

5. Check DIN connector terminal block for electrical markings. Then make electrical hookup to terminal block according to markings on it. Snap terminal block into connector cover and install center screw.
6. Position connector gasket on solenoid and install plug connector. Torque center screw to 5±1 in-lbs [0,6±1,1 Nm].

NOTE: Alternating current (AC) and direct current (DC) solenoids are built differently and cannot be converted from one to the other by changing the coil.

©ASCO Valve, Inc. 50 Hanover Road, Florham Park, New Jersey 07932 www.ascovalve.com

Installation of Solenoid

Solenoids may be assembled as a complete unit. Tightening is accomplished by means of a hex flange at the base of the solenoid.

Installation of Panel Mounted Solenoid (See Figure 3)

Disassemble solenoid following instruction under *Solenoid Replacement* then proceed.

3/4" Valve Bonnet Construction

1. Install retainer (convex side to solenoid) in 1.312 diameter mounting hole in customer panel.
2. Position spring washer over plugnut/core tube sub-assembly.
3. Install plugnut/core tube sub-assembly through retainer in customer panel then replace solenoid, nameplate and red cap.

15/16" Valve Bonnet Construction

1. Install solenoid base sub-assembly through 0.69 diameter mounting hole in customer panel.
2. Position spring washer on opposite side of panel over solenoid base sub-assembly then replace.

Solenoid Temperature

Standard solenoids are designed for continuous duty service. When the solenoid is energized for a long period, the solenoid becomes hot and can be touched by hand only for an instant. This is a safe operating temperature.

MAINTENANCE

⚠ WARNING: To prevent the possibility of death, serious injury or property damage, turnoff electrical power, depressurize solenoid operator and/or valve, and vent fluid to a safe area before servicing.

Cleaning

All solenoid operators and valves should be cleaned periodically. The time between cleaning will vary depending on medium and service conditions. In general, if the voltage to the solenoid is correct, sluggish valve operation, excessive noise or leakage will indicate that cleaning is required. Clean strainer or filter when cleaning the valve.

Preventive Maintenance

- Keep the medium flowing through the solenoid operator or valve as free from dirt and foreign material as possible.
- Periodic exercise of the valve should be considered if ambient or fluid conditions are such that corrosion, elastomer degradation, fluid contamination build up, or other conditions that could impede solenoid valve shifting are possible. The actual frequency of exercise necessary will depend on specific operating conditions. A successful operating history is the best indication of a proper interval between exercise cycles.
- Depending on the medium and service conditions, periodic inspection of internal valve parts for damage or excessive wear is recommended. Thoroughly clean all parts. Replace any worn or damaged parts.

Causes of Improper Operation

- **Faulty Control Circuit:** Check the electrical system by energizing the solenoid. A metallic *click* signifies that the solenoid is operating. Absence of the *click* indicates loss of power supply. Check for loose or blown fuses, open-circuited or grounded solenoid, broken leadwires or splice connections.
- **Burned-Out Solenoid:** Check for open-circuited solenoid. Replace if necessary. Check supply voltage; it must be the same as specified on nameplate/retainer and marked on the solenoid. Check ambient temperature and check that the core is not jammed.
- **Low Voltage:** Check voltage across the solenoid leads. Voltage must be at least 85% of rated voltage.

Solenoid Replacement

1. On solenoids with lead wires disconnect conduit, coil leads, and grounding wire.

NOTE: Any optional parts attached to the old solenoid must be reinstalled on the new solenoid.

2. Disassemble solenoids with optional features as follows:
   - **Spade or Screw Terminals**

   Remove terminal connections, grounding screw, grounding wire, and terminal block (screw terminal type only).

NOTE: For screw terminals, the socket head screw holding the terminal block serves as a grounding screw.

   - **Junction Box**

   Remove conduit and socket head screw (use 5/32″ hex key wrench) from center of junction box. Disconnect junction box from solenoid.

   - **DIN Plug Connector**

   Remove center screw from DIN plug connector. Disconnect DIN plug connector from adapter. Remove socket head screw (use 5/32″ hex key wrench), DIN terminal adapter, and gasket from solenoid.

3. Snap off red cap from top of solenoid base sub-assembly.
4. Push down on solenoid. Then using a suitable screwdriver, insert blade in slot provided between solenoid and nameplate/retainer. Pry up slightly and push to remove. Then remove solenoid from solenoid base sub-assembly.
5. Reassemble using exploded views for parts identifcation and placement.

Disassembly and Reassembly of Solenoids

1. Remove solenoid, see *Solenoid Replacement*.
2. Remove spring washer from solenoid base sub-assembly.
3. Unscrew solenoid base sub-assembly.

NOTE: Some solenoid constructions have a plugnut/core tube sub-assembly, bonnet gasket and bonnet in place of the solenoid base sub-assembly. To remove bonnet use special wrench adapter supplied in ASCO Rebuild Kit. For wrench adapter only, order ASCO Wrench Kit No. K218948.

4. The core is now accessible for cleaning or replacement.
5. If the solenoid is part of a valve, refer to basic valve installation and maintenance instructions for further disassembly.
6. Reassemble using exploded views for identification and placement of parts.

©ASCO Valve, Inc. 50 Hanover Road, Florham Park, New Jersey 07932 www.ascovalve.com

This page intentionally left blank

Enviro-Care
A WAMGROUP® Company

Ultrasonic Level Controller and Sensor(s)

This page intentionally left blank

Overview



HydroRanger 200 HMI is an ultrasonic level controller for up to six pumps and provides control, differential control, and open channel flow monitoring.

Benefits

- Easy to use HMI display with local four-button programming, menu-driven parameters, and Wizard support for key applications
- English, German, French, Spanish, Chinese, Italian, Portuguese, and Russian texts on the HMI
- Removable terminal blocks for ease of wiring
- Monitors wet wells, weirs and flumes
- Digital communications with built-in Modbus RTU via RS 485
- Compatible with SmartLinx system and SIMATIC PDM configuration software
- Single or dual point level monitoring
- 6 relays
- Auto False-Echo Suppression for fixed obstruction avoidance
- Anti-grease ring/tide mark build-up
- Differential amplifier transceiver for common mode noise rejection and improved signal-to-noise ratio
- Wall and panel mounting options

Application

For water authorities, municipal water, and wastewater plants, HydroRanger 200 HMI is an economical, low-maintenance solution delivering control efficiency and productivity needed to meet today's exacting standards. It offers single point monitoring with all models, and optional dual-point monitoring with 6 relay model. As well, it has digital communications with built-in Modbus RTU via RS 485.

The standard 6 relay HydroRanger 200 HMI will monitor open channel flow and features advanced relay alarming and pump control functions as well as volume conversion. It is compatible with SIMATIC PDM, allowing for PC configuration and set-up. Sonic Intelligence advanced echo-processing software provides increased reading reliability.

HydroRanger 200 HMI uses proven continuous ultrasonic echo ranging technology to monitor water and wastewater of any consistency up to 15 m (50 ft) in depth. Achievable resolution is 0.1 % with accuracy to 0.25 % of range. Unlike contacting devices, HydroRanger 200 HMI is immune to problems caused by suspended solids, harsh corrosives, grease or silt in the effluent, reducing downtime.

- Key Applications: wet wells, flumes/weirs, bar screen control

Technical specifications

Mode of Operation	
Measuring principle	Ultrasonic level measurement
Measuring range	0.3 ... 15 m (1 ... 50 ft), transducer dependent
Measuring points	1 or 2
Input	
Analog	0 ... 20 mA or 4 ... 20 mA, from alternate device, scalable (6 relay model)
Discrete	10 ... 50 V DC switching level Logical 0 ≤ 0.5 V DC Logical 1 = 10 ... 50 V DC Max. 3 mA
Output	
EchoMax transducer	44 kHz
Ultrasonic transducer	Compatible transducers: ST-H and EchoMax series XPS-10, XPS-15/15F, and XRS-5
Relays[1]	Rating 5 A at 250 V AC, non-inductive
• Model with 6 relays	4 SPST Form A/2 SPDT Form C
mA output	0 ... 20 mA or 4 ... 20 mA
• Max. load	750 Ω, isolated
• Resolution	0.1 % of range
Accuracy	
Error in measurement	0.25 % of range or 6 mm (0.24 inch), whichever is greater
Resolution	0.1 % of measuring range or 2 mm (0.08 inch), whichever is greater[2]
Temperature compensation	• -50 ... +150 °C (-58 ... +302 °F) • Integral temperature sensor in transducer • External TS-3 temperature sensor (optional) • Programmable fixed temperature values
Rated operating conditions	
Installation conditions	
• Location	Indoor / outdoor
• Installation category	II
• Pollution degree	4
Ambient conditions	
• Ambient temperature (enclosure)	-20 ... +50 °C (-4 ... +122 °F)

Design	
Weight	
• Wall mount	1.37 kg (3.02 lb)
• Panel mount	1.50 kg (3.31 lb)
Material (enclosure)	Polycarbonate
Degree of protection (enclosure)	
• Wall mount	IP65/Type 4X/NEMA 4X
• Panel mount	IP54/Type 3/NEMA 3
Cable	
• Transducer and mA output signal	2-core copper conductor, twisted, shielded, 300 Vrms, 0.82 mm² (18 AWG), Belden 8 760 or equivalent is acceptable
• Max. separation between transducer and transceiver	365 m (1 200 ft)
Displays and controls	60 x 40 mm (2.36 x 1.57 inch) LCD 240 x 160 pixels resolution
Power supply[3]	
AC version	100 ... 230 V AC ± 15 %, 50/60 Hz, 36 VA (17 W)
DC version	12 ... 30 V DC (20 W)
Certificates and approvals	• CE, RCM[4] • FM, $CSA_{US/C}$, UL listed • $CSA_{US/C}$ Class I, Div. 2, Groups A, B, C and D, Class II, Div. 2, Groups F and G, Class III (wall mount only) • MCERTS Class 2 approved for Open Channel Flow
Communication	• RS 232 with Modbus RTU or ASCII via RJ-11 connector • RS 485 with Modbus RTU or ASCII via terminal blocks • Optional: SmartLinx cards for - PROFIBUS DPV1 - DeviceNet

1) All relays certified for use with equipment that fails in a state at or under the rated maximums of the relays.

2) Program range is defined as the empty distance to the face of the transducer plus any range extension.

3) Maximum power consumption is listed.

4) EMC performance available upon request.

© Siemens AG 2015

HydroRanger 200 HMI

Selection and Ordering data	Article No.
Siemens HydroRanger 200 HMI Ultrasonic level controller for up to six pumps that provides control, differential control and open channel flow monitoring. The HydroRanger 200 HMI is also available as a level measurement controller only. Select option from number of measurement points options below.	**7ML5034-**
↗ Click on the Article No. for the online configuration in the PIA Life Cycle Portal.	
Mounting	
4 button HMI, Wall mount, standard enclosure	4
4 button HMI, Wall mount, 4 entries, 4 M20 cable glands included	5
4 button HMI, Panel Mount	6
Input voltage	
100 ... 230 V AC	A
12 ... 30 V DC	B
Number of measurement points	
Single point model, 6 relays	A
Dual point model, 6 relays	B
Communication (SmartLinx)	
Without module	0
SmartLinx PROFIBUS DP V0 module	2
SmartLinx DeviceNet module	3
SmartLinx PROFIBUS DP V1 module	4
See SmartLinx product page for more information	
Approvals	
General Purpose CE, FM, CSA$_{US/C}$, UL listed, RCM	1
CSA Class I, Div. 2, Groups A, B, C, and D; Class II, Div. 2, Groups F and G; Class III	2

Selection and Ordering data	Order code
Further designs	
Please add "**-Z**" to Article No. and specify Order code(s).	
Stainless steel tag [69 x 50 mm (2.71 x 1.97 inch)]: Measuring-point number/identification (max. 27 characters), specify in plain text	**Y15**
Test Certificate: Manufacturer's test certificate M to DIN 55350, Part 18 and to ISO 9000	**C11**
Operating Instructions	Article No.
English	**A5E36281317**
German	**A5E36281391**
Note: The Operating Instructions should be ordered as a separate item on the order.	
This device is shipped with the Siemens Milltronics manual DVD containing the ATEX Quick Start and Operating Instructions library.	
Other Operating Instructions	
SmartLinx PROFIBUS DPV1, English	**A5E36197302**
SmartLinx PROFIBUS DPV1, German	**A5E36197305**
SmartLinx PROFIBUS DP, English	**7ML1998-1AQ03**
SmartLinx PROFIBUS DP, German	**7ML1998-1AQ33**
SmartLinx PROFIBUS DP, French	**7ML1998-1AQ13**
SmartLinx DeviceNet, English	**7ML1998-1BH02**
Note: The appropriate SmartLinx Operating Instructions should be ordered as a separate line on the order.	
Accessories	
Tag, stainless steel, 12 x 45 mm (0.47 x 1.77 inch), one text line, suitable for enclosure	**7ML1930-1AC**
Sunshield kit, 304 stainless steel	**7ML1930-1GA**
SITRANS RD100, loop powered display - see Chapter 7	**7ML5741-...**
SITRANS RD200, universal input display with Modbus conversion - see Chapter 7	**7ML5740-...**
SITRANS RD300, dual line display with totalizer and linearization curve and Modbus conversion - see Chapter 7	**7ML5744-...**
SITRANS RD500 web, universal remote monitoring solution for instrumentation - see Chapter 7	**7ML5750-...**
Spare parts	
Power Supply Board (100 ... 230 V AC)	**7ML1830-1MD**
Power Supply Board (12 ... 30 V DC)	**7ML1830-1ME**
Replacement lid with 4 button HMI	**A5E35778738**
SmartLinx PROFIBUS DP V1 module	**A5E35778741**

Dimensional drawings

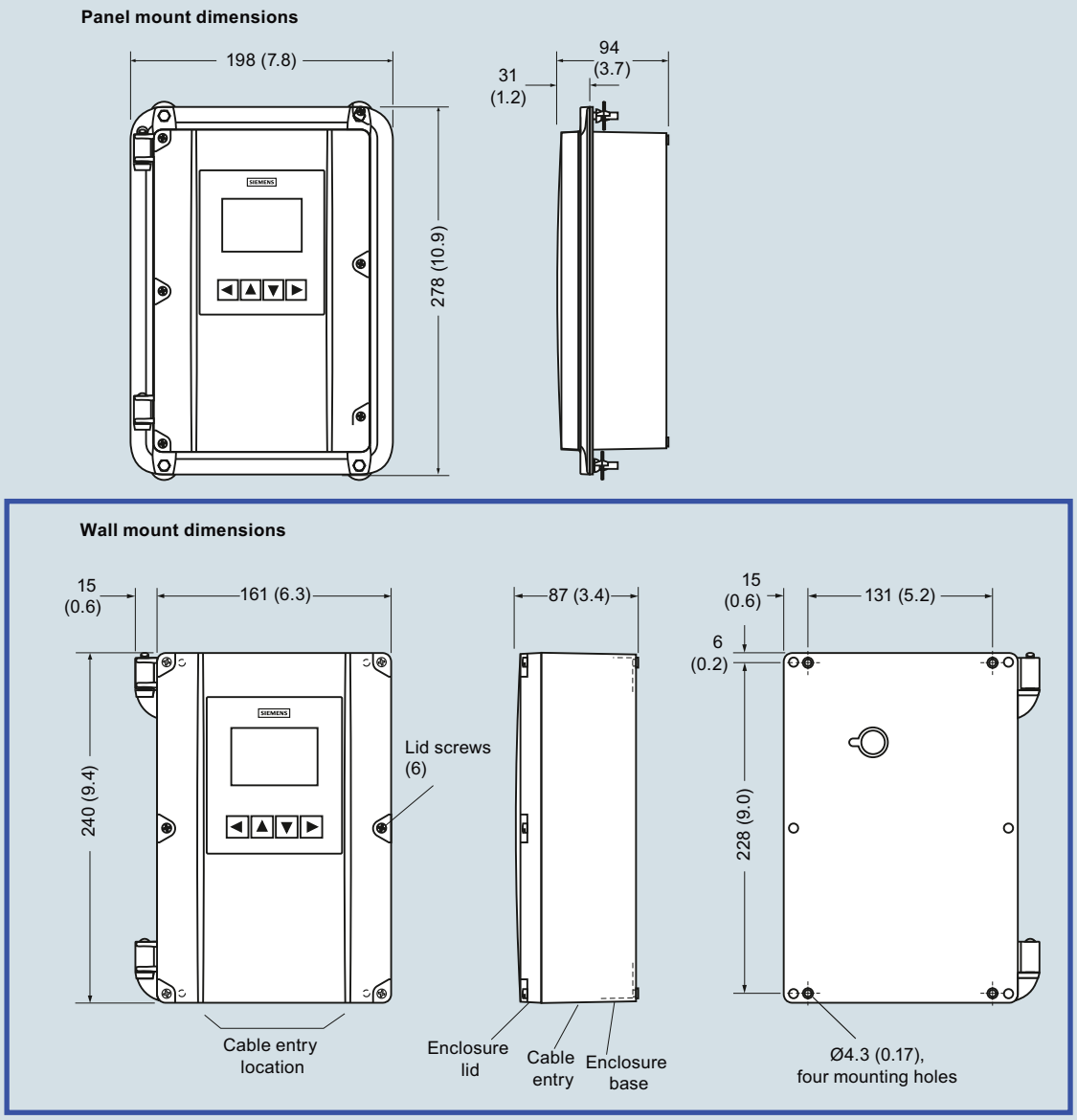

HydroRanger 200 HMI, dimensions in mm (inch)

Schematics

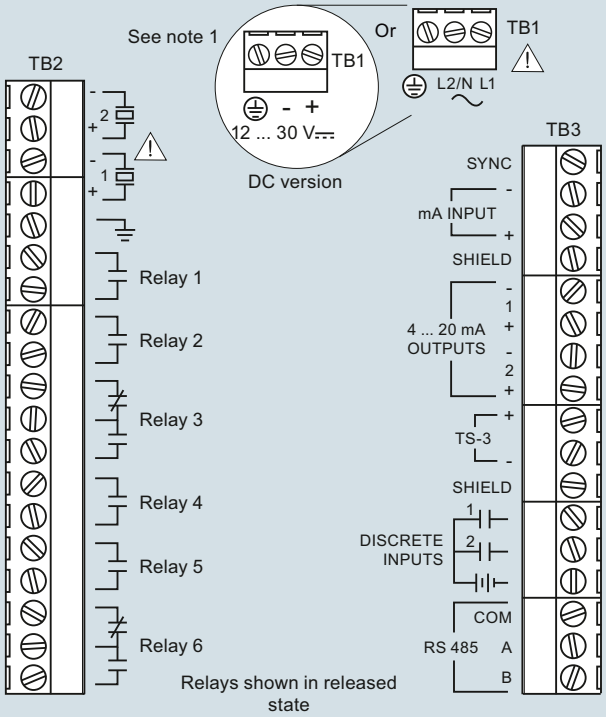

Note:

1. Use 2-core copper wire, twisted, with shield, for expansion up to 365 m (1 200 ft). Route cable in grounded metal conduit, separate from other cables.
2. Verify that all system components are installed in accordance with instructions.
3. Connect all cable shields to the MultiRanger shield connections. Avoid differential ground potentials by not connecting cable shields to ground (earth) anywhere else.
4. Keep exposed conductors on shielded cables as short as possible to reduce noise on the line caused by stray transmissions and noise pickup.

HydroRanger 200 HMI connections

© Siemens AG 2011

Overview



ST-H transducers use ultrasonic technology to measure level in chemical storage and liquid tanks.

Benefits

- Can be mounted on a 2" (50.8 mm) standpipe
- Immune to corrosive and harsh environments
- Integral temperature sensor

Application

The narrow design of the ST-H allows the transducer to be mounted on a 2" (50.8 mm) standpipe. When mounted correctly, it is completely protected from the process and can even be used in harsh, corrosive environments.

During operation, the ultrasonic transducer emits acoustic pulses in a narrow beam perpendicular to the transducer face. The level transceiver measures the propagation time between pulse emission and reception of the echo to calculate the distance from the transducer to the material. Variations in sound velocity due to changes in temperature within the permissible range are automatically compensated by the integral temperature sensor.

- Key Applications: chemical storage, liquid tanks

Technical specifications

Mode of operation	
Measuring principle	Ultrasonic transducer
Input	
Measuring range	0.3 ... 10 m (1 ... 33 ft)
Output	
Frequency	44 kHz
Beam angle	12°
Accuracy	
Temperature compensation	Compensated by integral temperature sensor
Rated operating conditions	
Pressure	Normal atmospheric pressure
Ambient conditions	
• Ambient temperature	-20 ... +60 °C (-5 ... +140 °F) (ATEX approved model) -40 ... +73 °C (-40 ... +163 °F) (CSA/FM approved model)
Design	
Weight [1]	1.4 kg (3 lbs)
Material (enclosure)	Base and lid made of ETFE or PVDF (epoxy fitted joint)[2]
Process connection	2" NPT [(Taper), ANSI/ASME B1.20.1], R 2" [(BSPT), EN 10226] or G 2" [(BSPP), EN ISO 228-1]
Degree of protection	IP68
Cable connection	2-core shielded/twisted, 0.519 mm² (20 AWG), PVC sheath
Cable (max. length)	365 m (1200 ft) with RG 62 A/U coaxial cable
Options	
Flange adapter	3" Universal (fits DN 65, PN 10 and 3" ASME)
Submergence coupling	For maintaining high level readings while the transducer is submerged
Certificates and approvals	CE[3], CSA Class I, II, III, Div. 1, Gr. A, B, C, D, E, F, G T3 (ETFE only), FM Class I, II, Div. 1, Gr. C, D, E, F, G T4A, ATEX II 2G EEx m IIC T5, C-TICK, INMETRO: Br-Ex m II T5

1) Approximate shipping weight of transducer with standard cable length
2) When measuring chemicals, check compatibility of ETFE or PVDF and epoxy, or mount joint external to process.
3) EMC certificate available on request

© Siemens AG 2011

ST-H

Selection and Ordering data		Order No.
Echomax® ST-H ultrasonic transducer	C)	**7ML1100-**
Level measurement in chemical storage and liquid tanks. The narrow design of the ST-H allows the transducer to be mounted on a 2" standpipe. Measuring range: min. 0.3 m (1 ft), max. 10 m (33 ft).		**■■A■0**
Process connection		
ETFE, 2" NPT [(Taper), ANSI/ASME B1.20.1]		**0**
PVDF copolymer, 2" NPT [(Taper), ANSI/ASME B1.20.1]		**3**
Cable length		
5 m (16.40 ft)		**A**
10 m (32.81 ft)		**B**
30 m (98.43 ft)		**C**
50 m (164.04 ft)		**D**
100 m (328.08 ft)		**E**
Approvals		
FM Class I, II, Div. 1, C-TICK		**2**
Operating Instructions		
Quick Start Manual, multi-language	C)	**7ML1998-5QK82**
Applications Guidelines, multi-language	C)	**7ML1998-5HV61**
Note: The Applications Guidelines should be ordered as a separate line item on the order.		
This device is shipped with the Siemens Milltronics manual CD containing the complete ATEX Quick Start and Operating Instructions library.		

C) Subject to export regulations AL: N, ECCN: EAR99

Selection and Ordering data	Order code
Further designs	
Please add "**-Z**" to Order No. and specify Order code(s).	
Acrylic coated, stainless steel tag [13 x 45 mm (0.5 x 1.75")]: Measuring-point number/identification (max. 16 characters) specify in plain text	**Y17**
Accessories	Order No.
Universal box bracket, mounting kit	**7ML1830-1BK**
3" ASME, DN 65 PN 10, JIS 10K 3B ETFE flange adapter for 2" NPT	**7ML1830-1BT**
3" ASME, DN 65 PN 10, JIS 10K 3B ETFE flange adapter for 2" BSPT	**7ML1830-1BU**
Easy Aimer 2, NPT with ¾" x 1" PVC coupling	**7ML1830-1AQ**
Easy Aimer 2, aluminum with M20 adapter and 1" and 1½" BSPT aluminum couplings	**7ML1830-1AX**
Easy Aimer 304, with stainless steel coupling	**7ML1830-1AU**
Easy Aimer 304, with M20 adapter and 1" and 1½" BSPT 304 SS couplings	**7ML1830-1GN**

© Siemens AG 2011

Dimensional drawings

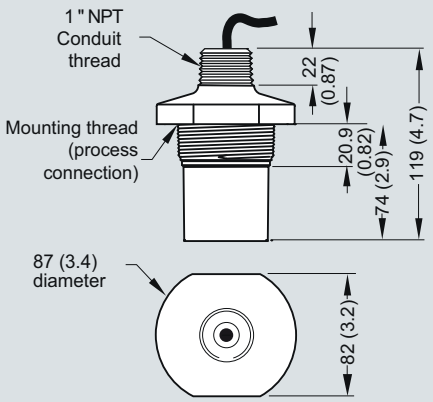

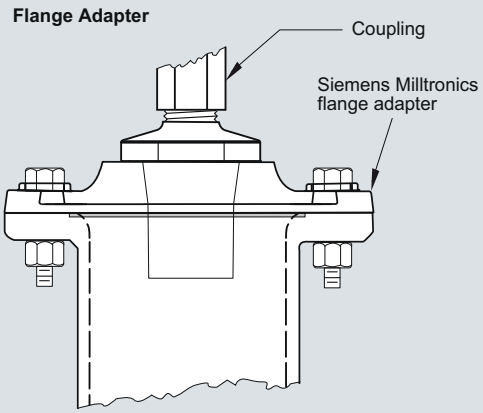

ST-H ultrasonic transducer, dimensions in mm (inch)

Schematics

Direct Connection

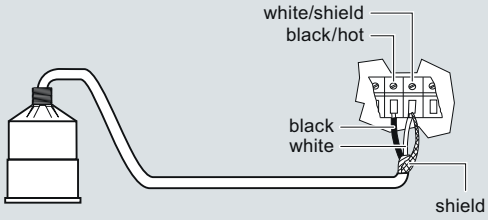

Coaxial Extension

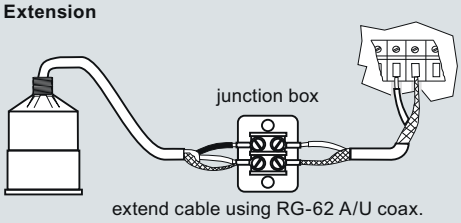

3 Terminal Direct*

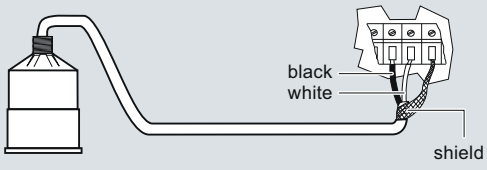

3 Terminal Extension*

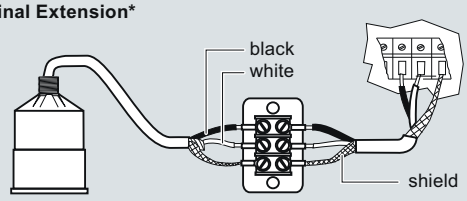

* For SITRANS LUC500, MultiRanger 100/200, HydroRanger 200

ST-H ultrasonic transducer connections

APPLICABLE TO CANADIAN INSTALLATIONS IN HAZARDOUS LOCATIONS ONLY.

CONFIDENTIAL
IMPORTANT NOTICE
THIS DOCUMENT REMAINS THE PROPERTY OF MILLTRONICS AND IS SUBJECT TO RECALL. IT MAY NOT BE COPIED, AND IS ISSUED AND CAN BE UTILIZED ONLY FOR SUCH LIMITED PURPOSES AS MAY SPECIFICALLY HAVE BEEN AUTHORIZED BY MILLTRONICS. IT IS TO BE MAINTAINED CONFIDENTIAL, SINCE IT MAY CONTAIN PROPRIETARY INFORMATION AND TRADE SECRETS OF MILLTRONICS OR OTHERS. THE ITEMS DEPICTED MAY THEMSELVES BE THE SUBJECT OF PATENTS, INDUSTRIAL DESIGN REGISTRATIONS OR COPYRIGHTS OF MILLTRONICS OR OTHERS, AND THE ISSUE OF THIS DRAWING DOES NOT IMPLY ANY LICENSE UNDER ANY SUCH RIGHTS.
COPYRIGHT MILLTRONICS
ALL RIGHTS RESERVED

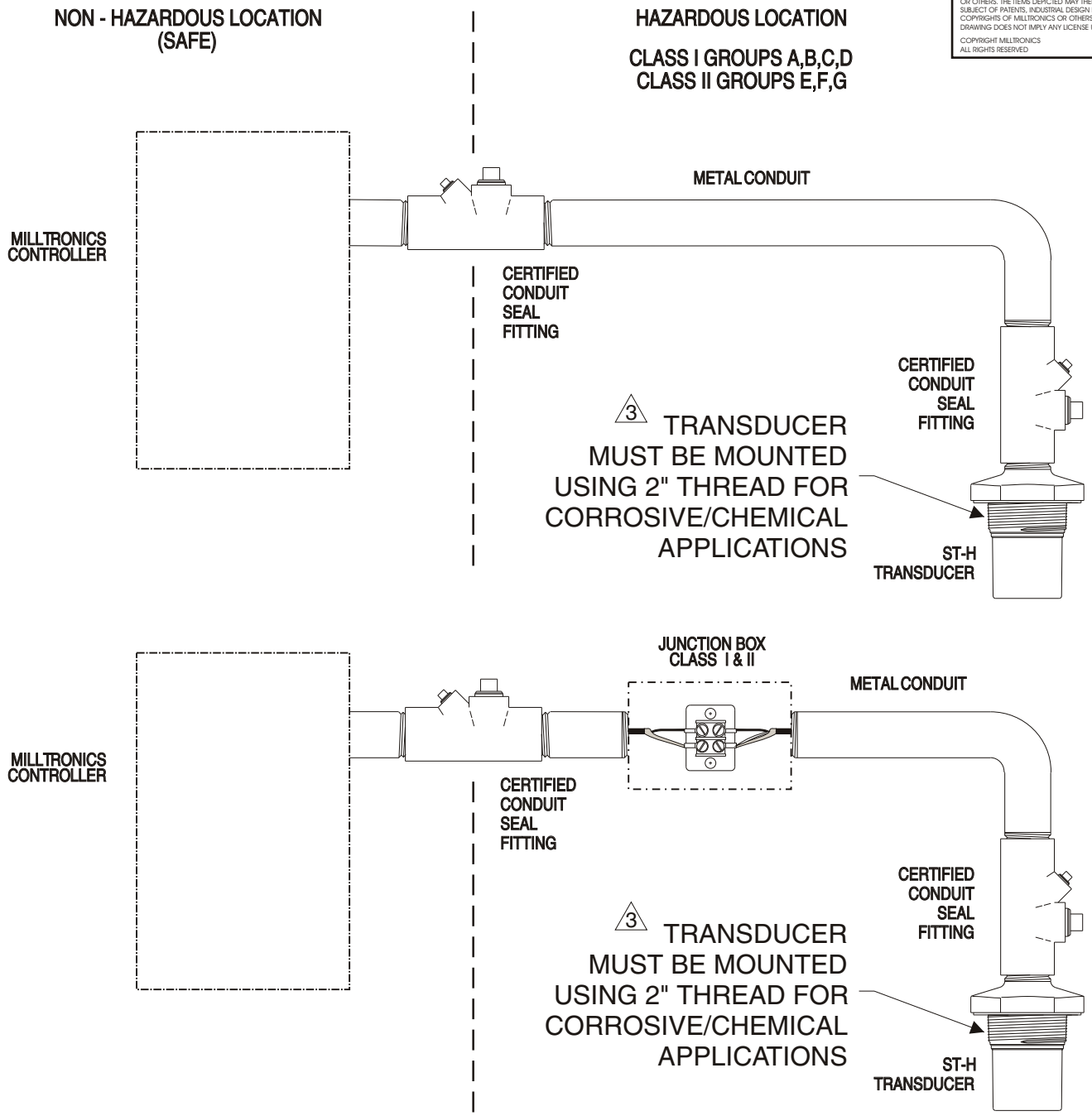

NOTES :

1) THE TRANSDUCER CABLE MUST BE TERMINATED IN AN AREA EXTERNAL TO HAZARDOUS LOCATIONS, CLASS I & II GR. A,B,C,D,E,F,G
2) A SEAL SHALL BE INSTALLED WITHIN 50 mm OF THE TRANSDUCER CONDUIT HUB.
3) THE MAX. TIGHTENING TORQUE AT THE CONDUIT HUB OF THE TRANSDUCER SHALL NOT EXCEED 22 N•m. INSTALLATION SHALL BE DONE IN ACCORDANCE WITH CEC PART 1 REQUIREMENTS.

No.	REVISION DESCRIPTION	DWG BY	APPRO.	DATE
3	ADDED MOUNTING NOTE PER ECN #97-887-0-0009	BG	AC	AUG 14/97
2	ADDED CANADIAN USE TITLE ECN #97-887-0-M006	BG	AC	MAR 05/97
1	CHANGED TITLE & REVISED FOR APPV'LS PER ECN #96-887-0-E000	TJTD	SN	APR 01/96
0	FOR CONSTRUCTION	DLM	IVZ	JUN 14/93

DRAWING SCALE: NONE
DRAWN BY: D. McCONNEL
CHECKED BY: TIEN VU
APPROVED BY: IAN VAN ZYL

TOLERANCES UNLESS OTHERWISE NOTED
1 PLACE DECIMAL ±0.030" FRACTIONS ±0.030"
2 PLACE DECIMAL ±0.010" ANGLES ±0.5°
3 PLACE DECIMAL ±0.002"

THIRD ANGLE PROJECTION

TITLE
ST-H TRANSDUCER INTERCONNECTION DIAGRAM

MILLTRONICS
PETERBOROUGH, ONTARIO, CANADA.

FILE No. 10196203
PLOT AT 1:1
DRAWING No. 1-9470004Z-DX-A
SHEET 1 OF 1
REV 3

This page intentionally left blank

Enviro-Care
A WAMGROUP® Company

Water Strainer

This page intentionally left blank

KECKLEY

Style F-150

Y-Strainer
Cast Bronze (ASTM B 584, C84400)
125 lb. Threaded



Style E-150

Y-Strainer
Cast Bronze (ASTM B 584, C84400)
125 lb. Solder Joint



Cast Bronze Y-Strainer

APPLICATIONS

Steam, water, oil or gas where protection from foreign matter in a pipeline is required.

CONSTRUCTION

The Keckley Style F-150 & E-150 stainers are constructed from the finest bronze castings and are machined to exacting specifications.

Solder Joint Ends are in compliance with ASME B16.8 unless otherwise specified.

FEATURES

The Keckley Style F-150& E-150 strainers feature a machined seat in the body and cap for propper alignment and to ensure accurate reseating when servicing is required. These strainers have a straight threaded cap and are furnished standard with a NPT blow-off connection. The gasket is a flat fiber gasket that is compressed between the body and cap for maximum strength and durability. Keckley Style F-150 & E-150 strainers are furnished with a bronze blow-off plug unless otherwise specified.

SCREENS

Standard screens are 20 mesh 304 stainless steel through size 2". Sizes 2-1/2", 3" and 4" are furnished with 3/64" perforated 304 stainless steel screens. All screens are spot welded for maximum strength. Different size perforations and meshes are available in stainless steel, monel, and brass to meet specific media requirements.

SELF CLEANING

Self cleaning is accomplished by opening the valve or drain plug connected to the blow-off port. **Warning:** See Maintenance Instructions on page S6 of the Strainer Information Section for additional precautions and detailed information on servicing the strainer.

WORKING PRESSURES - NON SHOCK

NOM. RATING	MEDIA	1/4" to 3"	8 mm to 80 mm
125# (THREADED & SOLDER JOINT)	STEAM	125 PSI @ 400ºF	862 KPa @ 204ºC
	W.O.G.	200 PSI @ 150ºF	1379 KPa @ 66ºC

KECKLEY

TECHNICAL DATA
DIMENSIONS AND WEIGHTS

Style F-150 & E-150

Y-Strainer, 125 lb. Threaded & Solder Joint Cast Bronze (ASTM B 584, C84400)

Style F-150
(Threaded)

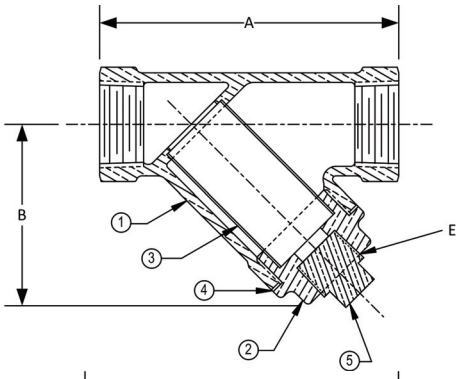

Style E-150
(Solder Joint)

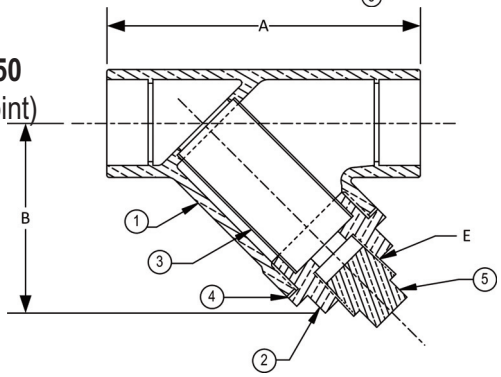

PARTS LIST		
ITEM	DESCRIPTION	MATERIAL
1	Body	Bronze (ASTM A B584, C84400)
2	Cap	Bronze (ASTM A B584, C84400)
3	Screen	Stainless Steel (304)
4	Gasket	Composition
5	Plug	Bronze (ASTM A B584, C84400)

STANDARD SCREENS SUPPLIED

SIZE		SCREEN GAGE	SCREEN PERFORATION					
			FOR STEAM		OPEN AREA	FOR LIQUID		OPEN AREA
in	mm		in	mm		in	mm	
1/4 to 2	8 to 50	20 MESH STAINLESS STEEL						49%
2-1/2 to 3	65 & 80	28	3/64	1.2	33%	3/64	1.2	33%

Options: Other meshes, perforations, and screen materials are available.

SIZE		DIMENSIONS												WEIGHTS			
		A				B				E							
		F-150		E-150		F-150		E-150		F-150		E-150		F-150		E-150	
in	mm	in	mm	in	mm	in	mm	in	mm	in	mm	in	mm	lbs	kgs	lbs	kgs
1/4	8	3-3/16	81	3-3/8	86	2-1/4	57	2-1/4	57	3/8	10	3/8	10	0.80	0.4	0.75	0.3
3/8	10	3-3/16	81	3-3/8	86	2-1/4	57	2-1/4	57	3/8	10	3/8	10	0.80	0.4	0.75	0.3
1/2	15	3-3/16	81	3-3/8	86	2-1/4	57	2-1/4	57	3/8	10	3/8	10	0.80	0.4	0.75	0.3
3/4	20	3-15/16	100	4-1/4	108	2-5/8	67	2-5/8	67	3/8	10	3/8	10	1.20	0.5	1.00	0.5
1	25	4-1/2	114	5	127	3	76	3-3/16	81	1/2	15	1/2	15	1.80	0.8	2.25	1.0
1-1/4	32	5-5/16	135	5-7/8	149	3-9/16	90	3-3/4	95	1/2	15	1/2	15	2.70	1.2	2.75	1.2
1-1/2	40	6-3/16	157	6-7/8	175	4	102	4-1/8	105	1/2	15	1/2	15	3.60	1.6	3.25	1.5
2	50	7-1/2	191	8-5/8	219	4-5/8	117	5-1/8	130	1/2	15	1/2	15	5.60	2.5	5.75	2.6
2-1/2	65	9	229	10-3/8	264	5-1/2	140	5-3/4	146	1/2	15	1/2	15	10.00	4.5	8.50	3.9
3	80	10-1/8	257	11-3/4	298	6-1/8	156	6-1/2	165	1/2	15	1/2	15	13.50	6.1	12.50	5.7

Certified dimensional drawings are available upon request.
†This table reflects only the nearest metric equivalents.

FLOW COEFFICIENTS

Size	C_V	Size	C_V	Size	C_V
1/4"	9.5	1"	30	2-1/2"	129.7
3/8"	9.5	1-1/4"	44.9	3"	161.3
1/2"	9.5	1-1/2"	61		
3/4"	18.7	2"	98		

TOTAL SCREEN AREA

Size	(in^2)	Size	(in^2)	Size	(in^2)
1/4"	3.09	1"	9.54	2-1/2"	46.98
3/8"	3.09	1-1/4"	14.26	3"	62.87
1/2"	3.09	1-1/2"	19.94		
3/4"	7.36	2"	33.39		

*See DETERMINING RATIOS on page S5 of the Strainer Information Section for calculating NET FREE AREA of the screen to inside pipe area.

PRESSURE vs. TEMPERATURE CHART
125# Threaded & Solder Joint Bronze (ASTM B 548, C84400)

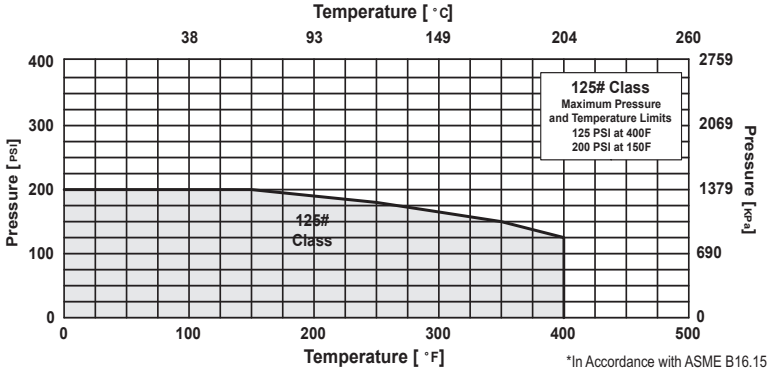

*In Accordance with ASME B16.15

KECKLEY

PRESSURE DROP CHART

Threaded "Y" Pattern Strainers (Styles B, BDI, E-150, F-150, F-300, SB, SB-7, SSB and SSB-7)

This pressure drop chart is based on the flow of clean water through the Keckley "Y" strainers listed above with screen perforations ranging from 3/64" through 1/8" and is additionally for use with those units equipped with a 20 mesh screen as standard.

TO USE CHARTS:

Find your desired rate of flow (GPM) on the left hand side of the chart. Follow its corresponding horizontal line to the point where it intersects the diagonal line indicating the strainer pipe size. From this point of intersection, follow the vertical line down to the bottom of the chart to determine the approximate pressure drop.

CORRECTION FACTORS:

For finer mesh screens that are backed with a perforated sheet, multiply the pressure drops shown at right by the following:

40 mesh	x 1.2
60 mesh	x 1.4
80 mesh	x 1.6
100 mesh	x 1.7

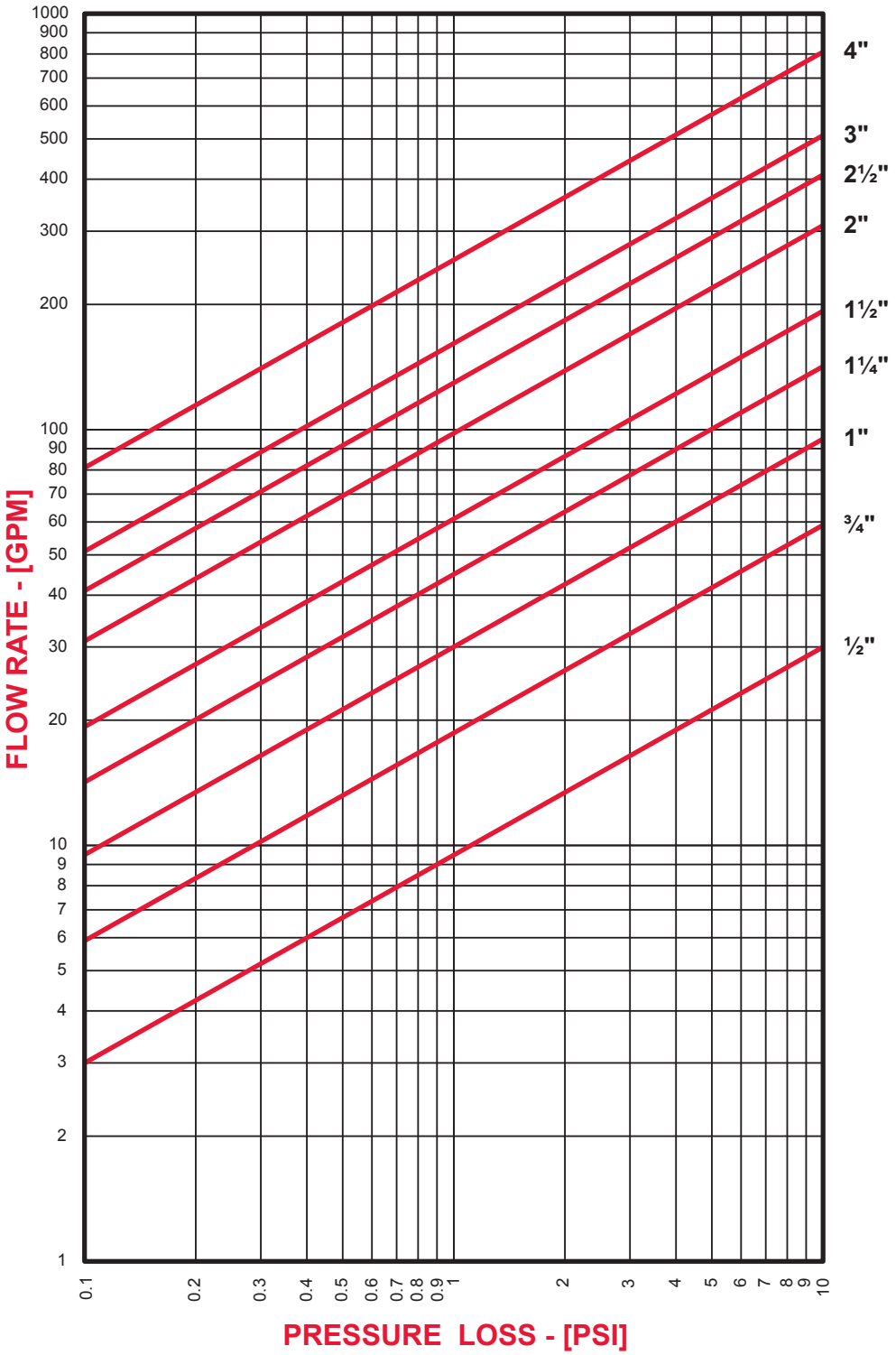

This page intentionally left blank

Enviro-Care
A WAMGROUP® Company

Water Hammer Eliminator

This page intentionally left blank

For Commercial Applications

Job Name _____ Contractor _____

Job Location _____ Approval _____

Engineer _____ Contractor's P.O. No. _____

Approval _____ Representative _____

Series 15M2
Water Hammer Arrestors

Sizes: ½" - 1" (15-25mm)



15M2

What is Water Hammer?

The noise from banging pipes is caused by shocks of high speed water flowing in the piping system when a fixture is suddenly closed. Sudden stoppage of the water (a non-compressible liquid) flowing at a given pressure and velocity causes a surge or spike of pressure and is called water hammer. When this occurs, a pressure wave travels back through the piping until it finds a point of relief.

Dishwashers, clothes washers, fast closing positive shutoff valves incorporated in the system all contribute to creating water shock which is not only annoying but damaging to pipes and appliances. The Watts Series 15M2 incorporates a pre-charged, permanent sealed air chamber to absorb the shock. The sealed chamber prevents the loss of air to the water and insures long and trouble-free life.

Features

- NPT solid hex brass adapter or solder end connection for easy installation
- Approved for installation with no access panel required
- May be installed in new or existing plumbing systems with a standard pipe tee vertically, horizontally or at any angle
- PDI Listed (PDI WH201)
- Maintenance free – piston is the only moving part
- Air pre-load is 60psi (4.2 bar)
- Factory air charged and permanently sealed

Standards

Standard: Listed by IAPMO, ASSE 1010 approved, ANSI A112.26.1M approved, PDI WH201 approved and certified.

Pressure - Temperature

Operating Pressure: Designed to operate on all domestic and commercial lines @ 150psi (10.6 bar) working pressure.

Temperature Range: 33°F to 180°F (0.5°C to 82°C).

Materials

Body:	Copper tubing
Piston:	Polypropylene
Adapter:	Brass
O-ring:	EPDM

Watts product specifications in U.S. customary units and metric are approximate and are provided for reference only. For precise measurements, please contact Watts Technical Service. Watts reserves the right to change or modify product design, construction, specifications, or materials without prior notice and without incurring any obligation to make such changes and modifications on Watts products previously or subsequently sold.

Sizing and Placement

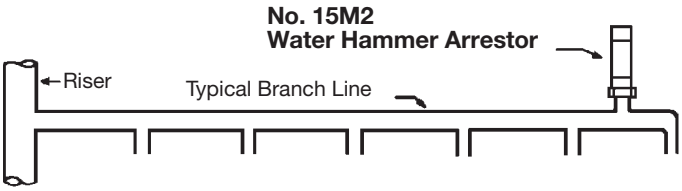

As shown, it has been established that the preferred location for the water hammer arrestor is at the end of the branch line between the last two fixtures served.

The location of the water hammer arrestor shown above applies to branch lines that do not exceed 20 ft. (6m) in length, from the start of the horizontal branch line to the last fixture supply on this branch line. When the branch line exceeds the 20 ft. (6m) length, an additional water hammer arrestor should be used. This practice is best defined by two rules which have been established to cover the placement of water hammer arrestors.

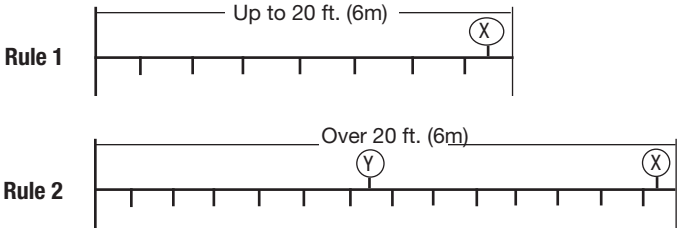

Rule 1 covers multiple fixture branch lines which do not exceed 20 ft. (6m) in length.

Explanation - Fixture-unit sizing and selection table is used to select the required PDI unit (water hammer arrestor).

Rule 2 covers multiple fixture branch lines which do exceed 20 ft. (6m) in length.

Explanation - Fixture-unit sizing and selection table is used to select the required PDI unit (water hammer arrestor). The sum of the fixture units rating of units X and Y shall be equal to or greater than the demand of the branches.

Dimensions - Weight

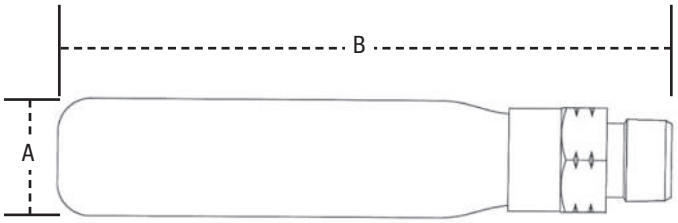

SIZE (DN)		DIMENSIONS				WEIGHT	
		A		B			
		in.	*mm*	*in.*	*mm*	*(lbs)*	*(kgs)*
Threaded							
½"	15M2-A	1⅛	28.5	5 15⁄16	150.9	0.5	0.2
¾"	15M2-B	1⅜	34.9	8 9⁄16	218.0	0.9	0.4
1"	15M2-C	1⅝	41.3	8 13⁄16	223.5	1.3	0.6
1"	15M2-D	2⅛	54.0	9 15⁄16	252.5	2.0	0.9
1"	15M2-E	2⅛	54.0	12 11⁄16	322.5	2.3	1.1
1"	15M2-F	2⅝	66.7	11 5⁄32	283.5	2.7	1.2

Sizing and Selection Table

SIZE (DN)	MODEL	ORDER CODE	CROSS FIXTURE UNITS	REF. PDI STANDARD
in. mm	*Threaded*			
½" 15	15M2-A	0750140	1-11	A
¾" 20	15M2-B	0750141	12-32	B
1" 25	15M2-C	0750142	33-60	C
1" 25	15M2-D	0750143	61-113	D
1" 25	15M2-E	0750144	114-154	E
1" 25	15M2-F	0750145	155-330	F

Fixture Units Sizing Information

FIXTURE	TYPE OF SUPPLY CONTROL	FIXTURE UNITS PUBLIC TOTAL	PUBLIC C.W.	PUBLIC H.W.	PRIVATE TOTAL	PRIVATE C.W.	PRIVATE H.W.
Water Closet 1.66 PF	Flush Valve	8	8	–	5	5	–
Water Closet 1.66 PF	Flush Tank	5	5	–	2.5	2.5	–
Pedestal Urinal 1.06 PF	Flush Valve	4	4	–	–	–	–
Stall or Wall Urinal	Flush Valve 1.06 PF	4	4	–	–	–	–
Stall or Wall Urinal	Flush Tank 1.06 PF	2	2	–	–	–	–
Lavatory	Faucet	2	1½	1½	1	1	1
Bathtub	Faucet	4	2	3	2	1½	1½
Shower Head	Mixing Valve	4	2	3	2	1	2
Bathroom Group	Flush Valve Closet	–	–	–	8	8	3
Bathroom Group	Flush Tank Closet	–	–	–	6	6	3
Separate Shower	Mixing Valve	–	–	–	2	1	2
Service Sink	Faucet	3	3	3	–	–	–
Laundry Tubs (1-3)	Faucet	–	–	–	3	3	3
Combination Fixture	Faucet	–	–	–	3	3	3

USA: No. Andover, MA • Tel. (978) 688-1811 • Fax: (978) 794-1848 • www.watts.com
Canada: Burlington, ONT. • Tel. (905) 332-4090 • Fax: (905) 332-7068 • www.wattscanada.ca

© 2011 Watts

Enviro-Care
A WAMGROUP® Company

Control Panel Components

This page intentionally left blank

Catalog Cuts

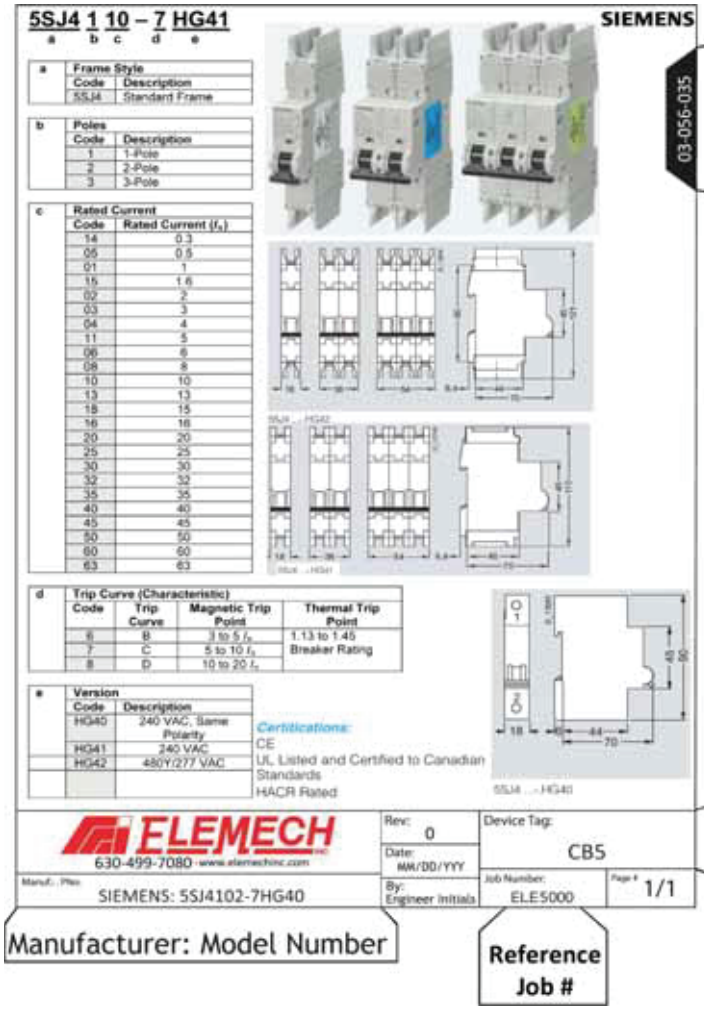

ELEMECH INC. 630-499-7080 · www.elemechinc.com	Rev: 0	Device Tag:	
	Date: 7/5/2018		
Manuf.: . PNo: Catalog Cuts	By: JAP	Job Number: EVC7258	Page # 1/1

C1WH6

PANDUIT

10-069-001

- **Base and covers sold separately**
- Non-slip cover design incorporates integral high friction lining to inhibit cover movement
- Cover flush with base provides greater wire capacity and improves aesthetics
- Easy cover removal makes changes to wiring quick and easy
- Available in various colors



Part Number	C1WH6
RoHS Compliancy Status	Compliant
Part Description	Covers duct to protect wires, improve aesthetics and provides greater wire capacity. Base and covers sold separately.
Product Type	Type C Cover for Flush Cover Wiring Duct
Material	Lead-Free PVC
Color	White
Length (ft.)	6
Length (m)	1.82
CE Compliant	Yes
Pricing Description	Duct Cover, PVC, 1"W X 6', White

Panduit Wiring Duct Approvals and Compliances

F1X3WH6

PANDUIT

10-069-007

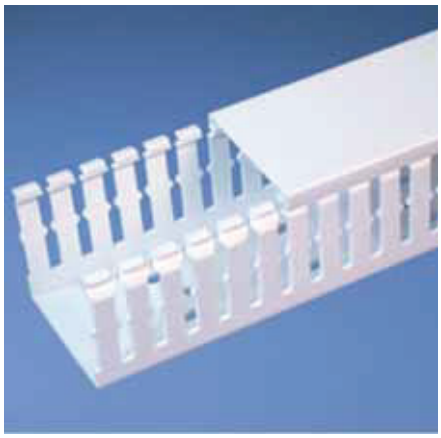

Specifications

- Made of lead-free PVC
- UL Recognized continuous use temperature: 122°F (50°C)
- UL94 Flammability Rating of V-0
- Conforms with NFPA 79-2002 section 14.3.1 requirement for flame retardant material
- Available in Light Gray and White
- Provided with mounting holes

Part Number	F1X3WH6
RoHS Compliancy Status	Compliant
Part Description	Narrow finger, slotted wiring duct.
Material	Lead–Free PVC
Color	White
CSA Certified	Yes
Length (ft.)	6
CE Compliant	Yes
CE Marking	Yes
Duct Size W x H (In.)	1.26 x 3.12
Duct Size W x H (mm)	32.0 x 79.2
Mounting Method	Standard Mounting Holes
Pricing Description	Slotted Duct,PVC,1"X3"X6',White

Panduit Wiring Duct Approvals and Compliances

DIN RAILS

IBOCO
Integrated Panel Management

42-063-007

Catalog Number	Lengths per Pack
G1	12
G1F	12
G1F1	24
OMEGA 2F	20
OMEGA 2F1	40*
OMEGA 3	20
OMEGA 3F	20
OMEGA 3F1	40*
OMEGA 3FD	20
OMEGA 3A	10
OMEGA 3AF	10
OMEGA 3AF1	20*
OMEGA 3AFD	10
OMEGA 3B	10
OMEGA 3B1	10*
OMEGA 75	2

Treated with galvanic zinc plating and passivation
(gal Zn 8c according to Din 50960)
Minimum thickness 6 microns
Standard length:
2 meters (6'6¾")



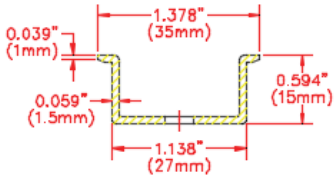

FRONT SECTION

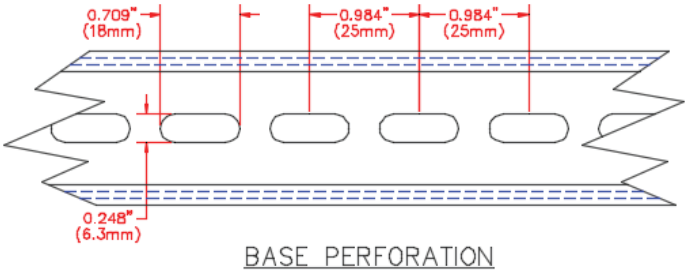

BASE PERFORATION

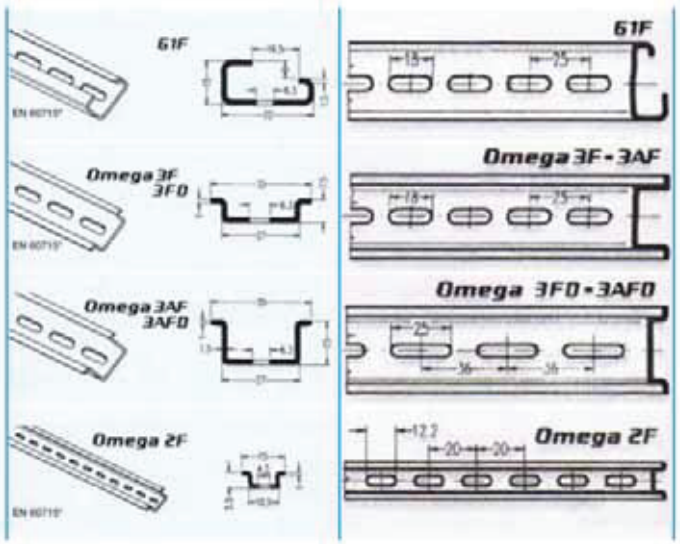

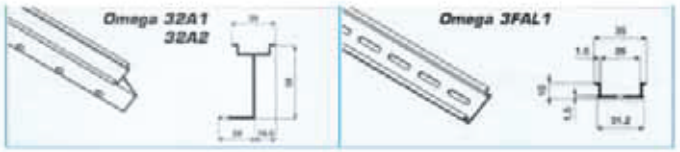

ELEMECH INC.
630-499-7080 · www.elemechinc.com

Manuf.: . PNo: IBOCO: OMEGA 3 AF	Rev: 0	Device Tag:	
	Date: 7/5/2018		
	By: JAP	Job Number: EVC7258	Page # 1/1

Wire – MTW Type

51-000-062

CONDUCTORS:
- 22 AWG - 8AWG Stranded Tinned Copper per ASTM B-33
- 22 AWG - 10 AWG Solid Tinned Copper per ASTM M-33

INSULATION:
- Color-Coded Polyvinyl Chloride (PVC)

TEMPERATURE RANGE/ VOLTAGE RATING:
- UL 1011/1015/1028/BC-5W2: 105°C/600V
- UL MTW: 90°C/600V
- CSA AWM I A/B & TEW: 105°C/600V

FLAME COMPLIANCES:
- UL VW-1
- CSA FT-1

INDUSTRY APPROVALS:
- UL Standard 758 - Styles 1011/1015/1028/1032/1230/1231/1335/1344
- UL Standard 1063 - MTW
- UL Standard 1426 - BC-5W2: 16 AWG - 8 AWG
- CSA AWM I A/B & TEW
- UL THHW
- UL CT Tray Rated
- SAE J378

STANDARD COLORS:
- Black, Orange, Blue, Violet, White, Yellow, Brown, Green/Yellow, Red, Green, Gray

OPTIONS:
- Stripes available upon request (minimums may apply)
- Other copper constructions available upon request (minimums may apply)

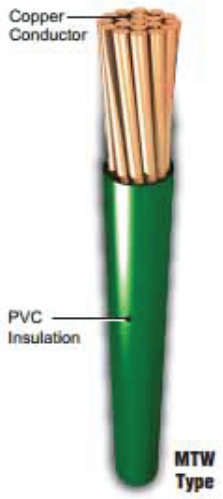

Catalog Number	Description
F22027	22 AWG (7/.0096) TC AWM 1015
F20037	20 AWG (10/30) TC AWM 1015
F18054	18 AWG (16/30) TC AWM 1015
F16032	16 AWG (26/30) TC AWM 1015
F14037	14 AWG (41/30) TC AWM 1015
F12024	12 AWG (65/30) TC AWM 1015
F10012	10 AWG (105/30) TC AWM 1015
F08010	8 AWG (7X19/29) TC AWM 1028

TEW/MTW Wire (Tinned Copper) Applications:

- This tinned copper hook up wire may be used for wiring of machine tools, appliances, and control cabinets.

ELEMECH INC.
630-499-7080 · www.elemechinc.com

Rev: 0	Device Tag:		
Date: 7/5/2018			
Manuf.: . PNo: ELEMECH: 51-000-062	By: JAP	Job Number: EVC7258	Page # 1/1

System pro *M* compact®
Miniature Circuit Breaker SU200 M
for branch circuit protection acc. to UL 489

03-001-124

The miniature circuit breaker SU200 M is ABB's solution for UL 489 branch circuit protection up to 480 Y/277 V AC and 96 V DC. This circuit breaker is an all-round device for AC and DC applications for universal use in North American and global markets due to its approvals acc. to the international standards UL, CSA and IEC. Moreover, SU200 M is fully compatible with System pro *M* compact® UL 489 accessories.

Features

- High performance MCB with 10 kA interrupting capacity acc. to UL 489 / CSA 22.2 No. 5 and 15 kA breaking capacity acc. to IEC/EN 60947-2
- Certified up to I_n = 40 A at 480 Y/277 V AC acc. to UL 489 / CSA 22.2 No. 5
- Certified for AC and DC use acc. to UL and CSA
- 40 °C reference temperature acc. to UL and CSA
- Current limiting acc. to UL 489
- Clear contact position indication in red/green ("real CPI")

Standards and approvals

Standards	
UL 489	
CSA 22.2 No. 5	
IEC/EN 60947-2	
Approvals	
UL 489	US
CSA 22.2 No. 5	CA
VDE	DE
CCC	CN







General Data

Standards		UL 489, CSA 22.2 No. 5, IEC/EN 60947-2
Poles		1P, 2P, 3P, 4P
Tripping characteristics		C, K, Z
Rated current I_n		0.2 - 63 A
Rated frequency f		50 / 60 Hz, DC (0 Hz)
Rated insulation voltage U acc. to IEC/EN 60664-1		250 V AC (phase to ground), 440 V AC (phase to phase)
Overvoltage category		III
Pollution degree		3
Rated voltage	AC	1P: 277 V AC up to 40 A for C, Z char.,
	AC	277 V AC up to 35 A for K char., 240 V AC
	AC	2P, 3P, 4P: 480 Y / 277 V AC up to 40 A for C, Z char.,
	AC	480 Y / 277 V AC up to 35 A for K char., 240 V AC
Short-circuit current rating acc. to UL 489		10 kA
Application		–
Reference temperature for tripping characteristics		40 °C
Electrical endurance		6,000 ops (AC), 6,000 ops. (DC); 1 cycle (1 s - ON, 9 s - OFF)

Installation

Terminal	Failsafe bi-directional cylinder-lift terminal
Cross-section of conductors (top/bottom)	solid, stranded: 35 mm² / 35 mm² flexible: 25 mm² / 25 mm² 18 – 4 AWG
Cross-section of busbars (top/bottom)	10 mm² / 10 mm² 18 – 8 AWG
Mounting	On DIN rail 35 mm acc. to EN 60715 by fast clip

Dimensions and weight

Mounting dimensions acc. to DIN 43880	Mounting dimension 3
Pole dimensions (H x D x W)	111 x 69 x 17.5 mm
Pole weight	approx. 125 g

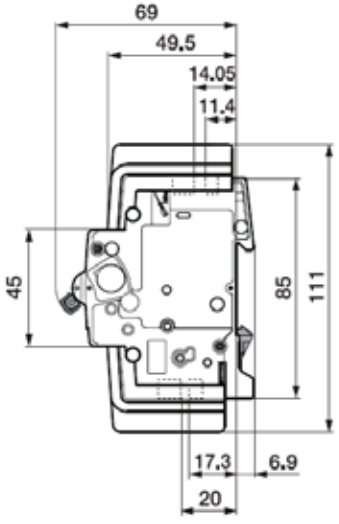

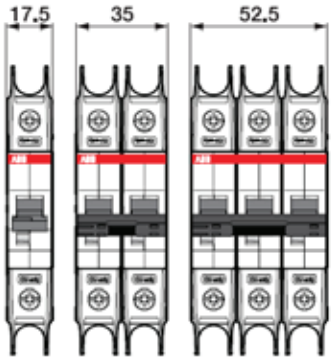

C characteristic

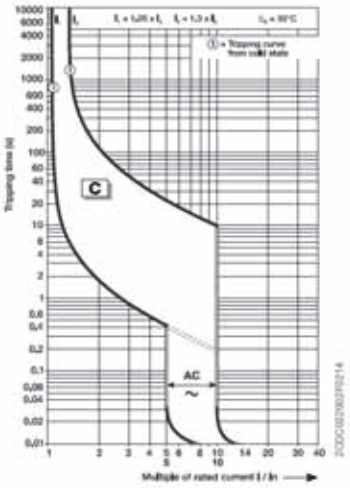

K characteristic

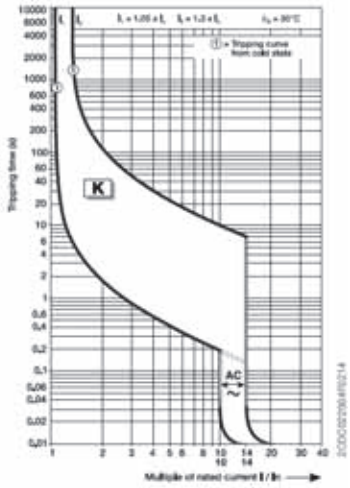

ELEMECH INC.
630-499-7080 · www.elemechinc.com

Manuf.: . PNo: ABB: SU201M-C2	Rev: 0	Device Tag: CB1	
	Date: 7/5/2018		
	By: JAP	Job Number: EVC7258	Page # 1/3

characteristic C

Number of poles	Rated current I_n A	Type	Order code	Weight per PCE kg	Packing unit PCE
1	0.5	SU201M-C0,5	2CDS271337R0984	0.125	10
	1	SU201M-C1	2CDS271337R0014	0.125	10
	1.6	SU201M-C1,6	2CDS271337R0974	0.125	10
	2	SU201M-C2	2CDS271337R0024	0.125	10
	3	SU201M-C3	2CDS271337R0034	0.125	10
	4	SU201M-C4	2CDS271337R0044	0.125	10
	5	SU201M-C5	2CDS271337R0054	0.125	10
	6	SU201M-C6	2CDS271337R0064	0.125	10
	8	SU201M-C8	2CDS271337R0084	0.125	10
	10	SU201M-C10	2CDS271337R0104	0.125	10
	13	SU201M-C13	2CDS271337R0134	0.125	10
	15	SU201M-C15	2CDS271337R0154	0.125	10
	16	SU201M-C16	2CDS271337R0164	0.125	10
	20	SU201M-C20	2CDS271337R0204	0.125	10
	25	SU201M-C25	2CDS271337R0254	0.125	10
	30	SU201M-C30	2CDS271337R0304	0.125	10
	32	SU201M-C32	2CDS271337R0324	0.125	10
	35	SU201M-C35	2CDS271337R0354	0.125	10
	40	SU201M-C40	2CDS271337R0404	0.125	10
	50	SU201M-C50	2CDS271337R0504	0.125	10
	60	SU201M-C60	2CDS271337R0604	0.125	10
	63	SU201M-C63	2CDS271337R0634	0.125	10

characteristic K

Number of poles	Rated current	Type	Order code	Weight per PCE	Packing unit
2	0.2	SU202M-K0,2	2CDS272337R0087	0.250	5
	0.3	SU202M-K0,3	2CDS272337R0117	0.250	5
	0.5	SU202M-K0,5	2CDS272337R0157	0.250	5
	0.75	SU202M-K0,75	2CDS272337R0187	0.250	5
	1	SU202M-K1	2CDS272337R0217	0.250	5
	1.6	SU202M-K1,6	2CDS272337R0257	0.250	5
	2	SU202M-K2	2CDS272337R0277	0.250	5
	3	SU202M-K3	2CDS272337R0317	0.250	5
	4	SU202M-K4	2CDS272337R0337	0.250	5
	5	SU202M-K5	2CDS272337R0357	0.250	5
	6	SU202M-K6	2CDS272337R0377	0.250	5
	8	SU202M-K8	2CDS272337R0407	0.250	5

Number of poles	Rated current I_n A	Type	Order code	Weight per PCE kg	Packing unit PCE
2	10	SU202M-K10	2CDS272337R0427	0.250	5
	13	SU202M-K13	2CDS272337R0447	0.250	5
	15	SU202M-K15	2CDS272337R0457	0.250	5
	16	SU202M-K16	2CDS272337R0467	0.250	5
	20	SU202M-K20	2CDS272337R0487	0.250	5
	25	SU202M-K25	2CDS272337R0517	0.250	5
	30	SU202M-K30	2CDS272337R0527	0.250	5
	32	SU202M-K32	2CDS272337R0537	0.250	5
	35	SU202M-K35	2CDS272337R0547	0.250	5
	40	SU202M-K40	2CDS272337R0557	0.250	5
	50	SU202M-K50	2CDS272337R0577	0.250	5
	60	SU202M-K60	2CDS272337R0587	0.250	5
	63	SU202M-K63	2CDS272337R0607	0.250	5
3	0.2	SU203M-K0,2	2CDS273337R0087	0.375	3
	0.3	SU203M-K0,3	2CDS273337R0117	0.375	3
	0.5	SU203M-K0,5	2CDS273337R0157	0.375	3
	0.75	SU203M-K0,75	2CDS273337R0187	0.375	3
	1	SU203M-K1	2CDS273337R0217	0.375	3
	1.6	SU203M-K1,6	2CDS273337R0257	0.375	3
	2	SU203M-K2	2CDS273337R0277	0.375	3
	3	SU203M-K3	2CDS273337R0317	0.375	3
	4	SU203M-K4	2CDS273337R0337	0.375	3
	5	SU203M-K5	2CDS273337R0357	0.375	3
	6	SU203M-K6	2CDS273337R0377	0.375	3
	8	SU203M-K8	2CDS273337R0407	0.375	3
	10	SU203M-K10	2CDS273337R0427	0.375	3
	13	SU203M-K13	2CDS273337R0447	0.375	3
	15	SU203M-K15	2CDS273337R0457	0.375	3
	16	SU203M-K16	2CDS273337R0467	0.375	3
	20	SU203M-K20	2CDS273337R0487	0.375	3
	25	SU203M-K25	2CDS273337R0517	0.375	3
	30	SU203M-K30	2CDS273337R0527	0.375	3
	32	SU203M-K32	2CDS273337R0537	0.375	3
	35	SU203M-K35	2CDS273337R0547	0.375	3
	40	SU203M-K40	2CDS273337R0557	0.375	3
	50	SU203M-K50	2CDS273337R0577	0.375	3
	60	SU203M-K60	2CDS273337R0587	0.375	3
	63	SU203M-K63	2CDS273337R0607	0.375	3

Monitoring Relays
1-Phase True RMS AC Over or Under Current
Type DIB01 100A

04-094-000

Ordering Key

DIB 01 C M24 100A

- Housing
- Function
- Type
- Item number
- Output
- Power supply
- Measuring range



Input Specifications

Input (current level)		
DIB01 100A	Built-in current transformer	
Measuring ranges		
Selectable by DIP-switch		**Max current**
2 to 20 A AC		120 A
5 to 50 A AC		120 A
10 to 100 A AC		120 A
Max. current for 30 s	250 A	
Max. current for 1 s	2000 A	

Contact input	
DIB01	Terminals A1, Y1
Disabled	Open
Enabled	< 10 kΩ
Latch disable	> 500 ms

Supply Specifications

Power supply	Overvoltage cat. III (IEC 60664, IEC 60038)
Rated operational voltage through terminals:	
A1, A2	24 VDC - 15% +10% 24 to 240 VAC ± 15% 45 to 65 Hz
Dielectric voltage	
Supply to input	4 kV
Supply to output	4 kV
Input to output	4 kV
Rated operational power	
DC	1 W
AC	1 W / 35 VA

Output Specifications

Output		SPDT relay
Rated insulation voltage		250 VAC
Contact ratings ($AgSnO_2$)		μ
Resistive loads	AC 1	8 A @ 250 VAC
	DC 12	5 A @ 24 VDC
Small inductive loads	AC 15	2.5 A @ 250 VAC
	DC 13	2.5 A @ 24 VDC
Mechanical life		≥ 30 x 10^6 operations
Electrical life		≥ 10^5 operations (at 8 A, 250 V, cos φ = 1)
Operating frequency		≤ 7200 operations/h
Dielectric strength		
Dielectric voltage		≥ 2 kVAC (rms)
Rated impulse withstand volt.		4 kV (1.2/50 μs)

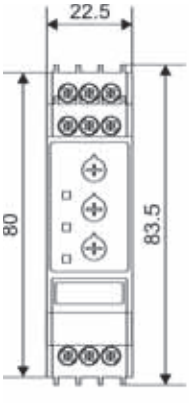

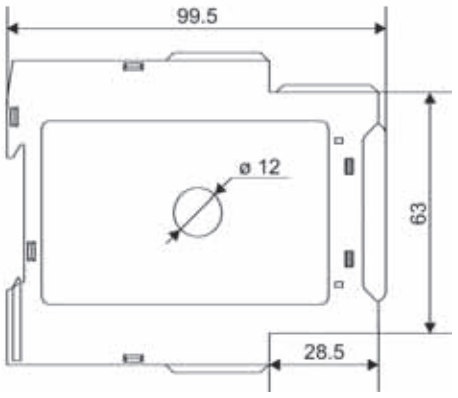

Approvals UL, CSA

ELEMECH INC.
630-499-7080 · www.elemechinc.com

Rev: 0	Device Tag: CM1		
Date: 7/5/2018			
Manuf.: . PNo: GAVAZZI: DIB01CM24100A	By: JAP	Job Number: EVC7258	Page # 1/1

Zelio® Plug-in Relays
RXM

Telemecanique

06-058-011


RXM●AB2F7

RXM Miniature Relays (page 4)

2 pole relays; 12 A, 1/2 hp (IEC rating = 12 A)
3 pole relays; 10 A, 1/3 hp (IEC rating = 10 A)
4 pole relays; 8 A, 1/3 hp (IEC rating = 6 A)
4 pole relays; 3 A (low level), 1/16 hp (IEC rating = 3 A)

- Mechanical "relay status" indicator on all relays
- Pilot light option available
- Manual operator optional for all relays
- Built-in marking area

Insulation characteristics

Rated insulation voltage (Ui)		250 V (IEC), 300 V (UL, CSA)
Rated impulse withstand voltage (Uimp)		3.6 kV (1.2/50 µs)
Dielectric strength (rms voltage)	Between coil and contact	2,500 Vac
	Between poles	2,500 Vac
	Between contacts	1,500 Vac

Contact characteristics

Relay type			**RXM2AB●●●**	**RXM3AB●●●**	**RXM4AB●●●**
Number and type of contacts (see page 12)			DPDT	3PDT	4PDT
Contact materials			AgNi		
Conventional thermal current (Ith)	For ambient temperature ≤ 131 °F (55 °C)		12 A	10 A	6 A
Rated operational current	Conforming to IEC in utilization category AC-1	N.O.	12 A	10 A	6 A
		N.C.	6 A	5 A	3 A
	Conforming to UL Resistive @277 Vac, hp @120 Vac		12 A, 1/2 hp	10 A, 1/3 hp	8 A, 1/3 hp
Maximum operating rate In operating cycles/hour	No load		18,000		
	Under load		1,200		
Switching voltage	Maximum		250 Vac/Vdc		
Switching capacity	Minimum		10 mA on 17 V		
	Maximum		3,000 VA	2,500 VA	1,500 VA
Utilization coefficient			20%		
Mechanical durability in millions of operating cycles			10		
Electrical durability in millions of operating cycles	Resistive load		0.1		

Coil characteristics

Average consumption		AC	1.2 VA
		DC	0.9 W
Drop-out voltage threshold		AC	> 0.15 Uc
		DC	> 0.1 Uc
Operating time (response time)	Between coil energization and making of the N.O. contact	AC	20 ms
		DC	20 ms
	Between coil de-energization and making of the N.C. contact	AC	20 ms
		DC	20 ms

Coil voltage Uc			**12 V**	**24 V**	**48 V**	**110 V**	**120 V**	**125 V**	**220 V**	**230 V**	**240 V**
Relay coil voltage codes			**JD**	**BD**	**ED**	**FD**	**—**	**GD**	**MD**	**—**	**—**
DC	Average resistance at 68 °F (20 °C) ± 10%		160 Ω	650 Ω	2,600 Ω	11,000 Ω	—	11,000 Ω	14,000 Ω	—	—
	Operating voltage limits	Min.	9.6 V	19.2 V	38.4 V	88 V	—	100 V	176 V	—	—
		Max.	13.2 V	26.4 V	52.8 V	121 V	—	138 V	242 V	—	—
Relay coil voltage codes			**—**	**B7**	**E7**	**—**	**F7**	**—**	**M7**	**P7**	**U7**
AC	Average resistance at 68 °F (20 °C) ± 15%		—	180 Ω	770 Ω	—	4,430 Ω	—	15,000 Ω	15,000 Ω	15,500 Ω
	Operating voltage limits	Min.	—	19.2 V	38.4 V	—	96 V	—	176 V	184 V	192 V
		Max.	—	26.4 V	52.8 V	—	132 V	—	242 V	253 V	264 V

Environment

Dielectric strength	2000 V AC (between poles) 2000 V AC (between coil and contact) 1300 V AC (between contacts)
Product certifications	CSA GOST Lloyds UL
Standards	EN/IEC 61810-1 UL 508 CSA C22.2 No 14

Telemecanique

06-058-011

Miniature relays with lockable test button, without LED

Coil Voltage	Number and type of contacts - Thermal current (Ith)								
	DPDT - 12 A			3PDT - 10 A			4PDT - 6 A		
	Catalog Number	Weight		Catalog Number	Weight		Catalog Number	Weight	
		lb.	kg		lb.	kg		lb.	kg
12 Vdc	RXM2AB1JD	0.082	0.037	RXM3AB1JD	0.084	0.038	RXM4AB1JD	0.080	0.036
24 Vdc	RXM2AB1BD	0.082	0.037	RXM3AB1BD	0.084	0.038	RXM4AB1BD	0.080	0.036
48 Vdc	RXM2AB1ED	0.082	0.037	RXM3AB1ED	0.084	0.038	RXM4AB1ED	0.080	0.036
110 Vdc	RXM2AB1FD	0.082	0.037	RXM3AB1FD	0.084	0.038	RXM4AB1FD	0.080	0.036
220 Vdc	—	—	—	—	—	—	RXM4AB1MD	0.080	0.036
24 Vac	RXM2AB1B7	0.082	0.037	RXM3AB1B7	0.084	0.038	RXM4AB1B7	0.080	0.036
48 Vac	RXM2AB1E7	0.082	0.037	RXM3AB1E7	0.084	0.038	RXM4AB1E7	0.080	0.036
120 Vac	RXM2AB1F7	0.082	0.037	RXM3AB1F7	0.084	0.038	RXM4AB1F7	0.080	0.036
230 Vac	RXM2AB1P7	0.082	0.037	RXM3AB1P7	0.084	0.038	RXM4AB1P7	0.080	0.036
240 Vac	—	—	—	—	—	—	RXM4AB1U7	0.080	0.036
Miniature relays with lockable test button, with LED									
12 Vdc	RXM2AB2JD	0.082	0.037	RXM3AB2JD	0.084	0.038	RXM4AB2JD	0.080	0.036
24 Vdc	RXM2AB2BD	0.082	0.037	RXM3AB2BD	0.084	0.038	RXM4AB2BD	0.080	0.036
48 Vdc	RXM2AB2ED	0.082	0.037	RXM3AB2ED	0.084	0.038	RXM4AB2ED	0.080	0.036
110 Vdc	RXM2AB2FD	0.082	0.037	RXM3AB2FD	0.084	0.038	RXM4AB2FD	0.080	0.036
125 Vdc	—	—	—	—	—	—	RXM4AB2GD	0.080	0.036
24 Vac	RXM2AB2B7	0.082	0.037	RXM3AB2B7	0.084	0.038	RXM4AB2B7	0.080	0.036
48 Vac	RXM2AB2E7	0.082	0.037	RXM3AB2E7	0.084	0.038	RXM4AB2E7	0.080	0.036
120 Vac	RXM2AB2F7	0.082	0.037	RXM3AB2F7	0.084	0.038	RXM4AB2F7	0.080	0.036
230 Vac	RXM2AB2P7	0.082	0.037	RXM3AB2P7	0.084	0.038	RXM4AB2P7	0.080	0.036

Miniature relays

RXM2●●●●●● RXM3●●●●●● RXM4●●●●●●

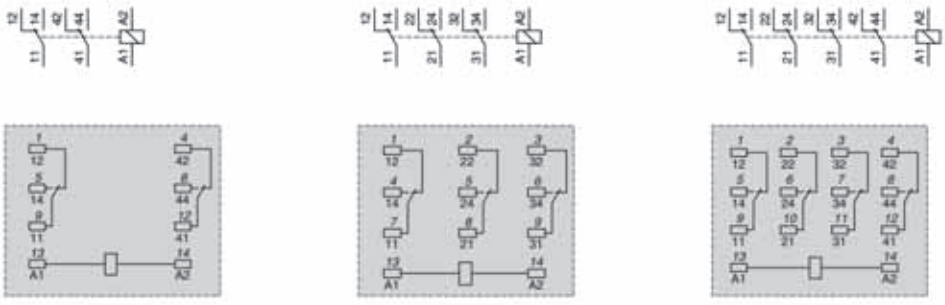

Resistive load AC

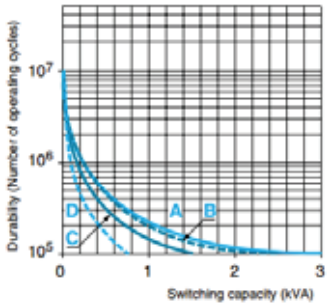

RXM ●●●●●● RXM 2 RXM 3 RXM 4

Common view Pin side view

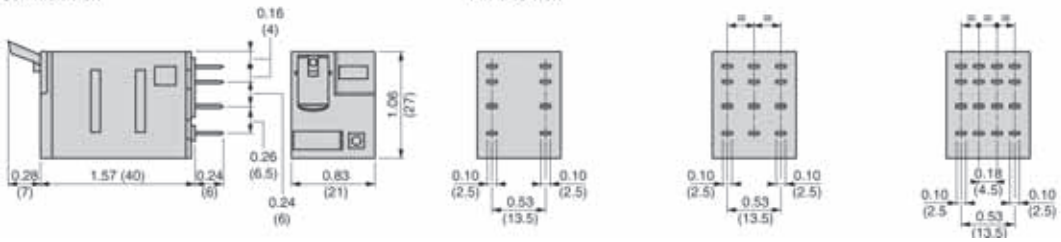

ELEMECH INC.
630-499-7080 · www.elemechinc.com

Rev: 0	Device Tag: CR1-3		
Date: 7/5/2018			
Manuf.: . PNo: SQUARE D: RXM3AB2F7	By: JAP	Job Number: EVC7258	Page # 2/2

RXZS2

bus jumper for Zelio Relay RXZ sockets with separate contacts



06-058-012

Main

Commercial Status	Commercialised
Range of product	Zelio Relay
Accessory / separate part type	Jumper
Accessory / separate part designation	Bus jumper
Sale per indivisible quantity	10

Complementary

Product compatibility	Socket RXZ
Accessory / separate part destination	All RXZ sockets with separate contacts
[Ith] conventional free air thermal current	5 A
Product weight	0.005 kg

Ordering and shipping details

Category	21128 - ZELIO ICE CUBE RELAY ACCESSORIES
Discount Schedule	CP2
GTIN	00785901924098
Nbr. of units in pkg.	10
Package weight(Lbs)	0.01
Stock Code	Stock - Normally stocked in distribution facility
Returnability	Y
Country of origin	CN

Sockets

Telemecanique

38-058-003

RXZE2S108M



Complementary

[Ith] conventional free air thermal current	12 A 5 A with bus jumper
[Ue] rated operational voltage	< 250 V
Tightening torque	<= 1 N.m (M3 screw(s))
Fixing mode	By screw mounting on panel Clip-on mounting on 35 mm symmetrical DIN rail
Marking	CE
Width	27 mm
Product weight	0.058 kg 0.07 kg

Environment

Standards	IEC 61984
Product certifications	CSA UL
Ambient air temperature for storage	-40...85 °C
Ambient air temperature for operation	-40...55 °C
IP degree of protection	IP20 conforming to EN/IEC 60529
Dielectric strength	2500 V
RoHS EUR status	Compliant
RoHS EUR conformity date	0801

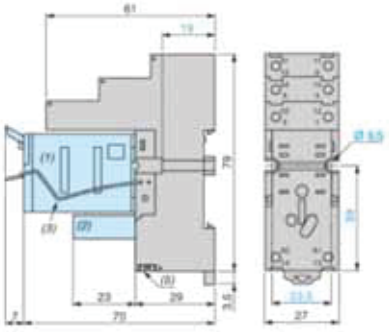

1 Relay
2 Protection Module
3 Carriage Stirrup
5 2 Links connection

Approvals for Sockets:

RXZE2S111M



Complementary

[Ith] conventional free air thermal current	10 A 5 A with bus jumper
[Ue] rated operational voltage	< 250 V
Tightening torque	<= 1 N.m (M3 screw(s))
Fixing mode	By screw mounting on panel Clip-on mounting on 35 mm symmetrical DIN rail
Marking	CE
Width	27 mm
Product weight	0.066 kg

Environment

Standards	IEC 61984
Product certifications	CSA UL
Ambient air temperature for storage	-40...85 °C
Ambient air temperature for operation	-40...55 °C
IP degree of protection	IP20 conforming to EN/IEC 60529
Dielectric strength	2500 V
RoHS EUR status	Compliant
RoHS EUR conformity date	0801

Dimensions

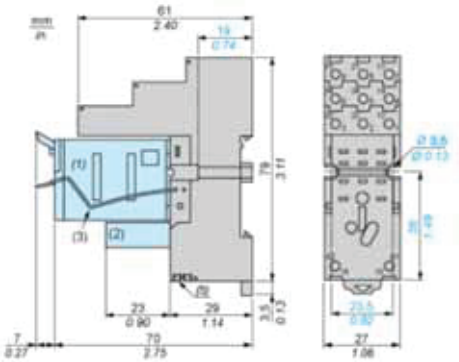

(1) Relays
(2) Protection module
(3) Maintaining clamp
(4) 2 elongated holes Ø 3.5 mm x 6.5 mm / Ø 0.13 in. x 0.25 in.
(5) 2 bus jumpers

Approvals for Sockets:

RXZE2S114M



Complementary

[Ith] conventional free air thermal current	10 A 5 A with bus jumper
[Ue] rated operational voltage	< 250 V
Tightening torque	<= 1 N.m (M3 screw(s))
Fixing mode	By screw mounting on panel Clip-on mounting on 35 mm symmetrical DIN rail
Marking	CE
Width	27 mm
Product weight	0.058 kg 0.07 kg

Environment

Standards	IEC 61984
Product certifications	CSA UL
Ambient air temperature for storage	-40...85 °C
Ambient air temperature for operation	-40...55 °C
IP degree of protection	IP20 conforming to EN/IEC 60529
Dielectric strength	2500 V
RoHS EUR status	Compliant
RoHS EUR conformity date	0801

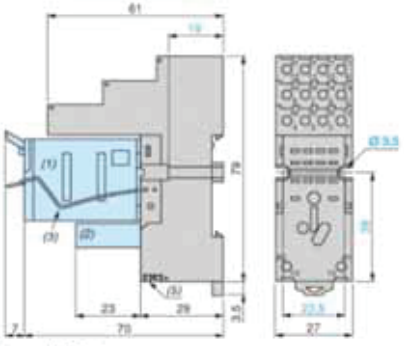

1 Relay
2 Protection Module
3 Carriage Stirrup
5 2 Links connection

Approvals for Sockets:

wieland

07-063-000

General Data

Part No: 07.311.4053.1
Description: End Cover – Black
Type of end plate – Yes
Snap in - Yes
Inflammability Class of insulation material acc. With UL94 – V0



ELEMECH INC. 630-499-7080 · www.elemechinc.com	Rev: 0	Device Tag: DB1	
	Date: 7/5/2018		
Manuf.: . PNo: WIELAND: 07.311.4053.1	By: JAP	Job Number: EVC7258	Page # 1/1

Cross connectors, (jumper bars) uninsulated

wieland

07-063-001

Type	Part no.	Std. pack
WKM 4/15	**6 mm spacing Screw: M 3**	
2pole 9215 - 2	Z7.210.3227.0	50
3pole 9215 - 3	Z7.210.3327.0	50
4pole 9215 - 4	Z7.210.3427.0	50
5pole 9215 - 5	Z7.210.3527.0	50
6pole 9215 - 6	Z7.210.3627.0	50
70pole 9215 M-70	Z7.210.3027.0	10



General

Colour	Other
Type	Cross connector
Modular spacing	6 mm
Number of bridged clamps	4
Mounting method	Screwable
Insulated	No

Accessories

Type	Cross connector
Mounting method	Screwable
Insulated	No
Colour	Other
Number of bridged clamps	4
Modular spacing	6 mm

wieland

07-063-002

Multi-tier blocks with screw connection

selos

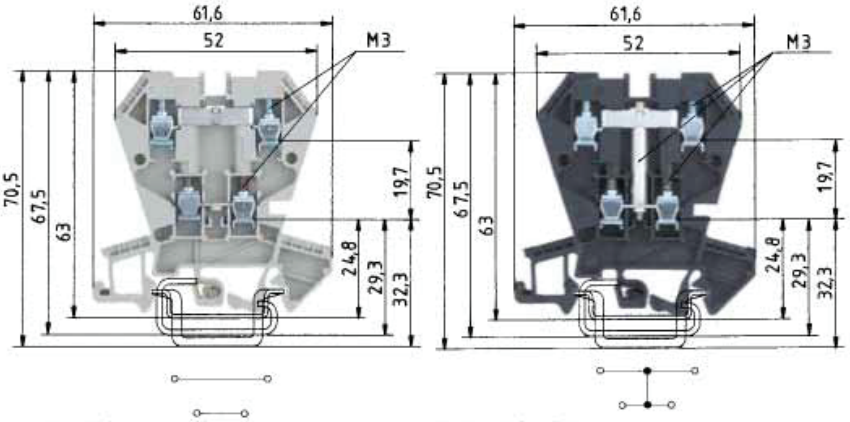

		WK 4 E/U				WK 4 E/U /VB			
0344 Ex II 2GD IM2		fine-stranded	solid	V	A	fine-stranded	solid	V	A
Ex e I/II		0.5-4mm²	0.5-4mm²	400V/6kV/3[3]	32	0.5-4mm²	0.5-4mm²	400V/6kV/3	32
EN 60947-7-1:2002									
EN 60947-7-2:2002									
UL ratings	Field/factory wiring	No. 22-10 AWG		300V	20	No. 22-10 AWG		300V	20
CSA ratings		No. 20-12 AWG		300V	10	No. 20-12 AWG		300V	10
KEMA 02 ATEX 2114 U[1]	EN 60079-0/EN 60079-7	0.5-4mm²	0.5-4mm²	275V	24/24[2]	0.5-4mm²	0.5-4mm²	275V	24
Width	Wire strip length	6mm			9mm	6mm			9mm
Approvals									

		Type	Part No.	Std. Pack	Type	Part No.	Std. Pack
Multi-tier block	gray	WK 4 E/U	57.404.7055.0	100			
Multi-tier block, vert. connected	black				WK 4 E/U/VB SCHWARZ	57.404.6955.1	100
Multi-tier ground block	green/yellow						
Function block	red						
Function block	orange						
Accessories							
1. Mounting rail TS 35, DIN rail 7.5 mm high	L = 2 m	35 x 27 x 7,5 EN 60715	98.300.0000.0	1	35 x 27 x 7,5 EN 60715	98.300.0000.0	1
Mounting rail TS 35, DIN rail, 15 mm high	L = 2 m	35 x 24 x 15 EN 60715	98.360.0000.0	1	35 x 24 x 15 EN 60715	98.360.0000.0	1
Mounting rail TS 32, G rail*	L = 2 m	9006 EN 60715 G-32	98.190.0000.0	1	9006 EN 60715 G-32	98.190.0000.0	1
2. End clamp with U-foot*	10mm wide	WE 1/U	Z5.523.5753.0	100	WE 1/U	Z5.523.5753.0	100
End clamp TS 35, with screw	8mm wide	9708/2 S 35	Z5.522.8553.0	100	9708/2 S 35	Z5.522.8553.0	100
End clamp TS 35, without screw	8mm wide	9708	Z5.522.7053.0	100	WEF 1/35	Z5.523.9353.0	100
3. End plate	gray	AP 4 E	07.311.4055.0	10	AP 4 E	07.311.4055.0	10
	blue						
4. Partition	gray	TW 4 E	07.311.5055.0	10	TW 4 E	07.311.5055.0	10
	blue						
5. Cross connector with screws	2 pole	9215-2	Z7.210.3227.0	50	9215-2	07.210.3227.0	1
for top tier	3 pole	9215-3	Z7.210.3327.0	50	9215-3	07.210.3327.0	1
	up to 6 pole	9215-6	Z7.210.3627.0	50	9215-6	07.210.3627.0	1
Jumper comb for lower tier block	2 pole	IVBS WK 4 E-2	Z7.256.4227.0	10	IVBS WK 4 E-2	Z7.256.4227.0	10
insulated, angled	up to 6 pole	IVBS WK 4 E-6	Z7.256.4627.0	10	IVBS WK 4 E-6	Z7.256.4627.0	10
Jumper comb for lower tier block	2 pole	IVB WK 4 E-2	Z7.255.2227.0	10	IVB WK 4 E-2	Z7.255.2227.0	10
insulated, straight	up to 6 pole	IVB WK 4 E-6	Z7.255.2627.0	10	IVB WK 4 E-6	Z7.255.2627.0	10
6. Partition plate with marking facility							
7. Single cover with marking facility		AD VB 4/15 GELB	04.326.2953.8	10	AD VB 4/15 GELB	04.326.2953.8	10
8. Cover with warning symbol over 4 blocks							

For more accessories see pages 60-77
For marking systems see pages 70-75

[1] Please note the mounting instructions on the cover page.
[2] With end plates 500 V/6 kV/3
[3] Ratings to adjacent feed-through blocks of the same series and size
[4] For the current carrying capability of the mounting rail see AT catalog section ***facts*** & DATA.
[5] With/without jumper
* Do not use in Ex environments.

ELEMECH INC.
630-499-7080 · www.elemechinc.com

Rev: 0
Date: 7/5/2018
By: JAP
Device Tag: DB1
Job Number: EVC7258
Page # 1/1
Manuf.: . PNo: WIELAND: 57.404.6955.1

Item No. 57.504.9055.0

wieland

Earth terminal WK 4 SL/ U /V0

Ground DIN rail terminal block with screw connection for mounting on TS 35 and TS 32, nominal cross section 4 mm², width 6 mm, color green/yellow



42-063-004

Rated impulse voltage	8 kV
Pollution degree	3
Closing plate required	No
Length	51 mm
Type of insulation material	Thermoplastic
Cross section UL	22-10 AWG
Cross section CSA	20-10 AWG
Maximum cross section fine stranded	4 mm²
Wire strip length	9 mm
Torque conductor mounting	0.5 Nm
Torque rail mounting	0,5

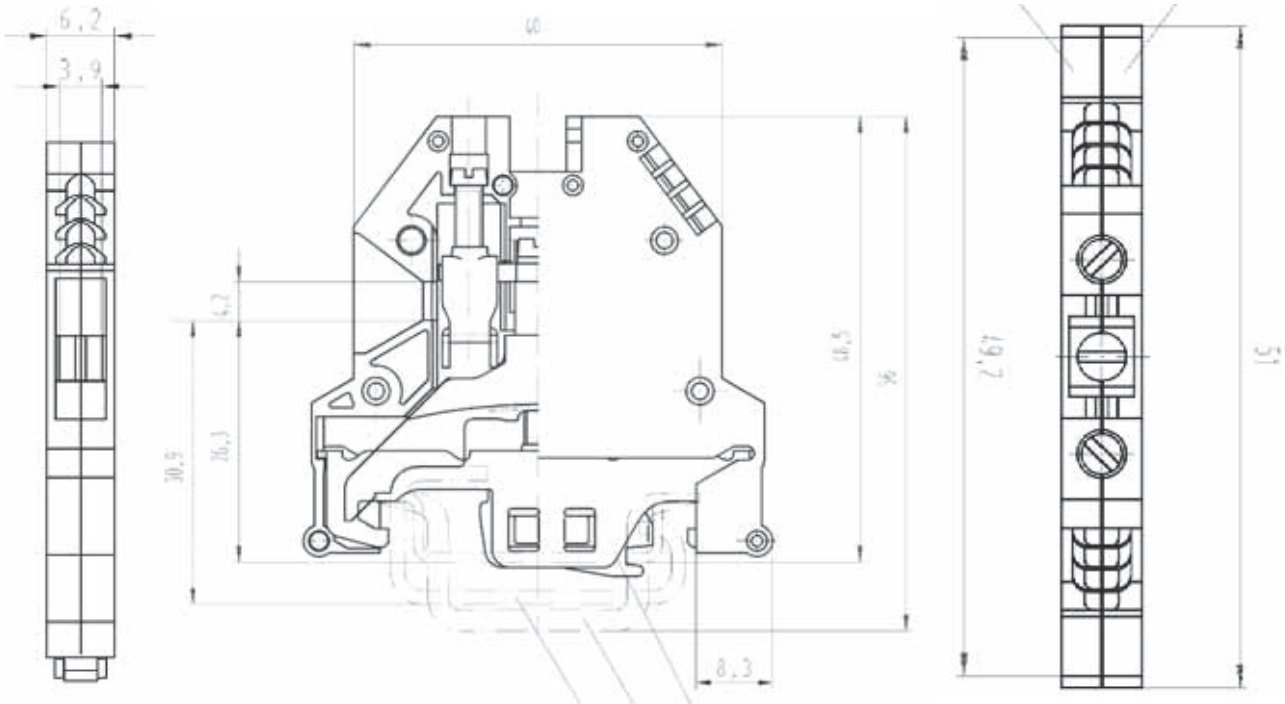

ELEMECH INC.
630-499-7080 · www.elemechinc.com

Rev: 0

Date: 7/5/2018

By: JAP

Device Tag: DB1,TB1

Job Number: EVC7258

Page # 1/1

Manuf.: . PNo: WIELAND: 57.504.9055.0

SwitchLine
Non-fusible disconnect switches
Compact, Heavy duty
16A – 2000A, 600V



09-001-A010

Catalog number	3 pole	OT16F3	OT25F3	OT40F3	OT63F3	OT80F3	OT30F3	OT60F3	OT100F3
General purpose amp rating	**A**	**20**	**30**	**40**	**60**	**80**	**30**	**60**	**100**
Catalog reference	Page #	1.10	1.10	1.10	1.10	1.10	1.11	1.11	1.11
Approvals①									
	2 pole	—	—	—	—	—	—	—	—
	3 pole	CSA C22.2 No.14	CSA C22.2 No.14	CSA C22.2 No.14	CSA C22.2 No.14	CSA C22.2 No.14	CSA C22.2 No.4	CSA C22.2 No.4	CSA C22.2 No.4
	4 pole	CSA C22.2 No.14	CSA C22.2 No.14	CSA C22.2 No.14	CSA C22.2 No.14	CSA C22.2 No.14	CSA C22.2 No.4	CSA C22.2 No.4	CSA C22.2 No.4
Technical ratings CSA,UL②									
Max operating voltage	V	600	600	600	600	600	600VAC / 250VDC	600VAC / 250VDC	600VAC / 250VDC
Max horsepower rating Three phase									
208V	HP	3	7.5	10	15	20	10	20	25
240V	HP	5	7.5	10	15	20	10	20	30
480V	HP	10	15	20	30	40	20	40	50
600V	HP	10	20	25	30	40	30	40	50
Single phase									
120V	HP	1	1.5	2	2	2	2	3	5
240V	HP	2	3	5	7.5	10	5	7.5	15
Technical ratings IEC②									
Rated insulation and operational voltage. AC20 and DC20③	V	750	750	750	750	750	750	750	750
Rated thermal current, I_{th}									
AC 20/DC 20 open	A	25	32	40	63	80	40	63	115
AC 20/DC 20 enclosed	A	25	32	40	63	80	40	63	115
AC 21A ≤ 500V	A	16	25	40	63	80	40	63	100
690V	A	16	25	40	63	80	40	63	100
Rated operational power AC23									
400/415V	kW	7.5	9	11	22	37	15	18.5	37
690V	kW	7.5	9	11	15	18.5	15	15	37
Physical characteristics									
Weight ④ 3 pole	Kg	0.11	0.11	0.11	0.27	0.27	0.36	0.36	0.36
Dimension 3 pole	H mm	68	68	68	91	91	100	100	100
	W mm	35	35	35	53	53	70	70	70
	D mm	56	56	56	72	72	75	75	75
Accessories									
Terminal lug kit		Integral	Integral	Integral	Integral	Integral	Integral	Integral	Integral
Terminal shroud		•	•	•	•	•	•	•	•
Auxiliary contact		•	•	•	•	•	•	•	•
Handle CSA/UL/NEMA type									
Type 1, 3R, 12		•	•	•	•	•	•	•	•
Type 1, 3R, 4, 4X, 12		•	•	•	•	•	•	•	•
Handle type									
Selector		•	•	•	•	•	•	•	•
Pistol		•	•	•	•	•	•	•	•
Conversion kits									
6 pole		•	•	•	•	•	•	•	•
Transfer		•	•	•	•	•	•	•	•
Bypass		•	•	•	•	•	•	•	•
Mechanical interlock		•	•	•	•	•	•	•	•
Electrical interlock		—	—	—	—	—	—	—	—

• = Available
— = Not available

CSA approved, UL listed, IEC rated, CE marked

① CSA 22.2 No.4 (UL98) —CSA File #LR58077, UL File # E101914 , CSA 22.2 No. 14 (UL508) —CSA File #LR58247, UL File # E63822

ELEMECH INC.
630-499-7080 · www.elemechinc.com

Manuf.: . PNo: ABB: OT63F3 ASSEMBLY	Rev: 0	Device Tag: DS1	
	Date: 7/5/2018		
	By: JAP	Job Number: EVC7258	Page # 1/1

CONTINUOUS HINGE WITH CLAMPS TYPE 4X WALL-MOUNT ENCLOSURES

PENTAIR

11-035-279

ENCLOSURE CATALOG NUMBER	ENCLOSURE DIMENSIONS (IN.)	SUB-PANEL CATALOG NUMBER
A-AHBCSS6LP	A x B x C	A APB

NOTE: 6 indicates 316 Stainless Steel.



APPLICATION

For use in indoor and outdoor corrosive environments that require a water-tight seal, this enclosure's seamless foam-in-place gasket and screw-down clamps provide a secure seal against contaminants.

SPECIFICATIONS

- 14 gauge Type 304 or Type 316L stainless steel bodies and doors
- Seams continuously welded and ground smooth
- Seamless foam-in-place gasket
- Rolled lip around three sides of door
- Stainless steel door clamp assembly
- Hasp and staple for padlocking
- Door removed by pulling stainless steel continuous hinge pin
- Data pocket is high-impact thermoplastic
- Collar studs provided for mounting optional panels
- Exterior hardware on Type 316L stainless steel enclosures matches enclosure material
- Bonding provision on door; grounding stud on body

FINISH

Door, sides, top and bottom have smooth #4 brushed finish.

ACCESSORIES

See also Accessories.
Fast-Operating Clamp Assembly
Panels for Type 3R, 4, 4X, 12 and 13 Enclosures
Junction Box and Wall-Mount Enclosure Swing Out Panel Kit
Steel and Stainless Steel Window Kits
H2OMIT™ Vent Drains, Type 4X
H2OMIT™ Thermoelectric Dehumidifier

MODIFICATION AND CUSTOMIZATION

Hoffman excels at modifying and customizing products to your specifications. Contact your local Hoffman sales office or distributor for complete information.

BULLETIN: A4S

INDUSTRY STANDARDS

UL 508A Listed; Type 3R, 4, 4X, 12; File No. E61997
cUL Listed per CSA C22.2 No 94; Type 3R, 4, 4X, 12; File No. E61997

NEMA/EEMAC Type 3, 3R, 4, 4X, 12, 13
CSA File No. 42186: Type 4, 4X, 12
IEC 60529, IP66
Meets NEMA Type 3RX requirements

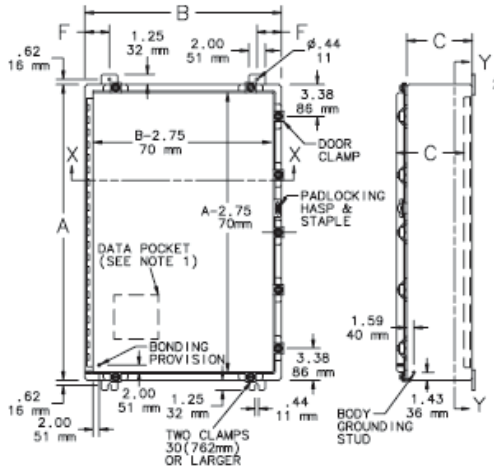

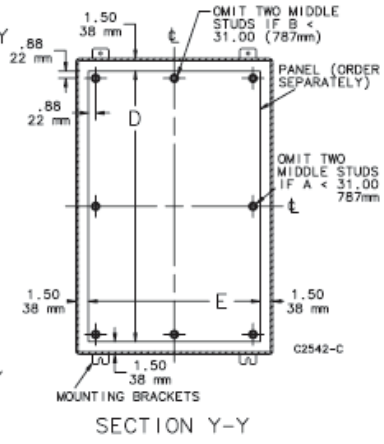

SECTION Y-Y

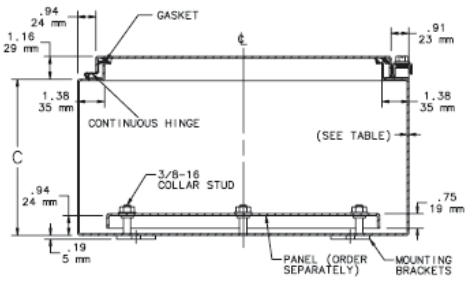

SECTION X-X

ELEMECH INC.
630-499-7080 · www.elemechinc.com

Rev:	Device Tag:
0	EN1
Date: 7/5/2018	
By: JAP	Job Number: EVC7258
Manuf.: . PNo: HOFFMAN: A-24H2408SS6LP	Page # 1/1

USCC & USM UltraSafe™ Fuseholders

MERSEN

13-030-070

Catalog Numbers:

Fuse Type	Ampere Rating	Voltage Rating AC	Voltage Rating DC	Visual Indication	No. of Poles	Catalog Number
Class CC	30	600	600	No	1	USCC1
	30	600	600	No	2	USCC2
	30	600	600	No	3	USCC3
	30	600	600	No	4	USCC4
	30	600	600	No	3+N	USCC3N
	30	600	600	Yes	1	USCC1I
	30	600	600	Yes	2	USCC2I
	30	600	600	Yes	3	USCC3I
	30	600	600	Yes	4	USCC4I
	30	600	600	Yes	3+N	USCC3IN
	30	120	-	Yes	1	USCC1I-AC120
	30	300	-	Yes	1	USCC1I-AC300
	30	-	24	Yes	1	USCC1I-DC24



Dimensions

Dimension	mm	In	Dimension	mm	In
A	17.5	0.69	G	78.0	3.07
B	35.0	1.38	H	59.0	2.32
C	52.5	2.07	I	42.5	1.67
D	70.0	2.76	J	5.0	0.20
E	78.0	3.07	K	45.0	1.77
F	2.5	0.10			

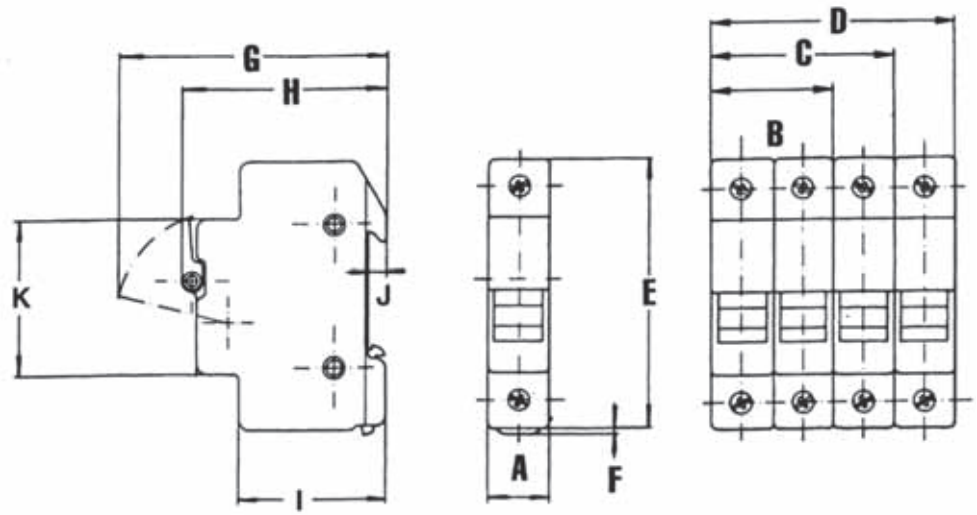

Ratings:

USM (Midget 10x38mm Fuses)

Volts : 800VAC Maximum
: 1000VDC Maximum

Amps : 30A Maximum

SCCR : 200kA AC
: 100kA DC

USCC (Class CC Fuses)

Volts : 600VAC / DC Maximum

Amps : 30A Maximum

SCCR : 200kA

Min. voltage to operate indicator light: 90VAC, 115VDC [Less than 0.7 mA leakage current at 600V]

Approvals:

- UL Listed to Standard 4248-4 (class CC) and 4248-1 (midget), File E52283
- UL Listed to standard 4248-18 (photovoltaic), File E347822
- CSA Certified C22.2
- IEC 60269-2-1 and 60947-3 Compliant (USM only)

ELEMECH INC.
630-499-7080 · www.elemechinc.com

Rev: 0	Device Tag: FU1		
Date: 7/5/2018			
Manuf.: . PNo: FERRAZ-SHAWMUT: USCC3I	By: JAP	Job Number: EVC7258	Page # 1/1

15-011-000



Copper Connectors
T&B Catalog Number: L70
UPC Number: 78378613002
Status: Active
Description:

Type L - Copper Single Conductor, One-Hole Mount for Conductor Range 14 Sol.-4 Str.

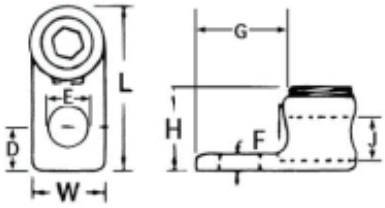

Features

	Cold forged from pure electrolytic copper with 99 percent conductivity.

General

Style	Type L - Copper Single Conductor, One-Hole Mount
Material	Copper
Wire Range	14 Sol.-4 Str.

Dimension Information

Length (inches)	1 1/8
Width (inches)	17/32
Height (inches)	35/64
D (inches)	9/32
E (inches)	9/32
F (inches)	3/32
G (inches)	21/32
J (inches)	9/32

Packaging

T&B Inner Pack	100
Package in Units	1000
T&B Sold in UOM	Each
T&B Weight Per UOM	3.32 lbs. per 100

Notes

	Available with screwdriver slot head screws only.
	UL 486A tested.

Certifications

RoHS Compliance	Yes

Certifications

File Nbr:
E9809

For further technical assistance, please contact us...

Thomas & Betts - USA
8155 T&B Blvd.
Memphis, TN 38125
www.tnb.com

T&B Technical Support
MS 3B-50
8155 T&B Blvd.
Memphis, TN 38125

Hours: 7AM - 6PM CDT
Monday-Friday
Phone: (888) 862-3289
Fax: (901) 252-1321
Email:techsupport@tnb.com

UWZ Series
AC Hour Meters

INTERMATIC

16-031-000



The UWZ Series Hour Meters are designed to meet IP20 environmental ratings for indoor applications. All models can withstand an IP20 rating or an IP52 rating with the use of a gasket. All models have a light gray color on black background. Tenths and hundreths numerals are yellow. An orange dial adjacent to the hundreths digit provides running indication.

UWZ48V - DIN Rail Mount

A special snap-on socket base enables the unit to be quickly and simply fitted on DIN rail.

Bezel:	1.89" x 1.89" (48 mm x 48 mm)
Capacity:	99,999.99 hours
Mounting:	DIN Rail
Digits:	0.16" high numerals
Voltage:	24, 120 VAC, 60 Hz
Power Consumption:	1VA
Termination:	Combination ¼" spade and screw clamp
Operating Temperature:	-40°F to 160°F (-40°C to 72°C)
Weight:	2.5 oz
Ordering Information:	UWZ48V - voltage/frequency

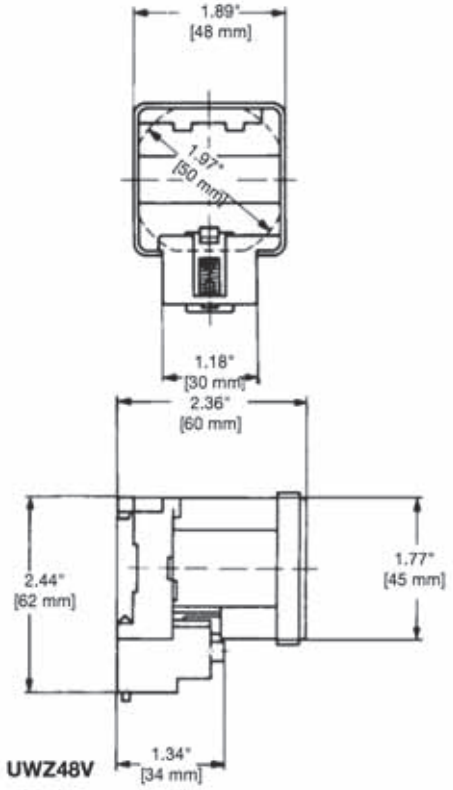

ELEMECH INC.
630-499-7080 · www.elemechinc.com

Manuf.: . PNo: GRASSLIN: UWZ48V-120/60	Rev: 0	Device Tag: HM1	
	Date: 7/5/2018		
	By: JAP	Job Number: EVC7258	Page # 1/1

Flexible Heaters

17-451-000

Flexible Heater Installation Methods

Flexible Heater Pressure Sensitive Adhesive (PSA)

PSA

For ease of attachment specify PSA. Installation is simple: just peel off the protective liner and apply. It will adhere to most clean smooth surfaces. Care must be taken when installing to attain a smooth, consistent, uniform bond to achieve maximum results.

Maximum Temperature:
Continuous – 300°F (149°C)
Intermittent – 500°F (260°C)

Recommended Watt Density:
Under 5 W/in² (0.78 W/cm²)

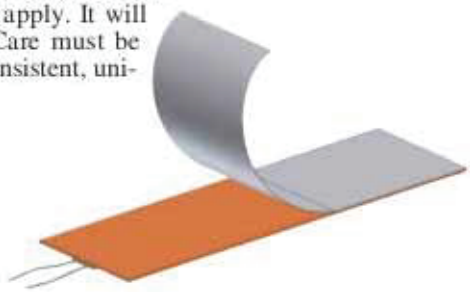

PSA Plus

A layer of aluminum foil is vulcanized to the back of the heater for added heat dissipation prior to the application of PSA.

UL Recognized: U.S. & Canada E65652

CSA Certified: 043099

Tempco PN: **SHS80707**
SILICONE RUBBER HEATER
3.000" W x 5.000" L
12" Teflon® leads in location A
Wire construction
Pressure sensitive adhesive
75 watts, 120 volts

Tempco PN: **SHS80708**
SILICONE RUBBER HEATER
4.500" W x 6.500" L
12" Teflon® leads in location A
Wire construction
Pressure sensitive adhesive
150 watts, 120 volts

ELEMECH INC. 630-499-7080 · www.elemechinc.com	Rev: 0	Device Tag: HTR1	
	Date: 7/5/2018		
Manuf.: . PNo: TEMPCO: SHS80707	By: JAP	Job Number: EVC7258	Page # 1/1

Zelio® Plug-In Relays

RPM power relays



Telemecanique

06-058-024

General characteristics

Conforming to standards			IEC/EN 61810-1 (iss. 2), UL 508, CSA C22-2 n° 14
Product certifications			cULus File E164862 CCN NLDX, NLDX7; cURus File E164862 CCN NLDX2, NLDX8; CSA; CE; RoHS compliant
Ambient air temperature around the device	Storage	°C (F)	- 40... + 85 (-40... +185)
	Operation	°C (F)	- 40... + 55 (-40... +131)
Vibration resistance conforming to IEC/EN 60068-2-6	In operation		3 gn (10...150 Hz/± 1 mm / 5g/5 cycles)
	Not operating		5 gn (10...150 Hz/± 1 mm / 5g/5 cycles)
Degree of protection	Conforming to IEC/EN 60529		IP 40
Shock resistance conforming to IEC/EN 60068-2-27	Opening		15 gn
	Closing		15 gn
Protection category			RT I
Mounting position			Any

Insulation characteristics

Rated insulation voltage (Ui)	Conforming to IEC/EN 60947	V	250 (IEC), 300 (UL, CSA)
Rated impulse withstand voltage (Uimp)		kV	4 (1.2/50 µs)
Dielectric strength (rms voltage)	Between coil and contact	∼ V	1550
	Between poles	∼ V	1550
	Between contacts	∼ V	1500

Contact characteristics

Relay type				RPM1•••	RPM2•••	RPM3•••	RPM4•••
Number and type of contacts				1 C/O	2 C/O	3 C/O	4 C/O
Contact materials				AgNi			
Conventional thermal current (Ith)	For ambient temperature ≤ 55 °C		A	15			
Rated operational current in utilization categories AC-1 and DC-1	Conforming to IEC	NO	A	15			
		NC	A	7.5			
	Conforming to UL		A	15			
Switching current	Minimum		mA	10			
Switching voltage	Maximum		V	∼/⎓ 250 (IEC)			
	Minimum		V	17			
Nominal load (resistive)			A	15 / 250 ∼ V			
			A	15 / 28 ⎓ V			
Switching capacity	Maximum	∼	VA	3750			
		⎓	W	420			
	Minimum		mW	170			
Maximum operating rate In operating cycles/hour	No-load			18 000			
	Under load			1200			
Utilization coefficient				20 %			
Mechanical durability	In millions of operating cycles			10			
Electrical durability In millions of operating cycles	Resistive load			0.1		0.06	
	Inductive load			See curves below			

Electrical durability of contacts
Resistive load ∼

Reduction coefficient for inductive load ∼ (depending on power factor cos φ)

Maximum switching capacity on resistive load ⎓

Telemecanique

06-058-024

Power relays without LED (sold in lots of 10)

Control circuit voltge	Number and type of contacts - Thermal current (Ith)							
	1 C/O - 15 A		2 C/O - 15 A		3 C/O - 15 A		4 C/O - 15 A	
	Catalog number	Weight	Catalog number	Weight	Catalog number	Weight	Catalog number	Weight
V		kg		kg		kg		kg
⎓ 12	RPM11JD	0.026	RPM21JD	0.036	RPM31JD	0.054	RPM41JD	0.071
⎓ 24	RPM11BD	0.026	RPM21BD	0.036	RPM31BD	0.054	RPM41BD	0.071
⎓ 48	RPM11ED	0.026	RPM21ED	0.036	RPM31ED	0.054	RPM41ED	0.071
⎓ 110	RPM11FD	0.026	RPM21FD	0.036	RPM31FD	0.054	RPM41FD	0.071
~ 24	RPM11B7	0.026	RPM21B7	0.036	RPM31B7	0.054	RPM41B7	0.071
~ 48	RPM11E7	0.026	RPM21E7	0.036	RPM31E7	0.054	RPM41E7	0.071
~ 120	RPM11F7	0.026	RPM21F7	0.036	RPM31F7	0.054	RPM41F7	0.071
~ 230	RPM11P7	0.026	RPM21P7	0.036	RPM31P7	0.054	RPM41P7	0.071

Power relays with LED (sold in lots of 10)

⎓ 12	RPM12JD	0.026	RPM22JD	0.036	RPM32JD	0.054	RPM42JD	0.071
⎓ 24	RPM12BD	0.026	RPM22BD	0.036	RPM32BD	0.054	RPM42BD	0.071
⎓ 48	RPM12ED	0.026	RPM22ED	0.036	RPM32ED	0.054	RPM42ED	0.071
⎓ 110	RPM12FD	0.026	RPM22FD	0.036	RPM32FD	0.054	RPM42FD	0.071
~ 24	RPM12B7	0.026	RPM22B7	0.036	RPM32B7	0.054	RPM42B7	0.071
~ 48	RPM12E7	0.026	RPM22E7	0.036	RPM32E7	0.054	RPM42E7	0.071
~ 120	RPM12F7	0.026	RPM22F7	0.036	RPM32F7	0.054	RPM42F7	0.071
~ 230	RPM12P7	0.026	RPM22P7	0.036	RPM32P7	0.054	RPM42P7	0.071

Dimensions (mm):

Power relays

RPM 1

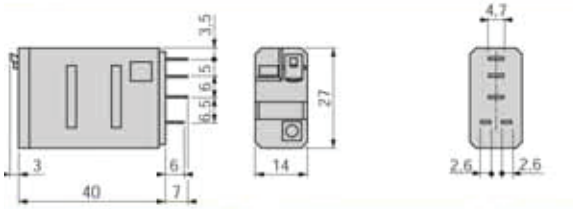

Common side view

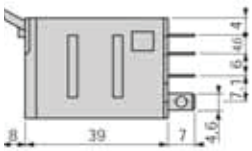

RPM2

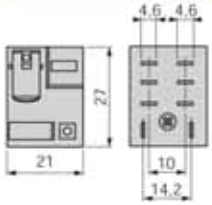

RPM 3

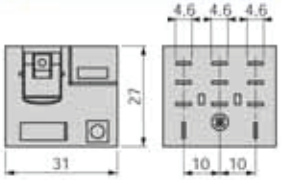

RPM 4

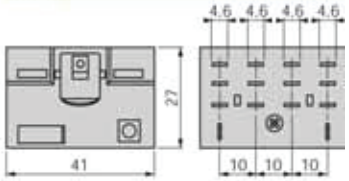

ELEMECH INC.
630-499-7080 · www.elemechinc.com

Rev: 0

Date: 7/5/2018

By: JAP

Device Tag: IR1,2

Job Number: EVC7258

Page # 2/2

Manuf.: . PNo: SQUARE D: RPM12F7

Sockets

Telemecanique

06-058-***

RPZF1

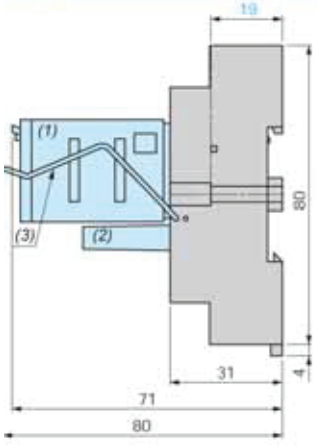

RPZF2

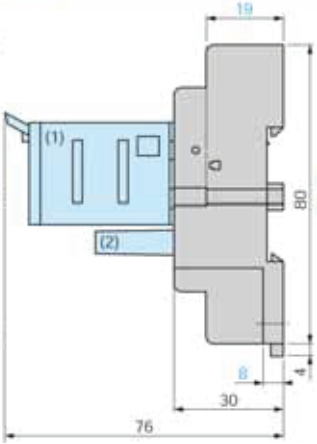

Common side view

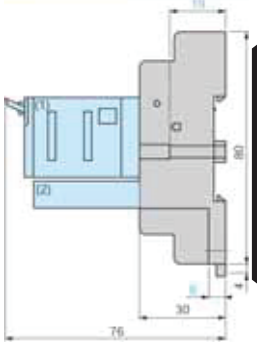

Socket characteristics

	RPZF1	RPZF2	RPZF3	RPZF4
Socket type	RPM1●●●	RPM2●●●	RPM3●●●	RPM4●●●
Relay types used	RXM02●●● RXM04●●●	RXM02●●● RXM04●●●	RUW24●●●	RUW24●●●
Protection module types used				

Contact terminal arrangement		Mixed
Wire connection method		Screw clamp terminals
Product certifications		cURus File E172326 CCN SWIV2, SWIV8; CSA; CE; RoHS compliant
Conforming to standards		IEC 61984, CE

Electrical characteristics

Conventional thermal current (Ith)	A	16
Maximum operating voltage	V	250 (IEC)

Insulation characteristics

Between adjacent output contacts	Vrms	2500
Between input and output contacts	Vrms	2500
Between contacts and DIN rail	Vrms	2500

General characteristics

Ambient air temperature around the device	Operation		°C	- 40…+ 55	
	Storage		°C	- 40…+ 85	
Degree of protection	Conforming to IEC/EN 60529			IP 20	
Connection	Solid wire without cable end	1 conductor		0.5…1.5 mm² - AWG 20…AWG 16	0.5…2.5 mm² - AWG 20…AWG 14
		2 conductors		0.5…1.5 mm² - AWG 20…AWG 16	0.5…2.5 mm² - AWG 20…AWG 14
	Flexible wire with cable end	1 conductor		0.25…1 mm² - AWG 22…AWG 17	0.25…1.5 mm² - AWG 22…AWG 16
		2 conductors		0.25…1 mm² - AWG 22…AWG 17	0.25…1.5 mm² - AWG 22…AWG 16
Maximum tightening torque / Screw size			Nm	1 / M3 screw	1 / M3.5 screw
Mounting				35 mm DIN rail / panel mount	
Mounting on DIN rail				By red plastic clip	
Terminal referencing				IEC, NEMA	
Compatibility with the metal hold-down clip				Yes	No
Timer module compatibility				No	Yes
Protection module				RXM040W, RXM041●●, RXM021●●	RUW24●●
Clip-in ID tags				No	
Wire connection method	Screw clamp terminals			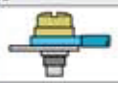	

RPZF3

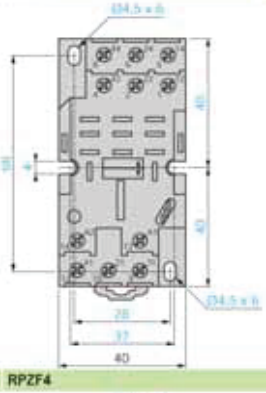

RPZF4

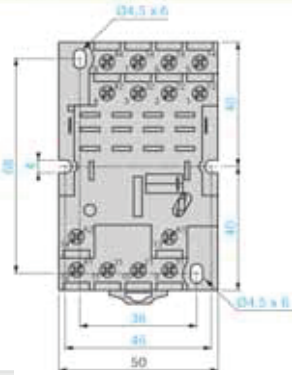

Sockets

Contact terminal arrangement	Connection	Relay type	Sold in lots of	Catalog number	Weight kg
Mixed	Screw clamp terminals	RPM1●●●	10	RPZF1	0.042
		RPM2●●●	10	RPZF2	0.054
		RPM3●●●	10	RPZF3	0.072
		RPM4●●●	10	RPZF4	0.094

ELEMECH INC.
630-499-7080 · www.elemechinc.com

Manuf.: . PNo: SQUARE D: RPZR235	Rev: 0	Device Tag: IR1,2	
	Date: 7/5/2018		
	By: JAP	Job Number: EVC7258	Page # 1/1

30.5 mm Push Buttons
Pilot Lights

Allen-Bradley

32-005-048

800 T ___ – P T ___ 16 G
a b c d e f g



a

Protection Rating	
Code	Description
T	Metal, Type 4/13
H	Plastic, Type 4/4X/13

c

Power Module Type		
800T Type 4/13	Description	800H Type 4/4X/13
Code		Code
P	Transformer (or dual input)	PR
Q	Full voltage/ Universal	QR

d

Lamp Test Options	
Code	Description
Blank	No test option
T	Push-to-test
D	Dual input — diode▲
DT	Dual input — transformer relay

Note: Push-to-test supplied with factory jumpered contact block.

e

Illumination Options	
Code	Description
Blank	Incandescent
H	LED•

f

Voltage	
Transformer	
Code	Description
16	120V AC 50/60 Hz
26	240V AC 50/60 Hz
46	480V AC 50/60 Hz
56	600V AC 50/60 Hz
Full Voltage — Incandescent	
12	12V AC/DC
24	24V AC/DC
48	48V AC/DC
10	120V AC/DC
20	240V AC/DC
Universal — LED	
2	12…130V AC/DC
Dual Input	
16	120V AC
24	24V AC/DC (Dual input diode only)

g

Lens Color		
Code	Color	Glass Code ▲
Blank	No lens	Blank
A	Amber	D
B	Blue	E
C	Clear	F
G	Green	H
R	Red	J
W	White	K

Specifications•

Electrical Ratings		
Contact ratings		Refer to the contact ratings tables on page 10-4.
Dielectric strength		2200V for one minute, 1300V for one minute (Logic Reed)
Electrical design life cycles		1 000 000 at max. rated load, 200 000 at max. rated load (Logic Reed)
Mechanical Ratings		
Vibration		10…2000 Hz, 1.52 mm displacement (peak-to-peak) max./ 10 G max. (except Logic Reed)
Shock		1/2 cycle sine wave for 11 ms ≥ 25 G (contact fragility) and no damage at 100 G
Degree of protection		Type 1/4/12/13 (800T); Type 1/4/4X/12/13 (800H); EN/IEC 60529 IP66/65
Mechanical design life cycles		
Push buttons	(Momentary, non-illuminated)	10 000 000 min.
	(Momentary, illuminated)	250 000 min.
	(Push-pull/twist-to-release)	250 000 min.
Selector switches	(Non-illuminated)	1 000 000 min.
	(Illuminated, key-operated)	200 000 min.
Potentiometers		25 000 min.
All other devices		200 000 min.
Contact operation		Shallow, mini, and low-voltage contact blocks: Slow, double make and break Logic Reed and sealed switch contact blocks: Single break magnetic
Wire gauge/Terminal screw torque		#18…14 AWG (#18…10 Max Duty) / 6…8 lb•in
Typical operating forces		
Operators without contact blocks		Flush, extended button, standard mushroom, jumbo plastic mushroom: 2 lbs max. Jumbo and extended aluminum mushroom head: 3.95 lbs max. Maintained selector switch: 3.6 in•lb max.
Spring return selector switches		3.6 in•lb to stop, 0.2 in•lb to return
Illuminated push buttons and push-to-test pilot lights		5 lb max.
2-position push-pull		8.0 lb max. push or pull
3-position push-pull		8 lb max. push to in position or pull to center position (15 lb max. pull to out position)
Twist-to-release or push-pull		9 lbs max. push or pull 30 in•oz max. twist, 6 in•oz minimum return
Potentiometer		Rotational torque 3…12 in•oz; stopping torque 12 in•lb (minimum)
Contact blocks	Standard	1 lb
	Logic Reed	1 lb max.
	Sealed switch	3 lb max. at 0.205 in. plunger travel
	Stackable sealed switch	1 lb max.
	MaxDuty	1.4 lb max.
	PenTUFF	1.4 lb max.
	Self Monitoring	1.6 lb
Environment		
Temperature range	Operating	-40…+131 °F (-40…+55 °C)
	Storage	-40…+185 °F (-40…+85 °C)
Note: Operating temperatures below freezing are based on the absence of moisture and liquids. Consult your local Rockwell Automation sales office or Allen-Bradley distributor for use in lower temperature applications.		
Humidity		50…95% RH from 77…140 °F (25…60 °C) per Procedure IV of MIL-STD-810C, Method 507.1 cycling test

Replacement Color Caps

30.5 mm Accessories

Allen-Bradley

32-005-***





Color	800T/H Pilot Light Color Caps		
	Standard*	Push-to-Test*	18 mm
	Cat. No.	Cat. No.	Cat. No.
Amber	**800T-N26A**	**800T-N42**	**800T-N122A**
Blue	**800T-N26B**	**800T-N43**	**800T-N122B**
Clear	**800T-N26C**	**800T-N45**	800T-N122C
Green	**800T-N26G**	**800T-N41**	**800T-N122G**
Red	**800T-N26R**	**800T-N40**	**800T-N122R**
White	**800T-N26W**	**800T-N44**	**800T-N122W**

Auxiliary Contacts

Allen-Bradley

22-005-010





Auxiliary Contact Blocks for Front Mounting ❶

- 2- and 4-pole
- Quick and easy mounting without tools
- Electronic-compatible contacts down to 17V, 5 mA
- Mutual positive guidance to the main contactor poles (except for L types)
- Models with equal function with several terminal numbering choices

L = Late break / Early make

Auxiliary contact blocks for front installation ❸

- 2 and 4 poles
- Quick and easy mounting without tools
- Contacts compatible with electronics
- Mutual positive quidance with the main contactor poles (except for L types)
- Models with equal function with several terminal numbering choises

L = late break / early make

N.O.	N.C.	Connection Diagrams	For Use With	Cat. No.
0	2		100-C all C30⊗00...C85⊗00	100-FA02 100-FB02
1	1	-FA02 -FB02 -FA11	100-C all C30⊗00...C85⊗00 C09⊗10...C23⊗10	100-FA11 100-FB11 100-FC11
2	0	-FB11 -FC11 -FA20	100-C all C30⊗00...C85⊗00	100-FA20 100-FB20
1L	1L	-FB20 -FAL11 -FBL11	100-C all C30⊗00...C85⊗00	100-FAL11 100-FBL11
0	4		100-C all	100-FA04
1	3	-FA04 -FA13	100-C all	100-FA13
2	2	-FA22 -FB22	100-C all C30⊗00...C85⊗00 C09⊗10...C23⊗10	100-FA22 100-FB22 100-FC22
3	1		100-C all C09⊗10...C23⊗10	100-FA31 100-FC31
4	0	-FC22 -FA31	100-C all	100-FA40
1+1L	1+1L	-FC31 -FA40 -FAL22	100-C all	100-FAL22

Bulletin 100-C Contactors

Allen-Bradley

22-005-012

104-C ___ D ___ ___

Rated Amps

Code	N.O. Contacts
0	No Contact
2	1 N.O.

Code	N.C. Contacts
0	No Contact
2	1 N.C.

V / Hz	120
60Hz	D

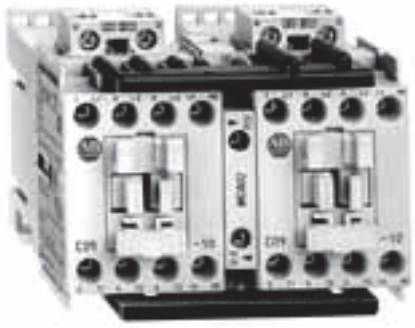

Reversing AC- and DC-Operated Contactors

Ie [A]		Ratings for Switching AC Motors AC-2, AC-3, AC-4										Auxiliary Contacts Installed per Contactor			
		kW (50 Hz)				HP (60 Hz)									
AC-3	AC-1		380V 415V			1∅		3∅							
460V	40°C	230V	400V	500V	690V	115V	230V	200V	230V	460V	575V	N.O.	N.C.	Cat. No.	*
9	25	3	4	4	4	1/3	1	2	2	5	7-1/2	1	1	104-C09⊗22	
12	25	4	5.5	5.5	5.5	1/2	2	3	3	7-1/2	10	1	1	104-C12⊗22	
16	32	5.5	7.5	7.5	7.5	1	3	5	5	10	10	1	1	104-C16⊗22	
23	32	7.5	11	11	10	2	3	5	7-1/2	15	15	1	1	104-C23⊗22	
30	45	10	15	15	15	2	5	7-1/2	10	20	20	0	1	104-C30⊗02	
												1	1	104-C30⊗22	
37	50	11	18.5	18.5	18.5	3	5	10	10	25	25	0	1	104-C37⊗02	
												1	1	104-C37⊗22	
43	63	13	22	22	22	3	7.5	10	15	30	30	0	1	104-C43⊗02	
												1	1	104-C43⊗22	
60	90	18.5	30	30	30	5	10	15	20	40	40	0	1	104-C60⊗02	
												1	1	104-C60⊗22	
72	90	22	37	37	37	5	15	20	25	50	50	0	1	104-C72⊗02	
												1	1	104-C72⊗22	
85	100	25	45	45	45	7-1/2	15	25	30	60	60	0	1	104-C85⊗02	
												1	1	104-C85⊗22	

⊗ Voltage Suffix Code

The Cat. No. as listed is incomplete. Select a voltage suffix code from the table below to complete the Cat. No. Example: 120V, 60 Hz: **Cat. No. 104-C09⊗22** becomes **Cat. No. 104-C09D22**.

Standard Coil Voltages	12	24	32	36	42	48	100	100-110	110	120	127	200	200-220	208	208-240	220-230	230	230-240	240	277	347	380	380-400	400	400-415	440	480	500	550	600
50 Hz	R	K	V	W	X	Y	KP	–	D	P	S	KG	–	–	–	F	–	VA	T	–	–	–	N	–	G	B	–	M	C	–
60 Hz	Q	J	–	V	–	X	–	KP	–	D	–	–	KG	H	L	–	–	–	A	T	I	E	–	–	–	N	B	–	–	C
50/60 Hz	–	KJ	–	–	–	KY	KP	–	KD	–	–	KG	–	–	–	–	KF	–	KA	–	–	–	–	KN	–	KB	–	–	–	–

E1 Plus Solid-State Overload Relays

Allen-Bradley

28-005-037

Bulletin 193-EE – Three-Phase Devices

- Selectable Trip Class (10, 15, 20, 30)
- Selectable Auto/Manual-Auto Reset
- Screw-Type Control Terminals

Mounts to Contactor	Adjustment Range (A)	Cat. No. ❶
100-C09…100-C23	0.1…0.5	193-EEAB
	0.2…1.0	193-EEBB
	1.0…5.0	193-EECB
	3.2…16	193-EEDB
	5.4…27	193-EEEB
100-C30…100-C43	5.4…27	193-EEED
	9…45	193-EEFD
100-C60…100-C85	18…90	193-EEGE

Specifications

Cat. No.		193-ED1_B, 193-EE_B, and 592-EE_T
Main Circuits		
Rated Insulation Voltage U_i		690V AC
Rated Impulse Strength U_{imp}		6 kV AC
Rated Operating Voltage U_e		690V AC (IEC) / 600V AC (CSA/UL)
Terminal Cross-Sections:	Terminal Type	
	Terminal Screw	M5
Flexible-Stranded with Ferrule	Single Conductor Torque	2.5…16 mm² 2.5 N·m
	Two Conductor Torque	2.5…10 mm² ❶ 3.4 N·m
Coarse-Stranded / Solid	Single Conductor Torque	2.5…25 mm² 2.5 N·m
	Two Conductor Torque	6…16 mm² ❶ 3.4 N·m
Stranded / Solid	Single Conductor Torque	14…6 AWG 22 lb-in
	Two Conductor Torque	14…6 AWG ❶ 30 lb-in
Pozidrive Screwdriver Size		2
Slotted Screwdriver (mm)		1 x 6
Hexagon Socket Size (mm)		—
Control Circuits		
Rated Insulation Voltage U_i		690V AC
Rated Impulse Strength U_{imp}		6 kV AC
Rated Operating Voltage U_e		690V AC (IEC) / 600V AC (CSA/UL)
Rating Designation		B600
Rated Operating Current I_e		N.O. / N.C.
AC-15	12…120V 220…240V 380…480V 500…600V	3 / 2 1.5 / 1.5 0.75 / 0.75 0.6 / 0.6
DC-13, at L/R ≤ 15 ms	24V 110V 220V 440V	1.1 / 1.1 0.4 / 0.4 0.2 / 0.2 0.08 / 0.08
Thermal Current I_{the}		5 A
Contact Reliability		17V, 5 mA
Screw Terminal Cross-Sections:	Terminal Screw	M3
Flexible-Stranded with Ferrule	Single Conductor Torque	0.5…2.5 mm² 0.55 N·m
	Two Conductor Torque	0.25…1.5 mm² 0.55 N·m
Coarse-Stranded / Solid	Single Conductor Torque	0.5…4 mm² 0.55 N·m
	Two Conductor Torque	0.2…2.5 mm² 0.55 N·m
Stranded / Solid	Single Conductor Torque	24…10 AWG 5 lb-in
	Two Conductor Torque	24…12 AWG 5 lb-in
Screwdriver (mm)		#1 Pozidrive / 0.6 x 3.5 slotted
Cage Clamp Cross-Sections:		
Flexible-Stranded with Ferrule		0.25…1 mm²
Coarse-Stranded / Solid		0.2…1.5 mm²
Stranded / Solid		24…14 AWG

Environmental Ratings		
Ambient Temperature	Storage Operating	-40…85°C (-40…185°F) -20…60°C (-4…140°F)
Humidity	Operating Damp Heat	5…95%, non-condensing per IEC 68-2-3 and IEC 68-2-3(
Vibration (per IEC 68-2-6)		3 G
Shock (per IEC 68-2-27)		30 G
Maximum Altitude		2000 m
Pollution Environment		Pollution Degree 3
Degree of Protection		IP20
Protection		
Type of Relay		Ambient Compensated, Time Delay, Phase
Nature of Relay		Solid-State
Trip Rating		120% FLA
Trip Class	Type ED Type EE	10 10, 15, 20, 30
Reset Mode	Type ED Type EE	Manual Automatic or Manual
Electromagnetic Compatibility		
Electrostatic Discharge Immunity	Test Level Performance Level	8 kV Air Discharge 6 kV Contact Discharge 1 ❶ ❷
RF Immunity	Test Level Performance Level	10 V/m 1 ❶ ❷
Electrical Fast Transient/Burst Immunity	Test Level Performance Level	4 kV 1 ❶ ❷
Surge Immunity	Test Level Performance Level	2 kV (L-E) 1 kV (L-L) 1 ❶ ❷

Standards Compliance

IEC/EN 60947-4-1
IEC/EN 60947-5-1
CSA 22.2 No. 14
UL 508

Certifications

CE
cULus Listed
C-Tick
CCC

ELEMECH INC.
630-499-7080 · www.elemechinc.com

Rev: 0	Device Tag: OL1	
Date: 7/5/2018		
By: JAP	Job Number: EVC7258	Page # 1/1

Manuf.: . PNo: ALLEN-BRADLEY: 193-EECB

30.5 mm Push Buttons

Allen-Bradley

29-005-002

800 T ___ – A 1 ___ A
a b c d e f



a

Protection Rating	
Code	Description
T	Metal, Type 4/13
H	Plastic, Type 4/4X/13

b

Finger-Safe Guards	
Code	Description
Blank	No guards
C	Guards on terminals

c

Operator Type		
800T Type 4/13 Code	Description	800H Type 4/4X/13 Code
A	Flush head	AR
B	Extended head	BR
D	Mushroom head	DR
DX	Mushroom head less color cap	DRX
—	Bootless guarded head	GR
—	Booted head	R*

d

Color Cap	
Code	Description
Blank	Used only when ordering Operator Type DX/DRX
1	Green
2	Black
3	Orange❄

Color Cap	
Code	Description
4	Grey❄
5	White❄
6	Red
7	Blue
9	Yellow

e

Special Mushroom Head	
Code	Description
J§	Jumbo mushroom head — plastic
L§	Jumbo mushroom head — metal

Note: Special mushroom head options only apply to mushroom head operator type code D/DR (Table c).

f

Contact Block(s)	
Code	Description
Blank	No contacts
Standard	
D1	1 N.O.
D2	1 N.C.
D3	1 N.O.E.M.
D4	1 N.C.L.B.
D5	1 N.O. (Mini)
D6	1 N.C. (Mini)
A1	1 N.C.L.B. - 1 N.O.
A2	2 N.O.‡
A4	2 N.C.
A7	1 N.C.L.B. - 1 N.C.
A	1 N.O. - 1 N.C.
B	2 N.O. - 2 N.C.

Certifications

UL Listed
(File No. E14840, E10314
Guide No. NKCR, NOIV)

CSA Certified
(File No. LR1234, LR11924)

CSA C22.2, No. 14

Specifications*

Electrical Ratings		
Contact ratings		Refer to the contact ratings tables on page 10-4.
Dielectric strength		2200V for one minute, 1300V for one minute (Logic Reed)
Electrical design life cycles		1 000 000 at max. rated load, 200 000 at max. rated load (Logic Reed)
Mechanical Ratings		
Vibration		10…2000 Hz, 1.52 mm displacement (peak-to-peak) max./ 10 G max. (except Logic Reed)
Shock		1/2 cycle sine wave for 11 ms ≥ 25 G (contact fragility) and no damage at 100 G
Degree of protection		Type 1/4/12/13 (800T); Type 1/4/4X/12/13 (800H); EN/IEC 60529 IP66/65
Mechanical design life cycles		
Push buttons	(Momentary, non-illuminated)	10 000 000 min.
	(Momentary, illuminated)	250 000 min.
	(Push-pull/twist-to-release)	250 000 min.
Selector switches	(Non-illuminated)	1 000 000 min.
	(Illuminated, key-operated)	200 000 min.
Potentiometers		25 000 min.
All other devices		200 000 min.
Contact operation		Shallow, mini, and low-voltage contact blocks: Slow, double make and break Logic Reed and sealed switch contact blocks: Single break magnetic
Wire gauge/Terminal screw torque		#18…14 AWG (#18…10 Max Duty) / 6…8 lb•in
Typical operating forces		
Operators without contact blocks		Flush, extended button, standard mushroom, jumbo plastic mushroom: 2 lbs max. Jumbo and extended aluminum mushroom head: 3.95 lbs max. Maintained selector switch: 3.6 in•lb max.
Spring return selector switches		3.6 in•lb to stop, 0.2 in•lb to return
Illuminated push buttons and push-to-test pilot lights		5 lb max.
2-position push-pull		8.0 lb max. push or pull
3-position push-pull		8 lb max. push to in position or pull to center position (15 lb max. pull to out position)
Twist-to-release or push-pull		9 lbs max. push or pull 30 in•oz max. twist, 6 in•oz minimum return
Potentiometer		Rotational torque 3…12 in•oz; stopping torque 12 in•lb (minimum)
Contact blocks	Standard	1 lb
	Logic Reed	1 lb max.
	Sealed switch	3 lb max. at 0.205 in. plunger travel
	Stackable sealed switch	1 lb max.
	MaxDuty	1.4 lb max.
	PenTUFF	1.4 lb max.
	Self Monitoring	1.6 lb
Environment		
Temperature range	Operating	-40…+131 °F (-40…+55 °C)
	Storage	-40…+185 °F (-40…+85 °C)
Note: Operating temperatures below freezing are based on the absence of moisture and liquids. Consult your local Rockwell Automation sales office or Allen-Bradley distributor for use in lower temperature applications.		
Humidity		50…95% RH from 77…140 °F (25…60 °C) per Procedure IV of MIL-STD-810C, Method 507.1 cycling test

Zelio® Logic 2

Telemecanique

Programmable Smart Relays

33-183-004

Compact smart relays with display

Number of I/O	Discrete inputs	Including 0-10 V analog inputs	Relay outputs	Transistor outputs	Clock	Reference
Supply ∿ 100 to 240 V						
20	12	0	8	0	Yes	**SR2 B201FU**



General environment characteristics (except for communication Modem interface SR2 COM01, see page 37)

Product certifications			UL, CSA, GL (pending), C-Tick
Conformity with the low voltage directive	Conforming to 73/23/EEC		EN (IEC) 61131-2 (open equipment)
Conformity with the EMC directive	Conforming to 89/336/EEC		EN (IEC) 61131-2 (Zone B) EN (IEC) 61000-6-2, EN (IEC) 61000-6-3 *(1)* and EN (IEC) 61000-6-4
Degree of protection	Conforming to IEC/EN 60529		IP 20
Overvoltage category	Conforming to IEC/EN 60664-1		3
Degree of pollution	Conforming to IEC/EN 61131-2		2
Ambient air temperature around the device	Operation	**°C (°F)**	- 20 to + 55 (- 4 to + 131) + 40 (+ 104) in an enclosure, conforming to IEC 60068-2-1 and IEC 60068-2-2
	Storage	**°C (°F)**	- 40 to + 70 (- 40 to + 158)
Maximum relative humidity			95% without condensation or dripping water
Maximum operating altitude	Operation	**m (ft.)**	2000 (6562)
	Transport	**m (ft.)**	3048 (10 000)
Mechanical resistance	Immunity to vibration		IEC/EN 60068-2-6, test Fc
	Immunity to mechanical shock		IEC/EN 60068-2-27, test Ea
Resistance to electrostatic discharge	Immunity to electrostatic discharge		IEC/EN 61000-4-2, level 3
Resistance to HF interference (immunity)	Immunity to electromagnetic radiated fields		IEC/EN 61000-4-3, level 3
	Immunity to fast transients in bursts		IEC/EN 61000-4-4, level 3
	Immunity to shock waves		IEC/EN 61000-4-5
	Radio frequency in common mode		IEC/EN 61000-4-6, level 3
	Voltage dips and breaks (∿)		IEC/EN 61000-4-11
	Immunity to damped oscillation waves		IEC/EN 61000-4-12
Conducted and radiated emissions	Conforming to EN 55022/11 (Group 1)		Class B *(1)*
Screw terminals connection capacity (Tightening using Ø 3.5 screwdriver)	Flexible cable with cable end	**mm²**	1 conductor: 0.25 to 2.5, cable: AWG 24 to AWG 14 2 conductors: 0.25 to 0.75, cable: AWG 24 to AWG 18
	Semi-solid cable	**mm²**	1 conductor: 0.2 to 2.5 cable: AWG 25 to AWG 14
	Solid cable	**mm²**	1 conductor: 0.2 to 2.5, cable: AWG 25 to AWG 14 2 conductors: 0.2 to 1.5, cable: AWG 24 to AWG 16
	Tightening torque	**N.m (lbf-in)**	0.5 (4.4)

Processing characteristics

Number of control scheme lines	With LADDER programming		120
Number of function blocks	With FBD programming		Up to 200
Cycle time		**ms**	10 to 50
Response time		**ms**	20 minimum
Back-up time (in the event of power failure)	Day/time		10 years (lithium battery) at 25 °C (77 °F)
	Program and settings		10 years (EEPROM memory cartridge)
Program memory checking			On each power-up
Clock drift			12 min/year 0 to 55 °C (32 to 131 °F) 6 sec/month at 25 °C (77 °F) and calibration
Timer block accuracy			1% ± 2 cycle time

Relay output characteristics

Smart relay type				SR2 ●●●/ SR3 B101●●/ SR3 XT61●●/ SR3 XT101●●
Operating limit values			V	⎓ 5 to 150 ∿ 24 to 250
Contact type				N/O
Thermal current			A	8
Electrical durability for 500 000 operating cycles	Utilization category	DC-12	V	24
			A	1.5
		DC-13	V	24 (L/R = 10 ms)
			A	0.6
		AC-12	V	230
			A	1.5
		AC-15	V	230
			A	0.9
Minimum switching capacity	At minimum voltage of 12 V		mA	10
Low power switching reliability of contact				12 V - 10 mA
Maximum operating rate	No-load		Hz	10
	At Ie (operational current)		Hz	0.1
Mechanical life	In millions of operating cycles			10
Rated impulse withstand voltage (Uimp)	Conforming to IEC/EN 60947-1 and IEC/EN 60664-1		kV	4
Response time	Trip		ms	10
	Reset		ms	5
Built-in protection	Against short-circuits			None
	Against overvoltage and overload			None

Transistor output characteristics

Smart relay type			SR● B●●2BD
Operating limit values		V	19.2 to 30
Load	Nominal voltage	V	⎓ 24
	Nominal current	A	0.5
	Maximum current	A	0.625 at 30 V
Drop-out voltage	At state 1	V	⩽ 2 for I = 0.5 A
Response time	Trip	ms	⩽ 1
	Reset	ms	⩽ 1
Built-in protection	Against overload and short-circuits		Yes
	Against overvoltage *(1)*		Yes
	Against inversions of power supply		Yes

(1) If there is no volt-free contact between the smart relay o

Analog output characteristics (QB, QC)

Analog outputs	Output range		V	∿ 0 to 10
	Type of load			Resistive
	Maximum load		mA	10
	Value of LSB		mV	10
Conversion	Resolution			10 bits
	Conversion time			Smart relay cycle time
	Precision	at 25 °C (77 °F)		± 1% of the full scale value
		at 55 °C (131 °F)		± 1% of the full scale value
	Repeat accuracy at 55 °C (131 °F)			< ± 1%
Isolation	Between analog channel and supply			None
Cabling distance			m (ft.)	10 (32.81) maximum, with shielded cable
Built-in protection	Reverse polarity protection			Yes

Discrete ∼ input characteristics

Smart relay type				SR● ●●●●FU
Nominal value of inputs	Voltage		V	100 to 240
	Current		mA	0.6
	Frequency		Hz	47 to 63
Input switching limit values	At state 1	Voltage	V	⩾ 79
		Current	mA	> 0.17
	At state 0	Voltage	V	⩽ 40
		Current	mA	< 0.5
Input impedance at state 1			kΩ	350
Configurable response time	State 0 to 1 (50/60 Hz)		ms	50
	State 1 to 0 (50/60 Hz)		ms	50
Isolation	Between supply and inputs			None
	Between inputs			None
Protection	Reverse polarity protection			Control instructions not executed

∼ 100 to 240 V supply characteristics

Smart relay type			SR2 ●201FU
Primary	Nominal voltage	V	100 to 240
Voltage limits		V	85 to 264
Nominal input current	Without extensions	mA	100/50
	With extensions	mA	–
Power dissipated	Without extensions	VA	11
	With extensions	VA	–
Micro-breaks	Permissible duration	ms	10
rms insulation voltage		V	1780

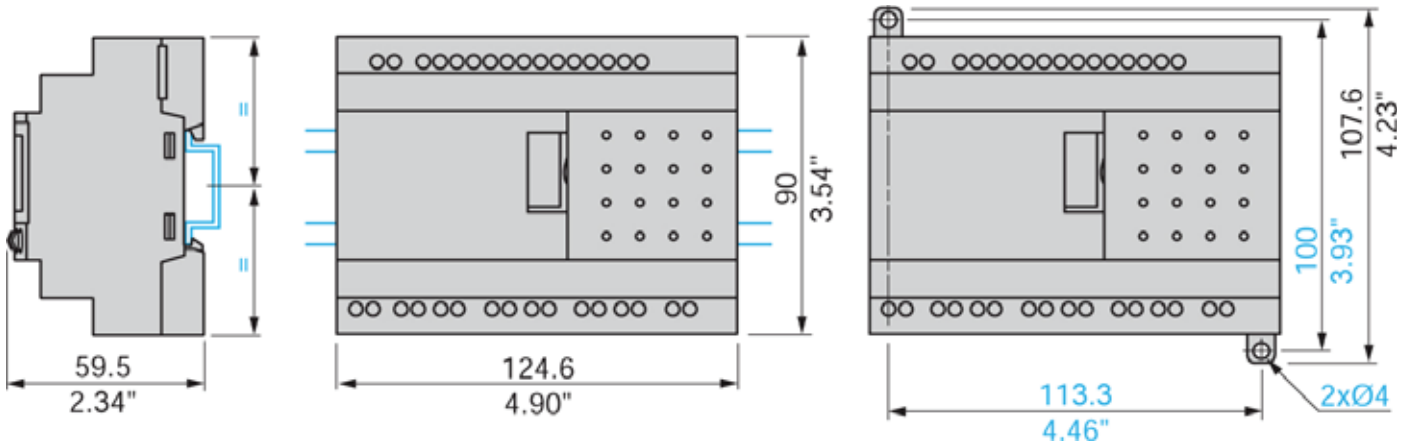

30.5 mm Push Buttons
Selector Switches

Allen-Bradley

39-005-009



800 T ___ – J 2 ___ C

a b c d e f

a

Protection Rating	
Code	Description
T	Metal, Type 4/13
H	Plastic, Type 4/4X/13

b

Finger-Safe Guards	
Code	Description
Blank	No guards
C	Guards on terminals

c

Knob Insert Colors		
800T Type 4/13 Code	Description	800H Type 4/4X/13 Code
J	White	JR
JX	Packet of colored inserts•	JRX
Metal Wing Lever Colors⊕		
Code	Color	Code
JA	Red	—
JG	Grey	—

d

Knob/Lever Type Operators	
Standard Knob	
Code	Operator Function
2	Maintained
4	Spring return from left
5	Spring return from right
91	Spring return from both
Knob Lever⊕	
Code	Operator Function
17	Maintained
18	Spring return from left
19	Spring return from right
20	Spring return from both
Metal Wing Lever⊕	
Code	Operator Function
11	Maintained
15	Spring return from left
16	Spring return from right
141	Spring return from both
Coin Slot⊕	
Code	Operator Function
10	Spring return from both

e

Cam Option‡▲	
Code	Description
Blank	KB7 cam (std.)
KA1	KA1 cam
KA7	KA7 cam

e (cont'd)

Cam Option‡▲	
Code	Description
KC1	KC1 cam
KC7	KC7 cam
KD7	KD7 cam
KE7§	KE7 cam
KQ1	KQ1 cam
KQ7	KQ7 cam
KR1§	KR1 cam
KR7§	KR7 cam
KT1§	KT1 cam
KT7§	KT7 cam
KU7§	KU7 cam

f

Contact Blocks	
Code	Description
Blank	No contacts on operator
Standard	
A	1 N.O. - 1 N.C. 1-800T-XA on white side
B	2 N.O. - 2 N.C. 2-800T-XAs — 1 on white side/1 on black side
PenTUFF (Low Voltage)	
AV	1 N.O. - 1 N.C. 1-800T-XAV on white side
BV	2 N.O. - 2 N.C. 2-800T-XAVs — 1 on white side/1 on black side

f (cont'd)

Contact Blocks▲	
Code	Description
Blank	No contacts
Class 1, Div. 2/Zone 2	
Logic Reed	
AR	1 N.O. - 1 N.C. 1-800T-XAR on white side
BR	2 N.O. - 2 N.C. 2-800T-XARs — 1 on white side/1 on black side
Sealed Switch	
AP	1 N.O. - 1 N.C. 1-800T-XAP on white side
BP	2 N.O. - 2 N.C. 2-800T-XAPs — 1 on white side/1 on black side
Stackable Sealed Switch	
AY	1 N.O. - 1 N.C. 1-800T-XAY on white side
BY	2 N.O. - 2 N.C. 2-800T-XAYs — 1 on white side/1 on black side

• One insert of each color (blue, green, orange, red, and yellow).
⊕ Only available on Bul. 800T, Type 4/13 operators.
‡ If an overlapping cam is required, consult your local distributor.
§ Not available with wing levers.
▲ See Table 1 for cam selections and associated targets.

Specifications•

Electrical Ratings		
Contact ratings		Refer to the contact ratings tables on page 10-4.
Dielectric strength		2200V for one minute, 1300V for one minute (Logic Reed)
Electrical design life cycles		1 000 000 at max. rated load, 200 000 at max. rated load (Logic Reed)
Mechanical Ratings		
Vibration		10…2000 Hz, 1.52 mm displacement (peak-to-peak) max./ 10 G max. (except Logic Reed)
Shock		1/2 cycle sine wave for 11 ms ≥ 25 G (contact fragility) and no damage at 100 G
Degree of protection		Type 1/4/12/13 (800T); Type 1/4/4X/12/13 (800H); EN/IEC 60529 IP66/65
Mechanical design life cycles		
Push buttons	(Momentary, non-illuminated)	10 000 000 min.
	(Momentary, illuminated)	250 000 min.
	(Push-pull/twist-to-release)	250 000 min.
Selector switches	(Non-illuminated)	1 000 000 min.
	(Illuminated, key-operated)	200 000 min.
Potentiometers		25 000 min.
All other devices		200 000 min.
Contact operation		Shallow, mini, and low-voltage contact blocks: Slow, double make and break Logic Reed and sealed switch contact blocks: Single break magnetic
Wire gauge/Terminal screw torque		#18…14 AWG (#18…10 Max Duty) / 6…8 lb•in
Typical operating forces		
Operators without contact blocks		Flush, extended button, standard mushroom, jumbo plastic mushroom: 2 lbs max. Jumbo and extended aluminum mushroom head: 3.95 lbs max. Maintained selector switch: 3.6 in•lb max.
Spring return selector switches		3.6 in•lb to stop, 0.2 in•lb to return
Illuminated push buttons and push-to-test pilot lights		5 lb max.
2-position push-pull		8.0 lb max. push or pull
3-position push-pull		8 lb max. push to in position or pull to center position (15 lb max. pull to out position)
Twist-to-release or push-pull		9 lbs max. push or pull 30 in•oz max. twist, 6 in•oz minimum return
Potentiometer		Rotational torque 3…12 in•oz; stopping torque 12 in•lb (minimum)
Contact blocks	Standard	1 lb
	Logic Reed	1 lb max.
	Sealed switch	3 lb max. at 0.205 in. plunger travel
	Stackable sealed switch	1 lb max.
	MaxDuty	1.4 lb max.
	PenTUFF	1.4 lb max.
	Self Monitoring	1.6 lb
Environment		
Temperature range	Operating	-40…+131 °F (-40…+55 °C)
	Storage	-40…+185 °F (-40…+85 °C)
Note: Operating temperatures below freezing are based on the absence of moisture and liquids. Consult your local Rockwell Automation sales office or Allen-Bradley distributor for use in lower temperature applications.		
Humidity		50…95% RH from 77…140 °F (25…60 °C) per Procedure IV of MIL-STD-810C, Method 507.1 cycling test

Certifications

UL Listed
(File No. E14840, E10314
Guide No. NKCR, NOIV)

CSA Certified
(File No. LR1234, LR11924)

CSA C22.2, No. 14

ELEMECH INC.
630-499-7080 · www.elemechinc.com

Rev: 0
Date: 7/5/2018
By: JAP

Device Tag: SS1,3,4

Manuf.: . PNo: ALLEN-BRADLEY: 800H-JR2A

Job Number: EVC7258

Page # 1/1

800T/H 30.5 mm

3-Position Selector Switch Devices, Non-Illuminated

800 T ___ – J 2 ___ C
a b c d e f



39-005-011

a

Protection Rating	
Code	Description
T	Metal, Type 4/13
H	Plastic, Type 4/4X/13

b

Finger-Safe Guards	
Code	Description
Blank	No guards
C	Guards on terminals

c

Knob Insert Colors		
800T Type 4/13 Code	Description	800H Type 4/4X/13 Code
J	White	JR
JX	Packet of colored inserts★	JRX
Metal Wing Lever Colors‡		
Code	Color	Code
JA	Red	—
JG	Grey	—

d

Knob/Lever Type Operators	
Standard Knob	
Code	Operator Function
2	Maintained
4	Spring return from left
5	Spring return from right
91	Spring return from both
Knob Lever‡	
Code	Operator Function
17	Maintained
18	Spring return from left
19	Spring return from right
20	Spring return from both
Metal Wing Lever‡	
Code	Operator Function
11	Maintained
15	Spring return from left
16	Spring return from right
141	Spring return from both
Coin Slot‡	
Code	Operator Function
10	Spring return from both

e

Cam Option§Δ	
Code	Description
Blank	KB7 cam (std.)
KA1	KA1 cam
KA7	KA7 cam

Cam Option§Δ	
Code	Description
KC1	KC1 cam
KC7	KC7 cam
KD7	KD7 cam
KE7▲	KE7 cam
KQ1	KQ1 cam
KQ7	KQ7 cam
KR1▲	KR1 cam
KR7▲	KR7 cam
KT1▲	KT1 cam
KT7▲	KT7 cam
KU7▲	KU7 cam

f

Contact Blocks	
Code	Description
Blank	No contacts on operator
Standard	
A	1 N.O. - 1 N.C. 1-**800T-XA** on white side
B	2 N.O. - 2 N.C. 2-**800T-XA**s — 1 on white side/1 on black side
PenTUFF (Low Voltage)	
AV	1 N.O. - 1 N.C. 1-**800T-XAV** on white side
BV	2 N.O. - 2 N.C. 2-**800T-XAV**s — 1 on white side/1 on black side
Code	Description
Blank	No contacts
Class 1, Div. 2	
Logic Reed	
AR	1 N.O. - 1 N.C. 1-**800T-XAR** on white side
BR	2 N.O. - 2 N.C. 2-**800T-XAR**s — 1 on white side/1 on black side
Sealed Switch	
AP	1 N.O. - 1 N.C. 1-**800T-XAP** on white side
BP	2 N.O. - 2 N.C. 2-**800T-XAP**s — 1 on white side/1 on black side
Stackable Sealed Switch	
AY	1 N.O. - 1 N.C. 1-**800T-XAY** on white side
BY	2 N.O. - 2 N.C. 2-**800T-XAY**s — 1 on white side/1 on black side

- CE Marked
- CSA Certified — File Nos. LR1234, LR11924
- CSA C22.2 — No. 14
- EN/IEC 60947-5-1
- EN/IEC 60947-5-5
- EN ISO 13850
- UL Listed — File Nos. E14840, E10314; Guide Nos. NKCR, NOIV, NISD

Table 1. Cam and Contact Block Functionality Table

Contact Block Suffix Code	Contact Block Side	Circuits	Cam Codes: KB7 (Std.)	KA1	KA7	KC1	KC7	KD7	KE7	KQ1	KQ7	KR1	KR7	KT1	KT7	KU7
A, B, C, HL	White	A	X O O	X O O	O O X	O O X	X O O	O O X	X O O	O O X	X O O	X O O	O X O	X O O	O X O	O X O
		B	O O X	O X O	O X O	O X O	O O X	O O X	O X O	O O X	O X O	O O X	O O X	O O X	O O X	O O X
	Black	A	X O O	X O O	O O X	O O X	X O O	O O X	X O O	O O X	X O O	X O O	O X O	X O O	O X O	O X O
		B	O O X	O X O	O X O	O X O	O O X	O O X	O X O	O O X	O X O	O O X	O O X	O O X	O O X	O O X
	White	A	X O O	X O O	O O X	O O X	X O O	O O X	X O O	O O X	X O O	X O O	O X O	X O O	O X O	O X O
		B	O O X	O X O	O X O	O X O	O O X	O O X	O X O	O O X	O X O	O O X	O O X	O O X	O O X	O O X
	Black	A	X O O	X O O	O O X	O O X	X O O	O O X	X O O	O O X	X O O	X O O	O X O	X O O	O X O	O X O
		B	O O X	O X O	O X O	O X O	O O X	O O X	O X O	O O X	O X O	O O X	O O X	O O X	O O X	O O X

Note: X = Closed/O = Open

Metal-Oxide Varistors (MOVs)

Radial Lead Varistors > LA Varistor Series



40-170-A000

PART NUMBER	MODEL SIZE DISC DIA. (mm)	DEVICE MODEL NUMBER BRAND-ING	MAXIMUM RATING (85°C)				SPECIFICATIONS (25°C)				
			CONTINUOUS		TRANSIENT		VARISTOR VOLT-AGE AT 1mA DC TEST CURRENT		MAXIMUM CLAMPING VOLTAGE 8 x 20µs		TYPICAL CAPACI-TANCE f = 1MHz
			V_{RMS}	V_{DC}	ENERGY 10 x 1000µs	PEAK CURRENT 8 x 20µs	V_{NOM} MIN	V_{NOM} MAX	V_C	I_{PK}	C
			$V_{M(AC)}$	$V_{M(DC)}$	W_{TM}	I_{TM}	(V)		(V)	(A)	(pF)
V130LA1	7	1301	130	175	11	1200	184	255	390	10	180
V130LA2	7	1302	130	175	11	1200	184	228	340	10	180
V130LA5	10	1305	130	175	20	2500	184	228	340	25	450
V130LA10A	14	130L10	130	175	38	4500	184	228	340	50	1000
V130LA20A	20	130L20	130	175	70	6500	184	228	340	100	1900
V130LA20B	20	130L20B	130	175	70	6500	184	220	325	100	1900

Absolute Maximum Ratings For ratings of individual members of a series, see Device Ratings and Specifications chart

	LA SERIES	UNITS
Continuous:		
Steady State Applied Voltage:		
AC Voltage Range ($V_{M(AC)RMS}$)	130 to 1000	V
DC Voltage Range ($V_{M(DC)}$)	175 to 1200	V
Transients:		
Peak Pulse Current (I_{TM})		
For 8/20µs Current Wave (See Figure 2)	1200 to 6500	A
Single Pulse Energy Range		
For 10/1000µs Current Wave (W_{TM})	11 to 360	J
Operating Ambient Temperature Range (T_A)	-55 to 85	°C
Storage Temperature Range (T_{STG})	-55 to 125	°C
Temperature Coefficient (αV) of Clamping Voltage (V_C) at Specified Test Current	<0.01	%/°C
Hi-Pot Encapsulation (Isolation Voltage Capability)	2500	V
(Dielectric must withstand indicated DC voltage for one minute per MIL-STD 202, Method 301)		
Insulation Resistance	1000	MΩ

Agency Approvals

Agency	Agency Approval	Agency File Number
cULus	UL1449	E320116
	CECC 42201-006 IEC 61051-1 IEC 61051-2 IEC 60950-1 (Annex Q) for 14mm and 20mm only	116895
	22.2-1	91768
	CECC 42201-006 IEC 61051-1 IEC 61051-2 IEC 60950-1 (Annex Q) for 14mm and 20mm only	E1273/F

ELEMECH INC.
630-499-7080 · www.elemechinc.com

Rev: 0
Date: 7/5/2018
By: JAP

Device Tag: SUP1

Job Number: EVC7258

Page # 1/1

Manuf.: . PNo:
LITTELFUSE: V130LA10A ASSEMBLY

Cutler-Hammer
Control Power Transformers



Cutler-Hammer
EATON

41-018-A068

Technical Data

Type	Epoxy encapsulated windings	Standards	ANSI/NEMA ST-1
Frequency	50/60 Hz		UL 506
Insulation	Class 105, 55°C temperature rise	Approvals	UL, file E46323
Terminals	Pressure plate		CSA, file LR27533

Transformers with Primary Fuse Blocks

VA	Dimensions (Inches)			Weight Lbs.	Dimensions (mm)			Weight kg	Wiring Diagram ①	Catalog Number	*
	H	W	D		H	W	D				
Primary: 550/575/600 Secondary: 110/115/120 with Fuse Clips for 13/32 x 1-1/2 Fuses											
50	3-15/16	3	3	2.9	100	76	76	1.3	10	**C0050E4CFB**	
75	3-15/16	3	3-1/2	3.8	100	76	89	1.7	10	**C0075E4CFB**	
100	4-1/4	3-3/8	3-3/8	4.4	108	86	86	2.0	10	**C0100E4CFB**	
150	4-9/16	3-3/4	4	7.0	116	95	102	3.2	10	**C0150E4CFB**	
200	5-3/16	4-1/2	4	8.6	132	114	102	3.9	10	**C0200E4CFB**	
250	5-3/16	4-1/2	4-3/8	10.2	132	114	111	4.6	10	**C0250E4CFB**	
300	5-3/16	4-1/2	4-3/4	11.5	132	114	121	5.2	10	**C0300E4CFB**	
350	5-3/16	4-1/2	5-1/4	13.8	132	114	133	6.3	10	**C0350E4CFB**	
500	6-1/8	5-1/4	5-3/8	17.0	156	133	137	7.7	10	**C0500E4CFB**	
750	6-1/8	5-1/4	7	25.9	156	133	178	11.8	10	**C0750E4CFB**	
Primary: 380/400/415 Secondary: 22/23/24 with Fuse Clips for 13/32 x 1-1/2 Fuses											
50	2-9/16	3	3	2.6	65	76	76	1.2	13	**C0050E4HFB**	
75	2-9/16	3	3-1/2	3.7	65	76	89	1.7	13	**C0075E4HFB**	
100	2-7/8	3-3/8	3-3/8	4.2	73	86	86	1.9	13	**C0100E4HFB**	
150	3-3/16	3-3/4	4	6.7	81	95	102	3.0	13	**C0150E4HFB**	
200	3-13/16	4-1/2	4	8.4	97	114	102	3.8	13	**C0200E4HFB**	
250	3-13/16	4-1/2	4-3/8	10.2	97	114	111	4.6	13	**C0250E4HFB**	
Primary: 550/575/600 Secondary: 22/23/24 with Fuse Clips for 13/32 x 1-1/2 Fuses											
50	2-9/16	3	3	2.7	65	76	76	1.2	12	**C0050E4WFB**	
75	2-9/16	3	3-1/2	3.7	65	76	89	1.7	12	**C0075E4WFB**	
100	2-7/8	3-3/8	3-3/8	4.2	73	86	86	1.9	12	**C0100E4WFB**	
150	3-3/16	3-3/4	4	6.7	81	95	102	3.0	12	**C0150E4WFB**	
200	3-13/16	4-1/2	4	8.4	97	114	102	3.8	12	**C0200E4WFB**	
250	3-13/16	4-1/2	4-3/8	10.2	97	114	111	4.6	12	**C0250E4WFB**	

① See **Pages 9-24** and **9-25** for Wiring Diagrams.

NOTE: For additional information, refer to Cutler-Hammer Industrial Control Transformer Binder B1228A.

Cutler-Hammer
EATON

41-018-A068

VA	Dimensions (Inches)			Weight Lbs.	Dimensions (mm)			Weight kg	Wiring Diagram ①	Catalog Number	*
	H	W	D		H	W	D				
Primary: 230/460/575 Secondary: 115/95 with Fuse Clips for 13/32 x 1-1/2 Fuses											
50	3-15/16	3	3	3.2	100	76	76	1.5	6	C0050E4DFB	
75	3-15/16	3	3-1/2	4.2	100	76	89	1.9	6	C0075E4DFB	
100	4-1/4	3-3/8	3-9/16	5.4	108	86	90	2.5	6	C0100E4DFB	
150	4-9/16	3-3/4	4	7.2	116	95	102	3.3	6	C0150E4DFB	
200	5-3/16	4-1/2	4	8.9	132	114	102	4.0	6	C0200E4DFB	
250	5-3/16	4-1/2	4-3/8	10.4	132	114	111	4.7	6	C0250E4DFB	
300	5-3/16	4-1/2	4-3/4	11.2	132	114	121	5.1	6	C0300E4DFB	
350	5-3/16	4-1/2	5-1/4	13.2	132	114	133	6.0	6	C0350E4DFB	
500	6-1/8	5-1/4	5-5/8	20.2	156	133	143	9.2	6	C0500E4DFB	
Primary: 550/575/600 Secondary: 110/115/120 with Fuse Clips for 13/32 x 1-1/2 Fuses											
50	2-9/16	3	3	2.7	65	76	76	1.2	10	C0050E4C	
75	2-9/16	3	3-1/2	3.6	65	76	89	1.6	10	C0075E4C	
100	2-7/8	3-3/8	3-3/8	4.2	73	86	86	1.9	10	C0100E4C	
150	3-3/16	3-3/4	4	6.8	81	95	102	3.1	10	C0150E4C	
200	3-13/16	4-1/2	4	8.4	97	114	102	3.8	10	C0200E4C	
250	3-13/16	4-1/2	4-3/8	10.0	97	114	111	4.6	10	C0250E4C	
300	3-13/16	4-1/2	4-3/4	11.3	97	114	121	5.1	10	C0300E4C	
350	3-13/16	4-1/2	5-1/4	13.6	97	114	133	6.2	10	C0350E4C	
500	4-3/4	5-1/4	5-3/8	16.8	121	133	137	7.6	10	C0500E4C	
750	4-3/4	5-1/4	7	25.7	121	133	178	11.7	10	C0750E4C	
Primary: 380/400/415 Secondary: 22/23/24 with Fuse Clips for 13/32 x 1-1/2 Fuses											
50	2-9/16	3	3	2.5	65	76	76	1.1	13	C0050E4H	
75	2-9/16	3	3-1/2	3.5	65	76	89	1.6	13	C0075E4H	
100	2-7/8	3-3/8	3-3/8	4.0	73	86	86	1.8	13	C0100E4H	
150	3-3/16	3-3/4	4	6.5	81	95	102	3.0	13	C0150E4H	
200	3-13/16	4-1/2	4	8.2	97	114	102	3.7	13	C0200E4H	
250	3-13/16	4-1/2	4-3/8	10.0	97	114	111	4.5	13	C0250E4H	
300	3-13/16	4-1/2	4-3/4	11.0	97	114	121	5.0	13	C0300E4H	
350	3-13/16	4-1/2	5-1/4	13.6	97	114	133	6.2	13	C0350E4H	
500	4-3/4	5-1/4	5-1/2	17.7	121	133	140	8.0	13	C0500E4H	
Primary: 550/575/600 Secondary: 22/23/24 with Fuse Clips for 13/32 x 1-1/2 Fuses											
50	2-9/16	3	3	2.5	65	76	76	1.1	12	C0050E4W	
75	2-9/16	3	3-1/2	3.5	65	76	89	1.6	12	C0075E4W	
100	2-7/8	3-3/8	3-3/8	4.0	73	86	86	1.8	12	C0100E4W	
150	3-3/16	3-3/4	4	6.5	81	95	102	3.0	12	C0150E4W	
200	3-13/16	4-1/2	4	8.2	97	114	102	3.7	12	C0200E4W	
250	3-13/16	4-1/2	4-3/8	10.0	97	114	111	4.5	12	C0250E4W	
300	3-13/16	4-1/2	4-3/4	11.0	97	114	121	5.0	12	C0300E4W	
350	3-13/16	4-1/2	5-1/4	13.6	97	114	133	6.2	12	C0350E4W	
500	4-3/4	5-1/4	5-1/2	17.7	121	133	140	8.0	12	C0500E4W	
750	4-1/2	5-1/4	7-3/8	28.0	114	133	187	12.7	12	C0750E4WXX	
Primary: 380/400/415 Secondary: 110 x 220 with Jumpers; Fuse Clips Not Applicable											
50	2-9/16	3	3	3.0	65	76	76	1.4	6	C0050E4D	
75	2-9/16	3	3-1/2	4.0	65	76	89	1.8	6	C0075E4D	
100	2-7/8	3-3/8	3-9/16	5.2	73	86	90	2.4	6	C0100E4D	
150	3-3/16	3-3/4	4	7.0	81	95	102	3.2	6	C0150E4D	
200	3-13/16	4-1/2	4	8.7	97	114	102	3.9	6	C0200E4D	
250	3-13/16	4-1/2	4-3/8	10.2	97	114	111	4.6	6	C0250E4D	
300	3-13/16	4-1/2	4-3/4	11.0	97	114	121	5.0	6	C0300E4D	
350	3-13/16	4-1/2	5-1/4	13.0	97	114	133	5.9	6	C0350E4D	
500	4-3/4	5-1/4	5-3/8	20.0	121	133	136	9.1	6	C0500E4D	
750	4-3/4	5-1/4	7	28.0	121	133	178	12.7	6	C0750E4D	

Diagram 6

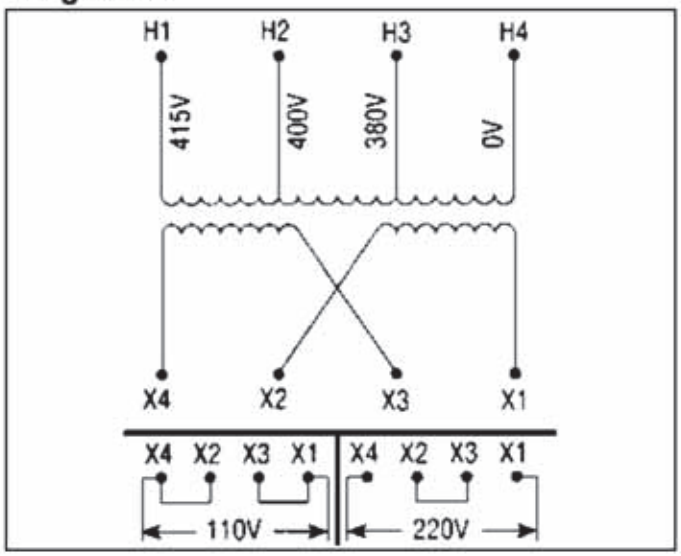

Diagram 10

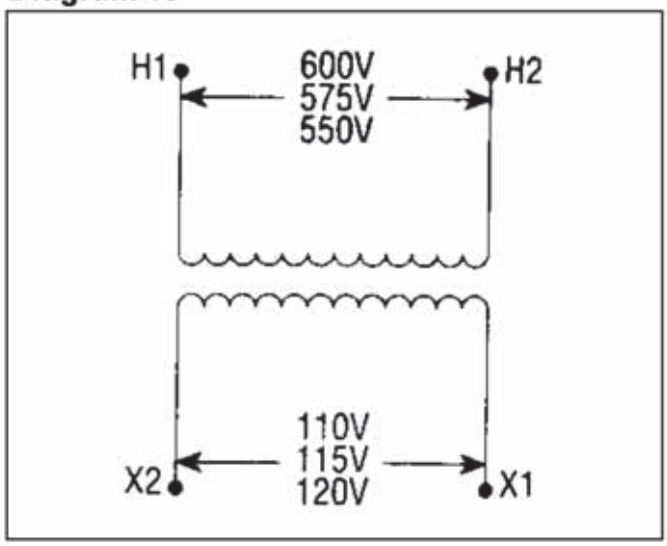

Diagram 12

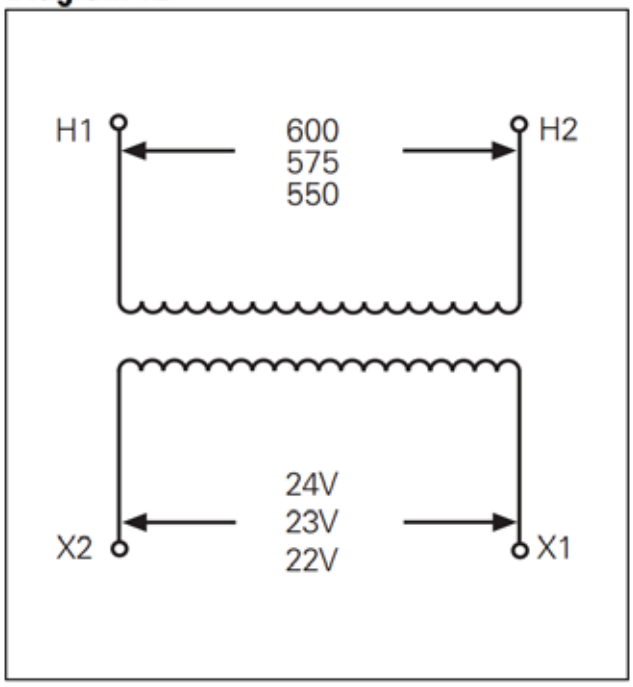

Diagram 13

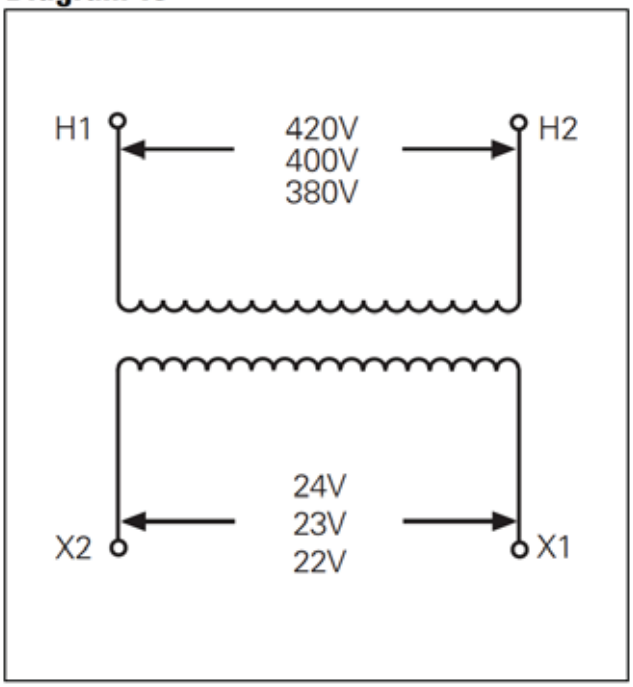

wieland

42-063-001

Datasheet

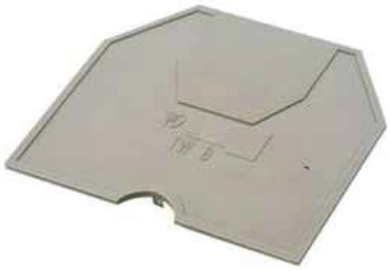

Art.No. 07.311.0155.0

End plate AP 2,5 -4 /V0

End plate for DIN rail terminal blocks type WK ..., color gray

Art.No.	07.311.0155.0
EAN	4015573392663
Order unit	10 pieces

Approvals

Technical data

General

Colour	Grey
Type of end plate	Yes
Type of partition	No
Thickness	1.5 mm
Snap in	Yes
Inflammability class of insulation material acc. with UL94	V0

Accessories

Type of end plate	Yes
Type of partition	No
Colour	Grey
Thickness	1.5 mm
Snap in	Yes
Inflammability class of insulation material acc. with UL94	V0

Feed-through blocks with screw connection

selos

wieland

42-063-003



UL wire connection versions

[4] or 2x no. 14 sol/str AWG
or 2x no. 16 sol/str AWG
or 2x no. 18 sol/str AWG
or 3x no. 20 sol/str AWG or 3x no. 22 sol/str AWG

[5] or 2x no. 12 sol/str AWG
or 2x no. 16 sol/str AWG
or 3x no. 18 sol/str AWG or 3x no. 22 sol/str AWG

[6] or 2x no. 12 sol/str AWG
or 2x no. 14 sol/str AWG
or 3x no. 16 sol/str AWG

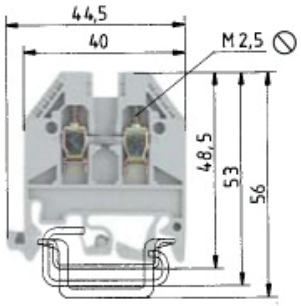

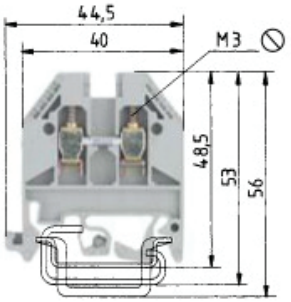

		WK 2,5/U			WK 4/U		
0344 Ex II 2GD IM2		fine-stranded	solid	V / A	fine-stranded	solid	V / A
Ex e I/II		0.5-2.5 mm²	0.5-4 mm²	800 V/8 kV/3 / 24	0.5-4 mm²	0.5-6 mm²	800 V/8 kV/3 / 32
EN 60947-7-1:2002		No. 22-12 AWG		600 V / 20/30	No. 22-10 AWG[4]		600 V / 30/35
UL ratings	Field/factory wiring	No. 24-12 AWG		600 V / 25	No. 20-10 AWG		600 V / 40
CSA ratings		0.5-2.5 mm²	0.5-4 mm²	690 V / 23	0.5-4 mm²	0.5-6 mm²	690 V / 14/27[3]
KEMA 02 ATEX 2114 U[1]	EN 60079-0/EN 60079-7						
Width	Wire strip length	5 mm		9 mm	6 mm		9 mm
Approvals		ATEX LR			ATEX LR		

			Type	Part No.	Std. Pack	Type	Part No.	Std. Pack
Feed-through block		gray	WK 2,5/U	57.503.0055.0	100	WK 4/U	57.504.0055.0	100
Feed-through block Exi		blue	WK 2,5/U BLAU	57.503.0055.6	100	WK 4/U BLAU	57.504.0055.6	100
Accessories								
1. Mounting rail TS 35, DIN rail 7.5 mm high	L = 2 m		35 x 27 x 7,5 EN 60715	98.300.0000.0	1	35 x 27 x 7,5 EN 60715	98.300.0000.0	1
Mounting rail TS 35, DIN rail, 15 mm high	L = 2 m		35 x 24 x 15 EN 60715	98.360.0000.0	1	35 x 24 x 15 EN 60715	98.360.0000.0	1
Mounting rail TS 32, G rail[2]	L = 2 m		9006 EN 60715 G-32	98.190.0000.0	1	9006 EN 60715 G-32	98.190.0000.0	1
2. End clamp with U-foot[2]	10 mm wide		WE 1/U	Z5.523.5753.0	100	WE 1/U	Z5.523.5753.0	100
End clamp TS 35, with screw	8 mm wide		9708/2 S35	Z5.522.8553.0	100	9708/2 S35	Z5.522.8553.0	100
End clamp TS 35, without screw	8 mm wide		WEF 1/35	Z5.523.9353.0	100	WEF 1/35	Z5.523.9353.0	100
3. End plate		gray	AP 2,5 - 4	07.311.0155.0	10	AP 2,5 - 4	07.311.0155.0	10
		blue	AP 2,5 - 4 BLAU	07.311.0155.6	10	AP 2,5 - 4 BLAU	07.311.0155.6	10
4. Partition		gray	TW 2,5 - 4	07.311.1155.0	10	TW 2,5 - 4	07.311.1155.0	10
		blue	TW 2,5 - 4 BLAU	07.311.1155.6	10	TW 2,5 - 4 BLAU	07.311.1155.6	10
5. Cross connector with screws	2 pole		IVB WK 2,5 - 2	Z7.280.2227.0	10	IVB WK 4 - 2	Z7.281.1227.0	10
insulated	3 pole		IVB WK 2,5 - 3	Z7.280.2327.0	10	IVB WK 4 - 3	Z7.281.1327.0	10
	up to 12 pole		IVB WK 2,5 - 12	Z7.280.3227.0	10	IVB WK 4 - 12	Z7.281.2227.0	10
6. Partition plate with marking facility			TS 2,5 GELB	07.311.2053.8	10	TS 4 GELB	07.311.2153.8	10
7. Single cover with marking facility			AD VB 2,5 GELB	04.326.2053.8	10	AD VB 4 GELB	04.326.2153.8	10
8. Cover with warning symbol over 4 blocks			AD VB 5/4 GELB	04.343.4756.8	10	AD VB 6/4 GELB	04.343.4856.8	10

For more accessories see pages 60-77
For marking systems see pages 70-75

[*] For maintaining the proper isolation distances, the open side of a feed-through terminal block as well as both sides of a jumper are to be enclosed by partitions.
[1] Please note the mounting instructions on the cover page. [2] Do not use in Ex environments. [3] With/without jumper

ELEMECH INC.
630-499-7080 · www.elemechinc.com

Rev: 0
Date: 7/5/2018
By: JAP
Device Tag: TB
Job Number: EVC7258
Page # 1/1
Manuf.: . PNo: WIELAND: 57.504.0055.0

fasis

wieland

42-063-***







2,5 mm²/5 mm Width

Type	Part no.	Std. pack
Marking strips, unmarked		
9705 A/5/10	04.242.5053.0	25
Marking strips, marked		
9705 A/5/9 B 1 - 9	04.842.4953.0	25
9705 A/5/10 B*	04.842.5053.0	25
9705 A/5/10 B 1 - 10	04.845.0153.0	25
11 - 20	04.845.0253.0	25
21 - 30	04.845.0353.0	25
31 - 40	04.845.0453.0	25
41 - 50	04.845.0553.0	25
51 - 60	04.845.0653.0	25
61 - 70	04.845.0753.0	25
71 - 80	04.845.0853.0	25
81 - 90	04.845.0953.0	25
91 - 100	04.845.1053.0	25
⊕ (10 x)	04.855.0053.0	25
⏚ (10 x)	04.855.0153.0	25
+ (10 x)	04.855.0253.0	25
– (10 x)	04.855.0353.0	25
L1 (10 x)	04.855.0453.0	25
L2 (10 x)	04.855.0553.0	25
L3 (10 x)	04.855.0653.0	25
PE (10 x)	04.855.0753.0	25
SL (10 x)	04.855.3153.0	25
N (10 x)	04.855.3253.0	25
F1 (10 x)	04.855.0953.0	25
F2 (10 x)	04.855.1053.0	25
L1, L2, L3, N, PE (2 x)	04.855.0853.0	25
with enlarged marking area		
9705 AL/5/10	04.242.5153.0	25
*Custom marking upon request		

4 mm²/6 mm Width

Type	Part no.	Std. pack
Marking strips, unmarked		
9705 A/6/10	04.242.6053.0	25
Marking strips, marked		
9705 A/6/9 B 1 - 9	04.842.5953.0	25
9705 A/6/10 B*	04.842.6053.0	25
9705 A/6/10 B 1 - 10	04.846.0153.0	25
11 - 20	04.846.0253.0	25
21 - 30	04.846.0353.0	25
31 - 40	04.846.0453.0	25
41 - 50	04.846.0553.0	25
51 - 60	04.846.0653.0	25
61 - 70	04.846.0753.0	25
71 - 80	04.846.0853.0	25
81 - 90	04.846.0953.0	25
91 - 100	04.846.1053.0	25
⊕ (10 x)	04.856.0053.0	25
⏚ (10 x)	04.856.0153.0	25
+ (10 x)	04.856.0253.0	25
– (10 x)	04.856.0353.0	25
L1 (10 x)	04.856.0453.0	25
L2 (10 x)	04.856.0553.0	25
L3 (10 x)	04.856.0653.0	25
PE (10 x)	04.856.0753.0	25
SL (10 x)	04.856.3153.0	25
N (10 x)	04.856.3253.0	25
F1 (10 x)	04.856.0953.0	25
F2 (10 x)	04.856.1053.0	25
L1, L2, L3, N, PE (2 x)	04.856.0853.0	25
with enlarged marking area		
9705 AL/6/10	04.242.6353.0	25
*Custom marking upon request		

10 mm²/10 mm Width

marked for 5 blocks (every 2nd tag) *

Type	Part no.	Std. pack
9705 A/5/10/5 B	04.842.5553.0	25

16 mm²/12 mm Width

marked for 5 blocks (every 2nd tag) *

Type	Part no.	Std. pack
9705 A/6/10/5 B	04.842.6553.0	25

35 mm²/16 mm Width

marked for 5 blocks (every 2nd tag) *

Type	Part no.	Std. pack
9705 A/8/10/5 B	04.842.8553.0	25

* indicate required marking with part no.

ELEMECH INC.
630-499-7080 · www.elemechinc.com

Manuf.: . PNo:
WIELAND: 04.242.6353-CUSTOM

Rev: 0

Date: 7/5/2018

By: JAP

Device Tag: TB,DB

Job Number: EVC7258

Page # 1/1

Item No. Z5.522.8553.0
End bracket 9708 / 2 S 35
End clamp for mounting rail TS 35

wieland

42-063-009



Item No.	Z5.522.8553.0
EAN	4015573141766
order unit	100 Piece(s)

Technical data

Accessories

ArticlePrice	udp_no_price
Colour	Black
Inflammability class of insulation material acc. with UL94	V2
Width/grid dimension	8 mm
Latching	Screwable
Length	49 mm
Material	Metal
Mounting method	DIN rail (top hat rail) 35/7.5 mm

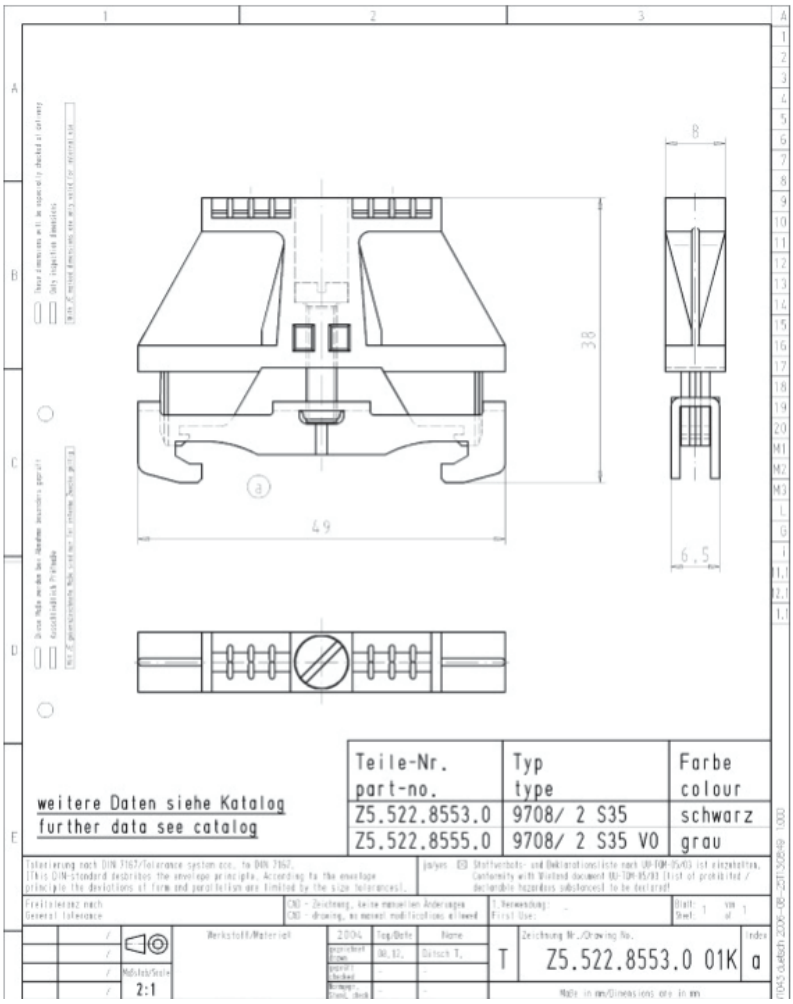

ELEMECH INC. 630-499-7080 · www.elemechinc.com	Rev: 0	Device Tag: TB,DB	
	Date: 7/5/2018		
Manuf.: . PNo: WIELAND: Z5.522.8553	By: JAP	Job Number: EVC7258	Page # 1/1

wieland

42-063-015

Item No. Z7.281.1227.0
Insulated jumper bar IVBWK 4 - 2
Cross connector, insulated for DIN rail terminal blocks type WK ..., 2 -pole





Item No.	Z7.281.1227.0
EAN	4015573156081
order unit	10 Piece(s)

Technical data

Accessories

ArticlePrice	
Colour	Yellow
Type	Cross connector
Modular spacing	5.95 mm
Number of bridged clamps	2
Mounting method	Screwable
Insulated	Yes

Type	Part no.	Std. pack
for terminal blocks type		
WK 2,5/U **WK 2,5 - 4 KOI/U** **WK 2,5 U/8113 S/H** **WKN 2,5 E/U**	**5 mm spacing Screw: M 2.5**	
2pole VB WK 2,5-2	Z7.280.0227.0	10
3pole VB WK 2,5-3	Z7.280.0327.0	10
4pole VB WK 2,5-4	Z7.280.0427.0	10
5pole VB WK 2,5-5	Z7.280.0527.0	10
6pole VB WK 2,5-6	Z7.280.0627.0	10
80pole VB WK 2,5 M-80	Z7.280.0027.0	10
WKM 2,5/15 **WKM 2,5 F1/15** **WKM 2,5 F2/15** **WKM 2,5/2 S 2,8 1 K/15** **WKM 2,5 TP1 O/15** **WKM 2,5 TP2 O/15**	**5 mm spacing Screw: M 2.5**	
2pole VB WKM 2,5/15-2	Z7.215.4227.0	50
3pole VB WKM 2,5/15-3	Z7.215.4327.0	50
4pole VB WKM 2,5/15-4	Z7.215.4427.0	50
5pole VB WKM 2,5/15-5	Z7.215.4527.0	50
6pole VB WKM 2,5/15-6	Z7.215.4627.0	50
60pole VB WKM 2,5/15 M-60	Z7.215.4027.0	10
WK/3 S/IW/U	**6 mm spacing Screw: M 3**	
WK/3 - 6 S/IW/U **WK/4 S/IW/U** **WK/4-8 S/IW/U**		
2pole VB WK/...S/IW/U-2	Z7.281.3227.0	10
3pole VB WK/...S/IW/U-3	Z7.281.3327.0	10
4pole VB WK/...S/IW/U-4	Z7.281.3427.0	10
5pole VB WK/...S/IW/U-5	Z7.281.3527.0	10
6pole VB WK/...S/IW/U-6	Z7.281.3627.0	10
20pole VB WK/...S/IW/U-20	Z7.281.3027.0	10

Type	Part no.	Std. pack
WK 4/U **WK 4TKS D/U** **WK 4 3 S 1 K/U** **WK 4 3-6 S 1 K/U** **WK 4 5 S 2,8 1 K/U** **WK 4 3 S 1 K/IW/U** **WK 4 3-6 S 1 K/IW/U** **WK 4/U F1** **WK 4/U F2**	**6 mm spacing Screw: M 3**	
2pole VB WK 4-2	Z7.281.0227.0	10
3pole VB WK 4-3	Z7.281.0327.0	10
4pole VB WK 4-4	Z7.281.0427.0	10
5pole VB WK 4-5	Z7.281.0527.0	10
6pole VB WK 4-6	Z7.281.0627.0	10
70pole VB WK 4 M-70	Z7.281.0027.0	10
WK 4/D 1/2 U **WK 4/D 2/2 U**	**6 mm spacing Screw: M 3**	
2pole VB WK 4 D..-2	Z7.281.6227.0	10
3pole VB WK 4 D..-3	Z7.281.6327.0	10
4pole VB WK 4 D..-4	Z7.281.6427.0	10
5pole VB WK 4 D..-5	Z7.281.6527.0	10
6pole VB WK 4 D..-6	Z7.281.6627.0	10
70pole VB WK 4 D.. M-70	Z7.281.6027.0	10
WKM 4/15 **WK 4/D EU** **WK 4 E/U** for upper tier block **WK 4 E/U GU ORANGE** **WK 4 E/U GO** **WK 4 E/U G2** **WK 4 E/U G1 ORANGE** **WK 4 E/U G-URL** **WK 4 E/U G-ULR** **WK 4 E/U VB SCHWARZ**	**6 mm spacing Screw: M 3**	
2pole 9215 - 2	Z7.210.3227.0	50
3pole 9215 - 3	Z7.210.3327.0	50
4pole 9215 - 4	Z7.210.3427.0	50
5pole 9215 - 5	Z7.210.3527.0	50
6pole 9215 - 6	Z7.210.3627.0	50
70pole 9215 M-70	Z7.210.3027.0	10

Type	Part no.	Std. pack
WK 4/3-6 SKO	**6 mm spacing Screw: M 3**	
2pole 2072/2	Z7.220.0227.0	50
3pole 2072/3	Z7.220.0327.0	50
4pole 2072/4	Z7.220.0427.0	50
5pole 2072/5	Z7.220.0527.0	50
6pole 2072/6	Z7.220.0627.0	50
70pole 2072/M	Z7.210.1027.0	10
WK/5 S/U **WK/5-10 S/U** **WK/3-6 S/U** **WK/4 S/U** **WK/4-8 S/U**	**6 mm spacing Screw: M 3**	
2pole 9703/6-2	Z7.211.0227.0	50
3pole 9703/6-3	Z7.211.0327.0	50
4pole 9703/6-4	Z7.211.0427.0	50
5pole 9703/6-5	Z7.211.0527.0	50
6pole 9703/6-6	Z7.211.0627.0	50
70pole 9703/6 M-70	Z7.211.0027.0	10

ELEMECH INC.
630-499-7080 · www.elemechinc.com

Rev: 0

Date: 7/5/2018

By: JAP

Device Tag: TB1

Job Number: EVC7258

Page # 1/1

Manuf.: . PNo: WIELAND: Z7.281.1227

SMALL COMPACT THERMOSTAT

KTO 011 / KTS 011

46-034-000



Technical Data KT 011

Part No.	Contact type	Scale on housing
01140.9-00	normally closed	30 - 140°F
01141.9-00	normally open	30 - 140°F
01146.9-00	normally closed	0 - 60°C
01147.9-00	normally open	0 - 60°C

Sensor element:	Thermostatic bi-metal
Maximum tolerance:	±7.2°F (4K)
Switching difference (hysteresis):	12.6°F ± 5.4°F (7°C ± 3K)
Service life:	100.000 cycles
Switching capacity (max. load):	15A resistive/2A inductive @ 120 VAC
	10A resistive/2A inductive @ 250 VAC
	DC 30W
EMI/EMC compliance:	EN 55014-1-2, EN 61000-3-2, EN 61000-3-3
Connections:	2-pole terminal for AWG 14 max. (2.5 mm²)
Mounting:	Clip for 35 mm DIN rail (EN 50022)
Dimensions (H x W x D):	2.4 x 1.3 x 1.7" (60 x 33 x 43 mm)
Housing:	Plastic, UL94V-0
Weight:	1.27 oz (36 g)
Protection type:	IP 20
Operating/storage temperature:	-49 to 158°F (-45 to 70°C)
Agency approvals:	UL, CSA

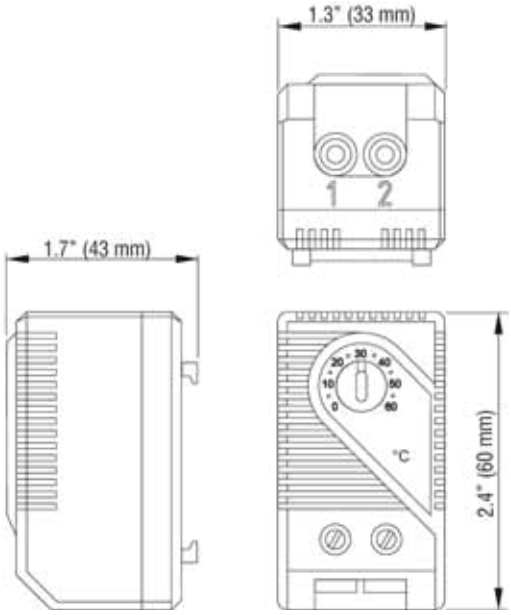

ELEMECH INC. 630-499-7080 · www.elemechinc.com	Rev: 0	Device Tag: TS1	
	Date: 7/5/2018		
Manuf.: . PNo: STEGO: 01140.9-00	By: JAP	Job Number: EVC7258	Page # 1/1

CHNF SERIES CONTINUOUS HINGE WITH CLAMPS TYPE 4X JUNCTION BOXES

PENTAIR

11-035-214

ENCLOSURE CATALOG NUMBER	ENCLOSURE DIMENSIONS (IN.)	SUB-PANEL CATALOG NUMBER
A-ABCCHNFSS6	A x B x C	A APB

NOTE:

1. SS - INDICATES 304 STAINLESS STEEL
2. 6 – INDICATES 316 STAINLESS STEEL



APPLICATION

Used in either indoor or outdoor applications, these enclosures combine a rugged continuous hinge, seamless foam-in-place gasket and stainless steel screw-down clamps for a reliable seal that protects components from corrosive environments.

SPECIFICATIONS

- 16 and 14 gauge Type 304 or 316L stainless steel
- Seams continuously welded and ground smooth
- Seamless foam-in-place gasket
- Stainless steel screws and clamps
- Pull stainless steel continuous hinge pin to remove door
- Weldnuts provided for mounting optional panels and terminal block kits
- Bonding provision on door and body

FINISH

Cover and sides of body have smooth #4 brushed finish.

INDUSTRY STANDARDS

UL 50, 50E Listed; Type 3R, 4, 4X, 12; File No. E27567
cUL Listed per CSA C22.2 No 94; Type 3R, 4, 4X, 12; File No. E27567
UL 508A Listed; Type 3R, 4, 4X, 12; File No. E61997
cUL Listed per CSA C22.2 No 94; Type 3R, 4, 4X, 12; File No. E61997

NEMA/EEMAC Type 3R, 4, 4X, 12, 13
CSA File No. 42184: Type 4, 4X, 12
IEC 60529, IP66
Meets NEMA Type 3RX requirements

ACCESSORIES

Fast-Operating Clamp-Cover Junction Box Clamp
Lock Kit for Clamp Cover Junction Boxes
Panels for Junction Boxes
Terminal Block Kit Assembly for Junction Boxes Overview

MODIFICATION AND CUSTOMIZATION

Hoffman excels at modifying and customizing products to your specifications. Contact your local Hoffman sales office or distributor for complete information.

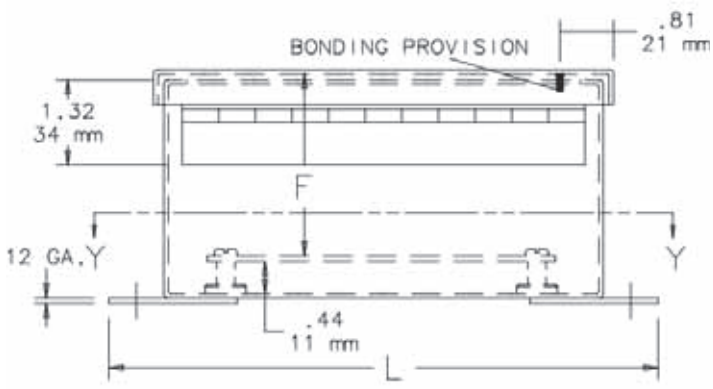

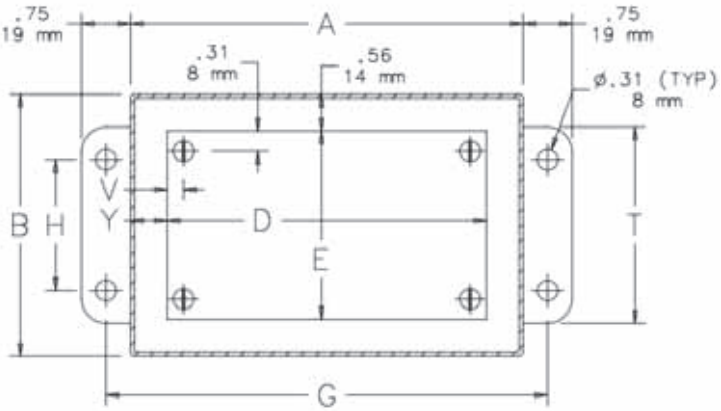

ELEMECH INC.
630-499-7080 · www.elemechinc.com

Rev:	Device Tag:
0	EN1
Date: 7/5/2018	
By: JAP	Job Number: EVC7258
Manuf.: . PNo: HOFFMAN: A-404NFSS6	Page # 1/1

30.5 mm Push Buttons

Allen-Bradley

02-005-008

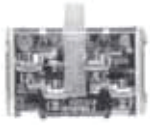

Shallow Block



PenTUFF™ (Low Voltage) Contact Block



Logic Reed Block



Sealed Switch Block



Stackable Sealed Switch Block

Contact Type	Shallow Block*❄		PenTUFF (Low Voltage) Block*❄		Logic Reed Block‡		Sealed Switch Block‡		Stackable Sealed Switch Block‡	
	Cat. No.	Code	Cat. No.	Code	Cat. No.	Code	Cat. No.	Code	Cat. No.	Code
1 N.O.	800T-XD1	D	800T-XD1V	H	800T-XD1R	V	800T-XD1P	R	800T-XD1Y	5
1 N.C.	800T-XD2	E	800T-XD2V	U	800T-XD2R	W	800T-XD2P	S	800T-XD2Y	6
1 N.O.E.M.	800T-XD3	G	800T-XD3V	I	—	—	—	—	—	—
1 N.C.L.B.	800T-XD4	J	800T-XD4V	Q	—	—	—	—	—	—
1 N.O. - N.C.	800T-XA	A	800T-XAV	F	800T-XAR	T	800T-XAP	P	800T-XAY	7
2 N.O.	800T-XA2§	M	—	—	800T-XA2R§	Y	—	—	800T-XA2Y	8
2 N.C.	800T-XA4	N	—	—	800T-XA4R	Z	—	—	800T-XA4Y	9
1 N.C.L.B. - 1 N.O.	800T-XA1	B	—	—	—	—	—	—	—	—
1 N.C.L.B. - 1 N.C.	800T-XA7	C	—	—	—	—	—	—	—	—

Note: Modular suffix codes can be used when specifying selector switches with multiple contact blocks.

PenTUFF™ (Low Voltage) Contact Ratings

Minimum DC: 5V, 1 mA
Maximum thermal continuous current I_{th} 2.5 A AC/1.0 A DC. Bulletin 800T units with 800T-XAV contacts have ratings as follows:

Max. Opertnl. Volts U_e	Utilization Category		Rated Operational Currents		
	IEC	NEMA	Volts U_e	Make	Break
AC 300	AC-15	C300	120...300 0...120	1800VA 15 A	180VA 1.5 A
DC 150	DC-13	R150	24...150 0...24	28VA 1.0 A	

Stackable Sealed Switch Contact Ratings

Minimum: 5V, 10 mA (digital); 24V, 1 mA (analog)

Maximum continuous current I_{th} 2.5 A. Bulletin 800T units have control circuit ratings with sealed switch contact blocks as follows:

Max. Opertnl. Volts U_e	Utilization Category		Rated Operational Currents		
	IEC	NEMA	Volts U_e	Make	Break
AC 300	AC-15	C300	120...300 0...120	1800VA 15 A	180VA 1.5 A
DC 150	DC-13	Q150	24...150 0...24	69VA 2.5 A	

MaxDuty Contact Rating

Maximum thermal continuous current I_{th} 24 A.
Pilot Duty — 120V AC, 12 A; 24V DC, 10 A
Motor Ratings — 120V AC, 1.5 Hp; 240V AC, 3 Hp; 24V DC, 10 A FLA/60 A LRA

Logic Reed Contact Ratings

Minimum — DC: 5V, 1 mA
Maximum — DC: 30V, 0.06 A, AC: 150V, 0.15 A
Should only be used with resistive loads.

Product Certifications

Certifications	UR/UL, CSA, CCC, CE
Standards Compliance — CE Marked	NEMA ICS-5; UL 508, EN ISO 13850, EN 60947-1, EN 60947-5-1, EN 60947-5-5

Bulletin 800T/H

30.5 mm Push Buttons

Emergency Stop Operators

Allen-Bradley

29-005-118

2-Position Red Trigger Action Twist-to-Release, Non-Illuminated

- Tamper resistant – front-of-panel mounting and non-removable operator head
- Compliant with global E-stop standards, including EN ISO 13850 and EN 60947-5-5



Cat. No. 800T-TFXJET6



Cat. No. 800T-TFXLET6



Cat. No. 800T-TFXK6



Cat. No. 800H-TFRXT6

	Operator Position		Type 4/13			Type 4/4X/13
			45 mm Plastic	63 mm Metal	Key Release	45 mm Plastic
Contact Type	Out	In	Cat. No.*❄‡	Cat. No.*§	Cat. No.*♣	Cat. No.*❄‡
No contacts	—	—	**800T-TFXT6**	**800T-TFXLT6**	**800T-TFXK6**	**800H-TFRXT6**
1 N.C.	X	O	800T-TFXT6D2	800T-TFXLTD2	800T-TFXK6D2	800H-TFRXT6D2
1 N.O. - 1 N.C.	O X	X O	**800T-TFXT6A**	800T-TFXLT6A	**800T-TFXK6A**	**800H-TFRXT6A**
1 S.M.C.B.►	X	O	800TC-TFXT6D4S	800TC-TFXLT6D4S	800TC-TFXK6D4S	800HC-TFRXT6D4S

* For finger-safe contact block terminals, add a **C** to the cat. no. Example: Cat. No. 800T**C**-TFXT6 or 800H**C**-TFRXT6.
❄ To order a device with a jumbo (60 mm) plastic head add the letter **J** after **X**. Example: Cat. No. 800T-TFX**J**T6A or 800H-TFRX**J**T6A.
‡ To order a jumbo head device with "E-STOP" printed on the cap add the letters **JE** after **X.** Example: Cat. No. 800T-TFX**JE**T6 or 800H-TFRX**JE**T6.
§ To order a device with "E-STOP" engraved on the cap add the letter **E** after **L.** Example: Cat. No. 800TC-TFX**LE**T6D4S.
♣ Provided with two DO18 keys.
► Self-monitoring contact block.

Standards Compliance

UL 508

CCC

Certifications

UL Listed
(File No. E14840, E10314
Guide No. NKCR, NOIV)

CSA Certified
(File No. LR1234, LR11924)

CSA C22.2, No. 14

EN/IEC: 60947-5-1

800 T ___ – T FX T 6 D2
a b c d e

a

Protection Rating	
Code	Description
T	Metal, Type 4/13
H	Plastic, Type 4/4X/13

b

Finger-Safe Guards	
Code	Description
Blank	No guards
C	Guards on terminals

c

800T Type 4/13 Code	Description	800H Type 4/4X/13 Code
Head Type‡		
FX	Standard (45 mm) mushroom head	FRX
FXJ	Jumbo (60 mm) mushroom head	FRXJ
FXJE	Jumbo (60 mm) mushroom head with "E-STOP"	FRXJE
FXK	45 mm mushroom head key release	—
FXL	63 mm anodized aluminum head	—
FXLE	63 mm anodized aluminum head with "E-STOP"	—

d

Release Function	
Code	Color
Blank	Key release⌘
T	Twise release

Note: X = Closed/O = Open
⌘Configurable only with **FXK** head type.

e

Contact Block(s)			
Code	Operator Position  Out	 In	Description
Blank	—	—	No contacts on operator
Standard			
D1	O	X	1 N.O.
D2	X	O	1 N.C.
D4	X	O	1 N.C.L.B.
A	O X	X O	1 N.O. - 1 N.C.
A1	O X	X O	1 N.O. - 1 N.C.L.B.
A5	X X	O O	2 N.C.L.B.
Pen*TUFF* (Low Voltage)			
D1V	O	X	1 N.O.
D2V	X	O	1 N.C.
D4V	X	O	1 N.C.L.B.
AV	O X	X O	1 N.O. - 1 N.C.
Class 1, Div. 2/Zone 2			
Logic Reed			
D1R	O	X	1 N.O.
D2R	X	O	1 N.C.
AR	O X	X O	1 N.O. - 1 N.C.
Sealed Switch			
D1P	O	X	1 N.O.
D2P	X	O	1 N.C.
AP	O X	X O	1 N.O. 1 N.C.
Stackable Sealed Switch			
D1Y	O	X	1 N.O.
D2Y	X	O	1 N.C.
AY	O X	X O	1 N.O. - 1 N.C.

ELEMECH INC.
630-499-7080 · www.elemechinc.com

Rev: 0
Date: 7/5/2018
By: JAP

Device Tag: PB

Job Number: EVC7258

Page # 1/1

Manuf.: . PNo:
ALLEN-BRADLEY: 800H-TFRXT6

SUB-PANELS FOR ENCLOSURES

PENTAIR

11-035-126

SUB-PANEL CATALOG NUMBER	SUB-PANEL DIMENSIONS (IN.)
A-DPESS	D x E

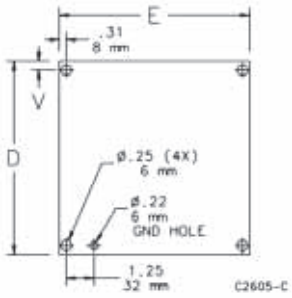



NOTE:

1. 6 indicates 316 Stainless Steel.
2. AL indicates Aluminum
3. G indicates Conductive Steel

Catalog Number	Material	Panel Size D x E (in.)	Panel Size D x E (mm)	V (in.)	V (mm)
A6P4	Painted steel	4.88 x 2.88	124 x 73	0.31	8
A6P4G	Conductive steel	4.88 x 2.88	124 x 73	0.31	8
A6P4SS	Stainless Steel	4.88 x 2.88	124 x 73	0.31	8
A6P4AL	Aluminum	4.88 x 2.88	124 x 73	0.31	8
A6P6	Painted steel	4.88 x 4.88	124 x 124	0.31	8
A6P6G	Conductive steel	4.88 x 4.88	124 x 124	0.31	8
A6P6SS	Stainless Steel	4.88 x 4.88	124 x 124	0.31	8
A6P6AL	Aluminum	4.88 x 4.88	124 x 124	0.31	8
A8P6	Painted steel	6.75 x 4.88	171 x 124	0.25	6
A8P6G	Conductive steel	6.75 x 4.88	171 x 124	0.25	6
A8P6SS	Stainless Steel	6.75 x 4.88	171 x 124	0.25	6
A8P6AL	Aluminum	6.75 x 4.88	171 x 124	0.25	6
A8P8	Painted steel	6.75 x 6.88	171 x 175	0.25	6
A8P8AL	Aluminum	6.75 x 6.88	171 x 175	0.25	6
A10P8	Painted steel	8.75 x 6.88	222 x 175	0.25	6
A10P8G	Conductive steel	8.75 x 6.88	222 x 175	0.25	6
A10P8SS	Stainless Steel	8.75 x 6.88	222 x 175	0.25	6
A10P8AL	Aluminum	8.75 x 6.88	222 x 175	0.25	6
A10P10	Painted steel	8.75 x 8.88	222 x 226	0.25	6
A10P10G	Conductive steel	8.75 x 8.88	222 x 226	0.25	6
A10P10AL	Aluminum	8.75 x 8.88	222 x 226	0.25	6
A12P6	Painted steel	10.75 x 4.88	273 x 124	0.25	6
A12P6G	Conductive steel	10.75 x 4.88	273 x 124	0.25	6
A12P10	Painted steel	10.75 x 8.88	273 x 226	0.25	6
A12P10G	Conductive steel	10.75 x 8.88	273 x 226	0.25	6
A12P10SS	Stainless Steel	10.75 x 8.88	273 x 226	0.25	6
A12P10AL	Aluminum	10.75 x 8.88	273 x 226	0.25	6
A12P12	Painted steel	10.75 x 10.88	273 x 276	0.25	6
A12P12G	Conductive steel	10.75 x 10.88	273 x 276	0.25	6
A12P12SS	Stainless Steel	10.75 x 10.88	273 x 276	0.25	6
A14P8	Painted steel	12.75 x 6.88	324 x 175	0.25	6
A14P8G	Conductive steel	12.75 x 6.88	324 x 175	0.25	6
A14P12	Painted steel	12.75 x 10.88	324 x 276	0.25	6
A14P12G	Conductive steel	12.75 x 10.88	324 x 276	0.25	6
A14P12SS	Stainless Steel	12.75 x 10.88	324 x 276	0.25	6
A14P12AL	Aluminum	12.75 x 10.88	324 x 276	0.25	6
A16P10	Painted steel	14.75 x 8.88	375 x 226	0.25	6
A16P10G	Conductive steel	14.75 x 8.88	375 x 226	0.25	6
A16P14	Painted steel	14.75 x 12.88	375 x 327	0.25	6
A16P14G	Conductive steel	14.75 x 12.88	375 x 327	0.25	6
A16P14SS	Stainless Steel	14.75 x 12.88	375 x 327	0.25	6
A16P14AL	Aluminum	14.75 x 12.88	375 x 327	0.25	6
A18P16	Painted steel	16.75 x 14.88	425 x 378	0.25	6
A18P16G	Conductive steel	16.75 x 14.88	425 x 378	0.25	6
A18P16SS	Stainless Steel	16.75 x 14.88	425 x 378	0.25	6
A18P16AL	Aluminum	16.75 x 14.88	425 x 378	0.25	6

Mounting Bracket Kits

Mounting bracket kits DMFK1 and DMFK2 include two 14 gauge steel external mounting brackets and fasteners. Mounting bracket kit CMFK and CMFKSS each contain four 12 gauge steel or Type 304 stainless steel external mounting brackets and fasteners. Sealing washers are provided with each kit to maintain Type 4 or 12 rating after installation. Steel mounting brackets are zinc plated with clear chromate finish.

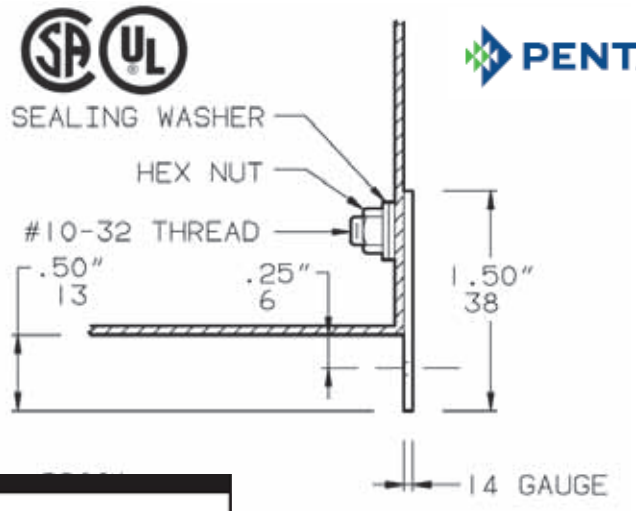

Catalog Number	Description
† **DMFK1**	Mounting bracket kit
† **DMFK2**	Mounting bracket kit
† **CMFK**	Steel mounting bracket kit
†† **CMFKSS**	Stainless steel mounting bracket kit
†† **CMTGFT**	Composite mounting bracket kit

† Maintains UL/CSA Type 4 and Type 12.

†† Maintains UL/CSA Type 4 Type 4X, and Type 12.



Fiberglass Mounting Bracket Kit

Catalog Number	Bulletin Number
A50MFKR	A50Y

11-035-176

FIBERGLASS-HINGE COVERED JUNCTION BOX TYPE 4X JUNCTION BOXES

PENTAIR

11-035-273

ENCLOSURE CATALOG NUMBER	ENCLOSURE DIMENSIONS (IN.)	SUB-PANEL CATALOG NUMBER
A-ABCJFGQRPWR	A x B x C	A APB

NOTE: 1. PWR indicates with window cover.
2. R indicates with solid cover.



INDUSTRY STANDARDS

Mounting brackets required to meet UL/CSA external mounting requirements.

UL 508A Listed; Type 3, 3R, 4, 4X, 12, 13; File No. E61997
cUL Listed per CSA C22.2 No 94; Type 3, 3R, 4, 4X, 12, 13; File No. E61997
Enclosure flammability evaluated per UL 508A
Window flammability evaluated per UL 508A

NEMA/EEMAC Type 3, 3R, 4, 4X, 12, 13
CSA File No. 42186: Type 3R, 4, 4X, 12
IEC 60529, IP66
Meets NEMA Type 3RX requirements

APPLICATION

Able to withstand harsh environments, these small enclosures feature a simple, traditional non-metallic design that is suitable for a broad range of applications.

SPECIFICATIONS

- Compression-molded fiberglass material has excellent temperature and chemical resistance qualities and exhibits outstanding physical properties
- Fiberglass material is easily punched, drilled, filed or sawed
- Seamless foam-in-place gasket assures water-tight and dust-tight seal
- Threaded internal bosses provided for mounting optional panels and terminal block kits
- Scratch-resistant polycarbonate windows are permanently bonded in place
- Screw-cover enclosures have easily removable covers attached to body with internal plated steel hinges. Cover securely fastens to the body with four captivated Type 316 stainless steel cover screws.
- Enclosures with quick-release latches have corrosion-resistant polyester hinges and polyester latches with a Type 316L stainless steel bail. Attached with Type 316 stainless steel screws. A Type 316L stainless steel padlock hasp is furnished with each enclosure.
- Sealing washers are furnished with enclosure

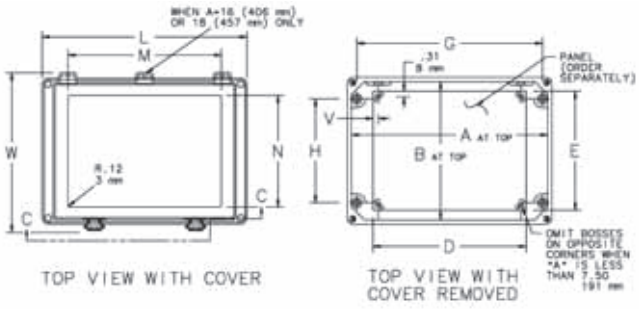

FINISH

Fiberglass material is light-gray inside and out. Optional steel panels are painted white. Optional stainless steel, aluminum and composite panels are unpainted.

ACCESSORIES

See also Accessories.
H2OMIT® Vent Drains, Type 4X
HOL-SEALERS™ Non-Metallic Hole Seals
Panels for Junction Boxes

MODIFICATION AND CUSTOMIZATION

Hoffman excels at modifying and customizing products to your specifications. Contact your local Hoffman sales office or distributor for complete information.

BULLETIN: A50

ELEMECH INC.
630-499-7080 · www.elemechinc.com

Rev:	Device Tag:
0	EN
Date: 7/5/2018	
By: JAP	Job Number: EVC7258
Manuf.: . PNo: HOFFMAN: A-14107JFGQRPWR	Page # 1/1

ATDR Time-delay/Class CC

MERSEN

13-030-025

Catalog Numbers (amps)

ATDR1/4	ATDR1-1/2	ATDR3	ATDR6	ATDR12
ATDR1/2	ATDR1-6/10	ATDR3-2/10	ATDR6-1/4	ATDR15
ATDR8/10	ATDR1-8/10	ATDR3-1/2	ATDR7	ATDR17-1/2
ATDR1	ATDR2	ATDR4	ATDR7-1/2	ATDR20
ATDR1-1/8	ATDR2-1/4	ATDR4-1/2	ATDR8	ATDR25
ATDR1-1/4	ATDR2-1/2	ATDR5	ATDR9	ATDR30
ATDR1-4/10	ATDR2-8/10	ATDR5-6/10	ATDR10	



Ratings:

Volts : 600VAC
: 300VDC
Amps : 1/4 to 30A
IR : 200kA I.R. AC
: 100kA I.R. DC

Dimensions

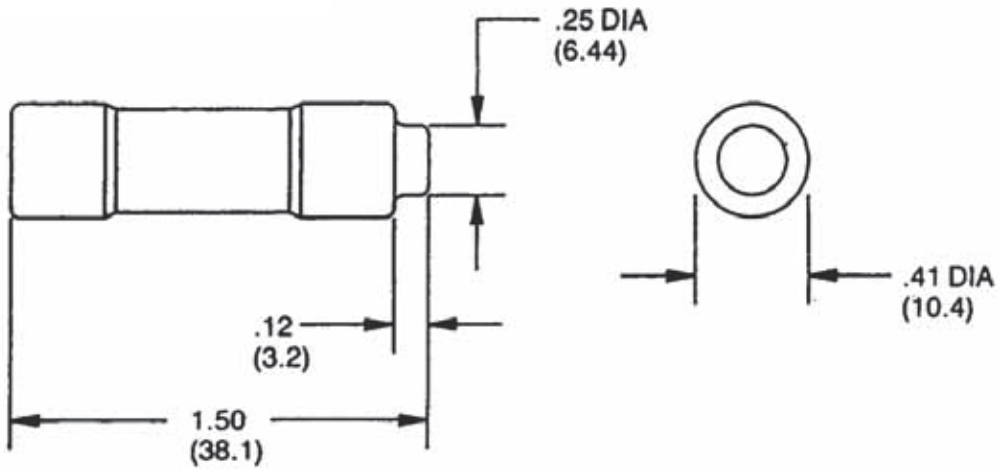

Approvals:

- UL listed to standard 248-4 File E2137
- CSA certified to standard C22.2 No. 248.4
- DC listed to UL standard 248

UL LISTED CSA

ELEMECH INC. 630-499-7080 · www.elemechinc.com	Rev: 0	Device Tag: SPARE	
	Date: 7/5/2018		
Manuf.: . PNo: FERRAZ-SHAWMUT: ATD-R-7	By: JAP	Job Number: EVC7258	Page # 1/1

ATQR Time-delay/Class CC

MERSEN

13-030-037

Ratings:

Volts : 600VAC (1/10-30A)
: 300VDC (3-2/10 – 30A)
Amps : 1/10 to 30A
IR : 200kA I.R. AC
: 100kA I.R. DC

Approvals:

- UL listed to standard 248-4 File E2137
- DC listed to UL standard 248
- CSA certified to standard C22.2 No. 248.4



Catalog Numbers (amps)

ATQR1/10	ATQR8/10	ATQR2-8/10	ATQR7-1/2
ATQR1/8	ATQR1	ATQR3	ATQR8
ATQR3/16	ATQR1-1/8	ATQR3-2/10	ATQR9
ATQR2/10	ATQR1-1/4	ATQR3-1/2	ATQR10
ATQR1/4	ATQR1-4/10	ATQR4	ATQR12
ATQR3/10	ATQR1-1/2	ATQR4-1/2	ATQR15
ATQR4/10	ATQR1-6/10	ATQR5	ATQR17-1/2
ATQR1/2	ATQR1-8/10	ATQR5-6/10	ATQR20
ATQR6/10	ATQR2	ATQR6	ATQR25
ATQR3/4	ATQR2-1/4	ATQR6-1/4	ATQR30
	ATQR2-1/2	ATQR7	

Dimensions

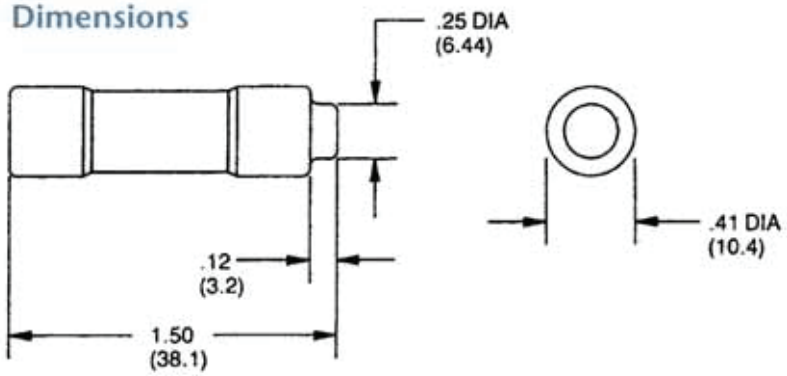

ELEMECH INC.
630-499-7080 · www.elemechinc.com

Rev: 0
Date: 7/5/2018
By: JAP

Device Tag: SPARE

Job Number: EVC7258

Page # 1/1

Manuf.: . PNo: FERRAZ-SHAWMUT: ATQ-R-2

TRM Time-Delay Midget Fuses

13-030-059

Features/Benefits:

- Numerous ratings for a wide variety of applications
- 250VAC rating in all sizes up to 30A
- Time-delay for circuits with high inrush currrent
- Can be used with UltraSafe™ fuse holders
- 1 1/2" x 13/32" (10mm x 38mm) dimensions



Ratings:

Volts : 250VAC
Amps : 1/10 to 30A
I.R. : 10kA I.R.

Recommended Fuse Blocks for Midget (10x38mm) Fuses

Number of Poles	Catalog Number			
	UltraSafe™ Indicating Fuse Holder	Screw Connector	Pressure Plate Connector	Copper Box Connector
Adder		30310	30320	30350
1	USM1I	30311	30321	30351
2	USM2I	30312	30322	30352
3	USM3I	30313	30323	30353
3	USFM10I			

Approvals:

- UL listed to standard 248-14 File E33925
- CSA Certified to Standard C22.2 No. 248.14

Catalog Numbers (amps)

TRM1/10	TRM6/10	TRM1-6/10	TRM3	TRM5-6/10	TRM10
TRM15/100	TRM8/10	TRM1-8/10	TRM3-2/10	TRM6	TRM12
TRM2/10	TRM1	TRM2	TRM3-1/2	TRM6-1/4	TRM15
TRM1/4	TRM1-1/8	TRM2-1/4	TRM4	TRM7	TRM20
TRM3/10	TRM1-1/4	TRM2-1/2	TRM4-1/2	TRM8	TRM25
TRM4/10	TRM1-4/10	TRM2-8/10	TRM5	TRM9	TRM30
TRM1/2					

ELEMECH INC.
630-499-7080 · www.elemechinc.com

Rev: 0
Date: 7/5/2018
By: JAP

Device Tag: SPARE

Job Number: EVC7258

Page # 1/1

Manuf.: . PNo: FERRAZ-SHAWMUT: TRM-4

Section Six: Enclosures

WEC217259Z - Parts List

WEC217259Z - General Arrangement Drawing

WEC217259Z - Control Panel Parts List

WEC217259Z CP01/CP02 - Control Panel Drawing

This page intentionally left blank

Enviro-Care
A WAMGROUP® Company

Job Number: WEC217259Z
Job Name: SPECO Tank Mounted Screw Screen Iqaluit WWTP
Revision: C

Apprvd By Created By SO12

Line	Part Number	Part Name	Rev	Quantity	Unit	Material	Notes
101	WEC217259Z-1	SPECO WASTEMASTER Screw Screen GCPC 600	-	1	EA	316LSS	Main Unit (SCRN-01-210)
102	WEC217259Z-2	SPECO WASTEMASTER Screw Screen GCPC 600	-	1	EA	316LSS	Main Unit (SCRN-01-220)
103	RD-9032.1,158-M2-35	Reducer - NORD, Ratio 158.74:1, M2 35 M5	N/A	2	EA	CI	Drive
104	MTR-VEM3558T-5	Motor - Baldor, 2HP, 575V, 60HZ, 145TC	N/A	2	EA	STL	orderd with Class 1 Zone 2 Label
105	HHCS-1/2"-0200-316S	Hex head cap screw 1/2" x 2" LG	N/A	8	EA	316SS	to attach reducer to trough end plate
106	HHCS-3/8"-0100-316S	3/8" Capscrew x 1" LG	N/A	8	EA	316SS	Motor to reducer
107	HHCS-1/2"-0200-316S	Hex head cap screw 1/2" x 2" LG	N/A	8	EA	316SS	to anchor fine screens to metalic platform by others not Enviro-Care
108	HNC-1/2"-316S	Hex Nut 1/2"	N/A	16	EA	316SS	1 ea to attach reducer to trough end plate AND 1 ea to anchor fine screens
109	FW-1/2 -316S	Flat Washer 1/2"	N/A	32	EA	316SS	2 ea to attach reducer to though end plate AND 2 ea to anchor fine screens
110	LW-1/2"-316S	Lock Washer 1/2"	N/A	16	EA	316SS	1 ea to attach reducer to trough end plate AND 1 ea to anchor fine screens
111	MCS-LSXV7L	Motor Cutout Switch, Honeywell	N/A	4	EA	AL	Explosion Proof. Aluminum housing
112	SOV-EF8210G94	Solenoid valve, ASCO, 1/2", 120VAC	N/A	2	EA	BRS	Explosion proof. Brass body
113	SOV-EF8210G54	Solenoid valve, ASCO, 1", 120VAC	N/A	2	EA	BRS	Explosion proof. Brass body
114	ULS-7ML11000BA20	Ultrasonic Level Sensor, CIZ1, Echomax ST-H Ultrasonic Transducer	N/A	2	EA	-	Supplied w/ control panel
115	Assy GCP 316 Spray	Spray Wash Assembly	N/A	2	EA	316SS	
116	WHE-LF15M2-C	Water hammer eliminator, 1"	N/A	1	EA	Copper	
117	WS-F150-1"-BRZ	Y-Strainer, 1" NPT Female, 20 Mesh, Keckley		2	EA	BRZ	
118	WEC217259Z-CP01	Control Panel, 600/3/60, NEMA 4X	-	2	EA	316LSS	Main Control Panel (SCRN-01-210)
119	WEC217295Z-CP02	Control Panel, 600/3/60, NEMA 4X	-	1	EA	316LSS	Main Control Panel (SCRN-01-220)
120	WEC217259Z-LCS	Local Control Station NEMA 4X C1D2	-	2	EA	316SS	Supplied w/ control panel
121	HR-7ML5034AA01	Ultrasonic Level Controller Siemens Hydroranger 200 HMI, Non-Hazardous Environment	N/A	2	EA	-	ordered w/ control panel
122	LABEL-EC-4x12	Label EC 4 x 12	N/A	4	EA	Vinyl	2 per unit
123	LABEL-EC-2x5	Label EC 2 x 5	N/A	2	EA	Vinyl	for control panel
124	NAMEPLATE	Nameplate	N/A	2	EA	Alum	
125	SPP-BRUSH KIT GCP600	Brush set, with fasteners		2	EA	PLASTIC	Spare

This page intentionally left blank

O:\Projects-EC Active\WEC217259Z Iqaluit7 Product Drawings\Submittal Drawings\WEC217259Z REV F DRAFT.

NOTES:

1. UNIT MATERIAL: SCREEN: 316L SS
   SCREENINGS PRESS: 316L SS
   SPIRAL MATERIAL: HI-STRENGTH ALLOY STEEL

2. AREA CLASSIFICATION:
   INSIDE TANK - HAZARDOUS - CLASS 1, ZONE 1.
   OUTSIDE TANK - HAZARDOUS - CLASS 1, ZONE 2

3. SCREEN DRIVE MOTOR: 1.5 HP, 575 V, 3 PH, 60 HZ

4. SCREEN WEIGHT - 1750 LB [793.8 Kg]
   MOTOR WEIGHT - 41 LB [19 Kg]
   GEAR BOX - 101 LB [46 Kg]

5. WATER REQUIREMENTS:
   SCREEN SPRAY WASH: 24 GPM @ 40 - 60 PSI [1.5L/s @ 275 - 414 kPa]

6. NOT SHOWN: ITEMS 119 - 125. REFER TO PARTS LISTS FOR DESCRIPTIONS, MATERIAL, AND QUANTITIES.

7. PROVIDE SUFFICIENT FLEXIBILITY IN WATER AND ELECTRICAL CONNECTIONS TO ALLOW THE UNIT TO PIVOT OUT OF CHANNEL . ALL INTER CONNECTING PIPING, WIRING, AND CONDUIT FROM UNIT-MOUNTED DEVICES WILL BE SUPPLIED BY OTHERS.

8. CUSTOMER MUST PROVIDE LIFTING DEVICE TO PIVOT UNIT OUT OF TANK LIFTING CAPABILITY MUST EQUAL A MINIMUM OF 60% ON UNIT WEIGHT, APPLIED AT LIFTING POINT SHOWN. TANK MUST BE EMPTY, AND SCREEN BASKET MUST BE CLEAR OF SOLIDS PRIOR TO PIVOTING.

9. BOTTOM OF SCREEN MUST REST FLUSH TO THE TANK FLOOR, TO PREVENT MATERIAL FROM BYPASSING THE SCREEN. SIDE SEALS MUST REST ALONG TANK WALL ON BOTH SIDES TO PREVENT MATERIAL FROM BYPASSING THE SCREEN.

10. STRAINER, SOLENOID VALVES AND WATER HAMMER (SHIPPED LOOSE) TO BE INSTALLED IN WASHWATER SUPPLY LINE.

11. EQUIPMENT MUST BE PROTECTED TO PREVENT SURFACE CONTAMINATION. CONTAMINATION CAN COME FROM WELDING CUTTING, PAINTING AND OTHER SUCH ACTIVITIES IN THE AREA OF THE EQUIPMENT. STAINLESS STEEL SURFACES CONTAMINATED WITH ANY IRON, CHLORIDE CONTAINING MATERIAL AND OTHER SUBSTANCES CAN EXPERIENCE ACCELERATED SURFACE CORROSION AND PITTING.

12. DESIGN IS BASED ON FLOW PARAMETERS PROVIDED. IF THERE ARE SITE SPECIFIC HYDRAULIC REQUIREMENTS (SUCH AS MAXIMUM AND MINIMUM FLOWS), PLEASE CONSULT ENVIRO-CARE REPRESENTATIVE TO ENSURE THAT THE EQUIPMENT CAN MEET ALL REQUIREMENTS. IN SOME CASES, ENVIRO-CARE MAY RECOMMEND A DOWNSTREAM WEIR FOR AVERAGE FLOWS THAT ARE EXTREMELY LOW.

13. THE FOLLOWING DEVICES NEED TO BE FIELD WIRED BY ELECTRICAL CONTRACTOR
    - SCREEN DRIVE MOTOR: ITEM 104 (QTY 2)
    - MOTOR CUT OUT SWITCH: ITEM 111 (QTY 4)
    - SOLENOID VALVES: ITEM 112 (QTY 2), ITEM 113 (QTY 2)
    - CONTROL PANEL: ITEM 117 (QTY 1), ITEM 118 (QTY 1)
    - LEVEL SENSOR ITEM 114 (QTY 2)
    - LEVEL CONTROLLER ITEM 121 (QTY 2), MOUNT NEAR SCREEN MAIN CONTROL PANEL
    - NEMA 4X LOCAL E-STOP (SUITABLE FOR CLASS 1, ZONE 2): ITEM 120 (QTY 2),

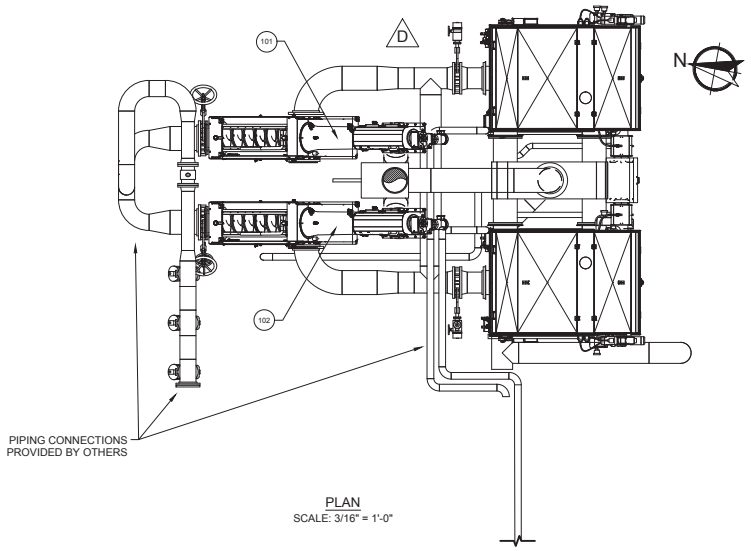

PLAN
SCALE: 3/16" = 1'-0"

PROCESS DESIGN INFORMATION:

APPLICATION:	CONTINOUS RAW WASTEWATER SCREENING
ANNUAL AVERAGE FLOW:	38.5 L/s
PEAK HOURLY FLOW PER SCREEN:	151 L/s
TANK LENGTH:	78.35 INCHES (1990mm)
TANK WIDTH:	25 INCHES (635mm)
TANK DEPTH:	54 INCHES (1370mm)
SCREEN OPENING / TYPE:	.236 INCHES (6mm) PERFORATED
ANGLE OF INCLINATION:	35 DEGREES
MAXIMUM UPSTREAM WATER LEVEL:	27.2 INCHES (692mm)
INFLUENT FLANGE SIZE:	16 INCHES (400mm)
EFFLUENT FLANGE SIZE:	16 INCHES (400mm)
SCREENINGS DISCHARGE:	16 INCHES (400mm)
DISCHARGE HEIGHT:	60.6 INCHES (1540mm) FROM MOUNTING FLOOR
SCREENINGS CAPTURE RATE (SRC):	52%

Rev	Revision Description	Date	Rev By	Approver
F	CORRECTED DSCHG FLNG DIMS, ADDED DIMS TO INLET/OUTLET FLANGE C/L	07/26/2018	EV29	SO12
E	REVISED DISCHARGE FLANGE DIMENSIONS	06/22/2018	EV29	SE33
D	UPDATED DRAWING TO REFLECT BOM REDUCER & MOTOR	06/18/2018	EV29	SE33
C	SHEETS 3 & 4, 1370mm WAS 1297mm PER CUSTOMER REQUEST	05/02/2018	EV29	SE33
B	ADDED DIM'S SHEETS 3 & 4, PER CUSTOMER REQUEST	04/16/2018	EV29	SE33
A	ADDED DIM'S SHTS 3 & 4 PER CUSTOMER REQUEST	04/06/2018	EV29	SE33

Project Information
IQALUIT WASTEWATER TREATMENT PLANT UPGRADE
NORTH CANADA
SPECIFICATION # 46 21 33
PROJECT # IQA15-4964-C

Enviro-Care
A WAMGROUP® Company

PROPERTY OF ENVIRO-CARE COMPANY. ALL RIGHTS RESERVED. NO PART OF THIS DRAWING MAY BE REPRODUCED IN ANY FORM WITHOUT WRITTEN PERMISSION FROM ENVIRO-CARE COMPANY AND NO PART OF THIS DRAWING MAY BE USED IN THE PRODUCTION OR THE DESIGN OF ITS EQUIPMENT AT ANY TIME WITHOUT PRIOR NOTICE AND WITHOUT ANY OBLIGATION WHATSOEVER.

Status: FOR APPROVAL

Title
IQALUIT WWTP
MODEL: GCPC600-LC3500 SPECO SCREW SCREEN IN A TANK

Designer	Checker	Date	Sheet
EV29	SE33	03-12-2018	1 of 5

Third Angle Projection

Drawing Number: WEC217259Z

Revision: F

This page intentionally left blank

O:\Projects-EC Active\WEC217259Z Iqaluit7 Product Drawings\Submittal Drawings\WEC217259Z REV F DRAFT

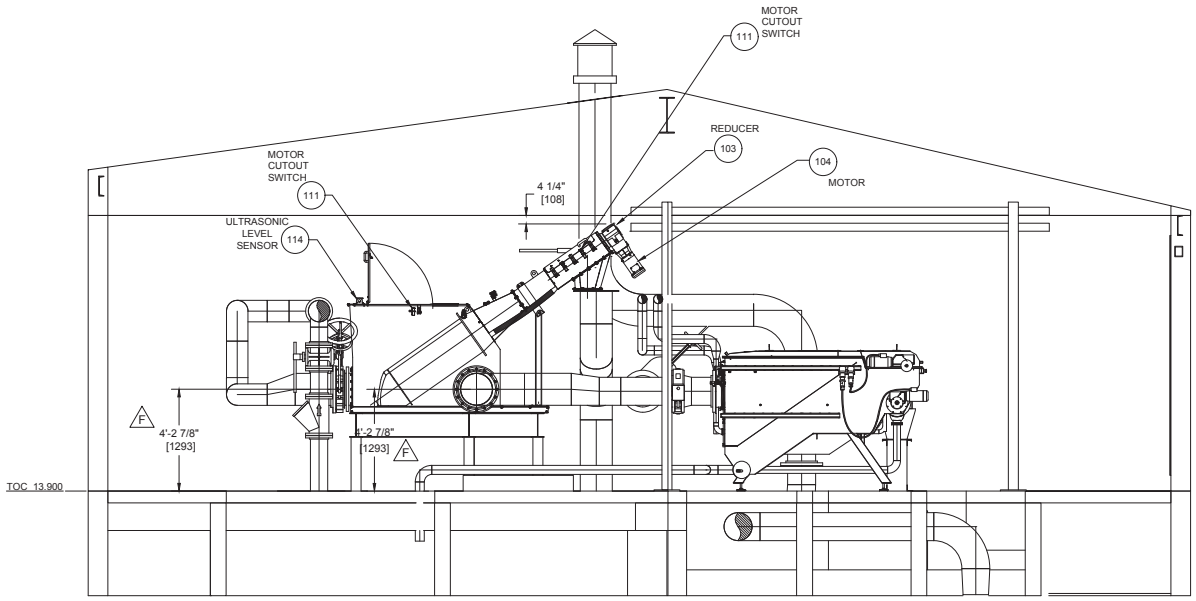

FRONT VIEW
SCALE: 1/4" = 1'-0"

Rev	Revision Description	Date	Rev By	Approver
F.	CORRECTED DSCHG FLNG DIMS, ADDED DIMS TO INLET/OUTLET FLANGE C/L	07/26/2018	EV29	SO12
E	REVISED DISCHARGE FLANGE DIMENSIONS	06/22/2018	EV29	SE33
D	UPDATED DRAWING TO REFLECT BOM REDUCER & MOTOR	06/18/2018	EV29	SE33
C	SHEETS 3 & 4, 1370mm WAS 1297mm PER CUSTOMER REQUEST	05/02/2018	EV29	SE33
B	ADDED DIM'S SHEETS 3 & 4, PER CUSTOMER REQUEST	04/16/2018	EV29	SE33
A	ADDED DIM'S SHTS 3 & 4 PER CUSTOMER REQUEST	04/06/2018	EV29	SE33

Enviro-Care
A WAMGROUP® Company

PROPERTY OF ENVIRO-CARE COMPANY. ALL RIGHTS RESERVED. NO PART OF THIS DRAWING MAY BE REPRODUCED IN ANY FORM BY ANY MEANS WITHOUT PERMISSION IN WRITING FROM ENVIRO-CARE COMPANY. THIS DRAWING AND THE DESIGN OF ITS EQUIPMENT AT ANY TIME WITHOUT PRIOR NOTICE AND WITHOUT ANY OBLIGATION WHATSOEVER.

Status: FOR APPROVAL

Title
IQALUIT WWTP
MODEL: GCPC600-LC3500 SPECO SCREW SCREEN IN A TANK

Designer	Checker	Date	Sheet
EV29	SE33	03-12-2018	2 of 5

Third Angle Projection

Drawing Number: WEC217259Z

Revision: F

This page intentionally left blank

O:\Projects-EC\ Active\WEC217259Z Iqaluit7 Product Drawings\Submittal Drawings\WEC217259Z REV F DRAFT

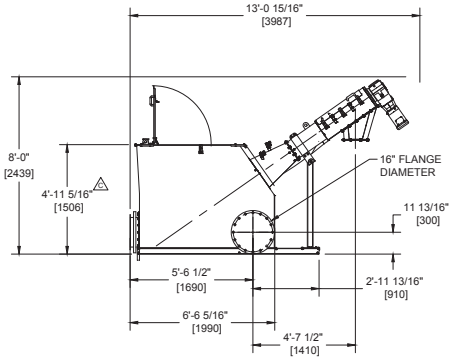

SIDE VIEW

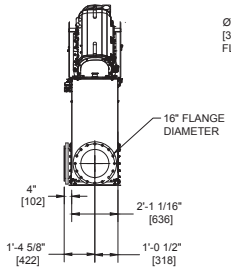

FRONT VIEW

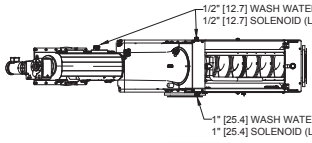

TOP VIEW

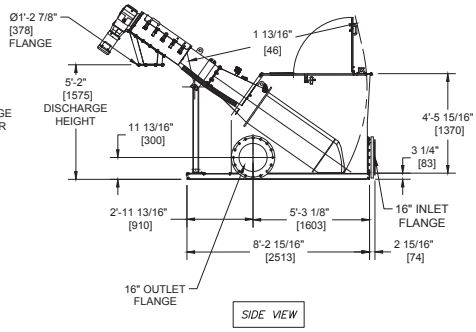

SIDE VIEW

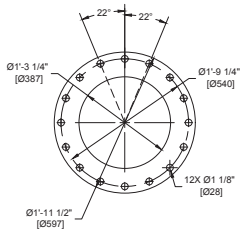

16" [406] FLANGE CONNECTION
SCALE: 3/4" = 1'-0"

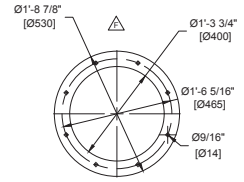

20.87" [530] DISCHARGE FLANGE
SCALE: 3/4" = 1'-0"

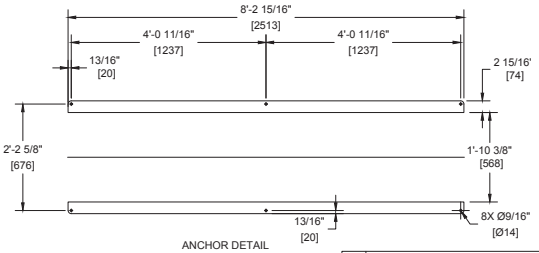

ANCHOR DETAIL
SCALE: 1/2" = 1' -0"
(BOTH SCREENS)

Rev	Revision Description	Date	Rev By	Approver
F.	CORRECTED DSCHG FLNG DIMS, ADDED DIMS TO INLET/OUTLET FLANGE C/L	07/26/2018	EV29	SO12
E	REVISED DISCHARGE FLANGE DIMENSIONS	06/22/2018	EV29	SE33
D	UPDATED DRAWING TO REFLECT BOM REDUCER & MOTOR	06/18/2018	EV29	SE33
C	SHEETS 3 & 4, 1370mm WAS 1297mm PER CUSTOMER REQUEST	05/02/2018	EV29	SE33
B	ADDED DIM'S SHEETS 3 & 4, PER CUSTOMER REQUEST	04/16/2018	EV29	SE33
A	ADDED DIM'S SHTS 3 & 4 PER CUSTOMER REQUEST	04/06/2018	EV29	SE33

Enviro-Care
A WAMGROUP® Company

PROPERTY OF ENVIRO-CARE COMPANY. ALL RIGHTS RESERVED. DO NOT OF THIS DRAWING MAY BE REPRODUCED IN ANY FORM WITH OUT THE WRITTEN PERMISSION OF ENVIRO-CARE COMPANY. ALL RIGHTS RESERVED. THIS DRAWING AND THE DESIGN OF ITS EQUIPMENT AT ANY TIME WITHOUT PRIOR NOTICE AND WITHOUT ANY OBLIGATION WHATSOEVER.

Status: FOR APPROVAL

Title
IQALUIT WWTP
MODEL: GCPC600-LC3500 SPECO SCREW SCREEN IN A TANK

Designer	Checker	Date	Sheet
EV29	SE33	03-12-2018	3 of 5

Third Angle Projection

Drawing Number: WEC217259Z

Revision: F

This page intentionally left blank

O:\Projects-EC Active\WEC217259Z Iqaluit7 Product Drawings\Submittal Drawings\WEC217259Z REV F DRAFT

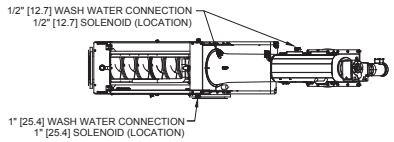

TOP VIEW

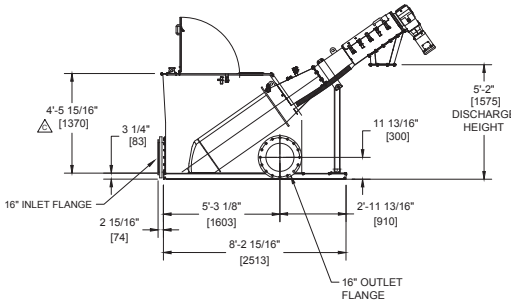

SIDE VIEW

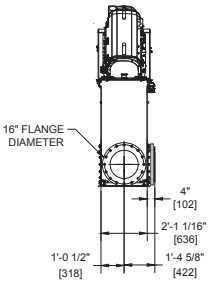

FRONT VIEW

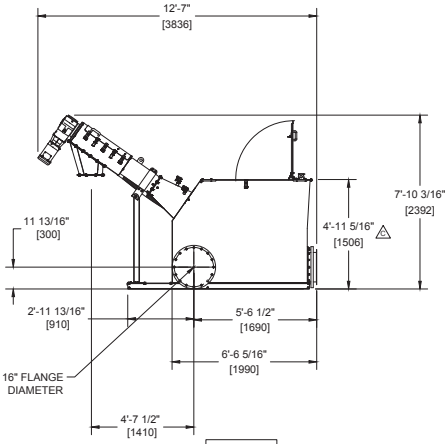

SIDE VIEW

Rev	Revision Description	Date	Rev By	Approver
F	CORRECTED DSCHG FLNG DIMS, ADDED DIMS TO INLET/OUTLET FLANGE C/L	07/26/2018	EV29	SO12
E	REVISED DISCHARGE FLANGE DIMENSIONS	06/22/2018	EV29	SE33
D	UPDATED DRAWING TO REFLECT BOM REDUCER & MOTOR	06/18/2018	EV29	SE33
C	SHEETS 3 & 4, 1370mm WAS 1297mm PER CUSTOMER REQUEST	05/02/2018	EV29	SE33
B	ADDED DIM'S SHEETS 3 & 4, PER CUSTOMER REQUEST	04/16/2018	EV29	SE33
A	ADDED DIM'S SHTS 3 & 4 PER CUSTOMER REQUEST	04/06/2018	EV29	SE33

Enviro-Care
A WAMGROUP® Company

PROPERTY OF ENVIRO-CARE COMPANY. ALL RIGHTS RESERVED. NO PART OF THIS DRAWING MAY BE REPRODUCED IN ANY FORM WITHOUT THE PRIOR WRITTEN PERMISSION OF ENVIRO-CARE COMPANY. NEITHER THIS DRAWING NOR THE INFORMATION IT CONTAINS, OR THE DESIGN OF ITS EQUIPMENT AT ANY TIME WITHOUT PRIOR NOTICE AND WITHOUT ANY OBLIGATION WHATSOEVER.

Status: FOR APPROVAL

Title
IQALUIT WWTP
MODEL: GCPC600-LC3500 SPECO SCREW SCREEN IN A TANK

Designer	Checker	Date	Sheet
EV29	SE33	03-12-2018	4 of 5

Third Angle Projection

Drawing Number: WEC217259Z

Revision: F

This page intentionally left blank

O:\Projects-EC Active\WEC217259Z Iqaluit7 Product Drawings\Submittal Drawings\WEC217259Z REV F DRAFT.

1. ENVIRO-CARE RESERVES PROPRIETARY RIGHTS TO THIS DRAWING AND THE DATA SHOWN THEREON, WHICH IS SUBMITTED IN CONFIDENCE.

2. IF APPLICABLE, A STAR DENOTES VARIANCE FROM CONTRACT DOCUMENTS AND SHOULD BE PARTICULARLY NOTED.

3. IF APPLICABLE, A CLOUD DENOTES DIMENSIONS WHICH ARE CRITICAL TO THE DESIGN OF THE EQUIPMENT, BUT NOT CLEAR AND/OR NOT PROVIDED IN THE CONTRACT DOCUMENTS.

4. THE FOLLOWING DEFINES THE RESPONSIBILITY OF ENVIRO-CARE WITH REGARD TO THE INFORMATION SHOWN ON THIS DRAWING.

   A. THIS DRAWING IS NOT TO BE USED FOR CONSTRUCTION OR INSTALLATION PURPOSES UNTIL IT HAS BEEN APPROVED BY THE OWNER, THE ENGINEER OR AN AUTHORIZED REPRESENTATIVE.

   B. DIMENSIONS, WEIGHTS, AND OTHER INFORMATION ARE PROVIDED TO ACCOMMODATE THE STRUCTURE TO THE EQUIPMENT AS SHOWN.

   C. ENVIRO-CARE IS NOT RESPONSIBLE FOR ANY CONCRETE STRUCTURE DESIGN. THE ENGINEER IS TO DETERMINE SIZES TO SUIT LOCAL REQUIREMENTS.

   D. ENVIRO-CARE IS NOT RESPONSIBLE FOR DAMAGE, INJURY OR LOSS RESULTING FROM USE OF THE SUPPLIED EQUIPMENT.

   E. CHARGES FOR MODIFICATIONS OR ADDITIONS TO THE EQUIPMENT WILL NOT BE ACCEPTED BY ENVIRO-CARE, UNLESS PRIOR APPROVAL HAS BEEN OBTAINED IN WRITING FROM AN AUTHORIZED ENVIRO-CARE REPRESENTATIVE.

5. ALL CONCRETE, GROUT, CONCRETE REINFORCING, SLIDE GATES, PIPING, VALVES, PIPE SUPPORTS OR FITTINGS, WALL BRACKETS, ELECTRICAL WIRING, CONDUIT, OR ELECTRICAL EQUIPMENT, ERECTION, FIELD PAINTING OR PAINT, FIELD WELDING OR WELD ROD, GREASE, OR LUBRICATING OIL, EXCEPT AS SPECIFICALLY NOTED IS TO BE BY OTHERS, NOT BY ENVIRO-CARE.

6. ALL ONSITE WELDING MUST CONFORM TO THE LATEST STANDARDS OF THE AMERICAN WELDING SOCIETY.

7. SEE PARTS LIST FOR ITEM IDENTIFICATION.

Rev	Revision Description	Date	Rev By	Approver
F	CORRECTED DSCHG FLNG DIMS, ADDED DIMS TO INLET/OUTLET FLANGE C/L	07/26/2018	EV29	SO12
E	REVISED DISCHARGE FLANGE DIMENSIONS	06/22/2018	EV29	SE33
D	UPDATED DRAWING TO REFLECT BOM REDUCER & MOTOR	06/18/2018	EV29	SE33
C	SHEETS 3 & 4, 1370mm WAS 1297mm PER CUSTOMER REQUEST	05/02/2018	EV29	SE33
B	ADDED DIM'S SHEETS 3 & 4, PER CUSTOMER REQUEST	04/16/2018	EV29	SE33
A	ADDED DIM'S SHTS 3 & 4 PER CUSTOMER REQUEST	04/06/2018	EV29	SE33

Enviro-Care
A WAMGROUP® Company

PROPERTY OF ENVIRO-CARE COMPANY. ALL RIGHTS RESERVED. NO PART OF THIS DRAWING MAY BE REPRODUCED IN ANY FORM WITH OUT WRITTEN PERMISSION FROM ENVIRO-CARE COMPANY. NEITHER THIS DRAWING NOR THE INFORMATION IT DISCLOSES, OR THE DESIGN OF ITS EQUIPMENT AT ANY TIME WITHOUT PRIOR NOTICE AND WITHOUT ANY OBLIGATION WHATSOEVER.

Title
IQALUIT WWTP
MODEL: GCPC600-LC3500 SPECO SCREW SCREEN IN A TANK

Designer	Checker	Date	Sheet
EV29	SE33	03/12/2018	5 of 5

Third Angle Projection

Drawing Number: WEC217259Z

Revision: F

This page intentionally left blank

Item No	Component	Description	Manufacturer Part Number	QTY	Device
Spiral Screen Control System (Quantity: 2)					
1	00-000-000	Wire, Hardware, Wire labels, etc.	EleMech: Miscellaneous	1	
2	10-069-001	Wireway Duct Cover, 1"W, 6 Ft. Section, w/Panduit F Series	Panduit: C1WH6	6	
3	10-069-007	Wireway Duct, 1"Wx3"H, 6 Foot Section	Panduit: F1X3WH6	6	
4	25-000-A001	Legendplate Assembly, Yellow E-Stop, Standard Encl.	EleMech: 25-000-A001 Assembly	1	
5	25-000-A002	Legendplate Assembly, White, Black Text, Standard Encl.	EleMech: 25-000-A002 Assembly	8	
6	25-000-A031	Nameplate Assembly, White: Power Supply - 3/60/600VAC	EleMech: 25-000-A031 Assembly	1	
7	42-063-007	Terminal Block, Din Rail, 35MM Wide, 15 High, 2 Meters Long	Iboco: Omega 3 AF	1	
8	51-000-062	Wire, MTW Type, 600V, 105°C, CSA/UL1015, Tinned Copper	EleMech: 51-000-062	1	
9	52-000-001	CSA decal set	EleMech: CSA	1	
10	03-001-124	Circuit Breaker, 1 Pole, 240VAC, 2A, 10kA, UL489, Type C	ABB: SU201M-C2	1	CB1
11	04-094-000	Current Monitor, Selectable, SPDT, 120/24V ,2-100A, w/Delay	Gavazzi: DIB01CM24100A	1	CM1
12	06-058-011	Control Relay, 3PDT,120VAC, 11Pin Spade, Indicator, Operator	Square D: RXM3AB2F7	3	CR1-3
13	06-058-012	Control Relay, Bus Jumper, 2-Pole, w/Telemec. RXM Relay	Square D: RXZ S2	2	CR1-3
14	38-058-003	Socket, 11 Pin Spade, Din, Screw Term., 3Tier, 250V w/3-Pole	Square D: RXZE2S111M	3	CR1-3
15	07-063-000	Distribution Block, End Cover, 4 Pole, 300V,10A, w/WK4E\U\VB	Wieland: 07.311.4053.1	1	DB1
16	07-063-001	Distribution Block, Jumper, 4 Pole, 300V,10A, w/WK4E\U\VB	Wieland: Z7.210.3427	3	DB1
17	07-063-002	Distribution Block, Single Pole, 10A, 300V, WK4E\U\VB	Wieland: 57.404.6955.1	10	DB1
18	42-063-004	Terminal Block, Ground, 30A, 600V, 6MM Wide, w/WK4/U	Wieland: 57.504.9055.0	4	DB1,TB1
19	09-001-A010	Disconnect Assembly, Non-Fused, 60 Amp, NEMA 4X, 8-10" Depth	ABB: OT63F3 Assembly	1	DS1
20	11-000-340	Enclosure Drip Shield, Stainless Steel, Per Inch	EleMech: 11-000-340	24	EN1
21	11-035-133	Sub-Panel, Painted Steel, w/24"Hx24"W C. Hinge Encl	Hoffman: A-24P24	1	EN1
22	11-035-279	Enclosure, Nema 4X, 316SS, 24"Hx24"Wx8"D, C. Hinge	Hoffman: A-24H2408SS6LP	1	EN1
23	13-030-025	Fuse, Class CC, Time Delay, 600VAC, 7 Amp, w/Starter	Ferraz-Shawmut: ATD-R-7	3	FU1
24	13-030-070	Fuse Block, 3 Pole, Class CC, 600VAC, 30A, Ultrasafe, w/Ind	Ferraz-Shawmut: USCC3I	1	FU1
25	15-011-000	Ground Lug, 14AWG - 4AWG	Blackburn: L70	2	GND
26	16-031-000	Elapsed Time Meter, Sq. Bezel, 0-99999.99, Din Rail Mount	Grasslin: UWZ48V-120/60	1	HM1
27	17-451-000	Heater, Silicone, Flat, 120VAC, 75 Watts, w/12" Lead, UL/CSA	Tempco: SHS80707	1	HTR1
28	52-137-003	Label, Caution: Heater Element, 1.5"Wx0.75"H, White/Red	Nameplate Tech: 52-137-003	1	HTR1
29	06-058-024	Control Relay, SPDT,120VAC, 5Pin Spade, Operator, 15A	Square D: RPM12F7	2	IR1,2

Item No	Component	Description	Manufacturer Part Number	QTY	Device
30	06-058-027	Control Relay Retension Clip, w/Telemec. RPM 1-Pole Relay	Square D: RPZR235	2	IR1,2
31	38-058-009	Socket, 5 Pin Spade, Din Mount, Screw Term., w/ RPM 1-Pole	Square D: RPZF1	2	IR1,2
32	52-137-002	Label, Multiple Supply Sources, Warning, 2.5"Wx1.5"H, Yellow	Nameplate Tech: 52-137-002	1	LBL1
33	52-137-000	Label, High Voltage, Danger, 2.25"Wx4.0"H, White/Black/Red	Nameplate Tech: 52-137-000	1	LBL2
34	32-005-046	Lens, Pilot Light, White, NEMA 4X, Standard, w/A-B 800H	Allen-Bradley: 800T-N26W	1	LT1
35	32-005-048	Pilot light, NEMA 4X, 120VAC, Transformer, No Lens	Allen-Bradley: 800H-PR16	3	LT1-3
36	32-005-044	Lens, Pilot Light, Green, NEMA 4X, Standard, w/A-B 800H	Allen-Bradley: 800T-N26G	1	LT2
37	32-005-045	Lens, Pilot Light, Red, NEMA 4X, Standard, w/A-B 800H	Allen-Bradley: 800T-N26R	1	LT3
38	22-005-010	Aux. Contact, Top mounted, 3NO/1NC, w/A-B 100C/104C	Allen-Bradley: 100-FA31	2	M1-F/R
39	22-005-012	Contactor, 3PH, Reversing, 9 Amp, 1NO Aux., 120VAC Coil	Allen-Bradley: 104-C09D22	1	M1-F/R
40	25-000-A010	Nameplate Assembly, White, Black Text, 1"Hx3"W	EleMech: 25-000-A010 Assembly	1	NP1
41	28-005-037	Overload Relay, 3PH, Adj Class, 1.0-5.0A, w/100-C09...C23	Allen-Bradley: 193-EECB	1	OL1
42	29-005-117	Pushbutton, E-Stop, NEMA 4X, Oper+1NC, Twist Rel. Red Head	Allen-Bradley: 800H-TFRXT6D2	1	PB1
43	02-005-004	Contact Block, 1NC, w/A-B 800 Series	Allen-Bradley: 800T-XD2	1	PB3
44	29-005-002	Pushbutton, NEMA 4X, Oper+1NO, Flush Head, Black	Allen-Bradley: 800H-AR2D1	1	PB3
45	33-183-004	PR, Zelio, 120VAC, 12)120VAC In, 8)Relay Out	Telemecanique: SR2B201FU	1	PR1
46	EVC-287-P004	Program, PR, SR2B201FU, Standard	EleMech: EVC-287-P004	1	PR1
47	13-000-A000	Spare Parts Box Assembly, Din Rail Mount	EleMech: 13-000-A000 Assembly	1	SP1
48	39-005-009	Selector Switch, NEMA 4X, 3 Pos. Maintained, 1NO-1NC	Allen-Bradley: 800H-JR2A	3	SS1,3,4
49	39-005-011	Selector Switch, Nema 4X, 3 Pos. Spring Fr. Right, 1NO-1NC	Allen-Bradley: 800H-JR5A	1	SS2
50	40-170-A000	Suppressor Assembly, Metal Oxide Varister, 4500A Peak, 14MM	Littelfuse: V130LA10A Assembly	1	SUP1
51	41-018-A068	Control Transformer Assembly, 600-120VAC, 300VA,w/Fuses	Cutler-Hammer: C0300E4CFB Assembly	1	T1,FU2,3
52	42-063-001	Terminal Block, End Plate, Gray, w/WK4/U	Wieland: 07.311.0155.0	2	TB
53	42-063-003	Terminal Block, Single Pole, 30A, 600V, 6MM Wide, WK4/U	Wieland: 57.504.0055.0	48	TB
54	42-063-000	Terminal Block, Labels, Custom Printed, w/WK4/U	Wieland: 04.242.6353-CUSTOM	102	TB,DB
55	42-063-009	Terminal Block, End Clamp, w/WKN10/U	Wieland: Z5.522.8553	6	TB,DB
56	42-063-008	Terminal Block, Labels, Blank, w/WK4/U-(600 tags per box)	Wieland: Z4.242.6353	22	TB1
57	42-063-015	Terminal Block, Jumper, w/WK4/U, 02 pole, Insulated	Wieland: Z7.281.1227	3	TB1
58	46-034-000	Thermostat, for heater control, N.C.contact, 6 amp,30-140 F.	Stego: 01140.9-00	1	TS1
LCS, 1 Hole, NEMA 4X, 316SS, E-Stop, C1D2 (Quantity: 2)					

Item No	Component	Description	Manufacturer Part Number	QTY	Device
59	11-035-214	Enclosure, Nema 4X, 316SS, 04"Hx04"Wx03"D, Clamp Jct. Box	Hoffman: A-404NFSS6	1	EN1
60	02-005-008	Contact Block Sealed, Stackable, 1NC - 1NO, w/A-B 800 Series	Allen-Bradley: 800T-XAY	1	PB
61	25-000-A001	Legendplate Assembly, Yellow E-Stop, Standard Encl.	EleMech: 25-000-A001 Assembly	1	PB
62	29-005-118	Pushbutton, E-Stop, NEMA 4X, Oper. Only, Twist Rel. Red Head	Allen-Bradley: 800H-TFRXT6	1	PB
ULC, Hydroranger200 HMI, NEMA 4X FRP, En w/Win,Upstream Only (Quantity: 2)					
63	11-035-126	Sub-Panel, Painted Steel, w/12"Hx10"W Junction Box	Hoffman: A-12P10	1	EN
64	11-035-176	Enclosure Mounting Feet, Fiberglass, J box	Hoffman: A-50MFKR	1	EN
65	11-035-273	Enclosure, Nema 4X, Fiberglass, 13.53"Hx10"Wx7"D, w/Window	Hoffman: A-14107JFGQRPWR	1	EN
66	25-000-A023	Nameplate Assembly, White: Ultrasonic Level Controller	EleMech: 25-000-A023 Assembly	1	NPL
67	49-043-131 - SP	ULC, Hydro 200 HMI, 120VAC, 6-Relay, 4-20mA, Upstream Only	Siemens: 7ML5034-4AA01	1	ULC1
Spare Parts / Ship Loose (Total Quantity Provided)					
68	49-043-008	ULS, STH, 2"NPT, 10M Cable, FM Class 1 Div. 1	Siemens: 7ML1100-0BA20	2	ULS
69	13-030-025	Fuse, Class CC, Time Delay, 600VAC, 7 Amp, w/Starter	Ferraz-Shawmut: ATD-R-7	6	SPARE
70	13-030-037	Fuse, Class CC, Time Delay, 600VAC, 2 Amp, w/Xfmr. Primary	Ferraz-Shawmut: ATQ-R-2	4	SPARE
71	13-030-059	Fuse, Midget, Time Delay, 250VAC, 4 Amp, w/Xfmr. Sec.	Ferraz-Shawmut: TRM-4	2	SPARE

This page intentionally left blank

Z:\Enviro-Care\7200\EVC7258-1\skill\ Canada\Submittal\EVC7258A1

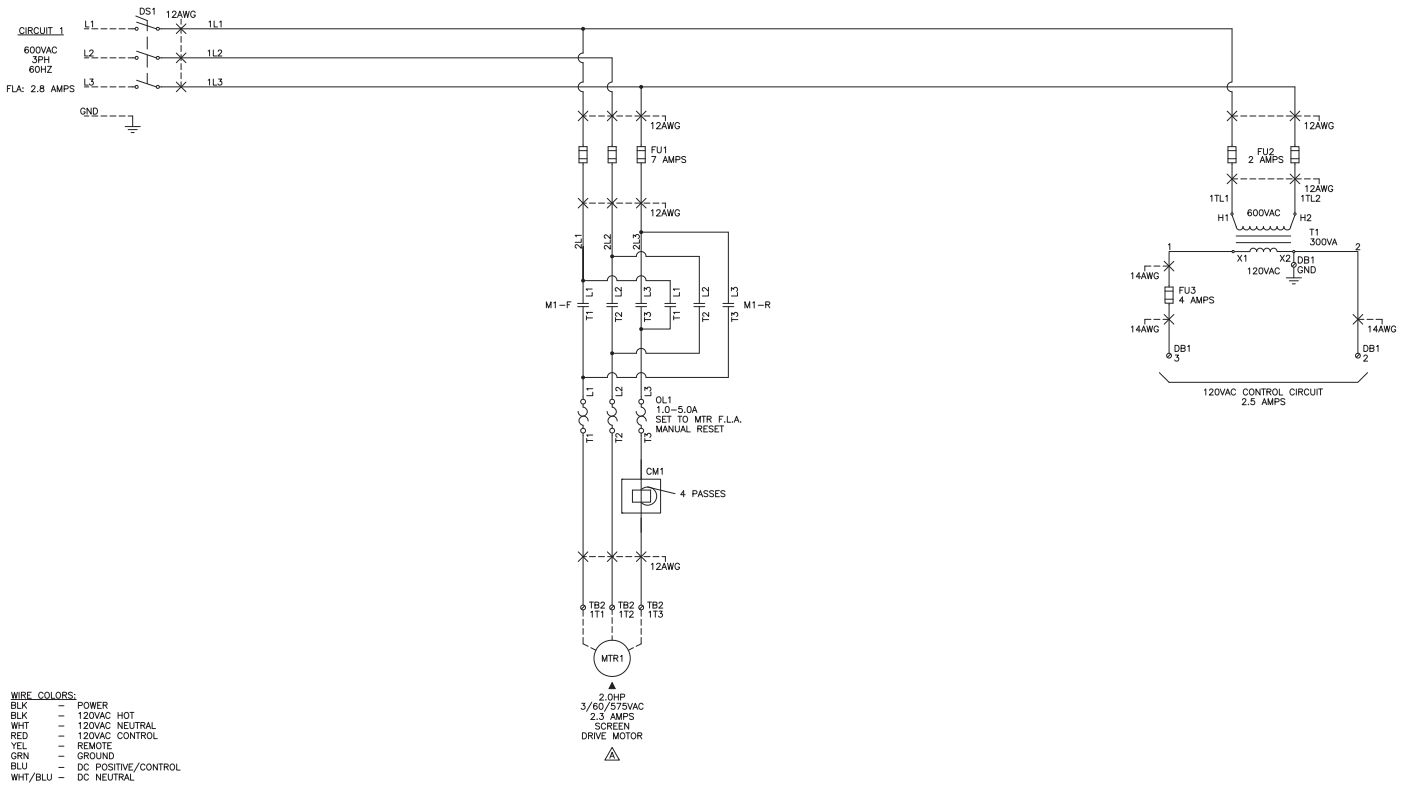

WIRE COLORS:

BLK	–	POWER
BLK	–	120VAC HOT
WHT	–	120VAC NEUTRAL
RED	–	120VAC CONTROL
YEL	–	REMOTE
GRN	–	GROUND
BLU	–	DC POSITIVE/CONTROL
WHT/BLU	–	DC NEUTRAL

NOTES:

1. ▲ DEVICES LOCATED OUTSIDE CONTROL PANEL.
2. ⊘ TERMINAL BLOCK (TB) OR DISTRIBUTION BLOCK (DB) LOCATED IN CONTROL PANEL.
3. –– FIELD WIRING.
4. CONTROL PANEL WIRING SHALL BE MTW TYPE, TINNED COPPER, 600V, 105°C, UL1015/CSA.
5. NAMEPLATES SHALL BE WHITE WITH BLACK LETTERS.
6. ELEMECH RESERVES THE RIGHT TO CHANGE, AS NECESSARY, THE SPACING, ORIENTATION, AND PHYSICAL LOCATION OF DEVICES IN ORDER TO OPTIMIZE THE DESIGN.
7. LOCAL MOTOR DISCONNECT SWITCHES SHALL BE PROVIDED BY OTHERS IF REQUIRED BY LOCAL REGULATIONS.
8. JUNCTION BOXES ARE NOT SHOWN AND SHALL BE PROVIDED BY OTHERS AS NECESSARY.
9. DRAWINGS TYPICAL FOR TWO (2) CONTROL PANELS.

Rev	Revision Description	Date	Rev By	Approver
B	AS BUILT	07/03/18	JAP	ALS
A	PER CUSTOMER COMMENTS	04/20/18	MBS	ALS

Project Information
IQALUIT, NU CANADA WWTP
IQALUIT, NU CANADA
SPECIFICATION # 46 21 33
CONTRACTOR - PO # N/A

Enviro-Care
A WAMGROUP® Company

PROPERTY OF ELEMECH-CARE COMPANY. ALL RIGHTS RESERVED. NO PART OF THE DRAWING MAY BE REPRODUCED IN ANY FORM WITHOUT WRITTEN PERMISSION FROM ELEMECH-CARE. ELEMECH-CARE RESERVES THE RIGHT TO ALL INFORMATION ON THE DESIGN OF ITS EQUIPMENT AT ANY TIME WITHOUT PRIOR NOTICE AND WITHOUT ANY OBLIGATION WHATSOEVER.

Status: AS BUILT

Title
CONTROL PANEL: 3/60/480
SPIRAL SCREEN
MAIN CONTROL PANEL

Designer	Checker	Date	Sheet
MBS	ALS	03/26/18	1 of 6

Third Angle Projection

Drawing Number: WEC217259Z-CP01/CP02

Revision: B

ELEMECH PROJECT: EVC7258A1

This page intentionally left blank

Z:\Enviro-Care\7200\EVC7258 - Iqaluit, Canada\Submittal\EVC7258A2

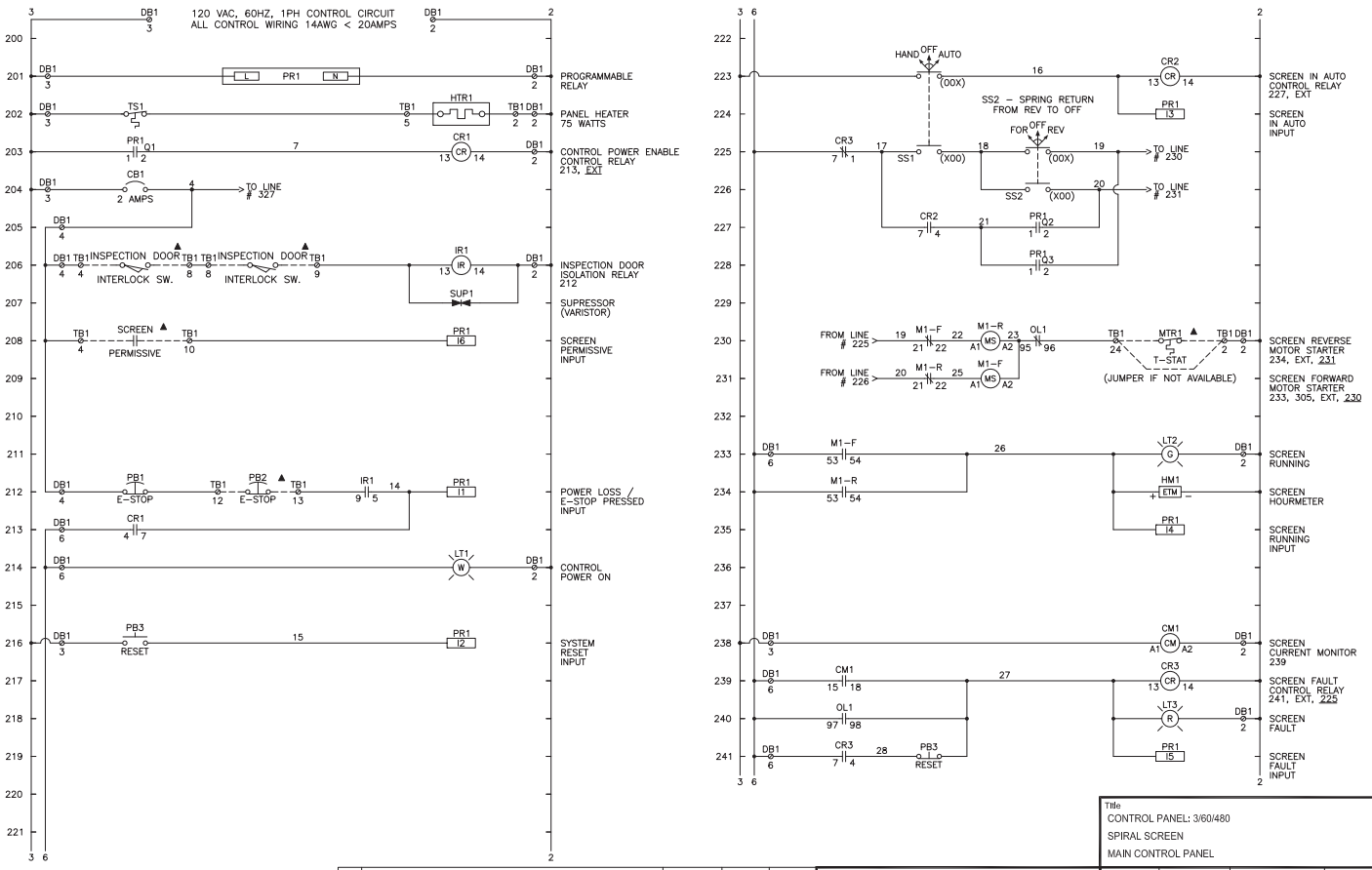

Rev	Revision Description	Date	Rev By	Approver
B	AS BUILT	07/03/18	JAP	ALS
A	PER CUSTOMER COMMENTS	04/20/18	MBS	ALS

Enviro-Care
A WAMGROUP® Company

PROPRIETARY OF ENVIRO-CARE COMPANY. ALL RIGHTS RESERVED. AS PART OF THE DRAWING MAY BE REPRODUCED IN ANY FORM WITHOUT WRITTEN PERMISSION FROM ENVIRO-CARE COMPANY. RESERVES THE RIGHT TO ALTER DATA ON THE DESIGN OF ITS EQUIPMENT AT ANY TIME WITHOUT PRIOR NOTICE AND WITHOUT ANY OBLIGATION WHATSOEVER.

Title
CONTROL PANEL: 3/60/480
SPIRAL SCREEN
MAIN CONTROL PANEL

Designer	Checker	Date	Sheet
MBS	ALS	03/26/18	2 of 6

Third Angle Projection

Drawing Number: WEC217259Z-CP01/CP02

Revision: B

ELEMECH PROJECT: EVC7258A2

This page intentionally left blank

Z:\Enviro-Care\7200\EVC7258 - Iqaluit, Canada\Submittal\EVC7258A3

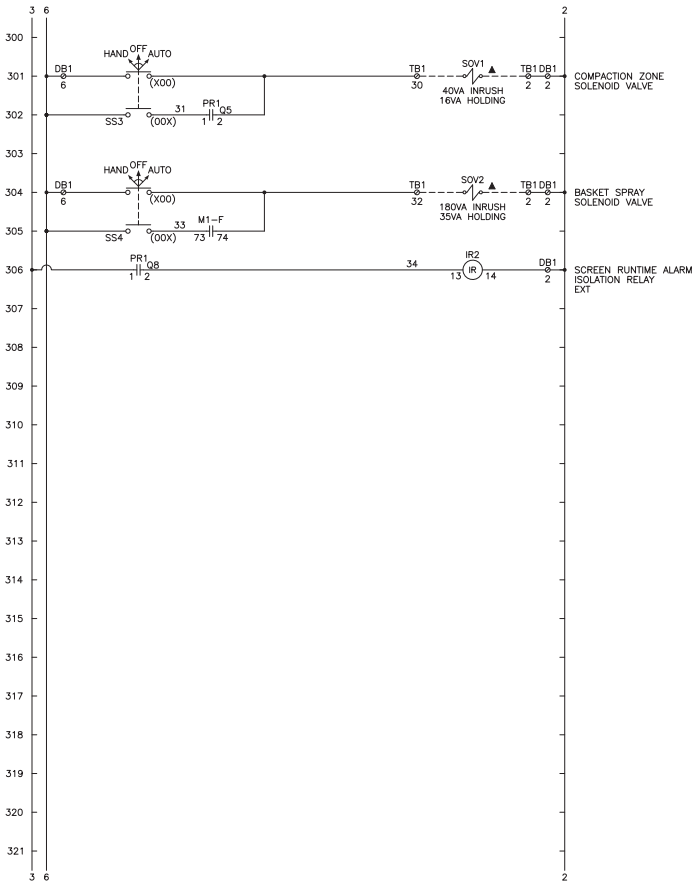

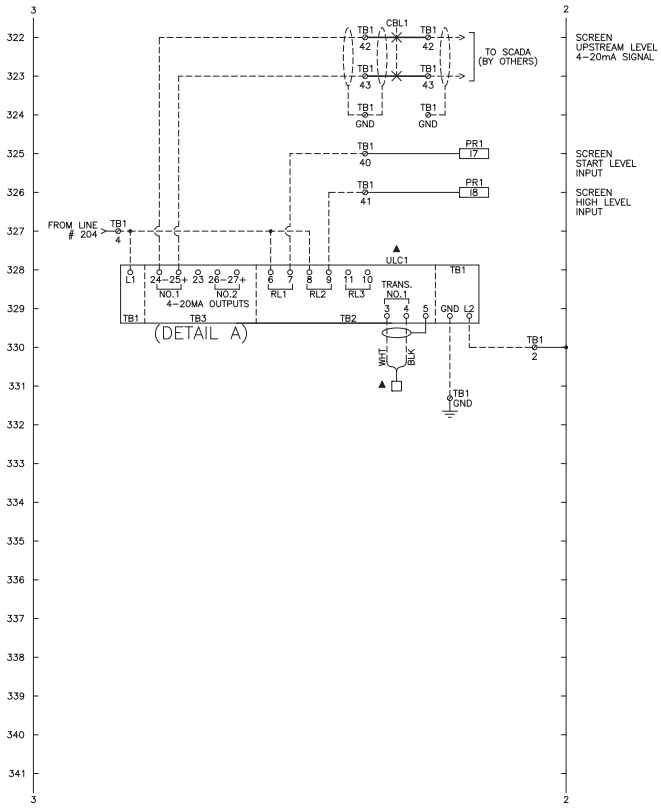

Rev	Revision Description	Date	Rev By	Approver
B	AS BUILT	07/03/18	JAP	ALS
A	PER CUSTOMER COMMENTS	04/20/18	MBS	ALS

Enviro-Care
A WAMGROUP® Company

PROPERTY OF ENVIRO-CARE COMPANY. ALL RIGHTS RESERVED. AS PART OF THE DRAWING MAY BE REPRODUCED IN ANY FORM WITHOUT WRITTEN PERMISSION FROM ENVIRO-CARE. ENVIRO-CARE RESERVES THE RIGHT TO ALTER DATA ON THE DESIGN OF ITS EQUIPMENT AT ANY TIME WITHOUT PRIOR NOTICE AND WITHOUT ANY OBLIGATION WHATSOEVER.

Title
CONTROL PANEL: 3/60/480
SPIRAL SCREEN
MAIN CONTROL PANEL

Designer	Checker	Date	Sheet
MBS	ALS	03/26/18	3 of 6

Third Angle Projection

Drawing Number: WEC217259Z-CP01/CP02

Revision: B

ELEMECH PROJECT: EVC7258A3

This page intentionally left blank

Z:\Enviro-Care\7200\EVC7258 - Iqaluit, Canada\Submittal\EVC7258A4

DEVICE SETTINGS

PR1 – I/O

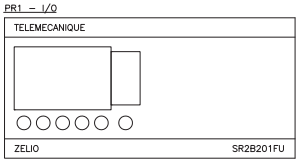

PR INPUTS

I1	POWER LOSS / E-STOP
I2	SYSTEM RESET
I3	SCREEN IN AUTO
I4	SCREEN RUNNING
I5	SCREEN FAULT
I6	SCREEN PERMISSIVE
I7	START LEVEL
I8	HIGH LEVEL
I9	SPARE
IA	SPARE
IB	SPARE
IC	SPARE

PR OUTPUTS

Q1	CONTROL POWER ENABLE
Q2	SCREEN CALL TO RUN FORWARD
Q3	SCREEN CALL TO RUN REVERSE
Q4	SPARE
Q5	COMPACTION ZONE SPRAY CALL
Q6	SPARE
Q7	SPARE
Q8	SCREEN RUNTIME ALARM

PR1 – SETPOINT CHANGE INSTRUCTIONS

TO ALTER THE VALUE OF A TIMER OR COUNTER:

1. PRESS THE GREEN "MENU/OK", PRESS ARROW DOWN TO "PARAMETER". PRESS "MENU/OK"
2. TO ACCESS THE REQUIRED TIMER PRESS THE "UP" ARROW KEY UNTIL THE DESIRED TIMER IS DISPLAYED.
3. PRESS THE "RIGHT" ARROW UNTIL TIME VALUE FLASHES.
4. MODIFY THE TIME VALUE USING THE "UP" OR "DOWN" ARROW KEYS.
5. VALIDATE THE CHANGES BY PRESSING THE "MENU/OK", PRESS "MENU/OK" AGAIN WHEN ASKED TO CONFIRM CHANGES.
6. PRESS "MENU/OK" TO RETURN TO MAIN SCREEN.

DEVICE SETTINGS

PR1 – SETTINGS ⚠

BIT REF.	DESCRIPTION	TIMER RESOLUTION	FACTORY SETTING
TT1 – t	SCREEN – LEVEL ON DELAY TIME	MIN:SEC	00:05
TT2 – t	SCREEN – REPEAT CYCLE OFF TIME	HR:MIN	01:00
TT3 – t	SCREEN – LEVEL OFF DELAY TIME	MIN:SEC	00:30
TT4 – t	SCREEN – REPEAT CYCLE ON TIME	MIN:SEC	01:00
TT5 – t	SCREEN – REV TO FWD DWELL TIME	MIN:SEC	00:05
TT6 – t	SCREEN – FWD TO REV DWELL TIME	MIN:SEC	00:05
TT7 – t	COMPACTION ZONE – REPEAT CYCLE ON TIME	MIN:SEC	00:15
TT8 – t	COMPACTION ZONE – REPEAT CYCLE OFF TIME	MIN:SEC	01:00
TT9 – t	SCREEN – REVERSE RUN TIME	MIN:SEC	00:03
TTA – t	SCREEN – ACCUMULATED RUNTIME ALARM	HR	0168
TTB – t	SCREEN – MAX CONTINUOUS RUNTIME	MIN:SEC	T5:00

TS1 – SETTINGS

HEATER ON/OFF	60 °F

ULC1 – HYDRORANGER 200 HMI

FUNCTION NUMBER	FUNCTION DESCRIPTION	DEFAULT	FACTORY SETTING	FIELD SETTING
2.1.1	UNIT	M	IN	
2.1.3	SENSOR MODE	LEVEL	LEVEL	
2.1.5	TRANSDUCER	NO	ST-H	
2.1.6	MATERIAL	LIQUID	LIQUID	
2.2.2	SPAN 1	26.2	*	
2.2.4	EMPTY 1	26.2	*	
2.2.6	BLANKING 1	11.8	*	
2.3.4	RESPONSE RATE 1	MEDIUM	MEDIUM	
2.4.2	LOE TIMER 1	10.0 MIN	10.0 MIN	
2.4.4	FAIL SAFE MODE 1	HOLD	HI	
2.5.3	CURRENT OUTPUT FUNCTION 1	DISTANCE	LEVEL	
2.5.4	MA OUTPUT ALLOCATION 1	POINT 1	POINT 1	
2.5.5	4MA SETPOINT 1	0	*	
2.5.6	20MA SETPOINT 1	0	*	
2.5.10	FAIL SAFE MODE 1	OFF	HI	
2.8.1.2	LEVEL SOURCE 1	TRANSDUCER 1	TRANSDUCER 1	
2.8.1.4	RELAY FUNCTION 1	OFF	LEVEL	
	RELAY FUNCTION 2	OFF	LEVEL	
2.8.1.5	RELAY 1 ON SETPOINT	0	*	
	RELAY 2 ON SETPOINT	0	*	
2.8.1.6	RELAY 1 OFF SETPOINT	0	*	
	RELAY 2 OFF SETPOINT	0	*	
2.8.1.11	RELAY 1 LOGIC	POSITIVE	NEGATIVE	
	RELAY 2 LOGIC	POSITIVE	NEGATIVE	
2.8.2.3	RELAY 1 FAIL SAFE	OFF	DE	
	RELAY 2 FAIL SAFE	OFF	DE	

NOTES:
1. FACTORY SETTING '*' NOTES PARAMETERS SET IN THE FIELD.
2. THE ABOVE IS A PARTIAL LISTING OF SETPOINTS. REFER TO THE INSTRUCTION MANUAL FOR A COMPLETE PARAMETER LISTING.
3. ALLOW AT LEAST ONE MINUTE FOR CONTROLLER LEVEL READING TO STABILIZE AFTER RETURNING TO THE RUN MODE.
4. ENSURE THE CORRECT PROFILE IS SELECTED WHEN ALTERING SETPOINTS WITH MULTIPLE FIELDS.

ULC1 – SETPOINT CHANGE INSTRUCTIONS

TO ALTER THE VALUE OF A SETPOINT:

1. PRESS THE RIGHT ARROW TO ACCESS THE MAIN MENU.
2. USE THE UP AND DOWN KEYS TO NAVIGATE THE MENU. USE THE RIGHT ARROW KEY TO ENTER THE HIGHLIGHTED MENU AND THE LEFT KEY TO RETURN TO THE PREVIOUS MENU. THE FUNCTION NUMBER IS BASED ON WHERE EACH SETPOINT IS LOCATED IN THE MENU. FOR EXAMPLE UNIT IS UNDER "SETUP">"SENSOR". SETUP IS THE 2ND ITEM FROM THE MAIN MENU, SENSOR IS THE FIRST ITEM IN THE SETUP MENU, AND UNIT IS THE FIRST ITEM IN THE SENSOR MENU SO THE FUNCTION NUMBER FOR UNIT IS 2.1.1.
3. USE THE RIGHT ARROW TO EDIT A SETPOINT WHEN SELECTED. USE THE UP AND DOWN ARROWS TO MODIFY THE VALUE AND THE LEFT AND RIGHT ARROWS TO SELECT THE FIELD TO MODIFY. USE THE RIGHT ARROW TO EXIT AND SAVE.

DEVICE SETTINGS

CM1 – CURRENT MONITOR

DIP SETTINGS

1	ON
2	OFF
3	ON
4	OFF
5	OFF
6	ON

HYSTERESIS	MIN
LEVEL	MIN
DELAY	MIN

NOTES:
1. THE CURRENT MONITOR DIAL SHALL BE SET TO MINIMUM FROM FACTORY.
2. FIELD CONFIGURATION SHALL BE PERFORMED BY THE STARTUP TECHNICIAN PER THE APPROPRIATE TECHNICAL DOCUMENTS.

Rev	Revision Description	Date	Rev By	Approver
B	AS BUILT	07/03/18	JAP	ALS
A	PER CUSTOMER COMMENTS	04/20/18	MBS	ALS

Enviro-Care
A WAMGROUP® Company

PROPERTY OF ENVIRO-CARE COMPANY. ALL RIGHTS RESERVED. NO PART OF THIS DRAWING MAY BE REPRODUCED OR USED IN ANY METHOD OR MEDIUM WHATSOEVER WITHOUT PRIOR WRITTEN PERMISSION FROM ENVIRO-CARE COMPANY. REPRODUCTION OR USE WITHOUT PERMISSION IS AN INFRINGEMENT OF COPYRIGHT LAW. THE DESIGN OF EQUIPMENT AT ANY TIME IS SUBJECT TO IMPROVEMENTS AND VARIATIONS WITHOUT NOTICE.

Title
CONTROL PANEL: 3/60/480
SPIRAL SCREEN
MAIN CONTROL PANEL

Designer	Checker	Date	Sheet
MBS	ALS	03/26/18	4 of 6

Third Angle Projection

Drawing Number: WEC217259Z-CP01/CP02

Revision: B

ELEMECH PROJECT: EVC7258A4

This page intentionally left blank

Z:\Enviro-Care\7200\EVC7258 - Iqaluit, Canada\Submittal\EVC7258A5

SEQUENCE OF OPERATION

CONTROL POWER ON-DELAY:
Each time the control panel power supply is cycled, the programmable relay will allow all solid state devices to become fully energized before enabling the control power circuit.

SPIRAL SCREEN MODES OF OPERATION:
HAND:
When Screen Selector is in the HAND position, the Screen will run per the Screen FOR-OFF-REV selector. In FOR position, the Screen runs in forward continuously. In OFF position, the Screen is off. In REV position, the Screen runs in reverse until operator release (spring-returns to OFF).

AUTO:
When the Screen selector is in the AUTO position and the Screen Permissive contact (from the PCS) is closed, the Screen will start forward when the liquid level in the upstream channel reaches the start level set-point (as determined by the upstream ultrasonic level transducer).

After the liquid level in upstream channel falls below the start level set-point for the time set in the Screen Level Off-Delay Timer, the Screen will shut off.

The Screen will also cycle OFF and ON/FOR (OFF first), per the settings of the Screen Repeat Cycle Timer (adjustable). The Screen Repeat Cycle Timer is provided for 3 possible reasons:
1. To keep the Screen operating periodically in low flow situations.
2. In case there is a failure with the upstream level sensing device.
3. In cold weather conditions, to keep the Screen operating periodically to prevent the screen from freezing.

Notes:
1. Any run of the Screen will reset the Screen Repeat Cycle Timer.
2. After each automatic cycle, the Screen will stop, run in reverse (stop and reverse times are set per Screen Reverse Run Timer), and then return to OFF.
3. If the Screen call-to-run signal remains active for the time set in the Screen Max Continuous Run Timer, the Screen will stop and run in reverse (stop and reverse times are set per Screen Reverse Run Timer). If the call-to-run persists, the Screen will again start to run in the forward direction.
4. Pressing and holding the System Reset pushbutton for 3 seconds will initiate a Screen Run cycle if the Screen selector is in the AUTO position.

COMPACTION ZONE SPRAY MODES OF OPERATION:
HAND:
When the Compaction Zone Spray selector is in the HAND position, the Compaction Zone Spray will run continuously.

⚠A AUTO:
When the Compaction Zone Spray selector is in the AUTO position, the Spray will cycle ON and OFF (ON first) per the settings of the Compaction Zone Spray Repeat Cycle Timer (adjustable). The Compaction Zone Spray will run when the Screen is running in forward or reverse.

BASKET SPRAY MODES OF OPERATION:
HAND:
When the Basket Spray selector is in the HAND position, the Basket Spray will run continuously.

AUTO:
When the Basket Spray selector is in the AUTO position, the Spray will run when the Screen is operating in forward.

SEQUENCE OF OPERATION

EMERGENCY STOP:
If either of the Emergency Stop (E-Stop) pushbutton is pressed the Spiral Screen, the Basket Spray, and the Compaction Zone Spray will stop immediately and the control power on light will de-energize. Screen and Sprays will also stop if the hatch door is opened. To re-set, pull out the E-Stop pushbutton, ensure the hatch door is closed, and press the System Reset pushbutton.

SPIRAL SCREEN FAULTS/Resets:
1. A fault occurs when the Screen Current Monitor is tripped. The Screen will stop immediately, and the Screen Fault light will be illuminated.
   Reset: Push the System Reset button.

2. A fault occurs when the Screen Motor Starter Thermal Overload is tripped. The Screen will stop immediately, and the Screen Fault light will be illuminated.
   Reset: Push the Reset pushbutton on the Screen Motor Starter Thermal Overload located inside the control panel then press the System Reset pushbutton. Unless entry into the control panel is being performed by a qualified electrician, the control panel power should be shut off prior to entry.

3. A fault occurs when the Screen Motor Thermostat (if supplied) is tripped. The Screen will stop immediately.
   Reset: Fault 3 resets automatically when the Screen Motor returns to a safe temperature.

SCREEN ACCUMULATED RUNTIME ALARM:
When the accumulated runtime of the Screen in AUTO reaches the Screen Accumulated Runtime timer the Screen Runtime Alarm will be activated. This will indicate that the duty/standby Screens should alternate. The Screen Runtime Alarm and Accumulated Runtime timer will reset when the Screen Permissive is removed, the Screen is removed from AUTO, or when power is cycled.

DRY OUTPUT CONTACTS

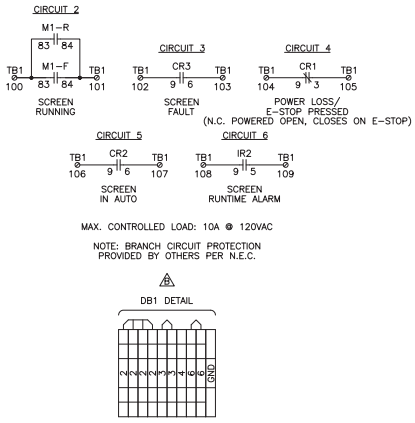

MAX. CONTROLLED LOAD: 10A @ 120VAC

NOTE: BRANCH CIRCUIT PROTECTION PROVIDED BY OTHERS PER N.E.C.

⚠B

FIELD WIRING DIAGRAM

WARNING:
DAMAGE RESULTING FROM INSTALLATION OF TOP ENTRY CONDUIT WILL VOID WARRANTY
- USE PROPER FITTINGS, MYERS TYPE 4 OR EQUAL
- PROTECT INTERIOR DEVICES FROM INSTALLATION DEBRIS
- CONDUIT MUST BE SEALED WATERTIGHT TO PREVENT WATER ENTRY

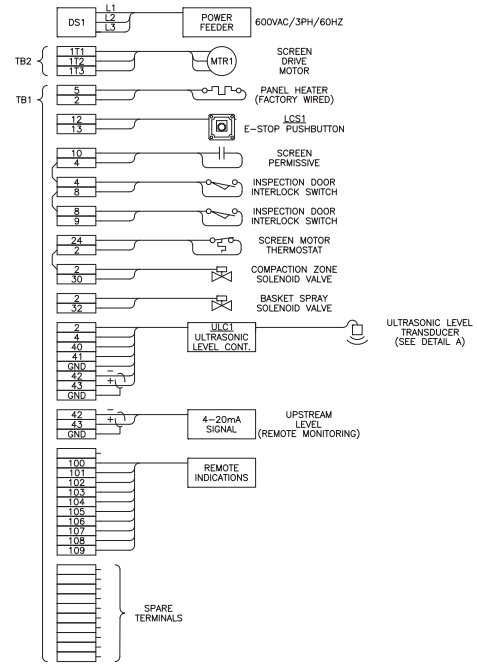

Rev	Revision Description	Date	Rev By	Approver
B	AS BUILT	07/03/18	JAP	ALS
A	PER CUSTOMER COMMENTS	04/20/18	MBS	ALS

Enviro-Care
A WAMGROUP® Company

PROPERTY OF ENVIRO-CARE COMPANY. ALL RIGHTS RESERVED. NO PART OF THE DRAWING MAY BE REPRODUCED OR MAY FORM OR DISCLOSE ITEM THEREON BE MADE WITHOUT WRITTEN PERMISSION. NEITHER DRAWING OR DESIGN IS TO BE USED FOR SALE OR FOR THE DESIGN OF ANY EQUIPMENT AT ANY TIME WITHOUT PRIOR WRITTEN AUTHORIZATION.

Title
CONTROL PANEL: 3/60/480
SPIRAL SCREEN
MAIN CONTROL PANEL

Designer	Checker	Date	Sheet
MBS	ALS	03/26/18	5 of 6

Third Angle Projection

Drawing Number: WEC217259Z-CP01/CP02

Revision: B

ELEMECH PROJECT: EVC7258A5

This page intentionally left blank

Z:\Enviro-Care\7200\EVC7258 - Iqaluit, Canada\Submittal\EVC7258A6

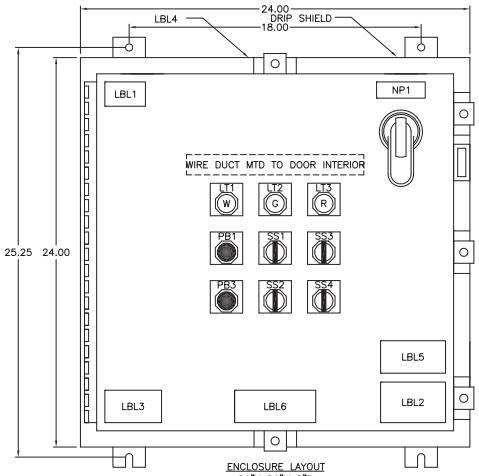

ENCLOSURE LAYOUT
24"Hx24"Wx8"D
NEMA 4X 316 STAINLESS STEEL

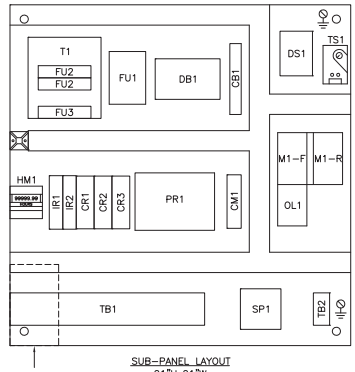

HTR1 MTD.
BEHIND
SUB–PANEL

SUB–PANEL LAYOUT
21"Hx21"W

PILOT DEVICE LEGEND PLATES:

LT1	– CONTROL POWER ON	
LT2	– SCREEN RUNNING	
LT3	– SCREEN FAULT	
PB1	– EMERGENCY STOP	
PB2	– EMERGENCY STOP	
PB3	– SYSTEM RESET	
SS1	– SCREEN	HAND–OFF–AUTO
SS2	– SCREEN	FOR–OFF–REV
SS3	– COMP. ZONE SPRAY	HAND–OFF–AUTO
SS4	– BASKET SPRAY	HAND–OFF–AUTO

NAMEPLATES:
NP1 – 600VAC–3PH–60HZ
NP2 – ULTRASONIC LEVEL CONTROLLER

LABEL DESCRIPTION:
LBL1 – WARNING: MULTIPLE SUPPLY SOURCES
OPEN ALL DISCONNECTS BEFORE SERVICING EQUIPMENT OR OTHER UNIT WIRING.
LBL2 – DANGER HIGH VOLTAGE
ENTRY BY QUALIFIED PERSON ONLY
LBL3 – ELEMECH ELECTRICAL CONTROL SYSTEMS
LBL4 – WARNING DAMAGE RESULTING FROM
INSTALLATION OF TOP ENTRY CONDUIT WILL VOID WARRANTY
– USE PROPER FITTINGS, MYERS TYPE 4 OR EQUAL
– PROTECT INTERIOR DEVICES FROM INSTALLATION DEBRIS
– CONDUIT MUST BE SEALED WATERTIGHT TO PREVENT WATER ENTRY
LBL5 – DANGER ARC FLASH AND SHOCK HAZARD
FOLLOW ALL REQUIREMENTS NFPA 70E FOR SAFE WORK PRACTICES AND FOR PERSONAL PROTECTIVE EQUIPMENT.
LBL6 – ENVIRO–CARE

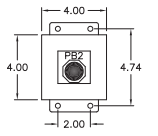

LOCAL CONTROL STATION
4"Hx4"Wx3"D
NEMA 4X 316 STAINLESS STEEL
SUITABLE FOR CLASS 1 DIV. 2

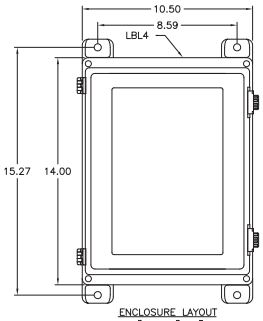

ENCLOSURE LAYOUT
14"Hx10.5"Wx7"D
NEMA 4X FIBERGLASS
10.28"Hx6.84"W WINDOW

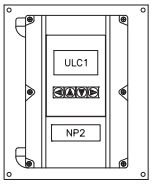

SUB–PANEL LAYOUT
10.75"Hx8.88"W

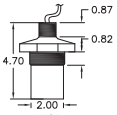

ULS1
ST–H TRANSDUCER
ETFE, 2" NPT CONNECTION
W/10M, SHIELDED, 2 CONDUCTER PVC CABLE
FM CLASS I, DIV. I RATING

Rev	Revision Description	Date	Rev By	Approver
B	AS BUILT	07/03/18	JAP	ALS
A	PER CUSTOMER COMMENTS	04/20/18	MBS	ALS

Enviro-Care
A WAMGROUP® Company

PROPERTY OF ENVIRO-CARE COMPANY. ALL RIGHTS RESERVED. NO PART OF THIS DRAWING MAY BE REPRODUCED OR COPIED IN ANY FORM OR BY ANY MEANS WITHOUT THE PRIOR WRITTEN PERMISSION FROM ENVIRO-CARE. ENVIRO-CARE COMPANY RESERVES THE RIGHT TO ALTER DATA ON THIS DESIGN OR EQUIPMENT AT ANY TIME WITHOUT PRIOR NOTICE AND WITHOUT FURTHER OBLIGATION WHATSOEVER.

Title
CONTROL PANEL: 3/60/480
SPIRAL SCREEN
MAIN CONTROL PANEL

Designer	Checker	Date	Sheet
MBS	ALS	03/26/18	6 of 6

Third Angle Projection

Drawing Number: WEC217259Z-CP01/CP02

Revision: B

ELEMECH PROJECT: EVC7258A6

This page intentionally left blank

March 23, 2018

WEC217259Z Iqaluit, Canada Sequence of Operation
GCP Wastemaster Screw Screen

Screens MUST operate in a duty/standby configuration. TBD Local/Remote/Auto

SPIRAL SCREEN MODES OF OPERATION:

HAND:

When Screen Selector is in the HAND position, the Screen will run per the Screen FOR-OFF-REV selector. In FOR position, the Screen runs continuously forward. In OFF position, the Screen is off. In REV position, the Screen runs in reverse until operator release (spring-returns to OFF).

AUTO:

When the Screen selector is in the AUTO position, the Screen will start forward when the liquid level in the upstream channel reaches the start level set-point (as determined by upstream Ultrasonic Level Sensor).

After the liquid level in upstream channel falls below the start level set-point for the time set in the Screen Level Off-Delay Timer, the Screen will shut off.

The Screen will also cycle OFF and ON/FOR (OFF first), per the settings of the Screen Repeat Cycle Timer (adjustable). The Screen Repeat Cycle Timer is provided for 3 possible reasons:

1. To keep the Screen operating periodically in low flow situations.
2. In case there is a failure with the upstream level sensing device.

Notes:

1. Any run of the Screen will reset the Screen Repeat Cycle Timer.
2. After each automatic cycle, the Screen will stop, run in reverse (stop and reverse times are set per Screen Reverse Run Timer), and then return to OFF.
3. If the Screen call-to-run signal remains active for the time set in the Screen Max Continuous Run Timer, the Screen will stop and run in reverse (stop and reverse times are set per Screen Reverse Run Timer). If the call-to-run persists, the Screen will again start to run in the forward direction.
4. Pressing and holding the System Reset pushbutton for 3 seconds will initiate a Screen Run cycle if the Screen selector is in the AUTO position.
5. Because the rotating auger is shaftless, there is no automatic jam logic.

COMPACTION ZONE SPRAY MODES OF OPERATION:

HAND:

When the Compaction Zone Spray selector is in the HAND position, the Compaction Zone Spray will run continuously.

AUTO:

When the Compaction Zone Spray selector is in the AUTO position, the Spray will cycle ON and OFF (ON first) per the settings of the Compaction Zone Spray Repeat Cycle Timer (adjustable). The Compaction Zone Spray is independent of the Screen operation.

BASKET SPRAY MODES OF OPERATION:

HAND:

When the Basket Spray selector is in the HAND position, the Basket Spray will run continuously.

AUTO:

When the Basket Spray selector is in the AUTO position, the Spray will run when the Screen is operating in forward.

March 23, 2018

Enviro-Care
A WAMGROUP® Company

WEC217259Z Iqaluit, Canada Sequence of Operation
GCP Wastemaster Screw Screen

EMERGENCY STOP:

If the Emergency Stop (E-Stop) pushbutton is pressed, the Spiral Screen, the Compaction Zone Spray, and the Basket Spray will stop immediately. Screen and Sprays will also stop if the hatch door is opened. To re-set, pull out E-Stop pushbutton and press the System Reset pushbutton.

SPIRAL SCREEN FAULTS/Resets:

1. A fault occurs when the Screen Current Monitor is tripped. The Screen will stop immediately, and the Screen Fault light will be illuminated.
   Reset: Push the System Reset button.

2. A fault occurs when the Screen Motor Starter Thermal Overload is tripped. The Screen will stop immediately, and the Screen Fault light will be illuminated.
   Reset: Push the Reset pushbutton on the Screen Motor Starter Thermal Overload located inside the control panel. Unless entry into the control panel is being performed by a qualified electrician, the control panel power should be shut off prior to entry.

3. A fault occurs when the Screen Motor Thermostat (if supplied) is tripped. The Screen will stop immediately.
   Reset: Fault 3 resets automatically when the Screen Motor returns to a safe temperature.

4. If heat trace equipment is included (to keep spray wash system from freezing in outdoor installations in cold winter environments), a fault occurs when the heat trace circuit breaker is tripped. When Fault 4 occurs, the operation of the Screen and Sprays is not affected, but the Heat Trace indicator light on the control panel will NOT be illuminated.
   Reset: Reset heat trace circuit breaker inside the control panel. Unless entry into the control panel is being performed by a qualified electrician, the control panel power should be shut off prior to entry.

SEE NEXT PAGE FOR RECOMMENDED INITIAL TIMER SETTINGS

March 23, 2018

WEC217259Z Iqaluit, Canada Sequence of Operation

GCP Wastemaster Screw Screen

Timer Description and Initial Timer Settings

DESCRIPTION	TIMER RESOLUTION (M:S, M:H, ETC)	FACTORY SETTING
SCREEN START LEVEL ON – DELAY	MIN:SEC	00:05
SCREEN REPEAT CYCLE OFF TIME	HR:MIN	01:00
SCREEN LEVEL OFF DELAY TIME	MIN:SEC	00:30
SCREEN REPEAT CYCLE ON TIME	MIN:SEC	01:00
SCREEN REV TO FWD DWELL TIMER	MIN:SEC	00:05
SCREEN FWD TO REV DWELL TIMER	MIN:SEC	00:05
SCREEN ACCUMULATED RUN TIME	TBD	TBD
COMPACTION SPRAY – REPEAT CYCLE ON TIME	MIN:SEC	00:15
COMPACTION SPRAY – REPEAT CYCLE OFF TIME	HR:MIN	4:00
SCREEN REVERSE RUN TIME	MIN:SEC	00:03
SCREEN MAX CONTINUOUS RUN TIMER	MIN:SEC	15:00

OWNER'S MANUAL

IQALUIT, NU

PROJECT NO: 480080

IMPORTANT CONTACTS

HEAD OFFICE - CANADA

Trojan Technologies
3020 Gore Road,
London, Ontario,
Canada, N5V 4T7
Tel.: +519 457 3400
Fax: +519 457 3030
http://www.trojanuv.com

TOLL FREE NUMBER:

1-800-291-0218

TOLL FREE FAX NUMBER:

1-800-291-0083

To schedule SERVICE or ORDER PARTS, contact:

1-800-291-0218

If you are unable to reach your Local Representative and have a TECHNICAL EMERGENCY, contact TROJAN TECHNOLOGIES' TECHNICAL ASSISTANCE CENTER:
Toll Free Phone: 1-866-388-0488
Email: TAC@Trojanuv.com

GLOBAL OFFICES

NORWAY
Salsnes Filter AS
P.O. Box 279
7801 Namsos, Norway
http://www.salsnes-filter.com

Document #: OM480080	Completed By: RLM	Date: 18NO15
Customer Revision: A	Checked By: SPM	Date: 18NO20
	Approved By: DP	Date: 18NO21

Salsnes Filter™ holds several patents for the system and all adaptations/changes that are in conflict with our patents and property rights are illegal without our written consent.

All warranties will be invalid if the customer makes changes on the system without approval.

COPYRIGHT © 2018 by Salsnes Filter
ALL RIGHTS RESERVED

TABLE OF CONTENTS

PART A
PROJECT AND SYSTEM DESCRIPTION
- Project Description
- System Description

PART B
LAYOUT DRAWINGS
- DR480080S01 - Rev. D
- DR480080S02 - Rev. C
- DR480080S03 - Rev. C

PART C
ELECTRICAL DRAWINGS
- 448241 - Rev. B
- 448242 - Rev. A

PART D
CONTROLS PHILOSOPHY
- CP480080 - Rev 1.0
- SCADA List - Rev 1.0

PART E
WARRANTIES
- Salsnes Equipment Warranty

PART F
SAFETY DATA SHEETS (SDS)
- Omega FGB 220
- SKF LGWA-2 Grease

PART G
MANUFACTURER'S MANUALS
- Salsnes Filter© SF Series Operation and Maintenance Manual
- Kaeser BB69C Blower User Manual

PART H
CERTIFICATE
- ISO 9001 Certificate of Registration
- ISO 14001 Certificate of Registration
- OHSAS 18001 Certificate of Registration
- Salsnes Filter AS Guarantee
- CE Certificate

PART

A

PROJECT AND SYSTEM DESCRIPTION

PROJECT DESCRIPTION

Project Name	**Iqaluit, NU**
Salsnes Project Number	**480080**
Specification Section	**City of Iqaluit Request for Quotation Iqaluit Wastewater Treatment Plant Upgrade Primary Filters Supply**
Peak Flow	**115.50 L/S**
Peak Hydraulic Flow	**121.00 L/S**
Future Peak Flow	**151.00 L/S**
Influent TSS	**153 mg/L**
TSS Removal	**50%**
Influent BOD	**153 mg/L**
BOD Removal	**25%**

SYSTEM DESCRIPTION

Filter Model - SF6000	
Quantity Required Filter Outlet Configuration	
One (1)	Left Outlet / Overflow, Left Sludge Outlet
One (1)	Right Outlet / Overflow, Right Sludge Outlet
Filter Specifications	
Filter Frame Material	316L SST
Filter Weight (without Water - includes Blower)	2711 lbs /1230 kgs
Filter Weight (with Water - includes Blower)	5732 lbs / 2600 kgs
Filter Mesh Specifications	
Filter Mesh Material	Polyester
Drive Belt Material	Polyurethane with Kevlar reinforced drive ends
Drive Belt Weight	11 lbs / 5 kgs
Total Filter Mesh Area	23.7 ft^2 / 2.2 m^2
Filter Connection Information	
Inlet Flange Diameter	14 inch / 350mm ANSI
Outlet and Overflow Flange Diameter	16 inch / 400mm ANSI
Bottom Cold Water Drain Flange Connection Diameter (for sediment flush)	4 inch / 100mm ANSI
De-watering Unit Reject Water Connection Diameter	4 inch /100mm with hose coupling
Hot and Cold Water Connections	1/2 inch / 12mm NPT
Hot and Cold Water Supply Requirements	Tap Water Quality (4 - 6 bar pressure)
Volume of Hot Water Tank Recommended (Provided by others)	79.2 gal / 300L
Hot Water Temperature	185°F / 85°C (Maximum) 160°F / 70°C (Minimum)
Hot Water Usage (at 90 PSI / 6 Bar) (mesh cleaning)	8.0 gpm / 30L/min
Volume Required for Cold Water (sediment flush)	0 - 15.8 gal / 0 - 60 L
Ventilation Flange Diameter	8 inch / 200mm (Inside Diameter)
Integrated Sludge De-watering System Information	
Integrated Sludge De-watering System Quantity	One (1) press per filter unit
Integrated Sludge De-watering System Materials	Trough and Lid - 316L Stainless Steel Screw - Carbon Steel
Instrumentation Information	
Pressure Sensor Quantity	One (1) per filter unit
Pressure Sensor Material	Ceramic sensing element / ASTM A-316L Stainless Steel Housing / Vented Polyurethane insulated Cable

Filter Model - SF6000	
Control Power Panel (CPP) Information	
Quantity of Control Power Panels Required	One (1) per Filter Unit
Controller Type	Allen Bradley Compact Logix L16ER
Operator Interface Terminal (OIT) Type	Allen Bradley PanelView 700 (In Seperate Class 1 Div 2 Nema 4X Enclosure)
Network Interface	Ethernet / IP
Environmental Rating	Type 4X / IP65
Mounting	Wall Mounted
Material	Painted Mild Steel
UPS	15 Minute
Variable Frequency Drives (for Blower, Filter & Screw Rotation Motor)	Included
Electrical - Voltages	480/277V, 3 Phase, 3 Wire + Ground, 60 Hz
Maximum Distance Between Filter and Control Power Panel	115 feet / 35.0 meters
Control Power Panel Weight	132 lbs / 60 kgs
Control Panel Accreditations	UL
Blower Information	
Quantity of Blowers Required	One (1) per Filter Unit
Blower Model	Kaeser BB69C
Blower Location	Standalone from Filter Unit
Blower Motor Rating	10 hp / 197 CFM
Connected Power	12.0 kW
Rated Power	7.5 kW
Air Knife Pressure	0.32 bar (maximum 0.65 bar)
Blower Weight (with sound enclosure)	672 lbs / 305 kgs
Sludge Box and Sludge Hopper Information	
Sludge Box and Sludge Hopper Quantity	One (1) per two (2) Filter Units
Miscellaneous Equipment	
1	Operator Kit
1	Double-sided Outlet Box
1	Double-sided Sludge Box
1 Set	Anchor Bolts
Spare Parts List	
Quantity	Part Name
1	Spare Filter Mesh
2	Spare Blower Air Filter
1 Set	Spare Bearings

PART

B

LAYOUT DRAWINGS

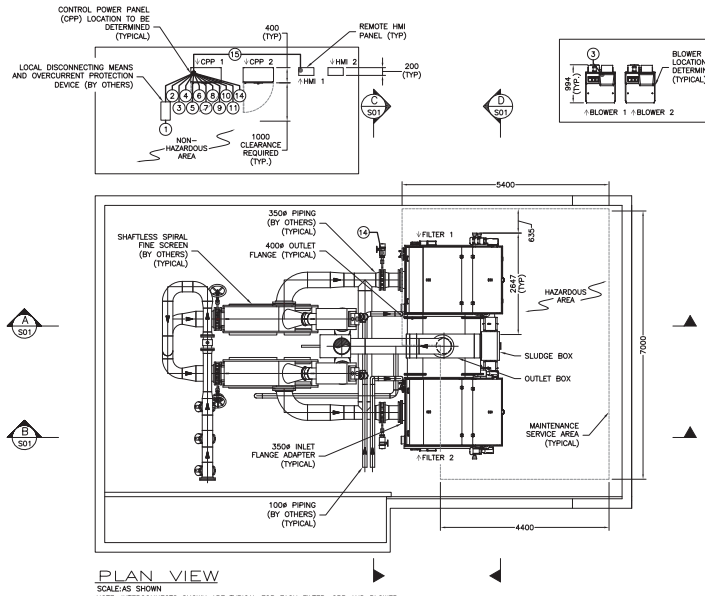

PLAN VIEW

SCALE:AS SHOWN

NOTE: INTERCONNECTS SHOWN ARE TYPICAL FOR EACH FILTER, CPP AND BLOWER.

- : BLOWER PIPING (BY OTHERS), HOT AND COLD WATER SUPPLY PIPING (BY OTHERS) NOT SHOWN.
- : ALL PIPES (BY OTHERS) TO BE ABOVE EXISTING FLOOR. FILTERS ELEVATES ON CONCRETE PEDESTALS (BY OTHERS).
- : ALL DRAINS TO BE DIRECTED TO OUTLET PIPE (BY OTHERS).
- : FEED PIPE (BY OTHERS) RUN OVERHEAD FROM THE PUMPS.

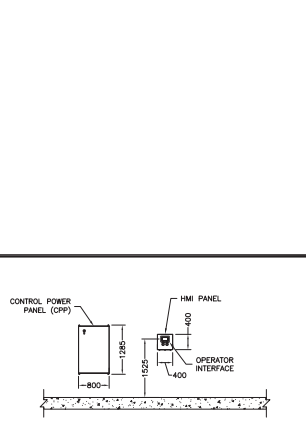

FRONT VIEW OF CPP & HMI PANEL

SCALE:AS SHOWN

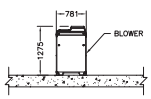

FRONT VIEW OF BLOWER

SCALE:AS SHOWN

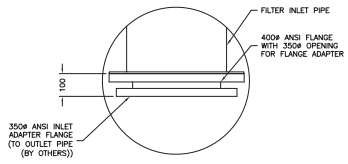

DETAIL A

SCALE:NOT TO SCALE

EQUIPMENT INTERCONNECTIONS

No.	DESCRIPTION	FROM	TO
1	CONTROL POWER PANEL (CPP) POWER SUPPLY 480Y/277V, 3 PHASE, 3 WIRE + GROUND, 60Hz, 16.8 kVA / 21 AMPS PER PHASE	DISTRIBUTION PANEL (DP) (BY OTHERS) (NOT SHOWN)	CONTROL POWER PANEL (CPP)
2	FILTER BELT & AUGER MOTOR/GEAR BOX POWER SUPPLY 480V, 3 PHASE, 3 WIRE + GROUND, 60Hz, 1.0Hp/0.75kW (FILTER BELT) + 1.0Hp/0.75kW (AUGER)	CONTROL POWER PANEL (CPP)	MOTOR JUNCTION BOX
3	BLOWER POWER SUPPLY 480V, 3 PHASE, 3 WIRE + GROUND, 60Hz, 10Hp/7.5kW (MOTOR) + ½ Hp/0.18kW (FAN)	CONTROL POWER PANEL (CPP)	BLOWER
4	SOLENOID VALVE JUNCTION BOX POWER SUPPLY 24 VDC, 6 WIRE + GROUND	CONTROL POWER PANEL (CPP)	SOLENOID VALVE JUNCTION BOX
5	FILTER LEVEL SIGNAL 4–20 mA ANALOG INPUT SIGNAL	LOW VOLTAGE JUNCTION BOX	CONTROL POWER PANEL (CPP)
6	AIR PRESSURE SIGNAL 4–20 mA ANALOG INPUT SIGNAL	LOW VOLTAGE JUNCTION BOX	CONTROL POWER PANEL (CPP)
7	DISCRETE EMERGENCY STOP SIGNAL 2 CONDUCTORS	EMERGENCY STOP	CONTROL POWER PANEL (CPP)
8	DISCRETE EMERGENCY STOP SIGNAL 2 CONDUCTORS	CONTROL POWER PANEL (CPP)	EMERGENCY STOP
9	DISCRETE REMOTE PERMISSIVE RUN 2 CONDUCTORS	CONTROL POWER PANEL (CPP)	PLANT SCADA (BY OTHERS) (NOT SHOWN)
10	DISCRETE REMOTE RESET 2 CONDUCTORS	CONTROL POWER PANEL (CPP)	PLANT SCADA (BY OTHERS) (NOT SHOWN)
11	ETHERNET/IP COMMUNICATION SHIELDED CAT5E CABLE CONNECTORS RJ45 (OR OPTIONAL FIBER OPTIC)	CONTROL POWER PANEL (CPP)	PLANT SCADA (BY OTHERS) (NOT SHOWN)
12	HOT WATER SUPPLY PRESSURE: 90 PSI (6 BAR) / 8 GPM (30 LPM) TEMP: 160°F (70°C) MIN. / 185°F (85°C) IDEAL	WATER HEATER (BY OTHERS)	FILTER HOT WATER CONNECTION PORT
13	COLD WATER SUPPLY PRESSURE: 60–90 PSI (4–6 BAR)/16 GPM (60L/min)	LOCAL TAP WATER SUPPLY (BY OTHERS) (NOT SHOWN)	FILTER COLD WATER CONNECTION PORT
14	DISCRETE INLET VALVE OPEN CONTROL OUTPUT – 2 CONDUCTORS DISCRETE INLET VALVE CLOSE CONTROL OUTPUT – 2 CONDUCTORS DISCRETE INLET VALVE OPEN STATUS INPUT – 2 CONDUCTORS DISCRETE INLET VALVE CLOSE STATUS INPUT – 2 CONDUCTORS DISCRETE INLET VALVE OVERLOAD TRIPPED STATUS – 2 CONDUCTORS	CPP CPP INLET VALVE (BY OTHERS) INLET VALVE (BY OTHERS) INLET VALVE (BY OTHERS)	INLET VALVE (BY OTHERS) INLET VALVE (BY OTHERS) CPP CPP CPP
15	ETHERNET + – 10 CONDUCTORS + GROUND	CPP	REMOTE HMI PANEL

NOTES:

- : HARDWARE AND GASKETS FOR INTERCONNECTION PIPING TO BE SUPPLIED BY CONTRACTOR. HARDWARE AND GASKETS RELATED TO THE PRIMARY FILTER ITSELF WILL BE SUPPLIED BY SALSNES.
- : SYSTEM CONDUIT, WIRING, DISTRIBUTION PANELS & INTERCONNECTIONS BY OTHERS.
- : FILTER UNIT TO BE POSITIONED ON A FOUNDATION (CONCRETE, STEEL OR ALUMINUM) A MINIMUM LOAD CAPACITY OF 2000kgs.
- : FOUNDATION FLOOR MUST BE FIRM AND LEVEL.
- : ELECTRICAL REQUIREMENTS SHOWN ARE TO SUPPLY SALSNES FILTER EQUIPMENT ONLY.
- : CONTRACTOR TO REVIEW ALL SALSNES FILTER INSTALLATION INSTRUCTIONS PRIOR TO EQUIPMENT INSTALLATION.
- : CONTROL POWER PANEL (CPP) TO BE MAXIMUM 275' CABLE RUN FROM INTERCONNECTING FILTER UNIT.

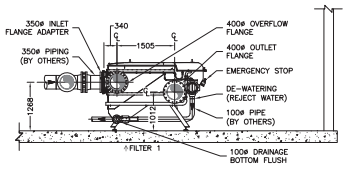

A SECTION

S01 SCALE:AS SHOWN

NOTE: SLUDGE BOX AND OUTLET BOX NOT SHOWN FOR CLARITY.

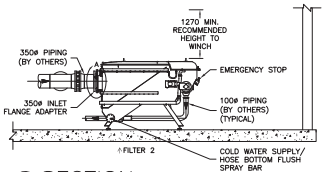

B SECTION

S01 SCALE:AS SHOWN

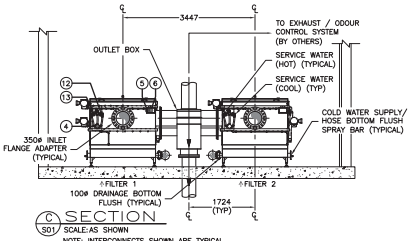

C SECTION

S01 SCALE:AS SHOWN

NOTE: INTERCONNECTS SHOWN ARE TYPICAL FOR EACH FILTER, CPP AND BLOWER.

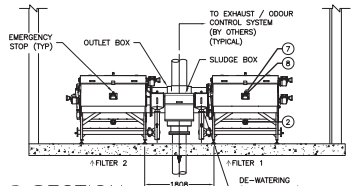

D SECTION

S01 SCALE:AS SHOWN

NOTE: INTERCONNECTS SHOWN ARE TYPICAL FOR EACH FILTER, CPP AND BLOWER.

DESIGN CRITERIA		
	PEAK FLOW	115.50 L/S
	PEAK HYDRAULIC FLOW	121.00 L/S
	INFLUENT T.S.S.	153 mg/L
	INFLUENT B.O.D	153 mg/L

CONFIDENTIALITY NOTICE
Copyright© 2018 by Salsnes Filter™. All rights reserved. No part of this document may be reproduced, stored in a retrieval system, or transmitted in any form, without the written permission of Salsnes Filter™.

DESCRIPTION: LAYOUT, SALSNES SF6000 IQALUIT NU

QUOTE NO. 210636

PROJECT NO. 480080

DRAWN BY : CC/RLM	DATE : 18N020	DWG NO. S01 / REV. C
CHECKED BY : SPM	DATE : 18N020	
APPROVED BY : DP	DATE : 18N021	
SCALE (279x432): 1:100	LOG NUMBER : N/A	

NOTES:
: HARDWARE AND GASKETS FOR INTERCONNECTION PIPING TO BE SUPPLIED BY CONTRACTOR. HARDWARE AND GASKETS RELATED TO THE PRIMARY FILTER ITSELF WILL BE SUPPLIED BY SALSNES.
: SYSTEM CONDUIT, WIRING, DISTRIBUTION PANELS & INTERCONNECTIONS BY OTHERS.
: ELECTRICAL REQUIREMENTS SHOWN ARE TO SUPPLY SALSNES FILTER EQUIPMENT ONLY. ELECTRICAL INRUSH FACTOR TO BE ADDED AS PER LOCAL CODE.
: CONTRACTOR TO REVIEW ALL SALSNES FILTER INSTALLATION INSTRUCTIONS PRIOR TO EQUIPMENT INSTALLATION.

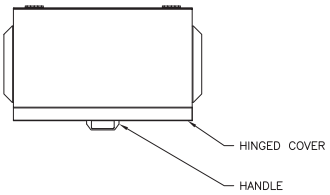

TOP VIEW
SCALE:AS SHOWN

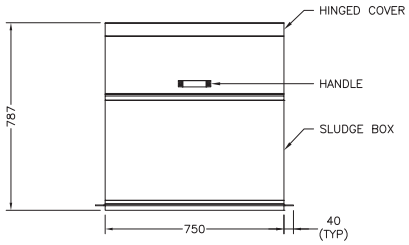

FRONT VIEW
SCALE:AS SHOWN

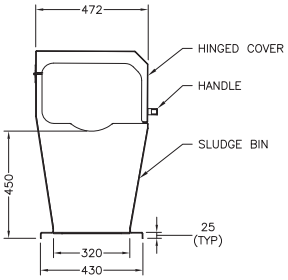

SIDE VIEW
SCALE:AS SHOWN

A TROJAN TECHNOLOGIES BUSINESS
salsnes filter™

CONFIDENTIALITY NOTICE
Copyright© 2018 by Salsnes Filter™. All rights reserved. No part of this document may be reproduced, stored in a retrieval system, or transmitted in any form, without the written permission of Salsnes Filter™.

DESCRIPTION: DOUBLE SIDED SLUDGE BOX, SF600 IQALUIT NU		QUOTE NO. 210636	
DRAWN BY : CC/RLM	DATE : 18MY29	PROJECT NO. 480080	
CHECKED BY : SPM	DATE : 18MY30		
APPROVED BY : DP	DATE : 18MY30	DWG NO. S02	REV. C
SCALE (215x280): 1:25	LOG NUMBER : N/A		

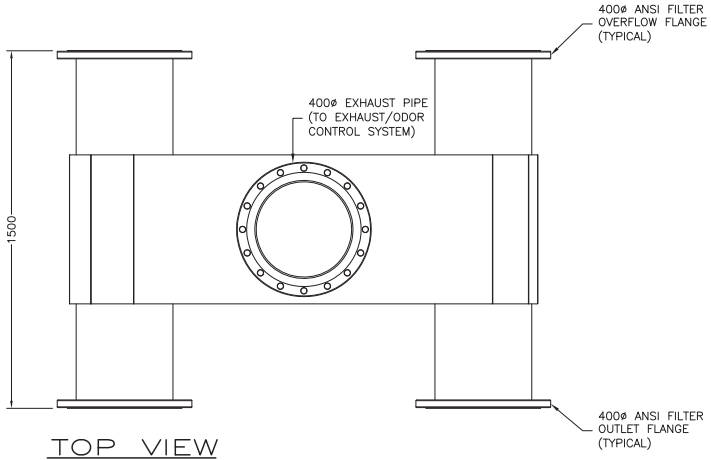

TOP VIEW
SCALE:AS SHOWN

NOTES:
: HARDWARE AND GASKETS FOR INTERCONNECTION PIPING TO BE SUPPLIED BY CONTRACTOR. HARDWARE AND GASKETS RELATED TO THE PRIMARY FILTER ITSELF WILL BE SUPPLIED BY SALSNES.
: SYSTEM CONDUIT, WIRING, DISTRIBUTION PANELS & INTERCONNECTIONS BY OTHERS.
: ELECTRICAL REQUIREMENTS SHOWN ARE TO SUPPLY SALSNES FILTER EQUIPMENT ONLY. ELECTRICAL INRUSH FACTOR TO BE ADDED AS PER LOCAL CODE.
: CONTRACTOR TO REVIEW ALL SALSNES FILTER INSTALLATION INSTRUCTIONS PRIOR TO EQUIPMENT INSTALLATION.

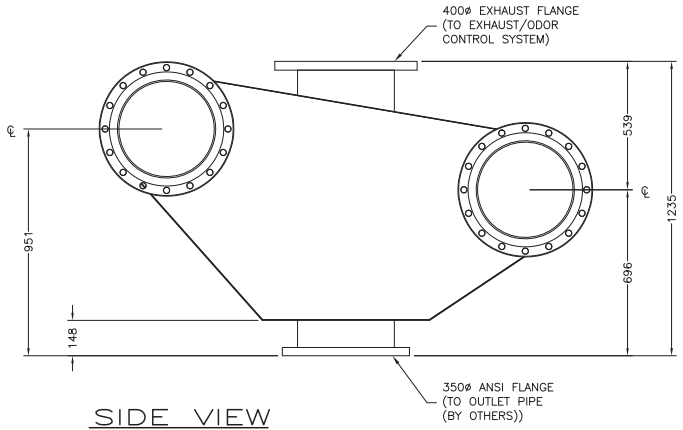

SIDE VIEW
SCALE:AS SHOWN

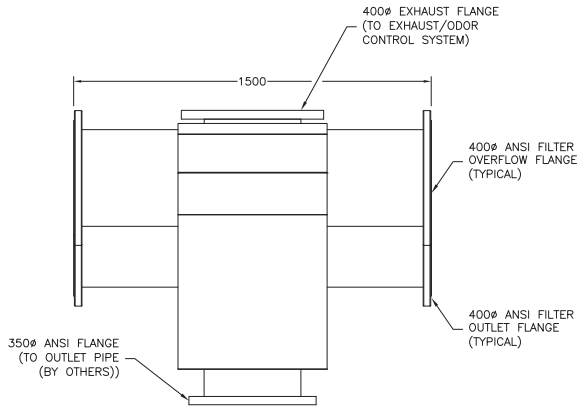

FRONT VIEW
SCALE:AS SHOWN

A TROJAN TECHNOLOGIES BUSINESS
salsnes filter™

CONFIDENTIALITY NOTICE
Copyright© 2018 by Salsnes Filter™. All rights reserved. No part of this document may be reproduced, stored in a retrieval system, or transmitted in any form, without the written permission of Salsnes Filter™.

DESCRIPTION: OUTLET BOX, SF600 IQALUIT NU		QUOTE NO. 210636	
DRAWN BY : CC/RLM	DATE : 18MY29	PROJECT NO. 480080	
CHECKED BY : SPM	DATE : 18MY30		
APPROVED BY : DP	DATE : 18MY30	DWG NO. S03	REV. C
SCALE (215x280): 1:25	LOG NUMBER : N/A		

PART

C

ELECTRICAL DRAWINGS

REV	REVISION DESCRIPTION	LOG NO.	REV'D BY	CHK'D BY	APPR'D BY	DATE YYYY-MM-DD
B	UPDATE SHEET 08 STATUS 3 TITLES	F18-065	HHG	SMM	HHG	2018-11-16

SALSNES FILTER
SF6000

DRAWING INDEX	
00	PROJECT INFORMATION
01	SYMBOLS LEGEND
02	MAINS POWER PROTECTION & 24VDC PS
03	FILTER, AUGER AND BLOWER CONTROL
04	OPTIONAL EQUIPMENT
05	24VDC CIRCUITS
06	SOLENOIDS AND LOCAL MODE CONTROL
07	PLC - DISCRETE INPUTS
08	PLC - DISCRETE OUTPUTS & 24VDC CIRCUITS
09	PLC - ANALOG INPUTS
10	BACKPLATE LAYOUT
11	TERMINAL LABEL DETAILS 2xACTUAL
12	ENCLOSURE LAYOUT
13	BILL OF MATERIALS
14	LABEL SCHEDULE

WIRE COLOR SPECIFICATION

DESCRIPTION	DESIGNATION	WIRE
AC POWER	L1	BLACK
	L2	BLACK
	L3	BLACK
	N	WHITE
AC CONTROL	L	RED
	N	WHITE
DC CONTROL	24VDC	BLUE
	0VDC	WHITE/BLUE
GROUND	GND OR ⏚	GREEN/YELLOW
EXTERNAL POWER		YELLOW

NOTES:

1) ELECTRICAL ASSEMBLY TO BE ASSEMBLED UNDER THE MINIMUM REQUIREMENTS OUTLINED IN ES0127. WHERE THERE IS A CONFLICT BETWEEN THIS DOCUMENT AND THE REQUIREMENTS OF ES0127, THE INFORMATION PRESENTED IN THIS DOCUMENT WILL BE USED.

2) ELECTRICAL ASSEMBLY TO BE ASSEMBLED UNDER THE MINIMUM REQUIREMENTS OUTLINED IN UL508A.

UNLESS OTHERWISE SPECIFIED:
DIMENSIONS ARE IN INCHES
TOLERANCES: 2 PL DEC ± N/A
3 PL DEC ± N/A
ANGLE DEG ± N/A
REMOVE ALL BURRS
ALL CORNERS R 0.010 OR BREAK
CP – CRITICAL CHARACTERISTIC

R-7001 WARDS, NORWAY, PO BOX 279
COPYRIGHT © TROJAN TECHNOLOGIES, 2019 - ALL RIGHTS RESERVED.

DESCRIPTION
CPP, SF6000 IQALUIT NU
PROJECT INFORMATION

THIRD ANGLE PROJECTION

SCALE: NTS

DWG NO. 448241 REV B

SHEET 00 OF 14

SIZE D

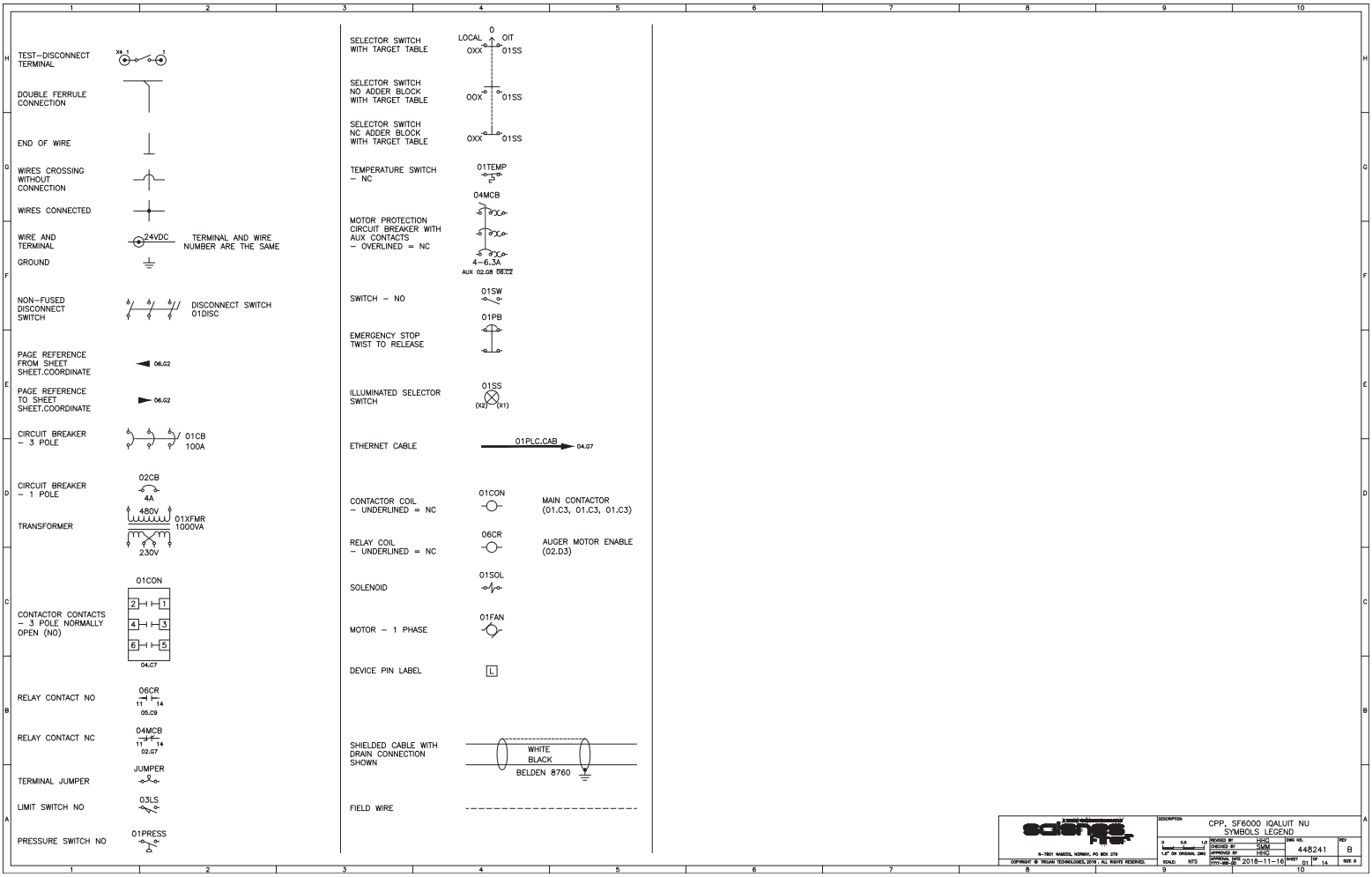
TEST-DISCONNECT TERMINAL
X4 1
1
DOUBLE FERRULE CONNECTION
END OF WIRE
WIRES CROSSING WITHOUT CONNECTION
WIRES CONNECTED
WIRE AND TERMINAL
24VDC
TERMINAL AND WIRE NUMBER ARE THE SAME
GROUND
NON-FUSED DISCONNECT SWITCH
DISCONNECT SWITCH 01DISC
PAGE REFERENCE FROM SHEET SHEET.COORDINATE
06.G2
PAGE REFERENCE TO SHEET SHEET.COORDINATE
06.G2
CIRCUIT BREAKER - 3 POLE
01CB 100A
CIRCUIT BREAKER - 1 POLE
02CB
4A
TRANSFORMER
480V
01XFMR 1000VA
230V
CONTACTOR CONTACTS - 3 POLE NORMALLY OPEN (NO)
01CON
2
1
4
3
6
5
04.C7
RELAY CONTACT NO
06CR
11
14
05.C9
RELAY CONTACT NC
04MCB
11
14
02.G7
TERMINAL JUMPER
JUMPER
LIMIT SWITCH NO
03LS
PRESSURE SWITCH NO
01PRESS
SELECTOR SWITCH WITH TARGET TABLE
LOCAL
0
OIT
0XX
01SS
SELECTOR SWITCH NO ADDER BLOCK WITH TARGET TABLE
0OX
01SS
SELECTOR SWITCH NC ADDER BLOCK WITH TARGET TABLE
0XX
01SS
TEMPERATURE SWITCH - NC
01TEMP
MOTOR PROTECTION CIRCUIT BREAKER WITH AUX CONTACTS - OVERLINED = NC
04MCB
4-6.3A
AUX 02.G8 06.C2
SWITCH - NO
01SW
EMERGENCY STOP TWIST TO RELEASE
01PB
ILLUMINATED SELECTOR SWITCH
01SS
(X2)
(X1)
ETHERNET CABLE
01PLC.CAB
04.G7
CONTACTOR COIL - UNDERLINED = NC
01CON
MAIN CONTACTOR (01.C3, 01.C3, 01.C3)
RELAY COIL - UNDERLINED = NC
06CR
AUGER MOTOR ENABLE (02.D3)
SOLENOID
01SOL
MOTOR - 1 PHASE
01FAN
DEVICE PIN LABEL
L
SHIELDED CABLE WITH DRAIN CONNECTION SHOWN
WHITE
BLACK
BELDEN 8760
FIELD WIRE
N-7801 NAMSOS, NORWAY, PO BOX 279
COPYRIGHT © TRIJAN TECHNOLOGIES, 2019 . ALL RIGHTS RESERVED.
DESCRIPTION
CPP, SF6000 IQALUIT NU
SYMBOLS LEGEND
0
0.5
1.0
1.0" ON ORIGINAL DWG
SCALE: NTS
DRAWN BY LEHIC
CHECKED BY SMM
APPROVED BY HHG
APPROVAL DATE YYYY-MM-DD 2018-11-16
DWG NO. 448241
REV B
SHEET 01 OF 14
SIZE D

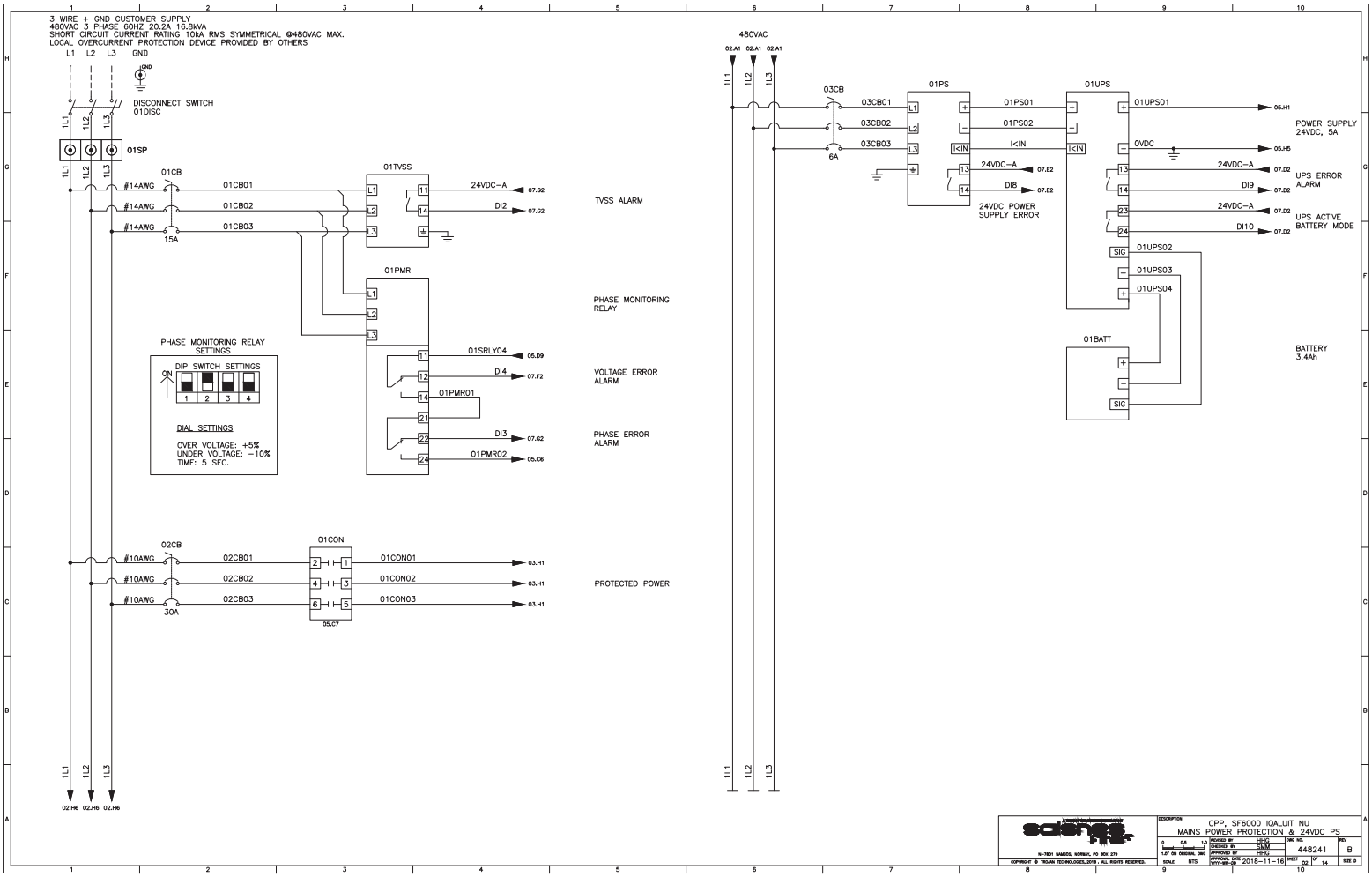
3 WIRE + GND CUSTOMER SUPPLY
480VAC 3 PHASE 60HZ 20.2A 16.8kVA
SHORT CIRCUIT CURRENT RATING 10kA RMS SYMMETRICAL @480VAC MAX.
LOCAL OVERCURRENT PROTECTION DEVICE PROVIDED BY OTHERS
L1 L2 L3 GND
DISCONNECT SWITCH
01DISC
01SP
01CB
#14AWG
01CB01
01CB02
01CB03
15A
01TVSS
24VDC-A
DI2
TVSS ALARM
01PMR
PHASE MONITORING RELAY
01SRLY04
DI4
VOLTAGE ERROR ALARM
01PMR01
DI3
PHASE ERROR ALARM
01PMR02
PHASE MONITORING RELAY SETTINGS
DIP SWITCH SETTINGS
ON
DIAL SETTINGS
OVER VOLTAGE: +5%
UNDER VOLTAGE: -10%
TIME: 5 SEC.
02CB
#10AWG
02CB01
02CB02
02CB03
30A
01CON
01CON01
01CON02
01CON03
PROTECTED POWER
480VAC
03CB
03CB01
03CB02
03CB03
6A
01PS
01PS01
01PS02
I<IN
24VDC-A
DI8
24VDC POWER SUPPLY ERROR
01UPS
01UPS01
POWER SUPPLY 24VDC, 5A
0VDC
UPS ERROR ALARM
DI9
UPS ACTIVE BATTERY MODE
DI10
SIG
01UPS02
01UPS03
01UPS04
01BATT
BATTERY 3.4Ah
02.H6 02.H6 02.H6
N-7801 NAMSOS, NORWAY, PO BOX 279
COPYRIGHT © TROJAN TECHNOLOGIES, 2019 . ALL RIGHTS RESERVED.
DESCRIPTION
CPP, SF6000 IQALUIT NU
MAINS POWER PROTECTION & 24VDC PS
DESIGNED BY HHG
DRAWN BY SMM
CHECKED BY HHG
APPROVED BY
DWG NO. 448241
REV B
SCALE NTS
DATE 2018-11-16
SHEET 02 OF 14
SIZE D

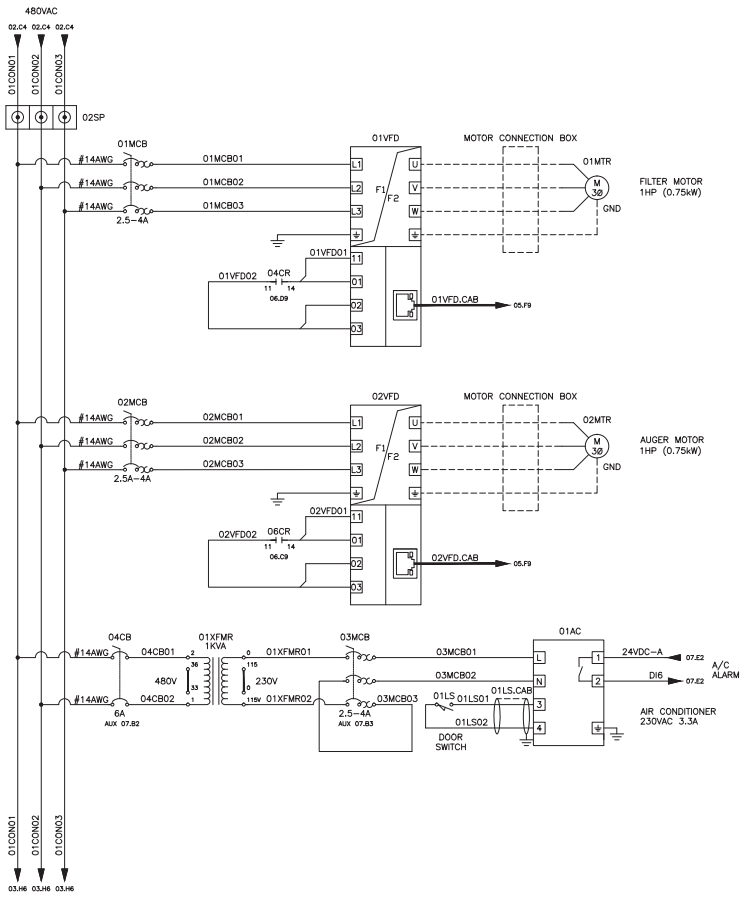

COPYRIGHT © TROJAN TECHNOLOGIES, 2018 - ALL RIGHTS RESERVED.

CPP, SF6000 IQALUIT NU
FILTER, AUGER AND BLOWER CONTROL

DRAWN BY	MMC
CHECKED BY	SMM
APPROVED BY	MHG
APPROVED ON	2018-11-16
DWG NO.	448241
REV	B
SHEET	03 OF 14
SIZE	D
SCALE	NTS

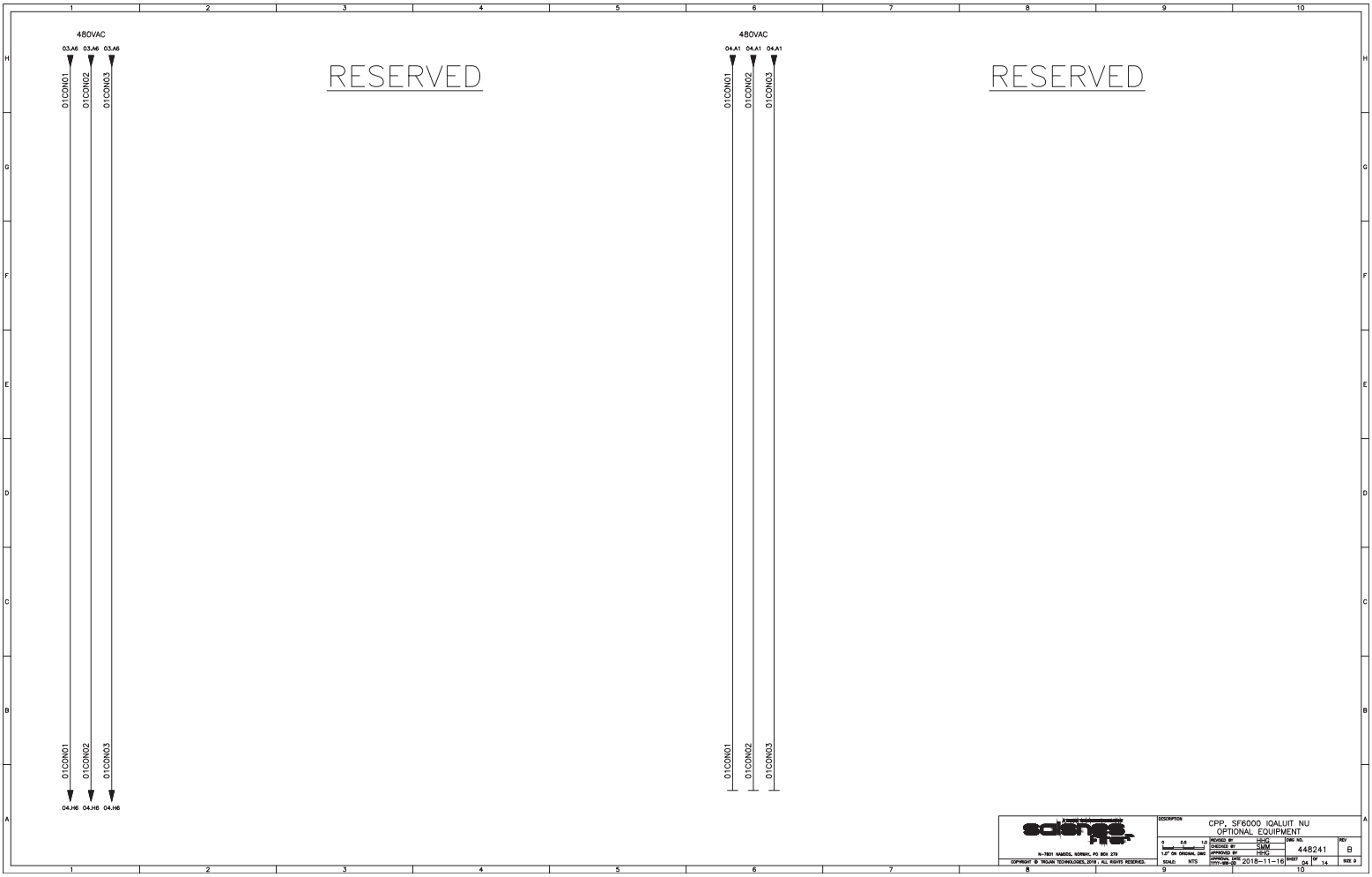
480VAC
03.A6 03.A6 03.A6
01CON01
01CON02
01CON03
RESERVED
01CON01
01CON02
01CON03
04.H6 04.H6 04.H6
480VAC
04.A1 04.A1 04.A1
01CON01
01CON02
01CON03
RESERVED
01CON01
01CON02
01CON03
N-7901 NAMDOS, NORWAY, PO BOX 279
COPYRIGHT © TROJAN TECHNOLOGIES, 2019 . ALL RIGHTS RESERVED.
DESCRIPTION
CPP, SF6000 IQALUIT NU
OPTIONAL EQUIPMENT
0 0.5 1.0
1.0" ON ORIGINAL DWG
SCALE: NTS
DRAWN BY: HHG
CHECKED BY: SMM
APPROVED BY: HHG
APPROVAL DATE: YYYY-MM-DD 2018-11-16
DWG NO. 448241
REV B
SHEET 04 OF 14
SIZE D

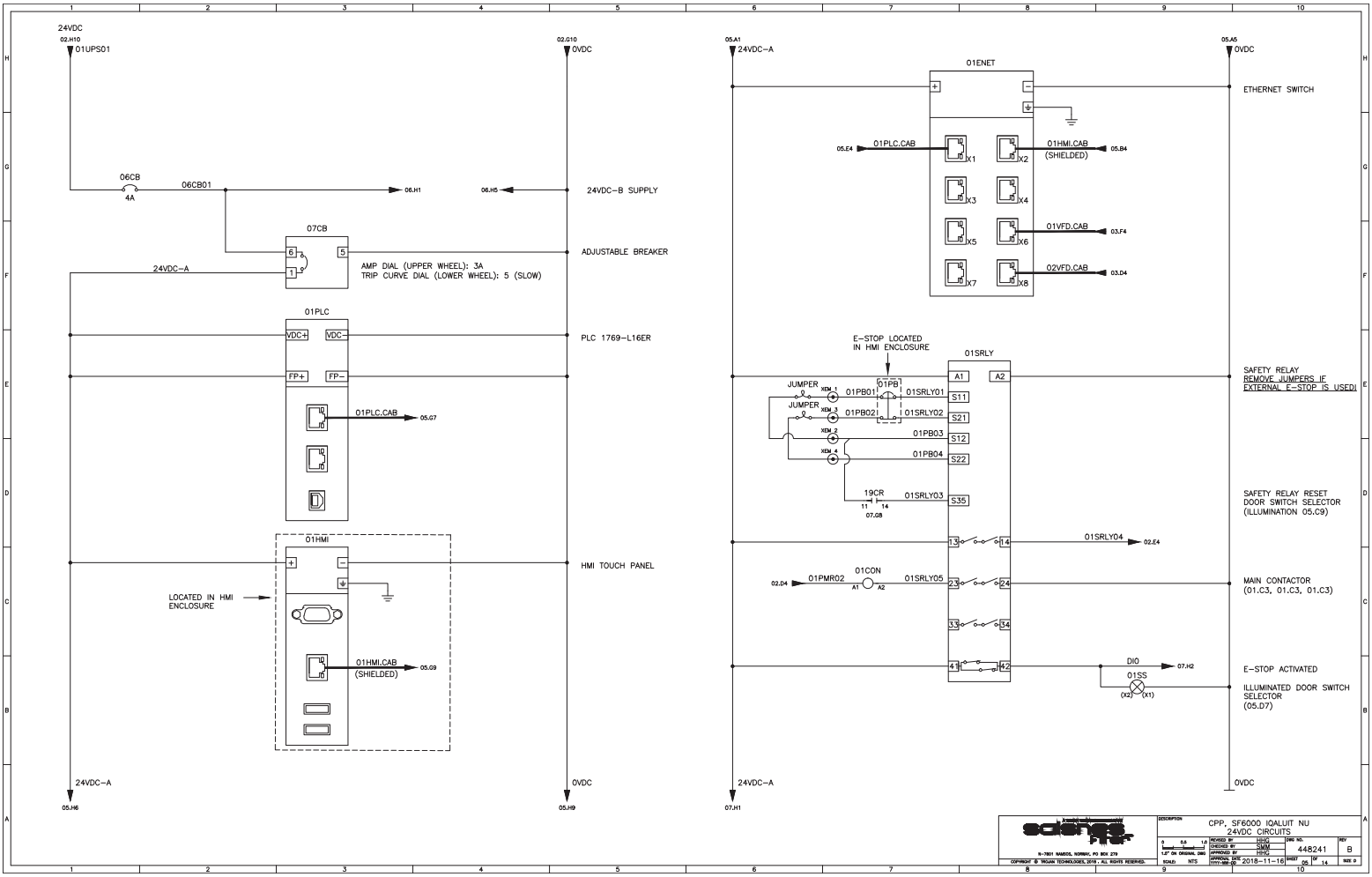
24VDC
02.H10
01UPS01
02.G10
0VDC
06CB
4A
06CB01
06.H1
06.H5
24VDC-B SUPPLY
07CB
ADJUSTABLE BREAKER
24VDC-A
AMP DIAL (UPPER WHEEL): 3A
TRIP CURVE DIAL (LOWER WHEEL): 5 (SLOW)
01PLC
VDC+
VDC-
PLC 1769-L16ER
FP+
FP-
01PLC.CAB
05.G7
01HMI
HMI TOUCH PANEL
LOCATED IN HMI
ENCLOSURE
01HMI.CAB
(SHIELDED)
05.G9
24VDC-A
05.H6
0VDC
05.H9
05.A1
24VDC-A
05.A5
0VDC
01ENET
ETHERNET SWITCH
05.E4
01PLC.CAB
01HMI.CAB
(SHIELDED)
05.B4
01VFD.CAB
03.F4
02VFD.CAB
03.D4
E-STOP LOCATED
IN HMI ENCLOSURE
01SRLY
JUMPER
01PB01
01PB
01SRLY01
01PB02
01SRLY02
01PB03
01PB04
19CR
07.G8
01SRLY03
SAFETY RELAY
REMOVE JUMPERS IF
EXTERNAL E-STOP IS USED!
SAFETY RELAY RESET
DOOR SWITCH SELECTOR
(ILLUMINATION 05.C9)
01SRLY04
02.E4
01CON
02.D4
01PMR02
01SRLY05
MAIN CONTACTOR
(01.C3, 01.C3, 01.C3)
DIO
07.H2
01SS
E-STOP ACTIVATED
ILLUMINATED DOOR SWITCH
SELECTOR
(05.D7)
24VDC-A
07.H1
0VDC
N-7801 NAMSOS, NORWAY, PO BOX 279
COPYRIGHT © TROJAN TECHNOLOGIES, 2018 . ALL RIGHTS RESERVED.
DESCRIPTION
CPP, SF6000 IQALUIT NU
24VDC CIRCUITS
REVISED BY HHG
CHECKED BY SMM
APPROVED BY HHG
APPROVAL DATE 2018-11-16
DWG NO. 448241
REV B
SCALE: NTS
SHEET 05 OF 14
SIZE D

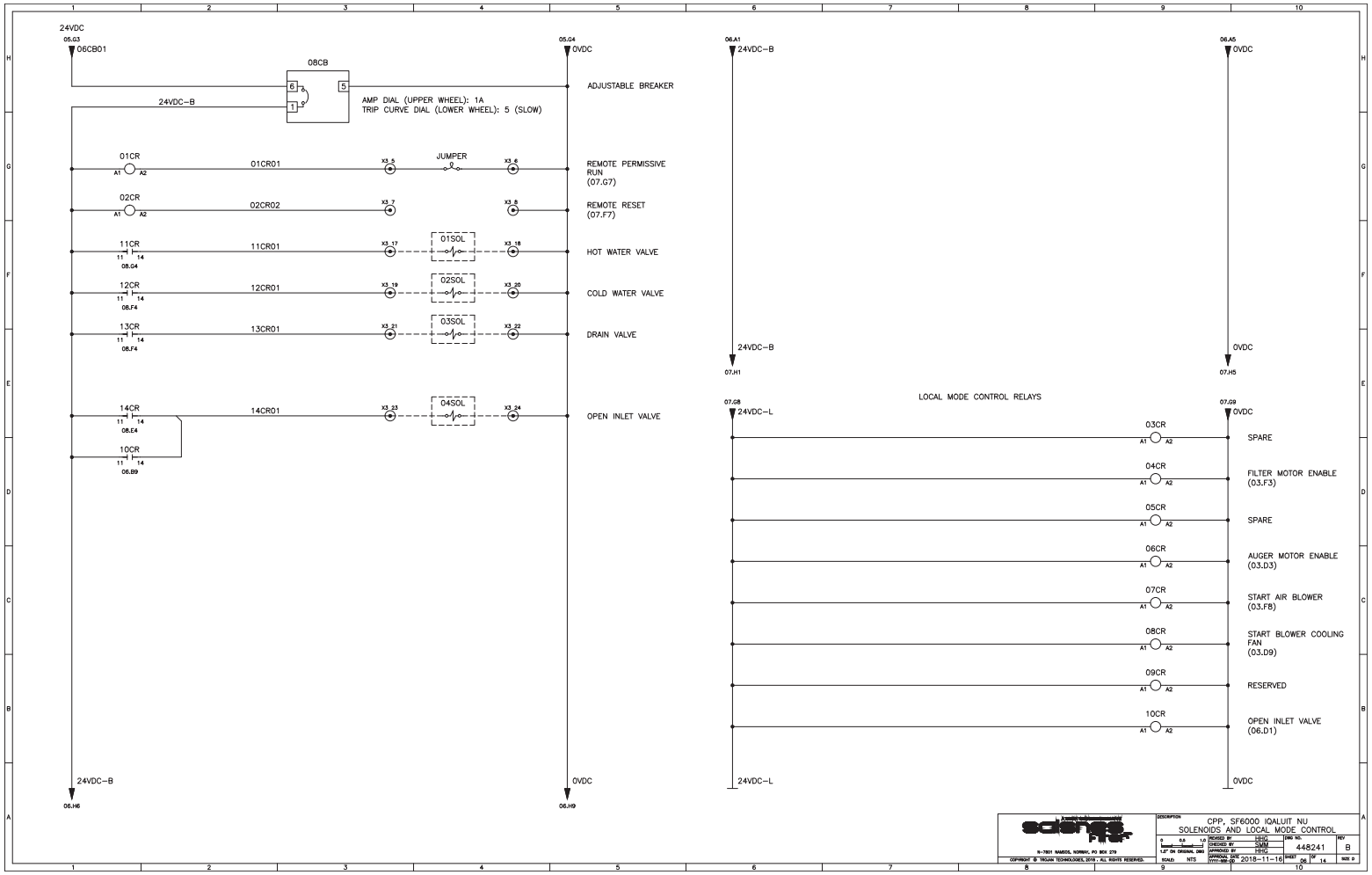
24VDC
05.G3
06CB01
08CB
6
5
1
24VDC-B
AMP DIAL (UPPER WHEEL): 1A
TRIP CURVE DIAL (LOWER WHEEL): 5 (SLOW)
05.G4
0VDC
ADJUSTABLE BREAKER
01CR
A1
A2
01CR01
X3_5
JUMPER
X3_6
REMOTE PERMISSIVE RUN (07.G7)
02CR
02CR02
X3_7
X3_8
REMOTE RESET (07.F7)
11CR
11
14
08.G4
11CR01
X3_17
01SOL
X3_18
HOT WATER VALVE
12CR
08.F4
12CR01
X3_19
02SOL
X3_20
COLD WATER VALVE
13CR
08.F4
13CR01
X3_21
03SOL
X3_22
DRAIN VALVE
14CR
08.E4
14CR01
X3_23
04SOL
X3_24
OPEN INLET VALVE
10CR
06.B9
24VDC-B
06.H6
0VDC
06.H9
06.A1
24VDC-B
07.H1
06.A5
0VDC
07.H5
LOCAL MODE CONTROL RELAYS
07.G8
24VDC-L
07.G9
0VDC
03CR
SPARE
04CR
FILTER MOTOR ENABLE (03.F3)
05CR
SPARE
06CR
AUGER MOTOR ENABLE (03.D3)
07CR
START AIR BLOWER (03.F8)
08CR
START BLOWER COOLING FAN (03.D9)
09CR
RESERVED
10CR
OPEN INLET VALVE (06.D1)
24VDC-L
0VDC
N-7801 NAMSOS, NORWAY, PO BOX 279
COPYRIGHT © TROJAN TECHNOLOGIES, 2018 . ALL RIGHTS RESERVED.
DESCRIPTION
CPP, SF6000 IQALUIT NU
SOLENOIDS AND LOCAL MODE CONTROL
0 0.5 1.0
1.5" ON ORIGINAL DWG
SCALE: NTS
DESIGNED BY HHG
CHECKED BY SMM
APPROVED BY HHG
APPROVAL DATE YYYY-MM-DD 2018-11-16
DWG NO. 448241
REV B
SHEET 06 OF 14
SIZE D

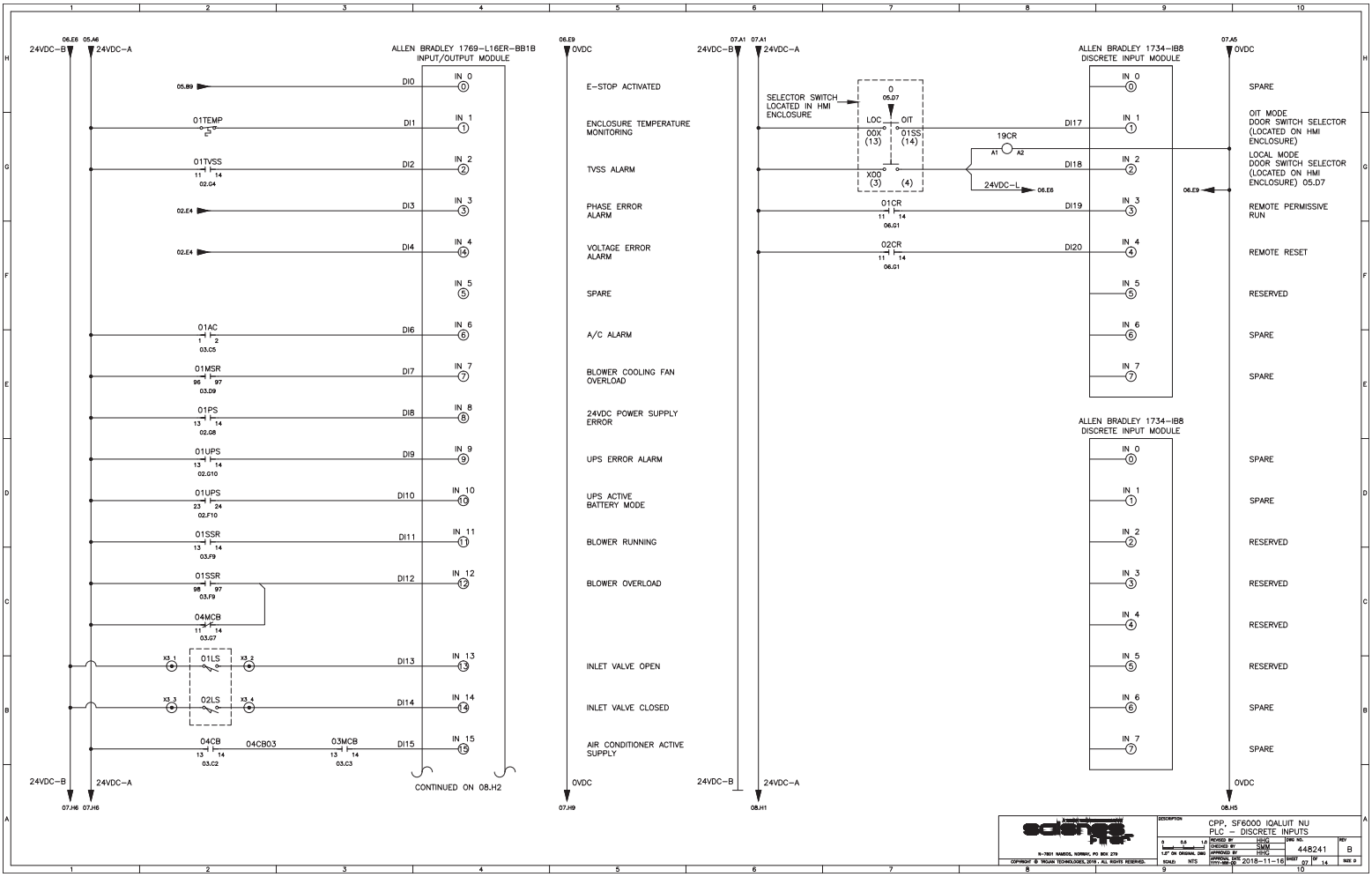
24VDC–B
24VDC–A
ALLEN BRADLEY 1769–L16ER–BB1B
INPUT/OUTPUT MODULE
0VDC
E–STOP ACTIVATED
ENCLOSURE TEMPERATURE MONITORING
TVSS ALARM
PHASE ERROR ALARM
VOLTAGE ERROR ALARM
SPARE
A/C ALARM
BLOWER COOLING FAN OVERLOAD
24VDC POWER SUPPLY ERROR
UPS ERROR ALARM
UPS ACTIVE BATTERY MODE
BLOWER RUNNING
BLOWER OVERLOAD
INLET VALVE OPEN
INLET VALVE CLOSED
AIR CONDITIONER ACTIVE SUPPLY
01TEMP
01TVSS
01AC
01MSR
01PS
01UPS
01SSR
04MCB
01LS
02LS
04CB
04CB03
03MCB
CONTINUED ON 08.H2
SELECTOR SWITCH LOCATED IN HMI ENCLOSURE
LOC
OIT
OOX
01SS
XOO
19CR
01CR
02CR
ALLEN BRADLEY 1734–IB8
DISCRETE INPUT MODULE
SPARE
OIT MODE DOOR SWITCH SELECTOR (LOCATED ON HMI ENCLOSURE)
LOCAL MODE DOOR SWITCH SELECTOR (LOCATED ON HMI ENCLOSURE) 05.D7
REMOTE PERMISSIVE RUN
REMOTE RESET
RESERVED
CPP, SF6000 IQALUIT NU
PLC – DISCRETE INPUTS
COPYRIGHT © TROJAN TECHNOLOGIES, 2019 - ALL RIGHTS RESERVED.

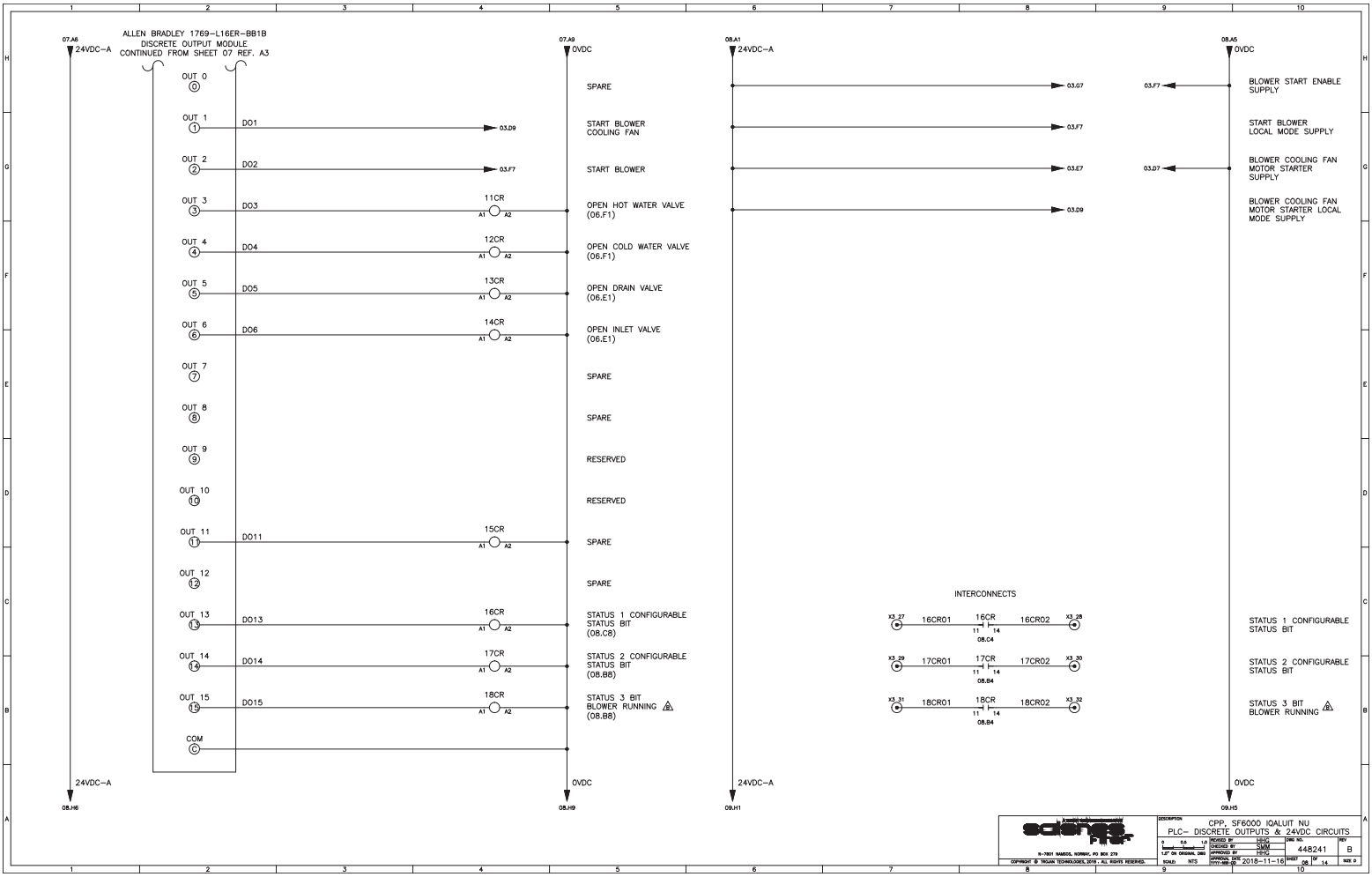

ALLEN BRADLEY 1769-L16ER-BB1B
DISCRETE OUTPUT MODULE
CONTINUED FROM SHEET 07 REF. A3
07.A6
24VDC-A
07.A9
0VDC
08.A1
24VDC-A
08.A5
0VDC
OUT 0
SPARE
OUT 1
DO1
03.D9
START BLOWER COOLING FAN
OUT 2
DO2
03.F7
START BLOWER
OUT 3
DO3
11CR
A1
A2
OPEN HOT WATER VALVE (06.F1)
OUT 4
DO4
12CR
OPEN COLD WATER VALVE (06.F1)
OUT 5
DO5
13CR
OPEN DRAIN VALVE (06.E1)
OUT 6
DO6
14CR
OPEN INLET VALVE (06.E1)
OUT 7
SPARE
OUT 8
SPARE
OUT 9
RESERVED
OUT 10
RESERVED
OUT 11
DO11
15CR
SPARE
OUT 12
SPARE
OUT 13
DO13
16CR
STATUS 1 CONFIGURABLE STATUS BIT (08.C8)
OUT 14
DO14
17CR
STATUS 2 CONFIGURABLE STATUS BIT (08.B8)
OUT 15
DO15
18CR
STATUS 3 BIT BLOWER RUNNING
COM
24VDC-A
08.H6
0VDC
08.H9
03.G7
03.F7
03.E7
03.D9
03.F7
BLOWER START ENABLE SUPPLY
START BLOWER LOCAL MODE SUPPLY
03.D7
BLOWER COOLING FAN MOTOR STARTER SUPPLY
BLOWER COOLING FAN MOTOR STARTER LOCAL MODE SUPPLY
INTERCONNECTS
X3_27
16CR01
16CR
11
14
08.C4
16CR02
X3_28
STATUS 1 CONFIGURABLE STATUS BIT
X3_29
17CR01
17CR
08.B4
17CR02
X3_30
STATUS 2 CONFIGURABLE STATUS BIT
X3_31
18CR01
18CR
08.B4
18CR02
X3_32
STATUS 3 BIT BLOWER RUNNING
24VDC-A
09.H1
0VDC
09.H5
N-7801 NAMSOS, NORWAY, PO BOX 279
COPYRIGHT © TROJAN TECHNOLOGIES, 2018 . ALL RIGHTS RESERVED.
DESCRIPTION
CPP, SF6000 IQALUIT NU
PLC- DISCRETE OUTPUTS & 24VDC CIRCUITS
0 0.5 1.0
1.5" ON ORIGINAL DWG
SCALE: NTS
DESIGNED BY HHG
CHECKED BY SMM
APPROVED BY HHG
APPROVAL DATE YYYY-MM-DD 2018-11-16
DWG NO. 448241
REV B
SHEET 08 OF 14
SIZE D

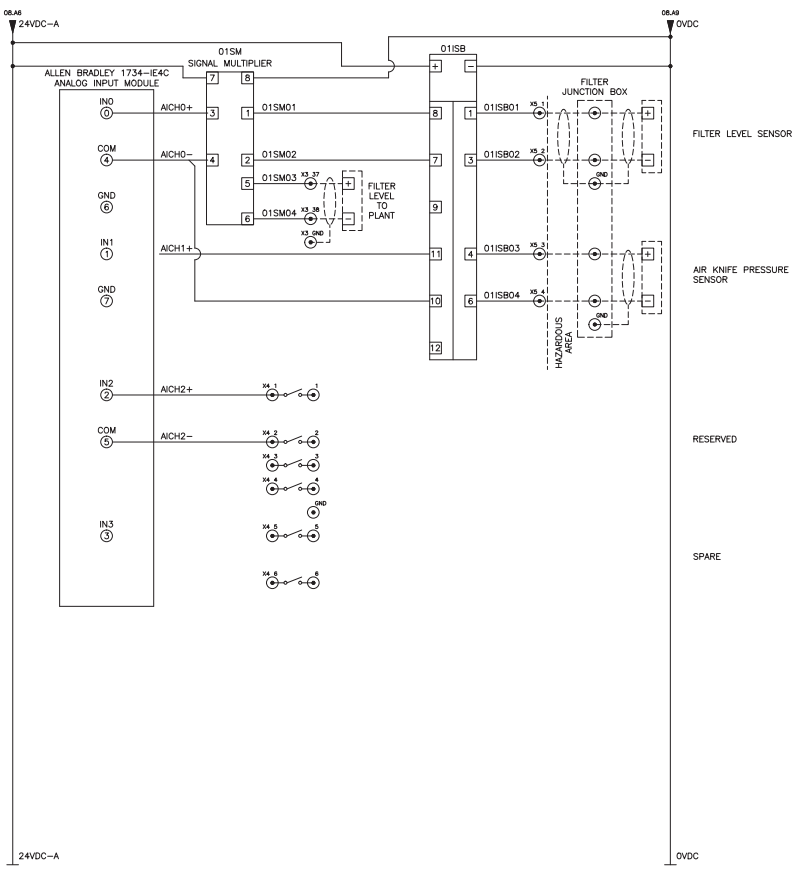

01SM SIGNAL MULTIPLIER (PHOENIX CONTACT 2905025)

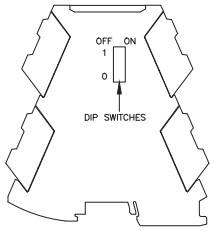

PIN #	FUNCTION
1	IN U/I +
2	IN U/I −
3	OUT 2 U/I +
4	OUT 2 U/I −
5	OUT 1 U/I +
6	OUT 1 U/I −
7	PWR +
8	PWR −

DIP SWITCH	FUNCTION
1	INPUT
2	SETTING THE INPUT RANGE
3	
4	OUT 1
5	SETTING THE OUTPUT RANGE
6	
7	OUT 2
8	SETTING THE OUTPUT RANGE
9	
0	OFF = DIP CONFIG NO ON = DIP CONFIG YES

SIGNAL MULTIPLIER
DIP SWITCH SETTINGS

	SWITCH #	SETTING
IN	1	OFF
	2	ON
	3	OFF
OUT 1	4	OFF
	5	ON
	6	OFF
OUT 2	7	OFF
	8	ON
	9	OFF
	0	ON

CONFIGURATION TABLE INPUT SIGNAL	IN DIP SWITCH		
	1	2	3
0–20mA	OFF	OFF	OFF
0–10mA	ON	OFF	OFF
4–20mA	OFF	ON	OFF
20–0mA	ON	ON	OFF
0–10V	OFF	OFF	ON
2–10V	ON	OFF	ON
0–5V	OFF	ON	ON
1–5V	ON	ON	ON

CONFIGURATION TABLE OUTPUT 1 SIGNAL	OUT 1 DIP SWITCH		
	4	5	6
0–20mA	OFF	OFF	OFF
0–10mA	ON	OFF	OFF
4–20mA	OFF	ON	OFF
20–0mA	ON	ON	OFF
0–10V	OFF	OFF	ON
2–10V	ON	OFF	ON
0–5V	OFF	ON	ON
1–5V	ON	ON	ON

CONFIGURATION TABLE OUTPUT 2 SIGNAL	OUT 2 DIP SWITCH		
	7	8	9
0–20mA	OFF	OFF	OFF
0–10mA	ON	OFF	OFF
4–20mA	OFF	ON	OFF
20–0mA	ON	ON	OFF
0–10V	OFF	OFF	ON
2–10V	ON	OFF	ON
0–5V	OFF	ON	ON
1–5V	ON	ON	ON

N-7001 NAMSOS, NORWAY, PO BOX 279

COPYRIGHT © TROJAN TECHNOLOGIES, 2018 . ALL RIGHTS RESERVED.

DESCRIPTION: CPP, SF6000 IQALUIT NU
PLC – ANALOG INPUTS

0 0.5 1.0
1.5" ON ORIGINAL DWG
SCALE: NTS

REVISED BY	HHG	DWG NO.	448241
CHECKED BY	SMM	REV	B
APPROVED BY	HHG		
APPROVAL DATE YYYY-MM-DD	2018-11-16	SHEET 09 OF 14	SIZE D

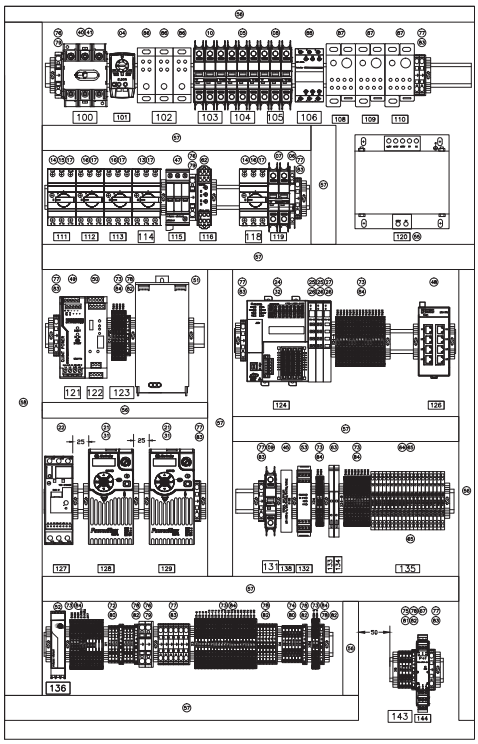

N-7901 MAGOS, NORWAY, PO BOX 279	DESCRIPTION: CPP, SF6000 IQALUIT NU BACKPLATE LAYOUT		
0 0.5 1.0 / 1.0" ON ORIGINAL DWG	DESIGNED BY: SAVE	DWG NO. 448241	REV B
	DRAWN BY: SMM		
	APPROVED BY: HHG		
SCALE: NTS	APPROVAL DATE: YYYY-MM-DD 2018-11-16	SHEET 10 OF 14	SIZE D

COPYRIGHT © TRIJAN TECHNOLOGIES, 2018 . ALL RIGHTS RESERVED.

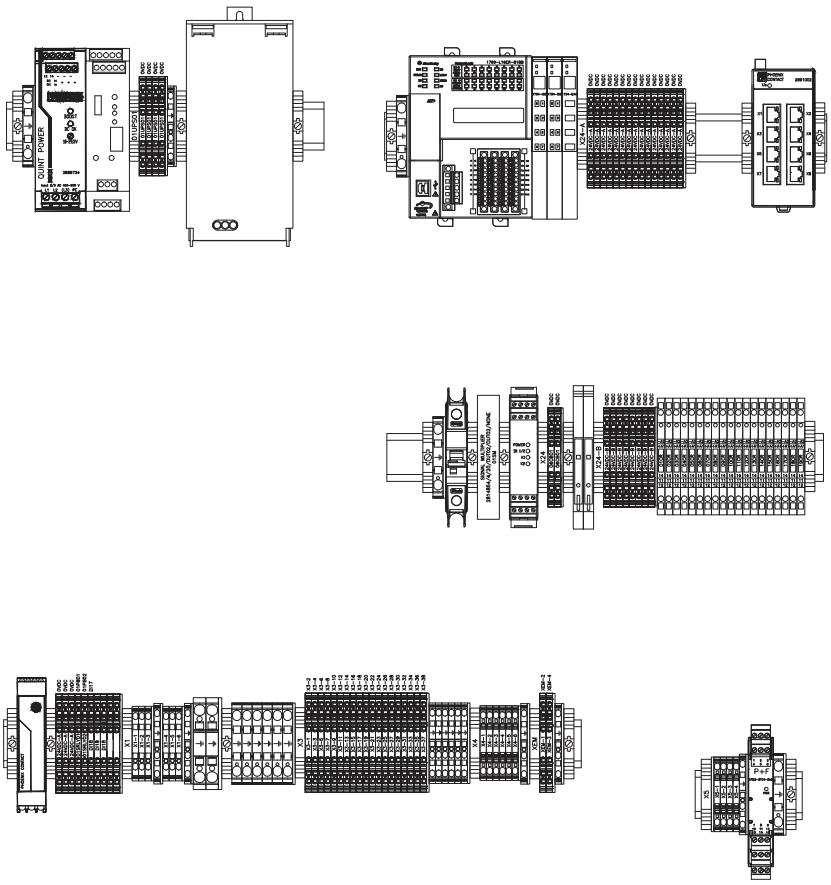

N-7801 NAMSOS, NORWAY, PO BOX 279

DESCRIPTION: CPP, SF6000 IQALUIT NU
TERMINAL LABEL DETAILS 2xACTUAL

0 0.5 1.0	DESIGNED BY: LEHC	DWG NO. 448241	REV B
1.0" ON ORIGINAL DWG	CHECKED BY: SMM		
	APPROVED BY: HHC		
SCALE: NTS	APPROVAL DATE: YYYY-MM-DD 2018-11-16	SHEET 11 OF 14	SIZE D

COPYRIGHT © TRIJAN TECHNOLOGIES, 2018 . ALL RIGHTS RESERVED.

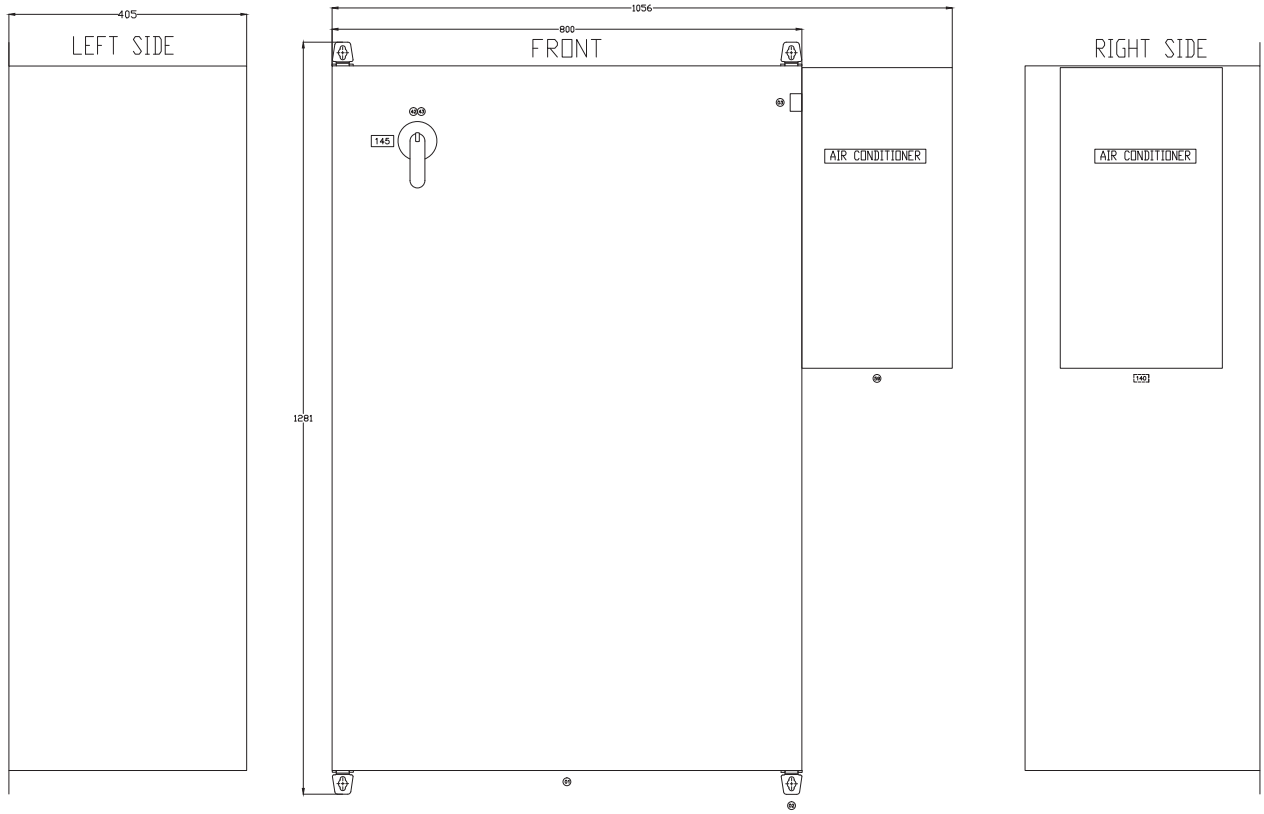

DESCRIPTION	CPP, SF6000 IQALUIT NU ENCLOSURE LAYOUT
DRAWN BY	HMG
CHECKED BY	SMM
APPROVED BY	HMG
APPROVAL DATE (YYY-MM-DD)	2018-11-16
DWG NO.	448241
REV	B
SCALE	NTS
SHEET	12 OF 14

COPYRIGHT © TROJAN TECHNOLOGIES, 2019 - ALL RIGHTS RESERVED.

NOTES:
1 – 2905025/I/4.0/20.0/I/4.0/20.0/I/4.0/20.0/60/NONE

ITEM	QTY	DESCRIPTION	MANUFACTURER	PART NUMBER	TROJAN NUMBER
88	1	CONTACTOR, 32A 3P 24VDC COIL	TELEMECANIQUE	LC1-D32BL	
87	3	DIST BLOCK, FINGER SAFE 3C	MERSON	FSPDB3C	913314-006
86	3	DIST BLOCK, FINGER SAFE 2C	MERSON	FSPDB2C	913314-004
85	A/R	TERM BLK, JUMPER 20CONN	WEIDMULLER	ZQV 2.5/20 1908960000	
84	7	TERM BLK, END PLT 4CONN Z2.5	WEIDMULLER	ZAP/TW ZDK2.5 1674730000	
83	8	TERM BLK, END PLT 2CONN Z6	WEIDMULLER	ZAP/TW5 1608830000	
82	7	TERM BLK, END PLT 3CONN GN	WEIDMULLER	ZAP/TW2GN 1683760000	
81	1	TERM BLK, END PLT 2 CONN BL	WEIDMULLER	ZAP/TW1 BL 1608750000	
80	3	TERM BLK, END PLT 2CONN Z2.5	WEIDMULLER	ZAP/TW1 1608740000	
79	3	TERM BLK, END PLT 2CON Z10	WEIDMULLER	ZAP/TW ZDU10 1748660000	
78	12	TERM BLK, 30-12AWG 3CON PE	WEIDMULLER	ZPE 2,5/3AN 1608650000	
77	14	TERM BLK, 22-8AWG 2CONN PE	WEIDMULLER	ZPE6 1608670000	
76	4	TERM BLK, 16-6AWG 2CONN PE	WEIDMULLER	ZPE 10 1746770000	
75	4	TERM BLK, 25A 2CONN 1CCT	WEIDMULLER	ZDU 2.5 BL 1608520000	
74	6	TERM BLK, DISC 20A 2CONN 1CCT	WEIDMULLER	ZTR 2.5 1831280000	
73	60	TERM BLK, 15A 4CONN 2CCT	WEIDMULLER	ZDK 2.5 1674300000	
72	6	TERM BLK, 25A 2CONN 1CCT	WEIDMULLER	ZDU 2.5 1608510000	
71					
70	A/R	TERM BLK, END STOP	WEIDMULLER	WEW 35/2 1061200000	
69	A/R	TERM BLK, LABEL 33.8x8mm	WEIDMULLER	WAD 8 MC NE WS	
68	A/R	TERM BLK, LABEL 5x5mm	WEIDMULLER	DEK 5/5 MC-10 NE WS	
67	1	IS MODULE, AI 2CH 24VDC	PEPPERL FUCHS	KFD2-STC4-Ex2	508038
66					
65	2	RELAY, BRIDGE JUMPER 8 POLE	LUTZE	762824	
64	19	RELAY, 24VDC 6A 1 NO 1NC	LUTZE	761020.1000	
63	2	BREAKER, ADJUST 1-10A 24VDC	LUTZE	716401	
62	1	PHASE RELAY, 380-480VAC 2NO	OMRON	K8AB-PM2	
61					
60					
59	1	A/C, 230VAC 680W NEMA 3R/4 DTS3061	PFANNENBERG	13382341355 OR EQUAL	
58	A/R	WIRE DUCT, TYPE G LT GRY 2x3	PANDUIT OR EQU	G2X3LG6 / C2LG6	913437-010
57	A/R	WIRE DUCT, TYPE G LT GRY1.5x3	PANDUIT OR EQU	G1.5X3LG6 / C1.5LG6	913437-006
56	A/R	WIRE DUCT, TYPE G LT GRY 1x3	PANDUIT OR EQU	G1X3LG6 / C1LG6	913437-004
55	1	XFMR, MULTI-INPUT 230VAC 1kVA	BLOCK	USTE 1000/2x115	

ITEM	QTY	DESCRIPTION	MANUFACTURER	PART NUMBER	TROJAN NUMBER
54					
53	1	SAFETY RELAY, 1-2 CHANNEL	PHOENIX CONTACT	2900510	
52	1	MOTOR STARTER, 0.6A 550VAC 3P	PHOENIX CONTACT	2900542	
51	1	UPS, IQ BATTERY 24V 3.4Ah	PHOENIX CONTACT	2320306	916905-306
50	1	UPS, QUINT IQ 24V 5A	PHOENIX CONTACT	2320212	913905-212
49	1	PS, 24VDC 3P QUINT 5A	PHOENIX CONTACT	2866734	916283-734
48	1	SWITCH, ENET SFNB 8TX	PHOENIX CONTACT	2891002	916397-1002
47	1	TVSS,120kA DIN MOUNT 350VAC	PHOENIX CONTACT	2905339	
46					
45	1	SIGNAL MULTIPLIER MODULE 4-20mA	PHOENIX CONTACT	SEE NOTE 1	
44					
43	1	DISC, ALIGNMENT RING ABB	ABB	OHZX10	
42	1	DISC, HANDLE ON/OFF 6mm 4X ABB	ABB	OHB80LH6	
41	1	DISC, SHAFT 6x6x400mm ABB	ABB	OXP6X430	912786-406
40	1	DISC, NON FU 60A 3P 600V ABB	ABB	OT60F3	912798-062
39					
38					
37					
36					
35					
34					
33					
32	1	CABLE, ENET RJ45 1m	ALLEN BRADLEY	1585J-M8EBJM-1	
31	2	CABLE, ENET RJ45 2m	ALLEN BRADLEY	1585J-M8EBJM-2	
30					
29					
28					
27					
27	1	PLC, AB POINT I/O 24VDC 4AI	ALLEN BRADLEY	1734-IE4C	
26	3	PLC, AB POINT I/O BASE SPRING	ALLEN BRADLEY	1734-TBS	
25	2	PLC, AB POINT I/O 24VDC DI8	ALLEN BRADLEY	1734-IB8	914301
24	1	PLC, L1 16DI/16DO 24VDC AB	ALLEN BRADLEY	1769-L16ER-BB1B	
23					
22	1	SOFT STARTER, 6.3-19A 3P 480V	ALLEN BRADLEY	150-C19NBR	
21	2	VFD, 480V EMC 3PH 1HP AB	ALLEN BRADLEY	25B-D2P3N114	
20					
19					
18					
17	5	SPACING ADAPTER, TERMINAL 140M	ALLEN BRADLEY	140M-C-TE1	
16	3	BREAKER, O/L 2.5-4A 3P AB	ALLEN BRADLEY	140M-C2E-B40	
15	1	BREAKER, O/L 10-16A 3P AB	ALLEN BRADLEY	140M-C2E-C16	
14	2	BREAKER, O/L AUX CONTACT 1NO 1NC	ALLEN BRADLEY	140M-C-AFA11	
13	1	BREAKER, O/L 0.4-0.63A 3P AB	ALLEN BRADLEY	140M-C2E-A63	
12					
11					
10	1	BREAKER, 30A 3P C 480VAC AB	ALLEN BRADLEY	1489-M3C300	
09	1	BREAKER, 4A 1P C 480VAC AB	ALLEN BRADLEY	1489-M1C040	
08	1	BREAKER, 6A 3P C 480VAC AB	ALLEN BRADLEY	1489-M3C060	
07	1	BREAKER, 6A 2P C 480VAC AB	ALLEN BRADLEY	1489-M2C060	
06	1	BREAKER, AUX CONTACT 1NO 1NC	ALLEN BRADLEY	1489-AMRA3	
05	1	BREAKER, 15A 3P C 480VAC AB	ALLEN BRADLEY	1489-M3C150	
04	1	THERMOSTAT, 6A NC	ELDON	ETR202	
03	1	SWITCH, DOOR 230VAC 6A	ELDON	ADSW01	
02	1	BRACKET, ENCL MOUNTING	ELDON	AWS41	
01	1	ENCL, TYPE 4 120XI80X40CM	ELDON	MAS1208040R5	



COPYRIGHT © TROJAN TECHNOLOGIES, 2019 - ALL RIGHTS RESERVED.

N-7801 NAMSOS, NORWAY, PO BOX 279

DESCRIPTION: CPP, SF6000 IQALUIT NU
BILL OF MATERIAL

DRAWN BY	LMC
CHECKED BY	SMM
APPROVED BY	MHG
DWG NO.	448241
REV	B
SHEET	13 OF 14
SIZE	D
DATE	2018-11-16
SCALE	NTS

1.0" ON ORIGINAL DWG

145	1	915433-1500753A	DO NOT	OPERATE	UNDER LOAD
144	1	915433-1000501A	01ISB		
143	1	915433-1500753A	INTRINSICALLY	SAFE WIRING	ONLY
142					
141					
140	1	915433-1000501A	01AC		
139					
138	1	915433-1000501A	01SM		
137					
136	1	915433-1500753A	01MSR	BLOWER	COOLING
135	1	915433-1500501A	01CR-1BCR		
134	1	915433-1000502A	08CB	24VDC-B	
133	1	915433-1000502A	07CB	24VDC-A	
132	1	915433-1000501A	01SRLY		
131	1	915433-1000753A	06CB	24VDC	4A
130					
129	1	915433-1000502A	02VFD	AUGER	
128	1	915433-1000502A	01VFD	FILTER	
127	1	915433-1000502A	01SSR	BLOWER	
126	1	915433-1000501A	01ENET		
125					
124	1	915433-1000501A	01PLC		
123	1	915433-1500752A	01BATT	24VDC 3.44h	
122	1	915433-1000753A	01UPS	24VDC	5A MAX
121	1	915433-1000753A	01PS	24VDC	5A
120	1	915433-1000502A	01XFMR	1KVA	
119	1	915433-1000502A	04CB	01XFMR	
118	1	915433-1000502A	03MCB	A/C	
117					
116	1	915433-1000501A	01PMR		
115	1	915433-1000501A	01TVSS		
114	1	915433-1000753A	05MCB	BLOWER	COOLING
113	1	915433-1000502A	02MCB	AUGER	
112	1	915433-1000502A	01MCB	FILTER	
111	1	915433-1000502A	04MCB	BLOWER	
110	1	915433-1000502A	02SP	01CON03	
109	1	915433-1000502A	02SP	01CON02	
108	1	915433-1000502A	02SP	01CON01	
107					
106	1	915433-1500753A	01CON	E-STOP	CONTACTOR
105	1	915433-1000752A	03CB	01PS	
104	1	915433-1500753A	01CB	PHASE	PROTECTION
103	**1**	**915433-1500752A**	**02CB**	**MOTORS, A/C**	
102	1	915433-1500752A	01SP	L1 L2 L3	
101	1	915433-1000501A	01TEMP		
100	1	915433-1500753A	01DISC	MAINS	DISCONNECT
ITEM	QTY	NAMEPLATE NUMBER	DESCRIPTION 1	DESCRIPTION 2	DESCRIPTION 3

TROJAN TECHNOLOGIES
R-7001 WANOS, ROMNY, PO BOX 279

COPYRIGHT © TROJAN TECHNOLOGIES, 2019 . ALL RIGHTS RESERVED.

DESCRIPTION: CPP, SF6000 IQALUIT NU
LABEL SCHEDULE

0.0	1.0	REVISED BY	MSC
1.0" = 1.0"		CHECKED BY	SMM
1.0" ON ORIGINAL SIZE		APPROVED BY	MMU
SCALE:	NTS	APPROVAL DATE (YYY-MM-DD)	2018-11-16

DWG NO. 448241 REV B
SHEET 14 OF 14
SIZE D

REV	REVISION DESCRIPTION	LOG NO.	REV'D BY	CHK'D BY	APPR'D BY	DATE YYYY-MM-DD
A	RELEASE	F18-021	HHG	SMM	HHG	2018-06-21

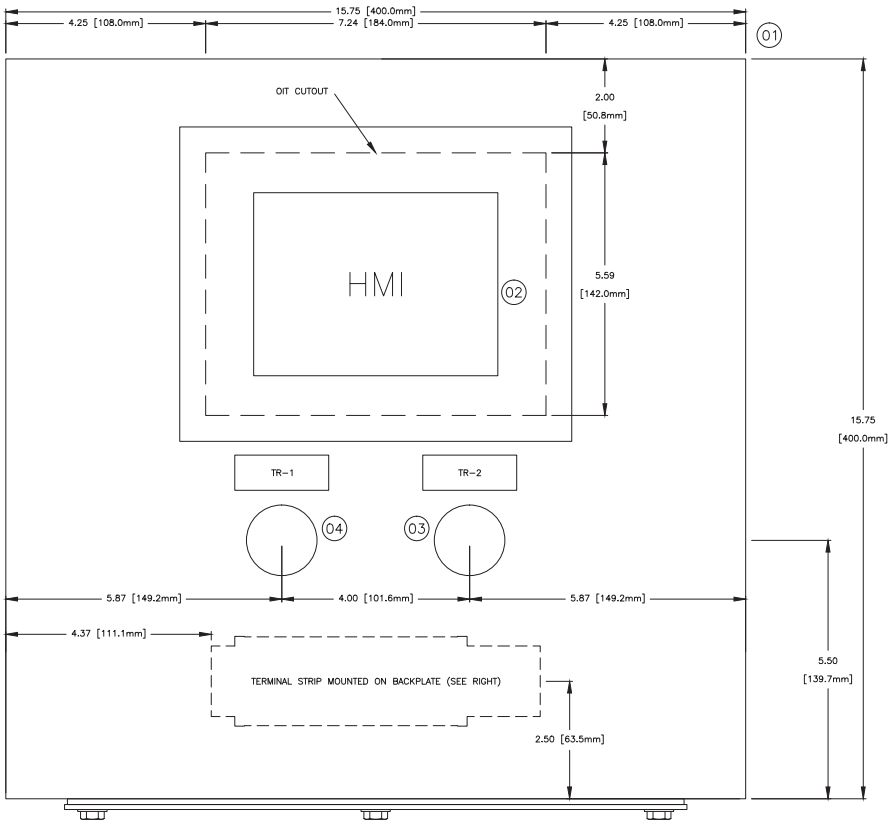

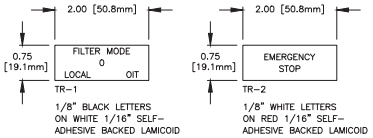

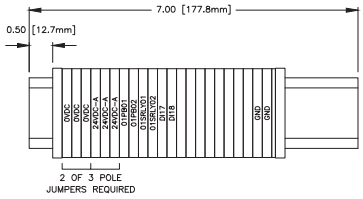

NOTES:
1. SPECIAL INSPECTION MAY BE REQUIRED FOR CLASS 1 DIV 2 UL APPROVAL

ITEM	QTY	DESCRIPTION	MANUFACTURER	PART NUMBER	TROJAN NUMBER
20					
19					
18					
17					
16					
15					
14					
13					
12					
11					
10					
09					
08					
07					
06					
05					
04	1	SELECTOR 3 POSITION	R. STAHL	8003/133-726-3-rr	
03	1	MUSHROOM PUSH BUTTON TWIST RELEASE - RED 1NC+1NC	R. STAHL	8003/123-015-6	
02	1	OPERATOR INTERFACE +7 LCD 7" TOUCH SCREEN 24VDC	ALLEN BRADLEY	2711P-T7C22D9P	917408-007
01	1	ENCL 16Hx16Wx8D 4X GRP1 DIV2 316SS BOTTOM GLAND PLT WITH 20 TERMINALS AND 2 GROUND TERMINALS	R. STAHL	8150/1-0400-0400-230-3321-A020-GPD	

UNLESS OTHERWISE SPECIFIED:
DIMENSIONS ARE IN INCHES
TOLERANCES: 2 PL DEC ± N/A
3 PL DEC ± N/A
ANGLE DEG ± N/A
REMOVE ALL BURRS
ALL CORNERS R 0.010 OR BREAK
Ⓒ - CRITICAL CHARACTERISTIC

COPYRIGHT © TROJAN TECHNOLOGIES, 2018 - ALL RIGHTS RESERVED.

DESCRIPTION
HMI ASSY, SF6000 IQALUIT NU
HUMAN MACHINE INTERFACE ASSEMBLY

THIRD ANGLE PROJECTION

DWG NO. 448242 REV A
SCALE: 1 SHEET 01 OF 01 SIZE B

PART D

CONTROLS PHILOSOPHY

CONTROLS PHILOSOPHY Salsnes Filter Iqaluit, NU

CONTROLS PHILOSOPHY Salsnes Filter Iqaluit, NU 1
1.0 Salsnes Filter System 3
1.1 Glossary 3
1.2 System Overview 3
1.3 Control Strategy Priorities 3
1.4 Safety Features 3
1.5 Alarm Classifications 4
2.0 CPP IO Layout 4
2.1 Discrete Inputs – Embedded I/O 5
2.2 Discrete Outputs – Embedded I/O 6
2.3 Discrete Inputs – I/O Module 1 7
2.4 Discrete Inputs – I/O Module 2 7
2.5 Analog Inputs – I/O Module 3 7
2.6 Communications Layout 8
3.0 CPP 8
3.1 Standard Operation 8
3.2 Operation Modes 10
3.3 Alarms 11
3.4 Operator Interface 11
4.0 Filter Belt 11
4.1 Control Architecture 11
4.2 Operation Modes 12
4.3 Alarms 12
4.4 Operator Interface 12
5.0 Blower 13
5.1 Control Architecture 13
5.1 Operation Modes 13
5.2 Alarms 14
5.3 Operator Interface - Overview 14
6.0 Sludge Screw 15
6.1 Control Architecture 15

6.2 Operation Modes 15
6.3 Alarms 16
6.4 Operator Interface 16
7.0 Level Transmitter 16
7.1 Control Architecture 16
7.2 Alarms 17
7.3 Operator Interface 17
8.0 Blower Pressure Transmitter 18
8.1 Control Architecture 18
8.2 Alarms 18
8.3 Operator Interface 18
9.0 Hot Water Valve 18
9.1 Control Architecture 18
9.2 Operation Modes 19
9.3 Alarms ..... **Error! Bookmark not defined.**
9.4 Operator Interface 19
10.0 Cold Water Valve 20
10.1 Control Architecture 20
10.2 Operation Modes – Off, On, Remote Off, Remote Manual, Auto 20
10.3 Operator Interface 20
11.0 Operator Interface 21
11.1 Alarms 21
11.2 Passwords 21
11.3 Data logging/Trending Screen 21
12.0 Interface with Plant Control System 22
12.1 Hardwired Status Signals 22
12.2 SF System interface tag list 23
13.0 Revision History 24

1.0 *Salsnes Filter System*

The objective of this document is to provide details regarding the control strategy for the Salsnes Filter (SF) System. The control philosophy outlines the major hardware components, system status, alarm conditions, and modes of operation of the System.

1.1 Glossary

SF	Salsnes Filter
PLC	Programmable Logic Controller
IO	Inputs/Outputs
CPP	Control Power Panel. The CPP contains the local power distribution components for each system. It also houses the PLC, IO, and the Operator Interface Terminal
OIT	Operator Interface Terminal
VFD	Variable Frequency Drive

1.2 System Overview

The SF System uses a PLC based control system that provides optimized control of a mesh Filter Belt. Each SF System is powered by a CPP that houses the PLC, IO, and OIT which provides local control and monitoring. The PLC will control the Filter Belt rotational speed to obtain optimum separation of the incoming material. The speed will be varied by a Filter Motor to maintain a specified water level in the inlet well. The solids are deposited off of the belt into an outlet well, where optional dewatering may be performed by the Sludge Screw.

1.3 Control Strategy Priorities

The strategic operational priorities of the SF System controls are as follows (arranged in order of priority):

- Operator and equipment safety
- Maximize Separation, Thickening, and Dewatering Efficiency

1.4 Safety Features

The SF System control strategy employs an equipment protection interlock and monitors a number of alarm conditions that will result in control actions designed to maximize efficiency.

There is one critical interlock signal that is hardwired to the CPP that will disable the motors in the SF System. This critical interlock is:

- Emergency Stop Push Button
- Dewatering Screw Failure
- Options: Air Pressure Not Present, Ventilation Differential Pressure Alarm, External Sludge Bin Fault

Certain other alarm conditions will trigger a control action that will result in the filter motor running at a fixed high speed. Examples of these types of alarm conditions are more fully described later in this document.

1.5 Alarm Classifications

1.5.1 *Critical*

A critical alarm will cause an immediate system shutdown. Any inlet water will flow from the inlet to the security overflow and no filtration is expected.

1.5.2 *Major*

A major alarm will not stop the filtration process, but the machine will change to a fixed speed (that is adjustable manually) on the Filter Belt to ensure that the system will cope with the flow. Reduced filtration performance is expected.

1.5.3 *Minor*

A minor alarm will have no impact on the system. This alarm is intended to provide warning and maintenance information.

2.0 *CPP IO Layout*

Type	Details	Model
CPU	Allen Bradley Compact Logix Controller	1769-L16ER-BB1B
HMI	Allen Bradley PV +700	2711P-T7C4D8
Embedded Discrete Input	16 Input, 24VDC	Embedded Processor I/O
Embedded Discrete Output	16 Output, 24VDC	Embedded Processor I/O
Discrete Input	8 Input, 24VDC	1734-IB8
Discrete Input	8 Input, 24VDC	1734-IB8
Analog Input	4 Input 0-20mA	1734-IE4C

2.1 Discrete Inputs – Embedded I/O

Channel	Description	Tagname	Range
In0	Emergency Stop Pressed	07-HS303	1=Estop Pressed
In1	Panel Temperature OK		0=High Temperature
In2	Surge Protection Tripped	07-YA307	1=Protection Error
In3	Phase Monitoring Relay: Phase Error	07-JA304B	1=Phase Error
In4	Phase Monitoring Relay: Voltage Error	07-EA304A	1=Voltage Error
In5	Spare		
In6	Spare		
In7	Air Blower Cooling Fan Running	07-M330A	1=Motor Running
In8	24VDC Power Supply OK		0=Power Supply Error
In9	UPS Main Supply Faulted	07-YA308A	1=UPS Active
In10	UPS Battery Faulted	07-YA308B	1=Battery Error
In11	Air Blower Running	07-M330	1=Motor Running
In12	Air Blower Overload Tripped	07-M330	1=Overload Tripped
In13	Inlet Valve Opened	07-ZSO310	1=Valve Open
In14	Inlet Valve Closed	07-ZSO310	1=Valve Closed
In15	Spare		

2.2 Discrete Outputs – Embedded I/O

Channel	Description	Tagname	Range
Out0	Spare		
Out1	Air Blower Start Cooling Fan	07-M330A	1=Start Motor
Out2	Start Air Blower	07-M330	1=Start Motor
Out3	Open Hot Water Valve	07-SV360	1=Open Valve
Out4	Open Cold Water Valve	07-SV351	1=Open Valve
Out5	Open Drain Valve	07-SV340	1=Open Valve
Out6	Open Inlet Valve	07-FV310	1=Open Valve
Out7	Close Inlet Valve	07-FV310	1=Close Valve
Out8	Spare		
Out9	Spare		
Out10	Spare		
Out11	Spare		
Out12	Spare		
Out13	Status Bit 1 - Configurable	07-YA390A	1=Configured Condition True
Out14	Status Bit 2 – Configurable	07-YA390B	1=Configured Condition True
Out15	Status Bit 3 - Configurable	07-YA390C	1=Configured Condition True

2.3 Discrete Inputs – I/O Module 1

Channel	Description	Tagname	Range
In0	Spare		
In1	HMI Mode (switch in cabinet door)	07-HS301A	1=HMI mode
In2	Local On Mode (switch in cabinet door)	07-HS301B	1=Local mode
In3	Remote Permissive Run (customer)	07-YA391	1=OK to run
In4	Remote Reset (customer)	07-YA392	1=Reset
In5	Spare		
In6	Inlet Valve Overload Tripped		1=Overload Tripped
In7	Spare		

2.4 Discrete Inputs – I/O Module 2

Channel	Description	Tagname	Range
In0	Spare		
In1	Spare		
In2	Spare		
In3	Spare		
In4	Spare		
In5	Spare		
In6	Spare		
In7	Spare		

2.5 Analog Inputs – I/O Module 3

Channel	Description	Tagname	Range
In0	Filter level	07-LT300	TBD
In1	Air pressure	07-PT331	0-15 psi
In2	*Spare*		
In3	*Spare*		

2.6 Communications Layout

Device Description	Address	Subnet Mask	Gateway	Tagname
CPP PLC	192.168.3.11	255.255.255.0	192.168.3.1	
CPP OIT	192.168.3.12	255.255.255.0	192.168.3.1	
CPP Modem	192.168.3.10	255.255.255.0	192.168.3.1	
CPP Filter VFD	192.168.3.13	255.255.255.0	192.168.3.1	07-M320
CPP Sludge Screw VFD	192.168.3.14	255.255.255.0	192.168.3.1	07-M350

3.0 *CPP*

3.1 Standard Operation

3.1.1 *Startup*

The startup sequence is as follows (system in HMI mode, all devices in Automatic):

- If PLC is configured to control the inlet valve, this valve will be opened when the filter is Local On or in HMI mode and a filter Start is requested either through a HMI start request or by a remote SCADA or hardwired Permissive Run request
- System remains idle until the water level in the inlet well reaches the start level set-point
- Once the water level in the inlet well reaches the start level set-point, the following motors will start:
    - Blower Motor (starts at adjustable water level before filter)
    - Blower Motor Cooling Fan
    - Filter Motor
    - Sludge Screw Motor – (after adjustable time delay)
- The Blower Motor must be at full speed in Auto before the Filter Motor will be allowed to start – the blower start level may be adjusted in order to optimize the system
- The filter belt speed may be set using the following configurable modes:
    - PID controlled to maintain a target water level set-point
    - Directly proportional to the water level
    - Fixed speed manual mode
- The Filter Motor will stop if the water level drops below the stop level set-point

3.1.2 *Controlled Shutdown*

The controlled shutdown sequence is as follows:

- System remains running while the water level in the inlet well stays above the stop level set-point
- Once the water level drops below the stop level set-point, the Filter Motor will stop immediately
- The Sludge Screw Motor will stop after a configurable time delay, after the Filter Motor has stopped
- The Blower Motor will then stop after the stop delay time expires
- The Blower Motor Cooling Fan will stop after a hard coded 1-minute time delay, after the Blower Motor has stopped
- Optionally the filter stop sequence may also be triggered by the loss of the plant permissive digital input signal which will also result in the inlet valve being closed (if applicable)
- If system is shutting down due to an operator request to put the filter out of operation (HMI Stop command or SCADA/hardwired loss of permissive run), a Cold Water Washing procedure will trigger before Blower shut-down

3.1.3 *Critical Shutdown*

The critical shutdown sequence is as follows:

- System shutdown signal is issued due to a critical alarm
- The Blower Motor turns off
- The Blower Motor Cooling Fan turns off
- The Filter Motor turns off
- The Sludge Screw Motor turns off
- Inlet valve close (if applicable)
- All valves and motors will shut down simultaneously
- System will not re-start until the critical alarm has been cleared

3.1.4 *Hot Water Flush*

Automatic Hot Water Flushing of the filter mesh and dewatering basin is performed as follows:

- System must be in HMI mode with selected to Automatic Mode, and no critical or major alarms are present
- Cold Water Flush cannot be occurring
- The Hot Water Flush interval time, which is set from the OIT, expires
- The Hot Water Flush Valve opens
- The Filter Motor runs at a constant speed
- The Hot Water Flush Valve closes after the flush duration time expires
- The Filter Motor speed regulation mode goes back to normal control

3.1.5 *Cold Water Flush*

Automatic Cold Water Flushing (not available on the SF1000) of the filtered water basin is performed as follows:

- System must be in HMI mode and all Motors and Valves in Automatic Mode, and no critical or major alarms are present
- System does not need to be moving but must be requested to operate
- Hot Water Flush cannot be occurring
- The Cold Water Flush interval time, which is set from the OIT, expires
- The Cold Water Flush Valve opens
- The Filtered Water Drain Valve, if equipped, opens
- The Cold Water Flush Valve and Filtered Water Drain Valve close after the flush duration time expires
- A Cold Water Flush sequence will also be triggered at the end of a controlled shutdown sequence as described in section 3.1.2

3.2 Operation Modes

3.2.1 *Off*

When the Filter Control Switch is in the “Off” position, the CPP PLC will have no control of the motors or valves.

3.2.2 *On*

When the Filter Control Switch is in the “On” position, the CPP PLC will have no control of the motors or valves. In this mode the filter starters and drives will all be electrically activated and will operate at a fixed speed using the manual speed set-points on the HMI.

3.2.3 *HMI Mode*

When the filter control mode switch is in the “HMI” position the CPP PLC has control of all motors in the system based on the configuration set in the CPP OIT. From the OIT, the filter system HMI mode can be set to “Off”, “Manual”, or “Auto” modes. When the filter system is set to HMI-Manual mode, each motor and valve may be individually requested to be started/opened or stopped/closed. When the filter control mode switch transitions to the “HMI” position, the PLC will automatically set the HMI mode to Automatic and all valves and motors will be automatically controlled by the PLC. The HMI mode must be switched to OFF or Manual if direct operator control of the devices is required.

Normal Operation of the SF System is to have all Motors and valves automatically controlled with the system in HMI Auto mode. Fully automatic operation of the system is described in section ‘3.1 – Standard Operation’. HMI Manual Operation of individual Motors is described later in this document.

3.3 Alarms

Each CPP alarm condition will generate a corresponding system level alarm.

Alarm Description	Alarm Condition	Delay	Classification		
			Minor	Major	Critical
Main Power Supply Failure	The Phase Monitoring relay detected a loss of main input power on one or more phases.				Enabled
UPS Supply Activated	The UPS has detected a loss of main power and the PLC is now operating on UPS power.	Critical			Enabled
UPS Battery Fault	The UPS has detected that the battery pack is faulted.	None	Enabled		
Emergency Stop Activated	The Emergency Stop located at the Filter is activated. Key Switch Reset is required to enable the system.	None			Enabled
Motor Failure	The Filter Motor, Blower Motor, or Sludge Screw Motor has failed to respond to a control command (start/stop) within a certain amount of time	Critical			Enabled
Service is due (Blower, Sludge Screw, Filter)	Indicates that service is required based on run time of equipment (should be 300 hours initially on blower, then 3000 hours)	None	Enabled		

3.4 Operator Interface

3.4.1 *Display Data*

The OIT will have a System Overview screen that will be used to display system status information and to provide operator control functions.

The System Overview screen will contain the following information:

- System status
- System fault indicators

4.0 *Filter Belt*

4.1 Control Architecture

The Filter Belt, which contains a filter mesh mounted on a removable cartridge, is used to draw waste material from the inlet to outlet sludge conveyor. Water is separated from the material as it is transported on the mesh towards the outlet well.

A Filter Motor, which rotates the Filter Belt, is driven by a VFD that regulates the speed based on a PID control algorithm. The speed is continually regulated in order to maintain an enterable inlet water level set-point. Optionally the system may be configured to operate the filter speed in a proportional mode so that the speed of the filter is proportionally increased as the filter water level increases, but a target water level is not maintained.

The VFD is controlled by a network communication signal controlled from the CPP PLC.

4.2 Operation Modes

4.2.1 *System Mode - Off*

When the System Mode selector switch is set to OFF, the Filter Belt Motor will not start.

4.2.2 *System Mode – On*

When the System Mode selector switch is set to ON, the Filter Belt Motor will be started by an electrical interlock that will force the motor to run at a fixed speed configured by the manual HMI set-points.

4.2.3 *System Mode HMI - Off*

When the System Mode selector switch is in the “HMI” position, and the HMI mode is set to “Off”, the CPP PLC will keep motor turned off and will not automatically start the Filter Motor, regardless of Filter level.

4.2.4 *System Mode HMI - Manual*

When the System Mode selector switch is in the “HMI” position, and the HMI mode is set to “Manual”, the CPP PLC will start and run Filter Motor according to requests by the operator from the HMI. The speed of the Filter Motor will be controlled by an operator entry on the OIT.

NOTE: This mode should not be used when the filter inlet valve is open unless the blower and sludge screw is also operating.

4.2.5 *System Mode HMI - Auto*

When the System Mode selector switch is in the “HMI” position, and the HMI mode is set to “Auto”, the CPP PLC has control of the Filter Belt. See section ‘3.1 – Standard Operation’.

4.3 Alarms

Each Filter Belt alarm condition will generate a corresponding system level alarm.

Alarm Description	Alarm Condition	Delay	Classification		
			Minor	Major	Critical
07-M320 Fault Filter Cloth	The VFD for the Filter Motor has reported a fault condition				Enabled

4.4 Operator Interface

4.4.1 *Display Data - Overview*

The OIT will have a System Overview screen that will be used to display Filter Belt status information and to provide operator control functions.

The screen will contain the following information:

- Filter Motor status
- Filter Motor fault indicators
- Filter Motor manual control

4.4.2 *Display Data - Information*

- Filter Motor running time (today, yesterday, total)
- Filter Motor starts (today, yesterday, total)

4.4.3 *Operator Settings*

Users will have access to screens which will allow them to view and modify the following Filter Belt options and settings:

- Adjust the Mode of the Filter Belt Motor
- Adjust the Start and Stop Level of the Filter Belt Motor
- Level set-point for Filter
- High level alarm set-point
- Minimum and maximum speed
- Filter Acceleration and Deceleration time
- Adjust the speed set-point of the Filter Belt Motor when it is in Manual

5.0 *Blower*

5.1 Control Architecture

The Blower is used to provide air for the Air Knife – Mesh Cleaning System, which is used to blow material off of the filter mesh into the sludge conveyor.

The Blower Motor is driven by a soft starter and maintains a fixed speed based on the selected blower specification.

The soft starter is controlled by a signal communicated from the CPP PLC.

A Blower Cooling Fan is mounted in the Blower enclosure. It will run when the Blower Motor is on, and it will stop when the Blower Motor stops after a hard coded 1 minute time delay.

5.1 Operation Modes

5.1.1 *System Mode - Off*

When the System Mode selector switch is set to OFF, the Blower Motor and Cooling Motor will not start.

5.1.2 *System Mode – On*

When the System Mode selector switch is set to ON, the Blower Motor and Cooling Motors will be started by an electrical interlock.

5.1.3 *System Mode HMI - Off*

When the System Mode selector switch is in the “HMI” position, and the HMI mode is set to “Off”, the CPP PLC will keep motor turned off and will not automatically start the Blower Motor and Blower Cooling Motor, regardless of Filter level.

5.1.4 *System Mode HMI - Manual*

When the System Mode selector switch is in the “HMI” position, and the HMI mode is set to “Manual”, the CPP PLC will start and run Blower Motor and Blower Cooling Motor according to requests by the operator from the HMI.

5.1.5 *System Mode HMI - Auto*

When the Filter Control Switch is in the “HMI” position, and the HMI mode is set to “Auto”, the CPP PLC has control of the Blower. See section ‘3.1 – Standard Operation’.

5.2 Alarms

Each Blower Motor alarm condition will generate a corresponding system level alarm.

Alarm Description	Alarm Condition	Delay	Classification		
			Minor	Major	Critical
07-M330 Fault Blower	The Blower Motor has reported a fault condition				Enabled
07-M330A Fault Blower Cooling Fan	The Blower Motor Cooling Fan has reported a fault condition		Enabled		

5.3 Operator Interface - Overview

5.3.1 *Display Data*

The OIT will have a System Overview screen that will be used to display Blower status information and to provide operator control functions.

The screen will contain the following information:

- Blower Motor status
- Blower Motor fault indicators
- Blower Motor manual control

5.3.2 *Display Data - Information*

- Blower Motor running time (today, yesterday, total)
- Blower Motor starts (today, yesterday, total)

5.3.3 *Operator Settings*

Users will have access to screens which will allow them to view and modify the following Blower Motor options and settings:

- Adjust the Mode of the Blower Motor
- Start and Stop blower motor in manual mode
- Adjust the Stop Delay time of the Blower Motor
- Adjust the Stop Delay speed of the Blower Motor
- Adjust the speed set-point of the Blower Motor

6.0 *Sludge Screw*

6.1 Control Architecture

The Sludge Screw is used to dewater and/or convey the Sludge that has been transported by the filter mesh. The Sludge is collected and conveyed by the screw where it is optionally pressed and dewatered before exiting the SF System.

The Sludge Screw Motor is driven by a VFD that maintains a fixed speed target based on a configurable setting from the CPP OIT. The Sludge Screw may be operated in forward or reverse direction in manual mode.

The VFD is controlled by a signal communicated from the CPP PLC.

6.2 Operation Modes

6.2.1 *System Mode - Off*

When the System Mode selector switch is set to OFF, the Sludge Screw will not start.

6.2.2 *System Mode – On*

When the System Mode selector switch is set to ON, the Sludge Screw will be started by an electrical interlock.

6.2.3 *System Mode HMI - Off*

When the System Mode is in the “HMI” position, and the HMI mode is set to “Off”, the CPP PLC will keep the motor turned off and will not automatically start the Sludge Screw, regardless of Filter level.

6.2.4 *System Mode HMI - Manual*

When the System Mode selector switch is in the “HMI” position, and the HMI mode is set to “Manual”, the CPP PLC will start and run the Sludge Screw according to requests by the operator from the HMI. The speed of the Sludge Screw will be controlled by an operator entry on the OIT.

6.2.5 *System Mode HMI - Auto*

When the System Mode selector switch is in the “HMI” position, and the HMI mode is set to “Auto”, the CPP PLC has control of the Sludge Screw. See section ‘3.1 – Standard Operation’.

6.3 Alarms

Each Sludge Screw Motor alarm condition will generate a corresponding system level alarm.

Alarm Description	Alarm Condition	Delay	Classification		
			Minor	Major	Critical
07-M350 Fault Sludge Screw	The VFD for the Sludge Screw Motor has reported a fault condition				Enabled

6.4 Operator Interface

6.4.1 *Display Data - Overview*

The OIT will have a System Overview screen that will be used to display Sludge Screw status information and to provide operator control functions.

The screen will contain the following information:

- Sludge Screw Motor status
- Sludge Screw Motor fault indicators
- Sludge Screw Motor manual control

6.4.2 *Display Data - Information*

- Sludge Screw Motor running time (today, yesterday, total)
- Sludge Screw Motor starts (today, yesterday, total)

6.4.3 *Operator Settings*

Users will have access to screens which will allow them to view and modify the following Sludge Screw Motor options and settings:

- Adjust the Mode of the Sludge Screw Motor
- Adjust the Stop Delay time of the Sludge Screw Motor
- Adjust the speed set-point of the Sludge Screw Motor

7.0 *Level Transmitter*

7.1 Control Architecture

An inlet well water level transmitter is required in order to determine when to start and stop the SF System. The water level is also used to control the speed of the Filter Belt. The value is supplied to the CPP PLC via a 4-20 mA analog signal that is passed through a smoothing

algorithm to reduce noise. This signal is then scaled to engineering units based on a full scale level set-point.

7.2 Alarms

Each level transmitter alarm condition will generate a corresponding system level alarm.

Alarm Description	Alarm Condition	Delay	Classification		
			Minor	Major	Critical
07-LT300 HL Level Filter	The level is greater than the High Level Alarm value		Enabled		
07-LT300 Overflow Filter	The level is greater than the Overflow limit.		Enabled		
07-LT300 Defect	The level transmitter is not within the allowable 4-20mA range			Enabled	

7.3 Operator Interface

7.3.1 *Display Data - Overview*

The OIT will have a System Overview screen that will be used to display Level Transmitter status information and to provide operator control functions.

The screen will contain the following information:

- Level Transmitter status
- Level Transmitter fault indicators

7.3.2 *Display Data - Information*

- Overflow time (today and yesterday)
- Overflow time total
- # of overflows (today and yesterday)
- Total number of overflows

7.3.3 *Operator Settings*

Users will have access to screens which will allow them to view and modify the following Level Transmitter options and settings:

- Adjust the Inlet Well water level set-point
- Adjust the start and stop water level limit
- Adjust the High Level alarm limit
- Adjust the Overflow alarm limit

8.0 *Blower Pressure Transmitter*

8.1 Control Architecture

A pressure transmitter is required in order to determine if the Blower is operating correctly. The value is supplied to the CPP PLC via a 4-20 mA analog signal that is passed through a smoothing algorithm to reduce noise. This signal is then scaled to engineering units based on a full scale pressure set-point.

8.2 Alarms

Each pressure transmitter alarm condition will generate a corresponding system level alarm.

Alarm Description	Alarm Condition	Delay	Classification		
			Minor	Major	Critical
07-PT331 LL Pressure Blower	The pressure is less than the Low Level Alarm value				Enabled
07-PT331 HL Pressure Blower	The pressure is greater than the High Level Alarm value		Enabled		
07-PT331 Defect	The pressure transmitter is not within the allowable 4-20mA range				Enabled

8.3 Operator Interface

8.3.1 *Display Data*

The OIT will have a System Overview screen that will be used to display Pressure Transmitter status information and to provide operator control functions.

The screen will contain the following information:

- Pressure Transmitter status
- Pressure Transmitter fault indicators

9.0 *Hot Water Valve*

9.1 Control Architecture

Hot Water is used for filter belt cleaning. All motors must be operating and in Automatic mode before a Hot Water flush will occur. The hot water valve is controlled by the CPP PLC via a discrete open signal, or the OIT in manual mode.

The CPP PLC will automatically perform a Hot Water flush based on a configurable time delay.

The Blower Motor, Blower Motor Cooling Fan, Filter Motor, and Sludge Screw Motor will start when the Hot Water Valve is being commanded to open via the in Auto mode.

9.2 Operation Modes

9.2.1 *System Mode - Off*

When the System Mode selector switch is set to OFF, the Hot Water valve will not open.

9.2.2 *System Mode – On*

When the System Mode selector switch is set to ON, the Hot Water valve will remain closed.

9.2.3 *System Mode HMI - Off*

When the System Mode is in the “HMI” position, and the HMI mode is set to “Off”, the CPP PLC will keep the Hot Water valve closed and will not automatically open the Hot Water valve.

9.2.4 *System Mode HMI - Manual*

When the System Mode selector switch is in the “HMI” position, and the HMI mode is set to “Manual”, the CPP PLC will open and close the Hot Water valve according to requests by the operator from the HMI.

9.2.5 *System Mode HMI - Auto*

When the System Mode selector switch is in the “HMI” position, and the HMI mode is set to “Auto”, the CPP PLC has control of the Hot Water valve. See section ‘3.1 – Standard Operation’. The Hot Water flush timer will count down to control the operation of the valve only in HMI-Auto mode. In all other modes, the Hot Water flush timer will be reset and suspended.

9.3 Operator Interface

9.3.1 *Display Data*

The OIT will have System Overview and Flushing screens that will be used to display Hot Water Valve status information and to provide operator control functions.

The screens will contain the following information:

- Valve status
- Adjust the Remote Mode of the Hot Water Valve
- Manual flush one control

9.3.2 *Operator Settings*

Users will have access to screens which will allow them to view and modify the following Hot Water Valve options and settings:

- Adjust the automatic Hot Water Flush interval delay time
- Adjust the automatic Hot Water Flush duration time

10.0 *Cold Water Valve*

10.1 Control Architecture

Cold Water is used for flushing of the filtered water basin. The cold water valve is controlled by the CPP PLC via a discrete open signal, or a manual Cold Water Control Switch.

The CPP PLC will automatically perform a Cold Water flush based on a configurable time delay.

10.2 Operation Modes – Off, On, Remote Off, Remote Manual, Auto

10.2.1 *System Mode - Off*

When the System Mode selector switch is set to OFF, the Cold Water valve will not open.

10.2.2 *System Mode – On*

When the System Mode selector switch is set to ON, the Cold Water valve will remain closed.

10.2.3 *System Mode HMI - Off*

When the System Mode is in the “HMI” position, and the HMI mode is set to “Off”, the CPP PLC will keep the Cold Water valve closed and will not automatically open the Cold Water valve.

10.2.4 *System Mode HMI - Manual*

When the System Mode selector switch is in the “HMI” position, and the HMI mode is set to “Manual”, the CPP PLC will open and close the Cold Water valve according to requests by the operator from the HMI.

10.2.5 *System Mode HMI - Auto*

When the System Mode selector switch is in the “HMI” position, and the HMI mode is set to “Auto”, the CPP PLC has control of the Cold Water valve. See section ‘3.1 – Standard Operation’. The Cold Water flush timer will count down to control the operation of the valve only in HMI-Auto mode. In all other modes, the Cold Water flush timer will be reset and suspended.

10.3 Operator Interface

10.3.1 *Display Data*

The OIT will have System Overview and Flushing screens that will be used to display Cold Water Valve status information and to provide operator control functions.

The screens will contain the following information:

- Valve status

- Adjust the Remote Mode of the Cold Water Valve
- Manual flush one control

10.3.2 *Operator Settings*

Users will have access to screens which will allow them to view and modify the following Cold Water Valve options and settings:

- Adjust the automatic Cold Water Flush interval delay time
- Adjust the automatic Cold Water Flush duration time

11.0 *Operator Interface*

11.1 Alarms

Alarms generated by the CPP PLC will be logged and displayed on the local OIT Alarm screen, as well as being passed to the Plant Control System. Each alarm generated will be time and date stamped at the OIT. The most recent alarms are recorded and displayed in the alarm history register of the OIT.

11.2 Passwords

The OIT for the equipment described within this document will each contain 3 levels of password protection; Operator, Technician and OEM level. Operator level has less user privileges for accessing and changing parameters for the system. Technician level has a higher level of user privileges and OEM level has full system configuration privileges. Users will be prompted to log in if trying to view or operate items with insufficient user privileges. Unique user passwords will not be provided for this system. A system log will record a history of the user log in access.

11.3 Data logging/Trending Screen

The OIT will store data points into a datalog file for retrieval for offline analysis, or for display on a Trend screen. The following data will be stored:

- Filter Level
- Filter Belt Speed
- Blower Air Pressure
- Filter Flow
- Filter Motor Voltage
- Filter Motor Current
- Sludge Screw Motor Voltage
- Sludge Screw Motor Current

12.0 *Interface with Plant Control System*

12.1 **Hardwired Status Signals**

The filter PLC will provide 3 discrete outputs (Status Bit 1 to 3) which can be configured as desired to provide alarm or operating status information. Multiple outputs may also be assigned to the same alarm output such that if any of the assigned conditions are present, the output contact will be closed. The following signals are available for assignment to these outputs:

- Filter motor running
- Sludge screw running
- Air blower running
- Water sampler pulse
- Cold water flush active
- Hot water flush active
- Drain valve open
- Filter in Automatic mode
- Common Critical Alarm
- Common Major Alarm
- Common Minor Alarm

12.2 SF System interface tag list

SF System interface tag list (SCADA list) will be developed at time of program development and will be provided as a separate “SCADA List” document.

RSLogix 5000 Symbolic Address	RSLogix 5000 Mapped Address	Tag Description	Units

From Salsnes to SCADA

	PLC Tag Name	Data Type	Description	Units	Range	Scaling
Heartbeat	Scada_Read[0]	Integer	Heartbeat to SCADA		0-32767	x1
Mode	Scada_Read[1]	Integer	System Mode	0-Off, 1-Manual, 2-Auto		
Filter Data	Scada_Read[2].0	Bool	Filter Motor Auto	1=Auto	0-1	
	Scada_Read[2].1	Bool	Filter Motor Running	1=Running	0-1	
	Scada_Read[2].2	Bool	Filter Motor Faulted	1=Faulted	0-1	
	Scada_Read[2].3	Bool	Spare			
	Scada_Read[2].4	Bool	Spare			
	Scada_Read[2].5	Bool	Spare			
	Scada_Read[2].6	Bool	Spare			
	Scada_Read[2].7	Bool	Spare			
	Scada_Read[2].8	Bool	Filter Level Sensor Faulted	1=Faulted	0-1	
	Scada_Read[2].9	Bool	Spare			
	Scada_Read[2].10	Bool	Spare			
	Scada_Read[2].11	Bool	Spare			
	Scada_Read[2].12	Bool	Spare			
	Scada_Read[2].13	Bool	Spare			
	Scada_Read[2].14	Bool	Spare			
	Scada_Read[2].15	Bool	Spare			
	Scada_Read[3]	Integer	Filter Mesh Speed	15-80 Hz	0-80	x1
	Scada_Read[4]	Integer	Filter Level	(-1000)-1000 mm	(-1000)-1000	x1
	Scada_Read[5]	Integer	Spare			
Air Blower Data	Scada_Read[6].0	Bool	Air Blower Motor Auto	1=Auto	0-1	
	Scada_Read[6].1	Bool	Air Blower Motor Running	1=Running	0-1	
	Scada_Read[6].2	Bool	Air Blower Motor Faulted	1=Faulted	0-1	
	Scada_Read[6].3	Bool	Spare			
	Scada_Read[6].4	Bool	Spare			
	Scada_Read[6].5	Bool	Spare			
	Scada_Read[6].6	Bool	Spare			
	Scada_Read[6].7	Bool	Spare			
	Scada_Read[6].8	Bool	Air Blower Pressure Sensor Faulted	1=Faulted	0-1	
	Scada_Read[6].9	Bool	Spare			
	Scada_Read[6].10	Bool	Spare			
	Scada_Read[6].11	Bool	Spare			
	Scada_Read[6].12	Bool	Spare			
	Scada_Read[6].13	Bool	Spare			
	Scada_Read[6].14	Bool	Spare			
	Scada_Read[6].15	Bool	Spare			
	Scada_Read[7]	Integer	Air Blower Pressure	0-600 mbar	0-600	x1
	Scada_Read[8]	Integer	Spare			
	Scada_Read[9]	Integer	Spare			
Sludge Screw Data	Scada_Read[10].0	Bool	Sludge Screw Motor Auto	1=Auto	0-1	
	Scada_Read[10].1	Bool	Sludge Screw Motor Running	1=Running	0-1	
	Scada_Read[10].2	Bool	Sludge Screw Motor Faulted	1=Faulted	0-1	
	Scada_Read[10].3	Bool	Spare			
	Scada_Read[10].4	Bool	Spare			
	Scada_Read[10].5	Bool	Spare			
	Scada_Read[10].6	Bool	Spare			
	Scada_Read[10].7	Bool	Spare			
	Scada_Read[10].8	Bool	Spare			
	Scada_Read[10].9	Bool	Spare			
	Scada_Read[10].10	Bool	Spare			
	Scada_Read[10].11	Bool	Spare			
	Scada_Read[10].12	Bool	Spare			
	Scada_Read[10].13	Bool	Spare			
	Scada_Read[10].14	Bool	Spare			
	Scada_Read[10].15	Bool	Spare			
	Scada_Read[11]	Integer	Sludge Screw Speed	15-80 Hz	0-80	x1
	Scada_Read[12]	Integer	Spare			
	Scada_Read[13]	Integer	Spare			
	Scada_Read[14]	Integer	Spare			
Valve Data	Scada_Read[15].0	Bool	Inlet Valve Auto	1=Auto	0-1	
	Scada_Read[15].1	Bool	Inlet Valve Opened	1=Opened	0-1	
	Scada_Read[15].2	Bool	Inlet Valve Closed	1=Closed	0-1	
	Scada_Read[15].3	Bool	Inlet Valve Faulted	1=Faulted	0-1	
	Scada_Read[15].4	Bool	Spare			
	Scada_Read[15].5	Bool	Spare			
	Scada_Read[15].6	Bool	Spare			
	Scada_Read[15].7	Bool	Spare			
	Scada_Read[15].8	Bool	Drain Valve Auto	1=Auto	0-1	
	Scada_Read[15].9	Bool	Drain Valve Opened	1=Opened	0-1	
	Scada_Read[15].10	Bool	Drain Valve Closed	1=Closed	0-1	
	Scada_Read[15].11	Bool	Drain Valve Faulted	1=Faulted	0-1	
	Scada_Read[15].12	Bool	Spare			
	Scada_Read[15].13	Bool	Spare			
	Scada_Read[15].14	Bool	Spare			
	Scada_Read[15].15	Bool	Spare			
	Scada_Read[16].0	Bool	Hot Water Valve Auto	1=Auto	0-1	
	Scada_Read[16].1	Bool	Hot Water Valve Opened	1=Opened	0-1	
	Scada_Read[16].2	Bool	Hot Water Valve Closed	1=Closed	0-1	
	Scada_Read[16].3	Bool	Hot Water Valve Faulted	1=Faulted	0-1	
	Scada_Read[16].4	Bool	Spare			
	Scada_Read[16].5	Bool	Spare			
	Scada_Read[16].6	Bool	Spare			
	Scada_Read[16].7	Bool	Spare			
	Scada_Read[16].8	Bool	Cold Water Valve Auto	1=Auto	0-1	
	Scada_Read[16].9	Bool	Cold Water Valve Opened	1=Opened	0-1	
	Scada_Read[16].10	Bool	Cold Water Valve Closed	1=Closed	0-1	
	Scada_Read[16].11	Bool	Cold Water Valve Faulted	1=Faulted	0-1	
	Scada_Read[16].12	Bool	Spare			
	Scada_Read[16].13	Bool	Spare			
	Scada_Read[16].14	Bool	Spare			
	Scada_Read[16].15	Bool	Spare			
	Scada_Read[17]	Integer	Spare			
	Scada_Read[18]	Integer	Spare			
	Scada_Read[19]	Integer	Spare			
	Scada_Read[20]	Integer	Filter Motor Running Time Today	Minutes	0-32767	x1
	Scada_Read[21]	Integer	Filter Motor Running Time Yesterday	Minutes	0-32767	x1
	Scada_Read[22]	Integer	Filter Motor Running Time Total	Hours	0-32767	x1

From Salsnes to SCADA

	PLC Tag Name	Data Type	Description	Units	Range	Scaling
Accumulated	Scada_Read[23]	Integer	Filter Motor Starts Today		0-32767	x1
	Scada_Read[24]	Integer	Filter Motor Starts Yesterday		0-32767	x1
	Scada_Read[25]	Integer	Filter Motor Starts Total		0-32767	x1
	Scada_Read[26]	Integer	Air Blower Motor Running Time Today	Minutes	0-32767	x1
	Scada_Read[27]	Integer	Air Blower Motor Running Time Yesterday	Minutes	0-32767	x1
	Scada_Read[28]	Integer	Air Blower Motor Running Time Total	Hours	0-32767	x1
	Scada_Read[29]	Integer	Air Blower Motor Starts Today		0-32767	x1
	Scada_Read[30]	Integer	Air Blower Motor Starts Yesterday		0-32767	x1
	Scada_Read[31]	Integer	Air Blower Motor Starts Total		0-32767	x1
	Scada_Read[32]	Integer	Sludge Screw Motor Running Time Today	Minutes	0-32767	x1
	Scada_Read[33]	Integer	Sludge Screw Motor Running Time Yesterday	Minutes	0-32767	x1
	Scada_Read[34]	Integer	Sludge Screw Motor Running Time Total	Hours	0-32767	x1
	Scada_Read[35]	Integer	Sludge Screw Motor Starts Today		0-32767	x1
	Scada_Read[36]	Integer	Sludge Screw Motor Starts Yesterday		0-32767	x1
	Scada_Read[37]	Integer	Sludge Screw Motor Starts Total		0-32767	x1
	Scada_Read[38]	Integer	Filter Overflow Time Today	Minutes	0-32767	x1
	Scada_Read[39]	Integer	Filter Overflow Time Yesterday	Minutes	0-32767	x1
	Scada_Read[40]	Integer	Filter Overflow Time Total	Hours	0-32767	x1
	Scada_Read[41]	Integer	Filter Overflow Count Today		0-32767	x1
	Scada_Read[42]	Integer	Filter Overflow Count Yesterday		0-32767	x1
	Scada_Read[43]	Integer	Filter Overflow Count Total		0-32767	x1
	Scada_Read[44]	Integer	Spare			
	Scada_Read[45]	Integer	Spare			
	Scada_Read[46]	Integer	Spare			
	Scada_Read[47]	Integer	Spare			
	Scada_Read[48]	Integer	Spare			
	Scada_Read[49]	Integer	Spare			
Alarms	Scada_Read[50].0	Bool	Supply Voltage Level error			
	Scada_Read[50].1	Bool	Emergency Stop active			
	Scada_Read[50].2	Bool	Phase Sequence error			
	Scada_Read[50].3	Bool	Hot Water low pressure			
	Scada_Read[50].4	Bool	Hot Water low temperature			
	Scada_Read[50].5	Bool	Surge Protection active			
	Scada_Read[50].6	Bool	Power Supply Control Circuit fault			
	Scada_Read[50].7	Bool	UPS active			
	Scada_Read[50].8	Bool	UPS replace batteries			
	Scada_Read[50].9	Bool	Level Offset Setting Out Of Range			
	Scada_Read[50].10	Bool	High level in filter			
	Scada_Read[50].11	Bool	Overflow			
	Scada_Read[50].12	Bool	Low air pressure			
	Scada_Read[50].13	Bool	High air pressure			
	Scada_Read[50].14	Bool	Flow Meter short circuit			
	Scada_Read[50].15	Bool	Flow Meter open circuit			
	Scada_Read[51].0	Bool	Level Transmitter short circuit			
	Scada_Read[51].1	Bool	Level Transmitter open circuit			
	Scada_Read[51].2	Bool	Pressure Transmitter short circuit			
	Scada_Read[51].3	Bool	Pressure Transmitter open circuit			
	Scada_Read[51].4	Bool	PLC IO fault			
	Scada_Read[51].5	Bool	Filter Belt Inverter communication fault			
	Scada_Read[51].6	Bool	Sludge Screw Inverter communication fault			
	Scada_Read[51].7	Bool	Spare			
	Scada_Read[51].8	Bool	High temperature in enclosure			
	Scada_Read[51].9	Bool	Spare			
	Scada_Read[51].10	Bool	Spare			
	Scada_Read[51].11	Bool	Filter Belt Motor overload tripped			
	Scada_Read[51].12	Bool	Filter Belt Inverter fault			
	Scada_Read[51].13	Bool	Filter Belt Motor failed to start			
	Scada_Read[51].14	Bool	Filter Belt Motor service due			
	Scada_Read[51].15	Bool	Air Blower Overload tripped			
	Scada_Read[52].0	Bool	Air Blower Inverter fault			
	Scada_Read[52].1	Bool	Air Blower failed to start			
	Scada_Read[52].2	Bool	Air Blower service due			
	Scada_Read[52].3	Bool	Sludge Screw Motor overload tripped			
	Scada_Read[52].4	Bool	Sludge Screw Inverter fault			
	Scada_Read[52].5	Bool	Sludge Screw Motor failed to start			
	Scada_Read[52].6	Bool	Sludge Screw Motor service due			
	Scada_Read[52].7	Bool	Spare			
	Scada_Read[52].8	Bool	Spare			
	Scada_Read[52].9	Bool	Spare			
	Scada_Read[52].10	Bool	Spare			
	Scada_Read[52].11	Bool	Spare			
	Scada_Read[52].12	Bool	Spare			
	Scada_Read[52].13	Bool	Spare			
	Scada_Read[52].14	Bool	Spare			
	Scada_Read[52].15	Bool	Spare			

PART

E

WARRANTIES

Salsnes Equipment Limited Warranty

January 23, 2013

The following terms and conditions will govern the equipment warranty provided by Salsnes to the Owner/Operator:

Period of Coverage: Salsnes warrants to the Owner/Operator noted above (the "Customer") that if within 12 calendar months from Substantial Completion (as defined below) or 18 calendar months from the date of delivery, whichever comes first, (the "Warranty Period") equipment manufactured by Salsnes (the "Equipment") will be free from defects in material and workmanship and will function in accordance with the specifications agreed to by Salsnes for the Equipment.

"Substantial Completion" is the date on which the Equipment commissioning and start-up is sufficiently completed such that the Equipment is capable of being put into operation by Owner for its intended use.

This warranty applies only to the Salsnes Filter unit and equipment supplied with and included in the purchase agreement and under the following conditions:

- Salsnes Filter ("SF") shall receive the Startup report signed by customer and representative within 30 days of Equipment Startup.
- Any part of the SF unit that fails or is damaged under normal use within the warranty period will be replaced or, at Salsnes Filter's option repaired.
- Any defective items shall be promptly returned to Trojan/Salsnes.

Technical performance: The Salsnes Technical Reliability and Performance Guarantee apply only under the following conditions:

- The application is as per Salsnes recommendations, and designed in a manner that not allows large or heavy particles, stones, etc. to enter into the SF unit and cause damage.
- The technical performance guarantee is contingent upon proper care and maintenance of the unit as detailed within the Operation and Maintenance Manual, and using Salsnes approved parts.
- Ensuring that appropriate maintenance is completed based on type of influent. This may require, but it is not limited to, utilizing a wash system for removal of Fats, Oil and Grease (above 80 mg/l), manual cleaning of mesh, COG's, equipment, etc.

Limitations: This warranty shall not apply to any failure or defect which results from:

- the Equipment not being operated and maintained in strict accordance with instructions specified in the Operation and Maintenance manual or Product Bulletin or which results from mishandling, misuse, neglect, improper storage, improper operation of the Equipment with other equipment furnished by the Customer or by other third parties or from defects in designs or specifications furnished by or on behalf of the Customer by a person other than Salsnes.
- Equipment that has been altered or repaired after start-up by anyone except: (a) authorized representatives of Salsnes, or (b) Customer acting under specific written instructions from Salsnes.
- Use of parts not supplied or approved by Salsnes.

This warranty does not cover:

- Normal wear and tear of the product
- Consumable components
- Corrosion
- Salsnes supplied components that are the subject of a separate warranty
- Costs related to removal, installation, or troubleshooting of a component
- Physical damage
- Improper installation
- Acts of God, terrorism, biological infestations, or input voltage that create operating conditions beyond the minimum or maximum limits listed in the Operations Manual including high input voltage from generators and lightning strikes
- Damage caused by improper return packaging
- Taxes, duties or brokerage fees (if any)
- Failure or damage caused by the use of the SF unit for any purposes or application other than that intended and communicated to Salsnes at time of sale
- Equipment components manufactured by third parties but furnished to Customer by Salsnes are warranted by the original manufacturer, only to the extent of the original manufacturer's warranty

PART F

SAFETY DATA SHEETS (SDS)

SAFETY DATA SHEET

KAESER OMEGA LUBRICANT FGB-220

KAESER COMPRESSORS
Built for a lifetime.

Section 1. Identification

GHS product identifier : KAESER OMEGA LUBRICANT FGB-220

Product code : KSROFGB220

Other means of identification : Synthetic Air Compressor Fluid.

Product type : Liquid.

Relevant identified uses of the substance or mixture and uses advised against

Identified uses	
Not available.	
Uses advised against	**Reason**
Not available.	

Supplier's details : Manufactured for Kaeser Compressors Canada Inc.
3760 La Verandrye
Boisbriand, QC Canada J7H 1R5
Phone: 450-971-1414

Emergency telephone number (with hours of operation) : 24 hr. CHEMTREC 1-800-424-9300 / International 1-703-527-3887

Section 2. Hazards identification

OSHA/HCS status : While this material is not considered hazardous by the OSHA Hazard Communication Standard (29 CFR 1910.1200), this SDS contains valuable information critical to the safe handling and proper use of the product. This SDS should be retained and available for employees and other users of this product.

Classification of the substance or mixture : Not classified.

GHS label elements

Signal word : No signal word.

Hazard statements : No known significant effects or critical hazards.

Precautionary statements

Prevention : Not applicable.

Response : Not applicable.

Storage : Not applicable.

Disposal : Not applicable.

Hazards not otherwise classified : None known.

Section 3. Composition/information on ingredients

Substance/mixture : Mixture

Other means of identification : Not available.

CAS number/other identifiers

CAS number : Not applicable.

Section 3. Composition/information on ingredients

Ingredient name	%	CAS number
Butene, homopolymer (products derived from either/or But-1-ene/But-2-ene)	≥25 - <50	9003-29-6

Any concentration shown as a range is to protect confidentiality or is due to batch variation.

There are no additional ingredients present which, within the current knowledge of the supplier and in the concentrations applicable, are classified as hazardous to health or the environment and hence require reporting in this section.

Occupational exposure limits, if available, are listed in Section 8.

Section 4. First aid measures

Description of necessary first aid measures

Eye contact : Immediately flush eyes with plenty of water, occasionally lifting the upper and lower eyelids. Check for and remove any contact lenses. Get medical attention if irritation occurs.

Inhalation : Remove victim to fresh air and keep at rest in a position comfortable for breathing. Get medical attention if symptoms occur.

Skin contact : Flush contaminated skin with plenty of water. Remove contaminated clothing and shoes. Get medical attention if symptoms occur.

Ingestion : Wash out mouth with water. Remove victim to fresh air and keep at rest in a position comfortable for breathing. If material has been swallowed and the exposed person is conscious, give small quantities of water to drink. Do not induce vomiting unless directed to do so by medical personnel. Get medical attention if symptoms occur.

Most important symptoms/effects, acute and delayed

Potential acute health effects

Eye contact : No known significant effects or critical hazards.

Inhalation : No known significant effects or critical hazards.

Skin contact : No known significant effects or critical hazards.

Ingestion : No known significant effects or critical hazards.

Over-exposure signs/symptoms

Eye contact : No specific data.

Inhalation : No specific data.

Skin contact : No specific data.

Ingestion : No specific data.

Indication of immediate medical attention and special treatment needed, if necessary

Notes to physician : Treat symptomatically. Contact poison treatment specialist immediately if large quantities have been ingested or inhaled.

Specific treatments : No specific treatment.

Protection of first-aiders : No action shall be taken involving any personal risk or without suitable training.

See toxicological information (Section 11)

Section 5. Fire-fighting measures

Extinguishing media

Suitable extinguishing media : Use an extinguishing agent suitable for the surrounding fire.

Unsuitable extinguishing media : Do not use water jet.

Specific hazards arising from the chemical : In a fire or if heated, a pressure increase will occur and the container may burst.

Section 5. Fire-fighting measures

Hazardous thermal decomposition products : Decomposition products may include the following materials:
carbon dioxide
carbon monoxide

Special protective actions for fire-fighters : Promptly isolate the scene by removing all persons from the vicinity of the incident if there is a fire. No action shall be taken involving any personal risk or without suitable training.

Special protective equipment for fire-fighters : Fire-fighters should wear appropriate protective equipment and self-contained breathing apparatus (SCBA) with a full face-piece operated in positive pressure mode.

Section 6. Accidental release measures

Personal precautions, protective equipment and emergency procedures

For non-emergency personnel : No action shall be taken involving any personal risk or without suitable training. Evacuate surrounding areas. Keep unnecessary and unprotected personnel from entering. Do not touch or walk through spilled material. Put on appropriate personal protective equipment.

For emergency responders : If specialised clothing is required to deal with the spillage, take note of any information in Section 8 on suitable and unsuitable materials. See also the information in "For non-emergency personnel".

Environmental precautions : Avoid dispersal of spilled material and runoff and contact with soil, waterways, drains and sewers. Inform the relevant authorities if the product has caused environmental pollution (sewers, waterways, soil or air).

Methods and materials for containment and cleaning up

Small spill : Stop leak if without risk. Move containers from spill area. Absorb with an inert dry material and place in an appropriate waste disposal container. Dispose of via a licensed waste disposal contractor.

Large spill : Stop leak if without risk. Move containers from spill area. Prevent entry into sewers, water courses, basements or confined areas. Wash spillages into an effluent treatment plant or proceed as follows. Contain and collect spillage with non-combustible, absorbent material e.g. sand, earth, vermiculite or diatomaceous earth and place in container for disposal according to local regulations (see Section 13). Dispose of via a licensed waste disposal contractor. Note: see Section 1 for emergency contact information and Section 13 for waste disposal.

Section 7. Handling and storage

Precautions for safe handling

Protective measures : Put on appropriate personal protective equipment (see Section 8).

Advice on general occupational hygiene : Eating, drinking and smoking should be prohibited in areas where this material is handled, stored and processed. Workers should wash hands and face before eating, drinking and smoking. Remove contaminated clothing and protective equipment before entering eating areas. See also Section 8 for additional information on hygiene measures.

Conditions for safe storage, including any incompatibilities : Store in accordance with local regulations. Store in original container protected from direct sunlight in a dry, cool and well-ventilated area, away from incompatible materials (see Section 10) and food and drink. Keep container tightly closed and sealed until ready for use. Containers that have been opened must be carefully resealed and kept upright to prevent leakage. Do not store in unlabeled containers. Use appropriate containment to avoid environmental contamination.

Section 8. Exposure controls/personal protection

Control parameters

Occupational exposure limits

None.

Appropriate engineering controls : Good general ventilation should be sufficient to control worker exposure to airborne contaminants.

Environmental exposure controls : Emissions from ventilation or work process equipment should be checked to ensure that they are working properly. Use hydrocarbon absorbing respirator if misting.

Individual protection measures

Hygiene measures : Wash hands, forearms and face thoroughly after handling chemical products, before eating, smoking and using the lavatory and at the end of the working period. Appropriate techniques should be used to remove potentially contaminated clothing. Wash contaminated clothing before reusing. Ensure that eyewash stations and safety showers are close to the workstation location.

Eye/face protection : Safety eyewear complying with an approved standard should be used when a risk assessment indicates this is necessary to avoid exposure to liquid splashes, mists, gases or dusts. If contact is possible, the following protection should be worn, unless the assessment indicates a higher degree of protection: safety glasses with side-shields.

Skin protection

Hand protection : Chemical-resistant, impervious gloves complying with an approved standard should be worn at all times when handling chemical products if a risk assessment indicates this is necessary.

Body protection : Personal protective equipment for the body should be selected based on the task being performed and the risks involved and should be approved by a specialist before handling this product.

Other skin protection : Appropriate footwear and any additional skin protection measures should be selected based on the task being performed and the risks involved and should be approved by a specialist before handling this product.

Respiratory protection : Use a properly fitted, air-purifying or air-fed respirator complying with an approved standard if a risk assessment indicates this is necessary. Respirator selection must be based on known or anticipated exposure levels, the hazards of the product and the safe working limits of the selected respirator.

Section 9. Physical and chemical properties

Appearance

Physical state : Liquid.

Color : Golden.

Odor : Mild hydrocarbon.

Odor threshold : Not available.

pH : Not applicable.

Pour point : -45°C (-49°F).

Boiling point : >371°C (700°F).

Flash point : Closed cup: 229°C (445°F)

Evaporation rate : Negligible.

Flammability (solid, gas) : Not available.

Lower and upper explosive (flammable) limits : Not available.

Vapor pressure : Not available.

Vapor density : Not available.

Section 9. Physical and chemical properties

Relative density : 0.65.

Solubility : Insoluble in water.

Partition coefficient: n-octanol/water : Not available.

Auto-ignition temperature : Not available.

Decomposition temperature : Not available.

Viscosity : Kinematic (40°C (104°F)): 2.2 cm^2/s (220 cSt)

Section 10. Stability and reactivity

Reactivity : No specific test data related to reactivity available for this product or its ingredients.

Chemical stability : The product is stable.

Possibility of hazardous reactions : Under normal conditions of storage and use, hazardous reactions will not occur.

Conditions to avoid : No specific data.

Incompatible materials : No specific data.

Hazardous decomposition products : Under normal conditions of storage and use, hazardous decomposition products should not be produced.

Section 11. Toxicological information

Information on toxicological effects

Acute toxicity

Product/ingredient name	Result	Species	Dose	Exposure
Butene, homopolymer (products derived from either/or But-1-ene/But-2-ene)	LD50 Dermal	Rabbit	>10250 mg/kg	-
	LD50 Oral	Rat	>34600 mg/kg	-

Irritation/Corrosion

Not available.

Sensitization

Not available.

Mutagenicity

Not available.

Carcinogenicity

Not available.

Reproductive toxicity

Not available.

Teratogenicity

Not available.

Specific target organ toxicity (single exposure)

Not available.

Specific target organ toxicity (repeated exposure)

Not available.

Section 11. Toxicological information

Aspiration hazard

Not available.

Information on the likely routes of exposure : Not available.

Potential acute health effects

Eye contact : No known significant effects or critical hazards.

Inhalation : No known significant effects or critical hazards.

Skin contact : No known significant effects or critical hazards.

Ingestion : No known significant effects or critical hazards.

Symptoms related to the physical, chemical and toxicological characteristics

Eye contact : No specific data.

Inhalation : No specific data.

Skin contact : No specific data.

Ingestion : No specific data.

Delayed and immediate effects and also chronic effects from short and long term exposure

Short term exposure

Potential immediate effects : Not available.

Potential delayed effects : Not available.

Long term exposure

Potential immediate effects : Not available.

Potential delayed effects : Not available.

Potential chronic health effects

Not available.

General : No known significant effects or critical hazards.

Carcinogenicity : No known significant effects or critical hazards.

Mutagenicity : No known significant effects or critical hazards.

Teratogenicity : No known significant effects or critical hazards.

Developmental effects : No known significant effects or critical hazards.

Fertility effects : No known significant effects or critical hazards.

Numerical measures of toxicity

Acute toxicity estimates

Not available.

Section 12. Ecological information

Toxicity

Not available.

Persistence and degradability

Section 12. Ecological information

Product/ingredient name	Aquatic half-life	Photolysis	Biodegradability
Butene, homopolymer (products derived from either/ or But-1-ene/But-2-ene)	-	-	Readily

Bioaccumulative potential

Product/ingredient name	$LogP_{ow}$	BCF	Potential
Butene, homopolymer (products derived from either/ or But-1-ene/But-2-ene)	7.6 to 7.8	314 to 1882	high

Mobility in soil

Soil/water partition coefficient (K_{OC}) : Not available.

Other adverse effects : No known significant effects or critical hazards.

Section 13. Disposal considerations

Disposal methods : The generation of waste should be avoided or minimized wherever possible. Disposal of this product, solutions and any by-products should at all times comply with the requirements of environmental protection and waste disposal legislation and any regional local authority requirements. Dispose of surplus and non-recyclable products via a licensed waste disposal contractor. Wste should not be disposed of untreated to the sewer unless fully compliant with the requirements of all authorities with jurisdiction. Waste packaging should be recycled. Incineration or landfill should only be considered when recycling is not feasible. This material and its container must be disposed of in a safe way. Empty containers or liners may retain some product residues. Avoid dispersal of spilled material and runoff and contact with soil, waterways, drains and sewers.

Section 14. Transport information

	DOT Classification	TDG Classification	IMDG	IATA
UN number	Not regulated.	Not regulated.	Not regulated.	Not regulated.

Special precautions for user : **Transport within user's premises:** always transport in closed containers that are upright and secure. Ensure that persons transporting the product know what to do in the event of an accident or spillage.

Transport in bulk according to Annex II of MARPOL 73/78 and the IBC Code : Not available.

Section 15. Regulatory information

U.S. Federal regulations : **TSCA 8(a) CDR Exempt/Partial exemption:** Not determined

All components are listed or exempted.

Clean Air Act Section 112 (b) Hazardous Air Pollutants (HAPs) : Not listed

Clean Air Act Section 602 Class I Substances : Not listed

Section 15. Regulatory information

Clean Air Act Section 602 Class II Substances : Not listed

DEA List I Chemicals (Precursor Chemicals) : Not listed

DEA List II Chemicals (Essential Chemicals) : Not listed

SARA 302/304

Composition/information on ingredients

No products were found.

SARA 304 RQ : Not applicable.

SARA 311/312

Classification : Not applicable.

Composition/information on ingredients

Name	%	Fire hazard	Sudden release of pressure	Reactive	Immediate (acute) health hazard	Delayed (chronic) health hazard
Butene, homopolymer (products derived from either/or But-1-ene/ But-2-ene)	≥25 - <50	No.	No.	No.	Yes.	No.

State regulations

Massachusetts : None of the components are listed.

New York : None of the components are listed.

New Jersey : None of the components are listed.

Pennsylvania : None of the components are listed.

California Prop.65

This product is not known to contain any chemicals currently listed as carcinogens or reproductive toxins.

International lists

National inventory

Australia : Not determined.

Canada : All components are listed or exempted.

China : Not determined.

Europe : Not determined.

Japan : Not determined.

Malaysia : Not determined.

New Zealand : Not determined.

Philippines : Not determined.

Republic of Korea : Not determined.

Taiwan : Not determined.

Section 16. Other information

Procedure used to derive the classification

Classification	Justification
Not classified.	

History

Date of issue/Date of revision : 12/30/2015

Version : 2

Section 16. Other information

Key to abbreviations : ATE = Acute Toxicity Estimate
BCF = Bioconcentration Factor
GHS = Globally Harmonized System of Classification and Labelling of Chemicals
IATA = International Air Transport Association
IBC = Intermediate Bulk Container
IMDG = International Maritime Dangerous Goods
LogPow = logarithm of the octanol/water partition coefficient
MARPOL 73/78 = International Convention for the Prevention of Pollution From Ships, 1973 as modified by the Protocol of 1978. ("Marpol" = marine pollution)
UN = United Nations

Indicates information that has changed from previously issued version.

Noticetoreader

To the best of our knowledge, the information contained herein is accurate. However, neither the above-named supplier, nor any of its subsidiaries, assumes any liability whatsoever for the accuracy or completeness of the information contained herein.
Final determination of suitability of any material is the sole responsibility of the user. All materials may present unknown hazards and should be used with caution. Although certain hazards are described herein, we cannot guarantee that these are the only hazards that exist.

Safety data sheet

Revision: 28-03-2017
Replaces: 25-11-2016
Version: 04.03/GBR

SECTION 1: Identification of the substance/mixture and of the company/undertaking

1.1. Product identifier

Trade name: LGWA 2

1.2. Relevant identified uses of the substance or mixture and uses advised against

Recommended uses: Lubricating grease

1.3. Details of the supplier of the safety data sheet

Supplier: SKF MAINTENANCE PRODUCTS
Postbus 1008
NL-3430 BA Nieuwegein
The Netherlands
Tel: +31 30 6307200
Email: sebastien.david@skf.com
WWW: www.skf.com

1.4. Emergency telephone number

0870 600 6266 (UK only) Only available to health professionals.

SECTION 2: Hazards identification

2.1. Classification of the substance or mixture

CLP-classification (Regulation (EC) No 1272/2008):

The product shall not be classified as hazardous according to the classification and labelling rules for substances and mixtures.

Most serious harmful effects:

May cause slight irritation to the skin and eyes. Persons with a known allergy to reaction products of bis(4-methylpentan-2-yl)dithiophosphoric acid with phosphorus oxide, propylene oxide and amines, C12-14-alkyl (branched) may exhibit an allergic response to the product.

2.2. Label elements

The product shall not be classified as hazardous according to the classification and labelling rules for substances and mixtures.

Supplemental information: Contains reaction products of bis(4-methylpentan-2-yl)dithiophosphoric acid with phosphorus oxide, propylene oxide and amines, C12-14-alkyl (branched). May produce an allergic reaction. Safety data sheet available on request.

2.3. Other hazards

Assessment to determine PBT and vPvB has not been made.

SECTION 3: Composition/information on ingredients

3.2. Mixtures

Registration number	CAS/ EC Number	Substance	CLP-classification (Regulation (EC) No 1272/2008)	w/w%	Note
.	12001-85-3-J	Naphthenic acids, zinc salts	Aquatic Chronic 2;H411	<2,5	.
.	234-409-2	.	.	.	.

01-211949362	.	reaction products of	Acute Tox. 4;H302 Eye Dam. 1;H318 Skin Sens.	0,1 - 1	.
0-38-XXXX	931-384-6	bis(4-methylpentan-2-yl)dithiophosph	1;H317 Aquatic Chronic 2;H411	.	.
.	.	oric acid with phosphorus oxide,	.	.	.
.	.	propylene oxide and amines,	.	.	.
.	.	C12-14-alkyl (branched)		.	.

Please see section 16 for the full text of H-phrases.

Other information: The mineral oils in the product contain <3% DMSO extract(IP 346). Any letters after the CAS number refer to individual data sets.

SECTION 4: First aid measures

4.1. Description of first aid measures

Inhalation: Seek fresh air. Seek medical advice in case of persistent discomfort.

Ingestion: Wash out mouth thoroughly and drink 1-2 glasses of water in small sips. Seek medical advice in case of discomfort.

Skin: Remove contaminated clothing. Wash skin with soap and water. Seek medical advice in case of persistent discomfort.

Eyes: Flush with water (preferably using eye wash equipment) until irritation subsides. Seek medical advice if symptoms persist.

Other information: When obtaining medical advice, show the safety data sheet or label.

4.2. Most important symptoms and effects, both acute and delayed

May cause slight irritation to the skin and eyes. The product contains small amounts of reaction products of bis(4-methylpentan-2-yl)dithiophosphoric acid with phosphorus oxide, propylene oxide and amines, C12-14-alkyl (branched). Persons with a known allergy may exhibit an allergic response to the product.

4.3. Indication of any immediate medical attention and special treatment needed

No special immediate treatment required. Treat symptoms.

SECTION 5: Firefighting measures

5.1. Extinguishing media

Suitable extinguishing media: Extinguish with powder, foam, carbon dioxide or water mist. Use water or water mist to cool non-ignited stock.

Unsuitable extinguishing media: Do not use water stream, as it may spread the fire.

5.2. Special hazards arising from the substance or mixture

Not flammable, but combustible. Can generate harmful flue gases containing carbon monoxide in the event of fire.

5.3. Advice for firefighters

Move containers from danger area if it can be done without risk. Avoid inhalation of vapour and flue gases – seek fresh air. Wear Self-Contained Breathing Apparatus (SCBA) with chemical resistant gloves.

SECTION 6: Accidental release measures

6.1. Personal precautions, protective equipment and emergency procedures

For non-emergency personnel: Wear gloves. Wear safety goggles if there is a risk of eye splash.

For emergency responders: In addition to the above: Normal protective clothing equivalent to EN 469 is recommended.

6.2. Environmental precautions

Prevent spillage from entering drains and/or surface water.

6.3. Methods and material for containment and cleaning up

Contain and absorb spill with sand or other absorbent material and transfer to suitable waste containers. Wipe up minor spills with a cloth.

6.4. Reference to other sections

See section 8 for type of protective equipment. See section 13 for instructions on disposal.

SECTION 7: Handling and storage

7.1. Precautions for safe handling

Use the product under well-ventilated conditions. Running water and eye wash equipment should be available. Wash hands before breaks, before using restroom facilities, and at the end of work.

7.2. Conditions for safe storage, including any incompatibilities

Store safely, out of reach of children and away from food, animal feeding stuffs, medicines, etc. Keep in tightly closed original packaging. Store in a dry, cool, well-ventilated area. Store at temperatures below 45°C. Do not store with the following: Oxidisers.

7.3. Specific end use(s)

None.

SECTION 8: Exposure controls/personal protection

8.1. Control parameters

Legal basis:	EH40/2005 Workplace exposure limits. Last amended December 2011.
	Contains no substances subject to reporting requirements.

8.2. Exposure controls

Appropriate engineering controls:	Wear the personal protective equipment specified below.
Personal protective equipment, eye/face protection:	Wear safety goggles if there is a risk of eye splash. Eye protection must conform to EN 166.
Personal protective equipment, skin protection:	In the event of direct skin contact, wear protective gloves: Type of material and thickness: Nitrile rubber >0,38mm. Penetration time: >8 hours. Gloves must conform to EN 374.
Personal protective equipment, respiratory protection:	Not required. In case of risk of formation of spray mist, wear respiratory protective equipment with A/P2 filter. Respiratory protection must conform to one of the following standards: EN 136/140/145.
Environmental exposure controls:	Ensure compliance with local regulations for emissions.

SECTION 9: Physical and chemical properties

9.1. Information on basic physical and chemical properties

State:	Fat.
Colour:	Yellow /Brown
Odour:	Characteristic
Odour threshold:	No data
pH (solution for use):	No data
pH (concentrate):	No data
Melting point/freezing point:	No data
Initial boiling point and boiling range:	No data
Flash point:	> 150 °C
Evaporation rate:	No data
Flammability (solid, gas):	No data
Upper/lower flammability limits:	No data
Upper/lower explosive limits:	No data
Vapour pressure:	No data
Vapour density:	No data
Relative density:	< 1,0 g/cm3 (25 °C)
Solubility:	Insoluble in the following: Water.
Partition coefficient n-octanol/water:	No data
Auto-ignition temperature:	No data
Decomposition temperature:	No data
Viscosity:	No data
Explosive properties:	No data
Oxidising properties:	No data

9.2. Other information

None.

SECTION 10: Stability and reactivity

10.1. Reactivity

Reacts with the following: Oxidisers.

10.2. Chemical stability

The product is stable when used in accordance with the supplier's directions.

10.3. Possibility of hazardous reactions

None known.

10.4. Conditions to avoid

Do not expose to heat (e.g. sunlight).

10.5. Incompatible materials

Oxidisers.

10.6. Hazardous decomposition products

Can generate harmful flue gases containing carbon monoxide in the event of fire.

SECTION 11: Toxicological information

11.1. Information on toxicological effects

Acute toxicity - oral:	Ingestion of large quantities may cause discomfort. The product does not have to be classified. Based on existing data, the classification criteria are deemed not to have been met. 12001-85-3-J: Rat: LD50 = 4920 mg/kg LGWA 2: LD50: 5528 mg/kg
Acute toxicity - dermal:	The product does not have to be classified. Based on existing data, the classification criteria are deemed not to have been met. LGWA 2: LD50: 4113 mg/kg
Acute toxicity - inhalation:	The product does not have to be classified. Based on existing data, the classification criteria are deemed not to have been met. LGWA 2: LC50 (Mist): 20,8 mg/l LGWA 2: LC50 (Vapour): 30 mg/l
Skin corrosion/irritation:	May cause slight irritation. The product does not have to be classified. Test data are not available.
Serious eye damage/eye irritation:	Temporary irritation. The product does not have to be classified. Test data are not available.
Respiratory sensitisation or skin sensitisation:	The product contains small amounts of reaction products of bis(4-methylpentan-2-yl)dithiophosphoric acid with phosphorus oxide, propylene oxide and amines, C12-14-alkyl (branched). Persons with a known allergy may exhibit an allergic response to the product. The product does not have to be classified. Test data are not available.
Germ cell mutagenicity:	The product does not have to be classified. Test data are not available.
Carcinogenic properties:	The product does not have to be classified. Test data are not available.
Reproductive toxicity:	The product does not have to be classified. Test data are not available.
Single STOT exposure:	The product does not have to be classified. Test data are not available.
Repeated STOT exposure:	The product does not have to be classified. Test data are not available.
Aspiration hazard:	The product does not have to be classified. Test data are not available.
Other toxicological effects:	On warming/heating, the vapours emitted may cause irritation to the respiratory organs. May cause coughing and breathing difficulties.

SECTION 12: Ecological information

12.1. Toxicity

The product does not have to be classified. Based on existing data, the classification criteria are deemed not to have been met.

Acute toxicity:

12001-85-3-J:
Fish: Lepomis macrochirus: 96hLC50 = 1,53-2 ppm
Crustacea: Daphnia magna: 48hEC50 = 4,6 ppm

12.2. Persistence and degradability

Not expected to be biodegradable. Test data are not available.

12.3. Bioaccumulative potential

No bioaccumulation expected. Test data are not available.

12.4. Mobility in soil

Not expected to be mobile in soil. Test data are not available.

12.5. Results of PBT and vPvB assessment

No assessment has been made.

12.6. Other adverse effects

Oil products may cause soil and water pollution.

German water pollution classification (WGK): 1

SECTION 13: Disposal considerations

13.1. Waste treatment methods

Avoid discharge to drain or surface water. Collect spills and waste in closed, leak-proof containers for disposal at the local hazardous waste site.

EWC code: Depends on line of business and use, for instance 13 02 08* other engine, gear and lubricating oils

Absorbent/cloth contaminated with the product:
EWC code: 15 02 02 absorbents, filter materials (including oil filters not otherwise specified), wiping cloths, protective clothing contaminated by dangerous substances

Uncleansed packaging is to be disposed of via the local waste-removal scheme. Empty, cleansed packaging should be disposed of for recycling.

SECTION 14: Transport information

The product is not covered by the rules for transport of dangerous goods.

14.1. UN number -

14.2. UN proper shipping name -

14.3. Transport hazard class(es) -

14.4. Packing group -

14.5. Environmental hazards -

14.6. Special precautions for user

-

14.7. Transport in bulk according to Annex II of MARPOL73/78 and the IBC Code

-

SECTION 15: Regulatory information

15.1. Safety, health and environmental regulations/legislation specific for the substance or mixture

Special provisions: None.

15.2. Chemical safety assessment

Chemical safety assessment has not been performed.

SECTION 16: Other information

Changes have been made in the following sections:	11, 12
Abbreviation explanations:	PBT: Persistent, Bioaccumulative and Toxic vPvB: Very Persistent and Very Bioaccumulative , STOT: Specific Target Organ Toxicity
Classification method:	Calculation based on the hazards of the known components.
H-phrases:	H302 Harmful if swallowed.

	H317 May cause an allergic skin reaction. H318 Causes serious eye damage. H411 Toxic to aquatic life with long lasting effects.
Training:	A thorough knowledge of this safety data sheet should be a prerequisite condition.
Other information:	This safety data sheet has been prepared for and applies to this product only. It is based on our current knowledge and the information that the supplier was able to provide about the product at the time of preparation. The safety data sheet complies with applicable law on preparation of safety data sheets in accordance with 1907/2006/EC (REACH) as subsequently changed.

PART

G

MANUFACTURER'S MANUALS

A TROJAN TECHNOLOGIES BUSINESS

Salsnes Filter System©

SF Series

Operation and Maintenance
User Manual
Original Instructions
Edition 6

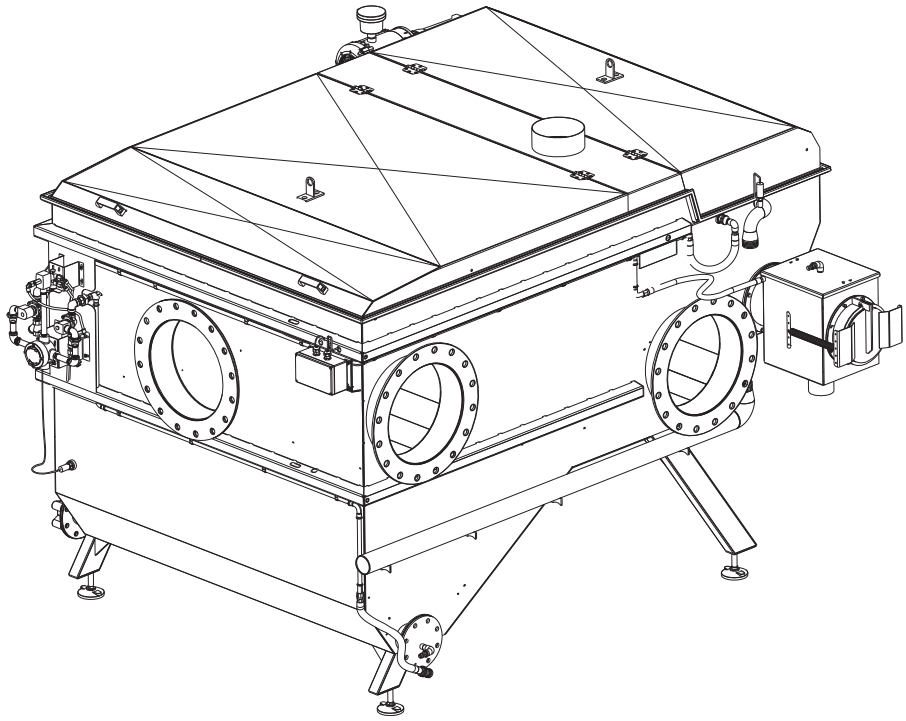

© Salsnes Filter, 2016. All rights reserved. Printed in Norway

DC700101-06-01


Place system label here
(do not translate this text)

Table of Contents

Section 1 Specifications 5

Section 2 Safety Information 9
- 2.1 Use of Hazard Information 9
- 2.2 Precautionary Labels 9
- 2.3 Safety Precautions 11
- 2.4 Safety Features 13

Section 3 General Information 15
- 3.1 System Overview 15
  - 3.1.1 System Components 15
- 3.2 Filter Components 17
- 3.3 Control Power Panel (CPP) 18
- 3.4 Air Blower 18
- 3.5 Acceptable Noise Levels 19
- 3.6 Patents and Permissions 19
- 3.7 Abbreviations and Acronyms 19

Section 4 Lockout Tag Out 21
- 4.1 Lockout Tag Out Procedure 21
  - 4.1.1 Equipment Shutdown 21
  - 4.1.2 Deactivate Energy Sources 21
  - 4.1.3 Lockout Tag Out Energy Sources 22
  - 4.1.4 Verify the Lockout 22
- 4.2 Remove the Lockout Tag Out 22

Section 5 Startup and Shutdown 23
- 5.1 Startup 23
  - 5.1.1 Pre-startup Checklist 23
  - 5.1.2 System Startup 23
  - 5.1.3 Startup after Emergency Stop 24
- 5.2 Shutdown 24
  - 5.2.1 Shutdown for Repair or Maintenance 24
  - 5.2.2 Emergency Shutdown 25

Section 6 Operation 27
- 6.1 Overview of Sequence and Principle 27
- 6.2 Basic Setup Data 27
- 6.3 Switches and Indicators 28
- 6.4 Control Modes 28
- 6.5 Navigate Operator Interface Terminal 29
  - 6.5.1 System Settings 29
- 6.6 Control Power Panel Operation 29
  - 6.6.1 Filter Screen 30
  - 6.6.2 Auxiliary Screen 31
  - 6.6.3 Settings Screens 32
  - 6.6.4 Accumulated Screen 39
  - 6.6.5 Trends Screen 40
  - 6.6.6 Alarms Screen 41

Section 7 Maintenance 43
- 7.1 Maintenance Schedule 43
- 7.2 Tools and Materials 44
- 7.3 Filter 45
  - 7.3.1 Drain the Filter Unit 45
  - 7.3.2 Remove Filter Lids 45

7.3.3 Install Filter Lids....46
7.3.4 Inspect Filter Mesh....46
7.3.5 Clean Filter Mesh....47
7.3.6 Remove and Install Filter Frame Assembly....48
7.3.7 Remove Filter Mesh....50
7.3.8 Install Filter Mesh....53
7.3.9 Check and Adjust Filter Mesh Tension....55
7.3.10 Lubricate Drive Roller and Under Roller....57
7.3.11 Replace Drive Roller Bearing....58
7.3.12 Replace Under Roller Bearing....59
7.3.13 Remove Guide Roller....61
7.3.14 Replace Guide Roller Bearing....63
7.4 Motors....63
7.4.1 Inspect Gear Box and Motor....63
7.4.2 Clean Motors....63
7.4.3 Lubricate Gear Flange....64
7.4.4 Remove and Install a Filter Mesh Drive Motor and Gear Box....64
7.4.5 Remove and Install a Sludge Auger Drive Motor and Gear Box....65
7.5 Sludge Auger....66
7.5.1 Inspect and Unblock Sludge Auger....66
7.5.2 Clean Inside Sludge Auger Area....67
7.5.3 Inspect Liner....68
7.5.4 Inspect and Maintain Sludge Auger Shear Bolts....69
7.6 Air Knife....70
7.6.1 Inspect and Clean Air Knife....70
7.7 Dewatering Unit (Optional)....71
7.7.1 Inspect and Clean Dewatering Unit....71
7.7.2 Replace Wedge Wire Screen....73
7.8 Level Sensor....74
7.8.1 Replace Level Sensor....74
7.8.2 Level Sensor Offset Adjustment....75
7.8.3 Clean Level Transmitter and Tube....76
7.9 Control Power Panel (CPP)....76
7.9.1 Inspect and Resolve Active Alarms....76
7.9.2 Inspect and Clean Air Filter....77
7.9.3 Clean Control Power Panel (CPP)....77
7.10 Air Blower....77

Section 8 Troubleshooting....79
8.1 Responding to Filter Component Failure Conditions....79
8.2 Responding to Control Power Panel (CPP) Alarms....81

Section 9 Replacement Parts....89
9.1 Filter....89
9.1.1 Filter (Internal) Components....89
9.1.2 Filter (External) Components....91
9.2 Dewater Unit Components....91
9.3 Air Knife Components....92
9.4 Instrumentation Components....92
9.5 Operator Kit Components....92
9.6 Miscellaneous Parts....92
9.7 Blower....93

Section 1 Specifications

Specifications are subject to change without notice.

SF: 2000	
General	
Environment ambient Temperature	0ºC - 40ºC (32ºF - 104ºF)
Maximum Hydraulic Flow (clean water, filter)	144 m³/hr (0.92 MGD)
Air Knife	
Air Knife Operating Pressure	0,15 -0,25 bar (max 0,4 bar) / 2.1 -3.6 psi (max 5.8 psi)
Filter	
Weight of the filter unit: (may vary based on specific design)	690 kg (1,521 lbs)
Weight with water	1210 kg (2,660 lbs)
Sludge Auger Weight	16 kg (35 lbs)
Typical design flow rate for municipal wastewater	20 liters per second (250 mg per litre)
Water Supply Requirements	Tap Water Quality, 4-6 bar pressure (58-88 psi)
Bottom Drain Flushing Frequency	3 minutes every 24 hours (field adjustable from 1 - 60 minutes between 1 - 24 hours)
Hot and Cold water connection sizes / types	1/2 inch NPT 1/2 inch BSP
Grease	SKF LGWA 2 According to DIN 51825, code KP2N-30 (lithium based)
Control Power Panel	
Environmental	Cooling Fans, Mild Painted Steel, IP54 (Type 12) Cooling Fans, 304 SST, IP54 (Type 12) Air Conditioner, Mild Painted Steel, IP66 (Type 4) Air Conditioner, 304 SST, IP66 (Type 4X)
Cabinet Ambient Temperature Limit	Cooling Fans: 35ºC (95ºF) Air Conditioner: 40ºC (104ºF)
Panel Weight	With Cooling Fans: 60 kgs (132 lbs) With Air Conditioner: 97 kgs (214 lbs)
Electrical	480/277V 3 ph, 3 wire + gnd, 60 Hz 400/230V 3 ph, 3 wire + gnd, 50 Hz
Surge Protection	TVSS
Peak Power for filter unit	13 kVA
Distance Between Filter and Panel	35m (115 ft)

SF: 4000	
General	
Environment ambient Temperature	0ºC - 40ºC (32ºF - 104ºF)
Maximum Hydraulic Flow (clean water, filter)	288 m³/hr (1.82 MGD)
Air Knife	
Air Knife Operating Pressure	0,15 -0,25 bar (max 0,4 bar) / 2.1 -3.6 psi (max 5.8 psi)
Filter	
Weight of the filter unit: (may vary based on specific design)	1,020 kg (2,248 lbs)
Weight with water	1,910 kg (4,200 lbs)
Sludge Auger Weight	34kg (75 lbs)
Typical design flow rate for municipal wastewater	40 liters per second (250 mg per litre)
Water Supply Requirements	Tap Water Quality, 4-6 bar pressure (58-88 psi)
Bottom Drain Flushing Frequency	3 minutes every 24 hours (field adjustable from 1 - 60 minutes between 1 - 24 hours)

SF: 4000	
Hot and Cold water connection sizes / types	1/2 inch NPT 1/2 inch BSP
Grease	SKF LGWA 2 According to DIN 51825, code KP2N-30 (lithium based)
Control Power Panel	
Environmental	Cooling Fans, Mild Painted Steel, IP54 (Type 12) Cooling Fans, 304 SST, IP54 (Type 12) Air Conditioner, Mild Painted Steel, IP66 (Type 4) Air Conditioner, 304 SST, IP66 (Type 4X)
Cabinet Ambient Temperature Limit	Cooling Fans: 35ºC (95ºF) Air Conditioner: 40ºC (104ºF)
Panel Weight	With Cooling Fans: 60 kgs (132 lbs) With Air Conditioner: 97 kgs (214 lbs)
Electrical	480/277V 3 ph, 3 wire + gnd, 60 Hz 400/230V 3 ph, 3 wire + gnd, 50 Hz
Surge Protection	TVSS
Peak Power for filter unit	16.8 kVA
Distance Between Filter and Panel	35m (115 ft)

SF: 6000	
General	
Environment ambient Temperature	0ºC - 40ºC (32ºF - 104ºF)
Maximum Hydraulic Flow (clean water, filter)	576 m³/hr (3.65 MGD)
Air Knife	
Air Knife Operating Pressure	0,15 -0,25 bar (max 0,4 bar) / 2.1 -3.6 psi (max 5.8 psi)
Filter	
Weight of the filter unit: (may vary based on specific design)	1,120 kg (2,469 lbs)
Weight with water	2,450 kg (5390 lbs)
Sludge Auger Weight	53 kg (117 lbs)
Typical design flow rate for municipal wastewater	75 liters per second (250 mg per litre)
Water Supply Requirements	Tap Water Quality, 4-6 bar pressure (58-88 psi)
Bottom Drain Flushing Frequency	3 minutes every 24 hours (field adjustable from 1 - 60 minutes between 1 - 24 hours)
Hot and Cold water connection sizes / types	1/2 inch NPT 1/2 inch BSP
Grease	SKF LGWA 2 According to DIN 51825, code KP2N-30 (lithium based)
Control Power Panel	
Environmental	Cooling Fans, Mild Painted Steel, IP54 (Type 12) Cooling Fans, 304 SST, IP54 (Type 12) Air Conditioner, Mild Painted Steel, IP66 (Type 4) Air Conditioner, 304 SST, IP66 (Type 4X)
Cabinet Ambient Temperature Limit	Cooling Fans: 35ºC (95ºF) Air Conditioner: 40ºC (104ºF)
Panel Weight	With Cooling Fans: 60 kgs (132 lbs) With Air Conditioner: 97 kgs (214 lbs)
Electrical	480/277V 3 ph, 3 wire + gnd, 60 Hz 400/230V 3 ph, 3 wire + gnd, 50 Hz

SF: 6000	
Surge Protection	TVSS
Peak Power for filter unit	16.8 kVA
Distance Between Filter and Panel	35m (115 ft)

Certification	
All Models	CE and UL available

Section 2 Safety Information

Please read this entire manual before operating this equipment. Pay attention to all danger, warning and caution statements in this manual. Failure to do so could result in serious personal injury or damage to the equipment.

Make sure that the protection provided by this equipment is not impaired. Do not use or install this equipment in any manner other than that specified in installation manual.

2.1 Use of Hazard Information

⚠ DANGER

Indicates a potentially or imminently hazardous situation which, if not avoided, will result in death or serious injury.

⚠ WARNING

Indicates a potentially or imminently hazardous situation which, if not avoided, could result in death or serious injury.

⚠ CAUTION

Indicates a potentially hazardous situation which, if not avoided, could result in minor or moderate injury.

NOTICE

Indicates a situation that is not related to personal injury.

2.2 Precautionary Labels

Read all labels and tags attached to the instrument. Personal injury or damage to the instrument could occur if not observed.

	Electrical equipment marked with this symbol may not be disposed of in European public disposal systems. In conformity with European local and national regulations (EU Directive 2002/96/EC), European electrical equipment users must now return old or end-of life equipment to the Producer for disposal at no charge to the user. ***Note:*** *For recycling, please contact the equipment producer or supplier for instructions on how to return end-of-life equipment, producer-supplied electrical accessories, and all auxiliary items for proper disposal. No equipment is to be returned without authorization. Local recycling programs may be used.*
	This is the safety alert symbol. Obey all safety messages that follow this symbol to avoid potential injury. If on the instrument, refer to the instruction manual for operation or safety information.
	This symbol indicates a risk of electrical shock and/or electrocution exists.
	This symbol indicates that the marked item has stored energy. Obey procedures to wait 5 (five) minutes after disconnecting main power to allow stored energy to dissipate.
	This symbol indicates the marked item could inject fluid into the skin.
	This symbol indicates machine may start automatically without warning.
	This symbol indicates the components of the system have been exposed to biohazardous waste and / or bioaerosols.

	This symbol indicates a rotational pinch hazard.
	This symbol indicates auger entanglement and should stay clear.
	This symbol indicates a belt entanglement hazard. Stay clear of moving/rotating parts.
	This symbol indicates a fork lift hazard.
	This symbol indicates a body crush hazard. People should stay clear from under overhead loads.
	This symbol indicates surfaces may be slippery or there is a potential fall hazard.
	This symbol indicates surfaces may be slippery and there is a potential fall hazard.
	This symbol indicates the marked item could be hot and should not be touched without gloves.
	This symbol indicates the marked item should not be touched.
	This symbol indicates to STOP.
	This symbol indicates a risk of electrical shock and/or electrocution exists, and that all appropriate lockout tag out procedures must be obeyed.
	This symbol indicates a physical lock is required during operation.
	This symbol indicates to secure the device with a safety device / hook.
	This symbol indicates safety glasses with side protection must be worn as a minimum added protection.
	This symbol indicates a full face shield is required for protection against airborne aerosols.

	This symbol indicates gloves must be worn.
	This symbol indicates safety boots must be worn.
	This symbol indicates a Tyvek® type suit or coveralls must be worn.
	This symbol indicates respiratory protection is required.
	This symbol indicates hearing protection is required.
	This symbol indicates a hard hat must be worn.
	This symbol indicates a safety harness or fall protection equipment must be worn.
	This symbol indicates the operator must read all available documentation to perform the required procedures.

2.3 Safety Precautions

Read the safety precautions in this section before doing maintenance, service or repair. Obey the instructions in the safety precautions. Failure to follow the instructions in the safety precautions can result in serious injury or death.

⚠ DANGER







Automated Machinery Hazard.

Auger Entanglement and Rotational Pinch Hazard.

- Failure to follow these instructions will result in serious injury or death due to AUTO START, entanglement, or rotational pinch.
- ALWAYS stay clear. This unit may start at any time.
- ALWAYS follow lockout tag out procedures, as required by ***Operation and Maintenance Manual*** before opening lid.
- NEVER operate equipment with lid open.

  Exception: *Inspection and cleaning performed in compliance with* ***Operation and Maintenance Manual*** *by competent personnel only.*

⚠ DANGER






Arc Flash and Shock Hazard - Live Electrical Circuit Present.

Hazardous Voltage.

- Failure to follow these instructions will result in electrical shock, injury or death from electrocution.
- Equipment should be accessed by competent personnel only.
- Uninterruptible Power Supply (UPS) outputs are still live after main disconnect is off and some circuits may continue to be energized.
- Turn off UPS and disconnect plugs from UPS outputs before performing any inspection, repair, service or maintenance.
- Lockout tag out all sources of power before performing any inspection, repair, or maintenance. ***There may be more than one source of power!***

⚠ WARNING




Body Crush Hazard.

- Failure to follow these instructions could result in serious injury or death due to improper lifting procedures and under rated lifting equipment.
- Inspection, repair and maintenance must be performed by competent personnel only.
- ALWAYS secure with safety device.
- ALWAYS stay clear of elevated loads.

⚠ WARNING






Biohazard.

- Failure to follow these instructions could result in serious injury or death due to contact with biohazardous materials.
- Inspection, repair and maintenance must be performed by competent personnel only.
- ALWAYS wear safety glasses and gloves when working on or around the equipment.
- ALWAYS wear respirator when working on or around the equipment when bioaerosols are present.

⚠ CAUTION





Slip and Fall Hazard.

- Failure to follow these instructions may result in injuries due to falls.
- Wet surfaces may be slippery.
- ALWAYS wear slip resistant footwear.
- ALWAYS use Safety Harness or Fall protection equipment when working around channel edge.

⚠ CAUTION



Burn Hazard.

- Failure to follow these instructions may result in minor or moderate injury due to burns.
- NEVER touch hot surface.

NOTICE



PPE Required.

Contamination of components is expected within this application due to effluent water. The manufacturer requires operators take all necessary precautions when working around, operating, or working on this equipment.

- ALWAYS use appropriate hearing protection when in an area with airborne noise emissions, A-weighted emission sound pressure, are above 70dB(A). Hearing protection is recommended when working around an operating air blower, air conditioner, or dewatering unit.
- ALWAYS use appropriate eye, hand, and foot protection.
- ALWAYS wear a face shield when inspecting open running equipment.
- ALWAYS wear respirator and appropriate clothing including thick gloves when bioaerosols are present.
- ALWAYS wear appropriate PPE as required by applicable regulations, depending on system application and plant procedures, to protect face, hands, and body from the process liquids, solids, and aerosols.
- ALWAYS follow plant safety procedures and protocols.
- Dispose of contaminated parts/components as per country requirements.

NOTICE



Avoid Injury.

- Read and understand the ***Operation and Maintenance Manual*** before operating this equipment.
- Use personal protective equipment appropriate to work being performed as required by local regulations and ***Operation and Maintenance Manual***.

NOTICE

Only competent personnel should undertake operation, repairs, maintenance, or servicing of equipment described in this manual. Maintain the continuity of the lockout tag out between shifts. If you do not understand the information or procedure explanations in this manual, STOP and contact your Service Provider for assistance.

2.4 Safety Features

The system has safety features that prevent personal injury:

- Emergency shut off
- Keyed Lid Lock
- Disconnects

The information in this manual has been carefully checked and is believed to be accurate. However, the manufacturer assumes no responsibility for any inaccuracies that may be contained in this manual. In no event will the manufacturer be liable for direct, indirect, special, incidental or consequential damages resulting from any defect or omission in this manual, even if advised of the possibility of such damages. In the interest of continued product development, the manufacturer reserves the right to make improvements in this manual and the products it describes at any time, without notice or obligation.

3.1 System Overview

The system is used for primary filtering of municipal wastewater effluent, and for industrial applications such as the fishing industry, fish net laundry facilities, pulp and paper industry, breweries, food processing industry, textile industry, tanneries, cruise ships, etc. The different models all perform the same function, but are scaled for different volumes of water.

3.1.1 System Components

The system is designed and produced to reduce the total suspended solids and consists of the following components.

- Filter - separates liquid from solids
- Air blower - produces air for cleaning the filter mesh
- Control Power Panel (CPP) - provides power and controls to the filter. For certain installations, the functionality of the CPP will be an integrated part of the main control system for the whole plant.

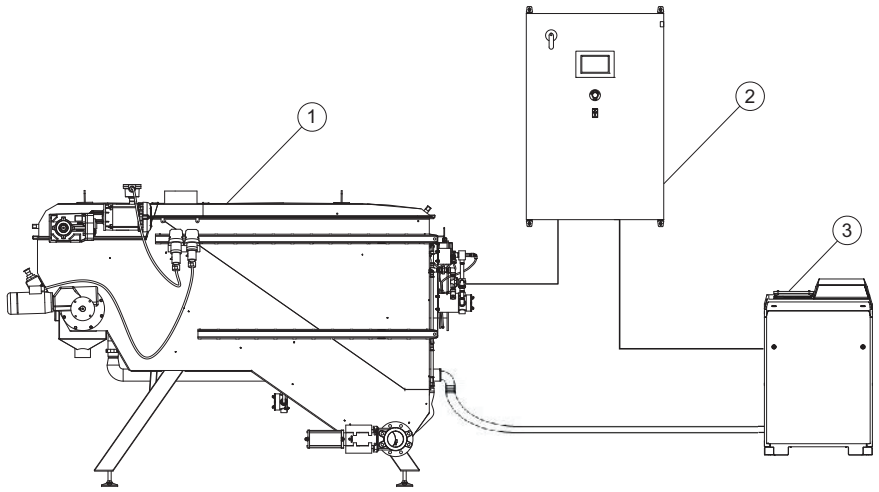

Figure 1 System Major Components

1	Filter Unit	**2**	Control Power Panel (CPP)
3	Air Blower		

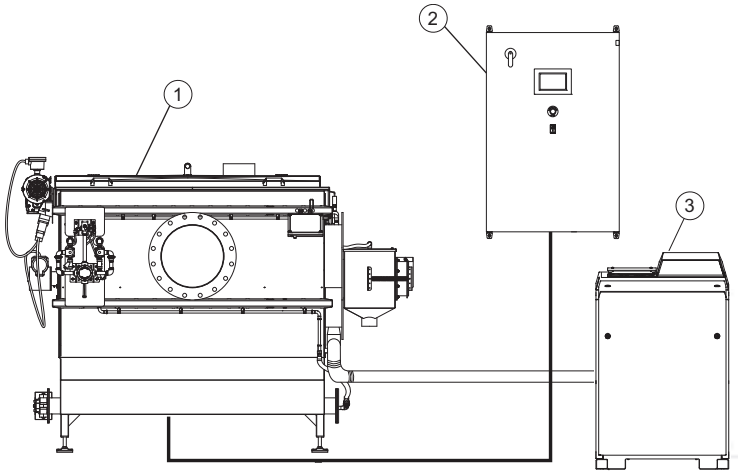

Figure 2 System Major Components

1	Filter Unit	**2**	Control Power Panel (CPP)
3	Air Blower		

3.2 Filter Components

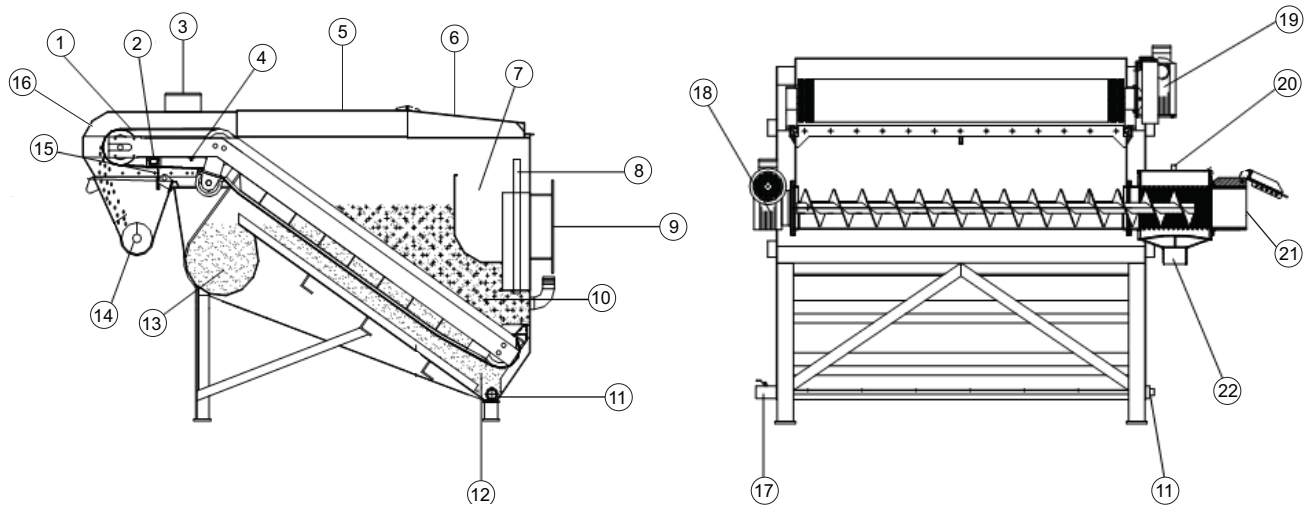

Figure 3 Filter Unit - Details

1	Filter Mesh	**2**	Air Knife
3	Ventilation	**4**	Flushing Nozzle
5	Center Lid	**6**	Inlet Lid
7	Overflow	**8**	Level Transmitter
9	Inlet	**10**	Untreated wastewater
11	Bottom Flush	**12**	Filtered Wastewater
13	Outlet	**14**	Sludge Auger
15	Tension Bar	**16**	Sludge Auger Lid
17	Drain	**18**	Motor, Sludge Screw
19	Motor, Filter Mesh	**20**	Dewatering Unit Lid (optional)
21	Dewatering Unit sludge outlet (optional)	**22**	Outlet, Dewatering Unit Wastewater (optional)

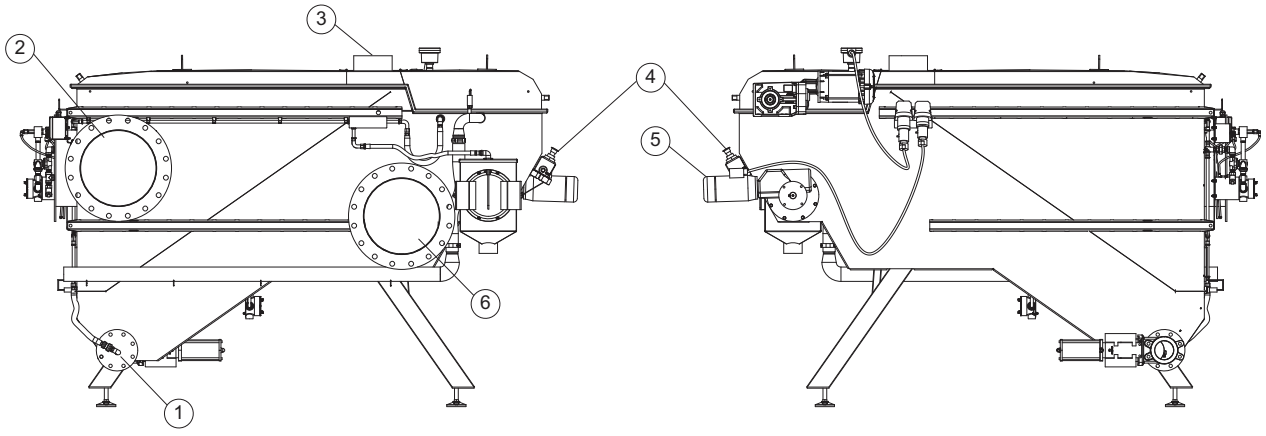

Figure 4 Filter Unit - Details

1	Cold Water Flush	**2**	Outlet
3	Vent (optional)	**4**	Emergency Stop
5	Sludge Conveyor Motor	**6**	Overflow

Filter Mesh
The filter mesh is a holed material that rotates on a belt. The solids above the filter mesh create a “filter mat”. The mat enhances separation performance as particles buildup on the mesh, creating progressively smaller holes that retain increasingly smaller particles. Water that is filtered past the mesh exits through the outlet.

Water Level Sensor
The Water Level Sensor measures the wastewater influent to a certain level allowing the filter mesh to start rotating and creating the filter mat.

Air Knife
The Air Knife is first initiated, air pressure is sensed and the filter mesh begins to rotate. Air Knife uses blower air to remove the filter mat from the filter mesh into the Sludge Conveyor compartment.

Sludge Conveyor
The Sludge Conveyor transports the filter mat out of the filter unit.

Dewatering Unit (Optional)
The Dewatering Unit is used to further reduce the moisture content from the filter mat.

Knife Gate Drain Valve
The Knife Gate Drain Valve opens to remove sediment from the filter during the flush procedure.

3.3 Control Power Panel (CPP)

The CPP houses a Programmable Logic Controller that makes this a completely automated system. A water pressure sensor tells the unit when to rotate the filter mesh (and at what speed), while the PLC simultaneously starts the Air Knife and sludge conveyor.

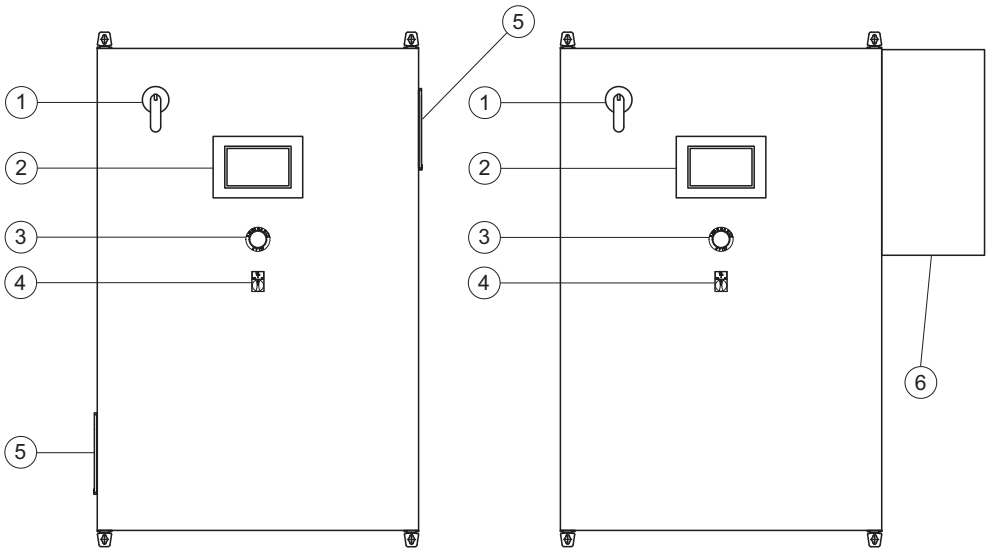

Figure 5 CPP Main Components

1	Disconnect Handle	**2**	Operator Interface Terminal (OIT)
3	Emergency Stop	**4**	Filter Mode Selector Switch
5	Cooling Fan	**6**	Air Conditioner

3.4 Air Blower

The Air Blower works with the Air Knife on the filter unit to clean the filter mesh.

3.5 Acceptable Noise Levels

NOTICE



Hearing protection is recommended when working around an operating air blower, air conditioner, or dewatering unit. Follow plant procedures.

The airborne noise emissions, A-weighted emission sound pressure level is above 70 dB(A) and less than 85 dB(A).

3.6 Patents and Permissions

The system in this manual may be protected by one or more patents in Norway and/or other countries. For a list of patents owned by Salsnes Filter®, go to www.trojantechnologies.com/patents.

No part of this publication may be reproduced, stored in a retrieval system, or transmitted in any form or by any means without written permission of Salsnes Filter®.

3.7 Abbreviations and Acronyms

Table 1 describes the abbreviations and acronyms included in this manual.

Table 1 Abbreviations and Acronyms

Abbreviation/Acronyms	Description
CPP	Control Power Panel
D gain	Derivative gain
HMI	Human Machine Interface
I gain	Integral gain
OIT	Operator Interface Terminal
P gain	Proportional gain
P mode	Proportional mode
PID mode	Proportional Integral Derivative mode
PLC	Programmable Logic Controller
PPE	Personal Protection Equipment
UPS	Uninterrupted Power Supply
VFD	Variable Frequency Drive

⚠ DANGER



Obey all warning and caution statements. Refer to Section 2.

Read and understand this Operation and Maintenance Manual before operating this equipment. Read all user documentation before performing operations, inspections, repair, or maintenance on this equipment.

Only competent personnel should undertake operation, repairs, maintenance, or servicing of equipment described in this section of the manual. If you do not understand the information or procedure explanations in this manual, STOP and contact your Service Provider for assistance.

The procedure in Section 4.1 is the minimum lockout requirement. Use additional precautions, as needed. Obey all site-specific protocols.

4.1 Lockout Tag Out Procedure

4.1.1 Equipment Shutdown

Contact the plant manager or shift supervisor for help regarding equipment location and identification.

1. Ensure no hazards will be created by equipment shutdown.
2. Shutdown all equipment that will need lockout tag out.
3. Ensure all moving parts come to a complete stop.

4.1.2 Deactivate Energy Sources

A hazardous energy source is any energy source that can cause serious personal injury or death. The potential hazardous energy sources in this system are:

1. Identify and deactivate the main isolating device of each energy source:
   -  Electrical energy (Incoming power)
   -  Mechanical (Kinetic Energy)
   -  Thermal (Thermal Energy)
2.  Disconnect all electrical equipment from power:
   - Disconnect all electrical equipment
   - Power off and disconnect electrical power to hard-wired equipment
3.  Dissipate stored electrical energy in capacitors.
4. Close all shut-off valves.

4.1.3 Lockout Tag Out Energy Sources



1. Use a multi-lock scissor adapter to lockout each energy source.
2. Attach a completed lockout tag. Include the required information:
   - Person and company applying the lockout
   - Reason for the lockout
   - Date of the lockout
3. Apply a personal lock.

4.1.4 Verify the Lockout



1. Ensure the volt meter is working correctly with a test before and after measuring the de-energized source:
   a. Test the voltmeter to a known, energized 24 VAC/120 VAC source.
   b. Use the same voltmeter to test the locked-out energy sources to verify that there is no voltage.
   c. Test the voltmeter again to a known, energized 24 VAC/120 VAC source.
2. Ensure the stored energy sources have dissipated.
3. Try to start the de-energized equipment.

4.2 Remove the Lockout Tag Out

When the work is finished, the lockout tag out can be removed.

1. Ensure no hazards will be created by removal of the lockout.
2. Obey manufacturer's instructions and safe work procedures to energize and start the equipment.
3. Clean up the work area.

⚠ DANGER

Obey all warning and caution statements. Refer to Section 2.

Read and understand this Operation and Maintenance Manual before operating this equipment. Read all user documentation before performing operations, inspections, repair, or maintenance on this equipment.Service Provider

Only competent personnel should undertake operation, repairs, maintenance, or servicing of equipment described in this section of the manual. If you do not understand the information or procedure explanations in this manual, STOP and contact your Service Provider for assistance.

5.1 Startup

- Ensure installation is completed. Refer to Installation Manual.

5.1.1 Pre-startup Checklist

Materials:



Procedure:



1. Stay clear from automated machinery. This system can auto start at any time.
2. Ensure area is clear.
3. Spray water on the belts and sealings, if the filter has been out of operation for an extended period of time.
4. Ensure all lids are closed, and the lid lock is engaged, and equipment is ready to operate.
5. Ensure the ventilation system is running as per plant procedures and protocols.
6. Ensure valves/gates are in correct operating position.

5.1.2 System Startup

Prerequisites:



- Pre-startup Checklist. Refer to Section 5.1.1.

Materials:



Procedure:



1. Set the filter mode selector switch to “OIT Mode” on the Control Power Panel (CPP).
2. Remove lockout tag out. Refer to Section 4.
3. On Filter Screen, select OIT control “Automatic” or “Manual” mode. Refer to Figure 9 Item 9.

4. Open the inlet valve.
5. As system water level is achieved, the system will startup.
6. Check Control Power Panel for any alarms.Refer to Section 6.6.6.
7. A the CPP, ensure the air knife pressure is between the acceptable range. Refer to Section 1.
   - If the pressure is too low, check the connections and refer to Section 8.1 for Symptom - Filter Mesh not cleaning.
   - If the pressure is too high, check for blockages or clean the air knife. Refer to Section 7.6.1.

   Note: *To check the pressure at the air blower, refer to the air blower manual for details.*
8. Observe the sludge mass outlet. When sludge mass appears at the sludge mass outlet, the filter unit is functioning properly.

5.1.3 Startup after Emergency Stop

Prerequisites:



- Pre-startup Checklist. Refer to Section 5.1.1.

Materials:



Procedure:

1. Ensure issue is resolved.
2. Pull or twist emergency stop button.
3. Turn the Filter Mode selector switch on the Control Power Panel (CPP) to the off position “0” and then to “Local” or “OIT Mode” to reset the safety relay.
4. Follow startup procedure. Refer to Section 5.1.2.

5.2 Shutdown

5.2.1 Shutdown for Repair or Maintenance

Procedure:



1. Ensure no hazards will be created by equipment shutdown.
2. If inlet valve/gate is manual, isolate and close manually. If inlet valve/gate is automatic, isolate and close at the OIT (HMI) Filter Screen. Refer to Figure 9 Item 8.
3. Open drain valve. Refer to Figure 9 Item 7.
4. Open cold water valve and run for 15 minutes. Refer to Figure 9 Item 3.
5. Turn the Filter Mode Selector Switch on the CPP to the “OFF” position.
6. Turn the Main Disconnect handle on the CPP to shutdown the system. Refer to Section 5.2.1.
7. Lockout tag out components. Refer to Section 4.
8. Ensure all moving parts come to a complete stop.

5.2.2 Emergency Shutdown

The emergency stop button should be used only when absolutely necessary. It will stop all mechanical motion.

Procedure:

1. Push the Emergency Stop Button on the CPP, refer to Figure 5 or at the Filter Unit, refer to Figure 3.

Note: *The location of the emergency stop button at the filter unit may differ depending on the installations. It will stop all mechanical motion.*

⚠ DANGER



Obey all warning and caution statements. Refer to Section 2.

Read and understand this Operation and Maintenance Manual before operating this equipment. Read all user documentation before performing operations, inspections, repair, or maintenance on this equipment.

Only competent personnel should undertake operation, repairs, maintenance, or servicing of equipment described in this section of the manual. If you do not understand the information or procedure explanations in this manual, STOP and contact your Service Provider for assistance.

The parameter values of the control system are set by the manufacturer. These values can be modified according to the current plant conditions in order to achieve optimized operations. These parameters are adjusted on the OIT. Refer to Table 2.

The water flush is set to operate in intervals and for a preset time. Depending on the fat/grease content in the wastewater, which tends to clog the filter mesh, flush interval is adjusted.

The dewatering sludge auger is controlled by a variable frequency drive and is run at a fixed speed depending on the application requirements. It is important that the conveyor screw runs for a certain time after the filter mesh is stopped to empty the tray.

6.1 Overview of Sequence and Principle

The system is controlled by the Control Power Panel (CPP).

1. Raw wastewater enters the system through the inlet.
2. The filter mesh filters the raw wastewater. Filtered water then flows through the outlet.
3. The sludge accumulated on the filter mesh is removed by the air knife device into the sludge outlet.
4. Sludge is transferred by auger through an (optional) dewatering unit.
5. Sludge is then transferred to a sludge collection system (sludge transfer system not supplied).

6.2 Basic Setup Data

The following setup parameters are valid for all units as shown in Table 2.

The CPP supplied has all the default values pre-programmed.

Water levels have the outlet threshold as a reference point zero (0) (Refer to Table 2). A ruler is mounted on the sidewall of the unit to read the actual levels above or below the 0 level.

Table 2 Water levels

	Level pressure transmitter (bottom of level sensor referencing outlet threshold as zero)	Water level - Start (initial value)	Max drive speed level** (initial value)	Water level - Stop (initial value)	Water level - Overflow
SF: 2000	- 45 mm (-1.8 in)	140 mm (5.9 in)	260 mm (10.2 in)	100 mm (3.9 in)	300 mm (11.8 in)
SF: 4000	- 145 mm (- 5.7 in)	160 mm (6.3 in)	280 mm (11.0 in)	120 mm (4.7 in)	320 mm (12.6 in)
SF: 6000	- 145 mm (-5.7 in)	165 mm (6.5 in)	290 mm (11.4 in)	125 mm (4.9 in)	345 mm (13.5 in)

** The motor has reached 60 Hz at this water level. For example, SF: 2000 water level 130mm above 0 will mean the motor is at 50% or 30 Hz.

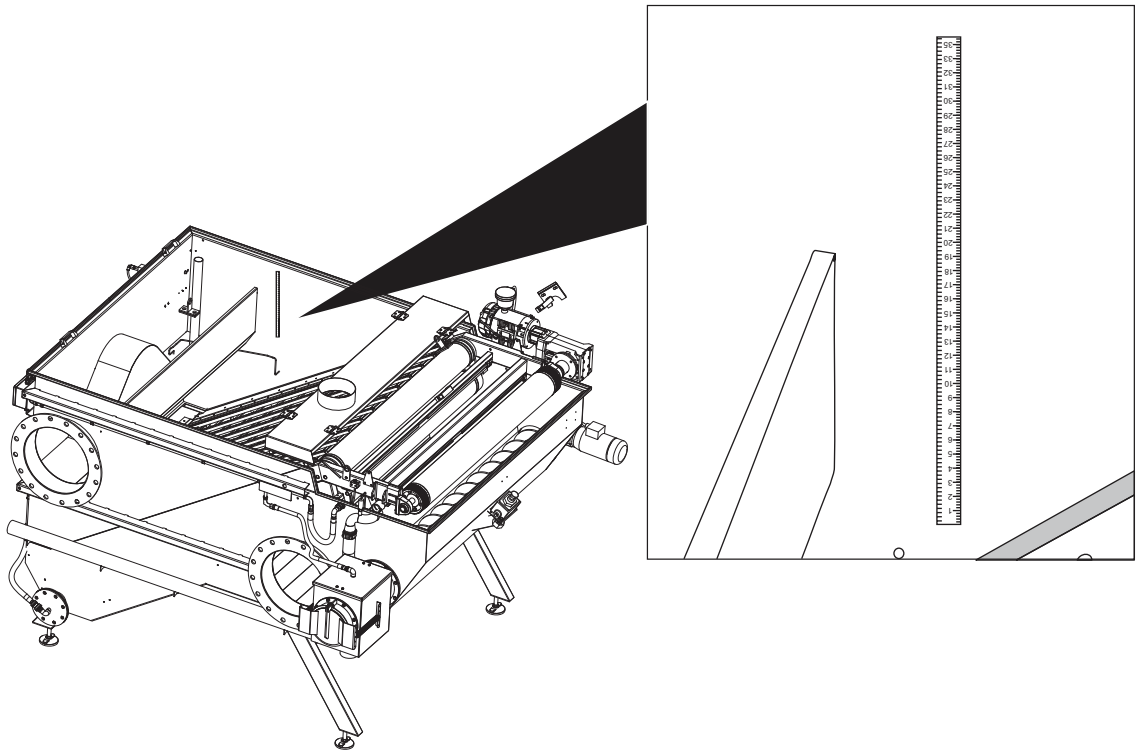

Figure 6 Ruler for Level Measurement

6.3 Switches and Indicators

The following control switches and indicators are needed in the control system for operation of the system. The Filter Mode Selector Switch can be found on the CPP. Refer to Figure 5.

Switch/Indicator	Functions	Description
Filter Mode Selector Switch	Local	Allows filter to run at last pre-set settings. Settings can be adjusted on variable frequency drives.
	Off	Turns system off.
	OIT Mode	Controlled from the Control Power Panel OIT screen.

6.4 Control Modes

The system can run in the following types of Control Modes:

Automatic Control Mode

This mode is used for normal operation, where the filter mesh, sludge auger and water flushing is automatic.

In this mode, the water level sensor provides the inputs to the PLC which are used to control the speed of the filter mesh. The PLC controls the filter mesh, air blower, sludge auger and water flushing. Refer to Table 2 for initial water level settings.

Manual Control Mode

This mode is used for maintenance, test and service purposes of:

- Air Blower Control
- Motor Control
- Valve Control

Local Control Mode

In this mode, the filter mesh and sludge auger both run at the manually entered device speed. The air blower will run continuously. The flush valves and drain valves will not operate.

Off Mode

In this mode, no devices are able to run.

6.5 Navigate Operator Interface Terminal

The OIT on the CPP uses touchscreen technology. Do not use the writing tips of pens or pencils or other sharp objects to make selections on the screen. Use only a clean, dry fingertip or the eraser tip of a pencil.

6.5.1 System Settings

The configuration settings for the system are accessed, reviewed or changed through the System Settings Screens. Push the numeric entry box, enter the value, then push ENTER. Use the pop-up numeric touch pad to enter the desired value.

6.5.1.1 Login Screen

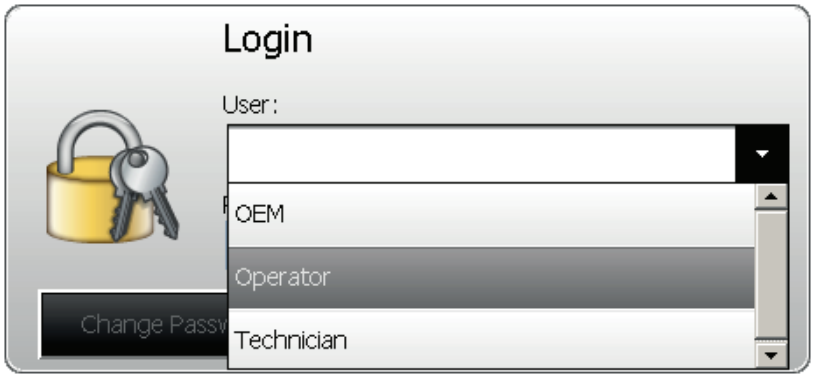

Figure 7 Login Screen

Table 3 Passwords

User	Password
OEM	Access used by Manufacturer only
Technician	Contact your Service Provider
Operator	3333

6.6 Control Power Panel Operation

The CPP contains the control program for the Filter system. The CPP is configured at the factory with inputs and outputs as required for each system. The manufacturer configures the functionality of each of the signals in the control strategy. Daily operation includes monitoring the system functions, and may occasionally require the operator to manually initiate or control processes.

6.6.1 Filter Screen

All OIT screens show navigation buttons around the system. Refer to Figure 8.

	Motor Running (Grey circle with Green Triangle)		Motor Stopped (Grey circle with White Triangle)		Motor Faulted (Grey circle with Red Triangle)
	Valve Open (Grey Valve with Green Rectangle)		Valve Closed (Grey Valve with White Rectangle)		Valve Faulted (Grey Valve with Red Rectangle)

Figure 8 Screen Navigation Buttons

The OIT screens use color codes to help identify types of data. The colored line at the bottom of each screen corresponds with the colored tab currently on display. The Filter Screen displays system status information, system fault indicators and provides the Operator control access.

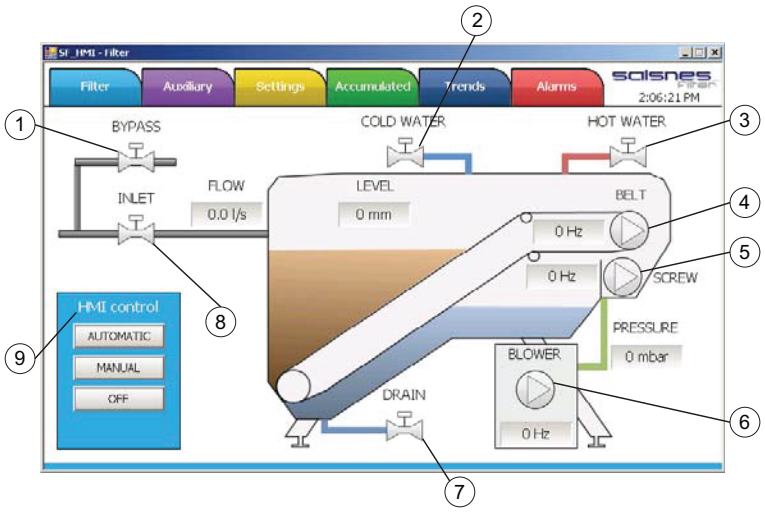

Figure 9 Filter Screen

1	Bypass button	**2**	Cold water button
3	Hot water button	**4**	Belt button
5	Screw button	**6**	Blower button
7	Drain button	**8**	Inlet button
9	OIT (HMI) control (Automatic, Manual, Off) buttons		

Note: *Not all buttons will be active, depending on the systems components.*

The Filter Screen buttons are accessed by selecting the  or  on the Filter Screen located on each device or component.

Note: *The following Filter Screen buttons are displayed below when the unit is set to Manual Mode. Local control buttons are not available when the system is in Automatic Mode.*

Table 4 Filter Screen Buttons

Screen	Description	Screen	Description
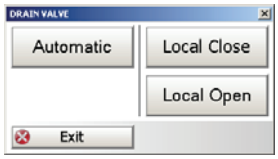	DRAIN VALVE	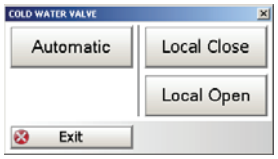	COLD WATER VALVE
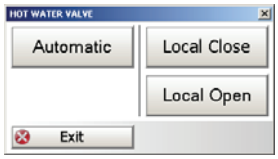	HOT WATER VALVE		FILTER MOTOR
	SLUDGE SCREW MOTOR		AIR BLOWER
	BYPASS VALVE	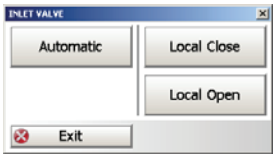	INLET VALVE

6.6.2 Auxiliary Screen

The Auxiliary screen is used to show the external equipment that is not standard on the system such as augers, sludge bins, pump stations etc.



Figure 10 Auxiliary Screen

6.6.3 Settings Screens

The Settings Screens are divided into two levels of access.

General Access screens are available at any time using the Operator level Password. Refer to Table 3.

Technician Access screens require the Technician password.

6.6.3.1 Level Control

The Level Control setting screen is used to configure the basic settings for how the system controls the water level.

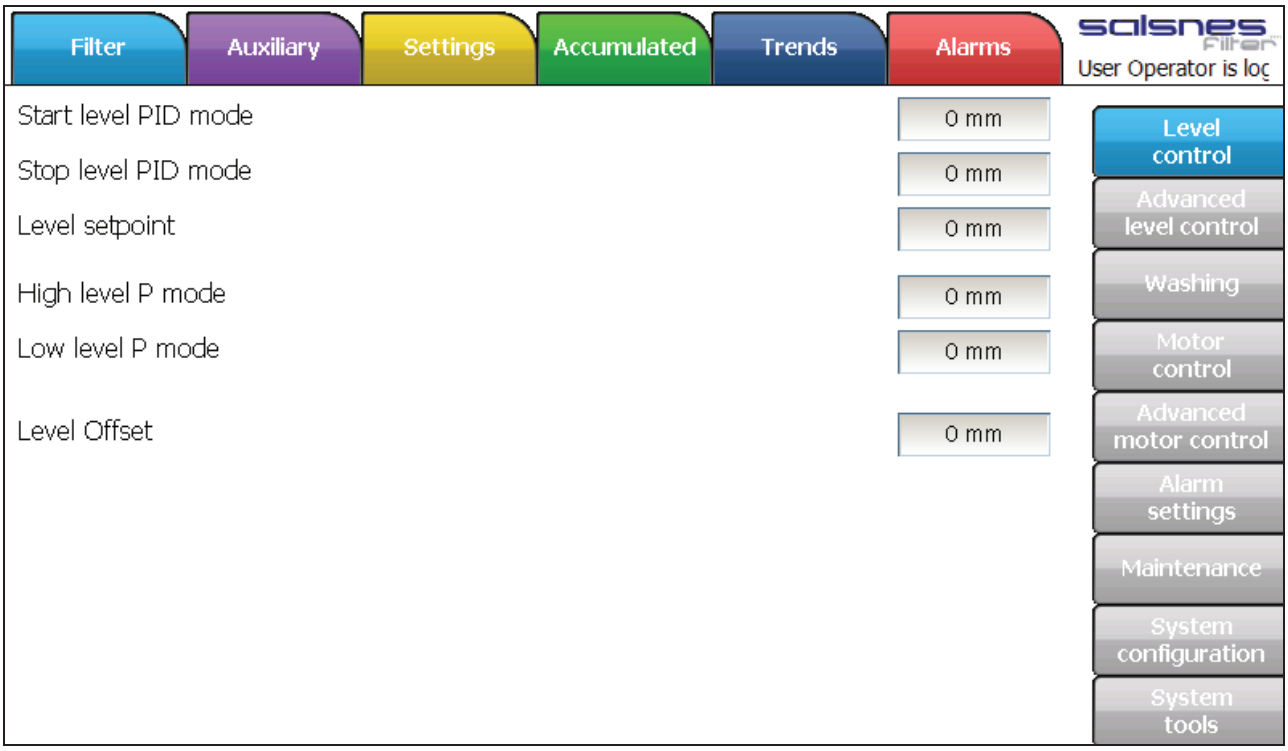

Figure 11 Level Control

Setting	Description	Units	Entry Limits	Security Level
Start Level PID mode	The filter will start when the water level is above this level and the system is in PID mode	mm	None	Operator
Stop Level PID mode	The filter will stop when the water level is below this level and the system is in PID mode. This level must be below the start level.			
Level Setpoint	The water level that the filter will try to maintain when in PID mode			
High level P mode	The water level at which the filter will run at the maximum frequency when in P mode			
Low level P mode	The water level at which the filter will run at the minimum frequency when in P mode			
Level Offset	The correction offset value to apply to the current level sensor reading.			

6.6.3.2 Advanced Level Control

The Advanced Level Control settings screen is used to control how the system responds to changes in level.

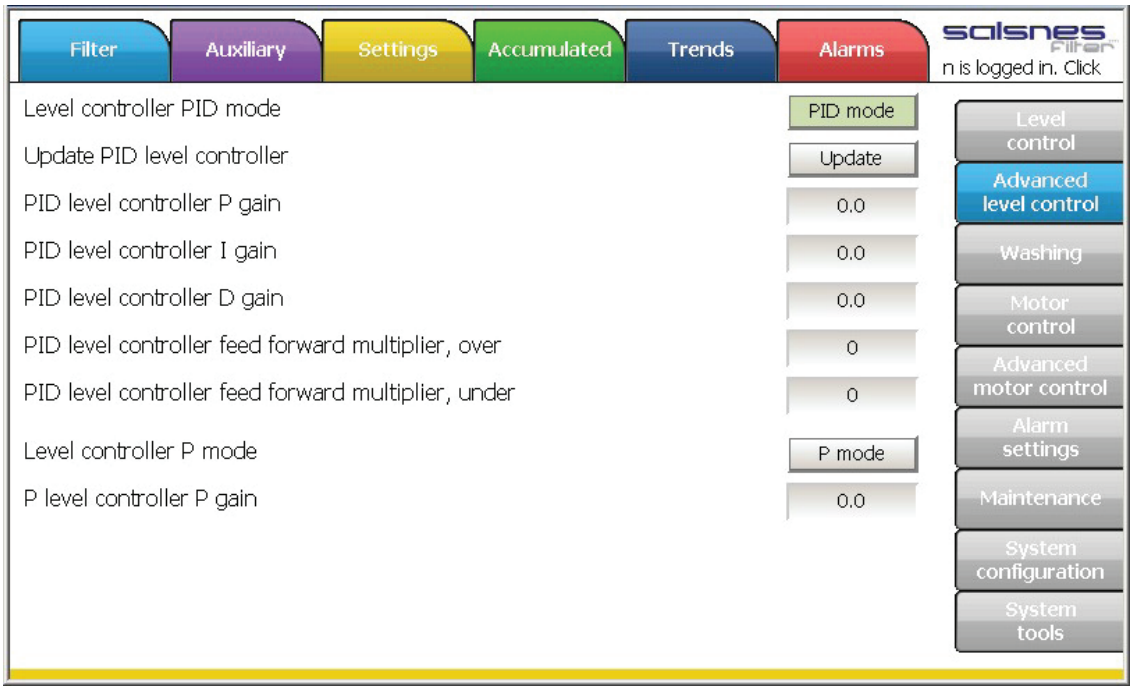

Figure 12 Advanced Level Control

Setting	Description	Units	Entry Limits	Security Level
Level controller PID mode	Sets the controller to use PID level control mode to target a specific water level setpoint using the PID controller to adjust belt speed	None	None	Technician
Update PID level controller	Triggers an update of the PID controller to accept any changes in PID parameters			
PID level controller P gain	Proportional gain of the PID controller			
PID level controller I gain	Integral gain of the PID controller			
PID level controller D gain	Derivative gain of the PID controller			
PID level controller feed forward multiplier, over	Feed forward multiplier of the PID controller when the level is above the target			
PID level controller feed forward multiplier, under	Feed forward multiplier of the PID controller when the level is below the target			
Level controller P mode	Sets the controller to use P level control mode to adjust belt speed as water level changes			
P level controller P gain	Proportional gain of the P controller			

6.6.3.3 Washing

The Washing Setting screen is used to configure the washing frequency and duration. Refer to Section 1 for operational ranges.



Figure 13 Washing

Setting	Description	Units	Entry Limits	Security Level
Cold water wash duty time	Duration that the cold water wash will run for	Seconds	None	Operator
Hot water wash duty time	Duration that the hot water wash will run for			
Cold water wash standby time	Duration between cold water washes	Minutes		
Hot water wash standby time	Duration between hot water washes			

6.6.3.4 Motor Control

The Motor Control Setting screen is used to configure basic motor operation settings and sequences.

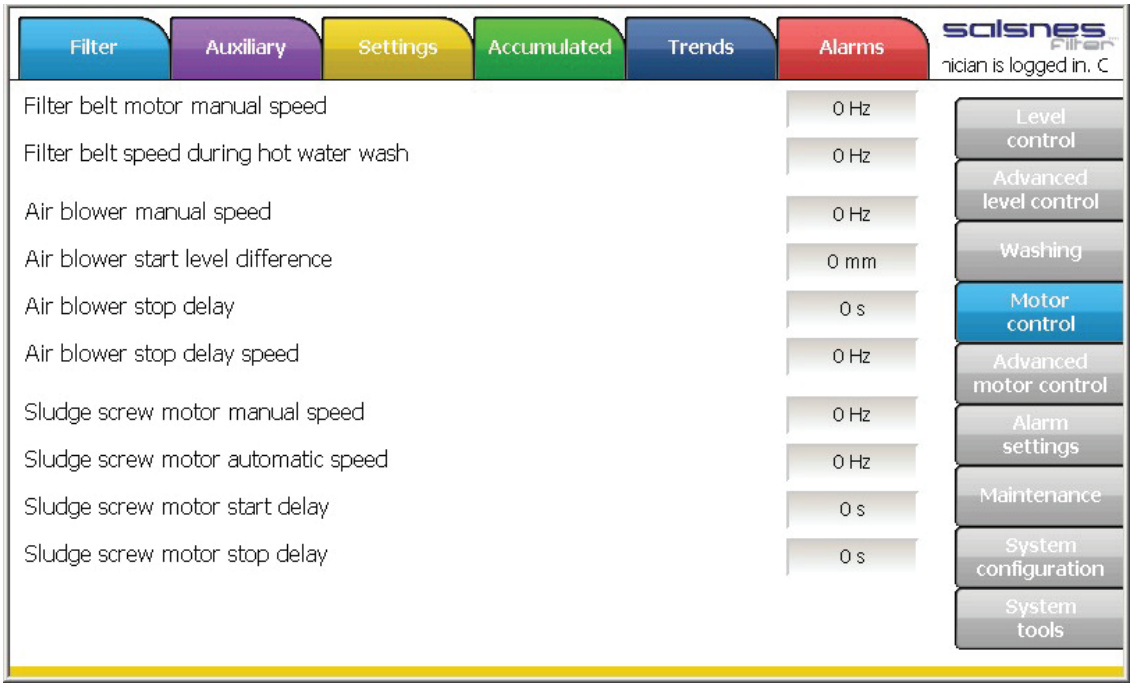

Figure 14 Motor Control

Setting	Description	Units	Entry Limits	Security Level
Filter belt motor manual speed	The speed the filter belt runs when in Manual control mode. This can be adjusted on the filter belt motor popup screen as well. This value is used for speed control when the control mode selector switch is set to Local	Hz	None	Operator
Filter belt speed during hot water wash	The speed the filter belt runs during a hot water wash.			
Air blower manual speed	The speed the air blower runs when in manual control mode. This can be adjusted on the air blower motor popup screen as well. This setting only applies when a VFD is used to control the air blower.			
Air blower start level difference	The distance below the start level setpoint that the air blower starts. The air blower must be running before the filter belt can start.			
Air blower stop delay	The amount of time the air blower remains running once the filter belt stops. This is used to reduce the number of start cycles for the blower.			
Air blower stop delay speed	The speed the air blower runs when the stop delay timer is running. This setting only applies when a VFD is used to control the air blower.			
Sludge screw motor manual speed	The speed the auger runs when in Manual control mode. This can be adjusted on the auger motor popup screen as well. This value is used for speed control when the control mode selector switch is set to Local			
Sludge screw motor manual speed	The speed the auger runs when in Automatic control mode.			

Setting	Description	Units	Entry Limits	Security Level
Sludge screw motor automatic speed	The speed the auger runs when in Automatic control mode.	Hz	None	Operator
Sludge screw motor start delay	The amount of time the filter belt must be running before the auger starts.			
Sludge screw motor stop delay	The amount of time the filter belt must be stopped before the auger stops.			

6.6.3.5 Advanced Motor Control

The Advanced Motor Control Setting screen is used to configure the advanced motor settings and limits.

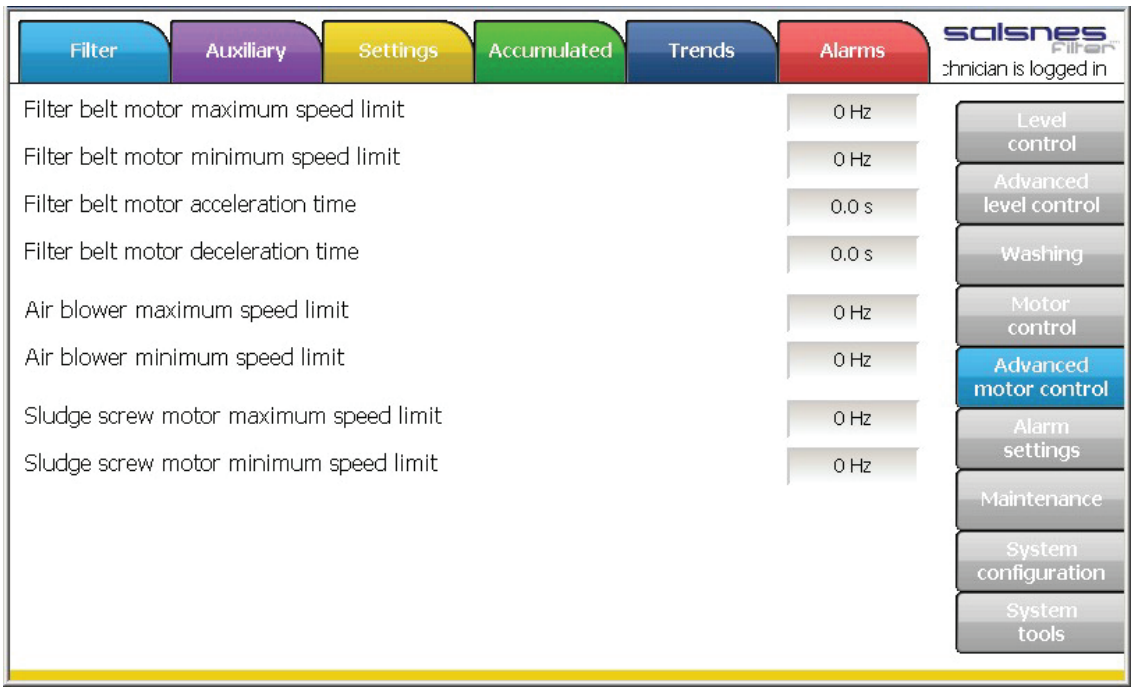

Figure 15 Advanced Motor Control

Setting	Description	Units	Entry Limits	Security Level
Filter belt motor maximum speed limit	The maximum frequency the filter belt motor can run at.	Hz	None	Technician
Filter belt motor minimum speed limit	The minimum frequency the filter belt motor can run at.	Hz		
Filter belt motor acceleration time	The filter belt motor acceleration time	Seconds		
Filter belt motor deceleration time	The filter belt motor deceleration time	Seconds		
Air blower maximum speed limit	The maximum frequency the air blower motor can run at. This setting only applies when a VFD is used to control the air blower.	Hz		
Air blower minimum speed limit	The minimum frequency the air blower motor can run at. This setting only applies when a VFD is used to control the air blower.	Hz		

Setting	Description	Units	Entry Limits	Security Level
Sludge screw motor maximum speed limit	The maximum frequency the auger motor can run at.	Hz	None	Technician
Sludge screw motor minimum speed limit	The minimum frequency the auger motor can run at.			

6.6.3.6 Alarm Settings

The Alarm Setting screen is used to configure operation alarm limits and delay times.

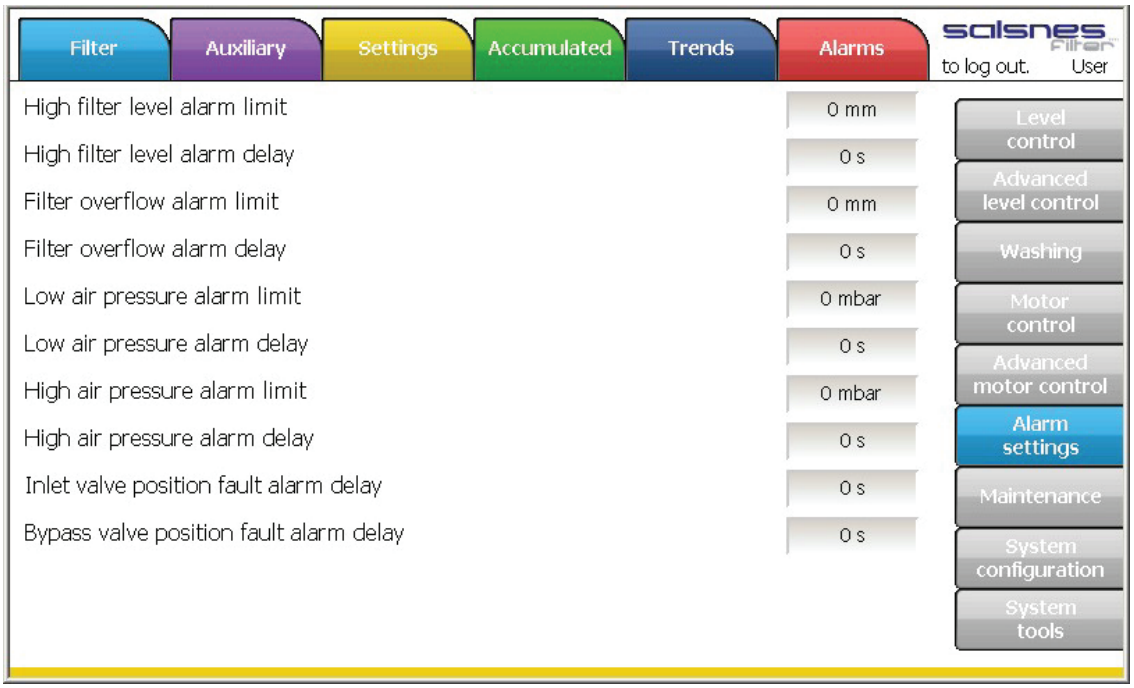

Figure 16 Alarms Settings

Setting	Description	Units	Entry Limits	Security Level
High filter level alarm limit	The alarm will occur if the water level is above this level for the delay time	mm	None	Technician
High filter level alarm delay	The alarm will occur if the water level is above the high limit for this delay time	Seconds		
Filter overflow alarm limit	The alarm will occur if the water level is above this level for the delay time	mm		
Filter overflow alarm delay	The alarm will occur if the water level is above the overflow limit for this delay time	Seconds		
Low air pressure alarm limit	The alarm will occur if the air pressure is below this level for the delay time	mbar		
Low air pressure alarm delay	The alarm will occur if the air pressure is below the low limit for this delay time	Seconds		
High air pressure alarm limit	The alarm will occur if the air pressure is above this level for the delay time	mbar		
High air pressure alarm delay	The alarm will occur if the air pressure is above the high limit for this delay time	Seconds		

Setting	Description	Units	Entry Limits	Security Level
Inlet valve position fault alarm delay	The alarm will occur if the valve has been requested to move to a position and the feedback for that position has not been received for this delay time	Seconds	None	Technician
Bypass valve position fault alarm delay	The alarm will occur if the valve has been requested to move to a position and the feedback for that position has not been received for this delay time	Seconds		

6.6.3.7 Maintenance

The Maintenance Setting screen is used to configure maintenance interval time reminders.

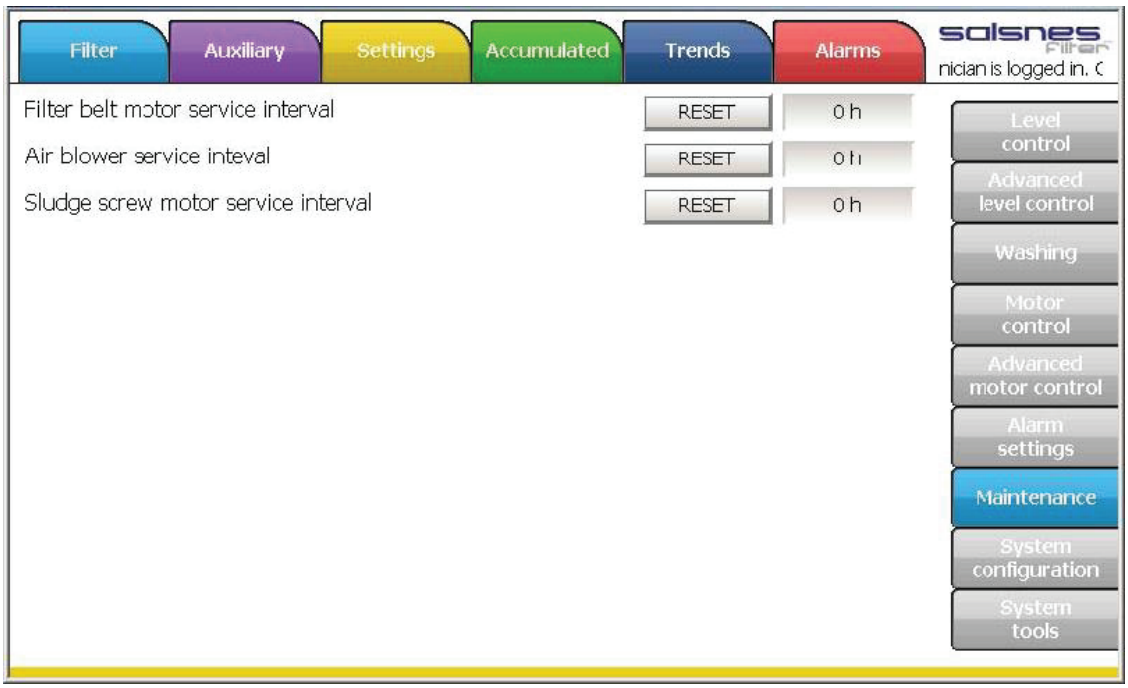

Figure 17 Maintenance

Setting	Description	Units	Entry Limits	Security Level
Filter belt motor service interval	A minor alarm service reminder will occur after the motor has been running for this time	Hours	None	Technician
Air blower service interval	A minor alarm service reminder will occur after the motor has been running for this time			
Sludge screw motor service interval	A minor alarm service reminder will occur after the motor has been running for this time			

6.6.3.8 System Configuration

This feature is for manufacturing Service Providers only.

6.6.3.9 System Tools

The System Tools screen is used to perform control hardware functions and view control hardware operating information.

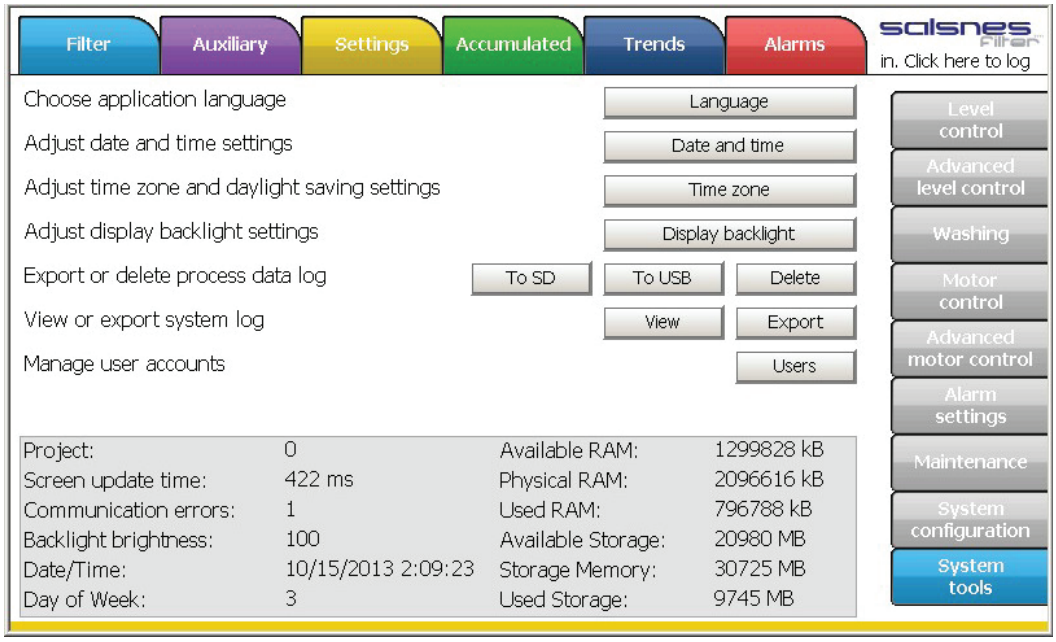

Figure 18 System Tools

Setting	Description	Units	Entry Limits	Security Level
Choose application language	Select the project language for the region	None	None	Technician
Adjust date and time settings	Adjust the data and time for the region			
Adjust time zone and daylight saving setting	Adjust the time zone and daylight saving options for the region			
Adjust display backlight settings	Adjust the backlight settings of the OIT			
Export or delete process data log	Choose which storage method to export the log files to (SD or USB) or delete the log files			
View or export system log	View or export the system logs			
Manage user accounts	Add/remove, change passwords, change security level of user accounts			

6.6.4 Accumulated Screen

The Accumulated Screen displays the runtime status and cycle counts for various filter components for the present day, the previous day and provides a total value. It also displays the number of Filter Overflow events and event duration.

The values are reset by selecting the “RESET” button.



Figure 19 Accumulated screen

6.6.5 Trends Screen

The Trend screen shows trend lines of data logged to an installed user interface Compact Flash card. Each line in the trending window represents the variables that are tracked, and shows the current value for each at the right hand side of the screen. Each line is color-coded.

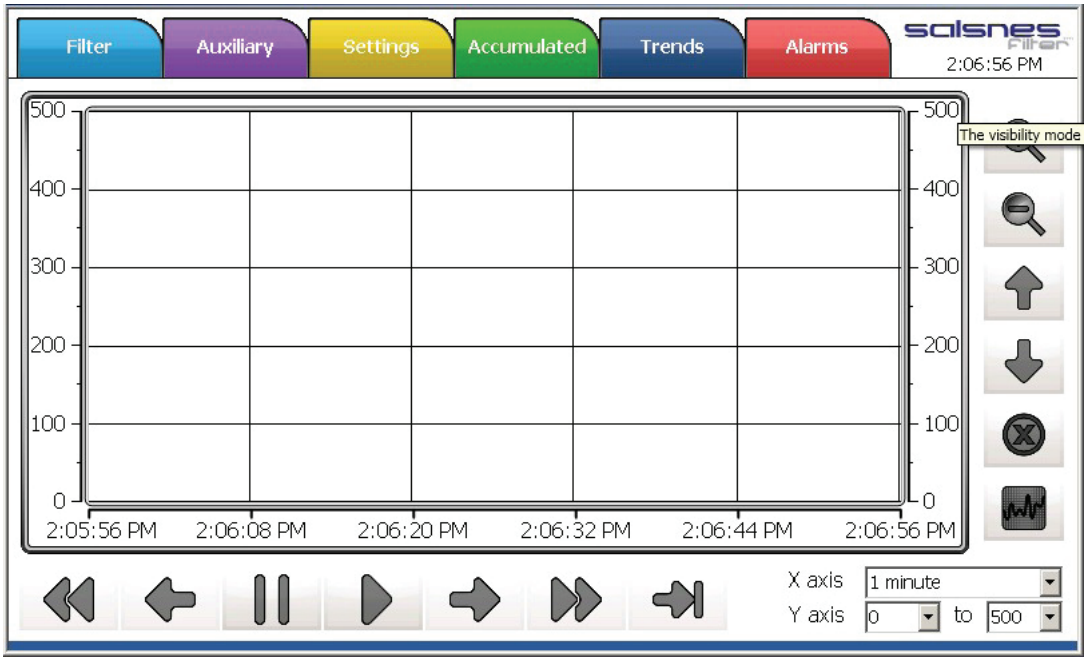

Figure 20 Trends screen

To view Trends:

1. Select  .
2. The Trend legend screen will pop up.

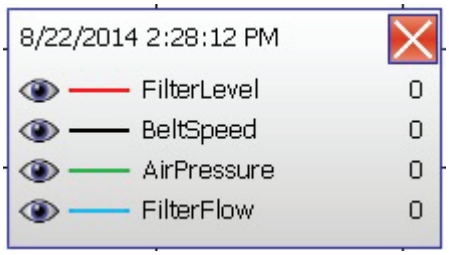

Figure 21 Trend Legend screen

3. Select  to turn the trend on or off from the trend display.

   Note: *The value to the right of the trend list displays the current value.*

6.6.6 Alarms Screen

The Alarm screen is used to display any alarm messages for currently active alarm conditions. This screen is displayed first when the alarm button is pushed, on the Screen Navigation bar. The Alarm screen provides an overview of the current active system alarms. The one hundred (100) most recent alarms are displayed on the Alarm screen. When an alarm condition is rectified and no longer active, it is removed from the Alarm screen.

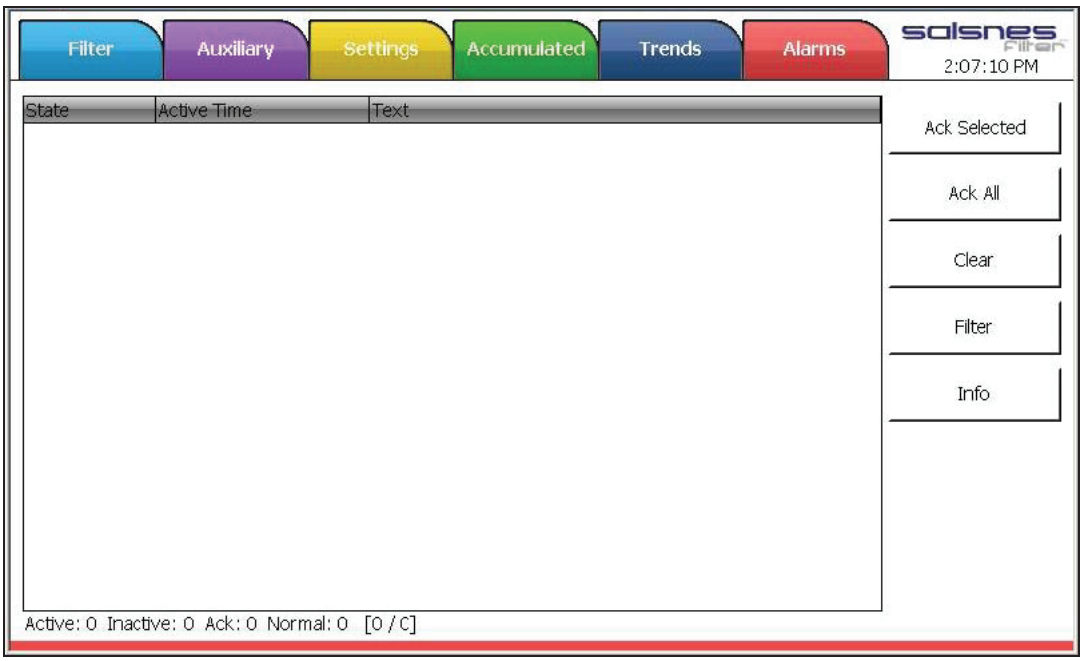

Figure 22 Alarms screen

To acknowledge individual alarms:

1. Touch the alarm on the OIT screen to be cleared.
2. Touch the 

Icon

To acknowledge all active alarms:

1. Touch Ack All Icon.

To Filter Alarms displayed:

1. Touch Filter .
2. The Alarm Event Filter Screen will pop up.

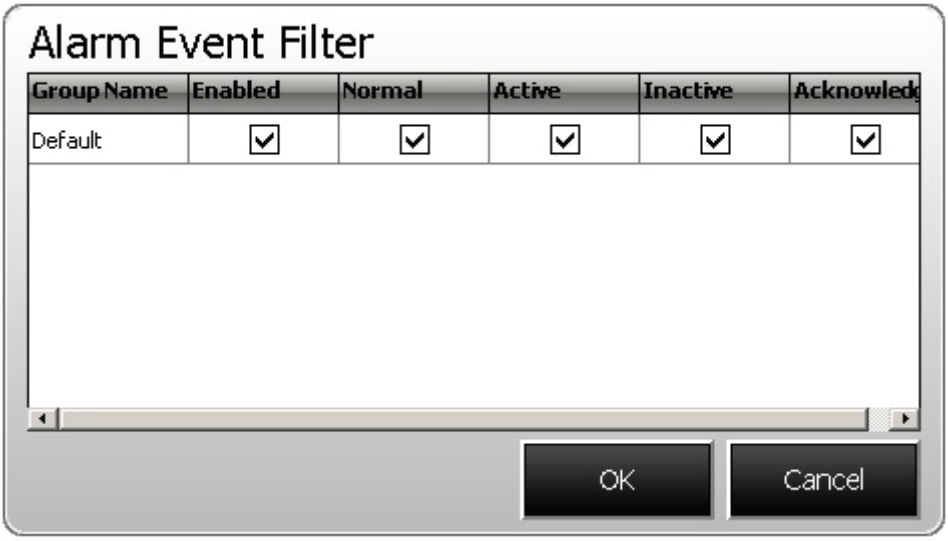

Figure 23 Alarm Event Filter screen

3. Select or deselect alarms to be displayed.

⚠ DANGER



Obey all warning and caution statements. Refer to Section 2.

Read and understand this Operation and Maintenance Manual before operating this equipment. Read all user documentation before performing operations, inspections, repair, or maintenance on this equipment.



Only competent personnel should undertake operation, repairs, maintenance, or servicing of equipment described in this section of the manual. If you do not understand the information or procedure explanations in this manual, STOP and contact your Service Provider for assistance.

7.1 Maintenance Schedule

The manufacturer recommends scheduled complete internal inspections. Routine maintenance consists of partial disassembly, cleaning and visual evaluation of system components. Table 5 describes the periodic maintenance tasks.

Table 5 Maintenance Schedule

Component	Maintenance Requirement	Daily	Weekly	Monthly	As needed	Annually
Sludge Auger	Inspect and unblock sludge auger. Refer to Section 7.5.1.		X			
	Clean inside sludge auger area. Refer to Section 7.5.2.			X		
	Inspect liner for wear. Refer to Section 7.5.3.			X		
	Inspect and maintain sludge auger shear bolts. Refer to Section 7.5.4.			X		
	Lubricate gear flange. Refer to Section 7.4.3.				X	
Drive Motors	Inspect gear box and motor. Refer to Section 7.4.1.			X		
	Clean motors. Refer to Section 7.4.2.				X	
Dewatering Unit (optional)	Inspect and clean wedge wire screen and spray nozzle. Refer to Section 7.7.				X	
	Replace the Wedge Wire Screen. Refer to Section 7.7.2.				X	
Air Knife	Inspect air knife pressure gauge. Refer to Section 7.6.1.	X			X	
	Inspect for even cleaning of the filter mesh. Refer to Section 7.3.4.	X			X	
	Clean air knife. Refer to Section 7.6.1.				X	
Filter	Check the belt tension and alignment. Refer to Section 7.3.9.			X		
	Test the E-stop on the filter unit. Refer to Section 5.2.2.					X
	Inspect the cover lift seal.					X
	Inspect the hot water spray nozzles for clogging and cleaning performance.					X
	Inspect filter mesh for wearing, holes or tears. Refer to Section 7.3.4.		X			
	Clean filter mesh. Refer to Section 7.3.5.			X	X	
	Lubricate drive roller and under roller. Refer to Section 7.3.10.				X	X
Level Sensor	Check Level Sensor Offset. Refer to Section 7.8.2			X		
Control Power Panel (CPP)	Test E-stop. Refer to Section 5.2.2.					X
	Inspect and resolve active alarms. Refer to Section 7.9.1.	X				
	Inspect and clean air filter. Refer to Section 7.9.2.			X	X	
	Clean inside and outside of the Control Power Panel (CPP). Refer to Section 7.9.3.				X	

7.2 Tools and Materials

Symbols	Description	Symbols	Description
	Manual Scraper	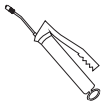	Grease Gun
	Water Hose with Spray Nozzle		Soft Cloth or Rag
	3, 6 mm Allen Key		10, 13, 17, 19, 24 mm Wrench
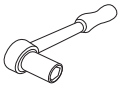	10, 13, 17, 19 mm Socket	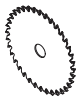	0.4 mm Saw Blade
	Cardboard		Power/Pressure Washer
	Key	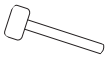	Rubber Mallet
	Pry Bar	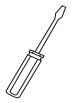	Screwdriver
	Bucket		Stainless Steel Wire Brush
	Spreader Bar	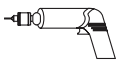	Cordless Drill
	Lifting Straps	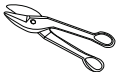	Metal Shear

7.3 Filter

7.3.1 Drain the Filter Unit

Materials:



- Environmentally friendly Degreasing Soap

Procedure:



1. Close the inlet. Refer to Figure 9 Item 8.
2. On Filter Screen, select OIT control “Manual”. Refer to Figure 9 Item 9.
3. Open the Drain valve. Refer to Figure 9 Item 7.
4. Run the filter at 30 hz. Refer to Figure 9 Item 4 and 5.

   Note: *Speed is on the Filter Screen.*
5. Initiate the sprayer nozzles by pressing hot water button. Refer to Figure 9 Item 3.
6. Deactivate the sprayer nozzles by pressing hot water button. Refer to Figure 9 Item 3.

7.3.2 Remove Filter Lids

Prerequisites:



- Bypass and shutdown the filter being inspected. Refer to Section 5.2.1.
- Lockout tag out the system. Refer to Section 4.

Tools:

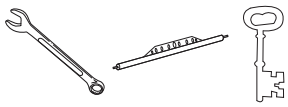

Materials:



Procedure:



Note: *Disconnect ventilation piping (if applicable) from the center lid.*

1. Unlock and lift the lid.
2. Disconnect and remove struts (x4) using 13 mm wrench and socket.
3. Disconnect ventilation piping (if applicable) from the center lid.

4. Remove mounting hardware from both sides of the center lid.
5. Attach spreader bar to appropriate crane or lifting device.
6. Connect the spreader bar to the lifting points on the lid.

   Note: *Insert spreader bar with longer shaft end in first. Secure with provided clip pins.*

7.3.3 Install Filter Lids

Prerequisites:



- Bypass and shutdown the filter being inspected. Refer to Section 5.2.1.
- Lockout tag out the system. Refer to Section 4.
- Connect spreader bar to appropriate crane or lifting device.

Tools:

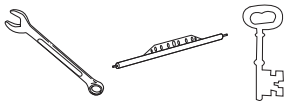

Materials:



Procedure:



1. Connect the spreader bar to the lifting points on the lid.
2. Lift the lid and install on filter unit.
3. Align the center lid mounting holes and loosely install mounting hardware.
4. Install lid struts.

   Note: *Make sure lid struts are fully tighten and then loosened slightly.*
5. Close lids and verify that locks are properly engaging.
6. Tighten center lid mounting hardware.

7.3.4 Inspect Filter Mesh

Prerequisites:



- Drain the Filter Unit. Refer to Section 7.3.1
- Bypass and shutdown the filter being inspected. Refer to Section 5.2.1.
- Lockout tag out the system. Refer to Section 4.
- Open Inlet Lid.

Materials:



Procedure:



1. View the filter mesh for uniform cleanliness.
2. Make sure the belt track lines are up with the cogs on the drive roller.
3. Check the Filter Mesh tension. Readjust belt tension as necessary. Refer to Section 7.3.9.
4. When service is complete, assemble in reverse order of disassembly.

7.3.5 Clean Filter Mesh

Prerequisites:



- Drain the Filter Unit. Refer to Section 7.3.1
- Open the Inlet Lid. Refer to Section 6..

Tools:



Materials:



- Environmentally friendly Degreasing Soap

Procedure:



1. Rotate the filter mesh.
2. Spray degreasing soap water for two revolutions on the filter seam. Clean up spills.
3. Stop filter mesh rotation and soak for 5 minutes. Refer to Figure 9 Item 4 and 5.
4. Initiate filter mesh rotation and flush cycles.
5. Repeat procedure until filter mesh is cleaned. If the filter mesh is not completely clean, additional cleaning with a pressure washer may be required.
6. When service is complete, assemble in reverse order of disassembly.

7.3.6 Remove and Install Filter Frame Assembly

Prerequisites:



- Isolate the filter being maintained. Bypass flow as required per plant procedures. Refer to Section 5.2.1.
- Drain the Filter Unit. Refer to Section 7.3.1
- Clean Filter Mesh. Refer to Section 7.3.5.
- Lockout tag out Control Power Panel (CPP) for associated filter. Refer to Section 4.
- Open and Remove Filter Lids. Refer to Section 6.
- Remove Drive Motor and Gear Box. Refer to Section 7.4.4.
- Wait for the air pipe to cool.

Tools:



Materials:



- Grease. Refer to Section 1.

Procedure:



1. Disconnect the air blower pipe. Refer to illustrated steps.
2. Disconnect the hot water line. Clean up spills. Refer to illustrated steps.
3. Connect the spreader bar to the center lifting points on the filter frame assembly. Refer to illustrated steps.
4. Lift the filter frame assembly out of the filter unit. Place the filter frame assembly flat on cardboard, protecting the rollers.

   Note: *Make sure not to damage the filter mesh during removal and installation.*

5. When service is complete, assemble in reverse order of disassembly.

   Notes: *1) During installation, lubricate the drive roller and under roller. Refer to Section 7.3.10.*
   2) After filter frame assembly installation, check and adjust the tension of the filter mesh. Refer to Section 7.3.9.

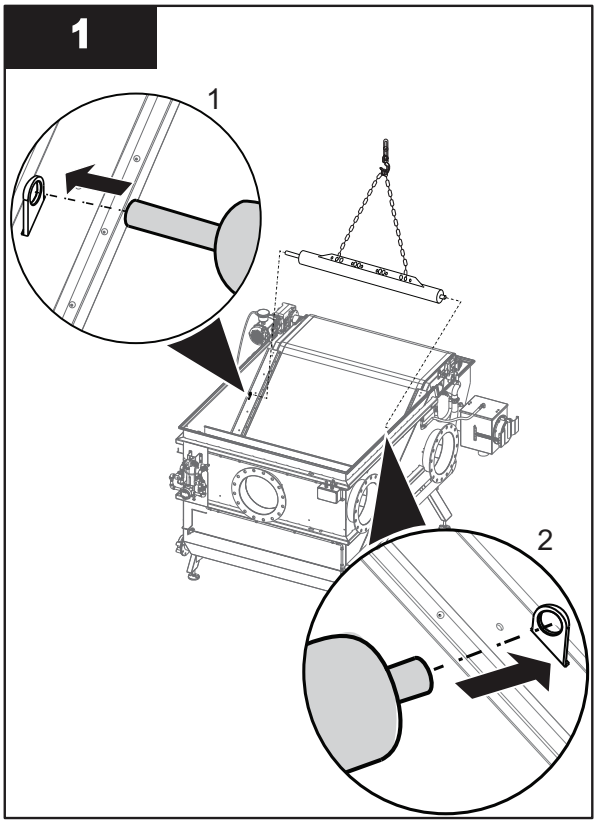
1
1
2

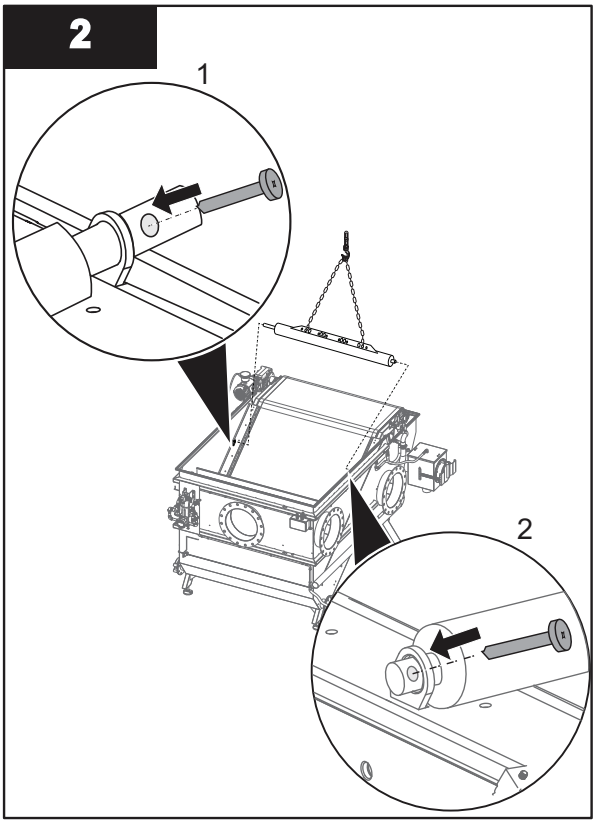
2
1
2

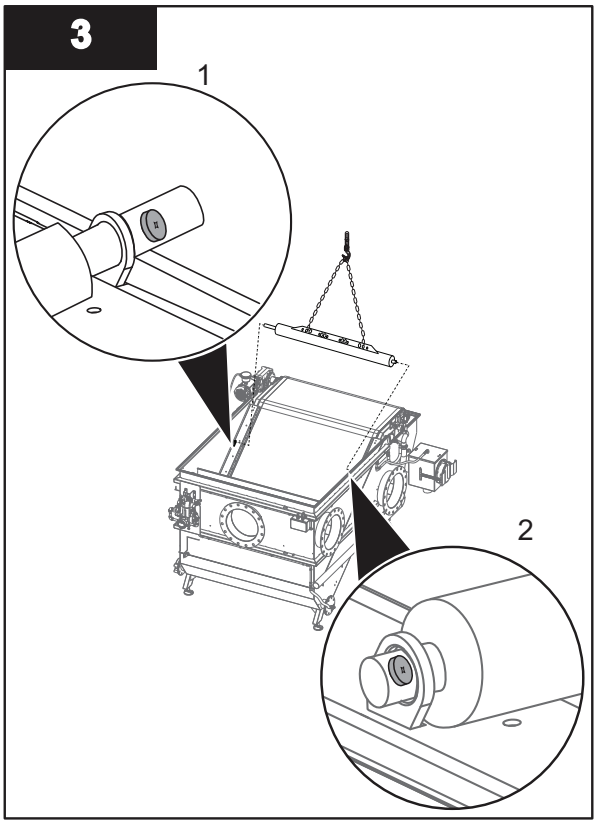
3
1
2

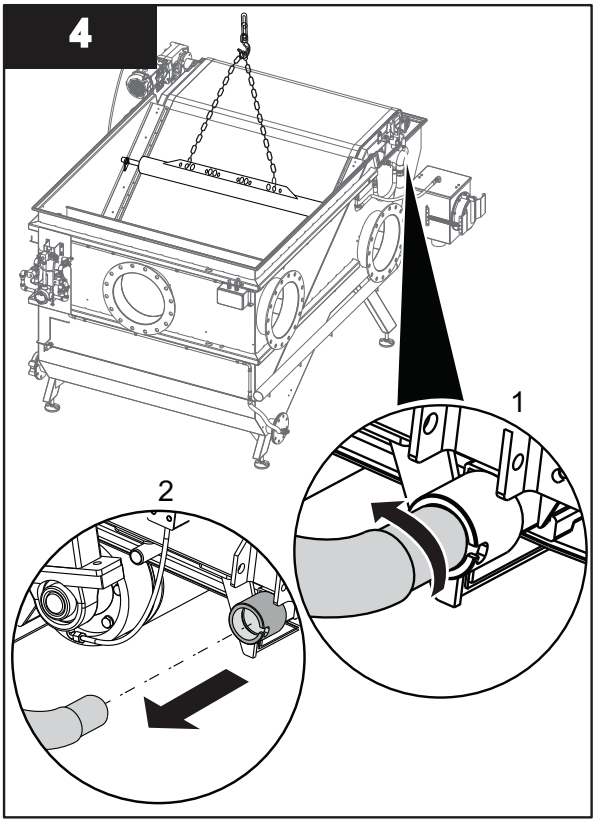
4
1
2

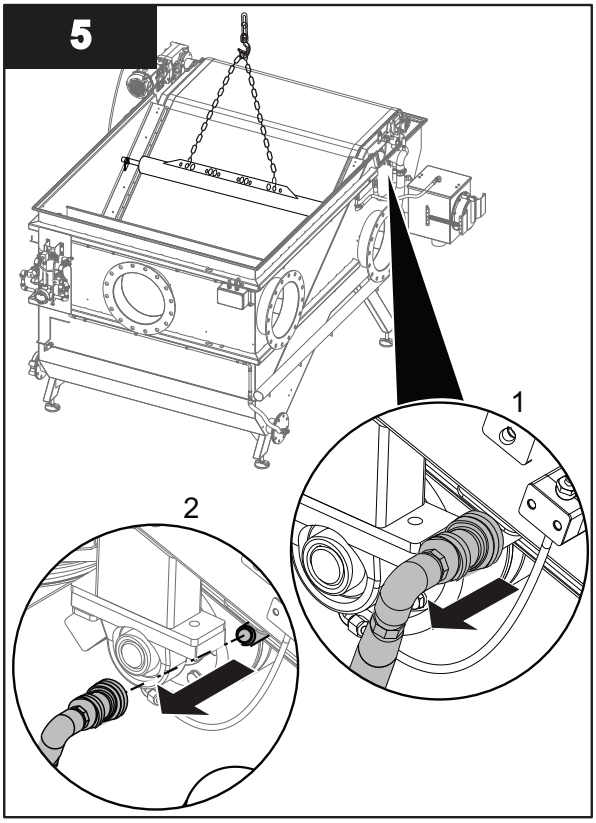

7.3.7 Remove Filter Mesh

Prerequisites:



- Remove Filter Frame Assembly. Refer to Section 7.3.6.

Tools:



- T25 Torx bit

Materials:



Procedure:



1. Reduce the tension on the filter mesh. Refer to Section 7.3.9.
2. Remove the hex head from the fixing bars (6 mm). Refer to Figure 26.

3. Remove the sealing beam hardware, one bolt on each corner. Remove the sealing beam and sealing plate assembly.

   Note: *Use two people to lift the sealing beam and sealing plate assembly to prevent breaking of the silicone seal. Refer to Figure 24.*

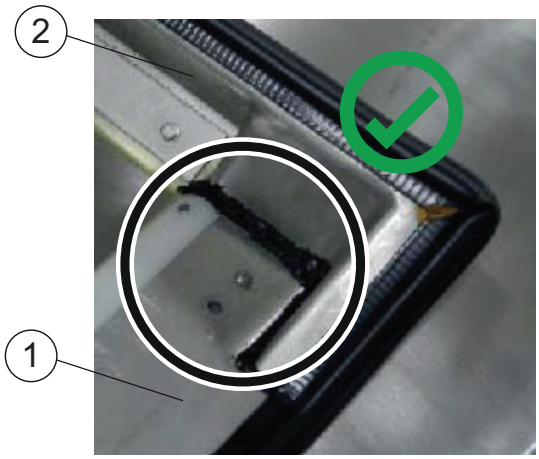

Figure 24 Silicone Seal

1	Fixing Bar	**2**	Sealing Beam

4. Rotate the lifting lugs down. Refer to Figure 26.
5. Remove the strut mounting bracket. Refer to Figure 26.
6. Use a lifting device and strapping, position the filter frame assembly on its side with the motor shaft on top. Refer to Figure 25.
7. Remove the slide bar assemblies on both sides of the filter frame assembly. Refer to Figure 26.

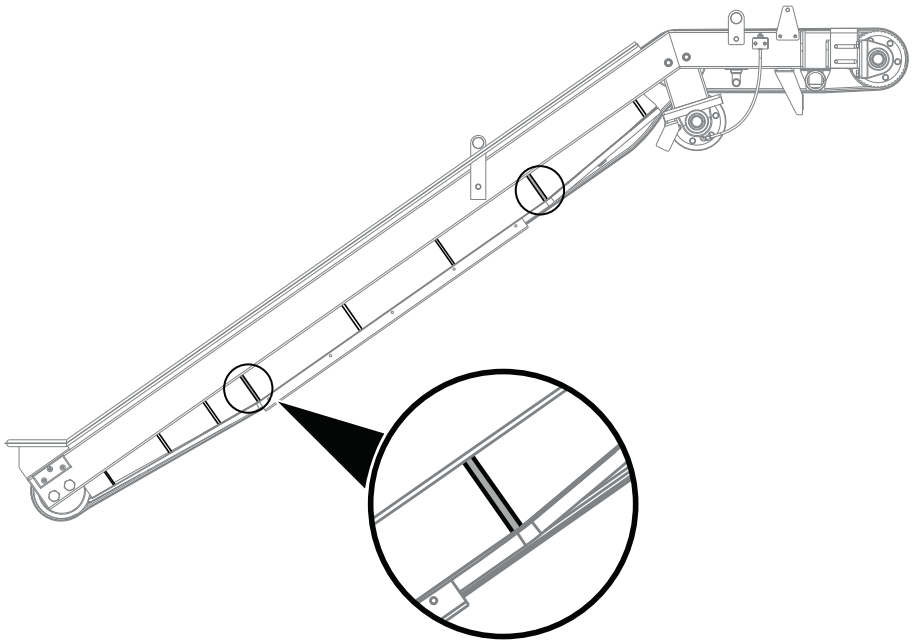

Figure 25 Lifting Points

8. Remove the filter mesh wiper bar hardware.
9. Disconnect the grease tubing from the grease terminal.
10. Remove roller scraper hardware.

11. Remove the under roller hardware.

Notes: *1) Take care when removing the under roller so that it does not become damaged.*

12. Lift the filter frame assembly and slide filter mesh downward.

Note: *Use two people to remove the filter mesh to prevent damage.*

13. Inspect the filter frame and air knife. If excess buildup is visible, use a pressure washer to clear the buildup. Clean up spills.

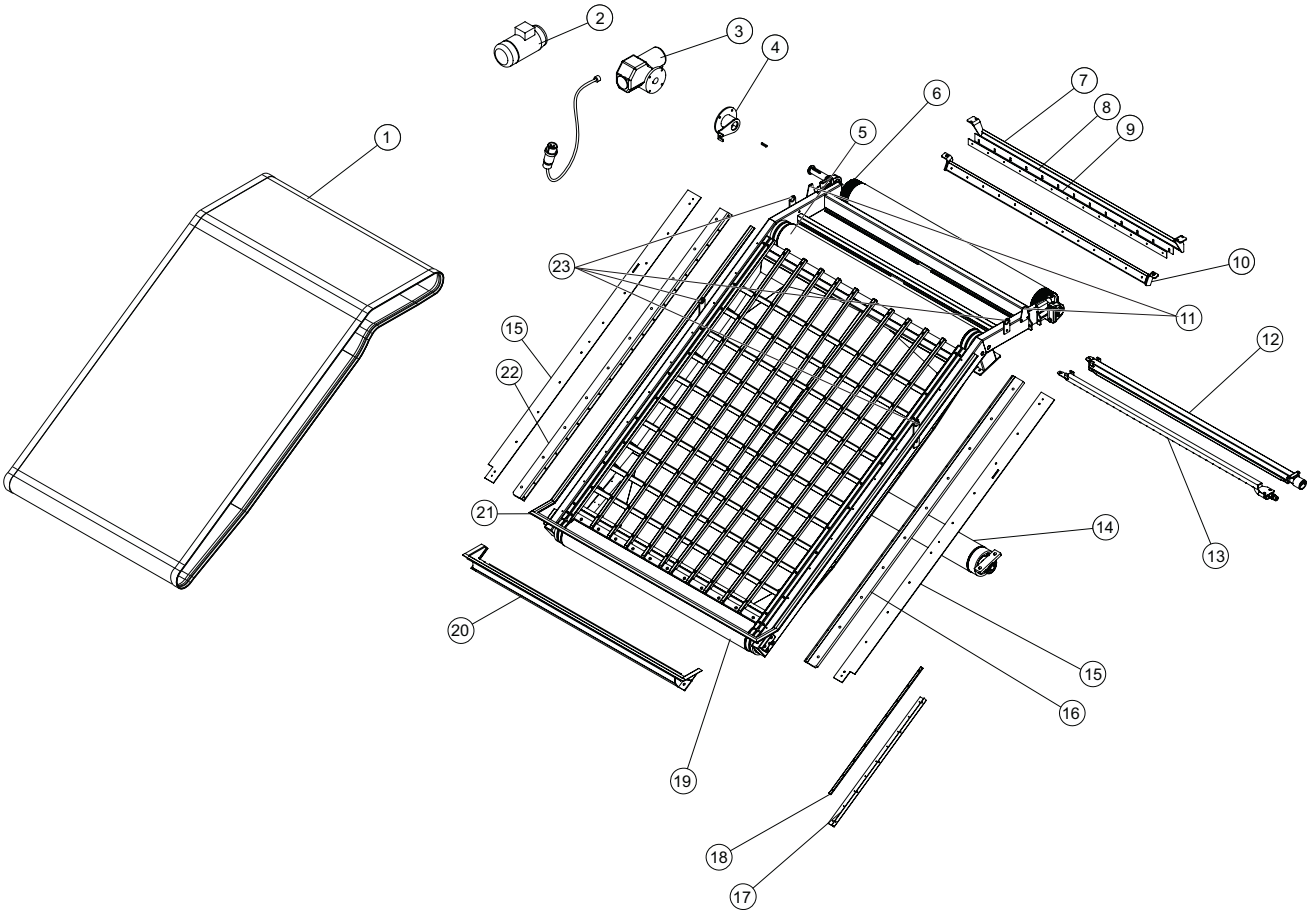

Figure 26 Filter Mesh Assembly

1	Filter Cloth	**13**	Flush Pipe
2	Drive Motor	**14**	Under Roller
3	Gear Box - Drive Motor	**15**	Sealing Plate
4	Anti-rotation Bracket	**16**	Right Fixing Bar
5	Guide Roller (Upper)	**17**	Slidebar
6	Drive Roller	**18**	Sidebar For Mesh
7	Filter Mesh Wiper	**19**	Guide Roller (Lower)
8	Wiper, Sludge Compartment	**20**	Sealing Beam
9	Fixing Plate for Wiper, Sludge Compartment	**21**	Gasket
10	Under Roller Wiper	**22**	Left Fixing Bar
11	Strut Bracket	**23**	Lifting Lugs
12	Air Knife		

7.3.8 Install Filter Mesh

Prerequisites:



- Remove Filter Mesh. Refer to Section 7.3.7.

Tools:

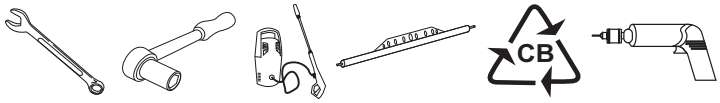

- T25 Torx bit

Materials:



- Silicone
- Filter mesh

Procedure:



1. Use a lifting device and strapping, position the filter frame assembly on its side with the motor shaft on top.
2. Lift the filter frame assembly above the work surface, allowing adequate space to install filter mesh.
3. Make sure that the arrow on the filter mesh points in the direction of rotation.
4. Align the black seam on the filter mesh with the drive roller.
5. Lower the filter frame assembly and slide filter mesh upward.

   Note: *It is recommended to use two people to install the filter mesh to prevent damage.*
6. Verify the black seam is parallel to the drive roller, this ensure it is installed evenly.

7. To install under roller and roller wiper bar, refer to following illustrations.

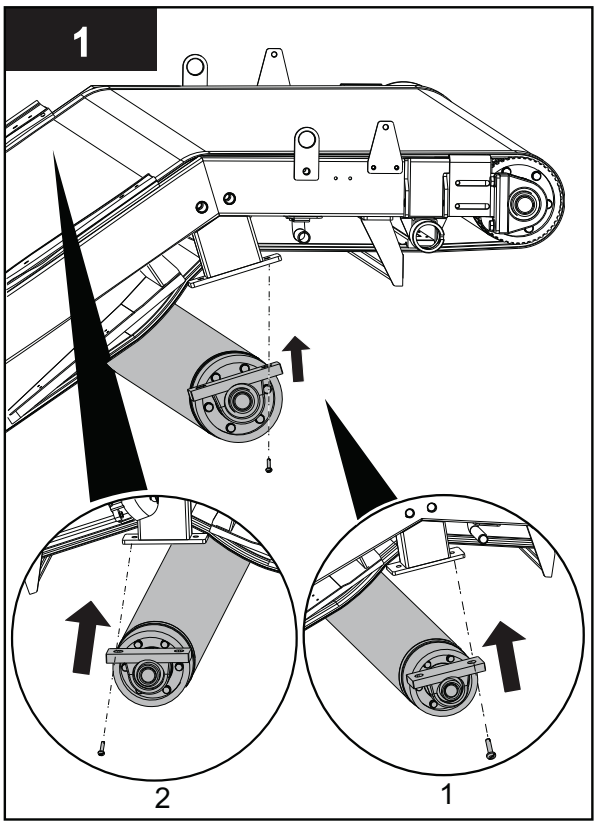

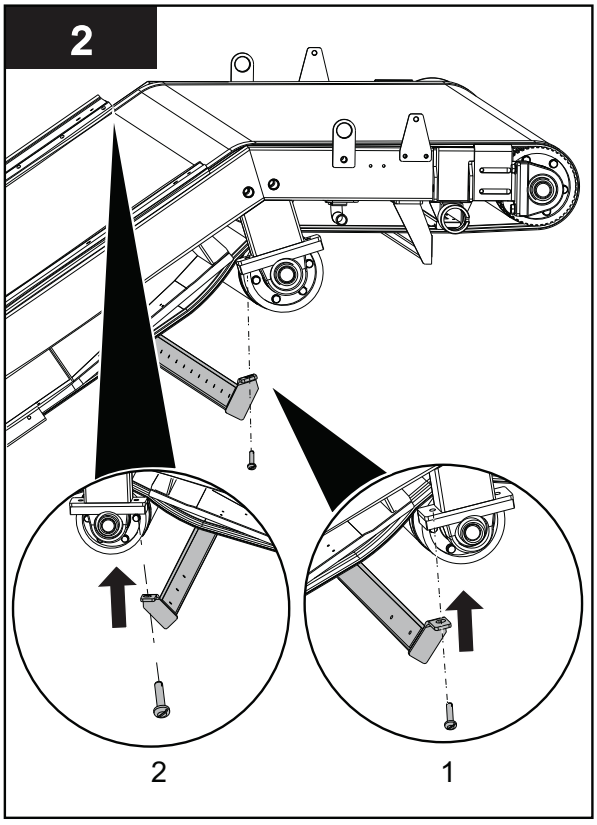

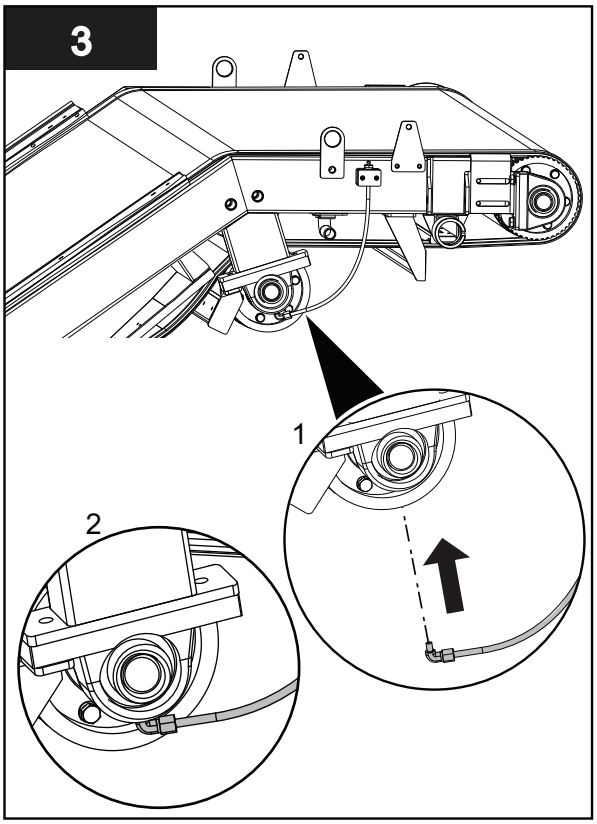

8. Install the filter mesh wiper bar. Make sure the wiper is installed in correct orientation. Refer to Figure 27.

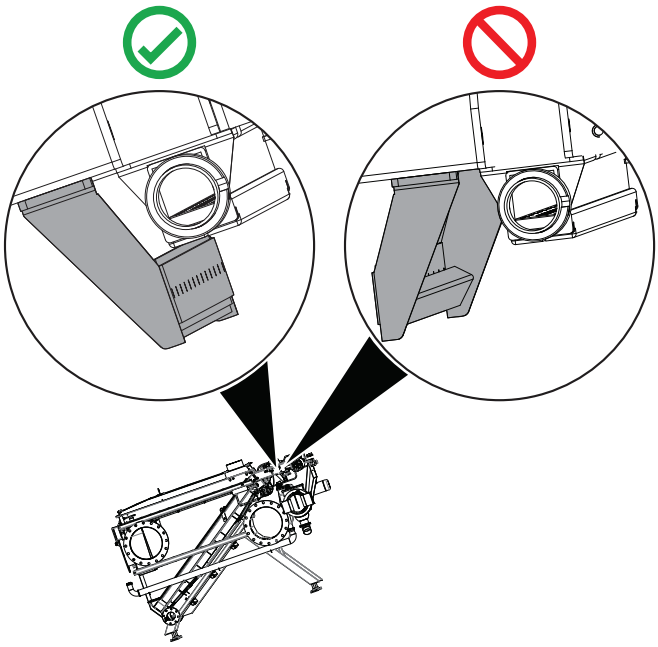

Figure 27 Filter Mesh Wiper

9. Gently lower the filter frame assembly onto a piece of cardboard, protecting the rollers.
10. Install slide bar assemblies on both sides of the filter frame using a cordless drill with T25 Torx Bit. Refer to Figure 26.
11. Place the sealing beam and sealing plate assembly on the filter frame. Refer to Figure 26.

    Note: *Use two people to lift the seal plate and sealing place assembly to prevent breaking the silicone seal.*
12. Inspect the silicone seal. If damaged, remove old silicone and apply new silicone until a proper seal is achieved. Refer to Figure 24.
13. Install M6 bolts on sealing plate, on both sides of the filter frame assembly. Refer to Figure 26.
14. Install M10 bolts on both sides of the bottom sealing beam. Refer to Figure 26.
15. Install filter frame assembly into Filter Unit. Refer to Section 7.3.6.

7.3.9 Check and Adjust Filter Mesh Tension

Prerequisites:



- Drain the Filter Unit. Refer to Section 7.3.1
- Clean Filter Mesh. Refer to Section 7.3.5.
- Bypass and shutdown the filter being inspected. Refer to Section 5.2.1.
- Lockout tag out Control Power Panel (CPP) for associated filter. Refer to Section 4.
- Open Sludge Auger Lid. Refer to Section 6.

Tools:

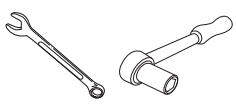

Materials:



Procedure:



1. View the filter mesh tension on each side by pressing the filter mesh down.
2. Use gloved fingertip to press down about 4 kg (9 lbs). The belt should have a slack of approximately 10-20 mm (3/8 in - 3/4 in).
3. To loosen the filter mesh tension:
   a. Using a 13 mm wrench/socket, loosen the side bolts on both sides of the filter frame. Refer to Figure 28.
   b. Using a 19 mm wrench, loosen the tensioning bolts on both sides of the filter frame. Refer to Figure 28.
   c. Push the drive roller towards the air knife.
4. To tighten the filter mesh tension,
   a. Make sure the cogs on the filter mesh align correctly with the cogs on the drive roller.
   b. Align the black seam on the filter mesh to the same reference point on both sides of the frame.
   c. Using a 19 mm wrench, tighten the tensioning bolts on both sides of the filter frame. Refer to Figure 28.
   d. Using a 13 mm wrench/socket, tighten the side bolts on both sides of the filter frame. Refer to Figure 28.
   e. Check that the black seam aligns to the same reference point on both sides of the frame. If aligned, proceed to Step 5. If not aligned, adjust as required.

5. Check if the filter mesh tension is correct. Refer to Steps 1-2.

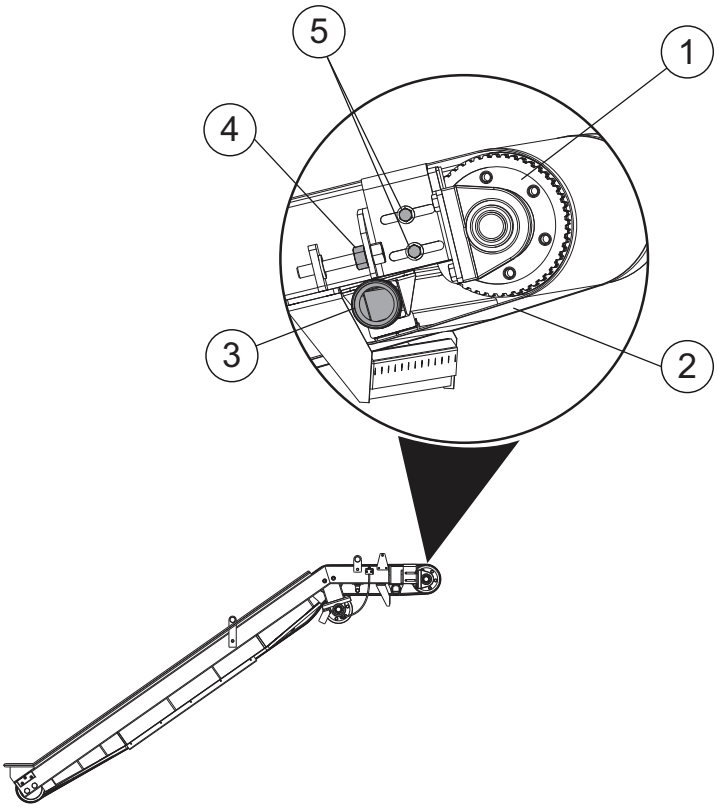

Figure 28 Filter Mesh Tension

1	Drive Roller	**4**	Tensioning Bolt
2	Filter Mesh	**5**	Side Bolt
3	Air Knife		

7.3.10 Lubricate Drive Roller and Under Roller

Prerequisites:



- Drain the Filter Unit. Refer to Section 7.3.1
- Bypass and shutdown the filter being inspected. Refer to Section 5.2.1.
- Lockout tag out Control Power Panel (CPP) for associated filter. Refer to Section 4.
- Open the Sludge Auger Lid. Refer to Section 6.

Tools:

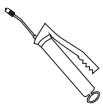

Materials:



- Grease. Refer to Section 1.

Procedure:



1. Apply grease gun to grease port on the drive roller bearings. Apply 3 to 4 injections of grease to each port. Clean up spills.
2. Apply grease gun to remote grease port located on the sides of the Filter Frame for the under roller bearings. Apply 3 to 4 injections of grease to each port.

   Note: *Make sure grease tubing is connected prior to adding grease.*
3. When service is complete, assemble in the reverse order of disassembly.

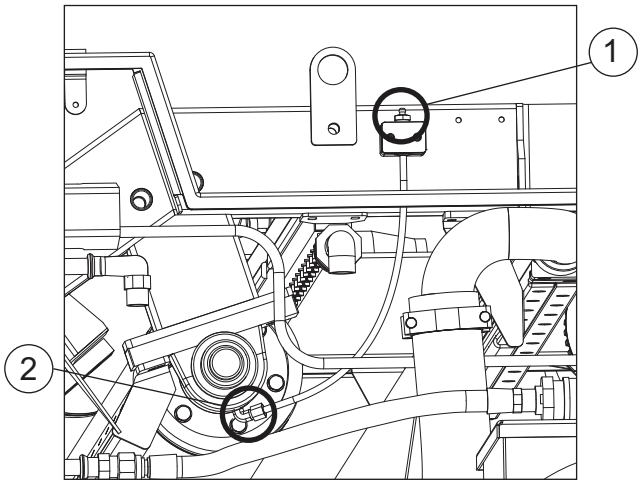

Figure 29 Filter Assembly Grease Ports

1	Remote Grease Fill Port	**2**	Under-roller Pillow Block Bearings

7.3.11 Replace Drive Roller Bearing

Prerequisites:



- Remove Filter Mesh. Refer to Section 7.3.7.

Tools:

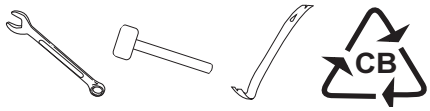

Materials:



- Bearing
- Bearing Housing (if required)

Procedure:

1. Use a wrench to remove drive roller mounting bolts on both sides of the filter frame. Remove the drive roller. Refer to Figure 30.

   Note: *Place the drive roller on a cardboard to prevent any damage to the roller.*

2. Use a pry bar to detach the bearing housing from the drive roller shaft.
3. Remove bearing from bearing housing with a rubber mallet. Install a new bearing into bearing housing.
4. Install bearing housing onto roller shaft using a rubber mallet.

   Note: *Lubricate the drive roller bearing housing after replacement. Refer to Section 7.3.10.*

When service is complete, assemble in the reverse order of disassembly.

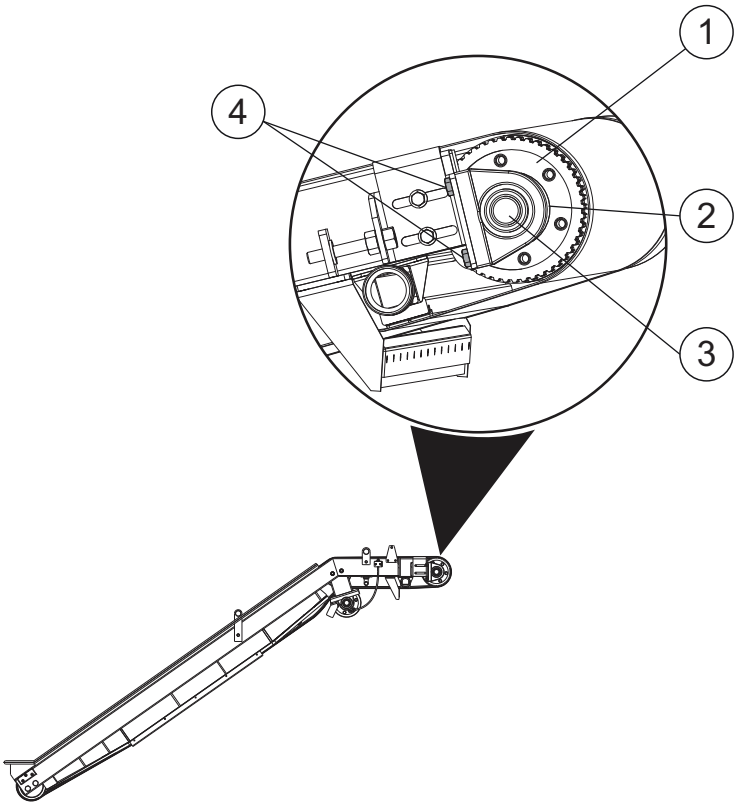

Figure 30 Drive Roller Bearing

1	Drive Roller	**3**	Bearing
2	Bearing Housing	**4**	Drive Roller - Mounting Bolt

7.3.12 Replace Under Roller Bearing

Prerequisites:



- Remove Filter Mesh. Refer to Section 7.3.7.

Tools:

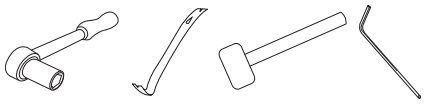

Materials:



Procedure:

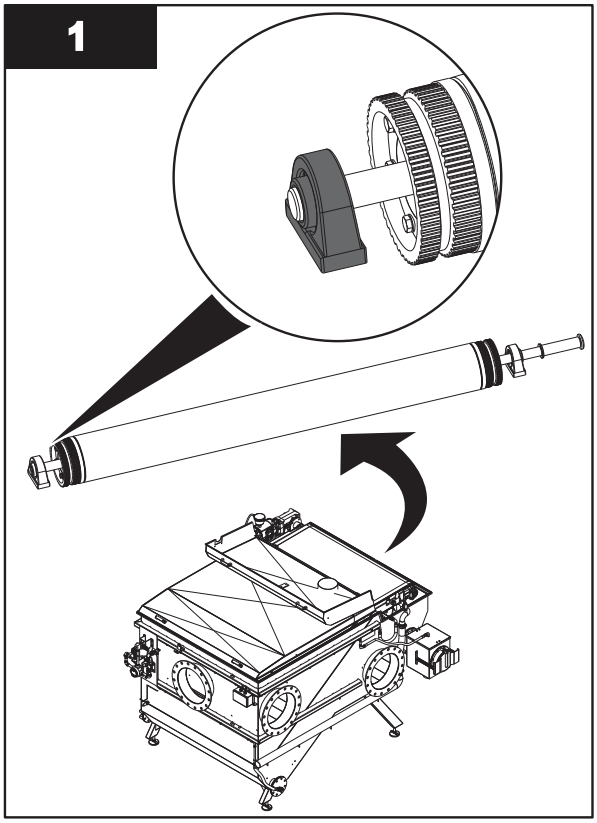

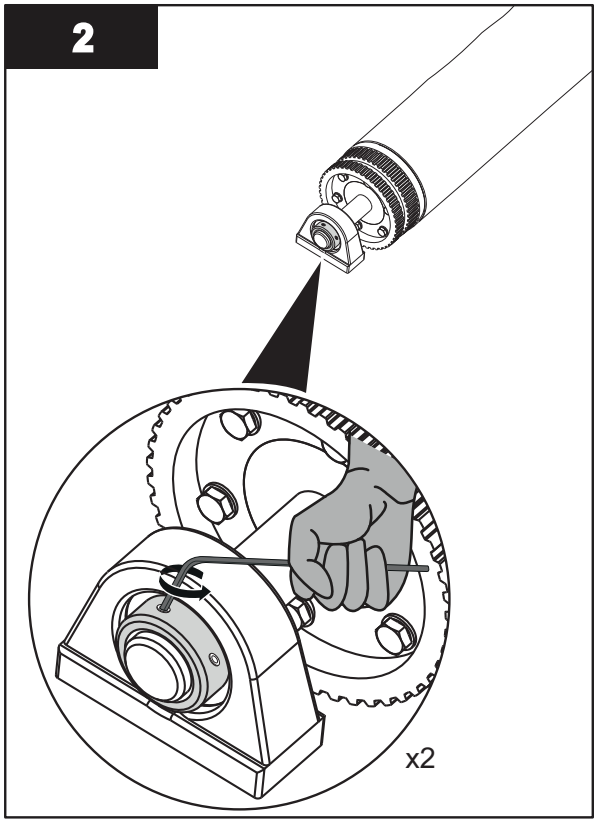

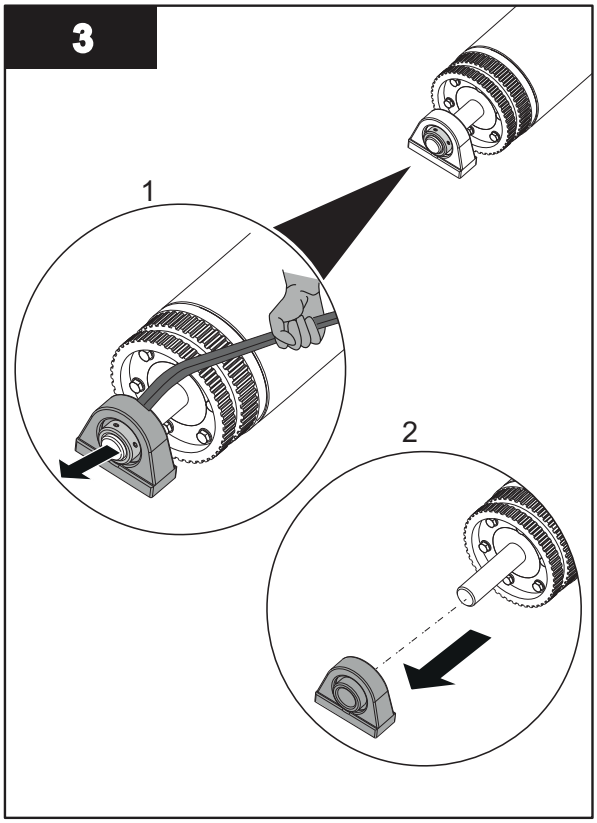

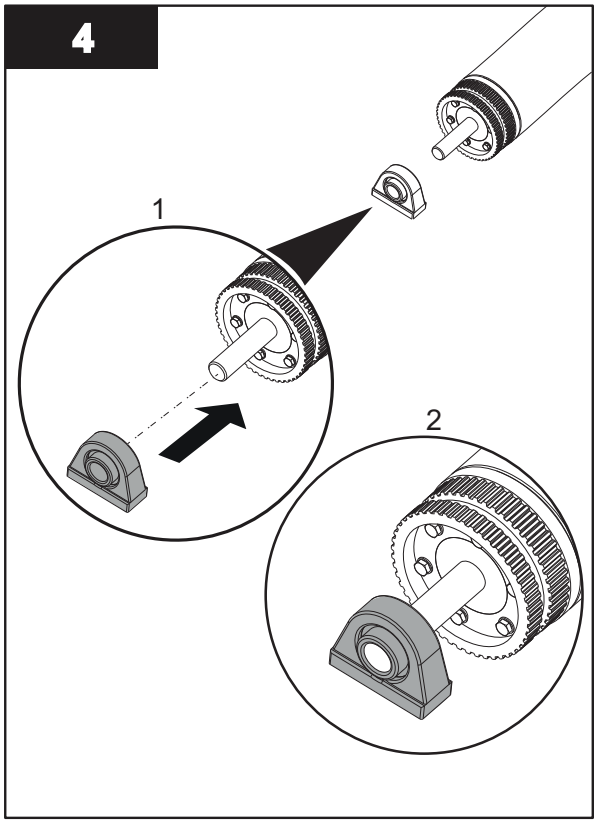

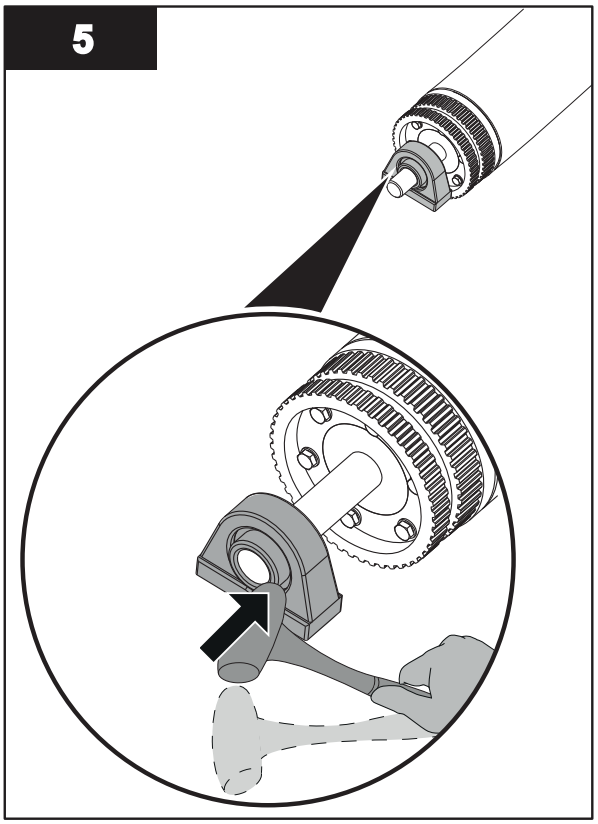

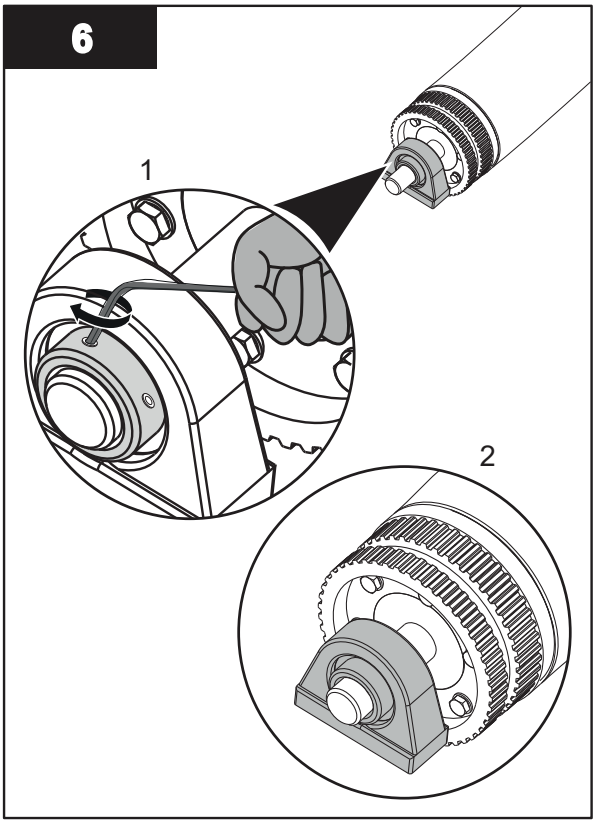

When service is complete, assemble in the reverse order of disassembly.

7.3.13 Remove Guide Roller

Prerequisites:



- Remove Filter Mesh. Refer to Section 7.3.7

Tools:

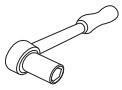

17 mm

Materials:



Procedure:

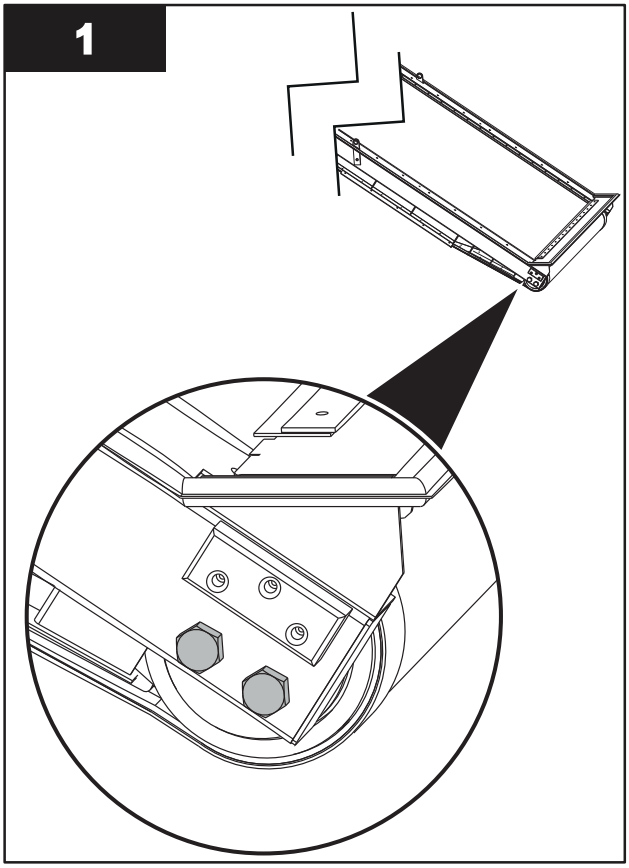

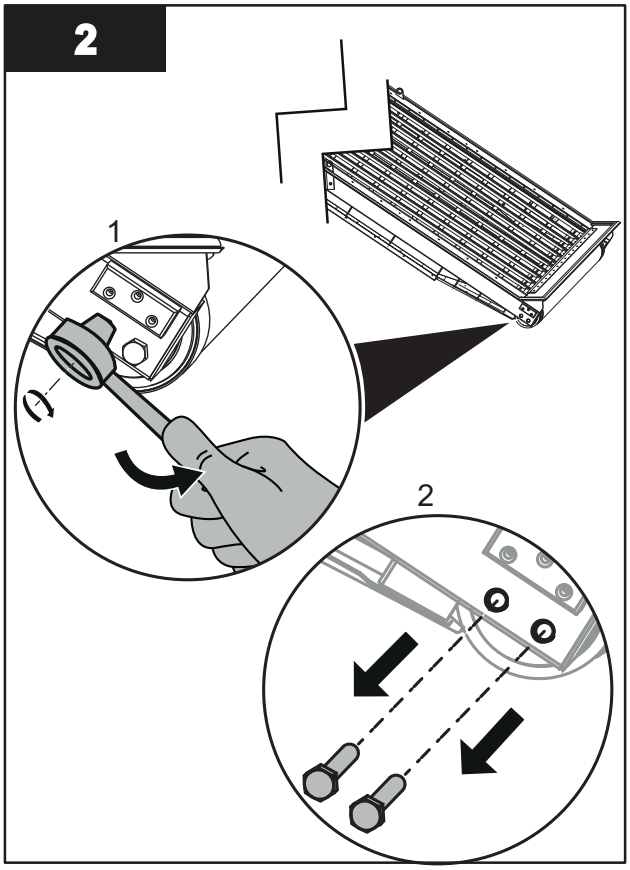

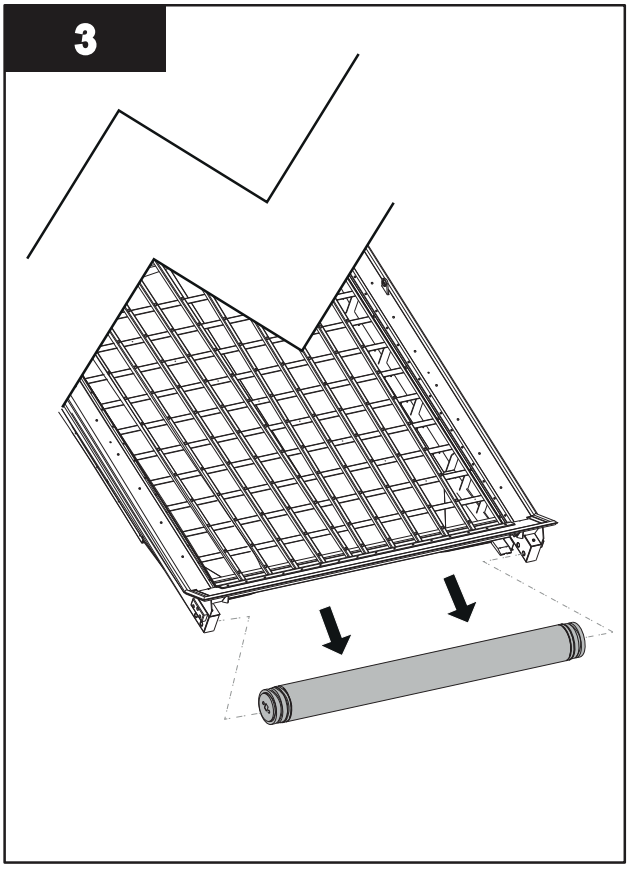

When service is complete, assemble in the reverse order of disassembly.

7.3.14 Replace Guide Roller Bearing

Prerequisites:



- Remove Guide Roller. Refer to Section 7.3.13.

Tools:

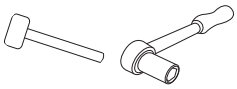

13 mm

Materials:



Procedure:

7.4 Motors

7.4.1 Inspect Gear Box and Motor

Each time the system is started up after maintenance, check the motor for excessive noise.

Materials:



Procedure:



1. Inspect gear box for signs of leaking oil
   a. Clean up spills if leaking. Contact service provider.
   b. If leaking is not present proceed to step 2.
2. Operate motor in Manual Mode.

Note: *If excessive noise present, contact your Service Provider.*

7.4.2 Clean Motors

Tools:

Plant air supply or can of compressed air

Materials:



Procedure:



1. Using plant air supply or can of compressed air, blow off the fan.

2. Wipe down the motor and clean up spills.

7.4.3 Lubricate Gear Flange

Tools:

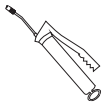

Materials:



- Grease. Refer to Section 1.

Procedure:



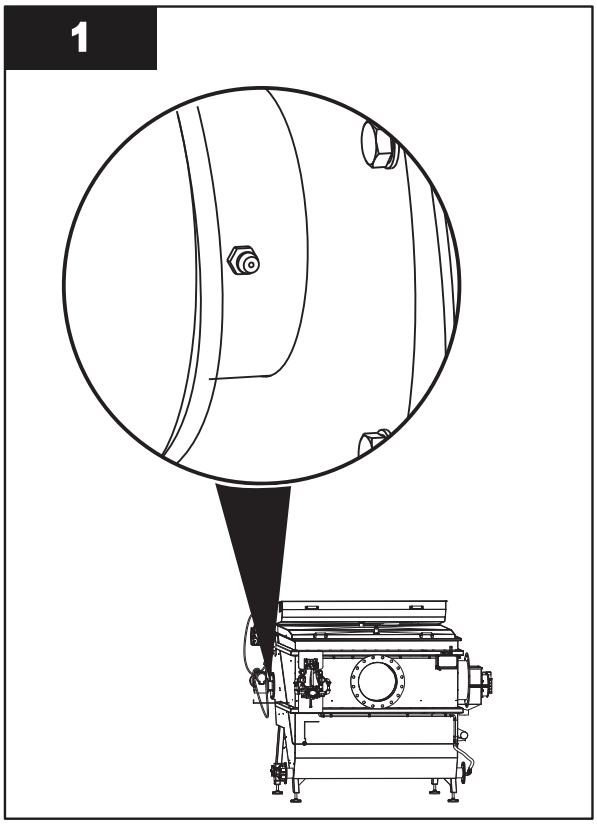

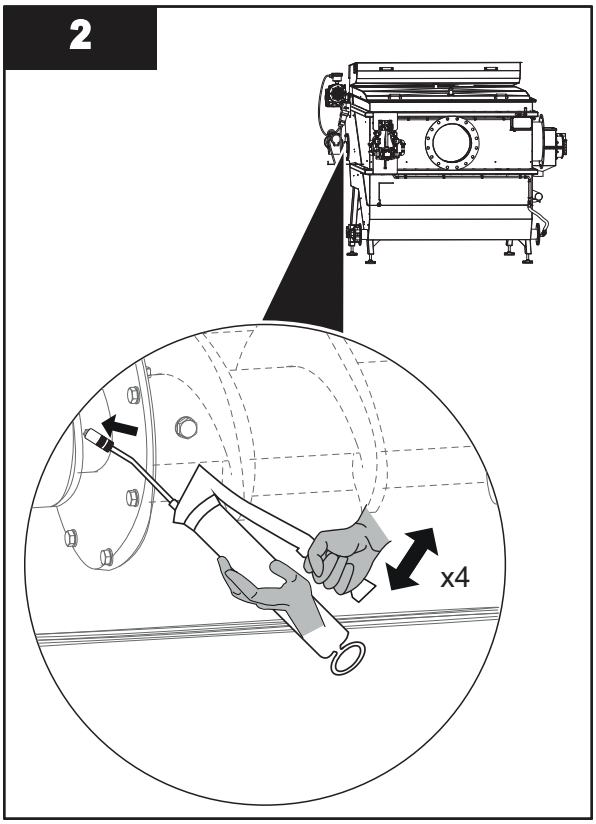

1. Connect grease gun to grease port, located on the bottom of the sludge auger gear flange.
2. Inject grease into each grease port until grease is seen exiting the top grease vent.

7.4.4 Remove and Install a Filter Mesh Drive Motor and Gear Box

Prerequisites:



- Drain the Filter Unit. Refer to Section 7.3.1

- Bypass and shutdown the filter being inspected. Refer to Section 5.2.1.
- Lockout tag out Control Power Panel (CPP) for associated filter. Refer to Section 4.
- Open Sludge Auger lid. Refer to Section 6.

Tools:

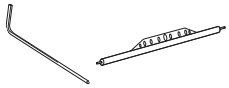

Materials:



- Gear box (if needed)
- Drive Motor (if needed)

Procedure:



1. To disconnect:
   a. Connect the spreader bar to the top lifting location on the filter frame assembly.
   b. Lift the filter frame assembly up to 50 mm (2 inches) high.
   c. Use a 6 mm Allen Key, remove the bolt and plate from the Filter Motor Gear Box.
   d. Remove the Drive Motor and Gear Box from the drive shaft and store in a safe location.

   Note: *It is recommended to use a crane or minimum 2 people to lift the drive motor and gear box assembly.*

   Note: *Do NOT damage electrical connections to motor.*

   Note: *If Drive Motor or Gear Box is damaged, contact your Service Provider.*
2. To install:
   a. Align the keyway on the gear box to the shaft.
   b. Align the anti-rotation bracket onto the tensioning bolt bushing.
   c. Push the Drive Motor and Gear Box onto the shaft until it is in place.
3. When service is complete, assemble in the reverse order of disassembly.

7.4.5 Remove and Install a Sludge Auger Drive Motor and Gear Box

Prerequisites:



- Bypass and shutdown the filter being inspected. Refer to Section 5.2.1.
- Lockout tag out Control Power Panel (CPP) for associated filter. Refer to Section 4.

Tools:

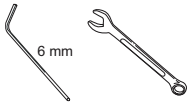

Materials:



Procedure:

1. Using the Allen Key, remove the bolt and plate from the Sludge Auger Motor Gear Box.
2. Using a wrench, remove the 4 bolts from the Sludge Auger Drive motor mount.
3. Remove the Sludge Auger Motor and Gear Box from the shaft, using minimum 2 operators.

Note: *If Sludge Auger Drive Motor or Gear Box is damaged, contact your Service Provider.*

4. To install a Sludge Auger Motor and Gear Box, use 2 operators to align the keyway on the gear box to the shaft.
5. Push the Sludge Auger Motor and Gear box onto the shaft until it is in place.
6. When service is complete, assemble in the reverse order of disassembly.

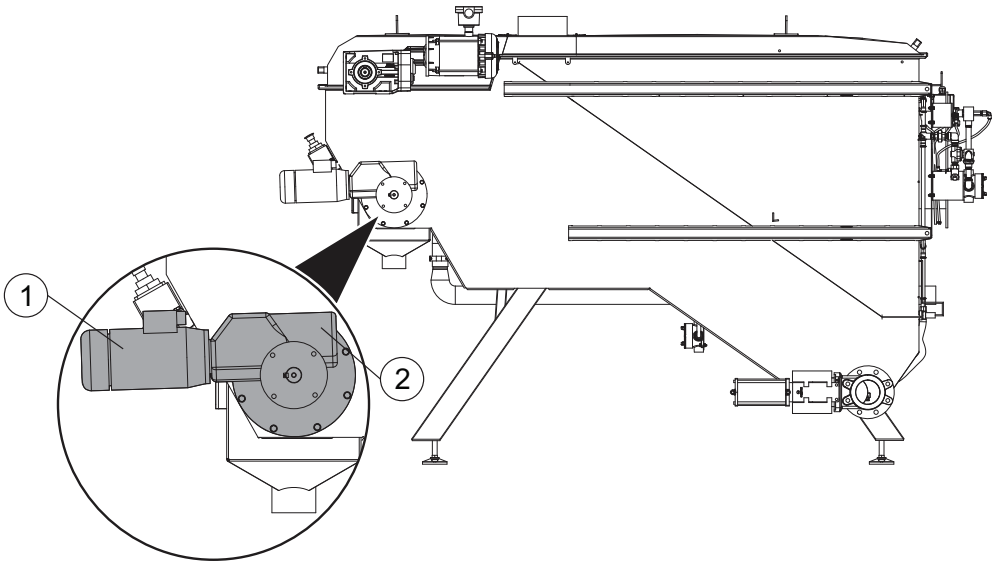

Figure 31 Sludge Auger Drive Motor

1	Drive Motor	**2**	Gear Box

7.5 Sludge Auger

7.5.1 Inspect and Unblock Sludge Auger

Prerequisites:



- Bypass and shutdown the filter being inspected. Refer to Section 5.2.1.
- Lockout tag out Control Power Panel (CPP) for associated filter. Refer to Section 4.
- Open Sludge Auger lid. Refer to Section 6.

Tools:



Materials:



Procedure:



1. Inspect for blockages.
2. If blockages are found, use scraper to remove large debris build up in the sludge auger.
3. When service is complete, assemble in the reverse order of disassembly.

7.5.2 Clean Inside Sludge Auger Area

NOTICE

Excessive sludge sticks to the plastic wiper and will dry up and harm the filter mesh if not cleaned regularly. Normally, this is the area with the most buildup of solids.

Prerequisites:



- Unblock Sludge Auger. Refer to Section 7.5.1.

Tools:



Materials:



Procedure:



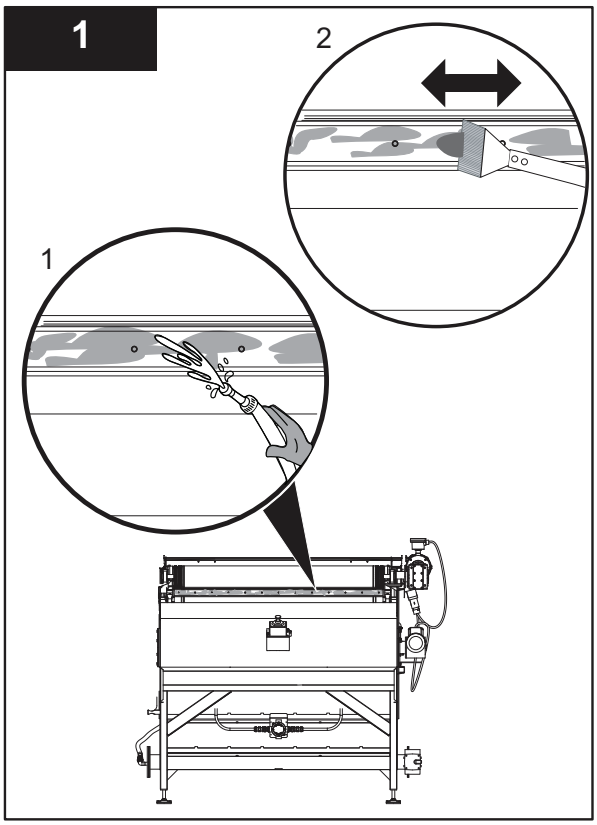

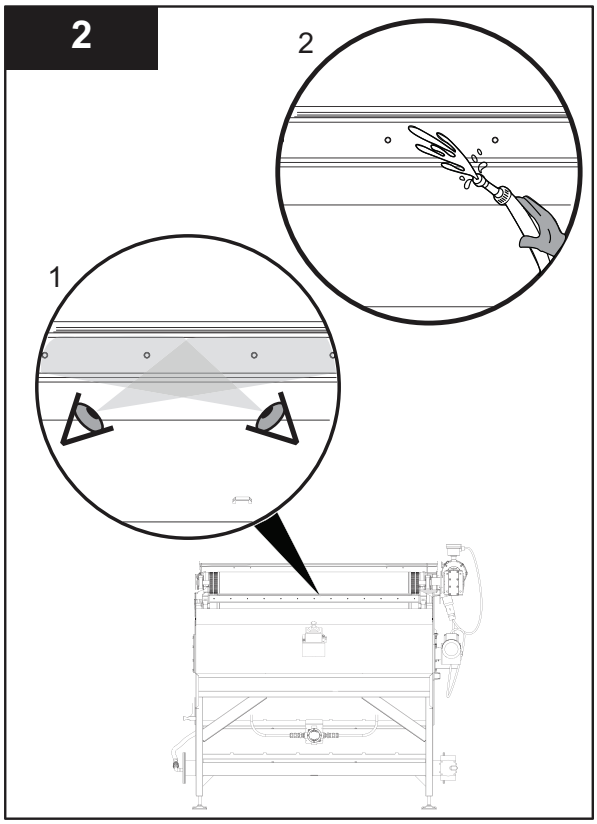

Notes: *Repeat procedure until area is clear and free of debris. Clean up spills immediately to avoid slipping.*

When service is complete, assemble in the reverse order of disassembly.

7.5.3 Inspect Liner

Prerequisites:



- Clean Sludge Auger area. Refer to Section 7.5.2

Materials:



Procedure:

1. Inspect liner under the sludge auger to ensure there is no exposed metal and the coating is in good condition.
2. If the liner is showing signs of wear, contact your Service Provider for assistance.
3. When service is complete, assemble in the reverse order of disassembly.

7.5.4 Inspect and Maintain Sludge Auger Shear Bolts

Prerequisites:



- Bypass and shutdown the filter being inspected. Refer to Section 5.2.1.
- Lockout tag out Control Power Panel (CPP) for associated filter. Refer to Section 4.
- Open Sludge Auger lid. Refer to Section 6.

Tools:



Materials:



Procedure:



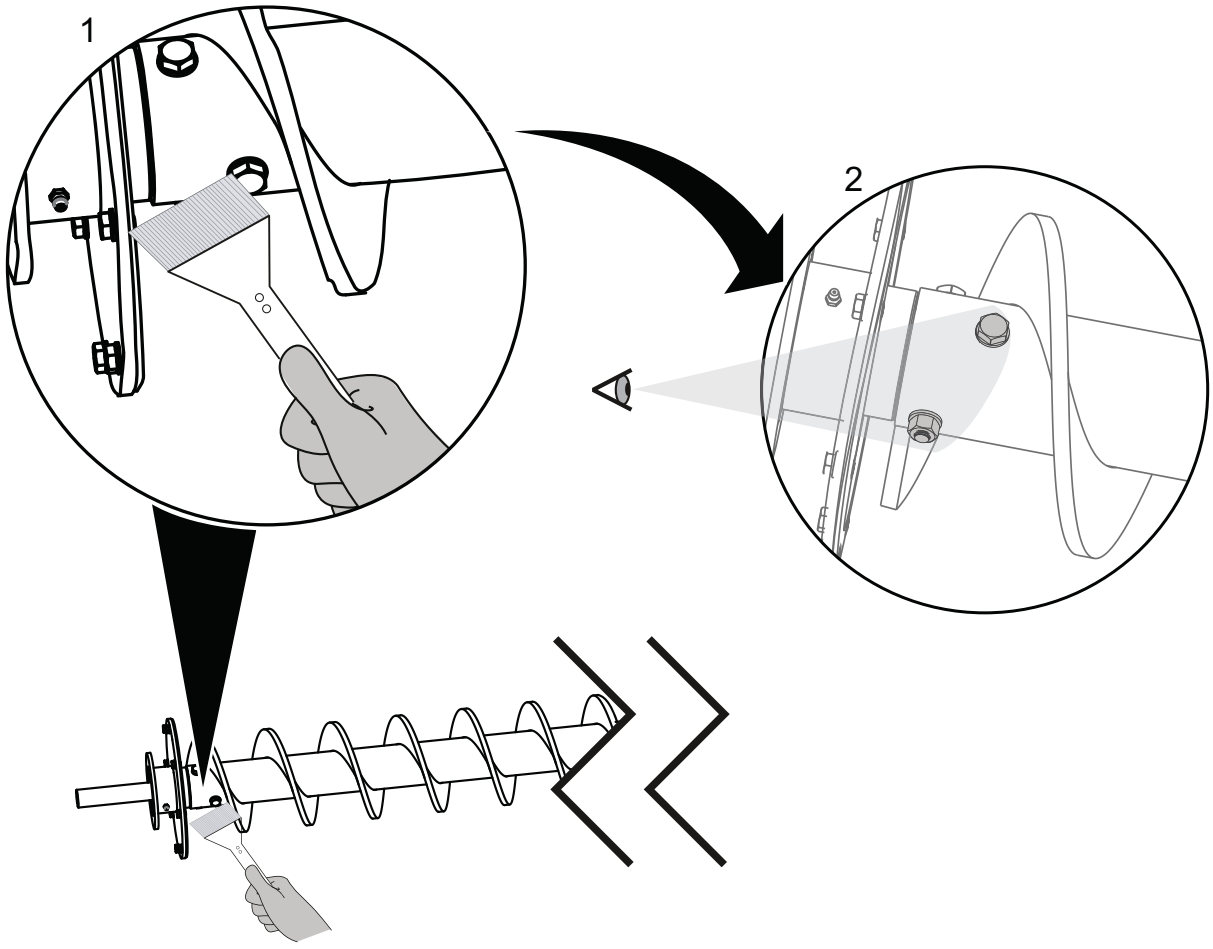

When service is complete, assemble prerequisites in reverse order of disassembly.

7.6 Air Knife

7.6.1 Inspect and Clean Air Knife

NOTICE

Inspect and clean air knife if there is excessive clogging or noted increase of pressure on the pressure gauge or alarm at the CPP.

Tools:



- Feeler gauge

Materials:



- Water

Procedure:



1. Record the pressure displayed on the Filter screen. Refer to Figure 9
2. Record the pressure reading on the pressure gauge at the air blower.

   Note: *If the readings match, proceed to Step 3. If the readings do not match, consult the Troubleshooting guide in Section 8.*

3. Observe the particle distribution on the filter mesh.
   a. If particle distribution is not equal, clean the Air Knife, continue to Step 4.
   b. If particle distribution is equal, no further maintenance task is required.
4. Remove the Filter Frame Assembly. Refer to Section 7.3.6.
5. Remove the Filter Mesh Drive Motor. Refer to Section 7.4.4.
6. Loosen filter mesh tension. Refer to Section 7.3.9.
7. Connect the spreader bar to the top lifting points on the filter frame assembly.
8. Lift the filter frame assembly until the air knife is accessible for removal.
9. Remove the air knife hardware on each end of the air knife. Remove the air knife. Refer to (Figure 32).

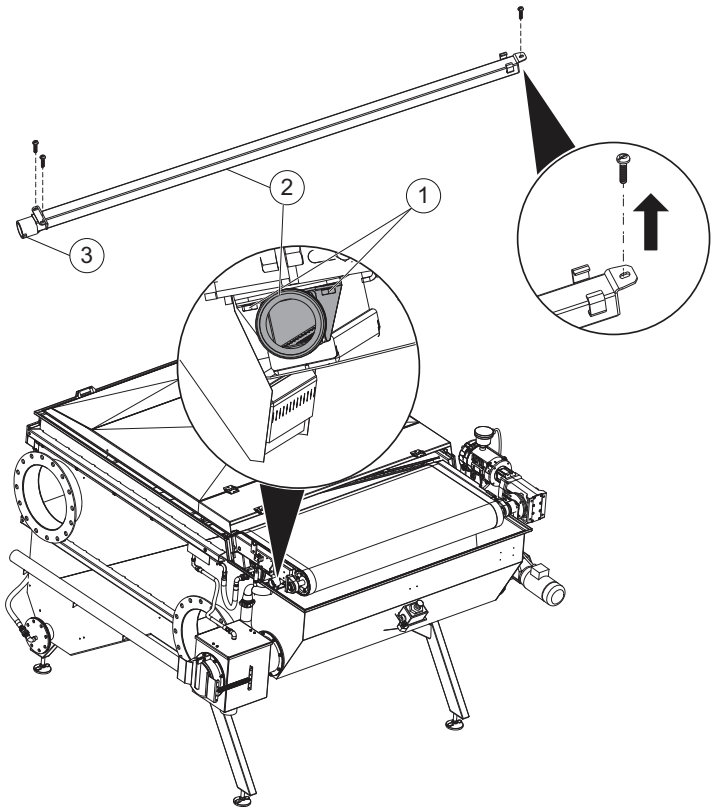

Figure 32 Air Knife

1	Air Knife Hardware	**3**	Air Knife air attachment
2	Air Knife		

10. Use a power washer to spray across the entire length of the air opening.
11. Attach water hose to the opening of the air knife air attachment (Figure 32) and use the 0.4 mm feeler gauge to clean the air opening with a light downward push and a slight back and forth motion.

Note: *Make sure air knife O-ring is not misplaced.*

12. Equal water surface is visible along entire air knife side opening when it is clean. Clean up spills.
13. Repeat step 11 as required.
14. If desired water layer is not achieved, remove the silicone seal and hardware.
15. Disassemble air knife completely and remove blockages.
16. Reassemble and apply silicone seal.

Note: *Allow silicone seal to dry completely before installing the air knife.*

17. When service is complete, assemble in reverse order of disassembly.

7.7 Dewatering Unit (Optional)

7.7.1 Inspect and Clean Dewatering Unit

Prerequisites:



- Bypass and shutdown the filter being inspected. Refer to Section 5.2.1.
- Lockout tag out Control Power Panel (CPP) for associated filter. Refer to Section 4.

Tools:



Materials:



- Compressed Air

Procedure:



1. Remove the dewatering unit lid. Refer to Figure 33.
2. Use a water hose to rinse excess debris and buildup off of the wedge wire screen and spray nozzles. Refer to Figure 33.
3. If necessary, gently use a wire brush to clean and remove any buildup from the wedge wire screen and spray nozzles.
4. Use a water hose to rinse wedge wire screen and spray nozzles. Clean up spills.
5. Repeat steps as necessary until all debris and buildup has been removed.
6. Inspect the wedge wire screen for extensive wear or damage. If extensive wear or damage is observed contact your Service Provider.
7. When service is complete, assemble in the reverse order of disassembly.

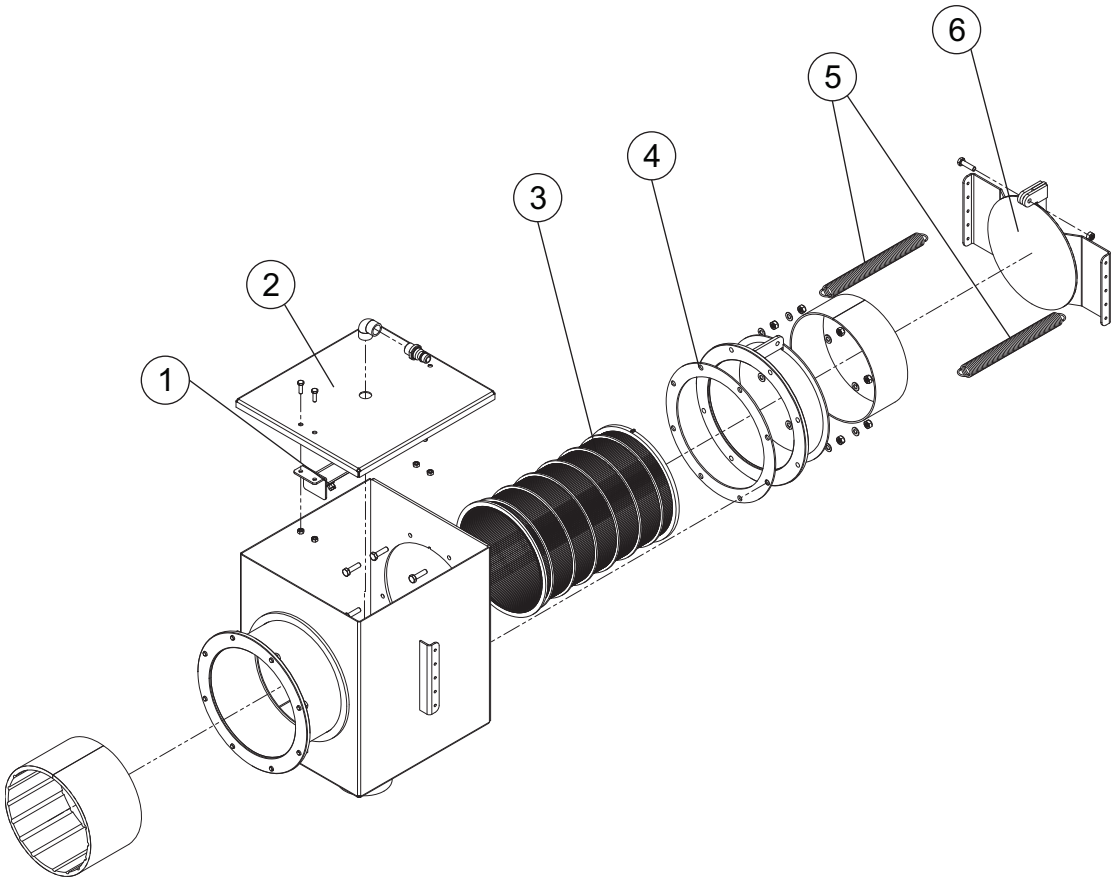

Figure 33 Dewater Unit

1	Spray Nozzle	**2**	Dewatering Unit Cover
3	Dewater Assembly Wedge Wire	**4**	Outlet Spigot Gasket
5	Dewatering Cover Spring	**6**	Sludge Cover Door Plate

7.7.2 Replace Wedge Wire Screen

Prerequisites:



- Bypass and shutdown the filter being inspected. Refer to Section 5.2.1.
- Lockout tag out Control Power Panel (CPP) for associated filter. Refer to Section 4.

Materials:



Procedure:

1. Remove tension springs from dewatering unit sludge cover.
2. Open sludge cover and remove the wedge wire screen.
3. Replace with new wedge wire screen.
4. When service is complete, assemble in reverse order of disassembly.

7.8 Level Sensor

NOTICE

DO NOT use any hard or sharp tools on the membrane surface.

7.8.1 Replace Level Sensor

Prerequisites:



- Drain the Filter Unit. Refer to Section 7.3.1.
- Bypass and shutdown the filter being maintained. Refer to Section 5.2.1.
- Lockout tag out Control Power Panel (CPP) for associated filter. Refer to Section 4.

Tools:

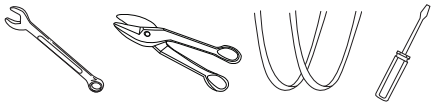

Materials:



- Level Sensor Assembly

Procedure:



1. Remove Junction Box cover.
2. Disconnect level sensor wiring at terminal blocks. Note the wire color and position.
3. Loosen strain relief, pull cable through.
4. Cut the tie straps that secure the cable to the filter unit.
5. Use adjustable wrench to remove the threaded level sensor.
6. Install new level sensor in reverse order of removal.

   Note: *Do NOT damage sensor membrane surface.*
7. Perform Level Sensor Offset Adjustment. Refer to Section 7.8.2.
8. When service is complete, assemble in reverse order of disassembly.

7.8.2 Level Sensor Offset Adjustment

Prerequisites:



- Lockout tag out Control Power Panel (CPP) for associated filter. Refer to Section 4.

Tools:

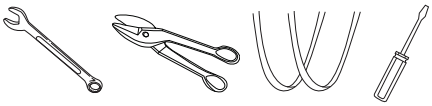

Materials:



- Level Sensor Assembly

Procedure:



1. Adjustment method 1:
   a. Determine base reference point of zero by bypassing and shutting down the Filter Unit being maintained.

   Note: *Do not drain the Filter Unit.*

   b. Record the level value displayed on the Filter Screen. Refer to Section 6.6.1.

   c. Add the recorded value from the Filter Screen to the current Level Offset value on the Level Control Settings Screen. Refer to Section 6.6.3.1.

   d. Enter the new value into the Level Offset value on the Level Controls Settings Screen. Refer to Section 6.6.3.1.

2. Adjustment method 2:
   a. Record the current level at the ruler. Refer to Section 6.2.

   b. Record the level value displayed on the Filter Screen. Refer to Section 6.6.1.

   c. Subtract the recorded level at the ruler from the value displayed on the Filter Screen.

3. Add the calculated value to the current Level Offset value on the Level Control Settings Screen. Refer to Section 6.6.3.1.
4. Enter the new value into the Level Offset value on the Level Controls Settings Screen. Refer to Section 6.6.3.1.

7.8.3 Clean Level Transmitter and Tube

Prerequisites:



- View the Trends Screen (Refer to Section 6.6.5) to see if a consistent and expected water level is being maintained. If water levels are very inconsistent then a cleaning may be required.
- Bypass and shutdown the filter being maintained.Refer to Section 5.2.1.
- Lockout tag out Control Power Panel (CPP) for associated filter. Refer to Section 4.

Tools:



Materials:



- Water

Procedure:



1. Pull the level sensor from its tube and inspect for debris and buildup.
2. Place the level transmitter into a pail of water, carefully agitate to remove debris. Do not damage the end of the level sensor.
3. Use a soft, non-abrasive cloth to remove remaining debris if required.
4. View the level transmitter's tube to ensure it is clean, clean as required.
5. When service is complete, assemble in the reverse order of disassembly.

7.9 Control Power Panel (CPP)

NOTICE

When opening the Control Power Panel (CPP) for any reason, including to clean or inspect the air filter, shutdown the system.

7.9.1 Inspect and Resolve Active Alarms

Procedure:

1. View the system overview Alarm Screen for active alarms and alarm history. Refer to Figure 22.
2. Resolve any active alarms. Refer to Troubleshooting Section 8.
3. Record and keep records of all alarm history. This will assist troubleshooting if alarms repeat during particular times or processes.

7.9.2 Inspect and Clean Air Filter

Prerequisites:



- Bypass and shutdown the filter being maintained. Refer to Section 5.2.1.
- Lockout tag out Control Power Panel (CPP) for associated filter. Refer to Section 4.

Materials:



- Air Supply or Vacuum Source

Procedure:

1. Access the air filter on the Control Power Panel (CPP).
2. Remove the air filter.
3. Clean the dust off the air filter. If required, replace air filter.
4. When service is complete, assemble in the reverse order of disassembly.

7.9.3 Clean Control Power Panel (CPP)

Prerequisites:



- Bypass and shutdown the filter being maintained. Refer to Section 5.2.1.
- Lockout tag out Control Power Panel (CPP) for associated filter. Refer to Section 4.

Tools:

- Screwdriver

Materials:



- Soapy Water

Procedure:



1. Clean dirt and excess dust off the outside of the Control Power Panel (CPP) with a soft cloth.
2. Clean the OIT with a soft cloth to prevent scratching.
3. Clean dirt/dust on the inside of the Control Power Panel (CPP) with a dry soft cloth.
4. Clean outside areas that may be more dirty with warm soapy water and a soft cloth.
5. When service is complete, assemble in the reverse order of disassembly.

7.10 Air Blower

For any maintenance required for the Air Blower, refer to the Air Blower manufacturers ***Operation and Maintenance manual***.

⚠ DANGER



Obey all warning and caution statements. Refer to Section 2.

Read and understand this Operation and Maintenance Manual before operating this equipment. Read all user documentation before performing operations, inspections, repair, or maintenance on this equipment.



Only competent personnel should undertake operation, repairs, maintenance, or servicing of equipment described in this section of the manual. If you do not understand the information or procedure explanations in this manual, STOP and contact your Service Provider for assistance.

NOTICE

This section includes a comprehensive list of alarms displayed by the Control Power Panel (CPP). Depending on the actual setup of your system, some of the alarms listed may not be applicable to your Control Power Panel (CPP).

8.1 Responding to Filter Component Failure Conditions

Symptom	Possible Cause	Solution
The system does not start OR Communication issue with the VFD	No electricity is being supplied.	Service Provider required to check the power supply to the unit and the fuses in the local CPP.
	Main disconnect is off.	Check the main disconnect, turn on the power, and follow system startup. Refer to Section 5.1.2.
	Failure in the variable frequency drive.	Service Provider required to change the variable frequency drive, and/or repair part.
The system does not start Automatically, only Manually. OR Start level setting could also be wrong, full scale range of the level sensor could be wrong	The level sensor is damaged or requires cleaning.	Ensure the level sensor is clean and is not damaged. Replace sensor, if damaged. Refer to Section 7.8.3.
	Wrong electrical connection between level sensor and CPP.	Service Provider required to check connection. Try to switch the position of the two leads
The system does not stop when in “AUTO” OR Start level setting could also be wrong, full scale range of the level sensor could be wrong	The level sensor is damaged or requires cleaning.	Ensure the level sensor is clean and is not damaged. Replace sensor, if damaged. Refer to Section 7.8.3.
	The Level Sensor Offset may need to be adjusted.	Level Sensor Offset Adjustment. Refer to Section 7.8.2.
	Failure in the level transmitter.	Service Provider required to adjust or change the level sensor.
	Minimum running frequency is higher than the Start frequency, or too high hysteresis.	Service Provider required to reprogram the control system/variable frequency drive.

Symptom	Possible Cause	Solution
Too high air pressure	The air knife is clogged	1.  Clean air knife. Refer to Section 7.6.1. If not corrected, second step is required. 2.  Service Provider required to change air knife.
	Clogged air filter in the compressor	1.  Clean air knife. Refer to Section 7.6.1. If not corrected, second step is required. 2.  Service Provider required to change air knife.
	Defective air compressor blower	 Service Provider required to repair, or change if necessary.
Filter Mesh not cleaning	Hot Water Spray is not working	1.  Confirm hot water supply is working and at correct settings. 2 Service Provider required to service spray bar.
	The air knife pressure is too low	1.  Confirm air blower settings are correct. 2 Confirm air blower intake filter is clean. 3 Confirm air blower piping is connected correctly. 4 Ensure O-ring is installed at air knife connection. Refer to Section 7.6. 5 Service Provider required to service spray bar.
	The air knife is clogged	1.  Clean air knife. Refer to Section 7.6.1. 2 Replace Air Knife. Refer to Section 7.6.1
Filter Mesh is not tracking properly on the filter mesh belt	Foreign objects, and soil deposits are behind the filter mesh belt.	 Remove the filter, rinse the filter mesh and belt, reposition or replace and tighten the belt. Refer to Section 7.3.4.
	The filter mesh belt is too loose.	 Reposition and tighten the belt. Refer to Section 7.3.4.
Whistling noise occurs	Filter Mesh is clogged with grease/fat.	 Clean filter mesh. Refer to Section 7.3.5.
Surface temperature of the gears is high	Normal surface temperature for gears should be 70ºC - 90ºC (158ºF - 194ºF)	 Externally clean gear box and contact Service Provided if oil leaks are detected.

8.2 Responding to Control Power Panel (CPP) Alarms

Active Alarm	Description	Possible Cause	Solution
Supply Voltage Error	The main power feed is over or under voltage	Main power feed is turned off	Follow plant procedure to turn main power feed on.
		Faulty power quality monitor	 Service Provider required to replace power quality monitor.
		Incoming voltage is high	Follow plant procedure to contact local utilities.
			Follow plant procedure to voltage limit setting.
		Incoming voltage is low	Follow plant procedure to contact local utilities.
			Follow plant procedure to correct voltage limit setting.
		Faulty PLC input	 Service Provider required to use 4-20 mA loop calibrator to send signal from flow meter to SCC.
Emergency Stop Active	An E-stop has been activated	Activated E-stop	 Reset E-stop. Refer to Section 5.1.3.
		Wire breakage	 Service Provider required to inspect and repair wiring.
		Faulty E-stop	 Service Provider required to replace E-stop.
		Faulty master control relay	 Service Provider required to replace control relay.
		Faulty PLC input	 Service Provider required to replace PLC input card.
Phase Sequence Error	The main power feed have the phases inverted	Incorrect main power feed wiring	 Service Provider required to correct wiring.
		Wire connection issue	 Service Provider required to correct wiring.
		Faulty power quality monitor	 Service Provider required to replace power quality monitor.
		Faulty PLC input	 Service Provider required to replace PLC input card.
Surge Protection Active	Surge protection tripped	There was a power surge occurrence	 Service Provider required to replace surge protection device.
		Faulty surge protector	 Service Provider required to replace surge protection device.
		Faulty PLC input	 Service Provider required to replace PLC input card.
		Wire connection issue	 Service Provider required to correct wiring.

Active Alarm	Description	Possible Cause	Solution
Main Power Supply Failure	The phase monitoring relay detected a under/over voltage on one or more phases	Utility interruption	Follow plant procedure to call utilities.
		Supply interruption	Follow plant procedure to check upstream protection devices.
		Faulty power quality monitor	 Service Provider required to replace power quality monitor.
		Wire connection issue	 Service Provider required to correct wiring.
UPS Active	The ups has detected a loss of main power and the PLC is now operating on ups power.	Main power supply failure	Refer to “Main power supply failure alarm” for possible causes and solutions.
		24 VDC power supply failure	 Service Provider required to replace 24 VDC power supply.
		Wire connection issue	 Service Provider required to correct wiring.
		Faulty PLC input	 Service Provider required to replace PLC input card.
UPS replace Batteries	The ups has detected that the battery pack is faulted.	Fuse has blown on battery	 Service Provider required to check and replace.
		Batteries have failed	 Service Provider required to replace batteries.
		Wire connection issue	 Service Provider required to correct wiring.
High Level in Filter	Level sensor has indicated a high level	Incorrect set point	 Service Provider required to correct set point.
		Faulty PLC input	 Service Provider required to replace PLC input card.
		Wire connection issue	 Service Provider required to correct wiring.
		Blocked/bad sensor	  Clean sensor. Refer to Section 7.8.3. If not corrected, second step is required.
		The Level Sensor Offset may need to be adjusted.	  Level Sensor Offset Adjustment. Refer to Section 7.8.2.
		Outlet partially blocked or closed	Follow plant procedure to open and clear outlet.
		Filter mesh not clean	 Clean filter mesh. Refer to Section 7.3.5.

Active Alarm	Description	Possible Cause	Solution
High Level in Filter	Level sensor has indicated a high level	Incorrect set point	Service Provider required to correct set point.
		Faulty PLC input	Service Provider required to replace PLC input card.
		Wire connection issue	Service Provider required to correct wiring.
		Blocked/bad sensor	1 Clean sensor. Refer to Section 7.8.3. If not corrected, second step is required. 2. Service Provider required to replace sensor.
		Outlet partially blocked or closed	Follow plant procedure to open and clear outlet.
		Filter mesh not clean	Clean filter mesh. Refer to Section 7.3.5.
Overflow	Level sensor has indicated a system overflow	Incorrect set point	Service Provider required to correct set point.
		Faulty PLC input	Service Provider required to replace PLC input card.
		Wire connection issue	Service Provider required to correct wiring.
		Blocked/bad sensor	1 Clean sensor. Refer to Section 7.8.3. If not corrected, second step is required. 2. Service Provider required to replace sensor.
		The Level Sensor Offset may need to be adjusted.	Level Sensor Offset Adjustment. Refer to Section 7.8.2.
		Outlet blocked or closed	Follow plant procedure to open and clear outlet.
		Filter mesh not clean	Clean filter mesh. Refer to Section 7.3.5.

Active Alarm	Description	Possible Cause	Solution
Overflow	Level sensor has indicated a system overflow	Incorrect set point	Service Provider required to correct set point.
		Faulty PLC input	Service Provider required to replace PLC input card.
		Wire connection issue	Service Provider required to correct wiring.
		Blocked/bad sensor	1 Clean sensor. Refer to Section 7.8.3. If not corrected, second step is required. 2. Service Provider required to replace sensor.
		Outlet blocked or closed	Follow plant procedure to open and clear outlet.
		Filter mesh not clean	Clean filter mesh. Refer to Section 7.3.5.
Level Transmitter Short Circuit	Signal detected is above 20.5 mA	Faulty PLC input	Service Provider required to replace PLC input card.
		Wire connection issue	Service Provider required to correct wiring.
		Faulty sensor	Service Provider required to replace sensor.
Level Transmitter Open Circuit	Signal detected is below 3.5 mA	Faulty PLC input	Service Provider required to replace PLC input card.
		Wire connection issue	Service Provider required to correct wiring.
		Faulty sensor	Service Provider required to replace sensor.
Low Air Pressure	Pressure sensor detects air knife has a lower pressure than the set point	Blocked piping from blower to sensor	Follow plant procedure to verify piping is clear from the blower to sensor.
		Blocked/bad sensor	Service Provider required to replace sensor.
		Clogged inlet filter on blower	For any maintenance required for the Air Blower, refer to the Air Blower manufacturers Operation and Maintenance manual.
		Incorrect set point	Service Provider required to correct set point.
		Faulty PLC input	Service Provider required to replace PLC input card.
		Wire connection issue	Service Provider required to correct wiring.
		Air Knife is not connected	Reconnect air knife.

Active Alarm	Description	Possible Cause	Solution
High Air Pressure	Pressure sensor detects air knife has a higher pressure than the set point	Blocked piping from blower to sensor	Follow plant procedure to verify piping is clear from the blower to sensor.
		Blocked/bad sensor	Service Provider required to replace sensor.
		Clogged air knife	1  Clean air knife. Refer to Section 7.6.1. If not corrected, second step is required. 2. Service Provider required to change air knife.
		Incorrect set point	Service Provider required to correct set point.
		Faulty PLC input	Service Provider required to replace PLC input card.
		Wire connection issue	Service Provider required to correct wiring.
Pressure Transmitter Short Circuit	Signal detected is above 20.5 mA	Faulty PLC input	Service Provider required to replace PLC input card.
		Wire connection issue	Service Provider required to correct wiring.
		Faulty sensor	Service Provider required to replace sensor.
Pressure Transmitter Open Circuit	Signal detected is below 3.5 mA	Faulty PLC input	Service Provider required to replace PLC input card.
		Wire connection issue	Service Provider required to correct wiring.
		Faulty sensor	Service Provider required to replace sensor.
Air Blower Overload tripped	Interruption of air blower	Over duty on blower	Refer to manufacturer's manual for reset instructions. Reset and try again.
		Overload value set to low	Service Provider required to adjust overload.
		Faulty PLC input	Service Provider required to replace PLC input card.
		Wire connection issue	Service Provider required to correct wiring.
		Faulty overload	Service Provider required to replace overload.
Air Blower Service Due	Timer has indicated that the service needs to be completed on the blower	Set point was set for proper maintenance	Service Provider required to perform maintenance/ reset timer.
		Set point was not set correctly	Service Provider required to set the setpoint as per blower manufacturers recommendations.

Active Alarm	Description	Possible Cause	Solution
Flow Meter Short Circuit	Signal detected is above 20.5 mA	Faulty PLC input	Service Provider required to replace PLC input card.
		Wire connection issue	Service Provider required to correct wiring.
		Faulty sensor	Service Provider required to replace sensor.
Flow Meter Open Circuit	Signal detected is below 3.5 mA	Faulty PLC input	Service Provider required to replace PLC input card.
		Wire connection issue	Service Provider required to correct wiring.
		Faulty sensor	Service Provider required to replace sensor.
Filter belt Invertor Communication Fault	Motor VFD error	Wire connection issue	Service Provider required to correct wiring.
		Ethernet switch failure	Service Provider required to replace ethernet switch.
Sludge Screw Invertor Communication Fault	Motor VFD error	Wire connection issue	Service Provider required to correct wiring.
		Ethernet switch failure	Service Provider required to replace ethernet switch.
High Temperature in Enclosure	Sensor detect temperature has exceeded 40°C	Air conditioner overload tripped	Refer to “Air conditioner overload tripped” for possible causes and solutions.
		Air conditioner fault	Refer to “Air conditioner fault” for possible causes and solutions.
		Incorrect set point	Service Provider required to correct set point.
		Faulty PLC input	Service Provider required to replace PLC input card.
		Wire connection issue	Service Provider required to correct wiring.
		Air conditioner set point not correct	Service Provider required to correct set point to maintain to 35°C.
		Faulty sensor	Service Provider required to replace sensor.
Air Conditioner overload tripped	Interruption of enclosure cooling	Faulty air conditioner	Service Provider required to reset and try again.
		Overload value set to low	Service Provider required to adjust overload.
		Faulty PLC input	Service Provider required to replace PLC input card.
		Wire connection issue	Service Provider required to correct wiring.
		Faulty overload	Service Provider required to replace overload.

Active Alarm	Description	Possible Cause	Solution
Air Conditioner Fault	Interruption of enclosure cooling	Circuit breaker tripped	 Service Provider required to reset and try again.
		Air conditioner overload tripped	Refer to “Air conditioner overload tripped” for possible causes and solutions.
		Door switch failure	 Service Provider required to replace sensor.
		Faulty PLC input	 Service Provider required to replace sensor.
		Wire connection issue	 Service Provider required to replace sensor.
		Faulty sensor	 Service Provider required to replace sensor.
Level Offset Setting Out of Range	The offset setting is too high	Faulty sensor	 Service Provider required to replace the Level Sensor.

Contact Salsnes Filter™ with the listed information to order replacement parts.

Provide the:

- Product name and model number (refer to the front of this manual)
- Part number and description of the replacement part or accessory

If a replacement part is not listed, contact Salsnes Filter™.

9.1 Filter

9.1.1 Filter (Internal) Components

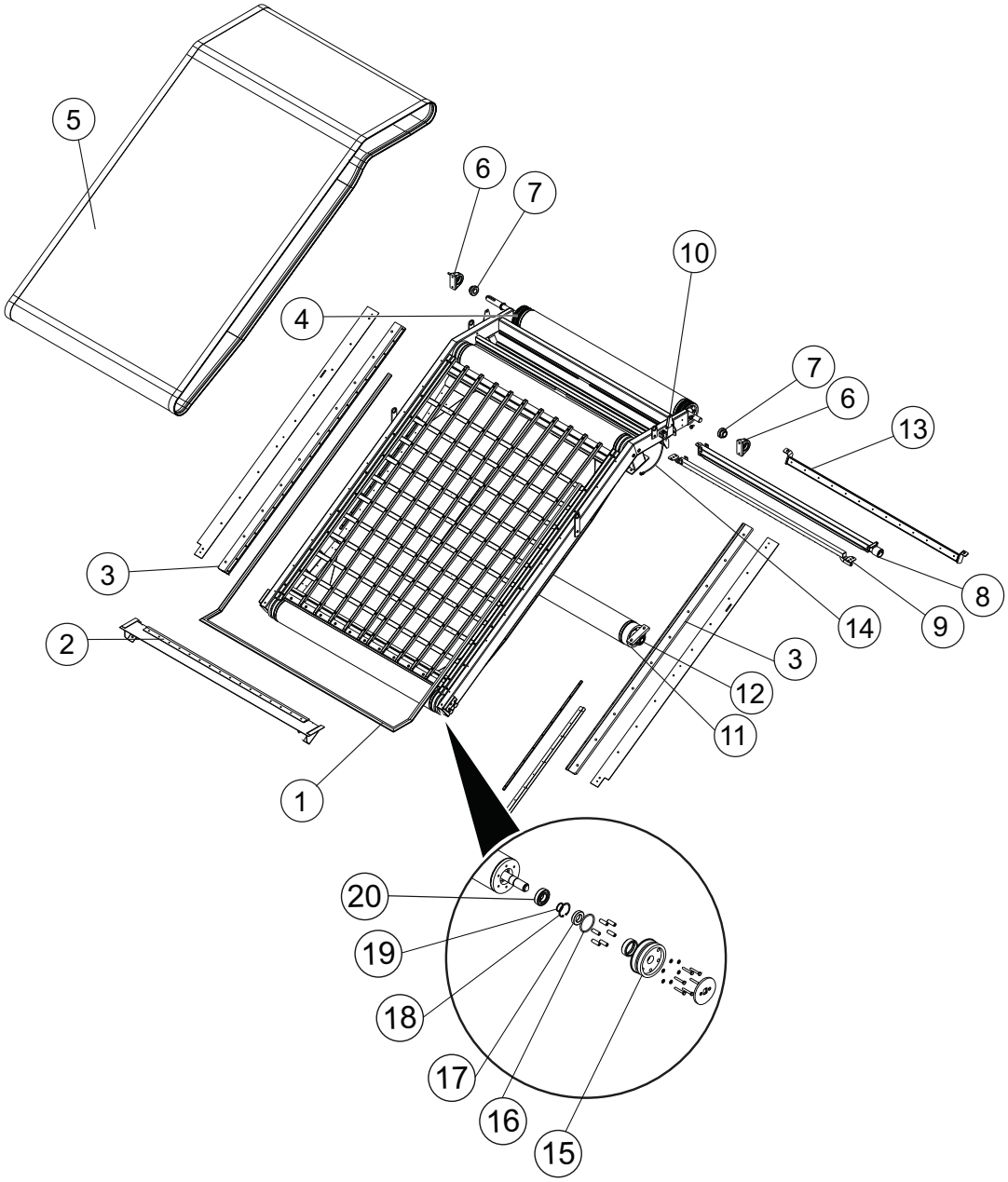

Figure 34 Filter Mesh Assembly

Item	Description	Part Number
1	Filter Gasket	
	SF: 2000- Length 3217 mm	20005011
	SF: 4000- Length 4230 mm	20005011

Item	Description	Part Number
	SF: 6000- Length 5658 mm	20005011
2	Wiper, Sealing Beam (not detailed)	
	SF: 2000	22504836
	SF: 4000	24504836
	SF: 6000	26504836
3	Wiper, Seal Bar	
	SF: 2000(Left Side)	22504812
	SF: 2000(Right Side)	22504811
	SF: 4000(Left Side)	26504812
	SF: 4000(Right Side)	26504811
	SF: 6000(Left Side)	26504812
	SF: 6000(Right Side)	26504811
4	Drive Roller Wheel	20504406
5	Filter Mesh	Contact Service Provider
6	Bearing Housing, Drive Roller	20006053
7	Bearing, Drive Roller	20006030
8	Air Knife	Refer to Section 9.3
9	Spray Bar Nozzle (Hot Water) (not detailed)	20012152
	Spray Bar Nozzle (Cold Water) (not detailed)	10202149
10	Wiper, Sludge Compartment (not detailed)	
	SF: 2000- Length 705 mm	22304102
	SF: 4000- Length 1000 mm	24304102
	SF: 6000- Length 1500 mm	26304102
11	Under Roller Bearing Assembly	
	SF: 2000;SF: 4000; SF: 6000	20006026
12	Under Roller Bearing	
	SF: 2000;SF: 4000; SF: 6000	20006030
13	Under Roller Wiper (not detailed)	
	SF: 2000- Length 705 mm	22304102
	SF: 4000- Length 1000 mm	24304102
	SF: 6000- Length 1500 mm	26304102
14	Grease Tube	20007016
15	Wheel, Guide Roller	20504202
16	O-ring, Guide Roller	421000138
17	Seal, Shaft 35X60X13	421000136
18	Circlip, 60mm	421000141
19	Circlip, 35mm	421000140
20	Bearing	421000139

9.1.2 Filter (External) Components

Description	Part Number
Auger Drive Motor - UL Class 1, Division 1	
SF: 2000; SF: 4000; SF: 6000	508072-001
Drive Motor - UL Class 1, Division 1	
SF: 2000; SF: 4000 SF: 6000	508072-001
Auger Drive Motor - UL	
SF: 2000; SF: 4000 SF: 6000	916865-001
Drive Motor - UL	
SF: 2000; SF: 4000; SF: 6000	916865-001
Auger Gear Box - UL Class 1, Division 1	
SF: 2000	448087-004
SF: 4000;SF: 6000	448041-003
Drive Motor Gear Box - UL Class 1, Division 1	
SF: 2000	448087-001
SF: 4000;SF: 6000	448041-001
Drive Motor - CE	
SF: 2000	20110102
SF: 4000;SF: 6000	20110103
Auger Motor Gear Box - CE	
SF: 2000	20110119
SF: 4000;SF: 6000	20110120
Drive Motor Gear Box - CE	
SF: 2000	20110117
SF: 4000;SF: 6000	20110118

9.2 Dewater Unit Components

Item	Description	Part Number
1	Wedge Wire Screen	
	SF: 2000	22302202
	SF: 4000	24302202
	SF: 6000	26302202
2	Nozzle, 1/8” Flat Spray	20012152
3	Insert	21304211
4	Gasket, Dewatering Unit	
	SF: 2000	22304001
	SF: 4000	24304001
	SF: 6000	20304002
5	Spring	20314201

9.3 Air Knife Components

Item	Description	Part Number
1	Air Knife Assembly	
	SF: 2000	448143
	SF: 4000	448160
	SF: 6000	448124
2	Air Knife O-Ring	20504609
3	Air Knife Plastic	
	SF: 2000	448145
	SF: 4000	448162
	SF: 6000	448126

9.4 Instrumentation Components

Item	Description	Part Number
1	Level Sensor (CE)	421000142
1	Level Sensor (UL)	448173
2	Pressure Transmitter (UL Class 1 / Division 1)	508055
2	Pressure Transmitter (UL / CE)	20215203
3	Solenoid Valve - 2 Way (UL Class 1 / Division 1)	508081
3	Solenoid Valve - 2 Way (UL / CE) - 1/2”	20012175
3	Solenoid Valve - 2 Way (UL / CE) - 1/4”	20012293
3	Solenoid Valve - 2 Way (UL / CE) - 3/4”	20012060
4	Solenoid Valve - 4 Way (UL Class 1 / Division 1)	508082

9.5 Operator Kit Components

Item	Description	Part Number
1	Manual Scraper	20032009
2	Lid Key	Contact Manufacturer

9.6 Miscellaneous Parts

Item	Description	Part Number
1	Grease	1073
2	Seal, Auger Shaft	448067
3	Bearing, Auger Shaft	448068-4060
4	Insert, Sludge Compartment	
	SF: 2000	22304104
	SF: 4000	24304104
	SF: 6000	26304101
5	Sealing, Rubber Edge Housing	
	SF: 2000 - Length = 6m	20005012

Item	Description	Part Number
	SF: 4000- Length = 8m	20005012
	SF: 6000- Length = 9m	20005012
6	Sealing, Rubber Cover	
	SF: 2000- Length = 6m	20005013
	SF: 4000- Length = 8m	20005013
	SF: 6000- Length = 9m	20005013

9.7 Blower

Refer to the Blower Manufacturer’s Operational and Maintenance manual for replacement parts.

Assembly and operating manual

Rotary blower

BB C pr

Number: 9_9593 22 E

Manufacturer:

KAESER KOMPRESSOREN SE

96410 Coburg • PO Box 2143 • GERMANY • Tel. +49-(0)9561-6400 • Fax +49-(0)9561-640130

http://www.kaeser.com

/KKW/BBBCP 2.02 en SBA-GEBLAESE

20140325 112112

KAESER KOMPRESSOREN

Contents

1 Regarding this document
- 1.1 Using this document ... 1
- 1.2 Further documents ... 1
- 1.3 Copyright ... 1
- 1.4 Symbols and labels ... 1
  - 1.4.1 Warnings ... 1
  - 1.4.2 Potential damage warnings ... 2
  - 1.4.3 Other alerts and their symbols ... 2

2 Technical Specifications
- 2.1 Nameplate ... 4
- 2.2 Option codes ... 4
- 2.3 Weight ... 5
- 2.4 Drive motor ... 6
- 2.5 Temperature ... 6
- 2.6 Recommended oil ... 6
- 2.7 Lubricating oil charge ... 7
- 2.8 Ambient and intake conditions ... 7
- 2.9 Noise emission ... 8
- 2.10 Power Supply ... 8
- 2.11 Power supply specifications ... 9
  - 2.11.1 Mains frequency: 50 Hz ... 9
  - 2.11.2 Mains frequency: 60 Hz ... 11
- 2.12 Options ... 12
  - 2.12.1 Pressure switch ... 12
  - 2.12.2 Speed monitor ... 13
  - 2.12.3 Unloaded start valve ... 14
  - 2.12.4 Temperature gauge switch ... 14
  - 2.12.5 Pressure sensor ... 15
  - 2.12.6 Start-up pressure regulating valve ... 15
  - 2.12.7 Thermostat ... 15
  - 2.12.8 Pressure gauge ... 16
  - 2.12.9 Filter maintenance indicator ... 16
  - 2.12.10 Filter pressure differential switch ... 16
  - 2.12.11 Check valve ... 17
  - 2.12.12 Auxiliary heating ... 17
  - 2.12.13 Outdoor installation ... 18
  - 2.12.14 Intake from pipe network ... 18
  - 2.12.15 Fan (sound enclosure) ... 18

3 Safety and Responsibility
- 3.1 Basic instructions ... 21
- 3.2 Specified use ... 21
- 3.3 Improper use ... 21
- 3.4 User's responsibilities ... 22
  - 3.4.1 Observe statutory and universally accepted regulations ... 22
  - 3.4.2 Determining personnel ... 22
- 3.5 Dangers ... 22
  - 3.5.1 Safely dealing with sources of danger ... 23
  - 3.5.2 Safe machine operation ... 25
  - 3.5.3 Organisational measures ... 27
- 3.6 Danger areas ... 27
- 3.7 Safety devices ... 27
- 3.8 Safety signs ... 28
- 3.9 In emergency ... 30

3.9.1 Correct fire fighting 30
3.9.2 Remove lubricating oil from the skin. 30
3.10 Environment protection 31
3.11 Warranty 31

4 Design and Function
4.1 Machine 32
4.1.1 Blower block 33
4.1.2 Pressure relief valve 33
4.1.3 Compensator 34
4.2 Safety devices 34
4.3 Options 34
4.3.1 Pressure switch 34
4.3.2 Speed monitor 35
4.3.3 Unloaded start valve 35
4.3.4 Temperature gauge switch 37
4.3.5 Pressure sensor 37
4.3.6 Start-up pressure regulating valve 38
4.3.7 Thermostat 39
4.3.8 Pressure gauge 40
4.3.9 Filter maintenance indicator 40
4.3.10 Filter pressure differential switch 40
4.3.11 Check valve 41
4.3.12 Auxiliary heating 42
4.3.13 Outdoor installation 43
4.3.14 Intake from pipe network 43
4.3.15 Sound enclosure 43

5 Installation and Operating Conditions
5.1 Ensuring safety 45
5.2 Installation conditions 45
5.2.1 Determining location and clearances 45
5.2.2 Ensuring adequate ventilation 47
5.3 Outdoor installation 47

6 Installation
6.1 Ensuring safety 48
6.2 Reporting transport damage 49
6.3 Anchoring the machine 49
6.4 Connecting the power supply 49
6.4.1 Connecting the drive motor 50
6.4.2 Under frequency control 50
6.5 Creating the compressed air connection 52
6.6 Safety devices installed by the user 52
6.7 Options 52
6.7.1 Connecting the pressure switch 53
6.7.2 Connecting the speed monitor 53
6.7.3 Connecting the temperature gauge switch 53
6.7.4 Connecting the pressure sensor 53
6.7.5 Connecting the thermostat 53
6.7.6 Connecting the filter pressure differential switch 53
6.7.7 Connecting the auxiliary heater 53
6.7.8 Connecting the suction line 54
6.7.9 Sound enclosure 54
6.8 BB 69 C pr , BB 89 C pr with sound enclosure: Remove transport securing devices 55

7 Initial Start-up
7.1 Ensuring safety 56
7.2 Checking installation and operating conditions 57
7.3 Instructions to be observed before commissioning or re-commissioning 57
7.4 Checking the direction of rotation 58
7.4.1 Drive motor 58
7.4.2 Fan (sound enclosure) 58

8 Operation
8.1 Switching on and off 60
8.1.1 Switching on 60
8.1.2 Switching off 60
8.2 Switching off in an emergency 61
8.3 Checking the fan function (sound enclosure) 61

9 Fault Recognition and Rectification
9.1 Basic instructions 62
9.2 Alarms 62
9.3 Options 63
9.3.1 Sound enclosure faults 63
9.3.2 Faulty pressure sensor 63

10 Maintenance
10.1 Ensuring safety 65
10.2 Maintenance schedule 66
10.2.1 Logging maintenance work 66
10.2.2 Regular maintenance tasks 66
10.2.3 Regular service tasks 67
10.3 Sound enclosure 68
10.4 Drive belt maintenance 68
10.5 Checking the oil level 70
10.6 Replenishing lubricating oil 70
10.7 Changing the oil 71
10.8 Air filter maintenance 72
10.8.1 Filter maintenance indicator 73
10.8.2 Filter pressure differential switch 74
10.8.3 Changing the air filter 74
10.9 Motor maintenance 75
10.9.1 Permanently greased drive motor bearings 75
10.9.2 Sound enclosure fan motor 75
10.10 Testing the pressure relief valve 75
10.11 Checking rotors for contamination 77
10.12 Documenting maintenance and service work 78

11 Spares, Operating Materials, Service
11.1 Note the nameplate 79
11.2 Ordering spares and operating fluids/materials 79
11.3 Spares for service and repair 79
11.3.1 BB 52 C pr 80
11.3.2 BB 69 C pr , BB 89 C pr 86
11.4 KAESER AIR SERVICE 89
11.5 Service Addresses 89
11.6 Completing the contamination declaration 89

12 Decommissioning, Storage and Transport
12.1 De-commissioning 90
12.2 Packing 90

12.3 Transport 91
12.3.1 Safety 91
12.3.2 BB 69 C pr , BB 89 C pr with sound enclosure 91
12.3.3 Transport with a forklift truck 91
12.4 Storage 91
12.5 Disposal 92

13 Annex
13.1 Pipeline and instrument flow diagram (P&I diagram) 93
13.2 Dimensional drawing 96
13.2.1 BB 52 C pr 96
13.2.2 BB 69 C pr , BB 89 C pr 100
13.3 Design diagrams 105
13.4 Drive motor electrical diagram 109
13.5 Electrical diagrams for options 114
13.5.1 Pressure switch wiring diagram 114
13.5.2 Speed monitor wiring diagram 114
13.5.3 Temperature gauge switch wiring diagram 114
13.5.4 Pressure sensor connections 115
13.5.5 Thermostat wiring diagram 115
13.5.6 Filter pressure differential switch wiring diagram 116
13.5.7 Auxiliary heater wiring diagram 116
13.5.8 Extractor motor wiring plan (sound enclosure) 122
13.6 Declaration concerning contamination 123
13.7 BB 69 C pr , BB 89 C pr : Noise emission 125
13.7.1 Sound pressure level [dB(A)] 125
13.7.2 Sound power level [dB(A)] 128
13.8 BB 52 C pr : Customer-specific design data 131

List of Illustrations

Fig. 1 Position of the safety signs at the machine 28
Fig. 2 Safety sign position, standstill heating, Option H2 29
Fig. 3 BB 69 C pr , BB 89 C pr : Safety sign position,weather protection, Option H3 29
Fig. 4 Machine 32
Fig. 5 Blower block 33
Fig. 6 Pressure relief valve 33
Fig. 7 Compensator 34
Fig. 8 Pressure switch 35
Fig. 9 Unloaded start valve AFM 4 , AFM 5 35
Fig. 10 Unloaded start valve AFE 15 36
Fig. 11 Diagram of the unloaded start valve AFE 15 36
Fig. 12 Location of the temperature gauge 37
Fig. 13 Pressure sensor 38
Fig. 14 Start-up pressure regulating valve 38
Fig. 15 Principle – Start-up pressure regulating valve 38
Fig. 16 Thermostat 39
Fig. 17 Location of the pressure gauge 40
Fig. 18 Filter pressure differential switch 40
Fig. 19 Pressure connection to the filter pressure differential switch 41
Fig. 20 Filter pressure differential switch function 41
Fig. 21 Check valve 42
Fig. 22 Auxiliary heating 42
Fig. 23 Sound enclosure overview 43
Fig. 24 Recommended machine placement and minimum dimensions [mm] 46
Fig. 25 Removing the transport securing devices 55
Fig. 26 Sound enclosure 68
Fig. 27 Drive belt maintenance 69
Fig. 28 Checking the oil level 70
Fig. 29 Replenishing lubricating oil 71
Fig. 30 Changing the oil 72
Fig. 31 Filter maintenance indicator 73
Fig. 32 Filter maintenance indicator (sound enclosure) 73
Fig. 33 Change the air filter (BB 52 C pr) 74
Fig. 34 Change the air filter (BB 69 C pr , BB 89 C pr) 75
Fig. 35 Checking the pressure relief valve (BB 52 C pr) 76
Fig. 36 Checking the pressure relief valve (BB 69 C pr , BB 89 C pr) 76
Fig. 37 Transporting with a forklift truck 91
Fig. 38 Pressure switch wiring diagram 114
Fig. 39 Speed monitor wiring diagram 114
Fig. 40 Temperature gauge switch wiring diagram 114
Fig. 41 Pressure sensor connections 115
Fig. 42 Thermostat wiring diagram 115
Fig. 43 Filter pressure differential switch wiring diagram 116
Fig. 44 Extractor motor star-delta connection (BB 52 C pr) 122
Fig. 45 Single-phase extractor motor diagram (BB 52 C pr) 122
Fig. 46 Extractor motor star-delta connection (BB 69 C pr , BB 89 C pr) 122
Fig. 47 Single-phase extractor motor diagram (BB 69 C pr , BB 89 C pr) 123
Fig. 48 Identification sheet - standard 132

List of Illustrations

List of Tables

Tab. 1	Danger levels and their definition (personal injury)	1
Tab. 2	Danger levels and their definition (damage to property)	2
Tab. 3	Nameplate	4
Tab. 4	Option codes	4
Tab. 5	Mass without sound enclosure	5
Tab. 6	Mass with sound enclosure	5
Tab. 7	Drive motor	6
Tab. 8	Temperature	6
Tab. 9	Recommended oil	6
Tab. 10	Lubricating oil charge	7
Tab. 11	Ambient and intake conditions	7
Tab. 12	Mains supply 230V/3/50Hz	9
Tab. 13	Mains supply 400V/3/50Hz	9
Tab. 14	Supply conditions at 400V/3/50Hz (direct online starting)	10
Tab. 15	Mains condition at 400V/3/50Hz (star-delta start)	10
Tab. 16	Mains supply 500V/3/50Hz	11
Tab. 17	Mains supply 230V/3/60Hz	11
Tab. 18	Mains supply 380V/3/60Hz	11
Tab. 19	Mains supply 460V/3/60Hz	12
Tab. 20	Mains supply 575V/3/60Hz	12
Tab. 21	Pressure switch (option C9)	12
Tab. 22	Speed monitor (Option C10)	13
Tab. 23	Speed monitor sensor (Option C10)	13
Tab. 24	Speed monitor sensor setting (Option C10)	13
Tab. 25	Unloaded start valve (Option C11)	14
Tab. 26	Temperature gauge switch (Option C13)	14
Tab. 27	Pressure sensor (option C14)	15
Tab. 28	Start-up pressure regulating valve (Option C18)	15
Tab. 29	Thermostat (Option C19)	15
Tab. 30	Pressure gauge (option C20)	16
Tab. 31	Filter maintenance indicator (option F4)	16
Tab. 32	Filter pressure differential switch (Option F5)	16
Tab. 33	Check valve (Option G1) BB 52 C pr	17
Tab. 34	Check valve (Option G1) BB 69 C pr , BB 89 C pr	17
Tab. 35	Auxiliary heating (Option H2) BB 52 C pr	17
Tab. 36	Auxiliary heating (Option H2) BB 69 C pr , BB 89 C pr	17
Tab. 37	Thermostatic auxiliary heating (Option H2)	17
Tab. 38	BB 52 C pr : Extractor delivery (Option H12)	18
Tab. 39	BB 52 C pr : Extractor motor 3~/50Hz (Option H12)	18
Tab. 40	BB 52 C pr : Extractor motor 1~/50Hz (Option H12)	19
Tab. 41	BB 52 C pr : Extractor motor 3~/60Hz (Option H12)	19
Tab. 42	BB 52 C pr : Extractor motor 1~/60Hz (Option H12)	19
Tab. 43	BB 69 C pr , BB 89 C pr : Extractor delivery (Option H12)	19
Tab. 44	BB 69 C pr , BB 89 C pr : Extractor motor 3~/50Hz (Option H12)	19
Tab. 45	BB 69 C pr , BB 89 C pr : Extractor motor 1~/50Hz (Option H12)	20
Tab. 46	BB 69 C pr , BB 89 C pr : Extractor motor 3~/60Hz (Option H12)	20
Tab. 47	BB 69 C pr , BB 89 C pr : Extractor motor 1~/60Hz (Option H12)	20
Tab. 48	Danger areas	27
Tab. 49	Safety signs	29
Tab. 50	Torques for customer pipeline	52
Tab. 51	Installation conditions checklist	57
Tab. 52	Re-commissioning after storage	58
Tab. 53	Faults and remedies	62
Tab. 54	Faults and remedies (option H12)	63

List of Tables

Tab. 55	Faults and remedies (option C14)	63
Tab. 56	Regular maintenance tasks	66
Tab. 57	Regular service tasks	67
Tab. 58	Logged maintenance tasks	78
Tab. 59	Consumable parts	79
Tab. 60	Lubricating oil overview	79
Tab. 61	Legend, dimensional drawing BB 52 C pr	96
Tab. 62	Legend, dimensional drawing BB 69 C pr , BB 89 C pr	100
Tab. 63	Blower block diagram (machine layout)	105
Tab. 64	Diagram legend	105
Tab. 65	Sound pressure level, legend	125
Tab. 66	Sound power level, legend	128
Tab. 67	Legend for the identification sheet (standard)	133

1 Regarding this document

1.1 Using this document

This document, hereafter called the service manual, contains important information about all life phases of the machine.

The operating manual is a component of the product. It describes the machine as it was at the time of first delivery after manufacture.

- ➢ Keep the operating manual in a safe place throughout the life of the machine.
- ➢ Supply any successive owner or user with this operating manual.
- ➢ Please insert any amendment or revision of the operating manual sent to you.
- ➢ Enter details from the machine nameplate and individual items of equipment in the table in chapter 2.

1.2 Further documents

Included with this operating manual are additional documents intended to assist in the safe operation of the machine:

- ■ Manufacturer's/installation declaration according to applicable directives.
- ■ Motor manual.

Missing documents can be requested from KAESER.

- ➢ Make sure all documents are complete and observe the instructions contained in them.
- ➢ Make sure you provide the data from the nameplate when ordering documents.

1.3 Copyright

This service manual is copyright protected. Queries regarding use or duplication of the documentation should be referred to KAESER. Correct use of information will be fully supported.

1.4 Symbols and labels

- ➢ Please note the symbols and labels used in this document.

1.4.1 Warnings

Warning notices indicate dangers that may result in injury when disregarded.

Warning notices indicate three levels of danger identified by the corresponding signal word:

Signal term	Significance	Consequences of non-compliance
DANGER	Warns of an imminent danger	Will result in death or severe injury
WARNING	Warns of a potentially imminent danger	May result in death or severe injury
CAUTION	Warns of a potentially dangerous situation	May result in a moderate physical injury

Tab. 1 Danger levels and their definition (personal injury)

Warning notices preceding a chapter apply to the entire chapter, including all sub-sections.

Example:



DANGER
The type and source of the imminent danger is shown here!
The possible consequences of ignoring a warning are shown here.
If you ignore the warning notice, the "DANGER" signal word indicates a lethal or severe injury will occur.
➢ The measures required to protect yourself from danger are shown here.

Warning notes referring to a sub-section or the subsequent action are integrated into the procedure and numbered as an action.

Example:



1. **WARNING!**
   The type and source of the imminent danger is shown here!
   The possible consequences of ignoring a warning are shown here.
   If you ignore the warning notice, the "WARNING" signal word indicates that a lethal or severe injury may occur.
   ➢ The measures required to protect yourself from danger are shown here.
2. Always read and comply with warning instructions.

1.4.2 Potential damage warnings

Contrary to the warnings shown above, damage warnings do not indicate a potential personal injury.

Warning notices for damages are identified by their signal term.

Signal term	Significance	Consequences of non-compliance
NOTE	Warns of a potentially dangerous situation	Damage to property is possible

Tab. 2 Danger levels and their definition (damage to property)

Example:



NOTICE
The type and source of the imminent danger is shown here!
Potential effects when ignoring the warning are indicated here.
➢ The protective measures against the damages are shown here.

➢ Carefully read and fully comply with warnings against damages.

1.4.3 Other alerts and their symbols



This symbol identifies particularly important information.

Material — Here you will find details on special tools, operating materials or spare parts.

Precondition — Here you will find conditional requirements necessary to carry out the task.
The conditions relevant to safety shown here will help you to avoid dangerous situations.

Option H12 — ➢ This symbol denotes lists of actions comprising one stage of a task.
Operating instructions with several steps are numbered in the sequence of the operating steps. Information relating to one option only are marked with an option code (e.g., H12 indicates that this section applies only to machines with sound enclosure). Option codes used in this service manual are explained in chapter 2.2.



Information referring to potential problems are identified by a question mark.
The cause is identified in the help text ...
➢ ... as is a solution.



This symbol identifies important information or measures regarding the protection of the environment.

Further information — Further subjects are introduced here.

2 Technical Specifications

2.1 Nameplate

The machine's nameplate provides the model designation and important technical information.

The nameplate is attached to the machine stand and at the left sidewall of the sound enclosure (Option H12).

The nameplate data relates to Standard intake state of 1013 mbar and 20 °C.

➢ Enter here the nameplate data as a reference:

Feature	Value
Rotary blowers	
Part No.	
Serial No.	
Year of manufacture	
Delivery at p_{max}	
Max. final pressure (a)	
Max. pressure differential	
Rated motor power	
Block RPM	
Ambient temperature	
Overall weight	

Tab. 3 Nameplate

2.2 Option codes

The table contains a list of possible options.

➢ Enter options here as a reference.

Option	Option code	Available?
Operating mode: Gauge pressure	B13	
Pressure switch	C9	
Speed monitor	C10	
Unloaded start valve	C11	
Temperature gauge switch	C13	
Pressure transducer	C14	
Start-up pressure regulating valve	C18	
Thermostat	C19	
Pressure gauge	C20	
Under frequency control	C32	
Filter maintenance indicator	F4	
Filter pressure differential switch	F5	

Option	Option code	Available?
Check valve	G1	
Auxiliary heating	H2	
Outdoor installation	H3	
Piped inlet	H11	
Sound enclosure	H12	

Tab. 4 Option codes

2.3 Weight

The indicated mass refers to the machine including the drive motor, but without options. The actual mass of individual machines depends on equipment fitted.

Machine without sound enclosure

	Mass [kg] *		
Rated motor power [kW]	BB 52 C pr	BB 69 C pr	BB 89 C pr
1.5	100	—	—
2.2	105	—	—
3	110	—	—
4	120	155	160
5.5	130	165	170
7.5	140	175	180
11	—	190	195
15	—	195	200

* Approximate values, actual mass can vary depending on the motor manufacturer

Tab. 5 Mass without sound enclosure

Option H12 Machine with sound enclosure

	Mass [kg] *		
Rated motor power [kW]	BB 52 C pr	BB 69 C pr	BB 89 C pr
1.5	170	—	—
2.2	175	—	—
3	180	—	—
4	190	285	290
5.5	200	295	300
7.5	210	305	310
11	—	320	325

* Approximate values, actual mass can vary depending on the motor manufacturer

	Mass [kg] *		
Rated motor power [kW]	BB 52 C pr	BB 69 C pr	BB 89 C pr
15	—	325	330
* Approximate values, actual mass can vary depending on the motor manufacturer			

Tab. 6 Mass with sound enclosure

2.4 Drive motor

Feature	Value
Rated motor power* [kW]	
Synchronous speed (2 poles/50 Hz) [min^{-1}]	3000
Synchronous speed (2 poles/60 Hz) [min^{-1}]	3600
Enclosure protection*	
* Copy the data from the motor nameplate into the table.	

Tab. 7 Drive motor

The warranty for machine damage is invalid in the following cases, if the damage can be traced to the drive motor:

- The machine is shipped without drive motor.
- The customer supplies the drive motor.

2.5 Temperature

	BB 52 C pr	BB 69 C pr	BB 89 C pr
Maximum block discharge temperature [°C]	160	160	160
Maximum temperature differential [K] *	115	115	115
* Discharge temperature minus inlet temperature			

Tab. 8 Temperature

2.6 Recommended oil

The lubricant type to be used depends on the operating conditions.

	OMEGA FLUID	
	SB220	SF220
Description	Synthetic oil	Synthetic oil
* Special measures are required for oil temperatures >120 °C. Consult KAESER for advice on this subject.		

	OMEGA FLUID	
	SB220	SF220
Application	Suitable for all applications, except food processing.	Specifically for applications where the compressed air comes into contact with foodstuffs.
Oil temperature [°C]	–10 – +120*	–5 – +110
* Special measures are required for oil temperatures >120 °C. Consult KAESER for advice on this subject.		

Tab. 9 Recommended oil

Further information An adhesive label identifying the used lubricant is attached to the blower block.
Information on ordering oil is found in chapter 11.2.

2.7 Lubricating oil charge

The block oil chambers are filled with oil at the factory.

Guide value

	Drive-end	Gear-end
Lubricating oil charge [l]	0.15 ±15 %	0.13 ±15 %

Tab. 10 Lubricating oil charge

2.8 Ambient and intake conditions

The following conditions must be maintained:

- No saliferous atmosphere in the immediate vicinity of the machine.
- The air must be free of chemicals or explosive substances.

	BB 52 C pr	BB 69 C pr	BB 89 C pr
Permissible temperature [°C]	–5 – +40	–5 – +40	–5 – +40
Machine with connected auxiliary heating (Options H2, H12) Permissible temperature [°C]	–15 – +40	–15 – +40	–15 – +40
Relative humidity [%]	0 – 80	0 – 80	0 – 80
Maximum altitude AMSL [m]	1000	1000	1000

Tab. 11 Ambient and intake conditions

Differing ambient and intake conditions require the recalculation of the performance data, and are permissible only upon agreement by the manufacturer.

Further information The wiring diagram for option H12 in chapter 13.5 contains further details of the power supply connection.

2.9 Noise emission

Operating state LOAD under the following conditions:

- Nominal speed
- Nominal flow rate
- Nominal pressure

Measuring condition according to DIN EN ISO 2151 and basic standard ISO 9614–2:

- Measurement distance: 1 m
- Tolerance: ±3 dB(A)
- Sound insulated pipeline

Further information BB 52 C pr : The sound pressure level and sound power level values for your machine are provided in the customer-specific design data sheet in chapter 13.8.

BB 69 C pr , BB 89 C pr : The sound pressure level and sound power level values for your machine are provided in the tables shown in chapter 13.7.

These values refer to the design condition. They do not apply to the control range with frequency converter.

2.10 Power Supply

Basic requirements

The machine is designed in accordance with the conditions for an electrical power supply specified in EN 60204-1 (IEC 60204-1) section 4.3.
In the absence of other user-specified conditions, the limits laid down in this standard must be adhered to.
It is recommended that the user and the supplier reach an agreement on the basis of the EN 60204-1, Annex B.

The machine requires a symmetrical three-phase power supply.
In a symmetrical three-phase supply, the phase displacement and voltages are equal for all phases.

The machine may only be operated from an earthed TN or TT three-phase supply.

Connection to an IT supply is not permitted without taking further measures (earth leak detection, etc.).

When designing and creating an external user-provided switching system, it must be ensured that the load currents can be released only after the presence of the applicable supply voltage has been tested and verified.

In the case of the failure of a supply voltage (load circuit or control circuit), the other voltage must always be switched off as well.

This machine is designed for the operation in an industrial environment with proprietary supply network separated from the public supply by a transformer or generator.

Option C32 **Under frequency control**

Extended demands on a three-phase supply for a machine with frequency converter:

This machine may only be supplied from an earthed TN or TT three-phase supply in which the **neutral point** is earthed.

The machine may not be connected to a three-phase supply in which one of the phases is earthed, as this can lead to dangerous voltage surges.

Connection to an IT network is not permitted without further measures being taken (earth leak detection, specially designed frequency converter, etc.).

Further information The connection diagram in chapter 13.4 contains further details of the power supply connection.

2.11 Power supply specifications

The following supply cable conductor cross sections (copper multi-core) and fusing (slow-blow class gG) are selected according to German DIN VDE 0100-430 (IEC 60364-4-43 and IEC 60364-4-473) and DIN VDE 0298-4 (HD 384.5.523 S2) standards for 30 °C ambient temperature and wiring type C.

➢ For other application conditions, check conductor diameters and change accordingly.

Other conditions would include, for example:

- Higher temperature
- Other cable installation method
- cable lengths >50 m

2.11.1 Mains frequency: 50 Hz

Nominal voltage: 230V±10%/3/50Hz (EN 60034-1)

Rated motor power [kW]		1.5	2.2	3	4	5.5	7.5	11	15
Current draw [A] ± (10%)		5.0	7.8	9.9	12.8	17.3	22.8	35.5	48.4
Direct-online starting	Backup fuse [A]	16	20	25	35	35	50	80	100
	Supply cable [mm^2]	1x 4x2.5	1x 4x2.5	1x 4x2.5	1x 4x2.5	1x 4x2.5	1x 4x6	1x 4x10	1x 4x10
Star-delta starting	Backup fuse [A]	10	10	16	16	25	35	40	63
	Supply cable [mm^2]	2x 4x2.5	2x 4x2.5	2x 4x2.5	2x 4x2.5	2x 4x2.5	2x 4x2.5	2x 4x4	2x 4x6

Tab. 12 Mains supply 230V/3/50Hz

Nominal voltage: 400V±10%/3/50Hz (EN 60034-1)

Rated motor power [kW]	1.5	2.2	3	4	5.5	7.5	11	15
Current draw [A] ± (10%)	2.9	4.5	5.7	7.4	10.0	13.2	20.5	28.0

Rated motor power [kW]		1.5	2.2	3	4	5.5	7.5	11	15
Direct-online starting	Backup fuse [A]	6	10	16	20	25	35	40	63
	Supply cable [mm^2]	1x 4x2.5	1x 4x2.5	1x 4x2.5	1x 4x2.5	1x 4x2.5	1x 4x2.5	1x 4x4	1x 4x10
Star-delta starting	Backup fuse [A]	4	6	10	10	16	16	25	35
	Supply cable [mm^2]	2x 4x2.5	2x 4x2.5	2x 4x2.5	2x 4x2.5	2x 4x2.5	2x 4x2.5	2x 4x2.5	2x 4x2.5

Tab. 13 Mains supply 400V/3/50Hz

Power supply conditions 400V/3/50Hz

The network conditions apply to machines connected to public mains supplies with the following characteristics.

- Mains frequency: 50 Hz
- Voltage between exterior and neutral lines 220 V...250 V
- Voltage between the exterior lines 380 V...430 V

They do not apply to private power supplies within industrial areas isolated from the public mains.

The motor powers listed in table are intended for operation with a public power supply with a system impedance at the transfer point (house connection) of maximum Z_{max} [Ohm].

The operator must ensure that the machines are only connected to a network that meets these requirements. If necessary, ask the local electricity company for the value of the network impedance.

Direct-online starting

Motor power [kW]	2.2	3	4	5.5	7.5	11	15
Highest permissible system impedance* Z_{max} [Ohm]	0.317	0.182	0.120	0.089	0.061	0.027	0.013

*Specification related to the sum of impedances in external and neutral lines.

Tab. 14 Supply conditions at 400V/3/50Hz (direct online starting)

Star-delta starting

Motor power [kW]	3	4	5.5	7.5	11	15
Highest permissible system impedance* Z_{max} [Ohm]	0.390	0.295	0.242	0.188	0.110	0.068

*Specification related to the sum of impedances in external and neutral lines.

Tab. 15 Mains condition at 400V/3/50Hz (star-delta start)

Machines with current consumption >16 A...<75 A comply fully with IEC 61000-3-12.

Nominal voltage: 500V±10%/3/50Hz (EN 60034-1)

Rated motor power [kW]		1.5	2.2	3	4	5.5	7.5	11	15
Current draw [A] ± (10%)		2.4	3.6	4.5	5.9	7.9	10.4	15.5	21.4
Direct-online starting	Backup fuse [A]	6	10	16	16	20	25	35	50
	Supply cable [mm²]	1x 4x2.5	1x 4x2.5	1x 4x2.5	1x 4x2.5	1x 4x2.5	1x 4x2.5	1x 4x2.5	1x 4x6
Star-delta starting	Backup fuse [A]	4	4	6	10	16	16	20	25
	Supply cable [mm²]	2x 4x2.5	2x 4x2.5	2x 4x2.5	2x 4x2.5	2x 4x2.5	2x 4x2.5	2x 4x2.5	2x 4x2.5

Tab. 16 Mains supply 500V/3/50Hz

2.11.2 Mains frequency: 60 Hz

Nominal voltage: 230V±10%/3/60Hz (NEMA MG-1)

Rated motor power [kW]		1.5	2.2	3	4	5.5	7.5	11	15
Current draw [A] ± (10%)		5.2	7.6	10.0	12.2	17.6	23.0	35.2	48.0
Direct-online starting	Backup fuse [A]	16	20	25	35	35	50	80	100
	Supply cable [mm²]	1x 4x2.5	1x 4x2.5	1x 4x2.5	1x 4x2.5	1x 4x2.5	1x 4x6	1x 4x10	1x 4x10
Star-delta starting	Backup fuse [A]	10	10	16	16	25	35	40	63
	Supply cable [mm²]	2x 4x2.5	2x 4x2.5	2x 4x2.5	2x 4x2.5	2x 4x2.5	2x 4x2.5	2x 4x4	2x 4x6

Tab. 17 Mains supply 230V/3/60Hz

Nominal voltage: 380V±10%/3/60Hz (EN 60034-1)

Rated motor power [kW]		1.5	2.2	3	4	5.5	7.5	11	15
Current draw [A] ± (10%)		3.1	4.5	6.3	8.5	10.7	13.9	21.3	29.1
Direct-online starting	Backup fuse [A]	6	10	16	20	25	35	40	63
	Supply cable [mm²]	1x 4x2.5	1x 4x2.5	1x 4x2.5	1x 4x2.5	1x 4x2.5	1x 4x2.5	1x 4x4	1x 4x6
Star-delta starting	Backup fuse [A]	4	6	10	10	16	16	25	35
	Supply cable [mm²]	2x 4x2.5	2x 4x2.5	2x 4x2.5	2x 4x2.5	2x 4x2.5	2x 4x2.5	2x 4x2.5	2x 4x2.5

Tab. 18 Mains supply 380V/3/60Hz

Nominal voltage: 460V±10%/3/60Hz (NEMA MG-1)

Rated motor power [kW]		1.5	2.2	3	4	5.5	7.5	11	15
Current draw [A] ± (10%)		2.6	3.8	5.0	6.1	8.8	11.5	17.6	24.0
Direct-online starting	Backup fuse [A]	6	10	16	16	20	25	35	50
	Supply cable [mm²]	1x 4x2.5	1x 4x2.5	1x 4x2.5	1x 4x2.5	1x 4x2.5	1x 4x2.5	1x 4x2.5	1x 4x6
Star-delta starting	Backup fuse [A]	6	6	10	10	16	20	25	35
	Supply cable [mm²]	2x 4x2.5	2x 4x2.5	2x 4x2.5	2x 4x2.5	2x 4x2.5	2x 4x2.5	2x 4x2.5	2x 4x2.5

Tab. 19 Mains supply 460V/3/60Hz

Nominal voltage: 575V±10%/3/60Hz (NEMA MG-1)

Rated motor power [kW]		1.5	2.2	3	4	5.5	7.5	11	15
Current draw [A] ± (10%)		2.1	2.9	4.0	4.9	7.0	9.2	14.1	19.2
Direct-online starting	Backup fuse [A]	6	6	10	16	20	25	35	40
	Supply cable [mm²]	1x 4x2.5	1x 4x2.5	1x 4x2.5	1x 4x2.5	1x 4x2.5	1x 4x2.5	1x 4x2.5	1x 4x4
Star-delta starting	Backup fuse [A]	6	6	6	6	10	16	20	25
	Supply cable [mm²]	2x 4x2.5	2x 4x2.5	2x 4x2.5	2x 4x2.5	2x 4x2.5	2x 4x2.5	2x 4x2.5	2x 4x2.5

Tab. 20 Mains supply 575V/3/60Hz

2.12 Options

Technical data for the options available for your machine are given in the following.

2.12.1 Option C9 Pressure switch

Feature		Data
Max. contact load at 250 V [A]	Inductive load	0.5
	Resistive load	1.0
Protection (with cover, electrical connection upwards)		IP 54

Tab. 21 Pressure switch (option C9)

Further information The wiring diagram for Option C9 in chapter 13.5 contains further details of the power supply connection.

2.12.2 Option C10 Speed monitor

Sensor

Feature	Data
Rated switching distance Sn [mm]	3 – 4
Installation conditions	Not flush
Output function	DC PNP/NPN
Degree of protection	IP 67

Tab. 22 Speed monitor (Option C10)

Sensor

Feature	Data
Rated voltage [V]	110 – 240 AC/DC (50 – 60 Hz) / 27 DC (typ. 24 DC)
Contact load capacity	6 A (250 V AC); B300, R300
Power consumption [VA]	5
Start override [s]	0,5 – 15
Ambient temperature [°C]	-20 – +70
Degree of protection - enclosure/terminals	IP 40 / IP 20
Connection	16 terminals up to 2.5 mm^2 (AWG 14)

Tab. 23 Speed monitor sensor (Option C10)

Sensor setting

Feature	Data
Start override time [s]	5
Switching point [Imp/min] (basic value)	20
Hysteresis [%]	5
Switching function	II
Switching point multiplier	100

Tab. 24 Speed monitor sensor setting (Option C10)

Further information The wiring diagram for Option C10 in chapter 13.5 contains further details of the power supply connection.

2.12.3 Option C11 Unloaded start valve

Type	AFM 4	AFM 5	AFE 15
Permissible pressure [bar]	0 – 2	0 – 2	0 – 2
Maximum delivery [m^3/min]	4	5	15
Inlet connection (DIN ISO 228–1)	R 1 1/4	R 2 1/2	—
Outlet connection (DIN ISO 228–1)	G 1 1/4	R 2	—
Nominal width (DIN ISO 228–1)	—	—	G 2 A
Voltage [V]	230, 1 ph, 50/60 Hz	230, 1 ph, 50/60 Hz	—
Connecting socket	Type 2508 to DIN 43650 A	Type 2508 to DIN 43650 A	—
Degree of protection	IP 65	IP 65	—

Tab. 25 Unloaded start valve (Option C11)

2.12.4 Option C13 Temperature gauge switch

Feature		Data
Switching capacity at 250 V(AC) [A] Single pole micro-switch with changeover contact	Inductive load	1.5
	Resistive load	5.0
Switching differential of the scale range [%]		< 3
Switching point tolerance [%] (of the scale range related to the cut-out point at rising temperature)		± 0.5
Minimum voltage [V] [AC] Minimum current [mA] (Switching safety)		24 20
Degree of protection	Front	IP 53
	Rear	IP 54

Tab. 26 Temperature gauge switch (Option C13)

Further information The wiring diagram for Option C13 in chapter 13.5 contains further details of the power supply connection.

2.12.5 Option C14 Pressure sensor

Feature	Data
Output signal [mA]	4 – 20
Parasitic energy [V]	U_B = DC 10 – 30
Permissible apparent resistance [Ohm]	$R_A = (U_B [V] - 10 V) / 0.02 A$
Enclosure protection	IP 65

Tab. 27 Pressure sensor (option C14)

Further information The wiring diagram for Option C14 in chapter 13.5 contains further details of the power supply connection.

2.12.6 Option C18 Start-up pressure regulating valve

Model	AFR 10	—
Permissible pressure [bar] (a)	0 – 2	—
Maximum delivery [m^3/min]	10	—
Maximum pressure differential [mbar]	950	—
Regulating range [mbar]	200 – 950	—
Nominal width (DIN ISO 228–1)	G 2 A	—
Control line connection (DIN ISO 228–1)	R 1/8 A	—

Tab. 28 Start-up pressure regulating valve (Option C18)

2.12.7 Option C19, H12 Thermostat

Feature	Data
Spring switch with changeover contact	1–pole
Switching capacity NC contact (1–2)	AC 230 V / 2.5 A / cosϕ=0.6 AC 230 V / 16 A / cosϕ=1 DC 230 V / 0.25 A
Switching capacity NO contact (1-4)	AC 230 V / 2.5 A / cosϕ=0.6 AC 230 V / 6.3 A / cosϕ=1 DC 230 V / 0.25 A
Switching differential scale starting position [%]	6
Switching differential scale end position [%]	1,5

Feature	Data
Degree of protection	IP 54

Tab. 29 Thermostat (Option C19)

Further information The wiring diagram for Option C19 in chapter 13.5 contains further details of the power supply connection.

2.12.8 Option C20 Pressure gauge

Feature	Data
Indicator range [bar]	0 – 1.6

Tab. 30 Pressure gauge (option C20)

2.12.9 Option F4 Filter maintenance indicator

Feature	Data
Indicator range [mbar]	0 – 55

Tab. 31 Filter maintenance indicator (option F4)

2.12.10 Option F5 Filter pressure differential switch

Feature	Data
Pressure differential, adjustable [mbar]	2,5 – 50,0
Voltage [V]	(AC) eff., min. 10 (AC) max. 250 (DC) min. 12 (DC) max. 48
Rated current [A]	(AC) 10
Switching current	(AC) eff., min. 20 mA (AC) max. 6 A, cosφ = 1.0 (AC) max. 3 A, cosφ = 0.6 (DC) min. 20 mA (DC) max. 1 A
Degree of protection	IP 54

Tab. 32 Filter pressure differential switch (Option F5)

Further information The wiring diagram for Option F5 in chapter 13.5 contains further details of the power supply connection.

2.12.11 Option G1 Check valve

BB 52 C pr

Feature	Data
Threaded connection [“]	2 1/2

Tab. 33 Check valve (Option G1) BB 52 C pr

BB 69 C pr , BB 89 C pr

Feature	Data
Max. pressure and back pressure[bar]	1.5

Tab. 34 Check valve (Option G1) BB 69 C pr , BB 89 C pr

2.12.12 Option H2, H12 Auxiliary heating

BB 52 C pr

Rated voltage [V]	115	208	230
Heating capacity [W]	160	160	160
Number of radiators	1	1	1

Tab. 35 Auxiliary heating (Option H2) BB 52 C pr

BB 69 C pr , BB 89 C pr

Rated voltage [V]	110–265
Heating capacity [W]	150
Number of radiators	1

Tab. 36 Auxiliary heating (Option H2) BB 69 C pr , BB 89 C pr

Thermostat

The thermostat data apply to BB 52 C pr , BB 69 C pr and BB 89 C pr .

Feature	Data
Spring switch with changeover contact	1–pole
Switching capacity NC contact (1–2)	AC 230 V / 2.5 A / cosϕ=0.6 AC 230 V / 16 A / cosϕ=1 DC 230 V / 0.25 A
Switching capacity NO contact (1-4)	AC 230 V / 2.5 A / cosϕ=0.6 AC 230 V / 6.3 A / cosϕ=1 DC 230 V / 0.25 A
Switching differential scale starting position [%]	6
Switching differential scale end position [%]	1.5

Feature	Data
Degree of protection	IP 54

Tab. 37 Thermostatic auxiliary heating (Option H2)

Further information The wiring diagram for Option H2 in chapter 13.5 contains further details of the power supply connection.

2.12.13 Option H3, H12 Outdoor installation

The dimensional drawings in chapter 13.2 include dimensions for outdoors installation.

2.12.14 Option H11 Intake from pipe network

The dimensional drawings in chapter 13.2 include connection dimensions.

2.12.15 Option H12 Fan (sound enclosure)

Power Supply

Set overload protection devices to 1.1 times nominal value.

Further information See chapter 6.7.9.2 for the fan connection and chapter 13.5.8 for the connection wiring diagram.

2.12.15.1 BB 52 C pr

The sound enclosure is fitted with a fan only if the drive motor has a rated power of <4 kW and the machine is operated with frequency converter (Option C32).

Delivery volume

Feature	Value
Delivery [m^3/h]	500–515

Tab. 38 BB 52 C pr : Extractor delivery (Option H12)

Three-phase power supply 50 Hz

Nominal voltage [V]	Δ–220/Y–380	Δ–230/Y–400	Y–500
Rated power ±10% [kW]	0.12	0.12	0.12
Current draw ±10% [A]	0.80/0.45	0.80/0.45	0.32
Degree of protection	IP 55	IP 55	IP 55

Tab. 39 BB 52 C pr : Extractor motor 3~/50Hz (Option H12)

AC power: 50 Hz – 1/N/PE

Nominal voltage [V]	230
Rated power ±10% [kW]	0.12
Current draw ±10% [A]	1.05
Degree of protection	IP 55

Tab. 40 BB 52 C pr : Extractor motor 1~/50Hz (Option H12)

Three-phase power supply 60 Hz

Nominal voltage [V]	Δ–208/Y–360	Δ–220/Y–380	Δ–230/Y–400	Y–460	Y–575
Rated power ±10% [kW]	0.15	0.15	0.15	0.15	0.15
Current draw ±10% [A]	0.80/0.45	0.80/0.45	0.80/0.45	0.45	0.37
Degree of protection	IP 55	IP 55	IP 55	IP 55	IP 55

Tab. 41 BB 52 C pr : Extractor motor 3~/60Hz (Option H12)

AC power: 60 Hz – 1/N/PE

Nominal voltage [V]	115	230
Rated power ±10% [kW]	0.15	0.15
Current draw ±10% [A]	2.40	1.35
Degree of protection	IP 55	IP 55

Tab. 42 BB 52 C pr : Extractor motor 1~/60Hz (Option H12)

2.12.15.2 BB 69 C pr , BB 89 C pr

The minimum value of the current draw in shown on the fan's nameplate.
The maximum value of the current draw can be taken from the tables below.

Delivery volume

Feature	Value
Delivery [m^3/h]	1800–2000

Tab. 43 BB 69 C pr , BB 89 C pr : Extractor delivery (Option H12)

Three-phase power supply 50 Hz

Nominal voltage [V]	Δ–220/Y–380	Δ–230/Y–400
Power consumption ±10% [kW]	0.10	0.11
Current draw ±10% [A]	0.38/0.22	0.38/0.22
Degree of protection	IP 44	IP 44

Tab. 44 BB 69 C pr , BB 89 C pr : Extractor motor 3~/50Hz (Option H12)

AC power: 50 Hz – 1/N/PE

Nominal voltage [V]	230
Power consumption ±10% [kW]	0.12
Current draw ±10% [A]	0.58
Degree of protection	IP 44

Tab. 45 BB 69 C pr , BB 89 C pr : Extractor motor 1~/50Hz (Option H12)

Three-phase power supply 60 Hz

Nominal voltage [V]	Δ–208/Y–360	Δ–220/Y–380	Δ–230/Y–400	Y–460
Power consumption ±10% [kW]	0.13	0.14	0.14	0.16
Current draw ±10% [A]	0.43/0.25	0.43/0.25	0.45/0.26	0.26
Degree of protection	IP 44	IP 44	IP 44	IP 44

Tab. 46 BB 69 C pr , BB 89 C pr : Extractor motor 3~/60Hz (Option H12)

AC power: 60 Hz – 1/N/PE

Nominal voltage [V]	115	230
Power consumption ±10% [kW]	0.16	0.15
Current draw ±10% [A]	1.51	0.71
Degree of protection	IP 44	IP 44

Tab. 47 BB 69 C pr , BB 89 C pr : Extractor motor 1~/60Hz (Option H12)

3 Safety and Responsibility

3.1 Basic instructions

The machine is manufactured to the latest engineering standards and acknowledged safety regulations. Nevertheless, dangers can arise through its operation:

- Danger to life and limb of the operator or third parties,
- Damages to the machine and other material assets.



Disregard of warning or safety instructions can cause serious injuries!

➢ Use this machine only if it is in a technically perfect condition and only for the purpose for which it is intended; observe all safety measures and the instructions in the service manual.

➢ Immediately rectify (have rectified) any faults that could be detrimental to safety!

3.2 Specified use

The machine is designed exclusively for the generation of overpressure in a commercial or industrial environment where air (in the following "compressed air") as delivery medium is approved for use. Any other use is considered incorrect. The manufacturer is not liable for any damages that may result from incorrect use. The user alone is liable for any risks incurred.

➢ Comply with the instructions in this operating manual.

➢ Operate the machine only within its performance limits and under the permitted ambient conditions.

➢ Do not use compressed air for breathing purposes unless it is specifically treated.

➢ Do not use compressed for any application that will bring it into direct contact with foodstuffs unless it is specifically treated.

➢ Operate the blower block only with inlet and outlet ports connected.

3.3 Improper use

Improper usage can cause damage to property and/or (severe) injuries.

➢ Only use the machine as intended.

➢ Never direct compressed air at persons or animals.

➢ Use hot cooling air for heating purposes only if there is no risk to the health of humans or animals. If necessary, hot cooling air should be treated by suitable means.

➢ Do not allow the machine to take in toxic, acidic, flammable of explosive gases or vapours.

➢ Do not operate the machine in areas in which specific requirements with regard to explosion protection are in force.

➢ Intake of solid particles > 0.1 mm is not permitted.

3.4 User's responsibilities

The machine is delivered in a state in which it cannot be activated. The user must equip the machine with a drive motor of >2 kW and a current draw of >10 A, with a lockable main switch and appropriate fusing. The machine must also be equipped with a motor overload protection switch and an EMERGENCY-OFF switch in accordance with applicable local regulations before being commissioned.

3.4.1 Observe statutory and universally accepted regulations

This includes, for example, nationally implemented European directives and/or applicable national legislation, safety and accident prevention regulations.

➢ Observe relevant statutory and accepted regulations during installation, operation and maintenance of the machine.

3.4.2 Determining personnel

Suitable personnel are experts who, by virtue of their training, knowledge and experience as well as their knowledge of relevant regulations can assess the work to be done and recognize the possible dangers involved.

Authorised operators possess the following qualifications:

- are of legal age,
- are conversant with and adhere to the safety instructions and sections of the service manual relevant to operation,
- have received adequate training and authorization to operate electrical and compressed air devices.

Authorised installation and maintenance personnel have the following qualifications:

- are of legal age,
- have read, are conversant with and adhere to the safety instructions and sections of the service manual applicable to installation and maintenance,
- are fully conversant with the safety concepts and regulations of electrical and compressed air engineering,
- are able to recognize the possible dangers of electrical and compressed air devices and take appropriate measures to safeguard persons and property,
- have received adequate training in and authorization for the safe installation and maintenance of this machine.

➢ Ensure that personnel entrusted with operation, installation and maintenance are qualified and authorised to carry out their tasks.

3.5 Dangers

Basic instructions

Information concerning the various forms of danger that can arise during machine operation are found here.

Basic safety instructions are found in this service manual at the beginning of each chapter in the section entitled 'Safety'.

Warning instructions are found before a potentially dangerous task.

3.5.1 Safely dealing with sources of danger

The following describes the various forms of danger that can occur during machine operation.

Electricity

Touching voltage carrying components can result in electric shocks, burns or death.

- ➢ All power supplies must be fitted with lockable isolating devices by the user.
- ➢ Allow only qualified and authorised electricians or trained personnel under the supervision of a qualified and authorised electrician to carry out work on electrical equipment according to electrical engineering regulations.
- ➢ Before commissioning or re-commissioning the machine, the user must ensure adequate protection against electric shock from direct or indirect contact.
- ➢ Before starting any work on electrical equipment:
  Switch off and lock out the power supply isolating device, and verify the absence of any voltage.
- ➢ Switch off any external power sources.
  These may include connections to the machine heater.
- ➢ Use fuses corresponding to machine power.
- ➢ Check regularly that all electrical connections are tight and in proper condition.

Forces of compression

Compressed air is contained energy. Uncontrolled release of this energy can cause serious injury or death. The following information concerns work on components that could be under pressure.

- ➢ Close shut-off valves or otherwise isolate the machine from the distribution network to ensure that no compressed air can flow back into the machine.
- ➢ De-pressurise all pressurised components and enclosures.
- ➢ Allow no person or thing to remain near the blow-off valve during machine operation. In the event of operating pressure being exceeded, hot gas is blown of at high velocity and the valve tension rod is blown upward with great force.
- ➢ Do not carry out welding, heat treatment or mechanical modifications on pressurised components, as this influences the components' resistance to pressure.
  The safety of the machine is then no longer ensured.

Compressed air quality

The composition of the compressed air must be suitable for the actual application in order to preclude health and life-threatening dangers.

- ➢ Use appropriate systems for air treatment before using the compressed air from this machine as breathing air and/or for the processing of foodstuffs.
- ➢ Use lubricating oil compatible with foodstuffs if compressed air can come into contact with them.

Spring forces

Springs under tension or compression store energy. Uncontrolled release of this energy can cause serious injury or death.

Blow-off valves and unloaded-start valves are under powerful spring loading.

➢ Do not open or dismantle any valves.

Rotating components

Touching the extractor fan or the belt drive while the machine is running can result in serious injury.

➢ Do not open the enclosure while the machine is switched on.

➢ Switch off and lock out the power supply disconnecting device, and verify the absence of any voltage.

➢ Wear close-fitting clothes and a hair net if necessary.

➢ Ensure that all covers and safety guards are in place and secured before re-starting.

Temperature

High temperatures are generated during compression. Touching hot components may cause injuries.

➢ Avoid contact with hot components.
These include, for example, blower blocks, silencers, oil and compressed air lines, motors and machine heaters.

➢ Wear protective clothing.

➢ If welding is carried out on or near the machine, take adequate measures to prevent sparks or heat from igniting oil vapours or parts of the machine.

Noise

The sound enclosure absorbs the machine noise to a tolerable level. This function will be effective only if the sound enclosure is closed.

➢ Wear hearing protection if necessary.
The blowing-off of the pressure relief valve can be particularly loud.

Operating fluids/materials

The used operating fluids and materials can cause adverse health effects. Suitable safety measures must be taken in order to prevent injuries.

➢ Strictly forbid fire, open flame and smoking.

➢ Follow safety regulations when dealing with oils, lubricants and chemical substances.

➢ Avoid contact with skin and eyes.

➢ Do not inhale oil mist and vapours.

➢ Do not eat or drink while handling lubricants.

➢ Keep suitable fire extinguishing agents ready for use.

➢ Use only KAESER approved operating materials.

Unsuitable spare parts

Unsuitable spare parts compromise the safety of the machine.

➢ Use only spare parts approved by the manufacturer for use in this machine.

➢ Use only genuine KAESER replacement parts on pressure bearing parts.

Conversion or modification of the machine

Modifications, additions or conversions to or of the machine can result in unpredictable hazards.

- ➢ Do not convert or modify the machine!
- ➢ Prior to any technical modification and expansions of the machine, obtain the written approval of the manufacturer.

Extending or modifying the compressor station

If dimensioned appropriately, pressure relief valves reliably prevent an impermissible rise in pressure. New dangers may arise if you modify or extend the compressed air station.

- ➢ When extending or modifying the compressed air system:
  Check the blow-off capacity of the safety valves prior to installing the new machine.
- ➢ If the blow-off capacity is insufficient:
  install pressure relief valves with larger blow-off capacity.

3.5.2 Safe machine operation

The following is information supporting you in the safe handling of the machine during individual product life phases.

Personal protective equipment

When working on the machine you may be exposed to dangers that can result in accidents with severe adverse health effects.

- ➢ Wear protective clothing as necessary.

Suitable protective clothing (examples):

- Safety workwear
- Protective gloves
- Safety boots
- Eye protection
- Ear protection

Transporting

The weight and size of the machine require safety measures during its transport to prevent accidents.

- ➢ Use suitable lifting gear that conforms to local safety regulations.
- ➢ Allow transportation only by personnel trained in the safe movement of loads.
- ➢ Attach lifting gear only to suitable lifting points.
- ➢ Be aware of the centre of gravity to avoid tipping.
- ➢ Make sure the danger zone is clear of personnel.
- ➢ Do not step onto machine components to climb up the machine.

Assembly

- ➢ Make sure no power is applied when electrical connections are made.
- ➢ Use only electrical cables that are suitable and approved for the surroundings and electrical loads applied.

- ➢ Never dismantle compressed air pipes until they are fully vented.
- ➢ Only use pressure lines that are suitable and approved for the maximum working pressure and the intended medium.
- ➢ Do not allow connection pipes to be placed under mechanical stress.
- ➢ Do not induce any forces into the machine via the connections, so that the compressive forces must be balanced by bracing.
- ➢ Do not step onto machine components to climb up the machine.

Installation

A suitable installation location for the machine prevents accidents and faults.

- ➢ Install the machine in a suitable compressor room.
- ➢ Ensure sufficient and suitable lighting such that the display can be read and work carried out comfortably and safely.
- ➢ Ensure accessibility so that all work on the machine can be carried out without danger or hindrance.
- ➢ If installed outdoors, the machine must be protected from frost, direct sunlight, dust, rain and splashing water.
- ➢ Do not operate in areas in which specific requirements with regard to explosion protection are in force.
  For instance, the requirements of ATEX directive 94/9/EC "Equipment and Protective Systems intended for use in Potentially Explosive Atmospheres".
- ➢ Ensure adequate ventilation.
- ➢ Place the machine in such a manner that the working conditions in its environment are not impaired.
- ➢ Comply with limit values for ambient temperature and humidity.
- ➢ The intake air must not contain any damaging contaminants,
  Damaging contaminants are for instance: explosive or chemically instable gases and vapours, acid or base forming substances such as ammonia, chlorine or hydrogen sulfide.
- ➢ Do not position the machine in the warm exhaust air flow from other machines.
- ➢ Keep suitable fire extinguishing agents ready for use.

Commissioning, operation and maintenance

During commissioning, operation and maintenance you may be exposed to dangers resulting from, e.g., electricity, pressure and temperature. Careless actions can cause accidents with severe adverse effects for your health.

- ➢ Allow maintenance work to be carried out only by authorised personnel.
- ➢ Wear close-fitting, flame-resistant clothing. Wear protective clothing as necessary.
- ➢ Switch off and lock out the power supply isolating device, and verify the absence of voltage.
- ➢ Check that there is no voltage on potential-free contacts.
- ➢ Close shut-off valves or otherwise isolate the machine from the distribution network to ensure that no compressed air can flow back into the machine.
- ➢ De-pressurise all pressurised components and enclosures.
- ➢ Allow the machine to cool down.
- ➢ Do not open the sound enclosure while the machine is switched on.
- ➢ Do not open or dismantle any valves.
- ➢ Use only spare parts approved by KAESER for use in this machine.

- ➢ Carry out regular inspections:
  for visible damages,
  of safety installations,
  of the EMERGENCY STOP command device,
  of any components requiring monitoring.
- ➢ Pay particular attention to cleanliness during all maintenance and repair work. Cover components and openings with clean cloths, paper or tape to keep them clean.
- ➢ Do not leave any loose components, tools or cleaning rags on or in the machine.
- ➢ Components removed from the machine can still be dangerous.
  Do not attempt to open or destroy any components taken from the machine.

De-commissioning, storage and disposal

Improper handling of old operating fluids and components represent a danger for the environment.

- ➢ Drain off fluids and dispose of them according to environmental regulations.
  These include, for example, lubricating oil.
- ➢ Dispose of the machine in accordance with local environmental regulations.

3.5.3 Organisational measures

- ➢ Designate personnel and their responsibilities.
- ➢ Give clear instructions on reporting faults and damage to the machine.
- ➢ Give instructions on fire reporting and fire-fighting measures.

3.6 Danger areas

The table gives information on areas dangerous to personnel.

Only authorized personnel may enter these areas.

Function	Danger area	Authorized personnel
Transporting	Within a 3 m radius of the machine.	Installation personnel for transporting preparation. No personnel during transporting.
	Beneath the lifted machine.	No personnel!
Installation	Within the machine. Within 1 m radius of the machine and its power supply cables.	Installation personnel
Operation	Within a 1 m radius of the machine.	Operating personnel
Maintenance	Within the machine. Within a 1 m radius of the machine.	Maintenance personnel

Tab. 48 Danger areas

3.7 Safety devices

Various safety devices ensure safe working with the machine.

- ➢ Do not change, bypass or disable safety devices.

- ➢ Check safety devices for correct function regularly.
- ➢ Do not remove or obliterate labels and notices.
- ➢ Ensure that labels and notices are clearly legible.

Further information More information on safety devices is contained in chapter 4, section 4.2.

3.8 Safety signs

The diagram shows the positions of safety signs on the machine. The table 49 lists the various safety signs used and their meanings.

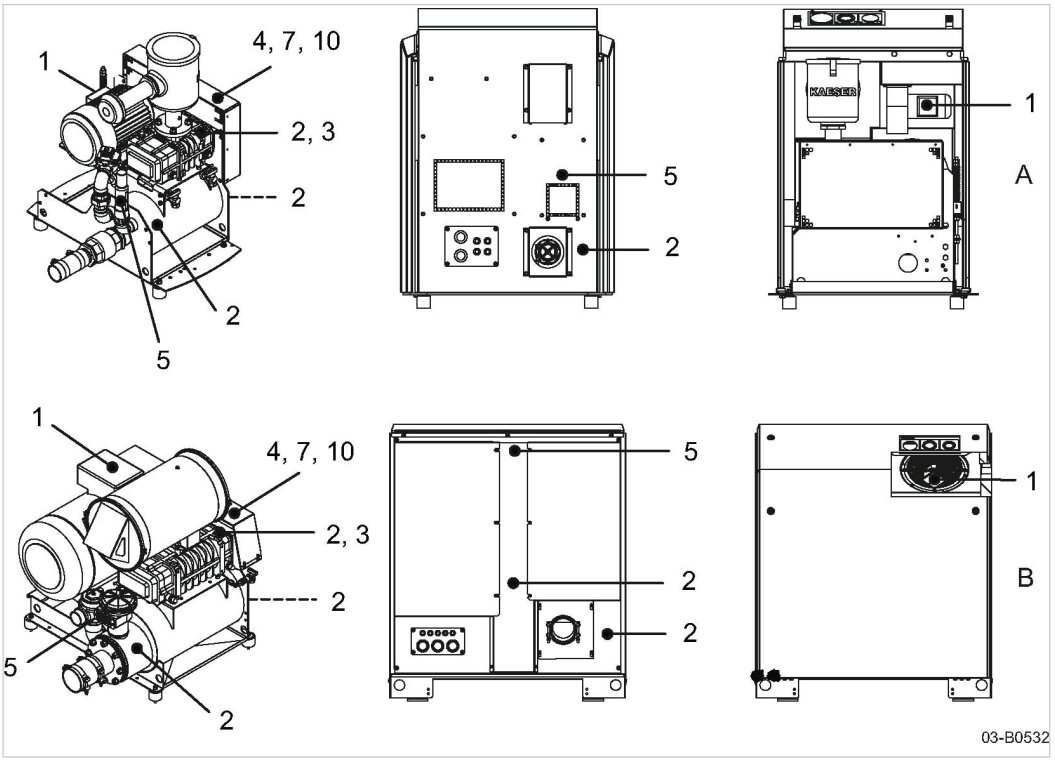

Fig. 1 Position of the safety signs at the machine

Ⓐ BB 52 C pr
Ⓑ BB 69 C pr , BB 89 C pr

Options

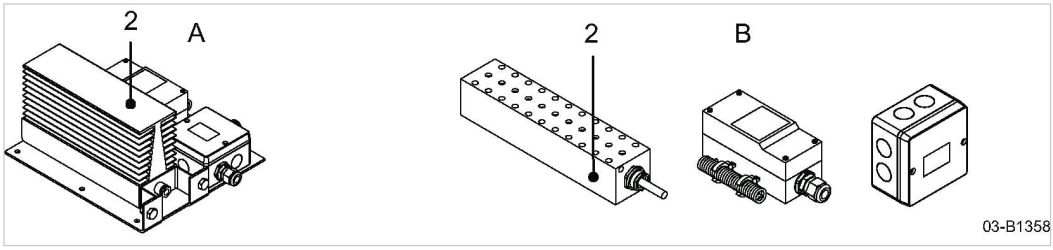

Fig. 2 Safety sign position, standstill heating, Option H2

Ⓐ BB 52 C pr
Ⓑ BB 69 C pr , BB 89 C pr

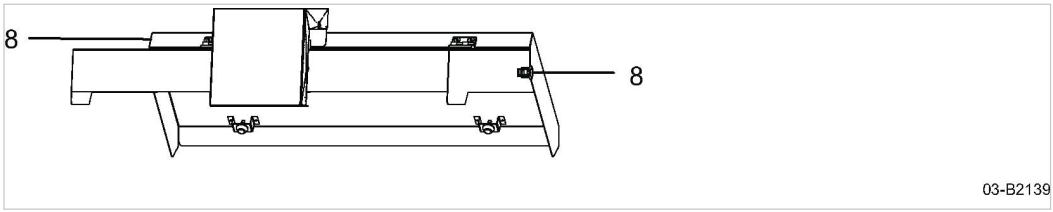

Fig. 3 BB 69 C pr , BB 89 C pr : Safety sign position,weather protection, Option H3

Position	Symbol	Meaning
1		Danger of fatal injury from electric shock! ➢ Before starting any work on electrical equipment: Switch off and lock out the power supply disconnecting device, and verify the absence of any voltage.
2		Hot surface! Risk of burns caused by contact with hot components. ➢ Do not touch the surface. ➢ Wear long-sleeved garments (not synthetics such as polyester) and protective gloves.
3		Rotating rotors. Risk of serious lacerations or even severing of extremities (fingers) from rotating components. ➢ Operate the machine only with an inlet silencer connected. ➢ Prior to any work at the machine: Switch off and lock out the power supply disconnecting device.
4		Rotating belt drive! Risk of serious lacerations or even severing of extremities (fingers) from moving belts. ➢ Never run the machine without a belt guard. ➢ Prior to any work at the machine: Switch off and lock out the power supply disconnecting device.
5		Danger of burns from hot gas! ➢ Do not enter danger zone. ➢ Wear long-sleeved garments (not synthetics such as polyester) and protective gloves.

Position	Symbol	Meaning
7		Noise during machine operation (without sound enclosure) or noise due to opened service panel of the sound enclosure (Option H12)! ➢ Hearing may be damaged. ➢ Wear hearing protection.
8		Injuries (to the hands in particular) due to shearing effects. ➢ Carefully close the flap in the weather protection roof. ➢ Always wear protective gloves.
10		Personal injury or damage to the machine by incorrect operation! ➢ Read and understand the service manual and all safety signs before switching on this machine.

Tab. 49 Safety signs

3.9 In emergency

3.9.1 Correct fire fighting

Suitable extinguishing agents

- Foam
- Carbon dioxide
- Sand or earth

Unsuitable or unsafe extinguishing agents

- Strong jet of water

1. Keep calm.
2. Give the alarm.
3. Switch off the power supply disconnecting device, if possible.
4. Move to safety.
   - Warn persons in danger.
   - Help incapacitated persons.
   - Close the doors.
5. Try to extinguish the fire if you have the skill to do so.

3.9.2 Remove lubricating oil from the skin.

➢ Eye contact:
Rinse eyes thoroughly with lukewarm water and seek medical assistance.

➢ Skin contact:
Wash off immediately.

3.10 Environment protection

- ➢ Store and dispose of operating materials and replaced parts in accordance with local environment protection regulations.
- ➢ Observe national regulations.
  This applies particularly to parts contaminated with lubricating oil.



- ➢ Do not allow lubricating oil to escape to the environment or into the sewage system.

3.11 Warranty

This service manual contains no independent warranty commitment. Our general terms and conditions apply with regard to warranty.

A condition of our warranty is that the machine is used solely for the purpose for which it is intended and under the conditions specified.
Due to the multitude applications for which the machine is suitable the obligation lies with the user to determine its suitability for his specific application.

Furthermore, we accept no warranty obligation for:

- the use of unsuitable parts or operating materials,
- un-authorised modifications,
- incorrect maintenance,
- incorrect repair.

Correct maintenance and repair includes the use of genuine KAESER spare parts and operating materials.

- ➢ Obtain confirmation from KAESER that your specific operating conditions are suitable.

4 Design and Function

4.1 Machine

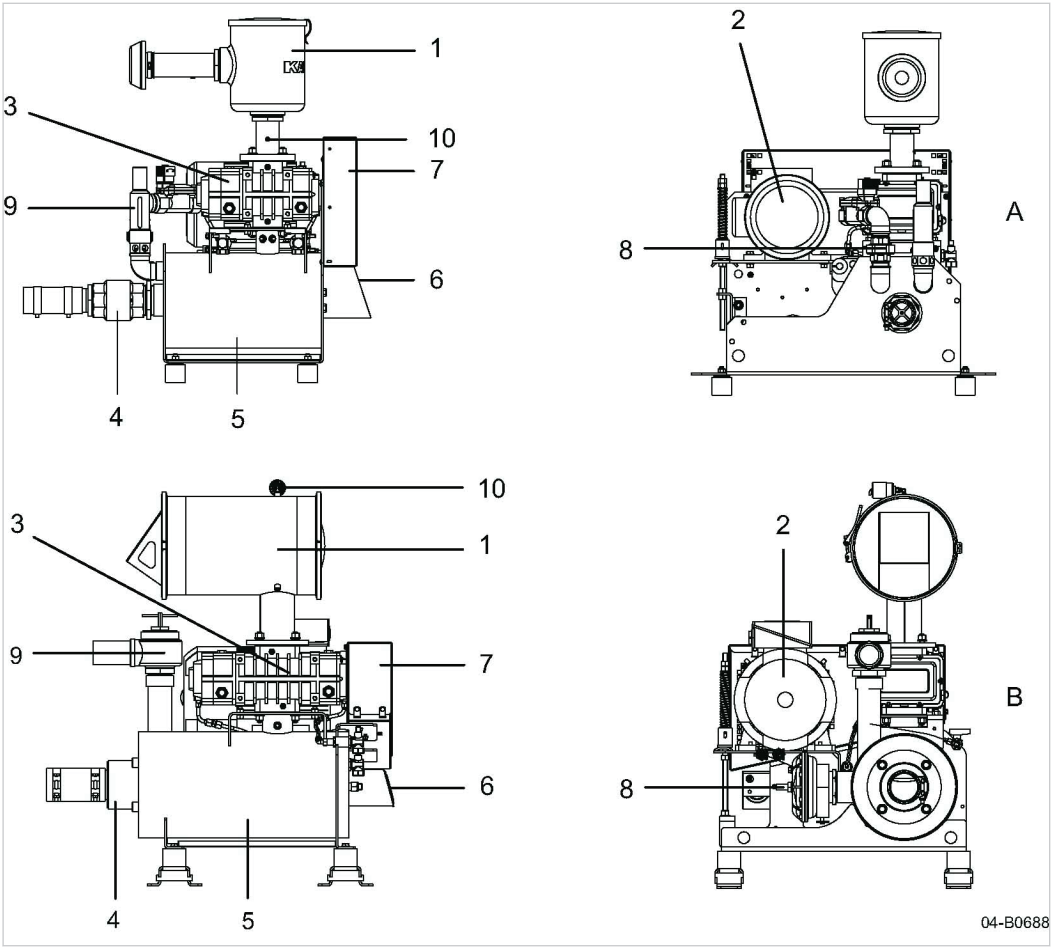

Fig. 4 Machine

A	BB 52 C pr	5	Outlet silencer
B	BB 69 C pr , BB 89 C pr	6	Display (option)
1	Inlet silencer	7	Belt guard
2	Drive motor	8	Unloaded start valve (option)
3	Blower block	9	Pressure relief valve
4	Check plate (option)	10	Filter maintenance indicator (option)

The motor 2 drives the block 3 via belts.

Air is drawn into the inlet silencer 1 and through a filter where it is cleaned.

The air is then pushed from the blower block in vertical direction into the outlet silencer 5, where the process forces pressure build-up.

4.1.1 Blower block

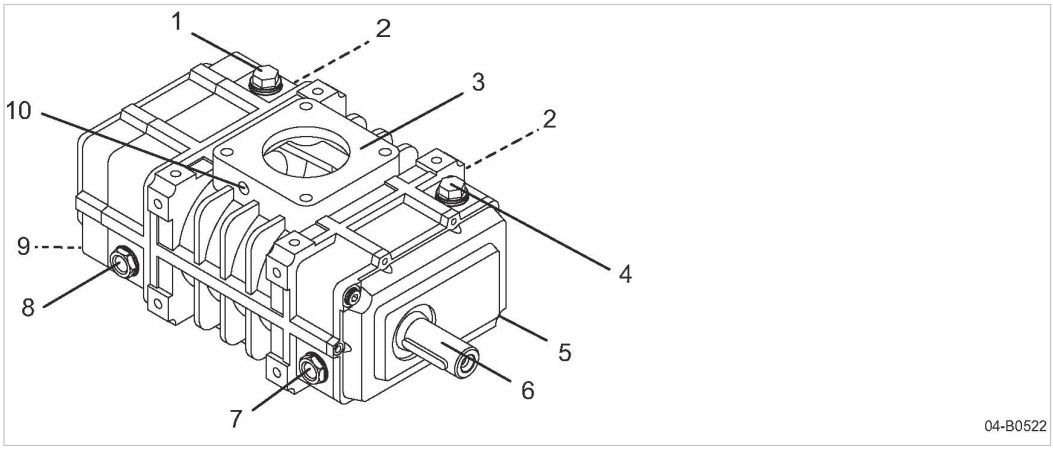

Fig. 5 Blower block

1 Gear-end oil inlet
2 Side gas drainage (closed)
3 Flange connection (both sides)
4 Drive-end oil inlet
5 Drive-end oil drain
6 Drive shaft
7 Drive-end oil sight glass
8 Gear-end oil sight glass
9 Gear-end oil drain
10 Connection for measuring instrument (both sides)

A pair or rotors with intermeshing lobes turn in opposite directions within a casing. The rotors are synchronised by timing gears on one end. Air in the block inlet is trapped between the rotor lobes and the casing and moved round to the discharge port.

As there is no contact between the rotors themselves and the casing, oil film lubrication is not required.

4.1.2 Pressure relief valve

The pressure relief valve protects the system from excessive pressure. It is factory set.

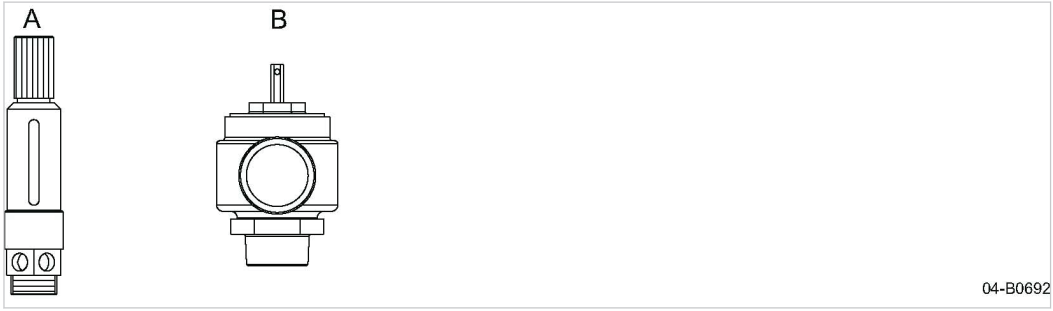

Fig. 6 Pressure relief valve

A BB 52 C pr
B BB 69 C pr , BB 89 C pr

4.1.3 Compensator

The compensator functions as follows:

- Inlet and outlet connections to silencers and accessories,
- Isolates the machine vibrations from the air pipeline.

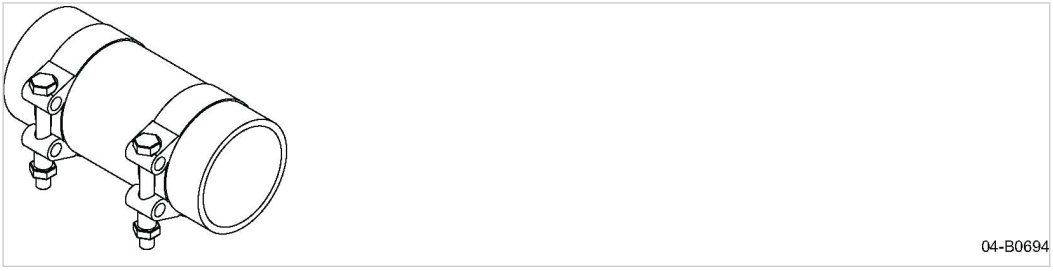

Fig. 7 Compensator

4.2 Safety devices

The following safety devices are provided and may not be modified in any way.

- Blow-off valve.
  The blow-off valve protects the machine from excessive pressure build-up. It is factory set.
- Covers over moving parts and electrical connections:
  These protect against accidental contact.
- Sound enclosure (Option H12):
  The sound enclosure prevents excessive noise emission.
- Drive motor with 3 PTC thermistors:
  They protect the motor against overheating in connection with the user's protection cut-out.

4.3 Options

The options available for your machine are described below.

4.3.1 Option C9 Pressure switch

The pressure switch sends a signal when the set pressure is exceeded.

The pressure switch is factory set according to the customers specification.
In other cases it must be set according to the application..

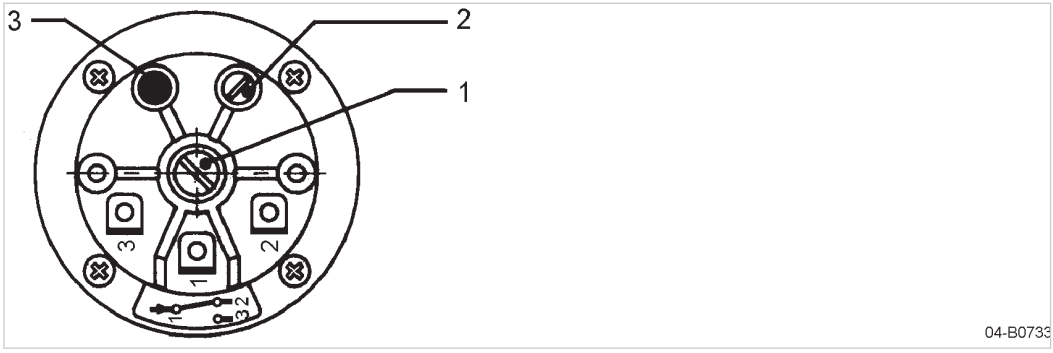

Fig. 8 Pressure switch

[1] Switching point adjusting screw
[2] Switching differential adjusting screw
[3] Screw sealed with a protective coating

The switching point can be adjusted by the screw [1] while the machine is running.
Fine adjustment and switching differential is set with the adjusting screw [2].

The screw [3] is sealed with a protective coating. It is not to be adjusted.

4.3.2 Option C10 Speed monitor

The speed monitor measures the rotational speed of the block rotors.

4.3.3 Option C11 Unloaded start valve

4.3.3.1 AFM 4 , AFM 5

AFM 4 and AFM 5 open the discharge line from the machine to the atmosphere for unloaded starting.

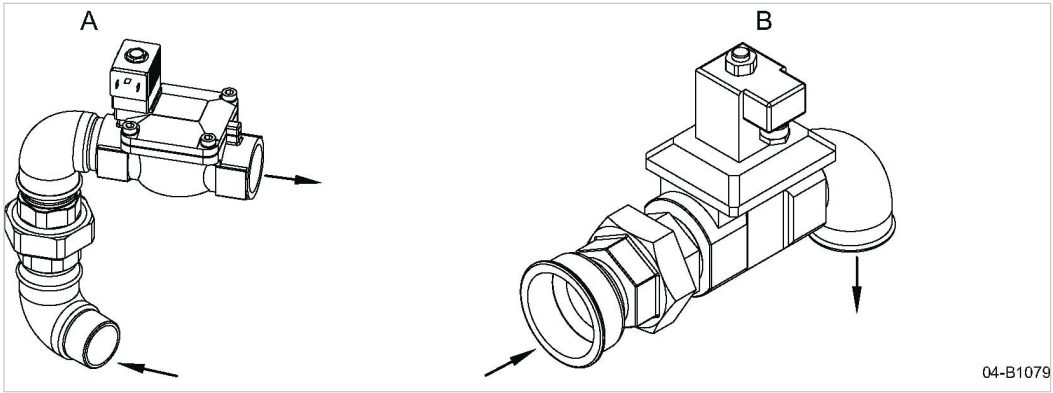

Fig. 9 Unloaded start valve AFM 4 , AFM 5

[A] AFM 4
[B] AFM 5

Functional description

The unloaded start valve is de-energised closed when the machine is switched off. When the machine is switched on and the motor is in the star phase, the unloaded start valve is energised and opens. Air discharged from the block is blown out to atmosphere.

When the motor switches to delta, the unloaded start valve is de-energised and closes.

4.3.3.2 AFE 15

AFE 15 provides an unloaded start of the machine in the star-delta phase. The valve closes when the motor starter switches from star (Y) to delta (Δ).

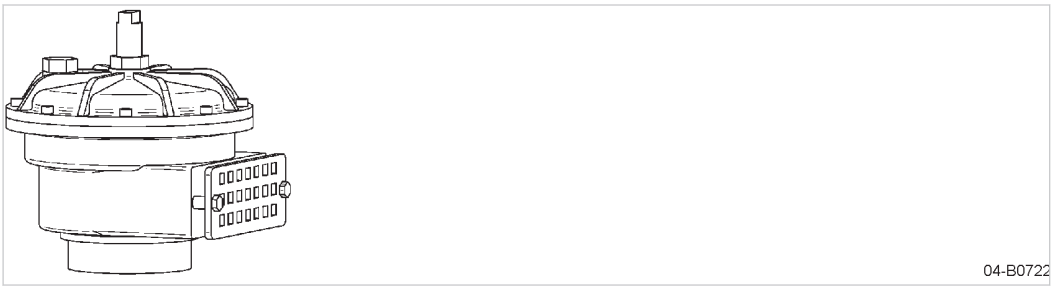

Fig. 10 Unloaded start valve AFE 15

The unloaded start valve is factory set.

Functional description

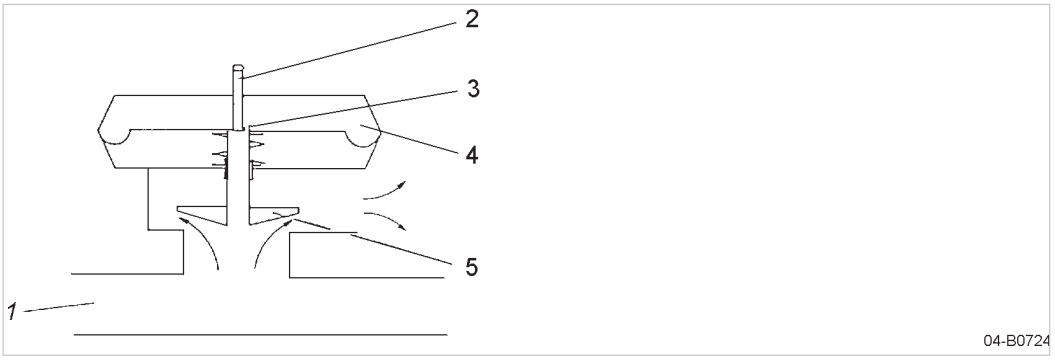

Fig. 11 Diagram of the unloaded start valve AFE 15

[1] Air network
[2] Adjusting screw
[3] Nozzle
[4] Diaphragm chamber
[5] Valve cone

When the machine is shut down the valve cone [5] is open.

When the machine is started, air passes through the blow-off aperture to atmosphere.

Turning the adjusting screw [2] reduces the valve aperture for the valve cone [5] to close at low volume flow.
(To close the valve cone [5], a pressure of 100mbar in the pipe is required.)

Back pressure enters through the nozzle [3] into the upper diaphragm chamber [4] to close the valve cone. The closing time can be influenced by changing the position of the valve cone with the adjusting screw [2].

Changing the closing time with the adjusting screw:

- Clockwise: shorter closing time
- Counterclockwise: longer closing time

4.3.4 Option C13 Temperature gauge switch

The gauge shows the temperature in the block discharge port and has a floating relay changeover contact that can be set to switch at a selected temperature.

The switching point is factory set to 145 °C.

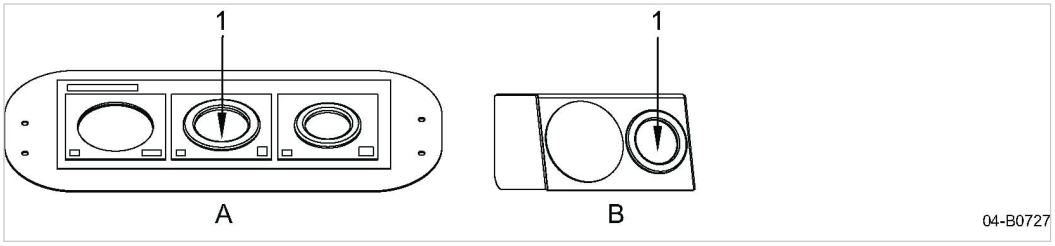

Fig. 12 Location of the temperature gauge

[A] Display: Machine with sound enclosure
[B] Display: Machine without sound enclosure
[1] Temperature gauge

Setting instructions

The switching point can be adjusted by means of the screw beneath the protective cover on the front plate.

Possible adjustment for working conditions on site:

- Block discharge temperature lower than 145 °C
  - If the average block discharge temperature is significantly lower than 145 °C the gauge, switching point can be adjusted down.
    The recommended switching point is the average block discharge temperature + 15 K.
- Block discharge temperature higher than 145 °C
  - If the average block discharge temperature is near to or higher than 145 °C, adjust the switching point upward.
    The maximum permissible value: 155 °C.

4.3.5 Option C14 Pressure sensor

The sensor measures the actual block discharge pressure.

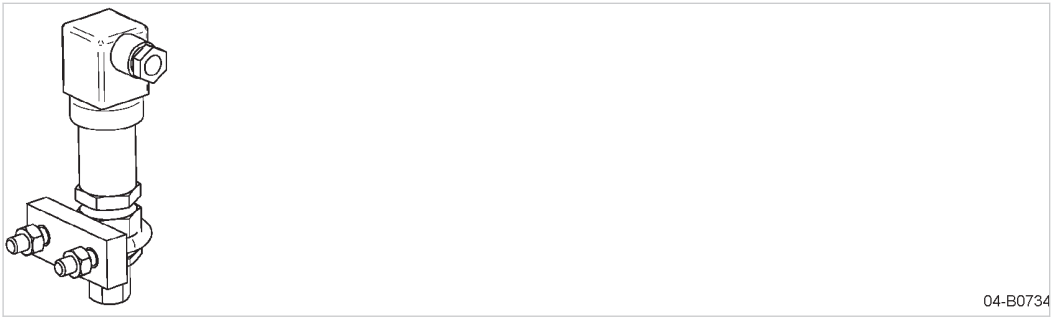

Fig. 13 Pressure sensor

4.3.6 Option C18
Start-up pressure regulating valve

The start-up regulating valve is a medium-controlled valve with the following functions:

- Unloaded starting
- Pressure regulating during operation

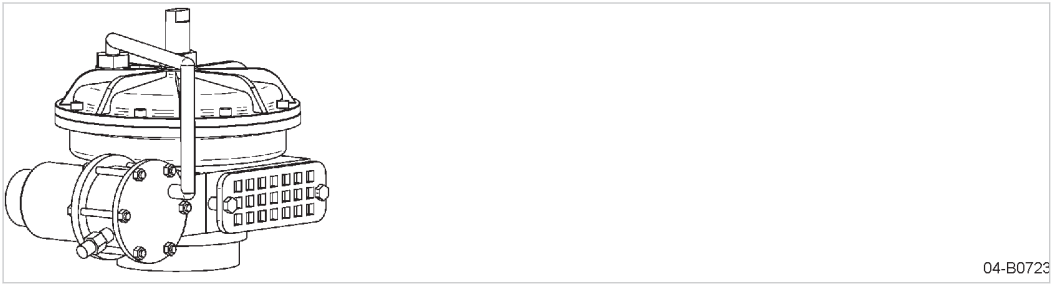

Fig. 14 Start-up pressure regulating valve

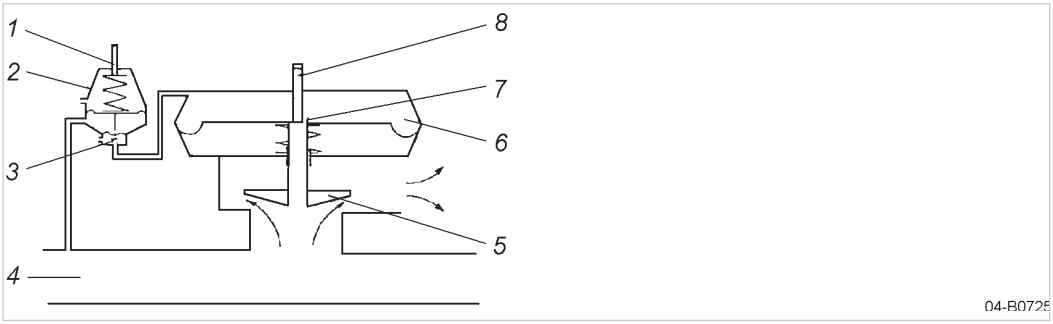

Fig. 15 Principle – Start-up pressure regulating valve

[1] Adjusting screw
[2] Control air regulator
[3] Valve cone
[4] Air network
[5] Valve cone
[6] Diaphragm chamber
[7] Nozzle
[8] Adjusting screw

Unloaded starting

When the machine is stopped the valve cone [5] is open and valve cone [3] closed. When the machine is started, air flows over the valve cone [5] and is blown off to atmosphere. The pressure build-up in the air network [4] is transmitted through the hollow spindle and nozzle [7] into the upper diaphragm chamber [6]. The resulting pressure on the diaphragm closes the valve cone [5].

Changing the closing time:
The valve closing time can be adjusted by changing the nozzle [7] and turning the adjusting screw [8].

- Clockwise: shorter closing time
- Counterclockwise: longer closing time

The unloaded start function only works if the pressure in the air network [4] reaches at least 100 mbar.

Overflow regulation

The control air regulator is set to atmospheric pressure.

After starting, the network pressure and the pressure on the control air regulator [2] rises. As soon as the set network pressure is reached the valve cone [3] opens. Pressure in the upper diaphragm chamber [6] bleeds off to atmosphere and the valve cone [5] opens.

The set network pressure is kept constant.

Changing the pressure setting
Remove the rubber cap from the control regulator to change network pressure. Undo the locknut and adjust the screw with a screwdriver.

- Clockwise: Lower pressure
- Counterclockwise: Higher pressure

Lock the screw in position after adjusting and replace the rubber cap.

4.3.7 Option C19, H12 Thermostat

The thermostat controls the temperature within the sound enclosure.
It consists of a temperature sensor with a floating relay changeover contact.

The switching point is factory set to 60°C.

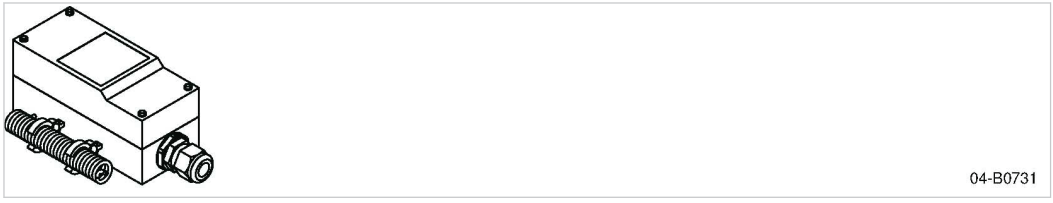

Fig. 16 Thermostat

4.3.8 Option C20
Pressure gauge

The pressure gauge shows the pressure in the blower block discharge port.

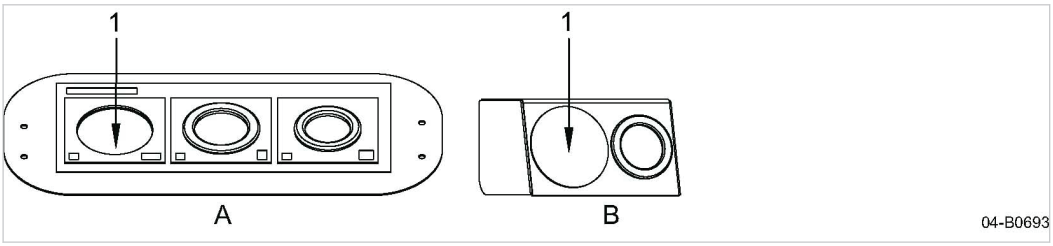

Fig. 17 Location of the pressure gauge

[A] Display: Machine with sound enclosure
[B] Display: Machine without sound enclosure
[1] Pressure gauge

4.3.9 Option F4
Filter maintenance indicator

The maintenance indicator shows when the filter needs maintenance. When the filter becomes clogged and flow resistance rises to a set point, the maintenance signal is given.

4.3.10 Option F5
Filter pressure differential switch

The filter pressure differential switch monitors contamination of the intake filter.

The switch is triggered by pressure differential. Falling below or rising above the set value causes the current flow to switch on, switch off or changeover according to how the switch is wired.

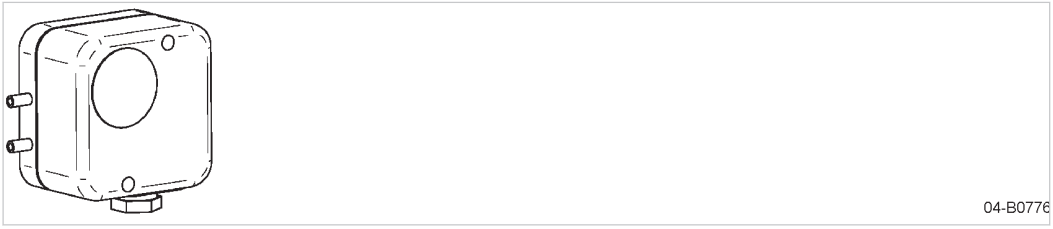

Fig. 18 Filter pressure differential switch

Pressure connection diagram

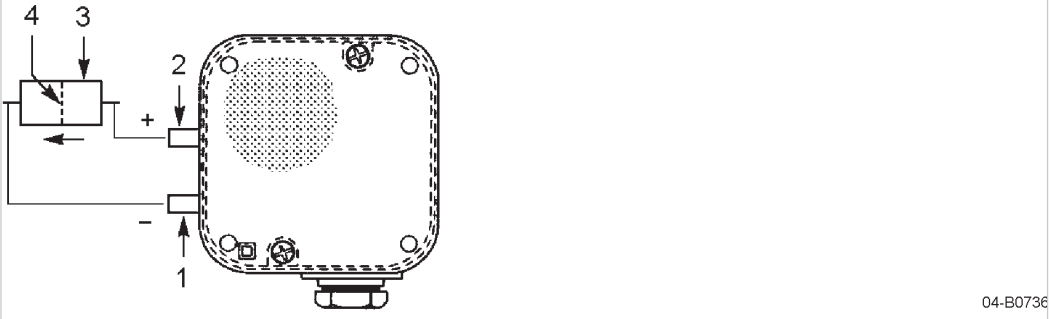

Fig. 19 Pressure connection to the filter pressure differential switch

1	Low pressure connection	3	Inlet silencer
2	Higher pressure connection	4	Filter

Switching function



Fig. 20 Filter pressure differential switch function

Switching with rising pressure:

- 1 NC opens
- 2 NO closes

Switching with falling pressure:

- 1 NC closes
- 2 NO opens

4.3.11 Option G1 Check valve

The check valve prevents a reversal of the normal air flow direction.

The valve is closed when the machine is at standstill.

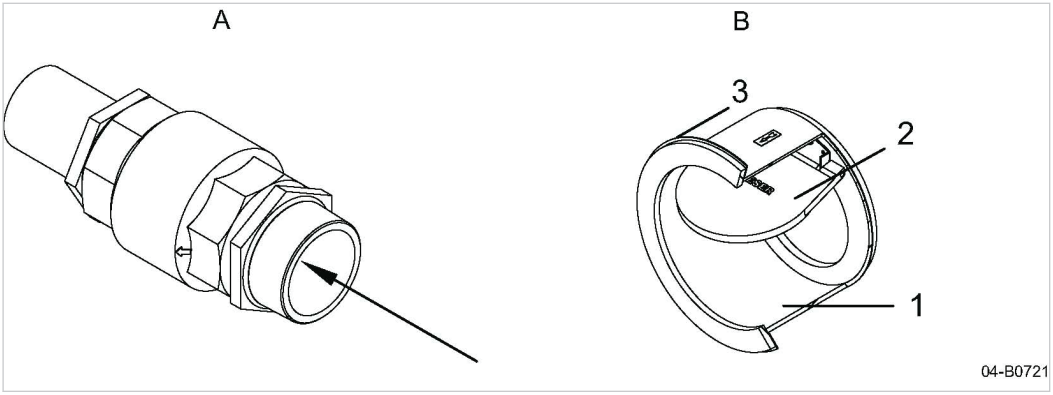

Fig. 21 Check valve

[A] BB 52 C pr
[B] BB 69 C pr , BB 89 C pr
[1] Housing
[2] Closing mechanism
[3] Gasket

4.3.12 Option H2, H12 Auxiliary heating

The auxiliary heating has the following functions:

- Prevents condensation forming on the machine in climates of high humidity.
- Pre-warms the machine when ambient temperatures are below −5 °C.

The heating is designed to raise the machine temperature by about 15 °C.

The thermostat switching point is factory set to 5 °C.

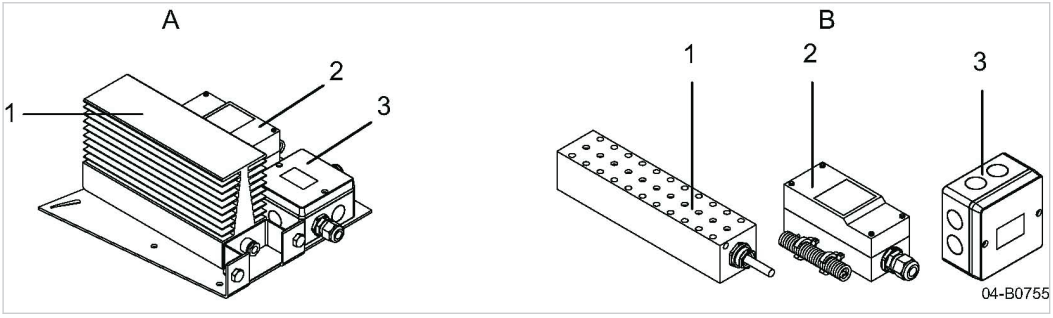

Fig. 22 Auxiliary heating

[A] BB 52 C pr
[B] BB 69 C pr , BB 89 C pr
[1] Radiator
[2] Thermostat
[3] Terminal box

4.3.13 Option H3, H12 Outdoor installation

BB 52 C pr

For an outdoor installation of the machine, the joints at the sound enclosure are sealed with silicon (Option H12).
The instruments are protected against direct sunlight, rain and snow.
A separate insulation of the intake duct protects against moisture.

BB 69 C pr , BB 89 C pr

The sound enclosure (Option H12) is fitted with a weather protection roof.
If the machine is installed outdoors, the sound enclosure in cover roof area and the instruments are protected against direct sunlight, rain and snow.
A separate insulation of the intake duct protects against moisture.

4.3.14 Option H11 Intake from pipe network

The air is drawn from the pipe network into the machine's intake silencer.

4.3.15 Option H12 Sound enclosure

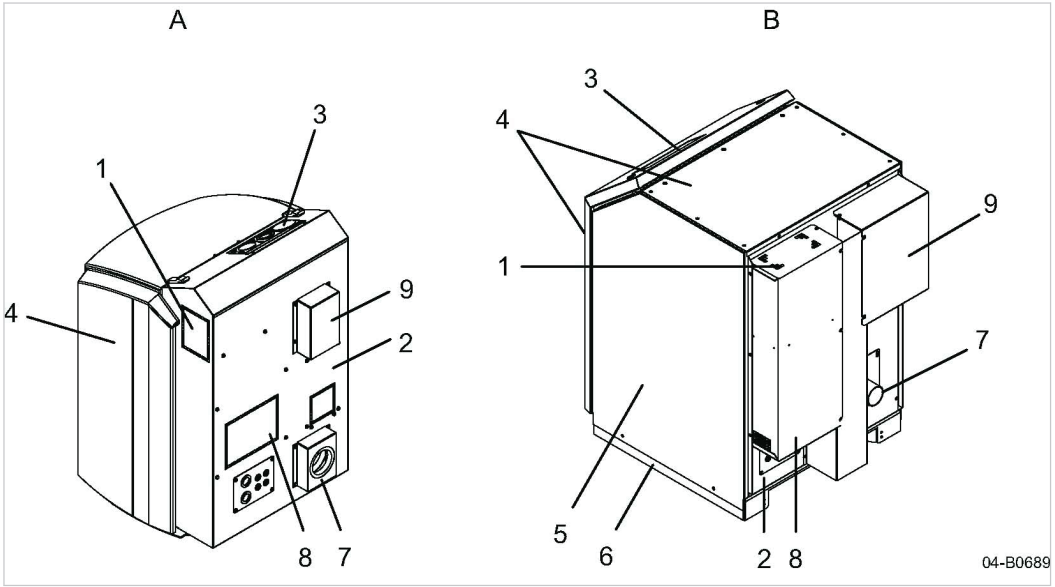

Fig. 23 Sound enclosure overview

- [A] BB 52 C pr
- [B] BB 69 C pr , BB 89 C pr
- [1] Cooling air outlet
- [2] Back plate
- [3] Display (option)
- [4] Removable panel
- [5] Side panel
- [6] Frame
- [7] Pressure line connection
- [8] Cooling air inlet
- [9] Intake air inlet

The motor fan draws cooling air through the inlet [8] into the sound enclosure to cool the drive motor and the machine.

Cooling air flow is supplemented by a fan within the enclosure. Warm air is blown out to protect the machine from overheating.

Air to be compressed is drawn in through the intake air inlet [9]. This ensures that only air at ambient temperature is compressed.

The sound enclosure has a removable access panel [4].
BB 52 C pr : Open the snap fasteners.
BB 69 C pr , BB 89 C pr : Use the supplied key to release the latches.

The sound enclosure has several functions when it is closed:

- Sound insulation
- Protection against contact with components
- Airflow control

The sound enclosure is not suitable for the following uses:

- Persons walking, standing or sitting on the machine.
- Use as resting place or storage of any kind of load.

5 Installation and Operating Conditions

5.1 Ensuring safety

The conditions in which the machine is installed and operated have a decisive effect on safety.

Warning instructions are located before a potentially dangerous task.



Disregard of warning instructions can cause serious injuries!

Complying with safety notes

Disregard of safety notes can cause unforeseeable dangers!

- ➢ Strictly forbid fire, open flame and smoking.
- ➢ If welding is carried out on or near the machine, take adequate measures to prevent sparks or heat from igniting oil vapours or parts of the machine.
- ➢ Do not store flammable material in the vicinity of the machine.
- ➢ The machine is not explosion-proof!
  Do not operate in areas in which specific requirements with regard to explosion protection are in force.
  For instance, the requirements of ATEX directive 94/9/EC "Equipment and Protective Systems intended for use in Potentially Explosive Atmospheres".
- ➢ Ensure sufficient and suitable lighting such that the display can be read and work carried out comfortably and safely.
- ➢ Keep suitable fire extinguishing agents ready for use.
- ➢ Ensure that required ambient conditions are maintained.

Required ambient conditions may be:

- ■ Maintain ambient temperature and humidity
- ■ Ensure the correct composition of the intake air:
  - – clean with no damaging contaminants (e.g., dust, fibres, fine sand)
  - – free of explosive or chemically unstable gases or vapours
  - – free of acid/alkaline forming substances, particularly ammonia, chlorine or hydrogen sulphide.

Noise

The sound enclosure absorbs the machine noise to a tolerable level. This function will be effective only if the sound enclosure is closed.

- ➢ If necessary, wear hearing protection or take hearing protection measures on-site.

5.2 Installation conditions

5.2.1 Determining location and clearances

The machine is intended for installation in an appropriate machine room. Information on distances from walls and ventilation is given below.

The distances quoted are recommended distances and ensure unhindered access to all machine parts.

➢ Please consult KAESER if you cannot comply with these recommendations.

Precondition The floor must be level, firm and capable of bearing the mass.
No special foundation is necessary.

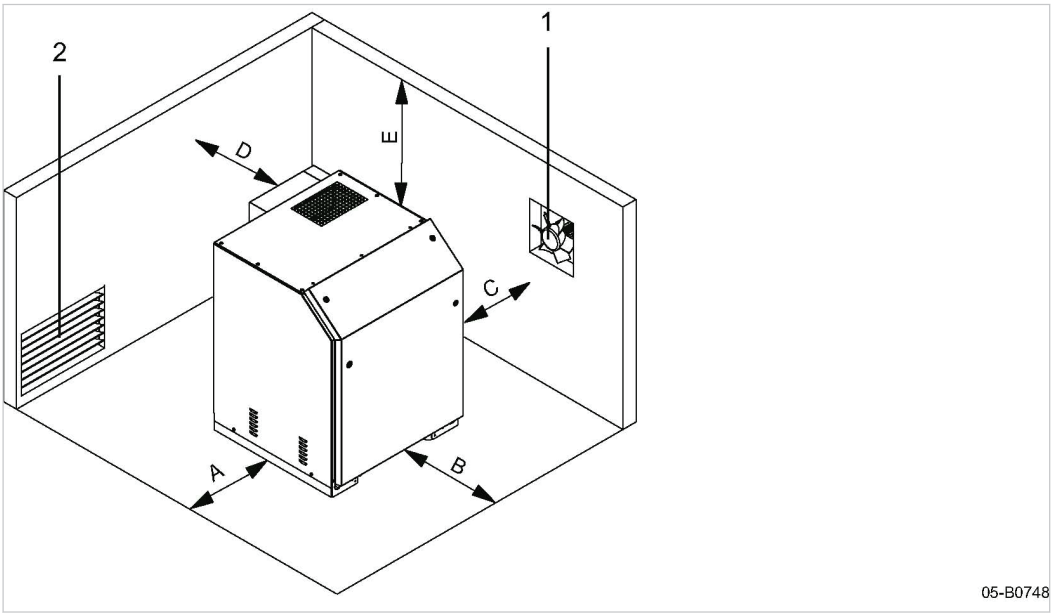

Fig. 24 Recommended machine placement and minimum dimensions [mm]

A	40 or 700	E	700
B	800	1	Exhaust fan
C	0 or 700	2	Air inlet aperture
D	700		

➢ The distance A **or** C must be at least 700 mm.
Version 1: A = 40 mm and C = 700 mm
Version 2: A = 700 mm and C = 0 mm

1. ***NOTICE!***
Ambient temperature too low!
Frozen condensate and highly viscous lubricating oil can cause damage when starting the machine.
➢ Ensure that the temperature of the machine is at least +3 °C before starting.
2. Heat the machine room adequately or install an auxiliary heater.

➢ Ensure accessibility so that all work on the machine can be carried out without danger or hindrance.

➢ Do not position the machine in the warm exhaust air flow from other machines.

➢ When installing multiple machines, ensure that all intake and exhaust air openings are arranged at one side.

➢ Anchoring the machine.

➢ If installed outdoors, protect the machine against frost, direct sunlight, dust and rain.

5.2.2 Ensuring adequate ventilation

If the ventilation is insufficient, a partial vacuum can be created in the room.

- ➢ Ensure that the volume of air flowing into the machine room is at least equivalent to that being removed from it by the machine and exhaust fan.
- ➢ Make sure that the machine and exhaust fan can only operate when the inlet aperture is actually open.
- ➢ Keep the inlet and exhaust apertures free of obstructions so that the cooling air can flow freely through the room.

5.3 Option H3, H12 Outdoor installation

BB 52 C pr

For an outdoor installation of the machine, the joints at the sound enclosure are sealed with silicon (Option H12).
The instruments are protected against direct sunlight, rain and snow.

A separate insulation of the intake duct protects against moisture.

BB 69 C pr , BB 89 C pr

The sound enclosure (Option H12) is fitted with a weather protection roof.
If the machine is installed outdoors, the sound enclosure in cover roof area and the instruments are protected against direct sunlight, rain and snow.

A separate insulation of the intake duct protects against moisture.

6 Installation

6.1 Ensuring safety

Follow the instructions below for safe installation.

Warning instructions are located before a potentially dangerous task.



Disregard of warning instructions can cause serious injuries!

Complying with safety notes

Disregard of safety notes can cause unforeseeable dangers!

- ➢ Follow the instructions in chapter 3 'Safety and Responsibility'.
- ➢ Installation work may only be carried out by authorised personnel.
- ➢ Make sure that no one is working on the machine.
- ➢ Ensure that all panels are closed.

When working on live components

Touching voltage carrying components can result in electric shocks, burns or death.

- ➢ Work on electrical equipment may only be carried out by authorised electricians.
- ➢ Switch off and lock out the power supply isolating device, and verify the absence of voltage.
- ➢ Check that there is no voltage on potential-free contacts.

When working on the compressed air system

Compressed air is contained energy. Uncontrolled release of this energy can cause serious injury or death. The following safety concerns relate to any work on components that could be under pressure.

- ➢ Switch off and lock out the power supply isolating device, and verify the absence of voltage.
- ➢ Close shut-off valves or otherwise isolate the machine from the distribution network to ensure that no compressed air can flow back into the machine.
- ➢ De-pressurise all pressurised components and enclosures.
- ➢ Do not open or dismantle any valves.

When working on the drive system

Touching voltage carrying components can result in electric shocks, burns or death.
Touching the extractor fan or the belt drive while the machine is running can result in serious injury.

- ➢ Switch off and lock out the power supply isolating device, and verify the absence of voltage.
- ➢ Do not open the panels while the machine is switched on.

Further information

Details of authorised personnel are found in chapter 3.4.2.

Details of dangers and their avoidance are found in chapter 3.5.

6.2 Reporting transport damage

1. Check the machine for visible and hidden transport damage.
2. Inform the carrier and the manufacturer in writing of any damage without delay.

6.3 Anchoring the machine

The machine may be anchored to the floor.

The following anchoring elements are shipped with the machine.

- Foundation bolts for machines without sound enclosure.
- Foundation bolts and angle brackets for machines with sound enclosure.

➢ Use the anchoring elements to anchor the machine without stress.

Further information Details of the fixing holes are contained in the dimensional drawing in chapter 13.2.

6.4 Connecting the power supply

Precondition The power supply is switched off,
the device is locked off,
the absence of any voltage has been verified.

The tolerance limits of the mains voltage (power supply) are within the permissible tolerance limits of the nominal voltage (machine).

1. The power supply must only be connected by authorised installation personnel or an authorised electrician.
2. Carry out protection measures as stipulated in relevant regulations (e.g IEC 364 or DIN VDE 0100) and in national accident prevention regulations (BGV A3 in Germany). In addition, observe the regulations of the local electricity supplier.
3. Select supply cable conductor diameters and fusing in accordance with local regulations.
4. The user must provide the machine with a lockable power supply disconnecting device. This could be, for example, a load disconnect switch with fused input. If a circuit breaker is used it must be suitable for the motor starting characteristics.
5. Connect the drive motor to the mains power supply in accordance with the electrical diagrams.
6. The user's safety devices must be correctly connected to the machine's electrical system by a qualified person.
7. If the machine is driven by a frequency converter, observe also the specifications provided in the documentation for this unit.



8. **DANGER!**
   Danger of fatal injury from electric shock!
   ➢ Switch off and lock out the power supply disconnecting device and check the absence of any voltage.
   ➢ When working with the frequency converter:
   Wait at least 5 minutes for dangerous voltages to subside.
9. Connect the machine to the power supply.

6.4.1 Connecting the drive motor

Precondition
The supply isolating device is switched off,
the device is locked off,
the absence of any voltage has been verified.

1. Determine the cable diameters and fusing according to the operation conditions.
2. Connect the drive motor according to the wiring diagram.

Further information
See chapter 2.11 for guidelines on cable diameters and fusing.
See electrical diagram in chapter 13.4.

6.4.2 Option C32 Under frequency control

If the machine is delivered by KAESER including the frequency converter, the regulation behaviour and operating mode of the frequency converter will be preset.

➢ Adapt and optimize the actual properties to the customer system on-site.

1. Comply with the following provisions if you operate machines with a frequency converter:
   - Operate the machine only within its performance limits and under the permitted ambient conditions.
   - The frequency converter must be suitable for the operation of a working machine with constant torque. Models with squared torque may not be used.
   - When operating the machine with frequency converter, the drive motor must be designed as follows:
     - Voltage < 500 V ≥ 75 kW:
       Standard winding and isolated bearing or bearing shield at the control side, regardless of the model.
     - Voltage ≥ 500 V < 75 kW:
       Enhanced winding isolation, standard bearing, regardless of the model.
     - Voltage ≥ 500 V ≥ 75 kW:
       Enhanced winding isolation and isolated bearing or bearing shield at the drive and the control side, regardless of the model.
   - Frequency converters providing a lower initial voltage than the rated motor voltage will cause an increased power consumption and heat development in the drive motor. This results in a reduced nominal motor power that can be utilised and thus a decrease in the machine's regulating range. To avoid damage to the drive motor, please consult with the manuufacturer of the frequency converter.
   - Use a frequency converter with IGBT transistors.
   - The speed change should be approx. 5 Hz per second. This value applies also for the starting ramp from standstill to reaching minimum frequency. Deviating settings, either slower or faster, may be possible after verification by KAESER Service.
   - The frequency converter may be switched to a motor in standstill only, in order to avoid malfunctions.
   - Upon deactivation of the frequency converter, it must be impossible to reactivate it until after complete machine standstill.
   - For a shut-down in the event of a malfunction, integrate the following devices in the user's controller:
     - PTC resistor for monitoring the winding temperature of the drive motor.
     - Thermostat for monitoring the compression discharge temperature.
   - For safety-technical reasons, an automatic restart of the machine is not permitted and must be fully deactivated when parametrising the frequency converter.
   - The maximum conductor length between output frequency converter and drive motor is 30 m. Longer conductors may be possible upon verification by the KAESER Service.
   - Only screened conductors may be used to connect the machine to ensure an EMC compliant connection and machine operation.
     - Do not twist the braided screen of these conductors. The braided screen must be generously spread two-sided across the earth potential.
     - Use only EMC shield clamps or EMC-compliant screwed cable glands.
     - This also applies to other connecting cables, such as the thermistor sensors (PTC) of the drive motor.
2. Consult with KAESER to determine an appropriate frequency converter.

6.5 Creating the compressed air connection

Precondition The machine is factory assembled up to the point of connection to the discharge silencer.
The air main is at atmospheric pressure.

WARNING
Serious injury or death can result from loosening or opening components under pressure.
➢ De-pressurise all pressurised components and enclosures.

If the system has a tendency for air/gas under pressure to flow back to the machine when it is stopped, a non-return device must be installed to allow for unloaded starting of the machine.

➢ Consult KAESER on a suitable check valve and expert installation.

1. Use an elastic connector to create the compressed air connection to the pipeline system or the consumer and install, complying with the torques specified below:

Connection	Torque [Nm]
Compensator, customer pipeline	100

Tab. 50 Torques for customer pipeline

2. Support the weight of the pipework and any other connecting components.

6.6 Safety devices installed by the user

➢ The user must install the necessary safety devices.
- Three PTC thermistor sensors should be installed by the user to protect against drive motor overheating or overloading.
- A motor overload protection switch/overload relay (if not included with the deliverables) must be installed to monitor maximum current draw(s).
- EMERGENCY OFF command device for immediate shut-down of the machine.

➢ The user must monitor the following parameters:
- Permissible final pressure
- Maximum block discharge temperature

➢ Consult KAESER for advice on this subject.

Pressure relief valves and check valves are not regulating means in case of overpressure. The activation of the pressure relief valve constitutes an impermissible operating state requiring immediate remedial measures.

6.7 Options

All options (except BB 52 C pr : (Option H2) are mechanically installed/mounted. The electrical connections and evaluations are the customer's responsibility.

➢ Instructions on individual options should be followed.

6.7.1 Option C9
Connecting the pressure switch

➢ Connecting the pressure switch

Further information See electrical diagram in chapter 13.5.1.

6.7.2 Option C10
Connecting the speed monitor

The sensor and transmitter are mechanically installed.

➢ A speed monitor sensor is supplied separately when ordered individually. Install in the user's control cabinet and wire up.

Further information See chapter 2.12.2 for the sensor settings.
The wiring diagram for the speed monitor is found in chapter 13.5.2.

6.7.3 Option C13
Connecting the temperature gauge switch

➢ Connect the temperature gauge switch.

Further information See electrical diagram in chapter 13.5.3.

6.7.4 Option C14
Connecting the pressure sensor

➢ Connecting the pressure sensor

Further information See chapter 13.5.4.

6.7.5 Option C19
Connecting the thermostat

➢ Connect the thermostat.

Further information See electrical diagram in chapter 13.5.5.

6.7.6 Option F5
Connecting the filter pressure differential switch

➢ Connect the filter pressure differential switch.

Further information See electrical diagram in chapter 13.5.6.

6.7.7 Option H2
Connecting the auxiliary heater

BB 52 C pr

The auxiliary heater is delivered uninstalled. The radiator, thermostat and terminal box are already installed on a mounting plate.

➢ Connect the auxiliary heater in the terminal box.

BB 69 C pr , BB 89 C pr

➢ Connect the auxiliary heater in the terminal box.

Further information See electrical diagram in chapter 13.5.7.

6.7.8 Option H11 Connecting the suction line

If air is sucked in from the pipeline, the inlet silencer is connected using a compensator.

Precondition The compressed air system is vented completely to atmospheric pressure.

➢ Secure the pipeline securely before the compensator.
➢ Connect to the compressed air network.

Further information Dimensional drawings for the pipeline connection is given in chapter 13.2.

6.7.9 Option H12 Sound enclosure

6.7.9.1 Electrical connections

Subsequent work enables the access to the electrical connections of drive motor, fan and accessories.

1. Remove the access panel of the sound enclosure.
   BB 52 C pr : Open the snap fasteners.
   BB 69 C pr , BB 89 C pr : Latches are released by a key supplied with the machine.
2. Make the electrical connections.
3. Insert the access panel, and close the snap fasteners or latches.

6.7.9.2 Connecting the fan

BB 52 C pr : The sound enclosure is fitted with a fan only if the drive motor has a rated power of <4 kW and the machine is operated with frequency converter (Option C32).

The fan motor has a terminal box for direct supply connection.

The drive motor and the fan must run simultaneously.

Ensure correct direction of rotation when connecting the fan. The fan must blow air out of the sound enclosure.

The fan should run on for ca. 15 minutes after machine shut down to avoid temperature peaks inside the sound enclosure.

Precondition The power supply is switched off,
the device is locked off,
the absence of any voltage has been verified.

1. Select sufficient cable length.

2. Connect cables to the terminal box without mechanical stress.
3. Connect the protective earth.

Further information See electrical diagram in chapter 13.5.8.

6.8 Option H12
BB 69 C pr , BB 89 C pr with sound enclosure: Remove transport securing devices

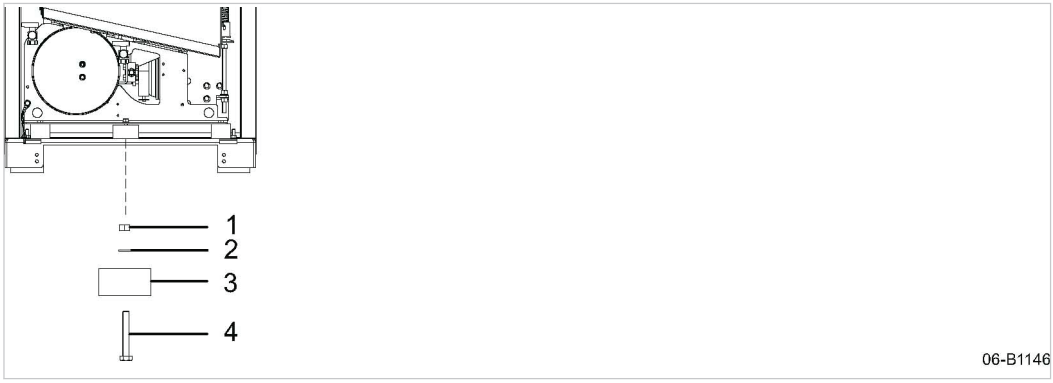

Fig. 25 Removing the transport securing devices

1	Hexagon nut	3	Spacer
2	Washer	4	Screw

Remove the transport securing devices after the machine has been installed.

1. Remove the access panel of the sound enclosure.
2. Remove the transport securing device and store for future transports.

7 Initial Start-up

7.1 Ensuring safety

Here you will find instructions for safe commissioning of the machine.
Warning instructions are located before a potentially dangerous task.



Disregard of warning instructions can cause serious injuries!

Complying with safety notes

Disregard of safety notes can cause unforeseeable dangers!

- ➢ Follow the instructions in chapter 3 'Safety and Responsibility'.
- ➢ Commissioning tasks may only be carried out by authorised personnel!
- ➢ Make sure that no one is working on the machine.
- ➢ Ensure that all panels are closed.

When working on live components

Touching voltage carrying components can result in electric shocks, burns or death.

- ➢ Work on electrical equipment may only be carried out by authorised electricians.
- ➢ Switch off and lock out the power supply isolating device, and verify the absence of voltage.
- ➢ Check that there is no voltage on potential-free contacts.

When working on the compressed air system

Compressed air is contained energy. Uncontrolled release of this energy can cause serious injury or death. The following safety concerns relate to any work on components that could be under pressure.

- ➢ Switch off and lock out the power supply isolating device, and verify the absence of voltage.
- ➢ Close shut-off valves or otherwise isolate the machine from the distribution network to ensure that no compressed air can flow back into the machine.
- ➢ De-pressurise all pressurised components and enclosures.
- ➢ Do not open or dismantle any valves.

When working on the drive system

Touching voltage carrying components can result in electric shocks, burns or death.
Touching the extractor fan or the belt drive while the machine is running can result in serious injury.

- ➢ Switch off and lock out the power supply isolating device, and verify the absence of voltage.
- ➢ Do not open the panels while the machine is switched on.

Further information

Details of authorised personnel are found in chapter 3.4.2.
Details of dangers and their avoidance are found in chapter 3.5.

7.2 Checking installation and operating conditions

➢ Check and confirm all the items in the checklist before commissioning the machine.

To be checked	See chapter	Complied?
➢ Have all packing materials, tool and transport securing means been removed from the machine?	–	
➢ Are the operators fully conversant with safety regulations?	–	
➢ Have all the positioning conditions been complied with?	5	
➢ Has the automatic machine shut-down by the user's safety devices in the event of a fault been realised?	6.6	
➢ Are the power supply cable conductor diameters and fuse ratings adequate?	2.11	
➢ Are the tolerance limits of the mains voltage (power supply) within the permissible tolerance limits of the nominal voltage (machine)?	2.11	
➢ Has the drive motor connection been checked?	6.4	
➢ Has the fan connection (sound enclosure) been checked? (Option H12)	6.7.9.2	
➢ Has the direction of rotation of drive motor and fan (sound enclosure) been checked?	7.4	
➢ All electrical connections checked for tightness? (The check must be repeated after 50 operating hours)	–	
➢ Is there adequate lubricating oil in the drive-end and gear-end of the block? (Level in the centre of the sight glass)	10.5	
➢ Has the connection to the compressed air network been made with a hose or compensator?	6.5	
➢ Has the drive belt tension been checked? (The check must be repeated after 24 operating hours)	10.4	
➢ Has the block drive shaft been turned by hand to check that it turns freely?	–	
➢ Is the machine anchored to the floor without stress?	6.3	
➢ Are the access panel of the sound enclosure and other panels inserted and locked? (Option H12)	4.3.15	
➢ BB 52 C pr : Has the silicone seal protecting the outdoor-installed machine been checked for leaks? (Option H3, H12)	–	

Tab. 51 Installation conditions checklist

7.3 Instructions to be observed before commissioning or re-commissioning

Incorrect or improper commissioning can cause injury to persons and damage to the machine.

➢ Commissioning may only be carried out by authorised installation and service personnel who have been trained on this machine.

Special measures for re-commissioning after storage

Storage period longer than:	Remedy
12 months	➢ Change the lubricating oil. ➢ Have the motor bearings checked by an authorised KAESER Service Technician.
36 months	➢ Have the overall technical condition checked by an authorised KAESER Service Technician.

Tab. 52 Re-commissioning after storage

7.4 Checking the direction of rotation

7.4.1 Drive motor

If the block rotors turn in the wrong direction the direction of airflow through the machine will also be wrong.

An arrow indicating direction of rotation is fixed on the side of the block at the drive end and at the belt guard.

1. *NOTICE!*
   Wrong direction of rotation!
   This may result in machine damage by drawing foreign bodies or excessive vacuum.
   ➢ Ensure the correct direction of rotation.
2. Remove the inlet silencer filter maintenance cover on the inlet silencer or inlet filter and/or remove the inlet non-return valve.
3. Verify the direction of phase rotation with a phase sequence meter.
4. If the direction of rotation is incorrect, interchange the phases L1 and L2.

You do not have a phase sequence meter?

➢ Switch the machine on and off again after 1 second.

➢ Compare the direction of rotation of the motor with the arrows on the belt guard and the blower casing.

➢ If the direction of rotation is incorrect, interchange the phases L1 and L2.

7.4.2 Option H12 Fan (sound enclosure)

BB 52 C pr : The sound enclosure is fitted with a fan only if the drive motor has a rated power of <4 kW and the machine is operated with frequency converter (Option C32).

An arrow is also to be found on the ventilator to indicate its correct direction of rotation.

The fan must blow air out of the sound enclosure.

- ➢ **Single-phase fan:** If the direction of rotation is incorrect, switch the electric connection in the terminal box of the fan. Instructions regarding "Right" and "Left" operation are provided in the cover of the terminal box.
- ➢ **Three-phase fan:** If the direction of rotation is incorrect, interchange the phases L1 and L2.

8 Operation

8.1 Switching on and off

Switching on and off follows to a large extent the procedure established for the equipment provided for this action. The equipment is provided by the user and not part of the scope of supply of the machine unless ordered as an option.

➢ Make sure the machine is technically sound before switching on.
If the machine has a sound enclosure, a check must be made that the fan is fully functional.

8.1.1 Switching on

Switch the machine on only when it is fully stopped.

Maximum frequency of motor starts per hour 6 times

Precondition A suitable unloaded start device is installed in the case of back-pressure.

1. **WARNING!**
   Possible serious injury from compressed air!
   ➢ Make sure that no one is working on the machine.
2. Switch the machine on at the user's control cabinet.

Further information Information on the function of the user's control cabinet should be taken from the cabinet manufacturer's documentation.

Option C32 Under frequency control

Maximum frequency of motor starts per hour: any

Precondition A suitable unloaded start device is installed in the case of back-pressure.

1. **WARNING!**
   Possible serious injury from compressed air!
   ➢ Make sure that no one is working on the machine.
2. Switch the machine on at the frequency converter.

8.1.2 Switching off

➢ Switch the machine off at the user's control cabinet.

Further information Information on the function of the user's control cabinet should be taken from the cabinet manufacturer's documentation.

Option C32 Under frequency control

➢ Switch the machine off at the frequency converter.

8.2 Switching off in an emergency

The machine is not equipped with an emergency stop device. Such a device must be provided by the user unless it is part of an ordered option.

➢ Ensure the machine can be stopped immediately in an emergency.

8.3 Option H12 Checking the fan function (sound enclosure)

BB 52 C pr : The sound enclosure is fitted with a fan only if the drive motor has a rated power of <4 kW and the machine is operated with frequency converter (Option C32).

NOTICE
Overheating inside the sound enclosure!
A standstill of the ventilator can result in a breakdown of the blower block or other components.

➢ If the ventilator stops, immediately provide an alternative flow of cooling air through the sound enclosure.

➢ Check that air is actually being blown out of the enclosure cooling air outlet, e.g. by holding a sheet of paper in front of the outlet.

Further information KAESER Service will advise on suitable measures.

9 Fault Recognition and Rectification

9.1 Basic instructions

The following tables are intended to assist in locating faults.

1. Do not attempt fault rectification measures other than those given in this manual.
2. In all other cases,
   have the fault rectified by an authorised KAESER Service Technician.

9.2 Alarms

Fault	Possible cause	Remedy
Unusual noise when running.	Too much backlash in the timing gears.	Contact KAESER Service.
	Too much play in the rotor bearings.	Contact KAESER Service.
	Rotors not synchronised.	Keep to the pressure differential and speed as specified. Contact KAESER Service.
Block runs too hot.	Pressure differential too great.	Check and correct pressure differential.
	Clogged inlet filter reducing air intake volume.	Clean the inlet filter.
	Rotor clearance too large.	Contact KAESER Service.
Oil leaks from the gas drain.	Oil level too high.	Drain off oil until the correct level is reached.
Oil leaking from around the drive shaft.	Shaft seal defective.	Contact KAESER Service.
Reduced air inlet flow.	Rotor clearance to large because of wear.	Contact KAESER Service.
	Intake resistance too high.	Clean the inlet filter.
Black film on the oil sight glasses.	Oil not changed at the correct interval.	Change the lubricating oil. Clean or renew the sight glass.
	Insufficient oil.	Change the lubricating oil. Clean or renew the sight glass.
	Oil overheated.	Contact KAESER Service.
	Block overloaded.	Contact KAESER Service.
Water in the oil.	Condensate build-up by prolonged storage and high humidity.	Change the lubricating oil.
Pressure relief valve activates.	Inadmissible operating state, operating pressure too high.	Bring the machine to a permissible operational state or shut down.

Fault	Possible cause	Remedy
PTC relay trips out.	Operating pressure too high.	Check and correct pressure differential.

Tab. 53 Faults and remedies

9.3 Options

This section provides remedies for technical faults concerning the machine's optional equipment.

9.3.1 Option H12 Sound enclosure faults

Fault	Possible cause	Remedy
Overheating inside the sound enclosure!	Extractor defective or turning in the wrong direction.	Check connection. Contact KAESER Service.
	Flow of cooling air blocked.	Check and clean cooling air apertures. Check the cooling air inlet temperature.
	Drive motor overloaded.	Check operating conditions.

Tab. 54 Faults and remedies (option H12)

9.3.2 Option C14 Faulty pressure sensor

Fault	Possible cause	Remedy
No output signal.	No power supply, broken wire.	Check power supply and wires.
	Pressure transducer incorrectly connected.	Check power supply and wires.
	No input pressure.	Check pressure feed.
	Electronic defect from power supply voltage surge or external voltage.	Contact KAESER Service.
Output signal does not respond to pressure changes.	Input channel blocked.	Clean the input channel and throttle screw, being careful not to damage the delicate diaphragm.
	Electronic defect from power supply voltage surge or external voltage.	Contact KAESER Service.
	Pressure transducer defective from mechanical overloading.	Contact KAESER Service.

Fault	Possible cause	Remedy
Output signal too high and not responding to pressure changes.	Electronic defect from power supply voltage surge or external voltage.	Contact KAESER Service.

Tab. 55 Faults and remedies (option C14)

10 Maintenance

10.1 Ensuring safety

Follow the instructions below to ensure safe machine maintenance.
Warning instructions are located before a potentially dangerous task.



Disregard of warning instructions can cause serious injuries!

Complying with safety notes

Disregard of safety notes can cause unforeseeable dangers!

- ➢ Follow the instructions in chapter 3 'Safety and Responsibility'.
- ➢ Allow maintenance work to be performed by authorised personnel only.
- ➢ Make sure that no one is working on the machine.
- ➢ Ensure that all panels are closed.

When working on live components

Touching voltage carrying components can result in electric shocks, burns or death.

- ➢ Work on electrical equipment may only be carried out by authorised electricians.
- ➢ Switch off and lock out the power supply isolating device, and verify the absence of voltage.
- ➢ Check that there is no voltage on potential-free contacts.

When working on the compressed air system

Compressed air is contained energy. Uncontrolled release of this energy can cause serious injury or death. The following safety concerns relate to any work on components that could be under pressure.

- ➢ Switch off and lock out the power supply isolating device, and verify the absence of voltage.
- ➢ Close shut-off valves or otherwise isolate the machine from the distribution network to ensure that no compressed air can flow back into the machine.
- ➢ De-pressurise all pressurised components and enclosures.
- ➢ Do not open or dismantle any valves.

When working on the drive system

Touching voltage carrying components can result in electric shocks, burns or death.
Touching the extractor fan or the belt drive while the machine is running can result in serious injury.

- ➢ Switch off and lock out the power supply isolating device, and verify the absence of voltage.
- ➢ Do not open the panels while the machine is switched on.

Further information

Details of authorised personnel are found in chapter 3.4.2.
Details of dangers and their avoidance are found in chapter 3.5.

10.2 Maintenance schedule

10.2.1 Logging maintenance work

The maintenance intervals given are those recommended for average operating conditions.

➢ Maintenance tasks should be carried out more frequently where operating conditions are unfavourable (e.g. dusty atmosphere) or when the equipment is in constant use.

➢ Adjust the maintenance intervals with regard to local installation and operating conditions.

➢ Keep a log of all maintenance and service work.

This enables the frequency of individual maintenance tasks and deviations from our recommendations to be determined.

Further information A prepared list is provided in chapter 10.12.

10.2.2 Regular maintenance tasks

The table below lists maintenance tasks required.

When operating conditions are unfavourable (e.g. dusty atmosphere) or when the equipment is in constant use, maintenance tasks must be carried out more frequently (shorter intervals).

➢ Carry out maintenance tasks punctually taking ambient and operating conditions into consideration.

Interval	Maintenance task	See chapter
24 hours after initial commissioning	Check belt tension.	10.4
50 hours after initial commissioning	Check all screwed electrical connections and tighten if necessary.	–
500 hours after initial commissioning	Change the lubricating oil.	10.7
Up to 500 h or monthly	Check the oil level.	10.5
	Check belt tension.	10.4
	Check the air filter.	10.8
Up to 1 500 h* at least once a year	Change the SF220 lubricating oil. (An adhesive label identifying the used lubricant is attached to the blower block.)	10.7
Up to 3 000 h annually at the latest	Change the air filter.	10.8
Up to 3 000 h* at least once a year	Change the SB220 lubricating oil. (An adhesive label identifying the used lubricant is attached to the blower block.)	10.7
Annually	Check the pressure relief valve.	10.10
	Check all screwed electrical connections and tighten if necessary.	–

h = operating hours
* The intervals for lubricating oil changes at high thermal stresses must be reduced and can be determined upon analyses of the oil.

Interval	Maintenance task	See chapter
Up to 12 000 h at the latest every 3 years.	Replace the drive belts.	10.4
As required	Check rotors for contamination.	10.11
after 2 years	BB 52 C pr : Check the silicone seal protecting the outdoor-installed machine for leaks and touch up, if necessary. (Option H3, H12)	–

h = operating hours
* The intervals for lubricating oil changes at high thermal stresses must be reduced and can be determined upon analyses of the oil.

Tab. 56 Regular maintenance tasks

10.2.3 Regular service tasks

The table below lists necessary service tasks.

➢ Only an authorised KAESER Service Technician should carry out service work.

➢ Have service tasks carried out punctually taking ambient and operating conditions into account.

Interval	Service task
Up to 12 000 h at the latest every 3 years.	Permanently greased drive motor bearings: Have motor bearings checked.
Up to 12 000 h at the latest every 3 years.	Fan motor (sound enclosure) Have motor bearings checked.
Up to 36 000 h at the latest every 8 years.	Have the compensators and hose lines checked.

h = operating hours

Tab. 57 Regular service tasks

10.3 Option H12 Sound enclosure

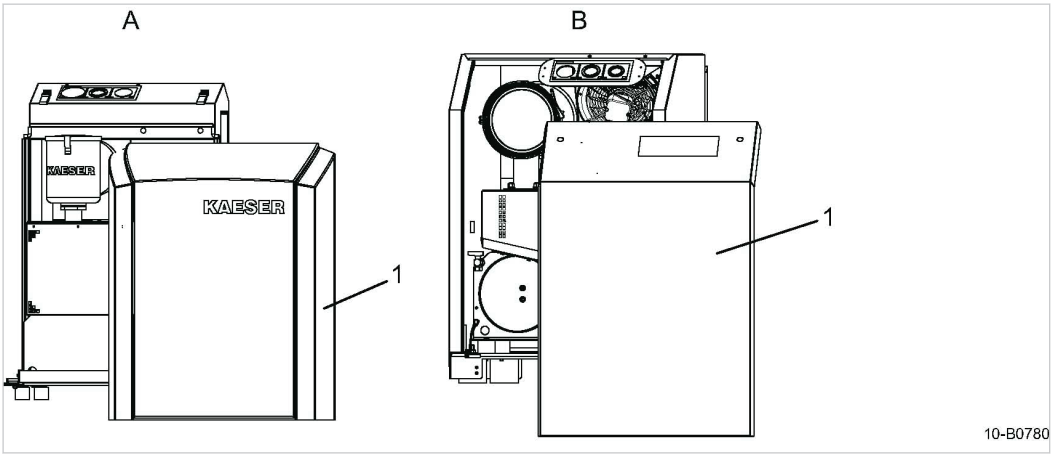

Fig. 26 Sound enclosure

(A) BB 52 C pr
(B) BB 69 C pr , BB 89 C pr
(1) Removable panel

➢ Remove the panel (1) for maintenance work.
BB 52 C pr : Open the snap fasteners.
BB 69 C pr , BB 89 C pr : Use the supplied key to release the latches.

10.4 Drive belt maintenance

Material Spare parts (if required)

Precondition The supply disconnecting device is switched off,
the device is locked off,
the absence of voltage has been verified.

The machine has cooled down.

WARNING
Touching the moving drive belt may result in severe bruising or even loss of limb or extremities.

➢ Switch off and lock out the power supply isolating device and verify the absence of voltage.

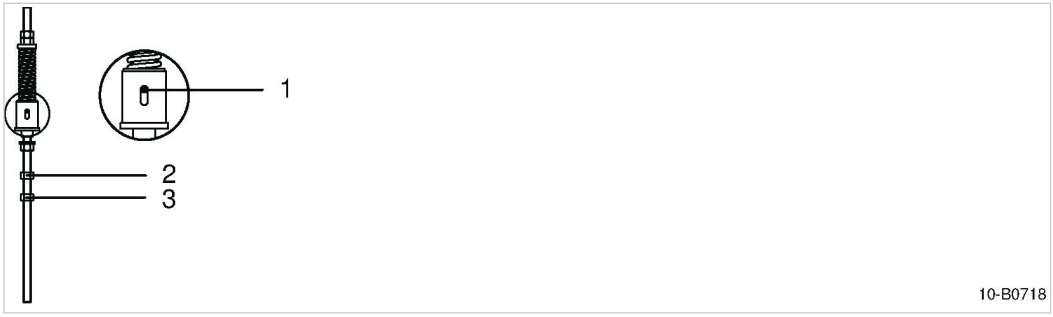

Fig. 27 Drive belt maintenance

[1] Marker pin (shown as: belt tensioning required)
[2] Clamping nut
[3] Clamping nut

Checking the belt tension and adjustment

The tensioning device uses spring force to apply correct tension to the belts.

Adjust the tension when the marker pin reaches the **top** end of the elongated hole.

1. Loosen the locking nut [2].
2. Use the adjusting nut [3] to adjust the spring tension until the marker pin reaches the lower end of the elongated hole.
3. Tighten the locking nut [2].

Visually check for damages.



1. **CAUTION!**
   Danger of pinching between belt and pulley!
   ➢ Work carefully.
2. Turn the pulley by hand so that the entire belt can be inspected for damage.
3. In case of damage: Replace the drive belt immediately.



When individual belts fail in multiple-groove drives, all belts must be replaced.

Changing the belt

1. Remove the belt guard.
2. Loosen the locking nut [3].
3. Turn the adjusting nut [2] to loosen the tension on the belts until they can be removed from the pulley.
4. Install the new set of belts and use the adjusting nut [2] to the adjust tension until the marker pin reaches the lower end of the elongated hole.
5. Tighten the locking nut [3].
6. Replace the belt guard.
7. Check the tension after the new belts have been in operation for 50 hours.

10.5 Checking the oil level

The true oil level can be seen in the oil sight glass only when the machine is stopped.

The gear-end and drive-end oil chambers are not connected.

WARNING
Danger of burns from hot components!
➢ Wear long-sleeved clothing and gloves.

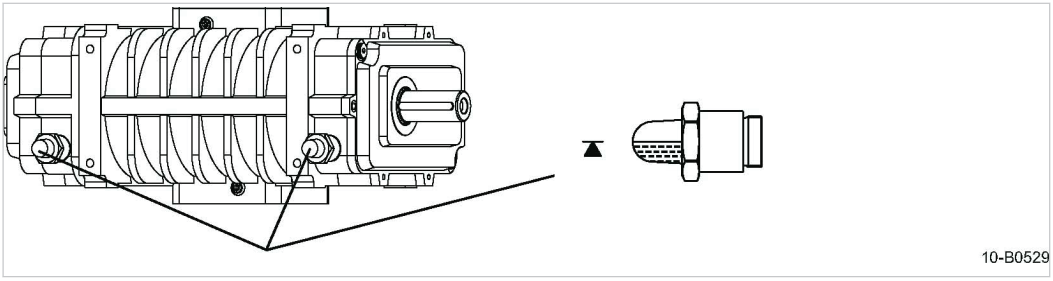

Fig. 28 Checking the oil level

1. Check the oil level in the sight glasses on both ends of the block.
2. Replenish as soon as the level falls 5 mm below the centre of the sight glass.

10.6 Replenishing lubricating oil

Labels giving the oil type for topping up are to be found on the blower block and belt guard.

The machine must be isolated from the compressed air network and completely vented before undertaking any work on the pressure system.

Precondition The power supply disconnecting device is switched off,
the disconnecting device is locked in the off position,
the oil level has settled.

WARNING
Danger of burns from hot components and oil!
➢ Wear long-sleeved clothing and gloves.

NOTICE
Unsuitable oil can damage the block!
➢ Never mix different types of oil.
➢ Never top up with a different type of oil to that already used in the block.

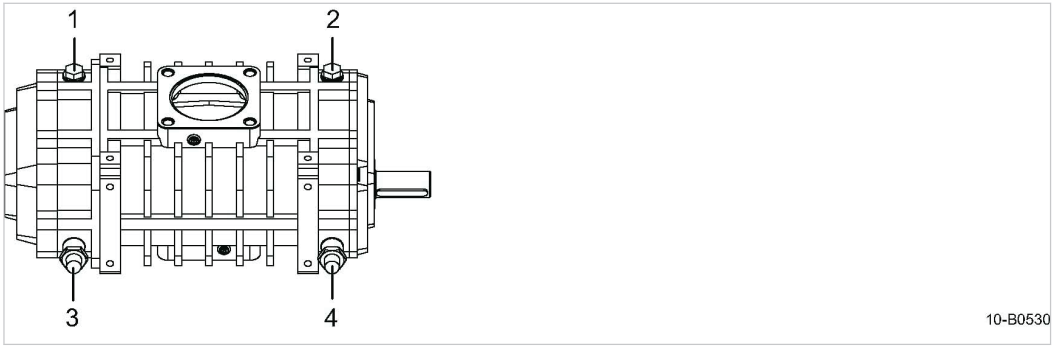

Fig. 29 Replenishing lubricating oil

1 Plug (gear-end oil filling port)
2 Plug (drive-end oil filling port)
3 Gear-end oil sight glass
4 Drive-end oil sight glass

1. Slowly remove the plug 1 and/or 2.
2. Top up until the level is at the marking on the sight glass 3 and/or 4.
3. Screw in the plugs.
4. Visually check for leaks.

10.7 Changing the oil

The machine must be isolated from the compressed air network and completely vented before undertaking any work on the pressure system.

The oil should be changed with the block temperature at 55 °C to ensure the oil flows freely.

Drain the oil thoroughly from the blower block:

- Control end
- Drive end

Material Lubricating oil

Oil receptacle

Precondition The power supply isolating device is switched off,
the device is locked off,
the absence of any voltage has been verified.

WARNING
Danger of burns from hot components and oil!

➢ Wear long-sleeved clothing and gloves.

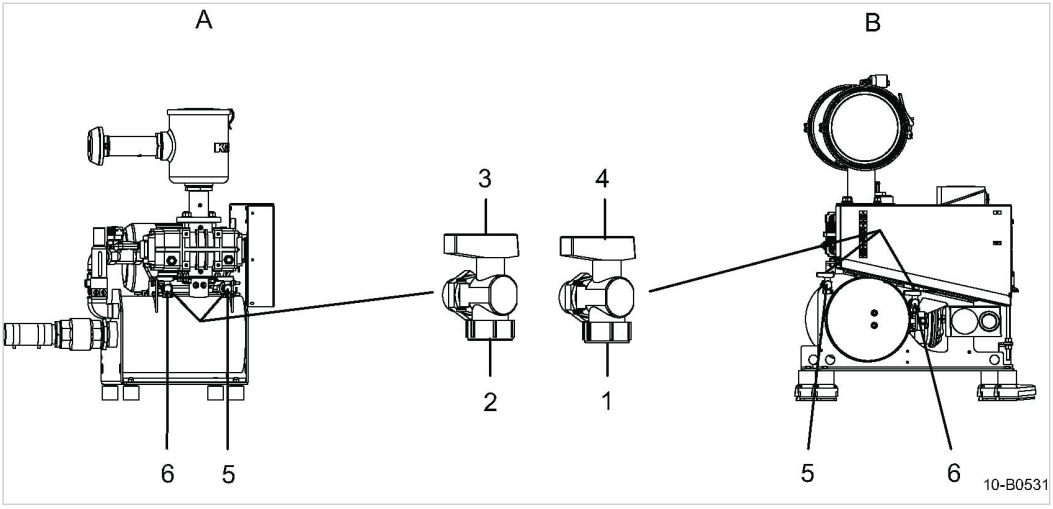

Fig. 30 Changing the oil

[A]	BB 52 C pr	[3]	Oil drain tap
[B]	BB 69 C pr , BB 89 C pr	[4]	Oil drain tap
[1]	Cap	[5]	Drive end
[2]	Cap	[6]	Control end

Drain the oil

1. Prepare an oil receptacle.
2. Open the filler plugs at the oil inlet of the blower block [1] and [2] (Fig. 29).
3. Take off the caps [1] and [2] and open the oil drain taps [3] and [4].
4. Drain the lubricating oil.

Dispose of the old oil in accordance with local environmental protection regulations.

Filling with fresh oil

1. Fill with fresh oil.
2. Allow the oil drain taps to remain open until fresh oil begins to run out (bleeding the oil drain lines).
3. Close the oil drain taps [3] and [4].
4. Check the oil level in both sight glasses (Fig. 29) and top up as necessary.
5. Screw on the caps [1] and [2].
6. Replace and tighten the plugs of the oil inlets at the blower block.
7. Visually check for leaks.

10.8 Air filter maintenance

The air filter protects the supplied pressure system from dirt entering.

NOTICE
Machine damage caused by unsuitable air filter!
Dirt can enter the compressed air system and cause damage to the machine.
➢ Use suitable air filters.

The air filter cannot be cleaned.

10.8.1 Option F4 Filter maintenance indicator

The maintenance indicator shows when the filter needs maintenance. When the filter becomes clogged and flow resistance rises to a set point, the maintenance signal is given.

Machine without sound enclosure

The filter maintenance indicator is installed at the intake silencer.

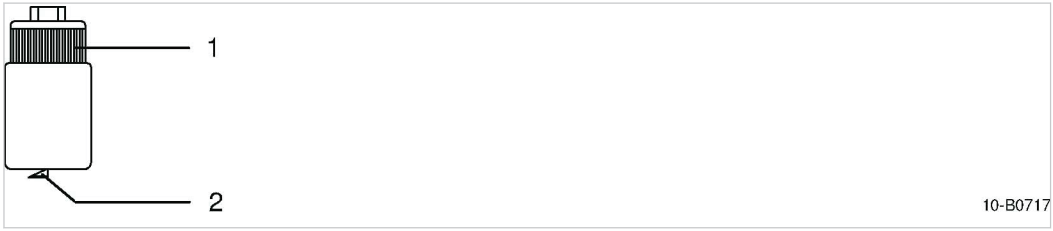

Fig. 31 Filter maintenance indicator
[1] Signal ring
[2] Reset button

1. Change the air filter when the signal ring [1] shows red.
2. Unlatch the signal ring by pressing the reset button [2].

Option H12 Machine with sound enclosure

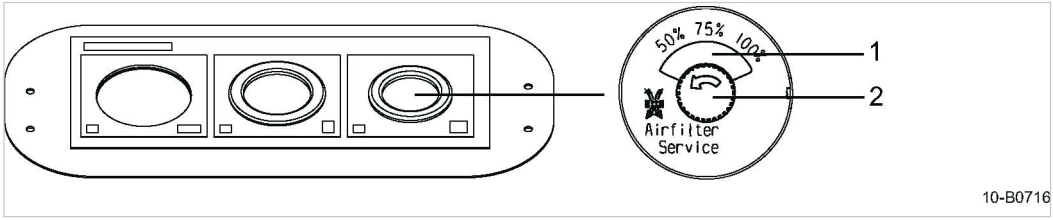

Fig. 32 Filter maintenance indicator (sound enclosure)
[1] Indicator range
[2] Reset button

1. Replace the filter when the maintenance indicator reads more than 50 %.
2. Reset to the indication range [1] by pressing the reset button [2].

10.8.2 Option F5 Filter pressure differential switch

The filter pressure differential switch monitors contamination of the intake filter.

The switch is triggered by pressure differential. Falling below or rising above the set value causes the current flow to switch on, switch off or changeover according to how the switch is wired.

➢ Change the air filter if the pressure differential switch activates.

10.8.3 Changing the air filter

The machine must be isolated from the compressed air network and completely vented before undertaking any work on the pressure system.

Material Spares

Precondition The power supply isolating device is switched off,
the device is locked off,
the absence of any voltage has been verified.

The machine has cooled down.

BB 52 C pr

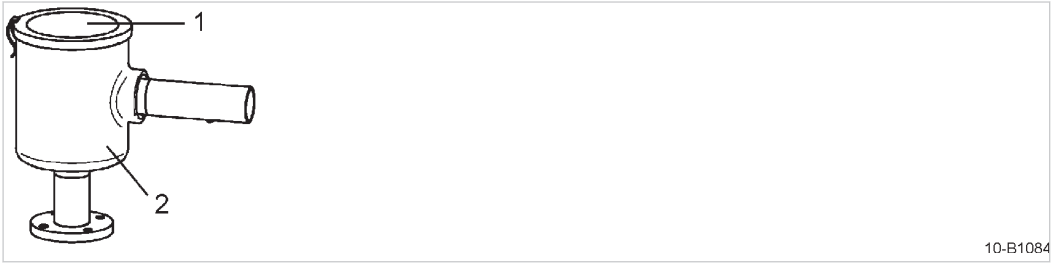

Fig. 33 Change the air filter (BB 52 C pr)

[1] Cover
[2] Inlet silencer

1. Open the snap fastener on the inlet silencer cover [2] .
2. Take off the cover [1].
3. Remove the clogged air filter.
4. Clean all parts and sealing surfaces.
5. Insert the new air filter.
6. Secure the silencer cover.

BB 69 C pr , BB 89 C pr

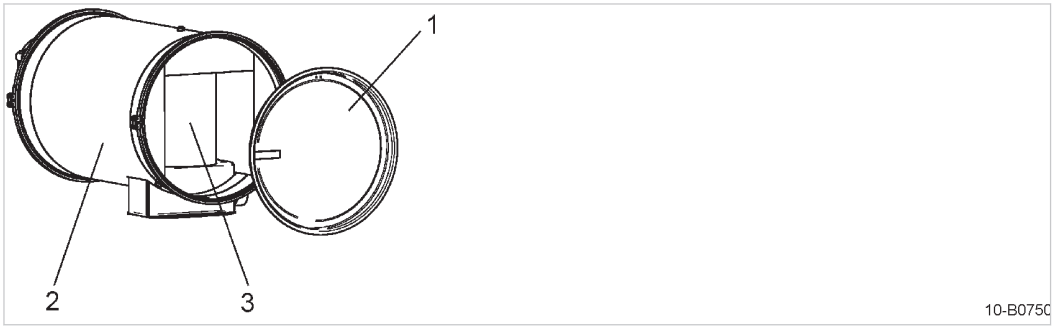

Fig. 34 Change the air filter (BB 69 C pr , BB 89 C pr)

[1] Cover
[2] Inlet silencer
[3] Air filter

1. Open the snap fastener on the inlet silencer cover [2] .
2. Take off the cover [1].
3. Loosen the Velcro strip and remove the air filter [3].
4. Clean all parts and sealing surfaces.
5. Place the new filter in the inlet silencer and secure with the Velcro strip.
6. Secure the silencer cover.

10.9 Motor maintenance

10.9.1 Permanently greased drive motor bearings

The motor bearings are greased for life. Re-greasing is not necessary.

➢ The motor bearings must be checked in the course of regular service calls by an authorised KAESER Service.

Further information For further information to the motor, please consult the motor manual.

10.9.2 Option H12 Sound enclosure fan motor

BB 52 C pr : The sound enclosure is fitted with a fan only if the drive motor has a rated power of <4 kW and the machine is operated with frequency converter (Option C32).

The motor bearings are greased for life. Re-greasing is not necessary.

➢ The motor bearings must be checked in the course of regular service calls by an authorised KAESER Service.

10.10 Testing the pressure relief valve

BB 52 C pr

The free movement of the pressure relief valve's tension rod is checked by hand.

Precondition The machine is switched off.
The machine is fully vented to atmosphere.

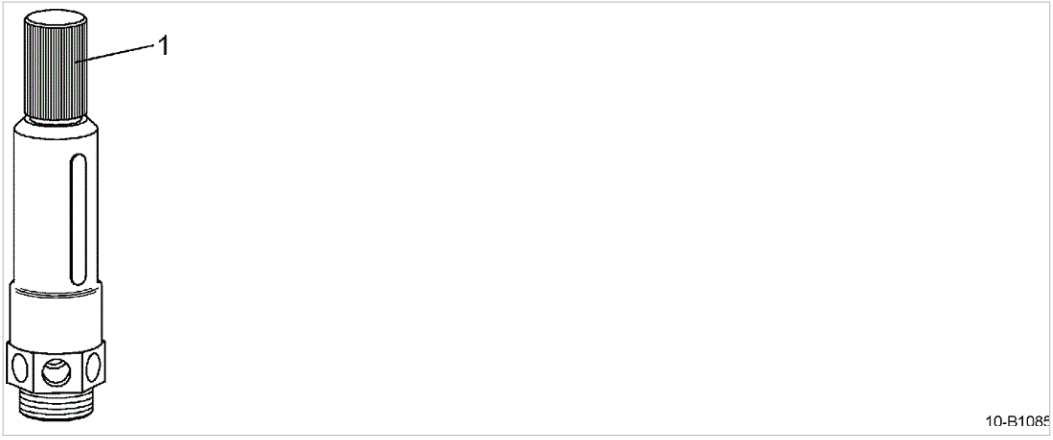

Fig. 35 Checking the pressure relief valve (BB 52 C pr)
[1] Cap

➢ Check the movability of the tension rod by rotating the knurled cap [1].

The valve opens as soon as maximum working pressure is exceeded.

➢ Never operate the machine without a correctly functioning pressure relief valve.
➢ Do **not** adjust the pressure relief valve.
➢ Replace a defective pressure relief valve.

BB 69 C pr , BB 89 C pr

The free movement of the pressure relief valve's tension rod is checked by hand or with a lifting device.

Precondition The machine is switched off.
The machine is fully vented to atmosphere.

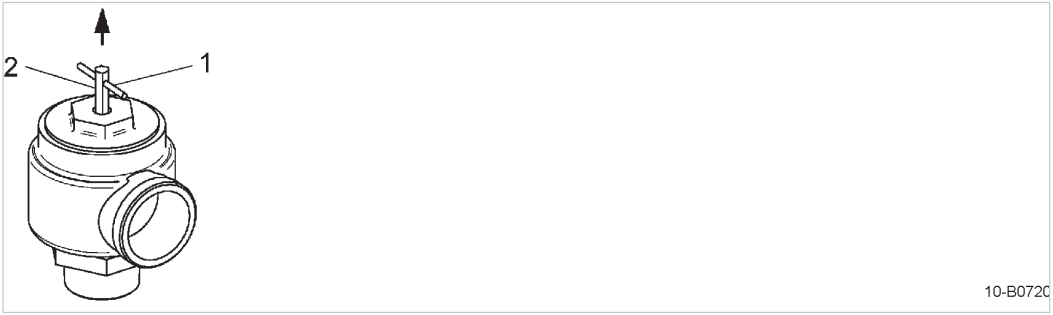

Fig. 36 Checking the pressure relief valve (BB 69 C pr , BB 89 C pr)
[1] Opening lever
[2] Tension rod

➢ Check for free movement of the tension rod [2] by pulling vertically at the opening lever [1].

The valve opens as soon as maximum working pressure is exceeded.

➢ Never operate the machine without a correctly functioning pressure relief valve.

➢ Do **not** adjust the pressure relief valve.
➢ Replace a defective pressure relief valve.

10.11 Checking rotors for contamination

Any dust in the conveyed medium can build up inside the block.



The machine must be isolated from the compressed air network and completely vented before undertaking any work on the pressure system.

Precondition
The power supply isolating device is switched off,
the device is locked off,
the absence of any voltage has been verified.
The machine has cooled down.



CAUTION
Rotating rotors.
Danger of squashing or severing.
➢ Switch off and lock out the power supply isolating device and verify the absence of voltage.

1. Disconnect the flange connections and look for contamination inside the block.
2. If necessary, have the block cleaned by an authorised KAESER Service Technician.

10.12 Documenting maintenance and service work

Machine number:

➢ Enter any maintenance and service work carried out in the list.

Date	Maintenance task carried out	Operating hours	Signature

Tab. 58 Logged maintenance tasks

11 Spares, Operating Materials, Service

11.1 Note the nameplate

The nameplate contains all information to identify your machine. This information is essential to us in order to provide you with optimal service.

➢ Please give the information from the nameplate with every enquiry and order for spares.

11.2 Ordering spares and operating fluids/materials

KAESER spares and operating fluids/materials have the same characteristics as the originals. They are specifically selected for use in KAESER machines.

WARNING
There is risk of personal injury or damage to the machine resulting from the use of unsuitable spares or operating fluids/materials.
Non-Kaeser parts and operating fluids/materials may be unsuitable or of poor quality and can damage the machine or impair its proper function.
Personal injury may result from damage.

➢ Use only original KAESER parts and operating fluids/materials.

➢ Have an authorised KAESER Service Technician carry out regular maintenance.

Machine

Name	Quantity	Number
Air filter	1	1250
Generic filter gasket	1	1251
Sealing ring	1	1252
Drive belts (set)	1	1800

Tab. 59 Consumable parts

Lubricating oils

Name	Quantity [l]	Material number
OMEGA FLUID-SB 220	1	831057.00010
	5	831057.0
OMEGA FLUID-SF 220	1	892702.00020
	5	892702.00010

Tab. 60 Lubricating oil overview

11.3 Spares for service and repair

Use this parts list to plan your material requirement according to operating conditions and to order the required spare parts.



➢ Make sure that any service or repair tasks not described in this manual are carried out by an authorised KAESER Service Technician.

11.3.1 BB 52 C pr

Machine without sound enclosure

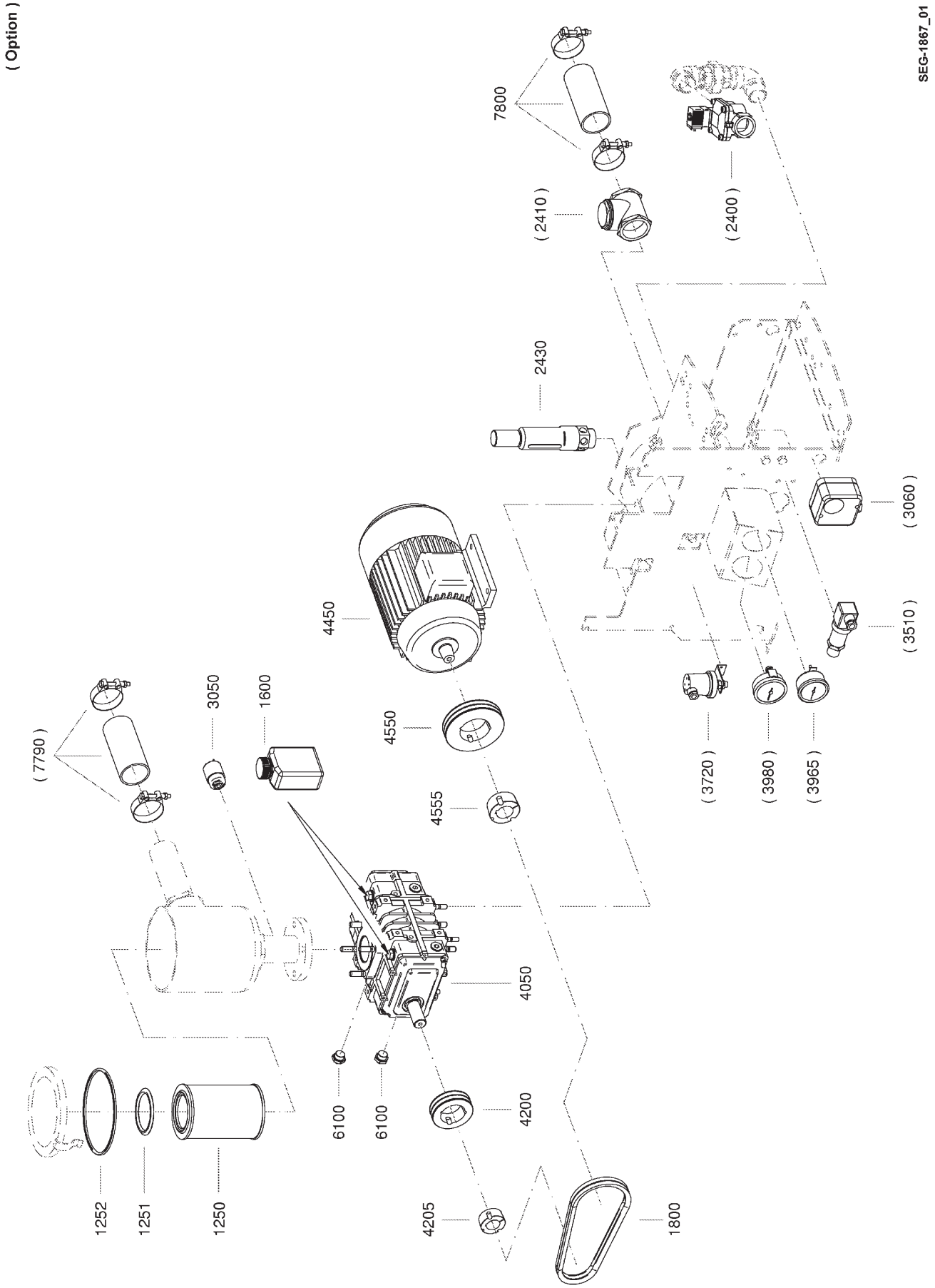
(Option)
SEG-1867_01
7800
(2410)
(2400)
2430
(3060)
(3510)
4450
4550
4555
3050
1600
(7790)
(3720)
(3980)
(3965)
4050
6100
6100
4200
4205
1800
1252
1251
1250

Legende	KAESER
BB 52 C	SEL-1715_01D

Pos.Nr.	Bezeichnung	Option
1250	Luftfilter	
1251	Luftfilterdichtung	
1252	Deckeldichtung	
1600	OMEGA FLUID *)	
1800	Antriebsriemen	
2400	Anfahrregelventil	X
2402	Revisionssatz Anfahrregelventil	
2410	Rückschlagventil	X
2412	Revisionssatz Rückschlagventil	
2430	Überdruckbegrenzungsventil	
3050	Wartungsanzeige	
3060	Differenzdruckschalter	X
3510	Drucksensor	X
3720	Druckschalter	X
3965	Temperaturanzeige	X
3980	Druckanzeige	X
4050	Gebläseblock OMEGA	
4052	Wellendichtung	
4200	Riemenscheibe	
4205	Taperbuchse	
4450	Motor	
4451	Motorlagersatz	
4550	Riemenscheibe	
4555	Taperbuchse	
6100	Ölstandsanzeige	
7790	Schlauchleitung	X
7800	Schlauchleitung	

Bitte geben Sie bei der Ersatzteilbestellung Material- und Serialnummer der Anlage sowie Positionsnummer und Bezeichnung der Ersatzteile an.

Vor und bei Ausführung aller Arbeiten sind die Sicherheits- und Servicehinweise in der Betriebsanleitung der Maschine zu beachten!

Wartungsintervalle bei günstigen Umgebungs- und Betriebsbedingungen wie kühle bis mäßige Umgebungstemperatur, niedrige Luftfeuchtigkeit und saubere Ansaugluft.

Abhängig von den Umgebungs- und Betriebsbedingungen können sich die Wartungsintervalle verkürzen.

*) siehe Betriebsanleitung

Option H12 Machine with sound enclosure

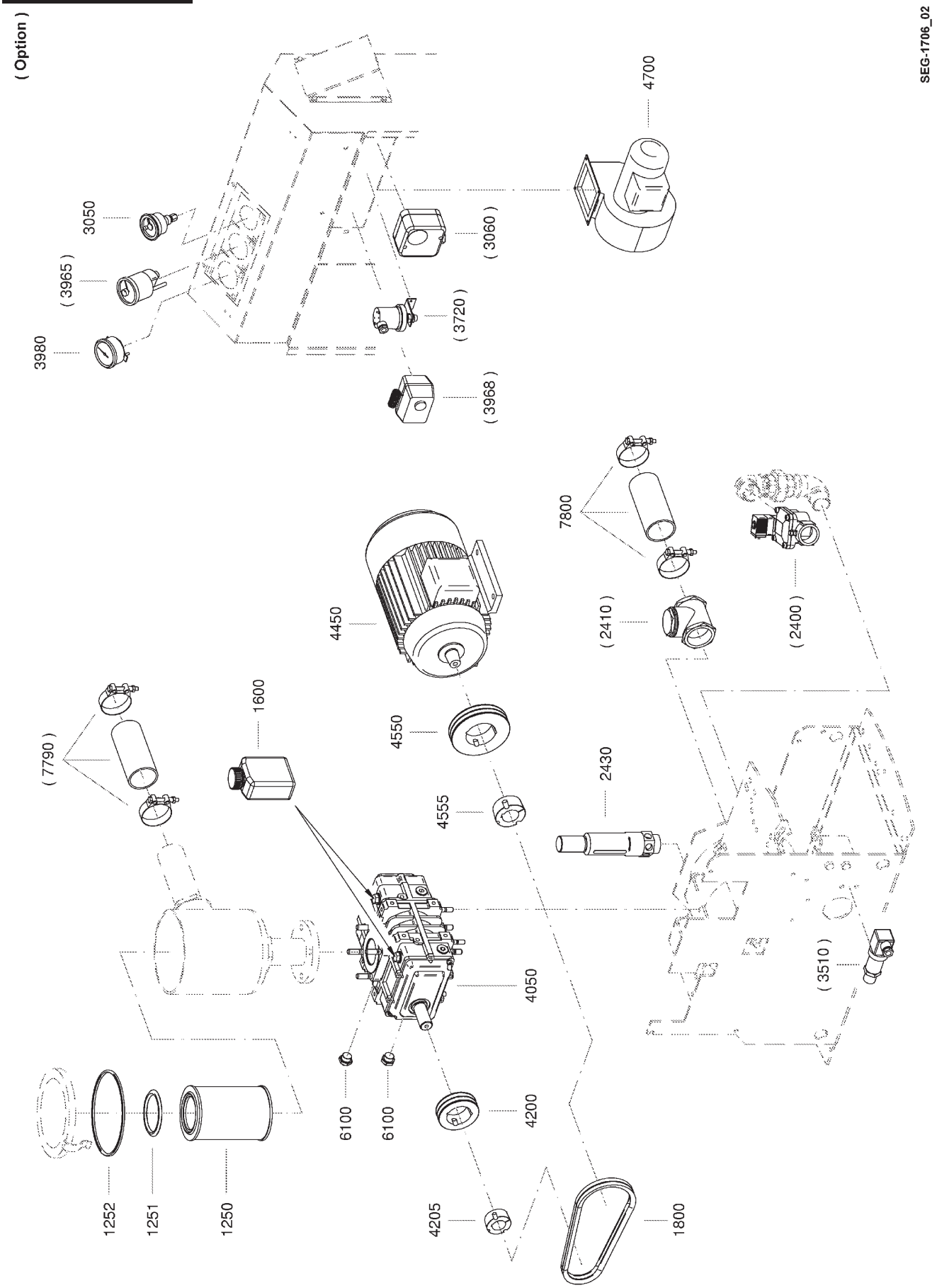
(Option)
SEG-1706_02
4700
3050
(3965)
3980
(3060)
(3720)
(3968)
7800
(2410)
(2400)
4450
1600
(7790)
4550
4555
2430
4050
(3510)
6100
6100
4200
4205
1800
1252
1251
1250

Legend	KAESER
BB 52 C	SEL-1635_02E

Item	Name	Option
1250	Air filter	
1251	Air filter seal	
1252	Cover seal	
1600	OMEGA FLUID *)	
1800	Drive belts	
2400	Start control valve	X
2402	Overhaul kit, start control valve	
2410	Check valve	X
2412	Check valve overhaul kit	
2430	Pressure limiting valve	
3050	Maintenance indicator	
3060	Pressure differential switch	X
3510	Pressure transducer	X
3720	Pressure switch	X
3965	Temperature gauge	X
3968	Thermostat	X
3980	Pressure gauge	
4050	OMEGA blower block	
4052	Shaft seal	
4200	Belt pulley	
4205	Tapered bushing	
4450	Motor	
4451	Motor bearing kit	
4550	Belt pulley	
4555	Tapered bushing	
4700	Fan	
6100	Oil level indicator	
7790	Prepared hose	X
7800	Prepared hose	

Please quote the part number and serial number of the machine together with the item number and the description of the part when ordering.

Before and during all work, be sure to read and follow the safety and service instructions in the machine's service manual.

Maintenance intervals under good ambient and operating conditions, such as low to moderate ambient temperature and dry, clean inlet air.

Maintenance intervals may decrease due to ambient and operating conditions.

*) See service manual

11.3.2 BB 69 C pr , BB 89 C pr

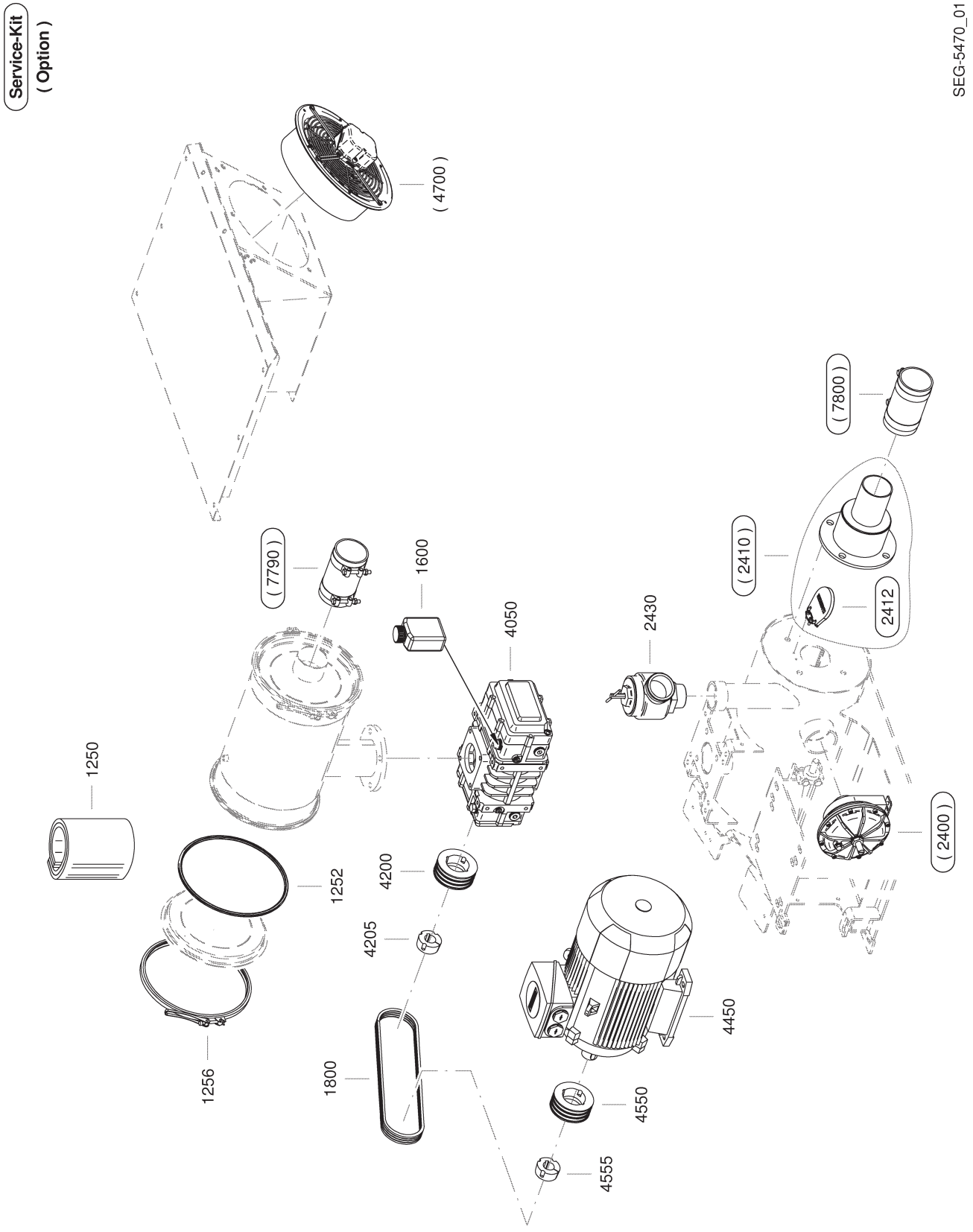
Service-Kit
(Option)
SEG-5470_01
(4700)
(7800)
(7790)
1600
(2410)
4050
2430
2412
1250
(2400)
1252
4200
4205
4450
1800
1256
4550
4555

Legend		KAESER
	BBC.2 pr	SEL-3900_01 E

Item	Description	Option
1250	Air filter insert	
1252	Inlet silencer gasket	
1256	Canopy fastener	
1600	OMEGA FLUID	
1800	Drive belt	
2400	Start control valve	X
2410	Check valve	X
2412	Overhaul kit, check valve	X
2430	Pressure limiting valve	
4050	OMEGA blower block	
4200	Airend pulley	
4205	Tapered bushing, airend	
4450	Drive motor	
4550	Drive motor pulley	
4555	Tapered bushing, drive motor	
4700	Fan unit	X
7790	Compensator, air inlet	X
7800	Compensator, air outlet	X

Please quote the part number and serial number of the machine together with the item number and the description of the part when ordering.

Before and during all work, be sure to read and follow the safety and service instructions in the machine's service manual!

*) see cooling oil recommendations

11.4 KAESER AIR SERVICE

KAESER AIR SERVICE offers:

- Authorised service technicians with KAESER factory training
- Increased operational reliability ensured by preventive maintenance
- Energy savings achieved by avoidance of pressure losses
- optimum conditions for operation of the compressed air system,
- The security of genuine KAESER spares.
- Increased legal certainty as all regulations are kept to.

➢ It make sense to sign a KAESER AIR SERVICE maintenance agreement.
Your advantage:
lower costs and higher compressed air availability.

11.5 Service Addresses

Addresses of KAESER agents are given at the end of this manual.

11.6 Completing the contamination declaration

Every company (user) is responsible for the health and safety of its employees. This extends to personnel who carry out servicing work at the user or service contractor.

A Declaration of Contamination must be completed and signed whenever maintenance or repair work is to be carried out on the machine.

Shipping the machine

Precondition Correct preparation of the machine for shipment.

1. Drain the lubricating oil.
2. Seal all openings.
3. Remove filter elements.
4. Use appropriate packing.
5. Ship in a suitable container.
6. Attach a copy of the Declaration of Contamination to the **outside** of the packing.

Further information A Declaration of Contamination form is provided in chapter 13.6.

12 Decommissioning, Storage and Transport

12.1 De-commissioning

De-commissioning is necessary, for example, under the following circumstances:

- The machine is (temporarily) not needed
- The machine is to be moved to another location.
- The machine is to be scrapped.

Temporary de-commissioning

Precondition The machine can be started at regular intervals.

➢ Run the machine once a week for at least 30 minutes at operating temperature to ensure corrosion protection.

Long-term de-commissioning

Precondition The power supply isolator is switched off (all poles),
the device is locked off,
the absence of voltage has been verified.
The machine is fully vented.

1. Allow the machine to completely cool down.
2. Disconnect all air and electrical connections.
3. Relax the drive belt.
4. Spray the machine inside and out with a preservative to prevent corrosion.
5. Store the machine in a dry, frost-proof room.

Further information Details of preservatives are found in chapter 12.4.

12.2 Packing

A wooden crate is required for overland transport to protect the machine from mechanical damage.
Other measures must be taken for the transport of machines by sea or air. Please contact KAESER SERVICE for more information.

Material Protective plastic sheeting
Wooden transport crate

Precondition The machine is decommissioned.
The machine is dry and cooled down.

1. Wrap the machine fully in plastic sheeting.
2. Protect the machine in a wooden crate against mechanical damages.

12.3 Transport

12.3.1 Safety

Mass and centre of gravity determine the most suitable method of transportation. Both are specified in the dimensional drawings in chapter 13.2.

Precondition Transport only using a forklift truck or lifting gear and only by personnel trained in the safe transportation of loads.

➢ Make sure the danger area is clear of personnel.

12.3.2 Option H12
BB 69 C pr , BB 89 C pr with sound enclosure

➢ Install the transport safety devices (see chapter 6.8).

12.3.3 Transport with a forklift truck

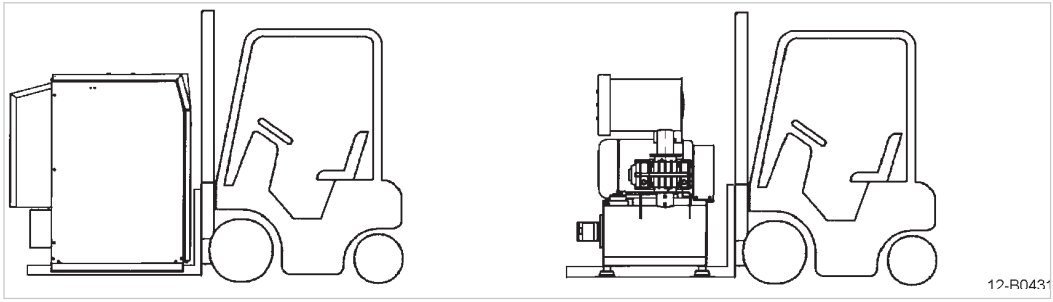

Fig. 37 Transporting with a forklift truck

➢ Drive the forks completely under the machine or pallet and lift carefully.

12.4 Storage

Moisture can lead to corrosion, particularly on the surfaces of the blower block. The storage temperature must not fall below –30 °C.

Advice can be obtained from KAESER on storage and re-commissioning.

CAUTION
Rotating piston!
Danger of squashing or severing of limbs.
➢ Do not reach into the interior of the block.

NOTICE
Moisture and frost can damage the machine!
➢ Prevent ingress of moisture and formation of condensation.

➢ Store the machine in a dry, frost-proof room.

- ➢ Protect the flange connections, drive shaft and delivery space of the block by spraying with appropriate an conservation oil, e.g., ANTICORIT OHK.
- ➢ Seal off the inlet and discharge ports to prevent entry of dirt.
- ➢ Each month, manually turn the motor shaft by about 30°.
- ➢ Change the lubricating oil annually.

After lengthy storage

- ➢ Remove the preservative from the flow chamber with cleaning solvent.
- ➢ Observe the procedures for assembly and initial start-up.
- ➢ Change the lubricating oil.
- ➢ Re-grease the drive motor bearings if they are not of the permanently greased type.
- ➢ Check the condition and tension of the drive belts.

12.5 Disposal

When disposing of a machine, drain out all liquids and remove old filters.

Precondition The machine is decommissioned.

1. Completely drain the oil from the machine.
2. Remove old filters.
3. Hand the machine over to an authorised disposal expert.



- ➢ Components contaminated with oil must be disposed of in accordance with local environment protection regulations.

13 Annex

13.1 Pipeline and instrument flow diagram (P&I diagram)

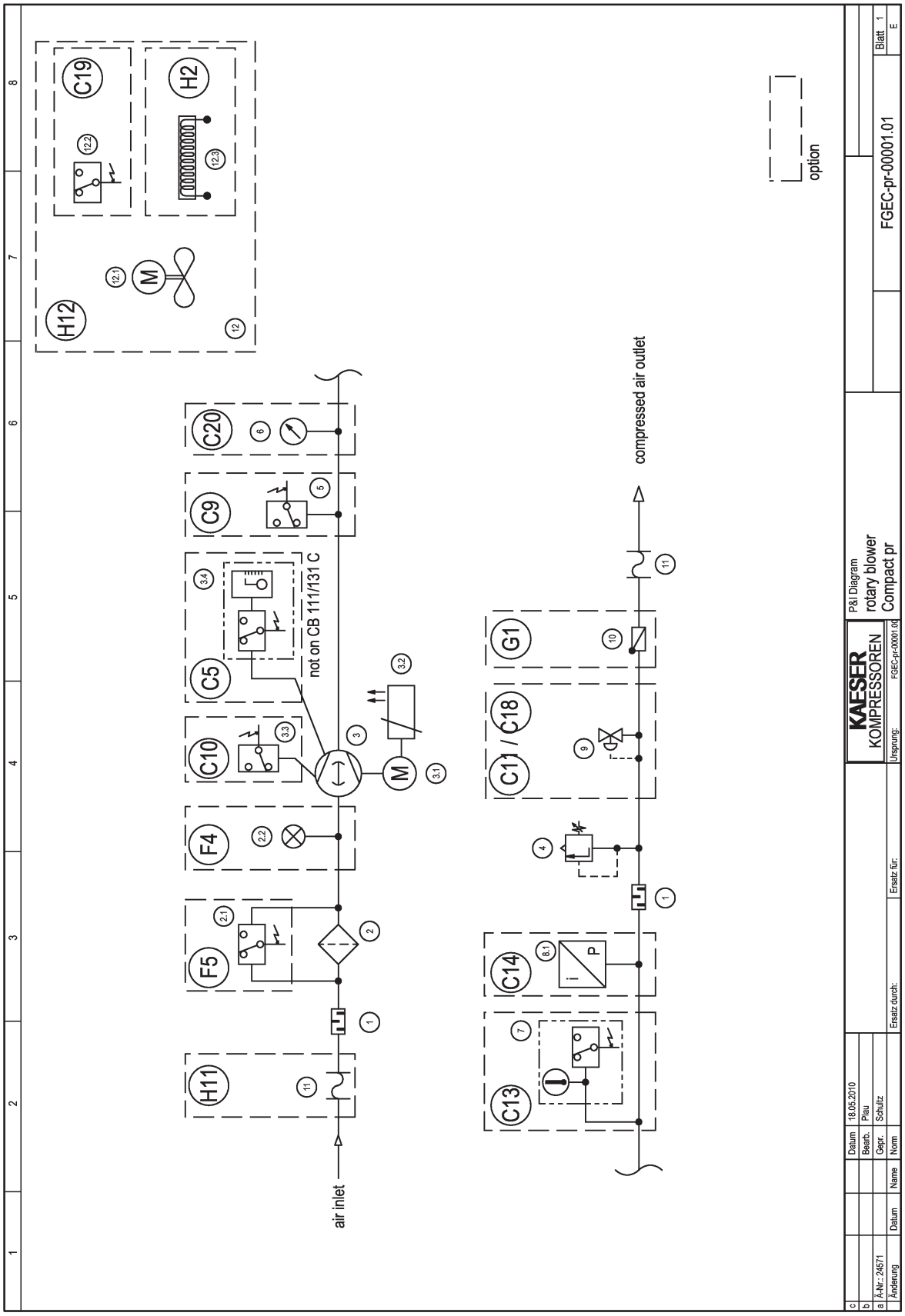
option
compressed air outlet
air inlet
not on CB 111/131 C
H12
C19
H2
C20
C9
C5
C10
F4
F5
H11
C14
C13
C11 / C18
G1
KAESER KOMPRESSOREN
P&I Diagram
rotary blower
Compact pr
FGEC-pr-00001.01
Blatt 1
E

1	silencer
2	air filter
2.1	differential pressure switch
2.2	filter maintenance indicator
3	blower block
3.1	drive motor
3.2	PTC-sensor
3.3	speed monitor
3.4	oil-level sensor, switching
4	blow-off valve
5	pressure switch
6	pressure gauge
7	temperature gauge switch + indication
8.1	pressure transducer - system pressure
9	unloaded start valve or unloaded start valve with regulating valve
10	check plate
11	compensator
12	sound enclosure
12.1	fan motor
12.2	thermostat
12.3	auxiliary heating

option

C5	oil level monitor (not on CB 111/131 C)
C9	high pressure warning message
C10	speed monitor
C11	unloaded starting
C13	temperature gauge switch
C14	pressure transducer
C18	unloaded starting with regulating valve
C19	sound enclosure thermostat
C20	pressure indicator
F4	filter maintenance indicator
F5	filter pressure differential monitoring
G1	check plate
H2	auxiliary heating
H11	piped inlet
H12	sound enclosure

c				Datum	18.05.2010		KAESER KOMPRESSOREN	P&I Diagram	
b				Bearb.	Plau			rotary blower	
a				Gepr.	Schultz			Compact pr	
	Änderung	Datum	Name	Norm		Ersatz durch:	Ersatz für:	Ursprung: FGEC-pr-00001.00	FGEC-pr-00001.01	Blatt 2 E

13.2 Dimensional drawing

13.2.1 BB 52 C pr

If the texts of the dimensional drawing are not provided in the chosen language, a translation can be found here.

Text position Dimensional drawing	Legend
1	Translation of texts in the installation/operating manual
7	Option
17	Type
18	Motor [kW]
19	Weight [kg] **
20	*Centre of gravity in approximate dimensions!
21	** Guide value, actual weight can vary according to manufacturer
22	Option code
24	Pressure switch
26	Unloaded start valve
27	Temperature gauge switch
28	Pressure transducer
29	Thermostat
30	Pressure gauge
31	Filter maintenance indicator
32	Filter pressure differential switch
33	Check valve
34	Auxiliary heating
35	Outdoor installation
36	Sound enclosure
37	Detail A *or* Detail B (optional)
38	Foundation drawing
40	for attaching to the floor (Detail A *or* Detail B)
47	Intake air duct
48	Intake air inlet
49	Piped inlet
59	Cooling air outlet
61	Cable bushings 2x Wire protecting sleeve Ø 40 mm 4x Wire protecting sleeve Ø 20 mm
66	Cooling air inlet
67	Start-up pressure regulating valve

Tab. 61 Legend, dimensional drawing BB 52 C pr

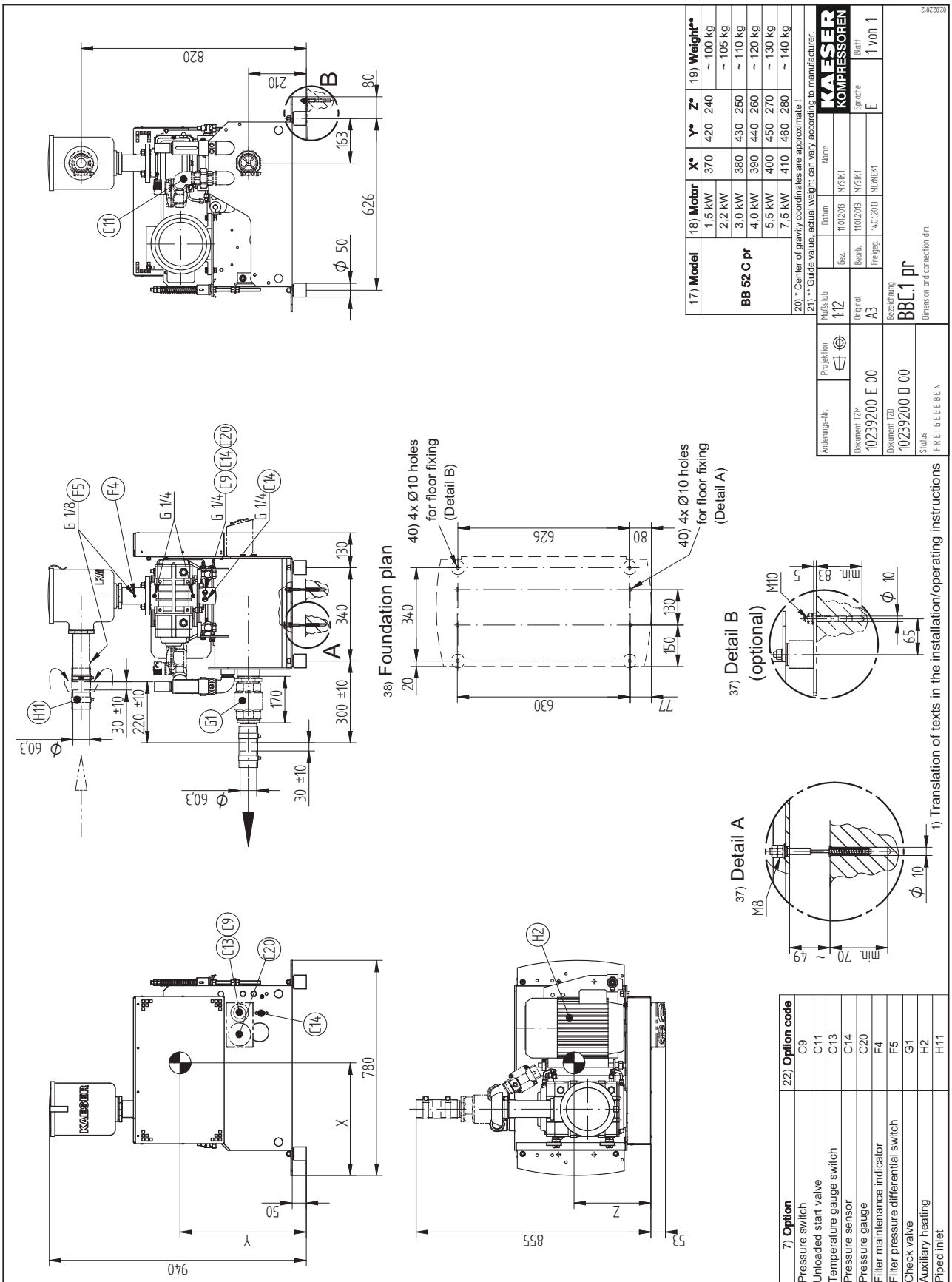

17) Model	18) Motor	X*	Y*	Z*	19) Weight**
BB 52 C pr	1.5 kW	370	420	240	~ 100 kg
	2.2 kW				~ 105 kg
	3.0 kW	380	430	250	~ 110 kg
	4.0 kW	390	440	260	~ 120 kg
	5.5 kW	400	450	270	~ 130 kg
	7.5 kW	410	460	280	~ 140 kg

20) * Center of gravity coordinates are approximate !
21) ** Guide value, actual weight can vary according to manufacturer.

Änderungs-Nr:	Projektion	Maßstab 1:12	Datum	Name
		gez.	11.01.2013	MYSIK1
Dokument TZM 10239200 E 00		Original A3	Bearb. 11.01.2013	MYSIK1
Dokument TZD 10239200 D 00		Bezeichnung BBC.1 pr	Freigag. 14.01.2013	MLYNEK1
Status FREIGEGEBEN		Dimension and connection dim.		

KAESER KOMPRESSOREN — Sprache E — Blatt 1 von 1

7) Option	22) Option code
24) Pressure switch	C9
26) Unloaded start valve	C11
27) Temperature gauge switch	C13
28) Pressure sensor	C14
30) Pressure gauge	C20
31) Filter maintenance indicator	F4
32) Filter pressure differential switch	F5
33) Check valve	G1
34) Auxiliary heating	H2
49) Piped inlet	H11

Die Zeichnung bleibt unser ausschließliches Eigentum. Sie darf nur zu dem vereinbarten Zweck verwendet werden. Kopien oder sonstige Vervielfältigungen dürfen nur mit unserer Zustimmung hergestellt werden. Eine Verwendung unter Verletzung unserer Schutzrechte gibt uns das Recht, Schadenersatz zu verlangen.

Drawings remain our exclusive property. They are entrusted only for the agreed purpose. Copies or any other reproduction including storage, treatment and dissemination by use of electronic systems must not be made for any other than the agreed purpose without our prior consent. They may be given to or made available to third parties.

Entwurfsurheberrechtlich geschützt. Vervielfältigungen dürfen nur mit unserer Zustimmung hergestellt werden. Eine Verwendung unter Verletzung unserer Schutzrechte gibt uns das Recht, Schadenersatz zu verlangen.

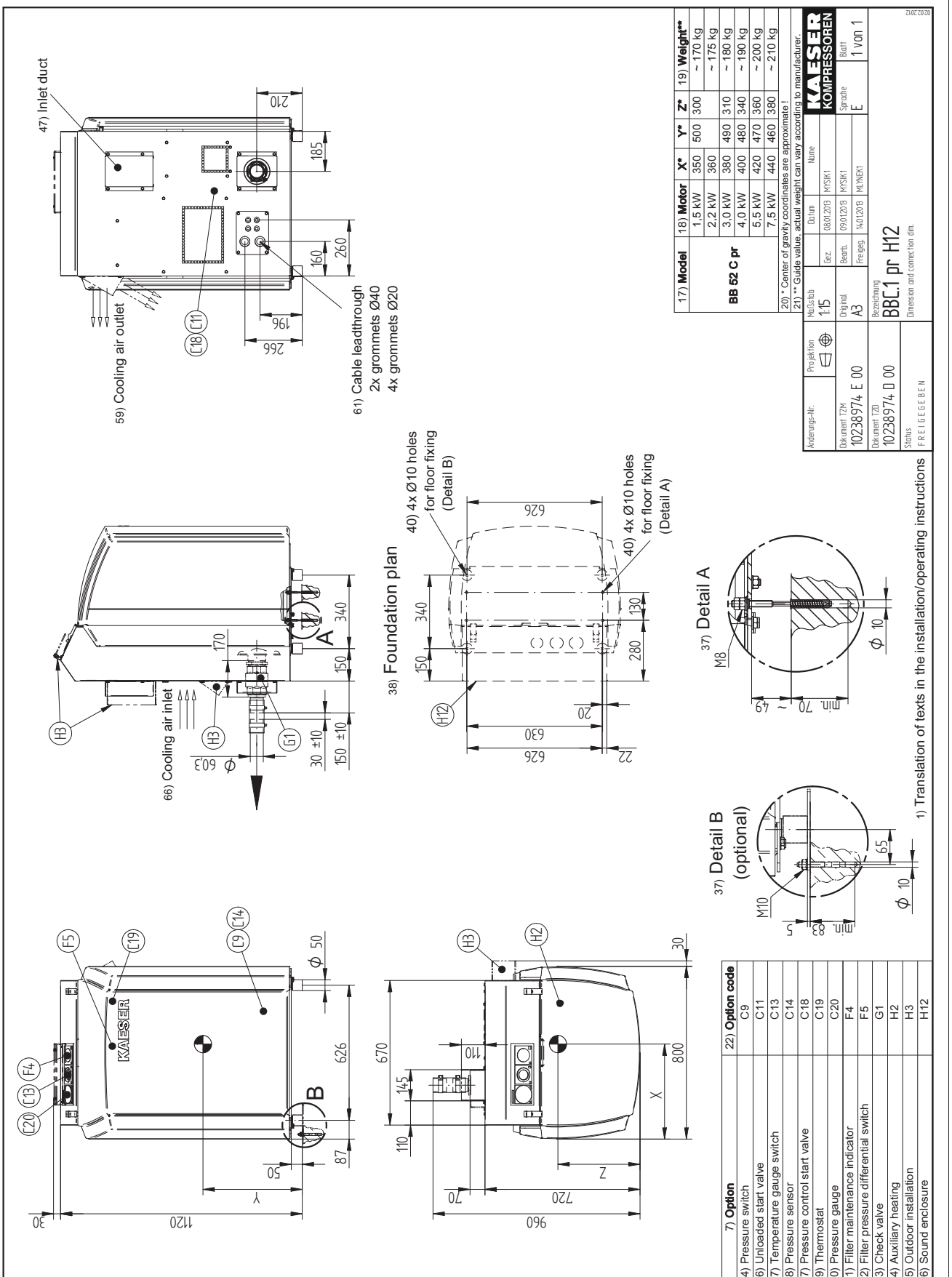

17) Model	18) Motor	X*	Y*	Z*	19) Weight**
BB 52 C pr	1,5 kW	350	500	300	~ 170 kg
	2,2 kW	360			~ 175 kg
	3,0 kW	380	490	310	~ 180 kg
	4,0 kW	400	480	340	~ 190 kg
	5,5 kW	420	470	360	~ 200 kg
	7,5 kW	440	460	380	~ 210 kg

20) * Center of gravity coordinates are approximate !
21) ** Guide value, actual weight can vary according to manufacturer.

7) Option	22) Option code
24) Pressure switch	C9
26) Unloaded start valve	C11
27) Temperature gauge switch	C13
28) Pressure sensor	C14
67) Pressure control start valve	C18
29) Thermostat	C19
30) Pressure gauge	C20
31) Filter maintenance indicator	F4
32) Filter pressure differential switch	F5
33) Check valve	G1
34) Auxiliary heating	H2
35) Outdoor installation	H3
36) Sound enclosure	H12

Die Zeichnung bleibt unser ausschließliches Eigentum. Sie wird nur zu dem vereinbarten Zweck anvertraut und darf zu keinem anderen Zweck verwendet werden. Kopien oder sonstige Vervielfältigungen einschließlich Speicherung, Verarbeitung oder Verbreitung unter Verwendung elektronischer Systeme dürfen nur zu dem vereinbarten Zweck angefertigt werden. Weder Original noch Vervielfältigungen dürfen Dritten ausgehändigt oder in sonstiger Weise zugänglich gemacht werden.
Drawings remain our exclusive property. They are entrusted only for the agreed purpose. Copies or any other reproduction, including storage, treatment and dissemination by use of electronic systems must not be made for any other than the agreed purpose. Neither originals nor reproductions may be given to or made available to third parties.
Entwicklungsbedingte Änderungen vorbehalten. Zeichnung darf nur über CAD geändert werden.

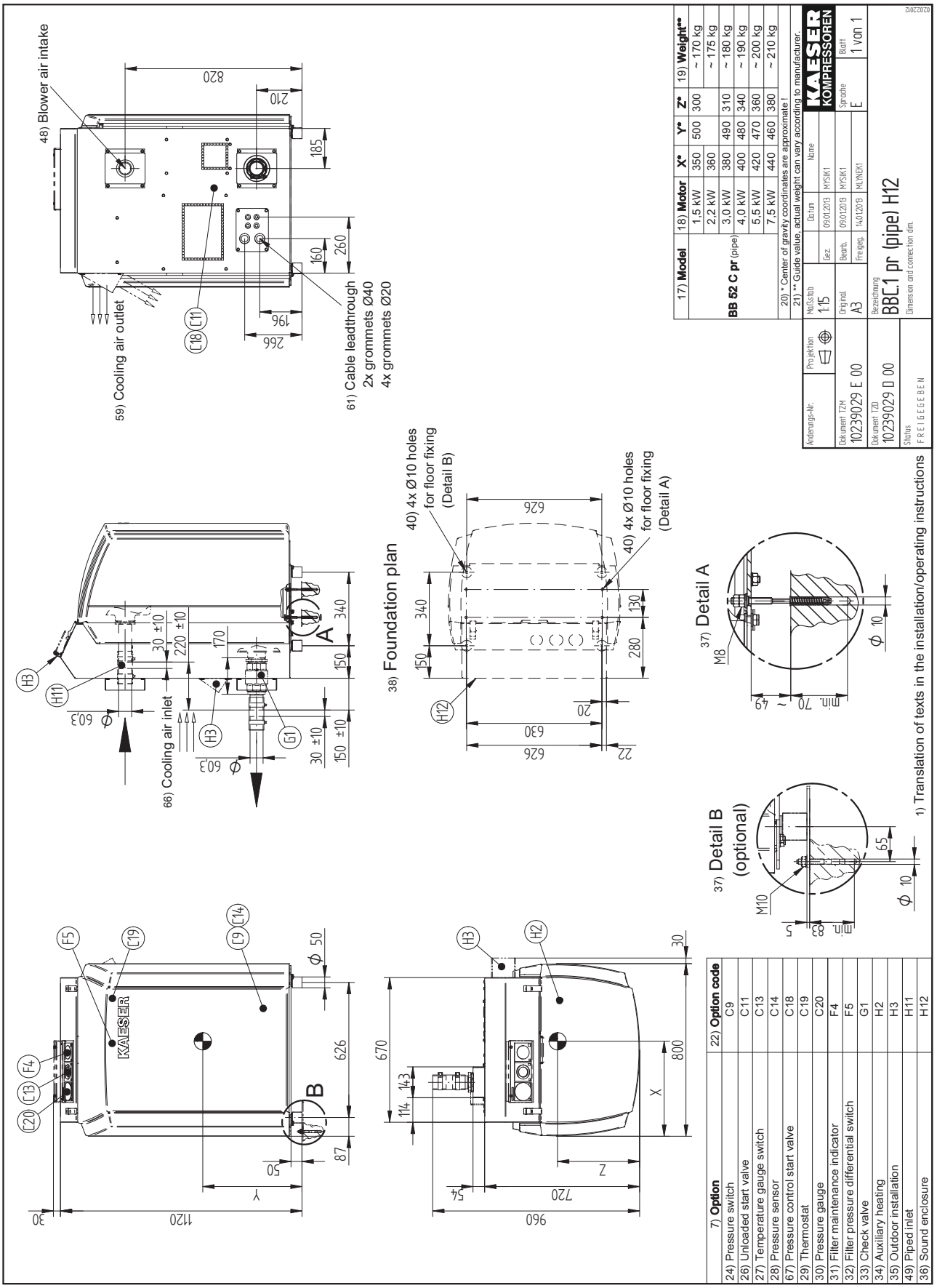

17) Model	18) Motor	X*	Y*	Z*	19) Weight**
BB 52 C pr (pipe)	1.5 kW	350	500	300	~ 170 kg
	2.2 kW	360			~ 175 kg
	3.0 kW	380	490	310	~ 180 kg
	4.0 kW	400	480	340	~ 190 kg
	5.5 kW	420	470	360	~ 200 kg
	7.5 kW	440	460	380	~ 210 kg

20) * Center of gravity coordinates are approximate !
21) ** Guide value, actual weight can vary according to manufacturer.

Änderungs-Nr:	Projektion	Maßstab	Datum	Name
		1:15	Gez. 09.01.2013	MYSIK1
Dokument TZM		Original	Bearb. 09.01.2013	MYSIK1
10239029 E 00		A3	Freigag. 14.01.2013	MUTNEK1
Dokument TZD		Bezeichnung		
10239029 D 00		BBC 1 pr (pipe) H12		
Status		Dimension and connection dim.		
FREIGEGEBEN				

KAESER KOMPRESSOREN
Sprache E
Blatt 1 von 1

7) Option	22) Option code
24) Pressure switch	C9
26) Unloaded start valve	C11
27) Temperature gauge switch	C13
28) Pressure sensor	C14
67) Pressure control start valve	C18
29) Thermostat	C19
30) Pressure gauge	C20
31) Filter maintenance indicator	F4
32) Filter pressure differential switch	F5
33) Check valve	G1
34) Auxiliary heating	H2
35) Outdoor installation	H3
49) Piped inlet	H11
36) Sound enclosure	H12

Die Zeichnung bleibt unser ausschließliches Eigentum. Sie wird nur zu dem innerbetrieblichen Zweck anvertraut und darf zu keinem anderen Zweck verwertet werden. Kopien oder sonstige vervielfältigungen verschiedlich Verbreitung oder Verwendung elektronischer Systeme dürfen nur zu dem vereinbarten Zweck angefertigt werden. Weder Original noch vervielfältigungen dürfen Dritten ausgehändigt oder in sonstiger Weise zugänglich gemacht werden.

Drawings remain our exclusive property. They are entrusted only for the agreed purpose. Copies or any other reproduction including storage, treatment and dissemination by use of electronic systems must not be made for any other than the agreed purpose (whether originals nor reproductions may be given to or made available to third parties.

Einhaltungsbedingte Änderungen vorbehalten. Zeichnung darf nur über CAD gendert werden.

13.2.2 BB 69 C pr , BB 89 C pr

If the texts of the dimensional drawing are not provided in the chosen language, a translation can be found here.

Text position Dimensional drawing	Legend
1	Translation of texts in the installation/operating manual
7	Option
17	Type
18	Motor [kW]
19	Weight [kg] **
20	*Centre of gravity in approximate dimensions!
21	** Guide value, actual weight can vary according to manufacturer
22	Option code
24	Pressure switch
25	Speed monitor
26	Unloaded start valve
27	Temperature gauge switch
28	Pressure transducer
29	Thermostat
30	Pressure gauge
31	Filter maintenance indicator
32	Filter pressure differential switch
33	Check valve
34	Auxiliary heating
35	Outdoor installation
36	Sound enclosure
37	Detail A *or* Detail B (optional)
38	Foundation drawing
40	for attaching to the floor (Detail A *or* Detail B)
47	Intake air duct
48	Intake air inlet
49	Piped inlet
59	Cooling air outlet
60	Cooling air duct
61	Cable bushings 2x Wire protecting sleeve Ø 40 mm 4x Wire protecting sleeve Ø 20 mm
67	Start-up pressure regulating valve
81	***Dimensions without check valve (optional)

Text position Dimensional drawing	Legend
84	Remove the transport securing devices after the installation.

Tab. 62 Legend, dimensional drawing BB 69 C pr , BB 89 C pr

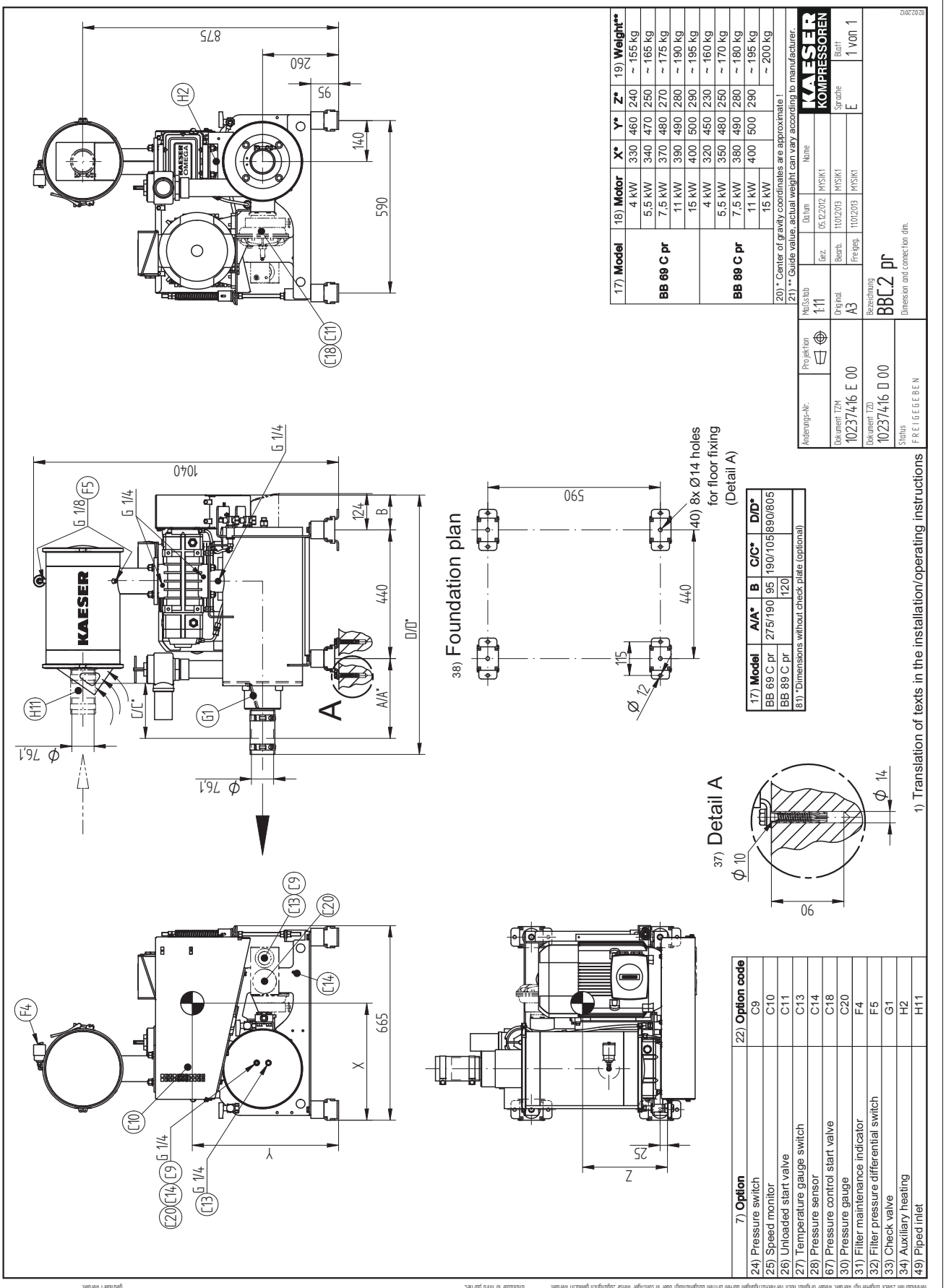

17) Model	A/A*	B	C/C*	D/D*
BB 69 C pr	275/190	95	190/105	890/805
BB 89 C pr		120		

81) *Dimensions without check plate (optional)

17) Model	18) Motor	X*	Y*	Z*	19) Weight**
BB 69 C pr	4 kW	330	460	240	~ 155 kg
	5.5 kW	340	470	250	~ 165 kg
	7.5 kW	370	480	270	~ 175 kg
	11 kW	390	490	280	~ 190 kg
	15 kW	400	500	290	~ 195 kg
BB 89 C pr	4 kW	320	450	230	~ 160 kg
	5.5 kW	350	480	250	~ 170 kg
	7.5 kW	380	490	280	~ 180 kg
	11 kW	400	500	290	~ 195 kg
	15 kW				~ 200 kg

20) * Center of gravity coordinates are approximate !
21) ** Guide value, actual weight can vary according to manufacturer.

7) Option	22) Option code
24) Pressure switch	C9
25) Speed monitor	C10
26) Unloaded start valve	C11
27) Temperature gauge switch	C13
28) Pressure sensor	C14
67) Pressure control start valve	C18
30) Pressure gauge	C20
31) Filter maintenance indicator	F4
32) Filter pressure differential switch	F5
33) Check valve	G1
34) Auxiliary heating	H2
49) Piped inlet	H11

Änderungs-Nr:	Projektion	Maßstab	Datum	Name	KAESER KOMPRESSOREN
		1:11	Gez.	05.12.2012	MYSIK1
Dokument TZM		Original	Bearb.	11012013	MYSIK1
102374 16 E 00		A3	Freigeg.	11012013	MYSIK1
Dokument TZB		Bezeichnung			
102374 16 D 00		BBC 2 pr			
Status		Dimension and connection dim.			
FREIGEGEBEN					

Sprache: E
Blatt: 1 von 1

02.02.2012

1) Translation of texts in the installation/operating instructions

Die Zeichnung bleibt unser ausschließliches Eigentum. Sie wird nur zu dem vereinbarten Zweck anvertraut und darf zu keinem anderen Zweck vervielfältigen werden. Kopien oder sonstige Vervielfältigungen anderweitig Verbreitung oder Verbreitung unter Verwendung elektronischer Systeme dürfen nur zu dem vereinbarten Zweck angefertigt werden. Dritten zugänglich gemacht werden.

Drawings remain our exclusive property. They are entrusted only for the agreed purpose. Copies or any other reproduction, including storage, treatment and dissemination by use of electronic systems must not be made for any other than the agreed purpose. Neither originals nor reproductions may be given to or made available to third parties.

Einfach Kopien oder Vervielfältigungen anderweitig Verbreitung oder Verbreitung unter Verwendung elektronischer Systeme dürfen nur zu dem vereinbarten Zweck angefertigt werden. Dritten zugänglich gemacht werden.

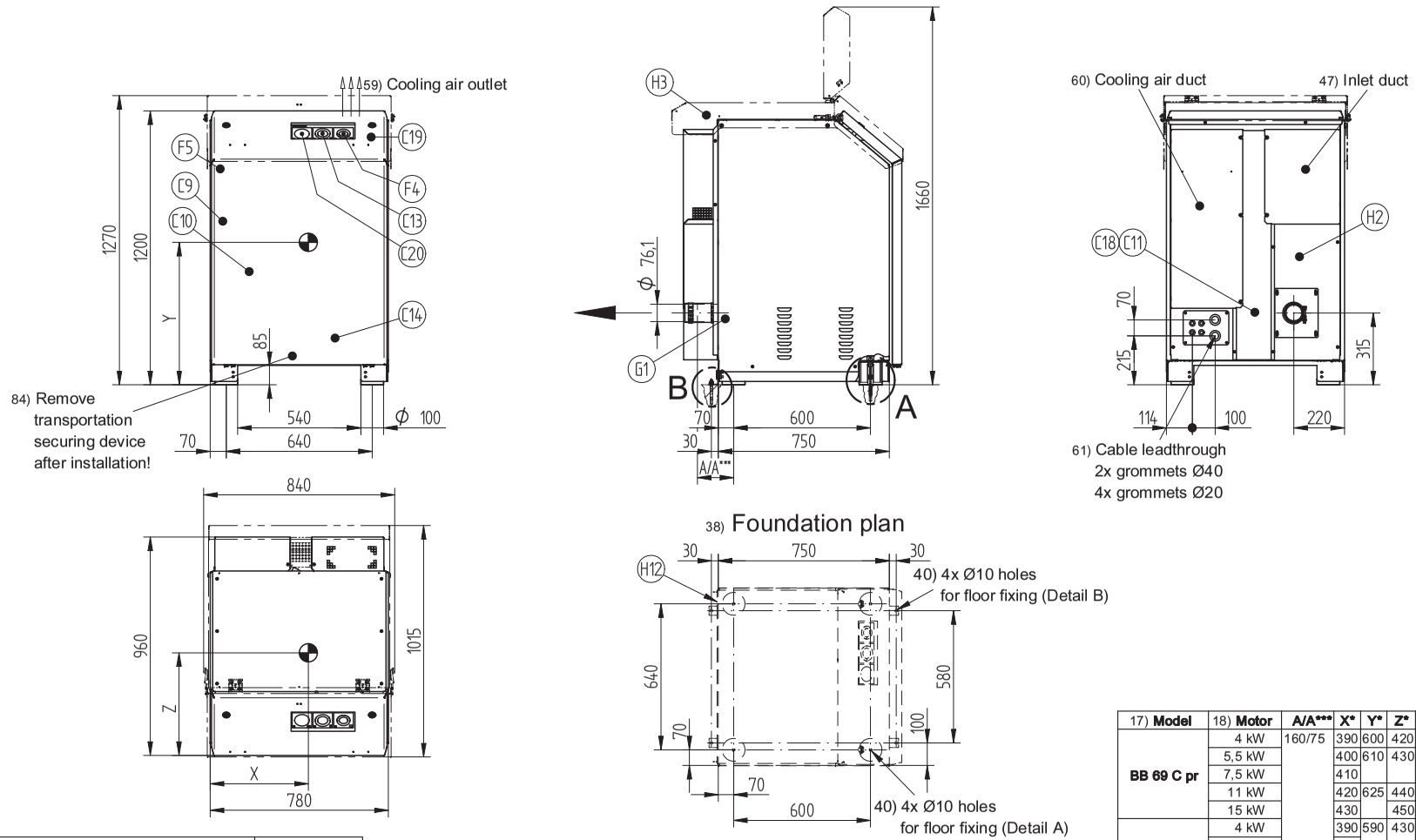

7) Option	22) Option code
24) Pressure switch	C9
25) Speed monitor	C10
26) Unloaded start valve	C11
27) Temperature gauge switch	C13
28) Pressure sensor	C14
67) Pressure control start valve	C18
29) Thermostat	C19
30) Pressure gauge	C20
31) Filter maintenance indicator	F4
32) Filter pressure differential switch	F5
33) Check valve	G1
34) Auxiliary heating	H2
35) Outdoor installation	H3
36) Sound enclosure	H12

17) Model	18) Motor	A/A***	X*	Y*	Z*	19) Weight**
BB 69 C pr	4 kW	160/75	390	600	420	~ 285 kg
	5,5 kW		400	610	430	~ 295 kg
	7,5 kW		410			~ 305 kg
	11 kW		420	625	440	~ 320 kg
	15 kW		430		450	~ 325 kg
BB 89 C pr	4 kW		390	590	430	~ 290 kg
	5,5 kW		400			~ 300 kg
	7,5 kW		410	600	440	~ 310 kg
	11 kW		430	625	450	~ 325 kg
	15 kW					~ 330 kg

20) * Center of gravity coordinates are approximate !
21) ** Guide value, actual weight can vary according to manufacturer.
81) ***Dimensions without check plate (optional)

1) Translation of texts in the installation/operating instructions

Änderungs-Nr.	Projektion	Maßstab 1:17		Datum	Name	KAESER KOMPRESSOREN
			Gez.	10.12.2012	MYSIK1	
Dokument TZM 10237725 E 00		Original A3	Bearb.	11.12.2012	MYSIK1	Sprache E / Blatt 1 von 1
			Freigeg.	11.12.2012	MYSIK1	
Dokument TZD 10237725 D 00		Bezeichnung BBC.2 pr H12 Dimension and connection dim.				
Status FREIGEGEBEN						02.02.2012

Die Zeichnung bleibt unser ausschließliches Eigentum. Sie wird nur zu dem vereinbarten Zweck anvertraut und darf zu keinem anderen Zweck verwendet werden. Kopien oder sonstige Vervielfältigungen einschließlich Speicherung, Verarbeitung oder Verbreitung unter Verwendung elektronischer Systeme dürfen nur zu dem vereinbarten Zweck angefertigt werden. Weder Original noch Vervielfältigungen dürfen Dritten ausgehändigt oder in sonstiger Weise zugänglich gemacht werden.

Drawings remain our exclusive property. They are entrusted only for the agreed purpose. Copies or any other reproduction, including storage, treatment and dissemination by use of electronic systems must not be made for any other than the agreed purpose. Neither originals nor reproductions may be given to or made available to third parties.

Entwicklungsbedingte Änderungen vorbehalten. Zeichnung darf nur über CAD geändert werden.

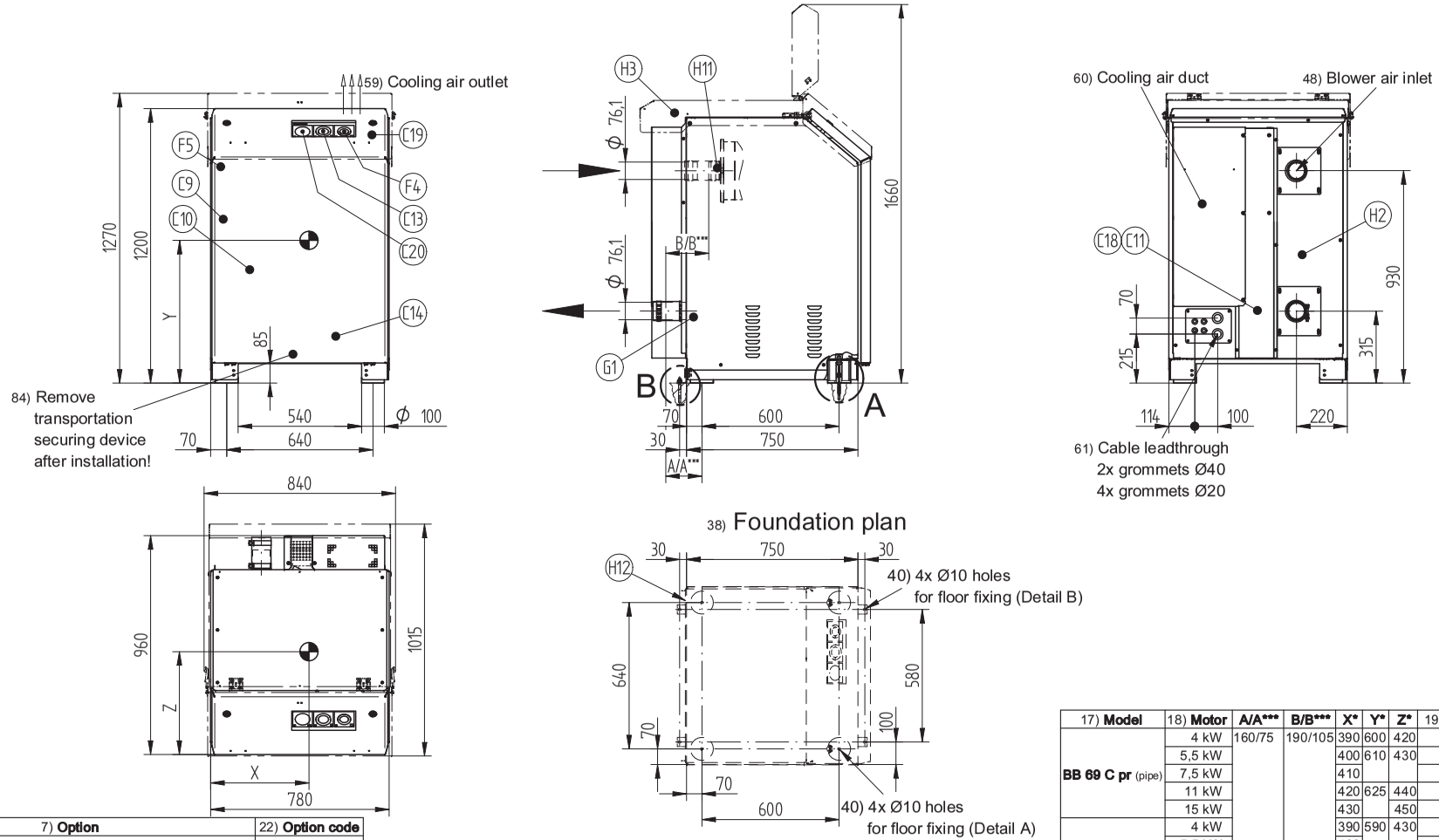

7) Option	22) Option code
24) Pressure switch	C9
25) Speed monitor	C10
26) Unloaded start valve	C11
27) Temperature gauge switch	C13
28) Pressure sensor	C14
67) Pressure control start valve	C18
29) Thermostat	C19
30) Pressure gauge	C20
31) Filter maintenance indicator	F4
32) Filter pressure differential switch	F5
33) Check valve	G1
34) Auxiliary heating	H2
35) Outdoor installation	H3
49) Piped inlet	H11
36) Sound enclosure	H12

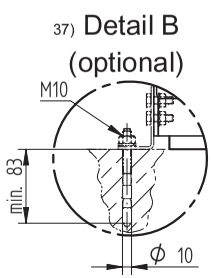

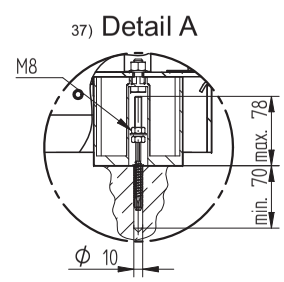

1) Translation of texts in the installation/operating instructions

17) Model	18) Motor	A/A***	B/B***	X*	Y*	Z*	19) Weight**
BB 69 C pr (pipe)	4 kW	160/75	190/105	390	600	420	~ 285 kg
	5,5 kW			400	610	430	~ 295 kg
	7,5 kW			410			~ 305 kg
	11 kW			420	625	440	~ 320 kg
	15 kW			430		450	~ 325 kg
BB 89 C pr (pipe)	4 kW			390	590	430	~ 290 kg
	5,5 kW			400			~ 300 kg
	7,5 kW			410	600	440	~ 310 kg
	11 kW			430	625	450	~ 325 kg
	15 kW						~ 330 kg

20) * Center of gravity coordinates are approximate !
21) ** Guide value, actual weight can vary according to manufacturer.
81) *** Dimensions without check plate (optional)

Änderungs-Nr.	Projektion	Maßstab		Datum	Name	KAESER KOMPRESSOREN
		1:17	Gez.	10.12.2012	MYSIK1	
Dokument TZM 10237742 E 00		Original A3	Bearb.	11.12.2012	MYSIK1	Sprache E / Blatt 1 von 1
			Freigeg.	11.12.2012	MYSIK1	
Dokument TZD 10237742 D 00		Bezeichnung BBC.2 pr (pipe) H12				
Status FREIGEGEBEN		Dimension and connection dim.				

02.02.2012

Die Zeichnung bleibt unser ausschließliches Eigentum. Sie wird nur zu dem vereinbarten Zweck anvertraut und darf zu keinem anderen Zweck verwendet werden. Kopien oder sonstige Vervielfältigungen einschließlich Speicherung, Verarbeitung oder Verbreitung unter Verwendung elektronischer Systeme dürfen nur zu dem vereinbarten Zweck angefertigt werden. Weder Original noch Vervielfältigungen dürfen Dritten ausgehändigt oder in sonstiger Weise zugänglich gemacht werden.
Drawings remain our exclusive property. They are entrusted only for the agreed purpose. Copies or any other reproduction, including storage, treatment and dissemination by use of electronic systems must not be made for any other than the agreed purpose. Neither originals nor reproductions may be given to or made available to third parties.
Entwicklungsbedingte Änderungen vorbehalten. Zeichnung darf nur über CAD geändert werden.

13.3 Design diagrams

The diagrams relate to the blower block.

	BB 52 C pr	BB 69 C pr	BB 89 C pr
Blower block diagram	OMEGA 21 PLUS	OMEGA 22 PLUS	OMEGA 23 PLUS

Tab. 63 Blower block diagram (machine layout)

If the texts of the diagrams is not provided in the chosen language, a translation can be found here.

	Diagram legend
A	Over-pressure operation Intake state: air at 1013 mbar and 20 °C
B	Δp [mbar]
C	Blower speed [min^{-1}]
D	Blower shaft power [kW]
E	FAD [m^3/min] (relative to the intake condition)
F	Temperature rise [K]

Tab. 64 Diagram legend

OMEGA 21PLUS

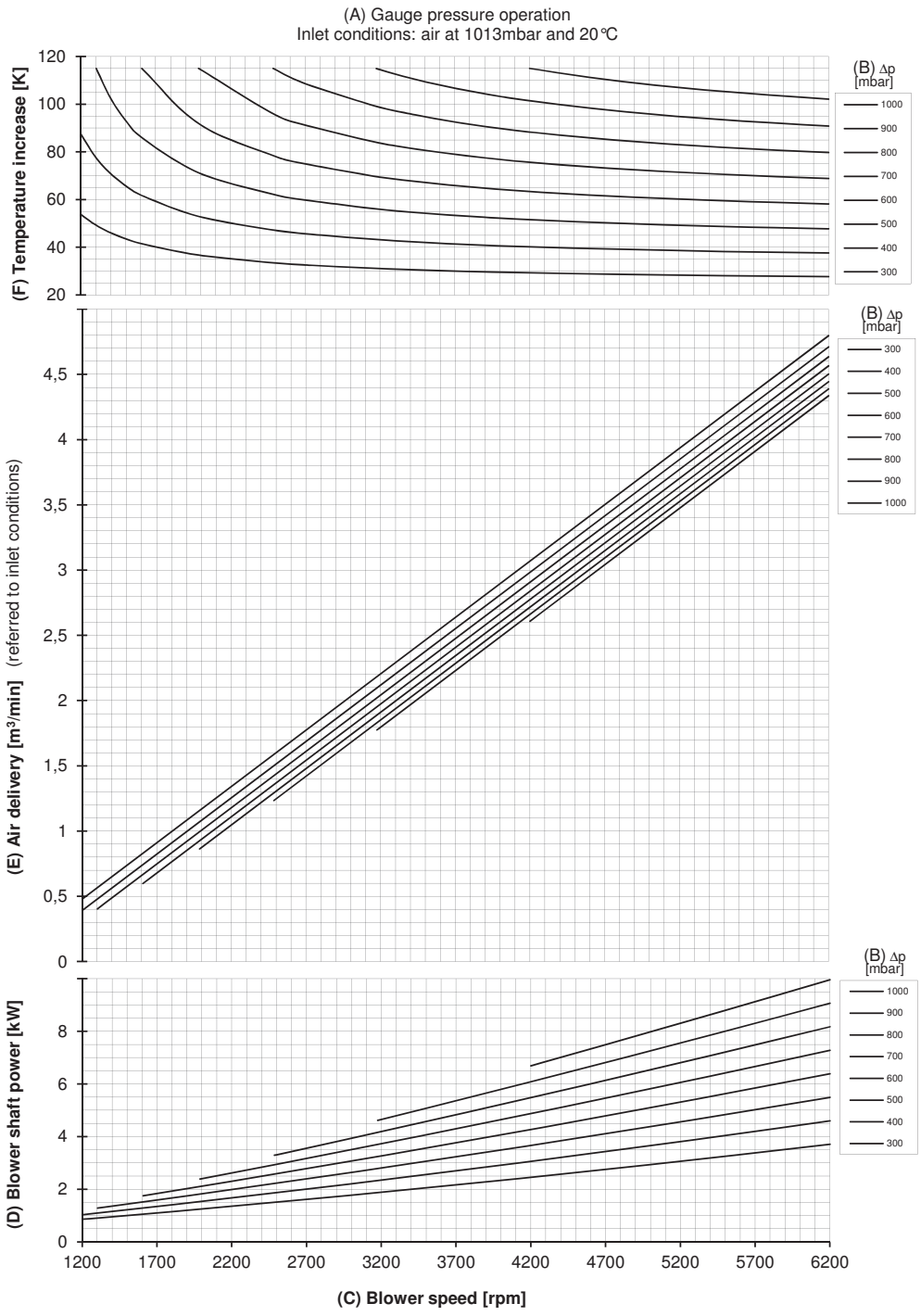

Diagramm O21P

Stand: 01.2010

OMEGA 22PLUS

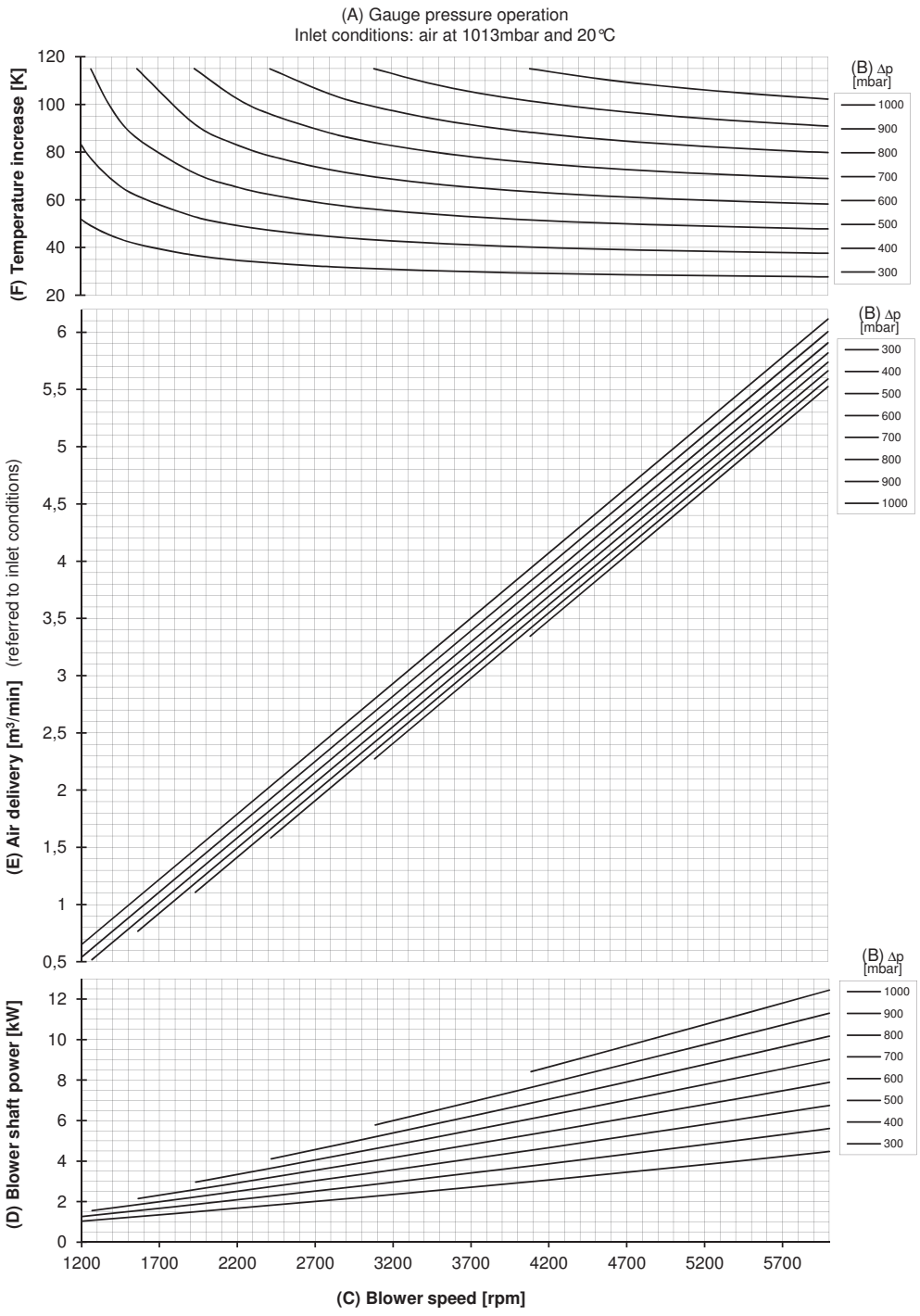

Diagramm O22P

Stand: 01.2010

OMEGA 23PLUS

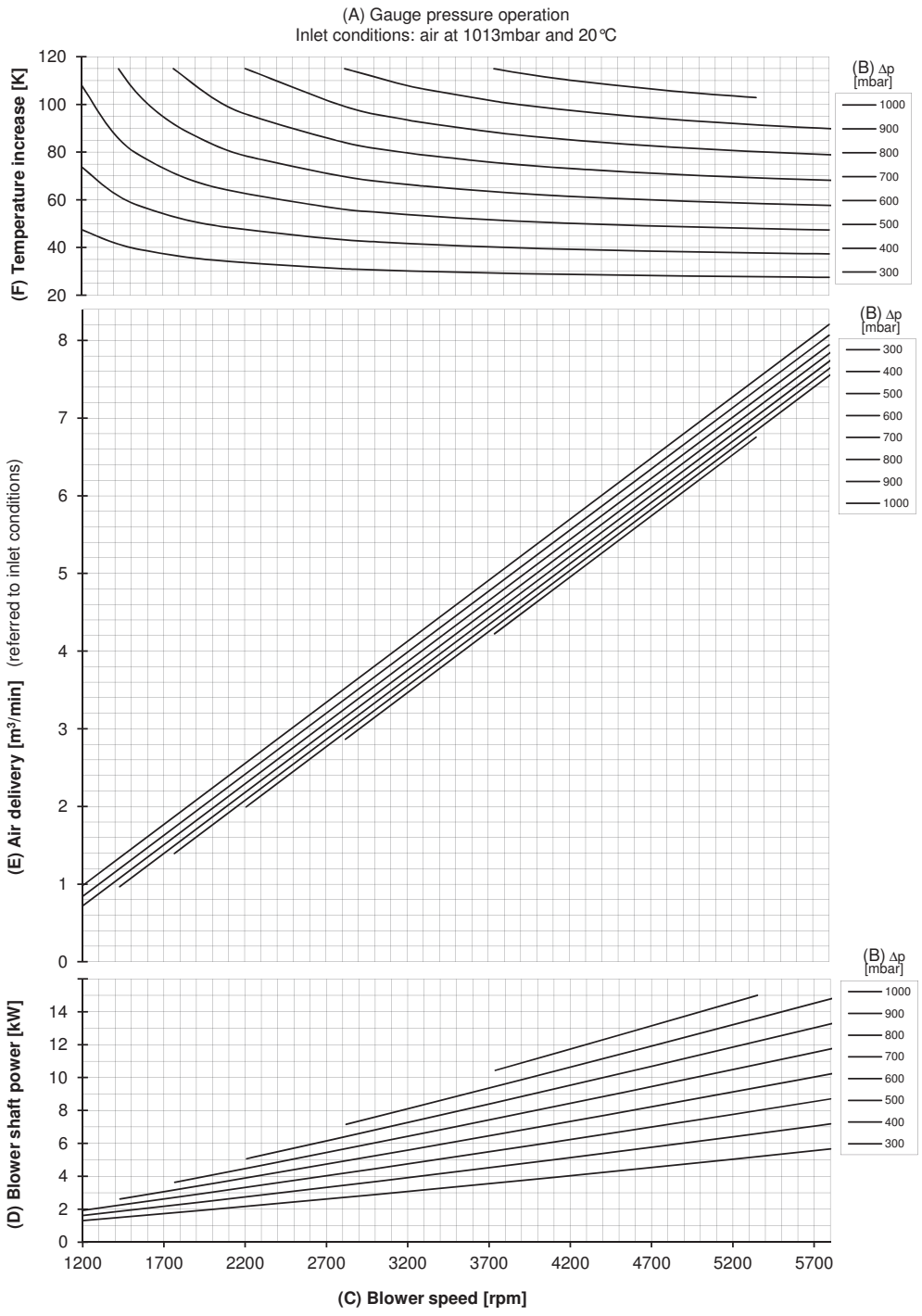

Diagramm O23P

Stand: 01.2010

13.4 Drive motor electrical diagram

The connection diagram is a common diagram for the mains voltage and frequency.

Schaltung der Motoren (eintourig) (6-poliger Klemmkasten)
Connection diagram for motor (single speed)(6-lead terminal box)

Typenschild *name plate*	Start in 50Hz – Netz *start in 50Hz – line*	Start in 60Hz – Netz *start in 60Hz – line*
200V Δ - 50Hz	200V Y/Δ / 200V Δ direkt / d.o.l.	
200V Δ - 60Hz		200V Y/Δ / 200V Δ direkt / d.o.l.
208V Δ / 360V Y - 60Hz		208V Y/Δ / 208V Δ direkt / d.o.l. / 360V Y direkt / d.o.l.
220V Δ / 380V Y - 50Hz	220V Y/Δ / 220V Δ direkt / d.o.l. / 380V Y direkt / d.o.l.	
220V Δ / 380V Y - 60Hz		220V Y/Δ / 220V Δ direkt / d.o.l. / 380V Y direkt / d.o.l.
230V Δ / 400V Y - 50Hz 460V Y - 60Hz	230V Y/Δ / 230V Δ direkt / d.o.l. / 400V Y direkt / d.o.l.	460V Y direkt / d.o.l.
240V Δ / 415V Y - 50Hz	240V Y/Δ / 240V Δ direkt / d.o.l. / 415V Y direkt / d.o.l.	
230V Δ / 460V Y - 60Hz		230V Y/Δ / 230V Δ direkt /d.o.l. / 460V Y direkt / d.o.l.
380V Δ - 50Hz	380V Y/Δ / 380V Δ direkt / d.o.l.	
380V Δ - 60Hz		380V Y/Δ / 380V Δ direkt / d.o.l.
380V Δ / 660V Y - 50Hz	380V Y/Δ / 380V Δ direkt / d.o.l. / 660V Y direkt / d.o.l.	
380V Δ / 660V Y - 60Hz		380V Y/Δ / 380V Δ direkt / d.o.l. / 660V Y direkt / d.o.l.
400V Δ - 50Hz / 460V Δ - 60Hz	400V Y/Δ / 400V Δ direkt / d.o.l.	460V Y/D / 460V D direkt / d.o.l.
400V Δ / 690V Y - 50Hz 460V Δ - 60Hz	400V Y/Δ / 400V Δ direkt / d.o.l. / 690V Y direkt / d.o.l.	460V Y/D / 460V D direkt / d.o.l.
400V Δ - 60Hz		400V Y/Δ / 400V Δ direkt / d.o.l.
415V Δ - 50Hz	415V Y/Δ / 415V Δ direkt / d.o.l.	
440V Δ - 60Hz		440V Y/Δ / 440V Δ direkt / d.o.l.
460V Δ - 60Hz		460V Y/Δ / 460V Δ direkt / d.o.l.
480V Δ - 60Hz		480V Y/Δ / 480V Δ direkt / d.o.l.
500V Δ - 50Hz / 575V Δ - 60Hz	500V Y/Δ / 500V Δ direkt / d.o.l.	575V Y/Δ / 575V Δ direkt / d.o.l.
535V Δ - 50Hz	535V Y/Δ / 535V Δ direkt / d.o.l.	
550V Δ - 50Hz	550V Y/Δ / 550V Δ direkt / d.o.l.	
550V Δ - 60Hz		550V Y/Δ / 550V Δ direkt / d.o.l.
660V Δ - 50Hz	660V Y/Δ / 660V Δ direkt / d.o.l.	
690V Δ - 50Hz	690V Y/Δ / 690V Δ direkt / d.o.l.	
690V Y - 50Hz	690V Y direkt / d.o.l.	
690V Δ - 60Hz		690V Y/Δ / 690V Δ direkt / d.o.l.
690V Y - 60Hz		690V Y direkt / d.o.l.

Sternschaltung
Für eine Sternschaltung müssen die Klemmen W2, U2, V2 zusammengeschlossen und die Stellen U1, V1 und W1 gespeist werden.
Der Phasenstrom und die Phasenspannung:
$I_{ph} = I_n$ $U_{ph} = U_n / \sqrt{3}$
wobei I_n der Netzstrom und U_n die Netzspannung ist.

Star connection
Connecting together the W2, U2, V2 terminals (star point) and connecting to the mains the U1, V1, W1 terminals a star connection is obtained.
The phase current Iph and the phase voltageUph are the following:
$I_{ph} = I_n$ $U_{ph} = U_n / \sqrt{3}$
where I_n the line current and U_n ist the line voltage.

Y

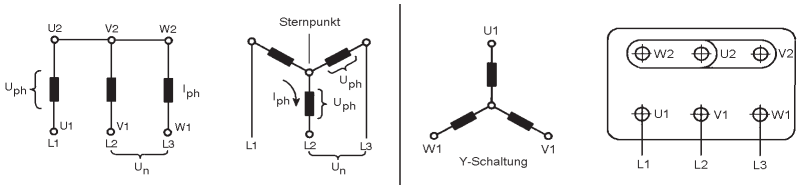

Dreieckschaltung
Für eine Dreieckschaltung muss das Ende der Phase an den Beginn der nächsten Phase angeschlossen werden.
Der Phasenstrom I_{ph} und die Phasenspannung U_{ph} sind:
$I_{ph} = I_n / \sqrt{3}$
$U_{ph} = U_n$
wobei I_n der Netzstrom und U_n die Netzspannung ist.

Delta connection
Connecting the end of each winding to the beginning of the next winding a delta connection is obtained.
The phase current I_{ph} and the phase voltageU_{ph} are the following:
$I_{ph} = I_n / \sqrt{3}$
$U_{ph} = U_n$
where I_n the line current and U_n ist the line voltage.

Δ

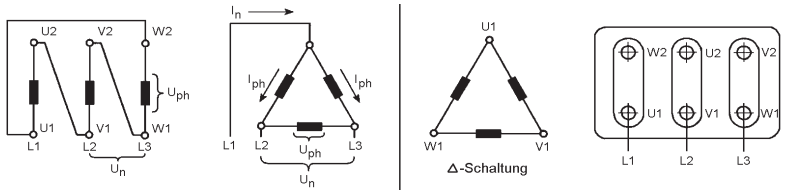

Stern-Dreieck-Anlauf:
Der Stern-Dreieck-Anlauf ist die einfachste Art, den Strom und das Anlaufdrehmoment zu reduzieren. Die Motoren, deren Nennspannung bei Dreieckschaltung der Netzspannung entspricht, können mit der Stern-Dreieck-Methode angelassen werden.

Star-Delta starting:
The star-delta starting is an easy way to reduce the starting current and starting torque.
Motors can be started with star-delta starting method whenever the supply voltage correspond to the rated voltage of the motors in delta connections.

\\gera02\data1\Technik\DATEN\GEBLAESE\AGGREGAT\MOTOR\Schaltplan\Schaltplan universal\[TBU-ETB-GERA-00011_02D_Sammelklemmenplan.xlsx]Optionen

Weitere Optionen für Motoren
more options for motor

3x Kaltleiter (PTC) für Abschaltung
Anschluss der intergrierten Kaltleiter (PTC) über die Klemmen 2TP1 und 2TP2 im Motorklemmkasten (Achtung: keine Spannung über 2,5V anlegen !)

3x thermistor (PTC) for Disconnection
Please connect the 3 thermistors (3x PTC) on lead 2TP1 und 2TP2 in the terminal box of the motor. (Attention: No voltage higher than 2,5V on T1 and T2 !)

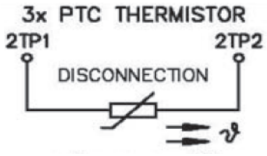

6x Kaltleiter (PTC) für Warnung und Abschaltung
Anschluss der intergrierten Kaltleiter (PTC) über die Klemmen 1TP1/1TP2 + 2TP1/2TP2 im Motorklemmkasten (Achtung: keine Spannung über 2,5V anlegen !)

6x thermistor (PTC) for Warning and Disconnection
Please connect the thermistors (PTC) on lead 1TP1/1TP2+2TP1/2TP2 in the terminal box of the motor. (Attention: No voltage higher than 2,5V on T1 and T2 !)

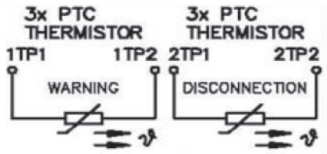

3x Widerstandsthermometer PT100
Anschluss der intergrierten Widerstandsthermometer PT100 über die Klemmen 1R1/1R2 + 2R1/2R2 +3R1/3R2 im Motorklemmkasten.

3x resistance thermometers (PT100)
Please connect the resistance thermometers on lead 1R1/1R2 + 2R1/2R2 +3R1/3R2 in the terminal box of the motor.

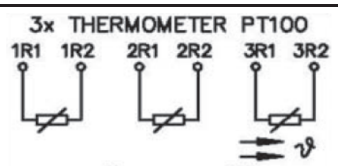

6x Widerstandsthermometer PT100
Anschluss der intergrierten Widerstandsthermometer PT100 über die Klemmen 1R1/1R2 + 2R1/2R2 +3R1/3R2 und 4R1/4R2 + 5R1/5R2 +6R1/6R2 im Motorklemmkasten.

6x resistance thermometers (PT100)
Please connect the resistance thermometers on lead 1R1/1R2 + 2R1/2R2 +3R1/3R2 and 4R1/4R2 + 5R1/5R2 +6R1/6R2 in the terminal box of the motor.

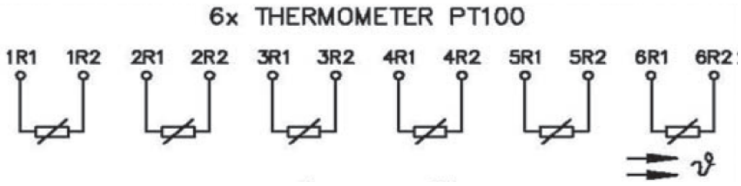

2x PT100 Einschraubthermometer in Grundschaltung bei Wälzlagern
Anschluss der intergrierten Widerstandsthermometer PT100 über die Klemmen 10R1/10R2 + 11R1/11R2 im Motorklemmkasten.

2x PT100 screwed-in resistance thermometers (basic circuit) for rolling-contact bearing
Please connect the resistance themometers on lead 10R1/10R2 + 11R1/11R2 in the terminal box of the motor.

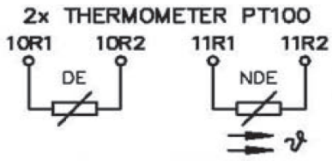

Option Stillstandsheizung:
K45 = 230V (1Ph/N/PE)
K46 = 115V (1Ph/N/PE)

Option Anticondensation heaters:
K45 = 230V (1Ph/N/PE)
K46 = 115V (1Ph/N/PE)

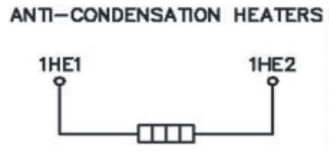

\\gera02\data1\Technik\DATEN\GEBLAESE\AGGREGAT\MOTOR\Schaltplan\Schaltplan universal\[TBU-ETB-GERA-00011_02D_Sammelklemmenplan.xlsx]Optionen

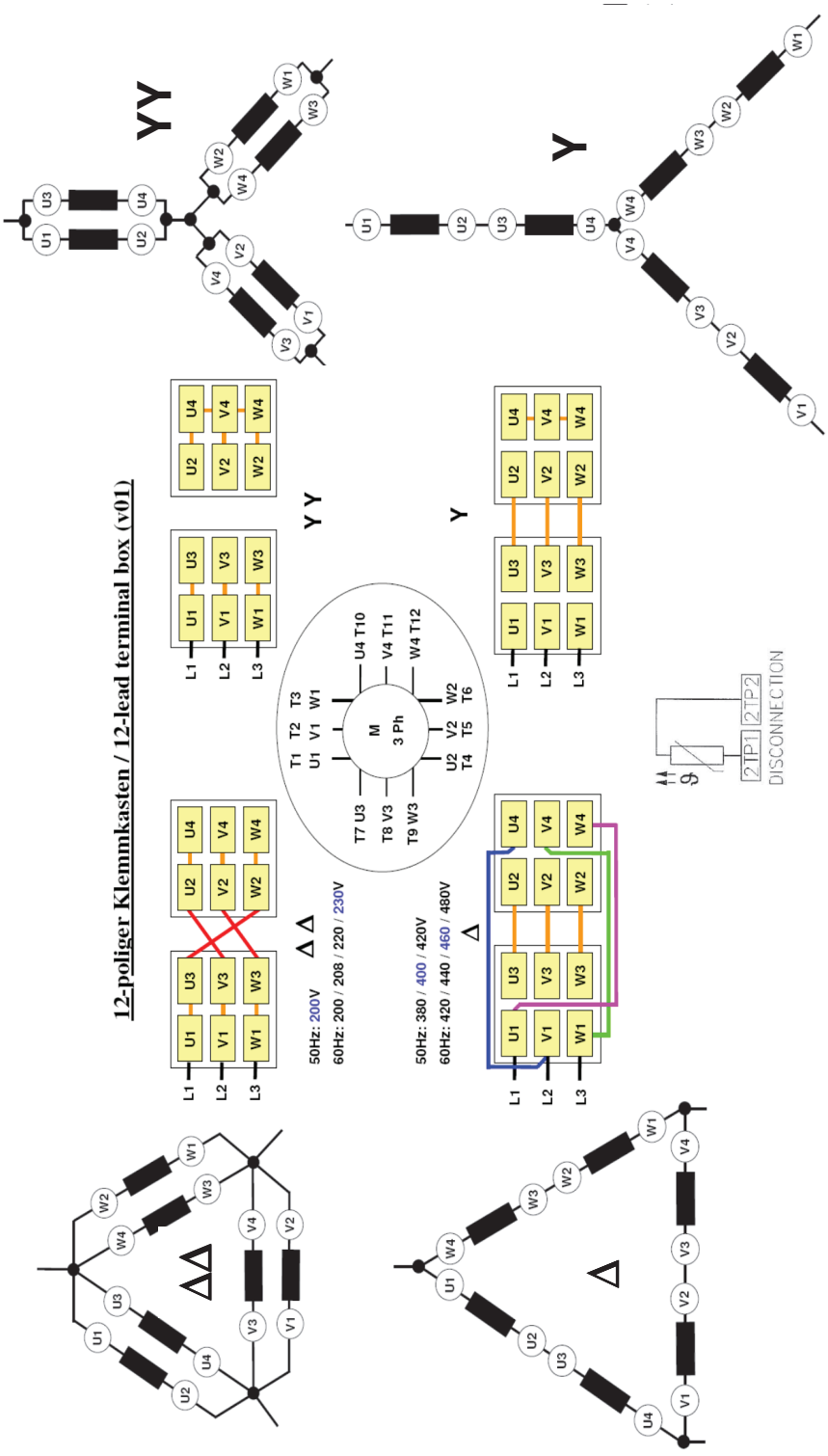
YY
Y
12-poliger Klemmkasten / 12-lead terminal box (v01)
Y Y
Y
M
3 Ph
T1 T2 T3
U1 V1 W1
U4 T10
V4 T11
W4 T12
W2 T6
V2 T5
U2 T4
T7 U3
T8 V3
T9 W3
L1 L2 L3
50Hz: 200V
60Hz: 200 / 208 / 220 / 230V
50Hz: 380 / 400 / 420V
60Hz: 420 / 440 / 460 / 480V
2TP1 2TP2
DISCONNECTION

12-Lead Motoren - technische Daten / technical data

Spannung	Schaltung	Start	Toleranz	Servicefaktor F/F	Isolationsklasse F IE3 | NPE		Bemerkung
Voltage	terminal (circuit)	start	tolerance	servicefactor F/F	isolation class F IE3 | NPE		note
200 V / 50 Hz	ΔΔ	YY–ΔΔ / ΔΔ	± 5%	1,1	ja / yes	ja / yes	
230 V / 50 Hz	nicht möglich / not available						
380 V / 50 Hz	Δ	Y–Δ / Δ	± 5%	1,1	nein / no	nein / no	
400 V / 50 Hz	Δ	Y–Δ / Δ	± 5%	1,1	ja / yes	ja / yes	
420 V / 50 Hz	Δ	Y–Δ / Δ	± 5%	1,1	nein / no	nein / no	
200 V / 60 Hz	ΔΔ	YY–ΔΔ / ΔΔ	± 10%	1,15	nein / no	nein / no	
208 V / 60 Hz	ΔΔ	YY–ΔΔ / ΔΔ	± 10%	1,15	ja / yes	ja / yes	
220 V / 60 Hz	ΔΔ	YY–ΔΔ / ΔΔ	± 10%	1,15	ja / yes	ja / yes	
230 V / 60 Hz	ΔΔ	YY–ΔΔ / ΔΔ	± 10%	1,15	ja / yes	ja / yes	
420 V / 60 Hz	Δ	Y–Δ / Δ	± 10%	1,15	nein / no	nein / no	
440 V / 60 Hz	Δ	Y–Δ / Δ	± 10%	1,15	ja / yes	ja / yes	
460 V / 60 Hz	Δ	Y–Δ / Δ	± 10%	1,15	ja / yes	ja / yes	
480 V / 60 Hz	Δ	Y–Δ / Δ	± 10%	1,15	nein / no	nein / no	

\\gera02\data1\Technik\DATEN\GEBLAESE\AGGREGAT\MOTOR\Schaltplan\Schaltplan universal\[TBU-ETB-GERA-00011_02D_Sammelklemmenplan.xlsx]Optionen

13.5 Electrical diagrams for options

Electrical diagrams for the options available for your machine are given in the following.

13.5.1 Option C9
Pressure switch wiring diagram

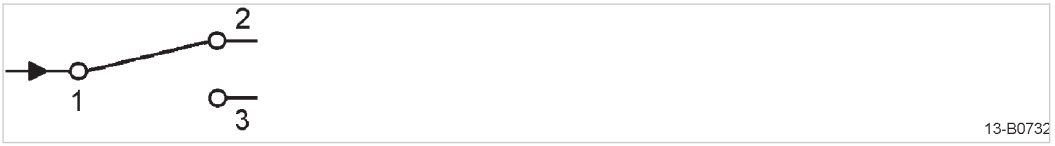

Fig. 38 Pressure switch wiring diagram

1 Supply
2 Break contact
3 Make contact

13.5.2 Option C10
Speed monitor wiring diagram

Sensor / evaluation device

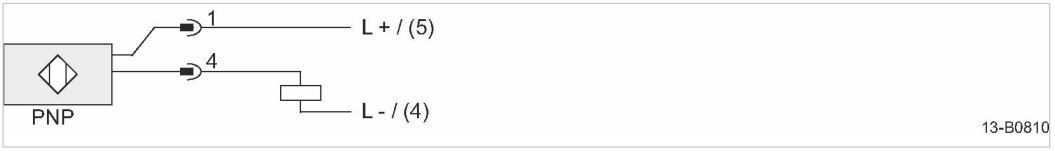

Fig. 39 Speed monitor wiring diagram

13.5.3 Option C13
Temperature gauge switch wiring diagram

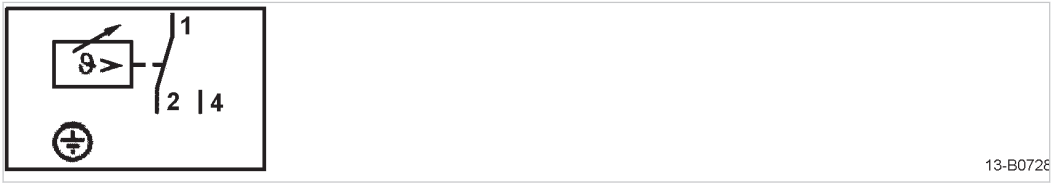

Fig. 40 Temperature gauge switch wiring diagram

13.5.4 Option C14
Pressure sensor connections

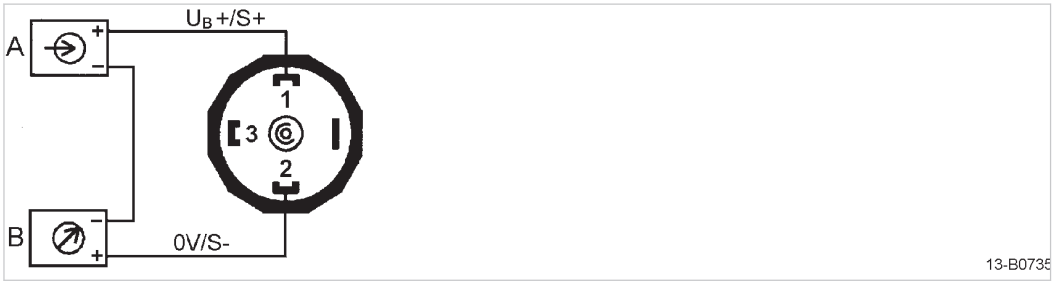

Fig. 41 Pressure sensor connections

Ⓐ Power supply
Ⓑ Evaluation/display

13.5.5 Option C19
Thermostat wiring diagram

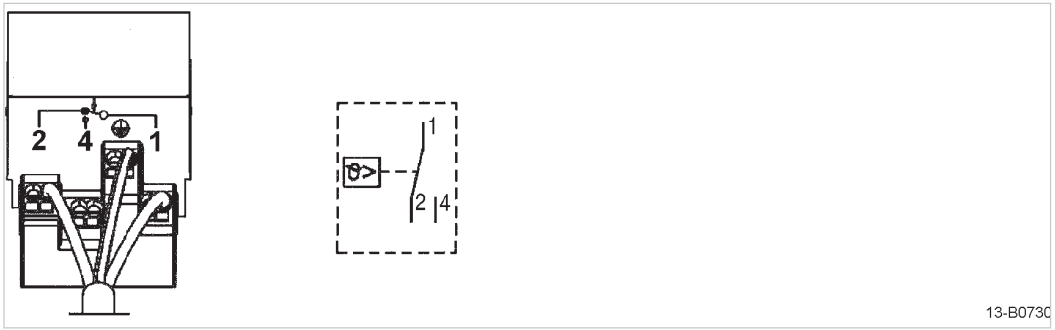

Fig. 42 Thermostat wiring diagram

13.5.6 Option F5
Filter pressure differential switch wiring diagram

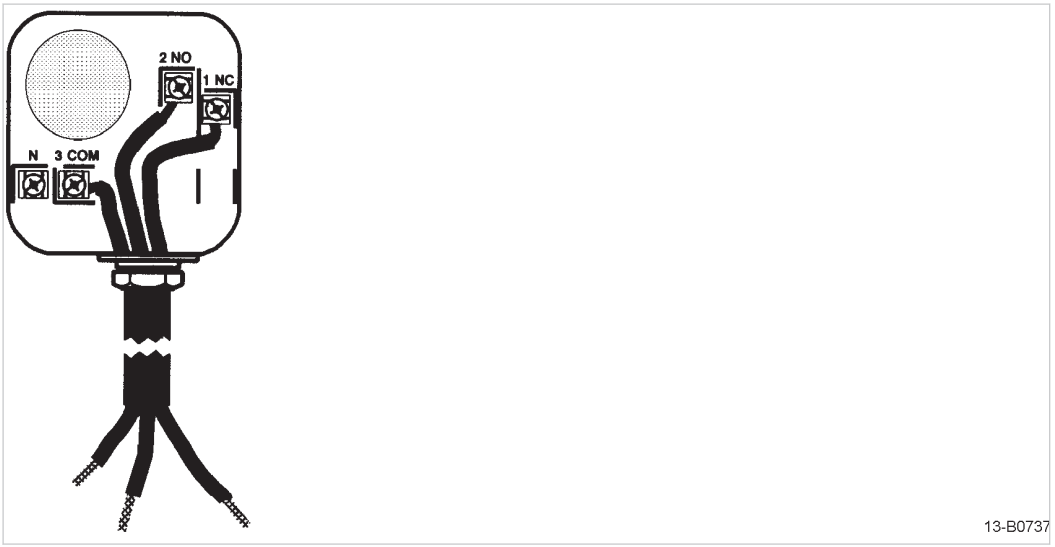

Fig. 43 Filter pressure differential switch wiring diagram

13.5.7 Option H2
Auxiliary heater wiring diagram

13.5.7.1 BB 52 C pr

Schaltungsunterlagen

Electrical diagrams

Gebläse/Blower

Heizung/Heater - 208...230V 50/60Hz

TT/TN-Netz mit geerdetem Sternpunkt
TT/TN power supply with common point grounding

Hersteller: KAESER KOMPRESSOREN GmbH
Postfach 2143
96410 Coburg

Dieses Dokument beinhaltet einen Sammelplan für alle hier aufgeführten Anlagentypen, Netzspannungen und Frequenzen. Unter welchen tatsächlichen Spannungen, Frequenzen und Umgebungsbedingungen die jeweilige Anlage ausschließlich betrieben werden darf, ist dem Typenschild der Anlage sowie der beiliegenden Betriebsanleitung zu entnehmen.

The document gives collective information on power supply voltages and frequencies for all machines. The voltage and frequency and local conditions under which any particular machine may be used are given on the nameplate of the machine and in the accompanying service manual.

Die Schaltungsunterlagen bleiben unser ausschließliches Eigentum. Sie werden nur zu dem vereinbarten Zweck anvertraut. Kopien oder sonstige Vervielfältigungen einschließlich der Speicherung, Verarbeitung und Verbreitung unter Verwendung elektronischer Systeme dürfen nur zu dem vereinbarten Zweck angefertigt werden. Weder Originale noch Vervielfältigungen dürfen Dritten ausgehändigt oder in sonstiger Weise zugänglich gemacht werden.

The drawings remain our exclusive property. They are entrusted only for the agreed purpose. Copies or any other reproductions, including storage, treatment and dissemination by use of electronic systems must not be made for any other than the agreed purpose. Neither originals nor reproductions must be forwarded or otherwise made accessible to third parties.

c				Datum	17.01.2012 D		KAESER KOMPRESSOREN	Deckblatt Heizung/Heater	=
b				Bearbeiter	M.Zeeh				+
a				Geprüft	M.Zeeh				
A	Änderung	Datum	Name	Norm		Ersatz durch:	Ersatz für:	Ursprung: SSS-01081	SXB.DSG-03014.00	Blatt 1 / 1 Bl.

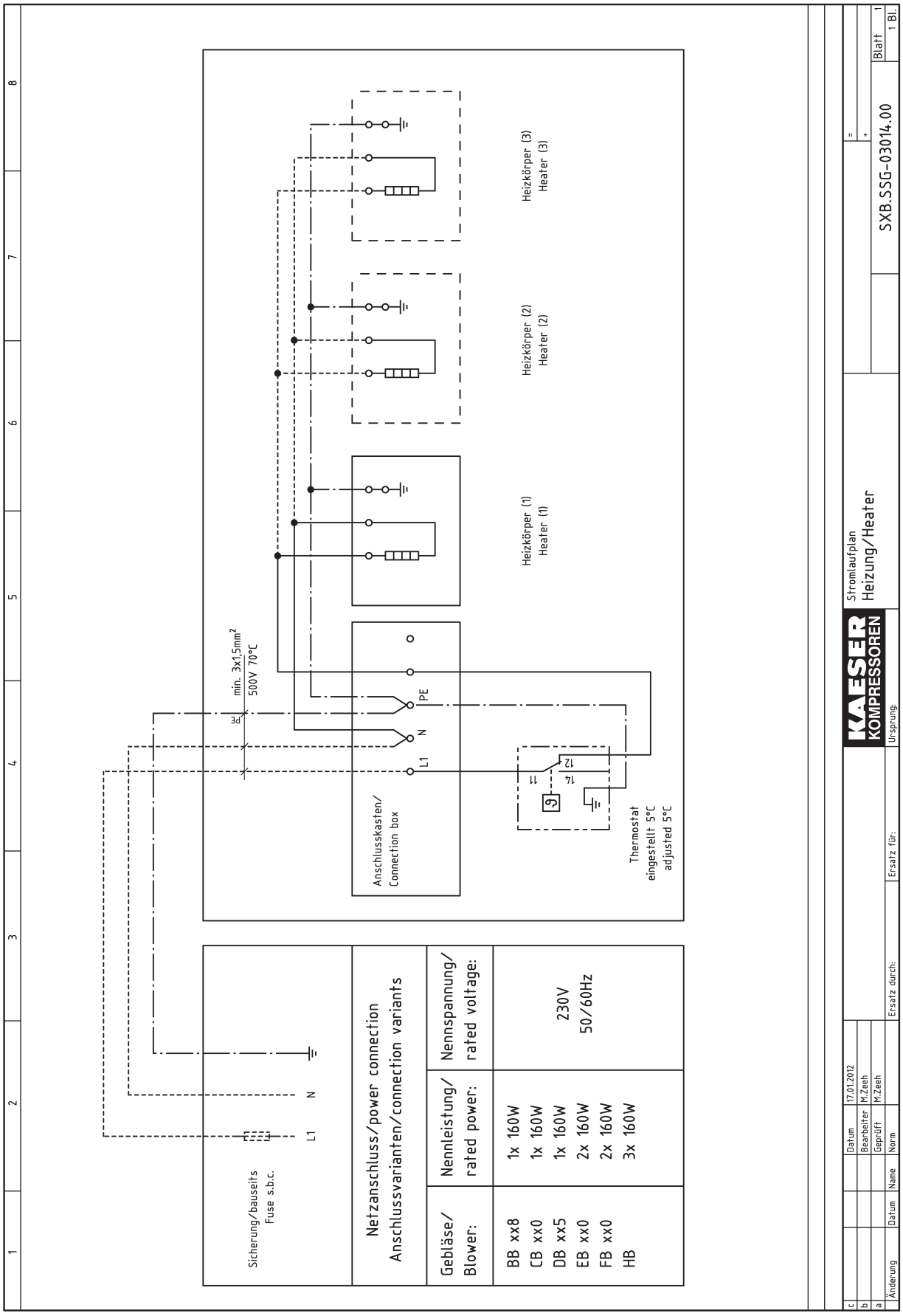
Netzanschluss/power connection
Anschlussvarianten/connection variants
Gebläse/ Blower:
Nennleistung/ rated power:
Nennspannung/ rated voltage:
BB xx8 1x 160W
CB xx0 1x 160W
DB xx5 1x 160W
EB xx0 2x 160W
FB xx0 2x 160W
HB 3x 160W
230V 50/60Hz
Sicherung/bauseits Fuse s.b.c.
L1 N
Anschlusskasten/ Connection box
PE N L1
min. 3x1,5mm² 500V 70°C
Heizkörper (1) Heater (1)
Heizkörper (2) Heater (2)
Heizkörper (3) Heater (3)
Thermostat eingestellt 5°C adjusted 5°C
11 12 14
Stromlaufplan Heizung/Heater
KAESER KOMPRESSOREN
SXB.SSG-03014.00
Blatt 1
1 Bl.
Datum 17.01.2012
Bearbeiter M.Zeeh
Geprüft M.Zeeh
Ersatz durch:
Ersatz für:
Ursprung:
Änderung Datum Name Norm

13.5.7.2 BB 69 C pr , BB 89 C pr

Schaltungsunterlagen

Electrical diagrams

Gebläse/Blower

Heizung/Heater - 110...265V 50/60Hz

TT/TN-Netz mit geerdetem Sternpunkt
TT/TN power supply with common point grounding

Hersteller: KAESER KOMPRESSOREN GmbH
Postfach 2143
96410 Coburg

Dieses Dokument beinhaltet einen Sammelplan für alle hier aufgeführten Anlagentypen, Netzspannungen und Frequenzen. Unter welchen tatsächlichen Spannungen, Frequenzen und Umgebungsbedingungen die jeweilige Anlage ausschließlich betrieben werden darf, ist dem Typenschild der Anlage sowie der beiliegenden Betriebsanleitung zu entnehmen.

The document gives collective information on power supply voltages and frequencies for all machines. The voltage and frequency and local conditions under which any particular machine may be used are given on the nameplate of the machine and in the accompanying service manual.

Die Schaltungsunterlagen bleiben unser ausschließliches Eigentum. Sie werden nur zu dem vereinbarten Zweck anvertraut. Kopien oder sonstige Vervielfältigungen einschließlich der Speicherung, Verarbeitung und Verbreitung unter Verwendung elektronischer Systeme dürfen nur zu dem vereinbarten Zweck angefertigt werden. Weder Originale noch Vervielfältigungen dürfen Dritten ausgehändigt oder in sonstiger Weise zugänglich gemacht werden.

The drawings remain our exclusive property. They are entrusted only for the agreed purpose. Copies or any other reproductions, including storage, treatment and dissemination by use of electronic systems must not be made for any other than the agreed purpose. Neither originals nor reproductions must be forwarded or otherwise made accessible to third parties.

c				Datum	17.01.2012 D		KAESER KOMPRESSOREN	Deckblatt		=
b				Bearbeiter	M.Zeeh			Heizung/Heater		+
a				Geprüft	M.Zeeh					
A	Änderung	Datum	Name	Norm		Ersatz durch:	Ersatz für:	Ursprung: SSS-01081	SXB.DSG-03013.00	Blatt 1 / 1 Bl.

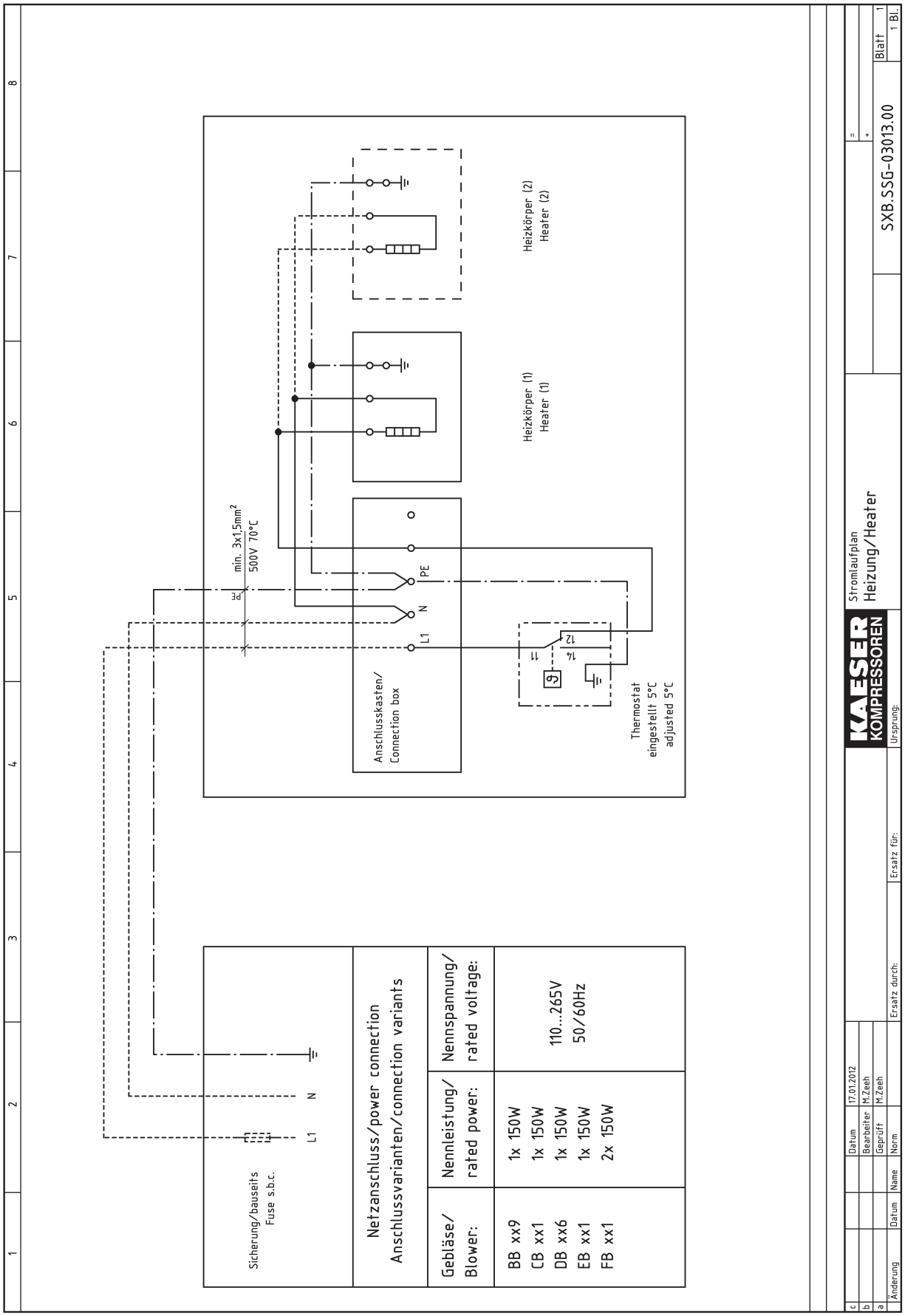
Heizkörper (2)
Heater (2)
Heizkörper (1)
Heater (1)
min. 3x1,5mm²
500V 70°C
PE
N
L1
Anschlusskasten/
Connection box
Thermostat
eingestellt 5°C
adjusted 5°C
Sicherung/bauseits
Fuse s.b.c.
Netzanschluss/power connection
Anschlussvarianten/connection variants
Gebläse/
Blower:
Nennleistung/
rated power:
Nennspannung/
rated voltage:
BB xx9 1x 150W
CB xx1 1x 150W
DB xx6 1x 150W
EB xx1 1x 150W
FB xx1 2x 150W
110...265V
50/60Hz
Stromlaufplan
Heizung/Heater
SXB.SSG-03013.00
Blatt 1
1 Bl.
Änderung
Datum
Name
Norm
Ersatz durch:
Ersatz für:
Ursprung:
17.01.2012
M.Zeeh

13.5.8 Option H12
Extractor motor wiring plan (sound enclosure)

13.5.8.1 BB 52 C pr

Three-phase motor connection

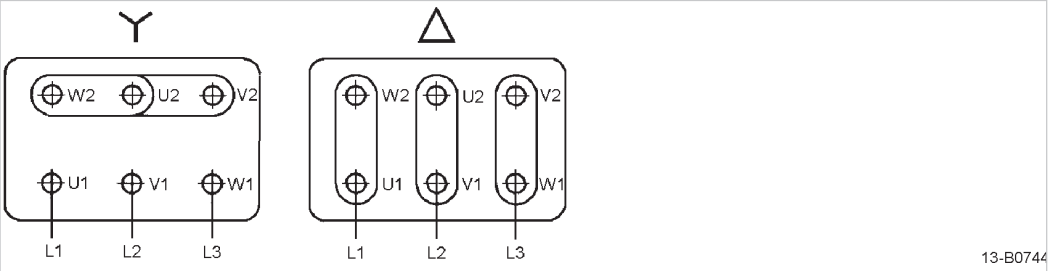

Fig. 44 Extractor motor star-delta connection (BB 52 C pr)

Single-phase motor connection

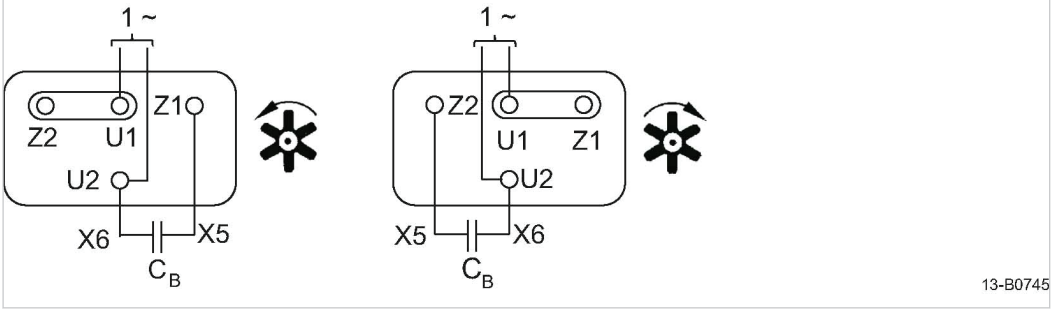

Fig. 45 Single-phase extractor motor diagram (BB 52 C pr)

13.5.8.2 BB 69 C pr , BB 89 C pr

Three-phase motor connection

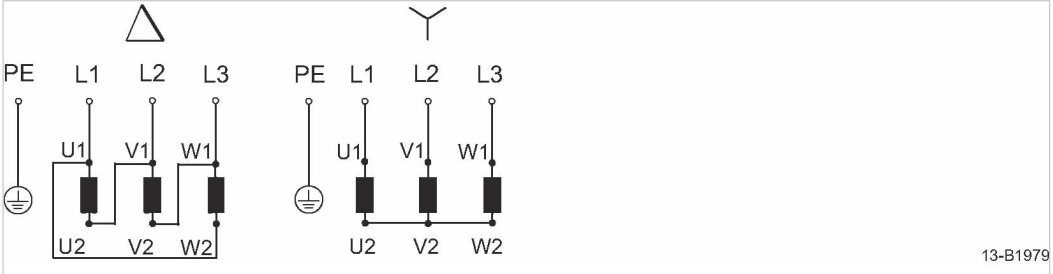

Fig. 46 Extractor motor star-delta connection (BB 69 C pr , BB 89 C pr)

Single-phase motor connection

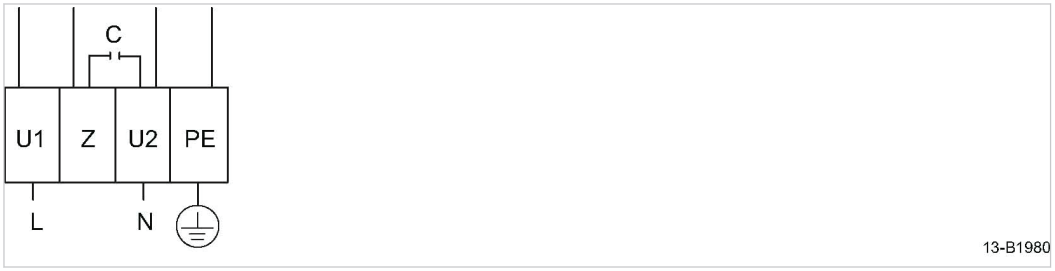

Fig. 47 Single-phase extractor motor diagram (BB 69 C pr , BB 89 C pr)

13.6 Declaration concerning contamination

KAESER KOMPRESSOREN

Declaration of Contamination
concerning compressors, blowers, vacuum pumps and components

Repair and/or maintenance work will only be carried out on items for which a Declaration of Contamination form has been filled out and attached. **A completed Declaration is required for each item.** Any item not accompanied by a Declaration is liable to be returned untouched. Items that have been contaminated with microbiological, explosive or radioactive substances will only be accepted when accompanied by confirmation that they have been **fully decontaminated** according to regulation.
This Declaration may only be filled out and signed by the authorized representative of the ordering party (sender of the item).

Sender/dept.: _____
Contact name: _____
Address: _____
_____
Phone / Fax: _____

Reason for sending the item:
_____
_____
_____
_____
_____
_____
(use rear side of form if necessary)

Specification of the item:

Model/type name: _____
Part no..: _____
Serial no..: _____
Oil used: _____

Accessories:
_____
_____
_____

Condition of the item:

	yes	no	not known
- has it been used?	☐	☐	☐
- emptied/vented?	☐	☐	☐
- all openings airtight closed?	☐	☐	☐
- cleaned / decontaminated?	☐	☐	☐

Cleaning substance used: _____
Cleaning method: _____

Information on contaminants:

- with what substances has the item been in contact?

	Trade name	Chemical name	Characteristics
a)			
b)			
c)			
d)			

	yes	no	not known
- Are the substances listed above hazardous to health?	☐	☐	☐
- Are any hazardous substances given off by heating?	☐	☐	☐

Which? _____

We declare that the information given in this declaration is true and complete and that the signatory is authorized and in a position to make this declaration. We are aware of our liability for any damages resulting from false or incomplete information given in this declaration and we engage to hold the contractor free of claims from third parties for compensation for damages resulting from such incomplete or false information.

Name of the authorized signatory (please print): _____

_____ _____
Date Authorized signature Sender's company seal:

Gera/QUM/V-190501 Kontaminierungserklärung Gebläse-2/28.09.2007-E

13.7 BB 69 C pr , BB 89 C pr : Noise emission

BB 52 C pr : The sound pressure level and sound power level values for your machine are provided in the customer-specific design data sheet in chapter 13.8.

The values for sound pressure levels and sound power levels are provided in the tables below: Each table discusses one model.
The values applicable to the machine result from the combination of the "pressure" row and the "speed" column.

13.7.1 Sound pressure level [dB(A)]

If the texts of the tables are not provided in the chosen language, a translation can be found here.

	Table legend
A	Sound pressure level [dB(A)]
B	Without sound enclosure
C	With sound enclosure
D	Speed [min^{-1}]
E	Pressure [mbar]

Tab. 65 Sound pressure level, legend

BB 69 C pr

A:Schalldruckpegel/Sound pressure level [dB(A)]
B:ohne Schalldämmhaube/without sound enclosure C:mit Schalldämmhaube/with sound enclosure

(D) Drehzahl/Speed [min^{-1}]	2600		2750		3260		3430		3630		3840		4050		4270		4530		4850		5180		5480		5800	
(E) Druck/Pressure [mbar]	B	C	B	C	B	C	B	C	B	C	B	C	B	C	B	C	B	C	B	C	B	C	B	C	B	C
170	79	69	79	69	79	69	79	69	80	69	80	69	80	69	80	69	81	69	81	69	82	69	83	69	83	69
180	79	69	79	69	79	69	79	69	80	69	80	69	80	69	80	69	81	69	81	69	82	69	83	69	83	69
190	79	69	79	69	79	69	79	69	80	69	80	69	80	69	80	69	81	69	81	69	82	69	83	69	83	69
200	79	69	79	69	79	69	79	69	80	69	80	69	80	69	80	69	81	69	81	69	82	69	83	69	83	69
210	79	69	79	69	79	69	79	69	80	69	80	69	80	69	80	69	81	69	81	69	82	69	83	69	83	69
220	79	69	79	69	79	69	79	69	80	69	80	69	80	69	80	69	81	69	81	69	82	69	83	69	83	69
230	79	69	79	69	79	69	79	69	80	69	80	69	80	69	80	69	81	69	81	69	82	69	83	69	83	69
240	79	69	79	69	79	69	79	69	80	69	80	69	80	69	80	69	81	69	81	69	82	69	83	69	83	69
250	79	69	79	69	79	69	79	69	80	69	80	69	80	69	80	69	81	69	81	69	82	69	83	69	83	69
260	79	69	79	69	79	69	79	69	80	69	80	69	80	69	80	69	81	69	81	69	82	69	83	69	83	69
270	79	69	79	69	79	69	79	69	80	69	80	69	80	69	80	69	81	69	81	69	82	69	83	69	83	69
280	79	69	79	69	79	69	79	69	80	69	80	69	80	69	80	69	81	69	81	69	82	69	83	69	83	69
290	79	69	79	69	79	69	79	69	80	69	80	69	80	69	80	69	81	69	81	69	82	69	83	69	83	69
300	79	69	79	69	79	69	79	69	80	69	80	69	80	69	80	69	81	69	81	69	82	69	83	69	83	69
310	79	69	79	69	79	69	79	69	80	69	80	69	80	69	80	69	81	69	81	69	82	69	83	69	83	69
320	79	69	79	69	79	69	79	69	80	69	80	69	80	69	80	69	81	69	81	69	82	69	83	69	83	69
330	79	69	79	69	79	69	79	69	80	69	80	69	80	69	80	69	81	69	81	69	82	69	83	69	83	69
340	79	69	79	69	79	69	79	69	80	69	80	69	80	69	80	69	81	69	81	69	82	69	83	69	83	69
350	79	69	79	69	79	69	79	69	80	69	80	69	80	69	80	69	81	69	81	69	82	69	83	69	83	69
360	79	69	79	69	79	69	79	69	80	69	80	69	80	69	80	69	81	69	81	69	82	69	83	69	83	69
370	79	69	79	69	79	69	79	69	80	69	80	69	80	69	80	69	81	69	81	69	82	69	83	69	83	69
380	79	69	79	69	79	69	79	69	80	69	80	69	80	69	80	69	81	69	81	69	82	69	83	69	83	69
390	79	69	79	69	79	69	79	69	80	69	80	69	80	69	80	69	81	69	81	69	82	69	83	69	83	69
400	79	69	79	69	79	69	79	69	80	69	80	69	80	69	80	69	81	69	81	69	82	69	83	69	83	69
410	79	69	79	69	79	69	79	69	80	69	80	69	80	69	80	69	81	69	81	69	82	69	83	69	83	69
420	79	69	79	69	79	69	79	69	80	69	80	69	80	69	80	69	81	69	81	69	82	69	83	69	83	69
430	79	69	79	69	79	69	79	69	80	69	80	69	80	69	80	69	81	69	81	69	82	69	83	69	83	69
440	79	69	79	69	79	69	79	69	80	69	80	69	80	69	80	69	81	69	81	69	82	69	83	69	83	69
450	79	69	79	69	79	69	79	69	80	69	80	69	80	69	80	69	81	69	81	69	82	69	83	69	83	69
460	79	69	79	69	79	69	79	69	80	69	80	69	80	69	80	69	81	69	81	69	82	69	83	69	83	69
470	79	69	79	69	79	69	79	69	80	69	80	69	80	69	80	69	81	69	81	69	82	69	83	69	83	69
480	79	69	79	69	79	69	79	69	80	69	80	69	80	69	80	69	81	69	81	69	82	69	83	69	83	69
490	79	69	79	69	79	69	79	69	80	69	80	69	80	69	80	69	81	69	81	69	82	69	83	69	83	69
500	79	69	79	69	79	69	79	69	80	69	80	69	80	69	80	69	81	69	81	69	82	69	83	69	83	69
510	79	69	79	69	79	69	79	69	80	69	80	69	80	69	80	69	81	69	81	69	82	69	83	69	83	69
520	79	69	79	69	79	69	79	69	80	69	80	69	80	69	80	69	81	69	81	69	82	69	83	69	83	69
530	79	69	79	69	79	69	79	69	80	69	80	69	80	69	80	69	81	69	81	69	82	69	83	69	83	69
540	79	69	79	69	79	69	79	69	80	69	80	69	80	69	80	69	81	69	81	69	82	69	83	69	83	69
550	79	69	79	69	79	69	79	69	80	69	80	69	80	69	80	69	81	69	81	69	82	69	83	69	83	69
560	82	69	82	69	82	69	82	69	82	69	83	69	83	69	83	69	84	69	84	69	85	69	85	69	86	69
570	82	69	82	69	82	69	82	69	82	69	83	69	83	69	83	69	84	69	84	69	85	69	85	69	86	69
580	82	69	82	69	82	69	82	69	82	69	83	69	83	69	83	69	84	69	84	69	85	69	85	69	86	69
590	82	69	82	69	82	69	82	69	82	69	83	69	83	69	83	69	84	69	84	69	85	69	85	69	86	69
600	82	69	82	69	82	69	82	69	82	69	83	69	83	69	83	69	84	69	84	69	85	69	85	69	86	69
610	82	69	82	69	82	69	82	69	82	69	83	69	83	69	83	69	84	69	84	69	85	69	85	69	86	69
620	82	69	82	69	82	69	82	69	82	69	83	69	83	69	83	69	84	69	84	69	85	69	85	69	86	69
630	82	69	82	69	82	69	82	69	82	69	83	69	83	69	83	69	84	69	84	69	85	69	85	69	86	69
640	82	69	82	69	82	69	82	69	82	69	83	69	83	69	83	69	84	69	84	69	85	69	85	69	86	69
650	82	69	82	69	82	69	82	69	82	69	83	69	83	69	83	69	84	69	84	69	85	69	85	69	86	69
660	82	69	82	69	82	69	82	69	82	69	83	69	83	69	83	69	84	69	85	69	86	69	87	69	88	72
670	82	69	82	69	82	69	82	69	82	69	83	69	83	69	83	69	84	69	85	69	86	69	87	69	88	72
680	82	69	82	69	82	69	82	69	82	69	83	69	83	69	83	69	84	69	85	69	86	69	87	69	88	72
690	82	69	82	69	82	69	82	69	82	69	83	69	83	69	83	69	84	69	85	69	86	69	87	69	88	72
700	82	69	82	69	82	69	82	69	82	69	83	69	83	69	83	69	84	69	85	69	86	69	87	69	88	72
710	82	69	82	69	82	69	82	69	82	69	83	69	83	69	83	69	84	69	85	69	86	69	87	69	88	72
720	82	69	82	69	82	69	82	69	82	69	83	69	83	69	83	69	84	69	85	69	86	69	87	69	88	72
730	82	69	82	69	82	69	82	69	82	69	83	69	83	69	83	69	84	69	85	69	86	69	87	69	88	72
740	82	69	82	69	82	69	82	69	82	69	83	69	83	69	83	69	84	69	85	69	86	69	87	69	88	72
750	82	69	82	69	82	69	82	69	82	69	83	69	83	69	83	69	84	69	85	69	86	69	87	69	88	72
760	82	69	82	69	82	69	82	69	82	69	83	69	83	69	83	69	84	69	85	69	86	69	87	69	88	72
770	82	69	82	69	82	69	82	69	82	69	83	69	83	69	83	69	84	69	85	69	86	69	87	69	88	72
780	82	69	82	69	82	69	82	69	82	69	83	69	83	69	83	69	84	69	85	69	86	69	87	69	88	72
790	82	69	82	69	82	69	82	69	82	69	83	69	83	69	83	69	84	69	85	69	86	69	87	69	88	72
800					82	69	82	69	82	69	83	69	83	69	83	69	84	69	85	69	86	69	87	69	88	72
810					82	69	82	69	82	69	83	69	83	69	83	69	84	69	85	69	86	69	87	69	88	72
820					82	69	82	69	82	69	83	69	83	69	83	69	84	69	85	69	86	69	87	69	88	72
830					82	69	82	69	82	69	83	69	83	69	83	69	84	69	85	69	86	69	87	69	88	72
840					82	69	82	69	82	69	83	69	83	69	83	69	84	69	85	69	86	69	87	69	88	72
850					82	69	82	69	82	69	83	69	83	69	83	69	84	69	85	69	86	69	87	69	88	72
860					82	69	82	69	82	69	83	69	83	69	83	69	84	69	85	69	86	69	87	69	88	72
870					82	69	82	69	82	69	83	69	83	69	83	69	84	69	85	69	86	69	87	69	88	72
880					82	69	82	69	82	69	83	69	83	69	83	69	84	69	85	69	86	69	87	69	88	72
890					82	69	82	69	82	69	83	69	83	69	83	69	84	69	85	69	86	69	87	69	88	72
900									82	69	83	69	83	69	83	69	84	69	85	69	86	69	87	69	88	72
910									82	69	83	69	83	69	83	69	84	69	85	69	86	69	87	69	88	72
920									82	69	83	69	83	69	83	69	84	69	85	69	86	69	87	69	88	72
930									82	69	83	69	83	69	83	69	84	69	85	69	86	69	87	69	88	72
940									82	69	83	69	83	69	83	69	84	69	85	69	86	69	87	69	88	72
950									82	69	83	69	83	69	83	69	84	69	85	69	86	69	87	69	88	72
960									82	69	83	69	83	69	83	69	84	69	85	69	86	69	87	69	89	72
970									82	69	83	69	83	69	83	69	84	69	85	69	86	69	87	69	89	72
980									82	69	83	69	83	69	83	69	84	69	85	69	86	69	87	69	89	72
990									82	69	83	69	83	69	83	69	84	69	85	69	86	69	87	69	89	72
1000													83	69	83	69	84	69	85	69	86	69	87	69	89	72

BB 89 C pr

A:Schalldruckpegel/Sound pressure level [dB(A)]
B:ohne Schalldämmhaube/without sound enclosure C:mit Schalldämmhaube/with sound enclosure

(D) Drehzahl/Speed [min-1]	2600		2750		3260		3430		3630		3840		4050		4270		4530		4850		5180		5480		5800	
(E) Druck/Pressure [mbar]	B	C	B	C	B	C	B	C	B	C	B	C	B	C	B	C	B	C	B	C	B	C	B	C	B	C
170	80	69	80	69	79	69	79	69	79	69	79	69	79	69	80	69	80	69	81	69	81	69	82	69	84	69
180	80	69	80	69	79	69	79	69	79	69	79	69	79	69	80	69	80	69	81	69	81	69	82	69	84	69
190	80	69	80	69	79	69	79	69	79	69	79	69	79	69	80	69	80	69	81	69	81	69	82	69	84	69
200	80	69	80	69	79	69	79	69	79	69	79	69	79	69	80	69	80	69	81	69	81	69	82	69	84	69
210	80	69	80	69	79	69	79	69	79	69	79	69	79	69	80	69	80	69	81	69	81	69	82	69	84	69
220	80	69	80	69	79	69	79	69	79	69	79	69	79	69	80	69	80	69	81	69	81	69	82	69	84	69
230	80	69	80	69	79	69	79	69	79	69	79	69	79	69	80	69	80	69	81	69	81	69	82	69	84	69
240	80	69	80	69	79	69	79	69	79	69	79	69	79	69	80	69	80	69	81	69	81	69	82	69	84	69
250	80	69	80	69	79	69	79	69	79	69	79	69	79	69	80	69	80	69	81	69	81	69	82	69	84	69
260	80	69	80	69	79	69	79	69	79	69	79	69	79	69	80	69	80	69	81	69	81	69	82	69	84	69
270	80	69	80	69	79	69	79	69	79	69	79	69	79	69	80	69	80	69	81	69	81	69	82	69	84	69
280	80	69	80	69	79	69	79	69	79	69	79	69	79	69	80	69	80	69	81	69	81	69	82	69	84	69
290	80	69	80	69	79	69	79	69	79	69	79	69	79	69	80	69	80	69	81	69	81	69	82	69	84	69
300	80	69	80	69	79	69	79	69	79	69	79	69	79	69	80	69	80	69	81	69	81	69	82	69	84	69
310	80	69	80	69	79	69	79	69	79	69	79	69	79	69	80	69	80	69	81	69	81	69	82	69	84	69
320	80	69	80	69	79	69	79	69	79	69	79	69	79	69	80	69	80	69	81	69	81	69	82	69	84	69
330	80	69	80	69	79	69	79	69	79	69	79	69	79	69	80	69	80	69	81	69	81	69	82	69	84	69
340	80	69	80	69	79	69	79	69	79	69	79	69	79	69	80	69	80	69	81	69	81	69	82	69	84	69
350	80	69	80	69	79	69	79	69	79	69	79	69	79	69	80	69	80	69	81	69	81	69	82	69	84	69
360	80	69	80	69	79	69	79	69	79	69	79	69	79	69	80	69	80	69	81	69	81	69	82	69	84	69
370	80	69	80	69	79	69	79	69	79	69	79	69	79	69	80	69	80	69	81	69	81	69	82	69	84	69
380	80	69	80	69	79	69	79	69	79	69	79	69	79	69	80	69	80	69	81	69	81	69	82	69	84	69
390	80	69	80	69	79	69	79	69	79	69	79	69	79	69	80	69	80	69	81	69	81	69	82	69	84	69
400	80	69	80	69	79	69	79	69	79	69	79	69	79	69	80	69	80	69	81	69	81	69	82	69	84	69
410	80	69	80	69	79	69	79	69	79	69	79	69	79	69	80	69	80	69	81	69	81	69	82	69	84	69
420	80	69	80	69	79	69	79	69	79	69	79	69	79	69	80	69	80	69	81	69	81	69	82	69	84	69
430	80	69	80	69	79	69	79	69	79	69	79	69	79	69	80	69	80	69	81	69	81	69	82	69	84	69
440	80	69	80	69	79	69	79	69	79	69	79	69	79	69	80	69	80	69	81	69	81	69	82	69	84	69
450	80	69	80	69	79	69	79	69	79	69	79	69	79	69	80	69	80	69	81	69	81	69	82	69	84	69
460	80	69	80	69	79	69	79	69	79	69	79	69	79	69	80	69	80	69	81	69	81	69	82	69	84	69
470	80	69	80	69	79	69	79	69	79	69	79	69	79	69	80	69	80	69	81	69	81	69	82	69	84	69
480	80	69	80	69	79	69	79	69	79	69	79	69	79	69	80	69	80	69	81	69	81	69	82	69	84	69
490	80	69	80	69	79	69	79	69	79	69	79	69	79	69	80	69	80	69	81	69	81	69	82	69	84	69
500	80	69	80	69	79	69	79	69	79	69	79	69	79	69	80	69	80	69	81	69	81	69	82	69	84	69
510	80	69	80	69	79	69	79	69	79	69	79	69	79	69	80	69	80	69	81	69	81	69	82	69	84	69
520	80	69	80	69	79	69	79	69	79	69	79	69	79	69	80	69	80	69	81	69	81	69	82	69	84	69
530	80	69	80	69	79	69	79	69	79	69	79	69	79	69	80	69	80	69	81	69	81	69	82	69	84	69
540	80	69	80	69	79	69	79	69	79	69	79	69	79	69	80	69	80	69	81	69	81	69	82	69	84	69
550	80	69	80	69	79	69	79	69	79	69	79	69	79	69	80	69	80	69	81	69	81	69	82	69	84	69
560	82	69	82	69	83	69	83	69	83	69	83	69	84	69	84	69	84	69	84	69	85	69	85	69	85	69
570	82	69	82	69	83	69	83	69	83	69	83	69	84	69	84	69	84	69	84	69	85	69	85	69	85	69
580	82	69	82	69	83	69	83	69	83	69	83	69	84	69	84	69	84	69	84	69	85	69	85	69	85	69
590	82	69	82	69	83	69	83	69	83	69	83	69	84	69	84	69	84	69	84	69	85	69	85	69	85	69
600	82	69	82	69	83	69	83	69	83	69	83	69	84	69	84	69	84	69	84	69	85	69	85	69	85	69
610	82	69	82	69	83	69	83	69	83	69	83	69	84	69	84	69	84	69	84	69	85	69	85	69	85	69
620	82	69	82	69	83	69	83	69	83	69	83	69	84	69	84	69	84	69	84	69	85	69	85	69	85	69
630	82	69	82	69	83	69	83	69	83	69	83	69	84	69	84	69	84	69	84	69	85	69	85	69	85	69
640	82	69	82	69	83	69	83	69	83	69	83	69	84	69	84	69	84	69	84	69	85	69	85	69	85	69
650	82	69	82	69	83	69	83	69	83	69	83	69	84	69	84	69	84	69	84	69	85	69	85	69	85	69
660	83	69	83	69	83	69	83	69	83	69	83	69	84	69	84	69	84	69	85	69	86	69	87	69	88	69
670	83	69	83	69	83	69	83	69	83	69	83	69	84	69	84	69	84	69	85	69	86	69	87	69	88	69
680	83	69	83	69	83	69	83	69	83	69	83	69	84	69	84	69	84	69	85	69	86	69	87	69	88	69
690	83	69	83	69	83	69	83	69	83	69	83	69	84	69	84	69	84	69	85	69	86	69	87	69	88	69
700	83	69	83	69	83	69	83	69	83	69	83	69	84	69	84	69	84	69	85	69	86	69	87	69	88	69
710	83	69	83	69	83	69	83	69	83	69	83	69	84	69	84	69	84	69	85	69	86	69	87	69	88	69
720	83	69	83	69	83	69	83	69	83	69	83	69	84	69	84	69	84	69	85	69	86	69	87	69	88	69
730	83	69	83	69	83	69	83	69	83	69	83	69	84	69	84	69	84	69	85	69	86	69	87	69	88	69
740	83	69	83	69	83	69	83	69	83	69	83	69	84	69	84	69	84	69	85	69	86	69	87	69	88	69
750	83	69	83	69	83	69	83	69	83	69	83	69	84	69	84	69	84	69	85	69	86	69	87	69	88	69
760	83	70	83	70	83	69	83	69	83	69	83	69	84	69	84	69	84	69	85	69	86	69	87	70	88	70
770	83	70	83	70	83	69	83	69	83	69	83	69	84	69	84	69	84	69	85	69	86	69	87	70	88	70
780	83	70	83	70	83	69	83	69	83	69	83	69	84	69	84	69	84	69	85	69	86	69	87	70	88	70
790	83	70	83	70	83	69	83	69	83	69	83	69	84	69	84	69	84	69	85	69	86	69	87	70	88	70
800	83	70	83	70	83	69	83	69	83	69	83	69	84	69	84	69	84	69	85	69	86	69	87	70	88	70
810	83	70	83	70	83	69	83	69	83	69	83	69	84	69	84	69	84	69	85	69	86	69	87	70	88	70
820	83	70	83	70	83	69	83	69	83	69	83	69	84	69	84	69	84	69	85	69	86	69	87	70	88	70
830	83	70	83	70	83	69	83	69	83	69	83	69	84	69	84	69	84	69	85	69	86	69	87	70	88	70
840	83	70	83	70	83	69	83	69	83	69	83	69	84	69	84	69	84	69	85	69	86	69	87	70	88	70
850	83	70	83	70	83	69	83	69	83	69	83	69	84	69	84	69	84	69	85	69	86	69	87	70	88	70
860	83	70	83	70	83	69	83	69	83	69	83	69	84	69	84	69	84	69	85	69	86	69	87	70	88	70
870	83	70	83	70	83	69	83	69	83	69	83	69	84	69	84	69	84	69	85	69	86	69	87	70	88	70
880	83	70	83	70	83	69	83	69	83	69	83	69	84	69	84	69	84	69	85	69	86	69	87	70	88	70
890	83	70	83	70	83	69	83	69	83	69	83	69	84	69	84	69	84	69	85	69	86	69	87	70	88	70
900							83	69	83	69	83	69	84	69	84	69	84	69	85	69	86	69	87	70		
910							83	69	83	69	83	69	84	69	84	69	84	69	85	69	86	69	87	70		
920							83	69	83	69	83	69	84	69	84	69	84	69	85	69	86	69	87	70		
930							83	69	83	69	83	69	84	69	84	69	84	69	85	69	86	69	87	70		
940							83	69	83	69	83	69	84	69	84	69	84	69	85	69	86	69	87	70		
950							83	69	83	69	83	69	84	69	84	69	84	69	85	69	86	69	87	70		
960							81	69	81	69	82	69	82	69	83	69	84	69	85	69	86	69	87	69		
970							81	69	81	69	82	69	82	69	83	69	84	69	85	69	86	69	87	69		
980							81	69	81	69	82	69	82	69	83	69	84	69	85	69	86	69	87	69		
990							81	69	81	69	82	69	82	69	83	69	84	69	85	69	86	69	87	69		
1000											82	69	82	69	83	69	84	69	85	69						

13.7.2 Sound power level [dB(A)]

If the texts of the tables are not provided in the chosen language, a translation can be found here.

	Table legend
A	Sound power level [dB(A)]
B	Without sound enclosure
C	With sound enclosure
D	Speed [min^{-1}]
E	Pressure [mbar]

Tab. 66 Sound power level, legend

BB 69 C pr

A:Schallleistungspegel/Sound power level [dB(A)]
B:ohne Schalldämmhaube/without sound enclosure C:mit Schalldämmhaube/with sound enclosure

(D) Drehzahl/Speed [min-1]	2600		2750		3260		3430		3630		3840		4050		4270		4530		4850		5180		5480		5800	
(E) Druck/Pressure [mbar]	B	C	B	C	B	C	B	C	B	C	B	C	B	C	B	C	B	C	B	C	B	C	B	C	B	C
170	94	85	94	85	94	85	94	85	95	85	95	85	95	85	95	85	96	85	96	85	97	85	98	85	98	85
180	94	85	94	85	94	85	94	85	95	85	95	85	95	85	95	85	96	85	96	85	97	85	98	85	98	85
190	94	85	94	85	94	85	94	85	95	85	95	85	95	85	95	85	96	85	96	85	97	85	98	85	98	85
200	94	85	94	85	94	85	94	85	95	85	95	85	95	85	95	85	96	85	96	85	97	85	98	85	98	85
210	94	85	94	85	94	85	94	85	95	85	95	85	95	85	95	85	96	85	96	85	97	85	98	85	98	85
220	94	85	94	85	94	85	94	85	95	85	95	85	95	85	95	85	96	85	96	85	97	85	98	85	98	85
230	94	85	94	85	94	85	94	85	95	85	95	85	95	85	95	85	96	85	96	85	97	85	98	85	98	85
240	94	85	94	85	94	85	94	85	95	85	95	85	95	85	95	85	96	85	96	85	97	85	98	85	98	85
250	94	85	94	85	94	85	94	85	95	85	95	85	95	85	95	85	96	85	96	85	97	85	98	85	98	85
260	94	85	94	85	94	85	94	85	95	85	95	85	95	85	95	85	96	85	96	85	97	85	98	85	98	85
270	94	85	94	85	94	85	94	85	95	85	95	85	95	85	95	85	96	85	96	85	97	85	98	85	98	85
280	94	85	94	85	94	85	94	85	95	85	95	85	95	85	95	85	96	85	96	85	97	85	98	85	98	85
290	94	85	94	85	94	85	94	85	95	85	95	85	95	85	95	85	96	85	96	85	97	85	98	85	98	85
300	94	85	94	85	94	85	94	85	95	85	95	85	95	85	95	85	96	85	96	85	97	85	98	85	98	85
310	94	85	94	85	94	85	94	85	95	85	95	85	95	85	95	85	96	85	96	85	97	85	98	85	98	85
320	94	85	94	85	94	85	94	85	95	85	95	85	95	85	95	85	96	85	96	85	97	85	98	85	98	85
330	94	85	94	85	94	85	94	85	95	85	95	85	95	85	95	85	96	85	96	85	97	85	98	85	98	85
340	94	85	94	85	94	85	94	85	95	85	95	85	95	85	95	85	96	85	96	85	97	85	98	85	98	85
350	94	85	94	85	94	85	94	85	95	85	95	85	95	85	95	85	96	85	96	85	97	85	98	85	98	85
360	94	85	94	85	94	85	94	85	95	85	95	85	95	85	95	85	96	85	96	85	97	85	98	85	98	85
370	94	85	94	85	94	85	94	85	95	85	95	85	95	85	95	85	96	85	96	85	97	85	98	85	98	85
380	94	85	94	85	94	85	94	85	95	85	95	85	95	85	95	85	96	85	96	85	97	85	98	85	98	85
390	94	85	94	85	94	85	94	85	95	85	95	85	95	85	95	85	96	85	96	85	97	85	98	85	98	85
400	94	85	94	85	94	85	94	85	95	85	95	85	95	85	95	85	96	85	96	85	97	85	98	85	98	85
410	94	85	94	85	94	85	94	85	95	85	95	85	95	85	95	85	96	85	96	85	97	85	98	85	98	85
420	94	85	94	85	94	85	94	85	95	85	95	85	95	85	95	85	96	85	96	85	97	85	98	85	98	85
430	94	85	94	85	94	85	94	85	95	85	95	85	95	85	95	85	96	85	96	85	97	85	98	85	98	85
440	94	85	94	85	94	85	94	85	95	85	95	85	95	85	95	85	96	85	96	85	97	85	98	85	98	85
450	94	85	94	85	94	85	94	85	95	85	95	85	95	85	95	85	96	85	96	85	97	85	98	85	98	85
460	94	85	94	85	94	85	94	85	95	85	95	85	95	85	95	85	96	85	96	85	97	85	98	85	98	85
470	94	85	94	85	94	85	94	85	95	85	95	85	95	85	95	85	96	85	96	85	97	85	98	85	98	85
480	94	85	94	85	94	85	94	85	95	85	95	85	95	85	95	85	96	85	96	85	97	85	98	85	98	85
490	94	85	94	85	94	85	94	85	95	85	95	85	95	85	95	85	96	85	96	85	97	85	98	85	98	85
500	94	85	94	85	94	85	94	85	95	85	95	85	95	85	95	85	96	85	96	85	97	85	98	85	98	85
510	94	85	94	85	94	85	94	85	95	85	95	85	95	85	95	85	96	85	96	85	97	85	98	85	98	85
520	94	85	94	85	94	85	94	85	95	85	95	85	95	85	95	85	96	85	96	85	97	85	98	85	98	85
530	94	85	94	85	94	85	94	85	95	85	95	85	95	85	95	85	96	85	96	85	97	85	98	85	98	85
540	94	85	94	85	94	85	94	85	95	85	95	85	95	85	95	85	96	85	96	85	97	85	98	85	98	85
550	94	85	94	85	94	85	94	85	95	85	95	85	95	85	95	85	96	85	96	85	97	85	98	85	98	85
560	97	85	97	85	97	85	97	85	97	85	98	85	98	85	98	85	99	85	99	85	100	85	100	85	101	85
570	97	85	97	85	97	85	97	85	97	85	98	85	98	85	98	85	99	85	99	85	100	85	100	85	101	85
580	97	85	97	85	97	85	97	85	97	85	98	85	98	85	98	85	99	85	99	85	100	85	100	85	101	85
590	97	85	97	85	97	85	97	85	97	85	98	85	98	85	98	85	99	85	99	85	100	85	100	85	101	85
600	97	85	97	85	97	85	97	85	97	85	98	85	98	85	98	85	99	85	99	85	100	85	100	85	101	85
610	97	85	97	85	97	85	97	85	97	85	98	85	98	85	98	85	99	85	99	85	100	85	100	85	101	85
620	97	85	97	85	97	85	97	85	97	85	98	85	98	85	98	85	99	85	99	85	100	85	100	85	101	85
630	97	85	97	85	97	85	97	85	97	85	98	85	98	85	98	85	99	85	99	85	100	85	100	85	101	85
640	97	85	97	85	97	85	97	85	97	85	98	85	98	85	98	85	99	85	99	85	100	85	100	85	101	85
650	97	85	97	85	97	85	97	85	97	85	98	85	98	85	98	85	99	85	99	85	100	85	100	85	101	85
660	97	85	97	85	97	85	97	85	97	85	98	85	98	85	98	85	99	85	100	85	101	85	102	85	103	88
670	97	85	97	85	97	85	97	85	97	85	98	85	98	85	98	85	99	85	100	85	101	85	102	85	103	88
680	97	85	97	85	97	85	97	85	97	85	98	85	98	85	98	85	99	85	100	85	101	85	102	85	103	88
690	97	85	97	85	97	85	97	85	97	85	98	85	98	85	98	85	99	85	100	85	101	85	102	85	103	88
700	97	85	97	85	97	85	97	85	97	85	98	85	98	85	98	85	99	85	100	85	101	85	102	85	103	88
710	97	85	97	85	97	85	97	85	97	85	98	85	98	85	98	85	99	85	100	85	101	85	102	85	103	88
720	97	85	97	85	97	85	97	85	97	85	98	85	98	85	98	85	99	85	100	85	101	85	102	85	103	88
730	97	85	97	85	97	85	97	85	97	85	98	85	98	85	98	85	99	85	100	85	101	85	102	85	103	88
740	97	85	97	85	97	85	97	85	97	85	98	85	98	85	98	85	99	85	100	85	101	85	102	85	103	88
750	97	85	97	85	97	85	97	85	97	85	98	85	98	85	98	85	99	85	100	85	101	85	102	85	103	88
760	97	85	97	85	97	85	97	85	97	85	98	85	98	85	98	85	99	85	100	85	101	85	102	85	103	88
770	97	85	97	85	97	85	97	85	97	85	98	85	98	85	98	85	99	85	100	85	101	85	102	85	103	88
780	97	85	97	85	97	85	97	85	97	85	98	85	98	85	98	85	99	85	100	85	101	85	102	85	103	88
790	97	85	97	85	97	85	97	85	97	85	98	85	98	85	98	85	99	85	100	85	101	85	102	85	103	88
800					97	85	97	85	97	85	98	85	98	85	98	85	99	85	100	85	101	85	102	85	103	88
810					97	85	97	85	97	85	98	85	98	85	98	85	99	85	100	85	101	85	102	85	103	88
820					97	85	97	85	97	85	98	85	98	85	98	85	99	85	100	85	101	85	102	85	103	88
830					97	85	97	85	97	85	98	85	98	85	98	85	99	85	100	85	101	85	102	85	103	88
840					97	85	97	85	97	85	98	85	98	85	98	85	99	85	100	85	101	85	102	85	103	88
850					97	85	97	85	97	85	98	85	98	85	98	85	99	85	100	85	101	85	102	85	103	88
860					97	85	97	85	97	85	98	85	98	85	98	85	99	85	100	85	101	85	102	85	103	88
870					97	85	97	85	97	85	98	85	98	85	98	85	99	85	100	85	101	85	102	85	103	88
880					97	85	97	85	97	85	98	85	98	85	98	85	99	85	100	85	101	85	102	85	103	88
890					97	85	97	85	97	85	98	85	98	85	98	85	99	85	100	85	101	85	102	85	103	88
900									97	85	98	85	98	85	98	85	99	85	100	85	101	85	102	85	103	88
910									97	85	98	85	98	85	98	85	99	85	100	85	101	85	102	85	103	88
920									97	85	98	85	98	85	98	85	99	85	100	85	101	85	102	85	103	88
930									97	85	98	85	98	85	98	85	99	85	100	85	101	85	102	85	103	88
940									97	85	98	85	98	85	98	85	99	85	100	85	101	85	102	85	103	88
950									97	85	98	85	98	85	98	85	99	85	100	85	101	85	102	85	103	88
960									97	85	98	85	98	85	98	85	99	85	100	85	101	85	102	85	104	88
970									97	85	98	85	98	85	98	85	99	85	100	85	101	85	102	85	104	88
980									97	85	98	85	98	85	98	85	99	85	100	85	101	85	102	85	104	88
990									97	85	98	85	98	85	98	85	99	85	100	85	101	85	102	85	104	88
1000													98	85	98	85	99	85	100	85	101	85	102	85	104	88

BB 89 C pr

A:Schallleistungspegel/Sound power level [dB(A)]
B:ohne Schalldämmhaube/without sound enclosure C:mit Schalldämmhaube/with sound enclosure

(D) Drehzahl/Speed [min-1]	2600		2750		3260		3430		3630		3840		4050		4270		4530		4850		5180		5480		5800	
(E) Druck/Pressure [mbar]	B	C	B	C	B	C	B	C	B	C	B	C	B	C	B	C	B	C	B	C	B	C	B	C	B	C
170	95	85	95	85	94	85	94	85	94	85	94	85	94	85	95	85	95	85	96	85	96	85	97	85	99	85
180	95	85	95	85	94	85	94	85	94	85	94	85	94	85	95	85	95	85	96	85	96	85	97	85	99	85
190	95	85	95	85	94	85	94	85	94	85	94	85	94	85	95	85	95	85	96	85	96	85	97	85	99	85
200	95	85	95	85	94	85	94	85	94	85	94	85	94	85	95	85	95	85	96	85	96	85	97	85	99	85
210	95	85	95	85	94	85	94	85	94	85	94	85	94	85	95	85	95	85	96	85	96	85	97	85	99	85
220	95	85	95	85	94	85	94	85	94	85	94	85	94	85	95	85	95	85	96	85	96	85	97	85	99	85
230	95	85	95	85	94	85	94	85	94	85	94	85	94	85	95	85	95	85	96	85	96	85	97	85	99	85
240	95	85	95	85	94	85	94	85	94	85	94	85	94	85	95	85	95	85	96	85	96	85	97	85	99	85
250	95	85	95	85	94	85	94	85	94	85	94	85	94	85	95	85	95	85	96	85	96	85	97	85	99	85
260	95	85	95	85	94	85	94	85	94	85	94	85	94	85	95	85	95	85	96	85	96	85	97	85	99	85
270	95	85	95	85	94	85	94	85	94	85	94	85	94	85	95	85	95	85	96	85	96	85	97	85	99	85
280	95	85	95	85	94	85	94	85	94	85	94	85	94	85	95	85	95	85	96	85	96	85	97	85	99	85
290	95	85	95	85	94	85	94	85	94	85	94	85	94	85	95	85	95	85	96	85	96	85	97	85	99	85
300	95	85	95	85	94	85	94	85	94	85	94	85	94	85	95	85	95	85	96	85	96	85	97	85	99	85
310	95	85	95	85	94	85	94	85	94	85	94	85	94	85	95	85	95	85	96	85	96	85	97	85	99	85
320	95	85	95	85	94	85	94	85	94	85	94	85	94	85	95	85	95	85	96	85	96	85	97	85	99	85
330	95	85	95	85	94	85	94	85	94	85	94	85	94	85	95	85	95	85	96	85	96	85	97	85	99	85
340	95	85	95	85	94	85	94	85	94	85	94	85	94	85	95	85	95	85	96	85	96	85	97	85	99	85
350	95	85	95	85	94	85	94	85	94	85	94	85	94	85	95	85	95	85	96	85	96	85	97	85	99	85
360	95	85	95	85	94	85	94	85	94	85	94	85	94	85	95	85	95	85	96	85	96	85	97	85	99	85
370	95	85	95	85	94	85	94	85	94	85	94	85	94	85	95	85	95	85	96	85	96	85	97	85	99	85
380	95	85	95	85	94	85	94	85	94	85	94	85	94	85	95	85	95	85	96	85	96	85	97	85	99	85
390	95	85	95	85	94	85	94	85	94	85	94	85	94	85	95	85	95	85	96	85	96	85	97	85	99	85
400	95	85	95	85	94	85	94	85	94	85	94	85	94	85	95	85	95	85	96	85	96	85	97	85	99	85
410	95	85	95	85	94	85	94	85	94	85	94	85	94	85	95	85	95	85	96	85	96	85	97	85	99	85
420	95	85	95	85	94	85	94	85	94	85	94	85	94	85	95	85	95	85	96	85	96	85	97	85	99	85
430	95	85	95	85	94	85	94	85	94	85	94	85	94	85	95	85	95	85	96	85	96	85	97	85	99	85
440	95	85	95	85	94	85	94	85	94	85	94	85	94	85	95	85	95	85	96	85	96	85	97	85	99	85
450	95	85	95	85	94	85	94	85	94	85	94	85	94	85	95	85	95	85	96	85	96	85	97	85	99	85
460	95	85	95	85	94	85	94	85	94	85	94	85	94	85	95	85	95	85	96	85	96	85	97	85	99	85
470	95	85	95	85	94	85	94	85	94	85	94	85	94	85	95	85	95	85	96	85	96	85	97	85	99	85
480	95	85	95	85	94	85	94	85	94	85	94	85	94	85	95	85	95	85	96	85	96	85	97	85	99	85
490	95	85	95	85	94	85	94	85	94	85	94	85	94	85	95	85	95	85	96	85	96	85	97	85	99	85
500	95	85	95	85	94	85	94	85	94	85	94	85	94	85	95	85	95	85	96	85	96	85	97	85	99	85
510	95	85	95	85	94	85	94	85	94	85	94	85	94	85	95	85	95	85	96	85	96	85	97	85	99	85
520	95	85	95	85	94	85	94	85	94	85	94	85	94	85	95	85	95	85	96	85	96	85	97	85	99	85
530	95	85	95	85	94	85	94	85	94	85	94	85	94	85	95	85	95	85	96	85	96	85	97	85	99	85
540	95	85	95	85	94	85	94	85	94	85	94	85	94	85	95	85	95	85	96	85	96	85	97	85	99	85
550	95	85	95	85	94	85	94	85	94	85	94	85	94	85	95	85	95	85	96	85	96	85	97	85	99	85
560	97	85	97	85	98	85	98	85	98	85	98	85	99	85	99	85	99	85	99	85	100	85	100	85	100	85
570	97	85	97	85	98	85	98	85	98	85	98	85	99	85	99	85	99	85	99	85	100	85	100	85	100	85
580	97	85	97	85	98	85	98	85	98	85	98	85	99	85	99	85	99	85	99	85	100	85	100	85	100	85
590	97	85	97	85	98	85	98	85	98	85	98	85	99	85	99	85	99	85	99	85	100	85	100	85	100	85
600	97	85	97	85	98	85	98	85	98	85	98	85	99	85	99	85	99	85	99	85	100	85	100	85	100	85
610	97	85	97	85	98	85	98	85	98	85	98	85	99	85	99	85	99	85	99	85	100	85	100	85	100	85
620	97	85	97	85	98	85	98	85	98	85	98	85	99	85	99	85	99	85	99	85	100	85	100	85	100	85
630	97	85	97	85	98	85	98	85	98	85	98	85	99	85	99	85	99	85	99	85	100	85	100	85	100	85
640	97	85	97	85	98	85	98	85	98	85	98	85	99	85	99	85	99	85	99	85	100	85	100	85	100	85
650	97	85	97	85	98	85	98	85	98	85	98	85	99	85	99	85	99	85	99	85	100	85	100	85	100	85
660	98	85	98	85	98	85	98	85	98	85	98	85	99	85	99	85	99	85	100	85	101	85	102	85	103	85
670	98	85	98	85	98	85	98	85	98	85	98	85	99	85	99	85	99	85	100	85	101	85	102	85	103	85
680	98	85	98	85	98	85	98	85	98	85	98	85	99	85	99	85	99	85	100	85	101	85	102	85	103	85
690	98	85	98	85	98	85	98	85	98	85	98	85	99	85	99	85	99	85	100	85	101	85	102	85	103	85
700	98	85	98	85	98	85	98	85	98	85	98	85	99	85	99	85	99	85	100	85	101	85	102	85	103	85
710	98	85	98	85	98	85	98	85	98	85	98	85	99	85	99	85	99	85	100	85	101	85	102	85	103	85
720	98	85	98	85	98	85	98	85	98	85	98	85	99	85	99	85	99	85	100	85	101	85	102	85	103	85
730	98	85	98	85	98	85	98	85	98	85	98	85	99	85	99	85	99	85	100	85	101	85	102	85	103	85
740	98	85	98	85	98	85	98	85	98	85	98	85	99	85	99	85	99	85	100	85	101	85	102	85	103	85
750	98	85	98	85	98	85	98	85	98	85	98	85	99	85	99	85	99	85	100	85	101	85	102	85	103	85
760	98	86	98	86	98	85	98	85	98	85	98	85	99	85	99	85	99	85	100	85	101	85	102	86	103	86
770	98	86	98	86	98	85	98	85	98	85	98	85	99	85	99	85	99	85	100	85	101	85	102	86	103	86
780	98	86	98	86	98	85	98	85	98	85	98	85	99	85	99	85	99	85	100	85	101	85	102	86	103	86
790	98	86	98	86	98	85	98	85	98	85	98	85	99	85	99	85	99	85	100	85	101	85	102	86	103	86
800	98	86	98	86	98	85	98	85	98	85	98	85	99	85	99	85	99	85	100	85	101	85	102	86	103	86
810	98	86	98	86	98	85	98	85	98	85	98	85	99	85	99	85	99	85	100	85	101	85	102	86	103	86
820	98	86	98	86	98	85	98	85	98	85	98	85	99	85	99	85	99	85	100	85	101	85	102	86	103	86
830	98	86	98	86	98	85	98	85	98	85	98	85	99	85	99	85	99	85	100	85	101	85	102	86	103	86
840	98	86	98	86	98	85	98	85	98	85	98	85	99	85	99	85	99	85	100	85	101	85	102	86	103	86
850	98	86	98	86	98	85	98	85	98	85	98	85	99	85	99	85	99	85	100	85	101	85	102	86	103	86
860	98	86	98	86	98	85	98	85	98	85	98	85	99	85	99	85	99	85	100	85	101	85	102	86	103	86
870	98	86	98	86	98	85	98	85	98	85	98	85	99	85	99	85	99	85	100	85	101	85	102	86	103	86
880	98	86	98	86	98	85	98	85	98	85	98	85	99	85	99	85	99	85	100	85	101	85	102	86	103	86
890	98	86	98	86	98	85	98	85	98	85	98	85	99	85	99	85	99	85	100	85	101	85	102	86	103	86
900							98	85	98	85	98	85	99	85	99	85	99	85	100	85	101	85	102	86		
910							98	85	98	85	98	85	99	85	99	85	99	85	100	85	101	85	102	86		
920							98	85	98	85	98	85	99	85	99	85	99	85	100	85	101	85	102	86		
930							98	85	98	85	98	85	99	85	99	85	99	85	100	85	101	85	102	86		
940							98	85	98	85	98	85	99	85	99	85	99	85	100	85	101	85	102	86		
950							98	85	98	85	98	85	99	85	99	85	99	85	100	85	101	85	102	86		
960							96	85	96	85	97	85	97	85	98	85	99	85	100	85	101	85	102	85		
970							96	85	96	85	97	85	97	85	98	85	99	85	100	85	101	85	102	85		
980							96	85	96	85	97	85	97	85	98	85	99	85	100	85	101	85	102	85		
990							96	85	96	85	97	85	97	85	98	85	99	85	100	85	101	85	102	85		
1000											97	85	97	85	98	85	99	85	100	85						

13.8 BB 52 C pr : Customer-specific design data

If the customer-specific data sheet is not available in the chosen language, a translation can be found here.

The identity sheet lists all design versions possible.

Specifications not relevant to your specific design are hidden when generating the design data.

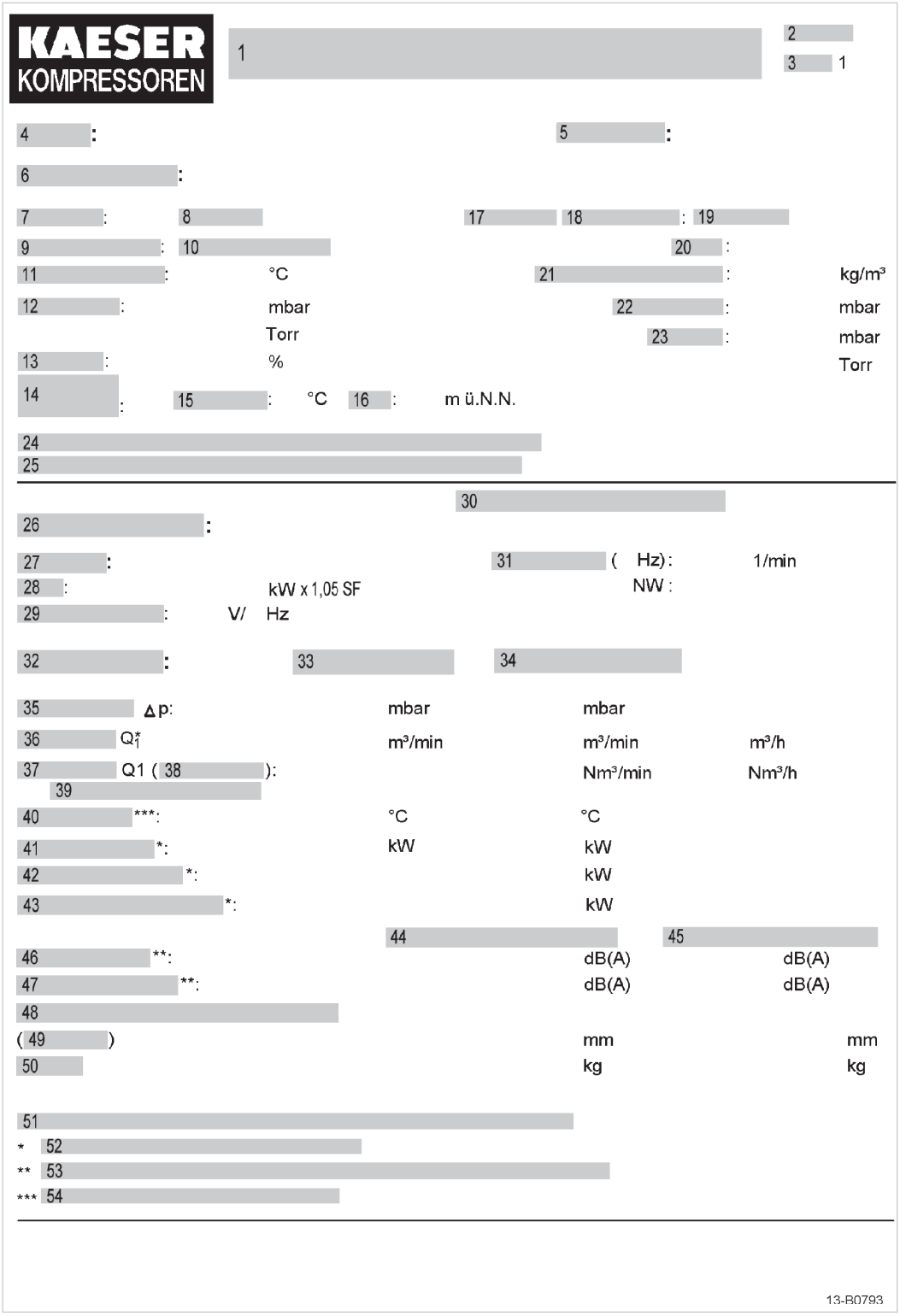

Fig. 48 Identification sheet - standard

Legend

1	OMEGA/OMEGA PLUS ROTARY BLOWER CHOICE OF VERSIONS
2	Date
3	Page
4	Project
5	Person in charge
6	Specification
7	Operating mode
8	Gauge pressure
9	Type of machine
10	Compact machine
11	Inlet temperature
12	Inlet pressure
13	Humidity
14	Ambient conditions
15	Temperature
16	Height
17	User-defined
18	Delivery medium
19	Dry air Humid air Nitrogen
20	Kappa
21	Density in standard state
22	Pressure differential
23	Final pressure
24	—
25	Note! If the ambient temperature is above 40 °C, please consult KAESER.
26	Technical Specification
27	Model
28	Motor
29	Power supply
30	Calculation with more powerful motor Calculation with motor 2-steps more powerful.
31	Block RPM
32	Operating data
33	Maximum loading
34	Design condition
35	Pressure differential

36	Delivery
37	Delivery
38	Standard condition
39	For 0 °C and 1013 mbar
40	Discharge temperature
41	Effective motor power
42	Motor shaft power
43	Drive power at the block
44	Without sound enclosure
45	With sound enclosure
46	Sound pressure level
47	Sound power level
48	Dimensions (dependent on motor manufacturer)
49	(LxDxH)
50	Weight
51	Ambient conditions are taken into account when calculating the motor power.
52	Performance data according to ISO 1217, part 1, annex C
53	Measured according to DIN EN ISO 2151, specification ± 3 dB(A), with sound insulated pipework and/or fitted discharge silencer.
54	Recommended theoretical arithmetic value

Tab. 67 Legend for the identification sheet (standard)

PART H

CERTIFICATE

bsi.

By Royal Charter

Certificate of Registration

QUALITY MANAGEMENT SYSTEM - ISO 9001:2015

This is to certify that:

Trojan Technologies
3020 Gore Road
London
Ontario
N5V 4T7
Canada

Holds Certificate No: **FM 63961**

and operates a Quality Management System which complies with the requirements of ISO 9001:2015 for the following scope:

Research, engineering, manufacture, sales and service of ultraviolet (UV) light technologies for wastewater, industrial, marine and drinking water disinfection applications, and for the destruction of pollutants in liquid streams.

For and on behalf of BSI:

Chief Operating Officer Assurance - Americas

Original Registration Date: 1998-03-27
Effective Date: 2018-07-11
Latest Revision Date: 2018-06-07
Expiry Date: 2021-07-10

...making excellence a habit.™

This certificate remains the property of BSI and shall be returned immediately upon request.
An electronic certificate can be authenticated online. Printed copies can be validated at www.bsigroup.com/ClientDirectory
To be read in conjunction with the scope above or the attached appendix.
Information and Contact: BSI, Kitemark Court, Davy Avenue, Knowlhill, Milton Keynes MK5 8PP. Tel: + 44 345 080 9000
BSI Assurance UK Limited, registered in England under number 7805321 at 389 Chiswick High Road, London W4 4AL, UK.
A Member of the BSI Group of Companies.

bsi.

By Royal Charter

Certificate of Registration

ENVIRONMENTAL MANAGEMENT SYSTEM - ISO 14001:2015

This is to certify that:

Trojan Technologies
3020 Gore Road
London
Ontario
N5V 4T7
Canada

Holds Certificate No: **EMS 633149**

and operates an Environmental Management System which complies with the requirements of ISO 14001:2015 for the following scope:

The environmental management system for the control of risks associated with the engineering and assembly of ultraviolet (UV) light technologies for wastewater, industrial, and drinking water disinfection applications, and for the destruction of pollutants in liquid streams.

For and on behalf of BSI:

Carlos Pitanga, SVP, System Certification and Compliance

Original Registration Date: 2016-03-08
Latest Revision Date: 2017-08-11

Effective Date: 2017-08-11
Expiry Date: 2019-03-07

...making excellence a habit.™

This certificate remains the property of BSI and shall be returned immediately upon request.
An electronic certificate can be authenticated online. Printed copies can be validated at www.bsigroup.com/ClientDirectory
To be read in conjunction with the scope above or the attached appendix.
Information and Contact: BSI, Kitemark Court, Davy Avenue, Knowlhill, Milton Keynes MK5 8PP. Tel: + 44 345 080 9000
BSI Assurance UK Limited, registered in England under number 7805321 at 389 Chiswick High Road, London W4 4AL, UK.
A Member of the BSI Group of Companies.

bsi.

By Royal Charter

Certificate of Registration

OCCUPATIONAL HEALTH & SAFETY MANAGEMENT SYSTEM

This is to certify that:

Trojan Technologies
3020 Gore Road
London
Ontario
N5V 4T7
Canada

Holds Certificate No: **OHS 633150**

and operates an Occupational Health and Safety Management System which complies with the requirements of BS OHSAS 18001:2007 for the following scope:

The health and safety management system for the control of risks associated with the engineering and assembly of ultraviolet (UV) light technologies for wastewater, industrial, and drinking water disinfection applications, and for the destruction of pollutants in liquid streams.

For and on behalf of BSI:

Reg Blake, VP Regulatory Affairs, BSI Group America Inc.

Original Registration Date: 03/08/2016
Latest Revision Date: 03/08/2016

Effective Date: 03/08/2016
Expiry Date: 09/07/2019

...making excellence a habit.™

This certificate remains the property of BSI and shall be returned immediately upon request.
An electronic certificate can be authenticated online. Printed copies can be validated at www.bsigroup.com/ClientDirectory
To be read in conjunction with the scope above or the attached appendix.
Information and Contact: BSI, Kitemark Court, Davy Avenue, Knowlhill, Milton Keynes MK5 8PP. Tel: + 44 845 080 9000
BSI Assurance UK Limited, registered in England under number 7805321 at 389 Chiswick High Road, London W4 4AL, UK.
A Member of the BSI Group of Companies.

EC Declaration of Conformity

The undersigned, representing the following manufacturer and the authorized representative established within the Community:

Salsnes Filter AS
Verftsgata 11
P.O. Box 32
N-7801 Namsos
Norway

herewith declare that the product **Salsnes Filter**

Model Type: SF6000 **Serial Number: 480080**
Possible Model Types: SF:1000, SF:2000, SF:4000, SF:6000, SFK:200, SFK:400, SFK:600

is in conformity with the essential requirements laid down in council directives:

2006/42/EC	*Machinery Directive*
2014/30/EU	*EMC Directive*

and with reference to the following EU harmonized standards:

EN ISO 12100:2010	*Safety of machinery.*
EN 60204-1	*Safety of machinery – Electrical equipment of machines.*
EN 61439-1	*Low-voltage Switchgear and Control Gear Assemblies.*
EN 55011	*Group 1, Class A: Industrial, Scientific, and Medical (ISM) Radio-Frequency Equipment*
EN 61000-6-4	*Electromagnetic compatibility - Emission standard for industrial environments*

The related Technical File, as prepared by Salsnes Filter, is held at the offices of Salsnes Filter in Norway. This Declaration of Conformity for the above system will be used by Salsnes Filter, as an authorized representative established within the Community, in accordance with compiling a CE Declaration of Conformity for the entire project of which this complete CE marked system is part.

Manufacturer:

_____

Signature

Name: Tor Olav Lyng
Position: Manufacturing Manager
Date: _____

SAMPLE TEMPLATE

For:
Iqaluit WWTP Upgrade
Canada

Equipment:
SPECO Tank Mounted Screw Screen
Model GCPC600

Engineer:
Nunami Stantec Limited
Edmonton, AB T5K 2L6, Canada
Contact: Glenn Prosko
Phone: (780) 969-3258
Email: N/A

Contractor:
Kudlik Construction Ltd.
1519 Federal Road, P.O. Box 727
Iqaluit, Nunavut
X0A 0H0
Contact: Sandra Rousseau P. E.
Phone: 418-871-3368 ext 257
Email: srousseau@kudlik.biz

Manufacturer:
Enviro-Care
1570 St. Paul Ave
Gurnee IL 60031
Phone: (815) 636-8306
Fax: (847) 672-7968

Enviro-Care Contact:
Project Manager: Steven Eismin
Phone: (224) 302-0328
Email: seismin@enviro-care.com

Enviro-Care Project Number: WEC217259Z
August 2018

OWNER'S MANUAL

IQALUIT, NU

PROJECT NO: 480080

IMPORTANT CONTACTS

HEAD OFFICE - CANADA

Trojan Technologies
3020 Gore Road,
London, Ontario,
Canada, N5V 4T7
Tel.: +519 457 3400
Fax: +519 457 3030
http://www.trojanuv.com

TOLL FREE NUMBER:

1-800-291-0218

TOLL FREE FAX NUMBER:

1-800-291-0083

To schedule SERVICE or ORDER PARTS, contact:

1-800-291-0218

If you are unable to reach your Local Representative and have a TECHNICAL EMERGENCY, contact TROJAN TECHNOLOGIES' TECHNICAL ASSISTANCE CENTER:
Toll Free Phone: 1-866-388-0488
Email: TAC@Trojanuv.com

GLOBAL OFFICES

NORWAY
Salsnes Filter AS
P.O. Box 279
7801 Namsos, Norway
http://www.salsnes-filter.com

WASTE WATER TREATMENT PLANT UPGRADE

IQALUIT, NUNAVUT

VEOLIA Project 5000 218 036



Operation and Maintenance Manual
Volume 1

Prepared by:
Veolia Water Technologies Canada Inc.
4105, Sartelon
Montreal, Quebec, Canada
H4S 2B3
Tel.: 514-334-7230

Revision: 1
Date: September 2019

The system was manufactured in Canada by:

Veolia Water Technologies Canada
4105, Sartelon
Saint-Laurent, Qc.
Canada H4S 2B3
Phone: 514-334-7230
Fax: 514-334-5070

For technical support or service needs, for spare parts or to get assistance during your warranty period, you may contact us at the following number during regular business hours or write us at:

Veolia Water Technologies Canada – After Sales Support
1-844-SER-VWT9 | 1-844-737-8989 | vwtservicecanada@veolia.com

Our business hours are from:
Monday to Friday
8:30am to 5pm (EST)

Have the following information on hand for each request or call:

Project Name:
VWTC Reference Number:

TABLE OF CONTENTS
Operation & Maintenance Manual
Iqaluit – Waste Water Treatment Plant Upgrade

1 INTRODUCTION ..... VOLUME 1

1.1 GENERAL DESCRIPTION

2 SAFETY ..... VOLUME 1

2.1 GENERAL RECOMMENDATIONS

3 DRAWINGS ..... VOLUME 1

3.1 PROCESS AND INSTRUMENTATION DIAGRAM
3.2 HYDRAULIC PROFILE
3.3 GENERAL ARRANGEMENT DRAWINGS
3.4 FIELD INSTALLATION DRAWINGS

4 DETAILED TECHNICAL DOCUMENTATION ..... VOLUME 1

4.1 N/A
4.2 N/A
4.3 SHOP DRAWINGS SUBMITTAL PACKAGES
4.3.1 Spidflow DAF
4.3.1.1 Process Data Sheet
4.3.1.2 Scraper
4.3.1.3 Pumps
4.3.1.4 Strainers
4.3.1.5 White Water Diffusion Nozzles
4.3.1.6 Valves
4.3.1.7 Instrumentation
4.3.1.8 Paint Specifications
4.3.2 MBBR
4.3.2.1 Process Data Sheet
4.3.2.2 Supplier Technical Data Sheets
4.3.3 Blowers
4.3.3.1 Suppliers Technical Data Sheets

TABLE OF CONTENTS
Operation & Maintenance Manual
Iqaluit – Waste Water Treatment Plant Upgrade

4.3.4 Polymer Preparation System for Belt Filter Press – Hydra-Pol 500
4.3.4.1 Process Data Sheet
4.3.4.2 Supplier Technical Data Sheets
4.3.5 Polymer Preparation System for DAF – Hydra-Pol 250
4.3.5.1 Process Data Sheet
4.3.5.2 Supplier Technical Data Sheets
4.3.6 Duplex Polymer Dosing Skid for Belt Filter Press
4.3.6.1 Process Data Sheet
4.3.6.2 Pumps
4.3.6.3 Valves
4.3.6.4 Calibration Cylinder
4.3.6.5 Instrument
4.3.7 Triplex Polymer Dosing Skid for DAF
4.3.7.1 Process Data Sheet
4.3.7.2 Pumps
4.3.7.3 Valves
4.3.7.4 Calibration Cylinder
4.3.7.5 Instrument
4.3.8 Progressive Cavity Transfer Pumps
4.3.8.1 Supplier Technical Data Sheets
4.4 LIST OF SUPPLIERS
4.5 COMMISSIONING AND PERFORMANCE TEST REPORTS

5 ELECTRICITY AND CONTROL ..... VOLUME 1

5.1 CONTROL ARCHITECTURE
5.2 ELECTRICAL LOAD LIST
5.3 PROCESS FUNCTIONAL DESCRIPTION
5.3.1 MBBR
5.3.2 Spidflow DAF
5.3.3 Hydra-Pol 500 for Belt Filter Press Polymer
5.3.4 Hydra-Pol 250 for DAF Polymer
5.3.5 Polymer Dosing Skid for Belt Filter Press
5.3.6 Polymer Dosing Skid for DAF

TABLE OF CONTENTS
Operation & Maintenance Manual
Iqaluit – Waste Water Treatment Plant Upgrade

5.4 WIRING DIAGRAMS

5.5 EXCHANGE TABLE

6 OPERATION AND MAINTENANCE ..... VOLUME 1

6.1 MBBR

6.1.1 Handling, Storage and Installation Manual

6.1.2 Operation and Maintenance Manual

6.2 SPIDFLOW DAF

6.2.1 Installation, Operation and Maintenance Manual

6.3 HYDRA-POL POLYMER PREPARATION SYSTEM

6.3.1 Installation, Operation and Maintenance Manual

6.4 POLYMER DOSING SKID

6.4.1 Installation, Operation and Maintenance Manual

7 SPARE PARTS ..... VOLUME 1

8 MANUFACTURER MAINTENANCE MANUAL ..... VOLUME 2

8.1 MANUFACTURER LIST

8.2 MANUFACTURER INSTALLATION, OPERATION AND MAINTENANCE MANUAL

LEFT BLANK

OPERATION AND MAINTENANCE MANUAL

VOLUME 1

LEFT BLANK

1 – INTRODUCTION

1.1 – GENERAL DESCRIPTION

LEFT BLANK

Project General Description

Veolia Water Technologies Canada (VWT) was contracted by Pilitak Enterprises Ltd to supply part of the equipment for the upgrade of the wastewater treatment plant of the city of Iqaluit.

VWT is responsible for the supply of the equipment and the control system detailed in Veolia Proposal #TM95602 Rev.1.

The Iqaluit wastewater treatment facility is designed to treat municipal waste water. Following this upgrade, the Iqaluit wastewater treatment plant will be able to treat the 2041 peak hour flow target.

Following a primary treatment (not supplied by VWT), the primary effluent flows by gravity to two Moving Bed Biofilm Reactors (MBBR). Incoming flow is split into the two MBBR reactors. The MBBR reactor ensures the removal of BOD_5. MBBR is a fixed-film process, making it well suited for variable influent flow since the biomass remains within the biological reactor whatever the flow and reacts to changing loads automatically.

MBBR effluent is then clarified using floatation of the suspended solids in a separate downstream dissolved air floatation system (DAF) using Veolia's SPIDFLOW® technology. This secondary clarification step (DAF) ensures that the Total Suspended Solids (TSS) removal target is reached. SPIDFLOW® technology makes it possible to continuously separate solids in suspension for various water qualities through a dissolved air flotation process where air micro-bubbles get attached to suspended solids in order to make them float. The micro-bubbles are created by releasing a flow of pressurized water saturated with dissolved air. Particle and air agglomerations end up on the surface of the flotation unit, before being evacuated from the system by a surface scraper to a sludge hopper.

In addition to the MBBR and SPIDFLOW® DAF equipment, VWT has supplied the following equipment:

- Process air blowers
- DAF polymer make-up system: Veolia HYDRA-POL® 250 system
- DAF polymer dosing skid equipped with three progressive cavity pumps
- Belt Filter Press (BFP) polymer make-up system: Veolia HYDRA-POL® 500 system
- BFP polymer dosing skid equipped with two progressive cavity pumps
- Two progressive cavity TWAS transfer pumps
- Two progressive cavity BFP feed pumps

LEFT BLANK

2 – SAFETY

2.1 – GENERAL RECOMMENDATIONS

LEFT BLANK

SAFETY

VEOLIA WATER TECHNOLOGIES CANADA INC.

INDEX

1 GENERAL 3

2 OPERATION AND MAINTENANCE MANUEL 3

3 PLANT SAFETY PROCEDURES 3

4 UTILITY HAZARDS 4

4.1 Steam 4
4.2 Electrical 5
4.3 High Pressure Water 6
4.4 Plant Air 6

5 EQUIPMENT HAZARDS 6

5.1 Rotating parts, hazardous areas and confined spaces 6
5.2 Operation and Maintenance 7

6 CHEMICAL HAZARDS 8

6.1 Chemical Burns 8
6.2 Fire and Explosion 9
6.3 Toxic Exposure 9

7 SAMPLING AND LINE UNBLOCKING PROCEDURES 10

7.1 Sampling Procedures 10
7.2 Unblocking Procedures 11

APPENDIX 12

SAFETY

1 GENERAL

It should be recognized that potential hazards exist in any processing system. By including this section in the operating manual, Veolia Water Technologies Canada Inc. is in no way attempting to override the plant safety rules laid out to the employees by their employer. However, because of our concern for good, efficient operation of the equipment furnished, we recognize our obligation to point out certain hazards. We also recognize that this section cannot cover every possible hazard; rather, it merely points out some of the most common and important ones.

In each plant, the hazards vary slightly because of the particular chemical or material that is being processed. However, there are some safety recommendations that apply to all operations. These hazards can be broken down into three general areas, namely utility hazards (compressed air, electrical, etc.), equipment hazards, and chemical hazards. These three areas will be covered separately in the following sections.

One of the most important ways to avoid hazards is to have a good understanding of the process. Familiarity with the system and good common sense will enable operators to run the system smoothly and safely.

WHMIS Safety Data Sheets (SDS) should be available for each chemical product.

2 OPERATION AND MAINTENANCE MANUAL



It is important that the operator has understood the instructions of use, security and maintenance before using the Veolia Water Technologies Canada Inc. system. The manufacturer can not be held responsible for use or improper maintenance resulting from a breach or non-compliance with instructions. The Operation and Maintenance manual contents must be kept permanently close to Veolia Water Technologies Canada Inc. system in a safe place.

3 PLANT SAFETY PROCEDURES

As stated earlier, the safety rules and guidelines issued to the employees are the primary precautions that are necessary for the prevention of accidents. The employee should be very familiar with these rules. The safety pictograms used in the plant are to be respected at all times.

Operators should always wear the safety equipment that is provided or required by their management. Such items as hard hats, safety shoes, safety glasses, gloves, breathing protection, protective clothing, protection harness and hearing protection are very basic and go a long way in preventing accidents.



Operators should be aware of the location of fire extinguishers, eye wash stations, safety showers, self-contained breathing apparatus, first aid stations, and other safety equipment furnished for the plant.



Good housekeeping will also eliminate safety hazards such as tripping or slipping. When spills happen, the floor should be washed as soon as possible. When construction or maintenance is finished, removing debris also eliminates a hazard. Proper housekeeping is a good indication of safety attitude in general.



Management provided training can always help in making employees more safety conscious. In these seminars, potential hazards can be pointed out. Veolia Water Technologies Canada Inc. will be glad to assist these efforts by furnishing details on its equipment relating to safety as well as on its operation.

Investigation of an accident to determine its cause will help to prevent the same accident from occurring again and will aid in finding a way of correcting or eliminating the hazard.

Remember, safety rules provided by your employer are designed to protect you and should be strictly adhered to. However, as an operator, safety is your responsibility and you should voice any concerns you have and follow through until corrective action is taken.

4 UTILITY HAZARDS

Utility hazards that may exist in the plant may include high-pressure/high-temperature steam, high-voltage electricity, high-pressure water, and high pressure air. Care should be taken when utilizing any of the utilities.

4.1 Steam



Any time steam is used the potential for burns exist. The recommended first aid for burns is to first apply ice or cold water directly to the burn and then cover the area with cool, moist application gauze or bandage material to minimize blistering. If burns are critical (second and third degree), transport the injured person to a medical facility promptly.

Hot surfaces in areas frequented by personnel should be covered with insulation for protection. When hot surfaces must be left exposed, such as steam valves or sight glasses, operators should be warned of the potential hazard displaying pictograms, training, and supervision.

Steam valve packing, steam traps, and pipe fittings that are leaking should be brought to the attention of supervision and repaired as soon as possible. Instrumentation connections and pipeline for steam should be piped with good connections. Valves should be tagged and locked out on equipment that is being worked on where steam is used to prevent someone from opening the valve. At times, steam is used for cleaning lines. Operators should make sure that if hoses are used, they are designed for steam service. Make sure the connections are tight and do not leak.

Drain and sample connections should be suitably identified and piped with proper fittings. Rupture discs, pressure relief valves, and steam trap discharges should be suitably identified and piped in such a way that they do not release steam in an area of access. These must also be periodically checked to make sure that they are in good working order. Precautions should be taken to prevent accidental release of pressurization, which could injure personnel. Water or steam hammering in steam lines should be investigated for the source and stopped as soon as possible to prevent rupture.

4.2 Electrical



As with steam, electrical equipment should never be worked on unless it is turned off and locked and tagged out. The lockout system key should belong to the person doing the repair or the on-site electrician. This will remove the potential danger for electrical shock or accidental start-up.

Electrical hazards fall into three categories: shock, burn, and fire. The severity of electrical shock is dependent on several items, such as the nature of the electrical impulse and the path that the shock takes through the body. Burns are those caused by contact with electrical current. Fire is where a chemical or gas burns or explodes when it comes in contact with an electrical spark.

General first aid for electrical burns is as follows:

- Remove the victim from contact with the electrical current without coming into contact with the current yourself.
- Check for cardiac arrest or respiratory failure.
- Check for points of entry and exit of current.
- Cover burned surface with a clean dressing.
- Splint all fractures.
- Treat for physical shock.
- Transport to a medical facility promptly.

Except for very low voltage exposure (below 24 V) and very low body current (below 0.2 mA), it is difficult to state safe limits for electrical exposure. Even these low energy exposures can be traumatic for people with heart diseases.

Even though most electrical motors and switch boxes are designed to be water tight, it must be recognized that the presence of water around electrical equipment always presents a hazard and therefore should be used with care.

4.3 High Pressure Water



In the case of some pumps, cooling devices, and heat exchanger, high pressure water is used. As with steam, high pressure water can be a hazard if a small leak is not repaired.

Only the proper pressure fittings should be used in the piping system. As stated earlier, leaks should be repaired as soon as possible. Isolation valves on piping that are being repaired should be shut tight and locked out. As with electrical repairs, the lockout system key should be in the possession of the individual working on the piping.



Plant Air

Care should be taken when using plant air to clean equipment, unblock lines, or blow dust off personnel. High pressure air can be very dangerous to personnel, especially in the area of the face. Pressure should be reduced before using the air to blow dust off clothing. Make sure all fittings have good connections and cannot blow loose.

5 EQUIPMENT HAZARDS

5.1 Rotating parts, Hazardous Areas and Confined Spaces



Rotating parts

Since the system includes equipment with rotating parts (eg pumps, mixers, etc.) Operators should avoid wearing loose clothing and jewellery. Loose clothing can present one of the biggest safety hazards that exist when working near equipment in process.

Sharp or protruding surfaces are normally eliminated at areas frequented by personnel. When present in an operating area, the surface should be covered for protection and clearly marked to minimize the danger of contact.

Equipment that is likely to generate high noise levels should be insulated and/or isolated for personal access. If personnel must enter a high noise area, they will wear hearing protection.



Confined Spaces

Before entering or breaking the plane of any vessel, be sure to check if it is a potential Confined Space and if a permit is required for entrance. Vessels that require a Confined Space Entry Permit may include but are not limited to flash tanks, heaters, condensers, and storage tanks.

5.2 Operation and Maintenance

The equipment in its normal use can present a hazard if not operated or repaired in a safe manner. Example of equipment: pumps, valves, instruments, hoses, etc.

All equipment should only be operated and repaired according to the recommended procedures of the manufacturer, and by qualified individuals. For further information on equipment maintenance procedures, proper maintenance tools, and/or the Personal Protective Equipment required, Section 3 - Equipment of this manual should be referenced.

Only recommended spare parts should be used. For instance, when replacing a gasket, verify the proper gasket is selected (pressure steam, corrosive, etc.).

In the repair or replacement of Veolia Water Technologies Canada Inc. furnished equipment, Veolia Water Technologies Canada Inc. specifications should be checked to make sure the correct pressure rating is used.



Maintenance on pumps, piping, etc. should be performed only after valves are locked and tagged or slip blanks are installed to completely isolate the equipment being worked on. Instrumentation and controls should always be kept in good working order to help assure the safe operation of equipment. Never remove instruments or controls out of service until having communicated with the operator and have established a plan to define the operation maintenance steps. If air operated valves are used for isolation, the air line should be removed to prevent inadvertent operation of the valves. When possible the valve can also be locked in position.



When maintenance is finished on equipment, the protective caps provided must be reinstalled. If a protection must be left off, unwary personnel should be notified by using safety pictograms or installing temporary protection. Equipment should never be inspected or maintenance attempted while the equipment is operating. All pumps and various automatic valves may cause harm to an operator if care is not taken.



Before starting the equipment, the operator must verify if the maintenance staff has completed the work, if the pumps are not locked or frozen and whether bare electrical wires are present. He must also check the pipes to ensure there are no leaks and should clean all debris

6 CHEMICAL HAZARDS

WHMIS Safety Data Sheets (SDS) should be available for each chemical product.

Since chemicals or chemical dosage are used during normal operation of treatment facility, the risks of fire, explosion and exposure to toxic chemicals or chemical burns are present. Chemicals that may be used regularly or, for instance, during cleaning including, without limitation, acids, caustics, polymers, ozone, coagulant and microsand. Operators should be made aware of the following:

- All chemicals which are used and any potentially dangerous reaction that could occur.
- Toxicity of all chemicals that are used or could be formed via reactions.
- Acidic or basic properties of all materials used.
- Potential fire or explosion hazards posed by the chemicals.
- Antidotes for exposure to toxic materials.
- Protective clothing that is recommended.
- Any other information that helps make the operators aware of a hazard.

6.1 Chemical Burns



Some treatment plant chemicals can be very acidic or basic and cause serious burns if coming in contact with the skin or eyes. Operators should be careful when opening valves and working on lines and pumps. Safety glasses with side shields are always recommended when working around chemicals. Operators should familiarize themselves with the location and operation of safety showers and eye wash stations. These stations should be inspected and tagged acceptably with a date and signature on a regular basis.

Whenever a leak or spill is sighted, corrective action should be taken immediately and the spill should be cleaned up. It should never be assumed that someone else is aware of the problem or will take care of the spill.

Accordingly, chemical lines should be clearly identified by color coding or other suitable means. Routing of these lines should be in open areas and should avoid major work/access areas wherever possible. This is critical if the vessels and piping are overhead.

Plant areas where these materials are handled should be restricted. A safety briefing for all visitors and/or new personnel is recommended before access is granted.

All plant personnel should be required to wear proper protective clothing when handling or working near these chemicals. A minimum wardrobe should include, but not be limited to, a plastic hard hat, coat, boots and gloves of a resistant material as well as a pair of safety glasses. Safety glasses, even with shields, are not adequate for use in areas where very acidic or basic materials are handled.

Accidental contact with these chemicals should be avoided. Remember, most liquid chemicals resemble water. Good housekeeping practices should be a requirement in areas where these materials are handled.

6.2 Fire and Explosion





A combustible material will spontaneously start to burn when its temperature is raised to its ignition point in the presence of air. The ignition point of all chemicals used in the process should be known and posted for operators. In some cases, the mixture of vapor and air can burn violently in the form of an explosion.

Accordingly, chemicals should not be added to other materials if the effects of the addition are unknown. This includes disposal, which should only be into suitable containers. Sinks and/or sewers are not suitable for disposal.

WARNING: In systems with Actiflo® clarifier, the lamella pack is pre-installed in the settling tank section of the Actiflo®. It is made of a very flammable material. Do not expose it to open flames or sparks. Do not allow any welding works nearby unless special precautions have been taken.

6.3 Toxic Exposure



Since we are dealing with the effects on individuals who may react to various toxic materials to different degrees, it is difficult to establish an absolute evaluation of toxicity. However, most toxic materials do not have particularly adverse effects when present in small amounts. Consequently, the concept of the “threshold limit value” (TLV) has been developed and is defined as a concentration of toxic material below which it is believed nearly all individuals may be repeatedly exposed over a long duration without adverse effects. The TLV for all chemicals used should be on record and easily accessible.

7 SAMPLING AND LINE UNBLOCKING PROCEDURES

7.1 Sampling Procedures

In the course of startup and operation of Veolia Water Technologies Canada Inc. supplied equipment, sampling of the process fluid is generally conducted in order to:

- Verify system instrumentation.
- Adjust system to maintain desired stability of operation.
- Troubleshoot upset conditions.
- Verify system performance meets contractual guarantees.








Regardless of the process fluid being sampled, care should always be taken to assure samples are collected without placing personnel at risk of injury. Personnel who are collecting samples should always practice good safety habits in their collection routine. Personal protective equipment (PPE) should be selected and worn with respect to the type of sample being collected and its means of collection.

PPE required for sampling is dependent on the material, the temperature and pressure, the sampling point, the surrounding conditions, etc. An example of the varying level of PPE required for each given sample is given below. However, the person responsible for sampling should determine for him or herself if his or her level of PPE is adequate for the task. **Remember, YOU are responsible for your safety.**

<u>PPE required for general field work</u>

- Steel-toed work boots, safety glasses, hard hat, leather gloves, hearing protection, respirator, long-sleeved shirt.

<u>Additional PPE required for handling hot, non-hazardous material</u>

- Insulated rubber gloves and face shield with goggles.

<u>Additional PPE required for handling hazardous material</u>

- Consult SDS
- Full body suit, respirator, rubber gloves, face shield with goggles, protective sampling container.

The collector should study the pertinent sampling station specific to his/her process until comfortable he/she can collect a sample from the station in a safe manner that is also representative of the process conditions. The collector should then develop his/her own sampling procedure.

7.2 Unblocking Procedures

The systems processing highly viscous or slurry solutions are prone to produce blocked drains, valves, and/or sampling stations. The operator should expect blocked connections in these systems. As such, the operator will eventually be required to unblock a connection to access a sample or drain a vessel or line. In doing so, the operator should:

- Review the need for proper personal protective equipment (PPE).
- Develop a plan for unblocking the connection
- Obtain the proper equipment to unblock the connection
- Safely implement the unblocking plan

Selecting the proper PPE for use in unblocking a connection is very similar to the PPE required for sampling noted in the previous section. However, unblocking a connection can result in an instantaneous release of fluid or material at velocities or forces much greater than seen during normal sampling methods. The operator should consider "what if" scenarios such as excessive splashing or large volume release after unblocking the connection and determine his/her PPE with these "worst case" conditions in mind.

Before attempting to unblock a connection, the operator should study the situation and develop a safe procedure to unblock the connection. He/she should observe the area around the connection problem in case a quick "get-a-way" should be required. He/she should inform any personnel in the area that may be affected by unblocking the connection. The operator should learn what the material behind the plug is operating at: what temperature, what pH, what pressure, etc. and modify his/her plan accordingly to develop the safest method of releasing the connection. It might be better for him/her to perform an exercise to test the method of unblocking to validate the proposed method.

Any equipment used in the unblocking process should be reviewed for adequacy of use. Is the hose rated for the material, temperature, and pressure expected to be seen by its use? Are the hose and fittings in good condition? If not, replace the unfit equipment with new or adequate equipment. Make sure all connections are tight and proper for the job. In addition, the hose assembly utilized in the unblocking process should be equipped with a bleed-off valve to depressurize the system prior to the dismantling of the connection. If a bleed-off valve does not exist, special care should be taken when dismantling a hose connection because it may still be subject to internal pressure after the release.

Once the plan and the equipment are in place, the operator must focus on the task to be sure the line is unblocked in the safest manner possible. He/she should especially be concerned not only with his/her own safety, but also of others in the area. Cordoning off the area surrounding the blocked connection is advisable. Remember, whatever means is used be it with water, steam, or air, or mechanical means, BE READY FOR ANY CONSEQUENCES when the drain pipe.

Finally, when working with a partner, take special precaution to communicate your plan to avoid harming anyone due to miscommunication.

APPENDIX

Forbidden

Subject	Pictogram
No swimming	
Not drinking water	

Danger

Subject	Pictogram
Electrical hazard	
Keep guard in place	
This machine start automatically	
Corrosive material	
Risk of falling	

Pressure Piping	
Risk of slippage	
Flammable or high temperature	
Rotating part	
High temperature	
Confined space	
Risk of explosion	
Toxic	

Obligatory

Subject	Pictogram
Safety glasses	
Respiratory protection	
Hardhat	
Safety shoes	
Safety gloves	
Coverage of hearing	
Personal protective against fall	
Consult the manual	
Mandatory use of padlocks	

3 – DRAWINGS

3.1 – PROCESS AND INSTRUMENTATION DIAGRAM

LEFT BLANK

EQUIPMENT

- FILTER OR FILTER–SILENCER INLET AIR
- DIFFUSER HEADER
- MIXER HORIZONTAL SURFACE
- HOSE REEL
- CLEANING BRUSH
- MIXER, INLINE STATIC
- VFD VARIABLE FREQUENCY DRIVE
- MIXER
- M MOTOR
- STOP LOG
- WEIR
- LEVEL CONTROL GATE
- COMPRESSOR, PISTON
- M PROGRESSIVE CAVITY PUMP
- PUMP, CENTRIFUGAL
- PUMP, ROTARY LOBE
- PUMP, DIAPHRAGM
- M PUMP, SUBMERSIBLE
- PUMP, PLUNGER
- PUMP, VERTICAL
- PUMP, GEAR
- PUMP, LINE SHAFT
- PUMP, METERING
- PUMP, METERING
- SUBMERSIBLE PROPELLER PUMP
- SLUICE GATE (NORMALLY CLOSED)
- SLUICE GATE (NORMALLY OPEN)
- WEIR GATE (NORMALLY CLOSED)
- WEIR GATE (NORMALLY OPEN)
- SLIDE GATE (NORMALLY CLOSED)
- SLIDE GATE (NORMALLY OPEN)
- GRINDER / MACERATOR
- HOIST
- SCREW PRESS
- POLYMER DOSING SYSTEM
- ROTARY DRUM THICKENER
- CONVEYOR
- BELT FILTER PRESS
- PRIMARY FILTER
- M SHAFTLESS SPIRAL FINE SCREEN
- DAF

EQUIPMENT

- FLAP GATE
- RECEIVER OR PRESSURE VESSEL
- SCREEN, ROTARY OVERFLOW
- TANK, DOUBLE WALLED
- SILENCER
- TANK
- POSITIVE DISPLACEMENT BLOWER
- CONDENSATE TANK
- EJ EJ EXPANSION JOINT (BELLOWS)
- LIFTING DAVIT SOCKET

PIPE LINE DEVICES

- INJECTOR
- ARV AIR RELEASE VALVE
- FLAME ARRESTER
- AAV AIR VACUUM VALVE
- FLAME ARRESTER WITH THERMAL SHUTOFF VALVE
- MANUAL AIR VENT
- FLAME CHECK
- STRAINER
- TRAP
- STATIC MIXER
- SEDIMENT TRAP
- FOOT VALVE
- PRA PRESSURE REDUCING ASSEMBLY
- AIR SEPARATOR
- DT GAS DRIP TRAP
- D DRAIN
- LIQUID SEPARATOR
- SPECTACLE BLIND
- BASKET STRAINER
- CALIBRATION CHAMBER
- RUPTURE DISK (VACUUM RELIEF)
- PULSATION DAMPENER
- RUPTURE DISK (PRESSURE RELIEF)
- SIGHT GLASS
- AIR VENT
- THERMOWELL
- STEAM VENT
- SUCTION GUIDE STRAINER
- QUICK CONNECTOR
- FLOW STRAIGHTENING VANES
- PLUG
- M MOTORIZED CONTROL DAMPER
- CAP
- BLIND FLANGE
- RECTANGULAR BALANCING DAMPER
- REDUCER
- FLEXIBLE CONNECTION
- F FIRE DAMPER
- AIR FILTER
- H C HEATING COIL
- B BACKDRAFT DAMPER
- C C COOLING COIL
- LOUVRE
- XX HARD PIPE UTILITY CONNECTION
- ORIFICE PLATE
- WATER SOFTENER

VALVES

- THREE WAY VALVE SOLENOID VALVE
- PUMP DISCHARGE VALVE (TRIPLE DUTY)
- GATE VALVE (NORMALLY OPEN)
- GAUGE OR ROOT VALVE
- GATE VALVE (NORMALLY CLOSED)
- KNIFE GATE VALVE
- PLUG VALVE (NORMALLY OPEN)
- BALANCING COCK
- PLUG VALVE (NORMALLY CLOSED)
- CIRCUIT BALANCING VALVE
- BALL VALVE (NORMALLY OPEN)
- THERMOSTATICALLY CONTROLLED VALVE
- BALL VALVE (NORMALLY CLOSED)
- PRESSURE AND VACUUM RELIEF VALVE
- BUTTERFLY VALVE
- VACUUM RELIEF VALVE
- CIRCULAR BALANCING DAMPER
- GLOBE VALVE
- PRESSURE SAFETY VALVE
- DIAPHRAGM VALVE
- IN–LINE, SPRING LOADED RELIEF VALVE
- ANGLE VALVE
- MUD VALVE
- FLOAT VALVE
- PINCH VALVE
- SPRAY NOZZLE
- Y–STRAINER
- CAMLOCK
- PRESSURE CONTROL VALVE (EXTERNAL SENSING)
- DOUBLE CHECK VALVE BACKFLOW PREVENTER
- PRESSURE CONTROL VALVE (INTERNAL SENSING)
- VEE BALL VALVE
- BLAST GATE
- BACK PRESSURE CONTROL VALVE
- NEEDLE VALVE
- DUCKBILL VALVE
- DOUBLE LEAF CHECK VALVE
- DRESSER COUPLING (FLEXIBLE CONNECTION)
- CHECK VALVE
- BALL CHECK VALVE
- REDUCED PRESSURE BACKFLOW PREVENTER
- flush purge purge flush FLUSHING/PURGE CONNECTION
- SPEC1 SPEC2 SPEC CHANGE

VALVE ACTUATORS

- MOTOR ACTUATOR
- S SOLENOID
- PNEUMATIC ACTUATOR
- DIAPHRAGM (PRESSURE BALANCE)
- DIAPHRAGM (SPRING OPPOSED)

MISCELLANEOUS DEVICES

- UTILITY STATION (NUMBER, IF ANY, DESIGNATES TYPE)
- SS SAMPLER
- FIRE HYDRANT & VALVE
- C CONTROL UNIT
- VAB VACUUM BREAKER (BFP TYPE)
- P PURGE OR FLUSHING CONNECTION

PROCESS LINES

- NEW PROCESS – PRIMARY
- NEW PROCESS – SECONDARY
- NEW PROCESS – TERTIARY
- EXISTING PROCESS
- FUTURE PROCESS
- FUTURE EQUIPMENT, ETC
- VENDOR PACKAGE BOUNDARY
- BOUNDARY MATCHLINE
- EXISTING PIPING AND EQUIPMENT TO BE REMOVED
- ENCLOSURE BOUNDARY
- INSULATION
- S OR E INSULATION WITH STEAM OR ELECTRIC HEAT TRACE
- PIPING UNDER STRUCTURE

PROCESS AND SIGNAL CROSS REFERENCE SYSTEM

1. ON DRAWING PXX XX1 CONTINUATION IS SHOWN AS: AAA P601 BBB
2. ON DRAWING PXX XX2 THIS CONTINUATION IS SHOWN AS: AAA P601 BBB

REV.	DESCRIPTION	DATE	REVISE / REVISED	VERIFIE / CHECKED	APPROUVE / APPROVED
3	ISSUED FOR INFORMATION	2019-05-21	A.R.	F.V.	G.P.
2	ISSUED FOR APPROVAL II	2019-02-14	F.C.	F.V.	G.P.
1	ISSUED FOR APPROVAL	2018-09-14	A.R.	G.H.	N/A

DESIGNATEUR/DESIGNER A.R. 2018-09-14
VERIFICATEUR/CHECKER G.H. 2018-09-14
INGÉNIEUR/ENGINEER DATE

CLIENT: IQALUIT WWTP

VEOLIA WATER TECHNOLOGIES

TITRE / TITLE: WASTE WATER TREATMENT PLANT UPGRADE
PROCESS AND INSTRUMENTATTION DIAGRAM
LEGEND

ÉCHELLE / SCALE: N.T.S.

PROJET / PROJECT 500218036 – P1600 | DESSIN No. / DRAWING No GEN | INTERNE / INTERNAL | FEUILLET / SHEET 1/15 | REV./REV 3

REFERENCE NUMBER
DWG. No.: P601

Ce document est la propriété de VEOLIA et ne peut être reproduit sans son autorisation écrite.
This document is the property of VEOLIA and cannot be reproduced without its written authorization

ANSI D

May 23, 2019 - 8:04:32 - W:\DATA\500218036 - Iqaluit WWTP EA\MODELS\2- Design models_Drawings\P- P\500218036-P600.dgn - Layout: Model

PROCESS AND MECHANICAL EQUIPMENT ABBREVIATIONS LIST

AB	AERATION BLOWER	EF	EXHAUST FAN	PSV	PRESSURE/VACUUM RELIEF
AC	AIR COMPRESSOR	EPR	EVAPORATOR		SAFETY VALVE
ACU	AIR CONDITIONING UNIT	ENG	ENGINE	PTO	POWER TAKE OFF/REDUCER
AD	AIR DRYER	ETNK	EXPANSION TANK	PV	PRESSURE VESSEL
ADEQ	ADMINISTRATION EQUIPMENT				
AF	AIR FILTER	F	FAN	RDP	RELIEF DAMPER
AG	SUBMERSIBLE MIXER	FBD	FINE BUBBLE DIFFUSER	RDT	ROTARY DRUM THICKENER
AHU	AIR HANDLING UNIT	FCV	MODULATING CONTROL VALVE	RF	RETURN FAN
AR	AIR RECEIVER	FDR	FERMENTER DRIVE	RV	RELIEF VALVE/RUPTURE DISC
AS	AIR SEPERATOR	FE	FLOW ELEMENT		(PROCESS RELIEF DAMPER)
ASD	ADJUSTABLE SPEED DRIVE	FLT	FILTER		
		FM	FLOW METER		
B	BLOWER	GBT	GRAVITY BELT THICKENER	SA	SAMPLER (STATION)
BFP	BELT FILTER PRESS	GDR	GRINDER/MACERATOR	SAF	SAFETY EQUIPMENT
BFV	BUTTERFLY VALVE	GV	GLOBE VALVE	SCRB	SCRUBBER
BG	BLAST GATE	HST	HOIST	SC	SPRAYED COIL
BIOF	BIOFILTER	HSS	HAULED SEPTAGE SCREEN	SCRN	SCREEN
BLR	BOILER			SCUM	SCUM COLLECTION MECHANISM
BR	BRUSH			SEP	SEPARATOR (CYCLONE,
BRM	BARMINUTOR	INC	INCINERATOR		DRIP TRAP, STEAM SEPARATOR,
BV	BALL VALVE	INJ	INJECTOR		AIR SEPARATOR)
				SF	SUPPLY FAN
CBD	COARSE BUBBLE DIFFUSER	KV	KNIFE GATE	SG	SITE GLASS
CBU	COMPOST BUNKER			SLR	SILENCER
CC	CALIBRATION CHAMBER	LAG	LAGOONS	SM	STATIC MIXER
CDR	CLARIFIER DRIVE	LCP	LOCAL CONTROL PANEL	SP	SCREW PRESS
CFG	CENTRIFUGE	LG	LEVEL SIGHT GLASS	SSV	SAFETY SHUT OFF VALVE
CFR	CHEMICAL FEEDER	LVR	LOUVRE	STR	STRAINER (AUTOMATIC)
	(POLYMER, LIME SLAKER,			SV	SOLENOID VALVE
	CHLORINATOR, ETC.)	MCP	MASTER CONTROL PANEL		
CH	CHILLER	ME	MECHANISM	T	TANK (NON-PRESSURIZED)
CLT	CLUTCH	MLWC	MIXED LIQUOR WASTING BOX	TK	HVAC TANK
CMP	COMPACTOR	MXR	MIXER		
COL	COLLECTOR	MWA	MICROWAVE ANALYZER	UH	UNIT HEATER
CON	CONVEYOR	MV	ON/OFF VALVE	US	UTILITY STATION
COV	COVER			UV	ULTRA VIOLET LAMP BANK
CP	COMPRESSOR	NV	NEEDLE VALVE		
CPRU	CONTROLLED			V	VALVE
	PRESSURIZATION UNIT	ORT	ODOUR REMOVAL TOWER	VAC	VACUUM CONVEYOR
CPT	COMPACTOR			VDR	VORTEX DRIVE
CRN	CRANE OR HOIST	P	PUMP	VFD	VARIABLE FREQUENCY DRIVE
CTU	COMPOST TUNNEL	PAG	POLYMER AGITATOR	VGC	VORTEX GRIT CHAMBER
CV	CONTROL VALVE	PDC	POWER DISTRIBUTION CENTRE		
		PDS	POLYMER DOSING SYSTEM	W	WINCH
CYL	CYLINDER	PF	PRIMARY FILTER	WSO	WATER SOFTENER
		PFH	POLYMER FEEDER HOPPER		
DAF	DISSOLVED AIR FLOTATION	PLV	PLUG VALVE		
	CLARIFIER	PSF	POLYMER SCREW FEEDER		
DDR	DAF DRIVE	PRV	PRESSURE REDUCING/		
DIST	ROTARY DISTRIBUTOR		REGULATING VALVE		

GENERAL NOTES

1. WHERE INFORMATION RELATING TO THE ORIGINAL PLANT CONDITIONS IS SHOWING ON THE DRAWINGS, IT HAS BEEN OBTAINED OR SCANNED FROM INFORMATION SUPPLIED BY OTHERS. PHASE II UPGRADES, CURRENTLY UNDER CONSTRUCTION AT THE TIME OF TENDER OF THIS PROJECT, WERE BASED ON THIS INFORMATION. NUMEROUS FIELD MODIFICATIONS WERE REQUIRED TO ACCOMMODATE INACCURATE INFORMATION ON THE ORIGINAL PLANT. AS-BUILT DRAWINGS INCORPORATING THESE MODIFICATIONS WERE NOT AVAILABLE AT THE TIME OF TENDER. CONSEQUENTLY, THE CONTRACTOR SHOULD MAKE SUFFICIENT ALLOWANCES IN THE AMOUNT OF WORK REQUIRED TO ACCOMMODATE PHASE II MODIFICATIONS.
   WHERE DIMENSIONS OR ELEVATIONS OF EXISTING FACILITIES ARE SHOWN, THEY ARE NOT INTENDED TO INDICATE PRECISE OR CURRENT CONDITIONS. ALL DIMENSIONS AND ELEVATIONS TO BE CHECKED AND CONFIRMED ON SITE BEFORE FABRICATION AND INSTALLATION OF THE EQUIPMENT.
2. THIS DRAWING IS GENERAL IN NATURE. SOME SYMBOLS SHOWN HERE MAY NOT BE USED ON THE CONTRACT DRAWINGS.
3. SEE DRAWING P602 FOR EQUIPMENT AND PIPE COMMODITY DESIGNATION SYSTEMS.
4. SEE DRAWING P603 FOR INSTRUMENTATION SYMBOLS.
5. SYMBOLS ARE ARRANGED ON DRAWINGS AND IN CATEGORIES FOR CONVENIENCE ONLY; SYMBOLS MAY BE USED ON ANY OF THE CONTRACT DRAWINGS.
6. IN PLAN VIEWS, EXISTING PIPE AND EQUIPMENT THAT MAY BE ABOVE OR BELOW SHOWS THROUGH AS FADED LINES. REFER TO SECTIONS FOR RELATIVE ELEVATION OF PLANT UPGRADE PIPE AND EQUIPMENT COMPARED TO EXISTING PIPE AND EQUIPMENT. ALL DIMENSIONS AND ELEVATIONS TO BE CHECKED AND CONFIRMED ON SITE BY THE CONTRACTOR.
7. THE ROUTING OF PIPES AND ASSOCIATED EQUIPMENT MAY BE SHOWN AS APPROXIMATE. OBTAIN ACCEPTANCE OF THE ENGINEER ON EXACT PIPE ROUTING AND EQUIPMENT LOCATIONS IN CONJUNCTION WITH PIPING ISOMETRICS, PRIOR TO INSTALLATION. SMALL DIAMETER PIPE ROUTING FOR LINES 100mm AND LESS NOT SHOWN ON PIPING LAYOUTS UNLESS OTHERWISE NOTED. REFER TO P&ID'S.
8. P&ID'S DO NOT SHOW ALL DRAIN, VENT, OR SAMPLE CONNECTIONS.
9. PROCESS STANDARD DETAILS: IN GENERAL, ALL EXTERIOR ANCHORS SHOULD BE STAINLESS STEEL. ALL INTERIOR ANCHORS CAN BE EITHER STAINLESS STEEL OR GALVANIZED EXCEPT IN THE HEADWORKS AND SLUDGE TREATMENT AND HANDLING AREAS WHERE THE ANCHORS MUST BE STAINLESS STEEL.

PIPE IDENTIFICATION



CHANNEL OR CHUTE IDENTIFICATION



VALVE / EQUIPMENT IDENTIFICATION

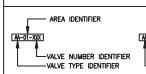

INSTRUMENTATION EQUIPMENT IDENTIFICATION



REFER TO DRAWING STD P02, "TYPICAL INSTRUMENT IDENTIFICATION" TABLE FOR FURTHER DETAIL.

NOTES

1. THIS DRAWING IS GENERAL IN NATURE, SOME ABBREVIATIONS SHOWN HERE MAY NOT BE USED ON THE CONTRACT DRAWINGS.
2. SEE DRAWING P00 002 FOR PROCESS EQUIPMENT LEGEND AND PIPING SYMBOLS.
3. SEE DRAWING P00 004 FOR INSTRUMENTATION SYMBOLS.

CHANNEL EQUIPMENT TYPE

BFG	BUTTERFLY GATE	PBP	PERFORATED BAFFLE PLATE
CFL	CUT THROAT FLUME	PFL	PARSHALL FLUME
CG	CHANNEL GATE	SLG	SLUICE GATE
FG	FIBREGLASS GATE	SL	STOP LOG
FLG	FLAP GATE	SW	STRAIGHT WEIR
FSG	FABRICATED SLIDE GATE		(USED TO CONTROL LEVELS)
HPG	HAND PULL GATE	TSV	TELESCOPIC GATE
LCG	LEVEL CONTROL GATE	WG	WEIR GATE
		VW	V-NOTCH WEIR

COMMODITIES

COMMODITY ABBREVIATIONS LIST

AL – LIQUID ALUM	NG – NATURAL GAS
BLD – SCRUBBER BLOWDOWN	NML – NITRIFIED MIXED LIQUOR
BSL – BOTTOM SLUDGE	NPW – NON POTABLE WATER
CEN – CENTRATE	NPWH – NON POTABLE WATER (HOT)
CIA – CITRIC ACID	OVF – OVERFLOW
CON – CONDENSATE	PA – PROCESS AIR
CPA – COMPOST PROCESS AIR	PAC – POLY ALUMINUM CHLORIDE
CW – COOLING WATER	PE – PRIMARY EFFLUENT
DCW – DOMESTIC COLD WATER (POTABLE)	PER – PERMEATE
DEW – DEWATERING (UNWATERING)	PI – PRIMARY INFLUENT
DHW – DOMESTIC HOT WATER (POTABLE)	PLY – POLYMER
DHWR – DOMESTIC HOT WATER RETURN (POTABLE)	PS – PRIMARY SLUDGE
	PSC – PRIMARY SCUM
DPS – DEWATERED PRIMARY SLUDGE	PW – POTABLE WATER
DR – PROCESS DRAINAGE	PWD – PROCESS WASTE DRAIN
DS – DEWATERED SLUDGE	RAS – RETURN ACTIVATED SLUDGE
DSC – DEWATERED SCREENINGS	REC – RECIRCULATED SCRUBBER SOLUTION
DSE – DISINFECTED SECONDARY EFFLUENT	RHS – RAW HAULED SEPTAGE
DSL – DIGESTED SLUDGE	RS – RAW SEWAGE
DSUB – DAF SUBNATANT	RSC – RAW SCREENINGS
DWS – DEWATERED SLUDGE	SAL – SAMPLE LINE
EW – EFFLUENT WATER	SAN – SANITARY SEWER
FE – FINAL EFFLUENT	SC – SECONDARY SCUM
FIL – FILTRATE	SCR – WASHED SCREENINGS
FOA – FOUL AIR	SE – SECONDARY EFFLUENT
FPW – FIRE PROTECTION WATER	SI – SECONDARY INFLUENT
FL – FLOOR DRAIN	SHS – SODIUM HYPOCHLORITE SOLUTION
FSL – FERMENTER SLUDGE	SPY – SCREENED PRIMARY SCUM
FSU – FERMENTER SUPERNATANT	SRS – SCREENED RAW SEWAGE
GLR – GLYCOL RETURN	ST – STORM SEWER
GLS – GLYCOL SUPPLY	SWD – SUMP WASTE DRAIN
GR – GRIT SLURRY	TA – TREATED AIR
HS – HAULED SEPTAGE	TSL – THICKENED SLUDGE
HSSC – HAULED SEPTAGE SCREENING	TPS – THICKENED PRIMARY SLUDGE
HWR – HOT WATER RETURN	TWAS – THICKENED WASTE ACTIVATED SLUDGE
HWS – HOT WATER SUPPLY	UTA – UTILITY AIR
IR – INTERNAL RECYCLE	UFE – UTILITY FINAL EFFLUENT WATER
IA – INSTRUMENT AIR	UWS – UTILITY SERVICE WATER
LO – LUBE OIL	VA – VENTILATION AIR
ML – MIXED LIQUOR	WAS – WASTE ACTIVATED SLUDGE
MSL – MIXED SLUDGE (WASTE ACTIVATED & PRIMARY)	WPWW – WATER PLANT WASTEWATER

GENERAL ABBREVIATIONS LIST

BOP – BOTTOM OF PIPE	B.C. – BEGINNING OF CURVE
BM – BENCH MARK	C.B. – CATCH BASIN
CB/MH – CATCH BASIN MANHOLE	C.B.T. – CATCH BASIN TOP
C/L – CENTRE LINE	CONC – CONCRETE
EL – ELEVATION	E.C. – END OF CURVE
IP – IRON PIN	HYD – HYDRANT
MAX – MAXIMUM	INV – INVERT
NTS – NOT TO SCALE	MH – MANHOLE
R 85.80 – RIM ELEVATION (METRES)	MS – MILD STEEL
T.O.S. – TOP OF STEEL OR SUPPORT	MIN – MINIMUM
HWL – HIGH WATER LEVEL	R – RADIUS
LWL – LOW WATER LEVEL	SS – STAINLESS STEEL
	W.M. – WATERMAIN

PLANT AREA CODES

01	INFLUENT PUMPING / PRELIMINARY TREATMENT / PRIMARY TREATMENT
02	SECONDARY TREATMENT
03	SOLIDS HANDLING
04	CHEMICAL DOSING

TIE-IN POINT IDENTIFICATION

REV.	DESCRIPTION	DATE	REVISÉ / REVISED	VÉRIFIÉ / CHECKED	APPROUVÉ / APPROVED
3	ISSUED FOR INFORMATION	2019-05-21	A.R.	F.V.	G.P.
2	ISSUED FOR APPROVAL II	2019-02-14	F.C.	F.V.	G.P.
1	ISSUED FOR APPROVAL	2018-09-14	A.R.	G.H.	N/A

DESIGNATEUR/DESIGNER: A.R. — DATE: 2018-09-14
VÉRIFICATEUR/CHECKER: G.H. — DATE: 2018-09-14
INGÉNIEUR/ENGINEER: — DATE:

CLIENT: IQALUIT WWTP

VEOLIA WATER TECHNOLOGIES

TITRE / TITLE: WASTE WATER TREATMENT PLANT UPGRADE
PROCESS AND INSTRUMENTATITION DIAGRAM
LEGEND

ÉCHELLE / SCALE: N.T.S.

PROJET / PROJECT	DESSIN No / DRAWING No	INTERNE / INTERNAL	FEUILLET / SHEET	REV./REV
500218036 – PI600		GEN	2/15	3

REFERENCE NUMBER
DWG. No.: P602

Ce document est la propriété de VEOLIA et ne peut être reproduit sans son autorisation écrite.
This document is the property of VEOLIA and cannot be reproduced without its written authorization

ANSI D

May 23, 2019 - 8:04:24 - M:\2018\500218036\... (Dossier manquant)\Drawings\P-PI\500218036-P600.DGN - Library: ...

FUNCTIONAL IDENTIFICATION

	FIRST LETTER (4)		SUCCEEDING–LETTERS (3)			DESCRIPTION
	MEASURED OR INITIATING VARIABLE	MODIFIER	READOUT OR PASSIVE FUNCTION	OUTPUT FUNCTION	MODIFIER	I/O TYPES
						TYPICAL ASSOCIATED CDACS
A	ANALYSIS		ALARM			DI
B	BURNER, COMBUSTION			CLOSE–STOP DECREASE		DO
C	CONDUCTIVITY, pH (ACIDITY)		CLOSE	CONTROL OR CONTROLLER		DI/AO
D	DENSITY	DIFFERENTIAL		OPEN–START–INCREASE		DO
E	VOLTAGE		SENSOR (PRIMARY ELEMENT)			
F	FLOW RATE	RATIO (FRACTION)			FAIL	DI
G	GAS		GLASS VIEWING DEVICE			
H	HAND				H–HIGH–(ALARM) HH–HIGH–(SHUTDOWN)	DI
I	CURRENT (ELECTRICAL)		INDICATE			AI
J	POWER	SCAN				DO/AI
K	TIME, TIME SCHEDULE	TIME RATE OF CHANGE		CONTROL STATION		DO/AO
L	LEVEL		LIGHT		L–LOW–(ALARM) LL–LOW–(SHUTDOWN)	DI
M	MOTOR	MOMENTARY	ON OR OPERATE		MIDDLE, INTERMEDIATE	DI
N	MOISTURE			START		DO
O	UNCLASSIFIED		OPEN ORIFICE, RESTRICTION POINT (TEST) CONNECTION	STOP	OVERLOAD	DO
P	PRESSURE, VACUUM			PNEUMATIC		
Q	QUANTITY	INTEGRATE, TOTALIZED		INTEGRATE OR TOTALIZED		DI/AI
R	RADIATION	REGULATING	RECORD			AI
S	SPEED, FREQUENCY, SOLENOID	SAFETY		SWITCH, OR SAFETY		DI/DO
T	TEMPERATURE			TRANSMIT		AI
U	MULTIVARIABLE		MULTIFUNCTION	MULTIFUNCTION	MULTIFUNCTION	DI
V	VIBRATION, MECHANICAL ANALYSIS			VALVE, DAMPER, LOUVRE		
W	WEIGHT, FORCE		WELL			
X	ON/OFF	X AXIS	UNCLASSIFIED	UNCLASSIFIED	UNCLASSIFIED	DI/DO
Y	EVENT, STATE, PRESENCE	Y AXIS		RELAY, COMPUTE, CONVERT		
Z	POSITION, DIMENSION	Z AXIS		DRIVER, ACTUATOR, UNCLASSIFIED – FINAL CONTROL ELEMENT		

TYPICAL INSTRUMENT IDENTIFICATION

SCHEMATIC IDENTIFICATION

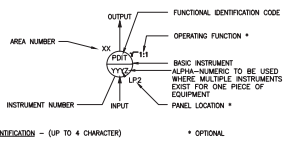

FUNCTIONAL IDENTIFICATION – (UP TO 4 CHARACTER) * OPTIONAL

SEE FUNCTIONAL IDENTIFICATION MATRIX ABOVE

DIGITAL POINT NAMING CONVENTION

NOTE: ALL DEVICES INTERFACED WITH CDACS MUST FOLLOW THE DIGITAL POINT NAMING CONVENTION.

POINT NAMING CONVENTION

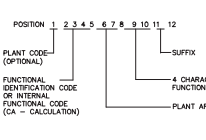

POINT IDENTIFICATION

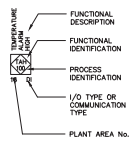

INSTRUMENT OPERATING FUNCTIONS

ANALYTICAL FUNCTIONS

Cl_2	CHLORINE
NH_3	AMMONIA
LEL	LOWER EXPLOSIVE LIMIT
COMB	COMBUSTIBLE GAS
H_2S	HYDROGEN SULFIDE
pH	pH
DO	DISSOLVED OXYGEN
O_2	OXYGEN
VIB	VIBRATION
SS	SUSPENDED SOLIDS (DENSITY)
CO	CARBON MONOXIDE
NO	NITRIC OXIDE
TSS	TOTAL SUSPENDED SOLIDS
NO_2	NITROGEN DIOXIDE
NO_3	NITRATE
PO_4	PHOSPHORUS

SWITCHING FUNCTIONS

HOA	HAND–OFF–AUTO SELECTION
S/S	START–STOP
OCA	OPEN–CLOSE–AUTO SELECTION
OSC	OPEN–STOP–CLOSE SELECTION
SEL	SELECTOR SWITCH
O/O	ON–OFF SELECTION
O/C	OPEN–CLOSE SELECTION
L/R	LOCAL–REMOTE SELECTION
P/R	PANEL–REMOTE SELECTION
ACK	ACKNOWLEDGE (ALARM)
FOR	FORWARD–OFF–REVERSE
LOR	LOCAL–OFF–REMOTE
ESD	EMERGENCY STOP DEVICE
OVR	INTERLOCK OVERRIDE SWITCH
FWD	FORWARD SELECTION
REV	REVERSE SELECTION

INSTRUMENT SIGNAL SYMBOLS

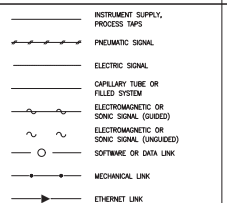

PRIMARY ELEMENT SYMBOLS

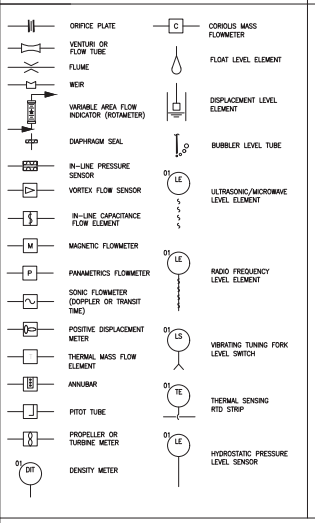

MISCELLANEOUS SYMBOLS

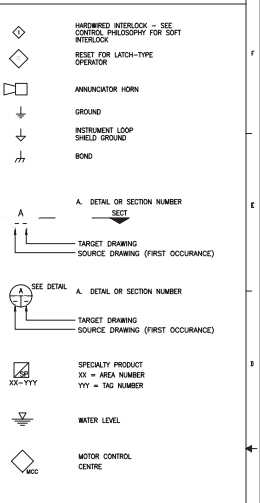

LINE DESIGNATIONS

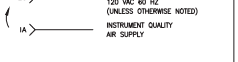

	PRIMARY LOCATION ***NORMALLY ACCESSIBLE TO OPERATOR	FIELD MOUNTED	AUXILIARY LOCATION ***NORMALLY ACCESSIBLE TO OPERATOR
DISCRETE INSTRUMENTS	1. * IP1**	2.	3.
SHARED DISPLAY SHARED CONTROL	4.	5.	6.
COMPUTER FUNCTION	7.	8.	9.
PROGRAMMABLE LOGIC CONTROL	10.	11.	12.

INSTRUMENT AND FUNCTION SYMBOLS

*SYMBOL SIZE MAY VARY ACCORDING TO THE USER'S NEEDS AND THE TYPE OF DOCUMENT. A SUGGESTED SQUARE AND CIRCLE SIZE FOR LARGER DIAGRAMS IS SHOWN ABOVE. CONSISTENCY IS RECOMMENDED.

**ABBREVIATION OF THE USER'S CHOICE SUCH AS IP1 (INSTRUMENT PANEL #1), IC2 (INSTRUMENT CONSOLE #2), CC3 (COMPUTER CONSOLE #3), ECT., MAY BE USED WHEN IT IS NECESSARY TO SPECIFY INSTRUMENT OR FUNCTION LOCATION.

***NORMALLY INACCESSIBLE OR BEHIND–THE–PANEL DEVICES OR FUNCTIONS MAY BE DEPICTED BY USING THE SAME SYMBOLS BUT WITH DASHED HORIZONTAL BARS, I.E.

REV.	DESCRIPTION	DATE	REVISE/REVISED	VERIFIE/CHECKED	APPROUVE/APPROVED
3	ISSUED FOR INFORMATION	2019–05–21	A.R.	F.V.	G.P.
2	ISSUED FOR APPROVAL II	2019–02–14	F.C.	F.V.	G.P.
1	ISSUED FOR APPROVAL	2018–09–14	A.R.	G.H.	N/A

DESIGNATEUR/DESIGNER A.R. DATE 2018–09–14
VERIFICATEUR/CHECKER G.H. DATE 2018–09–14
INGENIEUR/ENGINEER DATE

CLIENT: IQALUIT WWTP

VEOLIA WATER TECHNOLOGIES

TITRE / TITLE: WASTE WATER TREATMENT PLANT UPGRADE
PROCESS AND INSTRUMENTATTION DIAGRAM
LEGEND

ÉCHELLE / SCALE: N.T.S.

PROJET / PROJECT 5000218036 – PI600 | DESSIN No / DRAWING No | INTERNE / INTERNAL GEN | FEUILLET / SHEET 3/15 | REV./REV 2

REFERENCE NUMBER
DWG. No.: P603

Ce document est la propriété de VEOLIA et ne peut être reproduit sans son autorisation écrite.
This document is the property of VEOLIA and cannot be reproduced without its written authorization

ANSI D

May 23, 2019 8:56:26 – M:\DATA\DOCUMENTS\Veolia Water Technologies\Documents\5000218036–P600_P603.dwg – Administrator

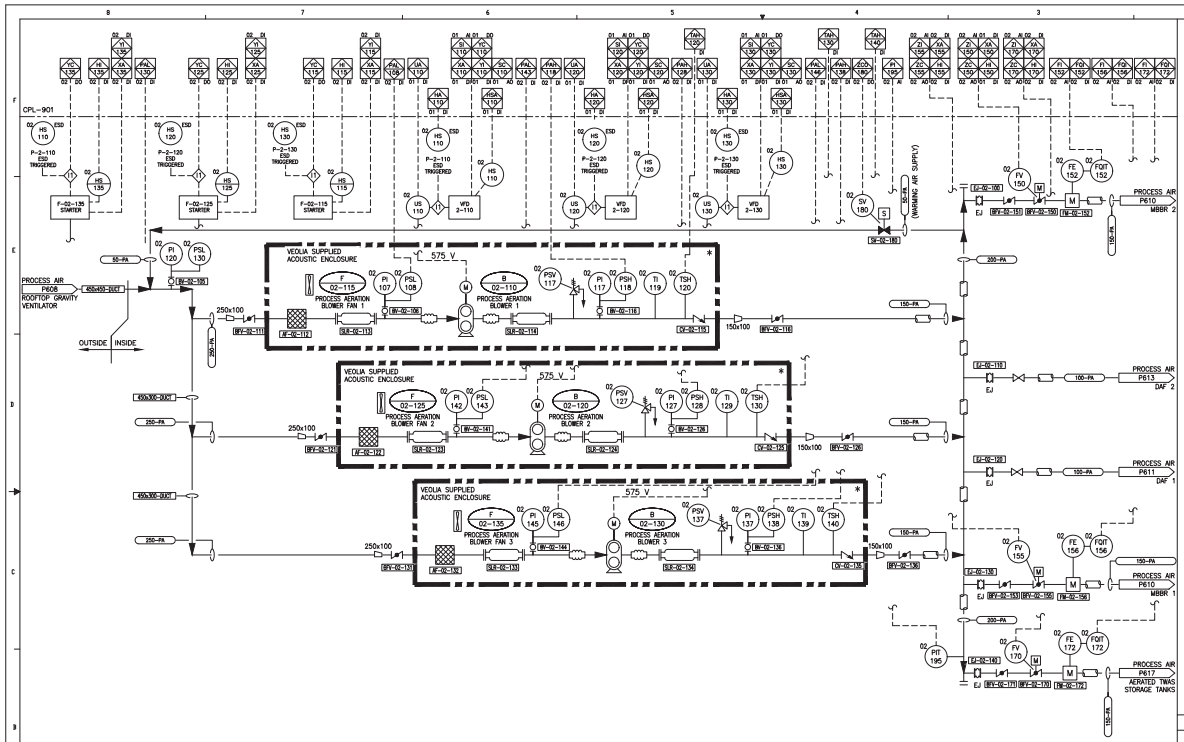

NOTES:

1. VENDOR SUPPLIED AERATION PACKAGE EQUIPMENT TO COME WITH PLANT PLC-A AS WELL AS ETHERNET CONNECTION ALLOWING COMMUNICATION LINK TO NETWORK SWITCH.
2. PROCESS AERATION FAN STARTER TO BE INTERLOCKED WITH RESPECTIVE PROCESS AERATION BLOWER ESD.
3. UNCLASSIFIED AREA.
4. * SUPPLIED BY VEOLIA.
5. SCOPE OF SUPPLY AND DESIGN BY VEOLIA IS LIMITED TO EQUIPMENT LOCATED IN BOXES WITH MIXED, DASHED LINE. THE REST OF THE P&I.D IS SHOWN FOR INFORMATION ONLY AND MAY NOT BE UP TO DATE.

F-02-115/F-02-125/F-02-135
PROCESS AERATION BLOWER FANS 1/2/3

B-02-110/B-02-120/B-02-130
PROCESS AERATION BLOWERS 1/2/3

TYPE:	POSITIVE DISPLACEMENT
CAPACITY:	460 SCFM @ 6.8 psi
MOTOR:	19.0 kW
	575 V

REV.	DESCRIPTION	DATE	REVISÉ / REVISED	VÉRIFIÉ / CHECKED	APPROUVÉ / APPROVED
3	ISSUED FOR INFORMATION	2019-05-21	A.R.	F.V.	G.P.
2	ISSUED FOR APPROVAL II	2019-02-14	F.C.	F.V.	G.P.
1	ISSUED FOR APPROVAL	2018-09-14	A.R.	G.H.	N/A

DESIGNATEUR/DESIGNER	A.R.	2018-09-14
VÉRIFICATEUR/CHECKER	G.H.	2018-09-14
INGÉNIEUR/ENGINEER		

CLIENT: IQALUIT WWTP

TITRE / TITLE: WASTE WATER TREATMENT PLANT UPGRADE
PROCESS AND INSTRUMENTATTION DIAGRAM
AERATION BLOWERS

ÉCHELLE / SCALE: N.T.S.

PROJET / PROJECT	DESSIN No / DRAWING No	INTERNE / INTERNAL	FEUILLET / SHEET	REV./REV
500218036 – PI600	P609	GEN	4/15	3

REFERENCE NUMBER
DWG. No.: P609

Ce document est la propriété de VEOLIA et ne peut être reproduit sans son autorisation écrite.
This document is the property of VEOLIA and cannot be reproduced without its written authorization

ANSI B

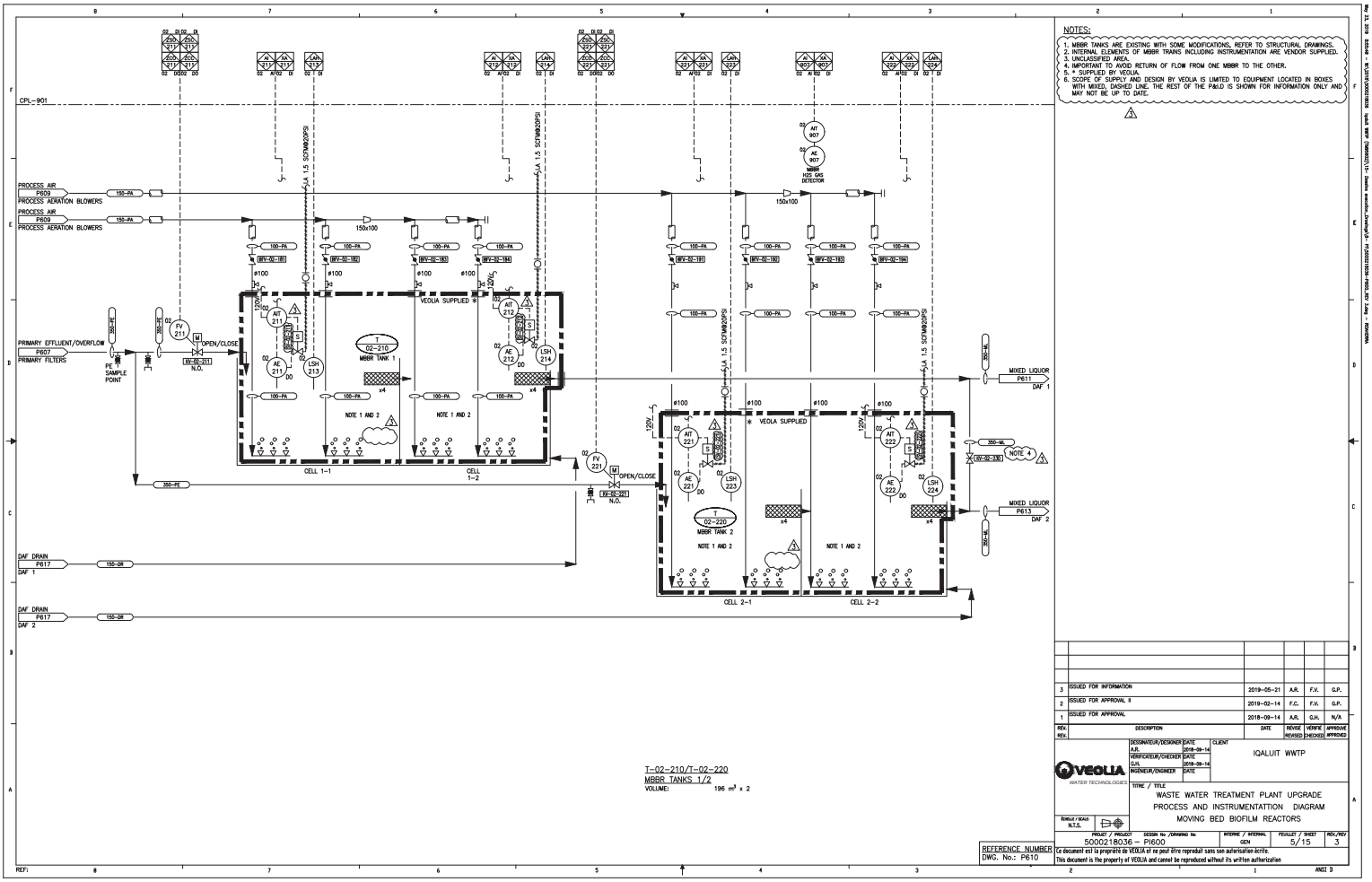

REV.	DESCRIPTION	DATE	REVISÉ / REVISED	VÉRIFIÉ / CHECKED	APPROUVÉ / APPROVED
3	ISSUED FOR INFORMATION	2019-05-21	A.R.	F.V.	G.P.
2	ISSUED FOR APPROVAL II	2019-02-14	F.C.	F.V.	G.P.
1	ISSUED FOR APPROVAL	2018-09-14	A.R.	G.H.	N/A

DESIGNATEUR/DESIGNER A.R. DATE 2018-09-14
VÉRIFICATEUR/CHECKER G.H. DATE 2018-09-14
INGÉNIEUR/ENGINEER DATE

CLIENT: IQALUIT WWTP

VEOLIA WATER TECHNOLOGIES

TITRE / TITLE:
WASTE WATER TREATMENT PLANT UPGRADE
PROCESS AND INSTRUMENTATTION DIAGRAM
MOVING BED BIOFILM REACTORS

ÉCHELLE / SCALE: N.T.S.

PROJET / PROJECT	DESSIN No / DRAWING No	INTERNE / INTERNAL	FEUILLET / SHEET	REV./REV
500218036 – PI600		GEN	5/15	3

REFERENCE NUMBER
DWG. No.: P610

Ce document est la propriété de VEOLIA et ne peut être reproduit sans son autorisation écrite.
This document is the property of VEOLIA and cannot be reproduced without its written authorization

ANSI D

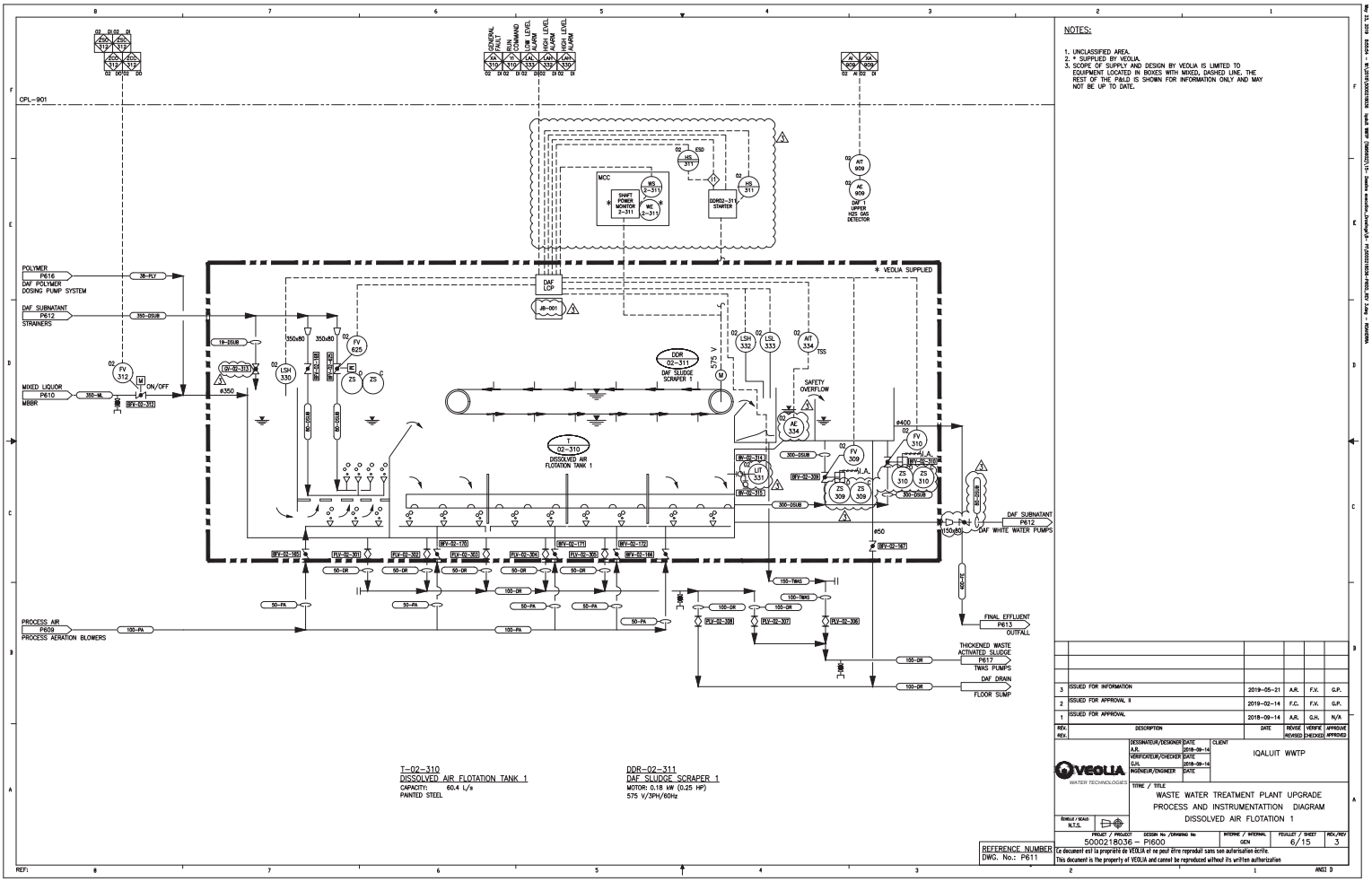

NOTES:

1. UNCLASSIFIED AREA.
2. * SUPPLIED BY VEOLIA.
3. SCOPE OF SUPPLY AND DESIGN BY VEOLIA IS LIMITED TO EQUIPMENT LOCATED IN BOXES WITH MIXED, DASHED LINE. THE REST OF THE P&ID IS SHOWN FOR INFORMATION ONLY AND MAY NOT BE UP TO DATE.

T-02-310
DISSOLVED AIR FLOTATION TANK 1
CAPACITY: 60.4 L/s
PAINTED STEEL

DDR-02-311
DAF SLUDGE SCRAPER 1
MOTOR: 0.18 kW (0.25 HP)
575 V/3PH/60Hz

REV.	DESCRIPTION	DATE	REVISÉ / REVISED	VÉRIFIÉ / CHECKED	APPROUVÉ / APPROVED
3	ISSUED FOR INFORMATION	2019-05-21	A.R.	F.V.	G.P.
2	ISSUED FOR APPROVAL II	2019-02-14	F.C.	F.V.	G.P.
1	ISSUED FOR APPROVAL	2018-09-14	A.R.	G.H.	N/A

DESIGNATEUR/DESIGNER A.R. DATE 2018-09-14
VÉRIFICATEUR/CHECKER G.H. DATE 2018-09-14
INGÉNIEUR/ENGINEER DATE

CLIENT: IQALUIT WWTP

WATER TECHNOLOGIES

TITRE / TITLE:
WASTE WATER TREATMENT PLANT UPGRADE
PROCESS AND INSTRUMENTATTION DIAGRAM
DISSOLVED AIR FLOTATION 1

ÉCHELLE / SCALE: N.T.S.

PROJET / PROJECT: 5000218036 – PI600
DESSIN No / DRAWING No
INTERNE / INTERNAL: GEN
FEUILLET / SHEET: 6/15
REV./REV: 3

REFERENCE NUMBER
DWG. No.: P611

Ce document est la propriété de VEOLIA et ne peut être reproduit sans son autorisation écrite.
This document is the property of VEOLIA and cannot be reproduced without its written authorization

ANSI D

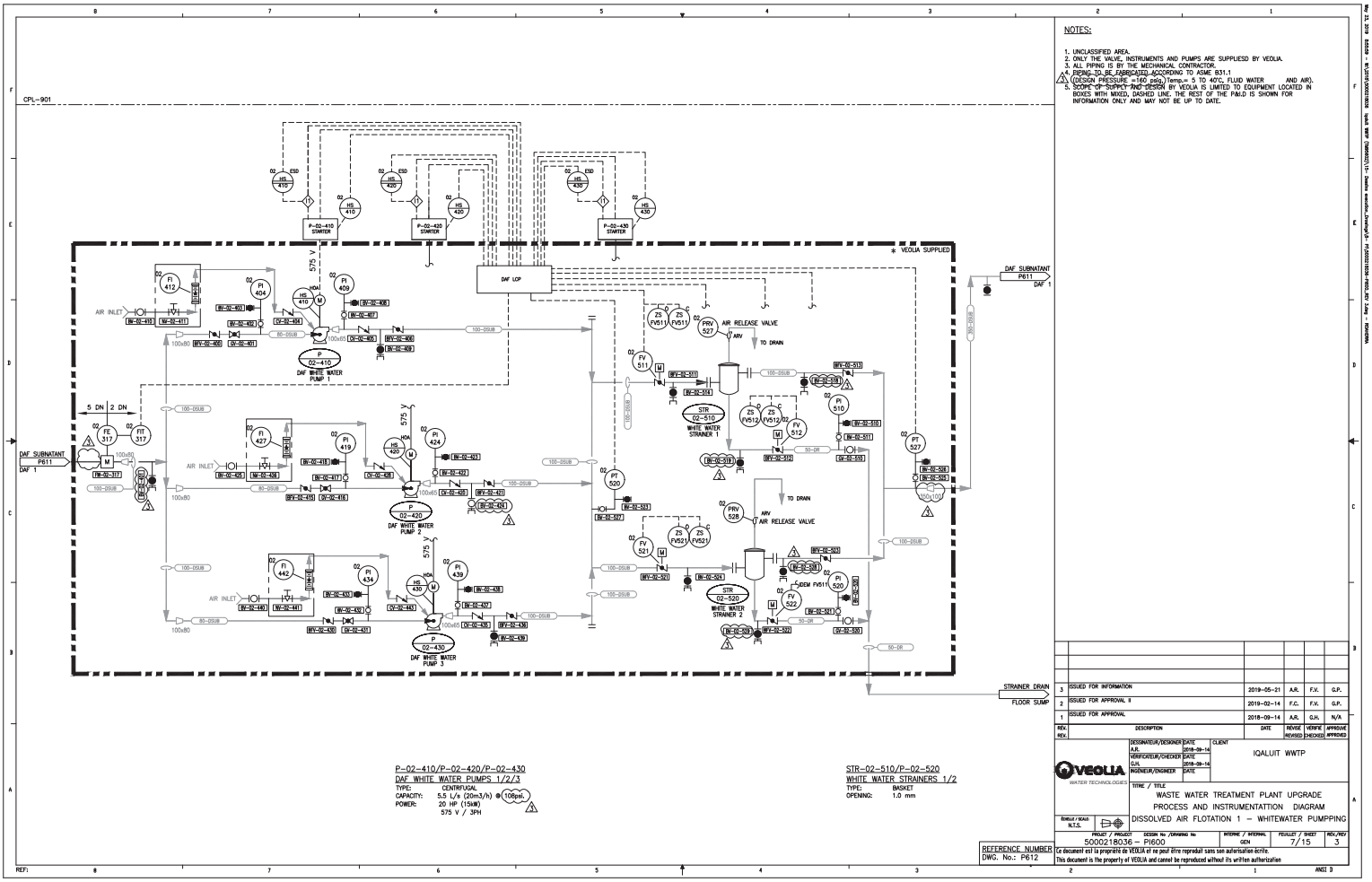

NOTES:

1. UNCLASSIFIED AREA.
2. ONLY THE VALVE, INSTRUMENTS AND PUMPS ARE SUPPLIESD BY VEOLIA.
3. ALL PIPING IS BY THE MECHANICAL CONTRACTOR.
4. PIPING TO BE FABRICATED ACCORDING TO ASME B31.1
5. (DESIGN PRESSURE =160 psig) Temp.= 5 TO 40°C, FLUID WATER AND AIR).
6. SCOPE OF SUPPLY AND DESIGN BY VEOLIA IS LIMITED TO EQUIPMENT LOCATED IN BOXES WITH MIXED, DASHED LINE. THE REST OF THE P&I.D IS SHOWN FOR INFORMATION ONLY AND MAY NOT BE UP TO DATE.

P-02-410/P-02-420/P-02-430
DAF WHITE WATER PUMPS 1/2/3
TYPE: CENTRIFUGAL
CAPACITY: 5.5 L/s (20m3/h) @ 106mH.
POWER: 20 HP (15kW)
575 V / 3PH

STR-02-510/P-02-520
WHITE WATER STRAINERS 1/2
TYPE: BASKET
OPENING: 1.0 mm

REX.	DESCRIPTION	DATE	REVISE REVISED	VERIFIE CHECKED	APPROUVE APPROVED
3	ISSUED FOR INFORMATION	2019-05-21	A.R.	F.V.	G.P.
2	ISSUED FOR APPROVAL II	2019-02-14	F.C.	F.V.	G.P.
1	ISSUED FOR APPROVAL	2018-09-14	A.R.	G.H.	N/A

DESIGNATEUR/DESIGNER A.R. DATE 2018-09-14
VERIFICATEUR/CHECKER G.H. DATE 2018-09-14
INGENIEUR/ENGINEER DATE

CLIENT: IQALUIT WWTP

VEOLIA WATER TECHNOLOGIES

TITRE / TITLE:
WASTE WATER TREATMENT PLANT UPGRADE
PROCESS AND INSTRUMENTATTION DIAGRAM
DISSOLVED AIR FLOTATION 1 – WHITEWATER PUMPING

ÉCHELLE / SCALE: N.T.S.

PROJET / PROJECT	DESSIN No /DRAWING No	INTERNE / INTERNAL	FEUILLET / SHEET	REV./REV
5000218036 – PI600		GEN	7/15	3

REFERENCE NUMBER
DWG. No.: P612

Ce document est la propriété de VEOLIA et ne peut être reproduit sans son autorisation écrite.
This document is the property of VEOLIA and cannot be reproduced without its written authorization

ANSI B

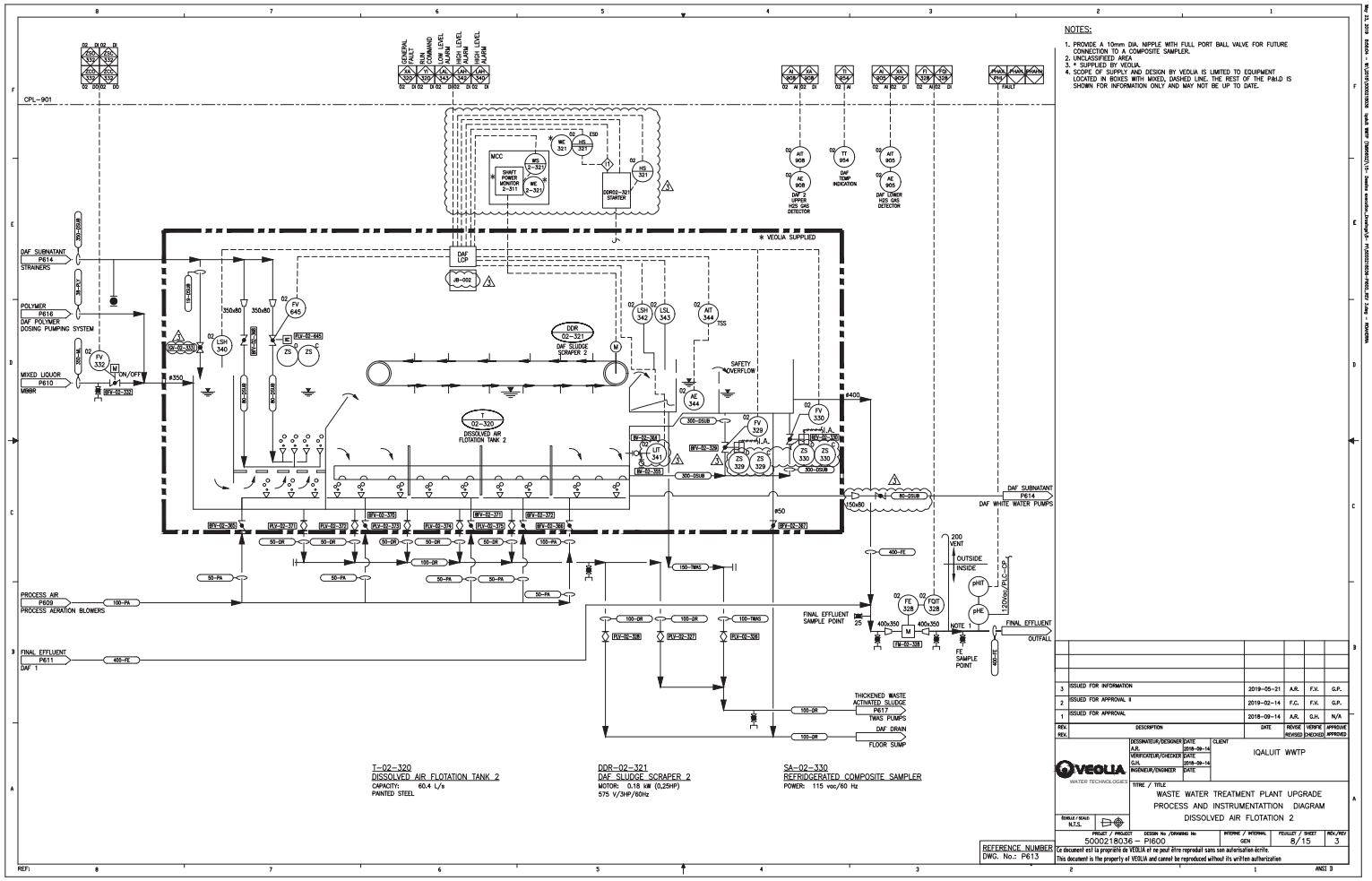
NOTES:
1. PROVIDE A 10mm DIA. NIPPLE WITH FULL PORT BALL VALVE FOR FUTURE CONNECTION TO A COMPOSITE SAMPLER.
2. UNCLASSIFIED AREA.
3. * SUPPLIED BY VEOLIA.
4. SCOPE OF SUPPLY AND DESIGN BY VEOLIA IS LIMITED TO EQUIPMENT LOCATED IN BOXES WITH MIXED, DASHED LINE. THE REST OF THE P&ID IS SHOWN FOR INFORMATION ONLY AND MAY NOT BE UP TO DATE.
CPL-901
* VEOLIA SUPPLIED
DAF SUBNATANT P614 STRAINERS
POLYMER P616 DAF POLYMER DOSING PUMPING SYSTEM
MIXED LIQUOR P610 MBBR
PROCESS AIR P609 PROCESS AERATION BLOWERS
FINAL EFFLUENT P611 DAF 1
T-02-320 DISSOLVED AIR FLOTATION TANK 2
DDR-02-321 DAF SLUDGE SCRAPER 2
SA-02-330 REFRIGERATED COMPOSITE SAMPLER
DAF SUBNATANT P614 DAF WHITE WATER PUMPS
FINAL EFFLUENT SAMPLE POINT
FINAL EFFLUENT
OUTFALL
THICKENED WASTE ACTIVATED SLUDGE P617 TWAS PUMPS
DAF DRAIN FLOOR SUMP
T-02-320
DISSOLVED AIR FLOTATION TANK 2
CAPACITY: 60.4 L/s
PAINTED STEEL
DDR-02-321
DAF SLUDGE SCRAPER 2
MOTOR: 0.18 kW (0.25HP)
575 V/3HP/60Hz
SA-02-330
REFRIGERATED COMPOSITE SAMPLER
POWER: 115 vac/60 Hz
3 ISSUED FOR INFORMATION 2019-05-21 A.R. F.V. G.P.
2 ISSUED FOR APPROVAL II 2019-02-14 F.C. F.V. G.P.
1 ISSUED FOR APPROVAL 2018-09-14 A.R. G.H. N/A
IQALUIT WWTP
WASTE WATER TREATMENT PLANT UPGRADE
PROCESS AND INSTRUMENTATTION DIAGRAM
DISSOLVED AIR FLOTATION 2
5000218036 - PI600
8/15
3
REFERENCE NUMBER
DWG. No.: P613
Ce document est la propriété de VEOLIA et ne peut être reproduit sans son autorisation écrite.
This document is the property of VEOLIA and cannot be reproduced without its written authorization
ANSI D

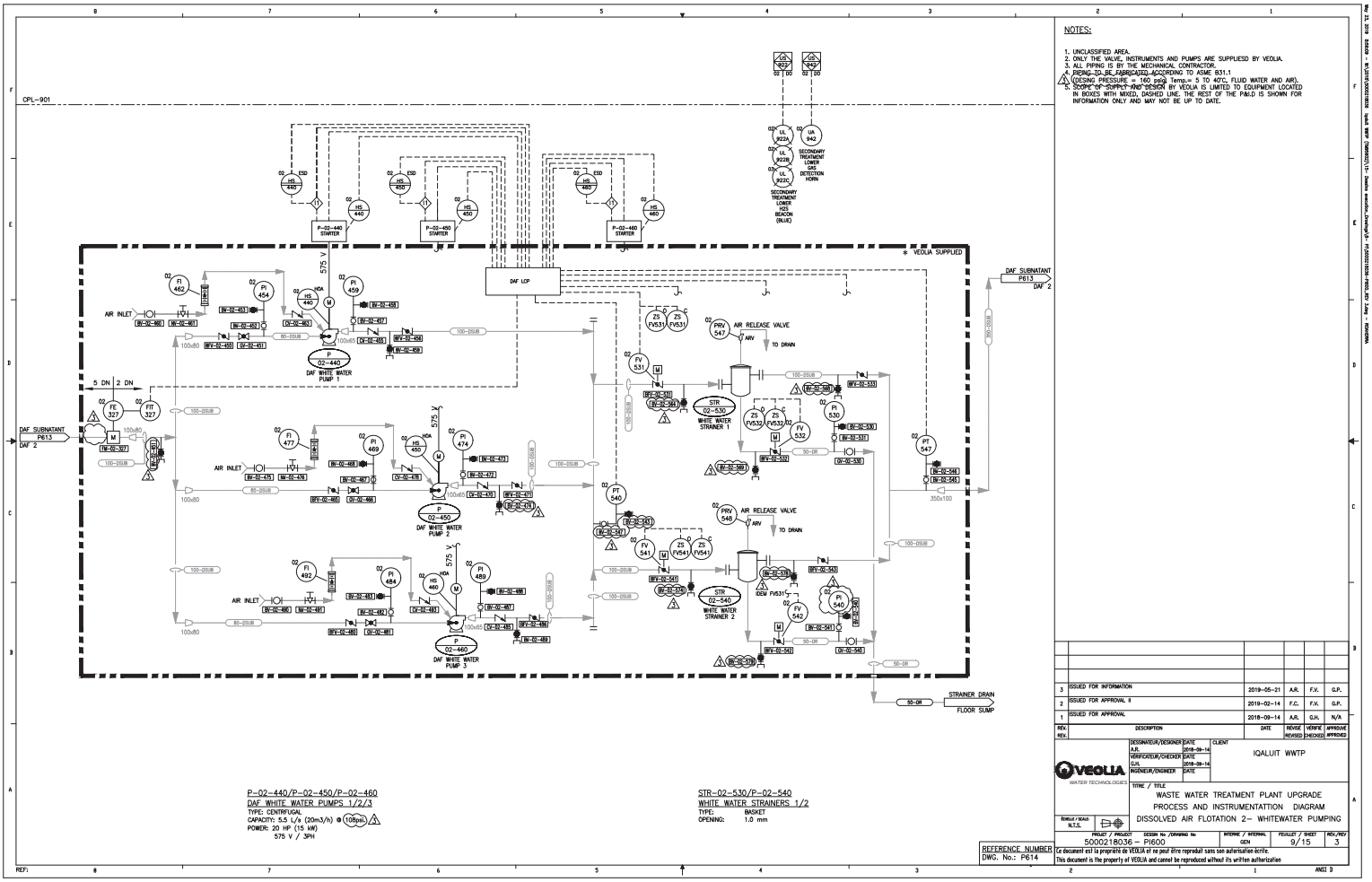

NOTES:

1. UNCLASSIFIED AREA.
2. ONLY THE VALVE, INSTRUMENTS AND PUMPS ARE SUPPLIESD BY VEOLIA.
3. ALL PIPING IS BY THE MECHANICAL CONTRACTOR.
4. PIPING TO BE FABRICATED ACCORDING TO ASME B31.1
5. DESING PRESSURE = 160 psig Temp.= 5 TO 40°C, FLUID WATER AND AIR).
6. SCOPE OF SUPPLY AND DESIGN BY VEOLIA IS LIMITED TO EQUIPMENT LOCATED IN BOXES WITH MIXED, DASHED LINE. THE REST OF THE P&I.D IS SHOWN FOR INFORMATION ONLY AND MAY NOT BE UP TO DATE.

P-02-440/P-02-450/P-02-460
DAF WHITE WATER PUMPS 1/2/3
TYPE: CENTRIFUGAL
CAPACITY: 5.5 L/s (20m3/h) @ 108psi
POWER: 20 HP (15 kW)
575 V / 3PH

STR-02-530/P-02-540
WHITE WATER STRAINERS 1/2
TYPE: BASKET
OPENING: 1.0 mm

REV.	DESCRIPTION	DATE	REVISÉ REVISED	VÉRIFIÉ CHECKED	APPROUVÉ APPROVED
3	ISSUED FOR INFORMATION	2019-05-21	A.R.	F.V.	G.P.
2	ISSUED FOR APPROVAL II	2019-02-14	F.C.	F.V.	G.P.
1	ISSUED FOR APPROVAL	2018-09-14	A.R.	G.H.	N/A

DESIGNATEUR/DESIGNER A.R. DATE 2018-09-14
VÉRIFICATEUR/CHECKER G.H. DATE 2018-09-14
INGÉNIEUR/ENGINEER DATE

CLIENT: IQALUIT WWTP

VEOLIA WATER TECHNOLOGIES

TITRE / TITLE:
WASTE WATER TREATMENT PLANT UPGRADE
PROCESS AND INSTRUMENTATTION DIAGRAM
DISSOLVED AIR FLOTATION 2– WHITEWATER PUMPING

ÉCHELLE / SCALE: N.T.S.

PROJET / PROJECT	DESSIN No / DRAWING No	INTERNE / INTERNAL	FEUILLET / SHEET	REV./RÉV
5000218036 – PI600		GEN	9/15	3

REFERENCE NUMBER
DWG. No.: P614

Ce document est la propriété de VEOLIA et ne peut être reproduit sans son autorisation écrite.
This document is the property of VEOLIA and cannot be reproduced without its written authorization

ANSI B

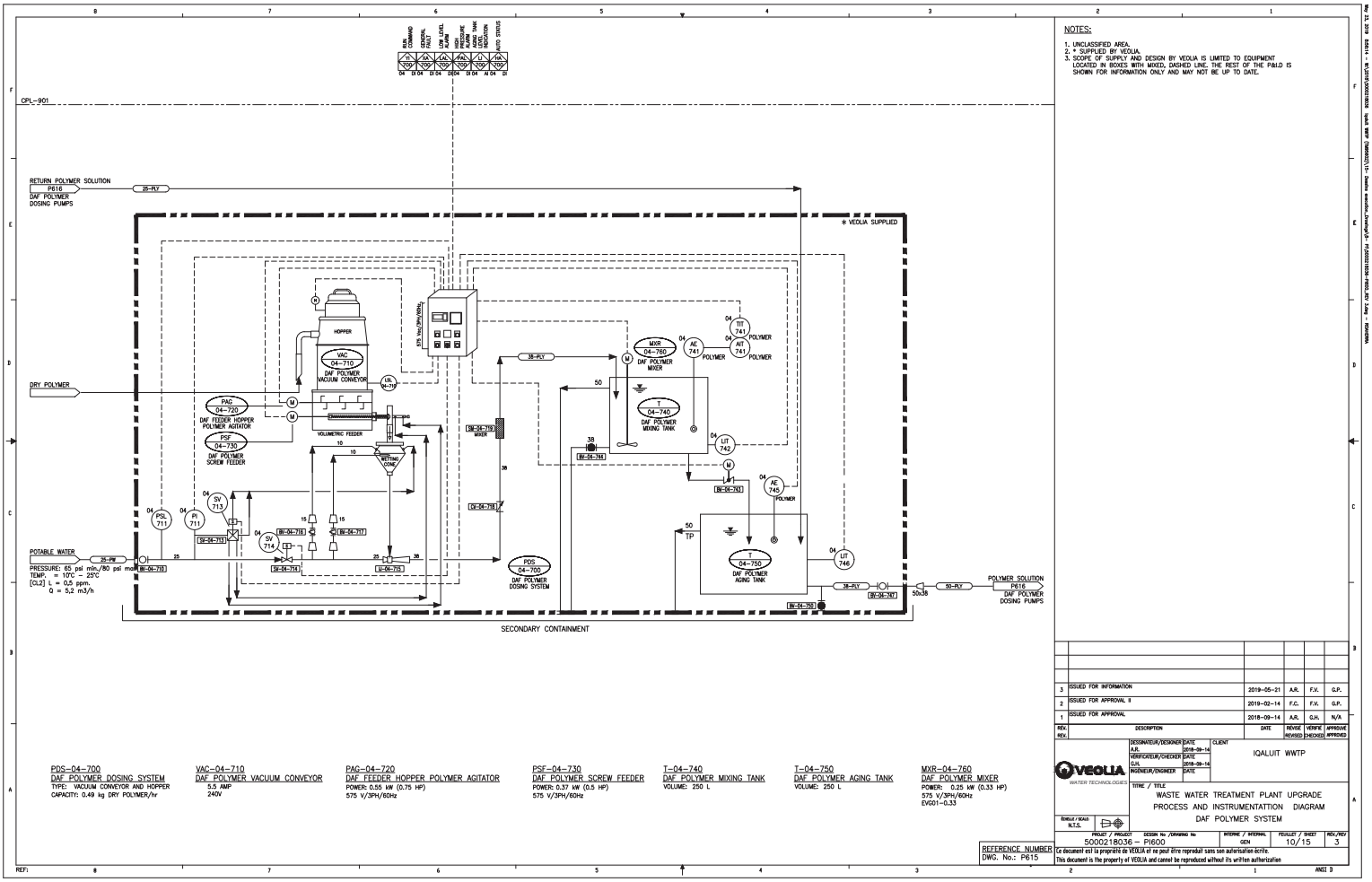

NOTES:

1. UNCLASSIFIED AREA.
2. * SUPPLIED BY VEOLIA.
3. SCOPE OF SUPPLY AND DESIGN BY VEOLIA IS LIMITED TO EQUIPMENT LOCATED IN BOXES WITH MIXED, DASHED LINE. THE REST OF THE P&I.D IS SHOWN FOR INFORMATION ONLY AND MAY NOT BE UP TO DATE.

PDS-04-700
DAF POLYMER DOSING SYSTEM
TYPE: VACUUM CONVEYOR AND HOPPER
CAPACITY: 0.49 kg DRY POLYMER/hr

VAC-04-710
DAF POLYMER VACUUM CONVEYOR
5,5 AMP
240V

PAG-04-720
DAF FEEDER HOPPER POLYMER AGITATOR
POWER: 0.55 kW (0.75 HP)
575 V/3PH/60Hz

PSF-04-730
DAF POLYMER SCREW FEEDER
POWER: 0.37 kW (0.5 HP)
575 V/3PH/60Hz

T-04-740
DAF POLYMER MIXING TANK
VOLUME: 250 L

T-04-750
DAF POLYMER AGING TANK
VOLUME: 250 L

MXR-04-760
DAF POLYMER MIXER
POWER: 0.25 kW (0.33 HP)
575 V/3PH/60Hz
EVG01-0.33

REV.	DESCRIPTION	DATE	REVISE REVISED	VERIFIE CHECKED	APPROUVE APPROVED
3	ISSUED FOR INFORMATION	2019-05-21	A.R.	F.V.	G.P.
2	ISSUED FOR APPROVAL II	2019-02-14	F.C.	F.V.	G.P.
1	ISSUED FOR APPROVAL	2018-09-14	A.R.	G.H.	N/A

DESIGNATEUR/DESIGNER A.R.	DATE 2018-09-14	CLIENT
VERIFICATEUR/CHECKER G.H.	DATE 2018-09-14	IQALUIT WWTP
INGÉNIEUR/ENGINEER	DATE	

VEOLIA WATER TECHNOLOGIES

TITRE / TITLE
WASTE WATER TREATMENT PLANT UPGRADE
PROCESS AND INSTRUMENTATTION DIAGRAM
DAF POLYMER SYSTEM

ÉCHELLE / SCALE: N.T.S.

PROJET / PROJECT	DESSIN No / DRAWING No	INTERNE / INTERNAL	FEUILLET / SHEET	REV./REV
5000218036 - PI600		GEN	10/15	3

REFERENCE NUMBER
DWG. No.: P615

Ce document est la propriété de VEOLIA et ne peut être reproduit sans son autorisation écrite.
This document is the property of VEOLIA and cannot be reproduced without its written authorization

ANSI B

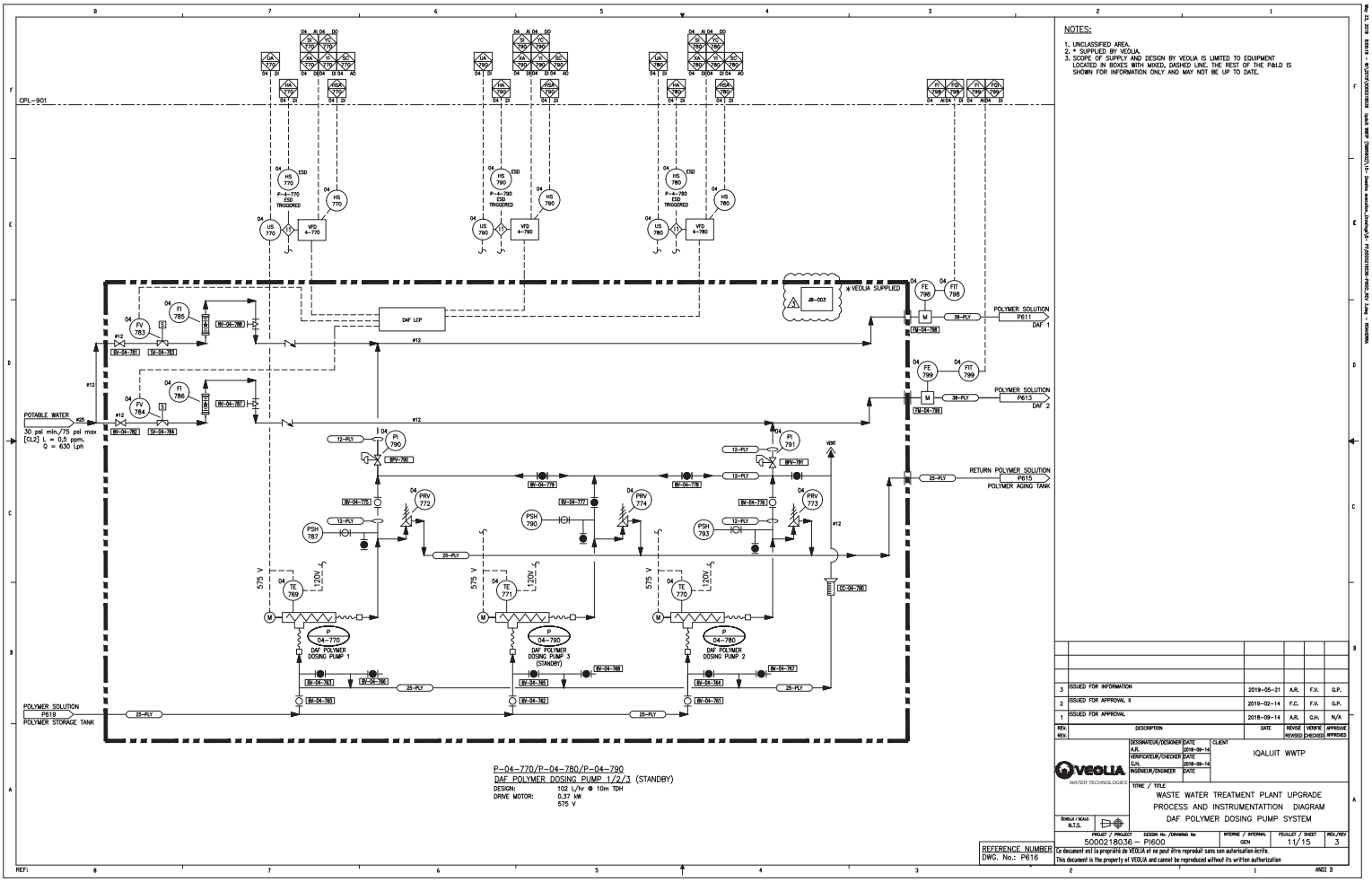

NOTES:

1. UNCLASSIFIED AREA.
2. * SUPPLIED BY VEOLIA.
3. SCOPE OF SUPPLY AND DESIGN BY VEOLIA IS LIMITED TO EQUIPMENT LOCATED IN BOXES WITH MIXED, DASHED LINE. THE REST OF THE P&I.D IS SHOWN FOR INFORMATION ONLY AND MAY NOT BE UP TO DATE.

REV.	DESCRIPTION	DATE	REVISÉ / REVISED	VÉRIFIÉ / CHECKED	APPROUVÉ / APPROVED
3	ISSUED FOR INFORMATION	2019-05-21	A.R.	F.V.	G.P.
2	ISSUED FOR APPROVAL II	2019-02-14	F.C.	F.V.	G.P.
1	ISSUED FOR APPROVAL	2018-09-14	A.R.	G.H.	N/A

DESIGNATEUR/DESIGNER: A.R. DATE: 2018-09-14
VÉRIFICATEUR/CHECKER: G.H. DATE: 2018-09-14
INGÉNIEUR/ENGINEER: DATE

CLIENT: IQALUIT WWTP

VEOLIA WATER TECHNOLOGIES

TITRE / TITLE:
WASTE WATER TREATMENT PLANT UPGRADE
PROCESS AND INSTRUMENTATTION DIAGRAM
DAF POLYMER DOSING PUMP SYSTEM

ÉCHELLE / SCALE: N.T.S.

PROJET / PROJECT	DESSIN No / DRAWING No	INTERNE / INTERNAL	FEUILLET / SHEET	REV./REV
5000218036 – PI600		GEN	11/15	3

REFERENCE NUMBER
DWG. No.: P616

Ce document est la propriété de VEOLIA et ne peut être reproduit sans son autorisation écrite.
This document is the property of VEOLIA and cannot be reproduced without its written authorization

ANSI B

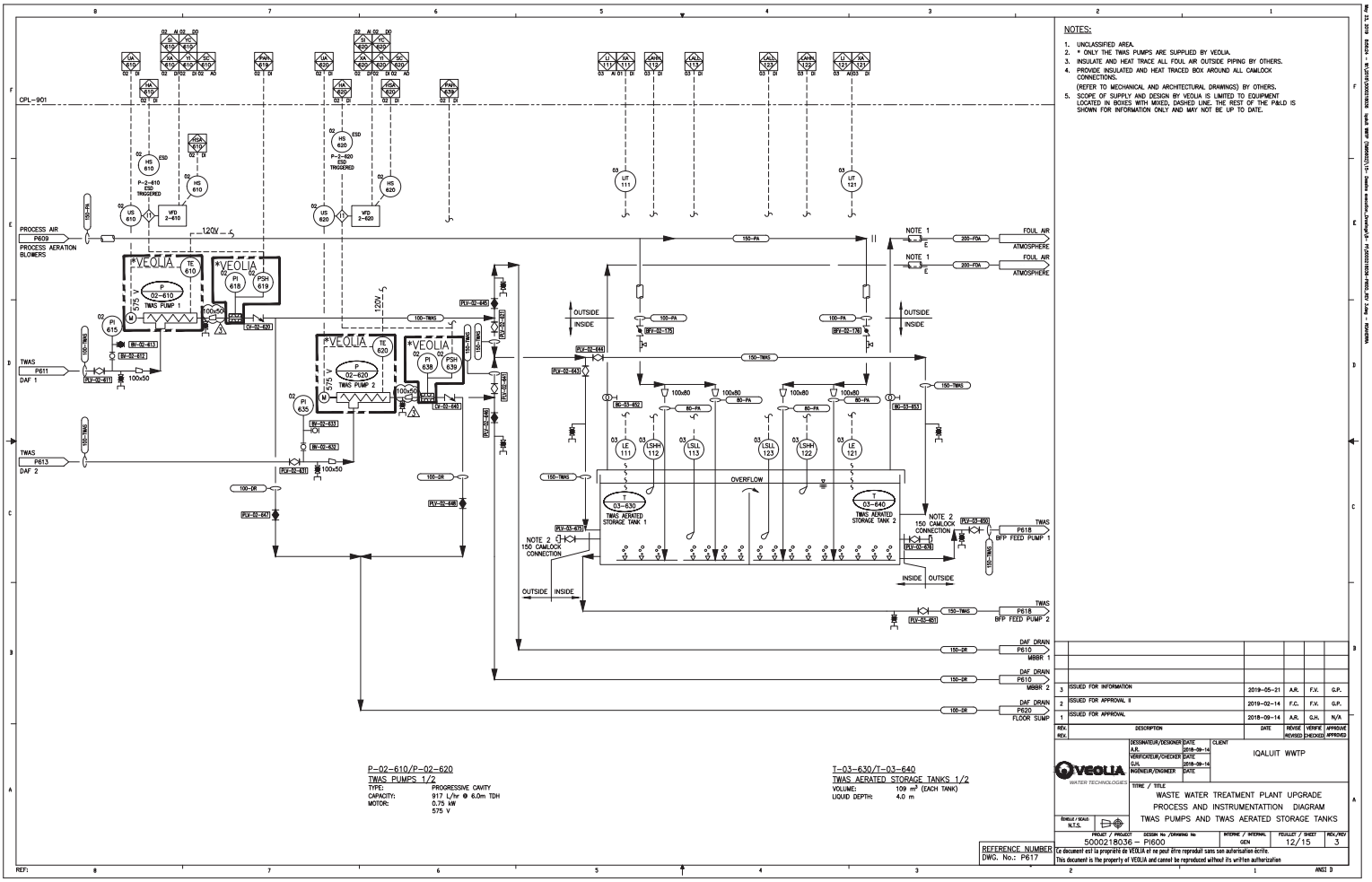

NOTES:

1. UNCLASSIFIED AREA.
2. * ONLY THE TWAS PUMPS ARE SUPPLIED BY VEOLIA.
3. INSULATE AND HEAT TRACE ALL FOUL AIR OUTSIDE PIPING BY OTHERS.
4. PROVIDE INSULATED AND HEAT TRACED BOX AROUND ALL CAMLOCK CONNECTIONS.
   (REFER TO MECHANICAL AND ARCHITECTURAL DRAWINGS) BY OTHERS.
5. SCOPE OF SUPPLY AND DESIGN BY VEOLIA IS LIMITED TO EQUIPMENT LOCATED IN BOXES WITH MIXED, DASHED LINE. THE REST OF THE P&ID IS SHOWN FOR INFORMATION ONLY AND MAY NOT BE UP TO DATE.

P-02-610/P-02-620
TWAS PUMPS 1/2

TYPE:	PROGRESSIVE CAVITY
CAPACITY:	917 L/hr @ 6.0m TDH
MOTOR:	0.75 kW
	575 V

T-03-630/T-03-640
TWAS AERATED STORAGE TANKS 1/2

VOLUME:	109 m³ (EACH TANK)
LIQUID DEPTH:	4.0 m

REV.	DESCRIPTION	DATE	REVISÉ / REVISED	VÉRIFIÉ / CHECKED	APPROUVÉ / APPROVED
3	ISSUED FOR INFORMATION	2019-05-21	A.R.	F.V.	G.P.
2	ISSUED FOR APPROVAL II	2019-02-14	F.C.	F.V.	G.P.
1	ISSUED FOR APPROVAL	2018-09-14	A.R.	G.H.	N/A

DESIGNATEUR/DESIGNER	A.R.
DATE	2018-09-14
VÉRIFICATEUR/CHECKER	G.H.
DATE	2018-09-14
INGÉNIEUR/ENGINEER	
DATE	
CLIENT	IQALUIT WWTP

VEOLIA WATER TECHNOLOGIES

TITRE / TITLE
WASTE WATER TREATMENT PLANT UPGRADE
PROCESS AND INSTRUMENTATITION DIAGRAM
TWAS PUMPS AND TWAS AERATED STORAGE TANKS

ÉCHELLE / SCALE: N.T.S.

PROJET / PROJECT	DESSIN No / DRAWING No	INTERNE / INTERNAL	FEUILLET / SHEET	REV./REV
5000218036 – PI600		GEN	12/15	3

REFERENCE NUMBER
DWG. No.: P617

Ce document est la propriété de VEOLIA et ne peut être reproduit sans son autorisation écrite.
This document is the property of VEOLIA and cannot be reproduced without its written authorization

ANSI D

May 23, 2019 - 8:04:24 - M:\DATA\DWG\P600\P617 - Iqaluit WWTP Upgrades\01-Design\Drawings\P-617\P600P617-PROCESS and Instr - Alexandra

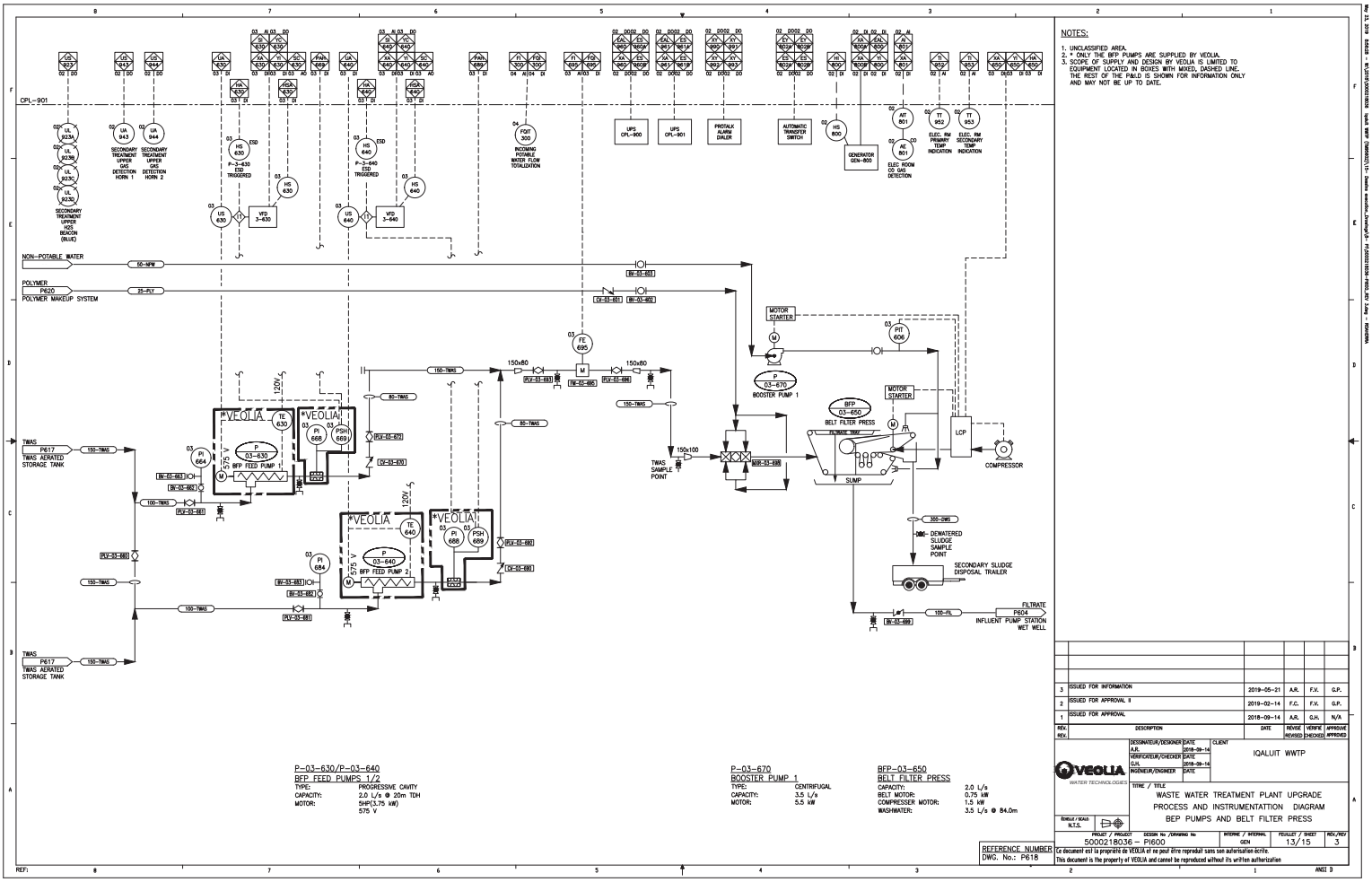

NOTES:

1. UNCLASSIFIED AREA.
2. * ONLY THE BFP PUMPS ARE SUPPLIED BY VEOLIA.
3. SCOPE OF SUPPLY AND DESIGN BY VEOLIA IS LIMITED TO EQUIPMENT LOCATED IN BOXES WITH MIXED, DASHED LINE. THE REST OF THE P&ID IS SHOWN FOR INFORMATION ONLY AND MAY NOT BE UP TO DATE.

P-03-630/P-03-640
BFP FEED PUMPS 1/2

TYPE:	PROGRESSIVE CAVITY
CAPACITY:	2.0 L/s @ 20m TDH
MOTOR:	5HP(3.75 kW) 575 V

P-03-670
BOOSTER PUMP 1

TYPE:	CENTRIFUGAL
CAPACITY:	3.5 L/s
MOTOR:	5.5 kW

BFP-03-650
BELT FILTER PRESS

CAPACITY:	2.0 L/s
BELT MOTOR:	0.75 kW
COMPRESSER MOTOR:	1.5 kW
WASHWATER:	3.5 L/s @ 84.0m

REV.	DESCRIPTION	DATE	REVISÉ / REVISED	VÉRIFIÉ / CHECKED	APPROUVÉ / APPROVED
3	ISSUED FOR INFORMATION	2019-05-21	A.R.	F.V.	G.P.
2	ISSUED FOR APPROVAL II	2019-02-14	F.C.	F.V.	G.P.
1	ISSUED FOR APPROVAL	2018-09-14	A.R.	G.H.	N/A

DESIGNATEUR/DESIGNER A.R.	DATE 2018-09-14
VÉRIFICATEUR/CHECKER G.H.	DATE 2018-09-14
INGÉNIEUR/ENGINEER	DATE
CLIENT	IQALUIT WWTP

VEOLIA WATER TECHNOLOGIES

TITRE / TITLE
WASTE WATER TREATMENT PLANT UPGRADE
PROCESS AND INSTRUMENTATTION DIAGRAM
BEP PUMPS AND BELT FILTER PRESS

ÉCHELLE / SCALE: N.T.S.

PROJET / PROJECT	DESSIN No /DRAWING No	INTERNE / INTERNAL	FEUILLET / SHEET	REV./REV
500021803G – PI600		GEN	13/15	3

REFERENCE NUMBER
DWG. No.: P618

Ce document est la propriété de VEOLIA et ne peut être reproduit sans son autorisation écrite.
This document is the property of VEOLIA and cannot be reproduced without its written authorization

ANSI B

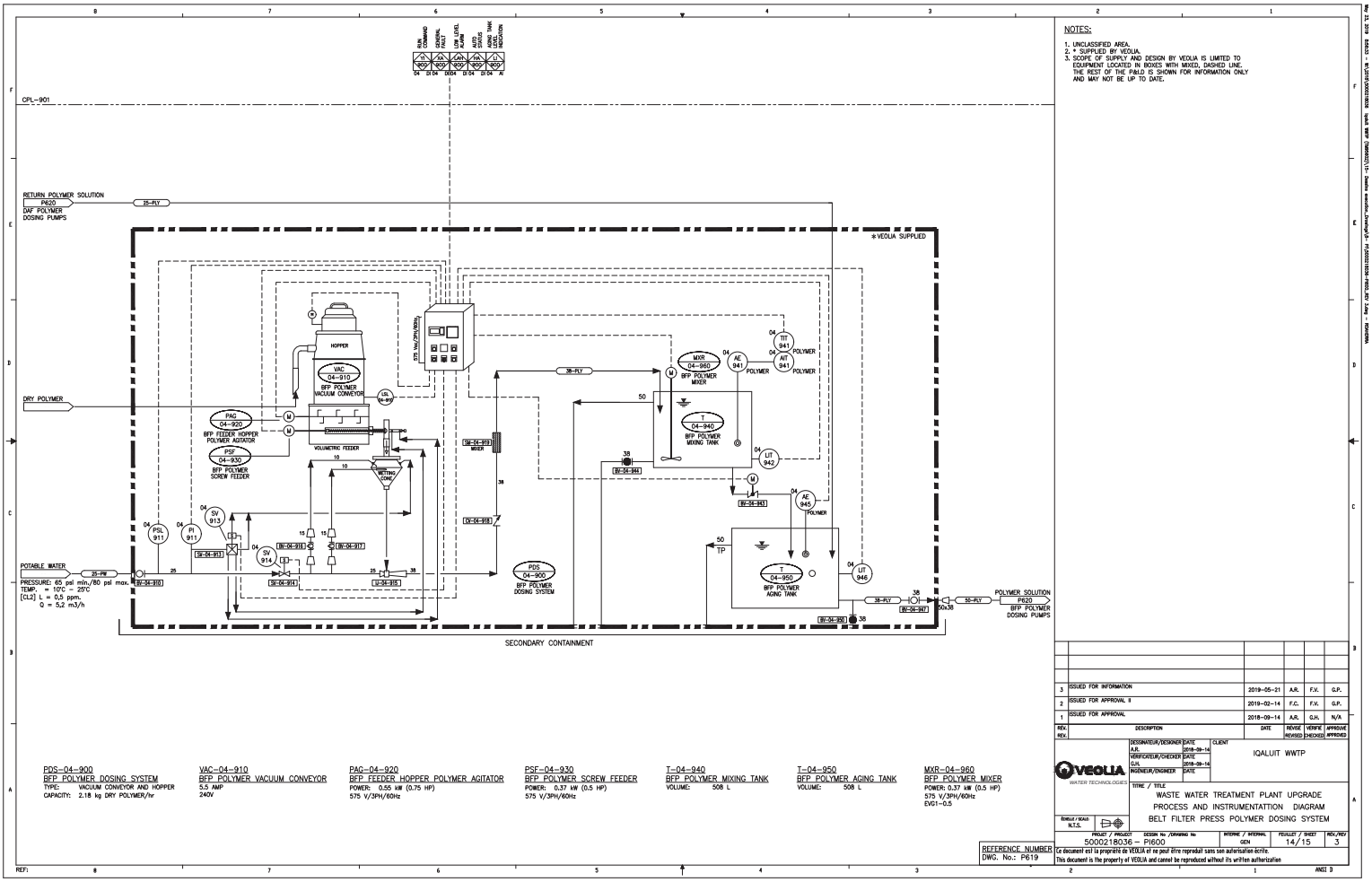

NOTES:

1. UNCLASSIFIED AREA.
2. * SUPPLIED BY VEOLIA.
3. SCOPE OF SUPPLY AND DESIGN BY VEOLIA IS LIMITED TO EQUIPMENT LOCATED IN BOXES WITH MIXED, DASHED LINE. THE REST OF THE P&ID IS SHOWN FOR INFORMATION ONLY AND MAY NOT BE UP TO DATE.

PDS-04-900
BFP POLYMER DOSING SYSTEM
TYPE: VACUUM CONVEYOR AND HOPPER
CAPACITY: 2.18 kg DRY POLYMER/hr

VAC-04-910
BFP POLYMER VACUUM CONVEYOR
5.5 AMP
240V

PAG-04-920
BFP FEEDER HOPPER POLYMER AGITATOR
POWER: 0.55 kW (0.75 HP)
575 V/3PH/60Hz

PSF-04-930
BFP POLYMER SCREW FEEDER
POWER: 0.37 kW (0.5 HP)
575 V/3PH/60Hz

T-04-940
BFP POLYMER MIXING TANK
VOLUME: 508 L

T-04-950
BFP POLYMER AGING TANK
VOLUME: 508 L

MXR-04-960
BFP POLYMER MIXER
POWER: 0.37 kW (0.5 HP)
575 V/3PH/60Hz
EVG1-0.5

REX. REV.	DESCRIPTION	DATE	REVISE REVISED	VERIFIE CHECKED	APPROUVE APPROVED
3	ISSUED FOR INFORMATION	2019-05-21	A.R.	F.V.	G.P.
2	ISSUED FOR APPROVAL II	2019-02-14	F.C.	F.V.	G.P.
1	ISSUED FOR APPROVAL	2018-09-14	A.R.	G.H.	N/A

DESIGNATEUR/DESIGNER A.R. DATE 2018-09-14
VERIFICATEUR/CHECKER G.H. DATE 2018-09-14
INGENIEUR/ENGINEER DATE

CLIENT: IQALUIT WWTP

VEOLIA WATER TECHNOLOGIES

TITRE / TITLE:
WASTE WATER TREATMENT PLANT UPGRADE
PROCESS AND INSTRUMENTATTION DIAGRAM
BELT FILTER PRESS POLYMER DOSING SYSTEM

ÉCHELLE / SCALE: N.T.S.

PROJET / PROJECT	DESSIN No / DRAWING No	INTERNE / INTERNAL	FEUILLET / SHEET	REV./REV
5000218036 - PI600		GEN	14/15	3

REFERENCE NUMBER
DWG. No.: P619

Ce document est la propriété de VEOLIA et ne peut être reproduit sans son autorisation écrite.
This document is the property of VEOLIA and cannot be reproduced without its written authorization

ANSI B

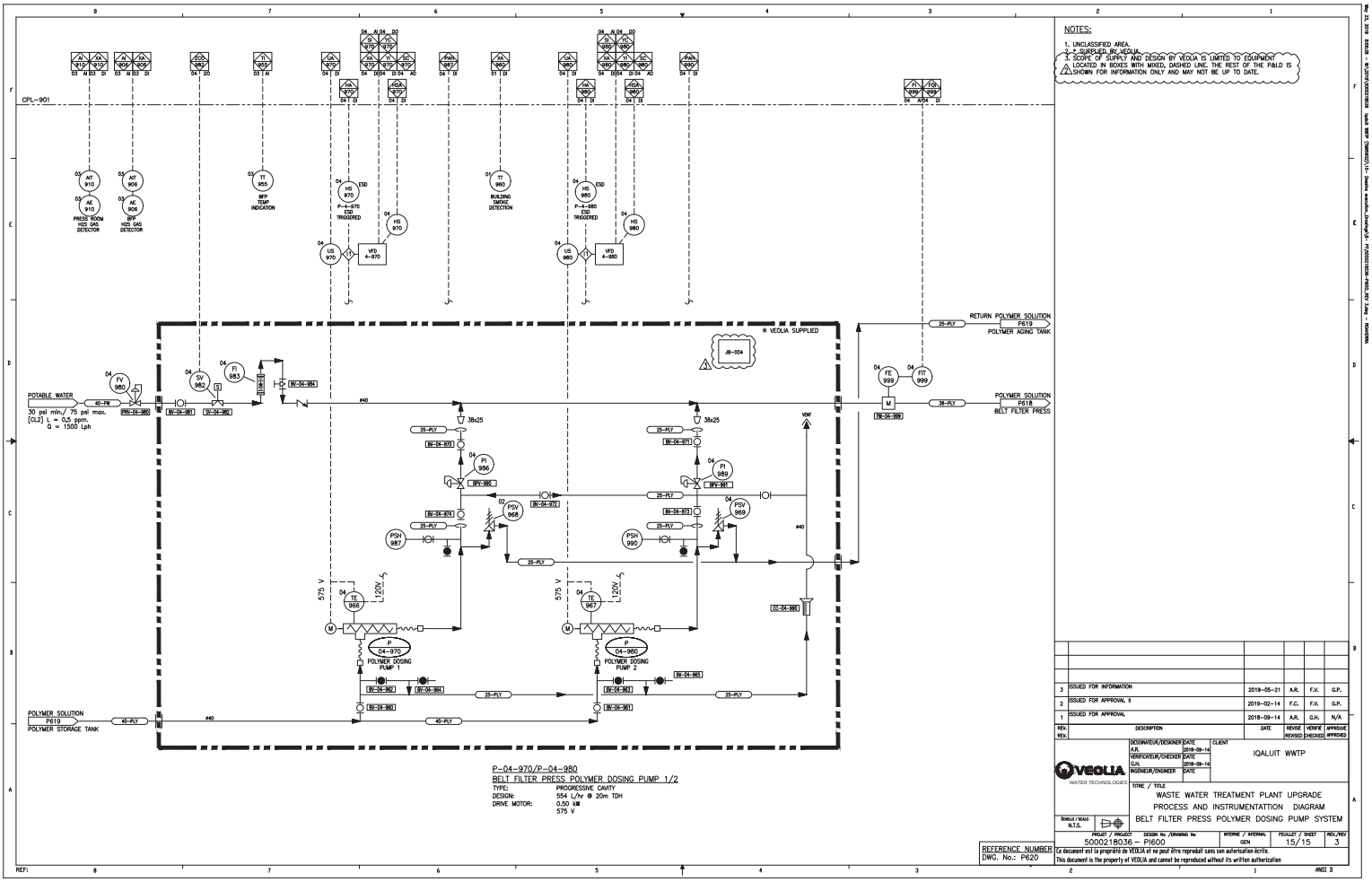

NOTES:

1. UNCLASSIFIED AREA.
2. * SUPPLIED BY VEOLIA.
3. SCOPE OF SUPPLY AND DESIGN BY VEOLIA IS LIMITED TO EQUIPMENT ⚠1 LOCATED IN BOXES WITH MIXED, DASHED LINE. THE REST OF THE P&I.D IS SHOWN FOR INFORMATION ONLY AND MAY NOT BE UP TO DATE.

P-04-970/P-04-980
BELT FILTER PRESS POLYMER DOSING PUMP 1/2

TYPE:	PROGRESSIVE CAVITY
DESIGN:	554 L/hr @ 20m TDH
DRIVE MOTOR:	0.50 kW 575 V

REV.	DESCRIPTION	DATE	REVISE REVISED	VERIFIE CHECKED	APPROUVE APPROVED
3	ISSUED FOR INFORMATION	2019-05-21	A.R.	F.V.	G.P.
2	ISSUED FOR APPROVAL II	2019-02-14	F.C.	F.V.	G.P.
1	ISSUED FOR APPROVAL	2018-09-14	A.R.	G.H.	N/A

DESIGNATEUR/DESIGNER A.R. DATE 2018-09-14
VERIFICATEUR/CHECKER G.H. DATE 2018-09-14
INGENIEUR/ENGINEER DATE

CLIENT: IQALUIT WWTP

TITRE / TITLE:
WASTE WATER TREATMENT PLANT UPGRADE
PROCESS AND INSTRUMENTATTION DIAGRAM
BELT FILTER PRESS POLYMER DOSING PUMP SYSTEM

ÉCHELLE / SCALE: N.T.S.

PROJET / PROJECT	DESSIN No /DRAWING No	INTERNE / INTERNAL	FEUILLET / SHEET	REV./REV
5000218036 – PI600		GEN	15/15	3

REFERENCE NUMBER
DWG. No.: P620

Ce document est la propriété de VEOLIA et ne peut être reproduit sans son autorisation écrite.
This document is the property of VEOLIA and cannot be reproduced without its written authorization

ANSI D

LEFT BLANK

3 – DRAWINGS

3.2 – HYDRAULIC PROFILE

LEFT BLANK

FLOW RATE PER UNIT		ELEVATION (m)						
		TANK HEIGHT	ZONE 1 WATER LEVEL	ZONE 2 WATER LEVEL	ZONE 3 WATER LEVEL	ZONE 4 SAFETY OVERFLOW	ZONE 5 TOP TULIPS WATER LEVEL	ZONE 6 WATER LEVEL
Q Min.@ (5m/h):	(43 m3/h)	3.650	3.298	3.293	3.288	3.388	2.849	2.400
Q Max.A (60m/h):	(520 m3/h)		3.310	3.298			2.934	

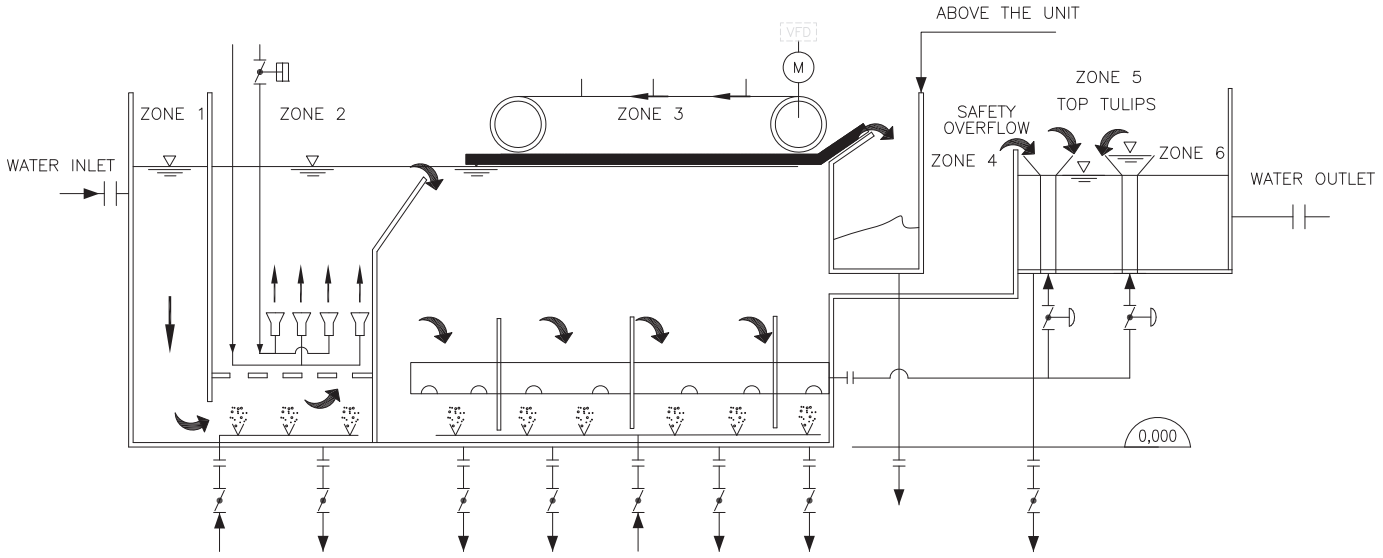

REV	DESCRIPTION	DATE	REVD	CHKD	APVD	ECN
1	FOR APPROVAL	2018-11-05	F.C.	G.H.	G.H.	N/A

CONFIDENTIALITY AND INTELLECTUAL PROPERTY NOTICE
ALL INFORMATION CONTAINED IN THIS DOCUMENT IS THE SOLE PROPERTY OF VEOLIA WATER TECHNOLOGIES CANADA INC. AND IS PROTECTED BY ALL APPLICABLE LAWS, INCLUDING BUT NOT LIMITED TO COPYRIGHT AND OTHER INTELLECTUAL PROPERTY LAWS. THE DESIGN CONCEPTS AND INFORMATION CONTAINED HEREIN ARE PROPRIETARY TO V.W.T. AND ARE SUBMITTED IN CONFIDENCE. THEY ARE NOT TRANSFERABLE. THEY SHALL NOT BE USED IN WHOLE OR IN PART FOR ANY PURPOSE OTHER THAN THAT FOR WHICH THEY ARE EXPRESSLY SUBMITTED AND NO IMPLIED LICENCE IS GRANTED OTHERWISE BY THE SUBMISSION OF THIS DOCUMENT. THEY ARE CONFIDENTIAL AND PRIVILEGED INFORMATION OF V.W.T. AND THEY MUST NOT BE DISCLOSED, REPRODUCED, LOANED, REMITTED OR USED IN ANY OTHER MANNER WITHOUT THE EXPRESS WRITTEN CONSENT OF V.W.T. V.W.T. ASSUMES NO RESPONSIBILITY OR LIABILITY FOR THE USE OF THIS DOCUMENT, IN WHOLE OR IN PART, IN CONNECTION WITH ANY WORK OTHER THAN THE DESIGN FOR ANOTHER PROJECT, OR IN A MANNER THAT DOES NOT RELATE TO THE FITNESS OR PURPOSE OF THIS DOCUMENT. IN NO EVENT SHALL THIS DOCUMENT OR THE DESIGN CONCEPTS AND INFORMATION CONTAINED HEREIN BE USED IN A MANNER DETRIMENTAL TO THE INTEREST OF V.W.T. ALL COPYRIGHT, PATENT AND OTHER INTELLECTUAL PROPERTY RIGHTS ARE RESERVED. ACCEPTANCE OF THE DELIVERY OF THIS DOCUMENT CONSTITUTES AGREEMENT TO THESE TERMS AND CONDITIONS.

DESIGNER	F.C.	DATE 2018-11-05
CHECKER	G.H.	DATE
ENGINEER	G.H.	DATE
SCALE:	NTS	

TITLE: DAF SFP-650 HYDRAULIC PROFILE

CLIENT: IQALUIT WWTP

VEOLIA WATER TECHNOLOGIES CANADA INC., 4105 Sartelon, Saint-Laurent, Qc, Canada, H4S 2B4 (514) 334-7230

PROJECT	DRAWING	INTERNAL	SHEET	REV
5000218036 – HY0001		DAF	1 OF 1	1

BAR = 1" AT PLOT SCALE
REF: N/A
STD: "B" 11x17

Nov 12, 2018 13:16:22 – W:\2018\5000218036 Iqaluit WWTP (TM95602)\15- Dessins execution_Drawings\7-HY\5000218036-HY1001DAF_1.dwg – Colnarff

LEFT BLANK

3 – DRAWINGS

3.3 – GENERAL ARRANGEMENT DRAWINGS

LEFT BLANK

TIE-IN POINTS (TP)		
TIE-POINT #	DESCRIPTION	DIMENSION / TYPE
TP-0601	RAW WATER INLET	Ø350 - #150 FLANGE - R.F.
TP-0602A/BE	CLEANING AIR INLET	Ø50 - #150 FLANGE - R.F.
TP-0603A/BF	DRAINS	Ø50 - #150 FLANGE - R.F.
TP-0604	SLUDGE OUTLET	Ø150 - #150 FLANGE - R.F.
TP-0605	WATER OUTLET TO PUMP	Ø150 - #150 FLANGE - R.F.
TP-0606	CLARIFIED WATER OUTLET	Ø400 - #150 FLANGE - R.F.
TP-0607A / TP-0607B	WHITE WATER INLET - AUTOMATIC VALVE (ON-OFF)	Ø50 - #150 FLANGE - R.F.
TP-0608A / TP-0608B	WHITE WATER INLET - MANUAL VALVE	Ø50 - #150 FLANGE - R.F.
TP-0609	DRAIN - CLARIFIED WATER	Ø50 - #150 FLANGE - R.F.

NOTES:

1- REMOVE LIFTING LUGS AFTER INSTALLATION.

2- ALL EQUIPMENT ON SITE MUST BE SUPPORTED IN AN INDEPENDANT MANNER. NO OTHER EQUIPMENT MAY BE SUPPORTED BY THE SPIDFLOW.

3- NO GRATING SHALL BE INSTALLED ON THE SPIDFLOW

4- SEE OPERATING MANUAL FOR ANY OTHER INFORMATION

5- WEIGHT:
DRY WEIGHT: 26 300 LBS
OPERATION WEIGHT: 160 400LBS
RECIRCULATION PIPING WEIGHT NOT INCLUDED (BY MECHANICAL CONTRACTOR)

6- DO NOT USE AS A LIFTING LUG

7- MINIMUM CLEARANCE AROUND THE UNIT: 600mm

8- PIPING AFTER OUTLET OF PUMP MUST BE FABRICATED ACCORDING TO B31.1 (TEMPERATURE: 5°C TO 35°C, PRESSURE 150 PSIG, FLUID AIR MIXED WITH WATER)

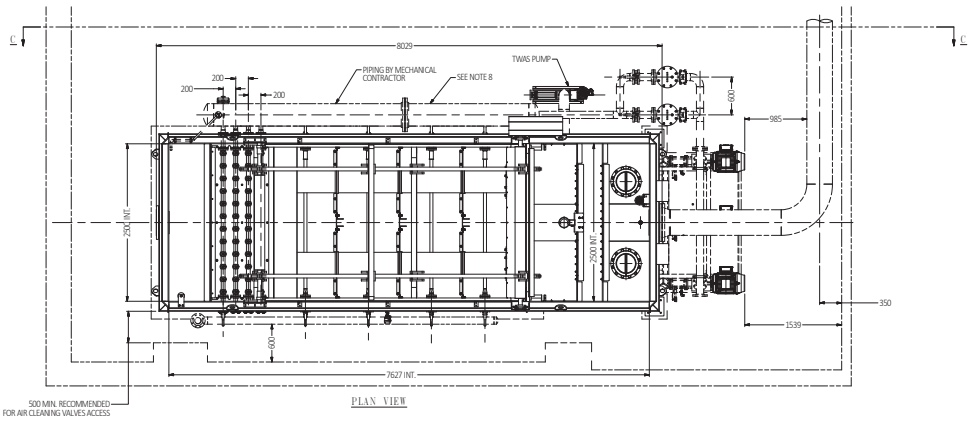

PLAN VIEW

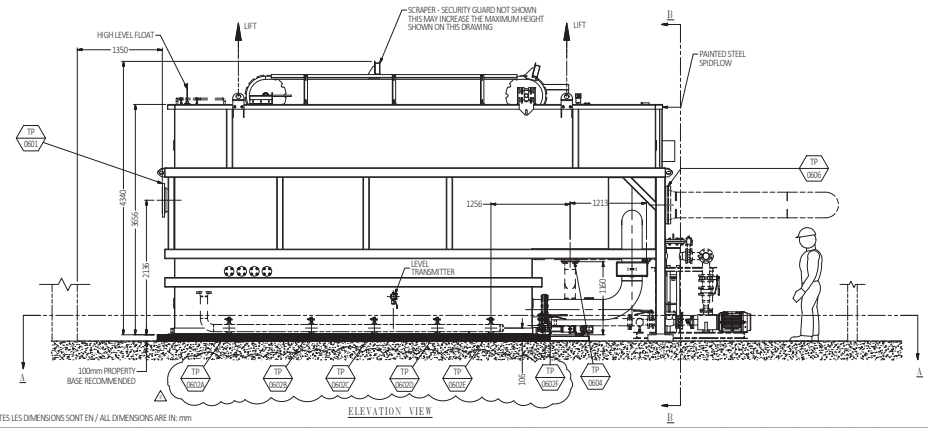

ELEVATION VIEW

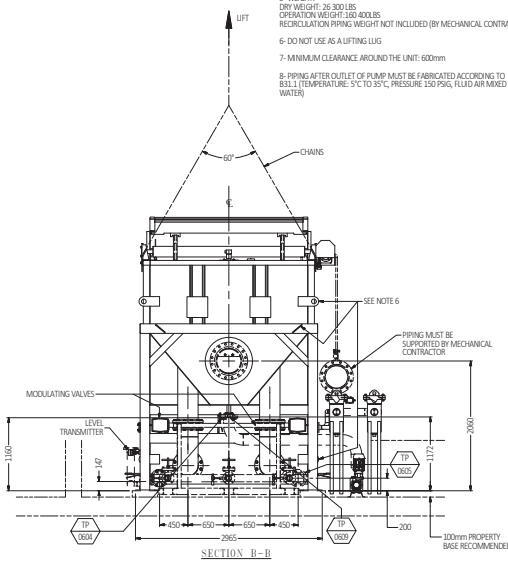

SECTION B-B

SCALE: 1:30

TOUTES LES DIMENSIONS SONT EN / ALL DIMENSIONS ARE IN: mm

REV.	DESCRIPTION	DATE	ISSUED/ REVISED	VÉRIFIÉ/ CHECKED	APPROUVÉ/ APPROVED	BY
3	FOR APPROVAL III	2018-12-17	M.M.	F.V.	C.B.	N/A
2	FOR APPROVAL II	2018-11-20	M.M.	F.V.	C.B.	N/A
1	FOR APPROVAL	2018-10-22	M.M.	G.H.	C.B.	N/A

DESSINÉ PAR / DRAWN BY: M.M. — DATE: 2018-10-22
VÉRIFIÉ PAR / CHECKED BY: N/A — DATE: N/A
INGÉNIEUR PAR / ENGINEERING BY: G.H. — DATE: 2018-10-22
ÉCHELLE / SCALE: 1:30

TITRE / TITLE: SPIDFLOW 650 DISSOLVED AIR FLOTTATION TANK GENERAL ARRANGEMENT
CLIENT: ICALUIT WWTP

VEOLIA WATER TECHNOLOGIES CANADA INC. 4105 Sartelon, Saint-Laurent, Qc, Canada, Tel: (514) 334-7100

PROJET / PROJECT	DESSIN / DRAWING	NUMÉRO INTERNE / INTERNAL NUMBER	FEUILLETS / PAGES	REV.
5000218036	GA001	GEN	1 / 3	3

ISO "D" 22 X 34 — REV: N/A — BARRE = 1" À L'ÉCHELLE D'IMPRESSION / BAR = 1" AT PLOT SCALE

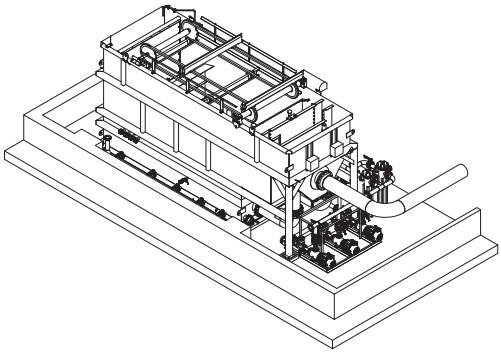

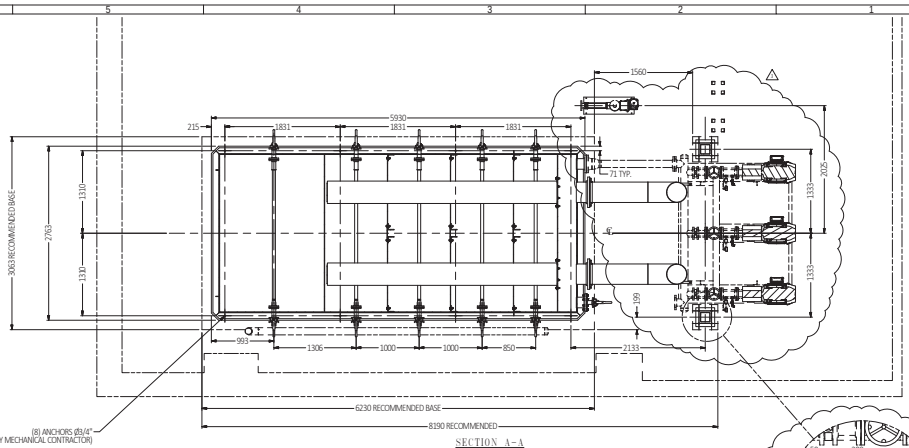

SECTION A-A

SCALE: 1:30

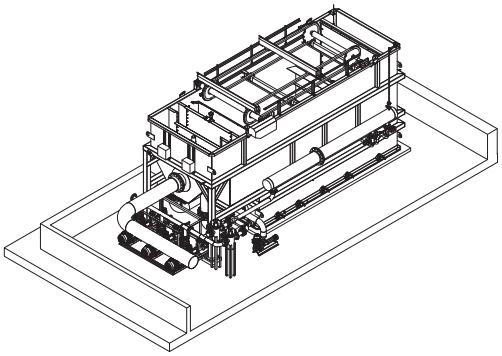

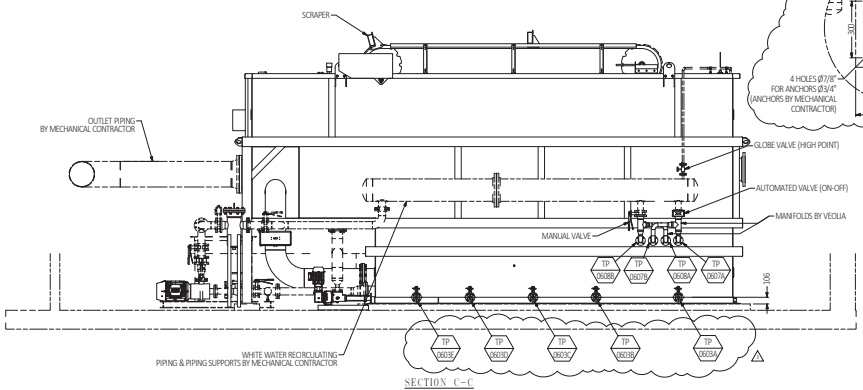

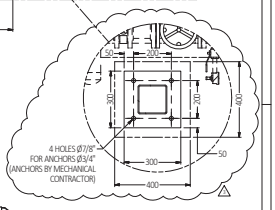

SECTION C-C

SCALE: 1:30

TOUTES LES DIMENSIONS SONT EN / ALL DIMENSIONS ARE IN: mm

REV.	DESCRIPTION	DATE	DESSINÉ PAR / DRAWN BY	VÉRIFIÉ PAR / CHECKED BY	APPROUVÉ PAR / APPROVED BY
3	FOR APPROVAL III	2018-12-17	M.M.	F.V.	C.B.
2	FOR APPROVAL II	2018-11-20	M.M.	F.V.	C.B.
1	FOR APPROVAL	2018-10-22	M.M.	G.H.	C.B.

DESSINÉ PAR / DRAWN BY	M.M.
DATE	2018-10-22
VÉRIFIÉ PAR / CHECKED BY	N/A
DATE	N/A
INGÉNIEUR PAR / ENGINEERING BY	G.H.
DATE	2018-10-22
ÉCHELLE / SCALE	1:30

TITRE / TITLE: SPEEFLOW 650 DISSOLVED AIR FLOTTATION TANK GENERAL ARRANGEMENT

CLIENT: ICAILLOT WWTP

VEOLIA WATER TECHNOLOGIES CANADA INC. 4105 Sartelon, Saint-Laurent, Qc, Canada, Tel: (514) 334-7330

PROJET / PROJECT	DESSIN / DRAWING	NUMÉRO INTERNE / INTERNAL NUMBER	FEUILLETS / PAGES	REV.
5000218036	GA002	GEN	2 / 3	3

INFORMATION CONFIDENTIELLE ET DE PROPRIÉTÉ RÉSERVÉE / CONFIDENTIAL AND PROPRIETARY INFORMATION

L'INFORMATION CONTENUE DANS CE DOCUMENT EST LA PROPRIÉTÉ EXCLUSIVE DE VEOLIA WATER TECHNOLOGIES CANADA INC. ET EST PROTÉGÉE PAR TOUTE LOI APPLICABLE INCLUANT, SANS LIMITATION, LES LOIS SUR LES SECRETS COMMERCIAUX ET LES DROITS D'AUTEUR. CE DOCUMENT NE DOIT ÊTRE UTILISÉ, REPRODUIT, MODIFIÉ, DIVULGUÉ OU AFFICHÉ QUE DANS LA MESURE OÙ VOUS AVEZ OBTENU UNE LICENCE ÉCRITE DE VEOLIA WATER TECHNOLOGIES CANADA INC. OU DANS LA MESURE AUTRE QUE PERMISE PAR LA LOI. SAUF DANS LA MESURE OÙ VOUS AVEZ OBTENU UNE LICENCE ÉCRITE DE VEOLIA WATER TECHNOLOGIES CANADA INC. OU DANS LA MESURE AUTRE QUE PERMISE PAR LA LOI, VOUS NE DEVEZ PAS UTILISER CE DOCUMENT À DES FINS AUTRES QUE CELLES POUR LESQUELLES IL A ÉTÉ FOURNI, NE DEVEZ PAS LE REPRODUIRE EN TOUT OU EN PARTIE, NE DEVEZ PAS LE MODIFIER, NE DEVEZ PAS LE DIVULGUER À DES TIERS ET NE DEVEZ PAS LE RENDRE ACCESSIBLE À DES TIERS. / THIS DRAWING CONTAINS CONFIDENTIAL AND PROPRIETARY INFORMATION OF VEOLIA WATER TECHNOLOGIES CANADA INC. AND IS PROTECTED BY ALL APPLICABLE LAWS, INCLUDING, WITHOUT LIMITATION, TRADE SECRET AND COPYRIGHT LAWS. THIS DRAWING SHALL NOT BE USED, REPRODUCED, MODIFIED, DISCLOSED OR DISPLAYED EXCEPT TO THE EXTENT YOU HAVE OBTAINED WRITTEN PERMISSION FROM VEOLIA WATER TECHNOLOGIES CANADA INC. OR TO THE EXTENT OTHERWISE PERMITTED BY LAW. EXCEPT TO THE EXTENT YOU HAVE OBTAINED WRITTEN PERMISSION FROM VEOLIA WATER TECHNOLOGIES CANADA INC. OR TO THE EXTENT OTHERWISE PERMITTED BY LAW, YOU MUST NOT USE THIS DRAWING FOR ANY PURPOSE OTHER THAN THE PURPOSE FOR WHICH IT WAS PROVIDED, YOU MUST NOT REPRODUCE IT IN WHOLE OR IN PART, YOU MUST NOT MODIFY IT, YOU MUST NOT DISCLOSE IT TO THIRD PARTIES AND YOU MUST NOT MAKE IT ACCESSIBLE TO THIRD PARTIES.

DISCLAIMER AND RESTRICTIVE PROPRIETY NOTICE

ALL INFORMATION CONTAINED IN THIS DOCUMENT IS THE SOLE PROPERTY OF VEOLIA WATER TECHNOLOGIES CANADA INC. AND IS PROTECTED BY ALL APPLICABLE LAWS, INCLUDING, WITHOUT LIMITATION, TRADE SECRET AND COPYRIGHT LAWS. THIS DRAWING SHALL NOT BE USED, REPRODUCED, MODIFIED, DISCLOSED OR DISPLAYED EXCEPT TO THE EXTENT YOU HAVE OBTAINED WRITTEN PERMISSION FROM VEOLIA WATER TECHNOLOGIES CANADA INC. OR TO THE EXTENT OTHERWISE PERMITTED BY LAW. EXCEPT TO THE EXTENT YOU HAVE OBTAINED WRITTEN PERMISSION FROM VEOLIA WATER TECHNOLOGIES CANADA INC. OR TO THE EXTENT OTHERWISE PERMITTED BY LAW, YOU MUST NOT USE THIS DRAWING FOR ANY PURPOSE OTHER THAN THE PURPOSE FOR WHICH IT WAS PROVIDED, YOU MUST NOT REPRODUCE IT IN WHOLE OR IN PART, YOU MUST NOT MODIFY IT, YOU MUST NOT DISCLOSE IT TO THIRD PARTIES AND YOU MUST NOT MAKE IT ACCESSIBLE TO THIRD PARTIES. / CE DESSIN CONTIENT DES RENSEIGNEMENTS CONFIDENTIELS ET DE PROPRIÉTÉ. TOUTE LA DOCUMENTATION CONTENUE DANS CE DESSIN EST LA PROPRIÉTÉ EXCLUSIVE DE VEOLIA WATER TECHNOLOGIES CANADA INC. ET EST PROTÉGÉE PAR TOUTE LOI APPLICABLE INCLUANT, SANS LIMITATION, LES LOIS SUR LES SECRETS COMMERCIAUX ET LES DROITS D'AUTEUR. CE DOCUMENT NE DOIT ÊTRE UTILISÉ, REPRODUIT, MODIFIÉ, DIVULGUÉ OU AFFICHÉ QUE DANS LA MESURE OÙ VOUS AVEZ OBTENU UNE LICENCE ÉCRITE DE VEOLIA WATER TECHNOLOGIES CANADA INC. OU DANS LA MESURE AUTRE QUE PERMISE PAR LA LOI. SAUF DANS LA MESURE OÙ VOUS AVEZ OBTENU UNE LICENCE ÉCRITE DE VEOLIA WATER TECHNOLOGIES CANADA INC. OU DANS LA MESURE AUTRE QUE PERMISE PAR LA LOI, VOUS NE DEVEZ PAS UTILISER CE DOCUMENT À DES FINS AUTRES QUE CELLES POUR LESQUELLES IL A ÉTÉ FOURNI, NE DEVEZ PAS LE REPRODUIRE EN TOUT OU EN PARTIE, NE DEVEZ PAS LE MODIFIER, NE DEVEZ PAS LE DIVULGUER À DES TIERS ET NE DEVEZ PAS LE RENDRE ACCESSIBLE À DES TIERS.

SIZE: "D" 22 X 34 | REF: N/A | BARRE = 1" À L'ÉCHELLE D'IMPRESSION. / BAR = 1" AT PLOT SCALE

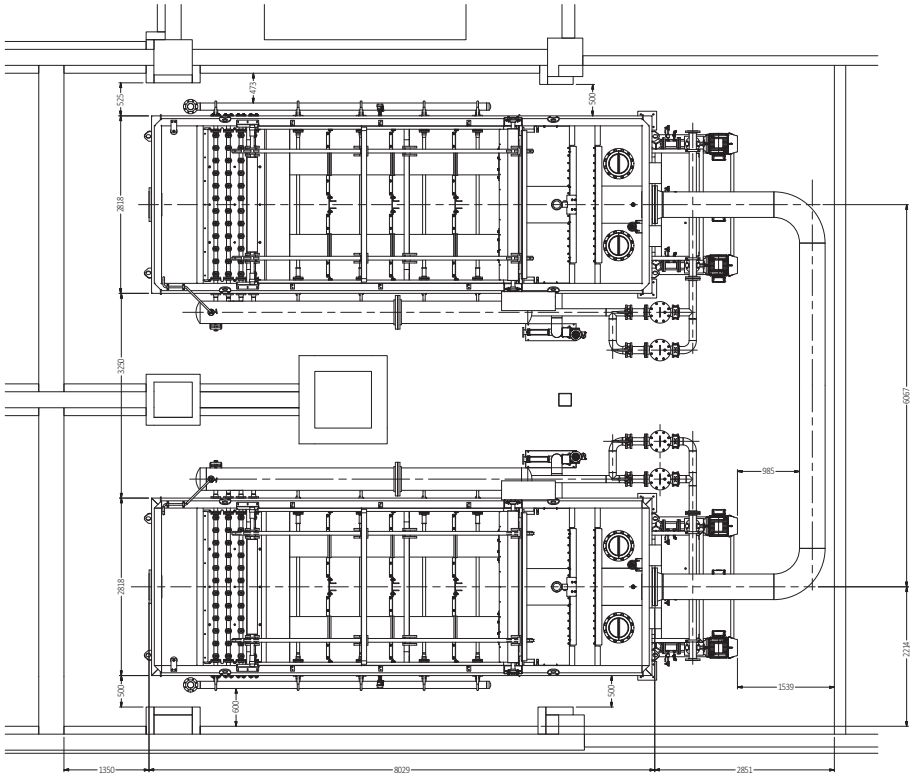

(2) SPIDFLOWS ON CLIENT'S LAYOUT

TOUTES LES DIMENSIONS SONT EN / ALL DIMENSIONS ARE IN: mm

REV.	DESCRIPTION	DATE	MEMBRE DESSINÉ	MEMBRE VÉRIFIÉ	APPROUVÉ APPROVED	BON
3	FOR APPROVAL III	2018-12-17	M.M.	F.V.	C.B.	N/A
2	FOR APPROVAL II	2018-11-20	M.M.	F.V.	C.B.	N/A
1	FOR APPROVAL	2018-10-22	M.M.	G.H.	C.B.	N/A

DESSINÉ PAR / DRAWN BY: M.M. — DATE: 2018-10-22
VÉRIFIÉ PAR / CHECKED BY: N/A — DATE: N/A
INGÉNIEUR PAR / ENGINEERING BY: G.H. — DATE: 2018-10-22
ÉCHELLE / SCALE: 1:30

TITRE / TITLE: SPIDFLOW ESD
DISSOLVED AIR FLOTTATION TANK
GENERAL ARRANGEMENT

CLIENT: ICALUIT WWTP

VEOLIA WATER TECHNOLOGIES CANADA INC. 4105 Sartelon, Saint-Laurent, Qc, Canada, Tel: (514) 334-7100

PROJET / PROJECT	DESSIN / DRAWING	NUMÉRO INTERNE / INTERNAL NUMBER	FEUILLETS / PAGES	REV.
5000218036	GA002	GEN	3 / 3	3

ECO: "0" 22:13:34 — REF: N/A — BARRE = 1" À L'ÉCHELLE D'IMPRESSION. BAR = 1" AT PLOT SCALE

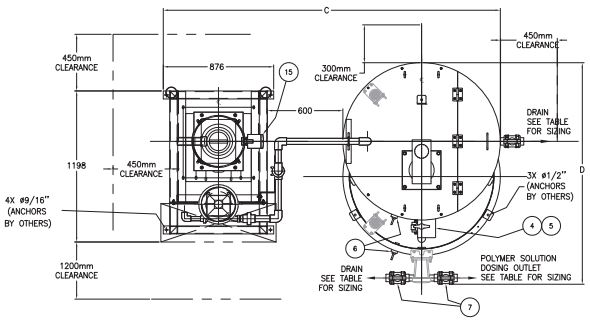

TOP VIEW

PAX	ITEM	DESCRIPTION	INVENTORY DWG REF	UN. QTY	TOT. QTY	E	S
	1	MIXING TANK FABRICATED SS304		1	1		
	2	STORAGE TANK FABRICATED SS304		1	1		
	3	MIXER		1	1		
	4	BUTTERFLY VALVE		1	1		
	5	ELECTRIC ACTUATOR		1	1		
	6	PRESSURE TRANSDUCER		1	1		
	7	BALL VALVE OUTLET		3	3		
	8	BALL CHECK VALVE		1	1		
	9	STATIC MIXER		1	1		
	10	VACUUM CONVEYOR		1	1		
	11	HOPPER		1	1		
	12	FEEDER		1	1		
	13	EDUCTOR		1	1		
	14	WETTING CONE		1	1		
	15	LEVEL LIMIT SWITCH		1	1		
	16	BALL VALVE INLET		1	1		
	17	PRESSURE SWITCH		1	1		
	18	PRESSURE GAUGE		1	1		
	19	SOLENOID VALVE FOUR WAYS		1	1		
	20	SOLENOID VALVE INLET		1	1		
	21	METERING BALL VALVE		2	2		
	22	CYLINDER AND PISTON		1	1		
	23	CONTROL PANEL		1	1		
	24	CONDUCTIVITY SENSOR (SEE NOTE 1)		2	2		

NOTE:
1–CONDUCTIVITY SENSOR IN PREPARATION TANK AND/OR STORAGE TANK ARE AVAILABLE ON REQUEST ONLY. PLEASE REFER TO QUOTATION.

2–THE HYDRAPOL UNIT IS PRE MOUNTED AS MUCH AS POSSIBLE BUT FREIGHT PURPOSE SOME COMPONENTS HAVE TO BE INSTALLED ON SITE BY THE CLIENT OR HIS INSTALLER. REFER TO THE HANDLING, STORAGE AND INSTALLATION INSTRUCTIONS MANUAL.

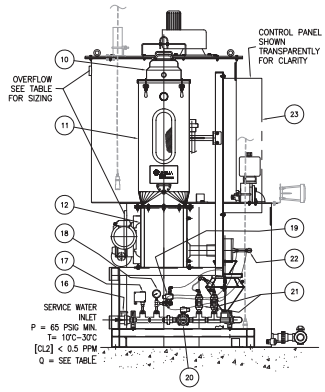

LEFT VIEW

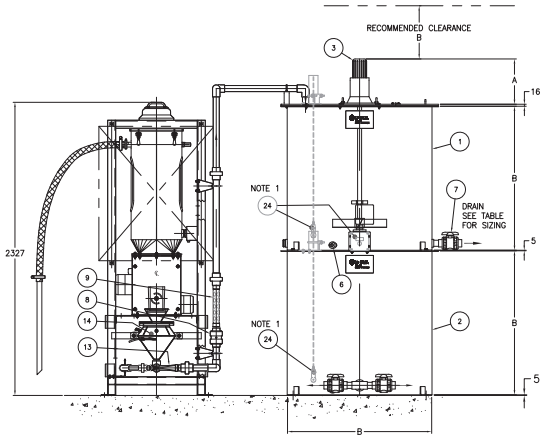

FRONT VIEW

MODEL	A	B	C	D	INLET WATER FLOW RATE	SERVICE WATER INLET	EDUCTOR OUTLET	STORAGE TANK OUTLET	DRAIN	PREPARATION TANK OVERFLOW	STORAGE TANK OVERFLOW	TRANSFER VALVE	APPROX. WEIGHT "EMPTY" (Kg)	APPROX. WEIGHT "FULL" (Kg)
HP 250	358	800	2332	1381	5.2 M3/H	ø1"	ø1½"	ø1½"	ø1½"	ø2"	ø2"	ø2"	534	1338
HP 500	405	915	2447	1556	5.2 M3/H	ø1"	ø1½"	ø1½"	ø1½"	ø2"	ø2"	ø2"	580	1780
HP 750	387	1042	2574	1696	5.2 M3/H	ø1"	ø1½"	ø1½"	ø1½"	ø2"	ø2"	ø2"	648	2424
HP 1000	387	1143	2675	1759	5.2 M3/H	ø1"	ø1½"	ø1½"	ø1½"	ø2"	ø2"	ø2"	707	3053
HP 1250	387	1219	2754	1835	5.2 M3/H	ø1"	ø1½"	ø1½"	ø1½"	ø2"	ø2"	ø2"	754	3600
HP 1500	387	1295	2827	1911	5.2 M3/H	ø1"	ø1½"	ø1½"	ø1½"	ø2"	ø2"	ø2"	803	4215
HP 1750	387	1371	2903	1987	5.2 M3/H	ø1"	ø1½"	ø1½"	ø1½"	ø2"	ø2"	ø2"	849	4897
HP 2000	387	1422	2954	2077	8.0 M3/H	ø1½"	ø2"	ø2"	ø2"	ø3"	ø2"	ø2"	904	5420
HP 2500	503	1524	3056	2141	8.0 M3/H	ø1½"	ø2"	ø2"	ø2"	ø3"	ø2"	ø2"	980	6540
HP 3000	428	1626	3208	2433	8.0 M3/H	ø1½"	ø2"	ø3"	ø3"	ø3"	ø2"	ø2"	1100	7852
HP 3500	510	1702	3284	2525	8.0 M3/H	ø1½"	ø2"	ø3"	ø3"	ø3"	ø2"	ø2"	1171	8915
HP 4000	510	1778	3360	2641	8.0 M3/H	ø1½"	ø2"	ø3"	ø3"	ø3"	ø2"	ø2"	1238	10068

REV	DESCRIPTION	DATE	REV'D	CHK'D	APV'D	ECN
2	CONDUCT. SENSOR QTY - FOR APPROVAL	2019-06-07	N.L.	S.M.	F.V.	
A	FOR APPROVAL	2018-09-27	N.L.	S.M.	G.H.	

CONFIDENTIALITY AND INTERGECTUAL PROPERTY SYSTEM
ALL INFORMATION CONTAINED IN THIS DOCUMENT IS THE EXCLUSIVE PROPERTY OF VEOLIA WATER TECHNOLOGIES CANADA INC. AND ITS AFFILIATES (COLLECTIVELY REFERRED TO AS "VEOLIA"). ANY UNAUTHORIZED USE, DISCLOSURE, REPRODUCTION OR OTHER DISTRIBUTION OF THIS DOCUMENT, OR ITS CONTENTS, MAY VIOLATE VEOLIA'S INTELLECTUAL PROPERTY RIGHTS. THE USERS CONCEPTS AND INFORMATION CONTAINED HEREIN ARE PROPRIETARY TO VEOLIA AND MAY BE USED OR DISCLOSED ONLY WITH THE WRITTEN PERMISSION OF VEOLIA OR IN STRICT ACCORDANCE WITH THE AGREEMENT UNDER WHICH THE DOCUMENT IS SUPPLIED. THIS DOCUMENT AND ITS CONTENTS ARE PROTECTED BY COPYRIGHT LAWS AND NO IMPLIED LICENCE IS GRANTED WHATSOEVER REGARDING THE USE OF ANY INFORMATION CONTAINED IN THIS DOCUMENT. VEOLIA RESERVES ALL RIGHTS AND MAY TAKE ANY AND ALL LEGAL ACTION IN THE EVENT THAT THIS DOCUMENT IS USED IN A MANNER INCONSISTENT WITH THE FOREGOING. UNLESS OTHERWISE AGREED IN WRITING BY VEOLIA, VEOLIA DISCLAIMS ALL RESPONSIBILITY OR LIABILITY FOR THE USE OF THIS DOCUMENT OR ANY PORTION THEREOF IN ANY MANNER WHATSOEVER. ANY RISK ARISING FROM SUCH USE BY YOU OR ANY UNAUTHORIZED USER SHALL BE YOUR SOLE RISK AND YOU WILL INDEMNIFY AND HOLD VEOLIA HARMLESS FROM AND AGAINST ANY AND ALL LOSS, LIABILITY, CLAIMS OR EXPENSES ARISING FROM OR CONNECTED WITH SUCH USE. IF YOU ARE NOT AUTHORIZED TO USE THIS DOCUMENT, YOU MUST DESTROY IT AND ALL COPIES IN YOUR POSSESSION, CONTROL OR CUSTODY AND NOTIFY VEOLIA IMMEDIATELY. BY RECEIVING OR USING THIS DOCUMENT, YOU ARE AGREEING TO BE BOUND BY THE TERMS OF THIS NOTICE. IF YOU DO NOT AGREE TO THESE TERMS, YOU MUST NOT USE THIS DOCUMENT. THIS NOTICE GOVERNS VEOLIA'S RIGHTS IN THE DOCUMENT UNLESS AGREED OTHERWISE IN WRITING.

DESIGNER	N.L.	2016-09-16
CHECKER	S.M.	2016-09-16
ENGINEER	S.M.	2016-09-16
SCALE:	---	

TITLE: HYDRA–POL HP–500
WAM VACUUM CONVEYOR TYPE WITH TANKS
GENERAL ARRANGEMENT

CLIENT: IQALUIT WWTP
CITY OF IQALUIT

VEOLIA
VEOLIA WATER TECHNOLOGIES CANADA INC. | 400 Clyde Ave. | Suite 210 | Montreal, QC, Canada, H3G 2B4 | 514-937-7337

PROJECT	DRAWING	INTERNAL	SHEET	REV
5000218036 – GA0002		PCH_WAM	1 OF 1	2

STD: "D" 22x34 | REF: N/A | BAR = 1" AT PLOT SCALE

Sep 27, 2018 11:11:29 – W:\2018\5000218036 Iqaluit WWTP (TNEP&EDT)\16- Automation\15- Detailed execution_Drawings\A- GA\5000218036_GA_0002_PM_WAM.dwg – Model tab

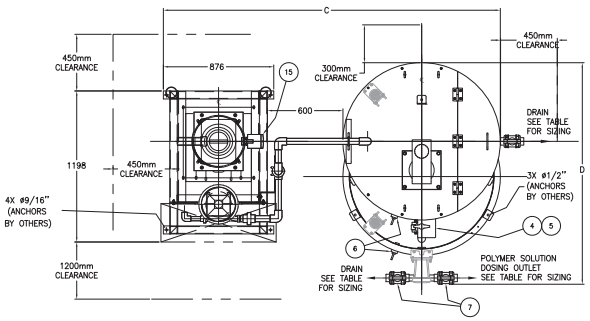

TOP VIEW

PAX	ITEM	DESCRIPTION	INVENTORY DWG REF	UN. QTY	TOT. QTY	E	S
	1	MIXING TANK FABRICATED SS304		1	1		
	2	STORAGE TANK FABRICATED SS304		1	1		
	3	MIXER		1	1		
	4	BUTTERFLY VALVE		1	1		
	5	ELECTRIC ACTUATOR		1	1		
	6	PRESSURE TRANSDUCER		1	1		
	7	BALL VALVE OUTLET		3	3		
	8	BALL CHECK VALVE		1	1		
	9	STATIC MIXER		1	1		
	10	VACUUM CONVEYOR		1	1		
	11	HOPPER		1	1		
	12	FEEDER		1	1		
	13	EDUCTOR		1	1		
	14	WETTING CONE		1	1		
	15	LEVEL LIMIT SWITCH		1	1		
	16	BALL VALVE INLET		1	1		
	17	PRESSURE SWITCH		1	1		
	18	PRESSURE GAUGE		1	1		
	19	SOLENOID VALVE FOUR WAYS		1	1		
	20	SOLENOID VALVE INLET		1	1		
	21	METERING BALL VALVE		2	2		
	22	CYLINDER AND PISTON		1	1		
	23	CONTROL PANEL		1	1		
	24	CONDUCTIVITY SENSOR (SEE NOTE 1)		2	2		

NOTE:
1–CONDUCTIVITY SENSOR IN PREPARATION TANK AND/OR STORAGE TANK ARE AVAILABLE ON REQUEST ONLY. PLEASE REFER TO QUOTATION.

2–THE HYDRAPOL UNIT IS PRE MOUNTED AS MUCH AS POSSIBLE BUT FREIGHT PURPOSE SOME COMPONENTS HAVE TO BE INSTALLED ON SITE BY THE CLIENT OR HIS INSTALLER. REFER TO THE HANDLING, STORAGE AND INSTALLATION INSTRUCTIONS MANUAL.

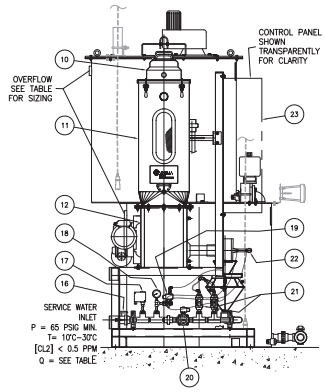

LEFT VIEW

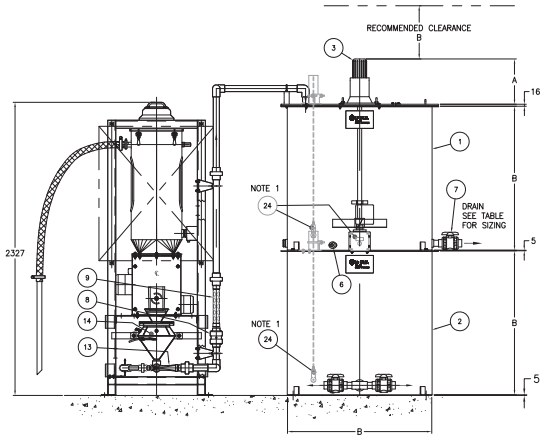

FRONT VIEW

MODEL	A	B	C	D	INLET WATER FLOW RATE	SERVICE WATER INLET	EDUCTOR OUTLET	STORAGE TANK OUTLET	DRAIN	PREPARATION TANK OVERFLOW	STORAGE TANK OVERFLOW	TRANSFER VALVE	APPROX. WEIGHT "EMPTY" (Kg)	APPROX. WEIGHT "FULL" (Kg)
HP 250	358	800	2332	1381	5.2 M3/H	ø1"	ø1½"	ø1½"	ø1½"	ø2"	ø2"	ø2"	534	1338
HP 500	405	915	2447	1556	5.2 M3/H	ø1"	ø1½"	ø1½"	ø1½"	ø2"	ø2"	ø2"	580	1780
HP 750	387	1042	2574	1696	5.2 M3/H	ø1"	ø1½"	ø1½"	ø1½"	ø2"	ø2"	ø2"	648	2424
HP 1000	387	1143	2675	1759	5.2 M3/H	ø1"	ø1½"	ø1½"	ø1½"	ø2"	ø2"	ø2"	707	3053
HP 1250	387	1219	2754	1835	5.2 M3/H	ø1"	ø1½"	ø1½"	ø1½"	ø2"	ø2"	ø2"	754	3600
HP 1500	387	1295	2827	1911	5.2 M3/H	ø1"	ø1½"	ø1½"	ø1½"	ø2"	ø2"	ø2"	803	4215
HP 1750	387	1371	2903	1987	5.2 M3/H	ø1"	ø1½"	ø1½"	ø1½"	ø2"	ø2"	ø2"	849	4897
HP 2000	387	1422	2954	2077	8.0 M3/H	ø1½"	ø2"	ø2"	ø2"	ø3"	ø2"	ø2"	904	5420
HP 2500	503	1524	3056	2141	8.0 M3/H	ø1½"	ø2"	ø2"	ø2"	ø3"	ø2"	ø2"	980	6540
HP 3000	428	1626	3208	2433	8.0 M3/H	ø1½"	ø2"	ø3"	ø3"	ø3"	ø2"	ø2"	1100	7852
HP 3500	510	1702	3284	2525	8.0 M3/H	ø1½"	ø2"	ø3"	ø3"	ø3"	ø2"	ø2"	1171	8915
HP 4000	510	1778	3360	2641	8.0 M3/H	ø1½"	ø2"	ø3"	ø3"	ø3"	ø2"	ø2"	1238	10068

REV	DESCRIPTION	DATE	REV'D	CHK'D	APV'D	ECN
2	CONDUCT. SENSOR QTY - FOR APPROVAL	2019-06-07	N.L.	S.M.	F.V.	
A	FOR APPROVAL	2018-09-27	N.L.	S.M.	G.H.	

CONFIDENTIALITY AND INTERSECTUAL PROPERTY SYSTEM
ALL INFORMATION CONTAINED IN THIS DOCUMENT IS THE EXCLUSIVE PROPERTY OF VEOLIA WATER TECHNOLOGIES CANADA INC. AND ITS AFFILIATES (COLLECTIVELY REFERRED TO AS "VEOLIA") AND IS STRICTLY CONFIDENTIAL. EXCEPT AS EXPRESSLY PROVIDED IN THE INTELLECTUAL PROPERTY LAW, THE VEOLIA CONCEPTS AND INFORMATION CONTAINED HEREIN ARE PROPRIETARY TO VEOLIA AND MAY BE PROTECTED BY PATENT, TRADE SECRET AND/OR COPYRIGHT LAW. YOU MAY USE OUT OF VEOLIA ONLY FOR THE PURPOSES FOR WHICH THE DOCUMENT IS EXPRESSLY SUBMITTED AND NO IMPLIED LICENCE IS GRANTED TO YOU IN THIS REGARD. REPRODUCTION OF THIS DOCUMENT OR ANY PORTION THEREOF, INCLUDING ANY ATTACHMENTS OR EXHIBITS AND ANY COPY MADE OR STORED, REPRODUCED, COPIED, ADAPTED OR SENT TO A THIRD PARTY WITHOUT THE PRIOR EXPRESS WRITTEN CONSENT OF VEOLIA IS STRICTLY PROHIBITED. BY ACCEPTING THIS DOCUMENT, YOU AGREE TO BE BOUND BY THE FOREGOING RESTRICTIONS. YOU ARE NOT AUTHORIZED TO MODIFY ANY INFORMATION CONTAINED HEREIN FOR ANY PURPOSE AND YOU AGREE NOT TO DISCLOSE ANY CONFIDENTIAL INFORMATION CONTAINED HEREIN OR THE EXISTENCE OF THE AGREEMENT WITH VEOLIA WITHOUT THE PRIOR WRITTEN CONSENT OF VEOLIA. UNAUTHORIZED USE OF THIS DOCUMENT OR ANY COPIES THEREOF AND ANY VIOLATION OF YOUR OBLIGATIONS MAY SUBJECT YOU TO CIVIL AND CRIMINAL PENALTIES. VEOLIA RESERVES ALL RIGHTS AND REMEDIES AVAILABLE TO IT. ALL DISPUTES WILL BE GOVERNED BY AND CONSTRUED IN ACCORDANCE WITH THE LAWS OF THE PROVINCE OF ONTARIO AND THE FEDERAL LAWS OF CANADA APPLICABLE THEREIN AT THE EXCLUSIVE JURISDICTION OF THE COURTS OF ONTARIO. YOU AGREE THAT VEOLIA WILL BE ENTITLED TO INJUNCTIVE RELIEF IN THE EVENT OF ANY VIOLATION OF THE TERMS AND CONDITIONS CONTAINED HEREIN. IF ANY PART OF THESE TERMS AND CONDITIONS SHALL BE HELD TO BE UNENFORCEABLE, THE REMAINING PROVISIONS SHALL REMAIN IN FULL FORCE AND EFFECT. YOU AGREE THAT THESE TERMS AND CONDITIONS CONSTITUTE THE ENTIRE AGREEMENT BETWEEN YOU AND VEOLIA WITH RESPECT TO THE SUBJECT MATTER HEREOF AND SUPERSEDE ANY AND ALL PRIOR AGREEMENTS, WHETHER WRITTEN OR ORAL, BETWEEN YOU AND VEOLIA WITH RESPECT TO SUCH SUBJECT MATTER. VEOLIA RESERVES THE RIGHT TO MODIFY THESE TERMS AND CONDITIONS AT ANY TIME AND YOUR CONTINUED USE OF THIS DOCUMENT FOLLOWING THE POSTING OF ANY SUCH MODIFICATION WILL CONSTITUTE YOUR ACCEPTANCE OF ANY SUCH MODIFICATION. YOU MAY NOT ASSIGN THIS AGREEMENT OR ANY RIGHTS HEREUNDER WITHOUT VEOLIA'S PRIOR WRITTEN CONSENT. VEOLIA MAY ASSIGN THIS AGREEMENT TO ANY AFFILIATE WITHOUT YOUR CONSENT. ANY ATTEMPTED ASSIGNMENT IN VIOLATION OF THIS AGREEMENT SHALL BE VOID. THIS AGREEMENT SHALL BE BINDING UPON AND INURE TO THE BENEFIT OF THE PARTIES HERETO AND THEIR RESPECTIVE PERMITTED SUCCESSORS AND ASSIGNS. THIS AGREEMENT MAY BE EXECUTED IN ANY NUMBER OF COUNTERPARTS, EACH OF WHICH WHEN EXECUTED AND DELIVERED SHALL BE AN ORIGINAL, BUT ALL COUNTERPARTS TOGETHER SHALL CONSTITUTE ONE AND THE SAME INSTRUMENT. THE PARTIES AGREE THAT THIS AGREEMENT MAY BE DELIVERED BY EMAIL OR FACSIMILE AND THAT SUCH DELIVERY SHALL BE VALID AND EFFECTIVE AS DELIVERY OF A MANUALLY EXECUTED ORIGINAL COUNTERPART OF THIS AGREEMENT.

		DATE
DESIGNER	N.L.	2016-09-16
CHECKER	S.M.	2016-09-16
ENGINEER	S.M.	2016-09-16
SCALE:	---	

TITLE: HYDRA–POL HP–250
WAM VACUUM CONVEYOR TYPE WITH TANKS
GENERAL ARRANGEMENT

CLIENT: IQALUIT WWTP
CITY OF IQALUIT

VEOLIA
VEOLIA WATER TECHNOLOGIES CANADA INC. 4105 Sartelon St Montreal QC, Canada, H4S 2B3 514-334-7230

PROJECT	DRAWING	INTERNAL	SHEET	REV
5000218036 – GA003		PCH_MAM	1 OF 1	2

STD: "D" 22x34 | REF: N/A | BAR = 1" AT PLOT SCALE

Sep 27, 2018 11:09:55 – W:\2018\5000218036 Iqaluit WWTP (TMENGR02)\16– Automation\15– Detailed execution_Drawings\A– GA\5000218036_GA_0003_PM_WT.dwg – Heberto

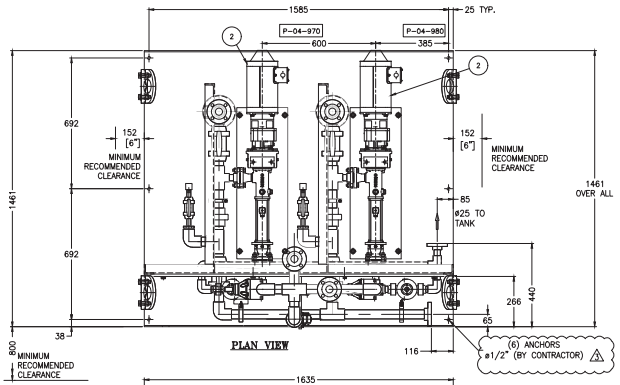

PLAN VIEW

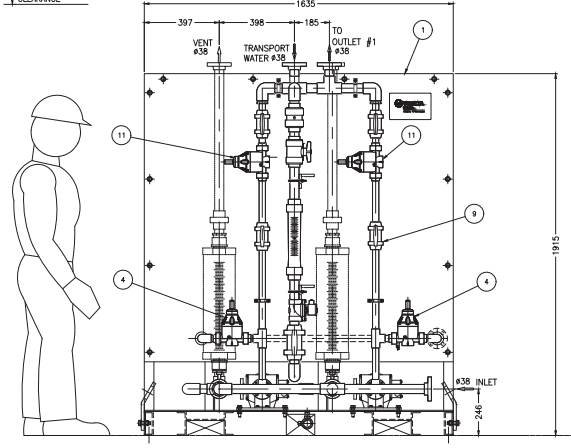

ELEVATION VIEW

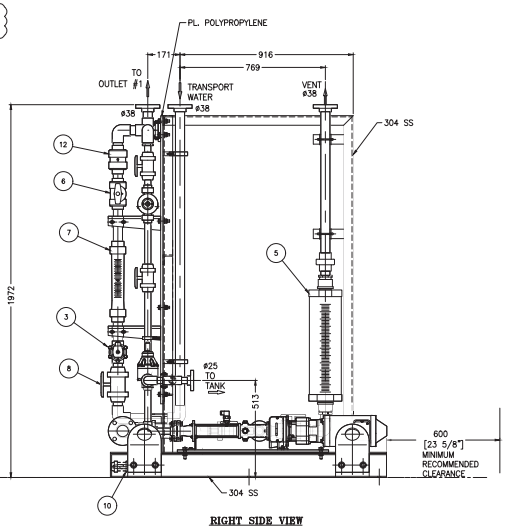

RIGHT SIDE VIEW

ITEM: SKID 620

REFERENCE #1: 5000218036-PI600 SHEET 15
REFERENCE #2: P620
TOTAL QUANTITY: 1
EMPTY WEIGHTS : APPROX. 625 kg/ 1377 Lbs
FLUID: POLYMER
PIPING: PVC SCH80
STRUCTURE: STAINLESS STEEL 304

ENGINEERING PA X	ITEM	DESCRIPTION	INVENTAIRE PLAN REF	QTE UN.	SHOP QTE TOT.	E	S
	1	BASE SUPPORT 304 SS STRUCTURE WITH POLYPROPYLENE COVER PLATE	–	1	1		
x	2	DOSING PUMP	–	2	2		
x	3	SOLENOID VALVE ø1 1/2"	–	1	1		
x	4	RELIEF VALVE ø1"	–	2	2		
x	5	CALIBRATION COLUMN	–	1	1		
	6	METERING BALL VALVE ø1 1/2"	–	1	1		
x	7	ROTAMETER ø1 1/2"	–	1	1		
	8	BALL VALVE "CHEMLINE" ø1 1/2"	–	5	5		
	9	BALL VALVE "CHEMLINE" ø1"	–	6	6		
	10	BALL VALVE "CHEMLINE" ø1/2"	–	3	3		
x	11	BACK PRESSURE VALVE ø1"	–	2	2		
x	12	CHECK VALVE ø1 1/2"	–	1	1		

REV.	DESCRIPTION	DATE	REVISE REVISED	VERIFIE CHECKED	APPROUVE APPROVED
3	FOR APPOVAL III	2019-01-14	F.C.	F.V.	G.P.
2	FOR APPROVAL II	2018-12-17	F.C.	F.V.	G.P.
1	FOR APPROVAL	2018-10-02	F.C.	G.H.	G.H.

DESSINATEUR/DESIGNER F.C. DATE 2018-09-27
VERIFICATEUR/CHECKER S.M. DATE
INGÉNIEUR/ENGINEER G.H. DATE

CLIENT: IQALUIT WWTP

VEOLIA WATER TECHNOLOGIES

TITRE / TITLE:
DUPLEX UNIT DOSING SKID
BFP POLYMER
GENERAL ARRANGEMENT

ÉCHELLE / SCALE: 1:10

PROJET / PROJECT: 5000218036 – GA0004
DESSIN No /DRAWING No: INTERNE / INTERNAL PCH0000
FEUILLET / SHEET: 1/1
REV./REV: 3

Ce document est la propriété de VEOLIA et ne peut être reproduit sans son autorisation écrite.
This document is the property of VEOLIA and cannot be reproduced without its written authorization

REF: N/A
ANSI B

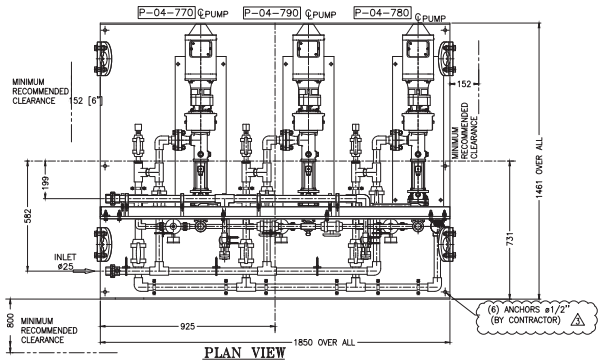

PLAN VIEW

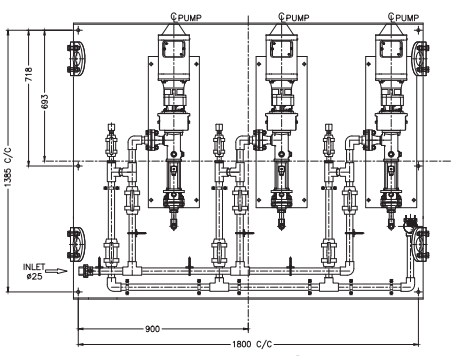

SECTION A

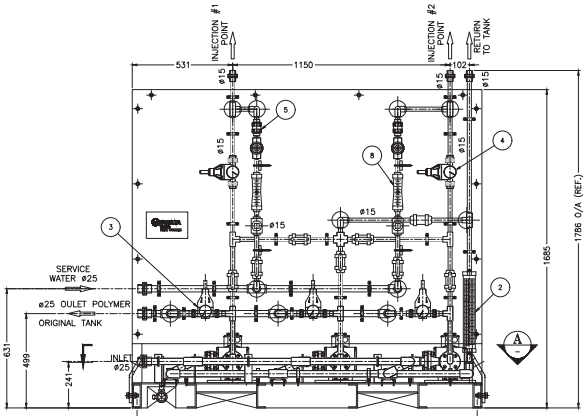

ELEVATION

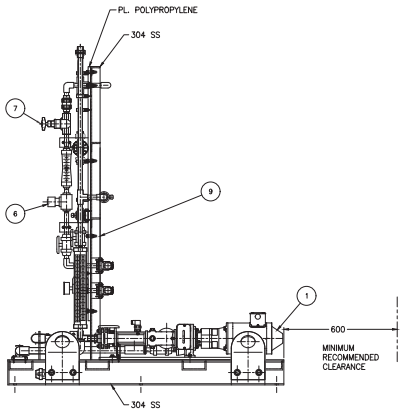

SIDE VIEW

ENGINEERING					SHOP		
PAX	ITEM	DESCRIPTION	INVENTORY DWG REF	UNI. QTY	TOT. QTY	E	S
X	1	PROGRESSIVE CAVITY PUMP	–	3	3		
X	2	CALIBRATION CYLINDER	–	1	1		
X	3	RELIEF VALVE ø1/2" NPT c/w GAUGE	–	3	3		
X	4	BACK PRESSURE ø1/2"	–	2	2		
X	5	CHECK VALVE ø1/2"		2	2		
X	6	SOLENOID VALVE ø1/2" FNPT, NORMALLY CLOSE	–	2	2		
X	7	GLOBE VALVE ø1/2" FNPT	–	2	2		
X	8	ROTAMETER ø1" FNPT	–	2	2		
	9	BASE SUPPORT 304 SS STRUCTURE WITH POLYPROPYLENE COVER PLATE	–	1	1		

ITEM: SKID-616

REFERENCE #1: 5000218036-PI600 SHEET-11
REFERENCE #2: P616
EMPTY WEIGHT: 653 Kg (1438 LB)
TOTAL QUANTITY: 1
PIPING: PVC SCH80
STRUCTURE: STAINLESS STEEL
FLUID:POLYMER

REV.	DESCRIPTION	DATE	REVISE REVISED	VERIFIE CHECKED	APPROUVE APPROVED
3	FOR APPROVAL III	2019-01-14	F.C.	F.V.	G.P.
2	FOR APPROVAL II	2018-12-11	F.C.	F.V.	G.P.
1	FOR APPROVAL	2018-10-02	F.C.	G.H.	G.H.

DESSINATEUR/DESIGNER F.C. DATE 2018-09-25
VERIFICATEUR/CHECKER S.M. DATE
INGÉNIEUR/ENGINEER G.P. DATE
CLIENT: IQALUIT WWTP

VEOLIA WATER TECHNOLOGIES

TITRE / TITLE
TRIPLE UNIT DOSING SKID
DAF POLYMER
GENERAL ARRANGEMENT

ÉCHELLE / SCALE 1:10

PROJET / PROJECT	DESSIN No /DRAWING No	INTERNE / INTERNAL	FEUILLET / SHEET	REV./REV
5000218036 – GA0005		PCH0000	1/1	3

Ce document est la propriété de VEOLIA et ne peut être reproduit sans son autorisation écrite.
This document is the property of VEOLIA and cannot be reproduced without its written authorization

REF: 8 7 6 5 4 3 2 1 ANSI B

LEFT BLANK

3 – DRAWINGS

3.4 – FIELD INSTALLATION DRAWINGS

LEFT BLANK

BILL OF MATERIALS

TITLE	Rev.	DESCRIPTION	DATE	Rev	Chk.	Appr.	CLIENT
SPIDFLOW FLOATING SYSTEM **FIELD INSTALLATION**	1	FOR INSTALLATION	2019-07-09	A.D.	S.M.	F.V.	**IQALUIT WWTP**
							REF.No. **5000218036** Rev. **1**
							Date: 2019-07-09
DWG # **FI001**							

REV.	ITEM		QTY Unit.	QTY Total	DESCRIPTION	MATERIAL	REFERENCE NO.	P&ID I.D. / TAG	Comments
	5000218036-FI001-	1	1	1	SPIDFLOW FLOATING SYSTEM (#T-02-320)		SA301		
	5000218036-FI001-	2	1	1	SPIDFLOW FLOATING SYSTEM (#T-02-310)		SA305		
	5000218036-FI001-	3	2	2	INLET WHITE WATER-MANUAL VALVE MANIFOLD	Generic	FA335		
	5000218036-FI001-	4	2	2	INLET WHITE WATER-AUTOMATIC VALVE (ON-OFF) MANIFOLD	Generic	FA347		
	5000218036-FI001-	5	8	8	FLANGE GASKET Ø2", FULL FACE, 0.125" THK., CLASS 150 LBS, ASME B16.21	EPDM	BY OTHERS		
	5000218036-FI001-	6	64	64	FLAT WASHER Ø5/8" TYPE A NARROW	AISI 304	BY OTHERS		
	5000218036-FI001-	7	32	32	HEX. NUT Ø5/8"-11UNC	ASTM A-194 | GR. 8 | (304)	BY OTHERS		
	5000218036-FI001-	8	32	32	HEX. BOLT Ø5/8"-11UNC X 3 LG.	ASTM A-193 | GR. B8 | CLASS 1 | (304)	BY OTHERS		
	5000218036-FI001-	9	8	8	MESH PANEL 1219 X 610 , YELLOW, FINISH PVC COATED	STEEL	5000217048-SA003-06		
	5000218036-FI001-	10	2	2	MESH PANEL 978 X 610 , YELLOW, FINISH PVC COATED	STEEL	FA409		
	5000218036-FI001-	11	4	4	MESH PANEL 582 X 610 , YELLOW, FINISH PVC COATED	STEEL	FA408		
	5000218036-FI001-	12	2	2	ALUMINIUM T-SLOTTED FRAMING 1-1/2" X 1-1/2" X 10'	ALUMINUM	5000217048-SA003-08		
	5000218036-FI001-	13	2	2	ALUMINIUM T-SLOTTED FRAMING 1-1/2" X 1-1/2" X 2932mm LG.	ALUMINUM	FA407		
	5000218036-FI001-	14	8	8	ALUMINIUM T-SLOTTED FRAMING 1-1/2" X 1-1/2" X 1199mm LG.	ALUMINUM	FA405		
	5000218036-FI001-	15	2	2	ALUMINIUM T-SLOTTED FRAMING 1-1/2" X 1-1/2" X 957mm LG.	ALUMINUM	FA404		
	5000218036-FI001-	16	12	12	ALUMINIUM T-SLOTTED FRAMING 1-1/2" X 1-1/2" X 708mm LG.	ALUMINUM	FA401		

BILL OF MATERIALS

TITLE	Rev.	DESCRIPTION	DATE	Rev	Chk.	Appr.	CLIENT
SPIDFLOW FLOATING SYSTEM FIELD INSTALLATION	1	FOR INSTALLATION	2019-07-09	A.D.	S.M.	F.V.	IQALUIT WWTP
							REF.No. 5000218036 Rev. 1
							Date: 2019-07-09
DWG # FI001							

REV.	ITEM		QTY Unit.	QTY Total	DESCRIPTION	MATERIAL	REFERENCE NO.	P&ID I.D. / TAG	Comments
	5000218036-FI001-	17	4	4	ALUMINIUM T-SLOTTED FRAMING 1-1/2" X 1-1/2" X 589mm LG.	ALUMINUM	FA402		
	5000218036-FI001-	18	8	8	ALUMINIUM T-SLOTTED FRAMING 1-1/2" X 1-1/2" X 600mm LG.	ALUMINUM	FA403		
	5000218036-FI001-	19	16	16	TEE BRACKET FOR 1-1/2" X 1-1/2" ALUMINIUM T-SLOTTED FRAMING, McMASTER-CARR #47065T279	ALUMINUM	FXFAGU319796		
	5000218036-FI001-	20	26	26	CORNER PLATE FOR 1-1/2" X 1-1/2" ALUMINIUM T-SLOTTED FRAMING, McMASTER-CARR #47065T271	ALUMINUM	FXFAGU319795		
	5000218036-FI001-	21	270	270	DROP-IN FASTENER WITH STUD C/W NUT, McMASTER-CARR #47065T234	ZINC PLATED	FXFAGU319800		
	5000218036-FI001-	22	56	56	PANEL HOLDER FOR ALUMINIUM T-SLOTTED FRAMING, McMASTER-CARR #47065T198	ALUMINIUM	FXFAGU319799		
	5000218036-FI001-	23	112	112	FLAT WASHER Ø5/16" TYPE A NARROW	AISI 304	FXWAYD200651		
	5000218036-FI001-	24	56	56	LOCK WASHER Ø5/16"	AISI 304	FXWAYD200652		
	5000218036-FI001-	25	64	64	HEX. BOLT Ø5/16"-18UNC X 1" LG.	ASTM-F593C-304	FXSCYD200273		
	5000218036-FI001-	26	4	4	MOUNTING FEET FOR SINGLE ALUMINIUM T-SLOTTED RAIL 1-1/2" X 1-1/2", McMASTER-CARR #47065T843	ALUMINIUM	FXFAGU319798		
	5000218036-FI001-	27	4	4	LOCK-NUT Ø1/2"-13UNC	ASTM-F594C-304	FXNUYV200214		
	5000218036-FI001-	28	8	8	FLAT WASHER Ø1/2" TYPE A NARROW	AISI 304	FXWAYV200670		
	5000218036-FI001-	29	4	4	HEX. BOLT Ø1/2"-13UNC X 1 3/4 LG.	ASTM-F593C-304	FXSCYV200428		
	5000218036-FI001-	30	14	14	STRAIGHT BRACKET FOR 1-1/2" X 1-1/2" ALUMINIUM T-SLOTTED FRAMING, McMASTER-CARR #47065T256	ALUMINIUM	FXFAGU319797		
	5000218036-FI001-	31	24	24	LOCK-NUT Ø5/16"-18UNC	ASTM-F594C-304	FXNUYD200184		
	5000218036-FI001-	32	24	24	HEX. BOLT Ø5/16"-18UNC X 2 3/4 LG.	ASTM-F593C-304	FXSCYR319772		

NOTE:
1- AIR FILTER REGULATORS FOR PNEUMATIC CONTROL VALVES TO BE INSTALLED VERTICALLY.
2- USE EXISTING DRILLED HOLES ON THE TOP OF THE TANK TO BOLT SCRAPER SHAFTS AND FLIGHT GUIDING RAILS.
3- OPENING IN THE SAFETY GUARD AROUND SHAFT TO BE CUT ON SITE.

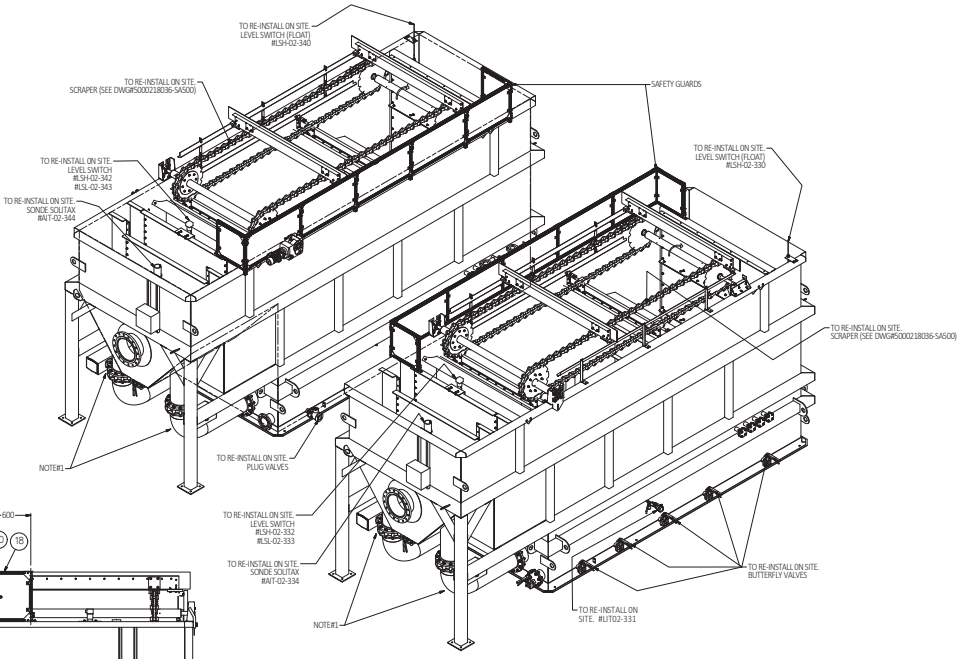

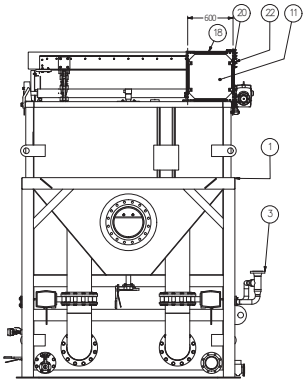

UNITE T-02-320

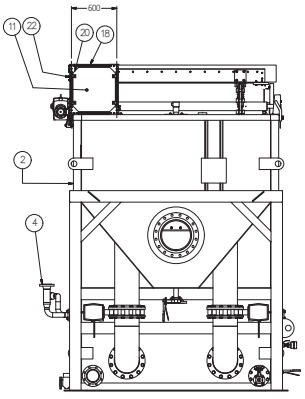

UNITE T-02-310

REV.	DESCRIPTION	DATE	REVUE REVISED	VÉRIFIÉ CHECKED	APPROUVÉ APPROVED
1	FOR INSTALLATION	2019-07-09	A.D.	S.M.	F.V.

DESSINATEUR/DESIGNER	DATE	CLIENT
A.D.	2019-07-09	IQALUIT WWTP
VÉRIFICATEUR/CHECKER	DATE	
S.M.	2019-07-09	
INGÉNIEUR/ENGINEER	DATE	
F.V.	2019-07-09	

VEOLIA WATER TECHNOLOGIES

TITRE / TITLE:
SPIDFLOW FLOATING SYSTEM
FIELD INSTALLATION

ÉCHELLE / SCALE: N.T.S.

PROJET / PROJECT - DESSIN No / DRAWING No	INTERNE / INTERNAL	FEUILLET / SHEET	REV/REV
5000218036 - FI001		1 / 3	1

Ce document est la propriété de VEOLIA et ne peut être reproduit sans son autorisation écrite.
This document is the property of VEOLIA and cannot be reproduced without its written authorization.

ANSI D

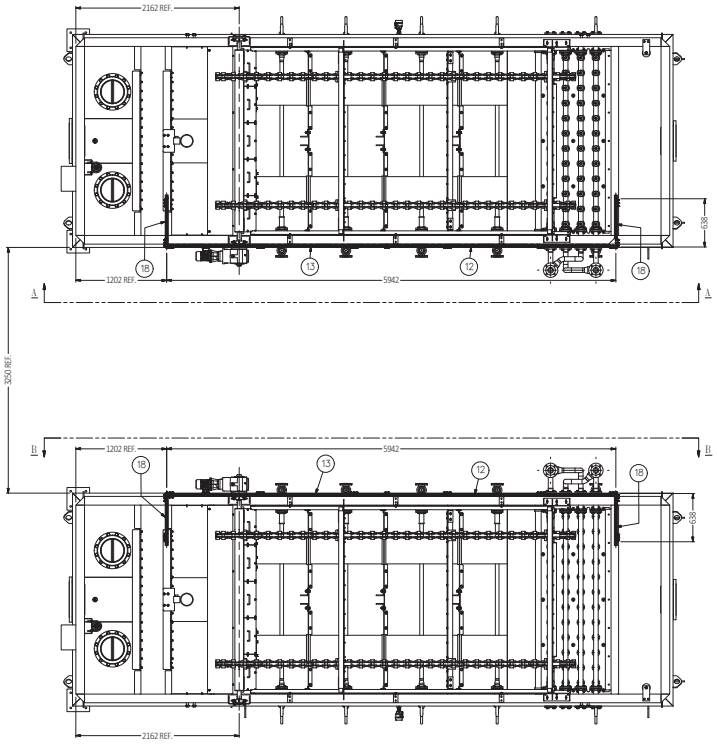

1	FOR INSTALLATION		2019-07-09	A.D.	S.M. F.V.
REV. REV.	DESCRIPTION		DATE	REVUE REVISED	VERIFIÉ CHECKED	APPROUVÉ APPROVED

VEOLIA WATER TECHNOLOGIES	DESSINATEUR/DESIGNER A.D.	DATE 2019-07-09	CLIENT IQALUIT WWTP
	VÉRIFICATEUR/CHECKER S.M.	DATE 2019-07-09	
	INGÉNIEUR/ENGINEER F.V.	DATE 2019-07-09	
	TITRE / TITLE SPIDFLOW FLOATING SYSTEM FIELD INSTALLATION		

ÉCHELLE / SCALE 1 : 25	PROJET / PROJECT - DESSIN No / DRAWING No 5000218036 - FI001	INTERNE / INTERNAL	FEUILLET / SHEET 2 / 3	REV/REV 1

Ce document est la propriété de VEOLIA et ne peut être reproduit sans son autorisation écrite.
This document is the property of VEOLIA and cannot be reproduced without its written authorization.

ANSI D

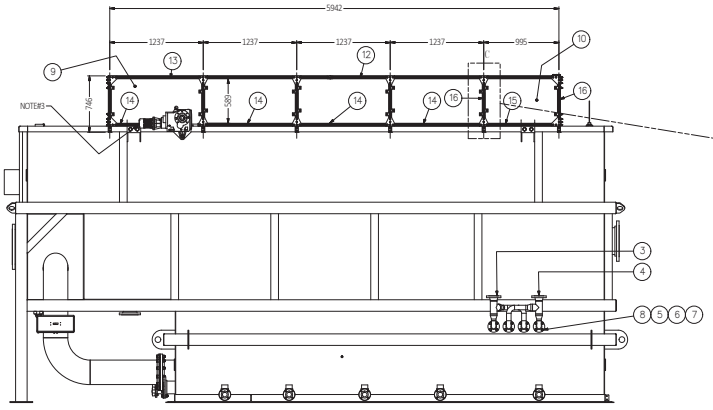

VIEW A-A PAGE(2/3)

SCALE: 1 / 25

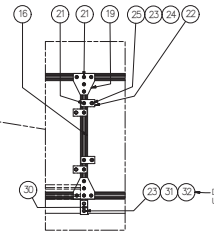

DETAIL C

SCALE: 1:10

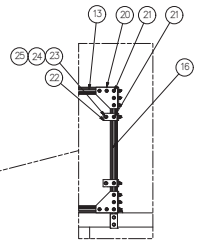

DETAIL D

SCALE: 1:10

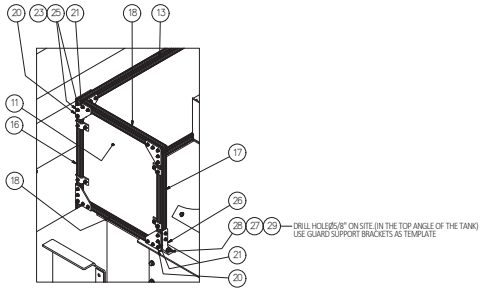

DETAIL D (ISOMETRIC)

SCALE: 1:10

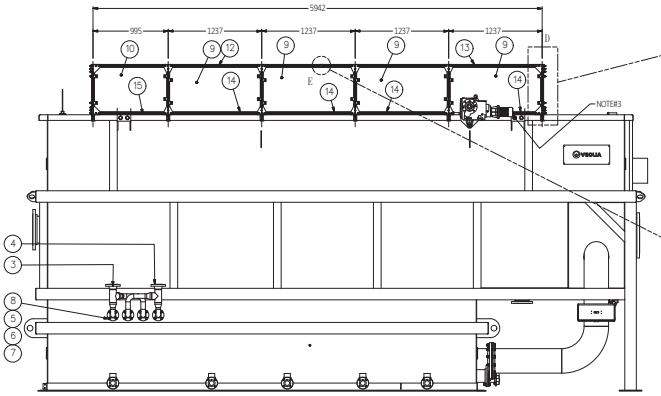

VIEW B-B PAGE(2/3)

SCALE: 1 / 25

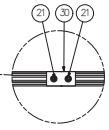

DÉTAIL E

ÉCHELLE: 1:5

1	FOR INSTALLATION	2019-07-09	A.D.	S.M.	F.V.
REV. REV.	DESCRIPTION	DATE	REVUE REVISED	VÉRIFIÉ CHECKED	APPROUVÉ APPROVED

DESSINATEUR/DESIGNER A.D. DATE 2019-07-09
DESSINATEUR/CHECKER S.M. DATE 2019-07-09
INGÉNIEUR/ENGINEER F.V. DATE 2019-07-09

CLIENT: IQALUIT WWTP

VEOLIA WATER TECHNOLOGIES

TITRE / TITLE: SPIDFLOW FLOATING SYSTEM
FIELD INSTALLATION

ÉCHELLE / SCALE: 2

PROJET / PROJECT - DESSIN No / DRAWING No: 5000218036 - FI001

INTERNE / INTERNAL

FEUILLET / SHEET 3 / 3

REV/REV 1

Ce document est la propriété de VEOLIA et ne peut être reproduit sans son autorisation écrite.
This document is the property of VEOLIA and cannot be reproduced without its written authorization.

ANSI D

LEFT BLANK

VEOLIA WATER

NOMENCLATURE/ BILL OF MATERIALS

TITRE/ TITLE	Rev.	DESCRIPTION	PAR/ BY:	APPR:	DATE:	Affaire / Contract	IQALUIT WWTP
MBBR FIELD INSTALLATION	1	FOR APPROVAL	F.C.	G.H.	11/7/2018		
	2	FOR APPROVAL II	F.C.	F.V.	11/20/2018		
	3	FOR APPROVAL III	F.C.	F.V.	12/18/2018	REF. No.	5000218036 Rev. 5
	4	FOR APPROVAL IV	F.C.	F.V.	1/14/2019		
DESSIN /DWG # FI0007	5	AS BUILT	F.C.	F.V.	21/8/2019	Date:	11/21/2018

REV.	ITEM		QTE/QTY. Unit.	QTE/QTY. Total	DESCRIPTION	P&ID I.D./TAG	CAT. ACCPAC	SOURCE	FA/SA FI SITE	P / N
					MATERIAL IS 304 SS UNLESS SPECIFIED DIFFERENTLY					
					ITEMS REPRESENTED WITH A CIRCLE					
	5000218036-FI0007	1		4	AERATION RAMP ø32mm WITH ELBOW (TANK 1 CELL 1, CELL 2)				FA3002	
	5000218036-FI0007	2		4	AERATION RAMP ø32mm WITH ELBOW (TANK 2 CELL 1, CELL 2)				FA3003	
	5000218036-FI0007	3		4	AERATION RAMP ø32mm (TANK 1 CELL 1,CELL 2)				FA3004	
	5000218036-FI0007	4		4	AERATION RAMP ø32mm (TANK 2 CELL 1,CELL 2)				FA3005	
	5000218036-FI0007	5		8	CONNECTING PIPING ø100				FA3006	
	5000218036-FI0007	6		4	CONNECTING PIPING WITH FLANGE ø100				FA3008	
	5000218036-FI0007	7		4	CONNECTING PIPING WITH FLANGE AND ELBOW ø100				FA3009	
	5000218036-FI0007	8		2	CONNECTING PIPING WITH FLANGE AND ELBOW ø100 (1900mm c/c)				FA3010	
	5000218036-FI0007	9		1	CONNECTING PIPING WITH FLANGE AND ELBOW ø100 (436mm c/c)				FA3011	
	5000218036-FI0007	9A		1	CONNECTING PIPING WITH FLANGE AND ELBOW ø100 (736mm c/c)				FA3016	
	5000218036-FI0007	10		2	CONNECTING PIPING WITH FLANGE AND ELBOW ø100 (896mm c/c)				FA3012	

VEOLIA WATER

NOMENCLATURE/ BILL OF MATERIALS

TITRE/ TITLE	Rev.	DESCRIPTION	PAR/ BY:	APPR:	DATE:	Affaire / Contract	IQALUIT WWTP
MBBR FIELD INSTALLATION	1	FOR APPROVAL	F.C.	G.H.	11/7/2018		
	2	FOR APPROVAL II	F.C.	F.V.	11/20/2018		
	3	FOR APPROVAL III	F.C.	F.V.	12/18/2018	REF. No.	5000218036 Rev. 5
	4	FOR APPROVAL IV	F.C.	F.V.	1/14/2019		
DESSIN /DWG # FI0007	5	AS BUILT	F.C.	F.V.	21/8/2019	Date:	11/21/2018

REV.	ITEM		QTE/QTY. Unit.	QTE/QTY. Total	DESCRIPTION	P&ID I.D./TAG	CAT. ACCPAC	SOURCE	FA/SA FI SITE	P / N
	5000218036-FI0007	11		2	CONNECTING PIPING WITH FLANGE ø100				FA3013	
	5000218036-FI0007	12		8	RETENTION SIEVE MBBR R15T20 ø450 x 1000LG					PRSNGU204034
	5000218036-FI0007	13		8	RETENTION SIEVE ø450 x 1000mm LG				FA3007	
	5000218036-FI0007	14		16	GASKET FLANGE Ø4",FF, 1/8" TH (RED RUBBER)					SEGAFP200123
	5000218036-FI0007	15		128	HEX. HEAD SCREW Ø5/8"-11UNC x 3 1/4" (ASTM-F593C-304)					FXSCYY200498
	5000218036-FI0007	16		128	NYLON INSERT LOCK NUT Ø5/8"-11UNC (ASTM-F594C-304)					FXNUYY200222
	5000218036-FI0007	17		256	FLAT WASHER Ø5/8", SAE TYPE N (304)					FXWAYY200674
5	**5000218036-FI0007**	30		16	COUPLING ø100 Gruvlok Fig 472 316 SS			ST-999-041		
					INSTALLATION HARDWARE (BY CONTRACTOR)					
	5000218036-FI0007	18		56	PIPING RISER CLAMP Ø4", (316) #31Z-316SS TAYLOR					SUPPLIED BY CONTRACTOR
	5000218036-FI0007	19		64	THREADED STUD Ø1/2"-13UNC x 16" (304)					SUPPLIED BY CONTRACTOR
	5000218036-FI0007	20		128	FLAT WASHER Ø1/2", SAE TYPE N (304)					SUPPLIED BY CONTRACTOR
	5000218036-FI0007	21		128	HEX.NUT Ø1/2"-13UNC (ASTM-F594C-304)					SUPPLIED BY CONTRACTOR
	5000218036-FI0007	22		112	ANCHOR TYPE "DROP-IN" Ø1/2" (304)					SUPPLIED BY CONTRACTOR

VEOLIA WATER

NOMENCLATURE/ BILL OF MATERIALS

TITRE/ TITLE	Rev.	DESCRIPTION	PAR/ BY:	APPR:	DATE:	Affaire / Contract	IQALUIT WWTP
MBBR FIELD INSTALLATION	1	FOR APPROVAL	F.C.	G.H.	11/7/2018		
	2	FOR APPROVAL II	F.C.	F.V.	11/20/2018		
	3	FOR APPROVAL III	F.C.	F.V.	12/18/2018	REF. No.	5000218036 Rev. 5
	4	FOR APPROVAL IV	F.C.	F.V.	1/14/2019		
DESSIN /DWG # FI0007	5	AS BUILT	F.C.	F.V.	21/8/2019	Date:	11/21/2018

REV.	ITEM		QTE/QTY. Unit.	Total	DESCRIPTION	P&ID I.D./TAG	CAT. ACCPAC	SOURCE	FA/SA FI SITE	P / N
	5000218036-FI0007	23		64	MECHANICAL ANCHOR ø1/2" x 4" LG (304)					SUPPLIED BY CONTRACTOR
	5000218036-FI0007	24		128	HEX. HEAD SCREW Ø1"-8UNC x 3" LG (304)					SUPPLIED BY CONTRACTOR
	5000218036-FI0007	25		256	FLAT WASHER Ø1", SAE TYPE N (304)					SUPPLIED BY CONTRACTOR
	5000218036-FI0007	26		128	HEX.NUT Ø1"-8UNC (ASTM-F594C-304)					SUPPLIED BY CONTRACTOR

END OF LIST

LEFT BLANK

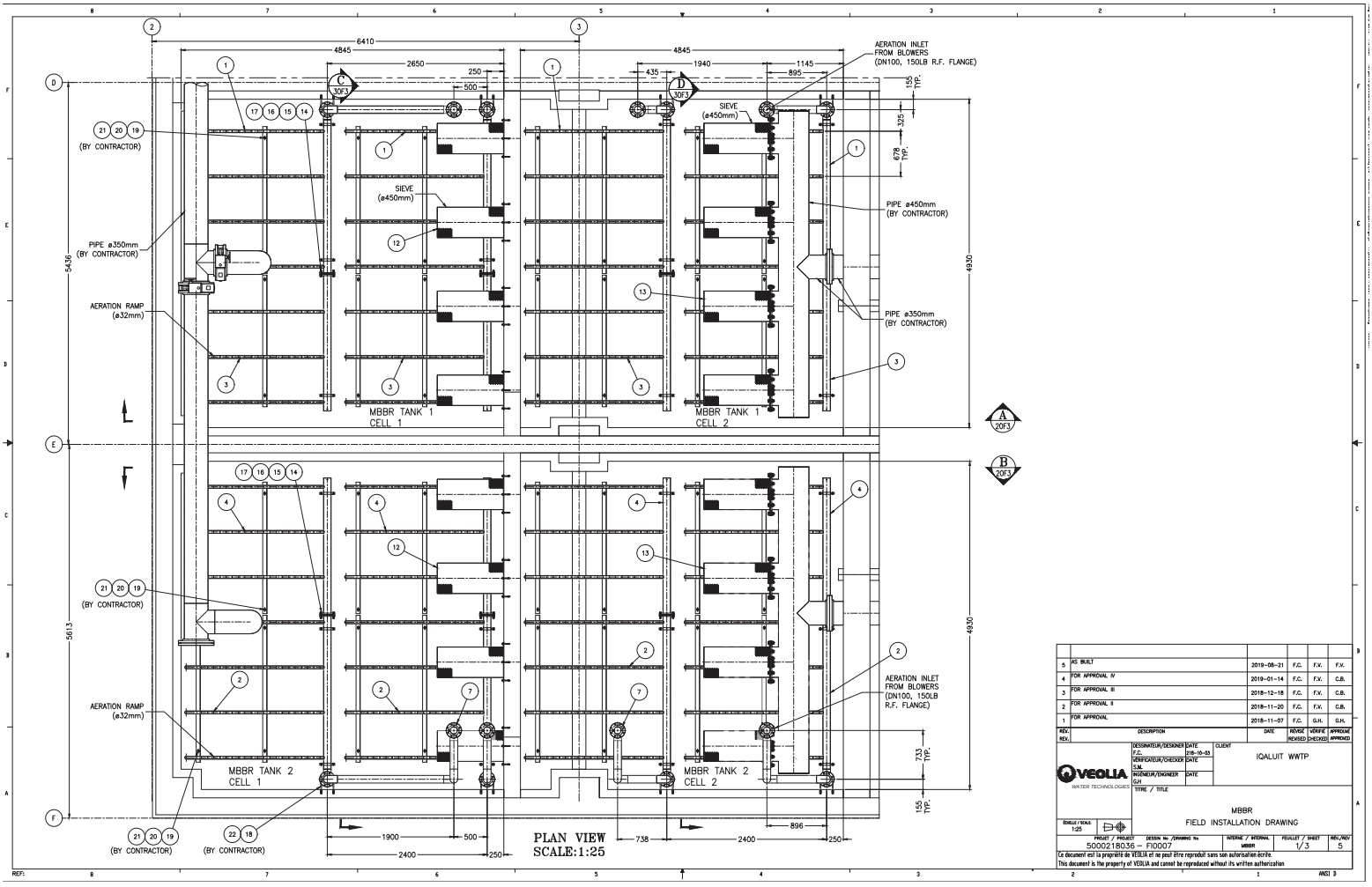

PLAN VIEW
SCALE:1:25

REV.	DESCRIPTION	DATE	REVUE / REVISED	VÉRIFIÉ / CHECKED	APPROUVÉ / APPROVED
5	AS BUILT	2019-08-21	F.C.	F.V.	F.V.
4	FOR APPROVAL IV	2019-01-14	F.C.	F.V.	C.B.
3	FOR APPROVAL III	2018-12-18	F.C.	F.V.	C.B.
2	FOR APPROVAL II	2018-11-20	F.C.	F.V.	C.B.
1	FOR APPROVAL	2018-11-07	F.C.	G.H.	G.H.

DESIGNATEUR/DESIGNER: F.C. DATE: 218-10-03
VÉRIFICATEUR/CHECKER: S.M. DATE:
INGÉNIEUR/ENGINEER: G.H. DATE:
CLIENT: IQALUIT WWTP
TITRE / TITLE: MBBR FIELD INSTALLATION DRAWING
ÉCHELLE / SCALE: 1:25
PROJET / PROJECT: 5000218036 – FI0007
DESSIN No / DRAWING No: MBBR
FEUILLET / SHEET: 1/3
REV./REV: 5

Ce document est la propriété de VEOLIA et ne peut être reproduit sans son autorisation écrite.
This document is the property of VEOLIA and cannot be reproduced without its written authorization

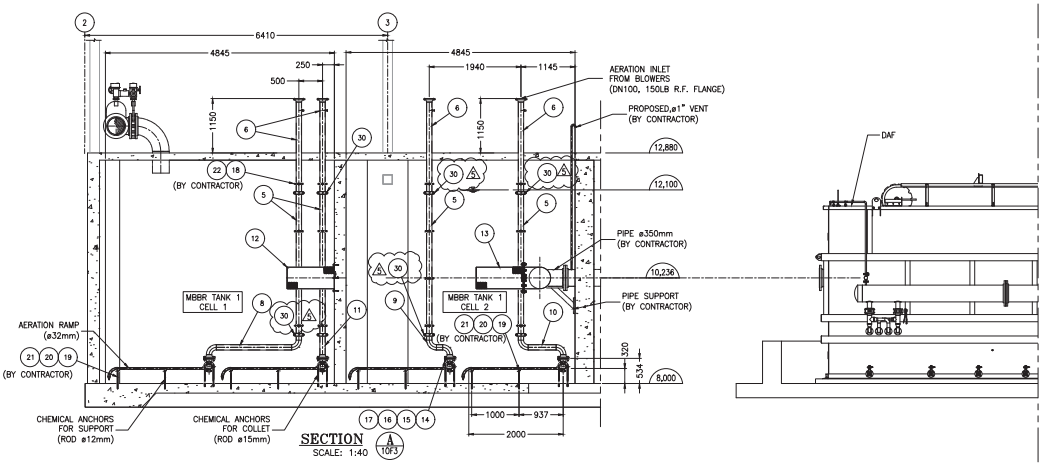

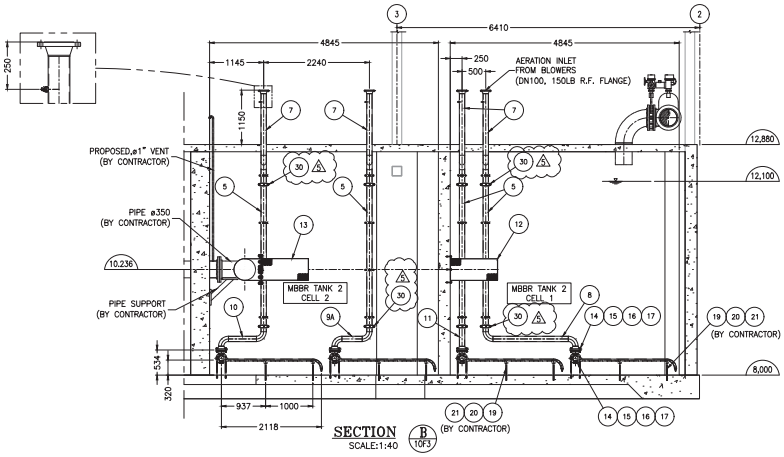

REV.	DESCRIPTION	DATE	REVUE / REVISED	VÉRIFIÉ / CHECKED	APPROUVÉ / APPROVED
5	AS BUILT	2019-08-21	F.C.	F.V.	F.V.
4	FOR APPROVAL IV	2019-01-14	F.C.	F.V.	C.B.
3	FOR APPROVAL III	2018-12-18	F.C.	F.V.	C.B.
2	FOR APPROVAL II	2018-11-20	F.C.	F.V.	C.B.
1	FOR APPROVAL	2018-11-07	F.C.	G.H.	G.H.

DESSINATEUR/DESIGNER	F.C.	DATE 218-10-03
VÉRIFICATEUR/CHECKER	S.M.	DATE
INGÉNIEUR/ENGINEER	G.H.	DATE

CLIENT: IQALUIT WWTP

VEOLIA WATER TECHNOLOGIES

TITRE / TITLE

MBBR

FIELD INSTALLATION DRAWING

ÉCHELLE / SCALE 1:40

PROJET / PROJECT	DESSIN No / DRAWING No	INTERNE / INTERNAL	FEUILLET / SHEET	REV./REV
5000218036 – FI0007		MBBR	2/3	5

Ce document est la propriété de VEOLIA et ne peut être reproduit sans son autorisation écrite.
This document is the property of VEOLIA and cannot be reproduced without its written authorization

REF: ANSI B

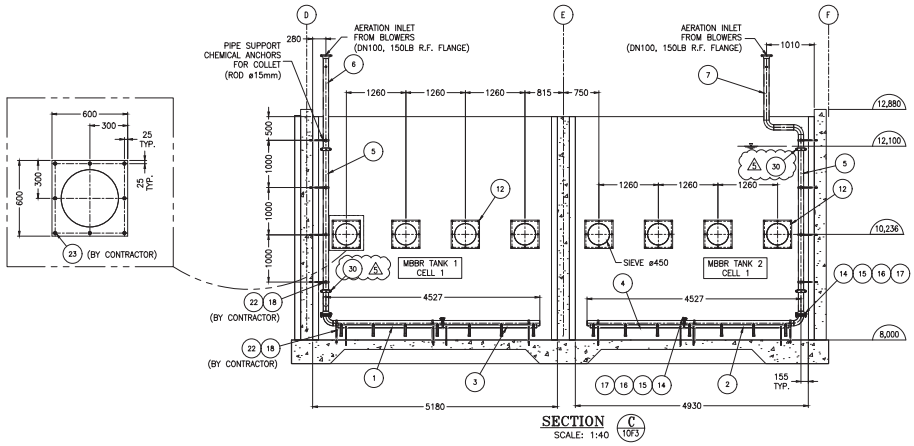

SECTION C (1OF3)
SCALE: 1:40

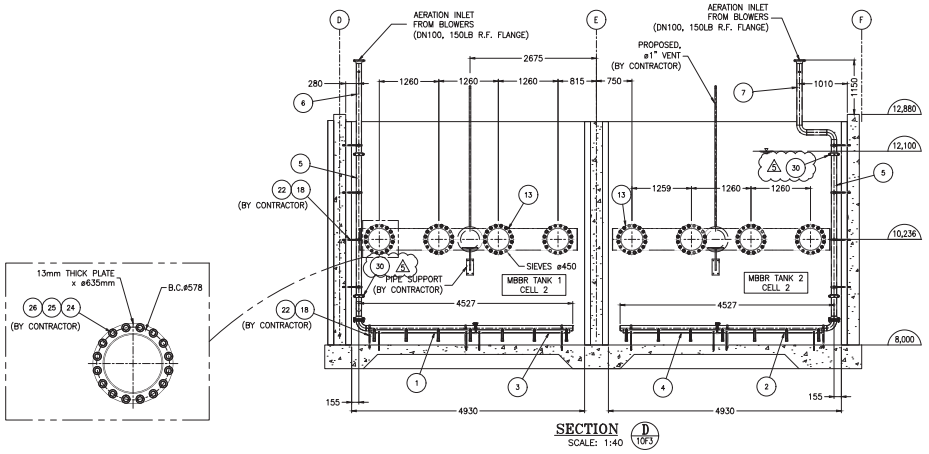

SECTION D (1OF3)
SCALE: 1:40

REV.	DESCRIPTION	DATE	REVUE/REVISED	VÉRIFIÉ/CHECKED	APPROUVÉ/APPROVED
5	AS BUILT	2019-08-21	F.C.	F.V.	F.V.
4	FOR APPROVAL IV	2019-01-14	F.C.	F.V.	C.B.
3	FOR APPROVAL III	2018-12-18	F.C.	F.V.	C.B.
2	FOR APPROVAL II	2018-11-20	F.C.	F.V.	C.B.
1	FOR APPROVAL	2018-11-07	F.C.	G.H.	G.H.

DESIGNATEUR/DESIGNER: F.C. DATE: 218-10-03
VÉRIFICATEUR/CHECKER: S.M. DATE:
INGÉNIEUR/ENGINEER: G.H. DATE:
CLIENT: IQALUIT WWTP
VEOLIA WATER TECHNOLOGIES
TITRE / TITLE: MBBR FIELD INSTALLATION DRAWING
ÉCHELLE / SCALE: 1:40
PROJET / PROJECT: 5000218036 – FI0007
DESSIN No / DRAWING No: MBBR
FEUILLET / SHEET: 3/3
REV./REV: 5

Ce document est la propriété de VEOLIA et ne peut être reproduit sans son autorisation écrite.
This document is the property of VEOLIA and cannot be reproduced without its written authorization

REF:
ANSI B

NOTES:
- RECOMMENDED 1000mm MINIMUM CLEARANCE AROUND EQUIPMENT.
- WEIGHT: 534 KG (1178 Lbs).

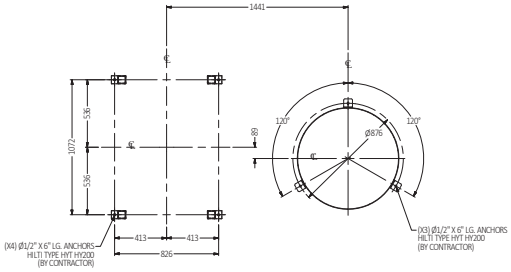

SECTION A-A

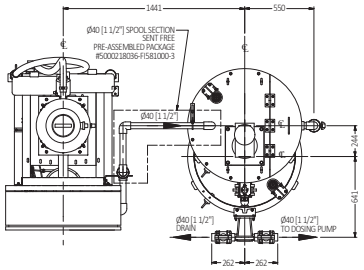

TOP VIEW

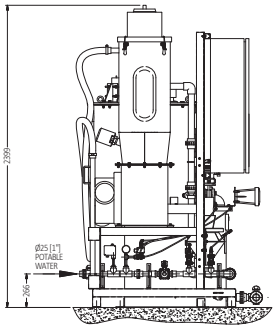

LEFT SIDE VIEW

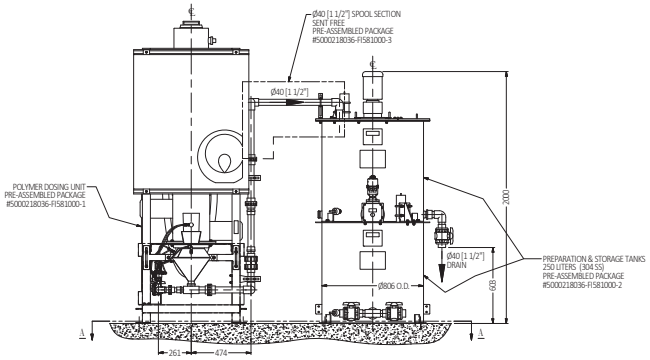

FRONT VIEW

REV	DESCRIPTION	DATE	REVUE REVISED	VÉRIFIÉ CHECKED	APPROUVÉ APPROVED
1	FOR FIELD INSTALLATION	2019-01-18	N.L.	S.M.	F.V.

DESSINATEUR/DESIGNER	N.L.	2019-01-18	CLIENT: IQALUIT WWTP
FABRICATEUR/CHECKER	S.M.	2019-01-18	
INGÉNIEUR/ENGINEER	F.V.	2019-01-18	

VEOLIA WATER TECHNOLOGIES

TITRE / TITLE:
HYDRAPOL 250L / DAF
POLYMER PREPARATION SYSTEM
FIELD INSTALLATION

ÉCHELLE / SCALE	PROJET / PROJECT - DESSIN No / DRAWING No	INTERNE / INTERNAL	FEUILLET / SHEET	REV/REV
1:15	5000218036 - FI581000	XXX	1 / 1	1

Ce document est la propriété de VEOLIA et ne peut être reproduit sans son autorisation écrite.
This document is the property of VEOLIA and cannot be reproduced without its written authorization.

ANSI D

NOTES:
- RECOMMENDED 1000mm MINIMUM CLEARANCE AROUND EQUIPMENT.
- WEIGHT: 595 KG (1312 Lbs).

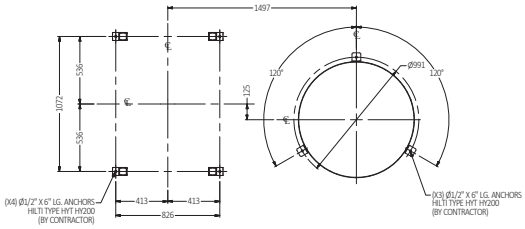

SECTION A-A

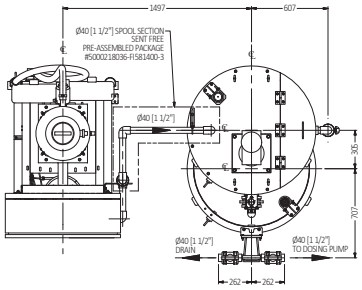

TOP VIEW

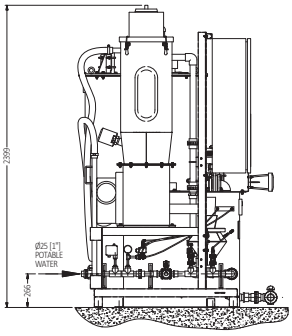

LEFT SIDE VIEW

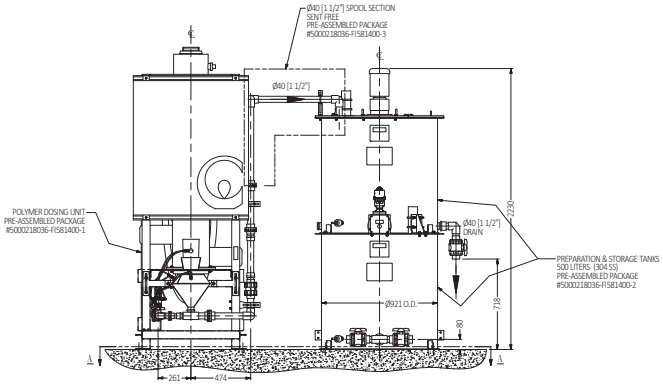

FRONT VIEW

REV.	DESCRIPTION	DATE	REVUE REVISED	VÉRIFIÉ CHECKED	APPROUVÉ APPROVED
1	FOR FIELD INSTALLATION	2019-01-18	N.L.	S.M.	F.V.

DESSINATEUR/DESIGNER N.L.	2019-01-18	CLIENT	IQALUIT WWTP
FABRICATEUR/CHECKER S.M.	2019-01-18		
INGÉNIEUR/ENGINEER F.V.	2019-01-18		

VEOLIA WATER TECHNOLOGIES

TITRE / TITLE

HYDRAPOL 500L / BELT FILTER PRESS
POLYMER PREPARATION SYSTEM
FIELD INSTALLATION

ÉCHELLE / SCALE	PROJET / PROJECT - DESSIN No / DRAWING No	INTERNE / INTERNAL	FEUILLET / SHEET	REV/REV
1:15	5000218036 - FI581400	SCH	1 / 1	1

Ce document est la propriété de VEOLIA et ne peut être reproduit sans son autorisation écrite.
This document is the property of VEOLIA and cannot be reproduced without its written authorization.

ANSI D

LEFT BLANK

4 – DETAILED TECHNICAL DOCUMENTATION

4.1 – N/A

LEFT BLANK

4 – DETAILED TECHNICAL DOCUMENTATION

4.2 – N/A

LEFT BLANK

4 – DETAILED TECHNICAL DOCUMENTATION

4.3 – SHOP DRAWINGS SUBMITTAL PACKAGES

4.3.1 – SPIDFLOW DAF

LEFT BLANK

TECHNICAL DOCUMENTATION

This page is intentionally left blank

Projet	IQALUIT
Projet#:	5000218036
Document #:	5000218036_DS_0001_PM_VWT Rev 2
Par:	FV
Verif.:	GH
approb.:	CB

SUBMITTAL PACKAGE

SPIDFLOW

This page is intentionally left blank

Projet	IQALUIT
Projet#:	5000218036
Document #:	5000218036_DS_0001_PM_VWT
Par:	FV
Verif.:	GP
approb.:	CB

SPIDFLOW

PROCESS DATASHEET

Section Manuel OM: 4.3.1.1

This page is intentionally left blank

VEOLIA				VWT DOC#		PDS_0001_SFP-650	
				PROJECT NUMBER		5000218036	
				DATE		2018-09-28	
				SPIDFLOW			
CLIENT	REV	DESCRIPTION		DATE	BY	CHKD	APP.
CITY OF IQALUIT	1	FOR APPROVAL		2017-10-04	G.H.	G.H.	G.P.
	2	FOR APPROVAL II		2019-05-29	F.V.	G.P.	C.B.
PROJECT	3						
IQALUIT WATER TREATMENT PLANT	4						
	5						
	6						
	7						REV
GENERAL INFORMATION	Technology			-	SPIDFLOW		
	Number of Trains			-	2		
	Application			-	Waste Water		
	Model				SFP-650		
	Number of units			-	1		
ENVIRONMENT	Equipmement location			-	Interior		
	Altitude			m	< 1000		
	Temp Min. - Water			°C	5		
	Temp Max. - Water			°C	25		
	Temp Min. - AIR			°C	5		
	Temp Max. -AIR			°C	35		
	Max Humidity			%	100		
	Cassified Zone			-	Unclassified		
	Corrosive Atmosphere			-	Non corrosive		
	Freeze Conditions			-	Non Freezing Conditions		
	Comments			-	NA		
APPROBATION & CERTIFICATION OF COMPONENTS	NSF-61		Yes/No	-	No		
	CSA / UL		Yes/No		Yes		
	Other			-	N/A		
SAFETY	Electric Zone Classification (NFPA 820)			-	N/A		
	Province / State				Iqaluit		
PERFORMANCES	Application			-	Municipal		
	Design Capacity per Unit			m^3/d	6 525		
	Total Client Design Capacity (if trains parallel)			m^3/d	13 050		
	Client Rise Rate			m/h	31.25		
	Nominal Unit Capacity (@30 m/h)			m^3/d	6 220		
	Retention time at nominal capacity (30 m/h)	Injection		min	1,2		
		Aeration		min	1		
		Flotation		min	6.6		
TECHNICAL DESCRIPTION	Tank Information per unit	Overall length, flange to flange (approx.)		mm	8029		2
		Overall width (approx.)		mm	2965		2
		Height (without scraper)		mm	3682		2
		Liquid depth		mm	3300		
		Recommended Clearance (around)		mm (in)	625 (20)		
		Recommended Clearance (above)		mm (in)	1000 (40)		
		Dry weight		lbs (kg)	26 300 (11 929)		2
		Operating weight		lbs (kg)	160 400 (72 756)		2
	Nozzles per unit	Number		-	48		
		Nozzle material		-	Polypropylene		
		Diaphragm material			Polyethylene		
		Connection		in (mm)	1''		
		Manufacturer			Opalium		
		Quantity			48		
	Scrapper per unit	Gearbox Manufacturer		-	Nord		
		Gearbox Model		-	SK90		
		Rotation (Clockwise, Counter-Clockwise)		-	Clockwise		
		Chain material		-	FRP		
		Number of blades		-	4		
		Sludge flow @ Qmin		m^3/h	0.21		
		Sludge flow @ Qmax		m^3/h	2.1		
		Monitoring module		-	EL-FI 20		
	Motor per unit	Power		HP	0,25		
		Type			TEFC		
		Manufacturer			WEG		

TECHNICAL DESCRIPTION	**Pump per unit**			**Quantity**	-	3		
				Duty/Stand-by	-	2 Duty / 1 Stand-by		
				Max. simultaneous operating pump	-	2		
				Manufacturer	-	Edur		
				Model	-	LBUX 602 C 160L		
				Recirculation % per pump	**% of Nominal flow**	10 - 18%		
				Power	**HP**	20		
				Flow	**m3/h**	20		
				Head	**psi (bar)**	108 (7.4)		
				Diameter	**NPT**	3 po (suction) / 2.5 po (discharge)		
	Strainer per unit			**Diameter Inlet/outlet**	**mm (in)**	150 (6)		
				Material	-	304 stainless steel (std)		
				Quantity	-	2		
	White water recirculation line			**Recirculation Line diameter**	**mm (in)**	350 (14)		
				Material	-	304 stainless steel (std)		
	Air Mixing			**Air flow**	**SCFM**	150		
				Header Diameter	**mm (in)**	75 (3)		
				Ramification Diameter	**mm (in)**	25 (1)		
OTHER MATERIAL OF CONSTRUCTION	**Bottom Collector**					304 stainless steel		
	Anti-Vortex Baffles				-	304 stainless steel		
	Hardware (Immersed)				-	304 stainless steel		
	Hardware (Surfaced state)				-	304 stainless steel		
CONNECTIONS	**Inlet flange**				**mm (in)**	350 (14)		2
	Outlet flange				**mm (in)**	400 (16)		2
	Drain diameter				**mm (in)**	50 (2)		
	Outlet sludge diameter				**mm (in)**	150 (6)		
	Air washing system diameter				**mm (in)**	50 (2)		2
	White water nozzles diameter				**mm (in)**	150 (6)		2
VALVES PER UNIT	**X**	**Modulating valve - Clarified Water**		**Manufacturer**	-	Bray		
				Type	-	Butterfly Lug Serie 31		
				Model | Diam.	-	Serie 31 & S92	300 (12)	
				Quantity	-	2		
		Isolation valve ON/OFF sludge		**Type**		-		2
				Model | Diam.		-	-	2
				Quantity		-		2
		Isolation valve ON/OFF air mixing		**Type**		-		2
				Model | Diam.		-	-	2
				Quantity		-		2
	X	**Isolation valve ON/OFF - Strainer**		**Type**		Butterfly Lug Serie 31		
				Model | Diam.		Serie 31 & S70	100 (4)	2
				Quantity		2		
	X	**Drain valve ON/OFF- Strainer**		**Type**		Ball valve		
				Model | Diam.		Flow-tek & Actuator S70	50 (2)	2
				Quantity		2		
	X	**Valve ON/OFF - White water**		**Manufacturer**	-	Bray		
				Type	-	Butterfly Lug Serie 31		
				Model | Diam.	-	Serie 31 & S70	75 (3)	2
				Quantity	-	1		
	X	**Isolation Valve - Flotation zone Drain**		**Manufacturer**	-	Pratt		2
				Type	-	Plug valve		2
				Model | Diam.	-	611A	50 (2)	2
				Quantity	-	5		
	X	**Isolation Valve - White Water Drain**		**Manufacturer**	-	Bray		
				Type	-	Butterfly Lug Serie 31		
				Model | Diam.	-	Serie 31	50 (2)	
				Quantity	-	1		
	X	**Isolation Valve - Air Mixing**		**Manufacturer**		Bray		
				Type		Butterfly Lug Serie 31		
				Model | Diam.		Serie 31	50 (2)	2
				Quantity		5		2
	X	**Isolation Valve - Pump Recirculation lines**		**Manufacturer**		Bray		
				Type		Butterfly Lug Serie 31		
				Model | Diam.		Serie 31	75 (3)	
				Quantity		3		2
	X	**Isolation Valve - Pump Recirculation lines**		**Type**		Butterfly Lug Serie 31		
				Model | Diam.		Serie 31	100 (4)	
				Quantity		3		
	X	**Check valve - White Water pump**		**Manufacturer**		Bray		
				Type		Wafer		2
				Model | Diam.		Rite 210	100 (4)	2
				Quantity		3		
	X	**Isolation valve Outlet- Strainer**		**Type**		Butterfly Lug Serie 31		
				Model | Diam.		Serie 31	100 (4)	
				Quantity		2		
	X	**Other**		**Manufacturer**	-			
				Type	-			
				Model | Diam.	-			
				Quantity	-			

INSTRUMENTATION PER UNIT	N/A	Raw Water Flowmeter	Manufacturer	-	NA		
			Model | Diam.				
		Zone : *Unclassified*	Quantity	-			
	X	Level Switch (High High)	Manufacturer	-	Flygt		
			Model | Diam.		ENM-10	4''	
		Zone : *Unclassified*	Quantity	-	1		
	N/A	Raw water pH probe	Manufacturer	-	-		2
			Model | Diam.		-		2
		Zone : *Unclassified*	Quantity	-	-		2
	N/A	Raw water pH transmitter	Manufacturer	-	-		2
			Model | Diam.		-	-	2
		Zone : *Unclassified*	Quantity	-	-		2
	N/A	Raw water Turbidity probe	Manufacturer	-	-		2
			Model | Diam.		-	-	2
		Zone : *Unclassified*	Quantity	-	-		2
	N/A	Raw water Turbidity transmitter	Manufacturer	-	-		2
			Model | Diam.		-	-	2
		Zone : *Unclassified*	Quantity	-	-		2
	X	Clarified water turbidity probe	Manufacturer	-	Hach		
			Model | Diam.		Solitax	1.5''	
		Zone : *Unclassified*	Quantity	-	1		
	X	Clarified Water Turbidity transmitter	Manufacturer	-	Hach		
			Model | Diam.		SC200	NA	
		Zone : *Unclassified*	Quantity	-	1		
	X	Level transmitter	Manufacturer	-	E&H		2
			Model | Diam.		PMP51-CA21JD1FGDR1JA1 + AAZ1	1/2	2
		Zone : *Unclassified*	Quantity	-	1		2
	X	Pressure transmitter (Recirculation)	Manufacturer	-	E&H		2
			Model | Diam.		PMP51-CA21JD1PGDRKJA1+AAZ1	1/2	2
		Zone : *Unclassified*	Quantity	-	2		2
	X	Pressure Gauge (White water skid)	Manufacturer	-	2.5'' Ashcroft		2
			Model | Diam.		1 009	1/2	2
		Zone : *Unclassified*	Quantity	-	8		2
	X	Other (specify): Recirculation Flowmeter	Manufacturer	-	E&H		2
		Zone : *Unclassified*	Model | Diam.		Promag 5W4C80	3''	2
			Quantity	-	1		2
		Commentaries		-			
CHEMICALS		Coagulant Dosing	Dosing	L/hr	NA		
		Polymer Dosing	Dosing	L/hr	5-100		
POWER SUPPLY		Voltage		V	575		
		Phase		ph	3		
		Frequency		Hz	60		
COMMENTS							

This page is intentionally left blank

Projet	IQALUIT
Projet#:	5000218036
Document #:	5000218036_DS_0001_PM_VWT
Par:	BB
Verif.:	GH
approb.:	CB

SPIDFLOW

SCRAPER

Section Manuel OM: 4.3.1.2

This page is intentionally left blank

CS-999-200 : Identification sheet

VWTC PROJECT NUMBER:	Iqaluit WWTP	REV:	02
PROJECT NAME:	5000218036	SUBMITTED TO (COMPANY):	
ENGINEER:	F.VINCI	SUBMITTED TO (RESPONSIBLE)	
PROJECT MANAGER:	C. BEKAERT	PROJECT NUM REFERENCE.:	
PHONE NUMBER:		LOT NUMBER:	

SUPPLIER	EQPT CODE	EQPT TAG NO	DIA	DESCRIPTION	INFO 1	INFO 2	INFO 3	APPLIC.	NOTE	REV
VEOLIA	ST-999-200	DDR-02-311		SURFACE SCRAPER	CHAIN SURFACE SCRAPER SYSTEM // 2-SHAFT, SURFACE SCUM SCRAPING SYSTEM // BASIN LENGTH: 4M // BASIN WIDTH: 2,5M // STEEL MATERIAL AISI304 // INCL. EL-FI DRIVE OVER/UNDERLOAD GUARD // SPEED OF SCRAPER 2,0 CM/S	GEARBOX NORD SK9033 // CW BEACH PLATE // CW NCS720S CHAIN //FRP FLIGHTS	SURFACE SCRAPER MOTOR // NORD MODEL # 63L/4 // POWER SUPPLY : 575 V/ 3 PH / 60 HZ // HIGH PERFORMANCE, INVERTER DUTY, NEMA 56C, 0,25 HP // CSA OR CUL APPROVED			2
VEOLIA	ST-999-200	DDR-02-321		SURFACE SCRAPER	DEWA CHAIN SURFACE SCRAPER SYSTEM // 2-SHAFT, SURFACE SCUM SCRAPING SYSTEM // BASIN LENGTH: 4M // BASIN WIDTH: 2,5M // STEEL MATERIAL AISI304 // INCL. EL-FI DRIVE OVER/UNDERLOAD GUARD // SPEED OF SCRAPER 2,0 CM/S	GEARBOX NORD SK9033 // CW BEACH PLATE // CW NCS720S CHAIN //FRP FLIGHTS	SURFACE SCRAPER MOTOR // NORD MODEL # 63L/4 // POWER SUPPLY : 575 V/ 3 PH / 60 HZ // HIGH PERFORMANCE, INVERTER DUTY, NEMA 56C, 0,25 HP // CSA OR CUL APPROVED			2

This page is intentionally left blank

ITEM: 5000218036-SA301-22 (1X) ⚠
ITEM: 5000218036-SA305-22 (1X) ⚠
QUANTITÉ TOTALE: 2
POIDS: 363 Kg (801 Lbs)

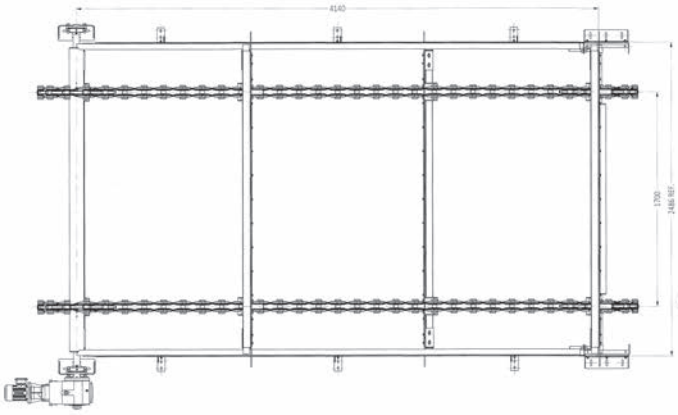

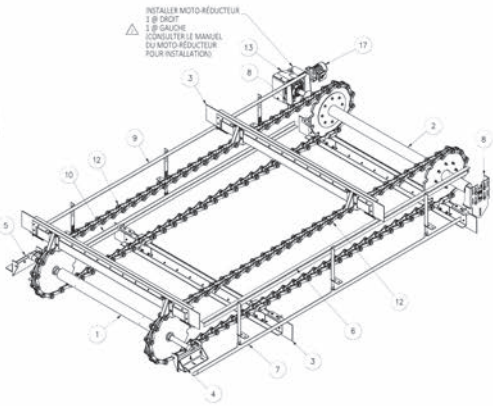

INGÉNIERIE ENGINEERING						ATELIER SHOP		
PAR #	ITEM	DESCRIPTION	MATÉRIEL MATERIAL	NUMÉRO REF. REF. NUMBER	QTÉ QTY	QTÉ TOT. TOT. QTY	#	%
	1	ARBRE DE TENSION A/C ROUE DENTÉE		SA301	1	1		
	2	ARBRE D'ENTRAÎNEMENT A/C ROUE DENTÉE		SA302	1	1		
	3	SUPPORT DE LAME DE RACLEUR		SA303	⚠4	8		
	4	GLISSIÈRE TENSION DROIT		SA304	1	1		
	5	GLISSIÈRE TENSION GAUCHE		SA305	1	1		
	6	SUPPORT DE GUIDE DROIT SUPÉRIEUR	Generic	SA306	1	1		
	7	SUPPORT DE GUIDE DROIT INFÉRIEUR	Generic	SA307	1	1		
	8	SUPPORT D'ARBRE D'ENTRAÎNEMENT		SA308	2	4		
	9	SUPPORT DE GUIDE GAUCHE SUPÉRIEUR	Generic	SA309	1	2		
	10	SUPPORT DE GUIDE GAUCHE INFÉRIEUR	Generic	SA310	1	1		
	11	CHAÎNE NON MÉTALLIQUE (ALLIED-LOOVE INDUSTRIES) #NDS720S - LONGUEUR 10.500m (66 MAILLONS)		ST-999-201	2	4		
	12	RÉDUCTEUR À ENGRENAGES CONIQUES À ANGLE DROIT (NORD) SK 9033.1 AZ80 56C		ST-999-220	1	2		
	14	CLAVETTE 1/2" LARGEUR 4 1/2" HAUTEUR (INCLUS AVEC RÉDUCTEUR)	Generic	ST-999-233	1	2		
	15	RONDELLE PLATE Ø3/4" TYPE A STROIT/SPECIUS AVEC RÉDUCTEUR)	316 304	ST-999-210	1	2		
	16	BTH Ø3/4"-10UNC X 1 1/2" LG (INCLUS AVEC RÉDUCTEUR)	ASTM F3955-304	ST-999-210	1	2		
	17	MOTEUR (NORD) 6/6/4	Generic	ST-999-211	1	2		
	18	ÉCROU Ø3/4"-10UNC	ASTM F594C-304	FINISHED0103	1	2		
	19	RONDELLE PLATE Ø3/4" TYPE A STROIT	316 304	HWWF000674	7	14		
	23	BTH Ø3/4"-10UNC X 8 LG	ASTM F3955-304	FASCH100501	1	2		

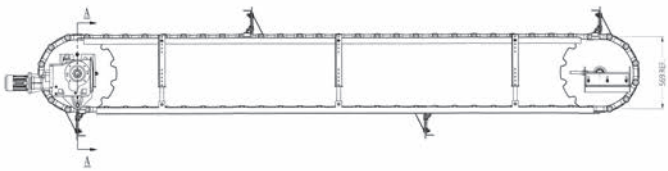

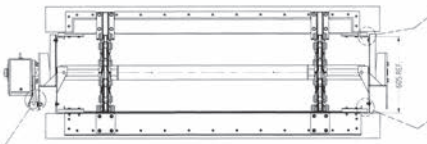

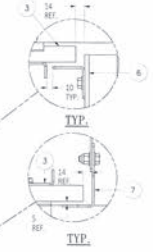

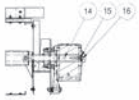

COUPE A-A
ÉCHELLE 1 : 15

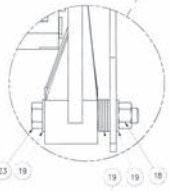

AJUSTER QUANTITÉ AU BESOIN

REV.	DESCRIPTION	DATE	APPR. APPD.	APPR. APPD.	APPROUVÉ APPROVED
2	POUR ASSEMBLAGE	2019-04-08	A.D.	S.M.	Y.H.
1	POUR ASSEMBLAGE	2019.03.26	A.D.	S.M.	Y.H.

TOLÉRANCES GÉNÉRALES:
DIMENSIONS EN mm:
0 @ 600 : ± 0.5
600 @ 4000 : ± 1.0
> 4000 : ± 3.0
DIMENSIONS EN POUCES:
0 @ 24 : ± 1/32 (± .03)
24 @ 160 : ± 1/16 (± .05)
> 160 : ± 1/8 (± 1)
ANGLES: ± 0° 30'
BAVER TOUTES LES ARÊTES
SURFACES USINÉES: 250

VEOLIA WATER TECHNOLOGIES

DESSINÉ PAR / DRAWN BY	DATE	CLIENT
A.D.	2019.03.26	IQALUIT WWTP
VÉRIFIÉ PAR / VERIFIED BY	DATE	
S.M.	2019.03.26	
APPROUVÉ PAR / APPROVED BY	DATE	
Y.H.	2019.03.26	

TITRE / TITLE
SPIDFLOW
RACLEUR
DÉTAIL D'ASSEMBLAGE

ÉCHELLE / SCALE: 1:15

PROJET / PROJECT	DESSIN No. / DRAWING No.	INTERNE / % INTERNAL	FEUILLE / SHEET	REV / REV.
5000218036	SA500	0%	1 / 1	2

Ce document est la propriété de VEOLIA et ne peut être reproduit sans son autorisation écrite.
This document is the property of VEOLIA and cannot be reproduced without its written authorization.

This page is intentionally left blank

NON-METALLIC CHAINS AND ATTACHMENTS

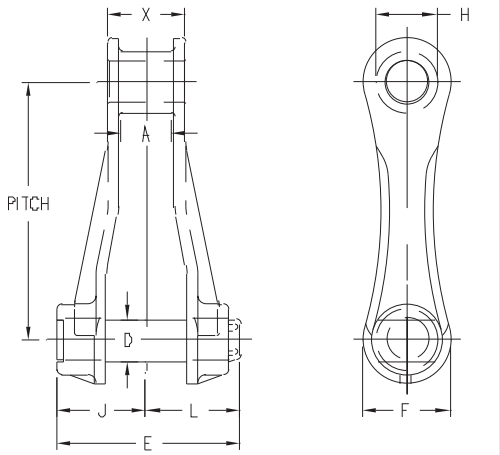

NCS720S

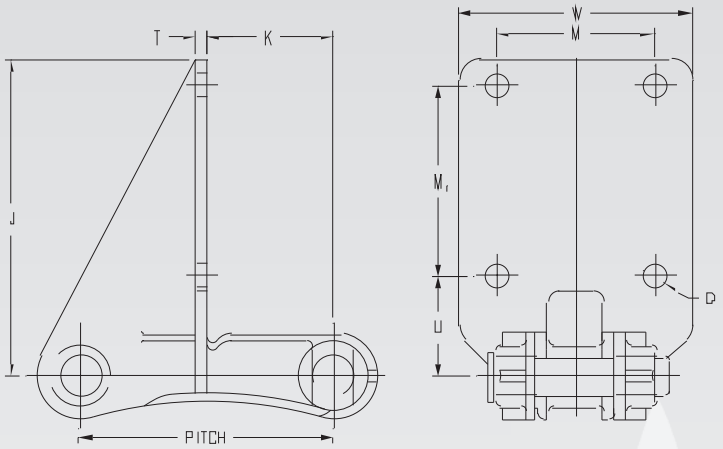

NCS720S-F22

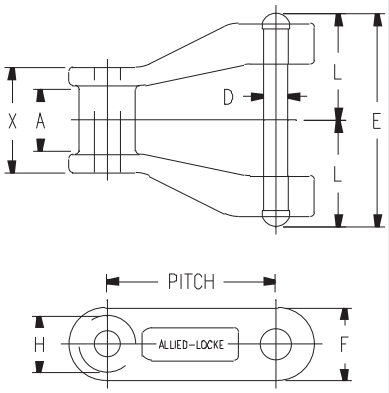

NH78

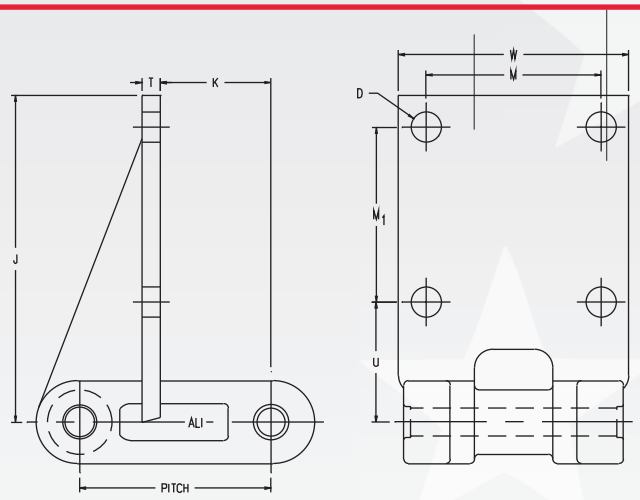

NH78-F2

ALI Catalog No.	Pitch in Inches	Links Per 10 Feet	Weight Per Foot in Lbs.	Average Ultimate Strength in Lbs.	Maximum Allowable Sprocket Face A	Over-All Width Detachable Cottered C	Pin Dia. D	Over-All Width Fixed Riveted E	Height of Side Bar F	Dia. of Barrel H	Head of Pin to Center Line J	End of Pin to Center Line Detachable Cottered K	End of Pin to Center Line Fixed Riveted L	Bearing Length X
NCS720S	6.00	20	1.5	6,000	1.12	4.29	.93	—	2.03	1.44	2.10	2.19	—	1.81
NH78	2.609	46	1.5	3,100	.94	—	.38	3.19	1.12	.88	—	—	1.59	1.62

ALI Attachment No.	Pitch in Inches	D		J	K	M	M_1	T	U	W
		Bolt Diameter	Hole Diameter							
NCS720S-F226	6.000	0.50	0.56	6.14	3.00	3.75	2.62	0.25	2.38	5.50
NCS720S-F228	6.000	0.50	0.56	7.50	3.00	3.75	4.50	0.25	2.38	5.50
NH78-F2	2.609	0.38	0.41	4.44	1.50	2.38	2.38	0.25	1.62	3.12

FF–0002

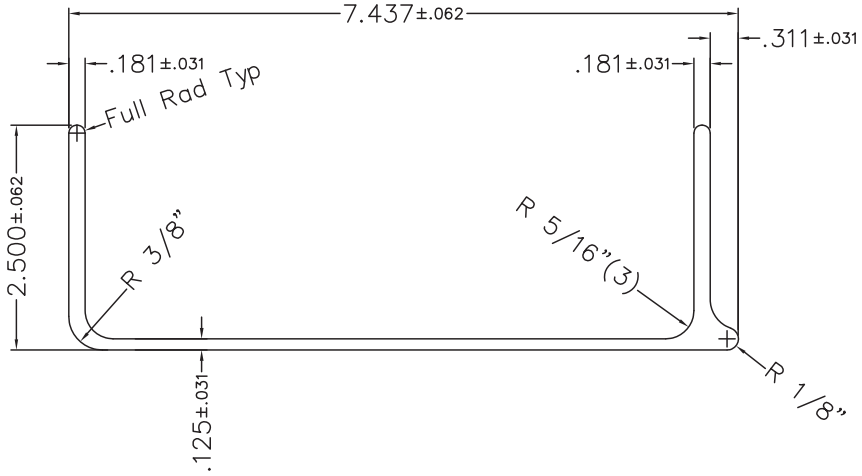

MATERIAL:

FIBERGLASS REINFORCED ISOPHTHALIC POLYESTER RESIN. REINFORCEMENT SHALL CONSIST OF CONTINUOUS STRAND, FIBERGLASS MAT. AND UNIDIRECTIONAL FIBERGLASS ROVING. GLASS CONTENT 55% MINIMUM BY WEIGHT.

MECHANICAL PROPERTIES (COUPOND	UNIT	TEST METHOD
LONGITUDINAL TENSILE STRENGTH	47,500 PSI. AVG	ASTM D638
TRANSVERSE TENSILE STRENGTH	7,000 PSI. AVG.	ASTM D638
LONGITUDINAL FLEXURAL STRENGTH	40,000 PSI. AVG	ASTM D790
TRANSVERSE FLEXURAL STRENGTH	10,000 PSI. AVG.	ASTM D790
LONGITUDINAL COMPRESSIVE STRENGTH	40,000 PSI. AVG.	ASTM D695
TRANSVERSE COMPRESSIVE STRENGTH	10,000 PSI. AVG.	ASTM D695
LONGITUDINAL TENSILE MODULUS	3.2 X 10^6 PSI.	ASTM D638
LONGITUDINAL FLEXTURAL MODULUS	2.0 X 10^6 PSI. AVG.	ASTM D790
SHEAR STREGNTH (BY PUNCH TOOL)	14,000 PSI. AVG.	ASTM D732
MODULAS OF ELASTICITY (FULL SECTION Y–Y)	4.8 x 10^6 PSI. MIN.	ANSI A14.5–1989

PHYSICAL PROPERTIES		
DENSITY	0.058–0.062 LBS./IN.	ASTN D1505–68
SPECIFIC GRAVITY	1.61 – 1.75	ASTM D792
WATER ABSORBTION	0.6% MAX	ASTM D570
BARCOL HARDNESS	40 AVERAGE	ASTM D2583–01

TOLERANCES

SQUARENESS OF END CUT MAXIUMUM DEVIATION IS 1°
ANGULARITY +/– 2°
LENGTH +/– 1/8" UP TO 20' LONG
FLATNESS: MAX. DEVIATION FROM FLAT IS .008" X INCH OF WIDTH
TWIST: 3" MAXIUM UP TO 20 FEET LONG
STAIGHTNESS: MAXIMUM DEVIATION FROM STRAIGHT
.030"/FT UP TO 20' IN LENGTH
.050"/FT. FOR LENGTHS GREATER THAN 20'
CHECKED WITH STRING (NO WEIGHT MINIMIZING).

NOTE: ALL TOLERANCES +/–.062 UNLESS OTHERWISE SPECIFIED

Cross Sectional Properties		
Area	1.873	in^2
Ix	15.589	in^4
Iy	1.114	in^4
Ixy	0.220	in^4
Sx	4.111	in^3
Sy	0.603	in^3
rx	2.885	in
ry	0.771	in

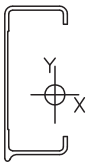

REVISIONS				MATERIAL
NO.	DATE	BY	CHANGE	
1.				
2.				TREATMENT
3.				
4.				
5.				

ALLIED - LOCKE IND.
P.O. BOX 509 DIXON, IL. 61021
INDUSTRIAL DIVISION

TITLE: 8" Sludge Flight

DRAWN BY.	SCALE	DRAWNING NO.
LSG	NONE	FF–0002
CHK'D	DATE 11/12/03	

90 SERIES RIGHT ANGLE HELICAL-BEVEL
SPEED REDUCERS/GEAR MOTORS

NORD DRIVESYSTEMS

PERFORMANCE SPECIFICATIONS

Configuration : right angle
Integral motor HP (min/ max) : 0.16 / 200
Integral motor kW (min/ max) : 0.12 / 160
Typical efficiency : 95.5%
Number of gear reductions : 3 to 6

MOUNTING STYLES

Footed housing style : standard
B5 flange outside diameter range [in] : 7.87 to 25.98
B5 flange outside diameter range [mm] : 200 to 660
Shaft mount housing available
B14 flange outside diameter range [in] : 5.51 to 17.72
B14 flange outside diameter range [mm] : 140 to 450

OPTIONS

NEMA C-face or IEC input adapter
Custom adapter flange
Flange pilot removed
Bolt-on torque arm with shock dampener
Effective drywell with flange

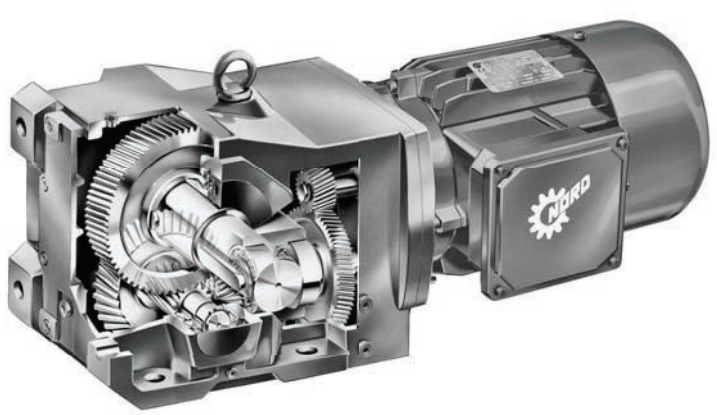

RATIO AND SPEED

Minimum standard ratio : 8.04:1
Maximum standard ratio : 134:32.68
Minimum output speed from 1750 rpm motor : 0.13 rpm
Maximum output speed from 1750 rpm motor : 218 rpm

Unit Size	Torque Max *		Ratio Range	Solid Shaft Dia.		Keyed Hollow Shaft Dia.				Shrink Disc Shaft Dia.	
	[lb-in]	[Nm]	Min-Max	[in]	[mm]	Std-[in]	Opt-[in]	Opt-[in]	[mm]	[in]	[mm]
SK 9012.1	3,540	400	8.09 - 332.37	1.250	30	1.375	1.438	1.250	35	1.375	35
SK 9013.1	3,540	400	141.29 - 1690.10	1.250	30	1.375	1.438	1.250	35	1.375	35
SK 9016.1	5,399	610	12.51 - 277.84	1.375	35	1.500	1.438	-	40	1.500	40
SK 9017.1	5,399	610	134.32 - 1412.69	1.375	35	1.500	1.438	-	40	1.500	40
SK 9022.1	7,611	860	8.78 - 276.86	1.375	35	1.500	1.438	-	40	1.500	40
SK 9023.1	7,611	860	228.47 - 1899.29	1.375	35	1.500	1.438	-	40	1.500	40
SK 9032.1	13,718	1,550	8.48 - 295.85	1.750	45	2.000	1.938	1.688	50	2.000	50
SK 9033.1	13,718	1,550	167.45 - 3635.95	1.750	45	2.000	1.938	1.688	50	2.000	50
SK 9042.1	24,780	2,800	8.83 - 329.69	2.375	60	2.375	1.438	1.188	60	2.375	60
SK 9043.1	24,780	2,800	172.08 - 4246.38	2.375	60	2.375	1.438	1.188	60	2.375	60
SK 9052.1	42,480	4,800	8.10 - 289.61	2.875	70	2.750	2.938	-	70	2.750	70
SK 9053.1	42,480	4,800	164.99 - 3735.92	2.875	70	2.750	2.938	-	70	2.750	70
SK 9072.1	75,225	8,200	9.16 - 245.76	3.625	90	3.250	2.938	-	80	3.250	80
SK 9072.1/32	75,225	8,200	311.10 - 4512.24	3.625	90	3.250	2.938	-	80	3.250	80
SK 9082.1	115,050	13,000	8.04 - 296.80	4.375	110	4.000	3.938	4.438	110	4.000	110
SK 9082.1/42	115,050	13,000	285.05 - 4671.14	4.375	110	4.000	3.938	4.438	110	4.000	110
SK 9086.1	177,000	20,000	8.04 - 230.64	4.750	120	4.750	-	-	120	4.750	120
SK 9086.1/52	177,000	20,000	144.80 - 4818.83	4.750	120	4.750	-	-	120	4.750	120
SK 9092.1	283,200	32,000	10.68 - 297.51	5.500	140	-	-	-	150	5.500	150
SK 9092.1/52	283,200	32,000	191.28 - 4916.63	5.500	140	-	-	-	150	5.500	150
SK 9096.1	442,500	50,000	16.78 - 200.57	7.500	190	-	-	-	155/160	6.00/6.25	155/160
SK 9096.1/62	442,500	50,000	208.95 - 1623.67	7.500	190	-	-	-	155/160	6.00/6.25	155/160
SK 9096.1/63	442,500	50,000	1774.21 - 13432.68	7.500	190	-	-	-	155/160	6.00/6.25	155/160

*** Torque may vary by ratio**

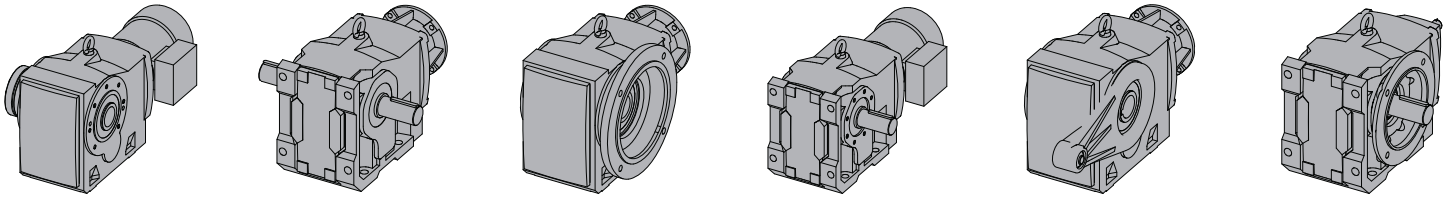

90 SERIES RIGHT ANGLE HELICAL-BEVEL



SHAFT DATA

- AISI 1045 or 4140 input and output shaft material
- Inch shaft key dimensions according to AISI B17
- Metric shaft key dimensions according to DIN 6885
- Standard output shaft drill and tap
- 2 hollow shaft keys
- Shrink disc size range [in] : 1.375 to 5.500
- Shrink disc size range [mm] : 35 to 150
- Minimum gripping safety factor range [h6 fit] : 2.6 to 6.3

SHAFT DATA OPTIONS

Double solid output shaft, Shaft fixing element, Custom shaft diameters, Hollow spline per DIN 5480, Custom spline, Cross drilled holes, 304 stainless steel



MOTOR MOUNTING

- Integral motor : 1/6 to 200 HP
- C-face adapter frame size range : 56C to 360TC
- IEC adapter [B5] frame size range : IEC 63 to IEC 315
- Sugar scoop motor availability : 56 to 365T
- Top mount platform motor availability : 56 to 405T

MOTOR MOUNTING OPTIONS

Custom motor adapter, Custom coupling diameter



GEARING

- Up to AGMA Class 13 gear quality rating
- 58 Rockwell C minimum gear hardness
- Ground or skive hobbed hard gear teeth finishing
- Standard drop forged gear blanks
- 275% momentary overload capacity
- Standard hunting tooth ratios

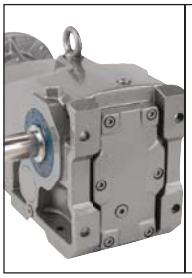

HOUSING

- Class 35 gray iron housing material
- Single setup machining method
- UNICASE™ one piece housing design
- Seals directly contact main housing
- Exceptional housing torsional stiffness
- Thick housing wall section
- Castings are dip sealed



BEARINGS

- ABEC-1 quality bearings
- Ball or tapered standard output bearing
- Tapered or spherical heavy-duty output bearing



LUBRICANT & SEALING COMPONENTS

- Factory filled ISO 220 mineral oil
- Standard AUTOVENT™ breather style
- QUADRILIP™ output seal design
- 1 double lip & 1 single lip output shaft oil seals
- Nitrile rubber Oil seals

LUBRICANT & SEALING OPTIONS

Custom synthetic lubricating oil, Custom temperature lubricating oil, Fluid grease lubricant, Food grade lubricating oil, Long term storage preparation, Magnetic drain plug, Bulls eye sight glass, Custom drain plug, Fluorinated rubber oil seal material, Custom oil seals



INTERNAL PARTS ASSEMBLY

- Heavy press fit assembly method
- Standard reversing duty
- Typical backlash range [arc minutes] : 7 to 13

INTERNAL PARTS ASSEMBLY OPTIONS

Internal backstop



ENVIRONMENTAL PROTECTION

- Exterior primer coverage on all metal exterior surfaces
- Water Based Resin paint type
- 316 stainless steel flake paint additive
- H1 USDA incidental contact exposure

ENVIRONMENTAL OPTIONS

Severe duty and washdown duty paint options, Custom paint, Shaft seal covers, High pressure washdown IP66 oil seals

DRIVESYSTEMS

www.nord.com

NORD Gear Corporation
National Customer Service Toll-Free: 888.314.6673
info.us@nord.com

NORD Gear Limited
Toll-Free in Canada: 800.668.4378
info.ca@nord.com

WEST
Corona, CA (Los Angeles)
Phone: 608.849.0190

MIDWEST
Waunakee, WI (Madison)
Phone: 608.849.7300

EAST
Charlotte, NC
Phone: 608.849.0140

CANADA
Brampton, ON (Toronto)
Phone: 905.796.3606

10020002 1/1011

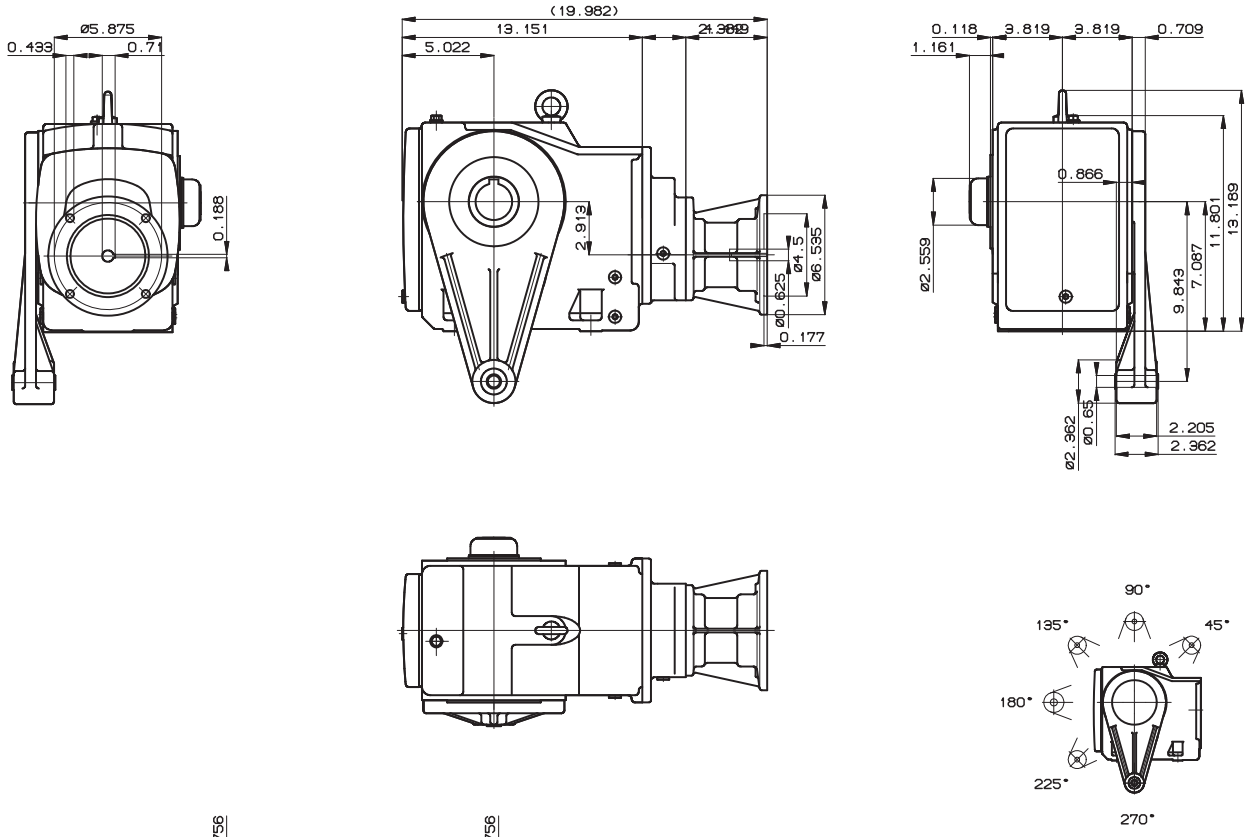

SK 9033.1 AZBD 56C

NORD

Nord Internet: http://www.nord.com

DRIVESYSTEMS

	Date	Name
Drawn	21/08/2019	singhj

Technical changes reserved!
This drawing is created with NORDCAD 9.1.0 s

HIGH PERFORMANCE MOTORS
GEAR MOTORS

NORD DRIVESYSTEMS

60 HERTZ LINE FREQUENCY - SF 1:15

230V - 3 phase : 0.16 to 40 hp
460V - 3 phase : 0.16 to 250 hp
575V - 3 phase : 0.16 to 250 hp

OPTIONS

115/230V - 1 phase : 0.16 to 2 hp
208V - 3 phase : 0.16 to 10 hp

50 HERTZ LINE FREQUENCY

230/400V - 3 phase : 0.12 to 2.2 kW
400/690V - 3 phase : 3 to 200 kW

OPTIONS

230V - 1 phase : 0.09 to 1.5 kW



Motor Power		Full Load Speed	Integral Model Number	Mounting Options					Full Load Current			Starting Torque	Break-down Torque
				NEMA T-Frame	NEMA C-Face	IEC Footed B3 Style	IEC Flanged B3 Style	IEC Flanged B14 Style	230V	460V	575V		
[hp]	[kW]	[rpm]							[A]	[A]	[A]	[%]	[%]
0.16	0.12	1700	63S/4	56T	56C	63S-B3	63S-B5	63S-B14	0.88	0.44	0.37	210	220
0.25	0.18	1680	63L/4	56T	56C	63L-B3	63L-B5	63L-B14	1.12	0.56	0.46	210	220
0.33	0.25	1710	71S/4	56T	56C	71S-B3	71S-B5	71S-B14	1.56	0.78	0.66	250	240
0.50	0.37	1720	71L/4	56T	56C	71L-B3	71L-B5	71L-B14	1.90	0.95	0.80	245	260
0.75	0.55	1710	80S/4	56T	56C	80S-B3	80S-B5	80S-B14	2.70	1.35	1.12	220	220
1	0.75	1650	80L/4	56T	56C	80L-B3	80L-B5	80L-B14	3.66	1.83	1.46	220	230
1.5	1.1	1660	90S/4	56T, 143T	56C, 143TC	90S-B3	90S-B5	90S-B14	4.84	2.42	1.94	270	260
2	1.5	1660	90L/4	145T	145TC	90L-B3	90L-B5	90L-B14	6.34	3.17	2.54	255	250
3	2.2	1705	100L/4	182T	182TC	100L-B3	100L-B5	100L-B14	9.00	4.50	3.60	230	260
5	3.7	1725	100L/40	184T	184TC	100La-B3	100La-B5	100La-B14	15.2	7.62	6.10	270	310
7.5	5.5	1735	132S/4	213T	213TC	132S-B3	132S-B5	132S-B14	19.8	9.90	7.92	245	275
10	7.5	1735	132M/4	215T	215TC	132M-B3	132M-B5	132M-B14	26	12.9	10.3	290	320
15	11	1770	160M/4	254T	254TC	160M-B3	160M-B5	-	38	19.2	-	245	300
20	15	1765	160L/4	256TC	256TC	160L-B3	160L-B5	-	49	25	-	290	330
25	18.5	1750	180MX/4	-	-	-	-	-	60	30	-	295	340
30	22	1755	180LX/4	-	-	-	-	-	71	36	-	340	370
40	30	1780	200L/4	-	-	-	-	-	96	48	-	290	260
50	37	1765	225S/4	-	-	-	-	-	-	58	-	310	350
60	45	1770	225M/4	-	-	-	-	-	-	70	-	310	260
75	55	1782	250M/4	-	-	-	-	-	-	89	-	280	320
100	75	1788	280S/4	-	-	-	-	-	-	118	-	290	350
125	90	1786	280M/4	-	-	-	-	-	-	144	-	280	330
150	110	1788	315S/4	-	-	-	-	-	-	176	-	280	310
175	132	1790	315M/4	-	-	-	-	-	-	200	-	300	340
200	150	1790	315Ma/4	-	-	-	-	-	-	230	-	320	360
250	187	1790	315L/4	-	-	-	-	-	-	280	-	320	330

HIGH PERFORMANCE MOTORS



INVERTER DUTY

- Motors conform with NEMA MG-1-2006 Section 31.4.4.2
- Speed range 5:1 constant torque from 60Hz to 12Hz
- Speed range 20:1 constant torque from 80Hz to 4Hz

INVERTER DUTY OPTIONS

- 10:1 Speed range: constant torque from 60Hz to 6Hz
- 1000:1 Speed range: constant torque from 60Hz to 0Hz
- Blower cooling fans
- Incremental encoder
- Class H magnet wire insulation



INTERNATIONAL CERTIFICATIONS

- Underwriters Laboratories Recognized component :
- Canadian Standards Association approved for most installations in Canada :
- CSA approved according to both US and Canadian standards :
- European Union (EU) member states approved according to Low Voltage Directive : CE



MOUNTING STYLES

- Integral motor with speed reducer
- NEMA C-face flange
- DIN B5, IEC FF metric face flange mount
- DIN B14, IEC metric face flange mount
- DIN B3, IEC metric foot mount



ENVIRONMENTAL PROTECTION

- IP55 enclosure protection
- Totally Enclosed Fan Cooled (TEFC)
- Tropical protection

ENVIRONMENTAL OPTIONS

NSD+ severe duty protection, Encapsulated windings for IEEE45 Marine Duty, IP66 enclosure, End bell drain holes, Drip cover (RD), Wind protected double drip cover (RDD), Space heater (SH), Additional epoxy coating on inside surface of motor



MULTIPLE SPEED OPTIONS

- 1800/3600 rpm - 4 pole and 2 pole windings
- 900/3600 rpm - 8 pole and 2 pole windings







STANDARD CONSTRUCTION FEATURES

- Corrosion resistant aluminum alloy housing
- Double coated magnet wire insulation
- Insulation lined slots
- First turn winding protection
- Varnish dipped stator
- Shaft lip seals both end bells
- Inorganic insulation for tropical protection
- Sealed stator to end bell connections
- Cast metal terminal box
- Gasket sealed terminal box
- Non sparking low inertia fan
- Dynamically balanced rotor
- Anti-corrosion coated rotor
- Bearing grease resists water
- Terminal block power connector
- Reversible rotation direction
- Four conduit box locations
- Four cable entry locations
- Threaded cable entry



THERMAL WINDING PROTECTION OPTIONS

- Thermostat sensor (TW)
- Thermistor sensors (TF)



POWER OFF BRAKE

- Ready to go…wired by factory
- Manual hand release lever included
- Downward adjustable torque is included, specification is required
- AC to DC voltage rectifier is included
- IP55 enclosure protection is included

POWER OFF BRAKE OPTIONS

NSD+ severe duty protection, Corrosion protection (RG), Dust protection (SR), Lockable hand release lever (FHL), Oversize brake, Undersize brake, Inverter duty modifications, Faster torque release enhancement, Faster torque stopping enhancement, Current sensing relay for automatic control(IR) Heating circuit (BSH), Micro switch wear indicator, IP 66 enclosure



OTHER OPTIONS

- Over-running clutch (FK)
- Anti-rotation backstop (RLS)
- Extended motor shaft beyond fan cover (WE)
- High inertia metal fan for soft start (Z)
- Quick power disconnect plug (MS1)

DRIVESYSTEMS

www.nord.com

NORD Gear Corporation
National Customer Service Toll-Free: 888.314.6673
info.us@nord.com

NORD Gear Limited
Toll-Free in Canada: 800.668.4378
info.ca@nord.com

WEST
Corona, CA (Los Angeles)
Phone: 608.849.0190

MIDWEST
Waunakee, WI (Madison)
Phone: 608.849.7300

EAST
Charlotte, NC
Phone: 608.849.0140

CANADA
Brampton, ON (Toronto)
Phone: 905.796.3606

100200015/1011

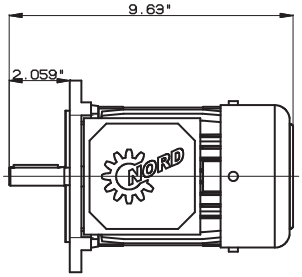

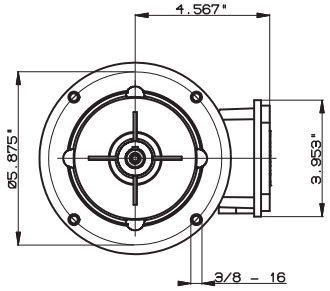

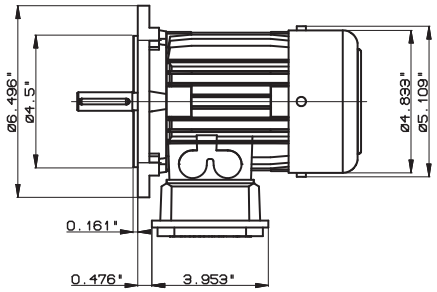

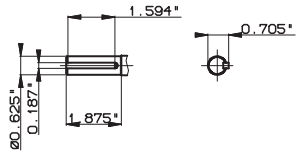

NEMA B14 63 L

KK1/1

NORD

Nord Internet: http://www.nord.com

DRIVESYSTEMS

	Date	Name
Drawn	21/03/19	singhj

Technical changes reserved!
This drawing is created with NORDCAD 9.1.0 s

emotron



EL-FI® M20

SHAFT POWER MONITOR

INSTRUCTION MANUAL

Motor shaft output power measurement

Protected by utility patent SE 9703952-3
International utility patent application pending WO 9925049

01-2551-01-11

Emotron AB
Mörsaregatan 12
Box 222 25
SE-250 24 Helsingborg
Sweden
Tel.: +46 42 169900
Fax: +46 42 169949
www.emotron.com

1 INSIDE THE BOX ...

This instruction manual describes the installation and commissioning of the M20 load monitor. The M20 supervises induction motor driven equipment and provides alarms when abnormal conditions are detected. The M20's ability to provide reliable monitoring & protection ensures production equipment is optimised and expensive breakdowns and interruptions are minimized. Due to the special method of subtracting motor power losses, the monitor is able to accurately measure the shaft power supplied by the motor to the application. This advanced technique allows the M20 to monitor the "application" load only as opposed to the "total" motor load, which includes the varying motor losses.

- Check the delivery. Your shipment should contain the M20 load monitor, a current transformer and this instruction manual.
- Check carefully that the ordered equipment complies with the motors input voltage and that the current transformer rating is as stated on the delivery packaging.
- Check that the contents have not been damaged in shipping.

Note!
If in doubt contact your supplier before starting to install or commissioning the product.

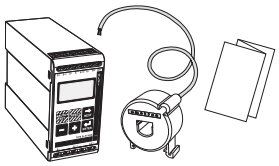

2 SAFETY

- Study this manual thoroughly before installing and using the monitor.
- The monitor must be installed by qualified personal.
- Always disconnect supply circuits prior to installing.
- The installation must comply with standard and local regulations.
- Pay special attention to this SAFETY section and the part marked "CAUTION!" in the OPERATION section.
- Should questions or uncertainties arise, please contact your local sales outlet or see section 11 SERVICE.

Note!
Do not remove or break the seal on the housing. The warranty will be cancelled.

3 WIRING

This wiring example shows how the M20 can be used to control the starting and stopping circuit of the motor. Other wiring configurations are possible.

1. The current transformer CTMxxx must be placed in the same phase that is connected to terminal 9, phase L1.
2. For single-phase connection see fig 2.

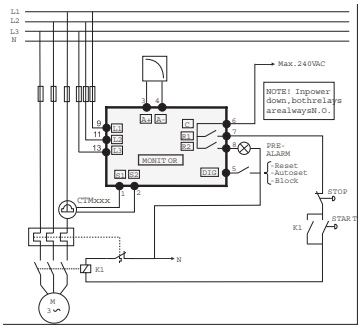

Fig 1. Connection example

Note!
If the START/STOP is connected according to fig. 1, it is recommended that terminals 6 and 7 be by-passed during programming. After the programming is completed the by-pass must be taken out.

3 Continue

ALTERNATIVE EXAMPLE FOR SINGLE-PHASE CONNECTION

This wiring example shows the deviant power connection to be made with regard to a single-phase connection. Refer to fig. 1 for the remaining wiring.

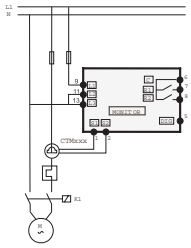

Fig 2. Single-phase connection example.

EXAMPLE - DIGITAL INPUT

The Digital Input use the terminals 5 (DIG) and 6 (C-reference). It can have either a VAC or a VDC signal. See also section 7 ADVANCED FEATURES.

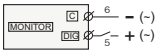

Fig 3. Wiring example for digital input.

4 SELECTION CURRENT TRANSFORMER

FOR MOTORS LESS THAN 100A

1. Check the rated motor current on the motor plate.
2. Compare this value with the current in table 1.
3. From table 1, select the current transformer and the appropriate numbers of windings.

Note!
Max length of the CTM cable is 1 m (39.37 in).

EXAMPLE:

- Rated motor current = 12A.
- Select 10.1-12.5A from the first colon in table 1.
- This gives:
  - CTM025 with 2 windings.

RATED MOTOR CURRENT [A]	CURRENT TRANSFORMER TYPE NUMBER OF WINDINGS			
	CTM 010	CTM 025	CTM 050	CTM 100
0.4 – 1.0	10			
1.01 – 2.0	5			
2.01 – 3.0	3			
3.1 – 5.0	2			
5.1 – 10.0	1			
10.1 – 12.5		2		
12.6 –25.0		1		
26.0 – 50.0			1	
51.0 – 100.0				1

Table 1. CT less than 100A.

Note!
Normally the appropriate Current Transformer (CT) will have been ordered and shipped with the M20, check that this is the case; contact the supplier if in doubt.

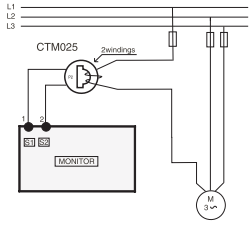

Fig 4. Example CTM 025 with 2 windings for an 12 A motor.

Note!
The transformer connection and orientation are not polarity sensitive.

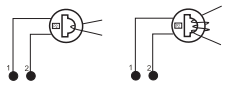

Fig 5. Example 1 and 3 windings.

6:4 Monitor Function (Window 05)

Monitor (Protection)	Indication in window 05	Alarm	Output Relay (default)
OVER- and UNDER-LOAD (default)	–	MAX Main-Alarm	Relay 1 (NC): 6-7
	–	MAX Pre-Alarm	Relay 2 (NO): 6-8
		MIN Pre-Alarm	Relay 2 (NO): 6-8
		MIN Main-Alarm	Relay 1 (NC): 6-7
OVERLOAD	–	MAX Main-Alarm	Relay 1 (NC): 6-7
		MAX Pre-Alarm	Relay 2 (NO): 6-8
UNDERLOAD		MIN Pre-Alarm	Relay 2 (NO): 6-8
	–	MIN Main-Alarm	Relay 1 (NC): 6-7

Programming

1. Go to window 05. The default selection is OVER- and UNDER-LOAD monitor.
2. Press – or + to select UNDERLOAD or OVERLOAD monitor.



OVER- and UNDERLOAD UNDERLOAD OVERLOAD

3. Press ↵ to confirm the change.

Over- and underload monitor

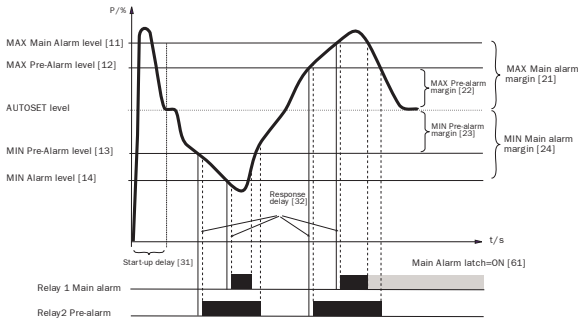

Fig 7. Over- and underload monitor

6:5 Set the START DELAY (window 31)

A START DELAY must be set to allow the motor and machine to speed up and to allow the power in-rush currents to be ignored by the monitor.

Programming

1. Determine in seconds, how long it takes for the motor and machine to reach speed and for the power in-rush to pass. This will be the minimum START DELAY.
2. Go to window 31 (default = 2.0s).
3. Press – or + to set the determined START DELAY time in seconds.
4. Press ↵ to confirm the change.

Example: Start Delay 2.0 s





Fig 8. Start Delay

6:6 Set Alarm levels with AUTOSET

The AUTOSET command performs a measurement of the actual motor load and automatically sets the relevant Alarm levels depending on the selected monitor function.

Protection (Monitor function window 5)	Alarm	Margin Value (Default margins)	Margins (Windows)	Alarm Level at AUTOSET
OVER- and UNDERLOAD (Default)	MAX Main-Alarm	16%	21: MAX Main Alarm margin	Normal machine load+Window 21
	MAX Pre-Alarm	8%	22: MAX Pre-Alarm margin	Normal machine load+Window 22
	MIN Pre-Alarm	8%	23: MIN Pre-Alarm margin	Normal machine load-Window 23
	MIN Main-Alarm	16%	24: MIN Main Alarm margin	Normal machine load-Window 24
OVERLOAD	MAX Main-Alarm	16%	21: MAX Main Alarm margin	Normal machine load+Window 21
	MAX Pre-Alarm	8%	22: MAX Pre-Alarm margin	Normal machine load+Window 22
UNDERLOAD	MIN Pre-Alarm	8%	23: MIN Pre-Alarm margin	Normal machine load-Window 23
	MIN Main-Alarm	16%	24: MIN Main Alarm margin	Normal machine load-Window 24

Programming

1. Start the motor and let it run at the normal machine load, until the START DELAY has expired.
2. Press AUTO SET for 3 seconds. This can be done in any window.
3. The display shows "SEt", to confirm that the AUTOSET level has been measured and the Alarm levels have been set. The display reverts to window 01.



4. If the alarm levels are too high or too low, readjust the appropriate MARGINS (see table above) and perform a new AUTOSET. Alternatively, alarm levels can be set manually - see section 7.

6:7 Set the RESPONSE DELAY (Window 32)

A RESPONSE DELAY allows the machine to remain in an over- or underload condition for a specific time before the alarm relays are activated.

Programming

1. Determine in seconds, how long an under- or overload condition is allowed. This depends on machine properties and behavior. This will be the RESPONSE DELAY.
2. Go to window 32 (default = 0.5s).
3. Press – or + to set the determined RESPONSE DELAY time in seconds.
4. Press ↵ to confirm the change.

Example: RESPONSE DELAY



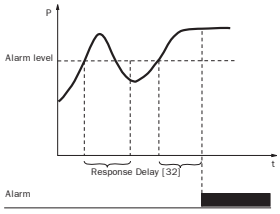

Fig 9. Response Delay

7 ADVANCED FEATURES

Set ALARM LEVELS manually (Window 11-14)

The alarm levels can be set manually, without using the AUTOSET. Also after an AUTOSET has been performed, these levels can be readjusted e.g. for fine-tuning.

Protection (Monitor function window 05)	Alarm levels (Window)	Default
OVER- and UNDERLOAD (Default)	11: MAX Main Alarm	100%
	12: MAX Pre-Alarm	100%
	13: MIN Pre-Alarm	0%
	14: MIN Main Alarm	0%
OVERLOAD	11: MAX Main Alarm	100%
	12: MAX Pre-Alarm	100%
UNDERLOAD	13: MIN Pre-Alarm	0%
	14: MIN Main Alarm	0%

Set MARGINS (window 21-24)

The MARGINS for the AUTOSET can be changed manually. After the adjustment, the AUTOSET action must be performed once again to activated the new margins.

Protection (Monitor function window 05)	Window	Default
OVER- and UNDERLOAD (Default)	21: MAX Main Alarm margin	16%
	22: MAX Pre-Alarm margin	8%
	23: MIN Pre-Alarm margin	8%
	24: MIN Main Alarm margin	16%
OVERLOAD	21: MAX Main Alarm margin	16%
	22: MAX Pre-Alarm margin	8%
UNDERLOAD	23: MIN Pre-Alarm margin	8%
	24: MIN Main Alarm margin	16%

Set HYSTERESIS (Window 33)

The HYSTERESIS of an Alarm level prevents the alarm relay "chattering" if the load fluctuates even in a normal "stable" condition . Apply also for pre-alarm. This feature is normally only used if the "Main Alarm Latch" (Window 61) is set to "OFF". Default = 0%.

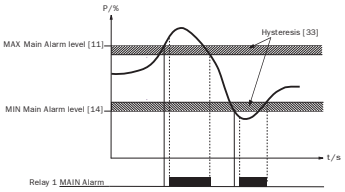

Fig. 10 Hysteresis

Set MAIN ALARM LATCH (Window 61)

The MAIN ALARM LATCH keeps the MAIN ALARM output active, even if the alarm condition has been removed (relay R1). A latched alarm output can be reset by:

- the reset key
- external reset via Digital input (see window 81).
- switching of the power of the monitor (see also "Wiring").

Default = OFF.

Set ALARM AT NO MOTOR CURRENT (Window 62)

The "ALARM AT NO MOTOR CURRENT" gives an alarm if the motor current becomes zero (ON). Default = OFF (No alarm at no motor current).

Set RELAY OUTPUTS (Window 63 and 64)

The RELAY OUTPUTs R1 and R2 can be set to NO or NC contacts.

Note!
If the power to the load monitor is switched off the relay contacts are allways in the NO.

Set DIGITAL INPUT (window 81)

The DIGITAL INPUT can be set for:

RES: External RESET (Default)	to reset an Alarm.
AU: External AUTOSET	to perform an AUTOSET with an external command.
bLo: Block Pre-Alarm	to block the Pre-Alarm function and start the Block timer. If the input is high a Pre-Alarm is blocked, e.g. it is neglected. See also window 82.

Set BLOCK TIMER (window 82)

To set the timer for the blocking time after the Block command is released (see also window 81). Default = 0.0 sec.

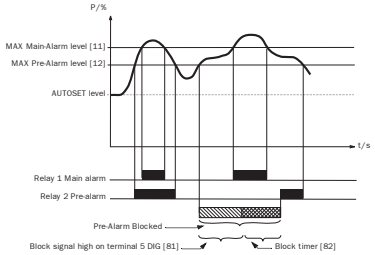

Fig 11. Block timer

Projet	IQALUIT
Projet#:	5000218036
Document #:	5000218036_DS_0001_PM_VWT
Par:	FV
Verif.:	GP
approb.:	CB

SPIDFLOW

WHITE WATER PUMP(S)

Section Manuel OM: 4.3.1.3

This page is intentionally left blank

CS-912-003 : Identification sheet

VWTC PROJECT NUMBER:	Iqaluit WWTP	REV:	02
PROJECT NAME:	5000218036	SUBMITTED TO (COMPANY):	
ENGINEER:	F.VINCI	SUBMITTED TO (RESPONSIBLE)	
PROJECT MANAGER:	C. BEKAERT	PROJECT NUM REFERENCE.:	
PHONE NUMBER:		LOT NUMBER:	

SUPPLIER	EQPT CODE	EQPT TAG NO	DIA	DESCRIPTION	INFO 1	INFO 2	INFO 3	APPLIC.	NOTE	REV
SHANLEY PUMP & EQUIPMENT	ST-912-003	P-02-410		WHITE WATER PUMPS	EDUR WHITE WATER PUMP // MODEL : LBUX 602C 160L // Q = 20 M3/H @ 7.4 BAR // DIN FLANGES // INLET DN80 PN16 X OUTLET DN65 PN40 // CAST IRON BODY WITH SS INTERNAL COMPONENT	WEG PREMIUM EFFICIENCY W22, 20 HP MOTOR, 575V, 3PH, 60 HZ // TEFC, 2 POLES, 3500 RPM, 256TC // 1,25 SF // CLASS1 DIV2 // MODEL # 02036ET3H256TC-W22 // CW AIR FLOWMETER GF 8431-2125				2
SHANLEY PUMP & EQUIPMENT	ST-912-003	P-02-420		WHITE WATER PUMPS	EDUR WHITE WATER PUMP // MODEL : LBUX 602C 160L // Q = 20 M3/H @ 7.4 BAR // DIN FLANGES // INLET DN80 PN16 X OUTLET DN65 PN40 // CAST IRON BODY WITH SS INTERNAL COMPONENT	WEG PREMIUM EFFICIENCY W22, 20 HP MOTOR, 575V, 3PH, 60 HZ // TEFC, 2 POLES, 3500 RPM, 256TC // 1,25 SF // CLASS1 DIV2 // MODEL # 02036ET3H256TC-W22 // CW AIR FLOWMETER GF 8431-2125				2
SHANLEY PUMP & EQUIPMENT	ST-912-003	P-02-430		WHITE WATER PUMPS	EDUR WHITE WATER PUMP // MODEL : LBUX 602C 160L // Q = 20 M3/H @ 7.4 BAR // DIN FLANGES // INLET DN80 PN16 X OUTLET DN65 PN40 // CAST IRON BODY WITH SS INTERNAL COMPONENT	WEG PREMIUM EFFICIENCY W22, 20 HP MOTOR, 575V, 3PH, 60 HZ // TEFC, 2 POLES, 3500 RPM, 256TC // 1,25 SF // CLASS1 DIV2 // MODEL # 02036ET3H256TC-W22 // CW AIR FLOWMETER GF 8431-2125				2
SHANLEY PUMP & EQUIPMENT	ST-912-003	P-02-440		WHITE WATER PUMPS	EDUR WHITE WATER PUMP // MODEL : LBUX 602C 160L // Q = 20 M3/H @ 7.4 BAR // DIN FLANGES // INLET DN80 PN16 X OUTLET DN65 PN40 // CAST IRON BODY WITH SS INTERNAL COMPONENT	WEG PREMIUM EFFICIENCY W22, 20 HP MOTOR, 575V, 3PH, 60 HZ // TEFC, 2 POLES, 3500 RPM, 256TC // 1,25 SF // CLASS1 DIV2 // MODEL # 02036ET3H256TC-W22 // CW AIR FLOWMETER GF 8431-2125				2

SUPPLIER	EQPT CODE	EQPT TAG NO	DIA	DESCRIPTION	INFO 1	INFO 2	INFO 3	APPLIC.	NOTE	REV
SHANLEY PUMP & EQUIPMENT	ST-912-003	P-02-450		WHITE WATER PUMPS	EDUR WHITE WATER PUMP // MODEL : LBUX 602C 160L // Q = 20 M3/H @ 7.4 BAR // DIN FLANGES // INLET DN80 PN16 X OUTLET DN65 PN40 // CAST IRON BODY WITH SS INTERNAL COMPONENT	WEG PREMIUM EFFICIENCY W22, 20 HP MOTOR, 575V, 3PH, 60 HZ // TEFC, 2 POLES, 3500 RPM, 256TC // 1,25 SF // CLASS1 DIV2 // MODEL # 02036ET3H256TC-W22 // CW AIR FLOWMETER GF 8431-2125				2
SHANLEY PUMP & EQUIPMENT	ST-912-003	P-02-460		WHITE WATER PUMPS	EDUR WHITE WATER PUMP // MODEL : LBUX 602C 160L // Q = 20 M3/H @ 7.4 BAR // DIN FLANGES // INLET DN80 PN16 X OUTLET DN65 PN40 // CAST IRON BODY WITH SS INTERNAL COMPONENT	WEG PREMIUM EFFICIENCY W22, 20 HP MOTOR, 575V, 3PH, 60 HZ // TEFC, 2 POLES, 3500 RPM, 256TC // 1,25 SF // CLASS1 DIV2 // MODEL # 02036ET3H256TC-W22 // CW AIR FLOWMETER GF 8431-2125				2

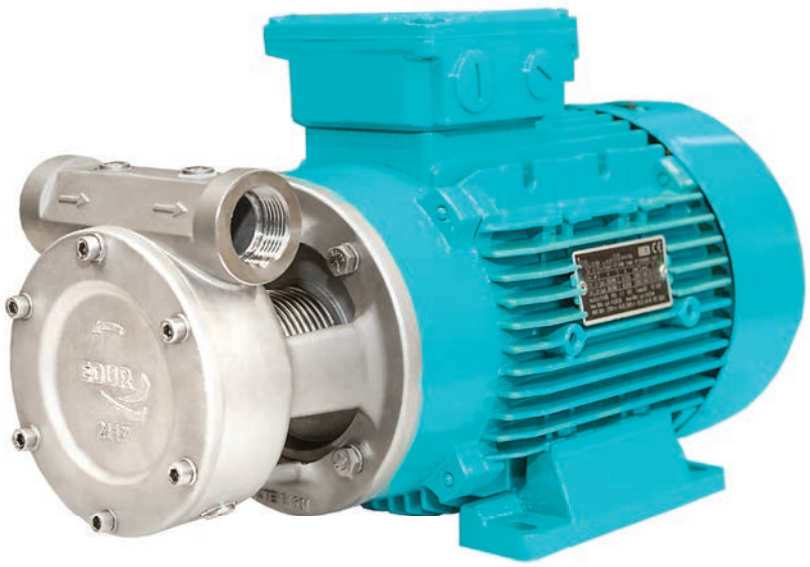

PBU

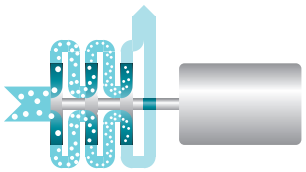

Multiphase
PBU LBU

Horizontal centrifugal pumps for the transport of liquid-gas mixtures and for the enrichment of liquids with gases. A dispersion with very fine bubbles is being achieved. Therefore the multiphase pumps are also acting as dynamic mixer with high shearing forces.

Some main applications are water and wastewater treatment, dissolved air flotation, neutralization, biofuel plants, bio-reactors, ozonation, crude oil water separation on oil fields and oil rigs as well as general process technology.

Other types:

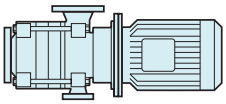

LBU

Advantages

- **High Energy-Efficiency**
  - optimal enrichment and mixing of liquids with gases
  - high degree of dispersion
  - low velocity of flow
  - optimized impeller approach flow
  - low internal friction losses
- **Technical Superiority**
  - open impellers without axial thrust
  - compensation of radial forces by means of diffuser
  - direct gas input acc. to VDMA 24430
- **Process Reliability**
  - gas contents up to 30 %
  - stable creation of micro bubbles
- **Easy Installation**
  - modular construction for customized solutions
  - bloc-design
- **Application**
  - operating pressure up to 40 bar
  - temperature -40° C to +140°C
  - viscosity up to 115 mm²/s








wastewater treatment
DAF dispersion flotation ozonation
micro bubbles
biological sewage works

Multiphase
PBU LBU

Characteristics

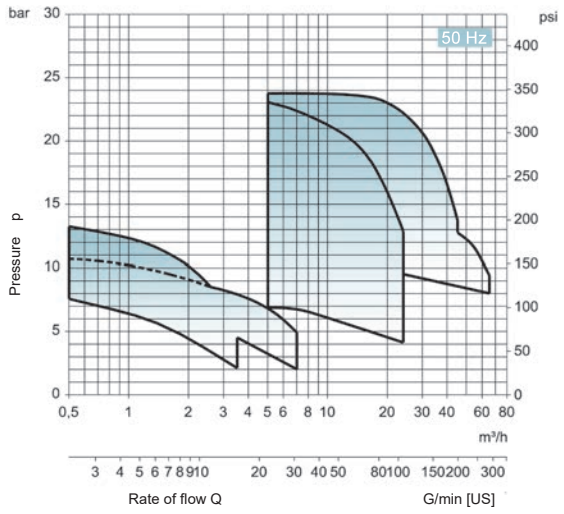

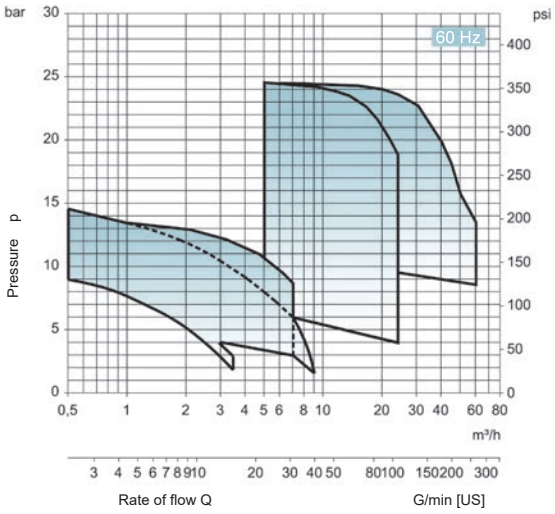






EDUR-Pumpenfabrik
Eduard Redlien GmbH & Co. KG
Edisonstraße 33
24145 Kiel – Germany

Tel. + 49 431 68 98 68
Fax + 49 431 68 98 800

www.edur.com
info@edur.de

Pump View and List of Spare Parts

LBU, LBKU

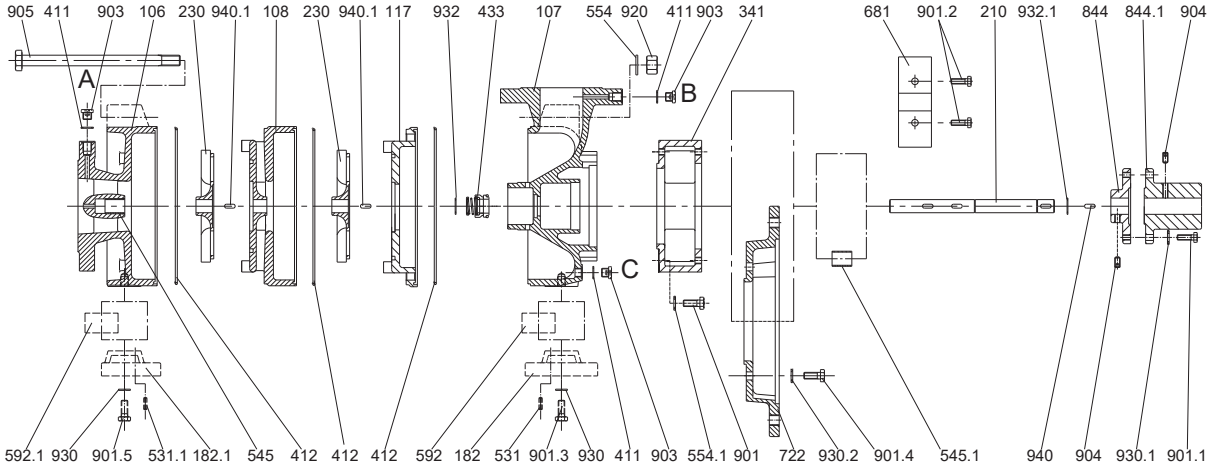

A: Screwed plug G1/4 for vent and pressure gauge connection
B: Screwed plug G1/4 for vent and pressure gauge connection
C: Screwed plug G1/4 for drain

VBU

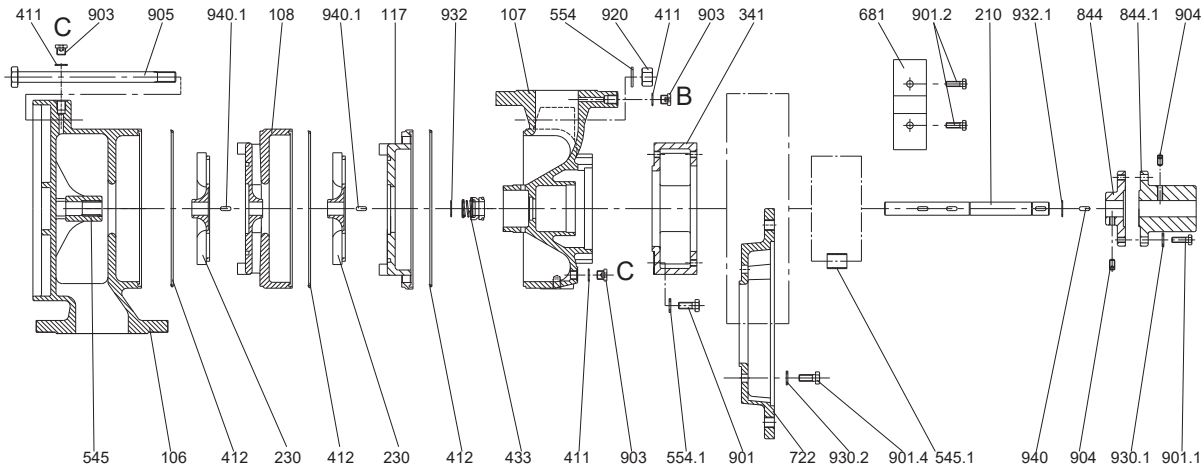

LBE/ VBE/ LBKE/ LBUX/ VBUX, delivery side

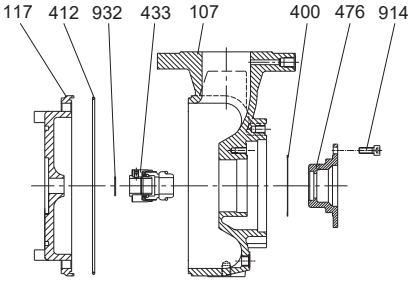

part no.	designation
106	suction casing
107	delivery casing
108	stage casing
117	end stage casing
182/.1	foot
210	shaft
230	impeller
341	lantern
400	gasket
411	joint ring
412	o-ring
433	mechanical seal
476	support to stationary element
531/.1	locking sleeve

part no.	designation
545/.1	bearing bush
554/.1	washer
592/.1	base (underlayer)
681	coupling guard
722	intermediate flange
844/.1	coupling half
901/.1-.5	hexagon screw
903	screwed plug
904	hexagon socket set screw
905	tie bolt
914	hexagon socket head cap screw
920	nut
930/.1-.2	tooth lock washer
932/.1	circlip
940/.1	key

When ordering spare parts, please indicate serial no., type no. and parts no.

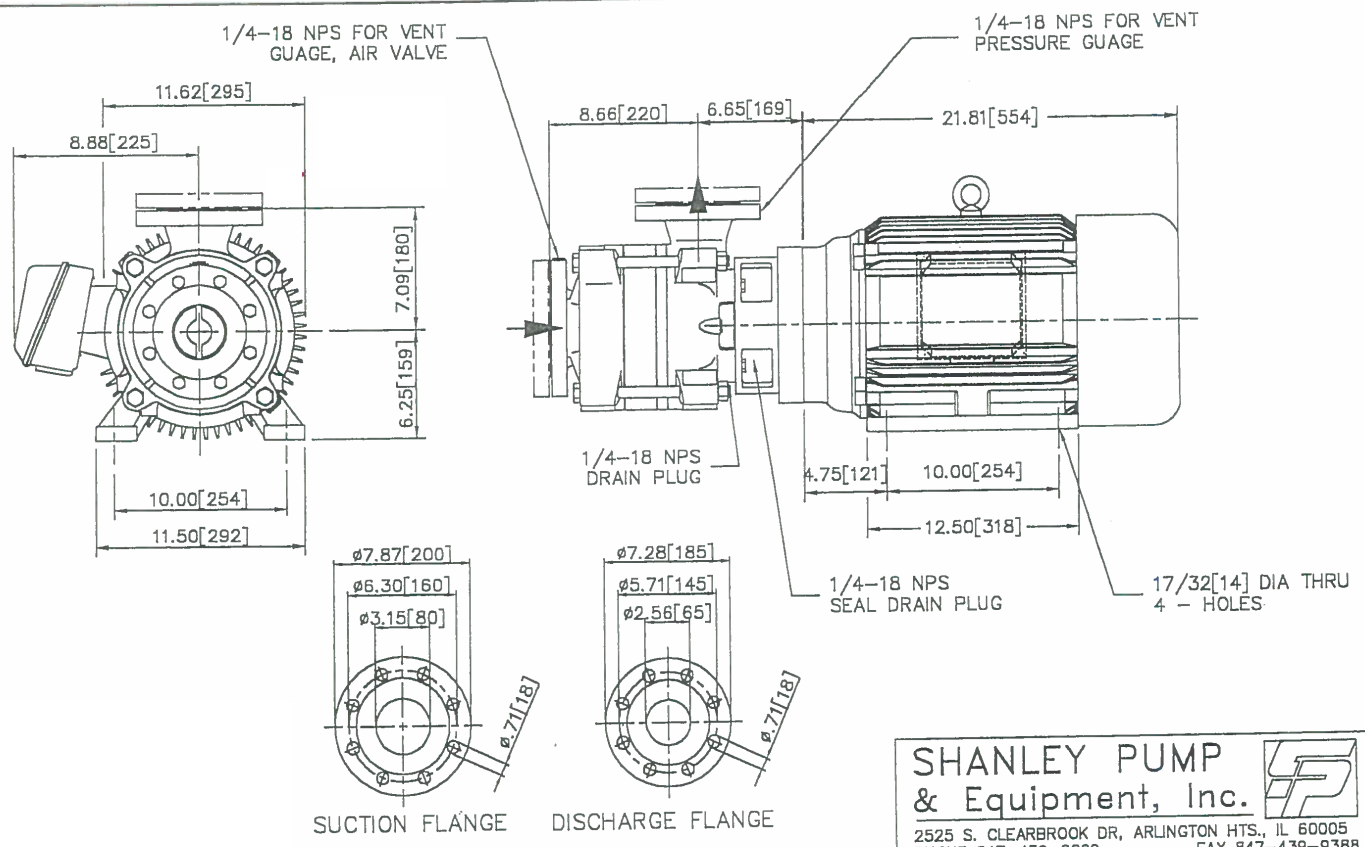

SHANLEY PUMP
& Equipment, Inc.
2525 S. CLEARBROOK DR, ARLINGTON HTS., IL 60005
PHONE 847–439–9200 FAX 847–439–9388

PUMP SPECIFICATIONS	
MODEL #:	LBUX602C160L
CASING:	NODULAR CAST IRON
IMPELLER:	STAINLESS STEEL
IMPELLER DIA:	160mm
INLET SIZE:	DN80 PN16 DIN 2533
OUTLET SIZE:	DN65 PN40 DIN 2535
NOMINAL FLOW:	100 GPM
NOMINAL AIR FLOW:	45 SLPM
FLOW RANGE @ 12% AIR:	25 TO 130 GPM

DRIVE SPECIFICATIONS
MOTOR MFG: BALDOR OR EQUAL HP_RPM_VOLT: 20 HP_3600 RPM_3/60/230–460V FRAME SIZE: 256TC ENCLOSURE: TEFC
TOTAL PACKAGE WEIGHT: 369 LBS
COMMENTS:

DRAWING NO. LBUX602C160La	
CUST.:	CUST. P.O.
SHANLEY JOB:	QUOTE NO.
DATE: 03–03–00	REVISED: 09–11–00
DIMENSIONS: INCHES[MilliMeters]	
DRAWN BY: JAM	CERTIFIED BY:

LBU602C160L / 12.6 kW

Kennlinien für Fördergut mit einer Dichte von 1 kg/dm³,Viskosität von 1mm/s², Temperatur von 20°C

Characteristic curves for pumped media with a density of 1 kg/dm³,viscosity 1mm/s²,temperature of 20°C

QH

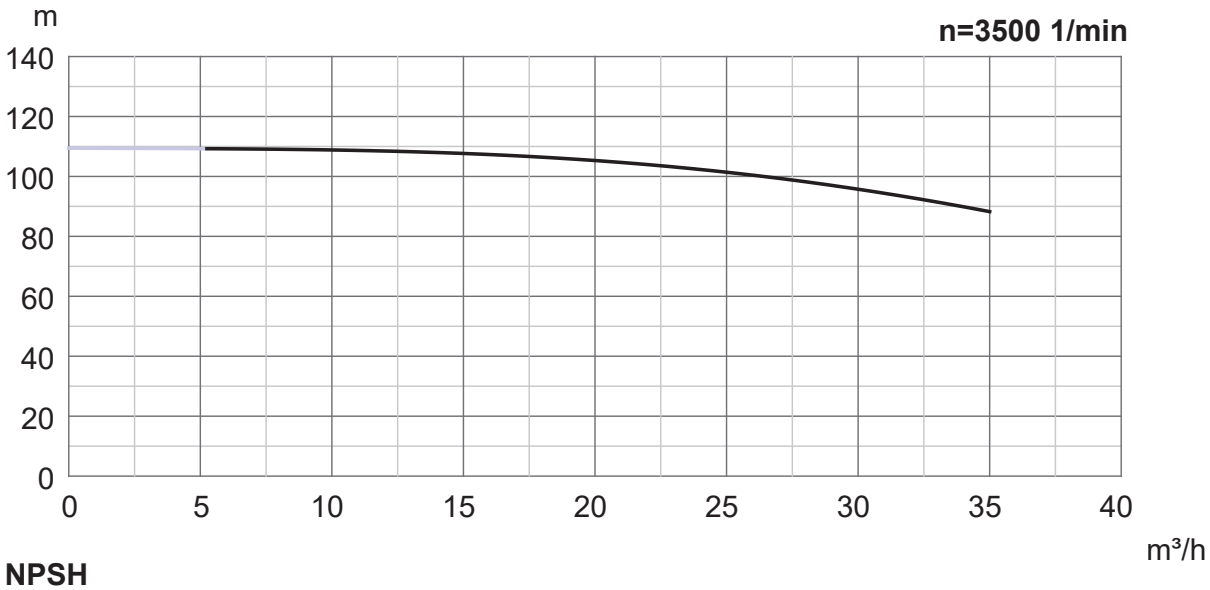

NPSH

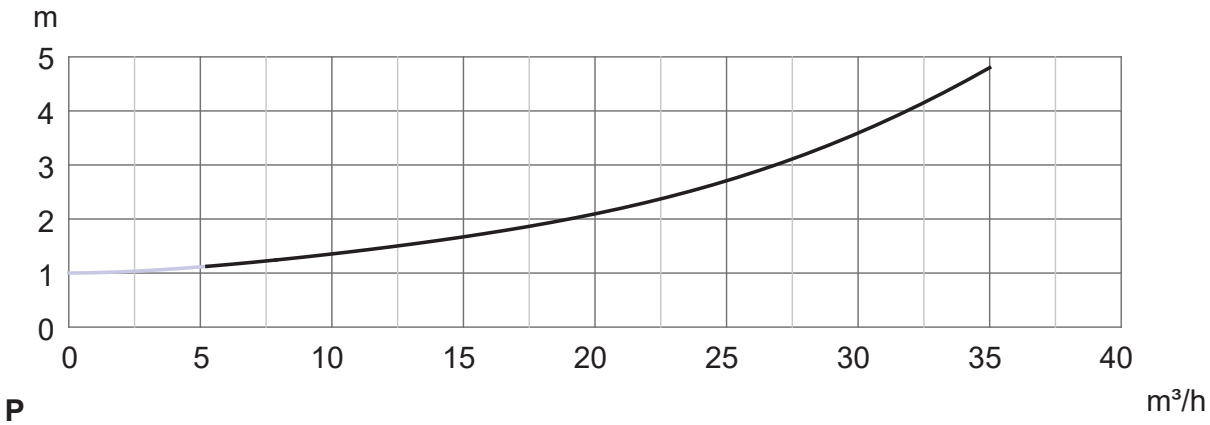

P

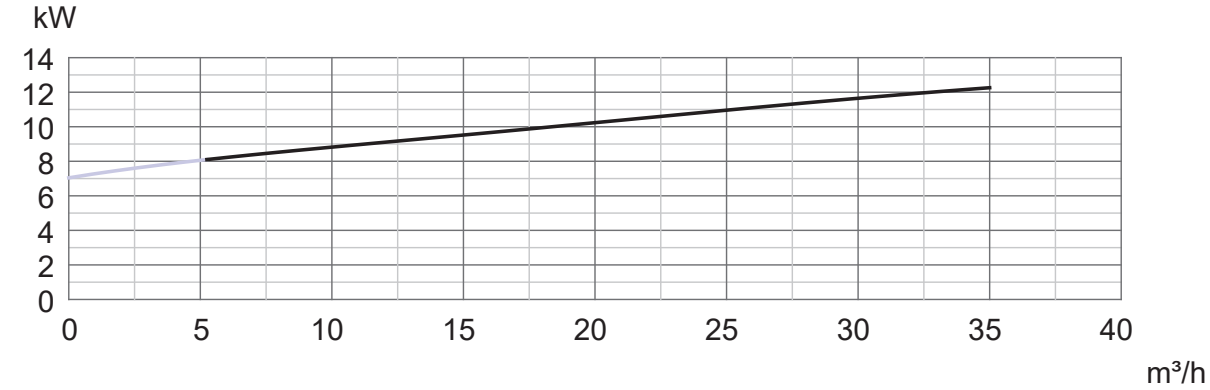

EDUR Pumpenfabrik Eduard Redlien GmbH & Co. KG • Edisonstrasse 33 • 24145 Kiel • Germany
Tel. +49(0)431/ 689868 • Fax +49(0)431/ 6898800 • Mail info@edur.de

LBU602C160L / 12.6 kW

Measurements (in mm) and Weight

Subject to technical alterations

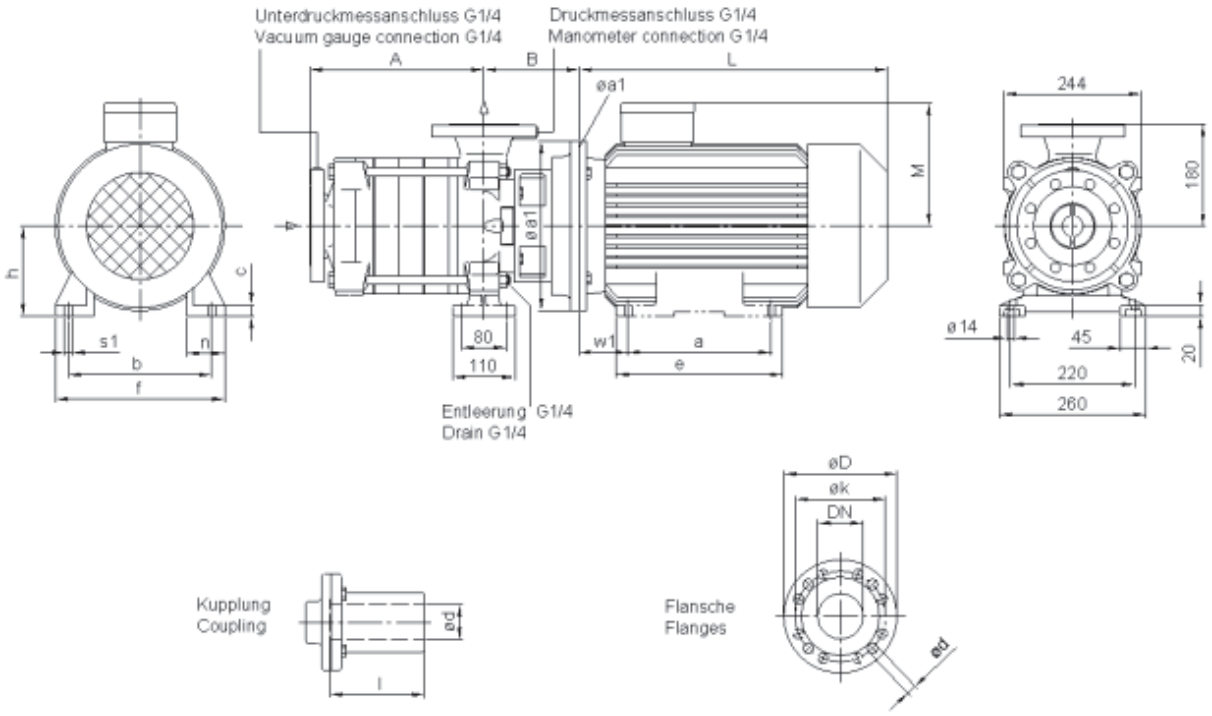

Motor		Pump		Flanges				Weight
L	517	A	220	DIN	EN 1092-2			162 kg
M	250	B	169	**Inlet branch**		**Outlet branch**		
		a	210	DNs	80	DNd	65	
		a1	300	PN	16	PN	40	
		b	254	D	200	D	185	
		c	22	k	160	k	145	
		d	42	d	19	d	19	
		e	260	**holes**	8	**holes**	8	
		f	320					
		h	160					
		l	112					
		n	69					
		s	15					
		w1	108					

EDUR Pumpenfabrik Eduard Redlien GmbH & Co. KG • Edisonstraße 33 • 24145 Kiel • Germany
Tel. +49(0)431/ 689868 • Fax +49(0)431/ 6898800 • Mail info@edur.de

V MEDIUM RANGE PTFE FLOW METERS

Incorporating traditional variable area precision glass technology, these rugged PTFE flow meters offer accurate and economical solutions to medium flow range measurements. **V meters** are designed with unique rotatable scales of dual air-water direct reading graduations showing SCFM and SLPM (air), as well as GPM and LPM (water) markings.

LEAK INTEGRITY

Flow meters are individually tested on a Mass Spectrometer Leak Detector and certified to a leak integrity rating of 1 X 10^{-7} sccs Helium or better.

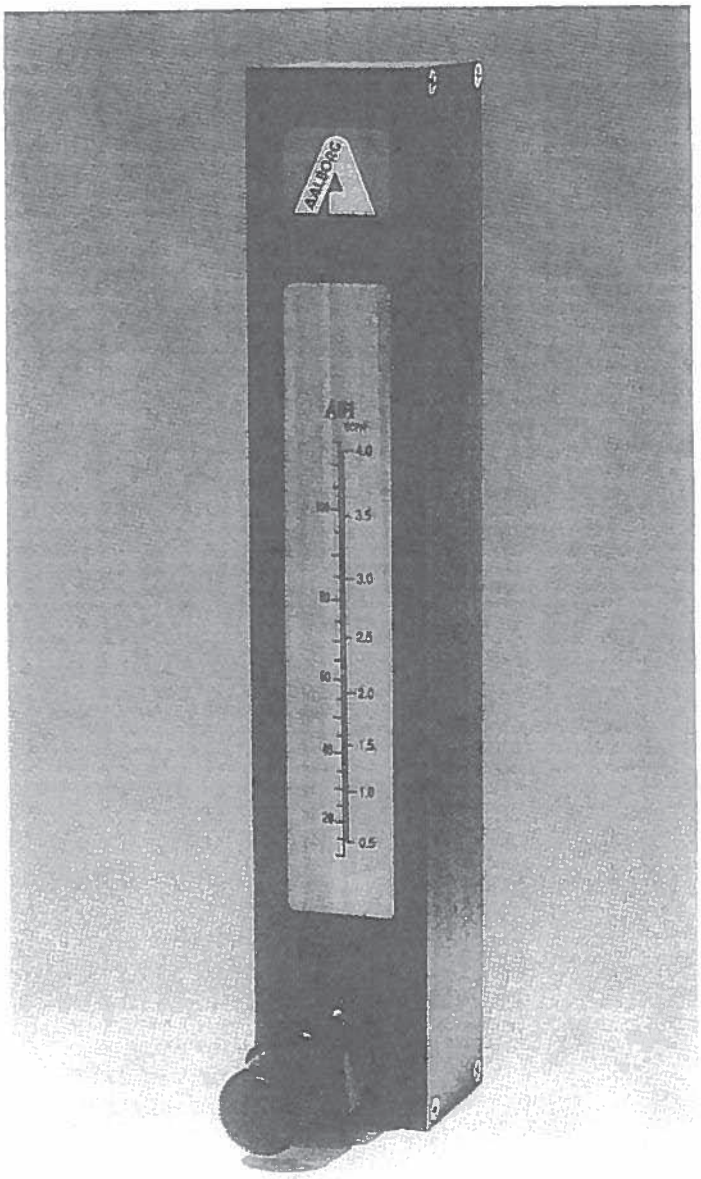

SPECIFICATIONS

SCALES	Rotatable, direct reading air, (SCFM-SLPM) and water (GPM-LPM). Scale length is 127mm (nominal).
ACCURACY	±5% of full scale.
MAXIMUM TEMPERATURE	150°F (65°C.)
MAXIMUM PRESSURE	100 psig (6.7) bars.
CONNECTIONS	3/8" NPT female in line or horizontal rear.
LEAK INTEGRITY	Individually leak tested and certified.

MATERIALS OF CONSTRUCTION

TUBE SHIELDS	Polycarbonate.
FLOW TUBES	Heavy walled precision formed borosilicate glass.
FLOATS	PTFE.
WETTED PARTS	PTFE, PCTFE.
SEALS	PTFE.

DIMENSIONS (PANEL MOUNT MODEL)

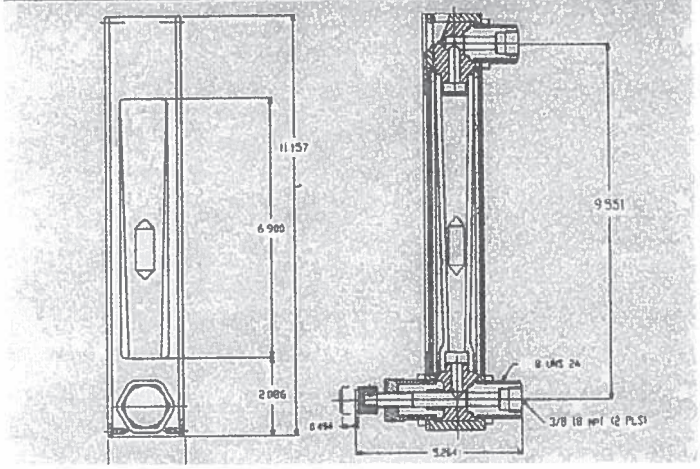

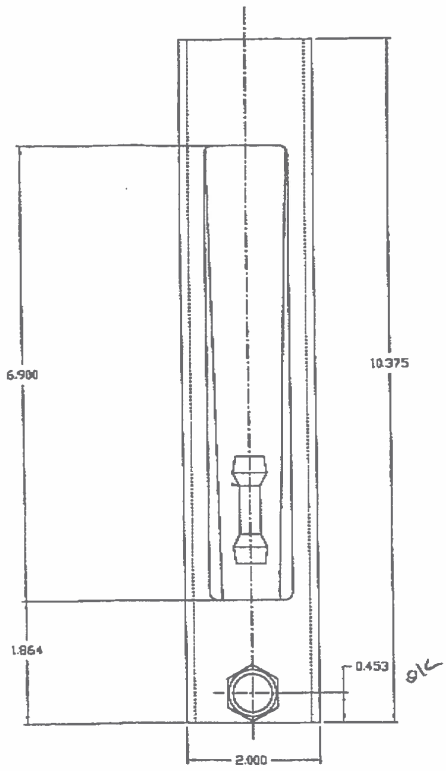

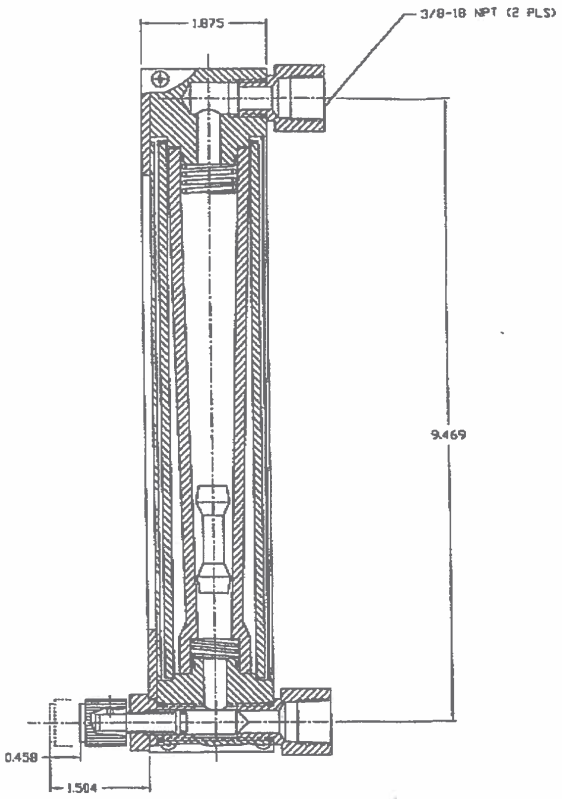

TOLERANCES (UNLESS OTHERWISE SPECIFIED) DECIMAL: ±0.005 IN FRACTION: ±1/64 IN ANGULAR: ±1/2°	AALBORG ORANGEBURG NEW YORK
SCALE FULL COMPUTER SYMBOL	TITLE PANEL V FLOWMETER VALVE OPTION
SUPERSEDES	
DRAWN DATE	
CHECKED	DWG. SIZE D DWG.NO. REV.
APPROVED	

TOTAL P.01

FLOW METER INSTRUCTIONS

GENERAL INFORMATION

Inspect instrument for possible visible damage resulting from shipping. Notify UPS or other carrier as well as the distributor where the flow meter was purchased of any claims.

Flow meters always must be installed in a vertical position, any significant deviation from vertical will affect the readings.

Valves should be closed before installation and opened gradually after all connections are carefully inspected. A leak test is highly recommended especialy when hazardous fluids are involved.

CAUTION: Excessive tightening of valves may damage the orifice.

It is important that all lines to be connected to the flow meter are purged of any dust or other residual contamination prior to installing the meter. All P and S style flow meters are equipped with a filter in the inlet port. In some applications an additional filter should be installed at the inlet of the flow meter.

STICKING FLOATS

Before installing open the valve of the flow meter and check to make sure that the float or floats are moving freely in the flow tube. This is best done by slowly tilting the flow meter from horizontal to vertical while observing if the float is rolling freely.

All meters are thoroughly inspected at the factory prior to shipping and are sealed in polyethylene bags to prevent dirt from entering into the flow passages. Certain small bore flow tubes have a clearance between the float and the inside walls of the flow tube of only a few ten thousandths of an inch. In some cases these flow tubes are found to have floats that are sluggish of not moving due to condensation resulting from temperature changes during shipping.

It is advisable to blow a dry clean gas through the meter to free float.

SAFETY INFORMATION

P and S style flow meters are designed to be operated at pressures not exceeding 200 psig (13.6 bars), or temperatures not exceeding 250 degrees F (121deg.C).

T style flow meters are designed to be operated at pressures not exceeding 100 psig (6.8 bars), or temperatures not exceeding 150 degrees F (65.5deg.C).

NOTE: When using a T style PTFE flow meter, at a pressure and/or temperature greater than standard the leak integrity approaches 1x10. Standard conditions are considered to be 14.7 psia (1 bar) and 70 degrees F (21deg.C).

All meters are factory tested for leakage prior to shipping. For hazardous fluids the flow meter must be re-tested at the time of installation in the system, prior to usage. It is also important that a leak integrity test is performed periodically to maintain safe operating conditions.

Flow meters must be protected from breakage due to external conditions such as objects bumping into or hitting the instrument, extreme vibrations, or attack by corrosive materials. It is the responsibility of the customer to acquaint the operator(s) of this flow meter with all appropriate safety information.

VALVE ALIGNMENT

The built-in needle valve may be positioned at either the inlet or the outlet of the flow meter. Valves are factory installed at the inlet of the flow meter unless otherwise requested.

APPLICATION	VALVE POSITION
Exhaust pressure at Atmospheric conditions	Valve at Inlet
Exhaust pressure other that Atmospheric conditions *	Valve at Outlet
Vacuum	Valve at Outlet
Liquid flow	Valve at Inlet or Outlet

*When using a flow meter with exhaust pressure greater than atmospheric conditions the standard calibrations can not be used. A calibration for the operating pressure must be obtained.

OPERATING INSTRUCTIONS

Close valve (if applicable) before initial use, then pressurize the system.

Slowly open the valve until the float is at the desired flow rate. The flow rate is read at the center of the float.

FLOW TUBE INSTALLATION OR REMOVAL

Remove the Front Shield and Back Plate. **Do not** remove the side panels from the flow meter.

To remove the flow tube:

P style meters: insert a 5/32" hex wrench into the Pressure Nut at the top of the flow meter. While holding the flow tube between your thumb and forefinger, turn the wrench counter clockwise to release the flow tube. Carefully remove the flow tube as not to damage it.

S and T style meters: insert a 3/32" diameter rod in the holes of the Lock Nut at the top of the flow tube. While holding the flow tube between your thumb and forefinger, turn the tool clockwise to release the flow tube. It may be necessary to push the Tube Adapter into the upper block to remove the flow tube.

To reinstall the flow tube reverse the above procedure. Take care to assure that the flow tube is centered, in the meter, at the top and bottom before tightening.

T style meters require additional tightening to insure proper sealing at the flow tube ends. The flow meter should be tightened again 24 hours after the initial tightening.

A leak integrity test is recommended after disassembling any flow meter.

FLOW TUBE CLEANING

If necessary, remove the flow tube from the frame as explained above, and clean as follows:

Insert a plastic rod that will fit into the flow tube with no obstruction, into the bottom of the flow tube and push the retaining plugs and float out of the flow tube. Use tweezers to handle the float and store the float and the plugs in a lint free container. Before removing note the position of the plugs for reference when reassembling.

Using a suitable solvent clean all the parts including the flow tube, dry them by means of a clean stream of air or gas.

To reassemble the flow tube use the push rod to first install the lower plug, next insert the float and then the upper plug.

Test by slowly tilting the flow tube from horizontal to vertical to assure that the float is moving freely. If the float is free follow the instructions above to reinstall the flow tube in the frame.

MAINTENANCE

Under normal operating conditions no special maintenance is required. Dirt or contamination may create problems within the flow tube by causing a restriction in the flow passage. Such conditions can be diagnosed by examining the flow tube. The most obvious indication of obstruction is the float being stuck in the flow tube. If the existence of the contamination is determined the condition may be rectified in a number of ways. The easiest being (if possible), to disconnect the inlet and the outlet of the flow meter and purge the instrument by using a clean and dry stream of gas. The action of the float within the bore of the flow tube very often causes particles to be dislodged through the outlet of the flow meter.

		No.:
		Date: 28-SEP-2018

Customer :

TECHNICAL PROPOSAL

Three-phase induction motor - Squirrel cage rotor

Product line : W22 NEMA Premium Efficiency Motors

Catalog Number :
List Price : $

Notes:

Performed by:	Checked:

No.:

Date: 28-SEP-2018

DATA SHEET

Three-phase induction motor - Squirrel cage rotor

Customer	:	
Product line	:	W22 NEMA Premium Efficiency Motors

Frame	:	254/6T
Output	:	20 HP
Frequency	:	60 Hz
Poles	:	2
Full load speed	:	3520 rpm
Slip	:	2.22 %
Voltage	:	575 V
Rated current	:	18.6 A
Locked rotor current	:	113 A
Locked rotor current (Il/In)	:	6.1
No-load current	:	5.20 A
Full load torque	:	40.7 Nm
Locked rotor torque	:	200 %
Breakdown torque	:	240 %
Design	:	B
Insulation class	:	F
Temperature rise	:	80 K
Locked rotor time	:	21 s (hot)
Service factor	:	1.25
Duty cycle	:	S1
Ambient temperature	:	-20°C - +40°C
Altitude	:	1000 m
Degree of Protection	:	IP55
Approximate weight	:	122 kg
Moment of inertia	:	0.06471 kgm²
Noise level	:	72 dB(A)

	D.E.	N.D.E.
Bearings	6309 C3	6209 C3
Regreasing interval	19000 h	20000 h
Grease amount	13 g	9 g

Load	Power factor	Efficiency (%)
100%	0.89	91.0
75%	0.87	91.7
50%	0.82	91.0

Notes:

Performed by	Checked

	No.:
	Date: 28-SEP-2018

PERFORMANCE CURVES RELATED TO RATED OUTPUT

Three-phase induction motor - Squirrel cage rotor

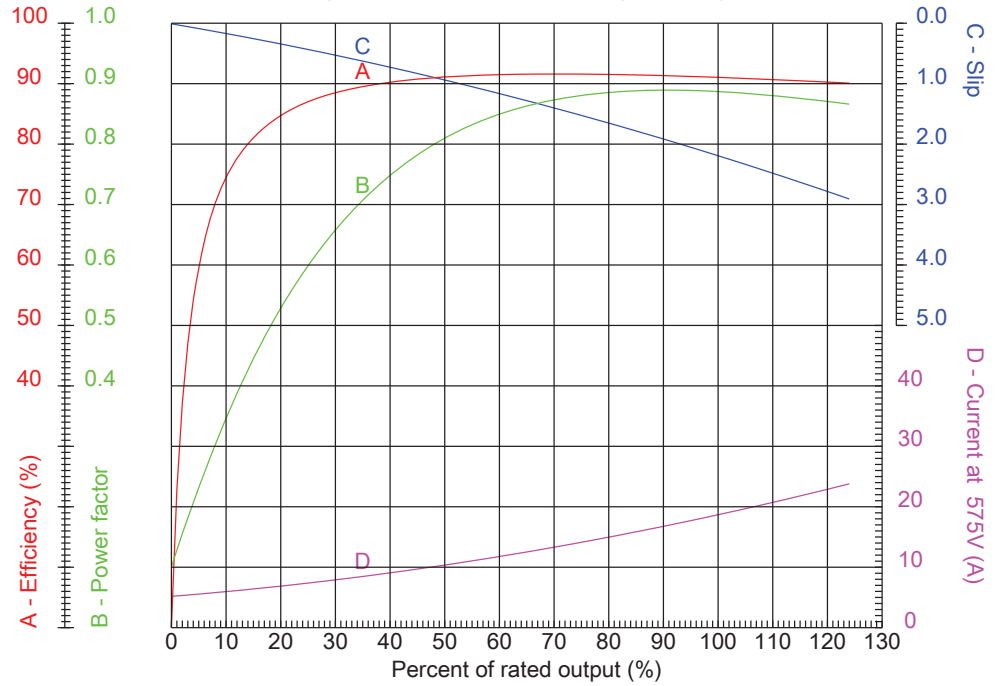

Customer	:		
Product line	:	W22 NEMA Premium Efficiency Motors	

Frame	: 254/6T	Locked rotor current (Il/In)	: 6.1
Output	: 20 HP	Duty cycle	: S1
Frequency	: 60 Hz	Service factor	: 1.25
Full load speed	: 3520 rpm	Design	: B
Voltage	: 575 V	Locked rotor torque	: 200 %
Rated current	: 18.6 A	Breakdown torque	: 240 %
Insulation class	: F		

Notes:

Performed by	Checked

	No.:
	Date: 28-SEP-2018

CHARACTERISTIC CURVES RELATED TO SPEED

Three-phase induction motor - Squirrel cage rotor

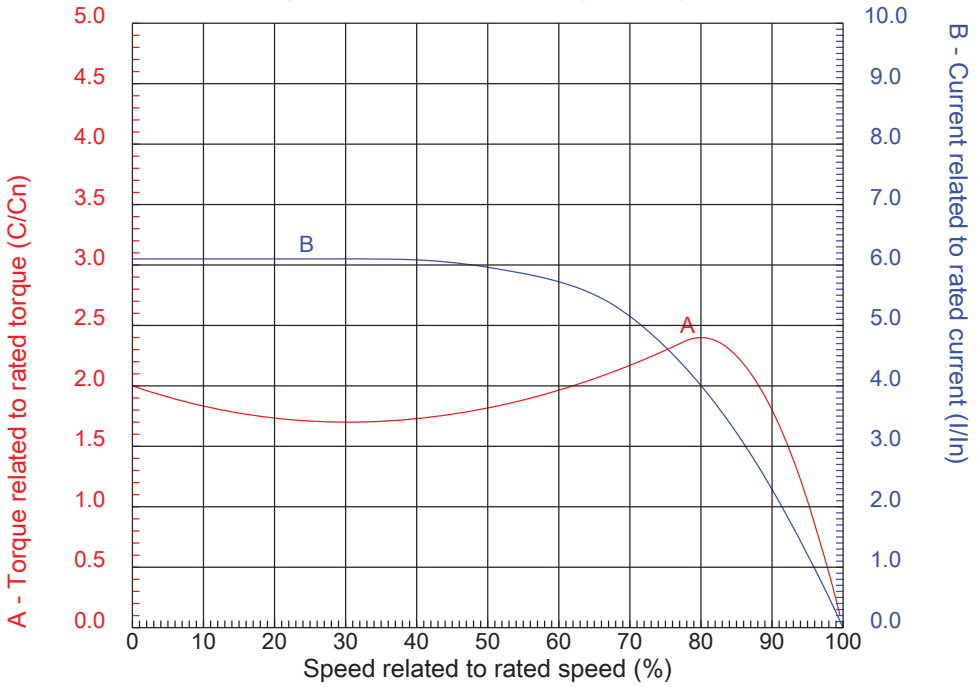

Customer	:
Product line	: W22 NEMA Premium Efficiency Motors

Frame	: 254/6T	Locked rotor current (Il/In)	: 6.1
Output	: 20 HP	Duty cycle	: S1
Frequency	: 60 Hz	Service factor	: 1.25
Full load speed	: 3520 rpm	Design	: B
Voltage	: 575 V	Locked rotor torque	: 200 %
Rated current	: 18.6 A	Breakdown torque	: 240 %
Insulation class	: F		

Notes:

Performed by	Checked

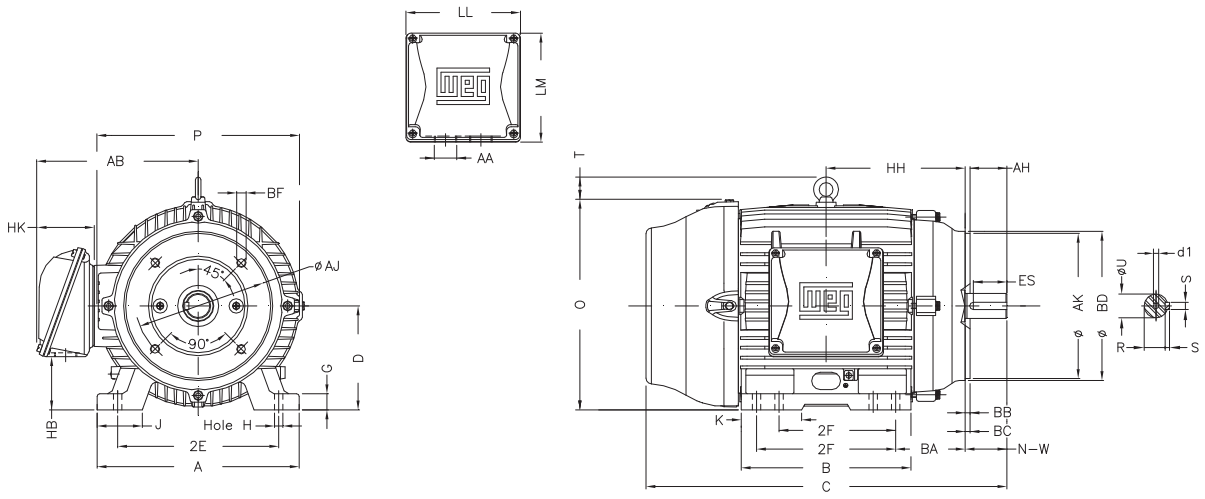

2E 10.000	J 1.787	A 11.496	P 12.953	AB 10.483	Notes:
2F 8.252/10.000	K 2.559	B 11.732	BA 4.250	FBA 6.852	Performed by:
U 1.625	N-W 4.000	ES 2.756	S 0.375	R 1.416	Checked:
depth 0.375	D 6.250	G 0.669	HB 3.061	O 12.598	Customer:
T 2.313	HF 6.565	HH 9.250	HK 3.976	H 0.531	W22 NEMA Premium Efficiency Motors
C 24.945	FC 28.477	LL 7.815	LM 7.480	AA NPT 1 1/2"	
d1 A 4	Flange FC-184	AJ 7.250	AK 8.500	BD 8.875	Three-phase induction motor Frame 254/6T - IP55
BF UNC 1/2"x13	BB 0.250	BC 0.250	AH 3.750		28-SEP-2018

Projet	IQALUIT
Projet#:	5000218036
Document #:	5000218036_DS_0001_PM_VWT
Par:	BB
Verif.:	GH
approb.:	CB

SPIDFLOW

STRAINER

Section Manuel OM: 4.3.1.4

This page is intentionally left blank

CS-912-005 : Identification sheet

VWTC PROJECT NUMBER:	Iqaluit WWTP			REV:	01
PROJECT NAME:	5000218036	SUBMITTED TO (COMPANY):			
ENGINEER:	G. HÉBERT	SUBMITTED TO (RESPONSIBLE)			
PROJECT MANAGER:	C. BEKAERT	PROJECT NUM REFERENCE.:			
PHONE NUMBER:		LOT NUMBER:			

SUPPLIER	EQPT CODE	EQPT TAG NO	DIA	DESCRIPTION	INFO 1	INFO 2	INFO 3	APPLIC.	NOTE	REV
IFC	ST-912-005	STR-02-510		WHITE WATER SCREEN	PUMP STRAINER // IFC MODEL #: B150FSS4BW1-OB // STRAINER TYPE: FABRICATED INLINE SIMPLEX BASKET STRAINER WITH OPEN BOTTOM BASKET// INLET / OUTLET DETAILS:4" ANSI 150 LB. RF FLANGED PER ASME B16.5 // BODY / SHELL DIAMETER: 8.63" OD//	BASKET ELEMENT: TYPE 304 STAINLESS STEEL WEDGE-WIRE CONSTRUCTION WITH 1/16" REVERSE ROLLED SLOTTED OPENINGS. NOTE: STRAINER BASKET WILL BE EQUIPPED WITH OPEN BOTTOM				1
IFC	ST-912-005	STR-02-520		WHITE WATER SCREEN	PUMP STRAINER // IFC MODEL #: B150FSS4BW1-OB // STRAINER TYPE: FABRICATED INLINE SIMPLEX BASKET STRAINER WITH OPEN BOTTOM BASKET// INLET / OUTLET DETAILS:4" ANSI 150 LB. RF FLANGED PER ASME B16.5 // BODY / SHELL DIAMETER: 8.63" OD//	BASKET ELEMENT: TYPE 304 STAINLESS STEEL WEDGE-WIRE CONSTRUCTION WITH 1/16" REVERSE ROLLED SLOTTED OPENINGS. NOTE: STRAINER BASKET WILL BE EQUIPPED WITH OPEN BOTTOM				1
IFC	ST-912-005	STR-02-530		WHITE WATER SCREEN	PUMP STRAINER // IFC MODEL #: B150FSS4BW1-OB // STRAINER TYPE: FABRICATED INLINE SIMPLEX BASKET STRAINER WITH OPEN BOTTOM BASKET// INLET / OUTLET DETAILS:4" ANSI 150 LB. RF FLANGED PER ASME B16.5 // BODY / SHELL DIAMETER: 8.63" OD//	BASKET ELEMENT: TYPE 304 STAINLESS STEEL WEDGE-WIRE CONSTRUCTION WITH 1/16" REVERSE ROLLED SLOTTED OPENINGS. NOTE: STRAINER BASKET WILL BE EQUIPPED WITH OPEN BOTTOM				1

SUPPLIER	EQPT CODE	EQPT TAG NO	DIA	DESCRIPTION	INFO 1	INFO 2	INFO 3	APPLIC.	NOTE	REV
IFC	ST-912-005	STR-02-540		WHITE WATER SCREEN	PUMP STRAINER // IFC MODEL #: B150FSS4BW1-OB // STRAINER TYPE: FABRICATED INLINE SIMPLEX BASKET STRAINER WITH OPEN BOTTOM BASKET// INLET / OUTLET DETAILS:4" ANSI 150 LB. RF FLANGED PER ASME B16.5 // BODY / SHELL DIAMETER: 8.63" OD//	BASKET ELEMENT: TYPE 304 STAINLESS STEEL WEDGE-WIRE CONSTRUCTION WITH 1/16" REVERSE ROLLED SLOTTED OPENINGS. NOTE: STRAINER BASKET WILL BE EQUIPPED WITH OPEN BOTTOM				1

industries served

ISLIP Flow Control products are designed to exacting specifications, and manufactured to the highest standards, resulting in an extensive range of flow controls that are built for dependability, and years of use. IFC's products are found around the globe. From Arizona to Australia, and Singapore to Saudi Arabia, ISLIP is there. We are the manufacturer of choice for professionals who know that quality, service and dependability equal success.



- **Metals & Mining**
- **Pulp & Paper**
- **Oil & Gas**
- **Exploration**
- **Chemicals**
- **Water Treatment**
- **Power Generation**

Whether it is a generating station or water authority in North America, a refining plant in Chile or offshore explorations in Vietnam, IFC delivers solutions.

Contact us today. At ISLIP Flow Controls, we speak your language

ISLIP FLOW CONTROLS Inc.
Our Knowledge Sets us Apart.#

Easy access to friendly help is always just a call or click away.

CANADA - 1145 Sutton Drive, Unit #3, Burlington, ON L7L 5Z8
Toll Free: 1.866.872.0072 Toll Free Fax: 1.866.872.0073 Local Calls: 905.335.8777 Local Fax: 905.335.0977

USA - PO Box 2989, Buffalo, NY 14240-2989

Visit us on the web at: www.islipflowcontrols.com

ISLIP FLOW CONTROLS Inc.
Our Knowledge Sets us Apart.#



For Strainers, Valves and Pipeline Accessories.

Our *Knowledge* Sets Us Apart.

ISLIP Flow Controls is the industry's answer for full-service solutions. We are the knowledge leaders you can depend on to resolve your flow control challenges in the industrial, oil & gas, petrochemical, HVAC and commercial industries.

Working with us means working with a front-line business partner you can trust. It is a customer-focused approach that has made us the manufacturer of choice for Strainers, Valves and Pipeline Accessories. It's exacting professional performance that delivers quick response and exceptional service. And, it is the benefit of intelligent people who have the experience and expertise to create workable solutions tailored to you and your business, project by project.



what sets us apart ?

At ISLIP Flow Controls, we have built an entire company on our dedication to quality. It isn't just our superior products and competitive prices that have made us the manufacturer of choice for users on five continents, it is so much more.

"They speak our language. We like their expertise and understanding of the business…"
Vanessa Nugent, Fluor Canada for the Imperial Oil ULSD Project

It's superb personal service, exacting detail, and a precise knowledge of the industries we work with. We offer solutions that are as individual as we are.

"ISLIP has the answers. They're not afraid to take on the challenge of new applications…"
Amy Ng, Delta Fountains

It's the kind of dependable advice and prompt response that's there when you need it most. With us, expertise and a new solution are just a call away.

"ISLIP offers instant, direct contact…" FMC Smith Meter, Guy Roussel-Dupre

And, it's commitment you can count on. We stock what you need; we ship on time.

"We often get same-day pick up. There's a good inventory. They're easy to work with…"
Greg White, Industrial Mine & Pipe

iFC
ISLIP FLOW CONTROLS Inc.
Our Knowledge Sets us Apart.#



products

All ISLIP Flow Control products are strictly manufactured and tested in accordance with applicable ASME and CSA standards as well as specific customer requirements.

Visit us online at **www.islipflowcontrols.com** for comprehensive details specifications on all our products. Find helpful downloads, catalogues on all the products we offer, and important certification documents. We will even help you find the right product for your individual applications with our convenient on-line Help List specifier.



When you work with IFC, you'll receive quality products that arrive on time and within budget. They are supported by certifications that carry the kind of assurance you can depend on, backed by a staff of experts who are there when you need them.

IFC manufactures and stocks a full line of Flow Control Products. Most product lines are available in sizes up to 60" in diameter and pressures up to 10,000 PSIG. Readily available and stocked materials of construction are cast and ductile iron, bronze, carbon steel and stainless steel in pressure classes 125 lb through 1500 lb. For extreme and special operating conditions, products manufactured from special alloys can also be supplied.









Ball Valves – One-Piece, Two-Piece & Three-Piece



Temp. Cone, Basket & Plate Strainers



Butterfly Valves – Resilient Seated & High Performance



Silent Check Valves



Dual Disc Check Valves



Duplex/Dual Basket Strainers



Rubber Connectors



Y Strainers



Basket/Simplex Strainers



Suction Diffusers



Triple Duty Valves



Custom-Fabricated Strainers and Valves, including IFC's Self-Cleaning Strainer



who we are

With over 30 years experience, professionals have made ISLIP Flow Controls their number one choice for Strainers, Valves and Pipeline Accessories.

Since founder David Islip formed the business, we have maintained a family company with family values: integrity, commitment to superior service, dedication to solving problems and a continuing responsibility to develop the best products in every market we serve. It is this kind of expertise that allows us to give our customers the buying benefits of a big business and the personal attention of small enterprise.

the ISLIP network

Choosing ISLIP Flow Controls means selecting the style of service you prefer most – working directly with the in-house experts at our Head Office or dealing face-to face with our appointed agents. No matter the choice, you can depend on industry experience and the kind of know-how it takes to solve the toughest problems.

Rest assured local IFC Master Distributors and Representatives are trusted professionals, who carry the face of ISLIP Flow Controls into every business they visit, providing the links that help us play a vital role in day-to-day success in markets across the country, and around the world. They serve as support to Specifiers, Contractors and Engineers, and work on our behalf to introduce IFC products to new markets. With a ready-to-access inventory of our entire product line, your local ISLIP Master Distributor can make a genuine difference on a project when dollars and cents really count.

our promise

Islip Flow Controls has redefined the meaning of exceptional quality and outstanding service. In fact, we have made it a part of how we do business every day. It is our Continuing Commitment to Customer Care and it means we go the extra mile to make sure we always exceed your expectations.



Count on us for

- **Friendly knowledgeable help that's there when you need it**
- **Dependable quality**
- **Delivery that's on-time**
- **Competitive pricing**
- **Customized engineering solutions**

We are your professional resource just a call or click away.

ISLIP FLOW CONTROLS Inc.
Our Knowledge Sets us Apart.#

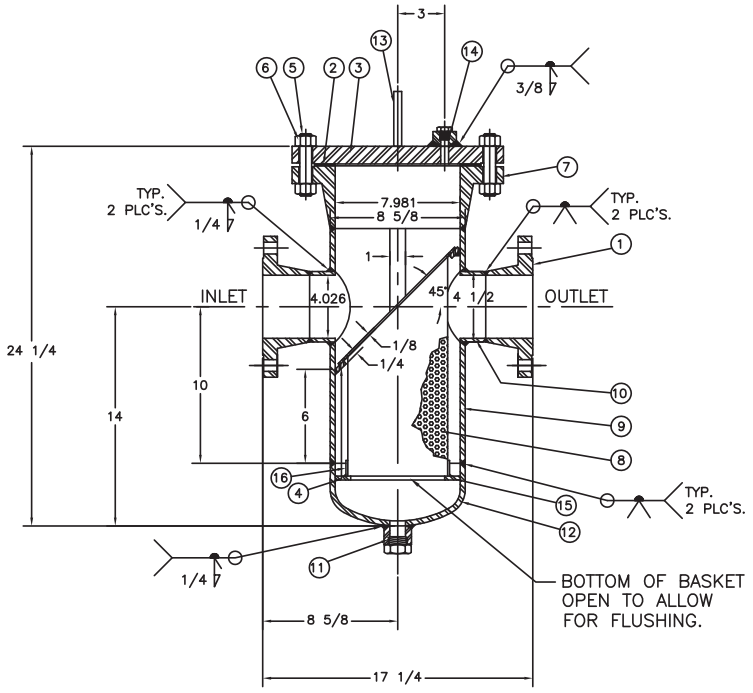

BILL OF MATERIALS

ITEM	DESCRIPTION	SPECIFICATIONS	QTY.
1	INLET/OUTLET FLANGE	4" 150 LB. R.F. SCH.40. C.STEEL ASME SA105 WELD NECK FLANGE PER ASME B16.5–2009	2
2	COVER GASKET	8" 150 LB. FLEXITALLIC 304 SS SPRIAL WOUND W/ GRAPHITE FILLER	1
3	COVER FLANGE	8" 150 LB. R.F. C.STEEL ASME SA105 BLIND FLANGE PER ASME B16.5–2009	1
4	BODY RING	1/4" THK. C.STEEL ASME SA36 (IFC–80–9)	1
5	COVER STUDS	3/4" X 4 1/4" LG. C.STEEL ASME SA193 B7	8
6	COVER NUTS	3/4" C.STEEL ASME SA194 2H	16
7	BODY FLANGE	8" 150 LB. R.F. SCH.STD. C.STEEL ASME SA105 WELD NECK FLANGE PER ASME B16.5–2009	1
8	BASKET ASSEMBLY	1/16" PERF. – TYPE 304 SS – 6 3/8"ø X 14" LG. (OPEN BOTTOM)	1
9	BODY PIPE	8" SCH.40. C.STEEL SMLS PIPE ASME SA106–B X 15" LG.	1
10	INLET/OUTLET PIPE	4" SCH.40. C.STEEL SMLS PIPE ASME SA106–B X 2 13/16" LG.	2
11	DRAIN COUPLING	1" NPS 6000 LB. C.STEEL ASME SA105 N.P.T. HALF COUPLING C/W PLUG PER ASME B16.11–2011	1
12	BOTTOM CAP	8" NPS SCH.40. C.STEEL ASME SA234–WPB WELD CAP PER ASME B16.9–2012	1
13	LIFTING LUG	C.STEEL ASME SA36	1
14	VENT COUPLING	1/2" NPS 6000 LB. C.STEEL ASME SA105 N.P.T. HALF COUPLING C/W PLUG PER ASME B16.11–2011	1
15	SUPPORT RING	1/4" THK. C.STEEL ASME SA36 (SEE DETAIL)	1
16	SUPPORT BANDING	1/8" THK. X 1" WIDE X 20 7/16" LG. C.STEEL ASME SA36	1

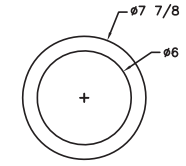

ITEM 15 DETAIL

STRAINER NAMEPLATE (QTY.2)

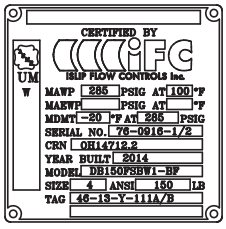

GENERAL NOTES

1. FLANGE BOLT HOLES STRADDLE NORMAL ℄ UNLESS NOTED.
2. ALL DIMENSIONS ARE IN INCHES UNLESS NOTED.
3. SPARE PARTS ITEM 2 AND 8.
4. EXPOSED INSIDE EDGES SHALL BE CHAMFERED OR ROUNDED PER UG–76(c).
5. MATERIAL IMPACT TEST EXEMPT PER UG–20(f) AND UCS–66(c).

REV	DATE	BY	REVISION DESCRIPTION

This drawing is the property of ISLIP FLOW CONTROLS and is subject to return upon request. It shall not be copied or duplicated in any manner and shall not be submitted to outside parties for examination without the consent of ISLIP FLOW CONTROLS it shall be used for reference to work under contract or proposals submitted by ISLIP FLOW CONTROLS only.

DESIGN SPECIFICATIONS

DESIGN CODE:	ASME SECTION VIII, DIV.1, 2013 ED.	INTERNAL CORROSION ALLOWANCE:	0.118" / 3mm	WPS UTILIZED:	IFC–014	INLET/OUTLET:	4" ANSI 150 LB. RFWN
PIPING CODE:	N/A	EXTERNAL CORROSION ALLOWANCE:	NIL	CRN	OH14712.2	DRAIN:	1" NPS N.P.T.
CODE STAMP:	ASME CODE UM–STAMP, CRN FITTING ALBERTA	M.D.M.T. :	–20°F / –29°C	TOTAL WEIGHT (EMPTY)	175 LBS.	VENT:	1/2" NPS N.P.T.
MAWP/TEMP:	285 psig AT 100°F / 1960 kPag AT 38°C	HYDROSTATIC TEST:	371 psig/2548 kPag FOR 10 MIN.	TOTAL WEIGHT (FULL)	N/A	DIFFERENTIALS:	N/A
MAEWP/TEMP:	N/A	N.D.E. REQUIREMENTS:	VISUAL	EST. CAPACITY:	0.72 cu.ft.	FILTRATION LEVEL:	1/16" PERF.
SEISMIC CODE:	N/A	HEAT TREATMENTS:	NONE	INTERNAL FINISH	NONE	FILTRATION AREA:	217 SQ. IN.
WIND CODE:	NONE (WEIGHT ONLY)	SERVICE TYPE:	NON LETHAL	EXTERNAL FINISH	STD. RED PRIMER	OPEN AREA/PIPE AREA:	6.97/1

TOLERANCES	
FRACTIONAL	± 1/8"
ANGULAR	± 1°
X.X	± .1"
X.XX	± .03"
X.XXX	± .015"
UNLESS OTHERWISE SPECIFIED	

IFC WORK ORDER: 76–0916

MODEL: B150FSBW1

SIZE: 4" X 8"

ISLIP FLOW CONTROLS Inc.

BURLINGTON–ONTARIO–CANADA / BUFFALO–N.Y.–U.S.A.

DESIGNED : DM | APPROVED : DM/JM

DRAWN : DM | SCALE : 1 : 3

CHECKED : JM | DATE : JUNE.18/14

DRAWING DESCRIPTION: BASKET STRAINER ASSEMBLY

ISLIP FLOW CONTROLS DWG. No.: D–10874–B

SHEET No: 1

REV: 0

BACKFLUSH/BACKWASH OPTION:

Custom Fabricated simplex and duplex strainers are available with this important option.

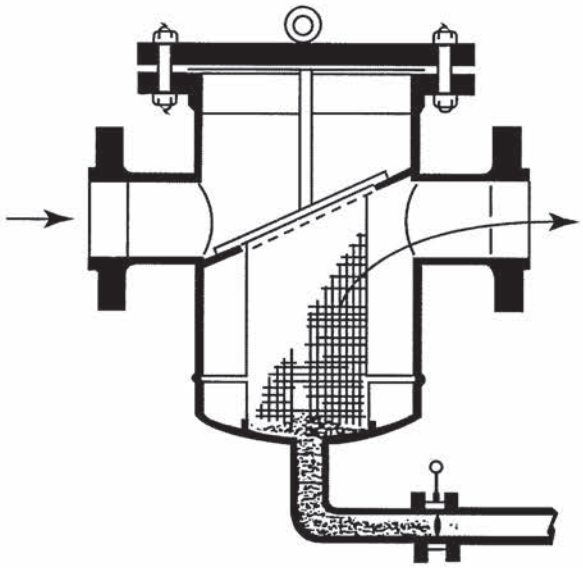

(A) Valve closed - dirt accumulated

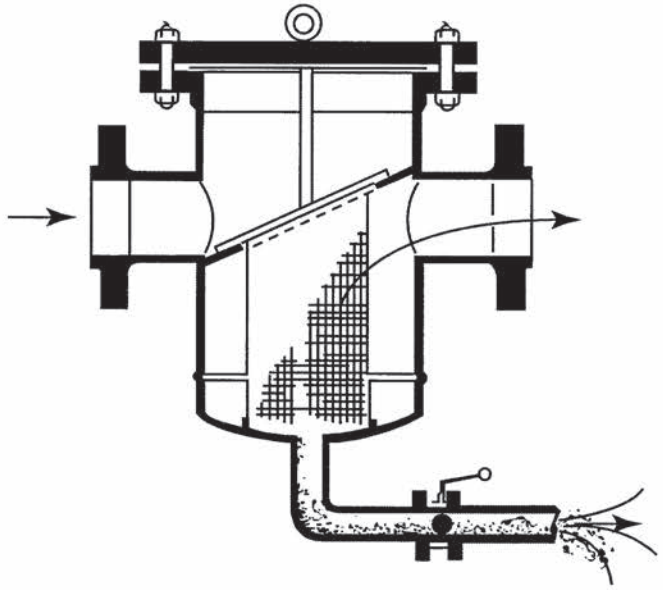

(B) Valve open - dirt removed thru backwash piping.

In many systems, particularly where solids are heavy and well defined, dirt accumulates as shown above (A). When the backflush valve is open, (B), the differential pressure between the operating pressure and the backflush system removes the dirt, all without shutting the system down. This simple process is referred to as backflushing.

Backwashing occurs when backflushing is supplemented by fluid flowing, under pressure, in the reverse direction into an empty strainer. This flow reversal backwashes the element and removes the residual dirt. Backwashing is often regarded as a second step, used to remove dirt not removed by backflushing.

STEAM JACKET OPTION:

Custom Fabricated simplex basket and tee strainers in all sizes are also available with this option. This modification is designed to have no impact on the function or normal maintenance.

Steam jacketing is available in carbon steel and 316SS for service up to 450°F. Steam jacketing is used to maintain critical fluid temperatures through the strainer. High temperatures are often required to process and transport high viscous fluids.

Projet	IQALUIT
Projet#:	5000218036
Document #:	5000218036_DS_0001_PM_VWT
Par:	BB
Verif.:	GH
approb.:	CB

SPIDFLOW

WHITE WATER DIFFUSION NOZZLE

Section Manuel OM: 4.3.1.5

This page is intentionally left blank

CS-912-004 : Identification sheet

VWTC PROJECT NUMBER:	Iqaluit WWTP	REV:	01
PROJECT NAME:	5000218036	SUBMITTED TO (COMPANY):	
ENGINEER:	G. HÉBERT	SUBMITTED TO (RESPONSIBLE)	
PROJECT MANAGER:	C. BEKAERT	PROJECT NUM REFERENCE.:	
PHONE NUMBER:		LOT NUMBER:	

SUPPLIER	EQPT CODE	EQPT TAG NO	DIA	DESCRIPTION	INFO 1	INFO 2	INFO 3	APPLIC.	NOTE	REV
OPALIUM	ST-912-004	NOZZLES		WHITE WATER NOZZLES	WHITE WATER NOZZLES // MODEL # 3,3 // LATIS # FANZFT201999 // FLOW 0,83 M3/H @ 5 BAR (72,5 PSI)					1
OPALIUM	ST-912-004	NOZZLES (2)		WHITE WATER NOZZLES	WHITE WATER NOZZLES // MODEL # 3,3 // LATIS # FANZFT201999 // FLOW 0,83 M3/H @ 5 BAR (72,5 PSI)					1

This page is intentionally left blank

BUSE DE DIFFUSION D'EAU BLANCHE

WHITE WATER DIFFUSION NOZZLE

CARACTERISTIQUES TECHNIQUES
TECHNICAL CHARACTERISTICS

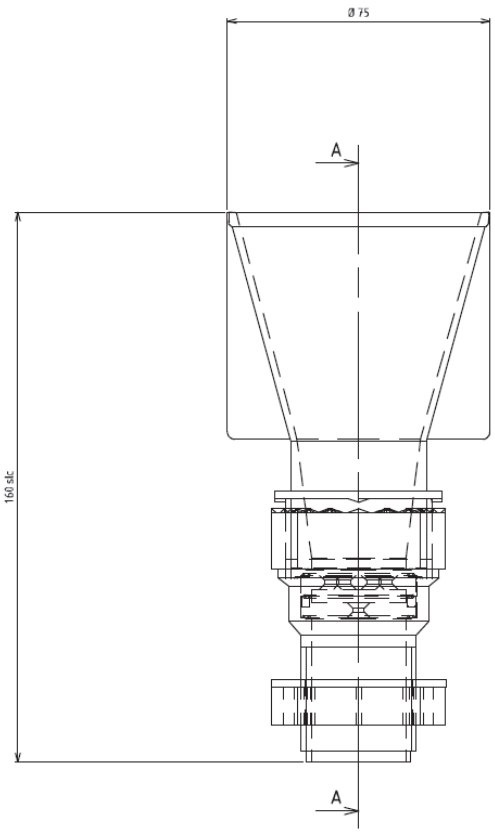

Figure 1: Vue d'ensemble / *General View*

Veolia Water Technologies – Municipal Standard Solutions
178 Avenue du Maréchal de Lattre de Tassigny • 94120 Fontenay-sous-Bois • France
Tel +33 1 45 14 12 12 • email: municipalsolutions@veolia.com • www.opalium.com

BUSE DE DIFFUSION D'EAU BLANCHE

WHITE WATER DIFFUSION NOZZLE

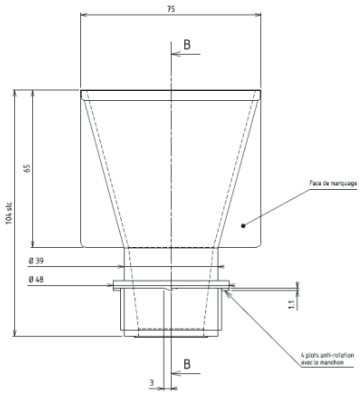

Figure 2: Cône / *Cone*

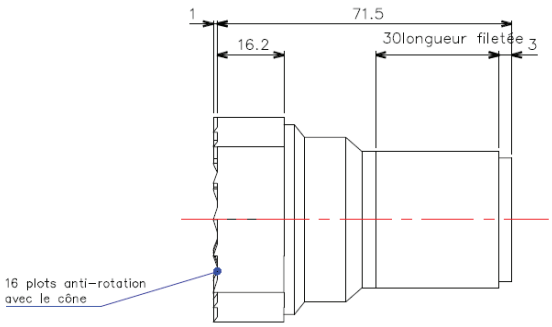

Figure 3: Manchon / Coupling

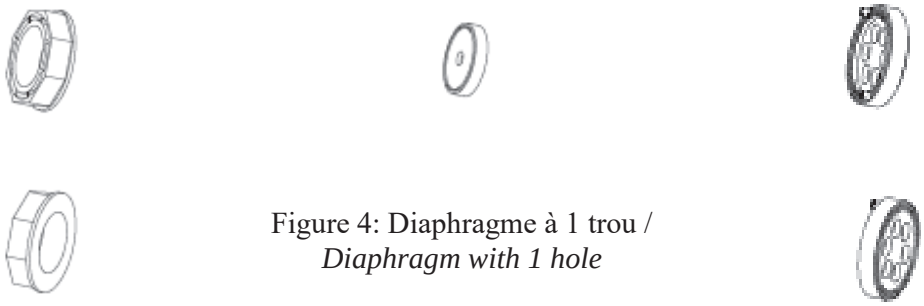

Figure 4: Diaphragme à 1 trou / *Diaphragm with 1 hole*

Figure 5: Contre écrou / *Lock nut*

Figure 6: Diaphragme à 6 trous / *Diaphragm with 6 holes*

Composition / *Composition :*

La buse de diffusion d'eau blanche est composée de 5 éléments pré-assemblés : le cône, 2 diaphragmes (1 et 6 trous), un manchon, un contre écrou (cf. plans en premières pages et photos en annexes
A white water nozzle is made up of 5 pieces pre assembled: a cone, 2 diaphragms (1 and 6 holes), a coupling and a locknut. Cf. drawings above and pictures in annex. It must be installed as received from the supplier: do not try to take it apart.

Veolia Water Technologies – Municipal Standard Solutions
178 Avenue du Maréchal de Lattre de Tassigny • 94120 Fontenay-sous-Bois • France
Tel +33 1 45 14 12 12 • email: municipalsolutions@veolia.com • www.opalium.com

VEOLIA Direction Technique & Performance	**BUSE DE DIFFUSION D'EAU BLANCHE** ***WHITE WATER DIFFUSION NOZZLE***	**Folio** ***Sheet*** **1/11**
		Date ***Date*** **25/07/14**

Document N° ***Document N°*** **FT 208 D**	**Plan : Diffuseur Eau blanche** ***Drawings: White water nozzle*** **2306001-001**	**Note procédé** ***Process note***
Distribué par OPALIUM ***Dispatched by OPALIUM*** **C.FAUGERAS**	**Rédigé par** ***Written by*** **S. TROTTIER**	**Approuvé par** ***Approved by*** **D. PASTORELLI**
REV D : 25/07/14	**dimension - tolerance**	
REV C: 28/04/14	**Process of fabrication diaphragm (injection) – raw material evolution**	
REV B : 09/12/13	**Raw material evolution**	
REV A : 17/02/10		

CARACTERISTIQUES TECHNIQUES
TECHNICAL CHARACTERISTICS

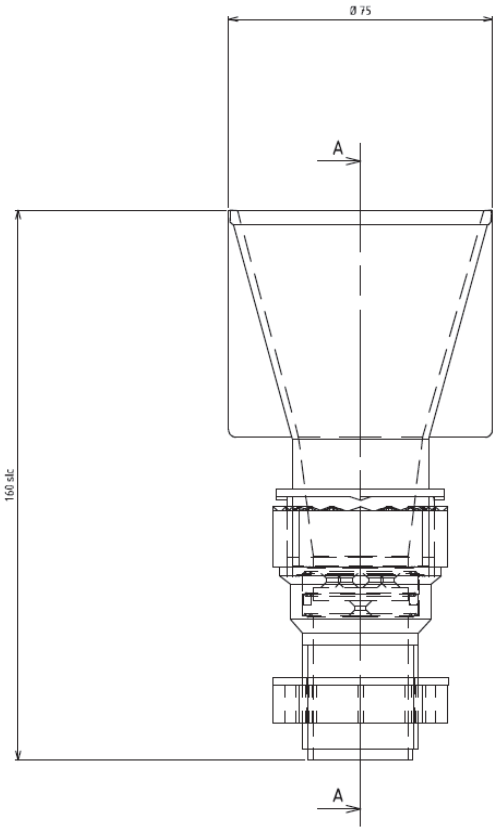

Figure 1: Vue d'ensemble / *General View*

Ce document comporte des informations confidentielles propriétés d'OTV. Il ne peut être reproduit ou utilisé sans autorisation écrite d'OTV.
This document contains confidential information which is the property of OTV. It shall not be reproduced or used without the express prior written authorization of OTV.

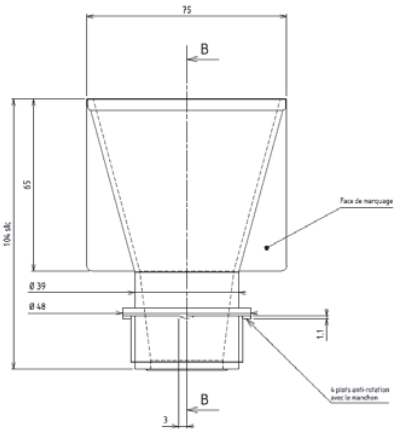

Figure 2: Cône / *Cone*

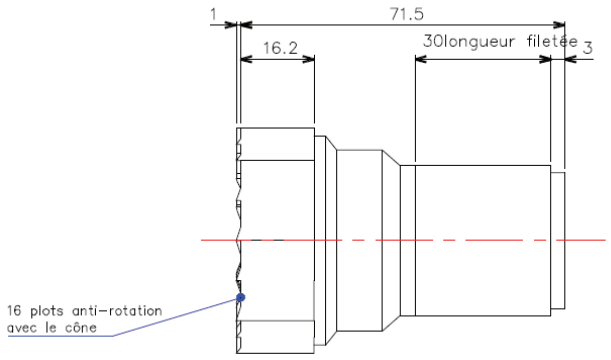

Figure 3: Manchon / Coupling



Figure 5: Contre écrou / *Lock nut*



Figure 4: Diaphragme à 1 trou / *Diaphragm with 1 hole*



Figure 6: Diaphragme à 6 trous / *Diaphragm with 6 holes*

<u>Composition / *Composition* :</u>

La buse de diffusion d'eau blanche est composée de 5 éléments pré-assemblés : le cône, 2 diaphragmes (1 et 6 trous), un manchon, un contre écrou (cf. plans en premières pages et photos en annexes
A white water nozzle is made up of 5 pieces pre assembled: a cone, 2 diaphragms (1 and 6 holes), a coupling and a locknut. Cf. drawings above and pictures in annex. It must be installed as received from the supplier: do not try to take it apart.

Ce document comporte des informations confidentielles propriétés d'OTV. Il ne peut être reproduit ou utilisé sans autorisation écrite d'OTV.
This document contains confidential information which is the property of OTV. It shall not be reproduced or used without the express prior written authorization of OTV.

Caractéristiques / *Design criteria* :

Pression de travail / *Operating pressure)* / Débit (*flow)* :

Il existe 3 différents diffuseurs capables de délivrer différents débits unitaires moyens. Le nombre de diffuseurs est à sélectionner en fonction de ces débits unitaires moyens. /
3 types of nozzle are available, each delivering a different unit average flow at the operation pressure. The number of nozzles has to be chosen according to these unit average flows.

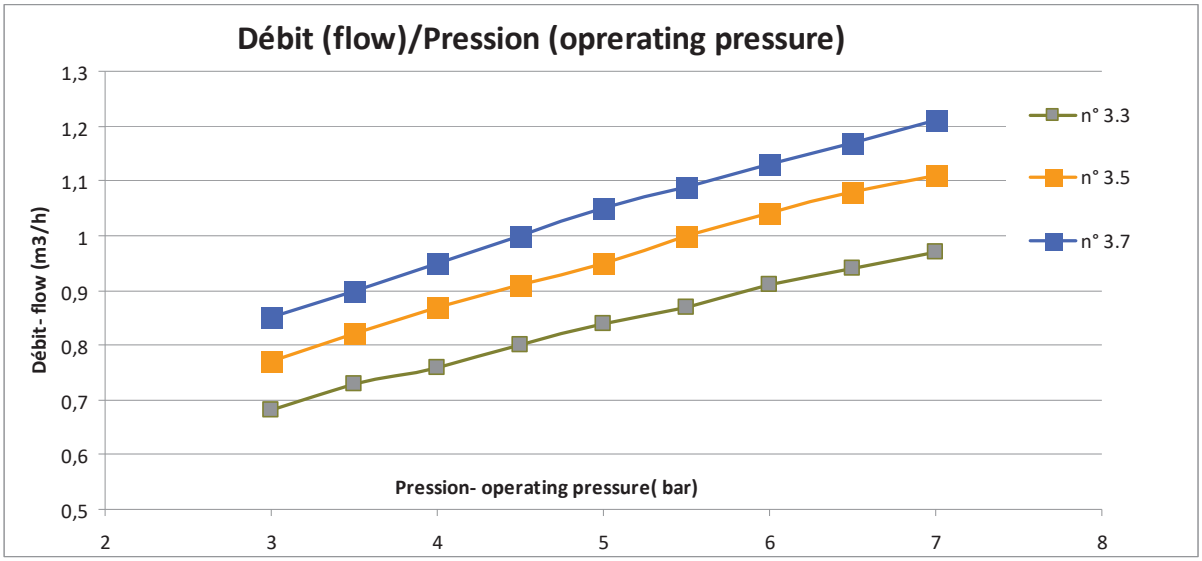

	Pressions en amont de buse - operating pressure (bar)								
	3	3,5	4	4,5	5	5,5	6	6,5	7
Buse n°	Débit- flow (m3/h)								
3,7	*0,85*	*0,90*	*0,95*	*1,00*	*1,05*	*1,09*	*1,13*	*1,16*	*1,21*
3,5	*0,78*	*0,82*	*0,88*	*0,92*	*0,97*	*1,01*	*1,04*	*1,08*	*1,12*
3,3	*0,68*	*0,73*	*0,76*	*0,80*	*0,83*	*0,87*	*0,90*	*0,93*	*0,96*

Les valeurs de débits sont données avec une tolérance de ± 5 %.
The flow values are provided with a tolerance of ± 5%.

Encombrement / *Size* :

- Hauteur totale / *Total height* = **160 mm ± 2 mm (suivant serrage)**
- Diamètre haut du cône / *Cone top diameter* **= 75 mm ± 0,5 mm**

Dimensions utiles pour la liaison avec la conduite de distribution d'eau blanche (manchon) / *Useful information for its installation on the white water circuit* :

- Filetage selon norme E 03 004/005 (pas du gaz) / *Thread according to the norm E 03 004/005 (gas thread)*

Ce document comporte des informations confidentielles propriétés d'OTV. Il ne peut être reproduit ou utilisé sans autorisation écrite d'OTV.
This document contains confidential information which is the property of OTV. It shall not be reproduced or used without the express prior written authorization of OTV.

- Longueur filetée totale / *Total threaded lenght* = **30 mm ± 0,5 mm**
- Longueur minimum sous contre écrou (y compris filetée) = **20 mm dont 17 mm de filet** / *Minimum Lenght after installing the locknut (thread included* de filetage / *20 mm of which 17 of thread*

Note : Les diffuseurs d'eau blanche sont fabriqués par moulage. Les moules ont été spécialement ajustés afin d'assurer une étanchéité parfaite (sans Loctite) avec l'emploi d'adaptateurs avec manchon taraudé femelle Simona (www.simona.de), détail en annexes. L'emploi de Loctite (ou équivalent) est néanmoins vivement recommandé afin de prévenir tout risque de fuite et de desserrement des buses.
Note: Nozzles are molded. The casts have been designed to ensure a leak free connexion, without sealant (Loctite for example) when screwed on a Simona coupling (www.simona.de), details in annexes. Sealant (Loctite or similar) is however highly recommended to prevent any leakage and the nozzles to loosen.

Ce document comporte des informations confidentielles propriétés d'OTV. Il ne peut être reproduit ou utilisé sans autorisation écrite d'OTV.
This document contains confidential information which is the property of OTV. It shall not be reproduced or used without the express prior written authorization of OTV.

PROCEDURE DE RECEPTION
ACCEPTANCE PROCEDURE

Avant de procéder à l'installation, vérifier que le matériel n'est pas endommagé et que la livraison est complète.
Prior to proceed with the installation, check that the equipment are not damage and the order complete.

Contrôle du conditionnement / *Packaging check* :

Toutes les crépines sont rangées dans un carton conventionnel. / *All the nozzles are store in a regular cardboard.*
Tous les cartons seront rangés sur palettes filmées. / *All cardboard boxes are stored on film wrapped pallets.*

Contrôle d'identification du matériel / *Material identification check* :

- La désignation du matériel / *Equipment designation*
- Le nom ou le numéro de l'affaire / *Project name or reference*
- Le nombre de colis / *Number of cardboard boxes*
- Le nombre de pièces pour la livraison / *Number of nozzles*
- Le poids du colis / *Weight of the shipment*

Contrôle du marquage / *Marking check* :

Zone de marquage : l'une des deux oreilles : EBOTV
Marking area: one of the ear: EBOTV –

Contrôle d'aspect / *Visual aspect check* :

Un contrôle visuel doit être réalisé sur un échantillon. *A visual check must be performed on sampled items.*

- Contrôle de l'ébavurage : Toutes les pièces doivent être ébavurées soigneusement, tout particulièrement l'orifice du diaphragme à 1 trou. *Deburring check: All parts must be correctly deburred, especially the diaphragm with 1 hole:*

Ce document comporte des informations confidentielles propriétés d'OTV. Il ne peut être reproduit ou utilisé sans autorisation écrite d'OTV.
This document contains confidential information which is the property of OTV. It shall not be reproduced or used without the express prior written authorization of OTV.

- Contrôle de la matière des diaphragmes/ ***Material check diaphragms*** : PPE+PS blend (Noryl® 731)
- Contrôle de la matière cône, Manchon et contre écrou : **Polypropylène** / *Material check cone, coupling and loknut:* ***Polypropylen***

<u>Contrôle dimensionnel sur les cotes fonctionnelles / *Principal dimensions check* :</u>

Vérification des cotes fonctionnelles au pied à coulisse, jauge de profondeur, pige.
Contrôler que les cotes fonctionnelles sont dans les tolérances : ± 0,05 mm pour les orifices principalement.
Check that the principal dimensions are according to the tolerances: ± 0,05 mm for the orifices. Use a vernier caliper, and a gauge.

<u>Précautions de stockage / *Storage precautions* :</u>



Les diffuseurs ne doivent pas être stockés en exposition directe à la lumière du soleil : le matériau s'oxyde et devient cassant (les flottateurs doivent être couverts, mais prendre garde également lorsque les buses sont installées). Malgré la bonne résistance à la chaleur du **PP (jusqu'à 70°C),** il est également recommandé de veiller à ne pas les stocker à des températures trop élevées afin de ne pas déformer les diffuseurs. Précaution d'autant plus valable que l'installation est faite dans des pays au climat désertique.
The nozzles should not be stored under direct sun light: material is getting fragile (floatators must be covered, but be careful when the nozzles are installed). Also, despite the good heat resistance of the material ***(up to 70°C),*** *it is recommended not to store them at high temperature so they do not loose their shape. This is specially the case for desert area.*

Ce document comporte des informations confidentielles propriétés d'OTV. Il ne peut être reproduit ou utilisé sans autorisation écrite d'OTV.
This document contains confidential information which is the property of OTV. It shall not be reproduced or used without the express prior written authorization of OTV.

NOTICE D'INSTRUCTION D'UTILISATION
UTILIZATION GUIDE

Instruction de montage / *Installation instructions* :

➢ Outils nécessaires / *Tools* :

1. Outil spécifique (cf. Annexes). Se rapprocher d'Opalium pour se procurer cet outil. / *Specific tool (cf. Annexes). Opalium is supplying this tool.*
2. Loctite 5331 (à conserver entre 8 et 21 °C) ou similaire (vérifier les conditions de stockage) / *Loctite 5331 (to be stored between 8°C and 21°C) or similar.*

➢ Vérifications d'avant montage / *Preparation* :

1. Vérifier l'état général de la buse, qu'elle ne soit pas abimée (oreille cassée ou pliée), qu'il n'y ait pas de détritus à l'intérieur. Vérifier également le manchon de la rampe de distribution. / *Check the general aspect of the nozzle: clean, no damage (ear not bended or broken for example). Also check the coupling on the distribution pipe.*
2. Vérifier que le diaphragme à 6 trous est visible depuis le cône et celui à 1 trou depuis le manchon. SI cela n'avait pas été fait à la réception du produit, vérifier l'ébavurage de l'orifice unique. / *Make sure that the diaphragm with 6 holes is clearly visible from the cone and the one with hole from the coupling. In case this was not done at the reception of the equipment, check the drilling of the holes, as shown above.*
3. Vérifier que le cône est correctement serré dans le manchon (serrage complet, pas d'ergots l'un sur l'autre : ces ergots, situés sur le cône et le manchon, empêche les 2 parties de se desserrer). / *Check that the cone is correctly screwed on the coupling: complete screwing, no fin on top of each (fins are the small triangle parts that prevent the cone and the coupling to unscrew).*
4. Vérifier, à l'aide de l'outil, que le contre-écrou est bien serré sur la partie haute du manchon. / *Check that the locknut is correctly screwed on the top part of the coupling.*

➢ Installation / *Installation* :

1. Appliquer la Loctite (ou similaire) sur les deux parties à visser (manchon du diffuseur et manchon de la rampe de distribution). / *Apply the Loctite (or equivalent) on both couplings (nozzle and distribution pipe).*
2. Commencer à serrer à la main le diffuseur dans le manchon de la rampe de diffusion, en prenant garde à l'insérer droit. / *Start by manually screwing the nozzle to the distribution pipe. Pay attention to screw vertically.*
3. A l'aide de l'outil, serrer le diffuseur (placer l'outil sur le manchon du diffuseur). Le couple de serrage maximal est de 10 N.m. / *Set the tool on the coupling of the nozzle (not the locknut) and tight it Maximum torque is 10 N.m.*
4. Vérifier, à l'aide de l'outil, que le contre-écrou est bien serré sur la partie haute du manchon. / *Check that the locknut is correctly screwed on the top part of the coupling.*

Ce document comporte des informations confidentielles propriétés d'OTV. Il ne peut être reproduit ou utilisé sans autorisation écrite d'OTV.
This document contains confidential information which is the property of OTV. It shall not be reproduced or used without the express prior written authorization of OTV.

➢ Précautions / *Precautions* :

1. Ne pas utiliser les oreilles du cône à des fins de serrage. Elles sont fragiles, et risquent de se déchirer ou casser. Il ne faut pas utiliser de buses dont les oreilles ont été endommagées. / *Do not use the ears of the nozzles to screw. They are fragile and could break. Nozzles with damages ears shall not be used.*
2. Ne pas utiliser de pinces multiprises ou tout autre outil à dents pour faire le serrage. Les dents endommageraient le diffuseur. Utiliser uniquement cet outil spécifique ou faire le montage manuellement. / *Do not use a pair of pliers or a pipe wrench to tight the nozzle. Such tools would irreversibly damage the nozzle. Only use the specific tool or install them manually.*

➢ Démontage / *Disassembly* :

Pour dévisser le diffuseur de la rampe, utiliser l'outil spécificque sur le manchon du diffuseur. Il est conseillé de limiter les serrages / desserrages des diffuseurs pour ne pas les endommager. Penser à nettoyer les résidus de Loctite. / *To disassemble the nozzle, use only the specific tool employed for the installation. It is recommended to limit the number of installation / removal in order not to damage the nozzle. It also highly recommended to clean the couplings from residual Loctite.*

Les diffuseurs en eux mêmes ne sont pas démontables. Les ergots entre le cône et le manchon seraient endommagés si l'utilisateur tente de desserrer les 2 parties. / *The different parts of the nozzle cannot be disassembled. The fins between the cone and the coupling would be damaged, and become useless for further utilization.*

➢ En cas de problème / *Troubleshooting* :

L'une des causes de chute rapide de la pression et d'augmentation du débit de l'eau blanche peut être le desserrage puis expulsion ou même la casse d'un diffuseur. S'ils ne surviennent pas à la mise en route de l'ouvrage, ces 2 phénomènes sont peu susceptibles d'apparaitre, grâce à l'emploi de Loctite. / *One of the reason why white water pressure could drop, and flow increase is the damage of the nozzle. It could be loosening and ejected or even broken. These 2 phenomena are most likely to occur at the start up of the plant, thank to the use of Loctite.*

Au contraire, si le débit d'eau blanche diminue et la pression augmente, cela peut être dû au colmatage d'un orifice des diaphragmes après un long arrêt (coquillage par exemple en utilisation eau de mer). / *On the other hand, if the flow is reducing but the pressure increasing, this could be due to the clogging of the diaphragms. This could eventually happen after a long break if the white water system was not flushed. Shells could have developed inside it in the case of seawater.*

Finalement, il convient de surveiller le fonctionnement des pompes de recirculation pour s'assurer du fonctionnement normal du système d'eau blanche, spécialement après une longue période d'arrêt durant laquelle le circuit d'eau blanche n'aurait pas été vidangé. / *It is recommended to check on the operation of the white water pumps to ensure the good running of the white water system. Changes in flow, pressure or pump frequency could be the sign of a dysfunction.*

Ce document comporte des informations confidentielles propriétés d'OTV. Il ne peut être reproduit ou utilisé sans autorisation écrite d'OTV.
This document contains confidential information which is the property of OTV. It shall not be reproduced or used without the express prior written authorization of OTV.

ANNEXES
ANNEXES



Figure 7 : Buse de diffusion d'eau blanche / *White water diffusion nozzle*

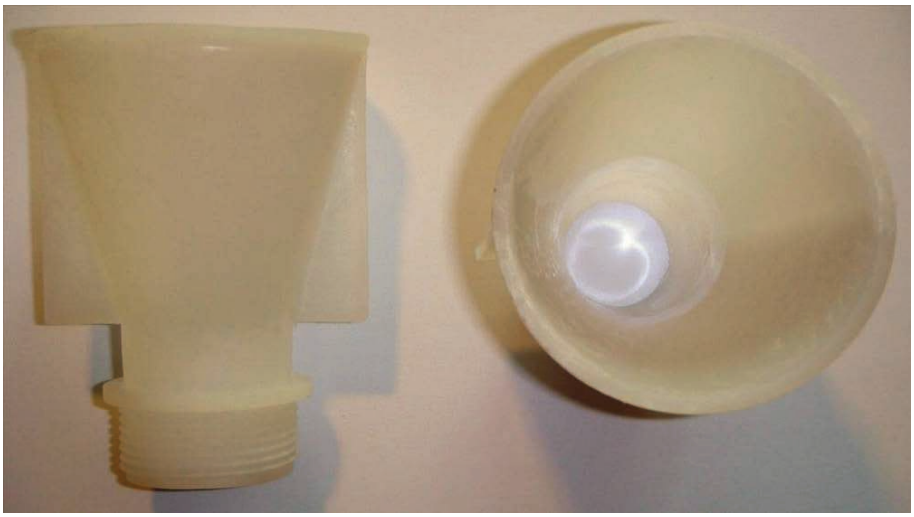

Figure 8 : Cône / *Cone*

Ce document comporte des informations confidentielles propriétés d'OTV. Il ne peut être reproduit ou utilisé sans autorisation écrite d'OTV.
This document contains confidential information which is the property of OTV. It shall not be reproduced or used without the express prior written authorization of OTV.



Figure 9 : Diaphragmes / *Diaphragms*

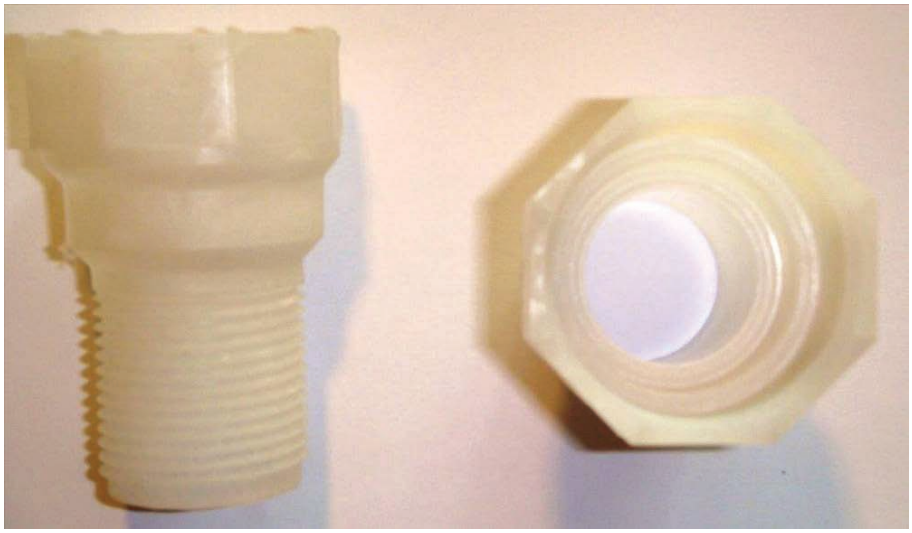

Figure 10 : Manchon / *Coupling*

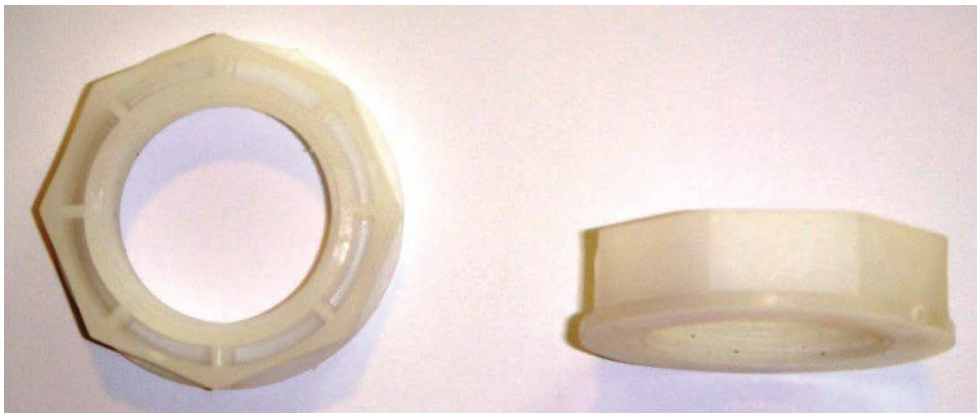

Figure 11 : Contre écrou / *Locknut*

Ce document comporte des informations confidentielles propriétés d'OTV. Il ne peut être reproduit ou utilisé sans autorisation écrite d'OTV.
This document contains confidential information which is the property of OTV. It shall not be reproduced or used without the express prior written authorization of OTV.



Figure 12: Outil spécifique de serrage manuel / *Manual Specific tool*

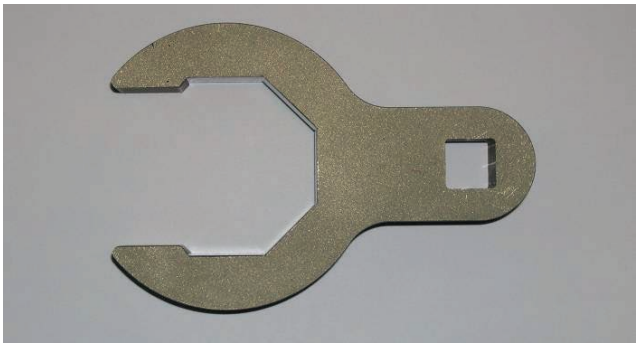

Figure 13: Outil spécifique de serrage adaptable sur clé dynamométrique / *Specific tool for torque wrench*

Ce document comporte des informations confidentielles propriétés d'OTV. Il ne peut être reproduit ou utilisé sans autorisation écrite d'OTV.
This document contains confidential information which is the property of OTV. It shall not be reproduced or used without the express prior written authorization of OTV.

This page is intentionally left blank

Project IQALUIT

Project#: 5000218036

Document #: 5000218036_DS_0001_PM_VWT

By: BB

Chkd.: GH

Approv.: CB

SPIDFLOW

VALVES

Section Manuel OM: 4.3.1.6

This page is intentionally left blank

CS-912-045 : Identification sheet

VWTC PROJECT NUMBER:	Iqaluit WWTP	REV:	01
PROJECT NAME:	5000218036	SUBMITTED TO (COMPANY):	
ENGINEER:	G. HÉBERT	SUBMITTED TO (RESPONSIBLE)	
PROJECT MANAGER:	C. BEKAERT	PROJECT NUM REFERENCE.:	
PHONE NUMBER:		LOT NUMBER:	

SUPPLIER	EQPT CODE	EQPT TAG NO	DIA	DESCRIPTION	INFO 1	INFO 2	INFO 3	APPLIC.	NOTE	REV
BRAY	ST-912-045	CV-02-405		CHECK VALVE WHITE WATER	CHECK VALVE # V0415XEZ205 4" ANSI 150 316 S/STEEL WITH EPDM // CRN# REQUIRED					1
BRAY	ST-912-045	CV-02-420		CHECK VALVE WHITE WATER	CHECK VALVE # V0415XEZ205 4" ANSI 150 316 S/STEEL WITH EPDM // CRN# REQUIRED					1
BRAY	ST-912-045	CV-02-435		CHECK VALVE WHITE WATER	CHECK VALVE # V0415XEZ205 4" ANSI 150 316 S/STEEL WITH EPDM // CRN# REQUIRED					1
BRAY	ST-912-045	CV-02-455		CHECK VALVE WHITE WATER	CHECK VALVE # V0415XEZ205 4" ANSI 150 316 S/STEEL WITH EPDM // CRN# REQUIRED					1

SUPPLIER	EQPT CODE	EQPT TAG NO	DIA	DESCRIPTION	INFO 1	INFO 2	INFO 3	APPLIC.	NOTE	REV
BRAY	ST-912-045	CV-02-470		CHECK VALVE WHITE WATER	CHECK VALVE # V0415XEZ205 4" ANSI 150 316 S/STEEL WITH EPDM // CRN# REQUIRED					1
BRAY	ST-912-045	CV-02-485		CHECK VALVE WHITE WATER	CHECK VALVE # V0415XEZ205 4" ANSI 150 316 S/STEEL WITH EPDM // CRN# REQUIRED					1

Bray/Rite® Check Valves

1" (25mm) - 60" (1500mm)
ASME Class 125 - 2500

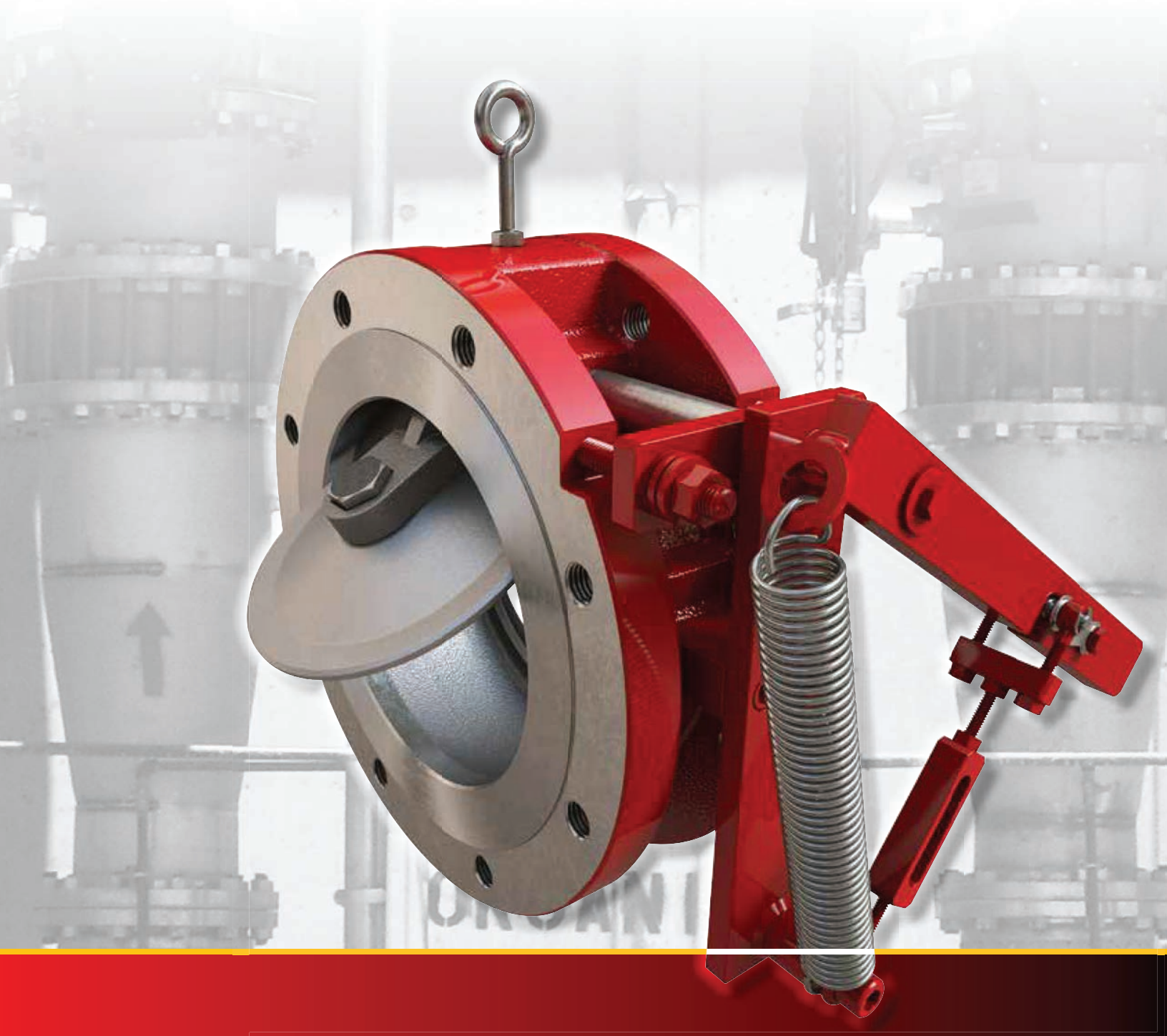

Bray®

WWW.BRAY.COM

YOUR GLOBAL FLOW CONTROL PARTNER™

Rite Corporation, headquartered in Quebec, Canada and founded in 1963, designs and manufactures exceptional Bray/Rite check valves, cam and groove quick couplings, and fluid handling loading and unloading equipment. For over 40 years, Rite has earned a reputation for reliability. This reputation is based on our highest quality manufacturing standards, premium components and thorough control procedures. With a worldwide sales and distribution network, we offer our customers full support wherever the project location.

Our engineers specialize in innovative, individual solutions to industry needs and will assist you with your project requirements. Our knowledgeable sales and support staff are committed to outstanding service and, above all, customer satisfaction. We look forward to recommending a practical and economical solution to your fluid control applications.

Bray/Rite Valves continue to be the premier wafer combination swing check valve. Designed in 1970, their performance remains unsurpassed. The line offers a wide range of valves and accessories, all fully stocked and readily available. Their successful, long term use in applications worldwide has made the Bray/Rite the industry standard for economy, durability and reliability.

State of the Art Check Valves, Bray/Rite is Rite Sized.

Rite's Bray/Rite wafer combination swing check valves are flow–activated and *Rite Sized*. Bray/Rite inlet ports and disc have been shape optimized to achieve a fully open position at low flow rates (3 ft/s on average). Therefore, the Bray/Rite operates exceptionally well in the flow rates typically found in pipelines containing control valves and lines with varying media flows.

Compare the Bray/Rite to typical full-sized swing check valves. Due in part to their oversized, heavier discs, these valves only fully open at an average flow rate of 11 ft/s. When activated at a lower flow rate, these valves loose true controllability and do not fully open. A partially open disc creates an obstruction that produces a higher pressure drop and fluttering of the valve disc – disturbing the flow and increasing the chance of water hammer.

Bray/Rite is *Rite Sized* to eliminate these problems. It has been engineered to accelerate line media through the valve and achieve a virtually unobstructed full opening in low pressure. *Rite Sized*, combined with the limited movement of internal parts during operation, reduces wear – enhancing the long service life of a Bray/Rite valve.

SIZE RANGE
1" (25mm) – 60" (1500mm)
ASME CLASS: 125 - 2500
API, DIN, BS, JIS
Classes Available



CSA B51, N285.0

Drinking Water
NSF / ANSI 61

ZERO LEAKAGE Bray/Rite valves, either resilient or metal seated, offer zero leakage in all pressure classifications. Each valve is hydrostatically tested at the factory and shipped with a certificate of compliance to MSS SP61. Rite has achieved zero leakage metal-to-metal sealing by a proven, engineered design backed by high quality manufacturing craftsmanship. As the disc closes toward the seat, the increased velocity of the line media and the unique shape of our seat remove all particles from the sealing surfaces – ensuring zero leakage.

LOW PRESSURE DROPS The low pressure drop of the Bray/Rite valve was achieved by Rite's many years of research and development in combination with universities and federal research agencies. Several theses and papers were published including *Minimizing the pressure loss of wafer type swing check valve ASME 79/MA-NE-5*. These results – primarily the optimum valve diameter and elliptical inlet shape – have been incorporated into the Bray/Rite design. Like a venturi, the aerodynamic shape accelerates the line media through the valve with the lowest possible pressure drop. Pressure drops at the full open position are between 0.5 to 0.7 psi for all size valves. Additionally, the disc shape and mass have been optimized to use the pipeline media flow as a lifting force on the disc, thus allowing a full open valve position in low line velocity.

HIGH FLOW CAPACITY Bray/Rite's valve inlet elliptical shape and optimum diameter, plus its virtually unobstructed opening combine to produce a substantially higher flow capacity (C_V) than other wafer combination swing check valves.

REDUCED WATER HAMMER An additional focus of Rite's R&D program was linked to Water Hammer Prediction. Findings were applied in the design of the valve to largely reduce or eliminate water hammer by closing the valve at the right moment (before reverse flow occurs). The Bray/Rite uses gravity, assisted by an internal spring, to pull the disc toward the closed position on decelerating line media flow. Rite has developed proprietary predictive software to select the best solution for your specific application.

The elliptical shape of the inlet port accelerates the line media through the valve.

The disc's angle and shape allows fluid to travel faster around the disc, thus creating lift like an aircraft wing.

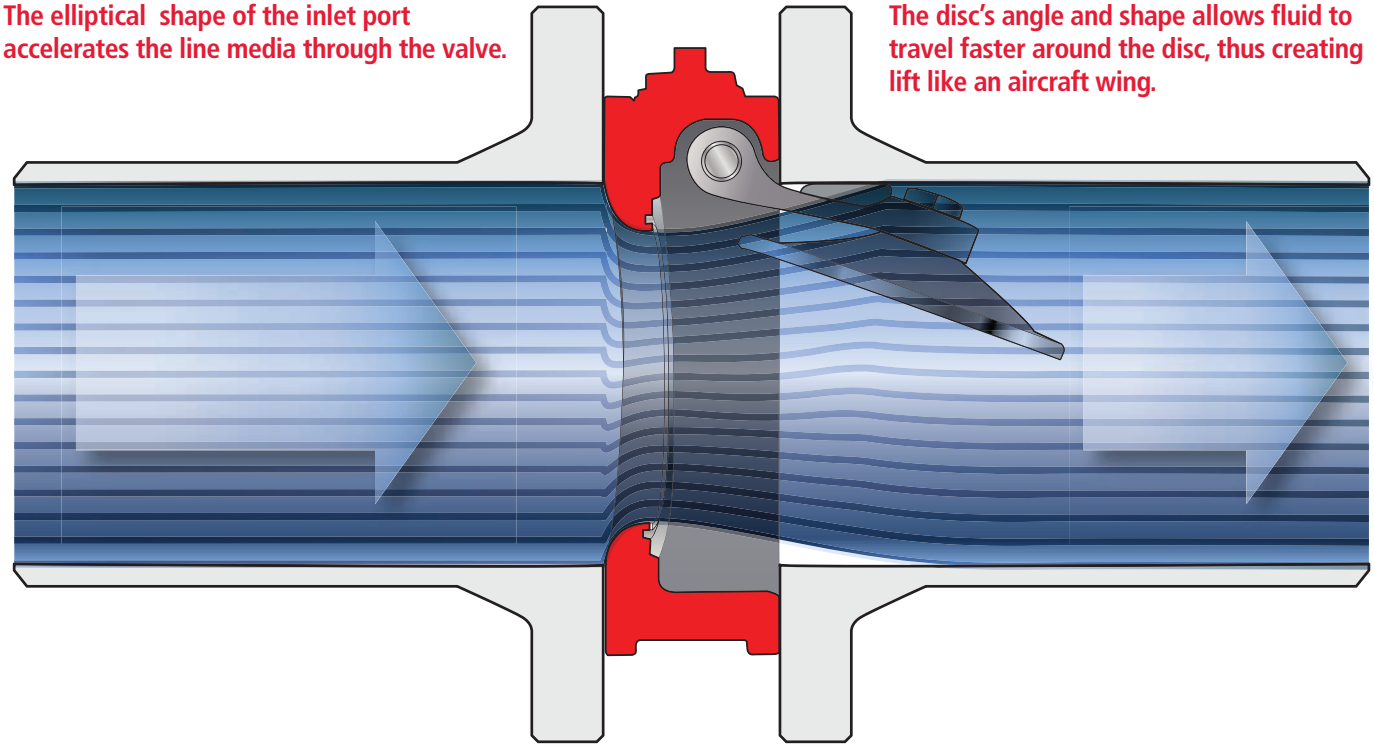

THE RITE ADVANTAGES

Bray/Rite SEATS Zero leakage shut off, even at 0 psi, is achieved through lapped metal seating surfaces. The seat and the disc edges are precisely machined then hand polished for a perfect fit. The disc hinge provides an even force at the disc to seat contact point, ensuring a uniform seal. Controlled tolerances maintain the proper disc to seat alignment. The spring assisted closure tension holds the disc in place when line pressure is removed.

RESILIENT SEATS A dynamic, O-ring seat is contained in a specially designed body groove. As line pressure is applied, the valve disc uniformly compresses the seat into the groove ensuring a zero leakage seal. The seat is easily replaced, simplifying maintenance.

METAL-TO-METAL SEATS Integral metal seats feature an engineered and precision machined angle that minimizes the metal-to-metal contact point between the disc and seat for a perfect seal. Pressure is applied evenly over the disc, eliminating galling and reducing wear.

METAL SEAT INSERT Carbon steel and ductile iron bodies have a stainless steel seat inserted into the body seal area, offering the same precision design as the integral metal-to-metal seat. These bodies are also available with a Resilient Seat Insert.

INHERENTLY FIRE SAFE All Bray/Rite valves are inherently fire safe due to the valve design, materials and construction. In the event of a pipeline fire, both resilient seated and metal seated valves provide metal-to-metal contact between the seat and disc and surpass all leak test standards.

Pressure Drop with Water

Valve Size	Cv	Min Flow to Fully Open Valve		Approx Pressure Drop w/ Water
Inch/ mm		GPM	Ft/ sec.	PSI @ 10 ft/sec.
1 / 25	30	28	10.4	0.78
1.5 / 40	38	68	10.7	2.1
2 / 50	84	46	4.4	1.7
2.5 / 65	137	76	5.1	1.4
3 / 75	221	197	8.5	1.1
4 / 100	373	157	4	1.4
5 / 125	679	352	5.6	1.1
6 / 150	931	367	4.1	1.5
8 / 200	1,440	428	2.7	1.6
10 / 250	2,623	837	3.4	1.1
12 / 300	3,531	1,229	3.5	1.2
14 / 350	3,226	1,180	2.7	2
16 / 400	3, 911	1,447	2.5	2.6
18 / 450	5,799	3,376	4.8	1.7
20 / 500	7,769	6,500	6.3	1.5
24 / 600	10,105	8,321	5.9	1.6
26 / 650	13,350	9,200	5.5	1.5
28 / 700	15,000	9,520	5.6	1.5
30 / 750	18,041	10,303	5.1	0.9
32 / 800	20,900	12,150	5	1.4
36 / 900	25,675	15,850	5.2	2
40 / 1,000	39,340	25,310	6.1	2.4
42 / 1,050	47,914	31,304	7.5	2.7
48 / 1,200	44,983	33,095	5.9	1.6
54 / 1,350	63,000	45,000	6	0.9
60 / 1,500	70,500	62,800	6.2	1.1

Notice the full open stable minimum velocity and the efficiency calculated at a normal velocity of 10 f/sec.

Resilient Seat



Metal-To-Metal Seat



Metal Seat Insert





The convex profile of the disc reacts to line flow like an airfoil. The velocity above the disc is higher than the velocity below, thus effectively creating lift.

PUMPING COST SAVINGS Pumping costs have been often overlooked but are now gaining in importance due to the increasing cost of energy. With Bray/Rite's long service life, its cost is actually insignificant to the end user compared to the energy lost pumping the fluid through the valve. Below is a comparison between different valve styles, assuming all valves are 100% open.

Yearly Energy Costs Comparison At 10 F/S - $0.10/kWh

VALVE SIZE / INCHES	2	2.5	3	4	5	6	8	10	12
Bray/Rite	$42	$66	$99	$174	$250	$254	$635	$872	$1,113
Tilting Disc	$50	$66	$102	$161	$250	$272	$425	$606	$739
Center Guided "Silent"	$115	$214	$339	$608	$1,002	$1,409	$2,541	$4,006	$3,447
Full Size Swing Check	$57	$66	$99	$191	$250	$415	$680	$1,002	$1,347
Dual Door	$218	$209	$314	$441	$491	$707	$979	$1,118	$1,282

HORIZONTAL / VERTICAL INSTALLATION

Unlike most conventional check valves, Bray/Rite wafer combination swing check valves are ideal for both horizontal and vertical pipeline installation – requiring only a single line for operation. This greatly increases pipeline layout flexibility and significantly reduces costs. In vertical installations, typical swing check valves must have an offset pipe section installed since these valves only function in a horizontal position. **See factory for vertical down applications.**

Bray/Rite horizontal assembly compared to conventional check valve assembly.

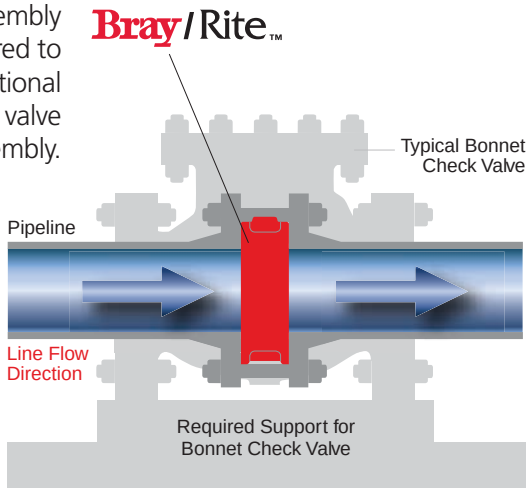

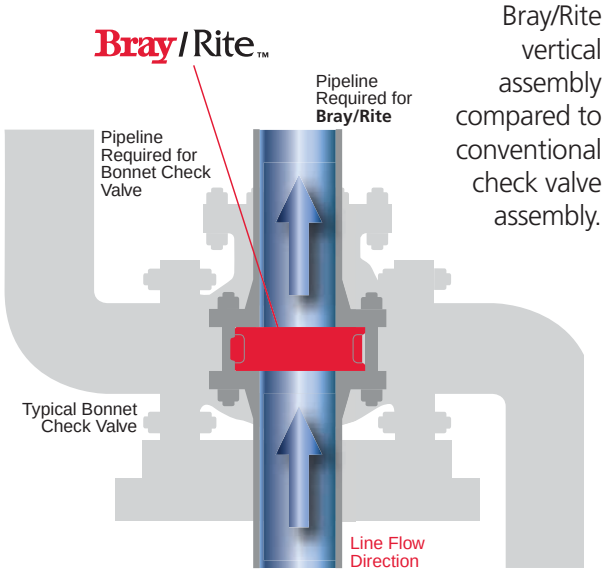

Bray/Rite vertical assembly compared to conventional check valve assembly.

LIGHT WEIGHT & REDUCED SIZE Installation costs are greatly reduced by Bray/Rite's light weight and minimal space requirements. Their compact design minimizes the distance between faces and are easily installed between all flanges.

Bray/Rite valves do not require added support to maintain pipeline integrity and need only 30% of the space of typical full size swing check valves.

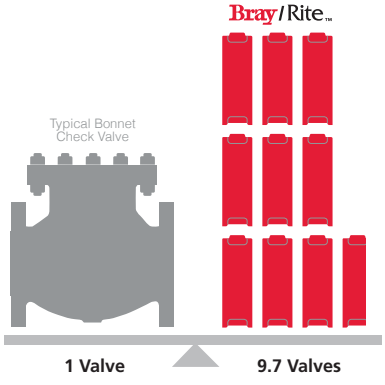

THE RITE ACCESSORIES

Bray/Rite has designed and manufactured an extensive range of accessories for specific applications.
Some commonly used accessories and a PVC body uniquely designed for a specific application are shown below. Bray/Rite valves can be fitted with any one or a combination of accessories, including safety caging.



EXTERNAL LEVER & SPRINGS (SA-01)

Provide additional external force to anticipate closure in applications where rapid media flow reversal requires the valve to close faster than standard.

Applications: Pump protection when pumping in parallel into a common header.

DUAL WEIGHTS (SA-10)

Two opposing weights, one to adjust cracking pressure and one to counter balance the disc.

Applications: Insures valve is fully open on very low flows.



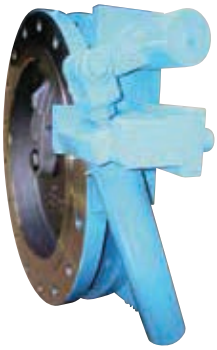

EXTERNAL LEVER & COMPRESSION SPRING (SA-40)

Provide additional force to anticipate valve closure, using an enclosed compression spring, in applications where rapid media flow reversal requires the valve to close faster than standard.

Applications: Pump protection when pumping in parallel into a common header, where spring force required is higher than a SA-01 or if an enclosed spring is preferred.

HYDRAULIC PNEUMATIC SPEED CONTROLS (H-100, SA-50)

Slow the opening of the valve to protect the disc assembly in the last few degrees of travel. These units offer adjustable speed control and are ideal in fluctuating flow applications. The H-100 uses the SA-01 spring. The SA-50 uses the SA-40 compression spring.

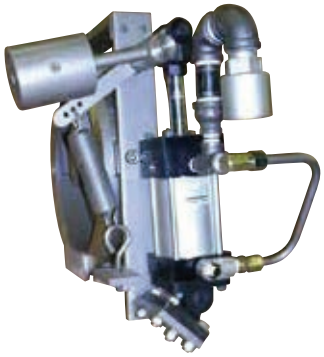



EXTERNAL LEVER & WEIGHT (SA-16)

Provide additional external mass to increase the cracking pressure (pressure required to open the disc) and increase the closing force of the moving disc.

Applications: Where increased cracking pressure is required. Waste Water service or where suspended solids are present in the process (the weight will insure inertia induced positive closure). Relief valve with adjustable cracking pressure.

LIMIT SWITCH (SA-2)

Provides remote indication of valve position and a positive indication of flow. If two are installed the first shows the closed position, the second the fully opened valve. (A partially opened valve is subject to premature wear.)

Applications: Automated control systems.

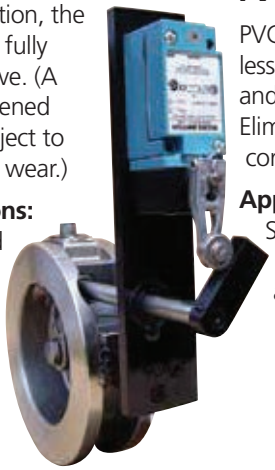



EXTERNAL LEVER, SPRING & WEIGHT (SA-1)

These units use the combination of a weight and spring to add cracking pressure and closing force to the disc.

Applications: Where performing both functions of faster closure and solid handling are required, primarily in waste water



PVC (PEZ SA-4AX)

PVC Body with passivated stainless steel or titanium internals and position indication lever. Eliminates internal body corrosion.

Applications: Used for Salt water, marine life support systems, desalination applications..

SELECTION PROCESS

A **Gather Process Information**
Line Fluid / Pressure / Temperature /Flow Rate / Location / Function

B **Gather Pipe Information**
Size / Material /
Flange Rating / Schedule

C **Select Valve Size** – Based on:
- Full open valve at minimum flow
- or Pipe size

D **Select Design Standard**
- ASME: 125 / 150 / 300
- API 594: 150 / 300 / 400 / 600 / 900 / 1500 / 2500
- PN: 10 / 16 / 25 / 40

E **Verify Conditions**
- Valve full open at minimum flow
- Max velocity 15 f/sec for Liquid
- Max velocity Mach 0.33 for Gas
- Non-reciprocating service
- No accessories required
- Installed with a minimum of 5 pipe diameters upstream and 3 downstream from a disturbance
- Not installed on close coupled multiple pump header

F **Select Model**
If answer is YES to All conditions:
- Select Model 210 (ASME, DIN) Models 201 - 205 (API 594)
- or if ULC FM* approved required select 212 (ASME), 312 (DIN) 2"-12" ONLY

If answer is NO to Any condition:

Select Model 260 (ASME, DIN) Models 201 - 205 (API 594)

G **Select Pressure Class and Body, Seat & Spacers Materials, and specific application accessories as required**

ORDERING EXAMPLE

A 6" heavy duty, Class 150 wafer combination swing check valve, carbon steel body with stainless steel inserted seat, stainless steel spacers and an external spring accessory would be written as follows:

06 15 SMZ SA01

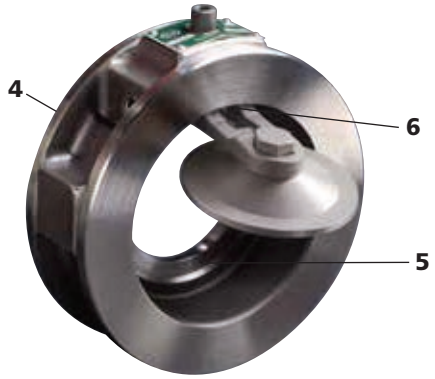

SELECTION INFORMATION

Description			Color
1 Size	01-60	1"- 60" ASME 25mm-1500mm DIN	
2 Model	201	API 594 #400/600	Grey
	203	API 594 #900/1500	Grey
	205	API 594 #150/300	Grey
	210	Standard ASME / DIN	
	212	ULC FM Approved ASME *	Red
	312	ULC FM Approved DIN *	Red
	260	Heavy Duty ASME / DIN	
	211	Flanged Body	
3 Pressure Class	10	PN 10	
	12	ASME 125 lb	
	15	ASME 150 lb	
	16	PN 16	
	25	PN 25	
	30	ASME 300 lb	
	40	PN 40	
	–	Other	
4 Body	C	ASTM A 126 CLB	Black
	D	ASTM A 395	Green
	S	ASTM A 216 WCB	Yellow (Class 300) Blue (Class 150)
	X	ASTM A 351 CF8M	None
	T	Titanium	None
	–	Other **	
5 Seat	B	BUNA -N	
	E	EPDM	
	M	A240 - 304 (Inserted or Integral) ***	
	T	PTFE	
	V	Viton	
6 Spacer	T	PTFE (Standard on 1"-12" Cast Iron Bodies)	
	Z	A479 - 316	
	–	Other **	
7 Special Application Assessories	SA-01	External Spring	
	SA-1	External Spring & Weight	
	SA-3	Backflush Lever and External Spring	
	SA-2	Limit Switch	
	SA-4	External Position Indicator	
	SA-4A	Backflush Lever	
	SA-7	Emergency Shut-off, Fusible Link	
	SA-10	Dual Balanced Weights	
	SA-40	External Compression Spring	
	SA-16	External Weight	
	SA-40A	External Compression Spring and Weight	
	H-100	External Spring, Weight, Hydraulic Damper	
	SA-50	External Compression Spring, Weight, & Hydraulic Damper	
	–	Other	

* ULC Approved under NFPA No. 11,13,14,15,20,22,24. FM Approved.
** Available in most exotic materials, please consult factory.
*** Inserted pressed-in interference seat at a minimum of 304 SS for carbon steel and ductile iron bodies, or seat is intergral to body.

Note: Spacers are located on both sides of the disc hinge, ensuring a uniform seal.
Note: The standard Bray/Rite is a wafer body style. Flanged Ends, RTJ style and other connections are available, please consult factory.

THE RITE DIMENSIONS

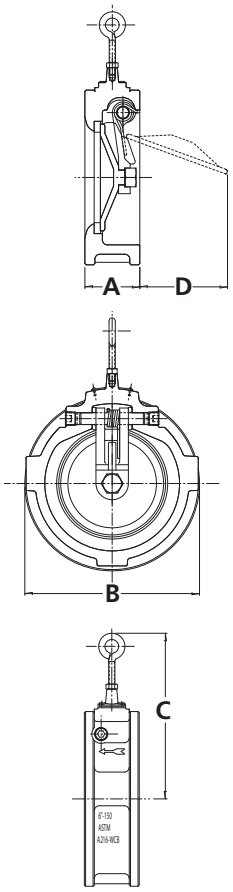

Models 210 (ANSI), 205 (API 594), Class 125/150

Nominal Pipe Size		A		A		B		C		D		Weight		Weight	
		210		205		210/205						210 SS		205 SS	
Inch	mm	Inch	mm	Inch	mm	Inch	mm	Inch	mm	Inch	mm	lbs	kg	lbs	kg
1	25	2	50.8			2 5/8	66.7	3.4	86.3					1.9	0.85
1½	40	2½	63.5			3 3/8	85.7	4 1/8	104.7			3.8	1.8		
2	50	1¾ 2⅛*	44.5	2 3/8	60.3	4 1/8	104.8	4 1/4	107.9	1 3/16	30.1	4.2	1.9	6.0	2.7
2½	65	1 7/8 2⅜*	47.6	2 5/8	66.7	4 7/8	123.8	4½	114.3	1 3/8	34.9	6.1	2.8	9.0	4.1
3	80	2 2⅝*	50.8	2 7/8	73.0	5 3/8	136.5	5	127.0	1 5/8	41.2	8.4	3.8	13.0	5.9
4	100	2¼	57.2	2 7/8	73.0	6 7/8	174.6	5 3/4	146.0	2 3/4	69.8	13.5	6.2	19.3	8.75
5	125	2½	63.5	3 1/4	82.5	7 3/4	196.9	6½	165.1	3 5/8	92.0	18.1	8.2	23.0	10.4
6	150	2¾	69.9	3 7/8	98.4	8 3/4	222.3	7 1/4	184.5	4½	114.3	22.5	10.2	34.0	15.4
8	200	2⅞	73.0	5	127.0	11	279.4	8 1/4	209.5	5 3/4	146.0	34.5	15.7	65.0	29.5
10	250	3⅛	79.4	5 3/4	146.0	13 3/8	339.7	9 5/8	244.4	7½	190.5	50.9	23.1	88.1	40
12	300	3⅜	85.7	7 1/8	181.0	16 1/8	409.6	10 3/4	273.0	8 3/4	222.2	83.7	38.0	154.2	70
14	350	4¼	108.0	7 1/4	184.0	17 5/8	447.7	13	330.2	7 1/4	184.1	115.0	53.0	200	90.8
16	400	4¼	108.0	7½	191.0	20 1/8	511.2	14½	368.3	8 1/4	209.5	130.0	59.0	230	104.4
18	450	4¼	108.0	8	203.0	21½	546.1	15 1/4	387.3	10½	266.7	170.0	77.2	320	145.3
20	500	5½	139.7	8 5/8	219.0	23 3/4	603.3	18 3/4	476.2	11	279.4	230.0	104.4	360	163.4
24	600	6	152.4	8 3/4	222.0	28 3/16	716.0	20½	520.7	15	381.0	385.0	175.0	560	254.2
26	650			12.5	318	29.25	749.3	20.88	530.4	17	432.0			965	438.1
28	700	6½	165.1			32 5/8	828.7	26	660.4	17 3/4	450.8	580.0	263.3		
30	750	9	228.6	12	305.0	34 5/8	879.5	27½	698.5	16 1/4	412.7	965.0	438.1	1300	590.2
32	800	9	228.6			36 13/16	936.8	29	736.6	16 3/4	425.4	1235.0	560.7		
36	900	11½	292.1	14½	368.0	41 1/8	1044.6	30	762.0	18 1/4	463.5	1525.0	692.4	2000	908.0
40	1000	11½	292.1			45 5/8	1158.9	35 1/4	895.3	21½	546.1	2200.0	998.8		
42	1050	12	304.8	17	432.0	48	1219.2	33 1/4	844.5	28	711.2	2235.0	1014.7	3200	1452.8
48	1200	14	355.6	20 5/8	523.9	54½	1384.3	38 1/4	971.5	24½	622.3	3250.0	1475.5	3910	1775
54	1350	23	584.2			61	1549.4	43	1092.2	19 3/8	492.1	5500.0	2497.0		
60	1500	23	584.2			67 3/8	1711.3	38 1/4	971.5	33	838.2	7000.0	3178.0		

* For Cast Iron

Models 210 (ANSI), 205 (API 594), Class 300

Nominal Pipe Size		A		A		B		C		D		Weight		Weight	
		210		205		210/205						210 SS		205 SS	
Inch	mm	Inch	mm	Inch	mm	Inch	mm	Inch	mm	Inch	mm	lbs	kg	lbs	kg
1	25	2	50.8			2⅞	73.0	3 3/5	86.4			1.9	0.85		
1½	40	2½	63.5			3¾	95.2	4 1/8	104.8			4.4	2.0		
2	50	1¾	44.5	2⅜	60.3	4⅜	111.1	4 1/4	108.0	1 3/16	30.0	4.0	1.8	8.4	3.8
2½	65	1⅞	47.6	2⅝	66.7	5⅛	130.2	4½	114.0	1½	38.0	5.9	2.7	13.2	6.0
3	80	2	50.8	2⅞	73.0	5⅞	149.2	5	127.0	1 11/16	43.0	7.9	3.6	15.4	7.0
4	100	2¼	57.2	2⅞	73.0	7⅛	181.0	5 3/4	146.0	2 7/16	62.0	11.9	5.4	22.5	10.2
5	125	2½	63.5	3¼	82.5	8½	215.9	6½	165.0	3⅜	86.0	18.9	8.6	27.5	12.5
6	150	2¾	69.9	3⅜	98.4	9⅞	250.8	7 1/4	184.0	4¼	108.0	26.9	12.2	43.0	19.5
8	200	2⅞	73.0	5	127.0	12⅛	308.0	8 1/4	210.0	5⅜	136.0	41.9	19.0	76.0	34.5
10	250	3⅛	79.4	5¾	146.0	14¼	362.0	9 5/8	244.0	7	178.0	61.7	28.0	109.0	49.5
12	300	3⅜	85.7	7⅛	181.0	16⅝	422.3	10 3/4	273.0	8⅛	206.0	94.7	43.0	198.2	90.0
14	350	8¾	222.3	8¾	222.0	19⅛	486.0	13	330.0	7¼	184.0	286.3	130.0	286.3	130.0
16	400	9⅛	231.8	9⅛	232.0	21¼	540.0	14½	368.0	8¼	210.0	352.4	160.0	352.4	160.0
18	450	10⅜	263.5	10⅜	264.0	23½	597.0	15 1/4	387.0	10½	267.0	440.5	200.0	440.5	200.0
20	500	11½	292.1	11½	292.0	25¾	654.0	18 3/4	476.0	11	280.0	572.7	260.0	572.7	260.0
24	600	12½	317.5	12½	318.0	30½	774.0	20½	520.0	15	381.0	925.1	420.0	925.1	420.0

Model 201 (API 594), Class 600

Nominal Pipe Size		A		B		B		C		D		Weight	
				400lbs		600lbs							
Inch	mm	Inch	mm	Inch	mm	Inch	mm	Inch	mm	Inch	mm	lbs	kg
2	50	2⅜	60.3	4⅜	111.1	4⅜	111.1	4⅝	117	½	13	7	3
2½	65	2⅝	66.7	5⅛	130.2	5⅛	130.2	5⅛	130	⅝	16	10	4.5
3	80	2⅞	73	5⅞	149.2	5⅞	149.2	6	152	¾	19	14.5	6.6
4	100	3⅛	79.4	7	177.8	7⅝	193.7	6¾	171	1½	38	24	11
6	150	5⅜	136.5	9¾	247.6	10½	266.7	9½	241	2⅛	54	54	25
8	200	6½	165.1	12	304.8	12⅝	320.7	10¾	273	2¾	70	96	44
10	250	8⅜	212.7	14⅛	358.8	15¾	400	12	305	3	76	171	78
12	300	9	228.6	16½	419.1	18	457.2	14¾	375	4⅛	105	250	114

Rite Corporation
A Subsidiary of Bray International, Inc.
10250 Parkway, Montreal, Quebec, Canada H1J 2K4
Tél 514.324.8900 Fax 514.324.9525
© 2016 Rite Corporation. All rights reserved.
R-3001_EN_V31_2016-10

Ritepro Corporation

A SUBSIDIARY OF / UNE FILIALE DE BRAY INTERNATIONAL INC.

INSTALLATION AND MAINTENANCE MANUAL

FOR

CHECK RITE WAFER TYPE SWING CHECK VALVES

MI-200

SIZES 1½" - 42"

ANSI SERIES: 125 - 2500

MODELS 201, 202, 203, 205, 210, 211, 212, 260, 262

10 August 2005

Ritepro Corporation, 12200 Albert Hudon, Montreal, Quebec, Canada, H1G 3K7
Tel: (514) 324-8900 ! Fax: (514) 324-9525
Web Site: www.ritepro.com ! Email: sales@ritepro.com

Table of Contents

Subject		***Page***
1.0	Introduction to Check Rite Wafer Type Swing Check Valves	2
2.0	Description of Check Rite Valves	2
3.0	Dis-Assembly and Assembly Instructions for Check Rite Wafer Type Swing Check Valves	4
4.0	Installation Instructions	6
5.0	Maintenance Requirements and Information	7
6.0	Check Rite and Spool Installation	8
7.0	Nameplates	8
	Serial Number	8
	Figure Number	8
8.0	Safety Warnings	9
9.0	Non Shock Pressure -Temperature Ratings	10
	Cast Iron (ASTM A126-CLB)	10
	Ductile Iron (ASTM A395)	10
	Carbon Steel (ASTM A216-WCB)	10
	Stainless Steel (ASTM A351-CF8M)	11

Illustrations

2" - 12" Series 125/150/300 Model 210	12
14" - 42" Series 125/150 Model 210	13
Stud Dimensions E-8 ANSI Series 125 - 1500	14
Spool Dimensions E-9 ANSI Series 125 / 150 / 300	15
2" - 12" Series 150 / 300 Model 262... .	16

1.0 Introduction to Check Rite Wafer Type Swing Check Valves

Modern piping applications demand better features, performance and economy in a check valve.

Features:

- Simplicity
- Compactness
- Minimum Weight

Performance Characteristics:

- Silent operation
- Non Slamming
- Rapid Response
- Low Pressure Drop
- Bubble Tight Shut-Off

A combination of these features and performance characteristics ensure long service life as characterized by Check Rite.

2.0 Description of Check Rite Valves.

Check Rite valves consist of a compact Body (1) with a single plate Disc (12) attached to a Hinge (2) which in turn is supported by a Hinge Pin (7) inside an off-center body cavity.

The Disc is mechanically biased to the closed position by a torsional Spring (5) located between the two hinge lugs. The Hinge Pin (7) is retained by two NPT Pipe Plugs (8) inside the Body (1). The Seat (3) can be:

- Metal to Metal
- Metal to Buna, Viton or Teflon

An Eyebolt (10) located on the top of the Check Rite valve aids for easy installation.

The Nameplate (11) located on the top pad specifies:

- Size
- Serial Number
- Figure Number (Pressure Class and Materials)
- Ritepro Corporation

Check Rite valves are designed to open when a pressure of less than 1 psi (.07 bar) is applied across the face of the Disc (12).

Check Rite valves are provided for installation inside the bolt circle and between standard flanges, using flat faced asbestos gaskets or as specified.

Check Rite valves are normally installed with the Eyebolt pointing vertically upwards in a horizontal run of pipe, with the arrow on the Body pointing in the direction of flow.

> For vertical pipe run applications, the flow direction is the only orientation required in a straight length of pipe.

All Check Rite valves are hydrostatically tested in accordance with MSS-SP-61 test procedures and zero leakage criteria.

In addition a "Zero Head Leakage" test is performed, where the Check Rite valves are placed in a horizontal position (see sketch) with the flow direction pointing vertically upwards.

An internal hydrostatic pressure equivalent to the head of water which can be retained within the downstream portion of the valve body is applied. During this one hour test, no leakage is allowed.

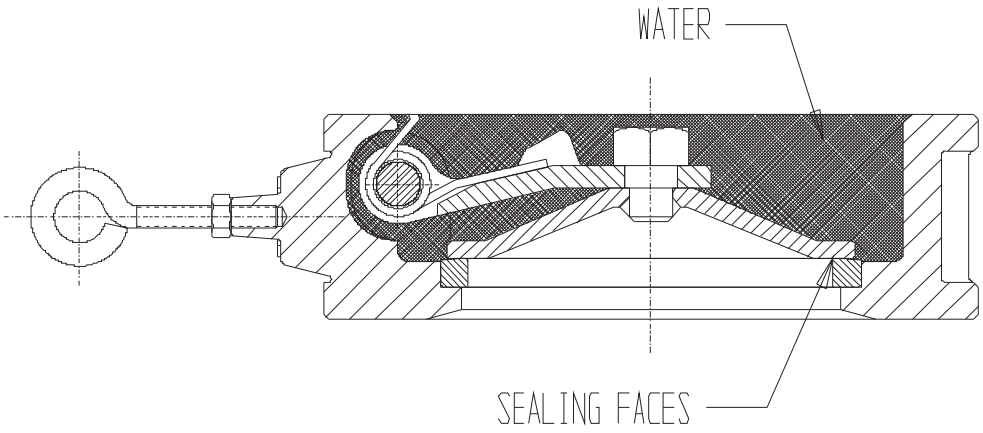

Check Rite valves are manufactured to high quality levels as specified in the applicable standards such as ANSI, MSS, API and CSA.

Check Rite valves in sizes 14" to 42" in classes 125 to 300 and all sizes in the higher pressure classes have a different Hinge-Disc connection which is illustrated on the applicable Specification Sheets.

The standard connection for small valves 2" to 12" classes 125 to 300 is a welded assembly, by means of a Shoulder Pin (4) passing through the Hinge (2) and Seal-welded to the Disc (12). In the larger sizes and higher pressure classes, the Disc (12) is assembled to the Hinge (2) with a Nut (15) and secured by welding.

A heavy duty Hinge (2) is available for valves sizes 2" to 24" in which the Disc (12) is attached to the Hinge (2) with a Nut (15) and a weld is used to secure the components. This is the Model 260-262 valve. All other dimensions, maintenance procedures, and O-Ring sizes apply as stated in this manual.

3.0 Dis-Assembly and Assembly Instructions for Check Rite Wafer Type Swing **Check Valves**

The simple design of the Check Rite valve permits for easy assembly and disassembly.

The following assembly procedure applies to all Check Rite valves.

To Dis-assemble the valve:

a) Place the Body (1) in a horizontal position with the disc assembly showing.
b) Remove the Plugs (8) on either side of the Body (1).
c) Hold the Spring (5) in position and slide the Pin (7) out of the Body (1).
d) Slowly release the pressure on the Spring (5) and remove it from the valve.
e) The Hinge-Disc Assembly can now be lifted from the Body (and disassembled, if required, on large sizes).
f) Remove the Spacers (6).
g) Remove the O-Ring (14) if required.

To re-assemble the valve:

a) Clean all parts with Varsol or other acceptable solvent.
b) Place the Body (1) in a horizontal position with the seating face pointing upwards.
c) If required, insert O-Ring (14) in the seat groove. (See next page for installation instructions).
d) Place the Hinge-Disc Assembly (2,12) in the body cavity.
e) Insert the Pin (7) through the plug hole on either side of the Body and slide a Spacer (6) in between the Body (1) and adjacent hinge lug.
f) Press Torsion Spring (5) between the hinge lugs and body cavity, then advance the Pin (7) through the Spring (5) and the second hinge lug.
g) Slide the second Spacer (6) between the Body and hinge lug and advance the Pin (7) into the Body (1).

Position the Hinge Pin (7) central to the valve body prior to the installation of the retaining Plugs (8).

h) Check that the torsion spring ends are seated properly.
i) Apply Teflon tape or sealing compound on retaining Plugs (8), install Plugs and tighten both sides with an Allen key.

j) **Check:**

aa) that the valve opens and closes freely.

bb) that adequate freedom of movement of the Shoulder Pin-Disc connection is provided for the disc to adapt a self-aligning position with the seat.

IMPORTANT-INSERT O-RING AS FOLLOWS

aa) Place O-Ring (14) on top of seat groove.

bb) To prevent looping, insert the O-Ring as shown by pressing the O-Ring into the groove in the following numerical sequence.

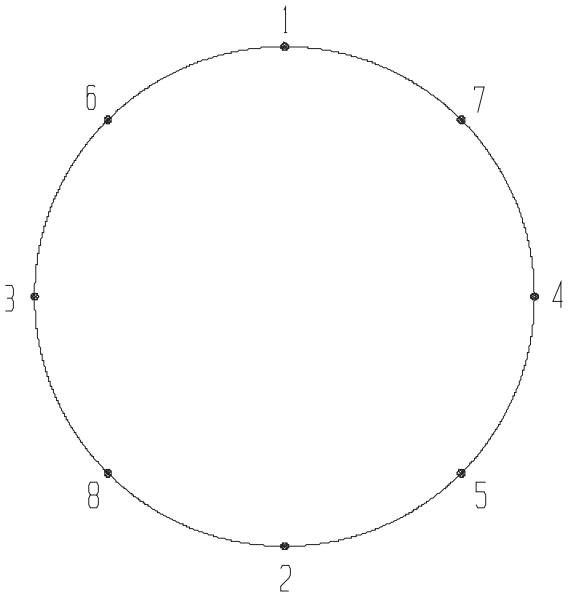

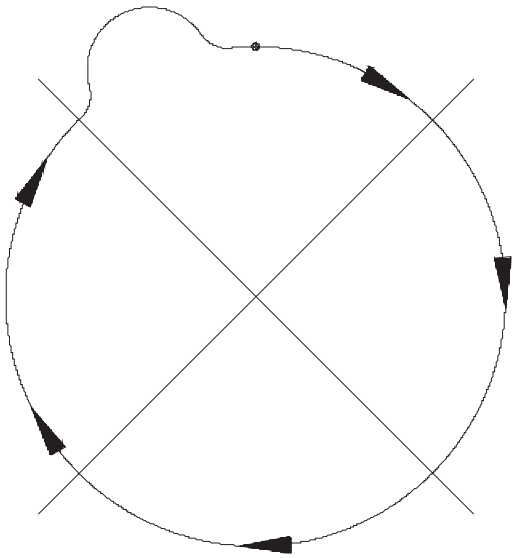

Right Wrong

cc) Having engaged the O-Ring in the groove according to the above illustration, proceed to smooth out the O-Ring using thumb pressure.

It is important to smooth out the O-Ring so that there are no visible ripples or loops.

It should be noted that the O-Ring groove is slightly larger than the O-Ring and it follows that the O-Ring must be hoop stretched to engage the groove.

4.0 Installation Instructions

The stud selection sheet (Specification Sheet E-8) shows the ease with which Check Rite valves are installed.

The valve is inserted between two companion flanges with gaskets on the contact faces. Studs are installed, which will span the valve, and tightened in the same manner as any flange connection.

The Check Rite valve outside diameter is designed to locate the valve in the same centerline as the companion flanges when mounted inside the studs.

The normal installation of a Check Rite valve is for horizontal flow with the hinge pin (7) in the horizontal upper position, or for vertical flow, with the flow direction upwards.

When removing a Check Rite valve from the line, only one half of the studs need to be removed and the others loosened.

IMPORTANT:

1) Check the flow arrow on the body before inserting the Check Rite valve between the flanges.

2) Pipeline flanges must be parallel and have the same pressure class rating as the valve.

3) There must be no obstructions in the flange or pipe bore as this would prevent the valve from opening fully.

If slip-on flanges are used, make sure that no weld projects into the pipe bore.

5.0 Maintenance Requirements and Information

No periodical maintenance work is required for Check Rite valves. For replacement of O-Rings refer to Section 3.0, "Assembly and Dis-assembly of Check Rite Valves".

The standard O-Ring numbers, Plug sizes and Allen key sizes for class 125/150/300 are listed below for valves 2"-42". For other classes, contact the factory.

Valve Size	*O-Ring Size S/N 82*	*O-Ring Size S/N 88*	*Plug Size NPT*	*Allen Key Size*
2"	127	128	1/4"	1/4"
2.5"	133	133	1/4"	1/4"
3"	141	141	3/8"	5/16"
4"	235	235	3/8"	5/16"
5"	243	242	3/8"	5/16"
6"	249	248	3/8"	5/16"
8"	260	259	1/2"	3/8"
10"	368	368	1/2"	3/8"
12"	448	447	3/4"	9/16"
14"	449		3/4"	9/16"
16"	453		3/4"	9/16"
18"	455		3/4"	9/16"
20"	458		1"	5/8"
24"	462		1"	5/8"
30"	471		1 1/2" *	1 1/4" *
36"	473		1 1/2" *	1 1/4" *
42"	3/8 x110"		2" *	1 5/16" *

* Square Head Plug

6.0 Check Rite and Spool Installation

As shown on Specification Sheet E-9, when a standard flanged valve is replaced with a wafer valve, a spool piece can be inserted with the Check Rite valve to obtain the required face to face dimension.

The installation instructions in Section 4.0 above apply.

7.0 Nameplates

Serial Number

The serial number gives the style of the valve internals and the date of manufacture of the valve.

The valve internals are based on either model 210 or 212. The first two digits of the serial number give the model.

82	Model 210
88	Model 212

For standard valves, the date of assembly is included in the Serial Number stamped on the nameplate attached to the valve. The last four digits of the serial number are the month and year of manufacture.

For UL/FM valves, the serial number is specified by UL and can be any numeric value. These valves are identified by the red paint and a special nameplate is used which includes the UL and FM logos. These valves are always based on Model 212.

A unique serial number is given to all special valves (not UL/FM). For special valves (including UL/FM) the month and year of manufacture are either stamped on the nameplate or on the exterior diameter of the flange, depending on valve size.

Figure Number

The figure number consists of at least five alphanumeric characters. The first two give the class of the valve. The next three give the principle materials of construction.

If the valve has a special model number, ie Model 260, this is stamped at the end of the code or if space prohibits this, then either underneath the code or on the outside diameter of the flange. The table on the following page explains the codes used.

UL/FM valves have either 212 or 312 for a figure number. The materials of construction are always cast iron body, buna seat, stainless internals and Teflon spacer. The applicable specification sheet gives more detailed information.

Valve Class	125	150	300	600	900	1500
Code	12	15	30	60	90	150

Body Material	Cast Iron	Ductile Iron	Steel	Stainless Steel
Code	C	D	S	X

Seat Material	Buna N	EPDM	Stainless Steel	Viton
Code	B	E	M	V

Spacer Material	Teflon	Bronze	Stainless Steel
Code	T	Y	Z

For example a class 150 check valve with a ductile iron body, stainless steel seat and Teflon spacers would be stamped: **15DMT**

8.0 Safety Warnings

1. The valve must be installed in the correct line size between flanges of the correct class.
2. The valve materials of construction must be compatible with the fluids being handled.
3. Pressures and temperatures must be kept within the limits specified by the appropriate ANSI standard, ie: B16.1, B16.34, B16.42, or within the limits specified by the particular design. These values are given on the following pages.
4. An arrow on the body indicates the direction of flow through the valve. The valve must be installed with the arrow pointing in the correct direction.
5. For flow in the horizontal direction, the valve shall be installed with the Pin in the horizontal upper position with the eye bolt pointing vertically upwards.
6. The valve must be installed in the correct location in the pipeline. The disc must not open into or against other piping components such as valves, elbows, or tees. For the best performance and life of the valve, a minimum of 10 pipe diameters of straight pipe upstream and downstream of the valve is suggested. Any reduction in this length upstream of the valve reduces the life of the valve proportionally.
7. Plugs must not be removed from the valve while the pipeline is under pressure.
8. Flow rates must be within acceptable limits. Too high a rate may cause extreme pressure drops and erosion of the components. Too low a flow may cause the disc assembly to oscillate and cause wear which may lead to premature failure of the internals.
9. Care should be taken in handling the valve. Mishandling may lead to damage of the sealing components or damage to the externals.
10. Disturbed flow will reduce greatly the life of the valve. Best practice should have 5 straight pipe diameter upstream and 3 downstream.

9.0 Non Shock Pressure -Temperature Ratings

All temperatures in °F and pressures in psi.

Cast Iron (ASTM A126-CLB) **Ratings from ANSI B16.1.**
Class 125

	Temperature											
Size	**-20 to 150**	**200**	**225**	**250**	**275**	**300**	**325**	**353**	**375**	**406**	**425**	**450**
1"-12"	200	190	180	175	170	165	155	150	145	140	130	125
14"-24"	150	135	130	125	120	110	105	100				
28" to 48"	150	115	100	85	65	50						

Ductile Iron *(ASTM A395)* ***Ratings from ANSI B16.42.***
Class 150

	Temperature						
Size	**-20 to 100**	**200**	**300**	**400**	**500**	**600**	**650**
2"-42"	250	235	215	200	170	140	125

Carbon Steel *(ASTM A216-WCB)*
Ratings from ANSI B16.34.
Permissible, but not recommended for prolonged usage above about 800°F.

	Pressure Class				
Temperature	**150**	**300**	**600**	**900**	**1500**
-20 to 100	285	740	1480	2220	3705
200	260	675	1350	2025	3375
300	230	655	1315	1970	3278
400	200	635	1270	1900	3170
500	170	600	1200	1795	2995
600	140	550	1095	1640	2735
650	125	535	1075	1610	2685
700	110	535	1065	1600	2665
750	95	505	1010	1510	2520
800	80	410	825	1235	2060
850	65	270	535	805	1340
900	50	170	345	515	860
950	35	105	205	310	515
1000	20	50	105	155	260

Stainless Steel *(ASTM A351-CF8M)*
Ratings from ANSI B16.34.

	Pressure Class				
Temperature	**150**	**300**	**600**	**900**	**1500**
-20 to 100	275	720	1440	2160	3600
200	240	620	1240	1860	3095
300	215	560	1120	1680	2795
400	195	515	1030	1540	2570
500	170	480	955	1435	2390
600	140	450	905	1355	2255
650	125	445	890	1330	2220
700	110	430	865	1295	2160
750	95	425	845	1270	2110
800	80	415	830	1245	2075
850	65	405	810	1215	2030
900	50	395	790	1180	1970
950	35	385	775	1160	1930
1000	20	365	725	1090	1820
1050		360	720	1080	1800
1100		325	645	965	1610
1150		275	550	825	1370
1200		205	410	620	1030
1250		180	365	545	910
1300		140	275	410	685
1350		105	205	310	515
1400		75	150	225	380
1450		60	115	175	290
1500		40	85	125	205

Illustrations

2" - 12" Series 125/150/300 Model 210
14" - 42" Series 125/150 Model 210
Stud Dimensions E-8 ANSI Series 125 - 1500
Spool Dimensions E-9 ANSI Series 125 / 150 / 300
ANSI Series 150/300 Model 262

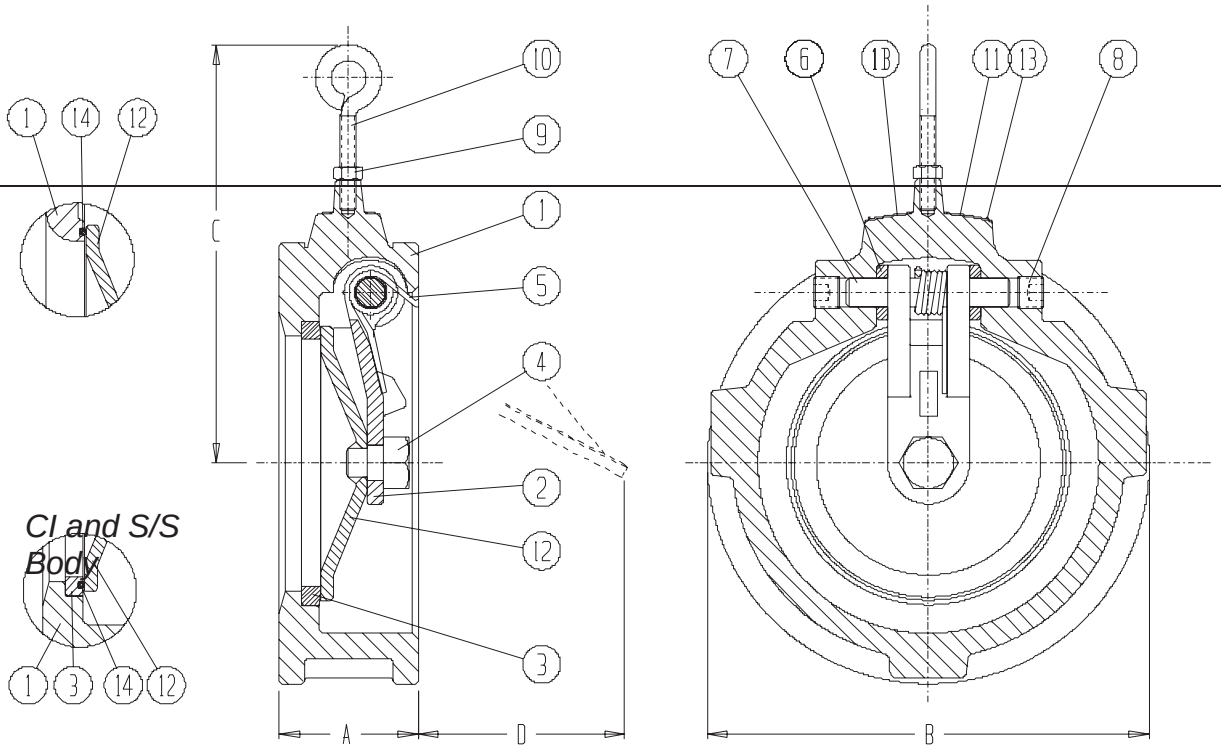

CI and S/S Body

DI and Steel Body

Item	Description	Standard Material
1	Body	ASTM A216-WCB
2	Hinge	ASTM A351-CF8M
3	Seat	ASTM A351-CF8
4	Shoulder Pin	ASTM A479-316
5	Spring	ASTM A313-316
6	Spacer	ASTM A479-316, Teflon
7	Pin	ASTM A479-316

Item	Description	Standard Material
8	Plug	Steel
9	Lock Nut	Steel Zinc Plated
10	Eye Bolt	Steel Zinc Plated
11	Name Plate	Aluminium
12	Disc	ASTM A240-316
13	Rivet	Steel Cad. Plated
14	O-Ring	Buna N, Viton, Teflon

Other body materials available: A126-CLB, A395, A351-CF8M, Monel, Alloy 20, Hastelloy, 254SMO.

Nominal Pipe Size		A		B Class 125/150		B Class 300		C		D		Weight	
Inch	mm	Inch	mm	Inch	mm	Inch	mm	Inch	mm	Inch	mm	lbs	kg
2	50	1.75 *	44.5	4.13	104.8	4.38	111.1	4.25	108	1.19	30	3.5	1.6
2 1/2	65	1.88 *	47.6	4.88	123.8	5.13	130.2	4.50	114	1.50	38	5.0	2.3
3	80	2.00 *	50.8	5.38	136.5	5.88	149.2	5.00	127	1.69	43	6.5	2.9
4	100	2.25	57.2	6.88	174.6	7.13	181.0	5.75	146	2.44	62	11	5.0
5	125	2.50	63.5	7.75	196.9	8.50	215.9	6.50	165	3.38	86	15	6.8
6	150	2.75	69.9	8.75	222.3	9.88	250.8	7.25	184	4.25	108	20	9.0
8	200	2.88	73.0	11.00	279.4	12.13	308.0	8.25	210	5.38	136	30	13.6
10	250	3.13	79.4	13.38	339.7	14.25	362.0	9.63	244	7.00	178	47	21.3
12	300	3.38	85.7	16.13	409.6	16.63	422.3	10.75	273	8.13	206	70	32

* Face to face for Cast Iron Class 125: 2": 2.13"
2½": 2.38"
3": 2.63"

Ritepro Corporation
A Subsidiary of Bray International, Inc

STANDARD SPECIFICATION SHEET
Check Rite Wafer Check Valves A-5
Series 125/150 Model 210
Date: 28 August 2001

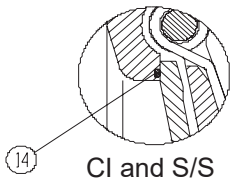

CI and S/S Body

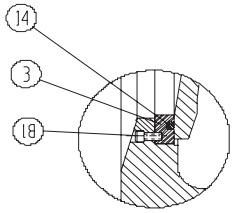

DI and Steel Body

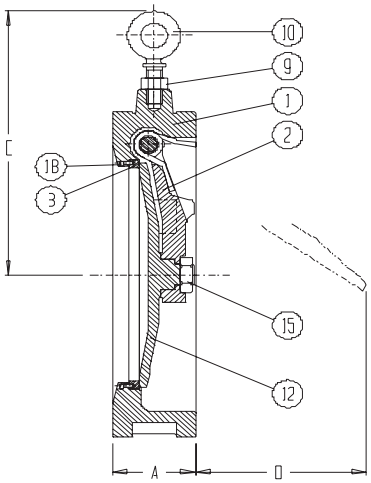

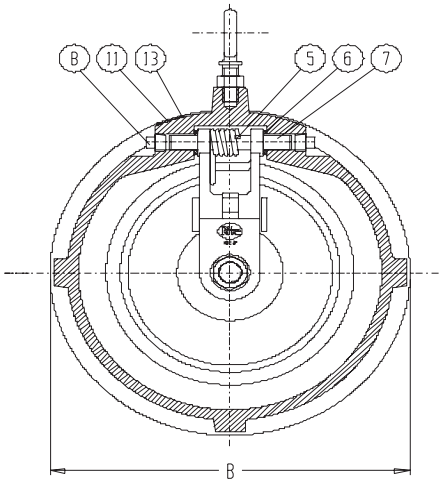

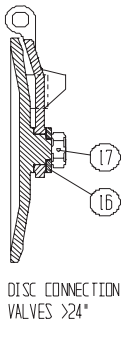

Item	Description	Standard Material
1	Body	ASTM A216-WCB *
2	Hinge	ASTM A216-WCB
3	Seat	ASTM A240-304
5	Spring	17-7PH Stainless
6	Spacer	ASTM A479-316
7	Pin	ASTM A479-316
8	Plug	Steel
9	Lock Nut	Steel Zinc Plated
10	Eye Bolt	Steel Zinc Plated

Item	Description	Standard Material
11	Name Plate	Aluminium
12	Disc	ASTM A351-CF8 **
13	Rivet	Steel Cad. Plated
14	O-Ring	Buna N, Viton, Teflon
15	Disc Nut	Steel
16	Disc Washer	Steel
17	Dowel Pin	Steel
18	SHCS	Steel

** 32" & Larger: A216-WCB with 304 overlay.

*Other body materials available: A126-CLB, A395, A351-CF8M, Monel, Alloy 20, Hastelloy, 254SMO.

Nominal Pipe Size		A		B		C		D		Weight	
Inch	*mm*	*Inch*	*mm*	*Inch*	*mm*	*Inch*	*mm*	*Inch*	*mm*	*lbs*	*kg*
14	*350*	*4.25*	*108.*	*17.6*	*447.*	*13.0*	*330*	*7.25*	*184*	*115*	*52*
16	*400*	*4.25*	*108.*	*20.1*	*511.*	*14.5*	*368*	*8.25*	*210*	*130*	*59*
18	*450*	*4.25*	*108.*	*21.5*	*546.*	*15.2*	*387*	*10.5*	*267*	*170*	*77*
20	*500*	*5.50*	*139.*	*23.7*	*603.*	*18.7*	*476*	*11.0*	*280*	*230*	*104*
24	*600*	*6.00*	*152.*	*28.1*	*714.*	*20.5*	*520*	*15.0*	*381*	*415*	*188*
28	*700*	*6.50*	*165.*	*32.5*	*825.*	*26.1*	*664*	*17.7*	*451*	*519*	*235*
30	*750*	*9.00*	*228.*	*34.6*	*879.*	*27.5*	*698*	*16.2*	*412*	*965*	*438*
32	*800*	*11.0*	*279.*	*36.7*	*933.*	*28.2*	*718*	*14.0*	*356*	*1150*	*522*
36	*900*	*11.5*	*292.*	*41.1*	*1044*	*30.0*	*762*	*18.2*	*464*	*1525*	*692*
42	*1050*	*12.0*	*304.*	*47.8*	*1216*	*33.2*	*844*	*28.0*	*712*	*2235*	*1014*

Ritepro Corporation
A Subsidiary of Bray International, Inc

STANDARD SPECIFICATION SHEET
Stud Dimensions E-8
ANSI Series 125 - 1500
Date: 20 April 2001

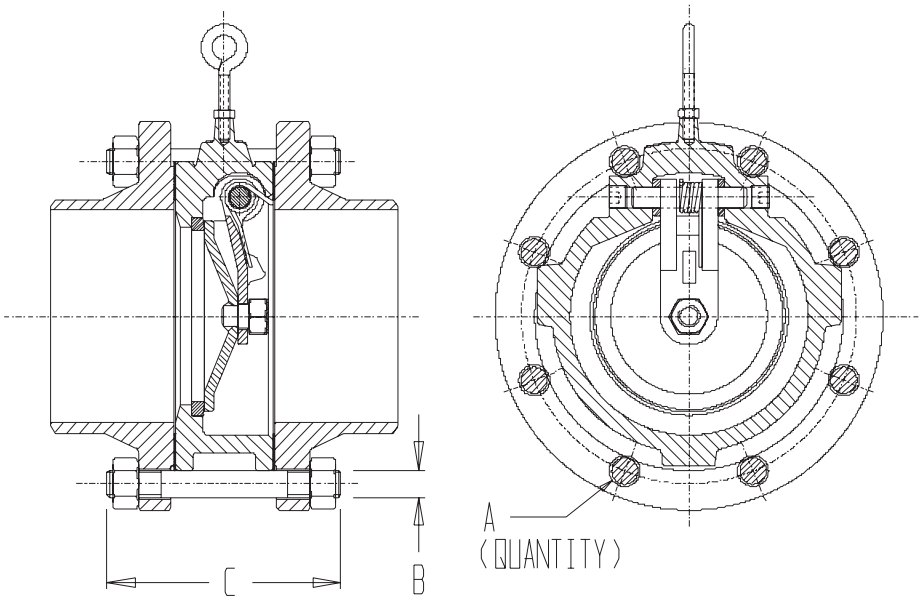

Nominal Pipe Size		Series 125 & 150			Series 250 & 300			Series 400		
		A	Stud Size B*C		A	Stud Size B*C		A	Stud Size B*C	
Inch	mm	Studs	Inch	mm	Studs	Inch	mm	Studs	Inch	mm
2	50	4	5/8*4.75	16*20	8	5/8*5.00	16*130	8	5/8*6.50	16*165
2 1/2	65	4	5/8*5.25	16*135	8	3/4*5.75	20*145	8	3/4*7.25	20*185
3	80	4	5/8*5.50	16*140	8	3/4*6.00	20*155	8	3/4*7.75	20*200
4	100	8	5/8*5.75	16*145	8	3/4*6.50	20*165	8	7/8*8.50	22*220
5	125	8	3/4*6.25	20*160	8	3/4*7.00	20*180			
6	150	8	3/4*6.50	20*165	12	3/4*7.50	20*190	12	7/8*11 .25	22*285
8	200	8	3/4*7.00	20*180	12	7/8*8.25	22*210	12	1*13.00	24*330
10	250	12	7/8*7.75	22*200	16	1*9.25	24*235	16	1 1/8*15.75	28*400
12	300	12	7/8*8.00	22*205	16	1 1/8*10.00	28*255	16	1 1/4*17.00	32*435
14	350	12	1*9.25	24*235	20	1 1/8*14.00	28*280			
16	400	16	1*9.50	24*245	20	1 1/4*14.75	32*295			
18	450	16	1 1/8*10.25	28*260	24	1 1/4*15.50	32*300			
20	500	20	1 1/8*11.50	28*295	24	1 1/4*16.75	32*345			
24	600	20	1 1/4*12.75	32*325	24	1 1/2*17.75	38*385			
30	750	28	1 1/4*18.00	32*460						
36	900	32	1 1/2*19.50	38*495						
42	1050	36	1 1/2*20.50	38*520						

Nominal Pipe Size		Series 600			Series 900			Series 1500		
		A	Stud Size B*C		A	Stud Size B*C		A	Stud Size B*C	
Inch	mm	Studs	Inch	mm	Studs	Inch	mm	Studs	Inch	mm
2	50	8	5/8*6.50	16*165	8	7/8*9.50	22*245	8	7/8*9.50	22*245
2 1/2	65	8	3/4*7.25	20*185	8	1*9.50	24*245	8	1*9.50	24*245
3	80	8	3/4*7.75	20*200	8	7/8*9.00	22*230	8	1 1/8*10.25	28*260
4	100	8	7/8*8.75	22*225	8	1 1/8*10.75	28*275	8	1 1/4*11.75	32*300
6	150	12	1*12.00	24*305	12	1 1/8*14.00	28*360	12	1 3/8*16.50	35*420
8	200	12	1 1/8*14.00	28*360	12	1 3/8*16.75	35*425	12	1 5/8*19.50	35*495
10	250	16	1 1/4*16.75	32*425	16	1 3/8*18.75	35*480	12	1 7/8*23.50	48*600
12	300	20	1 1/4*17.50	32*435	20	1 3/8*21.50	35*545	16	2*27.00	50*685

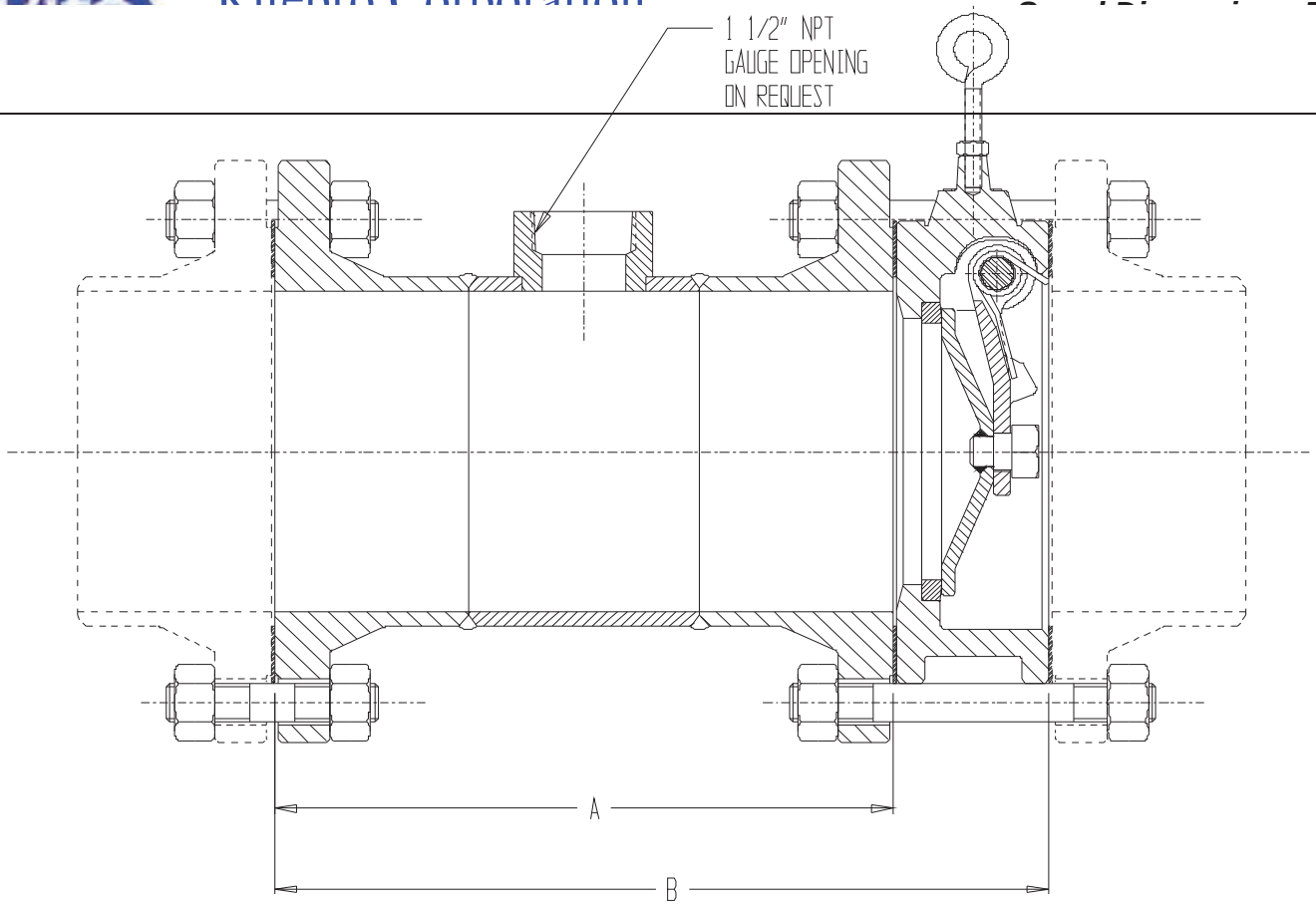

Nominal Pipe Size		Series 150				Series 300			
		A		B		A		B	
Inch	mm	Inch	mm	Inch	mm	Inch	mm	Inch	mm
2	50	6.19*	157*	8.0	203	8.69	221	10.5	267
2 1/2	65	6.56*	167*	8.5	216	9.56	243	11.5	292
3	80	7.44*	189*	9.5	241	10.44	265	12.5	318
4	100	9.19	233	11.5	292	11.69	297	14.0	356
5	125	10.44	265	13.0	330	13.19	335	15.75	400
6	150	11.19	284	14.0	356	14.69	373	17.5	445
8	200	16.56	421	19.5	495	18.06	459	21.0	533
10	250	21.31	541	24.5	622	21.31	541	24.5	622
12	300	24.06	611	27.5	699	24.56	624	28.0	711
14	350	26.69	678	31.0	787	25.69	652	33.0	838
16	400	29.69	754	34.0	864	26.44	672	34.0	864
18	450	34.19	868	38.5	978	30.44	773	38.5	978
20	500	32.94	837	38.5	978	31.31	795	40.0	1016
24	600	44.96	1141	51.0	1295	44.18	1122	53.0	1346
30	750	50.94	1294	60.0	1524				
36	900	65.44	1662	77.0	1956				

Dimension "B" corresponds to ANSI B16.10.

Nominal Pipe Size	Series 125	
	A	
Inch	Inch	mm
2	5.81	148
2 1/2	6.06	154
3	6.81	173

Remaining dimensions same as Series 150.

Ritepro Corporation
A Subsidiary of Bray International, Inc

STANDARD SPECIFICATION SHEET
Check Rite Wafer Type Swing Check Valve
ANSI Series 150/300 Model 262
Date: 21 April 2005

Designed to meet ANSI 16.34.

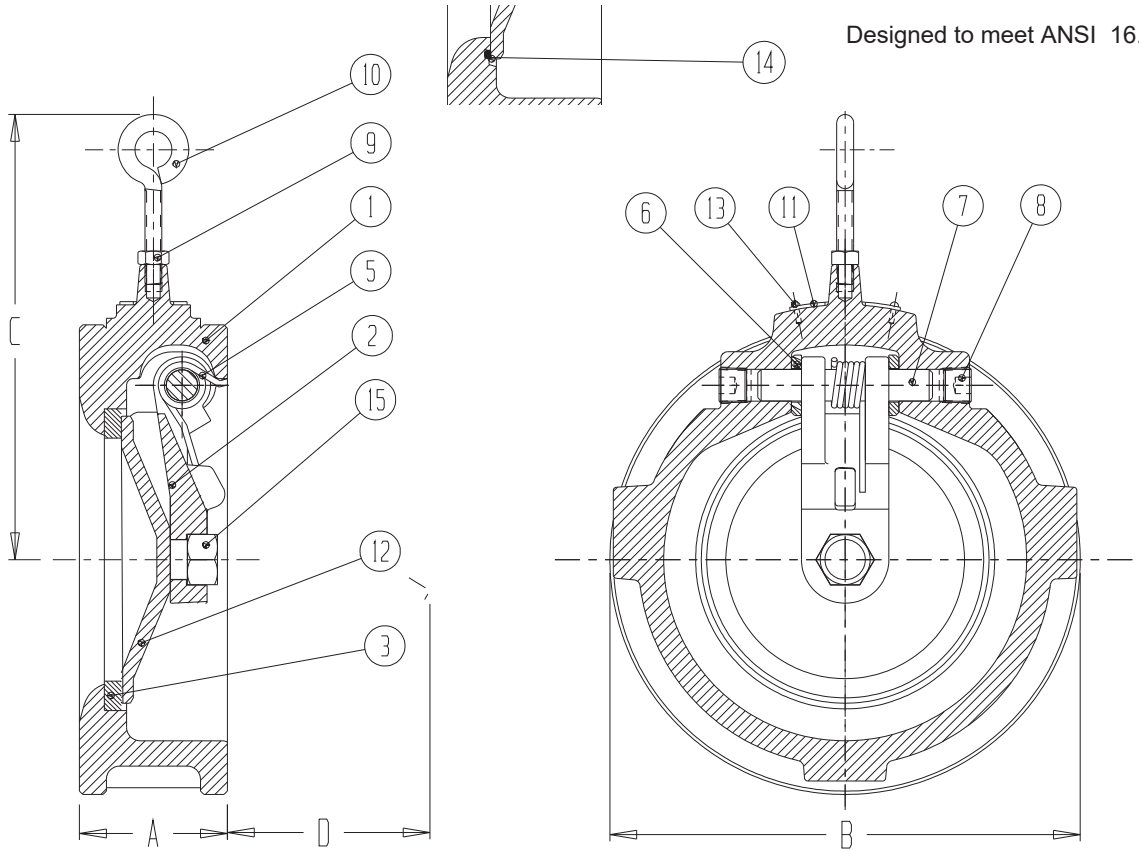

Item	Description	Standard Material
1	Body	ASTM A216-WCB
		ASTM A351-CF8M
		ASTM A395
2	Hinge	ASTM A351-CF8M
3	Seat	ASTM A240-304
5	Spring	ASTM A313-316
6	Spacer	ASTM A479-316
		TEFLON
7	Pin	ASTM A479-316

Item	Description	Standard Material
8	Plug	Steel
9	Lock Nut	Steel Zinc Plated
10	Eye Bolt	Steel Zinc Plated
11	Name Plate	Aluminium
12	Disc	ASTM A351-CF8M
13	Rivet	Steel Cad. Plated
14	O'ring	Buna, Viton , Teflon
15	Disc Nut	Stainless Steel

Nominal Pipe Size		A		B Class 150		B Class 300		C		D		Weight	
Inch	mm	Inch	mm	Inch	mm	Inch	mm	Inch	mm	Inch	mm	lbs	kg
2	50	1.75	44.5	4.13	104.8	4.38	111.1	4.25	108	1.19	30	3.5	1.6
2 1/2	65	1.88	47.6	4.88	123.8	5.13	130.2	4.50	114	1.50	38	5.0	2.3
3	80	2.00	50.8	5.38	136.5	5.88	149.2	5.00	127	1.69	43	6.5	2.9
4	100	2.25	57.2	6.88	174.6	7.13	181.0	5.75	146	2.44	62	11.6	5.3
5	125	2.50	63.5	7.75	196.9	8.50	215.9	6.50	165	3.38	86	15.5	7.0
6	150	2.75	69.9	8.75	222.3	9.88	250.8	7.25	184	4.25	108	20.6	9.4
8	200	2.88	73.0	11.00	279.4	12.13	308.0	8.25	210	5.38	136	33.0	15.0
10	250	3.13	79.4	13.38	339.7	14.25	362.0	9.63	244	7.00	178	48.5	22.0
12	300	3.38	85.7	16.13	409.6	16.63	422.3	10.75	273	8.13	206	72.8	33

CS-999-030 : Identification sheet

VWTC PROJECT NUMBER:	Iqaluit WWTP	REV:	02
PROJECT NAME:	5000218036	SUBMITTED TO (COMPANY):	
ENGINEER:	F.VINCI	SUBMITTED TO (RESPONSIBLE)	
PROJECT MANAGER:	C. BEKAERT	PROJECT NUM REFERENCE.:	
PHONE NUMBER:		LOT NUMBER:	

SUPPLIER	EQPT CODE	EQPT TAG NO	DIA	DESCRIPTION	INFO 1	INFO 2	INFO 3	APPLIC.	NOTE	REV
BRAY	ST-999-030	BFV-02-309		CONTROL VALVE SPIDFLOW	MODULATING VALVE // 311200-11011390 12 in. BRAY SERIES 31 BUTTERFLY VALVE , 50 PSI CLOSURE, DUCTILE IRON BODY, DUCTILE CAST IRON, NYLON 11 COATED, 416SS SHAFT, Buna-N SEAT, // F / O, FAIL OPEN ACTUATOR	922100-11300532, S92 / 210 PNEUM ACT- 50MM KEYED // 6A1600-24610536, MTG KIT, S6A POS TO S92-160 / 210 // 6DR5220-0EN000AA0, E / P, 2-4W, HART, 9C5500-74603536, S55 FILTER REG WITH MTG KIT				2
BRAY	ST-999-030	BFV-02-310		CONTROL VALVE SPIDFLOW	MODULATING VALVE // 311200-11011390 12 in. BRAY SERIES 31 BUTTERFLY VALVE , 50 PSI CLOSURE, DUCTILE IRON BODY, DUCTILE CAST IRON, NYLON 11 COATED, 416SS SHAFT, Buna-N SEAT, // F / O, FAIL OPEN ACTUATOR	922100-11300532, S92 / 210 PNEUM ACT- 50MM KEYED // 6A1600-24610536, MTG KIT, S6A POS TO S92-160 / 210 // 6DR5220-0EN000AA0, E / P, 2-4W, HART, 9C5500-74603536, S55 FILTER REG WITH MTG KIT				2
BRAY	ST-999-030	BFV-02-329		CONTROL VALVE SPIDFLOW	MODULATING VALVE // 311200-11011390 12 in. BRAY SERIES 31 BUTTERFLY VALVE , 50 PSI CLOSURE, DUCTILE IRON BODY, DUCTILE CAST IRON, NYLON 11 COATED, 416SS SHAFT, Buna-N SEAT, // F / O, FAIL OPEN ACTUATOR	922100-11300532, S92 / 210 PNEUM ACT- 50MM KEYED // 6A1600-24610536, MTG KIT, S6A POS TO S92-160 / 210 // 6DR5220-0EN000AA0, E / P, 2-4W, HART, 9C5500-74603536, S55 FILTER REG WITH MTG KIT				2

SUPPLIER	EQPT CODE	EQPT TAG NO	DIA	DESCRIPTION	INFO 1	INFO 2	INFO 3	APPLIC.	NOTE	REV
BRAY	ST-999-030	BFV-02-330		CONTROL VALVE SPIDFLOW	MODULATING VALVE // 311200-11011390 12 in. BRAY SERIES 31 BUTTERFLY VALVE , 50 PSI CLOSURE, DUCTILE IRON BODY, DUCTILE CAST IRON, NYLON 11 COATED, 416SS SHAFT, Buna-N SEAT, // F / O, FAIL OPEN ACTUATOR	922100-11300532, S92 / 210 PNEUM ACT- 50MM KEYED // 6A1600-24610536, MTG KIT, S6A POS TO S92-160 / 210 // 6DR5220-0EN000AA0, E / P, 2-4W, HART,9C5500-74603536, S55 FILTER REG WITH MTG KIT				2

CS-999-005 : Identification sheet

VWTC PROJECT NUMBER:	Iqaluit WWTP	REV:	02
PROJECT NAME:	5000218036	SUBMITTED TO (COMPANY):	
ENGINEER:	F.VINCI	SUBMITTED TO (RESPONSIBLE)	
PROJECT MANAGER:	C. BEKAERT	PROJECT NUM REFERENCE.:	
PHONE NUMBER:		LOT NUMBER:	

SUPPLIER	EQPT CODE	EQPT TAG NO	DIA	DESCRIPTION	INFO 1	INFO 2	INFO 3	APPLIC.	NOTE	REV
BRAY	ST-999-005	BFV-02-625		ON-OFF WHITE WATER VALVE	ON/OFF WHITE WATER VALVE, 3 INCHES BRAY SERIE 31 BUTTERFLY VALVE, MAXIMUM PRESSURE, DUCTILE CAST IRON BODY, DUCTILE CAST IRON DISC, NYLON 11 CAST, 416SS SHAFT, Buna-N SEAT//	Item 700061-113DA536 ELECTRICAL ACTUATOR,120V N4,600 IN-LB,30S,IRB // Item 7070A1-22600536 S70 ADAPTER KIT-70A1 // Item 70A000-22901536 SW KIT - AUX O/C SWITCHES	WITH CRN			2
BRAY	ST-999-005	BFV-02-645		ON-OFF WHITE WATER VALVE	ON/OFF WHITE WATER VALVE, 3 INCHES BRAY SERIE 31 BUTTERFLY VALVE, MAXIMUM PRESSURE, DUCTILE CAST IRON BODY, DUCTILE CAST IRON DISC, NYLON 11 CAST, 416SS SHAFT, Buna-N SEAT	Item 700061-113DA536 ELECTRICAL ACTUATOR,120V N4,600 IN-LB,30S,IRB // Item 7070A1-22600536 S70 ADAPTER KIT-70A1 // Item 70A000-22901536 SW KIT - AUX O/C SWITCHES	WITH CRN			2

CS-999-006 : Identification sheet

VWTC PROJECT NUMBER:	Iqaluit WWTP	REV:	02
PROJECT NAME:	5000218036	SUBMITTED TO (COMPANY):	
ENGINEER:	F.VINCI	SUBMITTED TO (RESPONSIBLE)	
PROJECT MANAGER:	C. BEKAERT	PROJECT NUM REFERENCE.:	
PHONE NUMBER:		LOT NUMBER:	

SUPPLIER	EQPT CODE	EQPT TAG NO	DIA	DESCRIPTION	INFO 1	INFO 2	INFO 3	APPLIC.	NOTE	REV
BRAY	ST-999-006	BFV-02-511		ON-OFF SCREEN INLET VALVE	ON/OFF VALVE STRAINER INLET // 310400-11010390, 4 in. BRAY SERIES 31 BUTTERFLY VALVE, MAXIMUM PRESSURE, DUCTILE IRON BODY, DUCTILE CAST IRON, NYLON 11 COATED, 416SS SHAFT, Buna-N SEAT,	Item 700061-113DA536 ELECTRICAL ACTUATOR,120V N4,600 IN-LB,30S,IRB // Item 7070B1-22600536 S70 ADAPTER KIT-70B1 // Item 70A000-22901536 SW KIT - AUX O/C SWITCHES		WITH CRN		2
BRAY	ST-999-006	BFV-02-521		ON-OFF SCREEN OUTLET VALVE	ON/OFF VALVE STRAINER INLET // 310400-11010390, 4 in. BRAY SERIES 31 BUTTERFLY VALVE, MAXIMUM PRESSURE, DUCTILE IRON BODY, DUCTILE CAST IRON, NYLON 11 COATED, 416SS SHAFT, Buna-N SEAT,	Item 700061-113DA536 ELECTRICAL ACTUATOR,120V N4,600 IN-LB,30S,IRB // Item 7070B1-22600536 S70 ADAPTER KIT-70B1 // Item 70A000-22901536 SW KIT - AUX O/C SWITCHES		WITH CRN		2
BRAY	ST-999-006	BFV-02-531		ON-OFF SCREEN INLET VALVE	ON/OFF VALVE STRAINER INLET // 310400-11010390, 4 in. BRAY SERIES 31 BUTTERFLY VALVE, MAXIMUM PRESSURE, DUCTILE IRON BODY, DUCTILE CAST IRON, NYLON 11 COATED, 416SS SHAFT, Buna-N SEAT,	Item 700061-113DA536 ELECTRICAL ACTUATOR,120V N4,600 IN-LB,30S,IRB // Item 7070B1-22600536 S70 ADAPTER KIT-70B1 // Item 70A000-22901536 SW KIT - AUX O/C SWITCHES		WITH CRN		2
BRAY	ST-999-006	BFV-02-541		ON-OFF SCREEN OUTLET VALVE	ON/OFF VALVE STRAINER INLET // 310400-11010390, 4 in. BRAY SERIES 31 BUTTERFLY VALVE, MAXIMUM PRESSURE, DUCTILE IRON BODY, DUCTILE CAST IRON, NYLON 11 COATED, 416SS SHAFT, Buna-N SEAT,	Item 700061-113DA536 ELECTRICAL ACTUATOR,120V N4,600 IN-LB,30S,IRB // Item 7070B1-22600536 S70 ADAPTER KIT-70B1 // Item 70A000-22901536 SW KIT - AUX O/C SWITCHES		WITH CRN		2

CS-999-016 : Identification sheet

VWTC PROJECT NUMBER:	Iqaluit WWTP	REV:	02
PROJECT NAME:	5000218036	SUBMITTED TO (COMPANY):	
ENGINEER:	F.VINCI	SUBMITTED TO (RESPONSIBLE)	
PROJECT MANAGER:	C. BEKAERT	PROJECT NUM REFERENCE.:	
PHONE NUMBER:		LOT NUMBER:	

SUPPLIER	EQPT CODE	EQPT TAG NO	DIA	DESCRIPTION	INFO 1	INFO 2	INFO 3	APPLIC.	NOTE	REV
BRAY	ST-999-016	BFV-02-165 BFV-02-166 BFV-02-170 BFV-02-171 BFV-02-172 BFV-02-365 BFV-02-366 BFV-02-370 BFV-02-371 BFV-02-372		DAF ISOLATION AIR	310200-1101030A // 2 in. BRAY SERIES 31 BUTTERFLY VALVE LUG, MAXIMUM PRESSURE, DUCTILE CAST IRON BODY, DUCTILE CAST IRON, COATED WITH NYLON 11, SHAFT IN 416SS, Buna-N SEAT	010200-21100007 HANDLE KIT (EDI) 2-3"				2
BRAY	ST-999-016	BFV-02-167 BFV-02-367		DAF CLARIFIED WATER DRAIN	310200-1101030A // 2 in. BRAY SERIES 31 BUTTERFLY VALVE LUG, MAXIMUM PRESSURE, DUCTILE CAST IRON BODY, DUCTILE CAST IRON, COATED WITH NYLON 11, SHAFT IN 416SS, Buna-N SEAT	010200-21100007 HANDLE KIT (EDI) 2-3"				2

CS-999-008 : Identification sheet

VWTC PROJECT NUMBER:	Iqaluit WWTP	REV:	02
PROJECT NAME:	5000218036	SUBMITTED TO (COMPANY):	
ENGINEER:	F.VINCI	SUBMITTED TO (RESPONSIBLE)	
PROJECT MANAGER:	C. BEKAERT	PROJECT NUM REFERENCE.:	
PHONE NUMBER:		LOT NUMBER:	

SUPPLIER	EQPT CODE	EQPT TAG NO	DIA	DESCRIPTION	INFO 1	INFO 2	INFO 3	APPLIC.	NOTE	REV
BRAY	ST-999-008	BFV-02-400 BFV-02-415 BFV-02-430 BFV-02-450 BFV-02-465 BFV-02-480		WHITE WATER PUMP MANUAL ISOLATION VALVE	310300-1101030A S31 3" DI,NDI,416,BUNA 3 in. BRAY SERIES 31 BUTTERFLY VALVE LUG TYPE, FULL RATED, DUCTILE IRON BODY, NYLON 11 COATED DUCTILE IRON DISC, 416SS SHAFT, Buna-N SEAT,	Item 010200-21100 007 HANDLE KIT (EDI) 2-3" WITH CRN				2
BRAY	ST-999-008	BFV-02-168 BFV-02-368		INLET WHITE WATER MANUAL ISOLATION VALVE	310300-1101030A S31 3" DI,NDI,416,BUNA 3 in. BRAY SERIES 31 BUTTERFLY VALVE LUG TYPE, FULL RATED, DUCTILE IRON BODY, NYLON 11 COATED DUCTILE IRON DISC, 416SS SHAFT, Buna-N SEAT,	Item 010200-21100 007 HANDLE KIT (EDI) 2-3" WITH CRN				2

CS-999-009 : Identification sheet

VWTC PROJECT NUMBER:	Iqaluit WWTP	REV:	02
PROJECT NAME:	5000218036	SUBMITTED TO (COMPANY):	
ENGINEER:	F.VINCI	SUBMITTED TO (RESPONSIBLE)	
PROJECT MANAGER:	C. BEKAERT	PROJECT NUM REFERENCE.:	
PHONE NUMBER:		LOT NUMBER:	

SUPPLIER	EQPT CODE	EQPT TAG NO	DIA	DESCRIPTION	INFO 1	INFO 2	INFO 3	APPLIC.	NOTE	REV
BRAY	ST-999-009	BFV-02-406		ISOLATION WHITE WATER VALVE	310400-1101030A // 4 in. BRAY SERIES 31 BUTTERFLY VALVE EAR TYPE, MAXIMUM PRESSURE, DUCTILE IRON BODY, DUCTILE CAST IRON, NYLON 11 COVER, 416SS SHAFT, Buna-N SEAT,	010400-21100007 HANDLE KIT (EDI) 4"// 020400-70050529 HANDLE LOCKING PLATE 4", BRAY PADLOCK KIT // CRN# REQUIRED				2
BRAY	ST-999-009	BFV-02-421		ISOLATION WHITE WATER VALVE	310400-1101030A // 4 in. BRAY SERIES 31 BUTTERFLY VALVE EAR TYPE, MAXIMUM PRESSURE, DUCTILE IRON BODY, DUCTILE CAST IRON, NYLON 11 COVER, 416SS SHAFT, Buna-N SEAT,	010400-21100007 HANDLE KIT (EDI) 4"// 020400-70050529 HANDLE LOCKING PLATE 4", BRAY PADLOCK KIT // CRN# REQUIRED				2
BRAY	ST-999-009	BFV-02-436		ISOLATION WHITE WATER VALVE	310400-1101030A // 4 in. BRAY SERIES 31 BUTTERFLY VALVE EAR TYPE, MAXIMUM PRESSURE, DUCTILE IRON BODY, DUCTILE CAST IRON, NYLON 11 COVER, 416SS SHAFT, Buna-N SEAT,	010400-21100007 HANDLE KIT (EDI) 4"// 020400-70050529 HANDLE LOCKING PLATE 4", BRAY PADLOCK KIT // CRN# REQUIRED				2
BRAY	ST-999-009	BFV-02-456		ISOLATION WHITE WATER VALVE	310400-1101030A // 4 in. BRAY SERIES 31 BUTTERFLY VALVE EAR TYPE, MAXIMUM PRESSURE, DUCTILE IRON BODY, DUCTILE CAST IRON, NYLON 11 COVER, 416SS SHAFT, Buna-N SEAT,	010400-21100007 HANDLE KIT (EDI) 4"// 020400-70050529 HANDLE LOCKING PLATE 4", BRAY PADLOCK KIT // CRN# REQUIRED				2

SUPPLIER	EQPT CODE	EQPT TAG NO	DIA	DESCRIPTION	INFO 1	INFO 2	INFO 3	APPLIC.	NOTE	REV
BRAY	ST-999-009	BFV-02-471		ISOLATION WHITE WATER VALVE	310400-1101030A // 4 in. BRAY SERIES 31 BUTTERFLY VALVE EAR TYPE, MAXIMUM PRESSURE, DUCTILE IRON BODY, DUCTILE CAST IRON, NYLON 11 COVER, 416SS SHAFT, Buna-N SEAT,	010400-21100007 HANDLE KIT (EDI) 4"// 020400-70050529 HANDLE LOCKING PLATE 4", BRAY PADLOCK KIT // CRN# REQUIRED				2
BRAY	ST-999-009	BFV-02-486		ISOLATION WHITE WATER VALVE	310400-1101030A // 4 in. BRAY SERIES 31 BUTTERFLY VALVE EAR TYPE, MAXIMUM PRESSURE, DUCTILE IRON BODY, DUCTILE CAST IRON, NYLON 11 COVER, 416SS SHAFT, Buna-N SEAT,	010400-21100007 HANDLE KIT (EDI) 4"// 020400-70050529 HANDLE LOCKING PLATE 4", BRAY PADLOCK KIT // CRN# REQUIRED				2

CS-999-010 : Identification sheet

VWTC PROJECT NUMBER:	Iqaluit WWTP	REV:	02
PROJECT NAME:	5000218036	SUBMITTED TO (COMPANY):	
ENGINEER:	F.VINCI	SUBMITTED TO (RESPONSIBLE)	
PROJECT MANAGER:	C. BEKAERT	PROJECT NUM REFERENCE.:	
PHONE NUMBER:		LOT NUMBER:	

SUPPLIER	EQPT CODE	EQPT TAG NO	DIA	DESCRIPTION	INFO 1	INFO 2	INFO 3	APPLIC.	NOTE	REV
BRAY	ST-999-010	BFV-02-513		ISOLATION WHITE WATER VALVE	310400-1101030A // 4 in. BRAY SERIES 31 BUTTERFLY VALVE EAR TYPE, MAXIMUM PRESSURE, DUCTILE IRON BODY, DUCTILE CAST IRON, NYLON 11 COVER, 416SS SHAFT, Buna-N SEAT,	010400-21100007 HANDLE KIT (EDI) 4"// CRN# REQUIRED				2
BRAY	ST-999-010	BFV-02-523		ISOLATION WHITE WATER VALVE	310400-1101030A // 4 in. BRAY SERIES 31 BUTTERFLY VALVE EAR TYPE, MAXIMUM PRESSURE, DUCTILE IRON BODY, DUCTILE CAST IRON, NYLON 11 COVER, 416SS SHAFT, Buna-N SEAT,	010400-21100007 HANDLE KIT (EDI) 4"// CRN# REQUIRED				2
BRAY	ST-999-010	BFV-02-543		ISOLATION WHITE WATER VALVE	310400-1101030A // 4 in. BRAY SERIES 31 BUTTERFLY VALVE EAR TYPE, MAXIMUM PRESSURE, DUCTILE IRON BODY, DUCTILE CAST IRON, NYLON 11 COVER, 416SS SHAFT, Buna-N SEAT,	010400-21100007 HANDLE KIT (EDI) 4"// CRN# REQUIRED				2
BRAY	ST-999-010	BFV-02-553		ISOLATION WHITE WATER VALVE	310400-1101030A // 4 in. BRAY SERIES 31 BUTTERFLY VALVE EAR TYPE, MAXIMUM PRESSURE, DUCTILE IRON BODY, DUCTILE CAST IRON, NYLON 11 COVER, 416SS SHAFT, Buna-N SEAT,	010400-21100007 HANDLE KIT (EDI) 4"// CRN# REQUIRED				2

CS-999-007 : Identification sheet

VWTC PROJECT NUMBER:	Iqaluit WWTP	REV:	02
PROJECT NAME:	5000218036	SUBMITTED TO (COMPANY):	
ENGINEER:	F.VINCI	SUBMITTED TO (RESPONSIBLE)	
PROJECT MANAGER:	C. BEKAERT	PROJECT NUM REFERENCE.:	
PHONE NUMBER:		LOT NUMBER:	

SUPPLIER	EQPT CODE	EQPT TAG NO	DIA	DESCRIPTION	INFO 1	INFO 2	INFO 3	APPLIC.	NOTE	REV
BRAY	ST-999-007	BFV-02-512 BFV-02-522 BFV-02-532 BFV-02-542		ON-OFF SCREEN DRAIN VALVE	2'' ON/OFF VALVE STRAINER OUTLET // 140200-11000SSRR-NN, 2 "7108-3-R-R-L, 2" 3-PIECE FLOW-TEK INDUSTRIAL BALL VALVE END CAPS 316L STAINLESS STEEL BODY / 316 STAINLESS STEEL PIN, RPTFE SEATS, RPTFE STEM SEAL	Item 700082-113DA536 ELECTRICAL ACTUATOR,120V N4,800IN-LBS,15S IR // Item EZ-010D-3 EZ MOUNTING KIT // Item 70A000-22901536 SW KIT - AUX O/C SWITCHEs	CRN# REQUIRED			2



Bray®

BUTTERFLY VALVES
RESILIENT SEATED

SERIES 30/31 Wafer/Lug
2" - 20" (50mm-500mm)

CELEBRATING 20 YEARS

The High Performance Company

SERIES 30

2"–20" (50mm–500mm)
Bray® Controls is proud to offer a high quality line of butterfly valves to meet the requirements of today's market. Combining years of field application experience, research and development, Bray has designed many unique features in the Series 30/31 not previously available. The results are longer service life, greater reliability, ease of parts replacement and interchangeability of components.

DISC AND STEM CONNECTION

(**A**) Features a high-strength through stem design. The close tolerance, double "D" connection that drives the valve disc is an exclusive feature of the Bray valve. It eliminates stem retention components being exposed to the line media, such as disc screws and taper pins, which commonly result in leak paths, corrosion, and vibration failures. Disc screws or taper pins, due to wear and corrosion, often

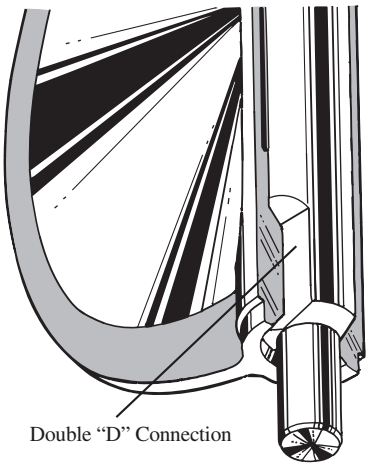

Double "D" Connection

require difficult machining for disassembly. Disassembly of the Bray stem is just a matter of pulling the stem out of the disc. Without fasteners obstructing the line flow, the Series 30/31 C_V values are higher than many other valves, turbulence is reduced, and pressure recovery is increased. The stem ends and top mounting flange are standardized for interchangeability with Bray actuators.

DISC (**B**) Casting is spherically machined and hand polished to provide a bubble-tight shut off, minimum torque, and longer seat life. The disc O.D. clearance is designed to work with all standard piping.

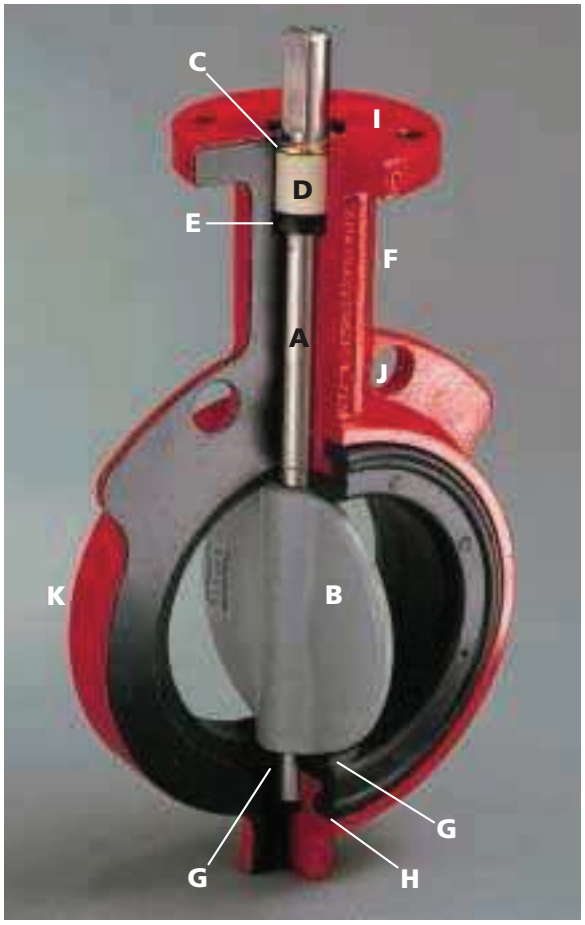

STEM BUSHING (D)

Non-corrosive, heavy duty acetal bushing absorbs actuator side thrusts.

STEM SEAL (E)

Double "U" cup seal design is self-adjusting and gives positive sealing in both directions. Prevents external substances from entering the stem bore.

NECK (**F**) Extended neck length allows for 2" of piping insulation and is easily accessible for mounting actuators.

PRIMARY AND SECONDARY SEALS (G)

The Primary Seal is achieved by an interference fit of the molded seat flat with the disc hub. The Secondary Seal is created because the stem diameter is greater than the diameter of the seat stem hole. These seals prevent line media from coming in contact with the stem or body.

STEM RETAINING ASSEMBLY (C)

The stem is retained in the body by means of a unique Stainless Steel "Spirolox®" retaining ring, a thrust washer and two C-rings, manufactured from brass as standard, stainless steel upon request. The retaining ring may be easily removed with a standard hand tool. The stem retaining assembly prevents unintentional removal of the stem during field service.

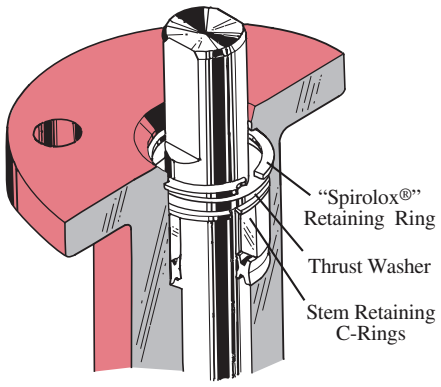

BRAY UNIQUE SEAT DESIGN (H)

One of the valve's key elements is Bray's unique *tongue and groove* seat design. This resilient seat features lower torque than many valves on the market today and provides complete isolation of flowing media from the body. The tongue-and-groove seat to body retention method is superior to traditional designs, making field replacement simple and fast. The seat is specifically designed to seal with slip-on or weld-neck flanges. The seat features a molded O-ring which eliminates the use of flange gaskets. An important maintenance feature is

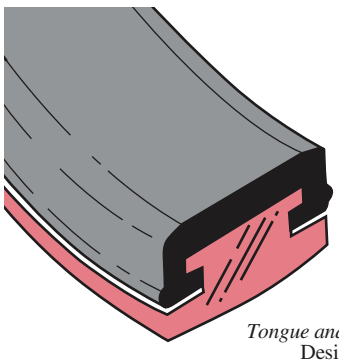

Tongue and Groove Design

*"Spirolox®" designation is a registered trademark of Kaydon Ring and Seal, Inc.

that all resilient seats for Bray butterfly valves Series 20, 21, 30, 31 and 34 are completely interchangeable.

ACTUATOR MOUNTING FLANGE AND STEM CONNECTION (I)
Universally designed to ISO 5211 for direct mounting of Bray® power actuators and manual operators.

FLANGE LOCATING HOLES (J)
Provide quick and proper alignment during installation.

BODY (K) One-piece wafer or lug style. Polyester coating for excellent corrosion resistance. Bray valve bodies meet ANSI 150 pressure ratings for hydrostatic shell test requirements.

DESIGN FEATURES

Bray's Series 30 valve is a wafer version with flange locating holes, and the Series 31 is the companion lug version for dead-end service and other flange requirements. All Bray valves are tested to 110% of full pressure rating before shipment.

A major design advantage of Bray valve product lines is international compatibility. The same valve is compatible with most world flange standards – ANSI Class 125/150, BS 10 Tables D and E, BS 4504 NP 10/16, DIN ND 10/16, AS 2129 and JIS 10. In addition the valves are designed to comply with ISO 5752 face-to-face and ISO 5211 actuator mounting flanges. Therefore, one valve design can be used in many different world markets.

Due to a modular concept of design, all Bray® handles, manual gear operators and pneumatic and electric actuators mount directly to Bray valves. No brackets or adapters are required.



Bray interchangeability and compatibility offers you the best in uniformity of product line and low-cost performance in the industry today.

POLYESTER COATING CORROSION PROTECTION
Bray's standard product offers valve bodies with a polyester coating, providing excellent corrosion and wear resistance to the valve's surface. The Bray polyester coating is a hard, gloss red finish.

Chemical Resistance – resists a broad range of chemicals including: dilute aqueous acids and alkalies, petroleum solvents, alcohols, greases and oils. Offers outstanding resistance to humidity and water.

Weatherability – outdoor tested resistant to ultra-violet radiation.

Abrasion Resistance – excellent resistance to abrasion.

Impact Resistance – withstands impact without chipping or cracking.

NYLON 11 COATING
Optionally available for valve bodies where outstanding protection and performance is needed. A thermoplastic produced from a vegetable base, this coating is inert to fungus growth and molds. Nylon 11 is *USDA Approved*, as well as certified to ANSI/NSF 61 for water service.

Corrosion Resistance – superior resistance to a broad range of chemical environments. Salt spray tested in excess of 2,000 hours and seawater immersion tested for over 10 years without corrosion to metal substrates.

Nylon 11 features a very low coefficient of friction and excellent resistance to impact and ultra-violet radiation.

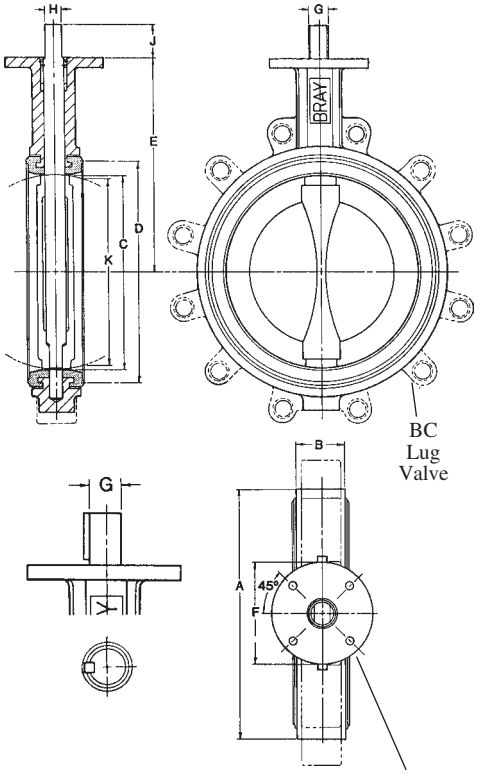

See chart for Actuator Mounting Flange Drilling.

DIMENSIONS SERIES 30 Wafer

Valve Size ins	Valve Size mm	A	B	C	D	E	F	Mounting Flange Drig. BC	No. Holes	Hole Dia.	G	H	J	K
2	50	3.69	1.62	2.00	2.84	5.50	3.54	2.76	4	.39	.55	.39	1.25	1.32
2 1/2	65	4.19	1.75	2.50	3.34	6.00	3.54	2.76	4	.39	.55	.39	1.25	1.91
3	80	4.88	1.75	3.00	4.03	6.25	3.54	2.76	4	.39	.55	.39	1.25	2.55
4	100	6.06	2.00	4.00	5.16	7.00	3.54	2.76	4	.39	.63	.43	1.25	3.57
5	125	7.06	2.12	5.00	6.16	7.50	3.54	2.76	4	.39	.75	.51	1.25	4.63
6	150	8.12	2.12	5.75	7.02	8.00	3.54	2.76	4	.39	.75	.51	1.25	5.45
8	200	10.50	2.50	7.75	9.47	9.50	5.91	4.92	4	.57	.87	.63	1.25	7.45
10	250	12.75	2.50	9.75	11.47	10.75	5.91	4.92	4	.57	1.18	.87	2.00	9.53
12	300	14.88	3.00	11.75	13.47	12.25	5.91	4.92	4	.57	1.18	.87	2.00	11.47

SERIES 31 Lug

Lug Bolting Data BC	No. Holes	Threads UNC-2B
4.75	4	5/8-11
5.50	4	5/8-11
6.00	4	5/8-11
7.50	8	5/8-11
8.50	8	3/4-10
9.50	8	3/4-10
11.75	8	3/4-10
14.25	12	7/8-9
17.00	12	7/8-9

Valve Size ins	Valve Size mm	A	B	C	D	E	F	Mounting Flange Drig. BC	No. Holes	Hole Dia.	G	J	KEY SIZE	K
14	350	17.05	3.00	13.25	15.28	13.62	5.91	4.92	4	.57	1.38	2.00	.39x.39	13.04
16	400	19.21	4.00	15.25	17.41	14.75	5.91	4.92	4	.57	1.38	2.00	.39x.39	14.85
18	450	21.12	4.25	17.25	19.47	16.00	8.27	6.50	4	.81	1.97	2.50	.39x.47	16.85
20	500	23.25	5.00	19.25	21.59	17.25	8.27	6.50	4	.81	1.97	2.50	.39x.47	18.73

Lug Bolting Data BC	No. Holes	Threads UNC-2B
18.75	12	1-8
21.25	16	1-8
22.75	16	1 1/8-7
25.00	20	1 1/8-7

SELECTION DATA

FLANGE REQUIREMENTS

Bray valves are designed for installation between ANSI Class 125/150 lb. weld-neck or slip-on flanges, BS 10 Tables D & E, BS 4504 NP 10/16, DIN ND 10/16, AS 2129 and JIS 10, either flat faced or raised faced. While weld-neck flanges are recommended, Bray has specifically designed its valve seat to work with slip-on flanges, thus eliminating common failures of other butterfly valve designs. When using raised face flanges be sure to properly align valve and flange. Type C stub-end flanges are not recommended.

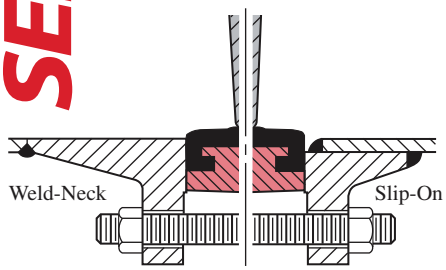

PRESSURE RATINGS*

For bi-directional bubble-tight shut off, disc in closed position:

Inches	mm	psig	bar
2-12	50-300	175	12
14-20	350-500	150	10

For Dead-end Service Applications:

With *downstream flanges installed* or with *vulcanized seats,* the dead-end pressure ratings are equal to valve bi-directional ratings as stated above. With no downstream flanges or with seats that are not vulcanized, the dead-end pressure rating for 2"-12" valves is 75 psi (5 bar) for 14"-20" valves, 50 psi (3.5 bar).

*Pressure Ratings are based on standard disc diameters. For low pressure application, Bray offers a standard reduced disc diameter to decrease seating torques and to extend seat life, thus increasing the valve's performance and reducing actuator costs for the customer.

VELOCITY LIMITS

For On/Off Services:
Fluids – 30 ft / sec (9m / s)
Gases – 175 ft / sec (54m / s)

C_V VALUES–VALVE SIZING COEFFICIENT

Valve Size		Disc Position (degrees)								
ins	mm	90°	80°	70°	60°	50°	40°	30°	20°	10°
2	50	144	114	84	61	43	27	16	7	1
2 1/2	65	282	223	163	107	67	43	24	11	1.5
3	80	461	364	267	154	96	61	35	15	2
4	100	841	701	496	274	171	109	62	27	3
5	125	1376	1146	775	428	268	170	98	43	5
6	150	1850	1542	1025	567	354	225	129	56	6
8	200	3316	2842	1862	1081	680	421	241	102	12
10	250	5430	4525	2948	1710	1076	667	382	162	19
12	300	8077	6731	4393	2563	1594	1005	555	235	27
14	350	10538	8874	5939	3384	2149	1320	756	299	34
16	400	13966	11761	7867	4483	2847	1749	1001	397	45
18	450	17214	14496	10065	5736	3643	2237	1281	507	58
20	500	22339	18812	12535	7144	4536	2786	1595	632	72

C_V is defined as the volume of water in U.S.G.P.M. that will flow through a given restriction or valve opening with a pressure drop of one (1) p.s.i. at room temperature. Recommended control angles are between 25°–70° open. Preferred angle for control valve sizing is 60°–65° open.

EXPECTED SEATING/UNSEATING TORQUES (Lb.-Ins.)

Valve Size		Full-Rated Pressure Valves				Reduced Disc Diameter
		ΔP (PSI)				ΔP (PSI)
ins	mm	50	100	150	175	50
2	50	125	130	135	140	125
2 1/2	65	195	205	215	220	195
3	80	260	275	290	297	260
4	100	400	425	450	462	267
5	125	615	670	725	755	410
6	150	783	871	953	1003	537
8	200	1475	1650	1825	1915	983
10	250	2240	2520	2800	2940	1493
12	300	3420	3870	4320	4545	2280
14	350	4950	5700	6450	—	3300
16	400	6400	7700	9000	—	4267
18	450	7850	9850	11850	—	5267
20	500	10300	12900	15500	—	6867

Valve Torque Rating – Bray has classified valve torque ratings according to 3 types: non-corrosive lubricating service, general service, and severe service. Torques listed above are for general services. Consult Bray for torque information corresponding to specific applications.

TO USE TORQUE CHART, NOTE THE FOLLOWING:
1) For Bray valves, Series 20, 21, 30, 31 and 34.
2) Review Technical Bulletin No. 1001, Expected Seating/Unseating Torques, for explanation of the 3 service classes and their related seating/unseating torque values for given pressure differentials of Full-Rated and Reduced Disc Diameter valves.
3) Dynamic Torque values are not considered. See Technical Bulletin No. 1002 for evaluation of Dynamic Torque values vs. Seating/Unseating Torque values.
4) Do not apply a safety factor to above torque values when determining actuator output torque requirement.
5) For 3 way assemblies where one valve is opening and other is closing, multiply torque by 1.5 factor.

SPECIFICATIONS

RECOMMENDED SPECIFICATIONS FOR BRAY SERIES 30/31 SHALL BE:

- Polyester coated, cast iron, wafer or lug bodies.
- With flange locating holes that meet ANSI Class 125/150 (or BS 10 Tables D & E, BS 4504 NP 10/16, DIN ND 10/16, AS 2129 and JIS 10) drillings.
- Through-stem direct drive double "D" design requiring no disc screws or pins to connect stem to disc with no possible leak paths in disc/stem connection.
- Stem mechanically retained in body neck and no part of stem or body exposed to line media.
- Tongue-and-groove seat design with primary hub seal and a molded O-ring suitable for weld-neck and slip-on flanges. Seat totally encapsulates the body with no flange gaskets required.
- Spherically machined, hand polished disc edge and hub for minimum torque and maximum sealing capability.
- Equipped with non-corrosive bushing and self-adjusting stem seal.
- Bi-directional and tested to 110% of full rating.
- Bi-directional pressure ratings:
2"-12" valves: 175 psi, 14"-20" valves: 150 psi
Lug bodies for dead end service
With downstream flanges or vulcanized seats, pressure ratings are equal to bi-directional ratings as stated above.
With no downstream flanges or non-vulcanized seats: 2"-12" valves: 75 psi, 14"-20" valves: 50 psi
- No field adjustment necessary to maintain optimum field performance.
- The valve shall be Bray Series 30 wafer / 31 lug or equal.

WEIGHTS

Valve Size		Series 30	Series 31
ins	mm		
2	50	5.5	7.0
2 1/2	65	7.0	8.0
3	80	7.5	9.0
4	100	11.5	15.0
5	125	14.0	20.0
6	150	17.0	23.0
8	200	34.0	42.0
10	250	49.0	66.0
12	300	67.0	88.0
14	350	95.0	114.0
16	400	135.0	166.0
18	450	200.0	226.0
20	500	260.0	305.0

Weights are in lbs.

MATERIALS SELECTION

2"–20" (50mm-500mm)

BODY:

- Cast Iron ASTM A126 Class B
- Ductile Iron ASTM A536
- Cast Steel ASTM A216 WCB
- Aluminum ASTM B26

SEAT:

- Buna-N – Food Grade
- EPDM – Food Grade
- FKM*
- White Buna-N – Food Grade

STEM:

- Coated Carbon Steel
- 416 Stainless Steel ASTM A582 Type 416
- 304 Stainless Steel ASTM A276 Type 304
- 316 Stainless Steel ASTM A276 Type 316
- Monel

DISC:

- Aluminum Bronze ASTM B148-954
- Coated Ductile Iron ASTM A536 Gr. 65-45-12
- Ductile Iron, Nylon 11 Coated, ASTM A536 Gr. 65-45-12
- Ductile Iron, Halar® Coated, ASTM A536 Gr. 65-45-12
- 316 Stainless Steel ASTM A351 CF8M
- Hastelloy® C-276 ASTM B575 Alloy N10276

TEMPERATURE RANGE OF SEATS

Type	Maximum	Minimum
EPDM	+250°F(121°C)	-40°F(-40°C)
Buna-N	+212°F(100°C)	0°F(-18°C)
FKM*	+400°F(204°C)	0°F(-18°C)

COMPONENTS

No.	Qty.	Description
1	1	Body
2	1	Seat
3	1	Disc
4	1	Stem
5	1	Stem Seal
6	1	Stem Bushing
7	2	Stem Retainer
8	1	Thrust Washer
9	1	Retaining Ring

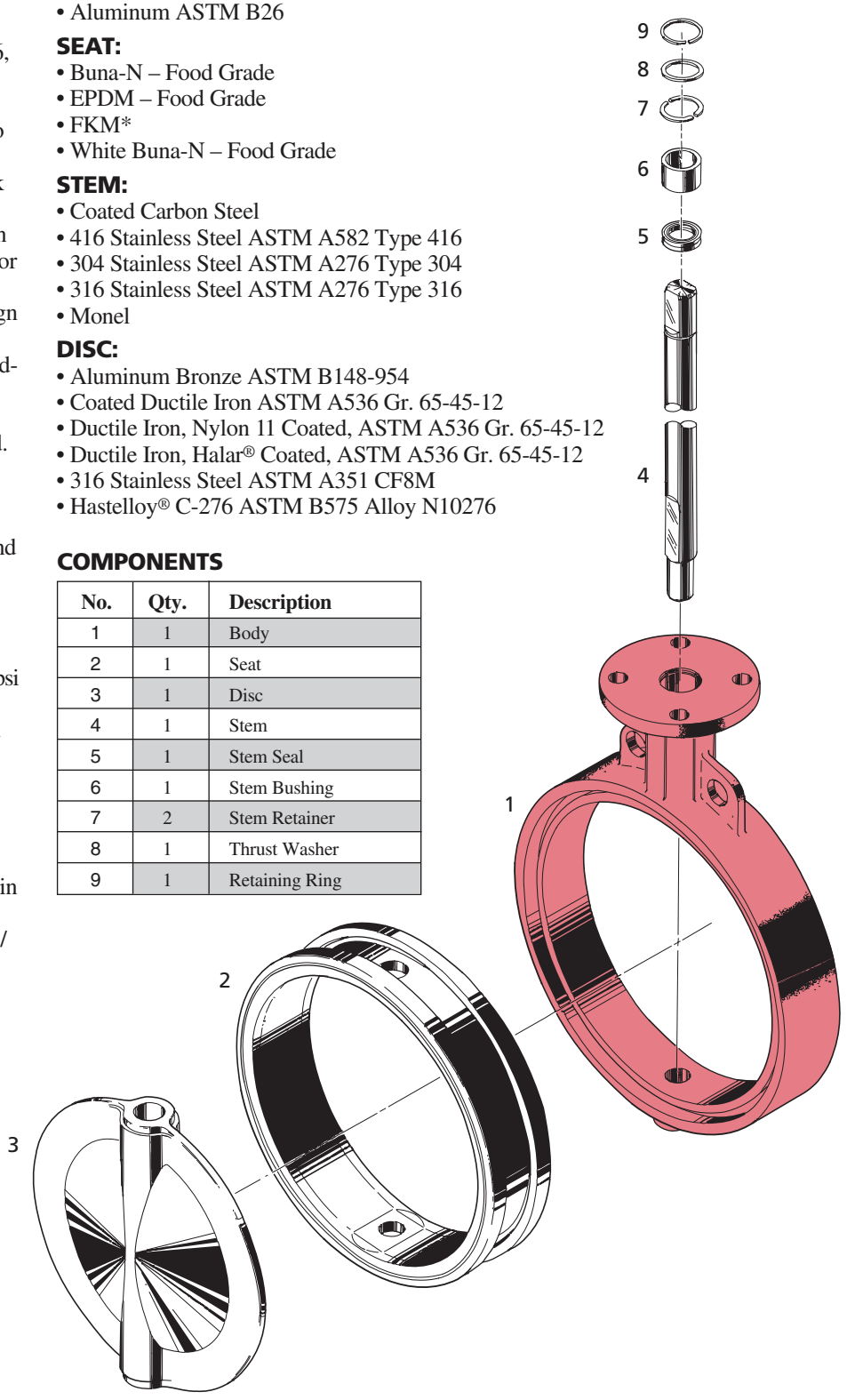

*FKM is the ASTM D1418 designation for Fluorinated Hydrocarbon Elastomers (also called Fluoroelastomers).

Hastelloy® is a registered trademark of Haynes International, Inc.
Halar® is a registered trademark of Ausimont U.S.A., Inc.

ASSEMBLY

INSTALLATION

Position the disc in the partially open position, maintaining the disc within the body face-to-face. Place the body between the flanges and install flange bolts. *Do not use flange gaskets.* Before tightening flange bolts, carefully open the disc to the full open position to ensure proper alignment and clearance of the disc O.D. with the adjacent pipe I.D. Leave disc in the full open position and tighten flange bolts per required specification. Once bolts are tightened, carefully rotate disc to closed position to ensure disc O.D. clearance.

MAINTENANCE AND REPAIR

The many Bray features minimize wear and maintenance requirements. No routine lubrication is required. All components – stem, disc, seat, bushing, stem seal, etc., are field replaceable, no adjustment is needed. If components require replacement, remove the valve from the line by placing the disc near the closed position, spread the flanges, support the valve, then remove the flange bolts. No valve maintenance, including removal of manual or power actuators, should be performed until the piping system is completely depressurized.

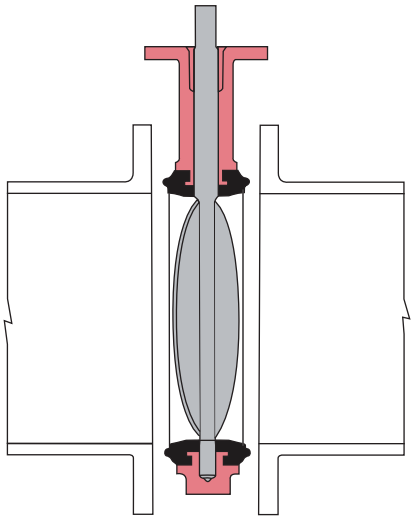

Disc in the Near Closed Position

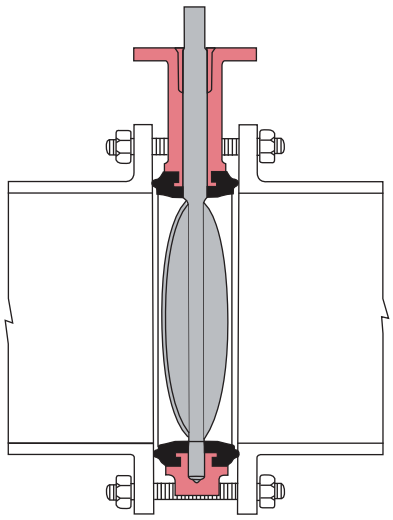

Disc in the Partially Open Position

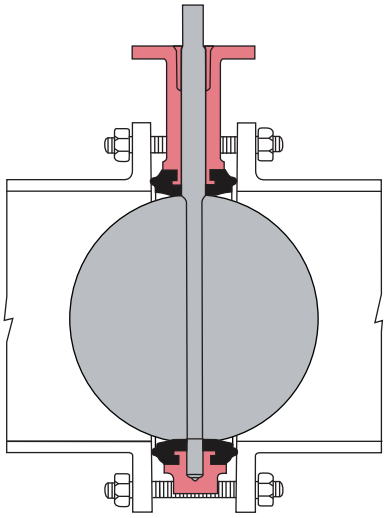

Disc in the Full Open Position

DISASSEMBLY

Remove the handle, gear operator, or actuator from actuator mounting flange. Remove "Spirolox®" retaining ring. Remove stem with its thrust washer and two C-ring stem retainers. Remove bushing and seal. Remove the disc from the seat, protecting disc edge at all times. Push the seat into an oval shape, then remove the seat from the body.

ASSEMBLY

Push the valve seat into an oval and push it into the body with seat stem holes aligned to body stem holes. Push stem into the stem hole of body. For aid in inserting disc, slightly protrude stem beyond the I.D. of the top of the seat. Install a light coating of foodgrade silicone oil (for silicone free applications use soap and water) on the I.D. of seat. Insert the disc into the seat by lining up the disc hole with the stem hole of the seat. Note: the broached double "D" flats in the disc must be toward the bottom of valve body. (Take special care when lining disc up with stem.) With a downward pressure and rotating the stem back and forth, push the stem until the stem touches the bottom of the body stem hole. Make certain that when pushing the stem through disc bottom, the broached flats of stem and disc are aligned. After the stem has engaged the disc, but before the stem is firmly seated in the body, replace the stem seal and bushing. Install the two C-ring stem retainers in the groove in the stem and thrust washer on top of the C-rings. Seat the stem firmly in the body and install the "Spirolox®" retaining ring back into position.

DISTRIBUTOR

All statements, technical information, and recommendations in this bulletin are for general use only. Consult Bray representatives or factory for the specific requirements and material selection for your intended application. The right to change or modify product design or product without prior notice is reserved.
United States patent number 5,152,501.
Other patents issued and applied for worldwide.

Bray® CONTROLS
A Division of BRAY INTERNATIONAL, Inc.
13333 Westland East Blvd. Houston, Texas 77041
281.894.5454 FAX 281.894.9499 www.bray.com

Bray® is a registered trademark of BRAY INTERNATIONAL, Inc.
© 2006 Bray International. All rights reserved.

Bray VALVE & CONTROLS
A Subsidiary of BRAY INTERNATIONAL, Inc.

SERIES 31
ES-0014
Date: June 1993

Valve Size	A	B	C	D	E	F	Top Plate Drilling BC	Top Plate Drilling No. of Holes	Top Plate Drilling Hole Diameter	G	H	J	K	L	Lug Bolting Data BC	Lug Bolting Data No. of Holes	Lug Bolting Data Threads UNC-2B	Adapter Code	Weight
2	3.69	1.62	2.00	2.84	5.50	3.54	2.76	4	.39	.55	.39	1.25	1.32	2.30	4.75	4	.62-11	A	7.0
2½	4.19	1.75	2.50	3.34	6.00	3.54	2.76	4	.39	.55	.39	1.25	1.91	2.57	5.50	4	.62-11	A	8.0
3	4.88	1.75	3.00	4.03	6.25	3.54	2.76	4	.39	.55	.39	1.25	2.55	2.81	6.00	4	.62-11	A	9.0
4	6.06	2.00	4.00	5.16	7.00	3.54	2.76	4	.39	.63	.43	1.25	3.57	4.09	7.50	8	.62-11	B	15.0
5	7.12	2.12	5.00	6.16	7.50	3.54	2.76	4	.39	.75	.51	1.25	4.63	4.61	8.50	8	.75-10	C	20.0
6	8.12	2.12	5.75	7.02	8.00	3.54	2.76	4	.39	.75	.51	1.25	5.45	5.06	9.50	8	.75-10	C	23.0
8	10.50	2.50	7.75	9.47	9.50	5.91	4.92	4	.57	.87	.63	1.25	7.45	6.05	11.75	8	.75-10	D	42.0
10	12.75	2.50	9.75	11.47	10.75	5.91	4.92	4	.57	1.18	.87	2.00	9.53	7.69	14.25	12	.88-9	E	66.0
12	14.88	3.00	11.75	13.47	12.25	5.91	4.92	4	.57	1.18	.87	2.00	11.47	9.02	17.00	12	.88-9	E	88.0

Note: K dim is disc chordal dimension at valve face

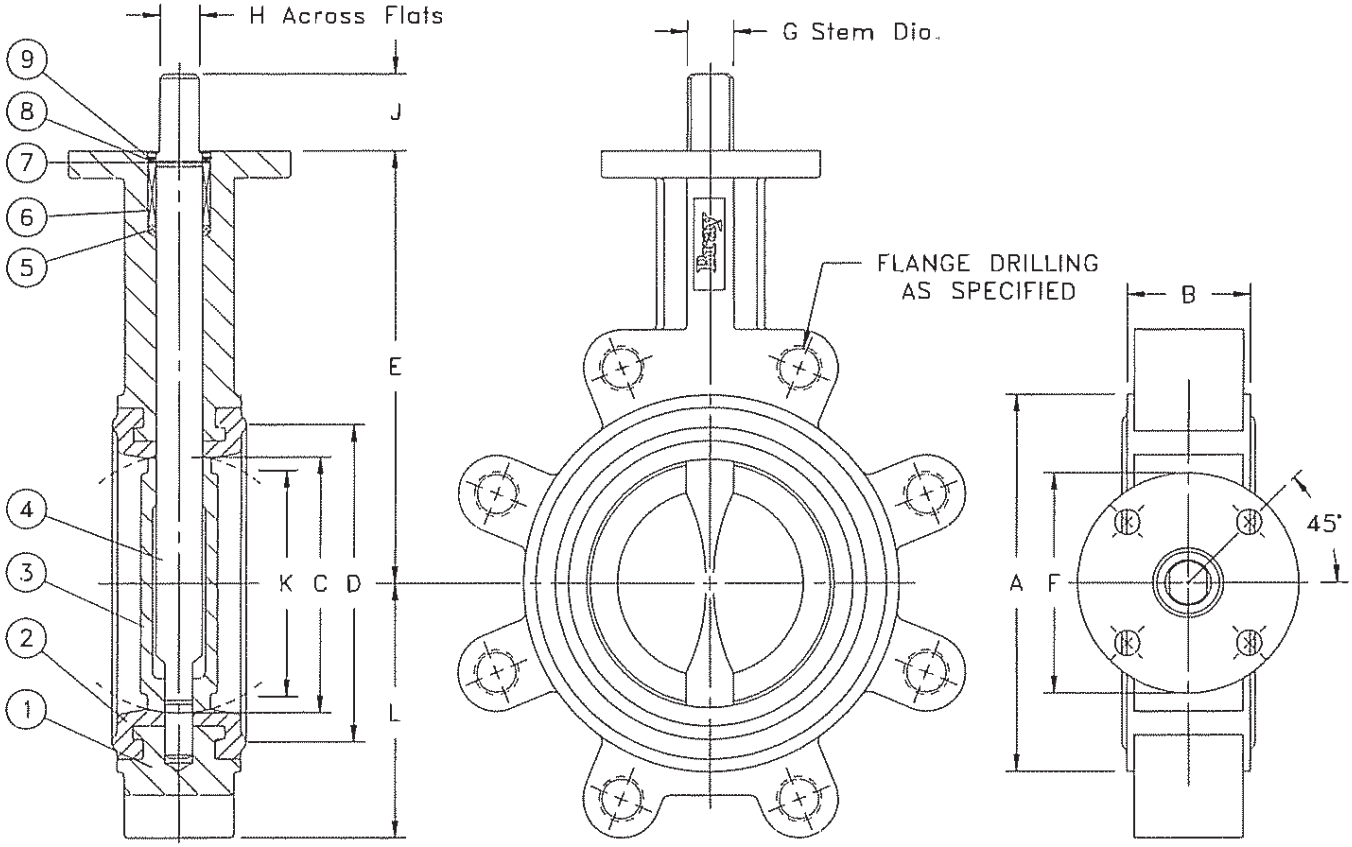

ITEM No.	NAME	No. REQUIRED	SERIES/PART No.	MATERIAL	SPECIFICATION/REMARKS
9	RETAINING RING	1			
8	THRUST WASHER	1			
7	STEM RETAINER	2			
6	BUSHING	1			
5	PACKING	1			
4	STEM	1			
3	DISC	1			
2	SEAT	1			
1	BODY	1			

Valve Size _____ Flg Drilling _____
Pressure Rating _____
Customer/Project _____
Inq/P O No _____
Bray Order No _____
Certified Correct By _____ Date _____

The High Performance Company

BRAY VALVE & CONTROLS
A Subsidiary of BRAY INTERNATIONAL, Inc.

PARTS LIST AND DIMENSIONS (Inches)
BUTTERFLY VALVE, SERIES 31 SIZES 2"-12"

Series	Size	Part No	Material Trim Code	Drawing No
				ES-0014

Bray

REV 1 / ERN-123B

DISK NO 301

Valve Size	A	B	C	D	E	
2,2 1/2,3	.552	.395	10.62	1.38	1.12	
4	.631	.434	10.62	1.38	1.12	
5,6	.749	.513	10.62	1.38	1.12	
8	.867	.631	11.75	2.00	1.62	
10,12	1.182	.867	11.75	2.00	1.62	

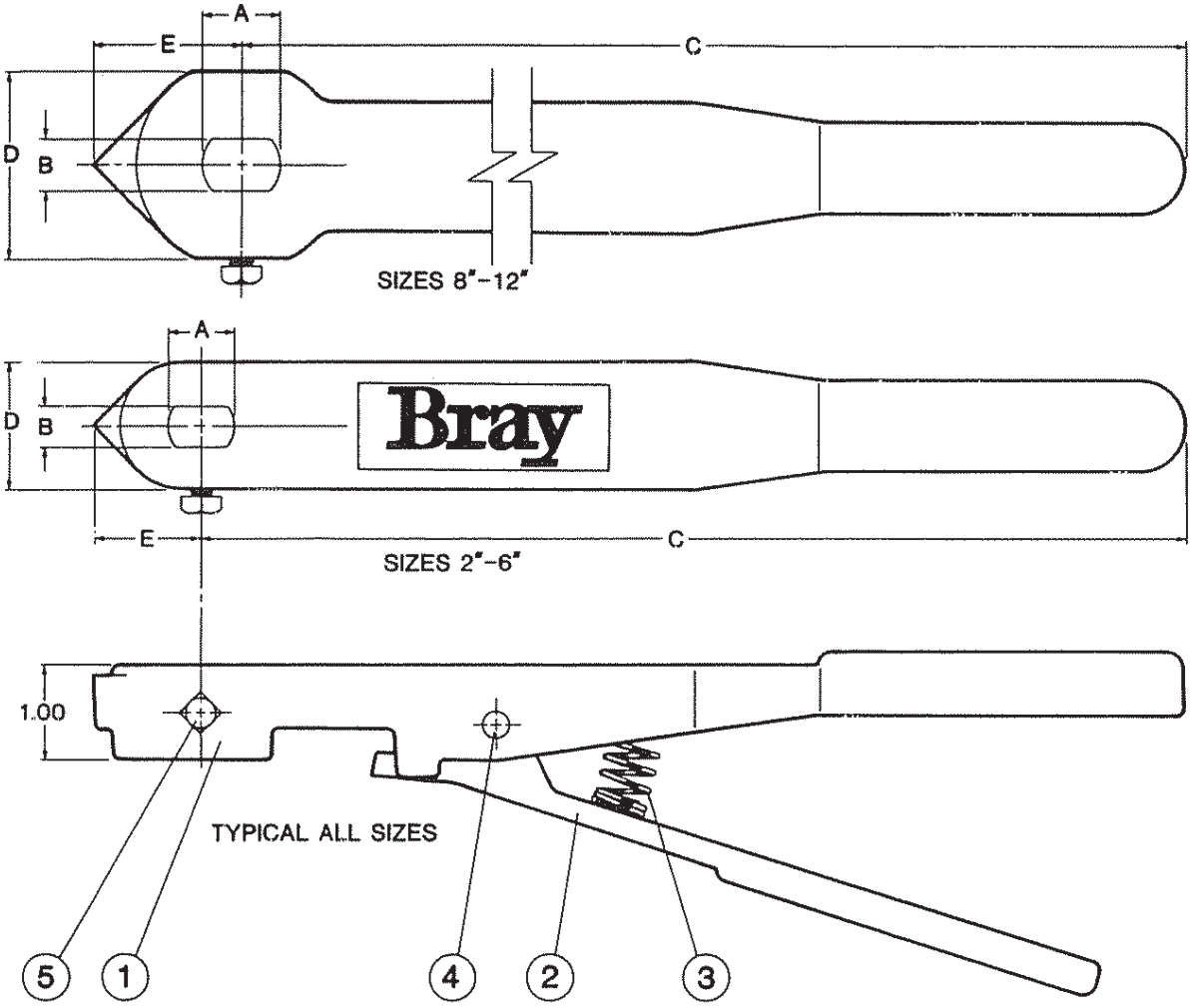

ITEM No.	NAME	No. REQUIRED	SERIES/PART No.	MATERIAL	SPECIFICATION/REMARKS
5	SET SCREW	1			
4	HINGE PIN	1			
3	SPRING	1			
2	LATCH	1			
1	HANDLE	1			

The High Performance Company

BRAY CONTROLS
A Subsidiary of BRAY INTERNATIONAL, Inc.

DIMENSIONS (Inches)
LEVER ACTUATOR, SERIES 01
SIZE 2"–12"

Series	Size	Part No.	Material Trim Code	Drawing No.
				ES-0028

Bray



Series 70
Electric Actuator

RUGGED ELECTRIC ACTUATOR FOR ROTARY VALVES

300 TO 18,000 LB-IN OUTPUT TORQUE

Bray Controls' years of proven success in electric actuation, combined with innovative engineering, has produced the Series 70. The Series 70 features on-off or modulating control. This red, round electric actuator for rotary valves delivers highly reliable service.

Bray's unique, customer–friendly designed Control Center has many advantages over present industry standards including:

- **UL, CSA and CE certification of most units**
- **Ease of customer field wiring directly to the terminal strip without interference from other components**
- **Simple and unique manual override handwheel system**
- **Lowest profile and lightest weight actuator on the market**
- **Simple finger or screw driver adjustment of travel limit cams without interference from other components**
- **Highly visible valve status display on most units**
- **Externally adjustable travel stops**
- **Captive housing screws**

Additionally, components not requiring customer access are protected underneath the Power Center cover plate.

LOW PROFILE, COMPACT, HIGH TORQUE DESIGN

The Series 70 is by far the most compact, lowest profile design of any electric actuator delivering comparable torque output. Thorough research and many years of field experience have gone into the development of this state-of-the-art actuator – *the product of the future*. This design offers the advantages of greatly reduced space requirements, lighter weight and ease of installation and maintenance when compared to other electric actuators. When mounted directly to Bray valves, the Series 70 is especially compact.



The Series 70 compared to a typical actuator, both mounted to 4" Bray valves.

DIRECT MOUNTING OF THE SERIES 70 ON BRAY VALVES

Bray actuators mount directly to Bray valves without using any external linkage. Field installation is simple and misalignment is minimized. For sanitary processing and outdoor applications, the Bray direct mounting system reduces the possibility of contamination buildup or corrosion between the valve and actuator. The mounting pattern complies with ISO 5211 and VDI/VDE 3845 (NAMUR recommendations). Standard rotation is 90° reversible. Bray can provide linkages for mounting the Series 70 to other devices requiring 90° rotation. Please consult the Bray factory for further information.

EXTERIOR FEATURES

EXPLOSION PROOF ENCLOSURE

The Series 70 waterproof/explosion proof unit is UL NEMA 4,4x,7&9 listed and certified to specifications for hazardous locations. The rugged, heavy duty housing contains precision machined bores and flanges to meet flame path requirements. Waterproof /explosion proof models are currently available with 800 to 2,000 lb.-in. output torque, continuous or intermittent duty.



MECHANICAL TRAVEL STOPS

Stainless steel mechanical travel stops permit precise field adjustment of actuator movement to specific degrees of rotation. The travel stops are located outside the base for easy readjustment without removing the cover. Stainless steel lock nuts with O-ring seals hold the travel stops securely in place. The travel stops are normally set at the factory to allow 0° and 90° travel.

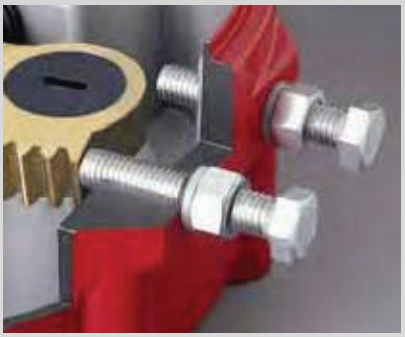



Series 70 manual override handwheel with optional spinner.

ENCLOSURE (A)
The Series 70 waterproof unit is UL NEMA 4, 4x listed. Die-cast aluminum cover and base are high-quality polyester powder coated for exceptional corrosion, wear, impact and ultra-violet resistance

MANUAL OVERRIDE (B)
A manual override handwheel is standard on all models to rotate the valve without electrical power. A yellow caution stripe around the handwheel hub indicates the handwheel is engaged for manual operation.

CAPTIVE COVER BOLTS (C)
The cover is attached to the base by stain-less steel bolts. When the cover is removed the bolts are held captive in the cover. This prevents time consuming problems caused from lost or misplaced bolts.

VALVE STATUS DISPLAY (D)
The Series 70 features a highly visible valve status display on most units. Prominently labeled and color coded – yellow for open, red for closed – the display indicates valve position through the full range of travel. The display can be seen from almost any angle. Made of high impact, heat and chemical resistant clear polycarbonate, this display withstands caustic wash down and offers excellent corrosion protection. Potential leak paths are eliminated since the indicator cover utilizes a static seal, not a dynamic seal.

ELECTRICAL CABLE CONNECTIONS (E) (Optional) A multi-pin, watertight cable receptacle offers full compatibility with today's industrial wiring systems. Factory pre-wiring prevents errors and allows quick–connect field installation. Cord sets with connection/flying leads or extension cords with connections on both ends can plug directly into the receptacle.





CONDUIT ENTRIES (F)
The Series 70 features two conduit connections in either NPT or metric threads. One entry is for power, one for control wiring.

PILOT DRILLED HOLES FOR LOCAL CONTROL STATION MOUNTING (G)
The conduit entry panel has four holes which may be easily tapped for the installation of optional local Control Station.



CLEAN AND EASY ACCESS TO ALL FIELD WIRING AND ADJUSTMENTS

Bray has specifically engineered the Series 70 Control Center for customer–friendly convenience. Designed like a junction box, the Series 70 offers by far the easiest access to terminal block wiring, cam adjustments and switch installation. Accessories are easily added, either before installation or after installation. Therefore, the time required for field start-up and adjustment is greatly reduced, and maintenance can be performed with assured ease and safety.

Bray's unique design, modular system of components and accessories, and innovative features combine to best meet today's industrial requirements.

TORQUE LIMITING SWITCHING SYSTEM (Optional)

The torque limiting switching system consists of two SPDT mechanical switches and two factory calibrated set screws. The upper cam adjusts the torque limit in the open direction, and the lower cam adjusts the torque limit in the closed direction. The switches independently respond to predetermined loads in both the open and closed travel directions by sensing the movement of the worm shaft, and interrupting the electrical power to the motor. The switches operate at any point of actuator travel.



Torque Limit Switches shown with mounting bracket sectioned for clarity.

SERIES 70 APPLICATIONS

The Series 70 is the ideal choice for process control applications involving:

- Automation and computer systems
- Butterfly, ball, plug and other rotary valves
- Dampers, switches, safety and flow-control devices
- Machine and fixture indexing
- Hostile environments demanding excellent moisture, chemical and corrosion resistance
- Long service life and rugged reliability

INDUSTRIES

Bray's Series 70 Electric Actuators are used in a wide range of industries world wide, including: Chemical, Pharmaceutical, Petroleum Refining and Oilfield, Microelectronics, Pulp and Paper, Water and Waste Water Treatment, Brewing, Food Processing, Beverages, Power, Marine, Mining, Textile and HVAC.

CONTROL CENTER FEATURES

TRAVEL LIMIT SPDT SWITCHES (A)

Bray has provided two SPDT mechanical switches as standard. These durable, high quality switches are mechanically isolated and electrically independent. The dedicated circuits eliminate any voltage cross-over between the switches. This switch combination is used for both open and closed positions of the valve and requires only one cam for each direction of valve travel. Bray's design provides synchronicity between motor control and position display. Switches are easily accessible without interference from other components. Each switch is marked with open or close labels and the cams are color coded, green for open and red for close, eliminating the possibility of making wrong adjustments of travel limits or field wiring errors.

AUXILIARY SWITCHES (Optional)

Independent dry-contact SPDT mechanical switches are available to indicate travel position to remote customer control systems.

AUTOMATIC POWER CUTOUT SWITCH (B)

The Series 70 is supplied with a SPDT mechanical switch which cuts power to the motor when the handwheel is engaged for manual operation. This switch also functions as a safety emergency shutdown device that immediately stops the actuator motor even if electrical power is still being applied to the actuator.

CERTIFICATIONS / APPROVALS

Bray has gained UL, CSA and CE certifications on most intermittent and continuous duty actuators. These certifications insure that the Series 70 has been designed to the highest quality requirements and most stringent safety standards worldwide. Substantial resources have been invested to assure our customers that the Series 70 is the best actuator on the market and will remain so.

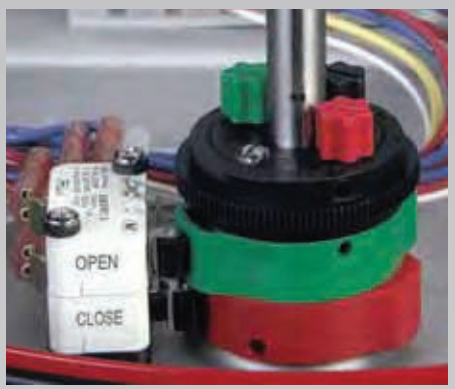

CAMS / CAM ADJUSTMENT (C)
Bray's patented cam design is an outstanding feature of the Series 70. Cams for each switch are *infinitely* adjustable by finger touch or screwdriver with no special tools needed. The adjustment knobs rotate the specially formed cams. Each cam is color coded – the red adjustment knob controls the red cam (close position), and the green knob controls the green cam (open position). Standard factory setting allows 90° travel between open and closed positions.

TERMINAL BLOCK (D)
The actuator switches are pre-wired to a terminal block. The block has been designed for ease of customer wiring without interference from other components and features clearly marked terminal numbers. The block has been placed near the two conduit entries with ample room for running wire leads. A wiring diagram is included inside the cover for easy reference. The ground wire screw (**E**) is plated green and positioned for easy access. With some optional features Bray installs a second terminal block for Bray factory wiring and customer field wiring of additional limit switches.

O-RING SEAL FOR WATERTIGHT ENCLOSURE (F)
The large seal between the cover and base provides a waterproof seal and prevents internal corrosion. The Bray Series 70 O-ring seal is the best design for watertight enclosures and is far superior to commonly used gaskets.



HEATER (G) (Optional)
Pre-wired to the terminal block, a self-regulating heater prevents condensation from collecting inside the actuator, which could cause damage to the electrical components. The heater is mounted below the switch plate. Heaters are ideal for use in applications with extremely wide temperature or humidity ranges.

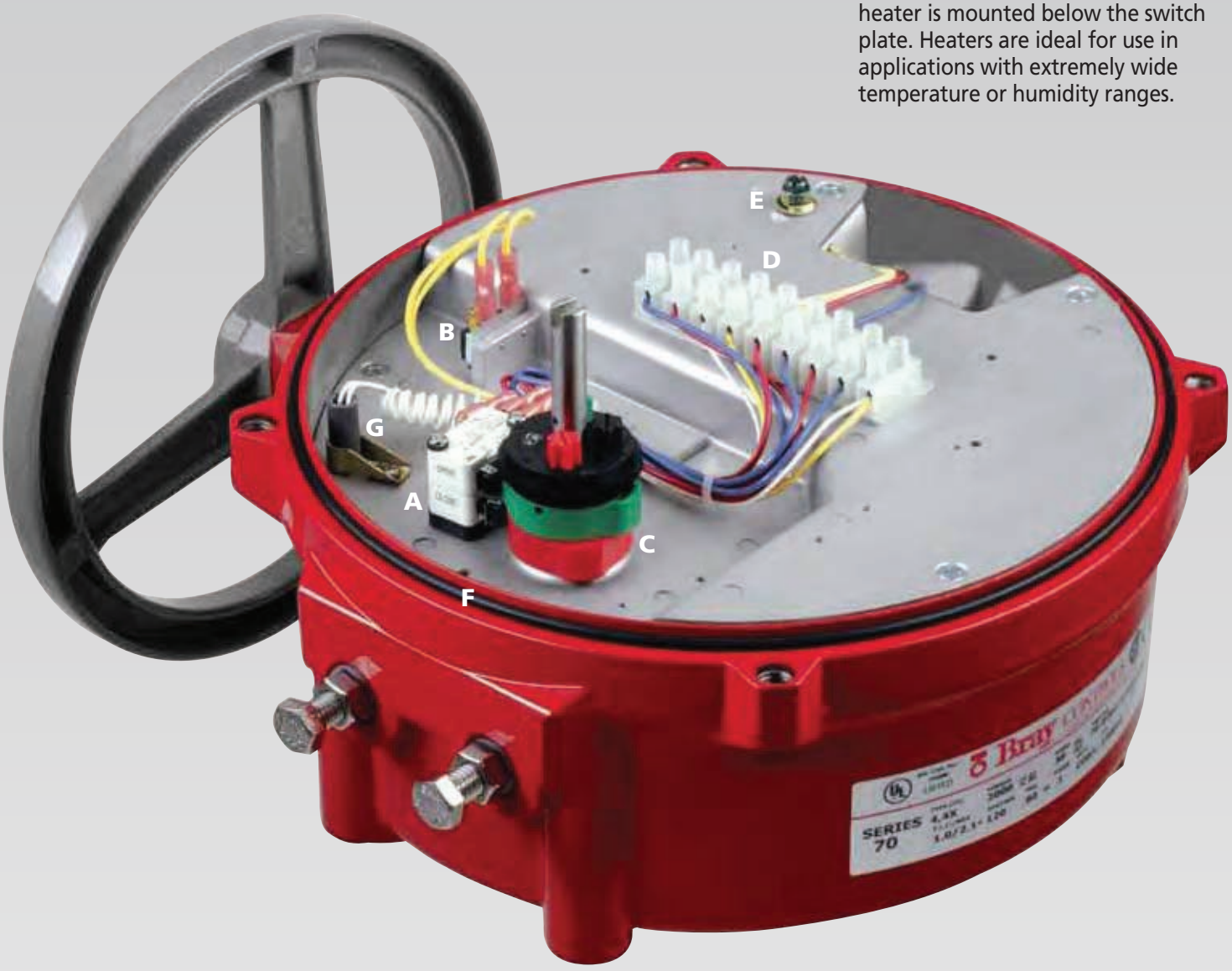

Bray designed the Series 70 to completely separate the Control Center from the Power Center. The Power Center, located in the actuator base, consists of motor, gear train, capacitor, output drive and heater. This design protects the power drive system as each component has been engineered to require no customer servicing. The Power Center components have been uniquely configured to maintain the extremely low profile of the Series 70.

POWER CENTER FEATURES

MOTOR (A), CAPACITOR (B), GEAR TRAIN (C) AND WORM GEAR (H) The Series 70 has a 120 or 220 VAC single phase permanent split-capacitor reversible induction motor. The motor features a built-in thermal overload protector of a bi-metallic strip in the windings set at 275°F (135°C) with automatic reset. The heavy-duty spur gear train is composed of precision cut, multi-staged gears and shafts. The gears and shafts are heat treated high alloy steel and will withstand locked rotor conditions. The gear train is permanently lubricated at the factory. This gear train drives the worm shaft which in turn drives the segmented worm gear output shaft.

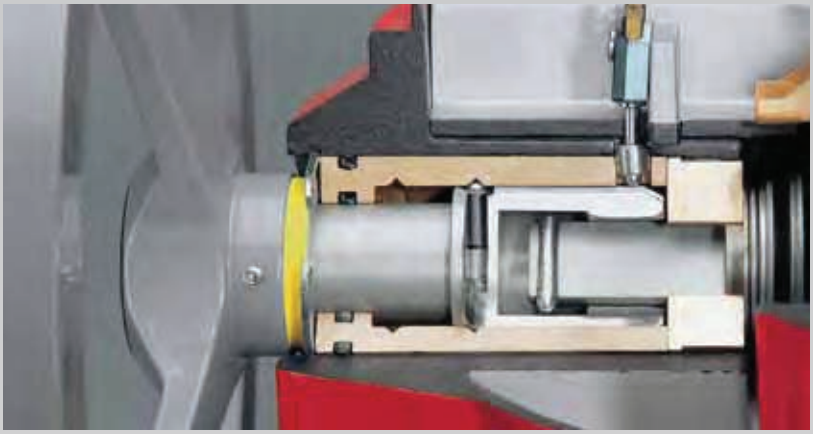

Above photograph is a sectional view of the manual override assembly with override disengaged. Photograph below shows manual override engaged.

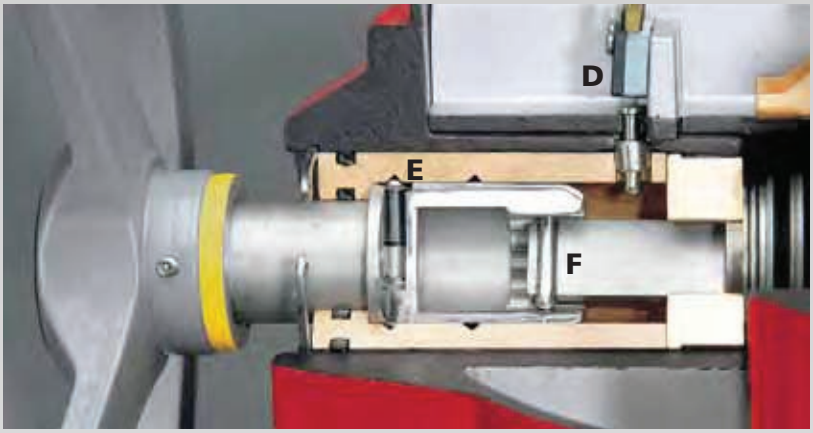

MANUAL OVERRIDE HANDWHEEL ASSEMBLY

- **Pull to engage for manual operation.**
- **Rotate handwheel to position valve.**
- **Push to disengage for power operation.**

A simple pull engages the handwheel for manual operation. The Bray manual override system ensures positive and fast manual operation without the use of extra tools or levers. When the handwheel is engaged, the electrical power to the motor is cut off by means of the Automatic Power Cutout Switch (**D**). When engaged, the manual override shaft is held in position by a Ball Detent (**E**). The Ball Detent also holds the shaft in position when the handwheel is pushed in to disengage the override. The Drive Pin (**F**) engages and disengages the manual override shaft from the worm and segmented worm gear output shaft. When the handwheel is pushed or pulled, the drive pin smoothly engages the worm shaft.

SELF-LOCKING OUTPUT DRIVE ASSEMBLY

The output drive assembly features a self-locking worm and worm gear drive which holds the valve in the desired position without the need for electro-mechanical braking systems. The worm shaft directly drives the worm gear. The Worm (**G**) is made of chrome-moly steel and the segmented Worm Gear (**H**) is a precision machined aluminum bronze casting. The worm gear and Output Shaft (**I**) are one part. The output shaft is the driving member that positions the valve. The worm gear drives the valve status display shaft which operates the infinitely adjustable cams to limit the electrical travel of the actuator.





MECHANICAL TORQUE LIMITING SYSTEM (**Optional**)

The mechanical torque limiting system consists of a Worm Shaft, a Worm (**G**), a set of Torque Disc Springs (**J**) and a Shaft Groove (**K**) for torque limiting switches. The torque disc springs, located on each side of the worm, resist the linear movement of the worm shaft. The worm shaft is driven against the torque disc springs in response to output torque. The shaft groove actuates the torque limiting switches, located above in the Control Center, to start and stop the motor. (Please refer to the Control Center section on page 4 for description of the Torque Limiting Switching System). The precisely controlled movement of this system is the main torque limiting element of the Series 70.



MODULATING ACTUATOR FOR PRECISION CONTROL OF VALVE POSITION

The Bray Series 70 Electric Actuator can be equipped with a Servo for precise control of valve position. The Servo consists of a microprocessor controlled circuit board and a feedback potentiometer assembly, which both fit entirely within the standard Series 70 actuator housing. The circuit board has terminal blocks for customer field wiring, and other terminals for internal connections to the actuator components. The feedback potentiometer is driven by a gear set connected to the actuator output drive. Also available are Servos capable of serial bus communication, such as DeviceNet.

COMMAND CENTER OPTIONS

SERVO PRO OPERATION

The Servo Pro can be configured by the factory or the customer to accept several types of input signals, such as 4-20 mADC, 0-10 VDC, 0-5 VDC or potentiometer control. Each terminal connection and indicator is clearly labeled to simplify field wiring and operation. The input signal electronically represents the *desired* actuator position, and the internal feedback potentiometer signal electronically represents the *actual* actuator position. The microprocessor constantly compares the two signals, and if a difference is detected, drives the actuator in the proper direction until the signals are equal. When a balance is reached, the microprocessor turns off the actuator motor. The worm gear then mechanically holds the valve in the desired position until the input signal is changed again.



Feedback Potentiometer Gear

SPEED CONTROL

Adjustments are configurable for both open and closed speed control of the actuator motor. In addition, an approach control circuit senses when the actuator is about to reach the desired valve position, and pulses the motor to avoid overshooting the set point.

POTENTIOMETER CALIBRATION

Calibration of the feedback potentiometer is done through a unique gear arrangement that is easily accessible and eliminates the need of any special tools. A simple adjustment of Bray's patented cam drive aligns the potentiometer gear as easily as a travel cam.

SERVO PRO FEATURES / SPECIFICATIONS

Note: Servo is available for modulating service – continuous duty actuators only.

Note: "Standard" is the way the Servo is set at the factory.
"Configurable" means the customer, or the factory, can modify the Servo by setting 10 DIP switches.

POWER INPUT	24 , 120 or 24 0 VAC, 50/60 Hz (power must match motor)
POWER CONSUMPTION	2 Watts (not including actuator power)
INPUT SIGNAL	Standard: 4-20 mADC 250 Ohm Input Impedance. Configurable: 0-10 VDC, 2-10 VDC, 10K Ohm or greater potentiometer, 0-10 VDC has 2.1 K Ohm Input Impedance
CALIBRATION	Single Button Autocalibration
INDICATORS	Power: Green LED Status: Flashing Red / Green LED Motor: Red LED (Close), Green LED (Open)
CONTROL MODES	Standard: Full Range, Direct Acting Reverse Acting, Split Range
FAIL POSITION (Loss of Input Signal)	Standard: Fail Closed Configurable: Fail Open
CONTROL CHARACTERISTIC	Linear
DUTY CYCLE	100%
INTERNAL FEEDBACK	10K Ohm Potentiometer, gear driven
RETRANSMISSION OUTPUT	Standard: 4-20 mADC Configurable: 0-5 VDC, 0-10 VDC, 2-10 VDC Retransmission Output is designed to drive an isolated 250 –500 Ohm resistive load.
SPEED CONTROL	Standard: Full Speed (Speed Control is Disabled) Configurable: Bidirectional – Independent Open and Close Trim Pots adjustment

FEEDBACK POTENTIOMETER
The feedback potentiometer gear has a green rib which should be aligned with the slot on top of the cam-indicator shaft when in the fully open position. This simple alignment ensures the potentiometer will provide the Servo Pro with continuous, accurate actuator-valve position feedback.

VOLTAGE SPIKE PROTECTION
Voltage spikes that can damage electrical equipment are very common in industrial locations. Large voltage spikes can be caused by switching power loads, such as large motor drives, at the customer location. The output stage TRIACs of the Servo Pro are protected against damage from voltage spikes by a special combination of

- limit switch circuitry
- metal oxide varistor (MOV) for transient voltage suppression
- zero crossing detection

DEVICENET SERVO PRO
Bray also offers the Series 70 with the most advanced serial bus communication Servo on the market. The Bray **DeviceNet Servo Pro** is fully ODVA (Open DeviceNet Vendor Association) compliant. Benefits include greatly simplified field wiring and installation, advanced control and diagnostics in real-time from a remote location, and full network integration. Please contact your Bray representative for more information.

CONTROL STATION (Optional)
Bray has designed a manual local electrical control station that flush mounts directly to the Series 70. The Control Station features:

- a local–off–remote control switch
- an open–stop–close switch
- two lights which locally indicate open and closed valve position

The cover plate can be rotated in any 90° increment, allowing the customer to operate and view the station with ease. The enclosure is aluminum and weatherproof (NEMA 4, 4X, IP 65). Additionally, the control station has captive cover bolts and two input ports available in the following thread connections: 3/4" NPT or M25. Two different multi-pin, watertight electrical cable connections are also available.



Control Station



Servo Pro shown

DIMENSIONS

WATERPROOF ENCLOSURE Dimensions are in Inches [Millimeters in brackets]

Actuator Series	A	B	C	D	E	F	G	H	J	K (UNC) x B.C.	M (UNC) x B.C.	N	P	Q	øR	S	T	U	Wt. lbs [kgs]
S70-003 S70-005	7.5 [191]	5.6 [142]	3.0 [76]	5.1 [130]	1.9 [48]	1.94 [49.3]	.19 [4.8]	1/2 ‡	2.0 [51]	5/16-18 x ø2.76 F07	—	.75 [19]	.51 [13]	1.75 [44]	3.5 [89]	–	–	–	12 [6]
S70-008 S70-012 S70-020	10.1 [257]	7.8 [198]	3.7 [94]	6.5 [165]	2.5 [64]	2.69 [68.3]	.56 [14.2]	3/4 ‡	2.6 [66]	5/16-18 x ø2.76 F07	1/2-13 x ø4.92 F12	1.18 [30]	.87 [22]	2.20 [56]	8 [203]	–	–	–	28 [13]
S70-030 S70-050 S70-065	12.1 [307]	9.5 [241]	5.6 [142]	7.2 [183]	2.9 [74]	3.19 [81]	.56 [14.2]	3/4 ‡	3.1 [79]	1/2-13 x ø4.92 F12	3/4-10 x ø6.50 F16	See Detail A1			12 [305]	–	–	–	48 [22]
S70-130/131 S70-180/181	12.1 [307]	9.5 [241]	5.6 [142]	12.5 [317]	8.1 [206]	9.2 [234]	.56 [14.2]	3/4 ‡	8.3 [211]	1/2-13 x ø4.92 F12	3/4-10 x ø6.50 F16	See Detail A2			12 [305]	6.1 [155]	12.7 [323]	8 [203]	83 [38]

WATERPROOF / EXPLOSION PROOF ENCLOSURE Dimensions are in Inches [Millimeters in brackets]

Actuator Series	A	B	C	D	E	F	G	H	J	K (UNC) x B.C.	M (UNC) x B.C.	N	P	Q	øR	Wt. lbs [kgs]
S70-708 S70-712 S70-720	12.5 [317]	8.0 [203]	3.7 [94]	7.67 [195]	2.5 [64]	2.69 [68.3]	.56 [14.2]	3/4 ‡	2.6 [66]	5/16-18 x ø2.76 F07	1/2-13 x ø4.92 F12	1.18 [30]	.87 [22]	2.01 [51]	8 [203]	34 [16]

WATERPROOF ENCLOSURE - S70-003 TO S70-065

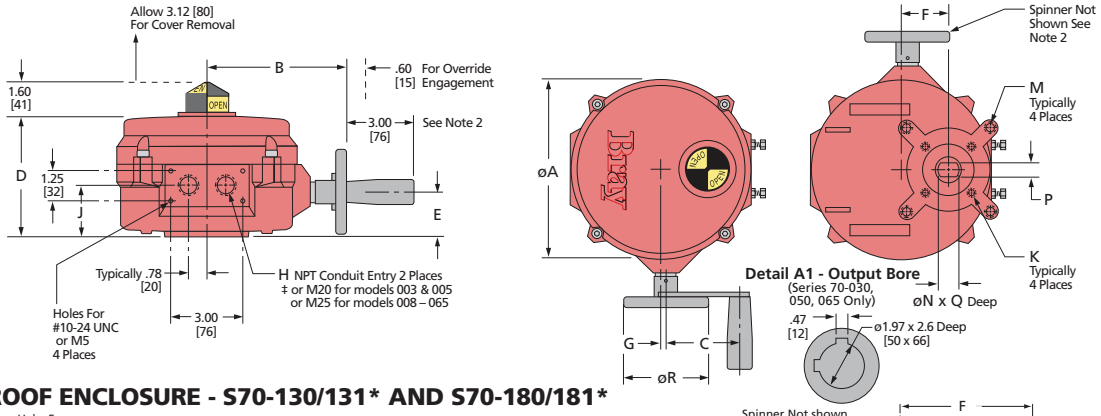

WATERPROOF ENCLOSURE - S70-130/131* AND S70-180/181*

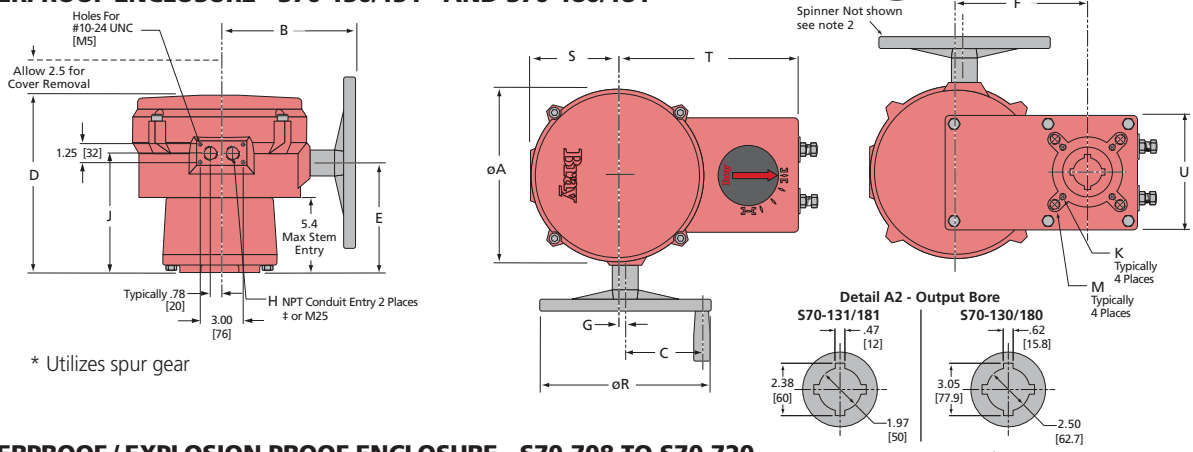

* Utilizes spur gear

WATERPROOF / EXPLOSION PROOF ENCLOSURE - S70-708 TO S70-720

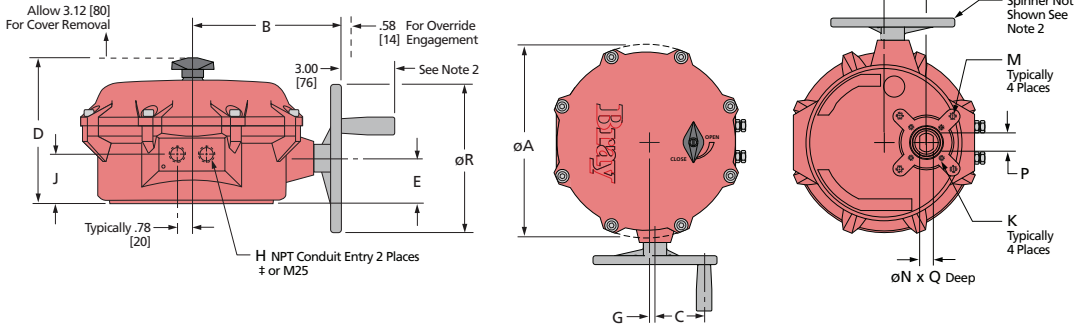

Notes:

1) Dimensions are in Inches, [Millimeters in brackets].
2) Handwheel Spinner shown in drawing is available as an option.
3) K & M Dimensions are also available in M8, M12, and M20.
4) N Dimension is also available with Double Square (Star) drive.

Actuator Series	Torque Output lb/in [Nm]	Single Phase Motors Current Rating (Amps) At All Speeds (locked rotor)			Speed for 90° Operations					Manual Override Gear Ratio	Rim Pull lbs [kgs]	Bray Valve Sizes for Direct Mounting
					On-Off Intermittent‡			Continuous:				
		VAC	Hz	Amps	Optional Speeds		Standard Speeds	On/Off	MOD			
S70-003	300 [34]	120	50/60	0.8		8 sec.	15 sec.	30 sec.	30+ sec.	30:1	11.4 [5]	2" through 6"
		220	50/60	0.5								
S70-005	500 [57]	120	50/60	1.4			15 sec.	30 sec.	30+ sec.	30:1	19.0 [9]	2" through 6"
		220	50/60	0.6								
S70-005	500 [57]	24	50/60	1.5			.	60 sec.	60+ sec.	30:1	19.0 [9]	2" through 6"
S70-008 S70-708	800 [90]	120	50/60	2.1	6 sec.	10 sec.	15 sec.	30 sec.	30+ sec.	30:1	13.0 [6]	2" through 12"
		220	50/60	0.9								
S70-012 S70-712	1200 [136]	120	50/60	2.1		10 sec.	15 sec.	30 sec.	30+c sec.	30:1	20.0 [9]	2" through 12"
		220	50/60	0.9								
S70-020 S70-720	2000 [226]	120	50/60	2.1			15 sec.	30 sec.	30+. sec	30:1	33.0 [15]	2" through 12"
		220	50/60	0.9								
S70-020	2000 [226]	24	50/60	2.0				60 sec.	60+ sec.	30:1	33.0 [15]	2" through 12"
S70-030	3000 [339]	120	50/60	3.0			18 sec.	30 sec.	30+ sec.	30:1	33.0 [15]	8" through 20"
		220	50/60	1.4								
S70-050	5000 [565]	120	50/60	3.0			18 sec.	30 sec.	30+ sec.	30:1	55.0 [25]	8" through 20"
		220	50/60	1.4								
S70-050	5000 [565]	24	50/60	3.0			70 sec.			30:1	55.0 [25]	8" through 20"
S70-065	6500 [735]	120	50/60	3.0				30 sec.	30+ sec.	30:1	72.0 [33]	8" through 20"
		220	50/60	1.4								
S70-130 S70-131	13000 [1469]	120	50/60	3.0				90 sec.	90+ sec.	90:1	86.0 [39]	12" through 22"
		220	50/60	1.4								
S70-180 S70-181	18000 [2034]	120	50/60	3.2				125 sec.	125+ sec.	90:1	86.0 [39]	16" through 36"
		220	50/60	1.5								

‡ The duty cycle for intermittent on-off operation is 25%. The continuous duty actuator with Servo is rated for 100% modulating operation.
12 VDC, 24 VDC and 3-Phase Motors are available as an option, please consult your Bray representative or the factory.

TYPICAL WIRING DIAGRAMS

ON–OFF
With Optional Torque Limit Switches, Auxiliary Limit Switches and Heater

Wiring Diagrams are For Reference Only. Do NOT use for field wiring.

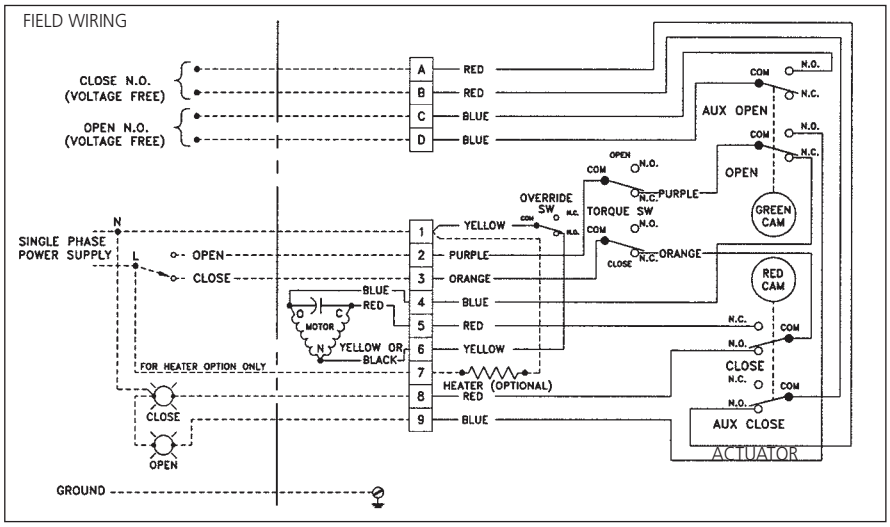

MODULATING–Servo Pro
With Optional Heater

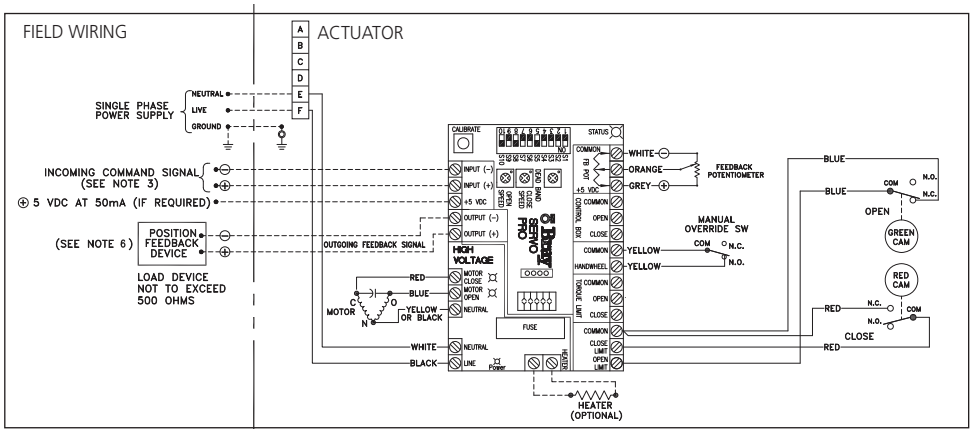

Notes:
1) Actuators are shown in closed position.
2) Manual Override is not engaged.
3) Actuators are shown with optional Heater
4) All switches are Single Pole, Double Throw.
5) Terminal block accepts field wiring from 12-22 AWG, 14-22 AWG for Servo.
6) Modulating Unit: Position Feedback Output is designed to drive an isolated 250 -500 Ohm resistive load.

SPECIFICATIONS

The electric actuator shall be compact and low–profile to greatly reduce space requirements. The actuator shall feature ease of access to field wiring and adjustment. The actuator shall be built to withstand line vibration and shock without failure and shall bolt directly to Bray valve mounting flanges without using brackets.

MOTOR A single phase permanent split-capacitor reversible motor with voltages of 120 and 220 VAC 50/60 Hz shall be standard. Motor insulation shall be Class F or better. The motor shall contain a built-in UL approved automatic reset thermal overload protector set at 275°F (135°C) embedded in motor windings. A variety of 3-Phase 50/60 Hz and DC motors shall be available upon request.

DUTY CYCLE The duty cycle for intermittent on-off operation shall be 25%. The continuous duty actuator with Servo shall be rated for 100% modulating operation.

SELF-LOCKING OUTPUT DRIVE ASSEMBLY The actuator shall have a self-locking output drive assembly consisting of a worm and worm gear output drive mechanism. The output drive assembly shall have precision cut multi-staged gears which will withstand locked rotor conditions. The output drive assembly shall be permanently lubricated at the factory and shall drive a chrome-moly steel worm which drives the composite aluminum bronze segmented worm gear / output shaft.

WIRING Actuator switches shall be pre-wired to a terminal block for ease of access and all internal wiring shall range from 12-22 AWG.

SWITCHES All travel switches shall be Single Pole, Double Throw, Form C type, 10A at 125/250 VAC, 1/2 A at 125 VDC, UL listed and CSA approved. Travel Limit switches shall limit actuator in both the open and closed position of valve travel.

CAMS Cams for each travel limit switch shall be infinitely adjustable by finger touch or screw driver, as provided by Bray's patented design.

CONDUIT ENTRIES All units shall have 2 conduit entries. Conduit entries for models 003 and 005 shall be either 1/2" NPT or M 20. Conduit entries for models 008 – 181 shall be either 3/4" NPT or M 25.

MECHANICAL TRAVEL STOPS Mechanical stainless steel travel stops shall be located outside the actuator for ease of adjustment and contain stainless steel lock nuts to hold the travel stops in place. O-rings provide waterproof seals. The travel stops shall limit the actuator movement to specific degrees of rotation.

MANUAL OVERRIDE All units shall be equipped with an aluminum manual override handwheel to rotate the valve without electrical power. The override assembly shall ensure positive and fast manual operation without the use of extra tools or levers.

EMERGENCY SHUT-OFF An automatic power cutout switch shall be provided to cut power to the motor when actuator handwheel is engaged for manual operation. This switch shall function as a safety emergency shutdown device and shall be accessible from outside the housing.

ENCLOSURE The die-cast aluminum enclosure shall be certified to UL, CSA & CE waterproof standards (NEMA 4, 4X, IP 65). Cover shall be polyester powder coated for exceptional corrosion, wear, impact and UV resistance. The enclosure shall have captive cover bolts, therefore preventing time consuming problems due to lost or misplaced bolts. A UL listed waterproof / explosion proof enclosure (NEMA 4, 4X, 7, 9) shall be available.

VALVE STATUS DISPLAY The actuator shall have a highly visible display prominently labeled to indicate valve position throughout the full range of travel.

TEMPERATURE RATING Actuators shall be designed for temperature ranges of -40°F (-40°C) to +150°F (65°C).

OPTIONAL EQUIPMENT

The actuator shall be designed to include any of the following accessories as an option.

TORQUE LIMITING SYSTEM with 2 SPDT mechanical switches and 2 factory calibrated screws. The worm shaft shall be driven against the torque disc springs in response to the output torque. The switches contact the worm shaft groove in response to predetermined loads and interrupt the electrical power to the motor. Switches shall operate at any point of actuator travel.

HEATER with self-regulating temperature control to prevent condensation buildup. The heater shall be pre-wired to the terminal block. Rated output is 15 W at 24, 120 or 220 VAC.

SERVO A microprocessor controlled Servo shall be available for precise modulating control of valve position in response to an analog input signal. The Servo shall have an analog output signal proportional to actual valve position as standard. This analog signal shall be configurable to either current or voltage output. The Servo shall have voltage spike protection on all Input terminals. Independent adjustments shall be provided for both open and closed Speed Control of the actuator and deadband. Input Signals: 4-20 mADC into 250 Ohm, 0-10 VDC, 0-5 VDC, 10k Ohm or greater potentiometer. 10K Ohm Potentiometer shall be used for internal feedback. Calibration of the Servo shall be accomplished by pressing a single button to initiate the calibration routine. Inputs for the control box and handwheel, LED status indicators and self-diagnostic capability shall also be provided.

DeviceNet Servos shall be available.

CONTROL STATION for manual local electrical operation of the actuator. The Control Station shall flush mount to the actuator and feature a local / off / remote control switch, an open–stop–close switch, and two lights which locally indicate open and closed valve position. The enclosure shall be aluminum and waterproof (NEMA 4, 4X, IP 65).



The Bray Series 70 Electric Actuators
Series 70-003/005, 008/012/020 and 70-030/050/065.

DISTRIBUTOR

All statements, technical information, and recommendations in this bulletin are for general use only. Consult Bray representatives or factory for the specific requirements and material selection for your intended application. The right to change or modify product design or product without prior notice is reserved.

United States patent number 5,305,781. Other patents applied for worldwide.

Bray CONTROLS
A Division of BRAY INTERNATIONAL, Inc.
13333 Westland East Blvd. Houston, Texas 77041
281.894.5454 FAX 281.894.9499 www.bray.com

© 2008 Bray International. All rights reserved.

B-1016_EL_S/70_2009-10

Flow-Tek®

Subsidiary of BRAY INTERNATIONAL, Inc.



FLANGED SERIES

2 PIECE FLANGED FULL PORT ½" - 12"

F15 - ASME Class 150 | F30 - ASME Class 300

FLANGED SERIES BALL VALVES

Flow-Tek's F15/F30 Flanged Series ball valves feature a floating ball design for low torque and increased cycle life. As standard, large size valves feature trunnion-type ball support. These rugged ball valves are ideal for industrial applications.

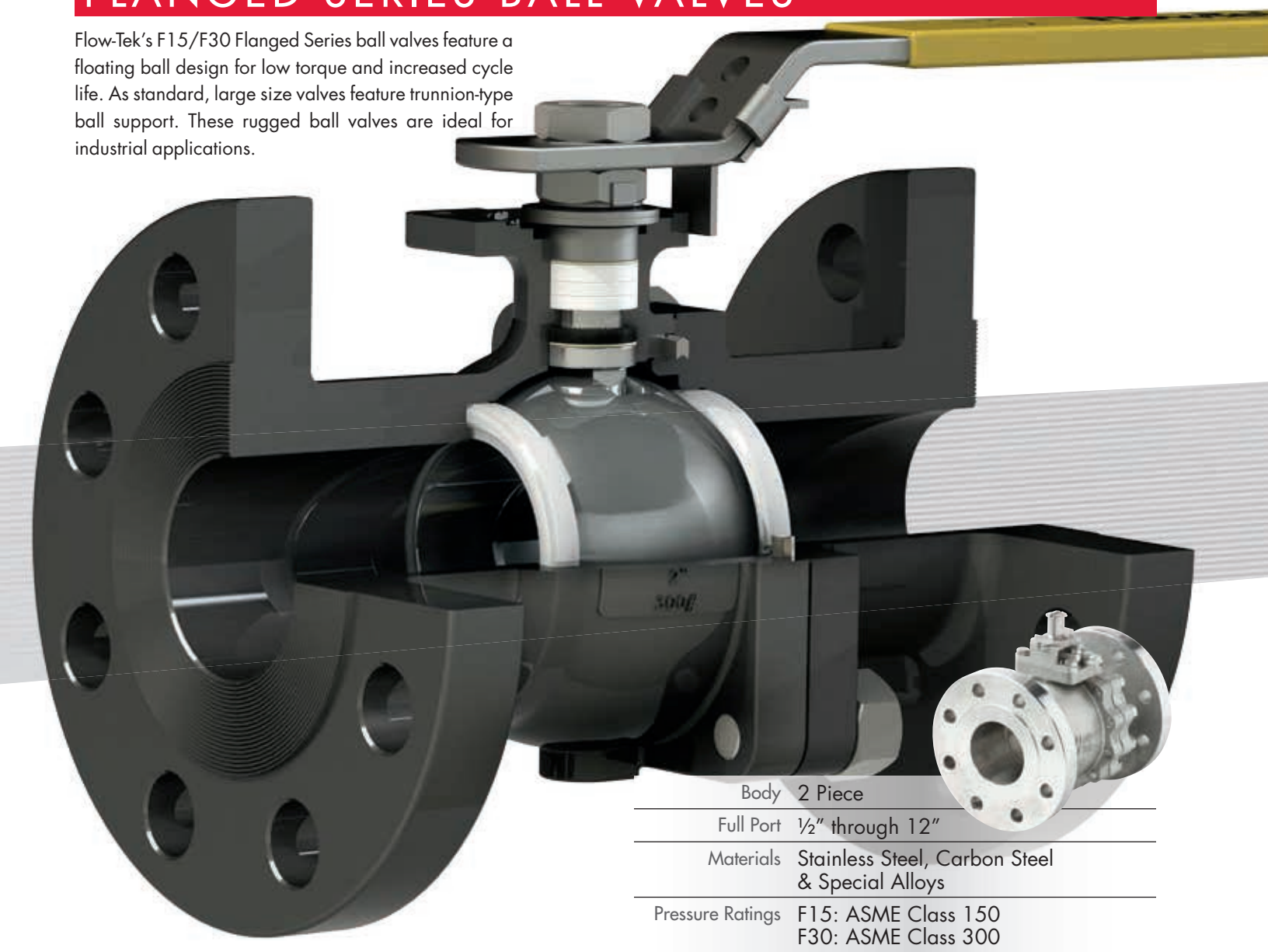

Body	2 Piece
Full Port	½" through 12"
Materials	Stainless Steel, Carbon Steel & Special Alloys
Pressure Ratings	F15: ASME Class 150 F30: ASME Class 300

SECURE MOUNT

Flanged Series valves offer ease of automation due to an integrally cast actuator mounting pad which complies with ISO 5211 through 2" valve sizes.

STEM SEALS

Flanged Series ½"– 2" valves feature live-loaded, self-adjusting primary and secondary sealing. Utilizing Belleville washers, the stem seal automatically adjusts to compensate for changes in temperature and normal wear. 2½"– 12" valves utilize an independent packing gland which can be easily adjusted without removing mounting hardware or operator. The packing gland is contoured to more uniformly distribute the load across the packing. The primary stem seal is a combination of a thrust washer and a thrust washer protector. An adjustable stem packing creates a secondary seal between the stem and body. The stem packing is composed of RPTFE V-rings as standard – graphite stem packing is standard on all fire safe valves.

BALL

Flow-Tek balls are precision machined and mirror finished for bubble-tight shut off and less operating torque. As an added safety feature, a hole in the stem slot of each ball equalizes pressure between the body cavity and the line media flow.

BODY

½"– 4" valve bodies are investment cast and solution annealed/ normalized for the highest quality and added strength. All body castings are marked with a foundry heat number for full traceability. Carbon steel bodies are phosphate coated for increased corrosion resistance.

SEAT

Flow-Tek's seat design ensures bi-directional, bubble-tight sealing with low operating torque. All resilient seats feature relief slots or seat O.D. clearance to relieve pressure past the upstream seat, and positive preloading to ensure low pressure/vacuum sealing.

STEM ASSEMBLIES

Flow-Tek manufactures heavy duty, high quality stems with double "D" connection to ball and operator mounting. Stem and ball design ensure positive contact. All Flow-Tek stems are internal entry and blowout proof for maximum safety.

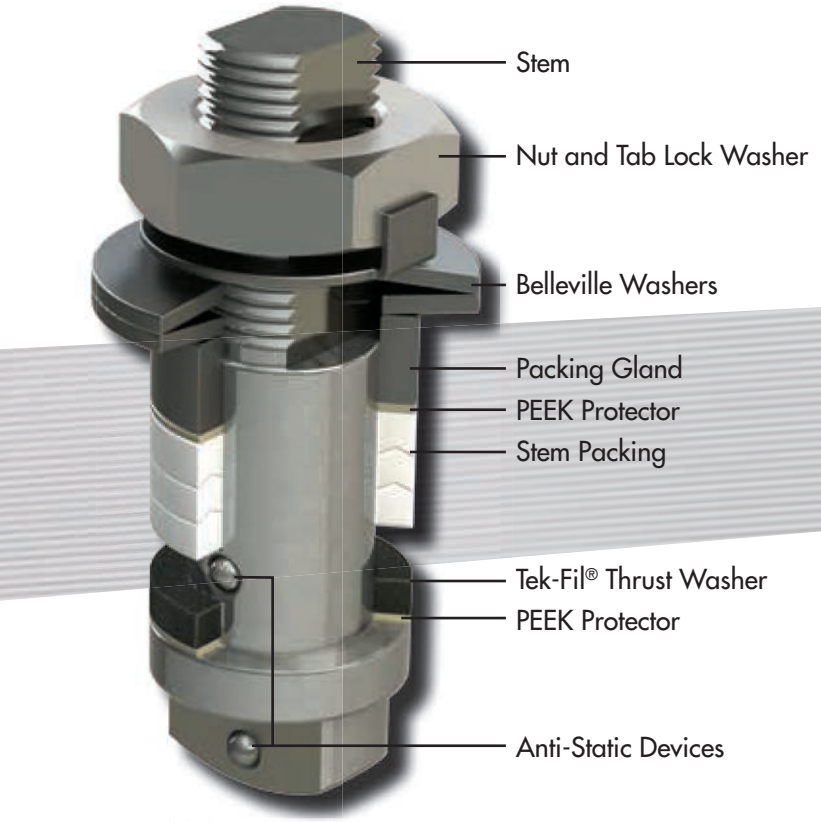

BALL SUPPORT Valve Sizes 6" through 12"

As standard, larger sized valves feature trunnion-type ball support. This support helps to maintain continuous contact between the ball and seats, preventing seat damage and blow-by. The results are less seat wear, lower torque, and longer service life.

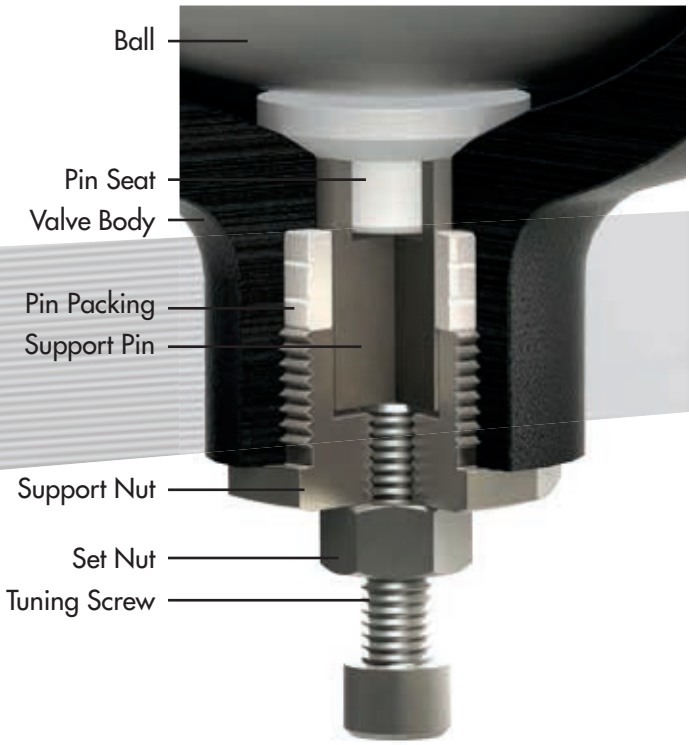

SMART STEM Valve Sizes ½" through 2"

Flow-Tek's interchangeable family of valves feature strong, large diameter stems with live-loaded, self-adjusting sealing utilizing Belleville washers which automatically adjust to compensate for changes in temperature and wear. Manual adjustments which can cause damage to the seal and seat are not required. The assembly is secured by a saddle-type lock washer which prevents stem nuts from unthreading in high cycle automation applications.

STEM PACKING

An adjustable V-ring design creates a multiple seal between the stem and body. Each stem assembly is composed of three or four (dependent on valve size) rings providing a very high cycle life by resisting creep and cold flow. The thrust washer and the thrust washer protector combine to provide a primary seal, reduce torque and prevent galling. This arrangement is a Flow-Tek exclusive.

LOCKING DEVICE



All manually operated valves feature a locking device to prevent accidental movement of ball position. Valves ½"–2" feature a safety trigger that locks the handle in the open or closed position. The handle lock can be bypassed, if needed, with a small bolt through the handle in the release position.

On all sizes a padlock can be added to secure the handle in position, preventing unwanted movement of the ball.

FIRE SAFE - Certified to API 607

Flanged Series valves with graphite stem seals have been thoroughly fire tested and meet these standards.

In the event of a fire, after heat destroys the primary resilient seat, the ball makes contact with the secondary metal seat, forming a secure seal. The body seal, composed of stainless steel and graphite wound into a spiral, prevents external leakage. The graphite stem rings prevent stem leakage.

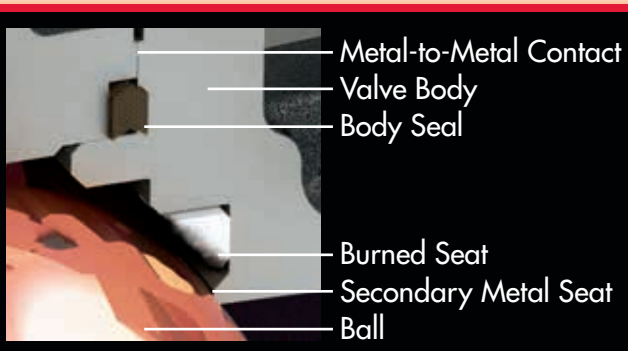

PRESSURE / TEMPERATURE

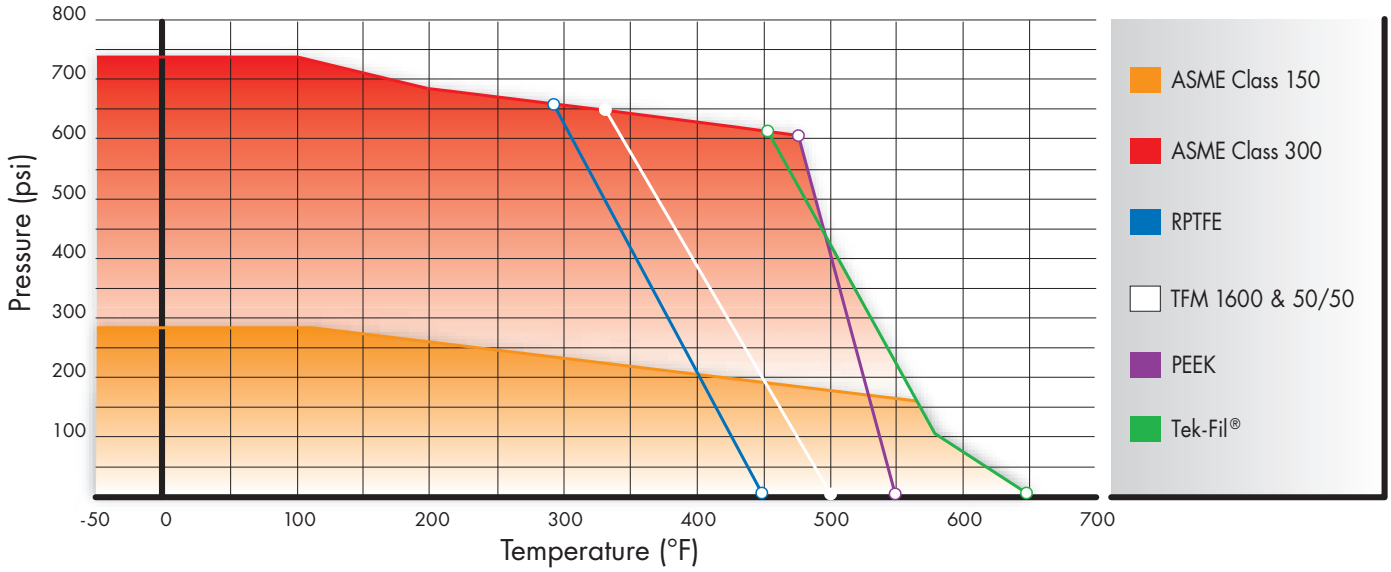

Carbon steel valves limited to -20°F

STEAM SERVICE PRESSURE RATINGS: WSP

	TFM Seats		Tek-Fil Seats		PEEK Seats	
	PSI	°F	PSI	°F	PSI	°F
Class 150	150	365	190	383	170	374
Class 300	150	365	425	454	425	454

Vacuum service to 29.9 inches Hg. gauge.

SPECIAL OPTIONS/SERVICES

Cavity Fillers	Media Containment Units
Spring Return Handles	NACE
Vented Balls	Polished Internals
Characterized Balls	Special Cleaning
Chlorine Service	Silicone Free

SPECIFICATIONS

- Valve sizes ¼" through 12"
- Design meets MSS-SP-110
- Threaded end connections meet ASME B1.20.1 NPT
- Socket weld end connections meet ASME B16.11
- Butt weld end (Schedule 40) connections meet MSS SP-72 /ASME B16.25
- Flanged end connections meet ASME Class 150

Valve body and end cap connections are high quality investment cast and solution annealed/normalized. Body and end cap wall thickness meets ASME B16.34.

Valve stems are blow-out proof for maximum safety and meet ASME B16.34 specification.

All valves are factory tested to MSS SP-72 and API 598.

SEAT SELECTION

A wide range of seat materials are available to meet most applications. The standard seat is TFM 1600. Options include:

- RPTFE
- Stainless Steel/PTFE (50/50)
- UHMWPE
- Virgin PTFE
- PEEK
- Tek-Fil® (carbon/graphite filled TFM)
- Full metal seats
- Cavity Fillers



PEEK seats offer high pressure/temperature capability. Tek-Fil® seats offer reduced torque in high temperature, high cycle, and steam service applications. TFM 1600 seats offer the exceptional chemical resistance of PTFE plus lower porosity and permeability, improved temperature range and reduced valve torques.

ISO 9001

COMPONENTS & MATERIALS

ITEM/NAME	STAINLESS STEEL	CARBON STEEL	QTY.
1. Body	ASTM A351 Gr CF8M	ASTM A216 Gr WCB	1
2. End Cap	ASTM A351 Gr CF8M	ASTM A216 Gr WCB	1
3. Ball	ASTM A351 Gr CF8M		1
4. Seat	TFM 1600		2
5. Stem	ASTM A479 Type 316		1
6. Body Seal	Spiral Wound (316/Graphite)		1
7. Body Nut	ASTM A194 Gr 8		*
8. Body Stud	ASTM A193 B8	ASTM A193 B7	*
9. Anti-Static Device	SS304		2
10. Packing Protector	PEEK		1
11. Thrust Washer Protector	PEEK		1
12. Thrust Washer	Tek-Fil		1
13. Stem Bearing	15% RPTFE		1
14. Stem Packing	RPTFE or Graphite		**
15. Packing Gland	ASTM A167 Type 304		1
16. Packing Follower	ASTM A351 Gr CF8M	ASTM A216 Gr WCB	1
17. Gland Bolt	SS304		2
18. Belleville Washer	SS301		2
19. Tab Lock Washer	SS304		1
20. Travel Stop Housing	CF8M	WCB	1
21. Housing Bolt	SS304	Alloy Steel	4
22. Travel Stop	SS304	Zinc Plated Carbon Steel	1
23. Travel Stop Sleeve	ASTM A167 Type 304		1
24. Travel Stop Bolt	SS304		1
25. Handle	SS304 or Ductile Iron***		1
26. Lock Nut	ASTM A167 Type 304		2
27. Handle Bolt	Carbon Steel		1
28. Handle Sleeve	Vinyl through 2"		1
29. Locking Device	SS304		1
30. Snap Ring	Nickel Plated Carbon Steel		2

* Quantity depends on valve size.
** RPTFE packing is composed of 3 or 4 pieces depending on size.
Graphite packing is composed of a single piece.
*** Ductile Iron used forvalve sizes ≥ 2½".

Flow-Tek offers the seat, body seal, thrust washer and stem packing as recommended spare parts. These parts are available as a packaged repair kit.

½" – 2" VALVES

Carbon steel bodies on valve sizes ½" – 4" are black phosphate coated.

All stainless steel bodies are solution annealed/normalized.

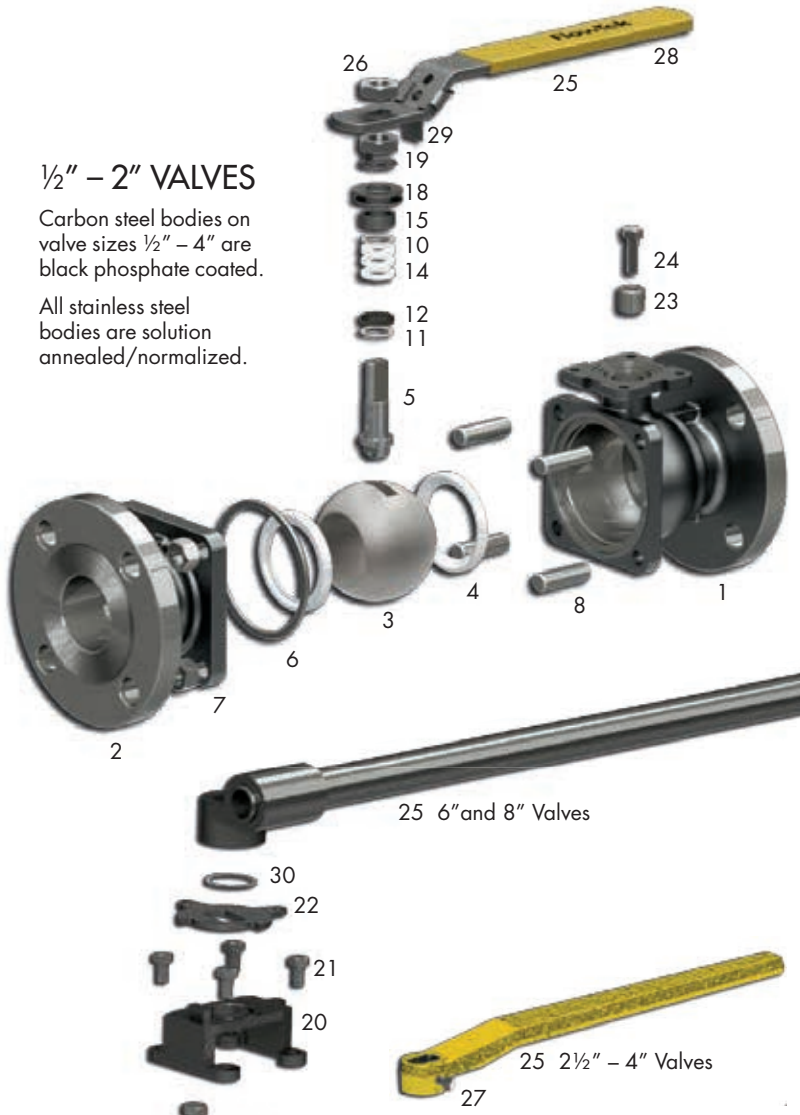



2½" – 12" VALVES

Ball support is included on 10"-12" F15 valves and 6"-12" F30 valves.

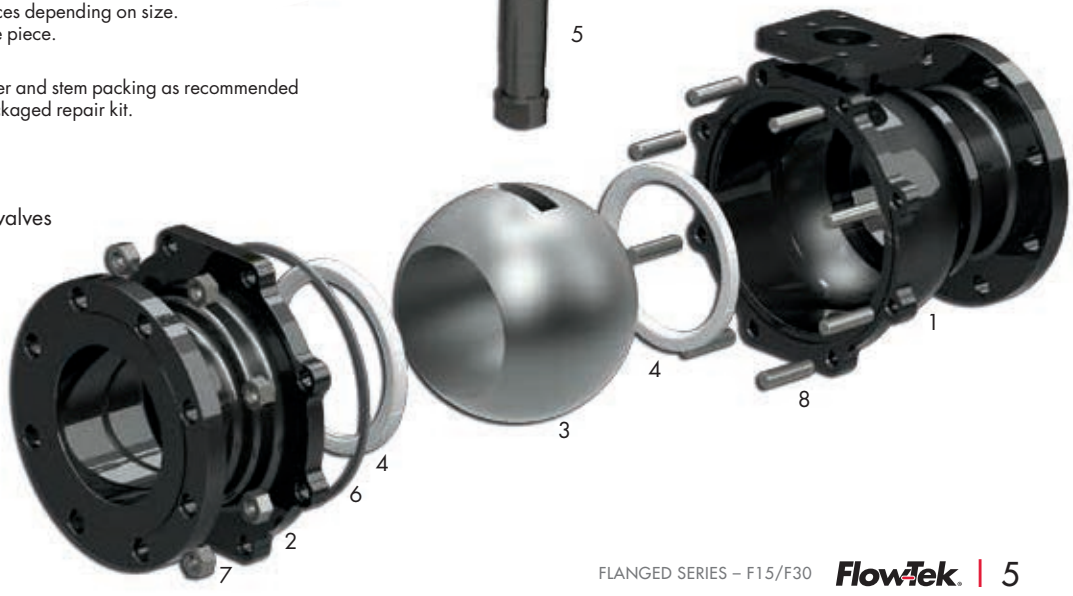

F15/F30 DIMENSIONS ½" – 2" VALVES (15mm - 50mm)

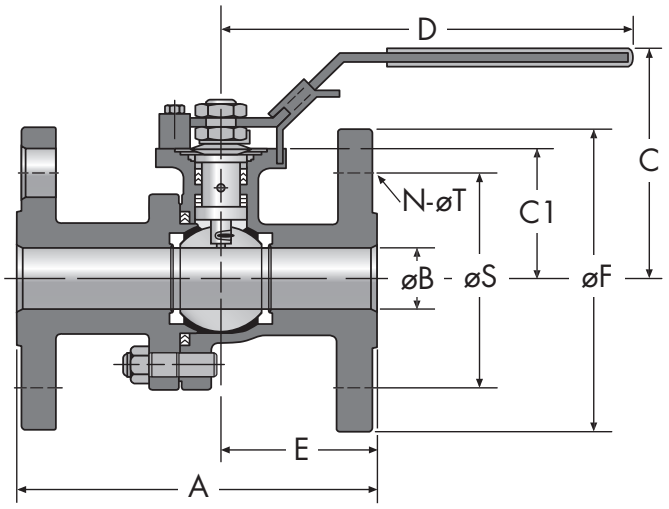

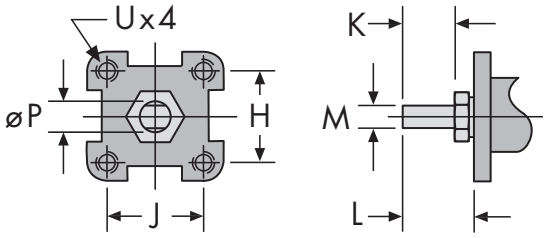

DIMENSIONS – Secure Mount

	Size	H	J	F0	BC DIA.	K	L	M	øP	U UNC
INCHES	1/2	1.17	1.17	F04	1.65	0.31	0.61	0.25	0.37	#10-24
	3/4	1.17	1.17	F04	1.65	0.31	0.61	0.25	0.37	#10-24
	1	1.39	1.39	F05	1.97	0.43	0.82	0.31	0.43	1/4-20
	1-1/2	1.95	1.95	F07	2.76	0.55	0.95	0.37	0.62	5/16-18
	2	1.95	1.95	F07	2.76	0.55	0.95	0.37	0.62	5/16-18
MILLIMETERS	15	29.7	29.7	F04	41.9	7.9	15.5	6.0	9.4	#10-24
	20	29.7	29.7	F04	41.9	7.9	15.5	6.0	9.4	#10-24
	25	35.0	35.0	F05	50.0	10.9	20.8	7.9	10.9	1/4-20
	40	49.5	49.5	F07	70.0	14.0	24.0	9.5	15.8	5/16-18
	50	49.5	49.5	F07	70.0	14.0	24.0	9.5	15.8	5/16-18

Model F15 – Class 150

	Size	A	øB	C	C1	D	E	øF	øS	N / øT	C_V	Torque*		Weight	
INCHES	1/2	4.25	0.59	2.88	1.54	6.50	1.79	3.50	2.38	4 x 0.62	32	36	LBS-IN	4	LBS
	3/4	4.62	0.79	2.97	1.67	6.50	2.01	3.88	2.75	4 x 0.62	60	65		5	
	1	5.00	0.98	3.41	2.05	7.87	2.13	4.25	3.12	4 x 0.62	105	95		10	
	1-1/2	6.50	1.49	4.20	2.60	9.84	2.76	5.00	3.88	4 x 0.62	275	230		14	
	2	7.00	1.97	4.53	2.95	10.43	3.07	6.00	4.75	4 x 0.75	500	390		20.5	
MILLIMETERS	15	108.0	15.0	73.25	39.0	165.0	45.5	88.9	60.5	4 x 15.8	28	4	Nm	2	KG
	20	117.0	20.0	75.40	42.4	165.0	51.0	98.6	69.9	4 x 15.8	52	7		2	
	25	127.0	24.9	86.69	52.0	199.9	54.0	108.0	79.0	4 x 15.8	91	11		4.5	
	40	165.0	37.9	106.60	66.0	249.9	70.0	127.0	98.6	4 x 15.8	238	26		6	
	50	177.8	50.0	115.01	74.9	264.9	78.0	152.0	120.7	4 x 19.0	433	44		9	

Model F30 – Class 300

	Size	A	øB	C	C1	D	E	øF	øS	N / øT	C_V	Torque*		Weight	
INCHES	1/2	5.50	0.59	2.92	1.57	6.50	2.44	3.75	2.62	4 x 0.62	32	40	LBS-IN	5	LBS
	3/4	6.00	0.79	2.97	1.67	6.50	2.72	4.62	3.25	4 x 0.75	60	70		7	
	1	6.50	0.98	3.41	2.05	7.87	2.91	4.88	3.50	4 x 0.75	105	108		10	
	1-1/2	7.50	1.49	4.04	2.60	9.84	3.27	6.12	4.50	4 x 0.88	275	270		19	
	2	8.50	1.97	4.53	2.95	10.43	3.94	6.50	5.00	8 x 0.75	500	445		25	
MILLIMETERS	15	139.7	15.0	74.23	39.9	165.0	62.0	95.0	66.6	4 x 15.8	28	5	Nm	2	KG
	20	152.0	20.0	75.40	42.0	165.0	69.0	117.0	82.6	4 x 19.0	52	8		3	
	25	165.0	24.9	86.61	52.0	199.9	73.9	124.0	88.9	4 x 19.0	91	12		5	
	40	190.5	37.9	102.50	66.0	249.9	83.0	155.5	114.0	4 x 22.0	238	31		9	
	50	215.9	50.0	115.06	74.9	264.9	100.0	165.0	127.0	8 x 19.0	433	50		11	

Face to Face dimensions meet ASME B16.10 long pattern and short pattern (sizes 1/2 " thru 2").
***Torque** at maximum rated pressure, clean water, TFM 1600 seating material. Other seat materials exhibit different torques. Please refer to TB 1005 for specific torques.

F15/F30 DIMENSIONS 2½" – 12" VALVES (65mm - 300mm)

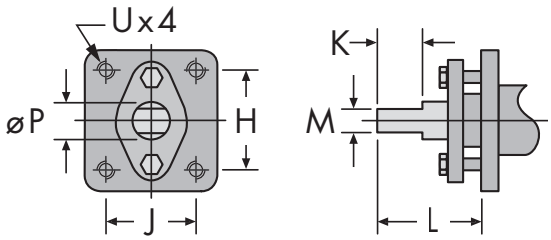

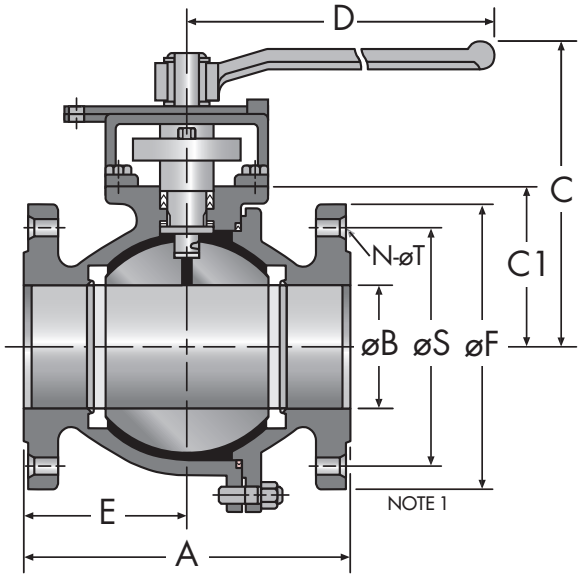

DIMENSIONS – Secure Mount

	Size	H	J	F0	BC DIA.	K	L	M	øP	U UNC
INCHES	2-1/2 - 4	3.54	1.87	F10	—	1.75	3.10	0.67	1.10	1/2-13
	6	3.37	3.37	F12	4.77	1.61	3.58	1.02	1.71	1/2-13
	8[1]	3.37	3.37	F12	4.77	2.13[1]	3.58[1]	1.02	1.71	1/2-13
	10-12[2]	4.53	4.53	F16	6.40	2.15	3.86[2]	1.38	1.97[2]	5/8-11
MILLIMETERS	65 - 100	89.9	47.5	F10	—	44.5	78.7	17.0	27.9	1/2-13
	150	85.6	85.6	F12	121.0	40.9	90.9	25.9	43.5	1/2-13
	200	85.6	85.6	F12	121.0	54.0	90.9	25.9	43.5	1/2-13
	250-300	115.0	115.0	F16	162.6	54.6	98.0	35.0	50.0	5/8-11

Model F15 – Class 150

	Size	A	øB	C	C1	D	E	øF	øS	N / øT	C_V	Torque*		Weight
INCHES	2-1/2	7.50	2.56	6.63	3.39	15.35	3.08	7.00	5.50	4 x 0.75	780	500		36
	3	8.00	2.99	6.92	3.66	15.35	3.74	7.50	6.00	4 x 0.75	1,150	650		45
	4	9.00	3.99	7.59	4.39	15.35	4.47	9.00	7.50	8 x 0.75	2,100	1,505		65
	6	15.50	5.98	12.38	7.17	15.35	7.62	11.00	9.50	8 x 0.88	5,000	3,250	LBS	157
	8	18.00	7.87	12.66	7.60	38.98	8.35	13.50	11.75	8 x 0.88	9,600	4,750		290
	10	21.00	9.84	14.80	9.88	38.98	10.47	16.00	14.25	12 x 1.00	15,000	13,700		500
	12	24.00	11.81	16.37	11.46	38.98	12.01	19.00	17.00	12 x 1.00	21,000	19,700		700
MILLIMETERS	65	190.5	65.0	168.40	86.0	389.9	78.0	177.8	139.7	4 x 19.0	675	56		16
	80	203.0	76.0	175.65	93.0	389.9	95.0	190.5	152.0	4 x 19.0	995	73		20
	100	228.6	101.0	192.90	111.5	389.9	113.5	228.6	190.5	8 x 19.0	1,817	170		29.5
	150	393.7	151.9	314.55	182.0	389.9	193.6	279.0	241.0	8 x 22.0	4,325	367	KG	71
	200	457.0	199.9	321.58	193.0	990.0	212.0	342.9	298.5	8 x 22.0	8,304	537		132
	250	533.0	249.9	375.85	251.0	990.0	265.9	406.0	362.0	12 x 25.0	12,975	1,548		227
	300	609.6	300.0	415.85	291.0	990.0	305.0	482.6	431.8	12 x 25.0	18,165	2,226		318

Model F30 – Class 300

	Size	A	øB	C	C1	D	E	øF	øS	N / øT	C_V	Torque*		Weight
INCHES	2-1/2	9.50	2.56	6.55	3.39	15.35	4.18	7.50	5.88	8 x 0.88	780	600		44
	3	11.12	2.99	6.85	3.72	15.35	5.57	8.25	6.62	8 x 0.88	1,150	850		61
	4	12.00	3.99	7.56	4.35	15.35	5.96	10.00	7.88	8 x 0.88	2,100	2,600		96
	6	15.88	5.98	12.37	7.19	38.98	7.60	12.50	10.62	12 x 0.88	5,000	5,300	LBS	243
	8	19.75	7.87	13.82	8.64	38.98	9.33	15.00	13.00	12 x 1.00	9,600	7,600		430
	10	22.38	9.84	-	9.69	38.98	11.18	17.50	15.25	16 x 1.12	15,000	17,800		610
	12	25.50	11.81	-	11.26	38.98	12.80	20.50	17.75	16 x 1.25	21,000	24,800		950
MILLIMETERS	65	241.0	65.0	166.40	86.0	389.9	106.0	190.5	149.0	8 x 22.0	675	68		20
	80	282.5	76.0	173.90	94.5	389.9	141.5	209.6	168.0	8 x 22.0	995	96		27.7
	100	304.8	101.0	192.05	110.5	389.9	151.0	254.0	200.0	8 x 22.0	1,817	294		44
	150	403.0	151.9	314.20	182.6	990.0	193.0	317.5	269.8	12 x 22.0	4,325	599	KG	110
	200	501.7	199.9	351.05	219.5	990.0	237.0	381.0	330.0	12 x 25.0	8,304	859		195
	250	568.5	249.9	-	246.0	990.0	284.0	444.5	387.0	16 x 28.5	12,975	2,011		277
	300	647.7	300.0	-	286.0	990.0	325.0	520.7	450.9	16 x 31.8	18,165	2,802		431

[1] For 8" F30: K=1.61, L=3.42

[2] For 10" F30: L=3.82, P=2.165

NOTE 1: Ball Support as shown on Page 2 is included on 10"-12" F15 and 6"-12" F30 valves.

NOTE 2: 2½", 3" & 4" valves feature a NAMUR stem slot for ease of limit switch mounting.

Face to Face dimensions meet ASME B16.10 long pattern in all sizes and short pattern sizes up to 4" F15 and up to 6" F30.

***Torque** at maximum rated pressure, clean water, TFM 1600 seating material. Other seat materials exhibit different torques. Please refer to TB 1005 for specific torques.

This page is intentionally left blank



Bray®

SERIES 92/93 Rack & Pinion
Double Acting & Spring Return

PNEUMATIC ACTUATOR

The
High
Performance
Company

SERIES 92/93

Styling, strength, compactness, and simplicity of design have been combined to produce the best rotary actuator on the market today. Bray Controls introduces this newest line of high performance, highest quality pneumatic actuators, the Series 92/93.

Engineering excellence and precision manufacturing has produced a modular product line with reduced overall size requirements and economic savings. In addition all Brayline Accessories are fully modular and directly mount to the actuator – providing flexibility and efficiency at reduced cost.

Bray Series 92/93 actuators are rack and pinion, opposed-piston actuators available in two versions: double acting for rotation of 90°, 135° and 180°, and spring return for 90° rotation. Their ideal use is actuating butterfly, ball or plug valves, but they can be applied anywhere a rotation of 90°, 135° or 180° is needed. Rotated on low friction acetal bearings, Bray units are well suited to handle offset loads to the gear and output shaft assembly.

The Series 92/93 actuators were designed primarily for pneumatic operation up to a maximum pressure of 140 psig (10 Bar) and for temperature ranges of -40°F (-40°C) to +200°F (+95°C). For higher and lower temperature applications, consult factory.

All double acting and spring return units are suitable for both on-off and throttling applications. Actuators which can be actuated with other media such as hydraulic oil or water are also available as an option.

The Series 92/93 is completely enclosed and self contained. The many features minimize maintenance and provide safe, simple disassembly and assembly.

The INTEGRAL PORTING (**A**) reduces the cost of external tubing that is also easily damaged. The unique, lubricated ACETAL PISTON GUIDES (**B**) and RINGS (**C**). Both have a very low coefficient of friction and absorb the side thrusts of the pistons. The piston cylinder walls in the body are honed to a very fine finish thus reducing the overall coefficient of friction. These features extend the life of the actuator and make the Series 92/93 one of the most efficient actuators on the market.

The OUTPUT SHAFT BEARINGS (**D**) on the top and bottom of the pinion are made of low-friction acetal.

The OUTPUT SHAFT and PINION GEAR (**E**) are one-piece, manufactured from hardened alloy steel and zinc-plated for corrosion protection.

The SHAFT POSITION INDICATOR (**F**) clearly shows open or closed position and is easily removable for MANUAL OVERRIDE FUNCTION of the actuator.

The BODY (**G**) is extruded aluminum with anodized corrosion protective coating. The END CAPS (**H**) are polyester coated for chemical resistance. This coating is resistant to dilute aqueous acids, salts, aliphatic hydrocarbons, detergents, petroleum solvents, alcohols, greases and oils.

The TRAVEL STOP (**I**) adjusting screws limit the travel of the actuator to specific degrees of rotation in both open and closed directions. The PISTONS (**J**) are die-cast aluminum.

The two PNEUMATIC SUPPLY PORTS (**K**) are 1/8" NPT on size 48 actuators. The other sizes have 1/4" NPT ports. NAMUR interface is standard on all actuator sizes.

All Bray Series 92/93 actuators have permanently lubricated factory packed bearings and guides. No further lubrication is necessary under normal operating conditions. All seals, including PISTON SEALS (**L**), are permanently lubricated Buna-N O-rings.

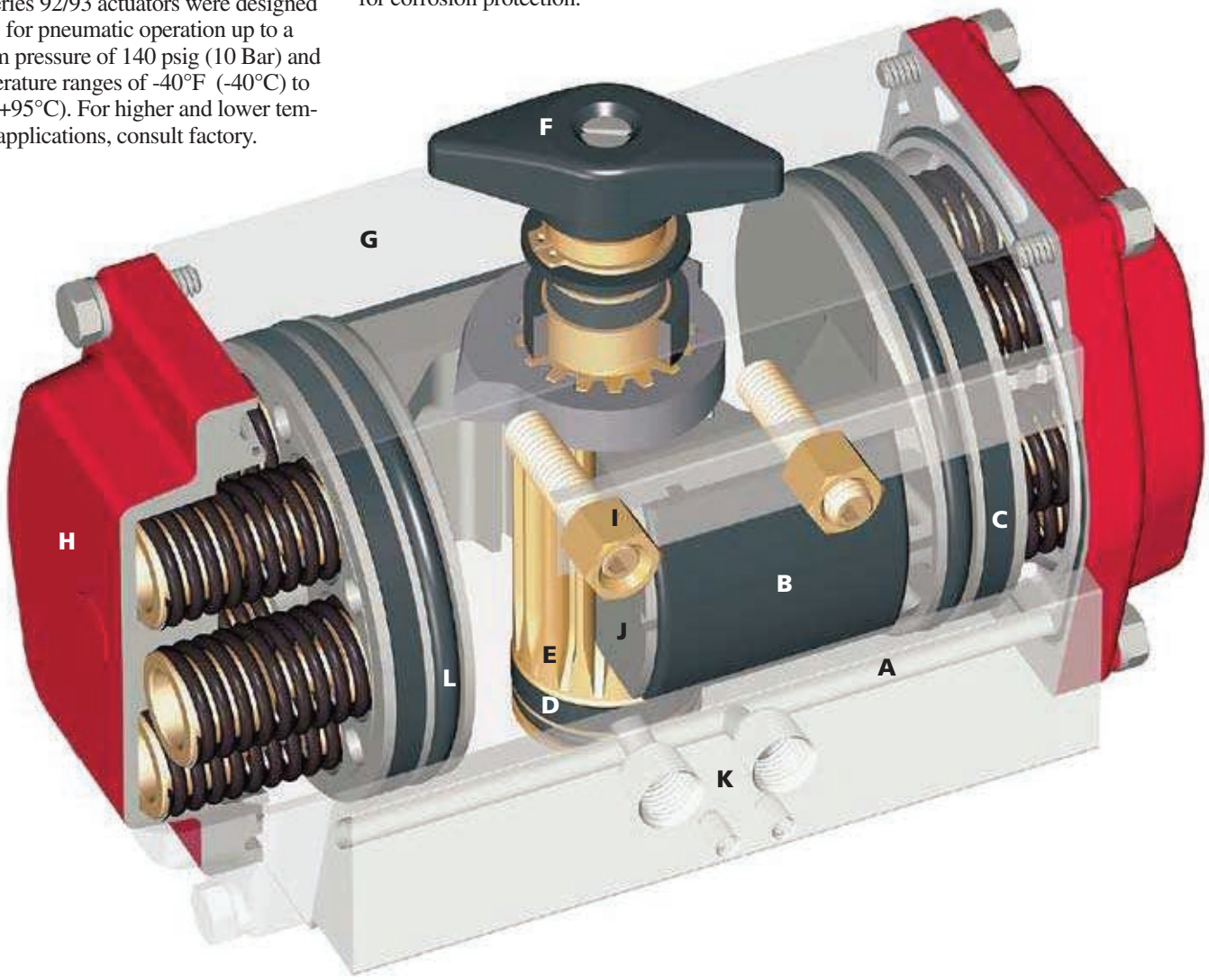

ENGINEERING

Double Acting/ Spring Return

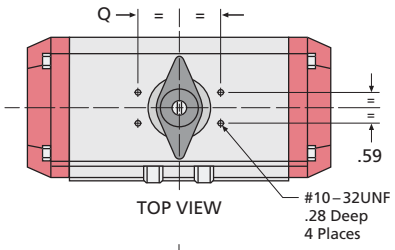

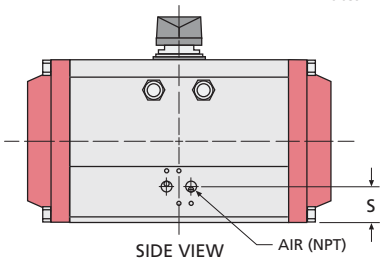

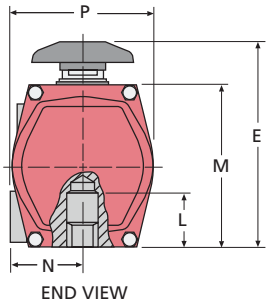

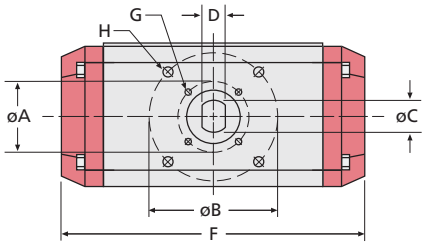

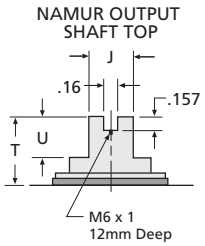

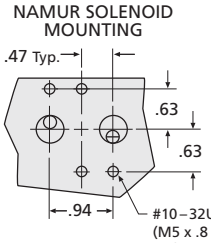

Special Note: Sizes 210 and 255 actuators have end-cap travel stops not bi-directional travel stops. Please consult factory for production release date of bi-directional stops for these size S92/93 actuators.

SERIES 92/93 DIMENSIONS

SIZE	48	63	83	92	118	127	160*	210	255‡
AIR NPT	1/8	1/4	1/4	1/4	1/4	1/4	1/4	1/4	1/4
A ISO "F"†	1.42 F 03	1.97 F 05	1.97 F 05	1.97 F 05	2.76 F 07	2.76 F 07	—	4.92 F 12	6.50 F 16
B ISO "F"†	1.97 F 05	2.76 F 07	2.76 F 07	2.76 F 07	4.92 F 12	4.92 F 12	4.92 F 12	6.50 F 16	7.87x4.72 Rect.
C	.55	.55	.75	.75	1.18	1.18	1.18	1.97	2.50
D	.40	.40	.51	.51	.87	.87	.87	.47	.62
E	3.88	4.53	5.43	5.78	7.28	8.09	9.36	11.45	13.35
F	6.10	5.58	7.40	8.59	11.90	12.31	15.54	17.80	26.70
G (UNC)	10-32 x .23	1/4-20 x .32	1/4-20 x .32	1/4-20 x .32	5/16-18 x .46	5/16-18 x .46	—	1/2-13 x .78	M16x2 x 28mm
H (UNC)	1/4-20 x .25	5/16-18 x .40	5/16-18 x .40	5/16-18 x .40	1/2-13 x .69	1/2-13 x .69	1/2-13 x .75	5/8-11 x 1.11	M16x2 x 28mm
J	.38	.38	.50	.50	1.12	1.12	1.12	1.12	1.12
L	1.38	1.38	1.46	1.46	2.20	2.20	2.20	2.76	4.25
M	2.50	3.46	4.27	4.61	5.52	6.32	7.80	10.04	11.89
N	1.60	1.72	2.02	2.18	2.53	2.72	3.07	4.25	4.75
P	2.78	3.11	3.83	4.17	4.91	5.44	6.82	8.83	10.75
Q	3.15	3.15	3.15	3.15	3.15	3.15	5.12	5.12	5.12
S	1.25	.89	.89	.94	1.36	1.36	1.39	1.44	1.50
T	1.10**	.79	.79	.79	.79	.79	1.18	1.18	1.18
U	.47	.47	.47	.47	.47	.47	.75	.75	.75

Note: Double Acting and Spring Return actuators have the same overall dimensions. The double acting unit of the size 48 actuator is optionally available with flat end caps with an F dimension of 4.00.

† ISO "F" means mounting flange-drilling pattern.

* Dimensions for Size 160A in table. Size 160B (keyed stem version) has C dimension of 1.38 and D dimension of .39.

‡ Dimensions for Size 255A in table. Size 255B actuator has a C dimension of 3.00 and D dimension of .75.

** Size 48 has a T dimension of .79 with use of NAMUR top plate.

Actuator Speeds

SIZE	48	63	83	92	118	127	160	210	255
Open Stroke/ Close Stroke	1/4	1/4	1/4	1/4	1/2	1/2	1	2	2 3/4

Note: Times shown are in seconds at 80 PSIG supply pressure with 6ft. tubing having an internal diameter of approximately 1/4". Bray S92/93 actuation times are very dependent on the flow capacity of their air supply. The use of smaller port solenoids, solenoid manifolds, smaller I.D. air supply tubing and/or extended lengths of tubing can significantly reduce the actuation time and/or initial response to the command signal.

Actuator Weights

SIZE	48	63	83	92	118	127	160	210	255
Double Acting	1.8	3.4	6.1	8.4	16.4	20.9	38.1	65.0	144.0
Spring Return	2.4	4.1	7.9	10.8	21.7	27.3	52.6	95.3	192.6

Weights are in lbs. Spring Return unit weights are with full set of springs per piston.

Actuator Volumes (ins³)

SIZE	48	63	83	92	118	127	160	210	255
Counter-clockwise	5.7	9.6	24.8	34.8	73.8	96.7	187.5	360.0	750.0
Clockwise	4.8	13.4	32.6	45.9	95.5	130.8	259.6	450.0	900.0

Counter-clockwise: Air volume in cubic inches required to push pistons apart, full travel.
Clockwise: Air volume in cubic inches required to push pistons together, full travel.

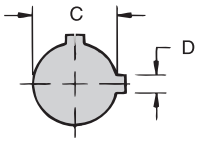

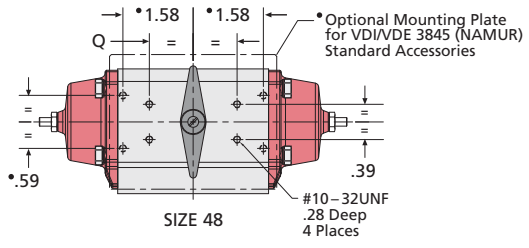

TORQUE

DOUBLE ACTING TORQUE CURVE

Series 92 – (Air to Air)

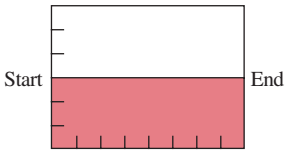

The Series 92 Actuator has a constant output torque throughout travel from start to end, clockwise or counterclockwise rotation.

SERIES 92 ACTUATOR TORQUE DATA

Double Acting Pneumatic Operated
Torque Output (Lb.-Ins.)

Actuator Size	Air Supply Pressure (PSIG)				
	40	60	80	100	120
48	75	113	150	188	225
63	145	221	297	373	449
83	351	536	721	906	1091
92	493	753	1013	1272	1532
118	1058	1615	2171	2728	3285
127	1410	2152	2894	3636	4378
160	2797	4270	5742	7214	8687
210	5783	8826	11870	14914	17957
255	14211	21691	29171	36650	44130

SINGLE ACTING TORQUE CURVES

Series 93 – (Spring Return)

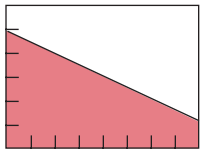

Counterclockwise (Air Stroke)

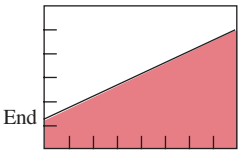

Clockwise (Spring Stroke)

SERIES 93 ACTUATOR TORQUE DATA

Air Operated, With Spring Return, Torque Output (Lb.-Ins.)

Actuator Size	No. Springs per Piston	Air Supply Pressure (PSIG)											
		40		60		80		100		120		Spring Stroke	
		Start	End	Start	End	Start	End	Start	End	Start	End	Start	End
48	1	51	32	89	70	126	107	164	145	201	182	43	24
	2/1	39	10	77	48	114	85	152	123	189	160	65	36
	2			64	27	101	64	139	102	176	139	86	49
	3/2			52	5	89	42	127	80	164	117	108	61
	3					77	21	115	59	152	96	129	73
63	2	91	65	167	141	243	217	319	293	395	369	80	54
	3	64	27	140	103	216	179	292	255	368	331	118	81
	4			113	65	189	141	265	217	341	293	156	108
	5			86	27	162	103	238	179	314	255	194	135
	6					135	65	211	141	287	217	232	162
83	2	210	167	395	352	580	537	765	722	950	907	184	141
	3	156	76	341	261	526	446	711	631	896	816	275	195
	4			281	176	466	361	651	546	836	731	360	255
	5			220	97	405	282	590	467	775	652	439	316
	6					369	185	554	370	739	555	536	352
92	2	310	232	570	492	830	752	1089	1011	1349	1271	261	183
	3	218	101	478	361	738	621	997	880	1257	1140	392	275
	4			386	231	646	491	905	750	1165	1010	522	367
	5			294	94	554	354	813	613	1073	873	659	459
	6					462	229	721	488	981	748	784	551
118	2	692	469	1249	1026	1805	1582	2362	2139	2919	2696	589	366
	3	509	174	1066	731	1622	1287	2179	1844	2736	2401	884	549
	4			883	437	1439	993	1996	1550	2553	2107	1178	732
	5			700	142	1256	698	1813	1255	2370	1812	1473	915
	6					1073	404	1630	961	2187	1518	1767	1098
127	2	880	465	1622	1207	2364	1949	3106	2691	3848	3433	945	530
	3			1357	733	2099	1475	2841	2217	3583	2959	1419	795
	4			1094	261	1836	1003	2578	1745	3320	2487	1891	1058
	5					1568	529	2310	1271	3052	2013	2365	1326
	6					1302	57	2044	799	2786	1541	2837	1592
160	2	1819	1118	3292	2591	4764	4063	6236	5535	7709	7008	1679	978
	3	1399	349	2872	1822	4344	3294	5816	4766	7289	6239	2448	1398
	4			2452	1123	3924	2595	5396	4067	6869	5540	3147	1818
	5			2030	353	3502	1825	4974	3297	6447	4770	3917	2240
	6					3154	1196	4626	2668	6099	4141	4546	2588
210	2	3833	2508	6876	5551	9920	8595	12964	11639	16007	14682	3275	1950
	3	2859	868	5902	3911	8946	6955	11990	9999	15033	13042	4915	2924
	4			4930	2275	7974	5319	11018	8363	14061	11406	6551	3896
	5			3949	638	6993	3682	10037	6726	13080	9769	8188	4877
	6					6022	2031	9066	5075	12109	8118	9839	5848
255	2	9487	6747	16967	14227	24447	21707	31926	29186	39406	36666	7464	4724
	3	7125	3015	14605	10495	22085	17975	29564	25454	37044	32934	11196	7086
	4			12243	6762	19723	14242	27202	21721	34682	29201	14929	9448
	5			9880	3030	17360	10510	24839	17989	32319	25469	18661	11811
	6					14998	6778	22477	14257	29957	21737	22393	14173

BrayLINE ACCESSORIES



TRAVEL STOP Two independent adjusting screws are located on the center of the output shaft to precisely limit the travel of the actuator to specific degrees of rotation. The travel stops permit bidirectional adjustment of actuator movement in both the open and closed positions.



SPRING RETURN Bray's Series 93 spring return models employ a unique cartridge system. The actuator was designed to save both space and cost. The housing length of the spring return unit is the same as the double acting unit. Converting from double acting to spring return actuation is just a matter of removing the end caps and adding the unique spring cartridges. The actuator can be disassembled and assembled without cumbersome equipment or danger to the installer due to springs releasing. 40, 60, 80, and 100 psi services are standard, optional ratings are available.



DIRECT MOUNTING Bray actuators comply with ISO 5211 dimensions and mount directly to Bray valves without using external linkages. Field installation is simple, misalignment is minimized and contamination buildup between valve and actuator is reduced. Bray can provide linkage for mounting actuators to other devices requiring 90° to 180° rotation.

SERIES 63 3-WAY AND 4-WAY SOLENOID VALVE

For electrical operation of pneumatic actuator on-off functions, Bray Series 63 solenoids are direct-mounted to the actuator by NAMUR interface. The pilot operated spool control valve is convertible from 3-Way (3/2) to 4-Way (5/2). Both watertight (NEMA 4, 4X) and explosion proof (NEMA 4,4X,7,9) housings are standard. NPT and IP65 DIN connections are offered with both single and dual coils. The air supply connection is 1/4" NPT and the electrical connection is 1/2" NPT. A manual override screw is located on the top of the valve body. Stainless Steel housings, digital Bus solenoids and a Series 55 speed control that allows independent control in both directions of travel are also available.



VALVE STATUS MONITOR SERIES 50

The Series 50 signals actuator and valve position to local and remote stations. The compact valve status monitor mounts directly to the top of the actuator. Features include finger-touch control cams, captive cover bolts, local position indicator and two conduit entries for easy wiring. Rated for 15 amps at 125 or 250 volts AC, the Series 50 is provided with internal travel switches that are prewired to a terminal block. Standard switches are two single pole double throw (SPDT) micro switches. Available switch options are 4 micro switches, 2 proximity switches, 2 pneumatic switches or potentiometer for continuous read out. The housing is available in waterproof (NEMA 4,4X) or explosion proof (NEMA 4,4X,7,9).





SERIES 52 VALVE STATUS MONITOR

The Bray 2N1 ProxSensor provides 2 proximity sensors in 1 self-contained, fully sealed, compact enclosure. The sensors are completely encapsulated with epoxy resin in a polymer enclosure for superior moisture, chemical and corrosion protection. AC, DC, Intrinsically Safe and BUS Network versions are offered. Features include LED indicators, high visibility pointer for local position indication, non-magnetic targets and multi-pin electrical cable connector. A Valve Position Display is available as an option. AC Sensor units operate on 20-250 VAC with a maximum load current of 500mA. DC Sensor units operate on 10-30VDC with a maximum load current of 200mA. BUS Network powered units with solenoid drive are AS-i, DeviceNet and PROFIBUS DP.



SERIES 6A ELECTRO-PNEUMATIC POSITIONERS

Series 6A intelligent electro-pneumatic positioners offer precise, microprocessor driven flow control and advanced communication combined with the lowest air consumption on the market. For use with either double or single acting actuators, Series 6A positioners can accept an analog 4-20 mA, HART, Foundation Fieldbus or Profibus PA input signal. Features include an LCD display, keypad, auto calibration and adaptive control. Both waterproof (NEMA 4, 4X) and explosion proof (NEMA 4,4X, 7,9) housings are available.

Brayline Accessories and Bray Actuators both comply with VDI/VDE 3845 (NAMUR recommendations).

SPECIFICATIONS

SPACE SAVING MODULAR PRODUCT LINE

The actuator shall be pneumatically operated and must travel a minimum of 90° in each direction and must be able to overtravel at 3% in each direction past 90°. The actuator shall be totally enclosed and contained in a single enclosure, with no external moving parts. All pneumatic passage ways must be integral to the actuator housing so as to eliminate the need for external tubing. Actuator shall be rack and pinion design, and the output torque shall be linear throughout travel. Actuator shall be provided with pistons that have acetal piston guides and rings thus greatly extending the life of the actuator and reducing friction to the minimum. Actuator must be supplied with two independent travel stop adjustments, the 0° and 90° travel positions have travel adjustments of +5° to –5° (see Diagram A below). The actuator shall be provided with mechanical visual position indicator, and the indicator must be able to be removed easily thus exposing the output shaft for use of manually overriding the actuator when needed. The output shaft and pinion must be of one piece and must be manufactured out of hardened alloy steel and zinc plated for corrosion protection. Actuator shall be able to mount in any position without loss of performance. The actuator shall bolt directly to Bray valve mounting flange without need for any brackets.

Actuator housing shall be anodized aluminum and all external fasteners shall be carbon steel, zinc plated. Springs shall be spring steel, coated for corrosion protection. All seals shall be Buna-N and bearings made of lubricated acetal resin.

The actuator shall be factory lubricated. Actuator design must have smooth housing lines so it will self-drain. The actuator shall be factory tested to ensure proper operation.

STANDARD MATERIALS

Body:	Extruded aluminum alloy, anodized
End Caps:	Die cast aluminum alloy with corrosion resistant polyester coating
Pistons:	Die cast aluminum alloy
Output Shaft/Pinion:	Carbon Steel, zinc plated
Travel Stop:	Alloy Steel
Shaft Bearings:	Acetal
Piston Guides:	Acetal
Fasteners:	Stainless Steel
Springs:	Spring Steel, protective coating
O-Ring Seals:	Buna-N
Options:	Polyester coated body exterior Electroless Nickel plated body exterior Hard Anodized body exterior Stainless Steel pinion

SPRING RETURN – MODULAR DESIGN

The Spring Return System for fail-safe services must be installed in the same housing as the double acting actuator, with no additional housing extensions required, therefore saving weight and space. The spring system must be supplied as a self-contained spring cartridge system. This is a safety feature that ensures disassembly of the actuator without danger of spring release when end caps are removed. Actuator shall be Bray Series 92 or 93 or approved equal.

SERVICE DATA:

Actuators shall be designed for pneumatic operation up to a maximum pressure of 140 PSIG (10 Bar) and for temperature ranges of -40°F (-40°C) to +200°F (+95°C). Filtered air is recommended but not required. All double acting and spring return units shall be suitable for both on-off and throttling applications. Optional units shall be able to operate with other media such as hydraulic oil or water, consult factory for further information.

OPTIONAL EQUIPMENT

See Bray brochure #1030 for Solenoid, brochures #1011 and #1029 for Pneumatic and Electro-Pneumatic Positioners and brochures #1012 and #1015 for Valve Status Monitors.

Diagram A Travel Stop Adjustments
The 0° and 90° travel positions have travel adjustments of +5° max. to –5° min.

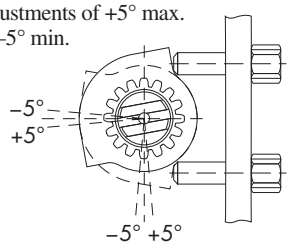

Caution: Care should be taken not to over adjust the travel stops in too far or out too far.

ACTUATOR COMPONENTS

Item No.	Qty.	Description
1	1	Body
2	2	Piston
3	1	Pinion
4	2	End Cap
5*	12 max.	Spring Cartridge Assembly
6	1	Upper Bearing
7	1	Lower Bearing
8	1	Retaining Ring
9	1	Nylon Washer
10	2	Acetal-Bearing Pad
11	2	Acetal-Guide Ring
12	2	Stop Nut
13	2	Travel Adjusting Screw Stop
14	2	O-Ring–Travel Stop
15	1	Acetal Spacer
16	1	Travel Stop
17	8	Hex Head Cap Screw
18	8	Washer
19	2	O-Ring–Piston
20	2	O-Ring–End Cap
21	1	O-Ring–Shaft-Top
22	1	O-Ring–Shaft-Bottom
23	1	Indicator Pointer
24	1	Indicator Pointer Screw

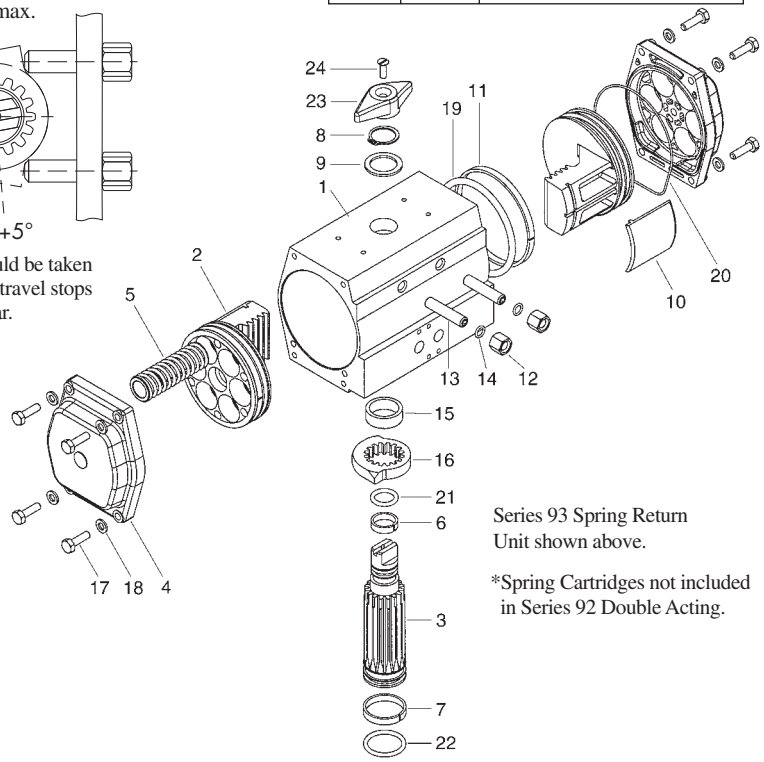

Series 93 Spring Return Unit shown above.

*Spring Cartridges not included in Series 92 Double Acting.

DISTRIBUTOR

All statements, technical information, and recommendations in this bulletin are for general use only. Consult Bray representatives or factory for the specific requirements and material selection for your intended application. The right to change or modify product design or product without prior notice is reserved.

Patented and patents applied for all over the world.
Bray® is a registered trademark of BRAY INTERNATIONAL, Inc.

Bray® CONTROLS
A Division of BRAY INTERNATIONAL, Inc.
13333 Westland East Blvd. Houston, Texas 77041
281.894.5454 FAX 281.894.9499 www.bray.com

© 2007 Bray International. All rights reserved.

SERIES 55
FILTER REGULATORS

The Bray Series 55 Filter Regulator is a 5 micron filter designed to provide nominal filtration removal of solids and liquids from the compressed air with accurate control to any pneumatic control device and are strongly recommended for use with the Bray Series 64 and 6A positioners.

LOCKING KNOB: Allows for downstream pressure adjustment and locks the pressure setting in place.

THREADED COLLAR: Permits easy attachment of bracket for panel mounting.

PRESSURE PORTS: 1/4" NPT or 1/4 G Metric

BOWL QUICK RELEASE: Allows for easy removal of the bowl and guard for access to the filter element without the need for special tools.

TRANSPARENT POLYCARBONATE BOWL: Provides easy view of liquid levels.

METAL BOWL GUARD: Provides sturdy breakage protection from external environmental factors.

PUSHBUTTON DRAIN: Allows for easy removal of liquid from the bowl.

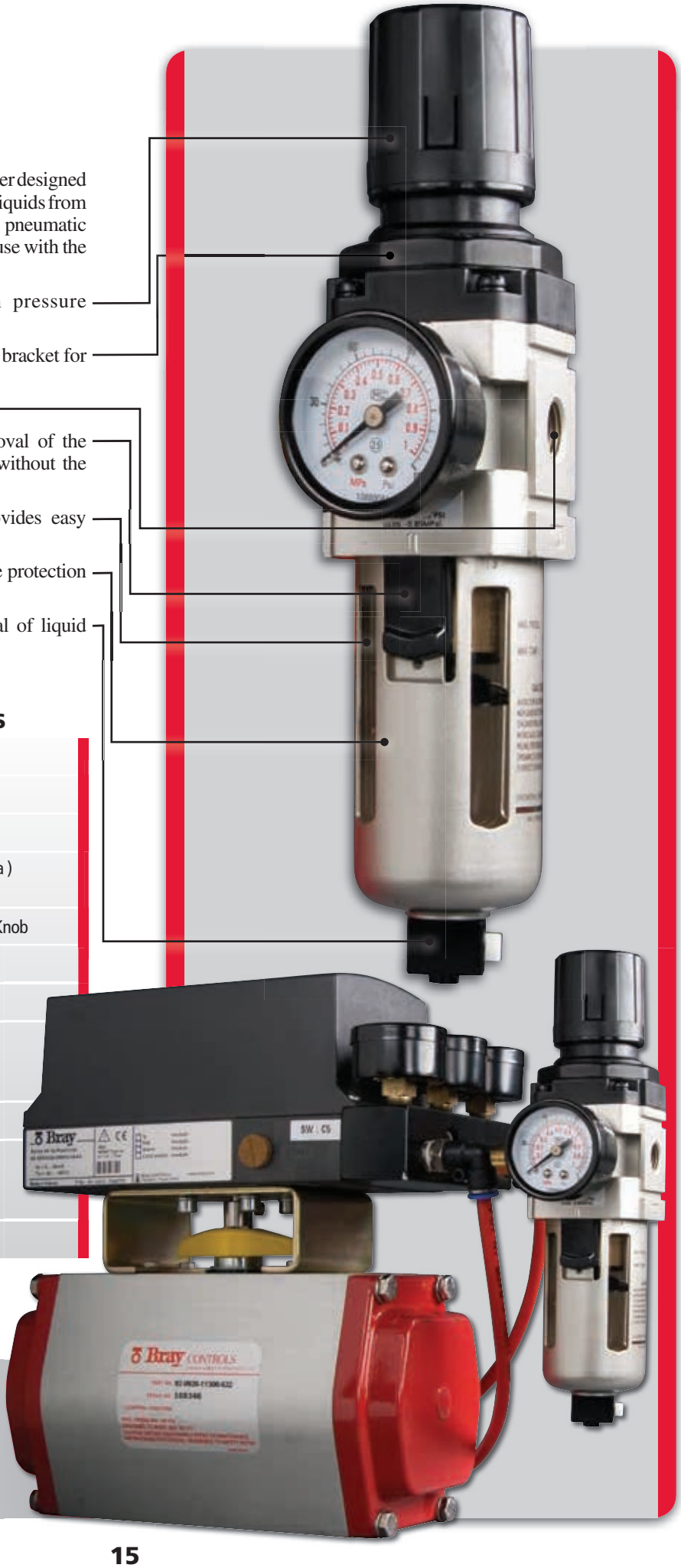

SERIES 55 FILTER REGULATORS

Pressure Ports	1/4" NPT or G 1/4
Gauge Ports	G 1/8
Flow (SCFM)*	30
Set Pressure	7 – 125 PSIG (0.05 - 0.85 MPa) (0.5 - 8.6 Bar)
Filter Regulator Body	Zinc / Non-Removable Rising Knob
Bonnet	Plastic
Springs	Steel
Bowls (2 Ounce)	Transparent Polycarbonate with Metal Guard Metal (Zinc) w/Sight Gauge
Filter Element	5 Micron Standard – Plastic
Pressure Ratings**	0 – 250 PSIG (0 - 1.70 MPa) (0 – 17.2 bar)
Temperature Ratings	32°F - 175°F (0°C - 80°C)

*SCFM = Standard cubic feet per minute at 100 psig inlet, 90 psig no flow secondary setting and 10 psig pressure drop.
**Do not attach to pressurized gas bottles.

This page is intentionally left blank

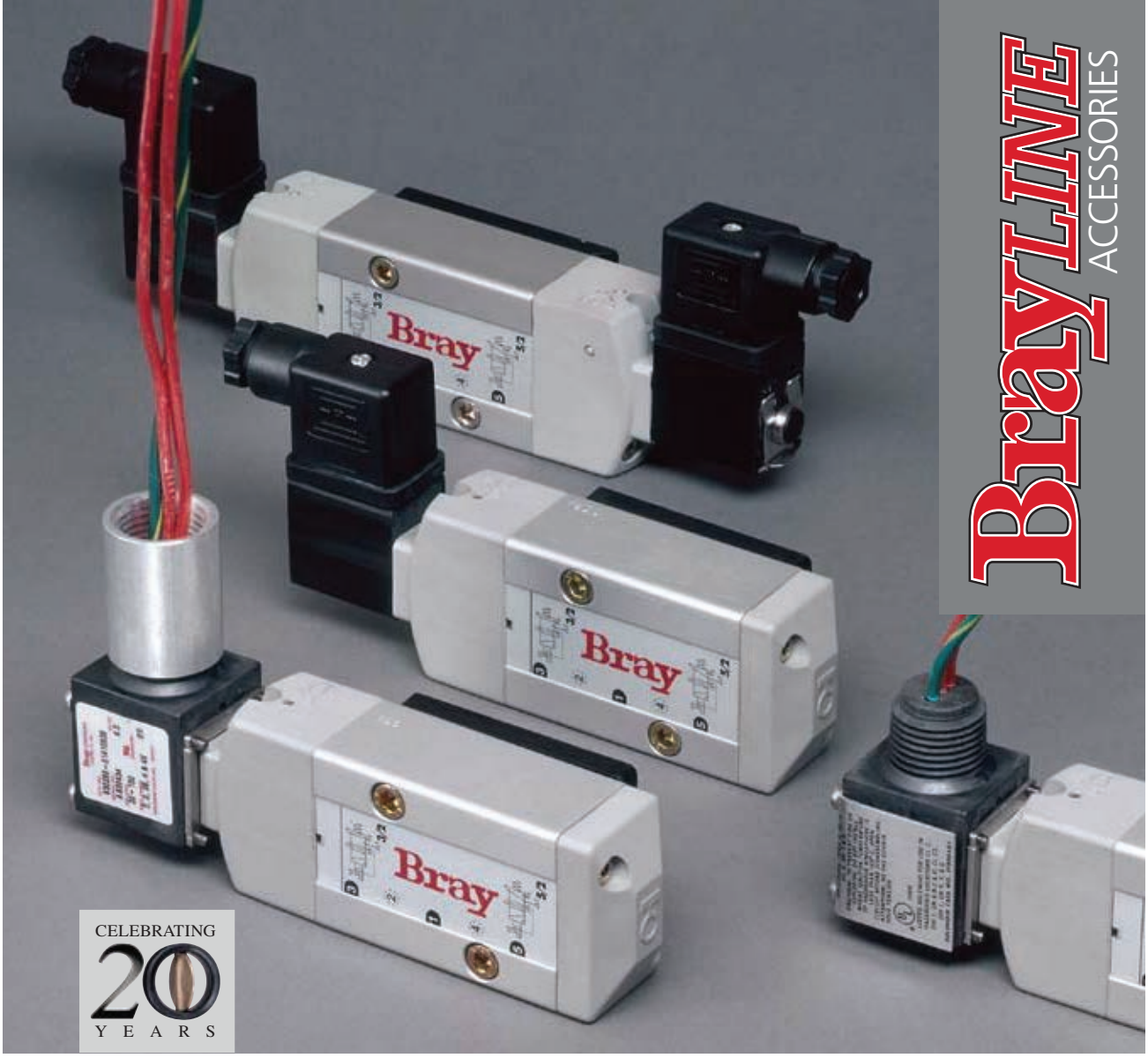

BrayLINE ACCESSORIES

SERIES 63 NEMA 4 & NEMA 4,4x, 7,9
SINGLE & DUAL COIL NPT & DIN
CONVERTIBLE 3-WAY & 4-WAY

SOLENOIDS

PILOT OPERATED SPOOL CONTROL VALVES

Far superior in performance when compared to the commonly used poppet type valves, the rugged Series 63 delivers long, trouble-free service.

FEATURES

Bray Controls offers the high flow Brayline Series 63 Solenoid Valve. The compact, modular, pilot operated spool control valve is convertible from 3-Way (3/2) to 4-Way (5/2). These units can be used with either spring return or double acting actuators where on/off electrical operation is required. Three standard coil housings/connectors are available: General Purpose Watertight (NEMA 4, 4x) and Explosion Proof (NEMA 4, 4x, 7 & 9) units have 1/2" NPT connections, and IP65 DIN units have cable gland PG9 connectors. All housings types are offered with single or dual coils. The coils are UL recognized and CSA certified. All Series 63 solenoids carry the CE mark.

MANUAL OVERRIDE

Each unit contains as standard a mechanical manual override located on the solenoid valve block. In the event of electrical power failure, overriding is simply a matter of rotating the manual override screw which will divert the air from one chamber of the pneumatic actuator to the other.

DIRECT MOUNTING

Meeting NAMUR (VDI/VDE 3845) standards, all Brayline Series 63 solenoid valves direct mount to the integral porting system of Bray Series 92/93 pneumatic actuators. No external piping is required. Bray's direct mounting permits quick and simple field installation.

SERIES 55 SPEED CONTROL

Speed controls that allow independent control of speed in both directions of actuator travel are optionally available.

CONVERTIBLE 3 & 4 WAY

Solenoid is shipped with both 3-Way (marked 3/2) and 4-Way (marked 5/2) flow plates, flow gaskets, O-rings that mount between flow plate and actuator, and mounting bolts.

OPTIONS

The Series 63 is available in the following options: stainless steel housings, low-powered units and intrinsically safe units. Intelligent, digital Bus solenoids are offered in DeviceNet and Profibus-PA protocols, and AS-I Interface solenoids with IP65 DIN/PG9 cable gland connectors are available. All direct mount to Bray pneumatic actuators.

The High Performance Company

SPECIFICATIONS

COIL HOUSINGS

Three standard coil housings are offered. The watertight (NEMA 4, 4x) housing offers a molded and potted coil with UL recognized components and CSA certification. The watertight and explosion proof (NEMA 4,4x,7,9) housing is UL listed and C.S.A. certified for hazardous locations Class I, Div.1 (Groups A-D) and Class II, Div.1 (Groups E-G).
The IP65 DIN housing has UL recognized components and CSA certification.

Standard solenoid valves are supplied as single coil units. Double coil units are also available for customers who require actuators to remain in last position during electrical power failure.

VALVE DESIGN Pilot Operated Spool

MEDIA Dry or lubricated air or inert gases

SPRING RETURN ACTUATORS The Series 63 Solenoid Valve fills the spring chamber with supply air rather than drawing air from the surrounding atmosphere. This keeps the spring chamber clean and dry, and improves the performance and service life of the actuator.

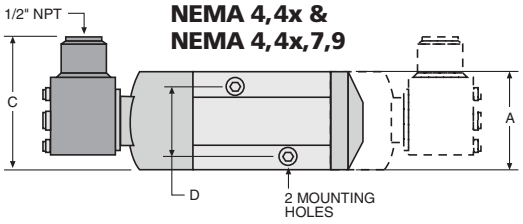

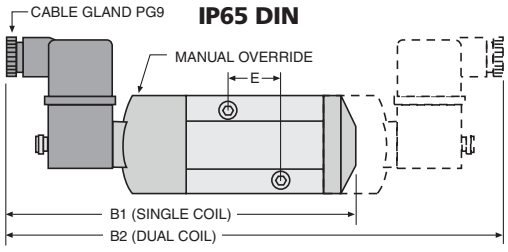

ELECTRICAL CHARACTERISTICS

COIL ELECTRICAL:

NEMA Housings:
24, 120, 220, 240 Volts AC, 50-60 HZ
6, 12, 24, 120 Volts DC, 50-60 HZ
IP65 DIN Housings:
24, 120, 240 Volts AC, 50-60 HZ
12, 24, 120 Volts DC, 50-60 HZ
Insulation-Class F Coils Maximum Temperature Rating: 311°F (155°C)

FLOW - 1/4" PIPE: $C_V = .7$
Flow = 30 scfm, 150 psi max.
Note: Bray S92/93 actuation times are very dependent on the flow capacity of their air supply. It is strongly recommended that only the Bray S63 high flow solenoid be used with the Bray S92/93 actuators. The use of smaller port solenoids, solenoid manifolds, small I.D. air supply tubing and/or extended lengths of tubing can significantly reduce the actuation time and/or the initial response to the command signal.

NOMINAL POWER (Watts)
NEMA Housings: A.C - 6.3, DC - 6.9
DIN Housing: A.C - 2.5, DC - 3.0

OPERATING SPEED: 10 cycles per minute - with more if needed

DUTY CYCLE: Continuous

FLOW SCHEMATICS

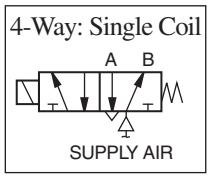

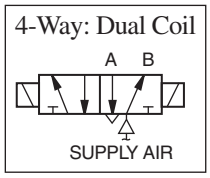

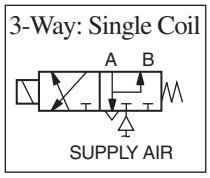

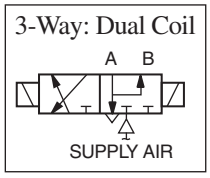

MECHANICAL CHARACTERISTICS

MOUNTING:

NAMUR (VDI/VDE 3845), mountable in any position, hardware included

MATERIALS:

Body: Anodized Aluminum
Spring: Phosphate treated black steel
Shading Coil: Copper
Seals: NBR + PUR
Core / Tube: Stainless / Brass
End Covers & Plate: 6/6 glass filled polyamide (PA/FV)
Spool: Aluminum
Internal Parts: Zamak, Steel, Acetal

PNEUMATIC PORTS: 1/4" NPT

CONNECTIONS:

NEMA Housings: Electrical: 1/2" NPT
DIN Housing: Electrical: Cable Gland PG9

CONSTRUCTION:

Standard construction is molded and potted coil with 18" leads, Class F Insulation. Other insulation classes available. The IP65 DIN coil and magnet structure are epoxy encased.
Molded Cordsets and connectors are available for IP65 DIN coil housings, please consult Bray representative or factory for further information.

NORMAL AMBIENT TEMPERATURE RANGE

NEMA Housings:
AC: -13°F (-25°C) to +140°F (+67°C)
DC: -13°F (-25°C) to +77°F (+25°C)
DIN Housing: AC & DC:
-13°F (-25°C) to +140°F (+67°C)

OPTIONAL ENCLOSURE:

Low power, intrinsically safe DIN Housing, CENELEC (Ex d,m,em &i) listed.

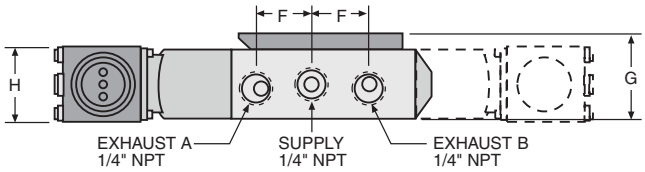

DIMENSIONS

Valve Size	Coil Housing	A	B1	B2	C	D	E	F	G	H
1/4"	NEMA 4, 4x	1.77	5.75	7.84	2.40	1.26	0.95	0.87	1.31	1.18
1/4"	NEMA 4,4x,7,9	1.77	5.75	7.84	2.40	1.26	0.95	0.87	1.31	1.18
1/4"	IP65 DIN	1.77	6.28	8.90	2.82	1.26	0.95	0.87	1.31	—

All statements, technical information and recommendation in this bulletin are for general use only. Consult Bray representatives or factory for the specific requirements and material selection for your intended application. The right to change or modify product design or product without prior notice is reserved.

Bray Controls is certified to ISO 9001 standards.

Bray® CONTROLS
A Division of BRAY INTERNATIONAL, Inc.
13333 Westland East Blvd. Houston, Texas 77041
281.894.5454 FAX 281.894.9499 www.bray.com

Bray® is a registered trademark of BRAY INTERNATIONAL, Inc.
© 2007 Bray International. All rights reserved. B-1030 04/07

BRAY INTERNATIONAL, INC

USA
Houston, TX +281.894.5454

FLOW-TEK

USA
Houston, TX +832.912.2300

CHINA
Hangzhou, Zhejiang +86.571.828.52200

BRAZIL
Paulinia SP-Brazil +55.19.3517.5555

BRAY CONTROLS / FLOW-TEK

BRAY CONTROLS USA
Houston, TX +832.912.2300

ARGENTINA
Buenos Aires +54.11.4362.0666

BENELUX
Heerhugowaard +31.72.572.1410

BRAZIL
Paulinia SP-Brazil +55.19.3517.6161

CANADA
Montréal +514.344.2729

CHILE
Santiago +56.2739.2966

CHINA
Hangzhou, Zhejiang +86.571.828.52200

GERMANY
Krefeld +49.2151.53360

INDIA
Gujarat +91.2667.664444

MEXICO
Zapopan, Jalisco +52.33.3836.4460

PACIFIC
Melbourne, Australia +613.9580.9755

PERU
Lima +511.251.0251

POLAND
Oświęcim +48.33.842.1968

UNITED KINGDOM
Inchinnan +44.141.812.5199

VIETNAM
Ho Chi Minh City +84.8.3742.3428

RITEPRO

CANADA
Montréal +514.324.8900

CHINA
Hangzhou, Zhejiang +86.571.828.52200

All statements, technical information, and recommendations in this bulletin are for general use only. Consult Flow-Tek representatives or factory for the specific requirements and material selection for your intended application. The right to change or modify product design or product without prior notice is reserved.

Flow-Tek® is a registered trademark of Bray International, Inc.
© 2016 Flow-Tek, Inc. All rights reserved.

F-2400_EN_F15/30_11_2016



▲ **FLOW-TEK - USA - Office & Manufacturing**

Global manufacturing, service around the corner

To serve you locally, each region maintains a factory certified sales and service network for all Bray International products.

CE

ABS Quality Evaluations, Inc. ★ Management System Certification ★

▼ **WORLD HEADQUARTERS - BRAY INTERNATIONAL , INC. - USA**



Flow-Tek®

Subsidiary of BRAY INTERNATIONAL, Inc.
8323 N. Eldridge Pkwy #100 Houston, Texas 77041
832.912.2300 Fax: 832.912.2301 www.flow-tek.com

This page is intentionally left blank

CS-912-052 : Identification sheet

VWTC PROJECT NUMBER:	Iqaluit WWTP	REV:	02
PROJECT NAME:	5000218036	SUBMITTED TO (COMPANY):	
ENGINEER:	F.VINCI	SUBMITTED TO (RESPONSIBLE)	
PROJECT MANAGER:	C. BEKAERT	PROJECT NUM REFERENCE.:	
PHONE NUMBER:		LOT NUMBER:	

SUPPLIER	EQPT CODE	EQPT TAG NO	DIA	DESCRIPTION	INFO 1	INFO 2	INFO 3	APPLIC.	NOTE	REV
KINGTRON	ST-999-015	BV-02-401,BV-02-402, BV-02-403,BV-02-407, BV-02-408,BV-02-409, BV-02-417,BV-02-418, BV-02-422,BV-02-423, BV-02-424,BV-02-432, BV-02-433,BV-02-437, BV-02-438,BV-02-439, BV-02-451,BV-02-452, BV-02-453,BV-02-457, BV-02-458,BV-02-459, BV-02-467,BV-02-468, BV-02-472,BV-02-473, BV-02-474,BV-02-482, BV-02-483,BV-02-487, BV-02-488,BV-02-489, BV-02-510,BV-02-511, BV-02-514,BV-02-518, BV-02-519,BV-02-520, BV-02-521,BV-02-523, BV-02-524,BV-02-525, BV-02-526,BV-02-527, BV-02-528,BV-02-529, BV-02-530,BV-02-531, BV-02-540,BV-02-541 BV-02-543,BV-02-545, BV-02-546,BV-02-547, BV-02-564,BV-02-568, BV-02-569,BV-02-574, BV-02-578,BV-02-579, BV-02-410,BV-02-425, BV-02-440,BV-02-460, BV-02-475,BV-02-490, BV-02-314,BV-02-315, BV-02-364,BV-02-365,	GENERAL ISOLATION VALVE	STAINLESS STEEL 1/2'' BALL VALVE // KingTron S-212T with reinforced PTFE seat // CRN required					2

This page is intentionally left blank

KingTron *Stainless Steel & Carbon Steel valve series*

2-PIECE STANDARD PORT BALL VALVES

FIG. S-212T / C-212T: THREADED ENDS, 2000 PSI(138 BAR) W.O.G..

FEATURES:

- Reinforced TFE seats increase durability.
- Adjustable packing gland.
- Bottom-loaded blow-out proof stem.
- Basic design complied with ANSI B16.34 & EN 12516-1.
- NPT threaded ends complied with ANSI B 1.20.1..
- Rc, Rp & G Threaded ends complied with BS 21/2779, JIS B-0203/0202, DIN 259/2999, ISO 228-1, AS1722.1/1722.2 are upon request.
- Tested according to API 598.



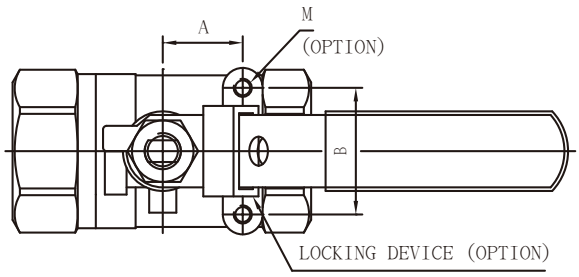

MATERIALS LIST:

NO.	PARTS	S-212T	C-212T
1	BODY	ASTM A351-CF8M	ASTM A216-WCB
2	SEAT	REINFORCED PTFE	REINFORCED PTFE
3	BALL	ASTM A351-CF8M/316	ASTM A351-CF8/304
4	GASKET	PTFE	PTFE
5	END CAP	ASTM A351-CF8M	ASTM A216-WCB
6	HANDLE NUT	AISI 304	AISI 304
7	HANDLE WASHER	AISI 304	AISI 304
8	GLAND	AISI 304	AISI 304
9	STEM PACKING	PTFE	PTFE
10	THRUST WASHER	PTFE	PTFE
11	STEM	ASTM A276-316	ASTM A276-304
12	HANDLE	AISI 304	ZINC PLATED STEEL
13	HANDLE COVER	PVC	PVC

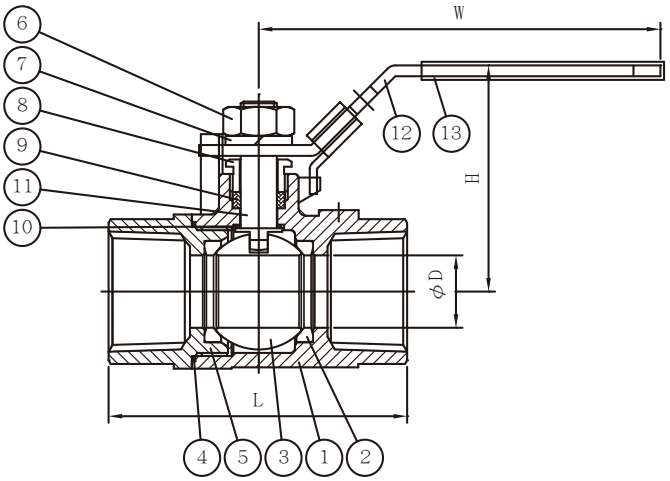

OPTIONS:

-L: LOCKING DEVICE. -V: VENTED BALL.
-M: TAPPED MOUNTING PAD. -W: BODY JOINT FULLY WELDED.
-A: ANTI-STATIC DEVICE.

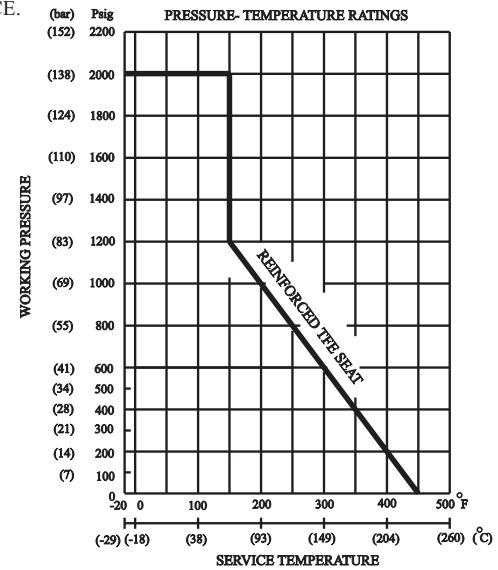

DIMENSIONS

SIZE		ϕD		L		A		B		H		W		M
inch	DN	in	mm	in	mm	in	mm	in	mm	in	mm	in	mm	(OPTION)
1/4"	8	0.37	9.5	2.09	53	0.50	12.7	1.12	28.5	2.13	54	3.70	94	10-24UNC
3/8"	10	0.37	9.5	2.09	53	0.50	12.7	1.12	28.5	2.13	54	3.70	94	10-24UNC
1/2"	15	0.49	12.5	2.38	60.5	0.50	12.7	1.12	28.5	2.13	54	3.70	94	10-24UNC
3/4"	20	0.59	15	2.70	68.5	0.50	12.7	1.12	28.5	2.24	57	3.70	94	10-24UNC
1"	25	0.79	20	3.25	82.5	0.87	22.1	1.38	35	2.46	62.5	4.37	111	10-24UNC
1 1/4"	32	0.98	25	3.58	91	0.93	23.6	1.38	35	2.87	73	5.37	136.5	10-24UNC
1 1/2"	40	1.26	32	3.94	100	0.93	23.6	1.50	38.1	3.09	78.5	5.37	136.5	1/4-20UNC
2"	50	1.50	38	4.61	117	0.93	23.6	1.50	38.1	3.48	88.5	6.57	167	1/4-20UNC

We reserve the rights to modify our product design or construction for improvement without prior notice.

This page is intentionally left blank

CS-999-017 : Identification sheet

VWTC PROJECT NUMBER:	Iqaluit WWTP	REV:	02
PROJECT NAME:	5000218036	SUBMITTED TO (COMPANY):	
ENGINEER:	F.VINCI	SUBMITTED TO (RESPONSIBLE)	
PROJECT MANAGER:	C. BEKAERT	PROJECT NUM REFERENCE.:	
PHONE NUMBER:		LOT NUMBER:	

SUPPLIER	EQPT CODE	EQPT TAG NO	DIA	DESCRIPTION	INFO 1	INFO 2	INFO 3	APPLIC.	NOTE	REV
KITZ	ST-999-017	GV-02-510 GV-02-520 GV-02-530 GV-02-540		WHITE WATER STRAINER DRAIN VALVE	KITZ AKUJM2, 2" STAINLESS STEEL GLOBE VALVE THREADED // WITH CRN					2

ST-999-019 : Identification sheet

VWTC PROJECT NUMBER:	Iqaluit WWTP	REV:	2
PROJECT NAME:	5000218036	SUBMITTED TO (COMPANY):	
ENGINEER:	F.VINCI	SUBMITTED TO (RESPONSIBLE)	
PROJECT MANAGER:	C. BEKAERT	PROJECT NUM REFERENCE.:	
PHONE NUMBER:		LOT NUMBER:	

SUPPLIER	EQPT CODE	EQPT TAG NO	DIA	DESCRIPTION	INFO 1	INFO 2	INFO 3	APPLIC.	NOTE	REV
KITZ	ST-999-019	GV-02-313 GV-02-333		MANUAL AIR PURGE VALVE	AKUJM07, ¾" 200WOG CF8M-10 IP SB GLOBE VALVE KITZ AKUJM// WITH CRN					2

GLOBE
200 WOG STAINLESS STEEL

Screw-In-Bonnet • Inside Screw • Non-Rising Stem
Stainless Steel Disc

CODE # 33 (AKUJM)
THREADED

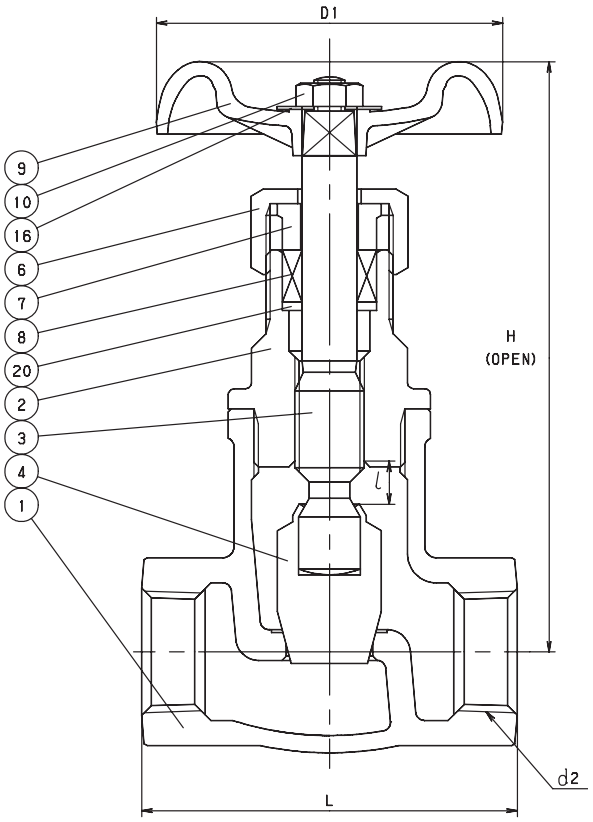

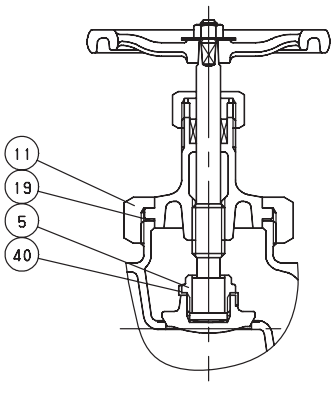

$2^1/_2$ and Larger

STANDARDS	
END TO END	KITZ
THREADED ENDS	ANSI B1.20.1
WALL THICKNESS	KITZ
DESIGN	KITZ

PRESSURE/TEMPERATURE

200 PSIG @ 250ºF – STATIC FLUID
150 PSIG @ 250°F – PULSATING FLUID / GAS
120 PSIG @ 350°F – SATURATED STEAM

MATERIAL LIST

NO.	NAME OF PART	SPECIFICATION
1	BODY	STAINLESS STEEL (A351 Gr. CF8M)
2	BONNET	STAINLESS STEEL (A351 Gr. CF8M)
3	STEM	STAINLESS STEEL (A276, TYPE 316)
4	DISC	STAINLESS STEEL (A276, TYPE 316)
5	LOCK NUT	STAINLESS STEEL (A276, TYPE 316)
6	PACKING NUT	STAINLESS STEEL (A276, TYPE 304) or (A351 Gr. CF8)
7	GLAND	STAINLESS STEEL (A276, TYPE 316)
8	GLAND PACKING	ARAMID FIBERS WITH GRAPHITE
9	HAND WHEEL ($^3/_8$ – $^3/_4$)	ZINC DIE-CAST (B86)
	(1 – 3)	ALUMINUM DIE-CAST (B85)
10	WHEEL NUT	CARBON STEEL (A307 Gr. B)
11	BONNET RING	STAINLESS STEEL (A351 Gr. CF8M)
16	NAME PLATE	ALUMINUM
19	GASKET	ARAMID FIBER SHEET
20	PACKING WASHER	STAINLESS STEEL (A276, TYPE 316)
40	LOCK PLATE	STAINLESS STEEL

DIMENSIONS - WEIGHTS - QUANTITIES

d2 SIZE	H	D1	L	APPROX. NET WT.	CARTON QTY
$^3/_8$	4.29	2.36	2.17	1.31	48
$^1/_2$	4.37	2.36	2.56	1.44	48
$^3/_4$	4.41	2.76	3.15	2.06	30
1	5.59	3.54	3.54	3.04	24
$1^1/_4$	5.91	3.54	4.13	4.33	15
$1^1/_2$	6.73	3.94	4.72	6.25	12
2	7.44	4.53	5.51	9.83	6
$2^1/_4$	9.96	7.09	7.09	14.67	3
3	11.02	8.86	7.87	21.50	2

This page is intentionally left blank

CS-999-020 : Identification sheet

VWTC PROJECT NUMBER:	Iqaluit WWTP	REV:	02
PROJECT NAME:	5000218036	SUBMITTED TO (COMPANY):	
ENGINEER:	F.VINCI	SUBMITTED TO (RESPONSIBLE)	
PROJECT MANAGER:	C. BEKAERT	PROJECT NUM REFERENCE.:	
PHONE NUMBER:		LOT NUMBER:	

SUPPLIER	EQPT CODE	EQPT TAG NO	DIA	DESCRIPTION	INFO 1	INFO 2	INFO 3	APPLIC.	NOTE	REV
SHARPE	ST-999-020	GV-02-401 GV-02-416 GV-02-431 GV-02-451 GV-02-466 GV-02-481		ADJUSTMENT WHITE WATER VALVE	3" globe valves, flanged, cast steel body, 316SS internals SHARPE #SV45114030					2

This page is intentionally left blank

SMITH-COOPER® INTERNATIONAL

SHARPE®
Valves, Automation & Controls

Series 45114
150# Flanged Cast Steel Globe Valve

Design Features

- Outside screw and yoke
- Bolted bonnet
- Welded Seat
- Yoke Integrated with Bonnet
- Loose Disc
- Rising stem and non-rising hand-wheel

Applicable Standards

• Steel valves	ANSI B16.34
• Face to face	ANSI B16.10
• End flanges	ANSI B16.5
• Butt-weld ends	ANSI B16.25
• Inspection and test	API 598
• NACE	MR-0175



USA 800-766-0076
Fax 323-890-4456
www.smithcooper.com
Los Angeles, CA
Chicago, IL
Atlanta, GA
Vancouver, WA
Houston, TX

SHARPE
Valves, Automation & Controls

Series 45114
150# Flanged Cast Steel Globe Valve

2"- 6" Dimensions, Parts & Materials

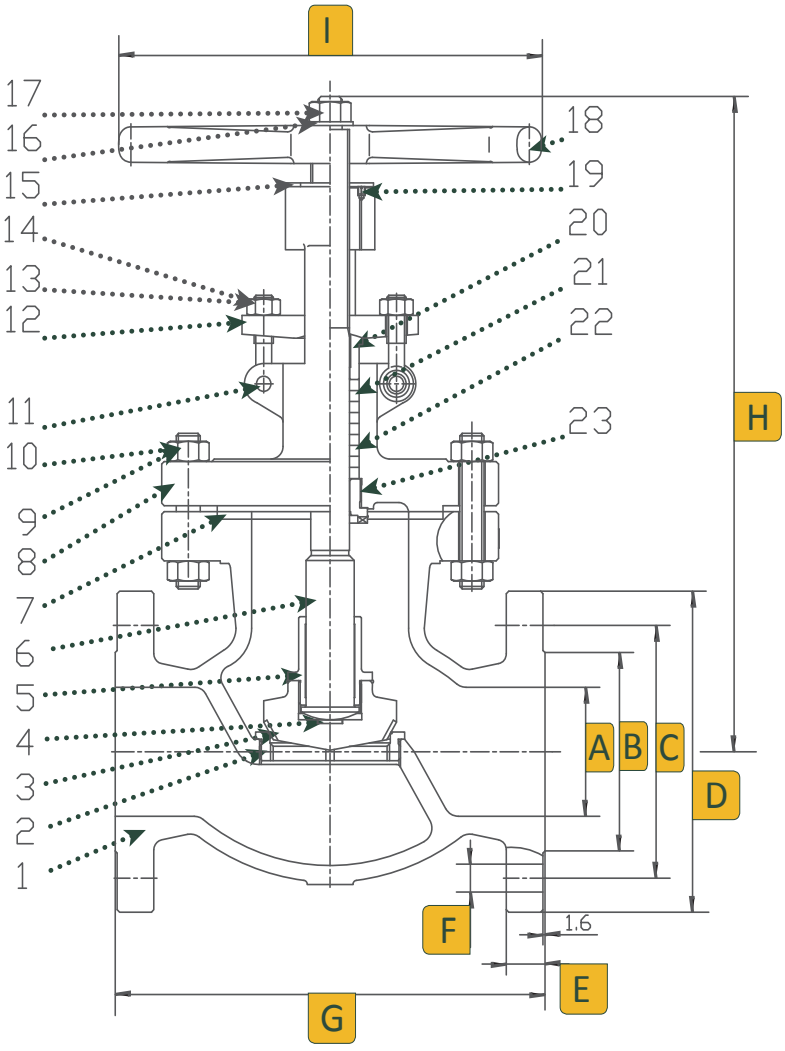

No.	Part Name	Material
1	Body	Carbon Steel ASTM A216 - WCB
2	Seat	A105 & STL.6
3	Disc	A105 & 410 Stainless Steel
4	Thrust Plate	410 Stainless Steel
5	Disc Cover	410 Stainless Steel
6	Stem	A182 F6a
7	Gasket	304 Stainless Steel & Flexible Graphite
8	Bonnet	Carbon Steel ASTM A216 - WCB
9	Stud	B7 Steel A193
10	Nut	2H Steel A194
11	Pin	Carbon Steel
12	Gland Flange	Carbon Steel
13	Eye Bolt	B7 Steel A193
14	Eye Nut	2H Steel A194
15	Stem Nut	D-2
16	Gasket	410 Stainless Steel
17	Nut	Carbon Steel
18	Hand-wheel	Ductile Iron
19	Screw	Carbon Steel
20	Gland	410 Stainless Steel
21	Packing	Flexable Graphite
22	Packing	Flexible Graphite
23	Back Seat	410 Stainless Steel

Dimensions (Inches)

Size	A	B	C	D	E	F	G	H	I	Num of Bolt Holes
2	2.01	3.62	4.76	6.00	0.75	0.75	8.00	13.43	7.87	4
2-1/2	2.52	4.13	5.51	7.00	0.88	0.75	8.50	14.45	9.84	4
3	2.99	5.00	6.00	7.50	0.94	0.75	9.50	14.76	9.84	4
4	4.02	6.18	7.50	9.00	0.94	0.75	11.50	19.02	11.81	8
6	5.98	8.50	9.50	11.00	1.00	0.875	16.00	20.35	13.78	8

SHARPE®
Valves, Automation & Controls

Series 45114
150# Flanged Cast Steel Globe Valve

8"- 16" Dimensions, Parts & Materials

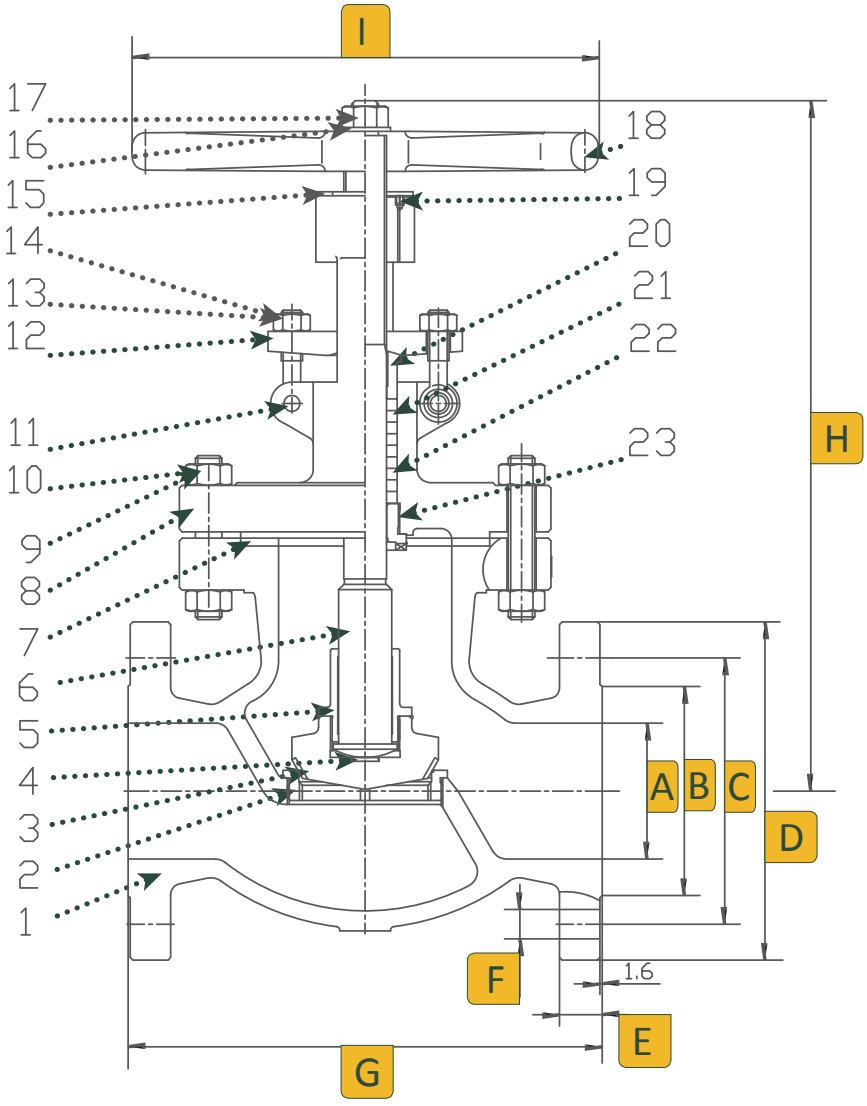

No.	Part Name	Material
1	Body	Carbon Steel ASTM A216 - WCB
2	Seat	A105 & STL.6
3	Disc	A105 & 410 Stainless Steel
4	Thrust Plate	410 Stainless Steel
5	Disc Cover	410 Stainless Steel
6	Stem	A182 F6a
7	Gasket	304 Stainless Steel & Flexible Graphite
8	Bonnet	Carbon Steel ASTM A216 - WCB
9	Stud	B7 Steel A193
10	Nut	2H Steel A194
11	Pin	Carbon Steel
12	Gland Flange	Carbon Steel
13	Eye Bolt	B7 Steel A193
14	Eye Nut	2H Steel A194
15	Stem Nut	D-2
16	Gasket	410 Stainless Steel
17	Nut	Carbon Steel
18	Hand-wheel	Ductile Iron
19	Screw	Carbon Steel
20	Gland	410 Stainless Steel
21	Packing	Flexible Graphite
22	Packing	Flexible Graphite
23	Back Seat	410 Stainless Steel

Dimensions (Inches)

Size	A	B	C	D	E	F	G	H	I	Num of Bolt Holes
8	8.00	10.62	11.75	13.50	1.12	0.875	19.50	23.23	15.75	8
10	10.00	12.75	14.25	16.00	1.18	1.00	24.50	29.70	17.72	12
12	12.00	15.00	17.00	19.00	1.25	1.00	27.50	37.10	22.05	12
14	13.27	16.25	18.75	21.00	1.37	1.125	31.00	37.40	22.05	12
16	15.21	18.50	21.25	23.50	1.44	1.125	36.00	38.00	25.20	16

Series 45114
150# Flanged Cast Steel Globe Valve

Technical Information

Temperature °F	Working Pressure psi
-20 to 100	285
200	260
300	230
400	200
500	170
600	140
650	125
700	110
750	95
800	80
850	65
900	50
950	35
1000	20

How to Order

Size	Series	Class	Ends	Body Material	Options
2 2-1/2 3 4 6 8 10 12 14* 16*	45	1 150	1 Flange 2 Butt-weld*	4 Carbon Steel	

*POA

Example: 8 - 45 - 1 - 1 - 4 = 8-45-1-1-4

Due to continuous development of our product range, we reserve the right to change the dimensions and information for this product as required.

CS-999-004 : Identification sheet

VWTC PROJECT NUMBER:	Iqaluit WWTP	REV:	02
PROJECT NAME:	5000218036	SUBMITTED TO (COMPANY):	
ENGINEER:	F.VINCI	SUBMITTED TO (RESPONSIBLE)	
PROJECT MANAGER:	C. BEKAERT	PROJECT NUM REFERENCE.:	
PHONE NUMBER:		LOT NUMBER:	

SUPPLIER	EQPT CODE	EQPT TAG NO	DIA	DESCRIPTION	INFO 1	INFO 2	INFO 3	APPLIC.	NOTE	REV
PRATT	ST-999-004	PLV-02-301 PLV-02-302 PLV-02-303 PLV-02-304 PLV-02-305 PLV-02-371 PLV-02-372 PLV-02-373 PLV-02-374 PLV-02-375		DAF DRAIN VALVE	PRATT PLUG VALVE #611A-E1-L-2" 2" PLUG VALVE 611A-E1-L, LEVER DUCTILE IRON BODY , FLG X FLG CONNECTION, 175PSIG WORKING PRESSURE, BUNA PLUG					2

This page is intentionally left blank

PRATT

Henry Pratt Company

1/2" - 2" Ballcentric® Plug Valve



Engineering Creative Solutions
for Fluid Systems Since 1901

A Tradition of Excellence

With the development of the first rubber seated butterfly valve more than 70 years ago, the Henry Pratt Company became a trusted name in the flow control industry, setting the standard for product quality and customer service. Today Pratt provides the following range of superior products to the water, wastewater and power generation industries.

Butterfly Valves: from 3" to 162"

Rectangular Valves: 1' x 1' to 14' x 16'

Ball Valves —
Rubber Seated: from 4" to 60"
Metal Seated: from 6" to 48"

Plug Valves: from 1/2" to 72", 100% port available up to 48", 3 ways

Air Valves for Water and Wastewater: from 1/2" to 20"

Hydraulic Control Systems

Valve Controls

Energy Dissipating Valves and Fixed Energy Dissipaters

Cone Valves

Check Valves

Plunger Valves

A Commitment to Meeting The Customers' Needs

Henry Pratt valves represent a long-term commitment to both the customer and to a tradition of product excellence. This commitment is evident in the number of innovations we have brought to the industries we serve. In fact, the Henry Pratt Company was the first to introduce many of the flow control products in use today, including the first rubber seated butterfly valve, one of the first nuclear N-Stamp valves, and the bonded seat butterfly valve.

Innovative Products For Unique Applications

Though many of the standard valves we produce are used in water filtration and distribution applications, Pratt has built a reputation on the ability to develop specialized products that help customers to meet their individual operational challenges.

Creative Engineering for Fluid Systems

Pratt's ability to provide practical solutions to complex issues is demonstrated by the following case histories.

Earthquake Proof Valves

Pratt designed and manufactured hydraulically actuated valves for a water storage application so that the valves would automatically operate in the event of earthquakes. This led to the development of a valve that will withstand acceleration forces of up to 6gs.

Custom Actuation/Isolation Valves

Pratt has designed and manufactured nuclear quality quarter-turn valves and parts since the first nuclear-powered generating plants were built. Our custom valves are able to close in a millisecond, using specially designed Pratt electro-pneumatic actuators.

Valves Designed for Harsh Environments

Pratt designed and manufactured a 144" diameter butterfly valve for the emergency cooling system at a jet engine test facility. The valve was designed to supply water to help dissipate the tremendous heat generated by the engines during testing.

PRATT
Henry Pratt Company

Through experience, commitment and creative engineering, Pratt is uniquely suited to provide superior products for our customers' special needs.
For more information, contact our corporate headquarters in Aurora, Illinois.

Scope of Line

The Henry Pratt criteria of quality, reliability, safety and value are embodied in the Ballcentric® Plug Valve setting higher standards for dependable performance with excellent features achieved by the utilization of the very latest design and manufacturing techniques.

- Computer Aided Design
- High Integrity Casting
- CNC manufacturing delivers consistent sizes on all components

All complemented by a rigorous Quality Control System

Body

The Ballcentric® Plug Valve body casting is ASTM A536 65-45-12 ductile iron using high pressure molding techniques. Threaded connection available on 1/2"-2" sizes. Flanged connection available on 2" size.

Flange diameter, thickness and drilling conform to ANSI B16.1 Class 125.

Seat

The valve seat shall be furnished with an overlay of corrosion and abrasion resistant epoxy.

Stem Seal

High integrity sealing by combining the advantages of a resilient and abrasion resistant U-Cup seal. From vacuum to high pressure, the self-adjusting sealing system (per AWWA C504) gives positive, trouble-free service and is retained independently of the plug stem or external torque device, thereby eliminating periodic maintenance.

Bearings

The plug rotates in permanently lubricated stainless steel bearings, located in the body and bonnet, along with upper and lower PTFE thrust washers which ensure consistently low operating torque.

Plug

Supported on integral trunnions, the plug is totally encapsulated with an elastomer that is molded to the casting providing tight shut off even under vacuum conditions. High integrity corrosion-free sealing is achieved by a variety of abrasion resistant elastomers which protect the plug right up to the trunnions. When assembled, the light compression of the elastomers onto PTFE thrust washers prevents entry of abrasive materials into the bearings.

Bonnet Seal

Superior “O” ring sealing with metal/metal contact means lower bolting stresses compared with compression gaskets.

Flow

The full round port design with streamlined internal contours gives the highest industry capacity straight through flow in the full open position, reducing turbulence and pressure drop and the effect of erosive media. Handling of sludges and slurries is therefore enhanced.

Travel Stops

Adjustable open and closed travel stops are fitted as standard on both wrench and gear operated Ballcentric® Plug Valves.

Features and Benefits

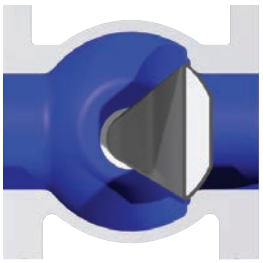

- Valve in closed position for bubble tight shut-off
- Normal flow direction gives pressure assisted sealing
- Torques are low even in reverse flow



- Plug rotates away from the seat for instant opening
- Seat wear and operating torque reduced
- No further seat contact until valve is closed again



- Design of Ballcentric® plug valve allows modulating control over the full 90˚ travel
- Ideally suited for balancing service
- Standard rotary valve provides control and tight shut off in one valve

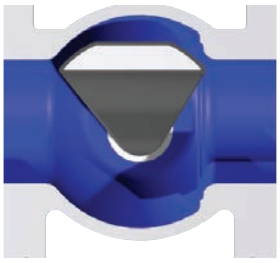

- Plug is out of flow path when fully open
- Straight through, uninterrupted smooth flow
- Round port reduces turbulence and erosion, lowers pumping costs and can be “pigged” to clean the pipeline

Installation

The Ballcentric® Plug Valve is suitable for flow and shut-off in either direction. Seat end downstream is the preferred orientation and any reverse flow requirement should be stated at the time of order. For use on fluids with suspended solids, installation with the seat upstream and the valve stem horizontal is recommended with plug rotation to the top of the valve.

In-Line Maintenance

In the unlikely event of stem leakage, the stem seals can be easily replaced without removing the bonnet. Access to the body for cleaning or inspection does not require removal from the line.

Modular Construction

Design of the bonnet and stem allows for on-site adaption of gear operators, power actuators, or extension devices on to standard valves. Conversion can be easily undertaken without removing the valve bonnet, thereby minimizing downtime.

Power Operation

Pneumatic, electric or hydraulic operation is available, complete with accessories such as limit switches, solenoid valves and positioners when required.

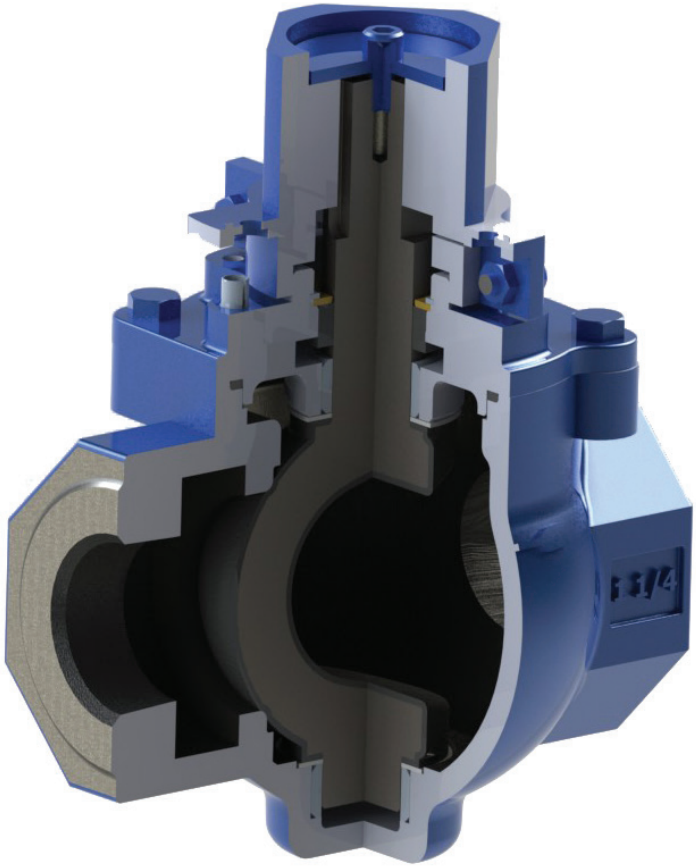

Standard Materials of Construction, Fig. 613A/611A, 1/2" - 2"

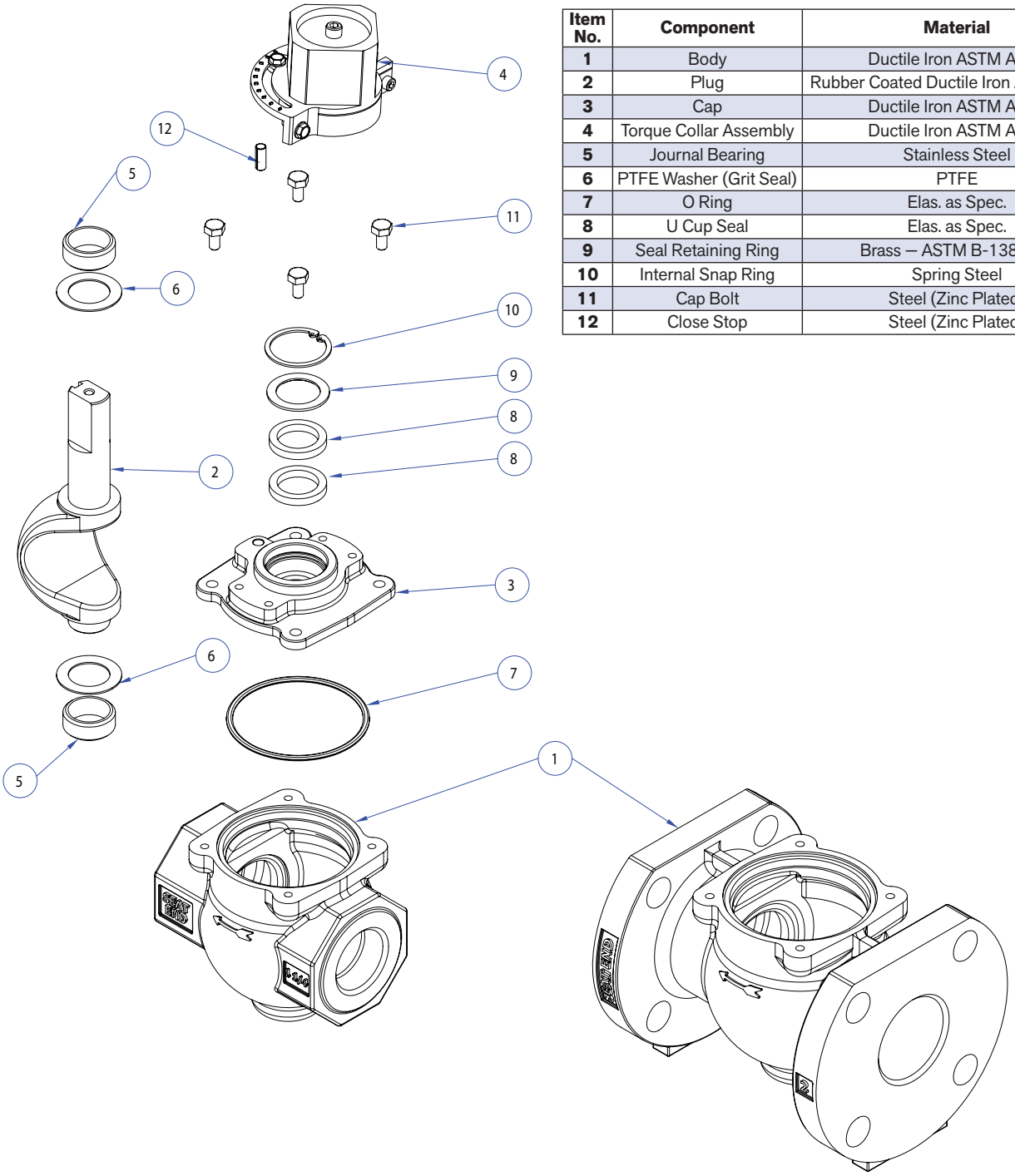

Item No.	Component	Material	Qty.
1	Body	Ductile Iron ASTM A536	1
2	Plug	Rubber Coated Ductile Iron ASTM A536	1
3	Cap	Ductile Iron ASTM A536	1
4	Torque Collar Assembly	Ductile Iron ASTM A536	1
5	Journal Bearing	Stainless Steel	2
6	PTFE Washer (Grit Seal)	PTFE	2
7	O Ring	Elas. as Spec.	1
8	U Cup Seal	Elas. as Spec.	2
9	Seal Retaining Ring	Brass – ASTM B-138-675	1
10	Internal Snap Ring	Spring Steel	1
11	Cap Bolt	Steel (Zinc Plated)	AR
12	Close Stop	Steel (Zinc Plated)	1

Technical Data

ORDERING INFORMATION

Valve Types	Designation
Threaded NPT Ductile Iron	613A
ANSI 125 Flanged Ductile Iron (2" only)	611A
Threaded NPT 316 SS	603AS
ANSI 150 Flanged 316SS (2" only)	601AS

SEAT

Epoxy	E
316SS (on stainless steel valve only)	S

ELASTOMER TRIM

EPDM	0
Buna-Nitrile	1
Viton*	2
Neoprene*	3

* Consult factory for availability

MANUAL OPERATORS

Lever/Wrench	L
Direct Nut	TC
Above Ground Gear & Handwheel	AGHW
Above Ground Gear & 2" Nut	AGNUT
Buried Gear with 2" Nut	BG
Memory Stop Gear & Handwheel	MGHW
Above Ground Gear & Chainwheel	AGCW

Valves are only tested for bi-directional shut-off if specified at time of order. Contact Henry Pratt for bi-directional ratings.

PRESSURE RATING

613A	NPT	400 PSI
611A	ANSI 125	175 PSI
603AS	NPT	400 PSI
601AS	ANSI 150	275 PSI

Body Hydrotest = 150% of rated pressure
Seat Test = 100% of rated pressure
Testing per AWWA C517

ELASTOMERS AVAILABLE FOR BALLCENTRIC® PLUG VALVE

Nitrile

A general purpose material sometimes referred to as BUNA-N or HYCAR with a -20°F to 212°F temperature range. Used on sewage, water, hydrocarbon and mineral oils.

EPDM

An excellent polymer for use on chilled water through to LP steam applications having a temperature range of -35°F to 250F. Resistance to many acids, alkalies, detergents, phosphate esters, alcohols and glycols is an added benefit.

Neoprene

This versatile material shows outstanding resistance to abrasion and ozone. Chemical resistance to a wide range of petroleum base products and dilute acids and alkalies. Temperature range -20°F to 225°F.

Viton

Retention of mechanical properties at high temperature is an important feature of this elastomer: temperature range is -10°F to 300°F. It also has excellent resistance to oils, fuels, lubricants and most mineral acids and aromatic hydrocarbons.

Note: Viton not for water or steam applications.

Elastomer Selection Chart

Service	Elastomer	Average Useful Temp. Range	Service	Elastomer	Average Useful Temp. Range	Service	Elastomer	Average Useful Temp. Range
Acetone	EPDM	–35°F to 250°F	Caustic Soda	EPDM	–35°F to 250°F	Oil, Animal	Nitrile	–20°F to 212°F
Air	EPDM	–35°F to 250°F	Cement Slurry	EPDM	–35°F to 250°F	Oil, Mobil Therm Light	Viton	10°F to 250°F
Air w/Oil	Nitrile	0°F to 212°F	Copper Sulphate	EPDM	–35°F to 250°F	Oil, Mobil Therm 600	Viton	10°F to 250°F
Alcohol AMYL	EPDM	0°F to 212°F	Creosote (Coal)	Nitrile	–20°F to 212°F	Oil, Mobil Therm 603	Nitrile	–20°F to 212°F
Alcohol Aromatic	Viton	10°F to 250°F	Coal Slurry	Nitrile	–20°F to 212°F	Oil, Lubricating	Nitrile	–20°F to 212°F
Alcohol Butyl	Neoprene	–20°F to 225°F	Diesel Fuel No. 3	Nitrile	–20°F to 212°F	Oil, Vegetable	Nitrile	–20°F to 212°F
Alcohol Denatured	Nitrile	–20°F to 212°F	Diethylene Glycol	EPDM	–35°F to 250°F	Paint, Latex	Nitrile	–20°F to 212°F
Alcohol Ethyl	EPDM	–20°F to 250°F	Ethylene Glycol	EPDM	–35°F to 250°F	Phosphate Ester	EPDM	–35°F to 250°F
Alcohol Grain	Nitrile	–20°F to 212°F	Fatty Acid	Nitrile	–20°F to 212°F	Propane	Nitrile	–20°F to 212°F
Alcohol Isopropyl	Neoprene	–20°F to 225°F	Fuel Oil No. 2	Nitrile	–20°F to 212°F	Rape Seed Oil	EPDM	–35°F to 250°F
Alcohol Methyl	EPDM	–20°F to 250°F	Fertilizer Liquid H4N2O2	EPDM	–35°F to 250°F	Sewage with Oils	Nitrile	–20°F to 212°F
Ammonia Anhydrous	Neoprene	–20°F to 225°F	Gasoline Keg	Nitrile	–20°F to 212°F	Sodium Hydroxide 20%	EPDM	–35°F to 250°F
Ammonium Nitrate	EPDM	–20°F to 250°F	Gas Natural	Nitrile	–20°F to 212°F	Starch	EPDM	–35°F to 250°F
Ammonia, water	EPDM	–20°F to 250°F	Glue, Animal	Nitrile	–20°F to 212°F	Steam to 250°F	EPDM	–35°F to 250°F
Animal Fats	Nitrile	–20°F to 212°F	Green Liquor	EPDM	–20°F to 212°F	Stoddard, Solvent	Nitrile	–20°F to 80°F
Black Liquor	EPDM	–20°F to 250°F	Hydraulic Oil (Petro)	Nitrile	–20°F to 212°F	Sulphuric Acid 10% 50%	Neoprene	–20°F to 158°F
Blast Furnace Gas	Neoprene	–20°F to 225°F	Hydrogen	Nitrile	–20°F to 212°F	Sulphuric Acid 100%	Viton	10°F to 300°F
Butane	Nitrile	–20°F to 212°F	JF4, JP5	Viton	–20°F to 212°F	Trichloroethylene Dry	Viton	10°F to 300°F
Bunker Oil "C"	Nitrile	–20°F to 212°F	Kerosene	Nitrile	0°F to 212°F	Triethanol Amine	EPDM	–35°F to 250°F
Calcium Chloride	EPDM	–20°F to 250°F	Ketone	EPDM	–35°F to 250°F	Varnish	Viton	10°F to 300°F
Carbon Dioxide	EPDM	–20°F to 250°F	Lime Slurry	EPDM	–35°F to 250°F	Water, Fresh	EPDM	–35°F to 250°F
Carbon Monoxide (Cold)	Neoprene	–20°F to 150°F	Methane	Nitrile	–20°F to 212°F	Water, Salt	EPDM	–35°F to 250°F
Carbon Monoxide (Hot)	Viton	10°F to 300°F	Methyl Ethyl Ketone	EPDM	–35°F to 250°F	Xylene	Viton	10°F to 300°F
Carbon Tetrachloride	Viton	10°F to 300°F	Naptha (Berzin)	Nitrile	–20°F to 212°F			

NOTE: Above elastomer/temperature chart are guidelines only. See Henry Pratt Compatibility Chart for specific applications.

Threaded End:
Fig. 613A Ductile Iron/603AS Stainless Steel 1/2" - 2"

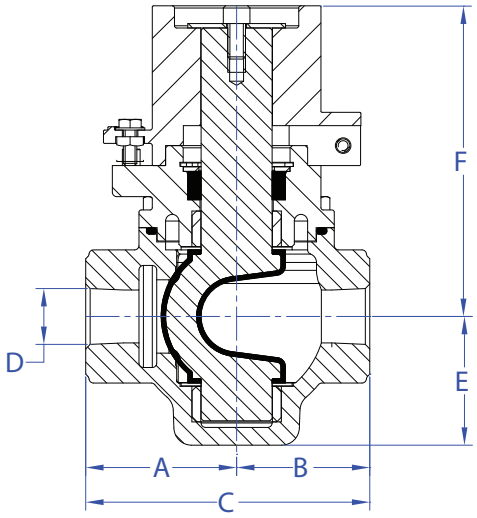

THREADED ENDS						
SIZE	1/2	3/4	1	1-1/4	1-1/2	2
A	2.13	2.13	2.13	3.00	3.00	3.00
B	1.88	1.88	1.88	2.50	2.50	2.50
C	4.00	4.00	4.00	5.50	5.50	5.50
D	½ " NPT	¾" NPT	1" NPT	1¼" NPT	1½" NPT	2" NPT
E	1.81	1.81	1.81	2.50	2.50	2.50
F	4.38	4.38	4.38	5.00	5.00	5.00
WEIGHT (approx.)	7.50	7.25	7.00	13.00	11.75	10.00

Flanged End:
Fig. 611A Ductile Iron/601AS Stainless Steel 2"

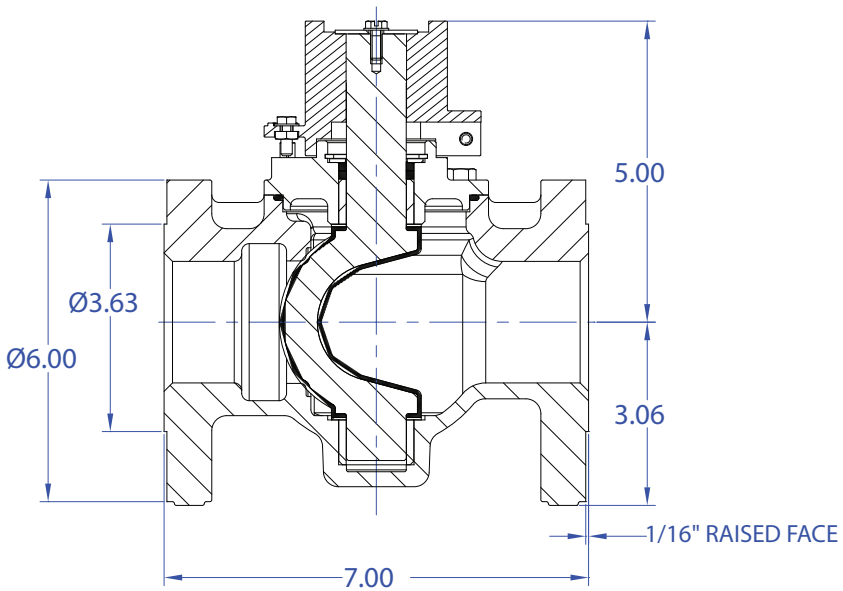

FLANGED ENDS	
SIZE	2
WEIGHT (approx.)	18.00

Note: RAISED FACE IS ONLY ON THE 2" FIG. 601AS STAINLESS STEEL.

PRATT PRODUCT GUIDE

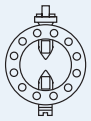

Model
2FII



Monoflange
MKII

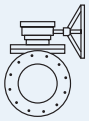

Plug
Valve

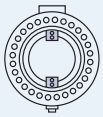

Triton®
XR70

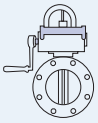

Indicating Butterfly Valve
UL & FM approved

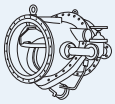

Tilting Disc
Check Valve

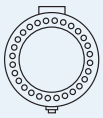

Triton®
XL

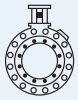

N-Stamp Nuclear
Butterfly Valve

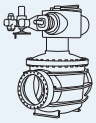

Cone
Valve

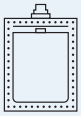

Rectangular



PIVA Post Indicating Valve Assembly
UL & FM approved

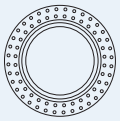

Sleeve
Valve

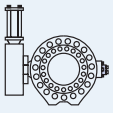

Rubber Seated
Ball Valve

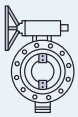

Triton®
HP250

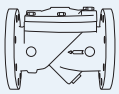

Check
Valve

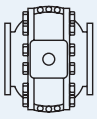

Metal Seated
Ball Valve



Control
Systems

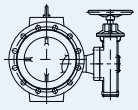

Plunger Valve

PRATT

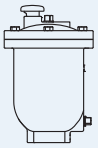

Air Valve

Henry Pratt Company
401 South Highland Avenue
Aurora, Illinois 60506-5563 - US
P: 630-844-4000 F: 630-844-4160
www.henrypratt.com
ISO 9001: 2000 Certified

©2014 Henry Pratt Company | Printed in the U.S.A. | HPSMPLUG-0414

ST-999-018 : Identification sheet

VWTC PROJECT NUMBER:	Iqaluit WWTP	REV:	02
PROJECT NAME:	5000218036	SUBMITTED TO (COMPANY):	
ENGINEER:	F.VINCI	SUBMITTED TO (RESPONSIBLE)	
PROJECT MANAGER:	C. BEKAERT	PROJECT NUM REFERENCE.:	
PHONE NUMBER:		LOT NUMBER:	

SUPPLIER	EQPT CODE	EQPT TAG NO	DIA	DESCRIPTION	INFO 1	INFO 2	INFO 3	APPLIC.	NOTE	REV
FLOW CONTROL COMPONENTS	ST-999-018	CV-02-404 CV-02-428 CV-02-443 CV-02-463 CV-02-478 CV-02-493		INLET AIR CHECK VALVE	FCC90B05, 1/2 FCC 90B 200WOG 316SS CAST STEEL THREADED CHECK VALVE					2

This page is intentionally left blank

CAST 316 STAINLESS STEEL VALVES

FIG. 90B-200 SWING CHECK VALVE (CF8M)
FIG. 91B-200 WEDGE GATE VALVE (CF8M)
FIG. 92B-200 GLOBE VALVE (CF8M)



Design Features

- 200 WOG/120 WSP @ 350°F Rated
- Investment Cast
- Compact Design

An economical choice to handle a variety of corrosive fluids.

FLOW CONTROL COMPONENTS

M. A. Stewart & Sons Ltd.
VALVES AND FITTINGS

CAST 316 STAINLESS STEEL VALVES

PRESSURE TEMPERATURE RATING 200 WOG/120 WSP @ 350°F

FIG. 90B–200 N.P.T. or FIG. 90BSW Socket Weld

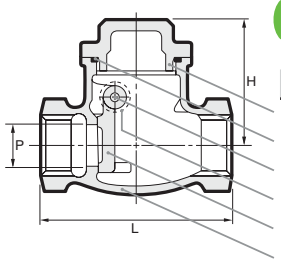

PARTS / MATERIAL
1. Cap / CF8M
2. Gasket / PTFE
3. Hinge Pin / 316
4. Plug / 316
5. Disc / CF8M
6. Body / CF8M

DIMENSIONS								
Valve	1/2	3/4	1	1 1/4	1 1/2	2	2 1/2	3
in/mm	15	20	25	32	40	50	65	75
L	2.60	3.18	3.58	4.19	4.75	5.50	7.06	7.89
in/mm	66	81	91	106.5	121	141	160	190
H	1.81	2.13	2.36	2.76	2.95	3.23	3.58	3.94
in/mm	46	54	60	70	75	82	91	100
P	0.59	0.79	0.98	1.22	1.46	1.89	2.48	2.95
in/mm	15	20	25	31	37	48	63	75
lbs/kg	0.66	1.06	1.65	2.53	3.40	5.60	8.38	13.01
	0.30	0.48	0.75	1.15	1.54	2.54	3.80	5.90

FIG. 91B–200 N.P.T. Only (Non-Rising Stem)

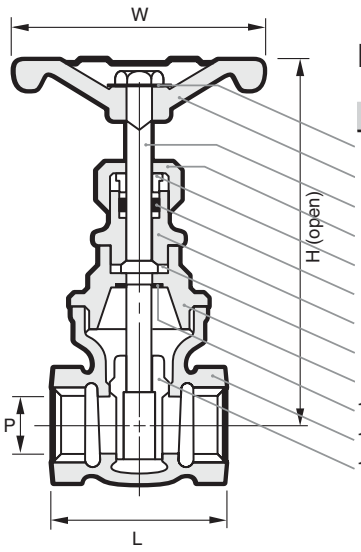

PARTS / MATERIAL
1. Name Plate / Aluminum
2. Handwheel / FCD
3. Stem / 316
4. Packing Nut / CF8
5. Gland / CF8M
6. Gland Packing / PTFE
7. Packing Box / 316
8. Stem Washer / 316
9. Bonnet / CF8M
10. Snap Ring / 316
11. Body / CF8M
12. Disc / CF8M

DIMENSIONS						
Valve	1/2	3/4	1	1 1/4	1 1/2	2
in/mm	15	20	25	32	40	50
L	2.24	2.38	2.64	2.99	3.43	3.70
in/mm	57	60.5	67	76	87	94
H	3.98	4.25	4.65	5.08	6.81	7.40
in/mm	101	108	118	129	173	186
W	2.44	2.44	2.87	2.87	3.74	4.61
in/mm	62	62	73	73	95	117
P	0.63	0.80	0.98	1.25	1.48	1.90
in/mm	16.1	20.3	25.0	31.8	37.5	48.3
lbs/kg	1.15	1.39	1.79	2.60	4.41	6.22
	0.52	0.63	0.81	1.18	2.00	2.82

FIG. 92B–200 N.P.T. Only (Rising Stem)

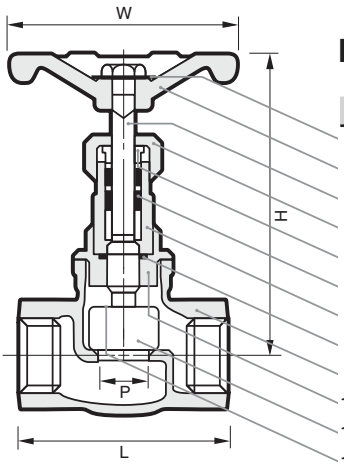

NAME / MATERIAL
1. Name Plate / Aluminum
2. Handwheel / FCD
3. Stem / 316
4. Packing Nut / CF8M
5. Gland / CF8M
6. Gland Packing / PTFE
7. Packing Box / 316
8. Stem Washer / 316
9. Body / CF8M
10. Bonnet / CF8M
11. Disc / 316
12. Snap Ring / 316

DIMENSIONS						
Valve	1/2	3/4	1	1 1/4	1 1/2	2
in/mm	15	20	25	32	40	50
L	2.60	2.70	3.08	3.39	3.86	4.35
in/mm	66	68.5	78.3	86	98	110.5
H open	4.02	3.98	4.09	4.72	5.59	6.18
in/mm	102	101	104	120	142	157
H close	3.78	3.66	3.74	4.41	4.88	5.43
in/mm	96	93	95	112	124	138
W	2.44	2.44	2.87	3.74	3.74	4.61
in/mm	62	62	73	95	95	117
P	0.59	0.63	0.75	0.94	1.26	1.50
in/mm	15	16	19	24	32	38
lbs/kg	0.88	0.99	1.37	2.31	3.09	4.63
	0.40	0.45	0.62	1.05	1.40	2.10

M. A. Stewart & Sons Ltd.
VALVES AND FITTINGS

SURREY, BC
P: 604.594.8431
F: 604.594.4335
surrey@mastewart.com

EDMONTON, AB
P: 780.436.9051
F: 780.435.0463
edmonton@mastewart.com

AJAX, ON
P: 905.683.7303
F: 905.683.9108
ajax@mastewart.com

MONTREAL, QC
P: 514.421.6311
F: 514.421.6323
montreal@mastewart.com

2/16/11-90.2

Projet	IQALUIT
Projet#:	5000218036
Document #:	5000218036_DS_0001_PM_VWT
Par:	BB
Verif.:	GH
approb.:	CB

SPIDFLOW

INSTRUMENTATION

Section Manuel OM: 4.3.1.7

This page is intentionally left blank

CS-999-011 : Identification sheet

VWTC PROJECT NUMBER:	Iqaluit WWTP	REV:	02
PROJECT NAME:	5000218036	SUBMITTED TO (COMPANY):	
ENGINEER:	F.VINCI	SUBMITTED TO (RESPONSIBLE)	
PROJECT MANAGER:	C. BEKAERT	PROJECT NUM REFERENCE.:	
PHONE NUMBER:		LOT NUMBER:	

SUPPLIER	EQPT CODE	EQPT TAG NO	DIA	DESCRIPTION	INFO 1	INFO 2	INFO 3	APPLIC.	NOTE	REV
ENDRESS & HAUSER	ST-999-011	LIT-02-331 LIT-02-341		LEVEL SPIDFLOW	PRESSURE TRANSMITTER // MANUF: E & H // MODEL: PMP51-CA21JD1FGDR1JA1 + AAZ1 APPROVAL: CA CSA C / US IS CL.I, II, III DIV.1 GR.A-G, CSA C / US IS CL.I DIV.2 GR.A-D, EX IA, C: ZONE 0.1.2 / US: ZONE 0,1,2,20,21,22 OUTPUT: 2 4-20MA HART	Display, Operation: LCD, push button on display/electronics // Housing: F31 Alu, glass window // CONNECTION. ELECT .: D NPT1 / 2, IP66 / 68 NEMA4X / 6P MEASUREMENT RANGE: 1F 400MBAR / 40KPA / 6PSI RELATIVE, 4MH2O / 13 FT H2O / 160 IN H2O /	OVERPRESSURE: 6BAR / 600KPA / 90PSI // CALIB .; UNIT: D CELL RANGE; MM / MH2O // CONNECTION. PROCESS: R1J TAPPING ANSI FNPT1 / 2, 316L // MTL MEMBRANE: A 316L / FILLING LIQUID: 1 SILICONE OIL / LANGUAGE OF CONFIG: AA ENGLISH/ MARKING:TAGGING			2

CS-999-012 : Identification sheet

VWTC PROJECT NUMBER:	Iqaluit WWTP	REV:	02
PROJECT NAME:	5000218036	SUBMITTED TO (COMPANY):	
ENGINEER:	F.VINCI	SUBMITTED TO (RESPONSIBLE)	
PROJECT MANAGER:	C. BEKAERT	PROJECT NUM REFERENCE.:	
PHONE NUMBER:		LOT NUMBER:	

SUPPLIER	EQPT CODE	EQPT TAG NO	DIA	DESCRIPTION	INFO 1	INFO 2	INFO 3	APPLIC.	NOTE	REV
ENDRESS & HAUSER	ST-999-012	PT-02-520 PT-02-527 PT-02-540 PT-02-547		PRESSURE TRANSMITTER	E+H // PMP51-CA21JD1PGDRKJA1+AAZ1 // APPROVAL: CA CSA C/US IS CL.I,II,III DIV.1 GR.A-G, CSA C/US IS CL.I DIV.2 GR.A-D, EX IA, C: ZONE 0,1,2/US: ZONE 0,1,2,20,21,22 // OUTPUT: 2 4-20MA HART // DISPLAY, OPERATION: 1 LCD, PUSH BUTTON ON DISPLAY/ ELECTRONICS //	SENSOR RANGE: 1P 10BAR/1MPA/150PSI GAUGE, 100MH2O/333FTH2O/ 4000INH2O OVERLOAD: 40BAR/4MPA/600PSI / / REFERENCE ACCURACY: G STANDARD // CALIBRATION; UNIT: D SENSOR RANGE; MM/ MH2O // PROCESS CONNECTION: RKJ THREAD ANSI MNPT1/2 HOLE 11.4MM, 316L	MEMBRANE MATERIAL: A 316L // FILL FLUID: 1 SILICONE OIL // LANGUAGE: AA ENGLISH // MARKING:TAGGING // CRN # REQUIRED			2

Level | Pressure | Flow | Temperature | Liquid Analysis | Registration | Systems Components | Services | Solutions

Technical Information

Cerabar M PMC51, PMP51, PMP55

Process pressure measurement
Pressure transmitter with ceramic and metallic sensors; With analog electronics or communication via HART, PROFIBUS PA or FOUNDATION Fieldbus



Application

The Cerabar M pressure transmitter is used for the following measuring tasks:
- Absolute pressure and gauge pressure measurement in gases, steams or liquids in all areas of process engineering and process measurement technology
- Level, volume or mass measurements in liquids
- High process temperature
  - without diaphragm seals up to 130°C (266°F), for a maximum of 60 minutes 150 °C (302 °F)
  - with diaphragm seals up to 400°C (752°F)
- High pressure up to 400 bar (6000 psi)
- International usage thanks to a wide range of approvals

Your benefits

- Very good reproducibility and long-term stability
- High reference accuracy: up to ±0.15%, as PLATINUM version: ±0.075%
- Turn down up to 100:1
- End-to-end modularity for differential pressure, hydrostatics and pressure (Deltabar M – Deltapilot M – Cerabar M), e.g.
  - replaceable display
  - universal electronics
- Easy commissioning without the need for an operating tool
- Easy and safe menu-guided operation
  - on-site via display module
  - via 4 to 20 mA with HART
  - via PROFIBUS PA
  - via FOUNDATION Fieldbus
- Device versions compliant with ASME-BPE
- Used for process pressure monitoring up to SIL2, certified to IEC 61508 Edition 2.0 and IEC 61511 by TÜV NORD

TI00436P/00/EN/17.12
No. 71190907

Endress+Hauser
People for Process Automation

Table of contents

Function and system design 4
Device selection 4
Measuring principle 5
Level measurement (level, volume and mass) 6
Electrical differential pressure measurement with gauge pressure sensors 6
System integration (except analog electronics) 6
Communication protocol 7

Input 8
Measured variable 8
Measuring range 8
Explanation of terms 10

Output 11
Output signal 11
Signal range 11
Signal on alarm 11
Load - 4 to 20 mA analog and 4 to 20 mA HART 11
Resolution 11
Dead time, Time constant 12
Dynamic behavior: current output (analog electronics) 12
Dynamic behavior: current output (HART electronics) 12
Dynamic behavior: digital output (HART electronics) 12
Dynamic behavior: PROFIBUS PA 13
Dynamic behavior: FOUNDATION Fieldbus 13
Damping 13
Data of the FOUNDATION Fieldbus interface 14

Power supply 16
Electrical connection 16
Supply voltage 18
Start-up current HART 19
Current consumption 19
Cable entry 19
Cable specification 19
Residual ripple 19
Influence of power supply 19

Performance characteristics – general 19
Reference operating conditions 19
Uncertainty of measurement for small absolute pressure ranges . . 19
Long-term stability 20
Influence of orientation 20
Warm-up period 20

Performance characteristics – ceramic process isolating diaphragm 21
Reference accuracy – PMC51 21
Total performance – PMC51 21
Total error - PMC51 22
Thermal change in the zero output and the output span – PMC51 22

Performance characteristics – metallic process isolating diaphragm 23
Reference accuracy – PMP51, PMP55 23
Total performance – PMP51 24
Total error - PMP51 25
Thermal change in the zero output and the output span – PMP51 and PMP55 25

Operating conditions (installation) 26
General installation instructions 26
Measuring arrangement for devices without diaphragm seal – PMC51, PMP51 26
Measuring arrangement for devices with diaphragm seal – PMP55 26
Wall and pipe mounting 26
"Separate housing" version 27
Oxygen applications 28
PWIS cleaning 28
Ultrapure gas applications 28
Applications with hydrogen 28

Operating conditions (environment) 29
Ambient temperature range 29
Storage temperature range 29
Degree of protection 29
Climate class 29
Vibration resistance 30
Electromagnetic compatibility 30
Overvoltage protection (optional) 30

Operating conditions (process) 31
Process temperature range PMC51 31
Process temperature limits 31
Pressure specifications 32

Mechanical construction 33
F31 aluminum housing dimensions 33
F15 stainless steel housing dimensions (hygienic) 33
Process connections PMC51 (with ceramic process isolating diaphragm) 33
Process connections PMC51 (with ceramic process isolating diaphragm) - continued 35
Process connections PMC51 (with ceramic process isolating diaphragm) - continued 36
Process connections PMC51 (with ceramic process isolating diaphragm) - continued 37
Process connections PMC51 (with ceramic process isolating diaphragm) - continued 38
Process connections PMC51 (with ceramic process isolating diaphragm) - continued 38
Process connections PMC51 (with ceramic process isolating diaphragm) - continued 39
Process connections PMC51 (with ceramic process isolating diaphragm) - continued 41
Process connections PMP51 (with metallic process isolating diaphragm) 42
Process connections PMP51 (with metallic process isolating diaphragm) - continued 43
Process connections PMP51 (with metallic process isolating diaphragm) - continued 45
Process connections PMP51 (with metallic process isolating

diaphragm) – continued 46
Process connections PMP51 (with metallic process isolating diaphragm) – continued 46
Process connections PMP51 (with metallic process isolating diaphragm) – continued 47
Process connections PMP51 (with metallic process isolating diaphragm) – continued 49
PMP55 basic device 49
Process connections PMP55 (with diaphragm seal) 50
Process connections PMP55 (with diaphragm seal) – continued . 51
Process connections PMP55 (with diaphragm seal) – continued . 52
Process connections PMP55 (with diaphragm seal) – continued . 52
Process connections PMP55 (with diaphragm seal) – continued . 58
Process connections PMP55 (with diaphragm seal) – continued . 60
Process connections PMP55 (with diaphragm seal) – continued . 62
Process connections PMP55 (with diaphragm seal) – continued . 63
Process connections PMP55 (with diaphragm seal) – continued . 65
Wall and pipe mounting with mounting bracket 66
Weight 66
Material (not wetted) 67
Material (wetted) 70

Human interface 71
Operating elements 71
Onsite operation 73
Remote operation 74
Hardware and software for onsite and remote operation 75

Planning instructions for diaphragm seal systems . . . 76
Applications 76
Function and design 76
Diaphragm seal filling oils 77
Operating temperature range 78
Installation instructions 78

Certificates and approvals 80
CE mark 80
Ex approvals 80
Suitability for hygienic processes 80
Pharma (CoC) 80
Functional safety SIL 80
Marine approval 80
CRN approvals 80
Pressure Equipment Directive (PED) 80
Drinking water approval 80
Standards and guidelines 81
North-American practice for installation of process seals 81

Ordering information 82
PMC51 82
PMC51 (continued) 83
PMC51 (continued) 84
PMC51 (continued) 85
PMP51 87
PMP51 (continued) 88
PMP51 (continued) 89
PMP51 (continued) 90
PMP55 92
PMP55 (continued) 93
PMP55 (continued) 94
PMP55 (continued) 95
PMP55 (continued) 96
PMP55 (continued) 97

Documentation 98
Technical Information 98
Operating Instructions 98
Brief Operating Instructions 98
Functional safety manual (SIL) 98
Safety Instructions 98
Installation/Control Drawings 99

Accessories 100
Shutoff valve 100
Siphon 100
Welding necks and Weld-in tool flanges 101
Mounting bracket for wall and pipe mounting 101
M12 connector 101

Configuration data sheet (HART, PROFIBUS PA, FOUNDATION Fieldbus electronics) 102
Level 102
Pressure 103

Configuration data sheet (analog electronics) 104
Pressure 104

Function and system design

Device selection

Cerabar M – Product family	**PMC51** 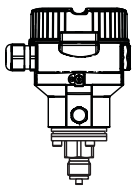 P01-PMC51xxx-16-xx-xx-xx-000 **With capacitive measuring cell and ceramic process isolating diaphragm (Ceraphire®)**	**PMP51** 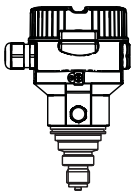 P01-PMP51xxx-16-xx-xx-xx-000 **With piezoresistive measuring cell and metallic welded process isolating diaphragm**	**PMP55** 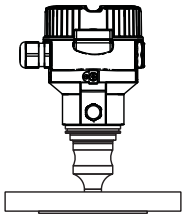 P01-PMP55xxx-16-xx-xx-xx-000 **With diaphragm seal**
Field of application	– Gauge pressure and absolute pressure – Level		
Process connections	– Thread – EN flanges DN 25 – DN 80 – ANSI flanges 1" – 4" – JIS flanges 50 A – 100 A – Flush-mounted hygienic connections	– Thread – EN flanges DN 25 – DN 80 – ANSI flanges 1" – 4" – JIS flanges 25 A – 100 A – Prepared for diaphragm seal mount – Flush-mounted hygienic connections	– Wide range of diaphragm seals
Measuring ranges	From –100/0 to 100 mbar (–1.5/0 to 1.5 psi) to –1/0 to 40 bar (–15/0 to 600 psi)	From –400/0 to 400 mbar (–6/0 to 6 psi) to –1/0 to 400 bar (–15/0 to 6000 psi)	
OPL [1]	Max. 60 bar (900 psi)	Max. 600 bar (9000 psi)	
Process temperature range	–40 to +130 °C (–40 to +266°F) For a maximum of 60 minutes: +150 °C (+302 °F)	–40 to +130°C (–40 to +266°F) For a maximum of 60 minutes: +150 °C (+302 °F)	–70 to 400 °C (–94 to +752 °F) depending on the filling oil
Ambient temperature range	– Without LCD display: -40 to +85°C (–40 to +185 °F) – With LCD display: –20 to +70°C (–4 to +158°F) (extended temperature application range (-40 to 85°C (-40 to 185°F)) with restrictions in optical properties such as display speed and contrast) – Separate housing: –20 to +60°C (–4 to +140°F) – Diaphragm seal systems depending on the version		
Reference accuracy	– Up to ±0.15% of the set span – PLATINUM version: up to ±0.075% of the set span		Up to ±0.15% of the set span
Supply voltage	– 11.5 to 45 V DC (versions with plug-in connection 35 V DC) – For intrinsically safe device versions: 11.5 to 30 V DC		
Output	4 to 20 mA, 4 to 20 mA with superimposed HART protocol		
Options	– PMP51, PMP55: NACE-compliant materials – PMC51, PMP51, PMP55: inspection certificate 2.2 or 3.1 or other certificates – 3A approval and EHEDG approval – Specific firmware versions – Initial device settings – Separate housing – Broad range of accessories		
Specialties	– Metal-free measurement with PVDF connection – Special cleaning of the transmitter to remove paint-wetting substances, for use in paint shops	– Process connections with minimum oil volume – Gas-tight, elastomer-free	– Wide range of diaphragm seals – For extreme medium temperatures – Process connections with minimum oil volume – Completely welded versions

1) OPL = over pressure limit; depends on the lowest-rated element, with regard to pressure, of the selected components

Measuring principle

Ceramic process isolating diaphragm used in PMC51 (Ceraphire®)

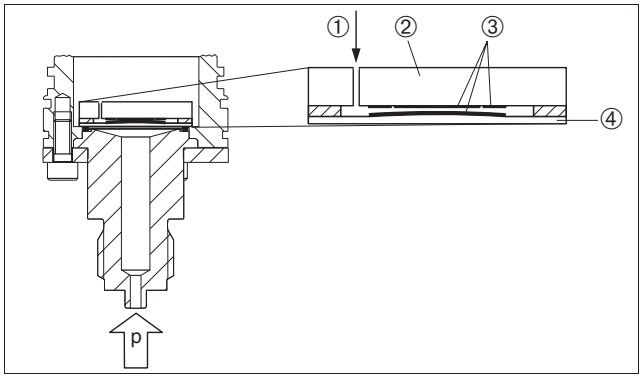

P01-PMC71xxx-03-xx-xx-xx-000

Ceramic sensor

1 *Air pressure (gauge pressure sensors)*
2 *Ceramic substrate*
3 *Electrodes*
4 *Ceramic process isolating diaphragm*

Metallic process isolating diaphragm used in PMP51 and PMP55

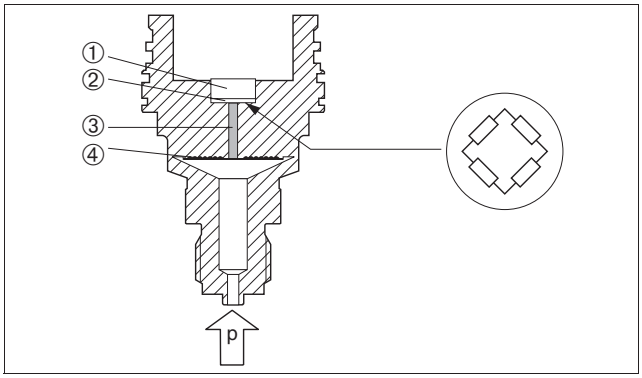

P01-PMP7xxxx-03-xx-xx-xx-000

Metallic sensor

1 *Silicon measuring element, substrate*
2 *Wheatstone bridge*
3 *Channel with fill fluid*
4 *Metallic process isolating diaphragm*

Ceramic process isolating diaphragm used in PMC51 (Ceraphire®)

The ceramic sensor is a dry sensor, i.e. the process pressure acts directly on the robust ceramic process isolating diaphragm and deflects it. A pressure-dependent change in capacitance is measured at the electrodes of the ceramic substrate and the process isolating diaphragm. The measuring range is determined by the thickness of the ceramic process isolating diaphragm.

Advantages:
- Guaranteed overload resistance up to 40 times the nominal pressure
- Thanks to ultrapure 99.9% ceramic (Ceraphire®, see also "www.endress.com/ceraphire")
  - extremely high chemical stability, comparable with Alloy C
  - less relaxation
  - high mechanical stability
- Can be used in absolute vacuum
- Outstanding surface finish, $R_a \leq 0.3$ µm (11.8 µin)

Metallic process isolating diaphragm used in PMP51 and PMP55

PMP51

The operating pressure deflects the process isolating diaphragm and a fill fluid transfers the pressure to a resistance bridge (semiconductor technology). The pressure-dependent change in the bridge output voltage is measured and evaluated.

Advantages:
- Can be used for process pressure up to 400 bar (6000 psi)
- High long-term stability
- Guaranteed overload resistance up to 4 times the nominal pressure
- Significantly less thermal effect compared to diaphragm seal systems

PMP55

The operating pressure acts on the process isolating diaphragm of the diaphragm seal and is transferred to the process isolating diaphragm of the sensor by a diaphragm seal fill fluid. The process isolating diaphragm is deflected and a fill fluid transfers the pressure to a resistance bridge. The pressure-dependent change in the bridge output voltage is measured and evaluated.

Advantages:
- Depending on the version, can be used for process pressure up to 400 bar (6000 psi) and simultaneous extreme process temperatures
- High long-term stability
- Guaranteed overload resistance up to 4 times the nominal pressure

Level measurement (level, volume and mass)

Function and design

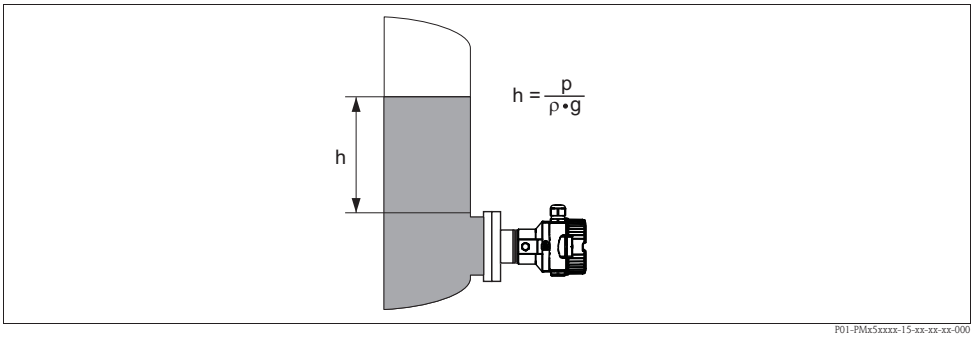

Level measurement

h *Height (level)*
p *Pressure*
ρ *Density of the medium*
g *Gravitation constant*

Your benefits

- Choice of different level measuring modes in the device software
- Volume and mass measurements in any tank shapes by means of a freely programmable characteristic curve
- Choice of diverse level units
- Has a wide range of uses, even in the following cases:
  – in the event of foam formation
  – in tanks with agitators or screen fittings
  – in the event of liquid gases

Electrical differential pressure measurement with gauge pressure sensors

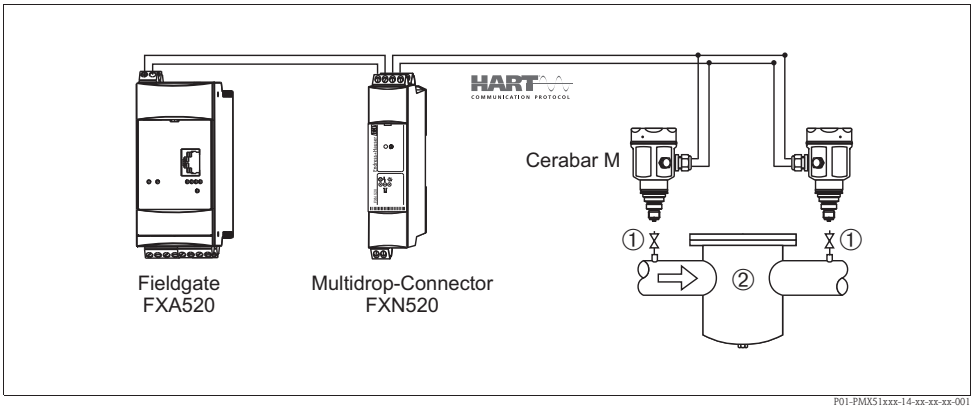

1 *Shut-off valves*

2 *e.g. filter*

In the example given, two Cerabar M devices (each with a gauge pressure sensor) are interconnected. The pressure difference can thus be measured using two independent Cerabar M devices.

Caution!
If using intrinsically safe devices, strict compliance with the rules for interconnecting intrinsically safe circuits as stipulated in IEC60079-14 (proof of intrinsic safety) is mandatory.

System integration (except analog electronics)

The device can be fitted with a tag name and a preset bus address, see → 82 ff "Ordering information" feature 895 "Identification:" version "Z1" and "Z2".

Communication protocol

- 4 to 20 mA without communication protocol (analog electronics)
- 4 to 20 mA with HART communication protocol
- PROFIBUS PA
  - The Endress+Hauser devices meet the requirements of the FISCO model.
  - Due to the low current consumption of 11 mA ± 1 mA, the following number of devices can be operated on one bus segment if installing as per FISCO:
    - up to 8 Cerabar M for Ex ia, CSA IS and FM IS applications
    - up to 31 Cerabar M for all other applications, e.g. in non-hazardous areas, Ex nA, etc.

  Further information on PROFIBUS PA can be found in Operating Instructions BA00034S "PROFIBUS DP/PA: Guidelines for planning and commissioning" and in the PNO Guideline.
- FOUNDATION Fieldbus
  - The Endress+Hauser devices meet the requirements of the FISCO model.
  - Due to the low current consumption of 16 mA ± 1 mA, the following number of devices can be operated on one bus segment if installing as per FISCO:
    - up to 6 Cerabar M for Ex ia, CSA IS and FM IS applications
    - up to 22 Cerabar M for all other applications, e.g. in non-hazardous areas, Ex nA, etc.

  Further information on FOUNDATION Fieldbus, such as requirements for bus system components can be found in Operating Instructions BA00013S "FOUNDATION Fieldbus Overview".

Input

Measured variable

- Analog electronics: Absolute pressure and gauge pressure
- HART electronics: Absolute pressure and gauge pressure, from which level (level, volume or mass) is derived

Measuring range

PMC51 – with ceramic process isolating diaphragm (Ceraphire®) for gauge pressure

Nominal value	Range limit		Smallest calibratable span (preset at the factory) [1]	MWP [2]	OPL [3]	Vacuum resistance	Version in the order code [4]
	lower (LRL) [bar (psi)]	upper (URL) [bar (psi)]	[bar (psi)]	[bar (psi)]	[bar (psi)]	[bar_{abs} (psi_{abs})]	
100 mbar (1.5 psi)	–0.1 (–1.5)	+0.1 (+1.5)	0.01 (0.15)	2.7 (40.5)	4 (60)	0.7 (10.5)	1C
250 mbar (3.75 psi)	–0.25 (–3.75)	+0.25 (+3.75)	0.01 (0.15)	3.3 (49.5)	5 (75)	0.5 (7.5)	1E
400 mbar (6 psi)	–0.4 (–6)	+0.4 (+6)	0.02 (0.3)	5.3 (79.5)	8 (120)	0	1F
1 bar (15 psi)	–1 (–15)	+1 (+15)	0.05 (1)	6.7 (100.5)	10 (150)	0	1H
2 bar (30 psi)	–1 (–15)	+2 (+30)	0.1 (1.5)	12 (180)	18 (270)	0	1K
4 bar (60 psi)	–1 (–15)	+4 (+60)	0.2 (3)	16.7 (250.5)	25 (375)	0	1M
10 bar (150 psi)	–1 (–15)	+10 (+150)	0.5 (7.5)	26.7 (400.5)	40 (600)	0	1P
40 bar (600 psi)	–1 (–15)	+40 (+600)	2 (30)	40 (600)	60 (900)	0	1S

PMC51 – with ceramic process isolating diaphragm (Ceraphire®) for absolute pressure

Nominal value	Range limit		Smallest calibratable span (preset at the factory) [1]	MWP [2]	OPL [3]	Vacuum resistance	Version in the order code [4]
	lower (LRL) [bar_{abs} (psi_{abs})]	upper (URL) [bar_{abs} (psi_{abs})]	[bar (psi)]	[bar_{abs} (psi_{abs})]	[bar_{abs} (psi_{abs})]	[bar_{abs} (psi_{abs})]	
100 mbar (15 psi)	0	+0.1 (+1.5)	0.01 (0.15)	2.7 (40.5)	4 (60)	0	2C
250 mbar (3.75 psi)	0	+0.25 (+3.75)	0.01 (0.15)	3.3 (49.5)	5 (75)	0	2E
400 mbar (6 psi)	0	+0.4 (+6)	0.02 (0.3)	5.3 (79.5)	8 (120)	0	2F
1 bar (15 psi)	0	+1 (+15)	0.05 (1)	6.7 (100.5)	10 (150)	0	2H
2 bar (30 psi)	0	+2 (+30)	0.1 (1.5)	12 (180)	18 (270)	0	2K
4 bar (60 psi)	0	+4 (+60)	0.2 (3)	16.7 (250.5)	25 (375)	0	2M
10 bar (150 psi)	0	+10 (+150)	0.5 (7.5)	26.7 (400.5)	40 (600)	0	2P
40 bar (600 psi)	0	+40 (+600)	2 (30)	40 (600)	60 (900)	0	2S

1) Recommended turn down: Max 10:1.
Factory calibration turn down: Max 20:1, higher on request or configurable in the device.

2) The MWP (maximum working pressure) for the measuring device depends on the lowest-rated element, with regard to pressure, of the selected components, i.e. the process connection (→ 🖹 33 ff) has to be taken into consideration in addition to the measuring cell (→ see Table above). Pay attention to the pressure-temperature dependence also. For the appropriate standards and other information, see → 🖹 32, "Pressure specifications" section.

3) OPL: over pressure limit depends on the lowest-rated element, with regard to pressure, of the selected components

4) Version in the order code → see also → 🖹 82 ff, feature 70 "Sensor range"

PMP51 and PMP55 – metallic process isolating diaphragm for gauge pressure

Nominal value	Range limit		Smallest calibratable span (preset at the factory) [1]	MWP [2]	OPL [3]	Vacuum resistance [4] Silicone oil/ Inert oil	Version in the order code [5]
	lower (LRL) [bar (psi)]	upper (URL) [bar (psi)]	[bar (psi)]	[bar (psi)]	[bar (psi)]	[bar_{abs} (psi_{abs})]	
400 mbar (6 psi)	–0.4 (–6)	+0.4 (+6)	0.02 (0.3)	4 (60)	6 (90)	0.01/0.04 (0.15/0.6)	1F
1 bar (15 psi)	–1 (–15)	+1 (+15)	0.05 (1)	6.7 (100)	10 (150)		1H
2 bar (30 psi)	–1 (–15)	+2 (+30)	0.1 (1.5)	13.3 (200)	20 (300)		1K
4 bar (60 psi)	–1 (–15)	+4 (+60)	0.2 (3)	18.7 (280.5)	28 (420)		1M
10 bar (150 psi)	–1 (–15)	+10 (+150)	0.5 (7.5)	26.7 (400.5)	40 (600)		1P
40 bar (600 psi)	–1 (–15)	+40 (+600)	2 (30)	100 (1500)	160 (2400)		1S
100 bar (1500 psi)	–1 (–15)	+100 (+1500)	5 (75)	100 (1500)	400 (6000)		1U
400 bar (6000 psi)	–1 (–15)	+400 (+6000)	20 (300)	400 (6000)	600 (9000)		1W

PMP51 and PMP55 – metallic process isolating diaphragm for absolute pressure

Nominal value	Range limit		Smallest calibratable span (preset at the factory) [1]	MWP [2]	OPL [3]	Vacuum resistance [4] Silicone oil/ Inert oil	Version in the order code [5]
	lower (LRL) [bar_{abs} (psi_{abs})]	upper (URL) [bar_{abs} (psi_{abs})]	[bar (psi)]	[bar_{abs} (psi_{abs})]	[bar_{abs} (psi_{abs})]	[bar_{abs} (psi_{abs})]	
400 mbar (6 psi)	0	+0.4 (+6)	0.02 (0.3)	4 (60)	6 (90)	0.01/0.04 (0.15/0.6)	2F
1 bar (15 psi)	0	+1 (+15)	0.05 (1)	6.7 (100)	10 (150)		2H
2 bar (30 psi)	0	+2 (+30)	0.1 (1.5)	13.3 (200)	20 (300)		2K
4 bar (60 psi)	0	+4 (+60)	0.2 (3)	18.7 (280.5)	28 (420)		2M
10 bar (150 psi)	0	+10 (+150)	0.5 (7.5)	26.7 (400.5)	40 (600)		2P
40 bar (600 psi)	0	+40 (+600)	2 (30)	100 (1500)	160 (2400)		2S
100 bar (1500 psi)	0	+100 (+1500)	5 (75)	100 (1500)	400 (6000)		2U
400 bar (6000 psi)	0	+400 (+6000)	20 (300)	400 (6000)	600 (9000)		2W

1) Recommended turn down: Max 10:1.
Factory calibration turn down: Max 20:1, higher on request or configurable in the device.

2) The MWP (maximum working pressure) for the measuring device depends on the lowest-rated element, with regard to pressure, of the selected components, i.e. the process connection (→ 🖹 33 ff) has to be taken into consideration in addition to the measuring cell (→ see Table above). Pay attention to the pressure-temperature dependence also. For the appropriate standards and other information, see → 🖹 32, "Pressure specifications" section.

3) OPL: over pressure limit (= sensor overload limit)

4) The vacuum resistance applies to the measuring cell at reference conditions. The pressure and temperature application limits of the selected filling oil must also be observed for the PMP55. → 🖹 77, "Diaphragm seal filling oils" section.

5) Version in the order code → 🖹 82 ff, feature 70 "Sensor range"

Explanation of terms

Explanation of terms: turn down (TD), set span and span based on zero point

Case 1:
- \|Lower range value (LRV)\| ≤ \|Upper range value (URV)\|

Example:
- Lower range value (LRV) = 0 bar
- Upper range value (URV) = 0.5 bar (7.5 psi)
- Nominal value (URL) = 1 bar (15 psi)

Turn down:
- TD = URL / \|URV\| = 2:1

Set span:
- URV – LRV = 0.5 bar (7.5 psi)
  This span is based on the zero point.

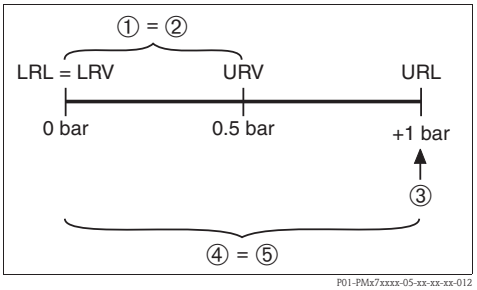

Example: 1 bar (15 psi) measuring cell

Case 2:
- \|Lower range value (LRV)\| ≤ \|Upper range value (URV)\|

Example:
- Lower range value (LRV) = 0 bar
- Upper range value (URV) = 0.5 bar (7.5 psi)
- Nominal value (URL) = 1 bar (15 psi)

Turn down:
- TD = URL / \|URV\| = 2:1

Set span:
- URV – LRV = 0.5 bar (7.5 psi)
  This span is based on the zero point.

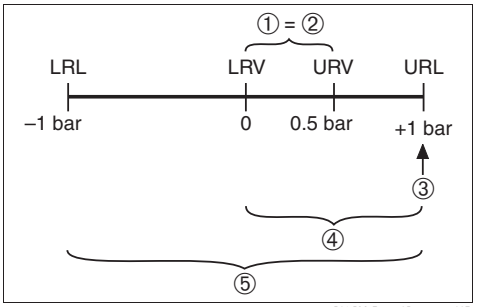

Example: 1 bar (15 psi) measuring cell

Case 3:
- \|Lower range value (LRV)\| ≥ \|Upper range value (URV)\|

Example:
- Lower range value (LRV) = –0.6 bar (–9 psi)
- Upper range value (URV) = 0 bar
- Nominal value (URL) = 1 bar (15 psi)

Turn down:
- TD = URL / \|LRV\| = 1.67:1

Set span:
- URV – LRV = 0.6 bar (–9 psi)
  This span is based on the zero point.

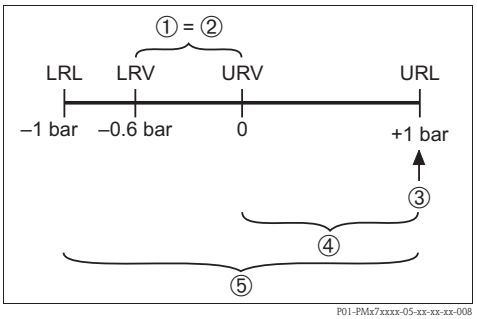

Example: 1 bar (15 psi) measuring cell

1 Set span
2 Span based on zero point
3 Nominal value ≙ upper range limit (URL)
4 Nominal measuring range
5 Sensor measuring range
LRL Lower range limit
URL Upper range limit
LRV Lower range value
URV Upper range value

Output

Output signal

- 4 to 20 mA analog, 2-wire
- 4 to 20 mA with superimposed digital communication protocol HART 6.0, 2-wire
- Digital communication signal PROFIBUS PA (Profile 3.02)
- Digital communication signal FOUNDATION Fieldbus

Signal range

4 to 20 mA analog, 4 to 20 mA HART: 3.8 to 20.5 mA

Signal on alarm

As per NAMUR NE 43

- 4 to 20 mA Analog:
  - Signal overshoot: > 20.5 mA
  - Signal undershoot: < 3.8 mA
  - Min Alarm (3.6 mA)
- 4 to 20 mA HART
  Options:
  - Max. alarm: can be set from 21 to 23 mA (factory setting: 22 mA)
  - Hold measured value: last measured value is held
  - Min. alarm: 3.6 mA
- PROFIBUS PA: can be set in the Analog Input block,
  Options: Last Valid Out Value (factory setting), Fail-safe Value, Status Bad
- FOUNDATION Fieldbus: can be set in the Analog Input block,
  Options: Last Good Value, Fail-safe Value (factory setting), Wrong Value

Load - 4 to 20 mA analog and 4 to 20 mA HART

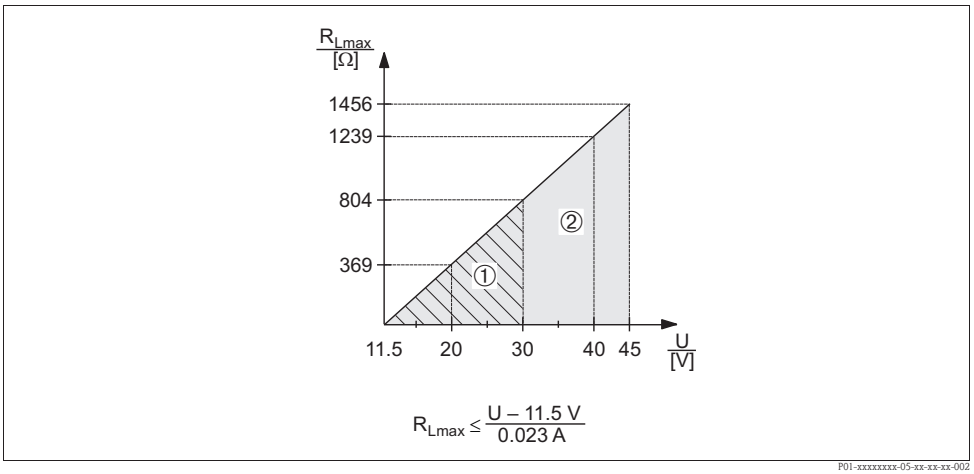

Load diagram

1 Power supply 11.5 to 30 V DC for intrinsically safe device versions
2 Power supply 11.5 to 45 V DC (versions with plug-in connector 35 V DC) for other types of protection and for uncertified device versions
R_{Lmax} Maximum load resistance
U Supply voltage

Note!
When operating via a handheld terminal or via a PC with an operating program, a minimum communication resistance of 250 Ω must be taken into account.

Resolution

- Current output: 1 µA
- Display HART: can be set (factory setting: presentation of the maximum accuracy of the transmitter)

Dead time, Time constant

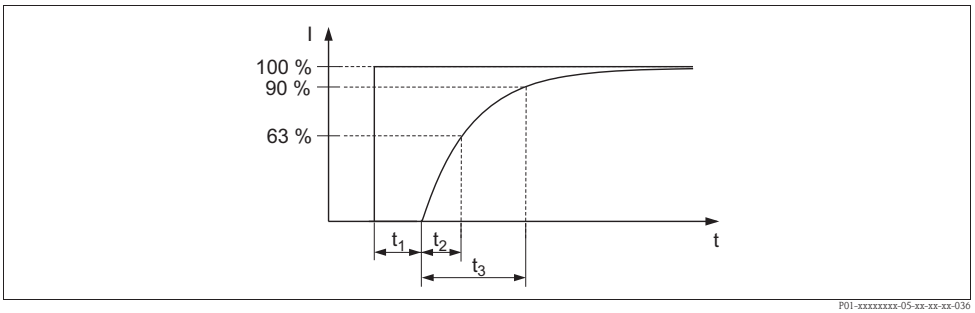

Presentation of the dead time and the time constant

Dynamic behavior: current output (analog electronics)

	Type	Dead time (t_1) [ms]	Time constant T63 (= t_2) [ms]	Time constant T90 (= t_3) [ms]
max.	PMC51	60	40	50
max.	PMP51	40	40	50
max.	PMP55	PMP51 + influence of the diaphragm seal		

Dynamic behavior: current output (HART electronics)

	Type	Dead time (t_1) [ms]	Time constant T63 (= t_2) [ms]	Time constant T90 (= t_3) [ms]
max.	PMC51	50	85	200
max.	PMP51	70	80	185
max.	PMP55	PMP51 + influence of the diaphragm seal		

Dynamic behavior: digital output (HART electronics)

	Type	Dead time (t_1) [ms]	Dead time (t_1) [ms] + Time constant T63 (= t_2) [ms]	Dead time (t_1) [ms] + Time constant T90 (= t_3) [ms]
min.	PMC51	210	295	360
max.		1010	1095	1160
min.	PMP51	210	285	345
max.		1010	1085	1145
max.	PMP55	PMP51 + influence of the diaphragm seal		

Reading cycle

- Acyclic: max. 3/s, typical 1/s (depends on command # and number of preambles)
- Cyclic (Burst): max. 3/s, typical 2/s

The Cerabar M commands the BURST MODE function for cyclic value transmission via the HART communication protocol.

Cycle time (Update time)

Cyclic (Burst): min. 300 ms

Response time

- Acyclic: min. 330 ms, typical 590 ms (depends on command # and number of preambles)
- Cyclic (Burst): min. 160 ms, typical 350 ms (depends on command # and number of preambles)

Dynamic behavior: PROFIBUS PA

	Type	Dead time (t_1) [ms]	Dead time (t_1) [ms] + Time constant T63 (= t_2) [ms]	Dead time (t_1) [ms] + Time constant T90 (= t_3) [ms]
min.	PMC51	85	170	235
max.		1185	1270	1335
min.	PMP51	85	160	220
max.		1185	1260	1320
max.	PMP55	PMP51 + influence of the diaphragm seal		

Reading cycle

- Cyclic: max. 30/s (dependent on the number and type of function blocks used in a closed-control loop)
- Acyclic: typical 25/s

Cycle time (update time)

min. 100 ms
The cycle time in a bus segment in cyclic data communication depends on the number of devices, on the segment coupler used and on the internal PLC cycle time.

Response time

- Cyclic: approx. 8 to 13 ms (depends on Min. Slave Interval)
- Acyclic: approx. 23 to 35 ms (depends on Min. Slave Interval)

Dynamic behavior: FOUNDATION Fieldbus

	Type	Dead time (t_1) [ms]	Dead time (t_1) [ms] + Time constant T63 (= t_2) [ms]	Dead time (t_1) [ms] + Time constant T90 (= t_3) [ms]
min.	PMC51	95	180	245
max.		1095	1180	1245
min.	PMP51	95	170	230
max.		1095	1170	1230
max.	PMP55	PMP51 + influence of the diaphragm seal		

Reading cycle

- Cyclic: max. 10/s (dependent on the number and type of function blocks used in a closed-control loop)
- Acyclic: typical 5/s

Cycle time (update time)

Cyclic: min. 100 ms

Response time

- Cyclic: max. 20 ms (for standard bus parameter settings)
- Acyclic: typical 70 ms (for standard bus parameter settings)

Damping

A damping affects all outputs (output signal, display).

- Via on-site display, handheld terminal or PC with operating program, continuous from 0...999 s
- Via DIP-switch on the electronic insert, switch position "on" (= set value) and "off" (= damping switched off)
- Factory setting: 2 s

Data of the FOUNDATION Fieldbus interface

Basic data

Device Type	0x1019
Device Revision	01 (hex)
DD Revision	0x01021
CFF Revision	0x000102
ITK Version	5.2.0
ITK Certification Driver No.	IT067700
Link-Master (LAS) capable	Yes
Link Master / Basic Device selectable	Yes; Factory setting: Basic Device
Number of VCRs	44
Number of Link Objects in VFD	50
Number of FB-Schedule Objects	40

Virtual communication references (VCRs)

Permanent Entries	44
Client VCRs	0
Server VCRs	5
Source VCRs	8
Sink VCRs	0
Subscriber VCRs	12
Publisher VCRs	19

Link settings

Slot time	4
Min. inter PDU delay	12
Max. response delay	40

Transducer Blocks

Block	Content	Output values
TRD1 Block	Contains all parameters related to the measurement	■ Pressure or level (channel 1) ■ Process temperature (channel 2) ■ Measured pressure value (channel 3) ■ Max. pressure (channel 4) ■ Level before linearization (channel 5)
Diagnostic Block	Contains diagnostic information	Error code via DI channels (channel 10 to 15)
Display Block	Contains parameters to configure the onsite display	No output values

Function blocks

Block	Content	Number of blocks	Execution time	Functionality
Resource Block	The Resource Block contains all the data that uniquely identify the device. It is an electronic version of a nameplate of the device.	1		enhanced
Analog Input Block 1 Analog Input Block 2	The AI Block receives the measuring data from the Sensor Block, (selectable via a channel number) and makes the data available to other function blocks at its output. Enhancement: digital outputs for process alarms, fail safe mode.	2	25 ms	enhanced
Digital Input Block	This block contains the discrete data of the Diagnose Block (selectable via a channel number 10 to 15) and provides them for other blocks at the output.	1	20 ms	standard
Digital Output Block	This block converts the discrete input and thus initiates an action (selectable via a channel number) in the DP Flow Block or in the im TRD1 Block. Channel 20 resets the counter for max. pressure transgressions value and Channel 21 resets the Totalizer.	1	20 ms	standard
PID Block	The PID Block serves as a proportional-integral-derivative controller and is used almost universally for closed-loop-control in the field including cascade and feedforward. Input IN can be indicated on the display. The selection is performed in the Display Block (DISPLAY_MAIN_LINE_CONTENT).	1	40 ms	standard
Arithmetic Block	This block is designed to permit simple use of popular measurement math functions. The user does not have to know how to write equations. The math algorithm is selected by name, chosen by the user for the function to be performed.	1	35 ms	standard
Input Selector Block	The Input Selector Block facilitates the selection of up to four inputs and generates an output based on the configured action. This block normally receives its inputs from AI Blocks. The block performs maximum, minimum, average and 'first good' signal selection. Inputs IN1 to IN4 can be indicated on the display. The selection is performed in the Display Block (DISPLAY_MAIN_LINE_1_CONTENT).	1	30 ms	standard
Signal Characterizer Block	The Signal Characterizer Block has two sections, each with an output that is a non-linear function of the respective input. The non-linear function is generated by a single look-up table with 21 arbitrary x-y pairs.	1	40 ms	standard
Integrator Block	The Integrator Block integrates a variable as a function of the time or accumulates the counts from a Pulse Input Block. The block may be used as a totalizer that counts up until reset or as a batch totalizer that has a setpoint, where the integrated or accumulated value is compared to pre-trip and trip settings, generating a binary signal when the setpoint is reached.	1	35 ms	standard

Additional function block information:

Instantiate Function Block	YES
Number of instantiate blocks	20

Power supply

Electrical connection

Note!
- When using the measuring device in hazardous areas, installation must comply with the corresponding national standards and regulations and the Safety Instructions or Installation or Control Drawings. → 98 ff, "Safety Instructions" and "Installation/Control Drawings" sections.
- According to IEC/EN61010 a suitable disconnector has to be installed for the device
- HART: Overvoltage protection HAW569-DA2B for the non-hazardous area, ATEX II 2 (1) Ex ia IIC and IEC Ex ia can be ordered as an option (see "Ordering information" section).
- Protective circuits against reverse polarity, HF influences and overvoltage peaks are installed.
- The digital communication signal is transmitted to the bus via a 2-wire connection. The bus also provides the power supply.

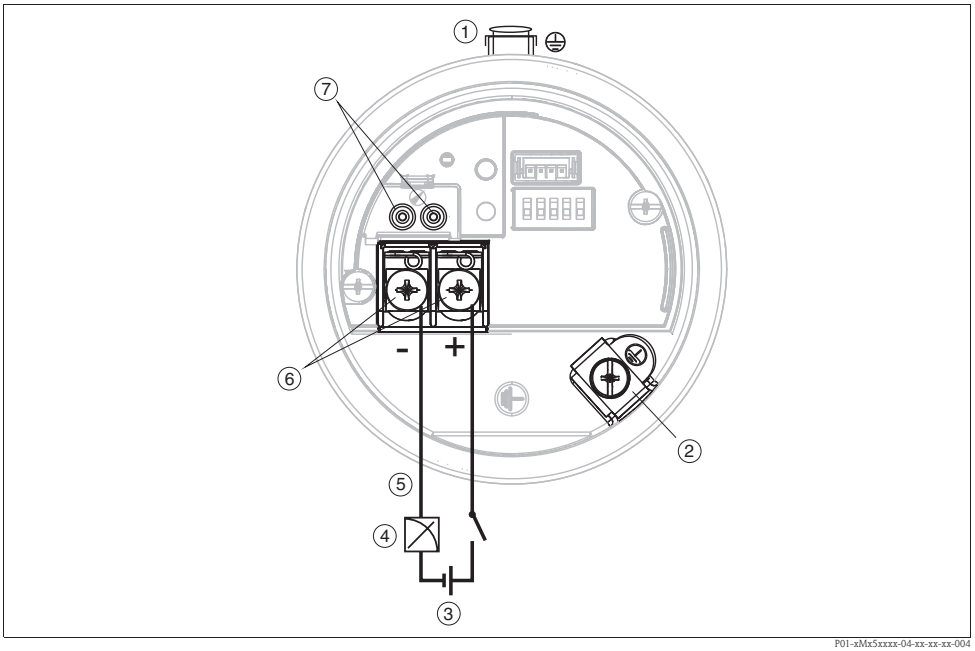

Electrical connection

1 External grounding terminal
2 Internal grounding terminal
3 Supply voltage → 18
4 4...20 mA for HART devices
5 For HART and FOUNDATION Fieldbus devices: With a handheld terminal, all the parameters can be configured anywhere along the bus line via menu operation.
6 Terminals
7 For HART devices: test terminals, see section "Taking 4 to 20 mA test signal"

4 to 20 mA Analog, 4 to 20 mA HART

Taking 4 to 20 mA test signal

A 4 to 20 mA test signal may be measured via the test terminals without interrupting the measurement.

PROFIBUS PA

For further information on the network structure and grounding, and for further bus system components such as bus cables, see the relevant documentation, e.g. Operating Instructions BA00034S "PROFIBUS DP/PA: Guidelines for planning and commissioning" and the PNO Guideline.
Cable specifications:
Use a twisted, shielded two-wire cable, preferably cable type A

Note!
For further information on the cable specifications, see Operating Instructions BA00034S "PROFIBUS DP/PA: Guidelines for planning and commissioning", the PNO Guideline 2.092 PROFIBUS PA User and Installation Guideline" and IEC 61158-2 (MBP).

FOUNDATION Fieldbus

The digital communication signal is transmitted to the bus via a 2-wire connection. The bus also provides the power supply. For further information on the network structure and grounding and for further bus system components such as bus cables, see the relevant documentation, e.g. Operating Instructions BA00013S "FOUNDATION Fieldbus Overview" and the FOUNDATION Fieldbus Guideline.
Cable specifications:
Use a twisted, shielded two-wire cable, preferably cable type A

Note!
For further information on the cable specifications, see Operating Instructions BA00013S "FOUNDATION Fieldbus Overview", FOUNDATION Fieldbus Guideline and IEC 61158-2 (MBP).

Devices with valve connector

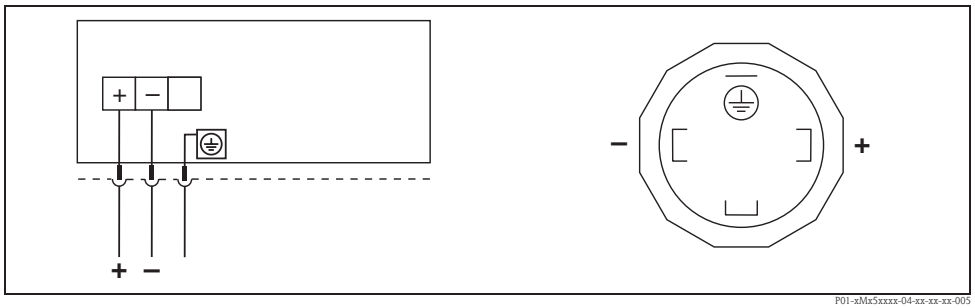

P01-xMx5xxxx-04-xx-xx-xx-005

Left: electrical connection for devices with a valve connector
Right: view of the connector at the device

Material: PA 6.6

Devices with Harting plug Han7D

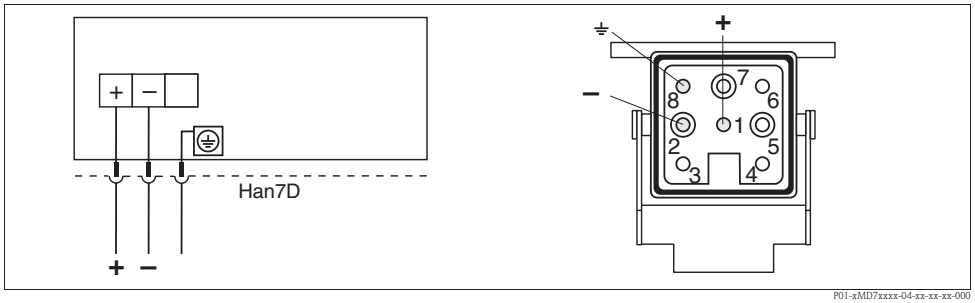

P01-xMD7xxxx-04-xx-xx-xx-000

Left: electrical connection for devices with Harting plug Han7D
Right: view of the plug connector at the device

Material: CuZn

Connecting the cable version

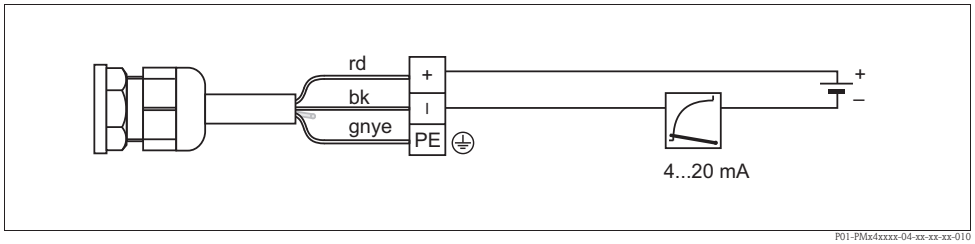

P01-PMx4xxxx-04-xx-xx-xx-010

rd = red, bk = black, gnye = green-yellow

Devices with M12 plug

PIN assignment for M12 connector

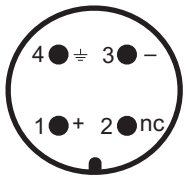

PIN	Meaning
1	Signal +
2	Not assigned
3	Signal –
4	Earth

Endress+Hauser offers the following accessories for devices with an M12 plug:
Plug-in jack M 12x1, straight
- Material: body PA; coupling nut CuZn, nickel-plated
- Degree of protection (fully locked): IP66/67
- Order number: 52006263

Plug-in jack M 12x1, elbowed
- Material: body PBT/PA; coupling nut GD-Zn, nickel-plated
- Degree of protection (fully locked): IP66/67
- Order number: 71114212

Cable 4x0.34 mm² (20 AWG) with M12 socket, elbowed, screw plug, length 5 m (16 ft)
- Material: body PUR; coupling nut CuSn/Ni; cable PVC
- Degree of protection (fully locked): IP66/67
- Order number: 52010285

Devices with 7/8" plug

PIN assignment for 7/8" connector

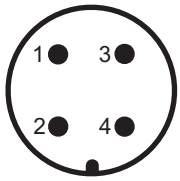

PIN	Meaning
1	Signal –
2	Signal +
3	Shield
4	Not assigned

External thread: 7/8 - 16 UNC
- Material: housing / body CuZn, nickel-plated
- Protection: IP66/68

Cable gland

Approval	Type	Clamping area
Standard, II1/2G Exia, IS	Plastic M20x1.5	5 to 10 mm (0.2 to 0.39 in)
ATEX II1/2D, II1/2GD Exia, II3G Ex nA	Metal M20x1.5 (Ex e)	7 to 10.5 mm (0.28 to 0.41 in)

Terminals

For wire cross-sections of 0.5 to 2.5 mm² (20 to 14 AWG).

Supply voltage

Note!
- When using the measuring device in hazardous areas, installation must comply with the corresponding national standards and regulations and the Safety Instructions or Installation or Control Drawings.
- All explosion protection data are given in separate documentation which is available upon request. The Ex documentation is supplied as standard with all devices approved for use in explosion hazardous areas.
→ 98 ff, "Safety Instructions" and "Installation/Control Drawings" sections.

4 to 20 mA, 4 to 20 mA HART

Type of protection	Supply voltage
■ Intrinsically safe	11.5 ... 30 V DC
■ Other types of protection ■ Devices without certificate	11.5 ... 45 V DC (Versions with plug-in connection 35 V DC)

PROFIBUS PA

■ Version for non-hazardous areas: 9 to 32 V DC

FOUNDATION Fieldbus

■ Version for non-hazardous areas: 9 to 32 V DC

Start-up current HART

12 mA or 22 mA (selectable)

Current consumption

■ PROFIBUS PA: 11 mA ± 1 mA, switch-on current corresponds to IEC 61158-2, Clause 21
■ FOUNDATION Fieldbus: 16 mA ± 1 mA, switch-on current corresponds to IEC 61158-2, Clause 21

Cable entry

→ 📄 82 ff, feature 50 "Electrical connection".

Cable specification

■ Endress+Hauser recommends using twisted, shielded two-wire cables.
■ Terminals for wire cross-sections 0.5 to 2.5 mm^2 (20 to 14 AWG)
■ Cable outer diameter: 5 to 9 mm (0.2 to 0.35 in) depends on the used cable gland (→ 📄 18)

Residual ripple

No influence on 4 to 20 mA signal up to ± 5 % residual ripple within the permitted voltage range [according to HART hardware specification HCF_SPEC-54 (DIN IEC 60381-1)]

Influence of power supply

≤ 0.001% of URL/1 V

Performance characteristics – general

Reference operating conditions

■ As per IEC 60770
■ Ambient temperature T_A = constant, in the range of: +21 to +33°C (+70 to +91°F)
■ Humidity φ = constant, in the range of: 5 to 80 % RH
■ Ambient pressure p_A = constant, in the range of: 860 to 1060 mbar (12.47 to 15.37 psi)
■ Position of the measuring cell: constant, in range: ±1° horizontally
■ Input of LOW SENSOR TRIM and HIGH SENSOR TRIM for lower range value and upper range value
■ Span based on zero point
■ Material of the process isolating diaphragm PMC51: Al_2O_3 (aluminum-oxide ceramic, Ceraphire®)
■ Material of the process isolating diaphragm PMP51 and PMP55: AISI 316L
■ Filling oil PMP51 and PMP55: silicone oil
■ Supply voltage: 24 V DC ± 3 V DC
■ Load with HART: 250 Ω

Uncertainty of measurement for small absolute pressure ranges

The smallest expanded uncertainty of measurement that can be returned by our standards is:
■ 0.4% of the measured value in the range of 1 to 30 mbar
■ 1% of the measured value in the range < 1 mbar.

Long-term stability

PMC51	Measuring range	Long-term stability of URL / 1 year
PMC51 with thread or flange	≤ 1 bar (15 psi)	±0.2 %
	> 1 bar (15 psi)	±0.1 %
PMC51 with hygienic process connection	≤ 1 bar (15 psi)	±0.35 %
	> 1 bar (15 psi)	±0.2 %

PMP51	Long-term stability of URL / 1 year
Measuring range	
≤ 1 bar (15 psi)	±0.25 %
> 1 bar to 10 bar (15 to 150 psi)	±0.1 %
40 bar (600 psi)	±0.1 %
100 bar (1500 psi)	±0.1 %
400 bar (6000 psi)	±0.1 %

Influence of orientation

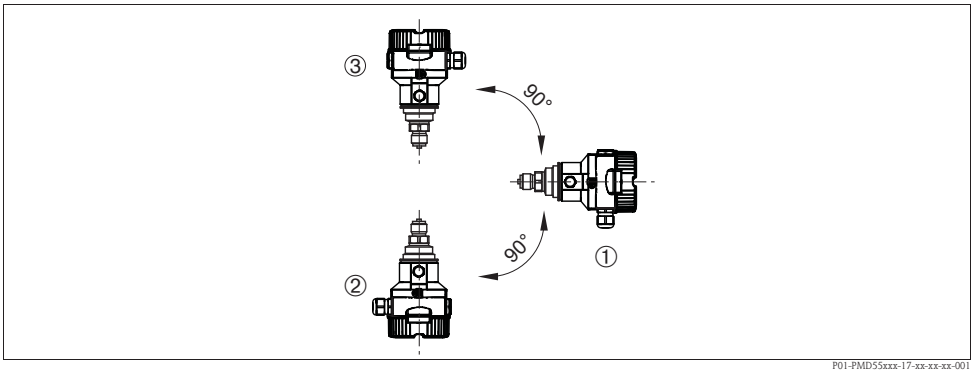

P01-PMD55xxx-17-xx-xx-xx-001

Measuring error in mbar (psi)

	① **Axis of the diaphragm perpendicular**	② **Diaphragm points up**	③ **Diaphragm points down**
PMC51	Calibration position, no measuring error	< +0.2 mbar (0.003 psi)	< -0.2 mbar (0.003 psi)
PMP51 with process connections 1/2" thread and silicone oil		< +4 mbar (0.06 psi)	< -4 mbar (0.06 psi)
PMP51 with process connections > thread 1/2" and flanges		< +10 mbar (0.145 psi) This value is doubled for inert oil.	< -10 mbar (0.145 psi) This value is doubled for inert oil.

Note!
Position-dependent zero point shift can be corrected at the device. → 📄 26, "General installation instructions" section and → 📄 78 ff, "Installation instructions" section.

Warm-up period

- 4 to 20 mA analog: ≤1.5 s
- 4 to 20 mA HART: ≤5 s
- PROFIBUS PA: ≤8 s
- FOUNDATION Fieldbus: ≤20 s (after a TOTAL-reset ≤45 s)

Performance characteristics – ceramic process isolating diaphragm

Reference accuracy – PMC51

The reference accuracy comprises the non-linearity according to limit point setting, hysteresis and non-reproducibility as per IEC 60770. The data refer to the calibrated span.

Gauge pressure sensors		
Measuring cell	**Standard reference accuracy**	**Platinum reference accuracy**
100 mbar (1.5 psi)	■ TD 1:1 to ≤ TD 10:1 = 0.15 % ■ TD > 10:1 to TD 20:1 = 0.20 %	■ TD 1:1 to ≤ TD 10:1 = ±0.075 % ■ TD > 10:1 to TD 20:1 = ±0.0075 x TD
250 mbar (3.75 psi), 400 mbar (6 psi), 1 bar (15 psi), 2 bar (30 psi), 4 bar (60 psi), 10 bar (150 psi)	■ TD 1:1 to ≤ TD 10:1 = 0.15 % ■ TD > 10:1 to TD 20:1 = 0.20 %	■ TD 1:1 to ≤ TD 10:1 = ±0.075 % ■ TD > 10:1 to TD 20:1 = ±0.1 %
40 bar (600 psi)	■ TD 1:1 to ≤ TD 10:1 = 0.15 % ■ TD > 10:1 to TD 20:1 = 0.20 %	■ TD 1:1 to ≤ TD 10:1 = ±0.075 % ■ TD > 10:1 to TD 20:1 = ±0.0075 x TD

Absolute pressure sensors		
Measuring cell	**Standard reference accuracy**	**Platinum reference accuracy**
100 mbar (1.5 psi)	■ TD 1:1 to ≤ TD 10:1 = 0.15 % ■ TD > 10:1 to TD 20:1 = ±0.0015 x TD	■ TD 1:1 to TD 5:1 = ±0.075 % ■ TD > 5:1 to TD 20:1 = ±0.015 x TD
250 mbar (3.75 psi)	■ TD 1:1 to ≤ TD 10:1 = 0.15 % ■ TD > 10:1 to TD 20:1 = 0.20 %	■ TD 1:1 to ≤ TD 10:1 = ±0.075 % ■ TD > 10:1 to TD 13:1 = ±0.1 %
400 mbar (6 psi), 1 bar (15 psi), 2 bar (30 psi), 4 bar (60 psi), 10 bar (150 psi)	■ TD 1:1 to ≤ TD 10:1 = 0.15 % ■ TD > 10:1 to TD 20:1 = 0.20 %	■ TD 1:1 to ≤ TD 10:1 = ±0.075 % ■ TD > 10:1 to TD 20:1 = ±0.1 %
40 bar (600 psi)	■ TD 1:1 to ≤ TD 10:1 = 0.15 % ■ TD > 10:1 to TD 20:1 = 0.20 %	■ TD 1:1 to ≤ TD 10:1 = ±0.075 % ■ TD > 10:1 to TD 20:1 = ±0.0075 x TD

Total performance – PMC51

The "Total performance" specification comprises the non-linearity including hysteresis, non-reproducibility as well as the thermal change in the zero point. All specifications apply to the temperature range –10 to +60°C (+14 to +140°F) and Turndown 1:1.

Signal output	Measuring cell	% URL
HART, PROFIBUS PA, FOUNDATION Fieldbus	100 mbar (1.5 psi), 250 mbar (3.75 psi), 400 mbar (6 psi)	±0.575
	1 bar (15 psi), 2 bar (30 psi), 4 bar (60 psi), 10 bar (150 psi), 40 bar (600 psi)	±0.5
Analog (4 to 20 mA)	100 mbar (1.5 psi), 250 mbar (3.75 psi), 400 mbar (6 psi)	±0.775
	1 bar (15 psi), 2 bar (30 psi), 4 bar (60 psi), 10 bar (150 psi), 40 bar (600 psi)	±0.7

Total error - PMC51

The total error comprises the long-term stability and the total performance. All specifications apply to the temperature range –10 to +60°C (+14 to +140°F) and Turndown 1:1.

	Signal output	Measuring cell	% URL
			1 year
PMC51 with thread or flange	HART, PROFIBUS PA, FOUNDATION Fieldbus	100 mbar (1.5 psi), 250 mbar (3.75 psi), 400 mbar (6 psi)	±0.55
		1 bar (15 psi), 2 bar (30 psi), 4 bar (60 psi), 10 bar (150 psi), 40 bar (600 psi)	±0.47
	Analog (4 to 20 mA)	100 mbar (1.5 psi), 250 mbar (3.75 psi), 400 mbar (6 psi)	±0.75
		1 bar (15 psi), 2 bar (30 psi), 4 bar (60 psi), 10 bar (150 psi), 40 bar (600 psi)	±0.67
PMC51 with hygienic process connection	HART, PROFIBUS PA, FOUNDATION Fieldbus	100 mbar (1.5 psi), 250 mbar (3.75 psi), 400 mbar (6 psi)	±0.925
		1 bar (15 psi), 2 bar (30 psi), 4 bar (60 psi), 10 bar (150 psi), 40 bar (600 psi)	±0.7
	Analog (4 to 20 mA)	100 mbar (1.5 psi), 250 mbar (3.75 psi), 400 mbar (6 psi)	±1.125
		1 bar (15 psi), 2 bar (30 psi), 4 bar (60 psi), 10 bar (150 psi), 40 bar (600 psi)	±0.9

Thermal change in the zero output and the output span – PMC51

PMC51 with thread or flange

Signal output	Measuring cell	% of the calibrated measuring span		
		–40 to -20°C (–40 to –4°F)	–10 to +60°C (+14 to +140°F)	–20 to +100°C (–4 to +212°F)
HART, PROFIBUS PA, FOUNDATION Fieldbus	100 mbar (1.5 psi), 250 mbar (3.75 psi), 400 mbar (6 psi)	±(0,6 + 0,45 x TD)	±0,2 + 0,275 x TD	±(0,4 + 0,425 x TD)
	1 bar (15 psi), 2 bar (30 psi), 4 bar (60 psi), 10 bar (150 psi), 40 bar (600 psi)	±0,5 + 0,35 x TD	±0,1 + 0,15 x TD	±(0,225 + 0,525 x TD)
Analog (4 to 20 mA)	100 mbar (1.5 psi), 250 mbar (3.75 psi), 400 mbar (6 psi)	±(0,6 + 0,45 x TD)	±0.4 + 0.275 x TD	±0.7 + 0.425 x TD
	1 bar (15 psi), 2 bar (30 psi), 4 bar (60 psi), 10 bar (150 psi), 40 bar (600 psi)	±0,5 + 0,35 x TD	±0.3 + 0.15 x TD	±0.525 + 0.525 x TD

PMC51 with hygienic process connection

Signal output	Measuring cell	% of the calibrated measuring span	
		–10 to +60°C (+14 to +140°F)	–20 to +130°C (–4 to +266°F)
HART, PROFIBUS PA, FOUNDATION Fieldbus	100 mbar (1.5 psi), 250 mbar (3.75 psi), 400 mbar (6 psi)	±(0,4 + 0,275 x TD)	±(0,7 + 0,425 x TD)
	1 bar (15 psi), 2 bar (30 psi), 4 bar (60 psi), 10 bar (150 psi), 40 bar (600 psi)	±(0,3 + 0,15 x TD)	±(0,525 + 0,525 x TD)
Analog (4 to 20 mA)	100 mbar (1.5 psi), 250 mbar (3.75 psi), 400 mbar (6 psi)	±(0,4 + 0,275 x TD)	±(0,7 + 0,425 x TD)
	1 bar (15 psi), 2 bar (30 psi), 4 bar (60 psi), 10 bar (150 psi), 40 bar (600 psi)	±(0,3 + 0,15 x TD)	±(0,525 + 0,525 x TD)

Performance characteristics – metallic process isolating diaphragm

Reference accuracy – PMP51, PMP55

The reference accuracy comprises the non-linearity according to limit point setting, hysteresis and non-reproducibility as per IEC 60770. The data refer to the calibrated span.

Gauge pressure sensors/absolute pressure sensors

	PMP51 and PMP55 without capillary	
Measuring cell	**Standard reference accuracy**	**Platinum reference accuracy** [1]
400 mbar (6 psi)	■ TD 1:1 = ±0.15 % ■ TD >1:1 to TD 20:1 = ±0.15 % x TD	Not available
	PMP51 with hygienic process connection: ■ TD 1:1 = ±0.3 % ■ TD >1:1 to TD 10:1 = ±0.3 % x TD	PMP51 with hygienic process connection: ■ TD 1:1 = ±0.2 % ■ TD >1:1 to TD 10:1 = ±0.2 % x TD
1 bar (15 psi)	■ TD 1:1 to TD 5:1 = ±0.15 % ■ TD >5:1 to TD 20:1 = ±0.03 % x TD	■ TD 1:1 to TD 2.5:1 = ±0.075 % ■ TD >2.5:1 to TD 20:1 = ±0.03 % x TD
	PMP51 with hygienic process connection: ■ TD 1:1 = ±0.3 % ■ TD >1:1 to TD 10:1 = ±0.3 % x TD	PMP51 with hygienic process connection: ■ TD 1:1 = ±0.2 % ■ TD >1:1 to TD 10:1 = ±0.2 % x TD
2 bar (30 psi)	■ TD 1:1 to TD 10:1 = ±0.15 % ■ TD >10:1 to TD 20:1 = ±0.015 % x TD	■ TD 1:1 to TD 5:1 = ±0.075 % ■ TD >5:1 to TD 20:1 = ±0.015 % x TD
	PMP51 with hygienic process connection: ■ TD 1:1 to TD ≤5:1: 0.15 % ■ TD >5:1 to TD ≤10:1: 0.2 %	PMP51 with hygienic process connection: ■ TD 1:1 to TD ≤5:1: 0.075 % ■ TD >5:1 to TD ≤10:1: 0.1 %
4 bar (60 psi)	■ TD 1:1 to TD 10:1 = ±0.15 % ■ TD >10:1 to TD 20:1 = ±0.20 %	■ TD 1:1 to TD 10:1 = ±0.075 % ■ TD 10:1 to TD 20:1 = ±0.0075 % x TD
	PMP51 with hygienic process connection: ■ TD 1:1 to TD ≤10:1: 0.15 % ■ TD >10:1 to TD 20:1: ±0.2 %	PMP51 with hygienic process connection: ■ TD 1:1 to TD ≤10:1: 0.075 % ■ TD >5:1 to TD 20:1: ±0.1 %
10 bar (150 psi), 40 bar (600 psi)	■ TD 1:1 to TD 10:1 = ±0.15 % ■ TD >10:1 to TD 20:1 = ±0.20 %	■ TD 1:1 to TD 10:1 = ±0.075 % ■ TD 10:1 to TD 20:1 = ±0.1 %
	PMP51 with hygienic process connection: ■ TD 1:1 to TD ≤10:1: 0.15 % ■ TD >10:1 to TD 20:1: ±0.2 %	PMP51 with hygienic process connection: ■ TD 1:1 to TD ≤10:1: 0.075 % ■ TD >5:1 to TD 20:1: ±0.1 %
100 bar (1500 psi)	■ TD 1:1 to TD 10:1 = ±0.15 % ■ TD >10:1 to TD 20:1 = ±0.20 %	■ TD 1:1 to TD 10:1 = ±0.075 % ■ TD 10:1 to TD 20:1 = ±0.0075 %
400 bar (6000 psi)	■ TD 1:1 to TD 5:1 = ±0.15 % ■ TD >5:1 to TD 20:1 = ±(0.03 % x TD)	■ TD 1:1 to TD 5:1 = ±0.15 % ■ TD >5:1 to TD 20:1 = ±(0.03 % x TD)

1) Only PMP51, PMP55 with direct diaphragm seal mounting

Gauge pressure sensors/absolute pressure sensors

	PMP55 with capillary	
Measuring cell	**Standard reference accuracy**	**Platinum reference accuracy** [1]
400 mbar (6 psi)	■ TD 1:1 = ±0.15 % ■ TD >1:1 to TD 20:1 = ±0.15 % x TD	Not available
1 bar (15 psi)	■ TD 1:1 to TD 3.75:1 = ±0.15 % ■ TD >3.75:1 to TD 20:1 = ±0.04 % x TD	■ TD 1:1 to TD 2:1 = ±0.1 % ■ TD >2:1 to TD 20:1 = ±0.04 % x TD
2 bar (30 psi)	■ TD 1:1 to TD 3.75:1 = ±0.15 % ■ TD >3.75:1 to TD 20:1 = ±0.04 % x TD	■ TD 1:1 to TD 2.5:1 = ±0.1 % ■ TD >2.5:1 to TD 20:1 = ±0.04 % x TD
4 bar (60 psi)	■ TD 1:1 to TD 10:1 = ±0.15 % ■ TD >10:1 to TD 20:1 = ±0.20 %	■ TD 1:1 to TD 10:1 = ±0.075 % ■ TD 10:1 to TD 20:1 = ±0.0075 % x TD
10 bar (150 psi), 40 bar (600 psi)	■ TD 1:1 to TD 10:1 = ±0.15 % ■ TD >10:1 to TD 20:1 = ±0.20 %	■ TD 1:1 to TD 10:1 = ±0.075 % ■ TD 10:1 to TD 20:1 = ±0.1 %
100 bar (1500 psi)	■ TD 1:1 to TD 10:1 = ±0.15 % ■ TD >10:1 to TD 20:1 = ±0.20 %	■ TD 1:1 to TD 10:1 = ±0.075 % ■ TD 10:1 to TD 20:1 = ±0.0075 % x TD
400 bar (6000 psi)	■ TD 1:1 to TD 5:1 = ±0.15 % ■ TD >5:1 to TD 20:1 = ±(0.03 % x TD)	■ TD 1:1 to TD 5:1 = ±0.15 % ■ TD >5:1 to TD 20:1 = ±(0.03 % x TD)

1) Only PMP51, PMP55 with direct diaphragm seal mounting

Total performance – PMP51

The "Total performance" specification comprises the non-linearity including hysteresis, non-reproducibility as well as the thermal change in the zero point. All specifications apply to the temperature range –10 to +60°C (+14 to +140°F) and Turndown 1:1.

Signal output	**Measuring cell**	**PMP51**	**PMP51 with hygienic process connection**	**PMP51 with gold/rhodium-coated process isolating diaphragm**
		% of URL		
HART, PROFIBUS PA, FOUNDATION Fieldbus	400 mbar (6 psi)	±0.34	±0.34	±1.25
	1 bar (15 psi)		±0.25	±0.75
	2 bar (30 psi)		±0.25	±0.45
	4 bar (60 psi)	±0.30	±0.25	±0.3
	10 bar (150 psi), 40 bar (600 psi)	±0.25	±0.25	±0.25
	100 bar (1500 psi)	±0.25	-	±0.25
	400 bar (6000 psi)	±0.4	-	±0.4
Analog (4 to 20 mA)	400 mbar (6 psi)	±0.34	±0.54	±1.25
	1 bar (15 psi)		±0.54	±0.75
	2 bar (30 psi)		±0.45	±0.45
	4 bar (60 psi)	±0.30	±0.45	±0.3
	10 bar (150 psi), 40 bar (600 psi)	±0.25	±0.45	±0.25
	100 bar (1500 psi)	±0.25	-	±0.25
	400 bar (6000 psi)	±0.4	-	±0.4

Total error - PMP51

The total error comprises the long-term stability and the total performance. All specifications apply to the temperature range –10 to +60°C (+14 to +140°F) and Turndown 1:1.

Signal output	Measuring cell	% of URL/year
HART, PROFIBUS PA, FOUNDATION Fieldbus	400 mbar (6 psi)	±0.59
	≥1 bar to 40 bar (15 psi to 600 psi)	±0.35
	≥40 bar to 100 bar (600 psi to 1500 psi)	±0.35
	400 bar (6000 psi)	±0.5
Analog (4 to 20 mA)	400 mbar (6 psi)	±0.79
	≥1 bar to 40 bar (15 psi to 600 psi)	±0.55
	≥40 bar to 100 bar (600 psi to 1500 psi)	±0.55
	400 bar (6000 psi)	±0.5

Thermal change in the zero output and the output span – PMP51 and PMP55

Note!
When using a PMP55, the influence from the respective diaphragm seal must also be taken into account (→ 🖹 76 ff "Planning instructions for diaphragm seal systems").

PMP51 and PMP55 (basic device)

Measuring cell	–10 to +60 °C (+14 to +140°F)	–40 to –10°C, +60 to +85°C (–40 to +14°F, +140 to +185°F)
	% of the calibrated measuring span	
400 mbar (6 psi), 1 bar (15 psi), 2 bar (30 psi), 4 bar (60 psi), 10 bar (150 psi), 40 bar (600 psi), 100 bar (1500 psi)	±(0.34 + 0.15 x TD)	±(0.4 + 0.25 x TD)
400 bar (6000 psi)	±(0.3 + 0.35 x TD)	±(0.3 + 0.7 x TD)

PMP51 with hygienic process connection

Signal output	Measuring cell	–10 to +60 °C (+14 to +140°F)	–40 to –10°C, +60 to +125°C (–40 to +14°F, +140 to +257°F)
		% of the calibrated measuring span	
HART, PROFIBUS PA, FOUNDATION Fieldbus	Clamp ½" / 400 mbar (6 psi)	±(0.1 + 0.4 x TD)	±(0.8 + 1.5 x TD)
	400 mbar (6 psi), 1 bar (15 psi)	±(0.1 + 0.25 x TD)	±(0.1 + 1.1 x TD)
	2 bar (30 psi), 4 bar (60 psi), 10 bar (150 psi), 40 bar (600 psi)	±(0.1 + 0.2 x TD)	±(0.1 + 0.5 x TD)
Analog (4 to 20 mA)	Clamp ½" / 400 mbar (6 psi)	±(0.3 + 0.4 x TD)	±(1.1 + 1.5 x TD)
	400 mbar (6 psi), 1 bar (15 psi)	±(0.3 + 0.25 x TD)	±(0.4 + 1.1 x TD)
	2 bar (30 psi), 4 bar (60 psi), 10 bar (150 psi), 40 bar (600 psi)	±(0.3 + 0.2 x TD)	±(0.4 + 0.5 x TD)

Operating conditions (installation)

General installation instructions

- The position-dependent zero point shift can be corrected:
  – directly at the device via operating keys on the electronic insert
  – directly at the device via operating keys on the display (except analog electronics)
  – via digital communication if the cover is not open (except analog electronics)
  Note!
  In hazardous areas, comply strictly with the safety instructions when the housing cover is closed and open.
- Endress+Hauser offers a mounting bracket for installing the device on pipes or walls.
  See also → 26, "Wall and pipe mounting" section.
- Use flushing rings for flange and cell diaphragm seals if medium buildup or clogging can be expected at the diaphragm seal connection. The flushing ring can be inserted between the process connection and the diaphragm seal. Thanks to the two lateral flushing bore holes, material buildup in front of the process isolating diaphragm can be rinsed away and the pressure chamber can be ventilated.
- To guarantee the leak-tightness of the transmitter, Endress+Hauser recommends that only genuine cable glands be used (also available as spare parts).

Measuring arrangement for devices without diaphragm seal – PMC51, PMP51

Cerabar M transmitters without diaphragm seals are mounted as per the norms for a manometer (DIN EN 837-2). We recommend the use of shutoff devices and siphons. The orientation depends on the measuring application.

Pressure measurement in gases

- Mount Cerabar M with shutoff device above the tapping point so that any condensate can flow into the process.

Pressure measurement in steams

- Mount Cerabar M with siphon above the tapping point.
- Fill the siphon with liquid before commissioning.
  The siphon reduces the temperature to almost the ambient temperature.

Pressure measurement in liquids

- Mount Cerabar M with shutoff device below or at the same level as the tapping point.

Level measurement

- Mount Cerabar M below the lowest measuring point (zero point of the measurement).
- Do not mount the device at the following positions: In the filling curtain, in the tank outlet or at a point in the container which could be affected by pressure pulses from an agitator or a pump.
- The calibration and functional test can be carried out more easily if you mount the device downstream of a shutoff device.

Measuring arrangement for devices with diaphragm seal – PMP55

- → 76, "Planning instructions for diaphragm seal systems" section.

Wall and pipe mounting

For installing the device on pipes or walls, Endress+Hauser provides a mounting bracket which is included in the scope of supply or can be ordered as a separate accessory (part no. 71102216).
For the dimensions, see → 66.

"Separate housing" version

With the "separate housing" version, you are able to mount the housing with the electronics insert at a distance from the measuring point. This version allows for trouble-free measurement:
- Under particularly difficult measuring conditions (at installation locations that are cramped or difficult to access)
- If extreme cleaning of the measuring point is required
- If the measuring point is exposed to vibrations
- For space-saving installations

You can choose between different cable versions:
- PE (2 m (6.6 ft), 5 m (16 ft) and 10 m (33 ft))
- FEP (5 m (16 ft)).

→ 82 ff, feature 600, "Separate housing".

For the dimensions, → 66.

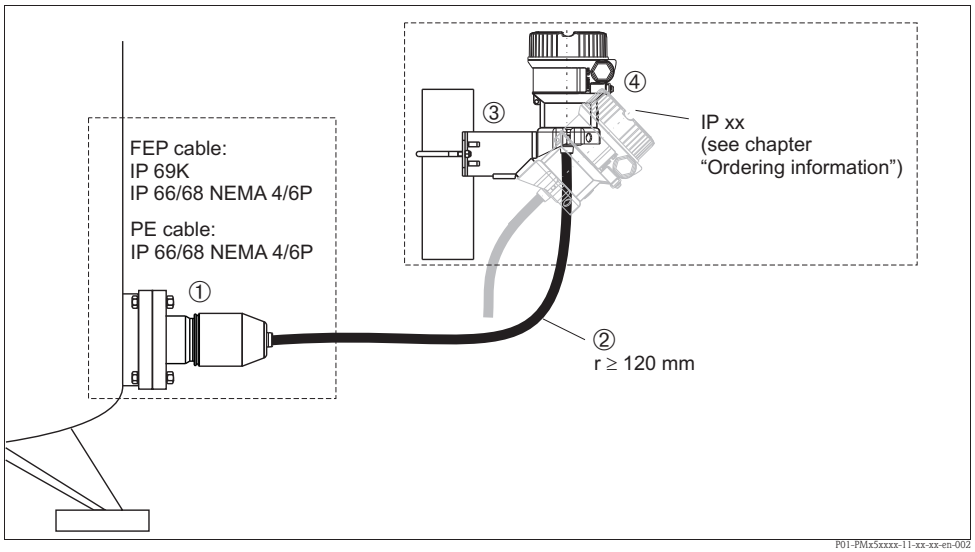

In the case of the "separate housing" version, the sensor is delivered with the process connection and cable ready mounted. The housing and a mounting bracket are enclosed as separate units. The cable is provided with a socket at both ends. These sockets are simply connected to the housing and the sensor.

1 Process connection with sensor
2 Cable, both ends are fitted with a socket
3 Mounting bracket provided, suitable for pipe and wall mounting (for pipes from 1 1/4" up to 2" diameter)
4 Housing with electronic insert

Degree of protection for the process connection and sensor with the use of
- FEP cable:
  - IP 69K
  - IP 66 NEMA 4/6P
  - IP 68 (1.83 mH_2O for 24 h) NEMA 4/6P
- PE cable:
  - IP 66 NEMA 4/6P
  - IP 68 (1.83 mH_2O for 24 h) NEMA 4/6P

Technical data of the PE and FEP cable:
- Minimum bending radius: 120 mm (4.72 in)
- Cable extraction force: max. 450 N (101 lbf)
- Resistance to UV light

Use in hazardous area:
- Intrinsically safe installations (Ex ia/IS)
- FM/CSA IS: for Div.1 installation only

Reduction in installation height

If the separate housing is used, the mounting height of the process connection is reduced compared to the dimensions of the standard version (see graphic).

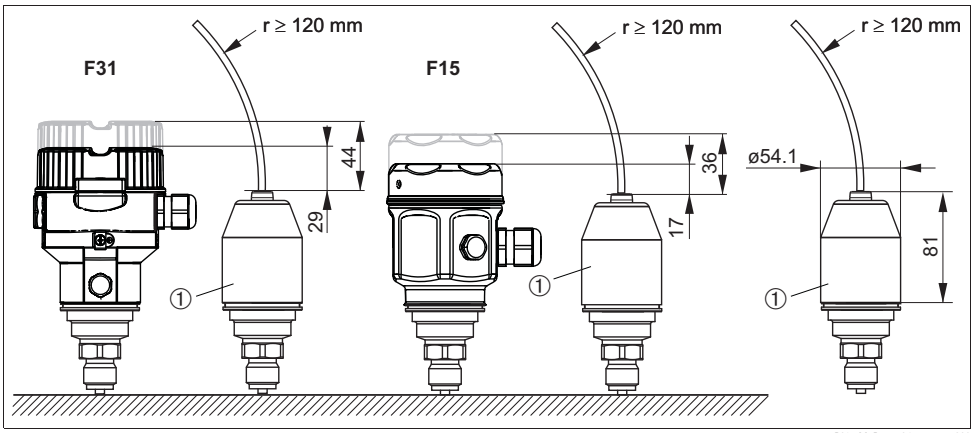

Oxygen applications

Oxygen and other gases can react explosively to oils, grease and plastics. As a result, the following are some of the precautions that must be taken:
– All components of the system, such as measuring devices, must be cleaned in accordance with the BAM (DIN 19247) requirements.
– Depending on the materials used, a certain maximum temperature and maximum pressure must not be exceeded for oxygen applications.

The devices suitable for gaseous oxygen applications are listed in the following table with the specification p_{max}.

Ordering code for devices[1] cleaned for oxygen applications	**p_{max} for oxygen applications**	**T_{max} for oxygen applications**
PMC51 [2] – devices with sensors, nominal value < 10 bar (150 psi)	Over pressure limit (OPL) of sensor[3], [4]	60°C (140°F)
PMC51 [2] – devices with sensors, nominal value ≥ 10 bar (150 psi)	40 bar (600 psi)	60°C (140°F)
PMP51 PMP55 [2]	Depends on the lowest-rated element, with regard to pressure, of the selected components: over pressure limit (OPL) of sensor [3], process connection (1.5 x PN) or fill fluid (160 bar (2320 psi))	85°C (185°F)

1) Only device, not accessory or enclosed accessory
2) Feature 570 "Service" version "HB"
3) → 82 ff "Ordering information", feature 70 "Sensor range"
4) PMC51 with PVDF thread or PVDF flange p_{max} = 15 bar (225 psi)

PWIS cleaning

Special cleaning of the transmitter to remove paint-wetting substances, for use in paint shops
→ 85 feature 570 "Service", version "HC".

Ultrapure gas applications

Endress+Hauser also provides devices which have been cleaned of oil and grease for special applications, such as for ultrapure gas. No special restrictions regarding the process conditions apply to these devices.

→ 82 ff, "Ordering information PMC51", feature 570 "Service" version "HA".
→ 88 ff, "Ordering information PMP51", feature 570 "Service" version "HA".

Applications with hydrogen

With regard to materials in which hydrogen formation takes place, hydrogen atoms can diffuse through the metallic process isolating diaphragm. This can result in incorrect measurement results.
Endress+Hauser offers process isolating diaphragms with a gold/rhodium coating for such instances.

→ 87 ff "Ordering information PMP51" and
→ 92 ff "Ordering information PMP55", feature 170 "Membrane Material" version "M".

Operating conditions (environment)

Ambient temperature range

Version	PMC51	PMP51	PMP55
Without LCD display	–40°C to +85°C (–40°F to +185°F)		
With LCD display [1]	–20°C to +70°C (–4°F to +158°F)		
With M12 plug , elbowed	–25°C to +85°C (–13°F to +185°F)		
With separate housing	–20°C to +60°C (–4°F to +140°F) (installation without insulation)		—
Diaphragm seal systems	—	—	→ 🖹 76

1) Extended temperature application range (–40°C to +85°C (–40°F to +185°F)) with restrictions in optical properties such as display speed and contrast

Note!
For high-temperature applications, either a PMP55 with a temperature isolator or with a capillary can be used. If vibrations also occur in the application, Endress+Hauser recommends you use a PMP55 with a capillary. If a PMP55 with a temperature isolator or capillary is used, we recommend a suitable bracket for mounting (see "Wall and pipe mounting" section on → 🖹 26).
For devices for use in hazardous areas, see Safety Instructions, Installation or Control Drawing. (→ 🖹 98 ff, "Safety Instructions" and "Installation/Control Drawings" sections)

Storage temperature range

Version	PMC51	PMP51	PMP55
Without LCD display	–40°C to +90°C (–40°F to +194°F)		
With LCD display	–40°C to +85°C (–40°F to +185°F)		
With M12 plug , elbowed	–25°C to +85°C (—13°F to +185°F)		
With separate housing	–40°C to +60°C (–40°F to +140°F)		—
Diaphragm seal systems	—	—	→ 🖹 76

Degree of protection

- → 🖹 82 ff, feature 50 "Electrical connection".
- Separate housing (→ 🖹 27)

Climate class

Class 4K4H (air temperature: –20 to 55°C (–4 to +131°F), relative humidity: 4 to 100%) satisfied as per DIN EN 60721-3-4 (condensation possible).

Vibration resistance

Device/Additional option	Test standard	Vibration resistance
Devices without mounting bracket	GL VI-7-2 ■ Part 7: Guidelines for the Performance of Type Approvals ■ Chapter 2: Test Requirements for Electrical / Electronic Equipment and Systems	guaranteed for 5 to 25 Hz: ±1.6 mm (0.06 in); 25 to 100 Hz: 4 g in all 3 planes
	IEC 61298-3 IEC 60068-2-6	guaranteed for 10 to 60 Hz: ±0.35 mm (0.01 in); 60 to 2000 Hz: 2 g in all 3 planes
Devices with mounting bracket	IEC 61298-3 IEC 60068-2-6	guaranteed for 10 to 60 Hz: ±0.15 mm (0.01 in); 60 to 500 Hz: 2 g in all 3 planes

Note!
For high-vibration applications, either a PMC51/PMP51 with a separate housing or a PMP55 with a capillary can be used. We recommend a suitable bracket for mounting (see "Wall and pipe mounting" section on → 26).

Electromagnetic compatibility

- Electromagnetic compatibility as per all the relevant requirements of the EN 61326 series and NAMUR Recommendation EMC (NE21). Details can be found in the Declaration of Conformity (in the Download area of "www.de.endress.com", "search area – Approvals and Certificates", "Manufact. Declaration").
- Maximum deviation: < 0.5 % of span

Overvoltage protection (optional)

The device can be fitted with overvoltage protection, see → 82 ff "Ordering information" feature 610 "Accessory mounted:" version "NA". The overvoltage protection is mounted at the factory on the housing thread (M20x1.5) for the cable gland and is approx. 70 mm (2.76 in) in length (take additional length into account when installing). The device is connected as illustrated in the following graphic.
For details refer to TI001013KEN, XA01003KA3 and BA00304KA2.

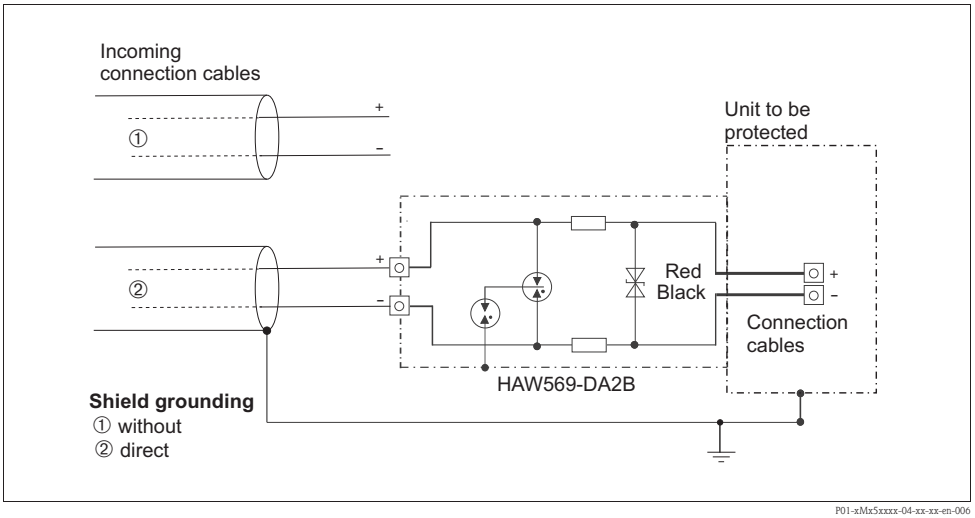

P01-xMx5xxxx-04-xx-xx-en-006

Operating conditions (process)

Process temperature range PMC51

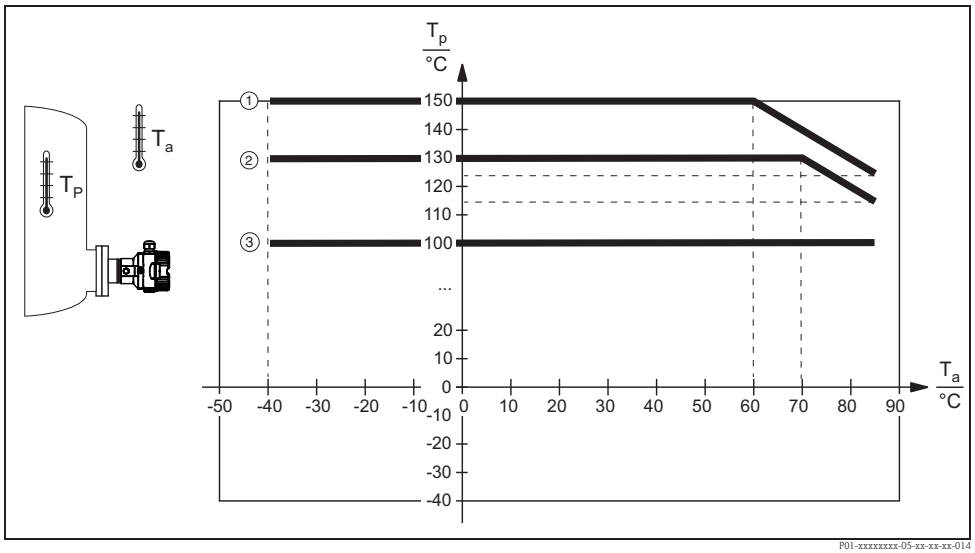

T_a = Ambient temperature; T_p = Process temperature; ①, ② and ③ see following chapter.

Process temperature limits

PMC51 (with ceramic process isolating diaphragm)

- ③: –40 to +100°C (–40 to +212°F) for threaded process connections or flange process connections
- ②: –40 to +130°C (–40 to +266°F) for hygienic process connections
- ①: For a maximum of 60 minutes: +150 °C (+302 °F)
- Observe the process temperature range of the seal. See also the following table.

Version for feature 190 in the order code	Seal	Notes	Process temperature range	
			Thread or flange	Hygienic process connection
A	FKM Viton	–	-20 to +100°C (-4 to +212°F)	–
A [1)]	FKM Viton	cleaned for O2 application	-5 to +60°C (+23 to +140°F)	–
B	FKM Viton	FDA [2)], 3A Class I, USP Class VI	-5 to +100°C (+23 to +212°F)	-5 to +150 °C (+23 to +302°F)
F	NBR	FDA [2)]	-10 to +100°C (-14 to +212°F)	–
H	NBR, Low temperature	–	-40 to +100°C (-40 to +212°F)	–
G	HNBR	FDA [2)], 3A Class I, KTW, AFNOR, BAM	-25 to +100°C (-13 to +212°F)	-20 to +125 °C (-4 to +257°F)
J	EPDM 70	FDA [2)]	-40 to +100°C (-40 to +212°F)	–
K	EPDM 291	FDA [2)], 3A Class II, USP Class VI, DVGW, KTW, W270, WRAS, ACS, NSF61	–	-15 to +150 °C (+5 to +302°F)
L	FFKM Kalrez 6375	–	+5 to +100°C (+41 to +212°F)	–
M	FFKM Kalrez 7075	–	+5 to +100°C (+41 to +212°F)	–
N	FFKM Kalrez 6221	FDA [2)], USP Class VI	-5 to +100°C (+23 to +212°F)	-5 to +150 °C (+23 to +302°F)
P	Fluoroprene XP40	FDA [2)], USP Class VI, 3A Class I	+5 to +100°C (+41 to +212°F)	+5 to +150 °C (+41 to +302°F)
S	VMQ Silicone	FDA [2)]	-35 to +85°C (-31 to +185°F)	-20 to +85 °C (-4 to +185°F)

1) With feature 570 "Service", version "HB - Cleaned for oxygen service"

2) Suitable for foods FDA 21 CFR 177.2600

Applications with jumps in temperature

Extreme jumps in temperature can result in temporary measuring errors. Temperature compensation takes effect after several minutes. Internal temperature compensation is faster the smaller the jump in temperature and the longer the time interval involved.
For further information please contact your local Endress+Hauser Sales Center.

PMP51 (with metallic process isolating diaphragm)

Description	Temperature operating range
Process connections with internal process isolating diaphragm	-40 to +125°C (-40 to +257°F)
Process connections with flush-mounted process isolating diaphragm, G 1 A, G 1 1/2 A, G 2 A, 1 NPT, 1 1/2 NPT, 2 NPT, M 44 x 1.25, EN/DIN, ANSI and JIS flanges	-40 to +100°C (-40 to +212°F)
Process connections with flush-mounted process isolating diaphragm, G 1/2 A, M 20x1.5	-20 to +85°C (-4 to +185°F)
Hygienic process connections	–40 to +130 °C (–40 to +266 °F) For a maximum of 60 minutes: +150 °C (+302 °F)

PMP55 (with diaphragm seal)

- Depending on the diaphragm seal and filling oil from -70°C (-94°F) up to +400°C (+752°F). Observe the temperature application limits → 🖹 76.

Note!
- The PTFE foil used is designed to protect the unit against abrasion. It does not provide protection against corrosive media.
- Do not use diaphragm seals with 0.25 mm (0.01 in) PTFE foil on AISI 316L (1.4435/1.4404) for vacuum applications, upper temperature limit +204 °C (+399 °F).
- For oxygen applications, observe → 🖹 28, "Oxygen applications" section.

Pressure specifications

- The maximum pressure for the measuring device depends on the lowest-rated element with regard to pressure.
  See the following sections:
  – → 🖹 8 ff, "Measuring range" section
  – "Mechanical construction" section.
  The MWP (maximum working pressure) is specified on the nameplate. This value refers to a reference temperature of +20°C (68°F), or 100°F (38°C) for ANSI flanges, and may be applied to the device for an unlimited time. Observe temperature dependency of the MWP.
- The pressure values permitted at higher temperatures can be found in the following standards:
  – EN 1092-1: 2001 Tab. 18 [1]
  – ASME B 16.5a – 1998 Tab. 2-2.2 F316
  – ASME B 16.5a – 1998 Tab. 2.3.8 N10276
  – JIS B 2220.
- The test pressure corresponds to the over pressure limit of the device (over pressure limit OPL = 1.5 x MWP [2]) and may be applied for only a limited time period in order to avoid permanent damage.
- The Pressure Equipment Directive (EC Directive 97/23/EC) uses the abbreviation "PS". The abbreviation "PS" corresponds to the MWP (maximum working pressure) of the measuring device.
- In the case of sensor range and process connection combinations where the OPL (over pressure limit) of the process connection is smaller than the nominal value of the sensor, the device is set at the factory, at the very maximum, to the OPL value of the process connection. If you want to use the entire sensor range, select a process connection with a higher OPL value (1.5 x PN; PN = MWP).
- In oxygen applications, the values for "p_{max} and T_{max} for oxygen applications" as per → 🖹 28, "Oxygen applications" may not be exceeded.
- Avoid steam hammering! Steam hammering can cause zero point drift.
  Recommendation:
  Residue (such as condensation or drops of water) can remain at the process isolating diaphragm after CIP cleaning and lead to local steam hammering if immediately steam is introduced. In practice, drying the process isolating diaphragm (e.g. by blowing off excess moisture) has proven to be a successful way of avoiding steam hammering.

1) With regard to their stability-temperature property, the materials 1.4435 and 1.4404 are grouped together under 13EO in EN 1092-1 Tab. 18. The chemical composition of the two materials can be identical.
2) The equation does not apply for PMP51 and PMP55 with a 40 bar (600 psi) - or a 100 bar (1500 psi) - measuring cell.

Mechanical construction

F31 aluminum housing dimensions

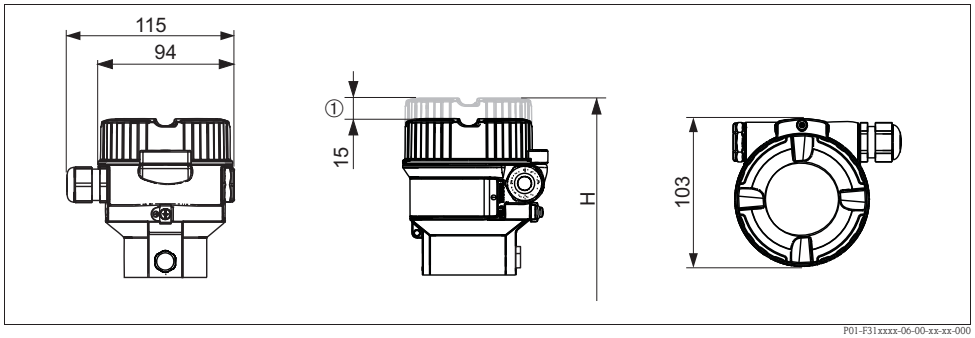

Front view, left-hand side view, top view
① The cover with viewing window is 15 mm (0.59 in) higher than the cover without viewing window.
→ For installation height H for housing with viewing window, see the specific process connection. Housing weight → 66

F15 stainless steel housing dimensions (hygienic)

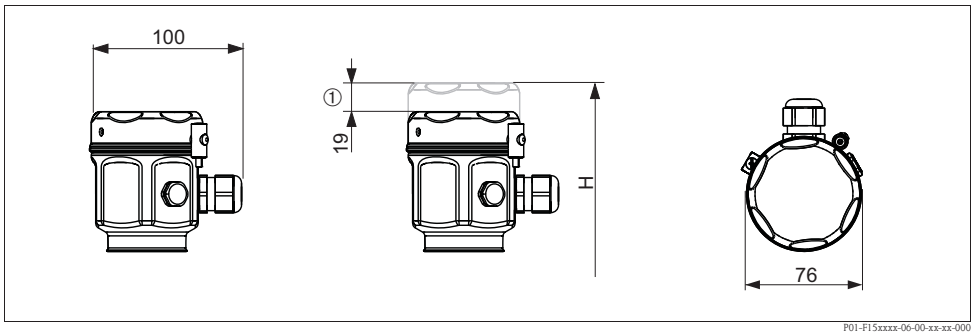

Front view, top view.
① The cover with viewing window is 19 mm (0.75 in) higher than the cover without viewing window.
→ For installation height H for housing with viewing window, see the specific process connection. Housing weight → 66

Process connections PMC51 (with ceramic process isolating diaphragm)

Thread, internal process isolating diaphragm

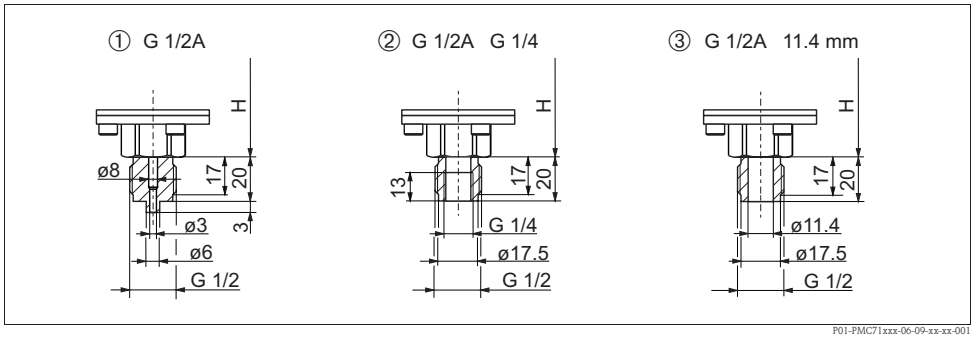

Process connections PMC51, thread ISO 228
Installation height H → 34.

1 Thread ISO 228 G 1/2 A EN 837;
Material version GCJ: AISI 316L, version GCC: Alloy C276
Version GCF: PVDF (max.: 15 bar (217.5 psi), –10 to +60 °C (+14 to +140 °F)), mount version "GCF" with a mounting bracket only (→ 26); weight: 0.63 kg (1.39 lbs)

2 Thread ISO 228 G 1/2 A G 1/4 (female);
Material version GLJ: AISI 316L, version GLC: Alloy C276; weight: 0.63 kg (1.39 lbs)

3 Thread ISO 228 G 1/2 A hole 11.4 mm (0.45 in);
Material version GMJ: AISI 316L, version GMC: Alloy C276; weight: 0.63 kg (1.39 lbs)

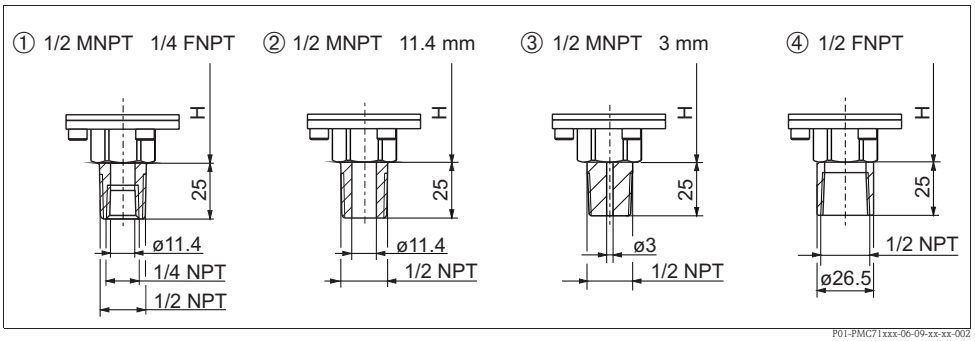

Process connections PMC51, thread ANSI
Installation height H → 34.

1 Thread ANSI 1/2 MNPT 1/4 FNPT;
Material version RLJ: AISI 316L, version RLC: Alloy C276; weight: 0.63 kg (1.39 lbs)
2 Thread ANSI 1/2 MNPT hole 11.4 (0.45 in);
Material version RKJ: AISI 316L; version RKC: Alloy C276; weight: 0.63 kg (1.39 lbs)
3 Thread ANSI 1/2 MNPT hole 3 mm (0.12 in);
Material version RJF: PVDF (max.: 15 bar (225 psi), –10 to +60 °C (+14 to +140 °F)) mount with mounting bracket only (→ 26); weight: 0.63 kg (1.39 lbs)
4 Thread ANSI FNPT 1/2
Material version R1J: AISI 316L, version R1C: Alloy C276; weight: 0.63 kg (1.39 lbs)

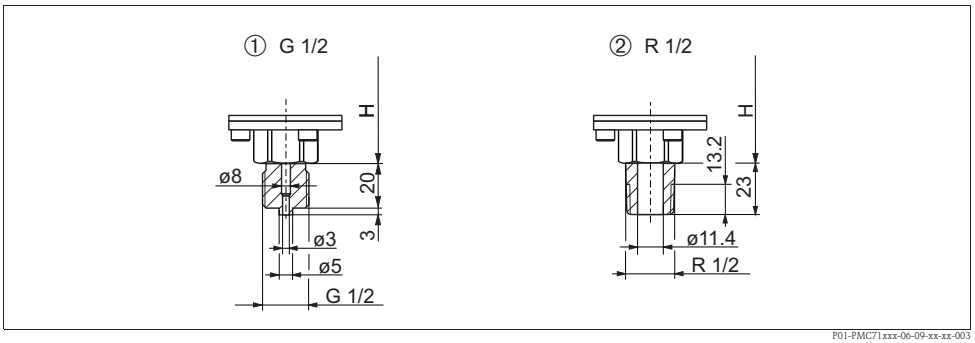

Process connections PMC51, thread JIS
Installation height H → 34.

1 Version GNJ: thread JIS B0202 G 1/2 (male), material: AISI 316L; weight: 0.63 kg (1.39 lbs)
2 Version GOJ: thread JIS B0203 R 1/2 (male), material: AISI 316L; Weight: 0.63 kg (1.39 lbs)

Installation height H for devices with threaded connection and internal process isolating diaphragm

F31 housing	F15 housing
154 mm (6.06 in)	146 mm (5.75 in)

Process connections PMC51 (with ceramic process isolating diaphragm) – continued

Thread, flush-mounted process isolating diaphragm

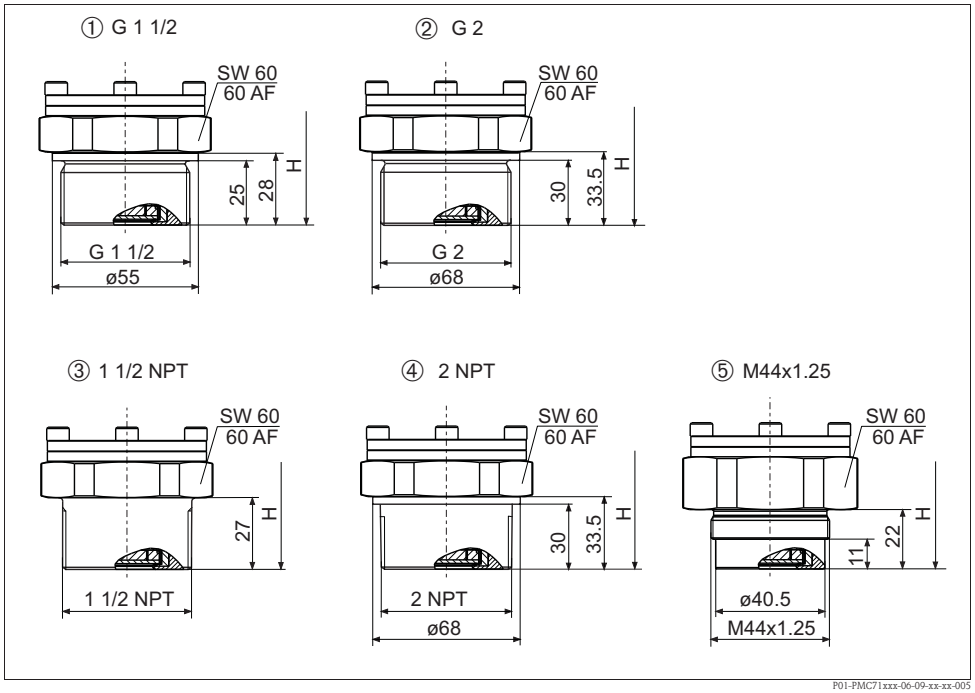

Process connections PMC51,
→ Installation height, see table below.

1 Thread ISO 228 G 1 1/2 A;
Material version GVJ: AISI 316L; weight: 0.63 kg (1.39 lbs)
2 Thread ISO 228 G 2 A;
Material version GWJ: AISI 316L; weight: 0.63 kg (1.39 lbs)
3 Thread ANSI 1 1/2 MNPT;
Material version U7J: AISI 316L; weight: 0.63 kg (1.39 lbs)
4 Thread ANSI 2 MNPT;
Material version U8J: AISI 316L; weight: 0.63 kg (1.39 lbs)
5 Thread DIN 13 M 44x1.25;
Material version G4J: AISI 316L; weight: 0.63 kg (1.39 lbs)

Installation height H for devices with threaded connection and flush-mounted process isolating diaphragm

F31 housing	F15 housing
201 mm (7.91 in)	193 mm (7.6 in)

Process connections PMC51 (with ceramic process isolating diaphragm) – continued

EN/DIN flanges, connection dimensions as per EN 1092-1/DIN 2527

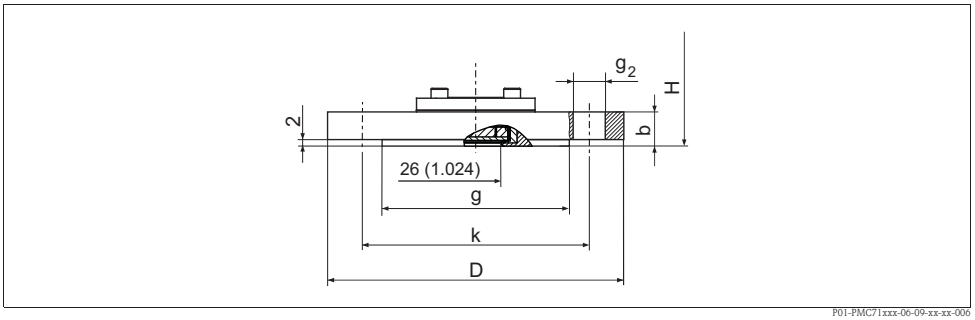

Process connection PMC51, EN/DIN flange with raised face (flush-mounted process isolating diaphragm)
Installation height H → 38.

	Flange							Boltholes			
Version	**Material**	**Nominal diameter**	**Nominal pressure**	**Shape** [1]	**Diameter** **D** [mm]	**Thickness** **b** [mm]	**Raised face** **g** [mm]	**Quantity**	**Diameter** g_2 [mm]	**Hole circle** **k** [mm]	**Flange weight** [2] [kg]
CNJ	AISI 316L	DN 25	PN 10-40	B1 (D)	115	18	68	4	14	85	1.4
CPJ	AISI 316L	DN 32	PN 10-40	B1 (D)	140	18	78	4	18	100	2.0
CQJ	AISI 316L	DN 40	PN 10-40	B1 (D)	150	18	88	4	18	110	2.4
CQP	ECTFE [4]	DN 40	PN 10-40	B1 (D)	150	21	88	4	18	110	2,6
CXJ	AISI 316L	DN 50	PN 10-40	B1 (D)	165	20	102	4	18	125	3.2
CFF	PVDF [3]	DN 50	PN 10-16	B1 (D)	165	18	102	4	18	125	2.9
CRP	ECTFE [4]	DN 50	PN 25-40	B1 (D)	165	20	102	4	18	125	3.2
CZJ	AISI 316L	DN 80	PN 10-40	B1 (D)	200	24	138	8	18	160	5.5
CSP	ECTFE [4]	DN 80	PN 25-40	B1 (D)	200	24	138	8	18	160	5.5

1) Designation as per DIN 2527 in brackets

2) Housing weight → 66

3) OPL.: 15 bar (225 psi)
Process temperature range: –10 to +60 °C (+14 to +140 °F)

4) ECTFE coating on AISI 316L (1.4404). When operating in hazardous areas, avoid electrostatic charging of the plastic surfaces.

Process connections PMC51 (with ceramic process isolating diaphragm) – continued

ANSI flanges, connection dimensions as per ANSI B 16.5, raised face RF

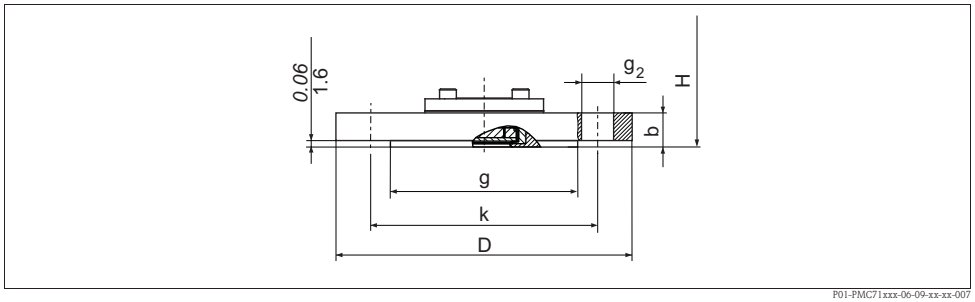

Process connection PMC51, ANSI flange with raised face RF (flush-mounted process isolating diaphragm)
Installation height H → 38.

	Flange						Boltholes			
Version	**Material**	**Nominal diameter**	**Class**	**Diameter** **D**	**Thickness** **b**	**Raised face** **g**	**Quantity**	**Diameter** **g_2**	**Hole circle** **k**	**Flange weight 1)**
		[in]	[lb./sq.in]	[in] / [mm]	[in] / [mm]	[in] / [mm]		[in] / [mm]	[in] / [mm]	[kg]
ACJ	AISI 316/316L 2)	1	150	4.25 / 108	0.56 / 14.2	2 / 50.8	4	0.62 / 15.7	3.12 / 79.2	0.9
ANJ	AISI 316/316L 2)	1	300	4.88 / 123.9	0.69 / 17.2	2 / 50.8	4	0.75 / 19	3.5 / 88.9	1.4
AEJ	AISI 316/316L 2)	1 1/2	150	5 / 127	0.69 / 17.5	2.88 / 73.2	4	0.62 / 15.7	3.88 / 98.6	1.0
AQJ	AISI 316/316L 2)	1 1/2	300	6.12 / 155.4	0.81 / 20.6	2.88 / 73.2	4	0.88 / 22.4	4.5 / 114.3	2.6
AFJ	AISI 316/316L 2)	2	150	6 / 152.4	0.75 / 19.1	3.62 / 91.9	4	0.75 / 19.1	4.75 / 120.7	2.4
AFN	ECTFE 3)	2	150	6 / 152.4	0.75 / 19.1	3.62 / 91.9	4	0.75 / 19.1	4.75 / 120.7	2.4
AFF	PVDF 4)	2	150	6 / 152.4	0.75 / 19.1	3.62 / 91.9	4	0.75 / 19.1	4.75 / 120.7	0.5
ARJ	AISI 316/316L 2)	2	300	6.5 / 165.1	0.88 / 22.4	3.62 / 91.9	8	0.75 / *19.1*	5 / 127	3.2
AGJ	AISI 316/316L 2)	3	150	7.5 / 190.5	0.94 / 23.9	5 / 127	4	0.75 / 19.1	6 / 152.4	4.9
AGN	ECTFE 3)	3	150	7.5 / 190.5	0.94 / 23.9	5 / 127	4	0.75 / 19.1	6 / 152.4	4.9
AGF	PVDF 4)	3	150	7.5 / 190.5	0.94 / 23.9	5 / 127	4	0.75 / 19.1	6 / 152.4	0.9
ASJ	AISI 316/316L 2)	3	300	8.25 / 209.5	1.12 / 28.6	5 / 127	8	0.88 / 22.4	6.62 / 168.1	6.8
AHJ	AISI 316/316L 2)	4	150	9 / 228.6	0.94 / 23.9	6.19 / 157.2	8	0.75 / 19.1	7.5 / 190.5	7.1
AHN	ECTFE 3)	4	150	9 / *228.6*	0.94 / 23.9	6.19 / 157.2	8	0.75 / 19.1	7.5 / 190.5	7.1
ATJ	AISI 316/316L 2)	4	300	10 / 254	1.25 / 31.8	6.19 / 157.2	8	0.88 / 22.4	7.88 / 200.2	11.6

1) Housing weight → 66

2) Combination of AISI 316 for required pressure resistance and AISI 316L for required chemical resistance (dual rated)

3) ECTFE coating on AISI 316/316L (1.4404/1.4435). When operating in hazardous areas, avoid electrostatic charging of the plastic surfaces.

4) OPL.: 15 bar (225 psi)
Process temperature range: –10 to +60 °C (+14 to +140 °F)

Process connections PMC51 (with ceramic process isolating diaphragm) - continued

JIS flanges, connection dimensions as per JIS B 2220 BL, raised face RF

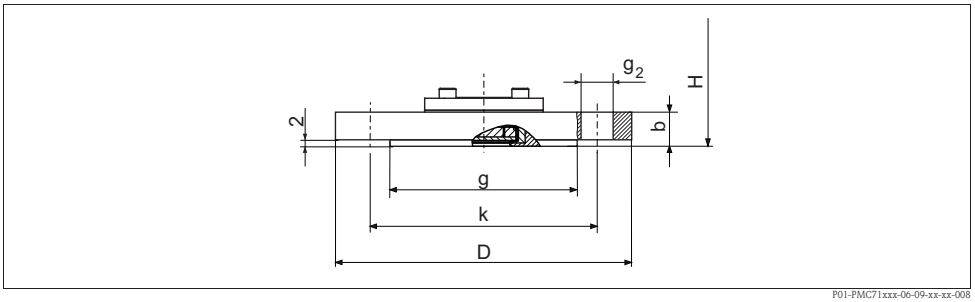

Process connection PMC51, JIS flange with raised face RF (flush-mounted process isolating diaphragm), material: AISI 316L → Installation height H, see table below.

	Flange					Boltholes			
Version	**Nominal diameter**	**Nominal pressure**	**Diameter** **D** [mm]	**Thickness** **b** [mm]	**Raised face** **g** [mm]	**Quantity**	**Diameter** **g_2** [mm]	**Hole circle** **k** [mm]	**Flange weight** [1] [kg]
KFJ	50 A	10 K	155	16	96	4	19	120	2.0
KGJ	80 A	10 K	185	18	127	8	19	150	3.3
KHJ	100 A	10 K	210	18	151	8	19	175	4.4

1) Housing weight, see → 66

Process connections PMC51 (with ceramic process isolating diaphragm) - continued

Installation height H for devices with flange

F31 housing	F15 housing
201 mm (7.91 in)	193 mm (7.6 in)

Process connections PMC51 (with ceramic process isolating diaphragm) – continued

Hygienic process connection, flush-mounted process isolating diaphragm

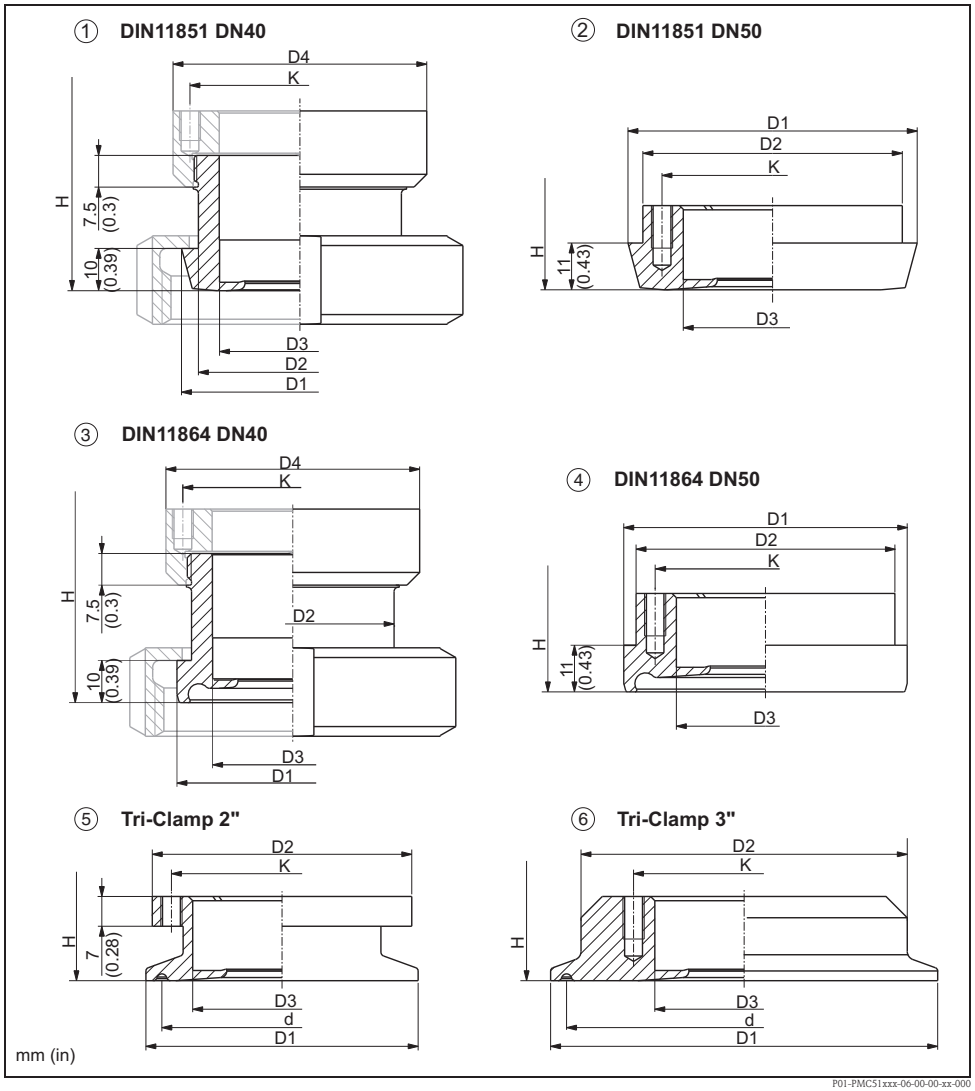

Hygienic process connections, material: AISI 316L (1.4435); Delta ferrite content <1 %
Surface roughness of the surfaces in contact with the medium R_a 0.76 µm (30 µin). Diaphragm seal versions optionally in conformity with ASME-BPE for use in biochemical processes, wetted surfaces R_a 0.38 µm (15 µin), electropolished; to be ordered using feature 570 "Service", version "HK" in the order code.

Pos.	Version	Nominal pressure PN	Outer-Ø D1	Outer-Ø D2	Internal-Ø D3	Outer-Ø D4	Seal-Ø d	Hole circle K[1)]	Height H	Weight [kg/lbs]
1	MZJ	25	56 (2.2)	48 (1.89)	38 (1.5)	60 (2.36)	–	52 (2.05)	max. 220 (8.66)	0.652 (1.44)
2	MRJ	25	68 (2.68)	61 (2.4)	42 (1.65)	–	–	52 (2.05)		0.276 (0.61)
3	NCJ	16	54.9 (2.16)	48 (1.89)	38 (1.5)	60 (2.36)	–	52 (2.05)		0.656 (1.45)
4	NDJ	16	66.8 (2.63)	61 (2.4)	42 (1.65)	–	–	52 (2.05)		0.288 (0.64)
5	TDJ	40	64 (2.52)	61 (2.4)	42 (1.65)	–	56.5 (2.22)	52 (2.05)		0.171 (0.38)
6	TFJ	40	91 (3.58)	76.7 (3.02)	42 (1.65)	–	83.5 (3.29)	52 (2.05)		0.539 (1.19)

mm (in)

1) 4 x M5 thread

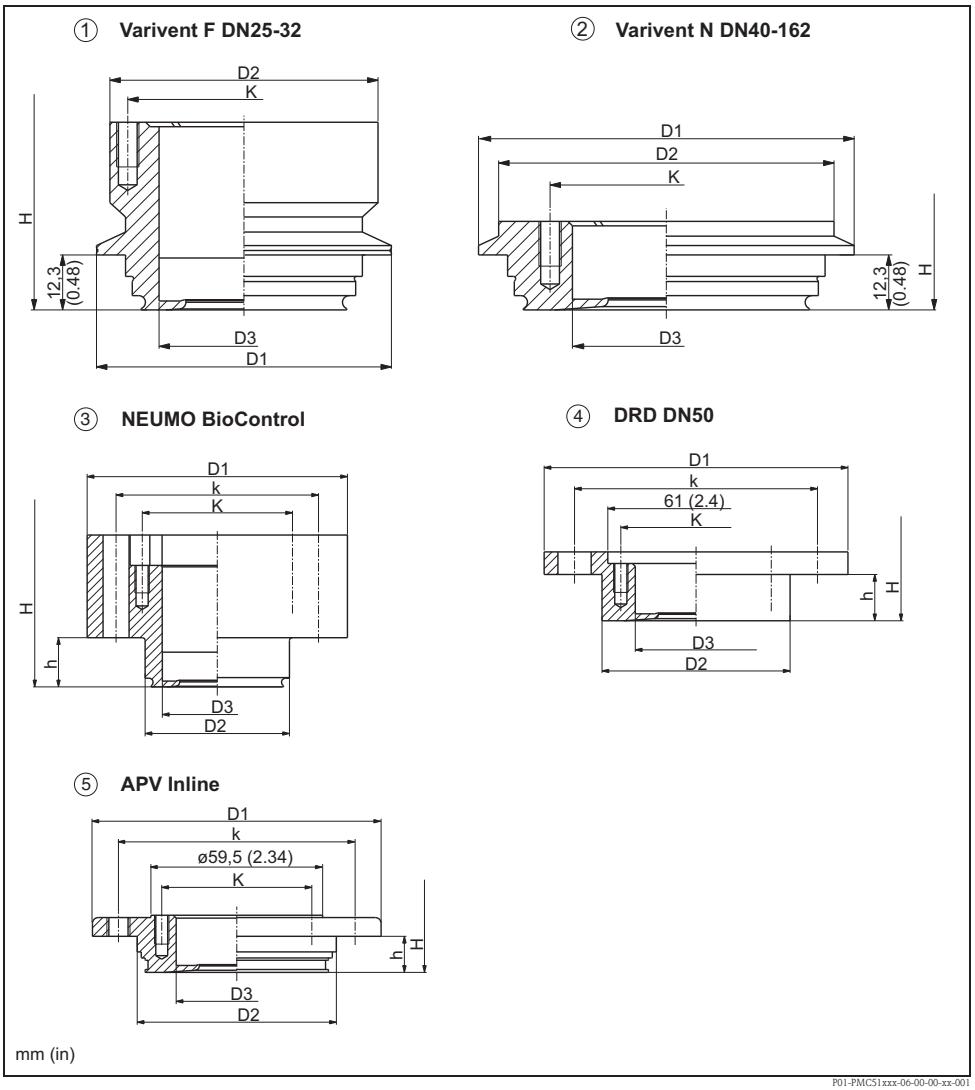

Hygienic process connections, material: AISI 316L (1.4435); Delta ferrite content <1 %
Surface roughness of the surfaces in contact with the medium R_a 0.76 µm (30 µin). Diaphragm seal versions optionally in conformity with ASME-BPE for use in biochemical processes, wetted surfaces R_a 0.38 µm (15 µin), electropolished; to be ordered using feature 570 "Service", version "HK" in the order code.

Pos.	Version	Nominal pressure PN	Outer-Ø D1	Outer-Ø D2	Internal-Ø D3	Hole circle K	Hole circle k[1)]	Height H	Height h	Weight [kg/lbs]
1	TQJ	40	66 (2.6)	60 (2.36)	38 (1.5)	52 (2.05)[2)]	-	max. 220 (8.66)	-	0.459 (1.01)
2	TRJ	40	84 (3.31)	75 (2.95)	42 (1.65)	52 (2.05)[2)]	-		-	0.426 (0.94)
3	S4J	40	90 (3.54)	49.9 (1.96)	38 (1.5)	52 (2.05)[2)]	90 (3.54)[3)]		17 (0.67)	1.34 (2.95)
4	TIJ	25	105 (4.13)	65 (2.56)	42 (1.65)	52 (2.05)[2)]	84 (3.31)[4)]		16 (0.63)	0.619 (1.36)
5	TMJ	40	100 (3.94)	69 (2.72)	42 (1.65)	52 (2.05)[2)]	82 (3.23)[5)]		12.5 (0.49)	0.519 (1.14)

mm (in)

1) 4 x M5 thread

2) 4 x M5 thread

3) 4 x ∅9 (0.35); 4 screws DIN912 M8 x 45 are enclosed (material (A4-80))

4) 4 x ∅11.5 (0.45)

5) 6 x ∅8.6 (0.34) + 2 x M8 thread; 8 x 45° (=360)

Process connections PMC51 (with ceramic process isolating diaphragm) – continued

Universal adapter

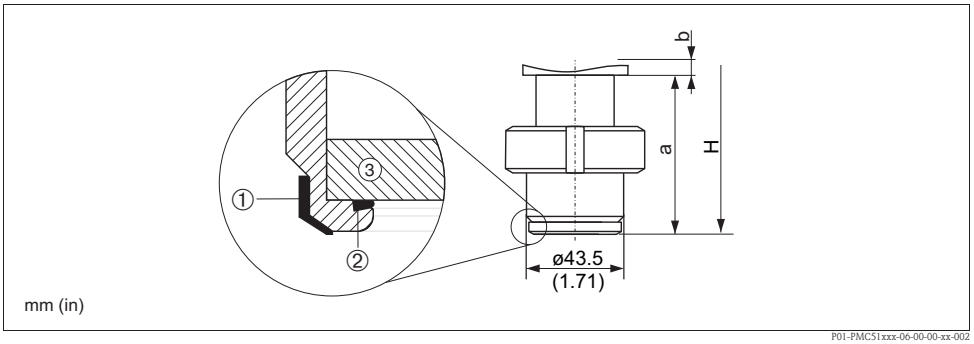

Material: b = top section AISI 316L (1.4404), a = bottom section AISI 316L (1.4435); Endress+Hauser supplies the slotted nut in stainless steel AISI 304 (DIN/EN material number 1.4301) or in AISI 304L (DIN/EN material number 1.4307).

Surface roughness of the surfaces in contact with the medium R_a 0.76 µm (30 µin). Diaphragm seal versions optionally in conformity with ASME-BPE for use in biochemical processes, wetted surfaces R_a 0.38 µm (15 µin), electropolished; to be ordered using feature 570 "Service", version "HK" in the order code.

Version	Process connection approval[1)]	Material of the molded seal ① (changeable)	Material of the measuring cell seal ② (not changeable) at the ceramic sensor ③	Measuring cell seal approval	Nominal Pressure PN	Weight [kg/lbs]
UPJ	EHEDG, 3A	Silicone (Spare part order no.: 52023572)	EPDM (Order version "K")	FDA[2)] 3A Class II, USP Class VI. DVGW, KTW, W270, WRAS, ACS, NSF61	10	0.74 (1.63)
UNJ	EHEDG	EPDM (Spare part order no.: 71100719)	EPDM (Order version "J")	FDA[2)]		

1) EHEDG or 3A approval only with approved process connection.

2) Suitable for foods FDA 21 CFR 177.2600

Installation height H, devices with universal adapter

F31 housing	F15 housing
196 mm (7.72 in)	189 mm (7.44 in)

Process connections PMP51 (with metallic process isolating diaphragm)

Thread, internal process isolating diaphragm

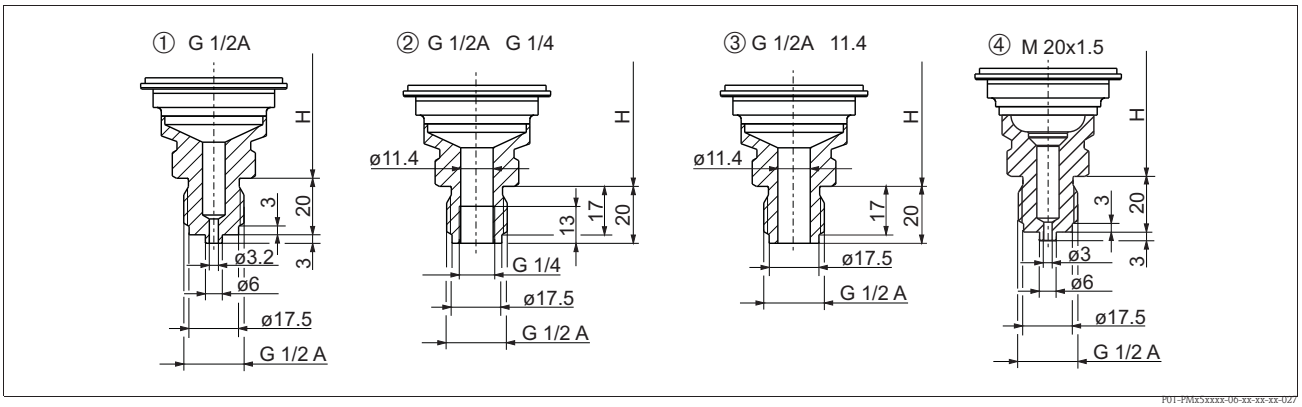

Process connections PMP51, thread ISO and DIN
Installation height H → 🖹 42.

1 Thread ISO 228 G 1/2 A EN 837;
Material version GCJ: AISI 316L, version GCC: Alloy C276; weight: 0.6 kg (1.32 lbs)
2 Thread ISO 228 G 1/2 A G 1/4 (female);
Material version GLJ: AISI 316L, version GLC: Alloy C276; weight: 0.6 kg (1.32 lbs)
3 Thread ISO 228 G 1/2 A hole 11.4 mm (0.45 in);
Material version GMJ: AISI 316L, version GMC: Alloy C276; weight: 0.6 kg (1.32 lbs)
4 Thread DIN13 M20x1.5
Material version G1J: AISI 316L; weight 0.4 kg (0.88 lbs)

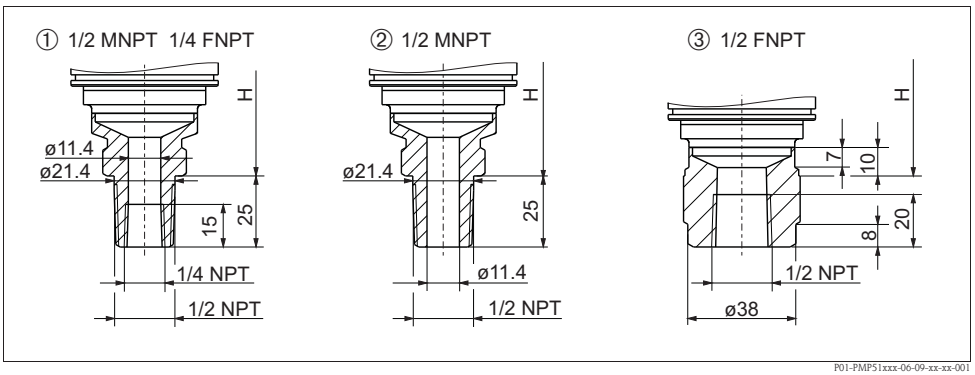

Process connections PMP51, thread ANSI
Installation height H → 🖹 42.

1 Thread ANSI 1/2 MNPT 1/4 FNPT;
Material version RLJ: AISI 316L, version RLC: Alloy C276; weight: 0.6 kg (1.32 lbs)
2 Thread ANSI 1/2 MNPT hole: 400 bar (6000 psi) = 11.4 mm (0.45 in)
Material version RKJ: AISI 316L, version RKC: Alloy C276; weight: 0.6 kg (1.32 lbs)
3 Thread ANSI 1/2 FNPT;
Material version R1J: AISI 316L, version R1C: Alloy C276/2.4819; Weight: 0.7 kg (1.54 lbs)

Installation height H for devices with threaded connection and internal process isolating diaphragm

	F31 housing	**F15 housing**
Height H	169 mm (6.65 in)	150 mm (5.91 in)

Process connections PMP51 (with metallic process isolating diaphragm) – continued

Thread, flush-mounted process isolating diaphragm

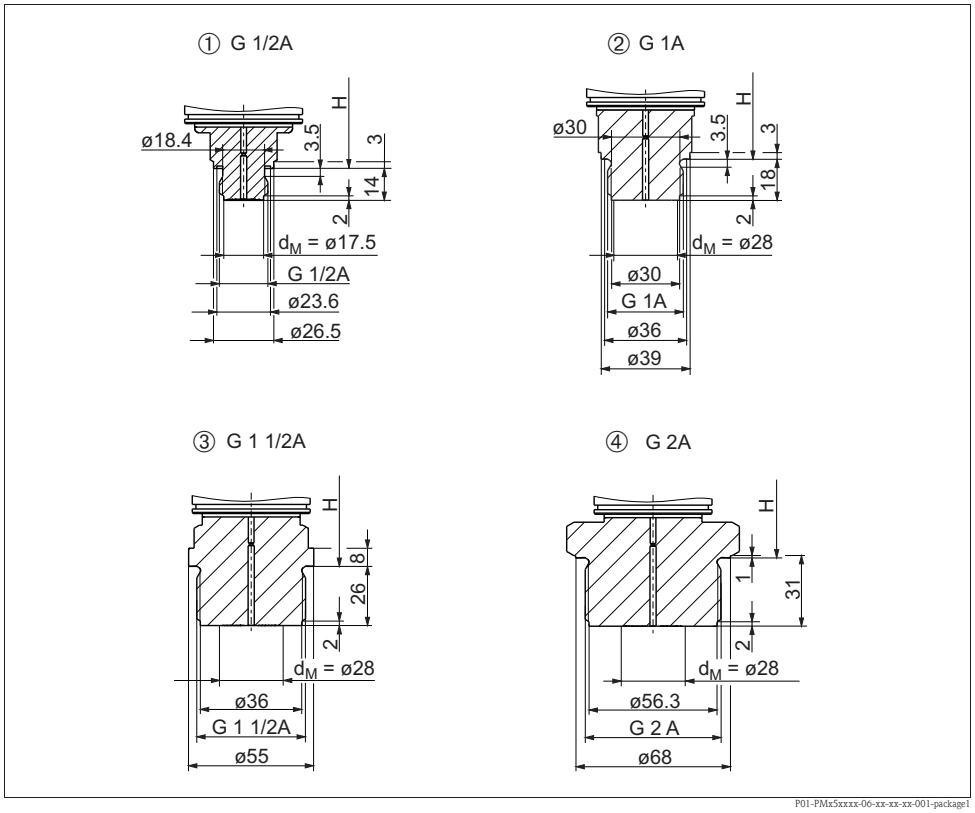

Thread ISO 228
Installation height H → 📄 44.

1 Thread ISO 228 G 1/2 A DIN 3852 (viton seal included);
Material version GRJ: AISI 316L, version GRC: : Alloy C276; weight: 0.4 kg (0.88 lbs)
2 Thread ISO 228 G 1 A (viton seal included);
Material version GTJ: AISI 316L; weight: 0.7 kg (1.54 lbs)
3 Thread ISO 228 G 1 1/2 A
Material version GVJ: AISI 316L; weight: 1.1 kg (2.43 lbs)
4 Thread ISO 228 G 2 A
Material version GWJ: AISI 316L; weight: 1.5 kg (3.31 lbs)

Note!
Endress+Hauser offers a pressure sensor dummy for the welding neck with order number 52002643. Order number for pressure sensor dummy: 52005082

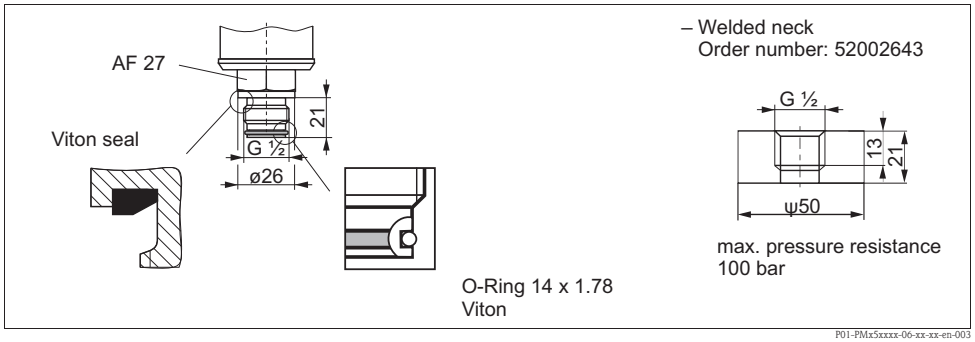

Version G0J: Thread ISO 228 G1/2; weight: 0.4 kg (0.88 lbs)

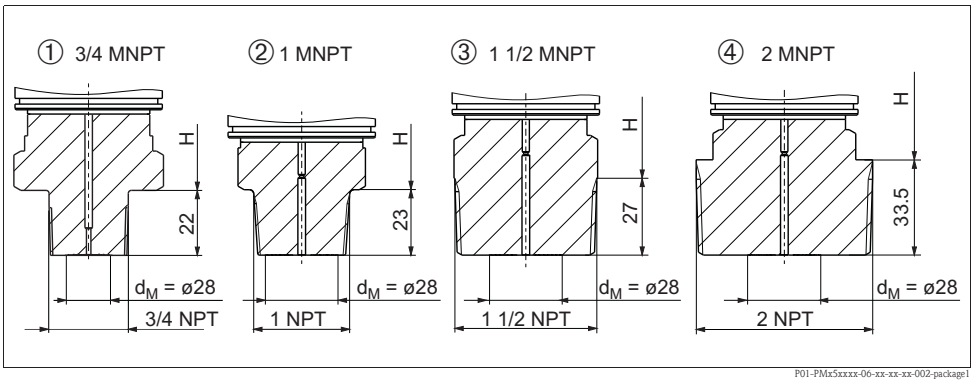

Process connections PMP51 thread ANSI
Installation height H see following table.

1 Thread ANSI 3/4 MNPT;
Material version U4J: AISI 316L; weight: 0.6 kg (1.32 lbs)
2 Thread ANSI 1 MNPT;
Material version U5J: AISI 316L; weight: 0.7 kg (1.54 lbs)
3 Thread ANSI 1 1/2 MNPT;
Material version U7J: AISI 316L; weight: 1.0 kg (2.21 lbs)
4 Thread ANSI 2 MNPT
Material version U8J: AISI 316L; weight: 1.3 kg (2.86 lbs)

Installation height H for devices with threaded connection and flush-mounted process isolating diaphragm

Description	F31 housing	F15 housing
G 1/2	163 mm (6.42 in)	148 mm (5.83 in)
G 1	167 mm (6.57 in)	152 mm (5.98 in)
G 1 1/2 A	163 mm (6.42 in)	148 mm (5.83 in)
G 2 A	162 mm (6.38 in)	147 mm (5.79 in)
3/4 MNPT	165 mm (6.5 in)	150 mm (5.91 in)
1 MNPT	162 mm (6.38 in)	147 mm (5.79 in)
1 1/2 MNPT	169 mm (6.65 in)	150 mm (5.91 in)
2 MNPT	199 mm (7.83 in)	144 mm (5.67 in)
M 20x1.5	163 mm (6.42 in)	148 mm (5.83 in)

Process connections PMP51 (with metallic process isolating diaphragm) – continued

EN/DIN flanges, connection dimensions as per EN 1092-1/DIN 2527

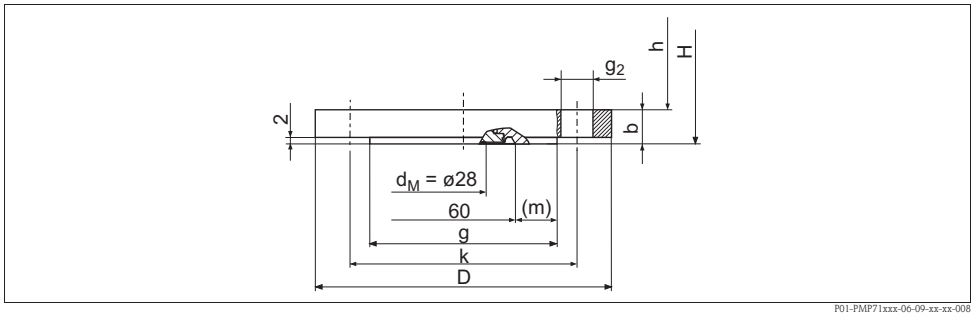

Process connection PMP51, EN/DIN flange with raised face, material AISI 316L

H: device height = height of device without flange h + flange thickness b
Height H → 🖹 46.

	Flange [1]							Boltholes			
Version	**Nominal diameter**	**Nominal pressure**	**Shape [2]**	**Diameter** **D** [mm]	**Thickness** **b** [mm]	**Raised face** **g** [mm]	**Width of the raised face** **(m)** [mm]	**Quantity**	**Diameter** **g_2** [mm]	**Hole circle** **k** [mm]	**Flange weight [3]** [kg]
CNJ	DN 25	PN 10-40	B1 (D)	115	18	68 [4]	4	4	14	85	1.2
CPJ	DN 32	PN 10-40	B1 (D)	140	18	78 [4]	9	4	18	100	1.9
CQJ	DN 40	PN 10-40	B1 (D)	150	18	88 [4]	14	4	18	110	2.2
CXJ	DN 50	PN 25/40	B1 (D)	165	20	102	–	4	18	125	3.0
CZJ	DN 80	PN 10-40	B1 (D)	200	24	138	–	8	18	160	5.5

1) The roughness of the surface in contact with the medium is R_a 0.8 µm (31.5 µin). Lower surface roughness available on request.

2) Designation as per DIN 2527 in brackets

3) Housing weight → 🖹 66

4) With these process connections the sealing surface is smaller than described in the standard. Due to a smaller sealing surface a special seal must be used. Contact a seal manufacturer or your local Endress+Hauser Sales Center.

Process connections PMP51 (with metallic process isolating diaphragm) – continued

ANSI flanges, connection dimensions as per ANSI B 16.5, raised face RF

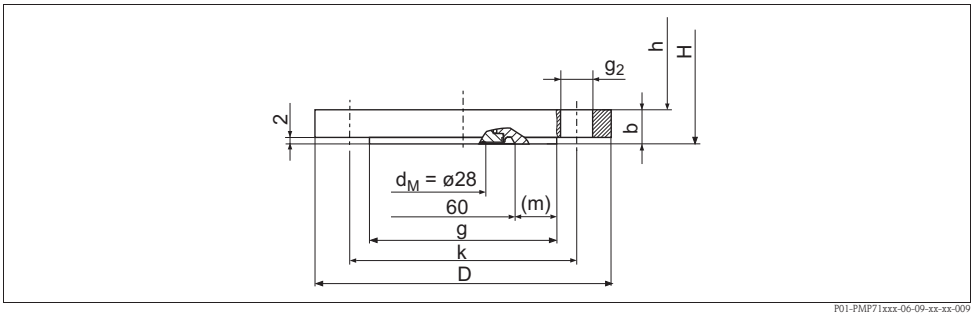

Process connection PMP51, ANSI flange with raised face RF (see table below)

H: device height = height of device without flange h + flange thickness b.. For height H → 📄 46.

	Flange [1]							Boltholes			
Version	Material	Nominal diameter	Class/ Nominal pressure	Diameter D	Thickness b	Diameter of raised face g	Width of the raised face (m)	Quantity	Diameter g_2	Hole circle k	Flange weight [2]
		[in]		[in] / [mm]	[in] / [mm]	[in] / [mm]	[in] / [mm]		[in] / [mm]	[in] / [mm]	[kg]
ANSI flanges											
ANJ	AISI 316/316L [3]	1	300 lb./sq.in	4.88 / 124	0.69 / 17.5	2.76 [4] / 50.8	0.2 / 5	4	0.75 / 19.1	3.5 / 88.9	1.3
AEJ	AISI 316/316L [3]	1 1/2	150 lb./sq.in	5 / 127	0.69 / 17.5	2.88 [4] / 73.2	0.52 / 6.6	4	0.62 / 15.7	3.88 / 98.6	1.5
AQJ	AISI 316/316L [3]	1 1/2	300 lb./sq.in	6.12 / 155.4	0.81 / 20.6	2.88 [4] / 73.2	0.52 / 6.6	4	0.88 / 22.4	4.5 / 114.3	2.6
AFJ	AISI 316/316L [3]	2	150 lb./sq.in	6 / 152.4	0.75 / 19.1	3.62 / 91.9	-	4	0.75 / 19.1	4.75 / 120.7	2.4
ARJ	AISI 316/316L [3]	2	300 lb./sq.in	7.5 / 190.5	0.88 / 22.3	3.62 / 91.9	-	8	0.75 / 19.1	5 / 127	3.2
AGJ	AISI 316/316L [3]	3	150 lb./sq.in	7.5 / 190.5	0.94 / 23.9	5 / 127	-	4	0.75 / 19.1	6 / 152.4	4.9
ASJ	AISI 316/316L [3]	3	300 lb./sq.in	8.25 / 209.5	1.12 / 28.6	5 / 127	-	8	0.88 / 22.4	6.62 / 168.1	6.7
AHJ	AISI 316/316L [3]	4	150 lb./sq.in	9 / 228.6	0.94 / 23.9	6.19 / 157.2	-	8	0.75 / 19.1	7.5 / 190.5	7.1
ATJ	AISI 316/316L [3]	4	300 lb./sq.in	10 / 254	1.25 / 31.8	6.19 / 157.2	-	8	0.88 / 22.4	7.88 / 200.2	11.6

1) The roughness of the surface in contact with the medium is R_a 0.8 µm (31.5 µin). Lower surface roughness available on request.

2) Housing weight → 📄 66

3) Combination of AISI 316 for required pressure resistance and AISI 316L for required chemical resistance (dual rated)

4) With these process connections the sealing surface is smaller than described in the standard. Due to a smaller sealing surface a special seal must be used. Contact a seal manufacturer or your local Endress+Hauser Sales Center.

Process connections PMP51 (with metallic process isolating diaphragm) – continued

Height H for devices with flange

	F31 housing	F15 housing
Height H	165 mm (6.5 in)	150 mm (5.91 in)

Process connections PMP51 (with metallic process isolating diaphragm) – continued

Hygienic process connection, flush-mounted process isolating diaphragm

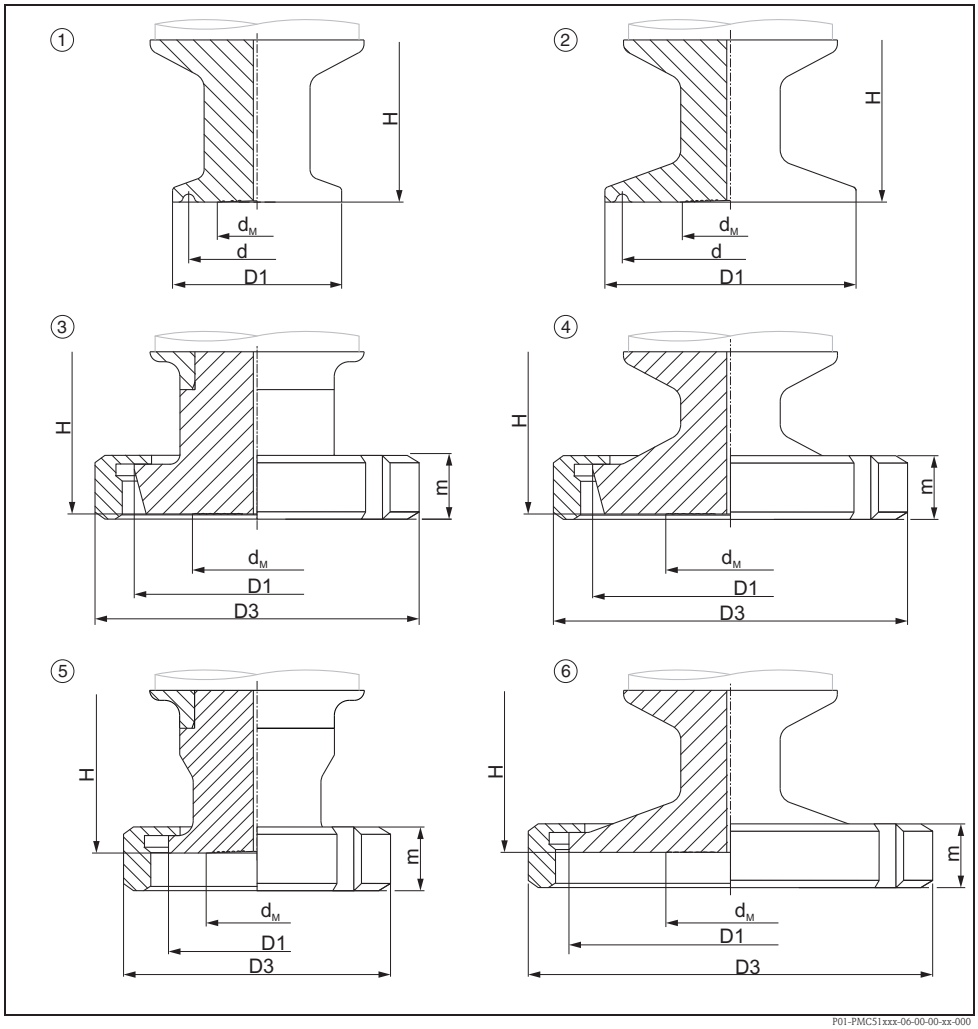

Hygienic process connections, material: AISI 316L (1.4435)
Surface roughness of the surfaces in contact with the medium R_a 0.76 µm (30 µin). Diaphragm seal versions optionally in conformity with ASME-BPE for use in biochemical processes, wetted surfaces R_a 0.38 µm (15 µin), electropolished; to be ordered using feature 570 "Service", version "HK" in the order code.

Pos.		Version	Nominal pressure PN	Outer-Ø D1	Outer-Ø D3	Seal-Ø d	Membrane-Ø d_M	Height H	Height m	Weight kg (lbs)
1	Clamp DN18-22	TBJ	40	34 (1.34)	–	27.5 (1.08)	17.2 (0.68)	max. 165 (6.5)	–	0.5 (1.10)
2	Clamp 1"	TCJ	40	50.5 (1.99)	–	43.5 (1.71)	21.65 (0.85)		–	0.6 (1.32)
	Clamp 1½"	TJJ	40	50.5 (1.99)	–	43.5 (1.71)	28 (1.10)		–	0.6 (1.32)
	Clamp 2"	TDJ	40	64 (2.52)	–	56.5 (2.22)	28 (1.10)		–	0.7 (1.54)
3	DIN11851 B25	MXJ	40	43.4 (1.71)	63 (2.48)	–	28 (1.10)		21 (0.83)	0.7 (1.54)
	DIN11851 B32	MIJ	40	49.4 (1.94)	70 (2.76)	–	28 (1.10)		21 (0.83)	0.8 (1.76)
4	DIN11851 B40	MZJ	40	55.4 (2.18)	78 (3.07)	–	28 (1.10)		21 (0.83)	0.9 (1.98)
	DIN11851 B50	MRJ	25	67.4 (2.65)	92 (3.62)	–	28 (1.10)		22 (0.87)	1.1 (2.43)
5	SMS 1"	T6J	25	35.5 (1.4)	51 (2.01)	–	21.65 (0.85)		20 (0.79)	0.7 (1.54)
6	SMS 1½"	T7J	25	55 (2.17)	74 (2.91)	–	28 (1.10)		25 (0.98)	0.8 (1.76)
	SMS 2"	TXJ	25	65 (2.56)	84 (3.31)	–	28 (1.10)		26 (1.02)	0.9 (1.98)

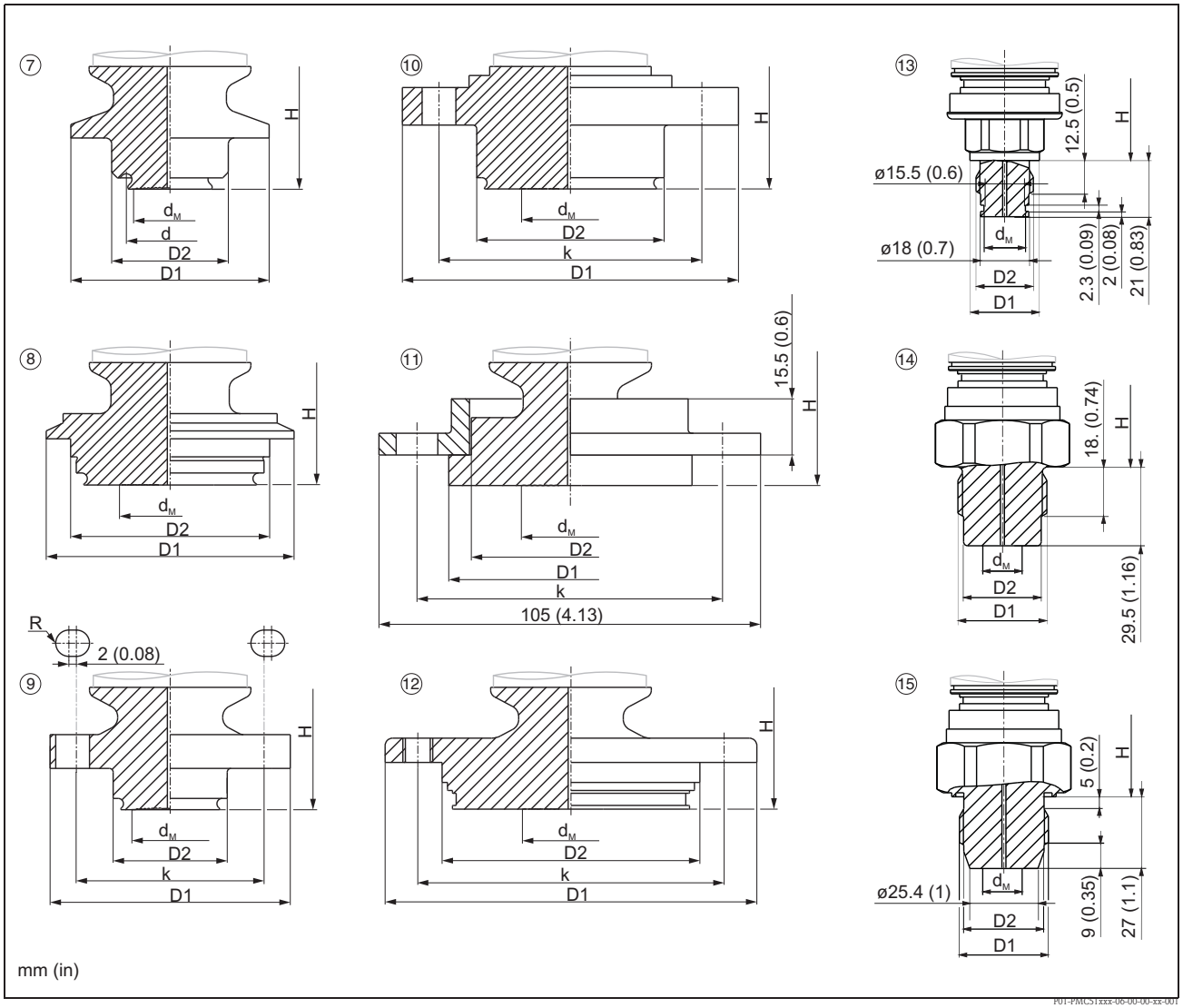

Hygienic process connections, material: AISI 316L (1.4435)

Surface roughness of the surfaces in contact with the medium R_a 0.76 µm (30 µin). Diaphragm seal versions optionally in conformity with ASME-BPE for use in biochemical processes, wetted surfaces R_a 0.38 µm (15 µin), electropolished; to be ordered using feature 570 "Service", version "HK" in the order code.

Pos.		Version	Nominal pressure PN	Outer-Ø D1	Outer-Ø D2	Hole circle-Ø k	Membran-Ø d_M	Height H	Weight kg (lbs)
7	Varivent B	TPJ	40	52.7 (2.07)	31 (1.22)	–	21.65 (0.85)	max. 165 (6.5)	0.7 (1.54)
8	Varivent F	TQJ	40	66 (2.6)	53 (2.09)	–	28 (1.10)		0.9 (1.98)
	Varivent N	TRJ	40	84 (3.31)	68 (2.68)	–	28 (1.10)		1.1 (2.43)
9	Neumo D25	S1J	16	64 (2.52)	30.4 (1.2)	50 (1.97); 4 x, R 3,5 mm (0.14 in)	21.65 (0.85)		0.8 (1.76)
10	Neumo D50	S4J	16	89.5 (3.52)	49.9 (1.96)	70 (2.76); 4 x ø 9 mm (0.35 in)	28 (1.10)		1.2 (2.65)
11	DRD	TIJ	25	64.5 (2.54)	52.5 (2.07)	84 (3.31); 4 x ø 11.5 mm (0.45 in)	28 (1.10)		1.0 (2.21)
12	APV Inline	TMJ	10	99.5 (3.92)	69 (2.72)	82 (3.23); 6 x ø 8.6 mm (0.34 in) + 2 x M8	28 (1.10)		1.2 (2.65)
13	G 1/2	G0J	40	26	G 1/2	–	17.5 (0.69)		0.5 (1.1)
14	G 1	GZJ	40	G 1	29	–	17.5 (0.69)		0.8 (1.76)
15	G 1	GXJ	100	G 1	30	–	17.5 (0.69)		0.8 (1.76)

Process connections PMP51 (with metallic process isolating diaphragm) – continued

Prepared for diaphragm seal mount

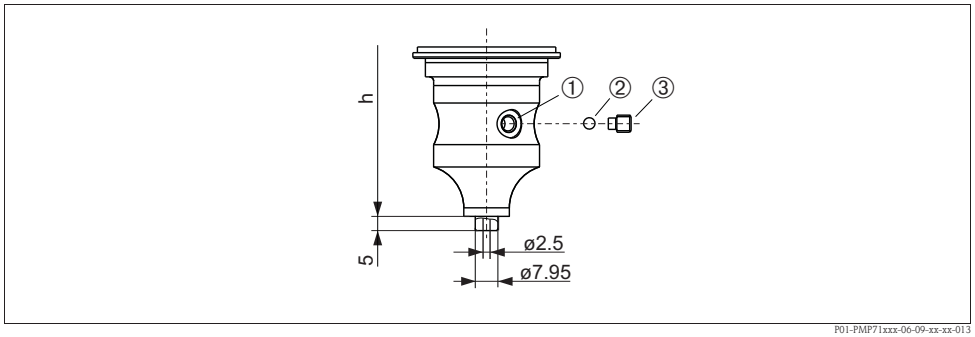

Version XSJ: prepared for diaphragm seal mount

1 Hole for fill fluid
2 Bearing
3 Setscrew with a hexagonal recess 4 mm (0.16 in)

	F31 housing	F15 housing
Height H	190 mm (7.48 in)	175 mm (6.89 in)

PMP55 basic device

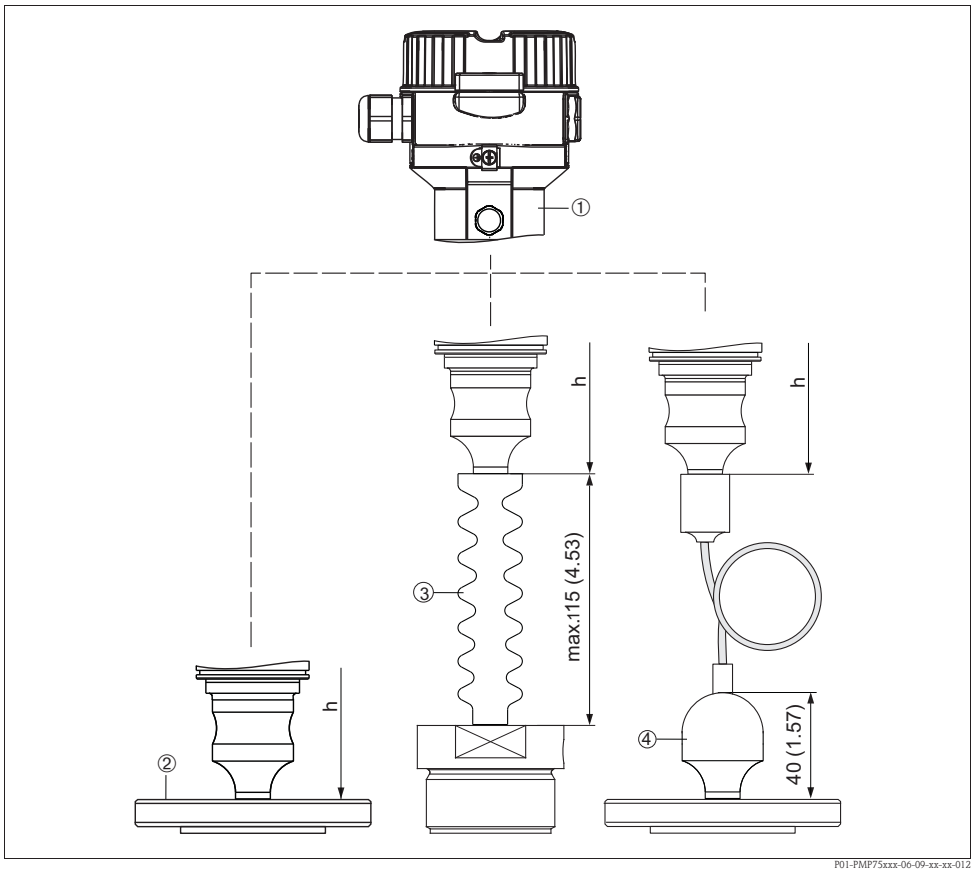

PMP55 basic device with diaphragm seal

1 PMP55 basic device
2 Diaphragm seal, here e.g. flange diaphragm seal
3 Diaphragm seal with temperature isolator
4 Process connections with capillary tubes are 40 mm (1,57 in) higher than process connections without capillary tubes

	F31 housing	F15 housing
Height H	190 mm (7.48 in)	175 mm (6.89 in)

Note!
- The weights of the diaphragm seals are given in the following tables. See → 66 for the weight of the housing.
- The following drawings are schematic diagrams. In other words, the dimensions of a diaphragm seal supplied may deviate from the dimensions given in this document.
- When using high-temperature oils the design can deviate significantly.
- Observe the information in the "Planning instructions for diaphragm seal systems" section → 76 ff.
- For further information please contact your local Endress+Hauser Sales Center.

Process connections PMP55 (with diaphragm seal)

Diaphragm seal cell structure (Pancake)

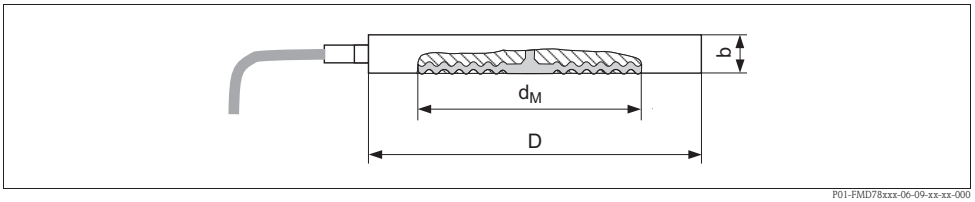

Process connection PMP55, material AISI 316L

	Flange				Diaphragm seal	
Version	**Nominal diameter**	**Nominal pressure** [1]	**Max. diameter** **D** [mm]	**Thickness** **b** [mm]	**Max. diameter of the process isolating diaphragm** d_M [mm]	**Weight of two diaphragm seals** [kg]
UIJ	DN 50	PN 16-400	102	20	59	2.6
UJJ	DN 80	PN 16-400	138	20	89	4.6
UKJ	DN 100	PN 16-400	162	20	89	6.2
	[in]	[lb/sq.in]	[in (mm)]	[in (mm)]	[in (mm)]	[kg]
ULJ	2	150-2500	4.01 (102)	0.79 (20)	2.32 (59)	2.6
UMJ	3	150-2500	5.35 (136)	0.79 (20)	3.50 (89)	4.6
URJ	4	150-2500	6.22 (158)	0.79 (20)	3.50 (89)	6.2

1) The specified nominal pressure applies to the diaphragm seal. The maximum pressure for the measuring device is dependent on the lowest-rated element, with regard to pressure, of the selected components. See also → 32, "Pressure specifications" section.

Process connections PMP55 (with diaphragm seal) - continued

Thread, flush-mounted process isolating diaphragm

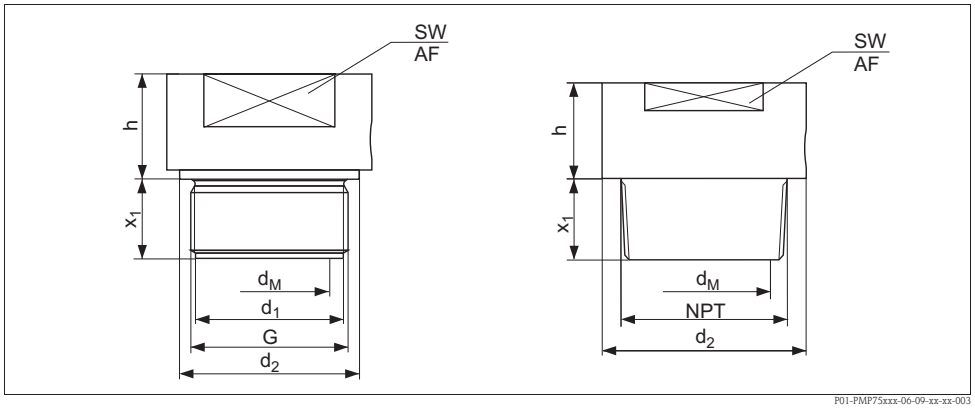

Process connections PMP55, left: thread ISO 228, right: thread ANSI

Threaded connection								Diaphragm seal		
Version	**Material**	**Thread**	**Nominal pressure** **PN**	**Diameter** **d_1** [mm]	**Diameter** **d_2** [mm]	**Screw-in length** **x_1** [mm]	**Across flats** **SW/AF**	**Max. diaphragm diameter** **d_M** [mm]	**Height** **h** [mm]	**Diaphragm seal weight** [kg]
GTJ	316L	G1	400	30	39	21[1)]	41	30	19	0.4
GTC	Alloy C276									0.5
GVJ	316L	G1 1/2 A	400	44	55	30	50	42	20	0.9
GVC	Alloy C276									1.0
GWJ	316L	G2	400	56	68	30	65	50	20	1.9
GWC	Alloy C276									2.1
U5J	316L	1 MNPT	400	-	48	28	41	24	37	0.6
U7J	316L	1 1/2 MNPT	400	-	60	30	41	36	20	0.9
U8J	316L	2 MNPT	400	-	78	30	65	38	35	1.8

1) 28 mm (1.1 in) in conjunction with high-temperature oil

Process connections PMP55 (with diaphragm seal) - continued

Pipe diaphragm seal (RDM) as per ISO2852

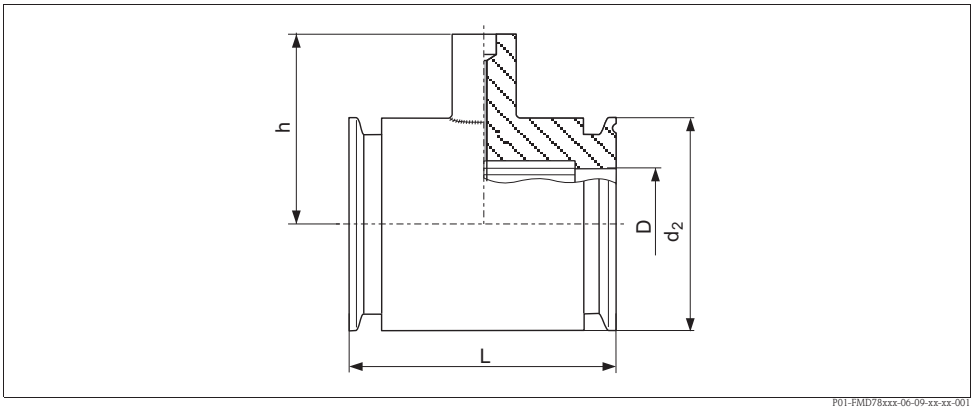

Process connection PMP55, material AISI 316L, surface roughness of the surfaces in contact with the medium $R_a \leq 0.8$ µm (31.5 µin) as standard. Lower surface roughness, see feature 570 "Service" version HK.

Version	Nominal diameter ISO2852	Nominal pressure	Nominal diameter	Diameter D [in]	Diameter d_2 [mm]	Height h [mm]	Face-to-face length L [mm]	Diaphragm seal weight [kg]
SBJ	DN 25	PN40	1"	22.5	50.5	67	126	1.7
SCJ	DN 38	PN40	1 1/2"	35.5	50.5	67	126	1.0
SDJ	DN 51	PN40	2"	48.6	64	79	100	1.7
SIJ	DN 10	PN40	3/4"	10.3	25	42	138.5	0.6
SJJ	DN 16	PN40	3/4"	15.7	25	67	116	0.9

Process connections PMP55 (with diaphragm seal) - continued

Aseptic screwed union, threaded connection, DIN 11864-1 Form A; pipe DIN 11866-A

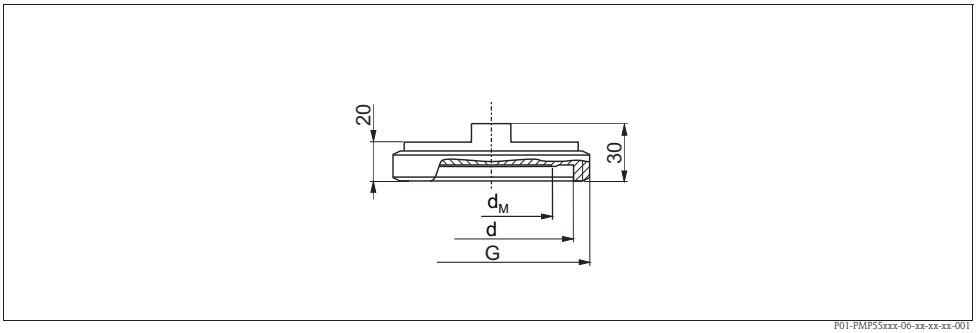

Process connection PMP55, material AISI 316L, surface roughness of the surfaces in contact with the medium Ra ≤ 0.8 µm (31.5 µin) as standard. Lower surface roughness, see feature 570 "Service" version HK.

	Threaded adapter				Diaphragm seal	
Version	Nominal diameter	Nominal pressure	Diameter d [mm]	Thread G	Max. diaphragm diameter d_M [mm]	Weight Diaphragm seal [kg]
NCJ	DN 40	PN 16	55	Rd 65 x 1/6	35	1.5
NDJ	DN 50		67	Rd 78 x 1/6	45	2.3

Aseptic flange connection, DIN 11864-2 Form A; pipe DIN 11866-1

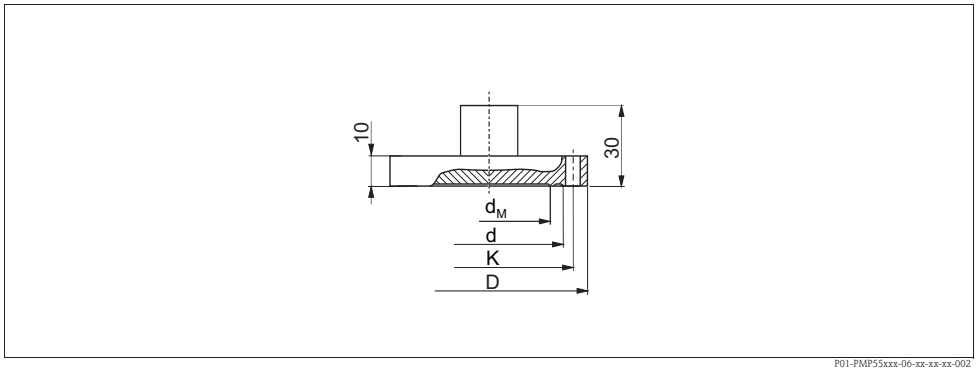

P01-PMP55xxx-06-xx-xx-xx-002

Process connection PMP55, material AISI 316L, surface roughness of the surfaces in contact with the medium Ra≤ 0.8 µm (31.5 µin) as standard. Lower surface roughness, see feature 570 "Service" version HK.

	Collar flange					Diaphragm seal	
Version	**Nominal diameter**	**Nominal pressure**	**Hole circle diameter** **K** [mm]	**Seal diameter** **d** [mm]	**Outer diameter** **D** [mm]	**Max. diaphragm diameter** **d_M** [mm]	**Diaphragm seal weight** [kg]
NFJ	DN 32	PN 16	59	47.7	76	25	1.5
NXJ	DN 40		65	53.7	82	35	1.7
NZJ	DN 50		77	65.7	94	45	2.2

Tri-Clamp ISO 2852

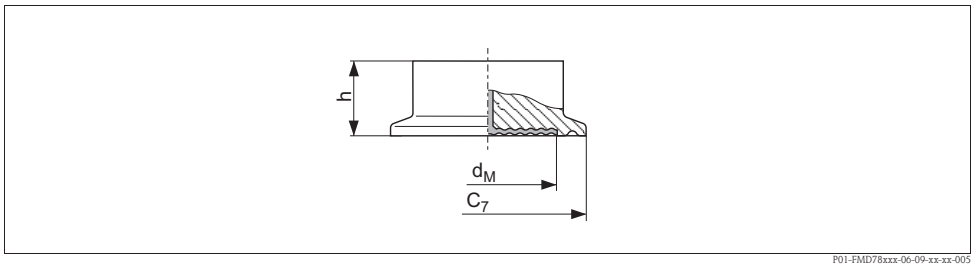

P01-FMD78xxx-06-09-xx-xx-005

Process connection PMP55, material: AISI 316L, surface roughness of the surfaces in contact with the medium R_a≤ 0.8 µm (31.5 µin) as standard. Lower surface roughness, see feature 570 "Service" version HK.

Version	**Nominal diameter ISO 2852**	**Nominal diameter DIN 32676**	**Nominal diameter** **[in]**	**Diameter** **C_7 [mm]**	**Max. diaphragm diameter** **d_M [mm]**	**Height** **h [mm]**	**Diaphragm seal weight** **[kg]**
TCJ	DN 25	DN 25	1	50.5	24	37	0.32
TJJ [1)]	DN 38	DN 40	1 1/2	50.5	34	30	1.0
TDJ [1)]	DN 51	DN 50	2	64	48	30	1.1
TFJ	DN 76.1	–	3	91	73	30	1.2

1) Diaphragm seal versions optionally in conformity with ASME-BPE for use in biochemical processes, wetted surfaces R_a ≤ 0.38 µm (15 µin), electropolished; to be ordered using feature 570 "Service", version "HK" in the order code. In combination with the order version "electropolished", the wetted parts of the 1-½" and 2" Tri-Clamp connections are made of 316L (1.4435) with a delta-ferrite content of < 1% (welding seams excluded).

Varivent N for pipes

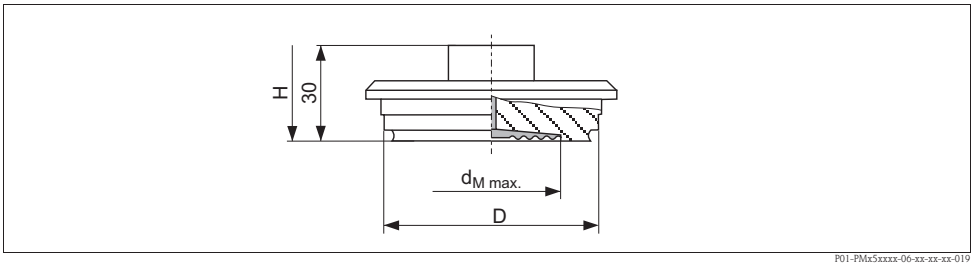

Process connection PMP55, material AISI 316, 3A, surface roughness of the surfaces in contact with the medium $R_a \leq 0.8$ µm (31.5 µin) as standard. Lower surface roughness, see feature 570 "Service" version HK.

Version	Description	Nominal pressure [bar]	Diameter D [mm]	Max. diaphragm diameter d_M [mm]	Max. installation height H [mm]	Diaphragm seal weight [kg]
TQJ	Type F for tubes DN 25 - DN 32	PN 40	50	30	250	0.6
TRJ [1]	Type N for tubes DN 40 - DN 162		68	64		0.8

1) Diaphragm seal versions optionally in conformity with ASME-BPE for use in biochemical processes, wetted surfaces $R_a \leq$ 0.38 µm (15 µin), electropolished; to be ordered using feature 570 "Service", version "HK" in the order code. In combination with the order version "electropolished", the wetted parts of the Varivent connection are made of 316L (1.4435) with a delta-ferrite content of < 1% (welding seams excluded).

DRD DN50 (65 mm)

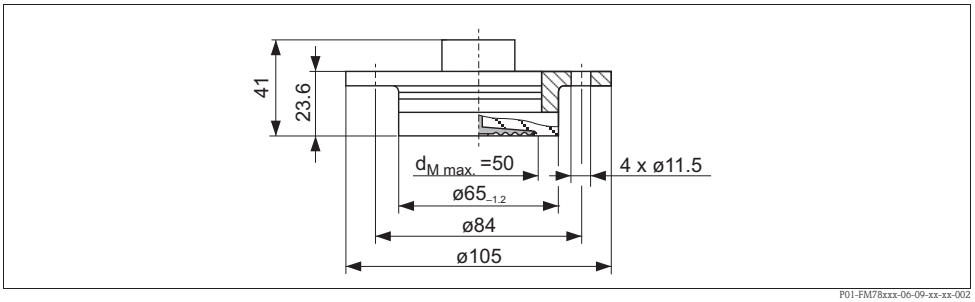

Process connection PMP55, surface roughness of the surfaces in contact with the medium $R_a \leq 0.8$ µm (31.5 µin) as standard. Lower surface roughness, see feature 570 "Service" version HK.

Version	Material	Nominal pressure	Diaphragm seal weight [kg]
TIJ	AISI 316L	PN 25	0.75

SMS nozzles with coupling nut

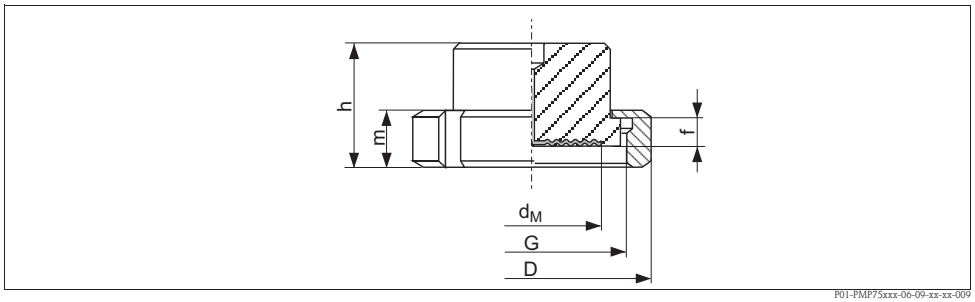

Process connection PMP55, material AISI 316L, surface roughness of the surfaces in contact with the medium Ra≤ 0.8 µm (31.5 µin) as standard. Lower surface roughness, see feature 570 "Service" version HK.

Version	Nominal diameter	Nominal pressure	Diameter	Adapter height	Thread	Height	Height	Max. diaphragm diameter	Diaphragm seal weight
			D	f	G	m	h	d_M	
	[in]	[bar]	[mm]	[mm]		[mm]	[mm]	[mm]	[kg]
T6J	1	PN 25	54	3.5	Rd 40 – 1/6	20	42.5	24	0.25
T7J	1 1/2	PN 25	74	4	Rd 60 – 1/6	25	57	36	0.65
TXJ	2	PN 25	84	4	Rd 70 – 1/6	26	62	48	1.05

APV-RJT nozzles with coupling nut

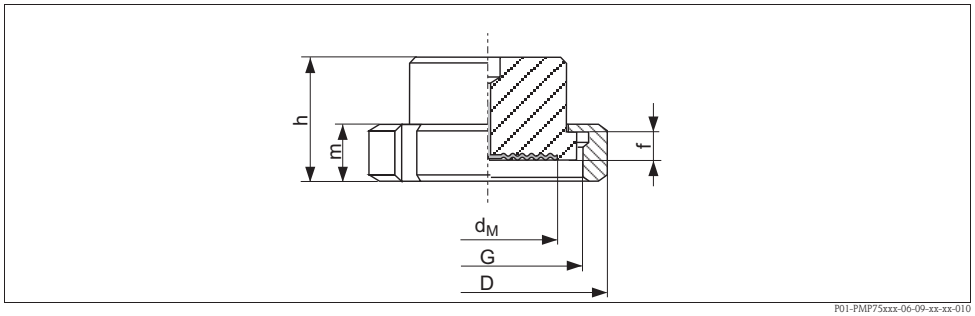

Process connection PMP55, material AISI 316L, surface roughness of the surfaces in contact with the medium Ra≤ 0.8 µm (31.5 µin) as standard. Lower surface roughness, see feature 570 "Service" version HK.

Version	Nominal diameter	Nominal pressure	Diameter	Adapter height	Thread	Height	Height	Max. diaphragm diameter	Diaphragm seal weight
		PN	D	f	G	m	h	d_M	
	[in]	[bar]	[mm]	[mm]		[mm]	[mm]	[mm]	[kg]
T0J	1	PN 40	77	6.5	1 13/16 – 1/8"	22	42.6	21	0.45
T1J	1 1/2	PN 40	72	6.4	2 5/16 – 1/8"	22	42.6	28	0.75
T2J	2	PN 40	86	6.4	2 7/8 – 1/8"	22	42.6	38	1.2

APV-ISS nozzles with coupling nut

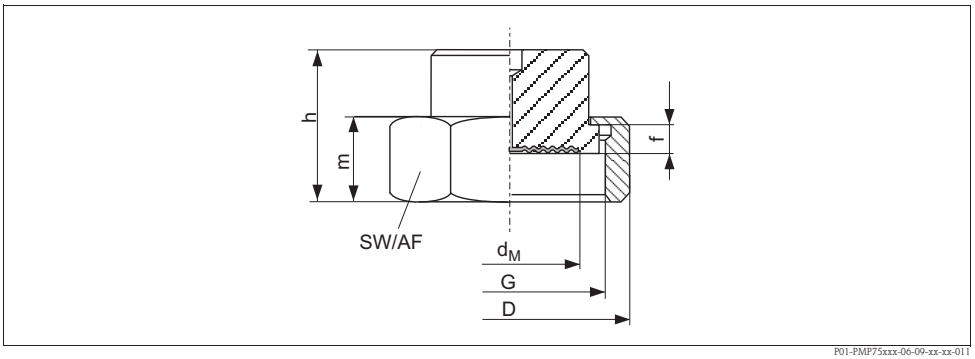

Process connection PMP55, material AISI 316L, surface roughness of the surfaces in contact with the medium Ra≤ 0.8 µm (31.5 µin) as standard. Lower surface roughness, see feature 570 "Service" version HK.

Version	Nominal diameter	Nominal pressure	Diameter D	Adapter height f	Thread G	Height m	Across flats AF	Height h	Max. diaphragm seal d_M	Diaphragm seal weight
	[in]	[bar]	[mm]	[mm]		[mm]		[mm]	[mm]	[kg]
T3J	1	PN 40	54.1	4	1 1/2" – 1/8"	30	46.8	50	24	0.4
T4J	1 1/2	PN 40	72	4	2" – 1/8"	30	62	50	34	0.6
T5J	2	PN 40	89	4	2 1/2" – 1/8"	30	77	50	45	1.1

Taper adapter with coupling nut, DIN 11851

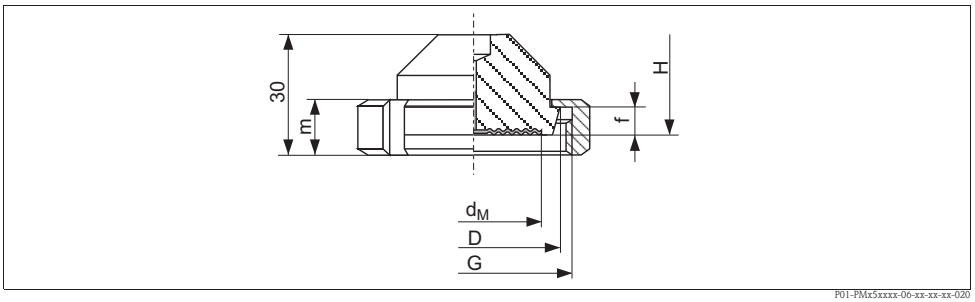

Process connection PMP55, material AISI 316L, 3A, surface roughness of the surfaces in contact with the medium R_a ≤ 0.8 µm (31.5 µin) as standard. Lower surface roughness, see feature 570 "Service" version HK.

	Taper adapter				Slotted nut		Diaphragm seal		
Version	Nominal diameter	Nominal pressure	Diameter D	Adapter height f	Thread G	Height m	Max. diaphragm diameter d_M	Max. installation height H	Diaphragm seal weight
			[mm]	[mm]		[mm]	[mm]	[mm]	[kg]
MIJ	DN 32	PN 40	50	10	Rd 58 x 1/6"	21	32	250	1.9
MZJ	DN 40	PN 40	56	10	Rd 65 x 1/6"	21	38		2.0
MRJ	DN 50	PN 25	68.5	11	Rd 78 x 1/6"	22	52		1.1
MSJ	DN 65	PN 25	86	12	Rd 95 x 1/6"	35	66		2.0
MTJ	DN 80	PN 25	100	12	Rd 110 x 1/4"	30	81		2.55

NEUMO BioControl

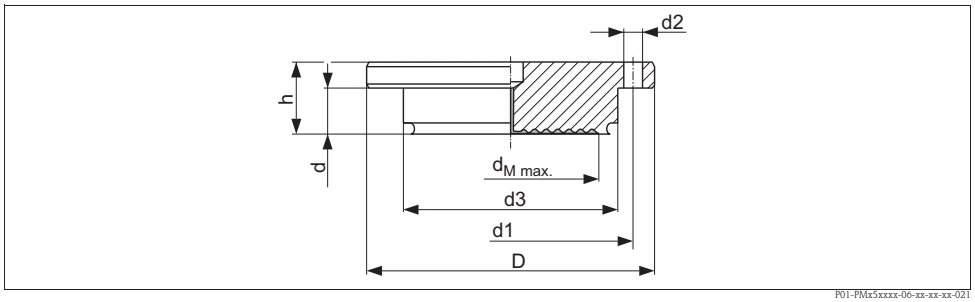

Process connection PMP55, material AISI 316L, surface roughness of the surfaces in contact with the medium Ra≤ 0.8 µm (31.5 µin) as standard. Lower surface roughness, see feature 570 "Service" version HK.

	Threaded adapter							Diaphragm seal	
Version	**Nominal diameter**	**Nominal pressure**	**Diameter diameter** **D** [mm]	**Hole circle** **d_1** [mm]	**Diameter** **d_2** [mm]	**Diameter** **d_3** [mm]	**Height** **h** [mm]	**Max. diaphragm diameter** **d_M** [mm]	**Diaphragm seal weight** [kg]
S4J	DN 50	PN 16	90	70	4 x ∅ 9	50	27	40	1.1

Process connections PMP55 (with diaphragm seal) – continued

EN/DIN flanges, connection dimensions as per EN 1092-1/DIN 2527 and DIN 2501-1

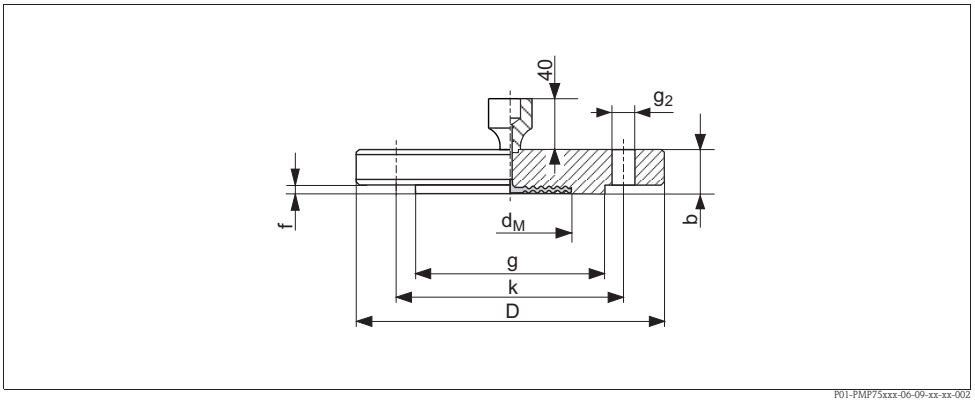

Process connection PMP55, EN/DIN flange with flush-mounted process isolating diaphragm, material AISI 316L

	Flanges							Boltholes			Diaphragm seal	
Version	**Nominal diameter**	**Nominal pressure**	**Shape** [1]	**Diameter**	**Thickness**	**Raised face**		**Quantity**	**Diameter**	**Hole circle**	**Max. diaphragm diameter**	**Diaphragm seal weight**
				D	**b**	**g**	**f**		**g_2**	**k**	**d_M**	
				[mm]	[mm]	[mm]	[mm]		[mm]	[mm]	[mm]	[kg]
CNJ	DN 25	PN 10-40	B1 (D)	115	18	66	3	4	14	85	32	2.1
QIJ	DN 25	PN 63-160	B2 (E)	140	24	68	2	4	18	100	28	2.5
QJJ	DN 25	PN 250	B2 (E)	150	28	68	2	4	22	105	28	3.7
QSJ	DN 25	PN 400	B2 (E)	180	38	68	2	4	26	130	28	7.0
CPJ	DN 32	PN 10-40	B1 (D)	140	18	77	2.6	4	18	100	34	1.9
CQJ	DN 40	PN 10-40	B1 (D)	150	18	87	2.6	4	18	110	48	2.2
CXJ	DN 50	PN 10-40	B1 (D)	165	20	102	3	4	18	125	59	3.0
PDJ	DN 50	PN 63	B2 (E)	180	26	102	3	4	22	135	59	4.6
QOJ	DN 50	PN 100-160	B2 (E)	195	30	102	3	4	26	145	59	6.2
QMJ	DN 50	PN 250	B2 (E)	200	38	102	3	8	26	150	59	7.7
QVJ	DN 50	PN 400	B2 (E)	235	52	102	3	8	30	180	59	14.7
CZJ	DN 80	PN 10-40	B1 (D)	200	24	138	3.5	8	18	160	89	5.3
PPJ	DN 80	PN 100	B2 (E)	230	32	138	4	8	24	180	89	8.9
PQJ	DN 100	PN 100	B2 (E)	265	36	175	5	8	30	210	89	13.7

1) Designation as per DIN 2527 in brackets

EN/DIN flanges with extended diaphragm seal, connection dimensions as per EN 1092-1/DIN 2527 and DIN 2501-1

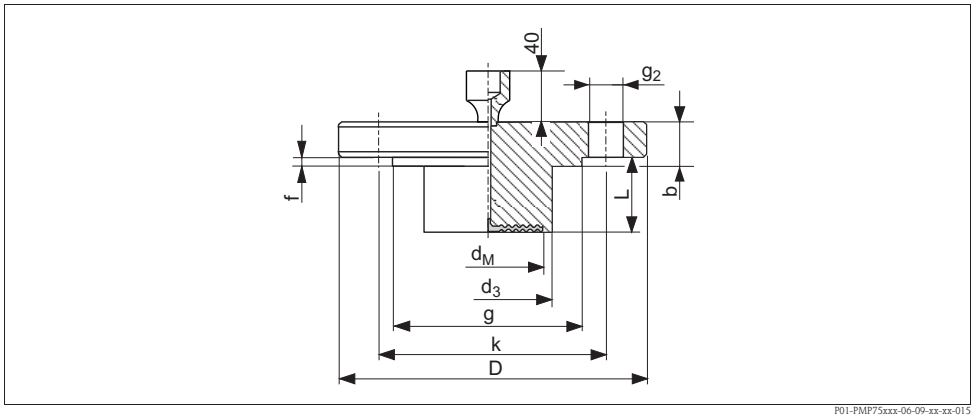

Process connection PMP55, EN/DIN flange with flush-mounted process isolating diaphragm, material AISI 316L

	Flanges							Boltholes			Diaphragm seal	
Version	**Nominal diameter**	**Nominal pressure**	**Shape** [1]	**Diameter**	**Thickness**	**Raised face**		**Quantity**	**Diameter**	**Hole circle**	**Max. diaphragm diameter**	**Diaphragm seal weight**
				D	**b**	**g**	**f**		**g_2**	**k**	**d_M**	
				[mm]	[mm]	[mm]	[mm]		[mm]	[mm]	[mm]	[kg]
FDJ [2]	DN 50	PN 10-40	B1 (D)	165	20	102	3	4	18	125	47	[2]
FEJ [2]	DN 80	PN 10-40	B1 (D)	200	24	138	3.5	8	18	160	72	[2]

1) Designation as per DIN 2527 in brackets

2) Available with 50 mm (1.97 in), 100 mm (3.94 in) or 200 mm (7.87 in) extended diaphragm seal, for extended diaphragm seal diameter and weight see the following table

Version	**Nominal diameter**	**Nominal pressure**	**Extended diaphragm seal length (L)**	**Extended diaphragm seal diameter d_3**	**Diaphragm seal weight**
			[mm]	[mm]	[kg]
FDJ	DN 50	PN 10-40	50 / 100 / 200	48.3	3.2 / 3.8 / 4.4
FEJ	DN 80	PN 10-40	50 /100 / 200	76	6.2 / 6.7 / 7.8

Process connections PMP55 (with diaphragm seal) – continued

ANSI flanges, connection dimensions as per ANSI B 16.5, raised face RF

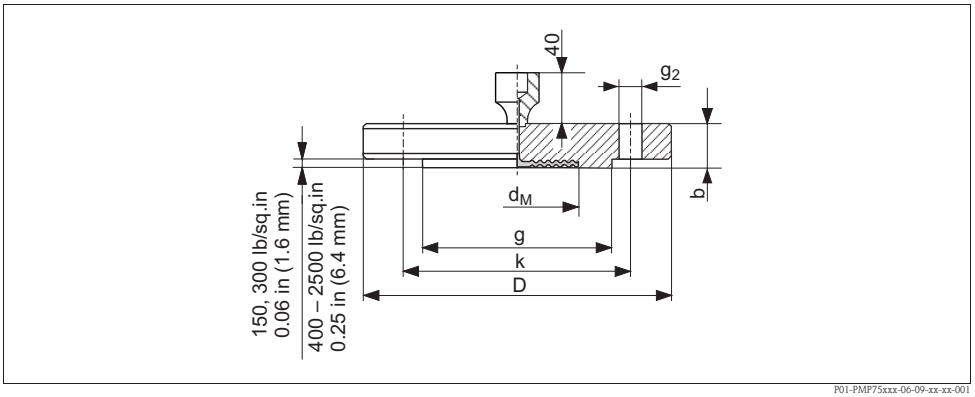

Process connection PMP55, ANSI flange, material AISI 316/316L (Combination of AISI 316 for required pressure resistance and AISI 316L for required chemical resistance (dual rated))

	Flange					Boltholes			Diaphragm seal	
Version	**Nominal diameter**	**Class**	**Diameter**	**Thickness**	**Raised face**	**Quantity**	**Diameter**	**Hole circle**	**Max. diaphragm diameter**	**Diaphragm seal weight**
			D	**b**	**g**		**g_2**	**k**	**d_M**	
	[in]	[lb./sq.in]	[in] / [mm]	[in] / [mm]	[in] / [mm]		[in] / [mm]	[in] / [mm]	[in] / [mm]	[kg]
ACJ	1	150	4.25 /108	0.56 / 14.2	2 / 50.8	4	0.62 / 15.7	3.12 / 79.2	1.26 / 32	1.2
ANJ	1	300	4.88 / 124	0.69 / 17.5	2 / 50.8	4	0.75 / 19.1	3.5 / 88.9	1.26 / 32	1.3
A0J	1	400/600	4.88 / 124	0.69 / 17.5	2 / 50.8	4	0.75 / 19.1	3.5 / 88.9	1.26 / 32	1.4
A2J	1	900/1500	5.88 / 149.4	1.12 / 28.6	2 / 50.8	4	1 / 25.4	4 / 101.6	1.26 / 32	3.2
A4J	1	2500	6.25 / 158.8	1.38 / 35.1	2 / 50.8	4	1 / 25.4	4.25 / 108	1.26 / 32	4.6
AEJ	1 1/2	150	5 / 127	0.69 / 17.5	2.88 / 73.2	4	0.62 / 15.7	3.88 / 98.6	1.89 / 48	1.5
AQJ	1 1/2	300	6.12 / 155.4	0.81 / 20.6	2.88 / 73.2	4	0.88 / 22.4	4.5 / 114.3	1.89 / 48	2.6
AFJ	2	150	6 / 152.4	0.75 / 19.1	3.62 / 91.9	4	0.75 / 19.1	4.75 / 120.7	2.32 / 59	2.2
ARJ	2	300	6.5 / 165.1	0.88 / 22.4	3.62 / 91.9	8	0.75 / 19.1	5 / 127	2.32 / 59	3.4
A1J	2	400/600	6.5 / 165.1	1 / 25.4	3.62 / 91.9	8	0.75 / 19.1	5 / 127	2.32 / 59	4.3
A3J	2	900/1500	8.5 / 215.9	1.5 / 38.1	3.62 / 91.9	8	1 / 25.4	6.5 / 165.1	2.32 / 59	10.3
A5J	2	2500	9.25 / 235	2 / 50.8	3.62 / 91.9	8	1.12 / 28.6	6.75 / 171.5	2.32 / 59	15.8
AGJ	3	150	7.5 / 190.5	0.94 / 23.9	5 / 127	4	0.75 / 19.1	6 / 152.4	3.50 / 89	5.1
ASJ	3	300	8.25 / 209.5	1.12 / 28.6	5 / 127	8	0.75 / 19.1	6 / 152.4	3.50 / 89	7.0
AHJ	4	150	9 / 228.6	0.94 / 23.9	6.19 / 157.2	8	0.75 / 19.1	7.5 / 190.5	3.50 / 89	7.2
ATJ	4	300	10 / 254	1.25 / 31.8	6.19 / 157.2	8	0.88 / 22.4	7.88 / 200.2	3.50 / 89	11.7

ANSI flanges with extended diaphragm seal, connection dimensions as per ANSI B 16.5, raised face RF

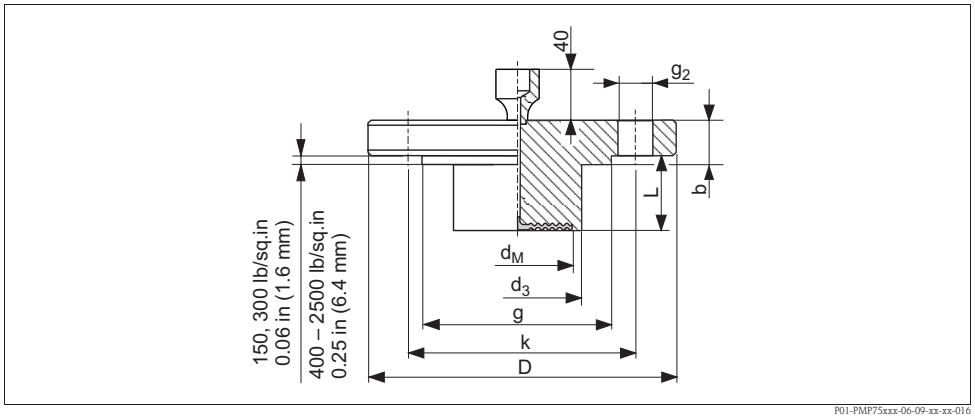

Process connection PMP55, ANSI flange with extended diaphragm seal, material AISI 316/316L (Combination of AISI 316 for required pressure resistance and AISI 316L for required chemical resistance (dual rated))

	Flange					Boltholes			Diaphragm seal	
Version	**Nominal diameter**	**Class**	**Diameter**	**Thickness**	**Raised face**	**Quantity**	**Diameter**	**Hole circle**	**Max. diaphragm diameter**	**Diaphragm seal weight**
			D	**b**	**g**		**g_2**	**k**	**d_M**	
	[in]	[lb./ sq.in]	[in] / [mm]	[in] / [mm]	[in] / [mm]		[in] / [mm]	[in] / [mm]	[in] / [mm]	[kg]
FMJ [1]	2	150	6 / 152.4	0.75 / 19.1	3.62 / 91.9	4	0.75 / 19.1	4.75 / 120.7	1.85 / 47	[1]
FNJ [1]	3	150	7.5 / 190.5	0.94 / 23.9	5 / 127	4	0.75 / 19.1	6 / 152.4	2.83 / 72	[1]
FWJ [1]	3	300	8.25 / 209.5	1.12 / 28.6	5 / 127	8	0.88 / 22.4	6.62 / 168.1	2.83 / 72	[1]
FOJ [1]	4	150	9 / 228.6	0.94 / 23.9	6.19 / 157.2	8	0.75 / 19.1	7.5 / 190.5	3.50 / 89	[1]
FXJ [1]	4	300	10 / 254	1.25 / 31.8	6.19 / 157.2	8	0.88 / 22.4	7.88 / 200.2	3.50 / 89	[1]

1) Available with 2 in, 4 in, 6 in or 8 in extended diaphragm seal, for extended diaphragm seal diameter and weight see the following table

Version	**Nominal diameter**	**Class**	**Extended diaphragm seal length (L)**	**Extended diaphragm seal diameter d_3**	**Diaphragm seal weight**
	[in]	[lb./sq.in]	in (mm)	in (mm)	[kg]
FMJ	2	150	2 (50.8) / 4 (101.6) / 6 (152.4) / 8 (203.2)	1.9 (48.3)	3.0 / 3.4 / 3.9 / 4.4
FNJ	3	150	2 (50.8) / 4 (101.6) / 6 (152.4) / 8 (203.2)	2.99 (75.9)	6.0 / 6.6 / 7.1 / 7.8
FWJ	3	300	2 (50.8) / 4 (101.6) / 6 (152.4) / 8 (203.2)	2.99 (75.9)	7.9 / 8.5 / 9.0 / 9.6
FOJ	4	150	2 (50.8) / 4 (101.6) / 6 (152.4) / 8 (203.2)	3.7 (94)	8.6 / 9.9 / 11.2 / 12.4
FXJ	4	300	2 (50.8) / 4 (101.6) / 6 (152.4) / 8 (203.2)	3.7 (94)	13.1 / 14.4 / 15.7 / 16.9

Process connections PMP55 (with diaphragm seal) – continued

JIS flanges, connection dimensions as per JIS B 2220 BL, raised face RF

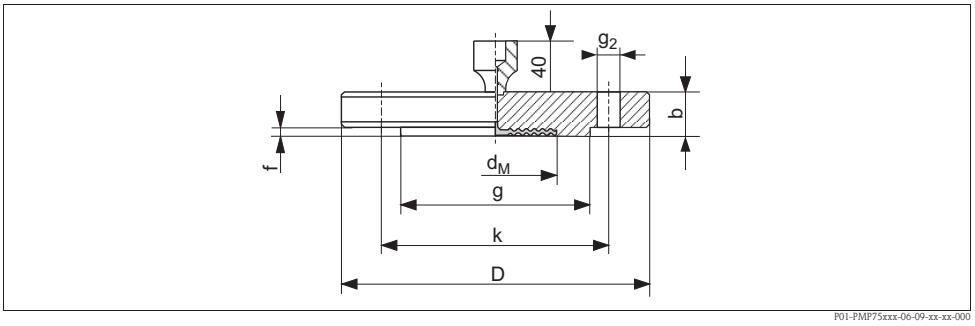

Process connection PMP55, JIS flange with raised face RF, material AISI 316L

	Flange [1]						Boltholes			Diaphragm seal	
Version	**Nominal diameter**	**Nominal pressure**	**Diameter** **D** [mm]	**Thickness** **b** [mm]	**Diameter of raised face** **g** [mm]	**Height of raised face** **f** [mm]	**Quantity**	**Diameter** g_2 [mm]	**Hole circle** **k** [mm]	**Max. diaphragm diameter** d_M [mm]	**Diaphragm seal weight**[2] [kg]
KCJ	25 A	10 K	125	14	67	1	4	19	90	32	1.5
KEJ	40 A	10 K	140	16	81	2	4	19	105	48	2.0
KFJ	50 A	10 K	155	16	96	2	4	19	120	59	2.3
KGJ	80 A	10 K	185	18	127	2	8	19	150	89	3.3
KHJ	100 A	10 K	210	18	151	2	8	19	175	89	4.4

1) The roughness of the surface in contact with the medium, including the raised face of the flanges (all standards) made of Hastelloy C, Monel or tantalum, is Ra 0.8 µm. Lower surface roughness available on request.

2) Housing weight → 🖹 66

Process connections PMP55 (with diaphragm seal) - continued

Thread 1/2 NPT and 1 NPT, separator

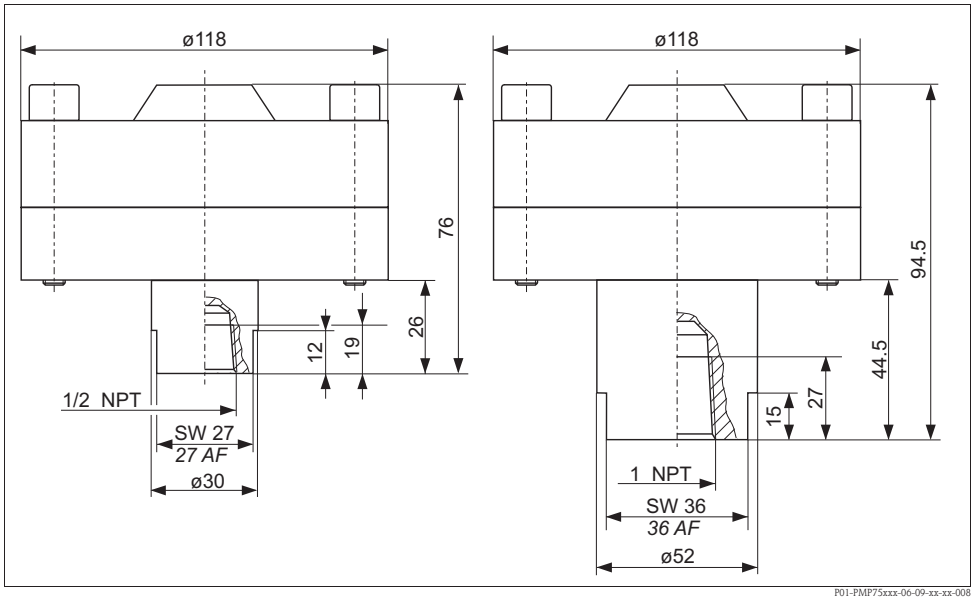

Process connection PMP55, version "UGJ" and "UHJ", threaded, material AISI 316L, seal Viton

Version	Measuring range	Description	Nominal pressure	Diaphragm seal weight [kg]
UGJ	≤ 250 bar	1/2 NPT	PN 250	4.75
UHJ	≤ 250 bar	1 NPT	PN 250	5.0

Thread ISO 228 G 1/2 A and ANSI 1/2 MNPT, separator

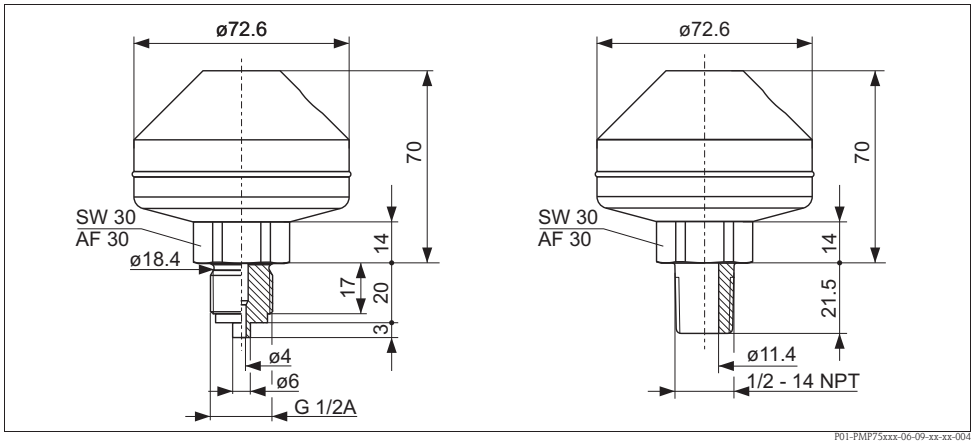

Process connection PMP55, version "UBJ" and "UCJ", welded, material AISI 316L

Version	Measuring range	Description	Nominal pressure	Diaphragm seal weight [kg]
UBJ	≤ 160 bar	ISO 228 G 1/2 A	PN 160	1.43
UCJ	≤ 160 bar	ANSI 1/2 MNPT	PN 160	1.43

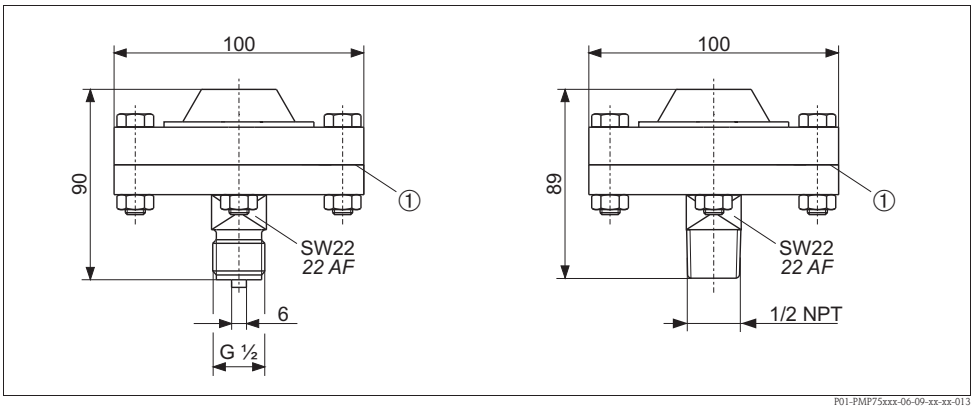

Process connection PMP55, left version "UDJ" threaded, with threaded connection ISO 228 G 1/2 B, right version "UEJ" with threaded connection ANSI 1/2 MNPT

1 PTFE seal as standard max. 260°C (500°F) (higher temperatures on request)

Version	Measuring range	Description	Nominal pressure	Diaphragm seal weight [kg]
UDJ	≤ 40 bar	ISO 228 G 1/2 B	PN 40	1.43
UEJ	≤ 40 bar	ANSI 1/2 MNPT	PN 40	1.43

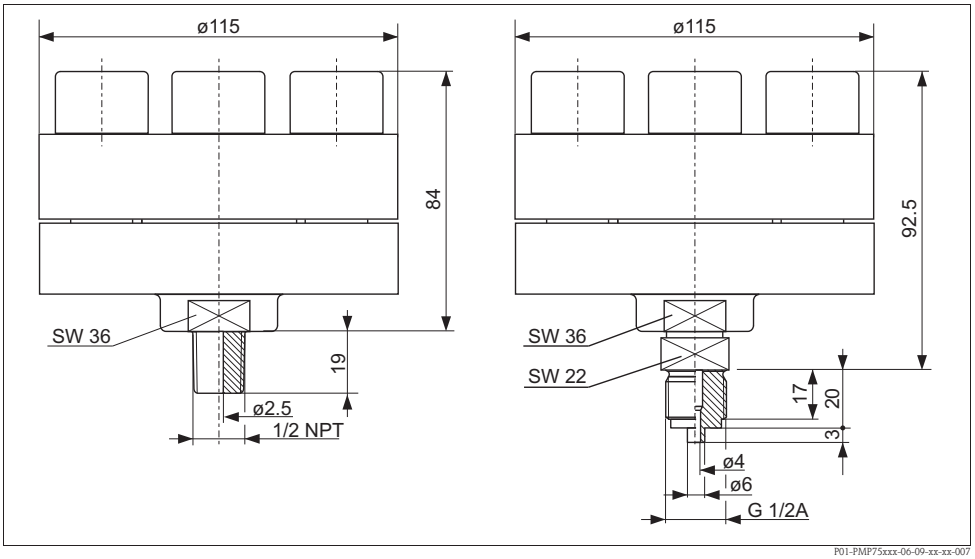

Process connection PMP55, version "UDJ" and "UEJ", threaded, with integrated seal lip, material AISI 316L

Version	Measuring range	Description	Nominal pressure	Diaphragm seal weight [kg]
UDJ	> 40 bar	ISO 228 G 1/2 A	PN 400	4.75
UEJ	> 40 bar	ANSI 1/2 MNPT	PN 400	4.75

Process connections PMP55 (with diaphragm seal) – continued

Universal adapter

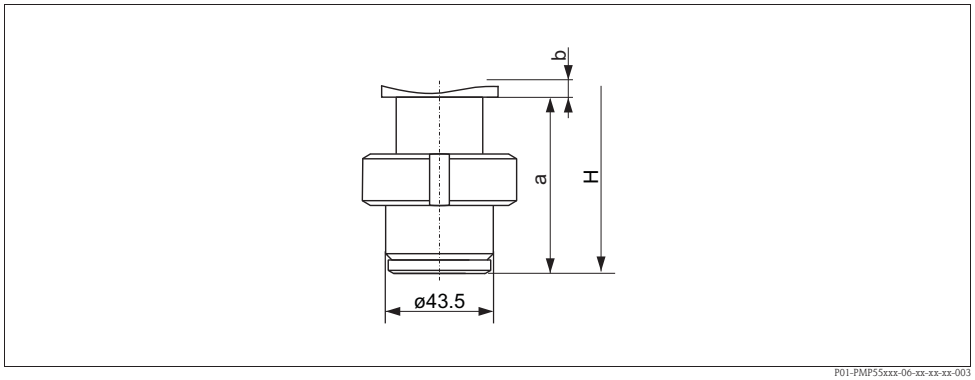

Material: b = top section AISI 316L (1.4404), a = bottom section AISI 316L (1.4435);
Surface roughness of the surfaces in contact with the medium $R_a \leq 0.76$ µm (30 µin) as standard. Lower surface roughness available on request.

Process connection PMP55, version UPJ [1]: universal adapter incl. silicone molded seal, EHEDG, 3A Class I, FDA 21 CFR 177.2600, USP Plastic Class VI-70C; Order no.: 52023572

Installation height H, devices with universal adapter

	F31 housing	F15 housing
Universal adapter	196 mm (7.72 in)	189 mm (7.44 in)

1) Endress+Hauser supplies these slotted nuts in stainless steel AISI 304 (DIN/EN material number 1.4301) or in AISI 304L (DIN/EN material number 1.4307).

Wall and pipe mounting with mounting bracket

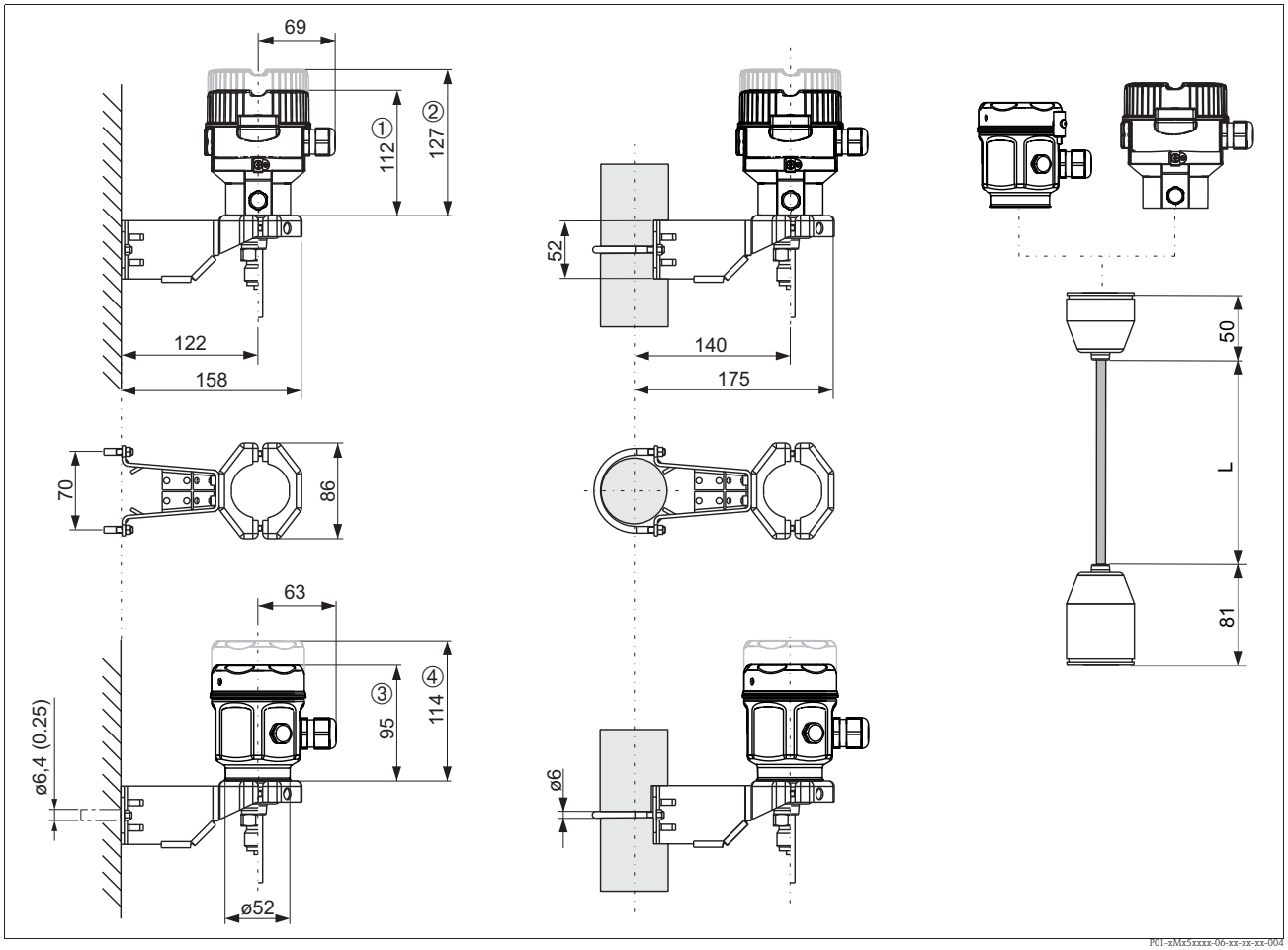

L: PE-cable 2 m (6.6 ft), 5 m (16 ft) or 10 m (33 ft). FEP-cable 5m (16 ft).

F31 housing dimensions. Housing weight → 66. ① Cover without viewing window. ② Cover with viewing window.

F15 housing dimensions. Housing weight → 66. ③ Cover without viewing window. ④ Cover with viewing window.

Weight

Housing

	F31 (aluminum)	F15 (stainless steel)	Separate housing
With electronic insert and local display	1.1 kg (2.43 lbs)	0.8 kg (1.76 lbs)	Weight of housing + 0.5 kg (1.10 lbs). Weight of sensor + 0.5 kg (1.10 lbs).
With electronic insert without local display	1.0 kg (2.21 lbs)	0.7 kg (1.54 lbs)	

Process connections

- Process connections PMC51 (with ceramic process isolating diaphragm): → 33 ff
- Process connections PMP51 (with metallic process isolating diaphragm): → 42 ff
- Process connections PMP55 (with diaphragm seal): → 50 ff

Material (not wetted)

Housing

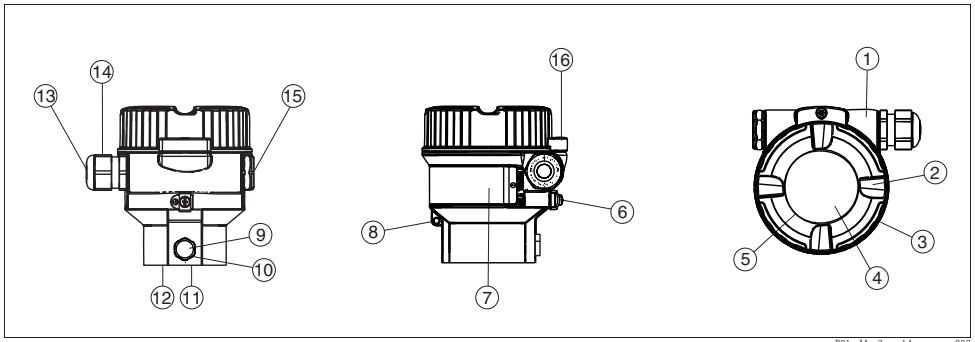

Front view, left-hand side view, top view

Item number	Component part	Material
1	F31 housing, RAL 5012 (blue)	Die-cast aluminum with protective powder-coating on polyester base
2	Cover, RAL 7035 (gray)	Die-cast aluminum with protective powder-coating on polyester base
3	Cover seal	EPDM
4	Sight glass	Mineral glass
5	Sight glass seal	Silicone (VMQ)
6	External ground terminal	AISI 304 (1.4301)
7	Nameplates	Plastic film
8	Attachement for tie-on label	AISI 304 (1.4301)/ AISI 316 (1.4401)
9	Pressure compensation filter	PA6 GF10
10	Pressure compensation filter, O-ring	Silicone (VMQ)
11	Sealing ring	EPDM
12	Snap ring	PC Plastic
13	Seal of cable gland and blind plug	EPDM/NBR
14	Cable gland	Polyamide (PA) or CuZn nickel-plated
15	Blind plug	PBT-GF30 FR
		for dust ignition-proof, Ex d, FM XP and CSA XP: AISI 316L (1.4435)
16	Cover clamp	Clamp AISI 316L (1.4435), screw A4

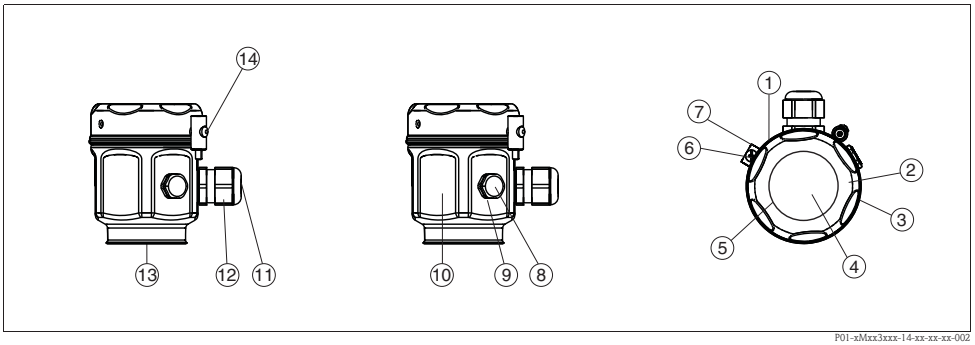

Front view, left-hand side view, top view

Item number	Component part	Material
1	F15 housing	AISI 316L (1.4404)
2	Cover	
3	Cover seal	Silicone with PTFE coating
4	Sight glass for non-hazardous area, ATEX Ex ia, NEPSI Zone 0/1 Ex ia, IECEx Zone 0/1 Ex ia, FM NI, FM IS, CSA IS	Polycarbonate (PC)
4	Sight glass for ATEX 1/2 D, ATEX 1/3 D, ATEX 1 GD, ATEX 1/2 GD, ATEX 3 G, FM DIP, CSA dust ignition-proof	Mineral glass
5	Sight glass seal	Silicone (VMQ)
6	External ground terminal	AISI 304 (1.4301)
7	Attachement for tie-on label	AISI 304 (1.4301)/ AISI 316 (1.4401)
8	Pressure compensation filter	PA6 GF10
9	Pressure compensation filter, O-ring	Silicone (VMQ)
10	Nameplates	lasered
11	Cable gland	Polyamide (PA), for dust ignition-proof: CuZn nickel-plated
12	Seal of cable gland and blind plug	NBR/Silicone/EPDM
13	Sealing ring	EPDM
14	Screw	A4-50

Connecting parts

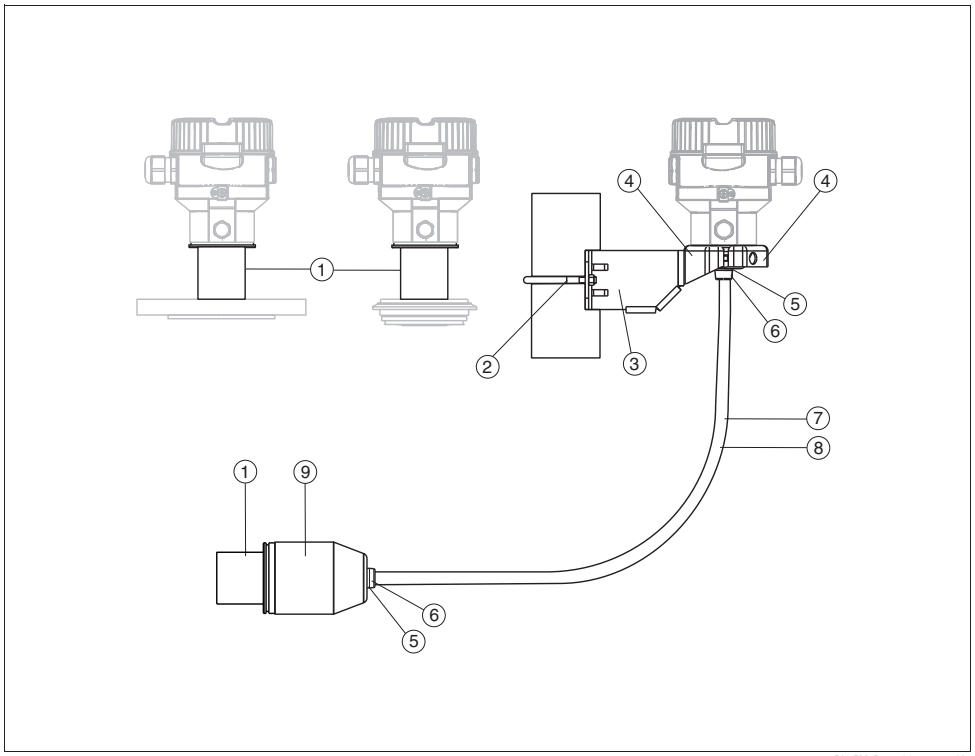

P01-PMx5xxxx-06-xx-xx-xx-026

Item number	Component part	Material
1	Connection between the housing and process connection	AISI 316L (1.4404)
2	Mounting bracket	Bracket AISI 304 (1.4301), AISI 304L (1.4306)
3		Screw and nuts A2-70
4		Half-shells: AISI 304L (1.4306)
5	Seal for cable from separate housing	FKM, EPDM
6	Gland for cable from separate housing: Screws:	AISI 316L (1.4404) A2 or A4
7	PE cable for separate housing	Abrasion-proof cable with strain-relief Dynema members; shielded using aluminum-coated film; insulated with polyethylene (PE-LD), black; copper wires, twisted, UV-resistant
8	FEP cable for separate housing	Abrasion-proof cable; shielded using galvanized steel wire netting; insulated with fluorinated ethylene propylene (FEP), black; copper wires, twisted, UV-resistant
9	Process connection adapter for separate housing	AISI 316L (1.4404)

Filling oil

See "Ordering information" (→ 82)

Miscellaneous:

- Diaphragm seal capillary: AISI 316 Ti (1.4571)
- Protective hose for diaphragm seal capillary: AISI 304 (1.4301)

Material (wetted)

Note!
The wetted device components are listed in the "Mechanical construction" (→ 📄 33 ff) and "Ordering information" (→ 📄 82 ff) sections.

TSE Certificate of Suitability (Transmissible Spongiform Encephalopathy)

The following applies to all process wetted device components:
- They do not contain any materials derived from animals.
- No auxiliaries or operating materials derived from animals are used in production or processing.

Process connections

- "Clamp connections" and "Hygienic process connections" (see also "Ordering information" section): AISI 316L (DIN/EN material number 1.4435)
- Endress+Hauser supplies process connections with threaded connections and DIN/ EN flanges made of stainless steel as per AISI 316L (DIN/EN material number 1.4404 (AISI 316) or 14435). With regard to their stability-temperature property, the materials 1.4404 and 1.4435 are grouped together under 13E0 in EN 1092-1 Tab.18. The chemical composition of the two materials can be identical.
- Some process connections are also available in the material Alloy C276 (DIN/EN material number 2.4819). See the information in the "Mechanical construction" section.

Process isolating diaphragm

- PMC51: Al_2O_3 aluminum-oxide ceramic, Ceraphire® (FDA 21 CFR 186.1256, USP Class VI), ultrapure 99.9 % (→ see also www.endress.com/ceraphire)
- PMP51:
  - AISI 316L (DIN/EN material number 1.4435)
  - AISI 316L with gold-rhodium coating
  - Alloy C276 (DIN/EN material number 2.4819)
- PMP55:
  - AISI 316L (DIN/EN material number 1.4435)
  - AISI 316L with gold-rhodium coating
  - AISI 316L with 0.09 mm PTFE foil (not for vacuum applications)
  - AISI 316L with 0.25 mm PTFE foil (not for vacuum applications)
  - Alloy C276 (DIN/EN material number 2.4819)
  - Monel
  - Tantalum

Seals

See ordering information, → 📄 82 ff

Human interface

Operating elements

Local display (optional) for devices with HART, PROFIBUS PA or FOUNDATION Fieldbus electronics

A 4-line liquid crystal display (LCD) is used for display and operation. The local display shows measured values, dialog texts as well as fault and notice messages in plain text, thereby supporting the user at every stage of operation. The liquid crystal display of the device can be turned in 90° stages.
Depending on the orientation of the device, this makes it easy to operate the device and read the measured values.

Functions:

- 8-digit measured value display including sign and decimal point, bar graph for 4 to 20 mA HART as current display; or for PROFIBUS PA as graphic display of the standardized value of the AI Block; for FOUNDATION Fieldbus as graphic display of the transducer output in relation to the set pressure range.
- Three keys for operation
- Simple and complete menu guidance as parameters are split into several levels and groups
- Each parameter is given a 3-digit ID number for easy navigation
- Possibility of configuring the display to suit individual requirements and preferences, such as language, alternating display, contrast setting, display of other measured values such as sensor temperature etc.
- Comprehensive diagnostic functions (fault and warning message etc.)

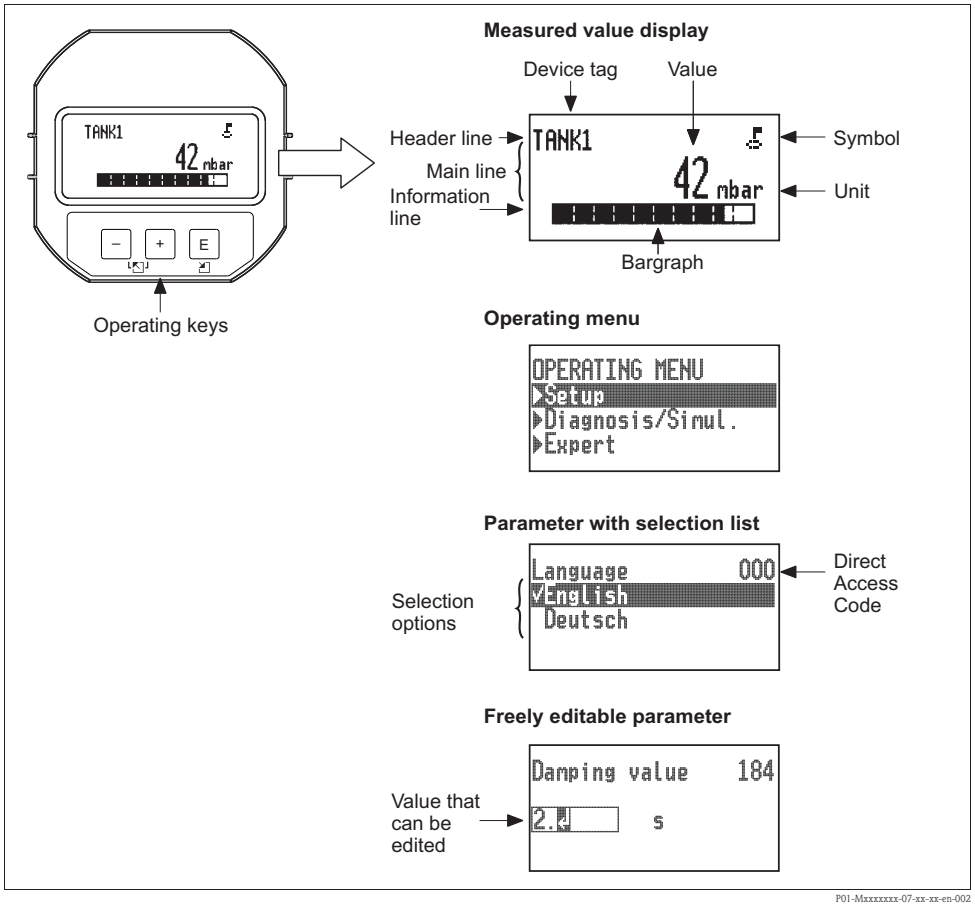

Local display (optional) for devices with analog electronics

A 4-line liquid crystal display (LCD) is used. The local display shows measured values, fault messages and notice messages. The liquid crystal display of the device can be turned in 90° stages.
Depending on the orientation of the device, this makes it easy to operate the device and read the measured values.

Functions:
- 8-digit measured value display including sign and decimal point, bar graph for 4 to 20 mA as current display.
- Diagnostic functions (fault and warning message etc.)

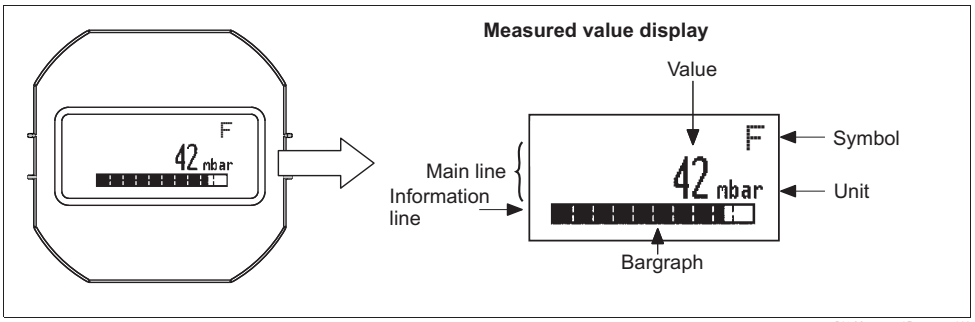

Operating keys and elements located on the electronic insert

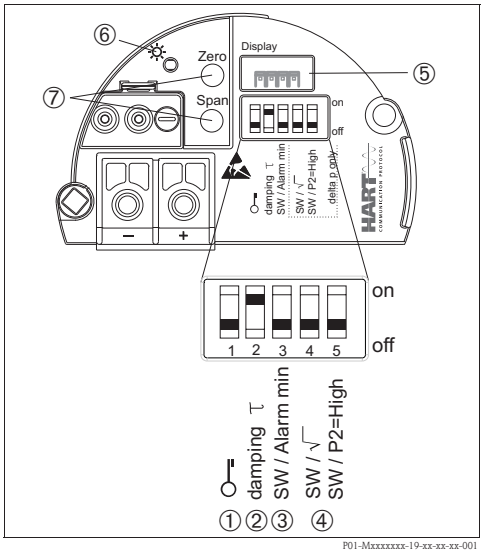

HART electronic insert

1 *DIP switch for locking/unlocking parameters relevant to the measured value*
2 *DIP switch for switching damping on/off*
3 *DIP switch for alarm current SW / Alarm Min (3.6 mA)*
4 *DIP switch only for Deltabar M*
5 *Slot for optional local display*
6 *Green LED to indicate successful operation*
7 *Operating keys for lower range value (zero), upper range value (span), position zero adjustment or reset*

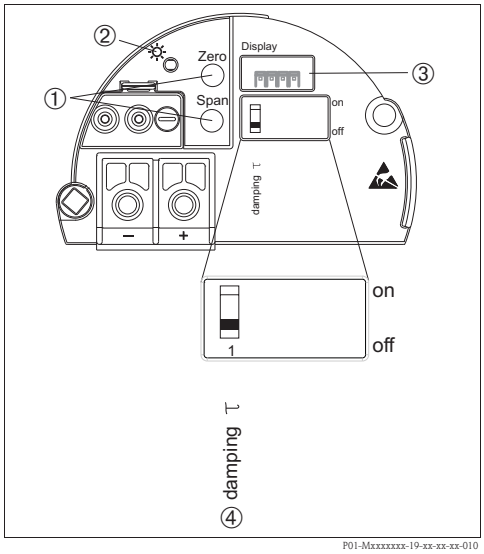

Analog electronic insert

1 *Operating keys for lower range value (zero), upper range value (span), position zero adjustment or reset*
2 *Green LED to indicate successful operation*
3 *Slot for optional local display*
4 *DIP switch for switching damping on/off*

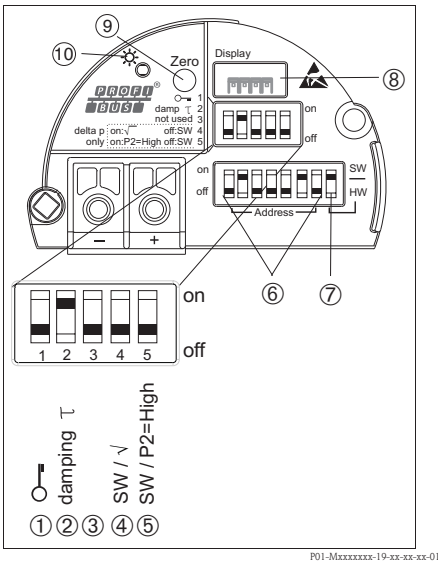

P01-Mxxxxxxx-19-xx-xx-xx-013

PROFIBUS PA electronic insert

1 DIP switch for locking/unlocking parameters relevant to the measured value
2 DIP switch for switching damping on/off
3/4/5 Not used
6 DIP-switch for hardware address
7 DIP-switch for bus address SW / HW
8 Slot for optional local display
9 Operating key for position zero adjustment (Zero) or reset
10 Green LED to indicate successful operation

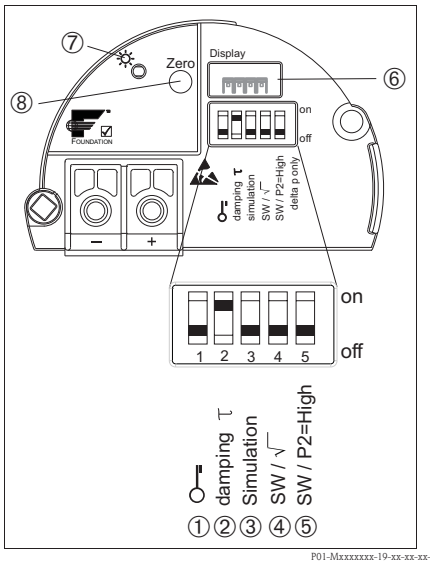

P01-Mxxxxxxx-19-xx-xx-xx-014

FOUNDATION Fieldbus electronic insert

1 DIP switch for locking/unlocking parameters relevant to the measured value
2 DIP switch for switching damping on/off
3 DIP-switch for simulation mode
4/5 Not used
6 Slot for optional local display
7 Green LED to indicate successful operation
8 Operating key for position zero adjustment (Zero) or reset

Onsite operation

Function	Operation without display with operating keys and DIP-switches on the electronic insert			
	Analog electronics	HART	PROFIBUS PA	FOUNDATION Fieldbus
Position adjustment (zero point correction)	X	X	X	X
Setting lower range value and upper range value – reference pressure present at the device	X	X	–	–
Device reset	X	X	X	X
Locking and unlocking parameters relevant to the measured value	–	X	X	X
Value acceptance indicated by the green LED	X	X	X	X
Switching damping on and off	X	X	X	X

Function	Operation via display (option)			
	Analog electronics	HART	PROFIBUS PA	FOUNDATION Fieldbus
Position adjustment (zero point correction)	–	X	X	X
Setting lower range value and upper range value – reference pressure present at the device	–	X	X	X
Device reset	–	X	X	X
Locking and unlocking parameters relevant to the measured value	–	X	X	X
Value acceptance indicated by the green LED	–	–	–	–
Switching damping on and off	–	X	X	X

Remote operation

All software parameters are accessible depending on the position of the write protection switch on the device.

HART

Remote operation via:
- FieldCare (see "Hardware and software for onsite and remote operation" section → 📄 75 ff) with Commubox FXA195 (see "Hardware and software for onsite and remote operation" section → 📄 75 ff)
- Field Xpert SFX100. Field Xpert is an industrial PDA with integrated 3.5" touchscreen from Endress+Hauser based on Windows Mobile. It communicates via wireless with the optional VIATOR Bluetooth modem connected to a HART device point-to-point or wireless via WiFi and Endress+Hauser's Fieldgate FXA520. Field Xpert also works as a stand-alone device for asset management applications. For details refer to BA00060S/00/EN.

PROFIBUS PA

Remote operation via:
- FieldCare (see "Hardware and software for onsite and remote operation" section → 📄 75 ff)
  - Profiboard: For connecting a PC to PROFIBUS
  - Proficard: For connecting a laptop to PROFIBUS

FOUNDATION Fieldbus

Remote operation via:
- FieldCare (see "Hardware and software for onsite and remote operation" → 📄 75 ff)
  - NI PCMCIA-FBUS series 2 to connect a laptop to FF.
- Use an FF-configuration program for example NI-FBUS Configurator, to
  - connect devices with "FOUNDATION Fieldbus signal" into an FF-network
  - set FF-specific parameters

  Operation with NI-FBUS Configurator:
  The NI-FBUS Configurator is an easy-to-use graphical environment for creating linkages, loops, and a schedule based on the fieldbus concepts.
  You can use the NI-FBUS Configurator to configure a fieldbus network as follows:
  - Set block and device tags
  - Set device addresses
  - Create and edit function block control strategies (function block applications)
  - Configure vendor-defined function and transducer blocks
  - Create and edit schedules
  - Read and write to function block control strategies (function block applications)
  - Invoke Device Description (DD) methods
  - Display DD menus
  - Download a configuration
  - Verify a configuration and compare it to a saved configuration
  - Monitor a downloaded configuration
  - Replace a virtual device by a real device
  - Save and print a configuration

Note!
For further information please contact your local Endress+Hauser Sales Center.

Hardware and software for onsite and remote operation

Commubox FXA195

For intrinsically safe HART communication with FieldCare via the USB interface. For details refer to TI00404F/00/EN.

Field Xpert SFX100

Compact, flexible and robust industry handheld terminal for remote parametrization and measured value inspection via the HART current output (4-20mA).
For details refer to Operating Instructions BA00060S/04/EN.

FieldCare

FieldCare is an Endress+Hauser asset management tool based on FDT technology. With FieldCare, you can configure all Endress+Hauser devices as well as devices from other manufacturers that support the FDT standard.

FieldCare supports the following functions:
- Configuration of transmitters in offline and online mode
- Loading and saving device data (upload/download)
- Documentation of the measuring point

Connection options:
- HART via Commubox FXA195 and the USB port on a computer
- PROFIBUS PA via segment coupler and PROFIBUS interface card
- FOUNDATION Fieldbus via NI interface card

For further information → www.endress.com

Planning instructions for diaphragm seal systems

Note!
The performance and the permitted applications for a diaphragm seal system depend on the process isolating diaphragm used, the filling oil, the coupling, the design and the process and ambient conditions at the place of operation.
To help you select suitable diaphragm seal systems for your individual application,
Endress+Hauser provides a free "Applicator Sizing Diaphragm Seal" selection tool. This tool is available online at "www.endress.com/applicator", or is available offline on a CD.

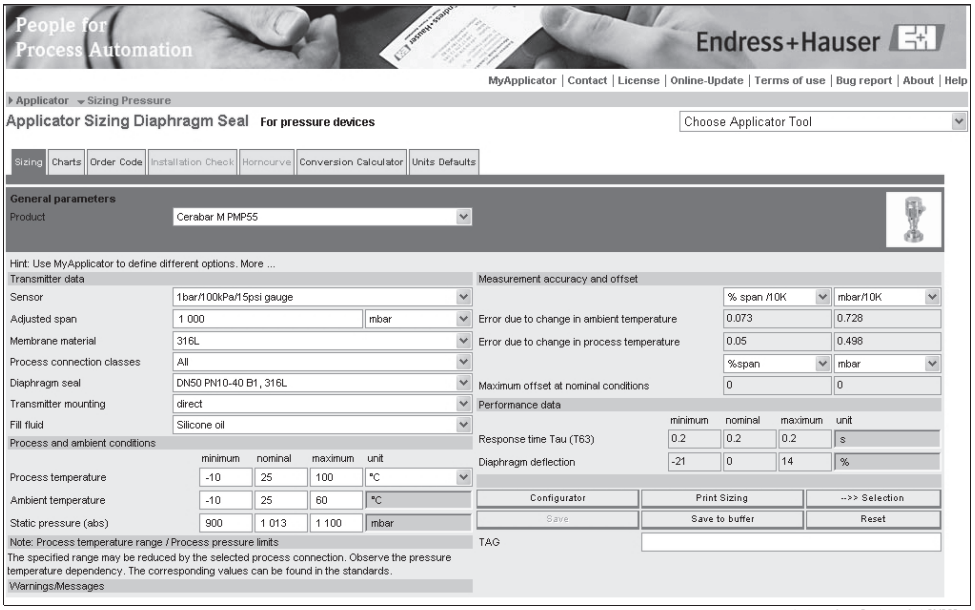

Applicator Sizing Diaphragm Seal PMP55-en

For further details, or for information on an optimum diaphragm seal solution, please contact your local Endress+Hauser Sales Center.

Applications

Diaphragm seal systems should be used if the process and the device need to be separated. Diaphragm seal systems offer clear advantages in the following instances:
- In the case of extreme process temperatures
- For aggressive media
- If extreme measuring point cleaning is necessary, or in the event of very damp mounting locations
- If the measuring point is exposed to severe vibrations
- For mounting locations that are difficult to access

Function and design

Diaphragm seals separate the measuring system from the process.

A diaphragm seal system consists of:
- A diaphragm seal
- A capillary tube or a temperature isolator if necessary
- Fill fluid
- A pressure transmitter

The process pressure acts via the process isolating diaphragm of a diaphragm seal on the liquid-filled system, which transfers the process pressure to the sensor of the pressure transmitter.
Endress+Hauser delivers all diaphragm seal systems as welded versions. The system is hermetically sealed, which ensures greater reliability.

The diaphragm seal determines the application range of the system on the basis of
- The diameter of the process isolating diaphragm
- The process isolating diaphragm: stiffness and material
- The design (oil volume)

Diameter of the process isolating diaphragm

The greater the diameter of the process isolating diaphragm (less stiff), the smaller the temperature effect on the measurement result.

Stiffness of the process isolating diaphragm

The stiffness depends on the diameter of the process isolating diaphragm, the material, any existing coating, the thickness of the process isolating diaphragm and the shape. The thickness of the process isolating diaphragm and the shape are determined by the design. The stiffness of a process isolating diaphragm of a diaphragm seal influences the temperature application range and the measuring error caused by temperature effects.

Capillary

Capillaries with an internal diameter of 1 mm (0.04 in) are used as standard.
As a result of its length and internal diameter, the capillary tube influences the thermal change, the ambient temperature application range and the response time of a diaphragm seal system.

Filling oil

When selecting the filling oil, the medium temperature and ambient temperature, as well as the process pressure, are of crucial importance. Observe the temperatures and pressures during commissioning and cleaning. A further selection criterion is the compatibility of the filling oil with the requirements of the medium. For example, only filling oils that do not present a health hazard are used in the food industry, e.g. vegetable oil or silicone oil. → See also the following section "Diaphragm seal filling oils".
The filling oil used influences the thermal change, the temperature application range of a diaphragm seal system and the response time. A temperature change results in a volume change in the filling oil. The volume change depends on the thermal expansion coefficient of the filling oil and on the volume of the fill fluid at calibration temperature (constant in the range: +21 to +33°C (+70 to 91°F)).
For example, the filling oil expands in the event of a temperature increase. The additional volume presses against the process isolating diaphragm of a diaphragm seal. The stiffer a process isolating diaphragm is, the greater its return force, which counteracts a volume change and acts together with the process pressure on the measuring cell, thus shifting the zero point.

Pressure transmitter

The pressure transmitter influences the temperature application range, the thermal change and the response time as a result of its volume change. The volume change is the volume that has to be shifted in order to pass through the complete measuring range.
Pressure transmitters from Endress+Hauser are optimized with regard to minimum volume change.

Diaphragm seal filling oils

Version[1]	Filling oil	Permissible temperature range [2] at 0.05 bar (0.725 psi) ≤ p_{abs} ≤ 1 bar (14.5 psi)	Permissible temperature range [2] at p_{abs} ≥ 1 bar (14.5 psi)	Density [g/cm³] / [SGU]	Viscosity [mm²/s] / [cSt] at 25°C (77°F)	Thermal expansion coefficient [3] [1/K]	Note
1	Silicone oil	–40 to +180°C (–40 to +356°F)	–40 to +250°C (–40 to +482°F)	0.96	100	0.00096	Suitable for foods FDA 21 CFR 175.105
2	Inert oil	–40 to +80°C (–40 to +176°F)	–40 to +175°C (–40 to +347°F)	1.87	27	0.000876	For ultrapure gas and oxygen applications
4	Vegetable oil	–10 to +120°C (+14 to +248°F)	–10 to +200°C (+14 to +392°F)	0.94	9.5	0.00101	Suitable for foods FDA 21 CFR 172.856
5	High-temperature oil [4]	–10 to +200°C (+14 to +392°F)	–10 to +400°C (+14 to +752°F)	1.07	37	0.0007	High temperatures
6	Low-temperature oil	–70 to +80°C (–94 to +176°F)	–70 to +180°C (–94 to +356°F)	0.92	4.4	0.00108	Low temperatures

1) Version for feature 180 in the order code (→ 92 ff)

2) Observe temperature limits of the device (→ 31) and of the system (→ 76).

3) Please refer to the "Applicator Sizing Diaphragm Seal" tool for the thermal change of the diaphragm seal and other important technical features.

4) When simultaneously applying the diaphragms seal at high process temperatures and low absolute pressures, Endress+Hauser recommends the vacuum service (Feature 570 "Service" version "HG").

Operating temperature range

The operating temperature range of a diaphragm seal system depends on the fill fluid, capillary length and internal diameter, process temperature and oil volume of the diaphragm seal.
The range of application can be extended by using a fill fluid with a smaller expansion coefficient and a shorter capillary.

Installation instructions

Diaphragm seal systems

- Endress+Hauser offer flushing rings as accessory to clean process isolating diaphragms without taking the transmitters out of process.
  For further information please contact your local Endress+Hauser Sales Center.
- A diaphragm seal together with the transmitter form a closed, calibrated system, which is filled through openings in the diaphragm seal and in the transmitter's measurement system. These openings are sealed and must not be opened.
- In the case of devices with diaphragm seals and capillaries, the zero point shift caused by the hydrostatic pressure of the filling liquid column in the capillaries must be taken into account when selecting the measuring cell. If a measuring cell with a small measuring range is selected, a position adjustment can cause range violation.
- For devices with a temperature isolator or capillary, a suitable fastening device (mounting bracket) is recommended.
- When using diaphragm seal systems with a capillary, sufficient strain relief must be ensured in order to prevent the capillary bending down (bending radius ≥ 100 mm (3.94 in)).

Capillary

In order to obtain more precise measurement results and to avoid a defect in the device, mount the capillaries as follows:

- Vibration-free (in order to avoid additional pressure fluctuations)
- Not in the vicinity of heating or cooling lines
- Insulate if the ambient temperature is below or above the reference temperature
- With a bending radius of ≥ 100 mm (3.94 in).

Vacuum applications

For applications under vacuum, Endress+Hauser recommends mounting the pressure transmitter below the diaphragm seal. This prevents vacuum loading of the diaphragm seal caused by the presence of fill fluid in the capillary.

When the pressure transmitter is mounted above the diaphragm seal, the maximum height difference H1 in accordance with the illustration below must not be exceeded. The maximum height difference depends on the density of the filling oil and the smallest ever pressure that is permitted to occur at the diaphragm seal (empty container), see illustration below right.
When simultaneously applying the diaphragm seal systems at high process temperatures and low absolute pressures, Endress+Hauser recommends the vacuum service (Feature 570 "Service" version "HG").

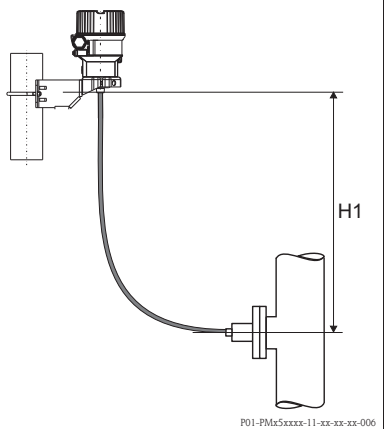

Installation above the diaphragm seal

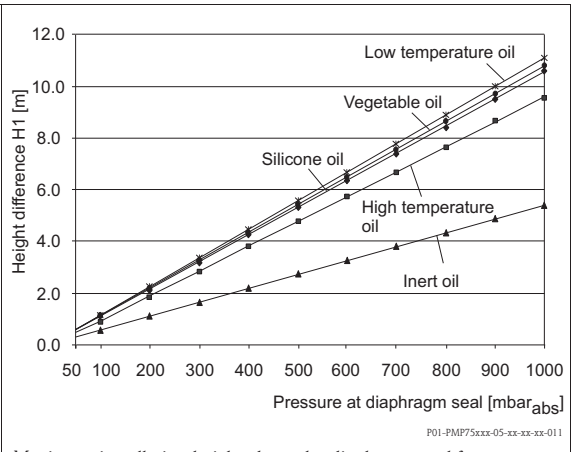

Maximum installation height above the diaphragm seal for vacuum applications

Thermal insulation

The PMP55 may only be insulated up to a certain height. The maximum permitted insulation height is indicated on the devices and applies to an insulation material with a heat conductivity ≤ 0.04 W/(m x K) and to the maximum permitted ambient and process temperature. The data were determined under the most critical application "quiescent air".

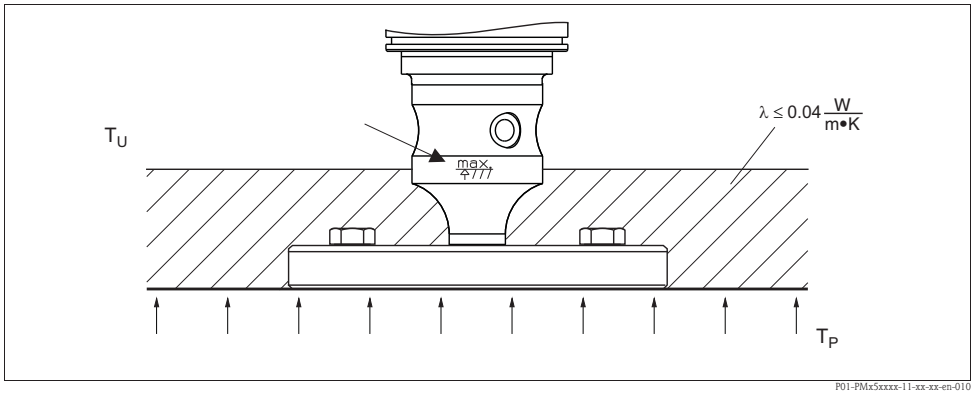

Maximum permitted insulation height, here indicated on a PMP55 with a flange

Mounting with temperature isolator

Endress+Hauser recommends the use of temperature isolators in the event of constant extreme medium temperatures which lead to the maximum permissible electronics temperature of +85°C (+185°F) being exceeded.
Depending on the filling oil used, diaphragm seal systems with temperature isolators can be used for maximum temperatures of up to 260 °C (+500 °F). → For the temperature application limits, see → 77, "Diaphragm seal filling oils" section.
To minimize the influence of rising heat, Endress+Hauser recommends the device be mounted horizontally or with the housing pointing downwards.
The additional installation height also brings about a maximum zero point shift of 21 mbar (0.315 psi) due to the hydrostatic column in the temperature isolator. You can correct this zero point shift at the device.

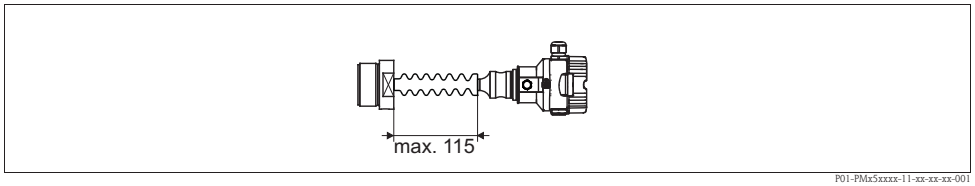

PMP55 with temperature isolator

Certificates and approvals

CE mark

The device meets the legal requirements of the relevant EC directives.
Endress+Hauser confirms that the device has been successfully tested by applying the CE mark.

Ex approvals

- ATEX
- IECEx
- FM
- CSA
- Also combinations of different approvals

All explosion protection data are given in separate documentation which is available upon request. The Ex documentation is supplied as standard with all devices approved for use in explosion hazardous areas.
→ 98 ff, "Safety Instructions" and "Installation/Control Drawings" sections.

Suitability for hygienic processes

The Cerabar M is suitable for use in hygienic processes.
Overview of suitable process connections → 33 ff.
Many versions meet the requirements of 3A-Sanitary Standard No. 74 and are certified by the EHEDG.
Suitable fittings and seals must be used for hygienic design in accordance with 3A and EHEDG specifications.
Note!
Gap-free connections can be cleaned without residue using the usual cleaning methods.





Pharma (CoC)

Certificate of Compliance (CoC) (according to ASME BPE-2007)

See "Ordering information", → 82 ff, feature 590 "Additional Option:", option"LW".

Functional safety SIL

The Cerabar M with 4 to 20 mA output signal has been developed to assessed and certified by TÜV NORD CERT as per IEC 61508 Edition 2.0 and IEC 61511. These devices can be used to monitor the process level and pressure up to SIL 2. For a detailed description of the safety functions with Cerabar M, settings and functional safety data, see the "Functional safety manual - Cerabar M" SD00347P. Ordering Information
→ 82 ff, feature 590 "Additional Approval:" version LA "SIL".

Marine approval

- DNV (Det Norske Veritas)
- GL (German Lloyd)

CRN approvals

Some device versions have CRN approval. For a CRN-approved device, a CRN-approved process connection (→ 33 ff, "Process connection") has to be ordered with a CSA approval (→ 82 ff, feature 10 "Approval"). PMP55 devices with a capillary are not CRN-approved. These devices are fitted with a separate plate bearing the registration number 0F10525.5C.

Pressure Equipment Directive (PED)

The devices PMC51, PMP51 and PMP55 correspond to Article 3 (3) of the EC directive 97/23/EC (Pressure Equipment Directive) and have been designed and manufactured according to good engineering practice.

The following also applies:
– PMP51/PMP55 with threaded connection and internal process isolating diaphragm PN > 200:
  Suitable for stable gases in group 1, category I
– PMP55 with pipe diaphragm seal ≥ 1.5"/PN40:
  Suitable for stable gases in group 1, category II
– PMP55 with separators PN400:
  Suitable for stable gases in group 1, category I

Drinking water approval

NSF 61 approval

Standards and guidelines	DIN EN 60770 (IEC 60770): Transmitters for use in industrial process control systems Part 1: Methods for inspection and routine testing DIN 16086: Electrical pressure measuring instruments, pressure sensors, pressure transmitters, pressure measuring instruments, concepts, specifications on data sheets EN 61326 series: EMC product family standard for electrical equipment for measurement, control and laboratory use.
North-American practice for installation of process seals	Endress+Hauser instruments are designed according to ANSI/ISA 12.27.01 either as single seal or dual seal devices with annunciation, allowing the user to waive the use and save the cost of installing external secondary process seals in the conduit as required by the process sealing sections of ANSI/NFPA 70 (NEC) and CSA 22.1 (CEC). These instruments comply with the North-American installation practice and provide a very safe and cost-saving installation for pressurized applications with hazardous fluids. Further information can be found in the control drawings of the relevant devices.

Ordering information

PMC51

This overview does not mark options which are mutually exclusive.

10	**Approval:**	
	AA	For non-hazardous areas
	BA	ATEX II 1/2G Ex ia IIC T6
	BB	ATEX II 1/2D Ex t IIIC
	BD	ATEX II 3G Ex nA IIC T6
	BE	ATEX II 2G Ex ia IIC T6
	BF	ATEX II 1/2D Ex ia IIIC
	BG	ATEX II 3G Ex ic IIC T6
	B1	ATEX II 1/2G Ex ia IIC T6 + ATEX II 1/2D Ex iaD
	8C	ATEX II Ex ia + FM/CSA IS ATEX II 1/2G Ex ia IIC T6+ FM/CSA IS Cl.I Div. 1 Gr. A-D FM/CSA: zone0,1,2
	IA	IEC Ex ia IIC T6 Ga/Gb
	IE	IEC Ex ic IIC T6 Gc
	IF	IEC Ex ia IIIC Da/ Db
	I1	IEC Ex ia IIC T6 Ga/Gb+Ex ia IIIC Da/Db
	NA	NEPSI Ex ia IIC T6
	TA	TIIS Ex ia IIC T4
	CA	CSA C/US IS Cl.I,II,III Div.1 Gr. A-G, CSA C/US IS Cl.I Div.2 Gr. A-D, Ex ia, C: Zone 0, 1, 2/US: Zone 0, 1, 2, 20, 21, 22
	CD	CSA General Purpose
	FA	FM IS Cl.I,II,III Div.1 Gr.A-G, AEx ia FM NI Cl.I Div.2 Gr.A-D FM IS: Zone 0,1,2,20,21,22/FM NI: Zone 2
	FD	FM NI Cl.I Div.2 Gr.A-D
	99	Special version
20	**Output:**	
	1	4-20mA Analog
	2	4-20mA HART
	3	PROFIBUS PA
	4	FOUNDATION Fieldbus
	9	Special version
30	**Display, operation:**	
	1	LCD, push buttons on display electronics
	2	W/o LCD, push buttons on electronics
	9	Special version
40	**Housing:**	
	I	F31 aluminum
	J	F31 aluminum, glass window
	Q	F15 Stainless Steel Hygiene
	R	F15 Stainless Steel Hygiene, glass window
	S	F15 Stainless Steel Hygiene, plastic window
	Y	Special version
50	**Electrical connection:**	
	A	Gland M20, IP66/68 NEMA4X/6P
	B	Thread M20, IP66/68 NEMA4X/6P
	C	Thread G1/2, IP66/68 NEMA4X/6P
	D	Thread NPT1/2, IP66/68 NEMA4X/6P
	I	Connector M12, IP66/67, NEMA4X/6P
	M	Connector 7/8", IP66/68, NEMA4X/6P
	P	Connector Han7D, 90deg, IP65
	S	PE Cable 5m, IP66/68 NEMA4X/6P + pressure compensation via cable
	V	Valve connector ISO4400 M16, IP64
	Y	Special version

PMC51 (continued)

70	Sensor range:	
	1C	100mbar/10kPa/1.5psi relative, 1mH2O/3ftH2O/40inH2O Overload: 4bar/400kPa/60psi
	1E	250mbar/25kPa/3.75psi relative, 2.5mH2O/7.5ftH2O/100inH2O Overload: 5bar/500kPa/75psi
	1F	400mbar/40kPa/6psi relative, 4mH2O/13ftH2O/160inH2O Overload: 8bar/800kPa/120psi
	1H	1bar/100kPa/15psi relative, 10mH2O/33ftH2O/400inH2O Overload: 10bar/1MPa/150psi
	1K	2bar/200kPa/30psi relative, 20mH2O/67ftH2O/800inH2O Overload: 18bar/1.8MPa/270psi
	1M	4bar/400kPa/60psi relative, 40mH2O/133ftH2O/1600inH2O Overload: 25bar/2.5MPa/375psi
	1P	10bar/1MPa/150psi relative, 100mH2O/333ftH2O/4000inH2O Overload: 40bar/4MPa/600psi
	1S	40bar/4MPa/600psi relative, 400mH2O/1334ftH2O/16000inH2O Overload: 60bar/6MPa/900psi
	2C	100mbar/10kPa/1.5psi abs, 1mH2O/3ftH2O/40inH2O Overload: 4bar/400kPa/60psi
	2E	250mbar/25kPa/3.75psi abs, 2.5mH2O/7.5ftH2O/100inH2O Overload: 5bar/500kPa/75psi
	2F	400mbar/40kPa/6psi abs, 4mH2O/13ftH2O/160inH2O Overload: 8bar/800kPa/120psi
	2H	1bar/100kPa/15psi abs, 10mH2O/33ftH2O/400inH2O Overload: 10bar/1MPa/150psi
	2K	2bar/200kPa/30psi abs, 20mH2O/67ftH2O/800inH2O abs Overload: 18bar/1.8MPa/270psi
	2M	4bar/400kPa/60psi abs, 40mH2O/133ftH2O/1600inH2O abs Overload: 25bar/2.5MPa/375psi
	2P	10bar/1MPa/150psi abs, 100mH2O/333ftH2O/4000inH2O abs Overload: 40bar/4MPa/600psi
	2S	40bar/4MPa/600psi abs, 400mH2O/1334ftH2O/16000inH2O abs Overload: 60bar/6MPa/900psi
	99	Special version

80	Reference accuracy:	
	D	Platinum
	G	Standard
	Y	Special version

90	Calibration; Unit:	
	A	Sensor range; %
	B	Sensor range; mbar/bar
	C	Sensor range; kPa/MPa
	D	Sensor range; mm/mH2O
	E	Sensor range; inH2O/ftH2O
	F	Sensor range; psi
	J	Customized pressure; see additional spec.
	K	Customized level; see additional spec.
	Y	Special version

PMC51 (continued)

110	Process connection:
	ANSI flanges
ACJ	1" 150lbs RF, 316/316L, flange ANSI B16.5 (CRN)
AEJ	1-1/2" 150lbs RF, 316/316L, flange ANSI B16.5 (CRN)
AFF	2" 150lbs RF, PVDF, flange ANSI B16.5
AFJ	2" 150lbs RF, 316/316L, flange ANSI B16.5 (CRN)
AFN	2" 150lbs, ECTFE>316/316L, flange ANSI B16.5
AGF	3" 150lbs RF, PVDF, flange ANSI B16.5 (CRN)
AGJ	3" 150lbs RF, 316/316L, flange ANSI B16.5
AGN	3" 150lbs, ECTFE>316/316L, flange ANSI B16.5
AHJ	4" 150lbs RF, 316/316L, flange ANSI B16.5 (CRN)
AHN	4" 150lbs, ECTFE>316/316L, flange ANSI B16.5
ANJ	1" 300lbs RF, 316/316L, flange ANSI B16.5 (CRN)
AQJ	1-1/2" 300lbs RF, 316/316L, flange ANSI B16.5 (CRN)
ARJ	2" 300lbs RF, 316/316L, flange ANSI B16.5 (CRN)
ASJ	3" 300lbs RF, 316/316L, flange ANSI B16.5 (CRN)
ATJ	4" 300lbs RF, 316/316L, flange ANSI B16.5 (CRN)
	EN flanges
CNJ	DN25 PN10-40 B1, 316L, flange EN1092-1
CPJ	DN32 PN10-40 B1, 316L, flange EN1092-1
CQJ	DN40 PN10-40 B1, 316L, flange EN1092-1
CXJ	DN50 PN10-40 B1, 316L, flange EN1092-1
CFF	DN50 PN10/16 B1, PVDF, flange EN1092-1
CEF	DN40 PN10/16 B1, PVDF, flange EN1092-1
CRP	DN50 PN25/40, ECTFE>316L, flange EN1092-1
CZJ	DN80 PN10-40 B1, 316L, flange EN1092-1
CSP	DN80 PN25/40, ECTFE>316L, flange EN1092-1
	JIS flanges
KFJ	10K 50 RF, 316L, flange JIS B2220
KGJ	10K 80 RF, 316L, flange JIS B2220
KHJ	10K 100 RF, 316L, flange JIS B2220
	Threaded connection
GCC	Thread ISO228 G1/2, AlloyC (CRN)
GCF	Thread ISO228 G1/2, PVDF
GCJ	Thread ISO228 G1/2, 316L (CRN)
GLC	Thread ISO228 G1/2 G1/4 female, AlloyC (CRN)
GLJ	Thread ISO228 G1/2 G1/4 female, 316L (CRN)
GMC	Thread ISO228 G1/2 hole 11.4mm, AlloyC (CRN)
GMJ	Thread ISO228 G1/2 hole 11.4mm, 316L (CRN)
GOJ	Thread JIS B0203 R1/2 male, 316L
GNJ	Thread JIS B0202 G1/2 male, 316L
GVJ	Thread ISO228 G1-1/2, 316L, flush-mounted (CRN)
GWJ	Thread ISO228 G2, 316L, flush-mounted (CRN)
G4J	Thread DIN13 M44x1.25, 316L, flush-mounted
	Threaded connection as per ANSI
RJF	Thread ANSI MNPT1/2 hole 3mm, PVDF (CRN)
RKC	Thread ANSI MNPT 1/2 hole, 11.4mm, Alloy C (CRN)
RKJ	Thread ANSI MNPT1/2 hole 11.4mm, 316L (CRN)
RLC	Thread ANSI MNPT1/2 FNPT1/4, AlloyC (CRN)
RLJ	Thread ANSI MNPT1/2 FNPT1/4, 316L (CRN)
R1C	Thread ANSI FNPT 1/2, Alloy C (CRN)
R1J	Thread ANSI FNPT 1/2, 316L (CRN)
U7J	Thread ANSI MNPT1-1/2, 316L, flush-mounted (CRN)
U8J	Thread ANSI MNPT2, 316L, flush-mounted (CRN)
	Hygienic process connections
MRJ	DIN11851 DN50 PN25 slotted-nut, 316L, EHEDG, 3A with seal FDA (CRN)
MZJ	DIN11851 DN40 PN25 slotted-nut, 316L, EHEDG, 3A with seal FDA (CRN)
NCJ	DIN11864-1 A DN40 PN16 pipe DIN11866-A, slotted-nut, 316L, EHEDG, 3A with seal FDA
NDJ	DIN11864-1 A DN50 PN16 pipe DIN11866-A, slotted-nut, 316L, EHEDG, 3A with seal FDA
TQJ	Varivent F pipe DN25-32 PN40, 316L, EHEDG, 3A with seal FDA
TRJ	Varivent N pipe DN40-162 PN40, 316L, EHEDG, 3A with seal FDA
S4J	NEUMO BioControl D50 PN16, 316L, EHEDG, 3A with seal FDA
TIJ	DRD DN50 65mm PN25, 316L
TMJ	APV Inline DN50 PN40, 316L, 3A with seal FDA
UPJ	Universaladapter 44mm 316L, incl. silicone molded seal, EHEDG, 3A with seal FDA
UNJ	Universaladapter 44mm 316L, EPDM molded seal, EHEDG
TDJ	Tri-Clamp ISO2852 DN40-51 (2"), 316L, DIN32676 DN50, EHEDG, 3A with seal FDA (CRN)
TFJ	Tri-Clamp ISO2852 DN76.1 (3"), 316L, EHEDG, 3A with seal FDA (CRN)

110	Process connection:
YYY	Special version

PMC51 (continued)

190	Seal:
A	FKM Viton
B	FKM Viton, FDA, 3A Class I, USP Class VI
G	HNBR, FDA, 3A Class I, KTW, AFNOR, BAM
F	NBR
H	NBR, Low temperature
J	EPDM, FDA
K	EPDM, FDA, 3A Class II, USP Class VI, DVGW, KTW, W270, WRAS, ACS, NSF61
L	FFKM Kalrez 6375
M	FFKM Kalrez 7075
N	FFKM Kalrez 6221, FDA, USP Class VI
P	Fluoroprene XP40, FDA, USP Class VI, 3A Class I
S	VMQ Silicone, FDA
Y	Special version

Additional ordering information (optional)

500	Additional Operating language:
AA	English
AB	German
AC	French
AD	Spanish
AE	Italian
AF	Dutch
AK	Chinese simplified
AL	Japanese

550	Calibration:
F1	Factory calibration certificate, 5-point
F2	DKD/DAkkS calibration certificate 10-point

570	Service:
HA	Oil and grease removed [1]
HB	Cleaned for oxygen service [1]
HC	Cleaned from PWIS (PWIS = paint wetting impairment substances) [1]
IA	Configured min alarm current
IB	Configured HART Burst Mode PV
I9	Special version
	1) Only device, not accessory or enclosed accessory

580	Test, certificate:
JA	EN10204-3.1 process connection material, inspection certificate
JB	NACE MR0175 process connection
KB	EN10204-3.1 material process conn. +Ra, Ra= surface roughness, dimensional check, inspection certificate
KD	EN10204-3.1 helium leak test, inspection certificate
KE	EN10204-3.1 pressure test, inspection certificate
K9	Special version,

590	Other approvals:
LW	CoC-ASME BPE (CoC = Certificate of Compliance)
LI	DNV marine certificate
LE	GL marine certificate
LA	SIL

600	Separate housing:
MA	Cable PE, 2m/80in + housing mounting bracket, wall/pipe, 304
MB	Cable PE, 5m/200in + housing mounting bracket, wall/pipe, 304
MC	Cable PE, 10m/400in + housing mounting bracket, wall/pipe, 304
MH	Cable FEP, 5m/200in IP69K + housing mounting bracket, wall/pipe, 304

610	Accessory mounted:
NA	Overvoltage protection

620	Accessory enclosed	
PA	Mounting bracket, wall/pipe, 304	
P2	Shutoff valve (PZAV), see additional spec	
	-R1A1	PZAV-R1A1 Shutoff valve, G1/2, C22.8
	-R1A2	PZAV-R1A2 Shutoff valve, G1/2, 316Ti
	-R1D1	PZAV-R1D1 Shutoff valve, NPT1/2, C22.8

620	**Accessory enclosed**		
		-R1D2	PZAV-R1D2 Shutoff valve, NPT1/2, 316Ti
		-B1A2	PZAV-B1A2 Shutoff valve, G1/2, 316Ti, 3.1
		-B1D2	PZAV-B1D2 Shutoff valve, NPT1/2, 316Ti, 3.1
	P4		Siphon (PZW), see additional spec
		-RA21	PZW-RA21 Siphon G1/2 vertical, C22.8 (O-shape)
		-RA22	PZW-RA22 Siphon G1/2 vertical, 316Ti (O-shape)
		-RC11	PZW-RC11 Siphon G1/2 x weld. horiz. C22.8 (U-shape)
		-RD11	PZW-RD11 Siphon NPT1/2 x weld. horiz. C22.8 (U-shape)
		-BB22	PZW-BB22 Siphon NPT1/2 vertical, 316Ti, 3.1 (O-shape)
		-BA22	PZW-BA22 Siphon NPT1/2x weld.vert.316Ti 3.1 (O-shape)
	QJ		Welding neck G1-1/2, 316L
	QK		Welding neck G1-1/2, 316L, 3.1, EN10204-3.1 material, inspection certificate
	QL		Weld-in tool adapter G1-1/2, brass
	QP		Weld-in flange DRD DN50 65mm, 316L
	QR		Weld-in fl. DRD DN50 65mm, 316L 3.1 EN10204-3.1 material, inspection certificate
	QS		Weld-in tool flange DRD DN50 65mm, Brass
	QT		Weld-in adapter Uni D65, 316L
	QU		Weld-in adapter Uni D65, 316L, 3.1 EN10204-3.1 material, inspection certificate
	Q1		Weld-in tool adapter Uni D65/D85, Brass
	Q2		Weld-in adapter Uni D85, 316L
	Q3		Weld-in adapter Uni D85, 316L, 3.1 EN10204-3.1 material, inspection certificate
	RA		Adapter Uni > DIN11851 DN40, 316L, slotted-nut
	RB		Adapter Uni > DIN11851 DN50, 316L, slotted-nut
	RC		Adapter Uni > DRD DN50 65mm, 316L
	RD		Adapter Uni > Clamp 2", 316L
	RE		Adapter Uni > Clamp 3", 316L
	RF		Adapter Uni > Varivent N, 316L
	RH		Adapter Uni > Cherry Burell 2", 316L
	R1		Adapter Uni > DIN11851 DN40, 316L, 3.1, slotted-nut, EN10204-3.1 material, inspection certificate
	R2		Adapter Uni > DIN11851 DN50, 316L, 3.1, slotted-nut, EN10204-3.1 material, inspection certificate
	R3		Adapter Uni > DRD DN50 65mm, 316L, 3.1 EN10204-3.1 material, inspection certificate
	R4		Adapter Uni > Clamp 2", 316L, 3.1 EN10204-3.1 material, inspection certificate
	R5		Adapter Uni > Clamp 3", 316L, 3.1 EN10204-3.1 material, inspection certificate
	R6		Adapter Uni > Varivent, 316L, 3.1 EN10204-3.1 material, inspection certificate
	R7		Adapter Uni > Cherry Burell, 316L, 3.1 EN10204-3.1 material, inspection certificate
	RL		Plug-in jack M12
	RM		Plug-in jack M12, 90deg
	RN		Plug-in jack M12, 90deg+5m cable
	R9		Special version, TSP-no. to be spec.
850	**Firmware version:**		
	78		01.00.zz, HART, DevRev01
895	**Identification:**		
	Z1		Measuring point (TAG), see additional spec.
	Z2		Bus address, see additional spec.

PMP51

This overview does not mark options which are mutually exclusive.

10	**Approval:**	
	AA	For non-hazardous areas
	BA	ATEX II 1/2G Ex ia IIC T6
	BB	ATEX II 1/2D Ex t IIIC
	BC	ATEX II 2G Ex d IIC T6
	BD	ATEX II 3G Ex nA IIC T6
	BE	ATEX II 2G Ex ia IIC T6
	BG	ATEX II 3G Ex ic IIC T6
	B1	ATEX II 1/2G Ex ia IIC T6 + ATEX II 1/2D Ex iaD
	B2	ATEX II 1/2G Ex ia IIC T6 + ATEX II 2G Ex d IIC T6
	8A	ATEX II Ex ia/Ex d + FM/CSA IS + XP ATEX II 1/2G Ex ia IIC T6+ ATEX II 2G Ex d IIC T6+ FM/CSA IS + XP Cl.I, II Div.1 Gr. A-G/B-G, zone 1,2
	8B	FM/CSA IS + XP Cl.I, II Div.1 Gr.A-D/B-G FM IS/FM XP Cl.I, II Div.1 Gr.A-G+ CSA IS/XP Cl.I, II Div.1 Gr.A-G, zone 1,2
	IA	IEC Ex ia IIC T6 Ga/Gb
	IB	IEC Ex d IIC T6 Gb
	ID	IEC Ex t IIIC Da/Db
	IE	IEC Ex ic IIC T6 Gc
	I1	IEC Ex ia IIC T6 Ga/Gb+Ex ia IIIC Da/Db
	NA	NEPSI Ex ia IIC T6
	NB	NEPSI Ex d IIC T6
	TA	TIIS Ex ia IIC T4
	CA	CSA C/US IS Cl.I,II,III Div.1 Gr.A-G, CSA C/US IS Cl.I Div.2 Gr.2 Gr.A-D, Ex ia, zone 0,1,2,20,21,22
	CB	CSA C/US XP Cl.I, II Div.1 Gr.B-G, Ex d (Conduit seal not required), zone 1,2
	CC	CSA C/US Cl.II, III Div.1 Gr.E-G, US: Zone 21,22
	CD	CSA General Purpose
	C1	CSA C/US IS/XP Cl.I, II Div.1 Gr.A-G/B-G, Zone 1,2
	FA	FM IS Cl.I,II,III Div.1 Gr.A-G, AEx ia FM NI Cl.I Div.2 Gr.A-D FM IS: Zone 0,1,2,20,21,22/FM NI: Zone 2
	FB	FM XP Cl.I, II Div.1 Gr.A-D, AEx d (Factory sealed) zone 1,2
	FC	FM DIP Cl.II, III Div.1 Gr.A-D Zone 21,22
	FD	FM NI Cl.I Div.2 Gr.A-D, Zone 2
	F1	FM IS/XP Cl.I, II Div.1 Gr.A-G, Zone 1,2
	99	Special version
20	**Output:**	
	1	4-20mA Analog
	2	4-20mA HART
	3	PROFIBUS PA
	4	FOUNDATION Fieldbus
	9	Special version
30	**Display, operation:**	
	1	LCD, keys on display/electronics
	2	Without LCD, keys on electronics
	9	Special version
40	**Housing:**	
	I	F31 aluminum
	J	F31 aluminum, glass window
	Q	F15 Stainless Steel Hygiene
	R	F15 Stainless Steel Hygiene, glass window
	S	F15 Stainless Steel Hygiene, plastic window
	Y	Special version
50	**Electrical connection:**	
	A	Gland M20, IP66/68 NEMA4X/6P
	B	Thread M20, IP66/68 NEMA4X/6P
	C	Thread G1/2, IP66/68 NEMA4X/6P
	D	Thread NPT1/2, IP66/68 NEMA4X/6P
	I	Connector M12, IP66/67, NEMA4X/6P
	M	Connector 7/8", IP66/68, NEMA4X/6P
	P	Connector Han7D, 90deg, IP65
	S	PE Cable 5m, IP66/68 NEMA4X/6P + pressure compensation via cable
	V	Valve connector ISO4400 M16, IP64

50	**Electrical connection:**	
	Y	Special version

PMP51 (continued)

70	**Sensor range:**	
	1F	400mbar/40kPa/6psi relative, 4mH2O/13ftH2O/160inH2O Overload: 6bar/600kPa/90psi
	1H	1bar/100kPa/15psi relative, 10mH2O/33ftH2O/400inH2O Overload: 10bar/1MPa/150psi
	1K	2bar/200kPa/30psi relative, 20mH2O/67ftH2O/800inH2O Overload: 20bar/2MPa/300psi
	1M	4bar/400kPa/60psi relative, 40mH2O/133ftH2O/1600inH2O Overload: 28bar/2.8MPa/420psi
	1P	10bar/1MPa/150psi relative, 100mH2O/333ftH2O/4000inH2O Overload: 40bar/4MPa/600psi
	1S	40bar/4MPa/600psi relative, 400mH2O/1334ftH2O/16000inH2O Overload: 160bar/16MPa/2400psi
	1U	100bar/10MPa/1500psi relative, 1000mH2O/3330ftH2O/40000inH2O Overload: 400bar/40MPa/6000psi
	1W	400bar/40MPa/6000psi relative, 4000mH2O/13340ftH2O/160000inH2O Overload: 600bar/60MPa/9000psi
	2F	400mbar/40kPa/6psi abs, 4mH2O/13ftH2O/160inH2O Overload: 6bar/600kPa/90psi
	2H	1bar/100kPa/15psi abs, 10mH2O/33ftH2O/400inH2O Overload: 10bar/1MPa/150psi
	2K	2bar/200kPa/30psi abs, 20mH2O/67ftH2O/800inH2O Overload: 10bar/1MPa/150psi
	2M	4bar/400kPa/60psi abs, 40mH2O/133ftH2O/1600inH2O abs Overload: 28bar/2.8MPa/420psi
	2P	10bar/1MPa/150psi abs, 100mH2O/333ftH2O/4000inH2O abs Overload: 40bar/4MPa/600psi
	2S	40bar/4MPa/600psi abs, 400mH2O/1334ftH2O/16000inH2O abs Overload: 160bar/16MPa/2400psi
	2U	100bar/10MPa/1500psi abs, 1000mH2O/3330ftH2O/40000inH2O abs Overload: 400bar/40MPa/6000psi
	2W	400bar/40MPa/6000psi abs, 4000mH2O/13340ftH2O/160000inH2O abs Overload: 600bar/60MPa/9000psi
	99	Special version

80	**Reference accuracy:**	
	D	Platinum
	G	Standard
	Y	Special version

90	**Calibration; Unit:**	
	A	Sensor range; %
	B	Sensor range; mbar/bar
	C	Sensor range; kPa/MPa
	D	Sensor range; mm/mH2O
	E	Sensor range; inH2O/ftH2O
	F	Sensor range; psi
	J	Customized pressure; see additional spec.
	K	Customized level; see additional spec.
	Y	Special version

PMP51 (continued)

110	Process connection:
	ANSI flanges
AEJ	1-1/2" 150lbs RF, 316/316L, flange ANSI B16.5 (CRN)
AFJ	2" 150lbs RF, 316/316L, flange ANSI B16.5 (CRN)
AGJ	3" 150lbs RF, 316/316L, flange ANSI B16.5 (CRN)
AHJ	4" 150lbs RF, 316/316L, flange ANSI B16.5 (CRN)
ANJ	1" 300lbs RF, 316/316L, flange ANSI B16.5 (CRN)
AQJ	1-1/2" 300lbs RF, 316/316L, flange ANSI B16.5 (CRN)
ARJ	2" 300lbs RF, 316/316L, flange ANSI B16.5 (CRN)
ASJ	3" 300lbs RF, 316/316L, flange ANSI B16.5 (CRN)
ATJ	4" 300lbs RF, 316/316L, flange ANSI B16.5 (CRN)
	EN flanges
CNJ	DN25 PN10-40 B1, 316L, flange EN1092-1
CPJ	DN32 PN10-40 B1, 316L, flange EN1092-1
CQJ	DN40 PN10-40 B1, 316L, flange EN1092-1
CXJ	DN50 PN25/40 B1, 316L flange EN1092-1
CZJ	DN80 PN25/40 B1, 316L, flange EN1092-1
	Threaded connection
GCC	Thread ISO228 G1/2, AlloyC
GCJ	Thread ISO228 G1/2, 316L
GLC	Thread ISO228 G1/2 G1/4 female, AlloyC
GLJ	Thread ISO228 G1/2 G1/4 female, 316L
GMC	Thread ISO228 G1/2 hole 11.4mm, AlloyC
GMJ	Thread ISO228 G1/2 hole 11.4mm, 316L
GRC	Thread ISO228 G1/2, AlloyC, flush-mounted
GRJ	Thread ISO228 G1/2, 316L, flush-mounted
GTJ	Thread ISO228 G1, 316L, flush-mounted
GVJ	Thread ISO228 G1-1/2, 316L, flush-mounted
GWJ	Thread ISO228 G2, 316L, flush-mounted
G0J	Thread ISO228 G1/2 seal O-ring, fm= flush-mounted, 316L, adapter 52002643
G1J	Thread DIN13 M20x1.5, 316L
	Threaded connection as per ANSI
RKC	Thread ANSI MNPT1/2 hole 11.4mm, AlloyC (CRN)
RKJ	Thread ANSI MNPT1/2 hole 11.4mm, 316L (CRN)
RLC	Thread ANSI MNPT1/2 FNPT1/4, AlloyC (CRN)
RLJ	Thread ANSI MNPT1/2 FNPT1/4, 316L (CRN)
R1C	Thread ANSI FNPT 1/2, Alloy C (CRN)
R1J	Thread ANSI FNPT 1/2, 316L (CRN)
U5J	Thread ANSI MNPT1, 316L, flush-mounted (CRN)
U7J	Thread ANSI MNPT1-1/2, 316L, flush-mounted (CRN)
U8J	Thread ANSI MNPT2, 316L, flush-mounted (CRN)
XSJ	Prepared for diaphragm seal mount, 316L (CRN)
	Hygienic connections
MXJ	DIN11851 DN25 PN25 coupling nut, 316L, EHEDG, 3A
MIJ	DIN11851 DN32 PN25 coupling nut, 316L, EHEDG, 3A
MZJ	DIN11851 DN40 PN25 coupling nut, 316L, EHEDG, 3A
MRJ	DIN11851 DN50 PN25 coupling nut, 316L, EHEDG, 3A
S1J	NEUMO BioControl D25 PN16, 316L, EHEDG, 3A
S4J	NEUMO BioControl D50 PN16, 316L, EHEDG, 3A
TBJ	Clamp ISO2852 DN18-22, 316L DIN32676 DN15-20, EHEDG, 3A, ASME-BPE
TCJ	Tri-Clamp ISO2852 DN25 (1"), 316L, DIN32676 DN25, EHEDG, 3A, ASME-BPE
TJJ	Tri-Clamp ISO2852 DN38 (1-1/2"), 316L, DIN32676 DN40, EHEDG, 3A, ASME-BPE
TDJ	Tri-Clamp ISO2852 DN40-51 (2"), 316L, DIN32676 DN50, EHEDG, 3A
TIJ	DRD DN50 65mm PN25, 316L
TMJ	APV Inline DN50 PN40, 316L, 3A
TPJ	Varivent B pipe DN10-15 PN40, 316L, EHEDG, 3A
TQJ	Varivent F pipe DN25-32 PN40, 316L, EHEDG, 3A
TRJ	Varivent N pipe DN40-162 PN40, 316L, EHEDG, 3A
T6J	SMS 1" PN25, 316L, EHEDG, 3A
T7J	SMS 1-1/2" PN25, 316L, EHEDG, 3A
TXJ	SMS 2" PN25, 316L, EHEDG, 3A
YYY	Special version

170	Material of the process isolating diaphragm:
A	316L
B	AlloyC
M	Rhodium>gold>316L
Y	Special version

180	Fill fluid:
1	Silicone oil
2	Inert oil
3	Synthetic oil, FDA
9	Special version

Additional ordering information (optional)

500	Additional Operating language:
AA	English
AB	German
AC	French
AD	Spanish
AE	Italian
AF	Dutch
AK	Chinese simplified
AL	Japanese

PMP51 (continued)

550	Calibration:
F1	Factory calibration certificate, 5-point
F2	DKD/DAkkS calibration certificate 10-point

570	Service:
HA	Oil and grease removed [1]
HB	Cleaned for oxygen service [1]
HC	Cleaned from PWIS (PWIS = paint wetting impairment substances) [1]
IA	Configured min alarm current
IB	Configured HART Burst Mode PV
I9	Special version
	1) Only device, not accessory or enclosed accessory

580	Test, certificate:
JA	EN10204-3.1 wetted material, inspection certificate
JB	NACE MR0175 wetted
JF	EN10204-3.1 AD2000 material wetted parts, excepting process membrane inspection certificate
KB	EN10204-3.1 wetted material + Ra, Ra= surface roughness, dimensional check, inspection certificate
KD	EN10204-3.1 helium leak test, inspection certificate
KE	EN10204-3.1 pressure test, inspection certificate
KG	EN10204-3.1 PMI test* (PMI = positive material identification), inspection certificate
	* Meter body and process isolating diaphragm not included.
K9	Special version

590	Other approvals:
LW	CoC-ASME BPE (CoC = Certificate of Compliance)
LI	DNV marine certificate
LE	GL marine certificate
LA	SIL
LR	NSF potable water approval

600	Separate housing:
MA	Cable PE, 2m/80in + housing mounting bracket, wall/pipe, 304
MB	Cable PE, 5m/200in + housing mounting bracket, wall/pipe, 304
MC	Cable PE, 10m/400in + housing mounting bracket, wall/pipe, 304
MH	Cable FEP, 5m/200in IP69K + housing mounting bracket, wall/pipe, 304

610	Accessory mounted:
NA	Overvoltage protection

620	Accessory enclosed	
PA	Mounting bracket, wall/pipe, 304	
P2	Shutoff valve (PZAV), see additional spec	
	-R1A1	PZAV-R1A1 Shutoff valve, G1/2, C22.8 (O-shape)
	-R1A2	PZAV-R1A2 Shutoff valve, G1/2, 316Ti (O-shape)
	-R1D1	PZAV-R1D1 Shutoff valve, NPT1/2, C22.8 (U-shape)
	-R1D2	PZAV-R1D2 Shutoff valve, NPT1/2, 316Ti (U-shape)
	-B1A2	PZAV-B1A2 Shutoff valve, G1/2, 316Ti, 3.1 (O-shape)
	-B1D2	PZAV-B1D2 Shutoff valve, NPT1/2, 316Ti, 3.1 (O-shape)
P4	Siphon (PZW), see additional spec	
	-RA21	PZW-RA21 Siphon G1/2 vertical, C22.8
	-RA22	PZW-RA22 Siphon G1/2 vertical, 316Ti
	-RC11	PZW-RC11 Siphon G1/2 x weld. horiz. C22.8

620	**Accessory enclosed**		
		-RD11	PZW-RD11 Siphon NPT1/2 x weld. horiz. C22.8
		-BB22	PZW-BB22 Siphon NPT1/2 vertical, 316Ti, 3.1
		-BA22	PZW-BA22 Siphon NPT1/2x weld.vert.316Ti 3.1
	QA	Welding neck G1/2, 316L,	
	QB	Welding neck G1/2, 316L, 3.1, EN10204-3.1 material, inspection certificate	
	QC	Weld-in tool adapter G1/2, brass	
	QG	Weld-in tool adapter G1, brass, metallic sealing taper	
	QJ	Welding neck G1-1/2, 316L	
	QK	Welding neck G1-1/2, 316L, 3.1, EN10204-3.1 material, inspection certificate	
	QL	Weld-in tool adapter G1-1/2, brass	
	RL	Plug-in jack M12	
	RM	Plug-in jack M12, 90deg	
	RN	Plug-in jack M12, 90deg+5m cable	
850	**Firmware version:**		
	78	01.00.zz, HART, DevRev01	
895	**Identification:**		
	Z1	Measuring point (TAG), see additional spec.	
	Z2	Bus address, see additional spec.	

PMP55

This overview does not mark options which are mutually exclusive.

10	**Approval:**	
	AA	For non-hazardous areas
	BA	ATEX II 1/2G Ex ia IIC T6
	BB	ATEX II 1/2D Ex t IIIC
	BC	ATEX II 2G Ex d IIC T6
	BD	ATEX II 3G Ex nA IIC T6
	BE	ATEX II 2G Ex ia IIC T6
	BG	ATEX II 3G Ex ic IIC T6
	B1	ATEX II 1/2G Ex ia IIC T6 + ATEX II 1/2D Ex iaD
	B2	ATEX II 1/2G Ex ia IIC T6 + ATEX II 2G Ex d IIC T6
	8A	ATEX II Ex ia/Ex d + FM/CSA IS + XP ATEX II 1/2G Ex ia IIC T6+ ATEX II 2G Ex d IIC T6+ FM/CSA IS + XP Cl.I, II Div.1 Gr. A-G/B-G, zone 1,2
	8B	FM/CSA IS + XP Cl.I, II Div.1 Gr.A-D/B-G FM IS/FM XP Cl.I, II Div.1 Gr.A-G+ CSA IS/XP Cl.I, II Div.1 Gr.A-G, Zone 1,2
	IA	IEC Ex ia IIC T6 Ga/Gb
	IB	IEC Ex d IIC T6 Gb
	ID	IEC Ex t IIIC Da/Db
	IE	IEC Ex ic IIC T6 Gc
	I1	IEC Ex ia IIC T6 Ga/Gb+Ex ia IIIC Da/Db
	NA	NEPSI Ex ia IIC T6
	NB	NEPSI Ex d IIC T6
	TA	TIIS Ex ia IIC T4
	CA	CSA C/US IS Cl.I,II,III Div.1 Gr.A-G, CSA C/US IS Cl.I Div.2 Gr.2 Gr.A-D, Ex ia, zone 0,1,2,20,21,22
	CB	CSA C/US CP Cl.I, II Div.1 Gr.B-G, Ex d (factory sealed) zone 1,2
	CC	CSA C/US Cl.II, III Div.1 Gr.E-G, Zone 21,22
	CD	CSA General Purpose
	C1	CSA C/US IS/XP CL.I, II Div.1 Gr.A-G/B-G, Zone 1,2
	FA	FM IS Cl.I,II,III Div.1 Gr.A-G, AEx ia FM NI Cl.I Div.2 Gr.A-D FM IS: Zone 0,1,2,20,21,22/FM NI: Zone 2
	FB	FM XP Cl.I, II Div.1 Gr.A-G, AEx d (factory sealed) zone 1,2
	FC	FM DIP Cl.II, III Div.1 Gr.A-G, zone 21,22
	FD	FM NI Cl.I Div.2 Gr.A-D, Zone 2
	F1	FM IS/XP Cl.I, II Div.1 Gr.A-G, Zone 1,2
	99	Special version
20	**Output:**	
	1	4-20mA Analog
	2	4-20mA HART
	3	PROFIBUS PA
	4	FOUNDATION Fieldbus
	9	Special version
30	**Display, operation:**	
	1	LCD, keys on display/electronics
	2	Without LCD, keys on electronics
	9	Special version
40	**Housing:**	
	I	F31 aluminum
	J	F31 aluminum, glass window
	Q	F15 Stainless Steel Hygiene
	R	F15 Stainless Steel Hygiene, glass window
	S	F15 Stainless Steel Hygiene, plastic window
	Y	Special version
50	**Electrical connection:**	
	A	Gland M20, IP66/68 NEMA4X/6P
	B	Thread M20, IP66/68 NEMA4X/6P
	C	Thread G1/2, IP66/68 NEMA4X/6P
	D	Thread NPT1/2, IP66/68 NEMA4X/6P
	I	Connector M12, IP66/67, NEMA4X/6P
	M	Connector 7/8", IP66/68, NEMA4X/6P
	P	Connector Han7D, 90deg, IP65
	S	PE Cable 5m, IP66/68 NEMA4X/6P + pressure compensation via cable
	V	Valve connector ISO4400 M16, IP64

50	**Electrical connection:**	
	Y	Special version

PMP55 (continued)

70	**Sensor range:**	
	1F	400mbar/40kPa/6psi relative, 4mH2O/13ftH2O/160inH2O Overload: 6bar/600kPa/90psi
	1H	1bar/100kPa/15psi relative, 10mH2O/33ftH2O/400inH2O Overload: 10bar/1MPa/150psi
	1K	2bar/200kPa/30psi relative, 20mH2O/67ftH2O/800inH2O Overload: 20bar/2MPa/300psi
	1M	4bar/400kPa/60psi relative, 40mH2O/133ftH2O/1600inH2O Overload: 28bar/2.8MPa/420psi
	1P	10bar/1MPa/150psi relative, 100mH2O/333ftH2O/4000inH2O Overload: 40bar/4MPa/600psi
	1S	40bar/4MPa/600psi relative, 400mH2O/1334ftH2O/16000inH2O Overload: 160bar/16MPa/2400psi
	1U	100bar/10MPa/1500psi relative, 1000mH2O/3330ftH2O/40000inH2O Overload: 400bar/40MPa/6000psi
	1W	400bar/40MPa/6000psi relative, 4000mH2O/13340ftH2O/160000inH2O Overload: 600bar/60MPa/9000psi
	2F	400mbar/40kPa/6psi abs, 4mH2O/13ftH2O/160inH2O Overload: 6bar/600kPa/90psi
	2H	1bar/100kPa/15psi abs, 10mH2O/33ftH2O/400inH2O Overload: 10bar/1MPa/150psi
	2K	2bar/200kPa/30psi abs, 20mH2O/67ftH2O/800inH2O abs Overload: 20bar/2MPa/300psi
	2M	4bar/400kPa/60psi abs, 40mH2O/133ftH2O/1600inH2O abs Overload: 28bar/2.8MPa/420psi
	2P	10bar/1MPa/150psi abs, 100mH2O/333ftH2O/4000inH2O abs Overload: 40bar/4MPa/600psi
	2S	40bar/4MPa/600psi abs, 400mH2O/1334ftH2O/16000inH2O abs Overload: 160bar/16MPa/2400psi
	2U	100bar/10MPa/1500psi abs, 1000mH2O/3330ftH2O/40000inH2O abs Overload: 400bar/40MPa/6000psi
	2W	400bar/40MPa/6000psi abs, 4000mH2O/13340ftH2O/160000inH2O abs Overload: 600bar/60MPa/9000psi
	99	Special version

80	**Reference accuracy:**	
	D	Platinum
	G	Standard
	Y	Special version

90	**Calibration; Unit:**	
	A	Sensor range; %
	B	Sensor range; mbar/bar
	C	Sensor range; kPa/MPa
	D	Sensor range; mm/mH2O
	E	Sensor range; inH2O/ftH2O
	F	Sensor range; psi
	J	Customized pressure; see additional spec.
	K	Customized level; see additional spec.
	Y	Special version

PMP55 (continued)

110	Process connection:
	ANSI flanges
ACJ	1" 150lbs RF, 316/316L, flange ANSI B16.5 (CRN)
AEJ	1-1/2" 150lbs RF, 316/316L, flange ANSI B16.5 (CRN)
AFJ	2" 150lbs RF, 316/316L, flange ANSI B16.5 (CRN)
AGJ	3" 150lbs RF, 316/316L, flange ANSI B16.5 (CRN)
AHJ	4" 150lbs RF, 316/316L, flange ANSI B16.5 (CRN)
ANJ	1" 300lbs RF, 316/316L, flange ANSI B16.5 (CRN)
AQJ	1-1/2" 300lbs RF, 316/316L, flange ANSI B16.5 (CRN)
ARJ	2" 300lbs RF, 316/316L, flange ANSI B16.5 (CRN)
ASJ	3" 300lbs RF, 316/316L, flange ANSI B16.5 (CRN)
ATJ	4" 300lbs RF, 316/316L, flange ANSI B16.5 (CRN)
A0J	1" 400/600lbs RF, 316/316L, flange ANSI B16.5 (CRN)
A1J	2" 400/600lbs RF, 316/316L, flange ANSI B16.5 (CRN)
A2J	1" 900/1500lbs RF, 316/316L, flange ANSI B16.5 (CRN)
A3J	2" 900/1500lbs RF, 316/316L, flange ANSI B16.5 (CRN)
A4J	1" 2500lbs RF, 316/316L, flange ANSI B16.5 (CRN)
A5J	2" 2500lbs RF, 316/316L, flange ANSI B16.5 (CRN)
FMJ	2" 150lbs RF, 316/316L, 2/4/6/8" extended diaphragm seal, flange ANSI B16.5, see additional spec. (CRN)
FNJ	3" 150lbs RF, 316/316L, 2/4/6/8" extended diaphragm seal, flange ANSI B16.5, see additional spec. (CRN)
FOJ	4" 150lbs RF, 316/316L, 2/4/6/8" extended diaphragm seal, flange ANSI B16.5, see additional spec. (CRN)
FWJ	3" 300lbs RF, 316/316L, 2/4/6/8" extended diaphragm seal, flange ANSI B16.5, see additional spec. (CRN)
FXJ	4" 300lbs RF, 316/316L, 2/4/6/8" extended diaphragm seal, flange ANSI B16.5, see additional spec. (CRN)
	EN flanges
CNJ	DN25 PN10-40 B1, 316L, flange EN1092-1
CPJ	DN32 PN10-40 B1, 316L, flange EN1092-1
CQJ	DN40 PN10-40 B1, 316L, flange EN1092-1
CXJ	DN50 PN10-40 B1, 316L, flange EN1092-1
CZJ	DN80 PN10-40 B1, 316L, flange EN1092-1
	JIS flanges
KCJ	10K 25 RF, 316L, flange JIS B2220
KEJ	10K 40 RF, 316L, flange JIS B2220
KFJ	10K 50 RF, 316L, flange JIS B2220
KGJ	10K 80 RF, 316L, flange JIS B2220
KHJ	10K 100 RF, 316L, flange JIS B2220
	DIN flanges
QIJ	DN25 PN63-160 E, 316L, flange DIN2501
QJJ	DN25 PN250 E, 316L, flange DIN2501
QMJ	DN50 PN250 E, 316L, flange DIN2501
QOJ	DN50 PN100-160 E, 316L, flange DIN2501
QSJ	DN25 PN400 E, 316L, flange DIN2501
QVJ	DN50 PN400 E, 316L, flange DIN2501
FDJ	DN50 PN10-40 B1, 316L, 50/100/200mm extended diaphragm seal, flange EN1092-1, see additional spec.
FEJ	DN80 PN10-40 B1, 316L, 50/100/200mm extended diaphragm seal, flange EN1092-1, see additional spec.
PDJ	DN50 PN63 B2, 316L, flange EN1092-1
PPJ	DN80 PN100 B2, 316L, flange EN1092-1
PQJ	DN100 PN100 B2, 316L, flange EN1092-1
	Threaded connection
GTC	Thread ISO228 G1, AlloyC, flush-mounted
GTJ	Thread ISO228 G1, 316L, flush-mounted
GVC	Thread ISO228 G1-1/2, AlloyC, fm= flush-mounted
GVJ	Thread ISO228 G1-1/2, 316L, flush-mounted
GWC	Thread ISO228 G2, AlloyC, flush-mounted
GWJ	Thread ISO228 G2, 316L, flush-mounted
UBJ	Thread ISO228 G1/2, PN160.316L, separator, EN837, welded
UCJ	Thread ANSI MNPT1/2,PN160.316L,separator, welded (CRN)
UDJ	Thread ISO228 G1/2, 316L, separator, EN837, threaded
UEJ	Thread ANSI MNPT1/2, 316L, separator, threaded
UGJ	Thread FNPT1/2, PN250, 316L, separator, threaded
UHJ	Thread FNPT1, PN250, 316L, separator, threaded
U5C	Thread ANSI MNPT1, AlloyC, flush-mounted (CRN)
U5J	Thread ANSI MNPT1, 316L, flush-mounted (CRN)
U7C	Thread ANSI MNPT1-1/2, AlloyC, fm=flush-mounted (CRN)
U7J	Thread ANSI MNPT1-1/2, 316L, flush-mounted (CRN)
U8C	Thread ANSI MNPT2, AlloyC, flush-mounted (CRN)
U8J	Thread ANSI MNPT2, 316L, flush-mounted (CRN)

PMP55 (continued)

110	Process connection:
	Diaphragm seal cell structure
UIJ	Pancake (Cell) DN 50 PN 16-400, AISI 316L
UJJ	Pancake (Cell) DN 80 PN 16-400, AISI 316L
UKJ	Pancake (Cell) DN 100 PN 16-400, AISI 316L
ULJ	Pancake (Cell) 2" 150-2500 lbs, AISI 316L
UMJ	Pancake (Cell) 3" 150-2500 lbs, AISI 316L
URJ	Pancake (Cell) 4" 150-2500 lbs, AISI 316L
	Pipe diaphragm seal
SIJ	Tri-Clamp ISO2852 DN10 (3/4") RDM, 316L, RDM = pipe diaphragm seal
SJJ	Tri-Clamp ISO2852 DN16 (3/4") RDM, 316L, RDM = pipe diaphragm seal
SBJ	Tri-Clamp ISO2852 DN25 (1") RDM, 316L, RDM = pipe diaphragm seal
SCJ	Tri-Clamp ISO2852 DN38 (1-1/2") RDM, 316L, PED Cat.II, RDM = pipe diaphragm seal 3.1 material + pressure test PED Cat.II
SDJ	Tri-Clamp ISO2852 DN51 (2") RDM, 316L, PED Cat.II, RDM = pipe diaphragm seal 3.1 material + pressure test PED Cat.II
	Hygienic process connections
MIJ	DIN11851 DN32 PN40 cap-nut, 316L, EHEDG, 3A
MRJ	DIN11851 DN50 PN25 cap-nut, 316L, EHEDG, 3A
MSJ	DIN11851 DN65 PN25 cap-nut, 316L, EHEDG, 3A
MTJ	DIN11851 DN80 PN25 cap-nut, 316L, EHEDG, 3A
MZJ	DIN11851 DN40 PN40 cap-nut, 316L, EHEDG, 3A
NCJ	DIN11864-1 A DN40 PN16 tube DIN11866-A, threaded connection, 316L, EHEDG, 3A
NDJ	DIN11864-1 A DN50 PN16 tube DIN11866-A, threaded connection, 316L, EHEDG, 3A
NFJ	DIN11864-2 A DN32 PN16 tube DIN11866-A, 316L, EHEDG, 3A
NXJ	DIN11864-2 A DN40 PN16 tube DIN11866-A, 316L, EHEDG, 3A
NZJ	DIN11864-2 A DN50 PN16 tube DIN11866-A, 316L, EHEDG, 3A
S4J	NEUMO BioControl D50 PN16, 316L, EHEDG
TCJ	Tri-Clamp ISO2852 DN25 (1"), 316L, DIN32676 DN25, EHEDG, 3A, ASME-BPE (CRN)
TJJ	Tri-Clamp ISO2852 DN38 (1-1/2"), 316L, DIN32676 DN40, EHEDG, 3A, ASME-BPE (CRN)
TDJ	Tri-Clamp ISO2852 DN51 (2"), 316L, DIN32676 DN50, EHEDG, 3A, ASME-BPE (CRN)
TFJ	Tri-Clamp ISO2852 DN76.1 (3"), 316L, EHEDG, 3A, ASME-BPE (CRN)
TIJ	DRD DN50 65mm PN25, 316L
TQJ	Varivent F pipe DN25-32 PN40, 316L, EHEDG, 3A
TRJ	Varivent N pipe DN40-162 PN40, 316L, EHEDG, 3A
UPJ	Universal adapter 44mm 316L, 3A, EHEDG, incl. silicone molded seal
T0J	APV-RJT 1" PN40, 316L
T1J	APV-RJT 1-1/2" PN40, 316L
T2J	APV-RJT 2" PN40, 316L
T3J	APV-ISS 1" PN40, 316L
T4J	APV-ISS 1-1/2" PN40, 316L
T5J	APV-ISS 2" PN40, 316L
T6J	SMS 1" PN25, 316L, EHEDG, 3A
T7J	SMS 1-1/2" PN25, 316L, EHEDG, 3A
TXJ	SMS 2" PN25, 316L, EHEDG, 3A
YYY	Special version

170	Material of the process isolating diaphragm:
A	316L
B	AlloyC
C	Monel
D	Tantalum
M	Rhodium>gold>316L
R	0.09mm PTFE>316L, not for vacuum
S	0.25mm PTFE>316L, not for vacuum
Y	Special version

PMP55 (continued)

180	Fill fluid:
1	Silicone oil
2	Inert oil
4	Vegetable oil, FDA
5	High-temperature oil
6	Low-temperature oil
9	Special version

200	Diaphragm seal connection:
A	Direct
B	Temperature isolator
D	..... m capillary
E	..... ft capillary
Y	Special version

Additional ordering information (optional)

500	Additional Operating language:
AA	English
AB	German
AC	French
AD	Spanish
AE	Italian
AF	Dutch
AK	Chinese simplified
AL	Japanese

550	Calibration:
F1	Factory calibration certificate, 5-point
F2	DKD/DAkkS calibration certificate 10-point

570	Service:
HA	Oil and grease removed [1]
HB	Cleaned for oxygen service [1]
HC	Cleaned from PWIS (PWIS = paint wetting impairment substances) [1]
HG	Diaphragm seal vacuum service
HK	Surface quality Ra<0.38um electropolished (wetted)
IA	Configured min alarm current
IB	Configured HART Burst Mode PV
I9	Special version
	1) Only device, not accessory or enclosed accessory

580	Test, certificate:
JA	EN10204-3.1 wetted material, inspection certificate
JB	NACE MR0175 wetted
JF	EN10204-3.1 AD2000 material wetted parts, excepting process membrane inspection certificate
KB	EN10204-3.1 wetted material + Ra, (Ra= surface roughness), dimensional check, inspection certificate
KD	EN10204-3.1 helium leak test, inspection certificate
KE	EN10204-3.1 pressure test, inspection certificate
KF	EN10204-3.1 measurement Delta ferrite content, inspection certificate
KG	EN10204-3.1 PMI test* (PMI = positive material identification), inspection certificate
	* Meter body and process isolating diaphragm not included.
K9	Special version

590	Other approvals:
LW	CoC-ASME BPE (CoC = Certificate of Compliance)
LI	DNV marine certificate
LE	GL marine certificate
LA	SIL

600	Separate housing:
MA	Cable PE, 2m/80in + housing mounting bracket, wall/pipe, 304
MB	Cable PE, 5m/200in + housing mounting bracket, wall/pipe, 304
MC	Cable PE, 10m/400in + housing mounting bracket, wall/pipe, 304
MH	Cable FEP, 5m/200in IP69K + housing mounting bracket, wall/pipe, 304

610	Accessory mounted:
NA	Overvoltage protection

PMP55 (continued)

620	**Accessory enclosed**		
	PA	Mounting bracket, wall/pipe, 304	
	P2	Shutoff valve (PZAV), see additional spec	
		-R1A1	PZAV-R1A1 Shutoff valve, G1/2, C22.8 (O-shape)
		-R1A2	PZAV-R1A2 Shutoff valve, G1/2, 316Ti (O-shape)
		-R1D1	PZAV-R1D1 Shutoff valve, NPT1/2, C22.8 (U-shape)
		-R1D2	PZAV-R1D2 Shutoff valve, NPT1/2, 316Ti (U-shape)
		-B1A2	PZAV-B1A2 Shutoff valve, G1/2, 316Ti, 3.1 (O-shape)
		-B1D2	PZAV-B1D2 Shutoff valve, NPT1/2, 316Ti, 3.1 (O-shape)
	P4	Siphon (PZW), see additional spec	
		-RA21	PZW-RA21 Siphon G1/2 vertical, C22.8
		-RA22	PZW-RA22 Siphon G1/2 vertical, 316Ti
		-RC11	PZW-RC11 Siphon G1/2 x weld. horiz. C22.8
		-RD11	PZW-RD11 Siphon NPT1/2 x weld. horiz. C22.8
		-BB22	PZW-BB22 Siphon NPT1/2 vertical, 316Ti, 3.1
		-BA22	PZW-BA22 Siphon NPT1/2x weld.vert.316Ti 3.1
	QA	Welding neck G1/2, 316L,	
	QB	Welding neck G1/2, 316L, 3.1, EN10204-3.1 material, inspection certificate	
	QC	Weld-in tool adapter G1/2, brass	
	QJ	Welding neck G1-1/2, 316L	
	QK	Welding neck G1-1/2, 316L, 3.1, EN10204-3.1 material, inspection certificate	
	QL	Weld-in tool adapter G1-1/2, brass	
	QP	Welding flange DRD DN50 65mm, 316L	
	QR	Welding fl. DRD DN50 65mm, 316L 3.1, EN10204-3.1 material, inspection certificate	
	QS	Weld-in tool flange DRD DN50 65mm, brass	
	RL	Plug-in jack M12	
	RM	Plug-in jack M12, 90deg	
	RN	Plug-in jack M12, 90deg+5m cable	
850	**Firmware version:**		
	78	01.00.zz, HART, DevRev01	
895	**Identification:**		
	Z1	Measuring point (TAG), see additional spec.	
	Z2	Bus address, see additional spec.	

Documentation

Technical Information

- EMC test procedures TI00241F/00/EN
- Deltabar M: TI00434P/00/EN
- Deltapilot M: TI00437P/00/EN

Operating Instructions

- 4 to 20 mA Analog: BA00385P/00/EN
- 4 to 20 mA HART: BA00382P/00/EN
- PROFIBUS PA: BA00383P/00/EN
- FOUNDATION Fieldbus: BA00384P/00/EN

Brief Operating Instructions

- 4 to 20 mA Analog: KA01036P/00/EN
- 4 to 20 mA HART: KA01030P/00/EN
- PROFIBUS PA: KA01031P/00/EN
- FOUNDATION Fieldbus: KA01032P/00/EN

Functional safety manual (SIL)

Cerabar M (4 to 20 mA): SD00347P/00/EN

Safety Instructions

Authorities	Version in the order code	Approval	Category	Type	Housing		Electronics	Documentation
					F31	F15		
ATEX	BA	Ex ia IIC	II 1/2 G	PMC51, PMP51, PMP55	X	X	– 4 to 20 mA HART	– XA00464P/00
	BB	Ex t IIC	II 1/2 D	PMC51, PMP51, PMP55	X	X	– 4 to 20 mA HART	– XA00466P/00
	BC	Ex d	II 2 G	PMP51, PMP55	X	—	– 4 to 20 mA HART – PROFIBUS PA – FOUNDATION Fieldbus	– XA00467P/00
	BD	Ex nA	II 3 G	PMC51, PMP51, PMP55	X	X	– 4 to 20 mA HART – PROFIBUS PA – FOUNDATION Fieldbus	– XA00469P/00
	BE	Ex ia IIC	II 2 G	PMC51, PMP51, PMP55	X	X	– 4 to 20 mA HART	– XA00464P/00
	BF	Ex ia IIC	II 1/2 D	PMC51	X	X	– 4 to 20 mA HART	– XA00465P/00
	BG	Ex ic IIC	II 3 G	PMC51, PMP51, PMP55	X	X	– 4 to 20 mA HART	– XA00489P/00
	B1	Ex ia Ex ia IIIC	II 1/2 G II 1/2 D	PMC51, PMP51, PMP55	X	X	– 4 to 20 mA HART	– XA00468P/00
	B2	Ex ia IIC	II 2 G II 1/2 G	PMP51, PMP55	X	X	– 4 to 20 mA HART	– XA00468P/00
	8A	Ex d IIC Ex ia IIC	II 2 G II 1/2 G	PMP51, PMP55	X	—	– 4...20 mA HART	– XA00504P/00

Authorities	Version in the order code	Approval	EPL	Type	Housing		Electronics	Documentation
					F31	F15		
IECEx	IA	Ex ia IIC	Ga/Gb	PMC51, PMP51, PMP55	X	X	– 4 to 20 mA HART	– XA00470P/00
	IB	Ex d IIC	Gb	PMP51, PMP55	X	—	– 4 to 20 mA HART – PROFIBUS PA – FOUNDATION Fieldbus	– XA00471P/00
	ID	Ex t IIIC	Da/Db	PMP51, PMP55	X	X	– 4 to 20 mA HART	– XA00472P/00
	IE	Ex ic	Gc	PMC51, PMP51, PMP55	X	X	– 4 to 20 mA HART	– XA00488P/00
	IF	Ex ia IIIC	Da/Db	PMC51	X	X	– 4 to 20 mA HART	– XA00487P/00
	I1	Ex ia IIC Ex ia IIIC	Ga/Gb Da/Db	PMC51, PMP51, PMP55	X	X	– 4 to 20 mA HART	– XA00473P/00

Authorities	Version in the order code	Approval	Housing		Electronics	Documentation
			F31	F15		
NEPSI	NA	Ex ia IIC	X	X	– 4 to 20 mA HART	– XA00533P/00
NEPSI	NB	Ex d IIC	X	—	– 4 to 20 mA HART	– XA00515P/00

Installation/Control Drawings

Authorities	Version in the order code	Approval	Type	Housing		Electronics	Documentation
				F31	F15		
FM	FA	FM IS Cl.I,II,III Div.1 Gr.A-G, AEx ia FM NI Cl.I Div.2 Gr.A-D FM IS: Zone 0,1,2,20,21,22/FM NI: Zone 2	PMC51, PMP51, PMP55	X	X	– 4...20 mA HART – PROFIBUS PA, FOUNDATION Fieldbus	– XA00563P/00 – XA00564P/00
	FB	FM XP Cl.I, II Div.1 Gr.A-D, AEx d (Factory sealed) Zone 1,2	PMP51, PMP55	X	—	– 4...20 mA HART – PROFIBUS PA – FOUNDATION Fieldbus	—
	FC	FM DIP Cl.II, III Div.1 Gr.A-D Zone 21,22	PMP51, PMP55	X	X	– 4 to 20 mA HART	– In preparation
	F1	FM IS/XP Cl.I, II Div.1 Gr.A-G, Zone 1,2	PMP51, PMP55	X		– 4 to 20 mA HART	– XA00567P/00
CSA	CA	C/US IS Cl.I,II,III Div.1 Gr.A-G, C/US IS Cl.I Div.2 Gr.A-D, Ex ia	PMC51, PMP51, PMP55	X	X	– 4...20 mA HART – PROFIBUS PA, FOUNDATION Fieldbus	– XA00556P/00 – XA00558P/00
	CB	CSA C/US CP Cl.I, II Div.1 Gr.B-G, Ex d (factory sealed) Zone 1,2	PMP51, PMP55	X	—	– 4 to 20 mA HART	– ZD00249P/00
	CC	CSA C/US Cl.II, III Div.1 Gr.E-G, Zone 21,22	PMP51, PMP55	X	X	– 4 to 20 mA HART	– In preparation
	C1	CSA C/US IS/XP CL.I, II Div.1 Gr.A-G/B-G, Zone 1,2	PMP51, PMP55	X	—	– 4...20 mA HART – PROFIBUS PA, FOUNDATION Fieldbus	– XA00577P/00 – XA00561P/00
FM CSA	8B	FM/CSA IS + XP Cl.I, II Div.1 Gr.A-D/B-G FM IS/FM XP Cl.I, II Div.1 Gr.A-G+ CSA IS/XP Cl.I, II Div.1 Gr.A-G, Zone 1,2	PMP55	X	—	– 4 to 20 mA HART	– In preparation

Accessories

Shutoff valve

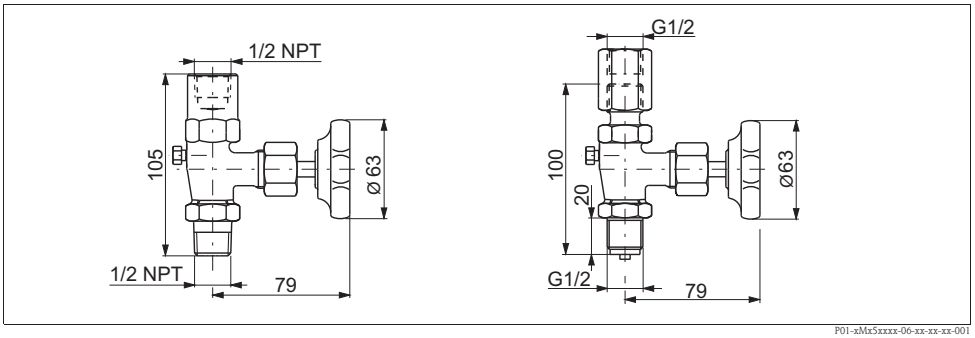

Max. working pressure [bar (psi)]	Connection thread [d]	Material	Version in the order code [1]
400 (5800)	G1/2	C22.8 (1.0460)	R1A1
		316Ti (1.4571)	R1A2, B1A2
	NPT1/2	C22.8 (1.0460)	R1D1
		316Ti (1.4571)	R1D2, B1D2

1) See also → 🖹 82 ff, feature 620, "Accessory enclosed", version "P2".

Siphon

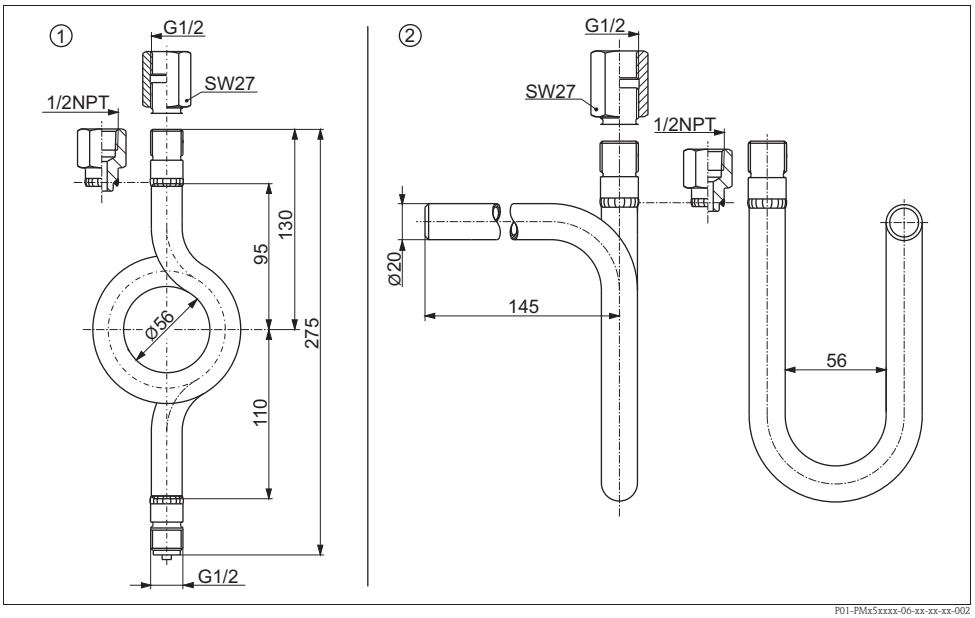

Nr	Max. Betriebsdruck [bar (psi)]	Max. operating temperature °C (°F) in front of the siphon (process side)	Connection thread [d]	Material	Version in the order code [1]
1	■ 104 (1508) ■ 120 (1740) ■ 160 (2320)	■ 400 (752) ■ 300 (572) ■ 120 (248)	G1/2	1.0345	RA21
				316Ti (1.4571)	RA22, BA22
			NPT1/2	316Ti (1.4571)	BB22
2			G1/2	1.0345	RC11
			NPT1/2	1.0345	RD11

1) See also → 🖹 82 ff, feature 620, "Accessory enclosed", version "P4".

Welding necks and Weld-in tool flanges	See technical Information TI00426F/00.
Mounting bracket for wall and pipe mounting	→ 26 ff
M12 connector	→ 18 ff

Configuration data sheet (HART, PROFIBUS PA, FOUNDATION Fieldbus electronics)

Level

The following configuration data sheet has to be filled in and included with the order if the version "K – Customized level" has been selected in feature 90 "Calibration; Unit" in the product structure.

Pressure Engineering Unit

❑ mbar ❑ mmH_2O ❑ mmHg ❑ Pa
❑ bar ❑ mH_2O ❑ kPa
❑ ftH_2O ❑ kgf/cm^2 ❑ MPa
❑ psi ❑ inH_2O

Output Unit (Scaled unit)

Mass	Length	Volume	Volume	Percent
❑ kg	❑ m	❑ l	❑ gal	❑ %
❑ t	❑ dm	❑ hl	❑ Igal	
❑ lb	❑ cm			
	❑ mm	❑ m^3		
		❑ ft^3		
	❑ ft	❑ in^3		
	❑ inch			

Empty pressure [a]:
Low pressure value (empty) _____ [pres. eng. unit]

Empty calibration [a]:
Low level value (empty) _____ [Scaled Unit]

Full pressure [b]:
High pressure value (full) _____ [pres. eng. unit]

Full calibration [b]:
High level value (full) _____ [Scaled Unit]

Example

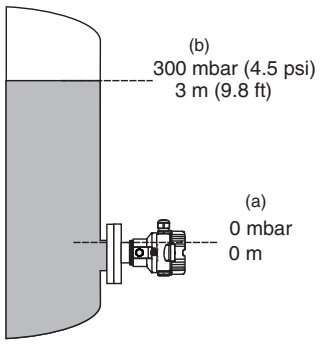

Display Information

1st Value Display [1]
❑ Main Value

2nd Value Display [1]
❑ none (Default)
❑ Main Value [%]
❑ Pressure
❑ Current [mA] (HART only)
❑ Temperature

[1] Depending on sensor and comunication variant

Damping

Damping: _____ sec (Default 2 sec)

Pressure

The following configuration data sheet has to be filled in and included with the order if the version "J - Customized pressure" has been selected in feature 90 "Calibration; Unit" in the product structure.

Pressure Engineering Unit

❑ mbar ❑ mmH_2O ❑ mmHg ❑ Pa
❑ bar ❑ mH_2O ❑ kPa
❑ ftH_2O ❑ kgf/cm^2 ❑ MPa
❑ psi ❑ inH_2O

Calibration Range / Output

Low range value (LRV): _____ [pressure engineering unit]
Upper range value (URV): _____ [pressure engineering unit]

Display Information

1st Value Display [1]
❑ Main Value

2nd Value Display [1]
❑ none (Default)
❑ Main Value [%]
❑ Pressure
❑ Current [mA] (HART only)
❑ Temperature

[1] Depending on sensor and comunication variant

Damping

Damping: _____ sec (Default 2 sec)

Note!
Smallest calibratable span (preset at the factory) → 📄 8 ff.

Configuration data sheet (analog electronics)

Pressure

The following configuration data sheet has to be filled in and included with the order if the version "J – Customized pressure" has been selected in feature 90 "Calibration; Unit" in the product structure.

Pressure Engineering Unit

❑ mbar ❑ mmH_2O ❑ mmHg ❑ Pa
❑ bar ❑ mH_2O ❑ kPa
❑ ftH_2O ❑ kgf/cm^2 ❑ MPa
❑ psi ❑ inH_2O

Calibration Range / Output

Low range value (LRV): _____ [pressure engineering unit]
Upper range value (URV): _____ [pressure engineering unit]

Display

1st Value Display [1)]
❑ Main Value

2nd Value Display [1)]
❑ none (Default)

[1)] Depending on sensor and comunication variant

Damping

Damping: _____ sec (Default 2 sec)

Note!
Smallest calibratable span (preset at the factory) → 🖹 8 ff.

Instruments International

Endress+Hauser
Instruments International AG
Kaegenstrasse 2
4153 Reinach
Switzerland

Tel.+41 61 715 81 00
Fax+41 61 715 25 00
www.endress.com
info@ii.endress.com

Endress+Hauser

People for Process Automation

TI00436P/00/EN/17.12
No. 71190907
CCS/FM+SGML 9.0

71190907

CS-999-014 : Identification sheet

VWTC PROJECT NUMBER:	Iqaluit WWTP	REV:	02
PROJECT NAME:	5000218036	SUBMITTED TO (COMPANY):	
ENGINEER:	F.VINCI	SUBMITTED TO (RESPONSIBLE)	
PROJECT MANAGER:	C. BEKAERT	PROJECT NUM REFERENCE.:	
PHONE NUMBER:		LOT NUMBER:	

SUPPLIER	EQPT CODE	EQPT TAG NO	DIA	DESCRIPTION	INFO 1	INFO 2	INFO 3	APPLIC.	NOTE	REV
ENDRESS & HAUSER	ST-999-014	FM-02-317 FM-02-327	3"	FLOWMETER	Electromagnetic flowmeter// Manuf: E&H // Promag 400 Model : 5W4C80-C6ALHP2DUA1K0A+AAL4Z1// DN80 (3")// Liner: Polyurethane	C6: Approval: CSA C/ US NI Cl.I Div.2 Gr. ABCD A: Design: **Insertion length short ISO/ DVGW until DN400, DN450-2000 1:1 L: Power Supply: 100-240VAC/24VAC/ DC H: Output; Input: 4-20mA HART, pulse/ freq., switch output P: Housing: Remote, alu, coated 2: Cable, Remote Version: 10m/30ft coil + signal cable D: Electrical Connection: Thread NPT1/2 U: Liner: Polyurethane	A1K: Process Connection: Cl.150, carbon steel, flange ASME B16.5 0: Electrodes: 1.4435/316L A: Calibration Flow: 0.5% AA: Operation Language Display: English L4: Additional Approval: NSF 61 Drinking water approval Z1: Marking: Tagging (TAG), see additional spec.			2

This page is intentionally left blank

TI01046D/06/EN/08.19
71424608
2019-02-01

Technical Information
Proline Promag W 400

Electromagnetic flowmeter



Versatile standard flowmeter for the water and wastewater industry

Anwendungsbereich

- The bidirectional measuring principle is virtually independent of pressure, density, temperature and viscosity
- Ideal for water measurement, e.g. drinking water, utility water and industrial/municipal wastewater

Device properties

- International drinking water approvals
- Degree of protection IP68 (Type 6P enclosure)
- Approved for custody transfer to MI-001/OIML R49
- Transmitter housing made of durable polycarbonate or aluminum
- WLAN access
- Integrated data logger: measured values monitoring

Your benefits

- With EN ISO 12944 corrosion protection for underground installation or permanent underwater use
- Flexible engineering – sensor with welded or lap-joint process connections
- Reliable measurement – accurate measured values even with 0 DN inlet run
- Improved plant availability – sensor compliant with industry-specific requirements
- Safe operation – no need to open the device due to display with touch control, background lighting
- Time-saving local operation without additional software and hardware – integrated web server
- Integrated verification – Heartbeat Technology

Endress+Hauser
People for Process Automation

Table of contents

About this document 4
Symbols used 4

Function and system design 5
Measuring principle 5
Measuring system 6
Equipment architecture 7
Safety 7

Input 8
Measured variable 8
Measuring range 9
Operable flow range 12
Input signal 12

Output 13
Output signal 13
Signal on alarm 14
Low flow cut off 16
Galvanic isolation 16
Protocol-specific data 16

Power supply 21
Terminal assignment 21
Pin assignment, device plug 23
Supply voltage 24
Power consumption 24
Current consumption 24
Power supply failure 24
Electrical connection 25
Potential equalization 29
terminals 30
Cable entries 31
Cable specification 31

Performance characteristics 33
Reference operating conditions 33
Maximum measured error 33
Repeatability 35
Influence of ambient temperature 35

Installation 35
Mounting location 35
Orientation 36
Inlet and outlet runs 37
Adapters 38
Length of connecting cable 38
Mounting the transmitter housing 39
Special mounting instructions 40

Environment 41
Ambient temperature range 41
Storage temperature 41
Atmosphere 41
Degree of protection 42
Vibration resistance 42
Shock resistance 42
Shock resistance 42
Mechanical load 42
Electromagnetic compatibility (EMC) 42

Process 42
Medium temperature range 42
Conductivity 43
Pressure-temperature ratings 43
Pressure tightness 46
Flow limit 47
Pressure loss 47
System pressure 48
Thermal insulation 48
Vibrations 49

Custody transfer mode 50

Mechanical construction 50
Dimensions in SI units 50
Dimensions in US units 68
Weight 78
Measuring tube specification 81
Materials 83
Fitted electrodes 85
Process connections 86
Surface roughness 86

Operability 86
Operating concept 86
Languages 86
Local display 87
Remote operation 87
Service interface 89
Supported operating tools 90
HistoROM data management 92

Certificates and approvals 93
CE mark 93
RCM-Tick mark 93
Ex approval 93
Drinking water approval 93
HART certification 93
Certification PROFIBUS 93
Modbus RS485 certification 93
EtherNet/IP certification 93
Radio approval 93
Measuring instrument approval 93
Other standards and guidelines 94

Ordering information 94
Product generation index 94

Application packages 95
Cleaning 95
Diagnostics functions 95
Heartbeat Technology 95

Accessories 95
Device-specific accessories 96
Communication-specific accessories 96
Service-specific accessories 97
System components 97

Supplementary documentation 98
Standard documentation 98
Supplementary device-dependent documentation 98

Registered trademarks 99

About this document

Symbols used

Electrical symbols

Symbol	Meaning
	Direct current
	Alternating current
	Direct current and alternating current
	**Ground connection** A grounded terminal which, as far as the operator is concerned, is grounded via a grounding system.
	**Protective Earth (PE)** A terminal which must be connected to ground prior to establishing any other connections. The ground terminals are situated inside and outside the device: ▪ Inner ground terminal: Connects the protectiv earth to the mains supply. ▪ Outer ground terminal: Connects the device to the plant grounding system.

Communication symbols

Symbol	Meaning
	**Wireless Local Area Network (WLAN)** Communication via a wireless, local network.
	**Bluetooth** Wireless data transmission between devices over a short distance.
	**LED** Light emitting diode is off.
	**LED** Light emitting diode is on.
	**LED** Light emitting diode is flashing.

Symbols for certain types of information

Symbol	Meaning
	**Permitted** Procedures, processes or actions that are permitted.
	**Preferred** Procedures, processes or actions that are preferred.
	**Forbidden** Procedures, processes or actions that are forbidden.
	**Tip** Indicates additional information.
	Reference to documentation.
	Reference to page.
	Reference to graphic.
	Visual inspection.

Symbols in graphics

Symbol	Meaning
1, 2, 3, ...	Item numbers
1., 2., 3., ...	Series of steps
A, B, C, ...	Views
A-A, B-B, C-C, ...	Sections
	Hazardous area
	Safe area (non-hazardous area)
	Flow direction

Function and system design

Measuring principle

Following *Faraday's law of magnetic induction*, a voltage is induced in a conductor moving through a magnetic field.

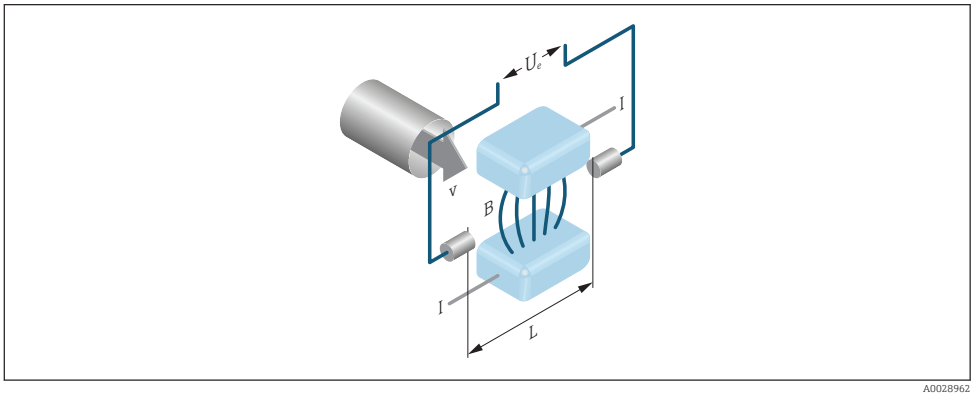

A0028962

Ue Induced voltage
B Magnetic induction (magnetic field)
L Electrode spacing
I Current
v Flow velocity

In the electromagnetic measuring principle, the flowing medium is the moving conductor. The voltage induced (U_e) is proportional to the flow velocity (v) and is supplied to the amplifier by means of two measuring electrodes. The flow volume (Q) is calculated via the pipe cross-section (A). The DC magnetic field is created through a switched direct current of alternating polarity.

Formulae for calculation

- Induced voltage $U_e = B \cdot L \cdot v$
- Volume flow $Q = A \cdot v$

Measuring system

The device consists of a transmitter and a sensor.

Two device versions are available:
- Compact version – transmitter and sensor form a mechanical unit.
- Remote version - transmitter and sensor are mounted in separate locations.

Transmitter

Promag 400 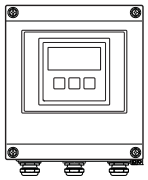 A0017117	Device versions and materials ▪ Compact version: compact housing – Polycarbonate plastic – Aluminum, AlSi10Mg, coated ▪ Remote version: wall-mount housing – Polycarbonate plastic – Aluminum, AlSi10Mg, coated Configuration: ▪ External operation via four-line, illuminated local display with touch control and guided menus ("Make-it-run" wizards) for applications ▪ Via operating tools (e.g. FieldCare) ▪ Via Web browser (e.g. Microsoft Internet Explorer) ▪ Also for device version with EtherNet/IP output: – Via Add-on Profile Level 3 for automation system from Rockwell Automation – Via Electronic Data Sheet (EDS) ▪ Also for device version with PROFIBUS DP output: Via PDM driver for Siemens automation system

Sensor

Promag W *Lap joint flange, lap joint flange, stamped plate or fixed flange with aluminum half-shell housing: DN 25 to 300 (1 to 12")* 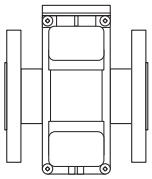 A0017040	▪ Nominal diameter range: DN 25 to 2400 (1 to 90") ▪ Materials→ 🖹 83
Fixed flange with fully welded housing made of carbon steel: DN 25 to 300 (1 to 12") 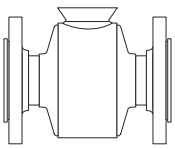 A0022673	

Fixed flange with fully welded housing made of carbon steel: DN 350 to 2400 (14 to 90")

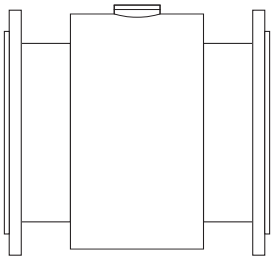

A0017041

Equipment architecture

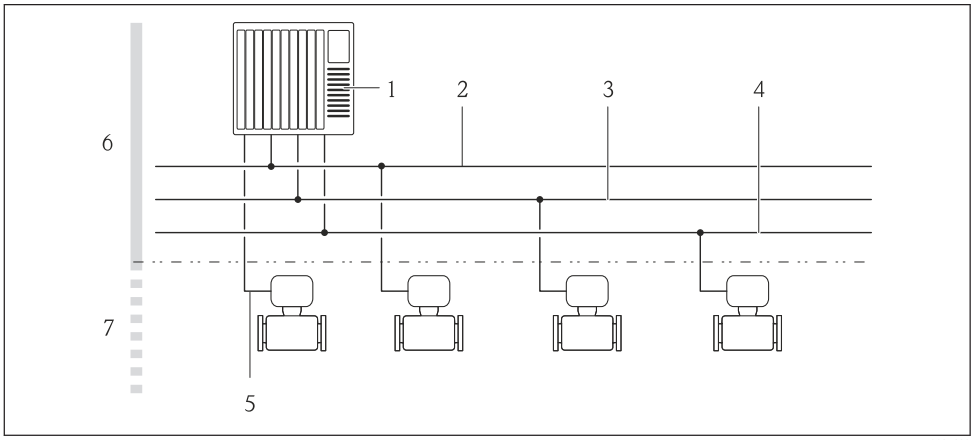

A0037833

1 *Possibilities for integrating measuring devices into a system*

1 *Control system (e.g. PLC)*
2 *EtherNet/IP*
3 *PROFIBUS DP*
4 *Modbus RS485*
5 *4-20 mA HART, pulse/frequency/switch output*
6 *Non-hazardous area*
7 *Non-hazardous area and Zone 2/Div. 2*

Safety

IT security

Our warranty is valid only if the device is installed and used as described in the Operating Instructions. The device is equipped with security mechanisms to protect it against any inadvertent changes to the settings.

IT security measures, which provide additional protection for the device and associated data transfer, must be implemented by the operators themselves in line with their security standards.

Device-specific IT security

The device offers a range of specific functions to support protective measures on the operator's side. These functions can be configured by the user and guarantee greater in-operation safety if used correctly. An overview of the most important functions is provided in the following section.

Protecting access via hardware write protection

Write access to the device parameters via the local display or operating tool (e.g. FieldCare, DeviceCare) can be disabled via a write protection switch (DIP switch on the motherboard). When hardware write protection is enabled, only read access to the parameters is possible.

Hardware write protection is disabled when the device is delivered.

Protecting access via a password

Different passwords are available to protect write access to the device parameters or access to the device via the WLAN interface.

- User-specific access code
  Protect write access to the device parameters via the local display, Web browser or operating tool (e.g. FieldCare, DeviceCare). Access authorization is clearly regulated through the use of a user-specific access code.
- WLAN passphrase
  The network key protects a connection between an operating unit (e.g. notebook or tablet) and the device via the WLAN interface which can be ordered as an option.
- Infrastructure mode
  When the device is operated in infrastructure mode, the WLAN passphrase corresponds to the WLAN passphrase configured on the operator side.

User-specific access code

Write access to the device parameters via the local display or operating tool (e.g. FieldCare, DeviceCare) can be protected by the modifiable, user-specific access code.

WLAN passphrase: Operation as WLAN access point

A connection between an operating unit (e.g. notebook or tablet) and the device via the WLAN interface, which can be ordered as an optional extra, is protected by the network key. The WLAN authentication of the network key complies with the IEEE 802.11 standard.

When the device is delivered, the network key is pre-defined depending on the device. It can be changed via the **WLAN settings** submenu in the **WLAN passphrase** parameter.

Infrastructure mode

A connection between the device and WLAN access point is protected by means of an SSID and passphrase on the system side. Please contact the relevant system administrator for access.

General notes on the use of passwords

- The access code and network key supplied with the device should be changed during commissioning.
- Follow the general rules for generating a secure password when defining and managing the access code or network key.
- The user is responsible for the management and careful handling of the access code and network key.

Access via Web server

The device can be operated and configured via a Web browser with the integrated Web server. The connection is via the service interface (CDI-RJ45) or the WLAN interface. For device versions with the EtherNet/IP and PROFINET communication protocols, the connection can also be established via the terminal connection for signal transmission with EtherNet/IP or PROFINET (RJ45 connector).

The Web server is enabled when the device is delivered. The Web server can be disabled if necessary (e.g. after commissioning) via the **Web server functionality** parameter.

The device and status information can be hidden on the login page. This prevents unauthorized access to the information.

For detailed information on device parameters, see:
The "Description of Device Parameters" document → 98

Input

Measured variable

Direct measured variables

- Volume flow (proportional to induced voltage)
- Electrical conductivity

In custody transfer: only volume flow

Calculated measured variables

Mass flow

Measuring range

Typically v = 0.01 to 10 m/s (0.03 to 33 ft/s) with the specified accuracy

Electrical conductivity: ≥ 5 µS/cm for liquids in general

Flow characteristic values in SI units: DN 25 to 125 (1 to 4")

Nominal diameter		Recommended flow	Factory settings		
		min./max. full scale value (v ~ 0.3/10 m/s)	Full scale value current output (v ~ 2.5 m/s)	Pulse value (~ 2 pulse/s)	Low flow cut off (v ~ 0.04 m/s)
[mm]	[in]	[dm³/min]	[dm³/min]	[dm³]	[dm³/min]
25	1	9 to 300	75	0.5	1
32	–	15 to 500	125	1	2
40	1 ½	25 to 700	200	1.5	3
50	2	35 to 1 100	300	2.5	5
65	–	60 to 2 000	500	5	8
80	3	90 to 3 000	750	5	12
100	4	145 to 4 700	1200	10	20
125	–	220 to 7 500	1850	15	30

Flow characteristic values in SI units: DN 150 to 2400 (6 to 90")

Nominal diameter		Recommended flow	Factory settings		
		min./max. full scale value (v ~ 0.3/10 m/s)	Full scale value current output (v ~ 2.5 m/s)	Pulse value (~ 2 pulse/s)	Low flow cut off (v ~ 0.04 m/s)
[mm]	[in]	[m³/h]	[m³/h]	[m³]	[m³/h]
150	6	20 to 600	150	0.025	2.5
200	8	35 to 1 100	300	0.05	5
250	10	55 to 1 700	500	0.05	7.5
300	12	80 to 2 400	750	0.1	10
350	14	110 to 3 300	1000	0.1	15
375	15	140 to 4 200	1200	0.15	20
400	16	140 to 4 200	1200	0.15	20
450	18	180 to 5 400	1500	0.25	25
500	20	220 to 6 600	2000	0.25	30
600	24	310 to 9 600	2500	0.3	40
700	28	420 to 13 500	3500	0.5	50
750	30	480 to 15 000	4000	0.5	60
800	32	550 to 18 000	4500	0.75	75
900	36	690 to 22 500	6000	0.75	100
1000	40	850 to 28 000	7000	1	125
–	42	950 to 30 000	8000	1	125
1200	48	1 250 to 40 000	10000	1.5	150
–	54	1 550 to 50 000	13000	1.5	200
1400	–	1 700 to 55 000	14000	2	225
–	60	1 950 to 60 000	16000	2	250

Nominal diameter		Recommended flow	Factory settings		
		min./max. full scale value (v ~ 0.3/10 m/s)	Full scale value current output (v ~ 2.5 m/s)	Pulse value (~ 2 pulse/s)	Low flow cut off (v ~ 0.04 m/s)
[mm]	[in]	[m³/h]	[m³/h]	[m³]	[m³/h]
1600	–	2 200 to 70 000	18000	2.5	300
–	66	2 500 to 80 000	20500	2.5	325
1800	72	2 800 to 90 000	23000	3	350
–	78	3 300 to 100 000	28500	3.5	450
2000	–	3 400 to 110 000	28500	3.5	450
–	84	3 700 to 125 000	31000	4.5	500
2200	–	4 100 to 136 000	34000	4.5	540
–	90	4 300 to 143 000	36000	5	570
2400	–	4 800 to 162 000	40000	5.5	650

Flow characteristic values in SI units: DN 50 to 300 (2 to 12") for order code for "Design", option C "Fixed flange, without inlet/outlet runs"

Nominal diameter		Recommended flow	Factory settings		
		min./max. full scale value (v ~ 0.12/5 m/s)	Full scale value current output (v ~ 2.5 m/s)	Pulse value (~ 4 pulse/s)	Low flow cut off (v ~ 0.01 m/s)
[mm]	[in]	[m³/h]	[m³/h]	[m³]	[m³/h]
50	2	15 to 600 dm³/min	300 dm³/min	1.25 dm³	1.25 dm³/min
65	–	25 to 1 000 dm³/min	500 dm³/min	2 dm³	2 dm³/min
80	3	35 to 1 500 dm³/min	750 dm³/min	3 dm³	3.25 dm³/min
100	4	60 to 2 400 dm³/min	1 200 dm³/min	5 dm³	4.75 dm³/min
125	–	90 to 3 700 dm³/min	1 850 dm³/min	8 dm³	7.5 dm³/min
150	6	145 to 5 400 dm³/min	2 500 dm³/min	10 dm³	11 dm³/min
200	8	220 to 9 400 dm³/min	5 000 dm³/min	20 dm³	19 dm³/min
250	10	20 to 850	500	0.03	1.75
300	12	35 to 1 300	750	0.05	2.75

Flow characteristic values in US units: 1 to 48" (DN 25 to 1200)

Nominal diameter		Recommended flow	Factory settings		
		min./max. full scale value (v ~ 0.3/10 m/s)	Full scale value current output (v ~ 2.5 m/s)	Pulse value (~ 2 pulse/s)	Low flow cut off (v ~ 0.04 m/s)
[in]	[mm]	[gal/min]	[gal/min]	[gal]	[gal/min]
1	25	2.5 to 80	18	0.2	0.25
–	32	4 to 130	30	0.2	0.5
1 ½	40	7 to 185	50	0.5	0.75
2	50	10 to 300	75	0.5	1.25
–	65	16 to 500	130	1	2
3	80	24 to 800	200	2	2.5

Nominal diameter		Recommended flow	Factory settings		
		min./max. full scale value (v ~ 0.3/10 m/s)	Full scale value current output (v ~ 2.5 m/s)	Pulse value (~ 2 pulse/s)	Low flow cut off (v ~ 0.04 m/s)
[in]	[mm]	[gal/min]	[gal/min]	[gal]	[gal/min]
4	100	40 to 1250	300	2	4
–	125	60 to 1950	450	5	7
6	150	90 to 2650	600	5	12
8	200	155 to 4850	1200	10	15
10	250	250 to 7500	1500	15	30
12	300	350 to 10600	2400	25	45
14	350	500 to 15000	3600	30	60
15	375	600 to 19000	4800	50	60
16	400	600 to 19000	4800	50	60
18	450	800 to 24000	6000	50	90
20	500	1000 to 30000	7500	75	120
24	600	1400 to 44000	10500	100	180
28	700	1900 to 60000	13500	125	210
30	750	2150 to 67000	16500	150	270
32	800	2450 to 80000	19500	200	300
36	900	3100 to 100000	24000	225	360
40	1000	3800 to 125000	30000	250	480
42	–	4200 to 135000	33000	250	600
48	1200	5500 to 175000	42000	400	600

Flow characteristic values in US units: 54 to 90" (DN 1400 to 2400)

Nominal diameter		Recommended flow	Factory settings		
		min./max. full scale value (v ~ 0.3/10 m/s)	Full scale value current output (v ~ 2.5 m/s)	Pulse value (~ 2 pulse/s)	Low flow cut off (v ~ 0.04 m/s)
[in]	[mm]	[Mgal/d]	[Mgal/d]	[Mgal]	[Mgal/d]
54	–	9 to 300	75	0.0005	1.3
–	1400	10 to 340	85	0.0005	1.3
60	–	12 to 380	95	0.0005	1.3
–	1600	13 to 450	110	0.0008	1.7
66	–	14 to 500	120	0.0008	2.2
72	1800	16 to 570	140	0.0008	2.6
78	–	18 to 650	175	0.0010	3.0
–	2000	20 to 700	175	0.0010	2.9
84	–	24 to 800	190	0.0011	3.2
–	2200	26 to 870	210	0.0012	3.4
90	–	27 to 910	220	0.0013	3.6
–	2400	31 to 1030	245	0.0014	4.1

Flow characteristic values in US units: 2 to 12" (DN 50 to 300) for order code for "Design", option C "Fixed flange, without inlet/outlet runs"

Nominal diameter		Recommended flow	Factory settings		
		min./max. full scale value (v ~ 0.12/5 m/s)	Full scale value current output (v ~ 2.5 m/s)	Pulse value (~ 4 pulse/s)	Low flow cut off (v ~ 0.01 m/s)
[in]	[mm]	[gal/min]	[gal/min]	[gal]	[gal/min]
2	50	4 to 160	75	0.3	0.35
–	65	7 to 260	130	0.5	0.6
3	80	10 to 400	200	0.8	0.8
4	100	16 to 650	300	1.2	1.25
–	125	24 to 1000	450	1.8	2
6	150	40 to 1400	600	2.5	3
8	200	60 to 2500	1200	5	5
10	250	90 to 3700	1500	6	8
12	300	155 to 5700	2400	9	12

Recommended measuring range

Flow limit → 47

For custody transfer, the applicable approval determines the permitted measuring range, the pulse value and the low flow cut off.

Operable flow range

Over 1000 : 1

For custody transfer, the operable flow range is 100 : 1 to 630 : 1, depending on the nominal diameter. Further details are specified by the applicable approval.

Input signal

External measured values

Various pressure transmitters and temperature measuring devices can be ordered from Endress +Hauser: see "Accessories" section → 97

It is recommended to read in external measured values to calculate the following measured variables: Mass flow

HART protocol

The measured values are written from the automation system to the measuring device via the HART protocol. The pressure transmitter must support the following protocol-specific functions:
- HART protocol
- Burst mode

Digital communication

The measured values can be written from the automation system to the measuring via:
- PROFIBUS DP
- Modbus RS485
- EtherNet/IP

Status input

Maximum input values	▪ DC 30 V ▪ 6 mA
Response time	Adjustable: 5 to 200 ms

Input signal level	▪ Low signal: DC –3 to +5 V ▪ High signal: DC 12 to 30 V
Assignable functions	▪ Off ▪ Reset totalizers 1-3 separately ▪ Reset all totalizers ▪ Flow override

Output

Output signal

Current output

Current output	Can be set as: ▪ 4-20 mA NAMUR ▪ 4-20 mA US ▪ 4-20 mA HART ▪ 0-20 mA
Maximum output values	▪ DC 24 V (no flow) ▪ 22.5 mA
Load	0 to 700 Ω
Resolution	0.5 µA
Damping	Adjustable: 0.07 to 999 s
Assignable measured variables	▪ Volume flow ▪ Mass flow ▪ Flow velocity ▪ Conductivity ▪ Electronic temperature

Pulse/frequency/switch output

Function	▪ With the order code for "Output; Input", option **H**: output 2 can be set as a pulse or frequency output ▪ With the order code for "Output; Input", option **I**: output 2 and 3 can be set as a pulse, frequency or switch output ▪ With the order code for "Output; Input", option **J**: output 2 firmly assigned as certified pulse output
Version	Passive, open collector
Maximum input values	▪ DC 30 V ▪ 250 mA
Voltage drop	For 25 mA: ≤ DC 2 V
Pulse output	
Pulse width	Adjustable: 0.05 to 2 000 ms
Maximum pulse rate	10 000 Impulse/s
Pulse value	Adjustable
Assignable measured variables	▪ Volume flow ▪ Mass flow
Frequency output	
Output frequency	Adjustable: 0 to 12 500 Hz
Damping	Adjustable: 0 to 999 s
Pulse/pause ratio	1:1

Assignable measured variables	▪ Volume flow ▪ Mass flow ▪ Conductivity ▪ Flow velocity ▪ Electronic temperature
Switch output	
Switching behavior	Binary, conductive or non-conductive
Switching delay	Adjustable: 0 to 100 s
Number of switching cycles	Unlimited
Assignable functions	▪ Off ▪ On ▪ Diagnostic behavior ▪ Limit value: – Off – Volume flow – Mass flow – Conductivity – Flow velocity – Totalizer 1-3 – Electronic temperature ▪ Flow direction monitoring ▪ Status – Empty pipe detection – Low flow cut off

PROFIBUS DP

Signal encoding	NRZ code
Data transfer	9.6 kBaud...12 MBaud

Modbus RS485

Physical interface	In accordance with EIA/TIA-485-A standard
Terminating resistor	Integrated, can be activated via DIP switch on the transmitter electronics module

EtherNet/IP

Standards	In accordance with IEEE 802.3

Signal on alarm

Depending on the interface, failure information is displayed as follows:

Current output 4 to 20 mA

4 to 20 mA

Failure mode	Choose from: ▪ 4 to 20 mA in accordance with NAMUR recommendation NE 43 ▪ 4 to 20 mA in accordance with US ▪ Min. value: 3.59 mA ▪ Max. value: 22.5 mA ▪ Freely definable value between: 3.59 to 22.5 mA ▪ Actual value ▪ Last valid value

0 to 20 mA

Failure mode	Choose from: ▪ Maximum alarm: 22 mA ▪ Freely definable value between: 0 to 22.5 mA

HART current output

Device diagnostics	Device condition can be read out via HART Command 48

Pulse/frequency/switch output

Pulse output	
Failure mode	Choose from: ▪ Actual value ▪ No pulses
Frequency output	
Failure mode	Choose from: ▪ Actual value ▪ 0 Hz ▪ Defined value: 0 to 12 500 Hz
Switch output	
Failure mode	Choose from: ▪ Current status ▪ Open ▪ Closed

PROFIBUS DP

Status and alarm messages	Diagnostics in accordance with PROFIBUS PA Profile 3.02

Modbus RS485

Failure mode	Choose from: ▪ NaN value instead of current value ▪ Last valid value

EtherNet/IP

Device diagnostics	Device condition can be read out in Input Assembly

Local display

Plain text display	With information on cause and remedial measures
Backlight	Red backlighting indicates a device error.

Status signal as per NAMUR recommendation NE 107

Interface/protocol

- Via digital communication:
  - HART protocol
  - PROFIBUS DP
  - Modbus RS485
  - EtherNet/IP
- Via service interface
  - CDI-RJ45 service interface
  - WLAN interface

Plain text display	With information on cause and remedial measures

Additional information on remote operation → 87

Web server

Plain text display	With information on cause and remedial measures

Light emitting diodes (LED)

Status information	Status indicated by various light emitting diodes The following information is displayed depending on the device version: ▪ Supply voltage active ▪ Data transmission active ▪ Device alarm/error has occurred ▪ EtherNet/IP network available ▪ EtherNet/IP connection established

Low flow cut off

The switch points for low flow cut off are user-selectable.

Galvanic isolation

The following connections are galvanically isolated from each other:
- Inputs
- Outputs
- Power supply

Protocol-specific data

HART

Manufacturer ID	0x11
Device type ID	0x69
HART protocol revision	7
Device description files (DTM, DD)	Information and files under: www.endress.com
HART load	Min. 250 Ω

Dynamic variables	Read out the dynamic variables: HART command 3 The measured variables can be freely assigned to the dynamic variables. **Measured variables for PV (primary dynamic variable)** ▪ Off ▪ Volume flow ▪ Mass flow ▪ Conductivity ▪ Flow velocity ▪ Electronic temperature **Measured variables for SV, TV, QV (secondary, tertiary and quaternary dynamic variable)** ▪ Volume flow ▪ Mass flow ▪ Conductivity ▪ Flow velocity ▪ Electronic temperature ▪ Totalizer 1 ▪ Totalizer 2 ▪ Totalizer 3
Device variables	Read out the device variables: HART command 9 The device variables are permanently assigned. A maximum of 8 device variables can be transmitted: ▪ 0 = volume flow ▪ 1 = mass flow ▪ 2 = conductivity ▪ 3 = flow velocity ▪ 4 = electronic temperature ▪ 5 = totalizer 1 ▪ 6 = totalizer 2 ▪ 7 = totalizer 3

PROFIBUS DP

Manufacturer ID	0x11
Ident number	0x1562
Profile version	3.02
Device description files (GSD, DTM, DD)	Information and files under: ▪ www.endress.com ▪ www.profibus.org
Output values (from measuring device to automation system)	**Analog input 1 to 4** ▪ Mass flow ▪ Volume flow ▪ Flow velocity ▪ Conductivity ▪ Electronic temperature **Digital input 1 to 2** ▪ Empty pipe detection ▪ Low flow cut off ▪ Verification status **Totalizer 1 to 3** ▪ Mass flow ▪ Volume flow

Input values (from automation system to measuring device)	**Analog output 1 (fixed assignment)** External density **Digital output 1 to 2 (fixed assignment)** ▪ Digital output 1: switch positive zero return on/off ▪ Digital output 2: start verification **Totalizer 1 to 3** ▪ Totalize ▪ Reset and hold ▪ Preset and hold ▪ Stop ▪ Operating mode configuration: – Net flow total – Forward flow total – Reverse flow total
Supported functions	▪ Identification & Maintenance Simplest device identification on the part of the control system and nameplate ▪ PROFIBUS upload/download Reading and writing parameters is up to ten times faster with PROFIBUS upload/download ▪ Condensed status Simplest and self-explanatory diagnostic information by categorizing diagnostic messages that occur
Configuration of the device address	▪ DIP switches on the I/O electronics module ▪ Via operating tools (e.g. FieldCare)

Modbus RS485

Protocol	Modbus Applications Protocol Specification V1.1
Device type	Slave
Slave address range	1 to 247
Broadcast address range	0
Function codes	▪ 03: Read holding register ▪ 04: Read input register ▪ 06: Write single registers ▪ 08: Diagnostics ▪ 16: Write multiple registers ▪ 23: Read/write multiple registers
Broadcast messages	Supported by the following function codes: ▪ 06: Write single registers ▪ 16: Write multiple registers ▪ 23: Read/write multiple registers
Supported baud rate	▪ 1 200 BAUD ▪ 2 400 BAUD ▪ 4 800 BAUD ▪ 9 600 BAUD ▪ 19 200 BAUD ▪ 38 400 BAUD ▪ 57 600 BAUD ▪ 115 200 BAUD
Data transfer mode	▪ ASCII ▪ RTU
Data access	Each device parameter can be accessed via Modbus RS485. For detailed information on "Modbus RS485 register information", see the Description of Device Parameters → 98

EtherNet/IP

Protocol	▪ The CIP Networks Library Volume 1: Common Industrial Protocol ▪ The CIP Networks Library Volume 2: EtherNet/IP Adaptation of CIP		
Communication type	▪ 10Base-T ▪ 100Base-TX		
Device profile	Generic device (product type: 0x2B)		
Manufacturer ID	0x49E		
Device type ID	0x1067		
Baud rates	Automatic $^{10}/_{100}$ Mbit with half-duplex and full-duplex detection		
Polarity	Auto-polarity for automatic correction of crossed TxD and RxD pairs		
Supported CIP connections	Max. 3 connections		
Explicit connections	Max. 6 connections		
I/O connections	Max. 6 connections (scanner)		
Configuration options for measuring device	▪ DIP switches on the electronics module for IP addressing ▪ Manufacturer-specific software (FieldCare) ▪ Custom Add-on Profile for Rockwell Automation control systems ▪ Web browser ▪ Electronic Data Sheet (EDS) integrated in the measuring device		
Configuration of the EtherNet interface	▪ Speed: 10 MBit, 100 MBit, auto (factory setting) ▪ Duplex: half-duplex, full-duplex, auto (factory setting)		
Configuration of the device address	▪ DIP switches on the electronics module for IP addressing (last octet) ▪ DHCP ▪ Manufacturer-specific software (FieldCare) ▪ Custom Add-on Profile for Rockwell Automation control systems ▪ Web browser ▪ EtherNet/IP tools, e.g. RSLinx (Rockwell Automation)		
Device Level Ring (DLR)	No		
Fix Input			
RPI	5 ms to 10 s (factory setting: 20 ms)		
Exclusive Owner Multicast		Instance	Size [byte]
	Instance configuration:	0x68	398
	O → T configuration:	0x66	56
	T → O configuration:	0x64	32
Exclusive Owner Multicast		Instance	Size [byte]
	Instance configuration:	0x69	-
	O → T configuration:	0x66	56
	T → O configuration:	0x64	32
Input only Multicast		Instance	Size [byte]
	Instance configuration:	0x68	398
	O → T configuration:	0xC7	-
	T → O configuration:	0x64	32
Input only Multicast		Instance	Size [byte]
	Instance configuration:	0x69	-
	O → T configuration:	0xC7	-
	T → O configuration:	0x64	32

Input Assembly	▪ Current device diagnostics ▪ Volume flow ▪ Mass flow ▪ Conductivity ▪ Totalizer 1 ▪ Totalizer 2 ▪ Totalizer 3		
Configurable Input			
RPI	5 ms to 10 s (factory setting: 20 ms)		
Exclusive Owner Multicast		Instance	Size [byte]
	Instance configuration:	0x68	398
	O → T configuration:	0x66	56
	T → O configuration:	0x65	88
Exclusive Owner Multicast		Instance	Size [byte]
	Instance configuration:	0x69	-
	O → T configuration:	0x66	56
	T → O configuration:	0x65	88
Input only Multicast		Instance	Size [byte]
	Instance configuration:	0x68	398
	O → T configuration:	0xC7	-
	T → O configuration:	0x65	88
Input only Multicast		Instance	Size [byte]
	Instance configuration:	0x69	-
	O → T configuration:	0xC7	-
	T → O configuration:	0x65	88
Configurable Input Assembly	▪ Volume flow ▪ Mass flow ▪ Electronic temperature ▪ Conductivity ▪ Totalizer 1 to 3 ▪ Flow velocity ▪ Volume flow unit ▪ Mass flow unit ▪ Temperature unit ▪ Conductivity unit ▪ Unit totalizer 1-3 ▪ Flow velocity unit ▪ Verification result ▪ Verification status The range of options increases if the measuring device has one or more application packages.		
Fix Output			
Output Assembly	▪ Activation of reset totalizers 1-3 ▪ Activation of reference density compensation ▪ Reset totalizers 1-3 ▪ External density ▪ Density unit ▪ Activation verification ▪ Start verification		

Configuration	
Configuration Assembly	Only the most common configurations are listed below. ▪ Software write protection ▪ Mass flow unit ▪ Mass unit ▪ Volume flow unit ▪ Volume unit ▪ Density unit ▪ Conductivity ▪ Temperature unit ▪ Totalizer 1-3: – Assignment – Unit – Operating mode – Failure mode ▪ Alarm delay

Power supply

Terminal assignment

Transmitter: 0-20 mA/4-20 mA HART

The sensor can be ordered with terminals.

Connection methods available		Possible options for order code "Electrical connection"
Outputs	Power supply	
Terminals	Terminals	▪ Option **A**: coupling M20x1 ▪ Option **B**: thread M20x1 ▪ Option **C**: thread G ½" ▪ Option **D**: thread NPT ½"

Supply voltage

Order code "Power supply"	Terminal numbers	terminal voltage		Frequency range
Option **L** (wide range power unit)	1 (L+/L), 2 (L-/N)	DC 24 V	±25%	–
		AC 24 V	±25%	50/60 Hz, ±4 Hz
		AC 100 to 240 V	−15 to +10%	50/60 Hz, ±4 Hz

Signal transmission 0-20 mA/4-20 mA HART and additional outputs and inputs

Order code for "Output" and "Input"	Terminal numbers							
	Output 1		Output 2		Output 3		Input	
	26 (+)	27 (-)	24 (+)	25 (-)	22 (+)	23 (-)	20 (+)	21 (-)
Option **H**	▪ 4-20 mA HART (active) ▪ 0-20 mA (active)		Pulse/frequency output (passive)		Switch output (passive)		-	
Option **I**	▪ 4-20 mA HART (active) ▪ 0-20 mA (active)		Pulse/frequency/ switch output (passive)		Pulse/frequency/ switch output (passive)		Status input	
Option **J**	▪ 4-20 mA HART (active) ▪ 0-20 mA (active)		Permanently assigned: Pulse output adjusted (passive)		Pulse/frequency/ switch output (passive)		Status input	

Transmitter: PROFIBUS DP

The sensor can be ordered with terminals.

Connection methods available		Possible options for order code "Electrical connection"
Outputs	**Power supply**	
Terminals	Terminals	▪ Option **A**: coupling M20x1 ▪ Option **B**: thread M20x1 ▪ Option **C**: thread G ½" ▪ Option **D**: thread NPT ½"

Supply voltage

Order code "Power supply"	Terminal numbers	terminal voltage		Frequency range
Option **L** (wide range power unit)	1 (L+/L), 2 (L-/N)	DC 24 V	±25%	–
		AC 24 V	±25%	50/60 Hz, ±4 Hz
		AC 100 to 240 V	–15 to +10%	50/60 Hz, ±4 Hz

PROFIBUS DP signal transmission

Order code for "Output" and "Input"	Terminal numbers	
	26 (RxD/TxD-P)	**27 (RxD/TxD-N)**
Option **L**	B	A
Order code for "Output": Option L: PROFIBUS DP, for use in non-hazardous areas and Zone 2/div. 2		

Transmitter: Modbus RS485

The sensor can be ordered with terminals.

Connection methods available		Possible options for order code "Electrical connection"
Outputs	**Power supply**	
Terminals	Terminals	▪ Option **A**: coupling M20x1 ▪ Option **B**: thread M20x1 ▪ Option **C**: thread G ½" ▪ Option **D**: thread NPT ½"

Supply voltage

Order code "Power supply"	Terminal numbers	terminal voltage		Frequency range
Option **L** (wide range power unit)	1 (L+/L), 2 (L-/N)	DC 24 V	±25%	–
		AC 24 V	±25%	50/60 Hz, ±4 Hz
		AC 100 to 240 V	–15 to +10%	50/60 Hz, ±4 Hz

Signal transmission Modbus RS485

Order code for "Output" and "Input"	Terminal numbers	
	26 (+)	**27 (-)**
Option **M**	B	A

Transmitter: EtherNet/IP

The transmitter can be ordered with terminals or a device plug.

Connection methods available		Possible options for order code "Electrical connection"
Outputs	**Power supply**	
EtherNet/IP (RJ45 connector)	Terminals	Option **D**: thread NPT ½"
Device plug → 📄 23	Terminals	▪ Option **L**: plug M12x1 + thread NPT ½" ▪ Option **N**: plug M12x1 + coupling M20 ▪ Option **P**: plug M12x1 + thread G ½" ▪ Option **U**: plug M12x1 + thread M20

Supply voltage

Order code "Power supply"	Terminal numbers	terminal voltage		Frequency range
Option **L** (wide range power unit)	1 (L+/L), 2 (L-/N)	DC 24 V	±25%	–
		AC 24 V	±25%	50/60 Hz, ±4 Hz
		AC 100 to 240 V	−15 to +10%	50/60 Hz, ±4 Hz

EtherNet/IP signal transmission

Order code for "Output"	Connection via
Option **N**	EtherNet/IP: RJ45 or M12 connector

Remote version

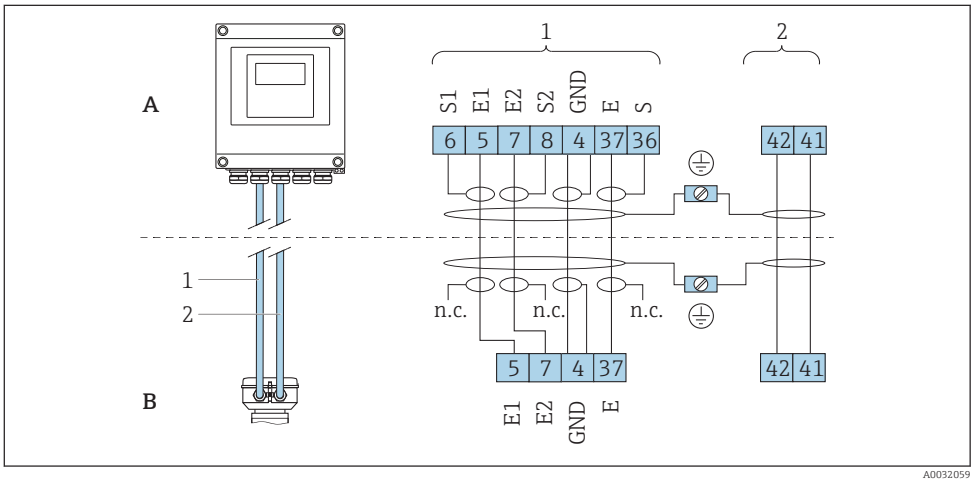

2 *Remote version terminal assignment*

A Transmitter wall-mount housing
B Sensor connection housing
1 Electrode cable
2 Coil current cable
n.c. Not connected, insulated cable shields

Terminal No. and cable colors: 6/5 = brown; 7/8 = white; 4 = green; 36/37 = yellow

Pin assignment, device plug

Order codes for the M12x1 connectors, see the "Order code for electrical connection" column: EtherNet/IP → 📄 23

EtherNet/IP

Device plug for signal transmission (device side)

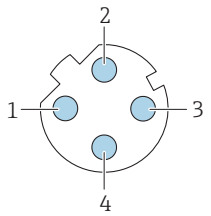

Pin	Assignment		Coding	Plug/socket
1	+	Tx	D	Socket
2	+	Rx		
3	-	Tx		
4	-	Rx		

Recommended plug:
- Binder, series 763, part no. 99 3729 810 04
- Phoenix, part no. 1543223 SACC-M12MSD-4Q
- The device plug is not permitted in the hazardous area, Class I Division 2. The device plug may only be used in the non-hazardous area (General Purpose).

Supply voltage

Transmitter

Order code for "Power supply"	terminal voltage		Frequency range
Option **L**	DC 24 V	±25%	–
	AC 24 V	±25%	50/60 Hz, ±4 Hz
	AC 100 to 240 V	−15 to +10%	50/60 Hz, ±4 Hz

Power consumption

Order code for "Output"	Maximum power consumption
Option **H**: 4-20mA HART, pulse/frequency/switch output, switch output	30 VA/8 W
Option **I**: 4-20mA HART, 2 x pulse/frequency/switch output, status input	30 VA/8 W
Option **J**: 4-20mA HART, certified pulse output, pulse/frequency/switch output, status input	30 VA/8 W
Option **L**: PROFIBUS DP	30 VA/8 W
Option **M**: Modbus RS485	30 VA/8 W
Option **N**: EtherNet/IP	30 VA/8 W

Current consumption

Transmitter

Order code for "Power supply"	Maximum Current consumption	Maximum switch-on current
Option **L**: AC 100 to 240 V	145 mA	25 A (< 5 ms)
Option **L**: AC/DC 24 V	350 mA	27 A (< 5 ms)

Power supply failure

- Totalizers stop at the last value measured.
- Depending on the device version, the configuration is retained in the device memoryor in the pluggable data memory (HistoROM DAT).
- Error messages (incl. total operated hours) are stored.

Electrical connection

Connecting the transmitter

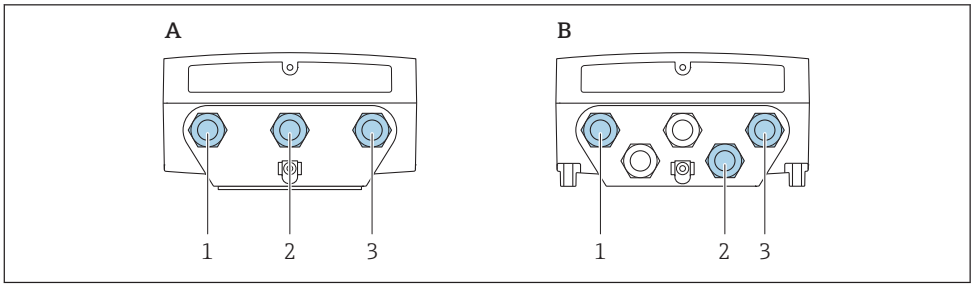

3 *Supply voltage and signal transmission connection*

A Compact version
B Remote version wall-mount housing
1 Cable entry for supply voltage
2 Cable entry for signal transmission
3 Cable entry for signal transmission

Remote version connection

Connecting cable

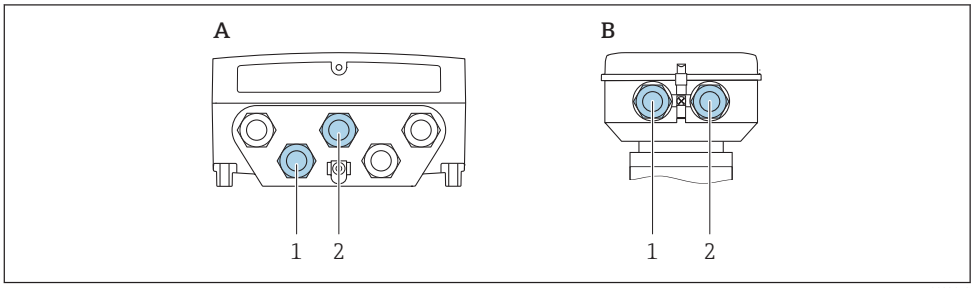

4 *Connecting cable connection: electrode and coil current cable*

A Transmitter wall-mount housing
B Sensor connection housing
1 Electrode cable
2 Coil current cable

- Fix the cable run or route it in an armored conduit.
  Cable movements can influence the measuring signal especially in the case of low fluid conductivities.
- Route the cable well clear of electrical machines and switching elements.
- Ensure potential equalization between sensor and transmitter .

Connection examples

Current output 4 to 20 mA HART

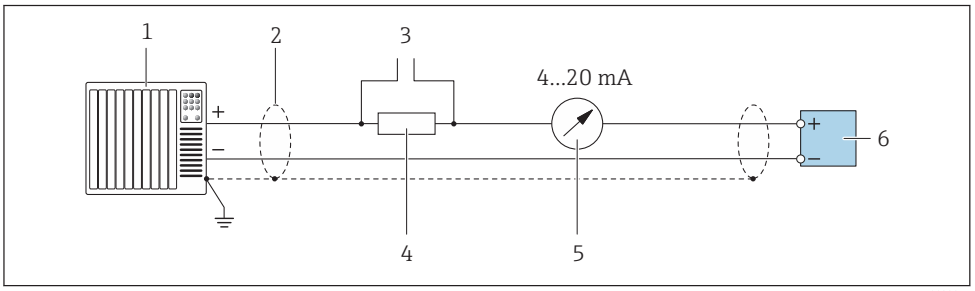

5 Connection example for 4 to 20 mA HART current output (active)

1 *Automation system with current input (e.g. PLC)*
2 *Cable shield: the cable shield must be grounded at both ends to comply with EMC requirements; observe cable specifications → 31*
3 *Connection for HART operating devices → 87*
4 *Resistor for HART communication (≥ 250 Ω): observe maximum load → 13*
5 *Analog display unit: observe maximum load → 13*
6 *Transmitter*

Current output 4-20 mA

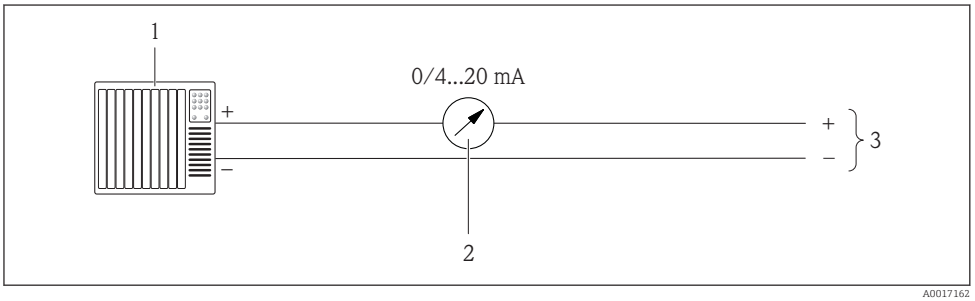

6 Connection example for 0-20 mA current output (active) and 4-20 mA current output (active)

1 *Automation system with current input (e.g. PLC)*
2 *Analog display unit: observe maximum load*
3 *Transmitter*

Pulse/frequency output

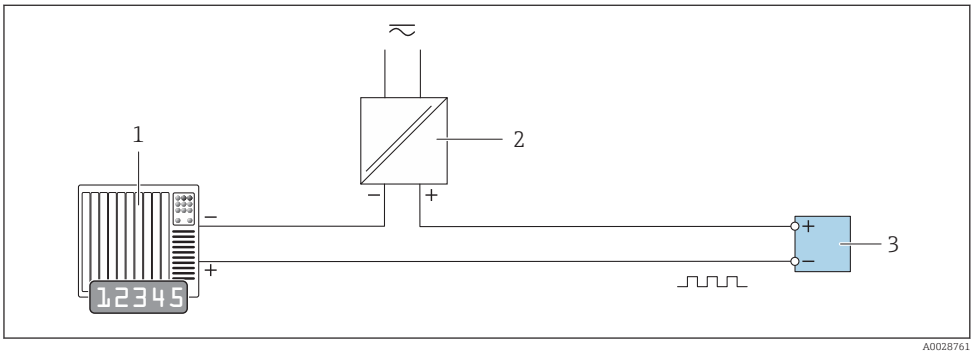

7 Connection example for pulse/frequency output (passive)

1 *Automation system with pulse/frequency input (e.g. PLC)*
2 *Power supply*
3 *Transmitter: Observe input values → 13*

Switch output

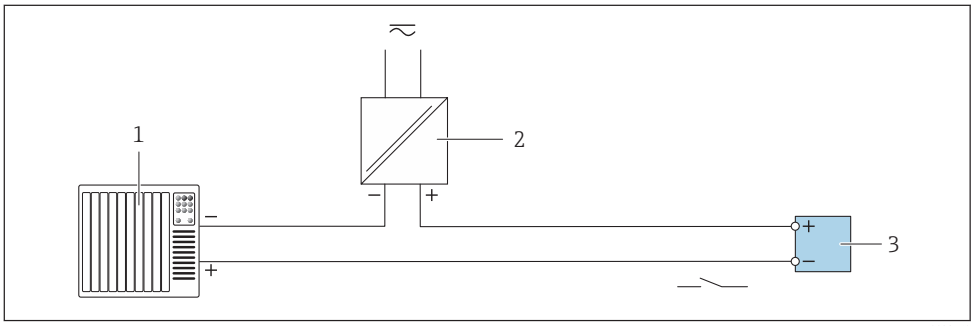

8 Connection example for switch output (passive)

1 Automation system with switch input (e.g. PLC)
2 Power supply
3 Transmitter: Observe input values → 13

PROFIBUS DP

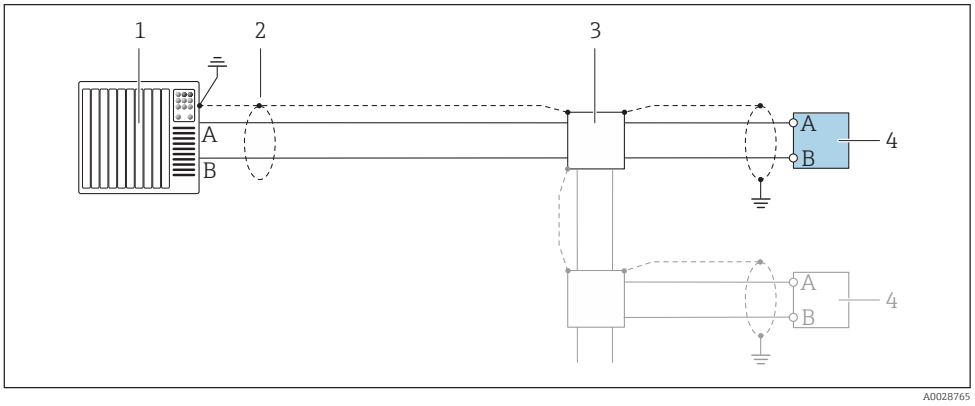

9 Connection example for PROFIBUS DP, non-hazardous area and Zone 2/Div. 2

1 Control system (e.g. PLC)
2 Cable shield: the cable shield must be grounded at both ends to comply with EMC requirements; observe cable specifications
3 Distribution box
4 Transmitter

If baud rates > 1.5 MBaud an EMC cable entry must be used and the cable shield must continue as far as the terminal wherever possible.

Modbus RS485

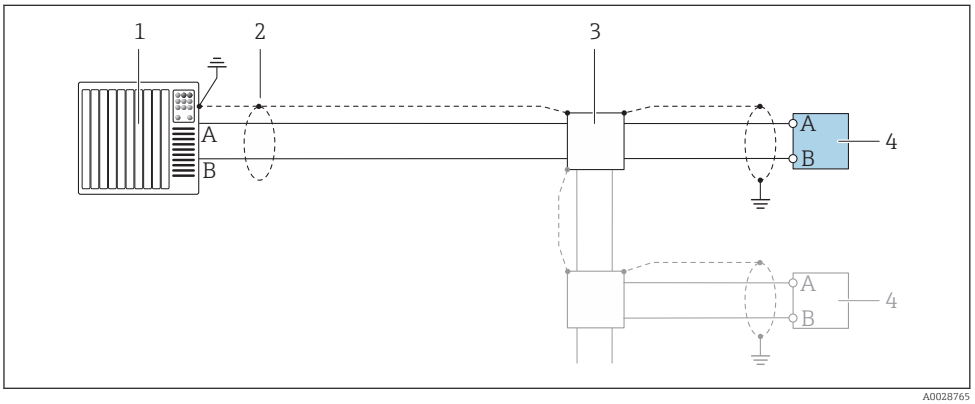

10 Connection example for Modbus RS485, non-hazardous area and Zone 2/Div. 2

1 Control system (e.g. PLC)
2 Cable shield: the cable shield must be grounded at both ends to comply with EMC requirements; observe cable specifications
3 Distribution box
4 Transmitter

EtherNet/IP

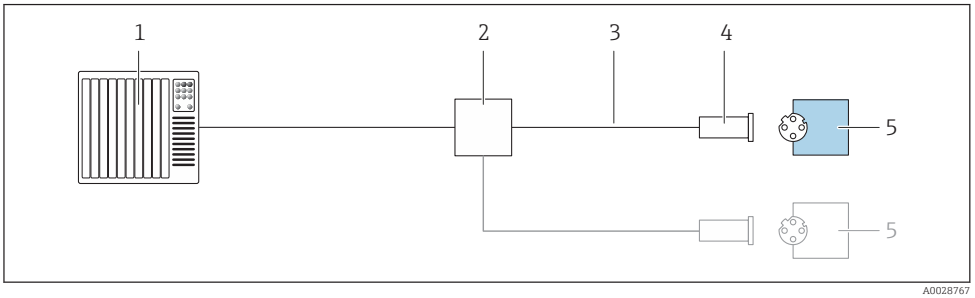

11 Connection example for EtherNet/IP

1 Control system (e.g. PLC)
2 Ethernet switch
3 Observe cable specifications
4 Device plug
5 Transmitter

Status input

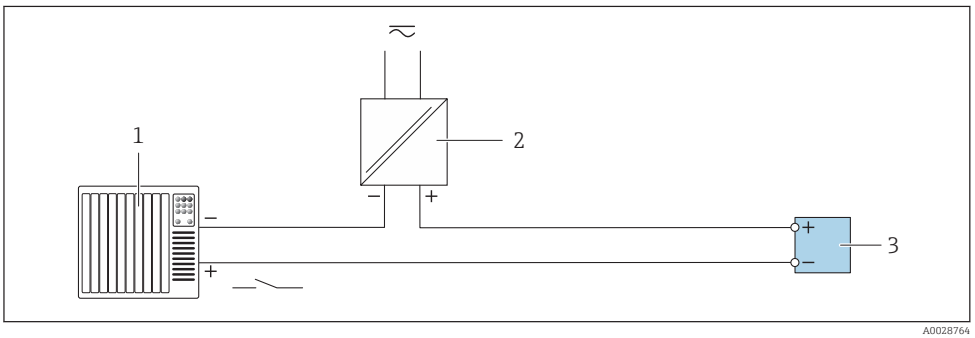

12 Connection example for status input

1 Automation system with status output (e.g. PLC)
2 Power supply
3 Transmitter

Potential equalization

Requirements

Please consider the following to ensure correct measurement:
- Same electrical potential for the fluid and sensor
- Remote version: same electrical potential for the sensor and transmitter
- Company-internal grounding concepts
- Pipe material and grounding

Connection example, standard scenario

Metal, grounded pipe

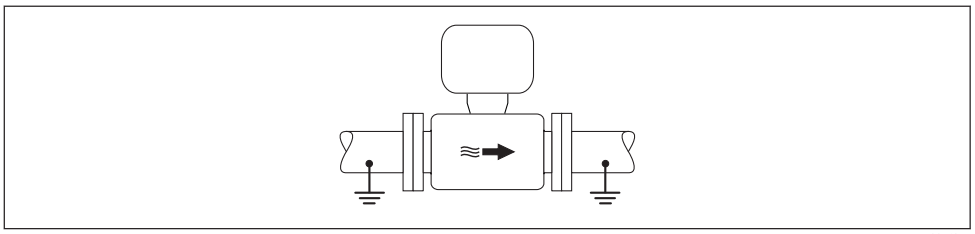

13 *Potential equalization via measuring tube*

Connection example in special situations

Unlined and ungrounded metal pipe

This connection method also applies in situations where:
- The customary potential equalization is not used
- Equalizing currents are present

Ground cable	Copper wire, at least 6 mm² (0.0093 in²)

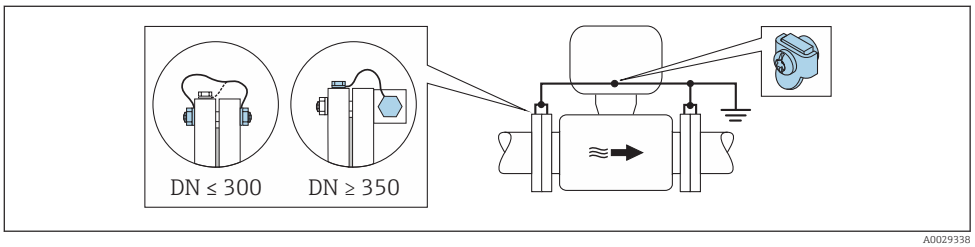

14 *Potential equalization via ground terminal and pipe flanges*

Note the following when installing:
- Connect both sensor flanges to the pipe flange via a ground cable and ground them.
- Connect the connection housing of the transmitter or sensor to ground potential by means of the ground terminal provided for the purpose. To mount the ground cable:
  - If DN ≤ 300 (12"): Mount the ground cable directly on the conductive flange coating of the sensor with the flange screws.
  - If DN ≥ 350 (14"): Mount the ground cable directly on the metal transport bracket.

For remote device versions, the ground terminal in the example always refers to the sensor and **not** to the transmitter.

You can order the necessary ground cable from Endress+Hauser: .

Plastic pipe or pipe with insulating liner

This connection method also applies in situations where:
- The customary potential equalization is not used
- Equalizing currents are present

Ground cable	Copper wire, at least 6 mm² (0.0093 in²)

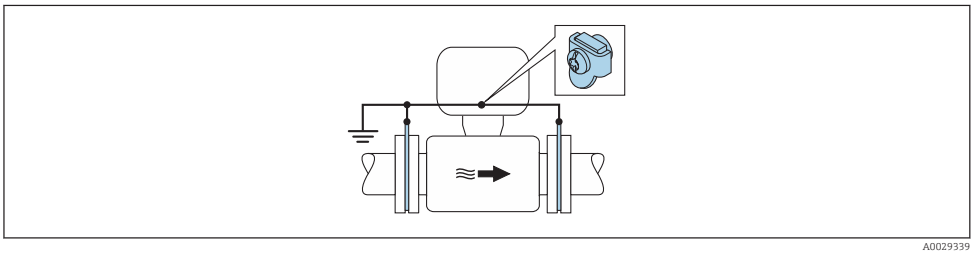

15 *Potential equalization via ground terminal and ground disks*

Note the following when installing:
The ground disks must be connected to the ground terminal via the ground cable and be connected to ground potential.

For remote device versions, the ground terminal in the example always refers to the sensor and **not** to the transmitter.

The ground cable and ground disks can be ordered from Endress+Hauser .

Pipe with a cathodic protection unit

This connection method is only used if the following two conditions are met:
- Metal pipe without liner or pipe with electrically conductive liner
- Cathodic protection is integrated in the personal protection equipment

Ground cable	Copper wire, at least 6 mm² (0.0093 in²)

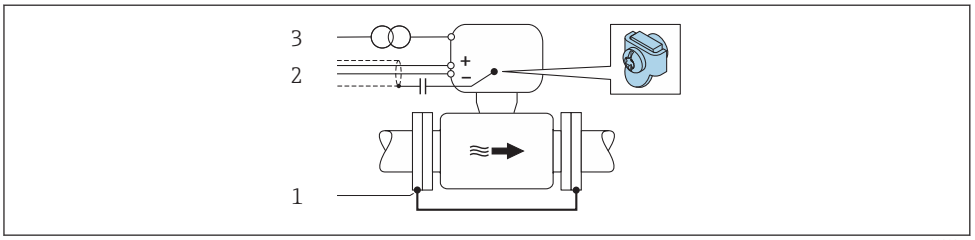

1 *Connection of the two flanges of the pipe via a ground cable*
2 *Signal line shielding via a capacitor*
3 *Measuring device connected to power supply such that it is floating in relation to the protective ground (isolation transformer)*

Note the following when installing:
The sensor is installed in the pipe in a way that provides electrical insulation.

For remote device versions, the ground terminal in the example always refers to the sensor and **not** to the transmitter.

You can order the necessary ground cable from Endress+Hauser: .

terminals

Transmitter
- Supply voltage cable: plug-in spring terminals for wire cross-sections 0.5 to 2.5 mm² (20 to 14 AWG)
- Signal cable: plug-in spring terminals for wire cross-sections 0.5 to 2.5 mm² (20 to 14 AWG)
- Electrode cable: spring terminals for wire cross-sections 0.5 to 2.5 mm² (20 to 14 AWG)
- Coil current cable: spring terminals for wire cross-sections 0.5 to 2.5 mm² (20 to 14 AWG)

Sensor connection housing
Spring terminals for wire cross-sections0.5 to 2.5 mm² (20 to 14 AWG)

Cable entries

Cable entry thread
- M20 x 1.5
- Via adapter:
  - NPT ½"
  - G ½"

Cable gland
- For standard cable: M20 × 1.5 with cable Φ6 to 12 mm (0.24 to 0.47 in)
- For reinforced cable: M20 × 1.5 with cable Φ9.5 to 16 mm (0.37 to 0.63 in)

If metal cable entries are used, use a grounding plate.

Cable specification

Permitted temperature range
- The installation guidelines that apply in the country of installation must be observed.
- The cables must be suitable for the minimum and maximum temperatures to be expected.

Power supply cable

Standard installation cable is sufficient.

Signal cable

Current output 0/4 to 20 mA

Standard installation cable is sufficient.

Current output 4 to 20 mA HART

A shielded cable is recommended. Observe grounding concept of the plant.

Pulse/frequency/switch output

Standard installation cable is sufficient.

Status input

Standard installation cable is sufficient.

PROFIBUS DP

The IEC 61158 standard specifies two types of cable (A and B) for the bus line which can be used for every transmission rate. Cable type A is recommended.

Cable type	A
Characteristic impedance	135 to 165 Ω at a measuring frequency of 3 to 20 MHz
Cable capacitance	< 30 pF/m
Wire cross-section	> 0.34 mm² (22 AWG)
Cable type	Twisted pairs
Loop resistance	≤110 Ω/km
Signal damping	Max. 9 dB over the entire length of the cable cross-section
Shield	Copper braided shielding or braided shielding with foil shield. When grounding the cable shield, observe the grounding concept of the plant.

For further information on planning and installing PROFIBUS networks see:

Operating Instructions "PROFIBUS DP/PA: Guidelines for planning and commissioning" (BA00034S)

Modbus RS485

The EIA/TIA-485 standard specifies two types of cable (A and B) for the bus line which can be used for every transmission rate. Cable type A is recommended.

Cable type	A
Characteristic impedance	135 to 165 Ω at a measuring frequency of 3 to 20 MHz
Cable capacitance	< 30 pF/m
Wire cross-section	> 0.34 mm² (22 AWG)
Cable type	Twisted pairs
Loop resistance	≤110 Ω/km
Signal damping	Max. 9 dB over the entire length of the cable cross-section
Shield	Copper braided shielding or braided shielding with foil shield. When grounding the cable shield, observe the grounding concept of the plant.

EtherNet/IP

The standard ANSI/TIA/EIA-568-B.2 Annex specifies CAT 5 as the minimum category for a cable used for EtherNet/IP. CAT 5e and CAT 6 are recommended.

For more information on planning and installing EtherNet/IP networks, please refer to the "Media Planning and Installation Manual. EtherNet/IP" of ODVA Organization

Connecting cable for remote version

Electrode cable

Standard cable	3 ×0.38 mm² (20 AWG) with common, braided copper shield (ϕ ~9.5 mm (0.37 in)) and individual shielded cores
Cable for empty pipe detection (EPD)	4 ×0.38 mm² (20 AWG) with common, braided copper shield (ϕ ~9.5 mm (0.37 in)) and individual shielded cores
Conductor resistance	≤50 Ω/km (0.015 Ω/ft)
Capacitance: core/shield	≤420 pF/m (128 pF/ft)
Operating temperature	–20 to +80 °C (–68 to +176 °F)

Coil current cable

Standard cable	3 ×0.75 mm² (18 AWG) with common, braided copper shield (ϕ ~9 mm (0.35 in))
Conductor resistance	≤37 Ω/km (0.011 Ω/ft)
Capacitance: core/core, shield grounded	≤120 pF/m (37 pF/ft)
Operating temperature	–20 to +80 °C (–68 to +176 °F)
Test voltage for cable insulation	≤ AC 1433 V r.m.s. 50/60 Hz or ≥ DC 2026 V

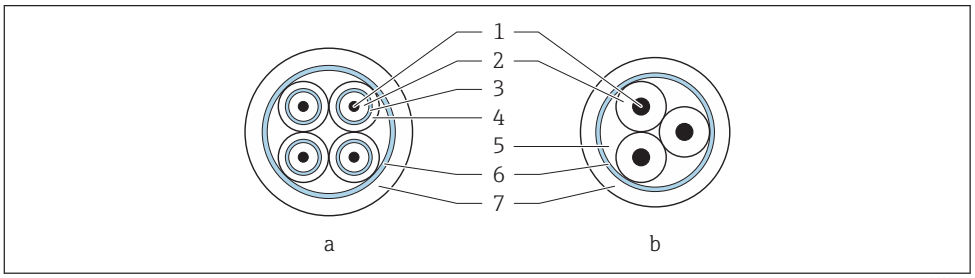

16 *Cable cross-section*

a *Electrode cable*
b *Coil current cable*
1 *Core*
2 *Core insulation*
3 *Core shield*
4 *Core jacket*
5 *Core reinforcement*
6 *Cable shield*
7 *Outer jacket*

A connecting cable can be ordered from Endress+Hauser for IP68:
- Pre-terminated cables that are already connected to the sensor.
- Pre-terminated cables, where the cables are connected by the customer onsite (incl. tools for sealing the connection compartment)

Reinforced connecting cables

Reinforced connecting cables with an additional, reinforcing metal braid should be used for:
- When laying the cable directly in the ground
- Where there is a risk of damage from rodents
- If using the device below IP68 degree of protection

Reinforced connecting cables with an additional, reinforcing metal braid can be ordered from Endress+Hauser .

Operation in zones of severe electrical interference

The measuring system meets the general safety requirements → 94 and EMC specifications → 42.

Grounding is by means of the ground terminal provided for the purpose inside the connection housing. The stripped and twisted lengths of cable shield to the ground terminal must be as short as possible.

Performance characteristics

Reference operating conditions

- Error limits following DIN EN 29104, in future ISO 20456
- Water, typically +15 to +45 °C (+59 to +113 °F); 0.5 to 7 bar (73 to 101 psi)
- Data as indicated in the calibration protocol
- Accuracy based on accredited calibration rigs according to ISO 17025

Maximum measured error

Error limits under reference operating conditions

o.r. = of reading

Volume flow
- ±0.5 % o.r. ± 1 mm/s (0.04 in/s)
- Optional: ±0.2 % o.r. ± 2 mm/s (0.08 in/s)

Fluctuations in the supply voltage do not have any effect within the specified range.

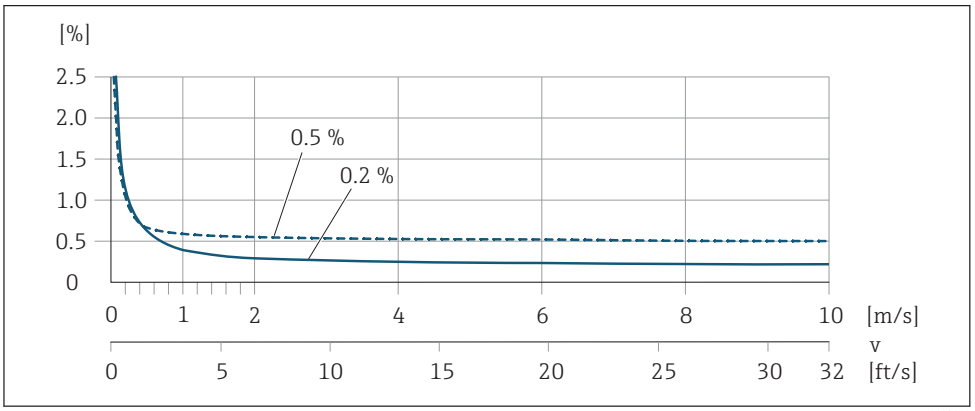

17 *Maximum measured error in % o.r.*

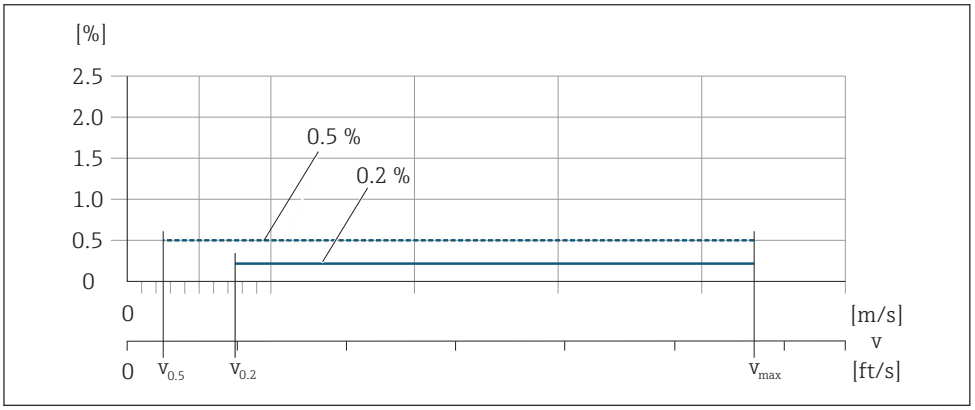

18 *Flat Spec in % o.r.*

For Flat Spec 0.5 %, the measured error is constant as of a flow velocity of $v_{0.5}$.

Flat Spec flow values0.5 %

Nominal diameter		$v_{0.5}$		v_{max}	
[mm]	[in]	[m/s]	[ft/s]	[m/s]	[ft/s]
25 to 600	1 to 24	0.5	1.64	10	32
50 to 300 [1)]	2 to 12	0.25	0.82	5	16

1) Order code for "Design", option C "Fixed flange, without inlet/outlet runs"

For Flat Spec 0.2 %, the measured error is constant as of a flow velocity of $v_{0.2}$.

Flat Spec flow values0.2 %

Nominal diameter		$v_{0.2}$		v_{max}	
[mm]	[in]	[m/s]	[ft/s]	[m/s]	[ft/s]
25 to 600	1 to 24	1.5	4.92	10	32
50 to 300 [1)]	2 to 12	0.6	1.97	4	13

1) Order code for "Design", option C "Fixed flange, without inlet/outlet runs"

Electrical conductivity
Max. measured error not specified.

Accuracy of outputs

The outputs have the following base accuracy specifications.

Current output

Accuracy	Max. ±5 µA

Pulse/frequency output

o.r. = of reading

Accuracy	Max. ±50 ppm o.r. (over the entire ambient temperature range)

Repeatability

o.r. = of reading

Volume flow
max. ±0.1 % o.r. ± 0.5 mm/s (0.02 in/s)

Electrical conductivity
Max. ±5 % o.r.

Influence of ambient temperature

Current output

o.r. = of reading

Temperature coefficient	Max. ±0.005 % o.r./°C

Pulse/frequency output

Temperature coefficient	No additional effect. Included in accuracy.

Installation

No special measures such as supports etc. are necessary. External forces are absorbed by the construction of the device.

Mounting location

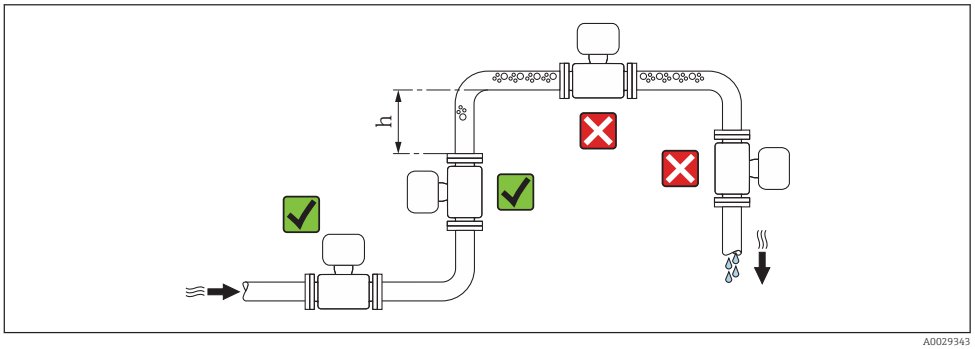

Preferably install the sensor in an ascending pipe, and ensure a sufficient distance to the next pipe elbow: h ≥ 2 × DN

Not necessary for the order code for "Design", option C

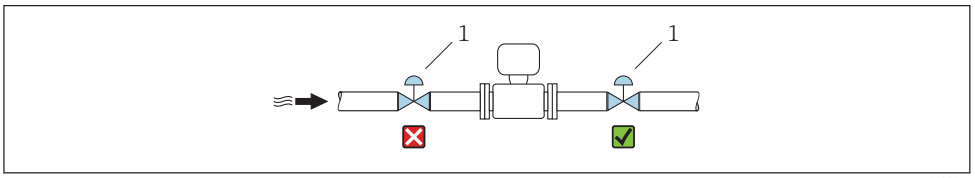

19 *Installation of the sensor after a control valve is not recommended*

1 Control valve

Installation in down pipes

Install a siphon with a vent valve downstream of the sensor in down pipes whose length h ≥ 5 m (16.4 ft). This precaution is to avoid low pressure and the consequent risk of damage to the measuring tube. This measure also prevents the system losing prime.

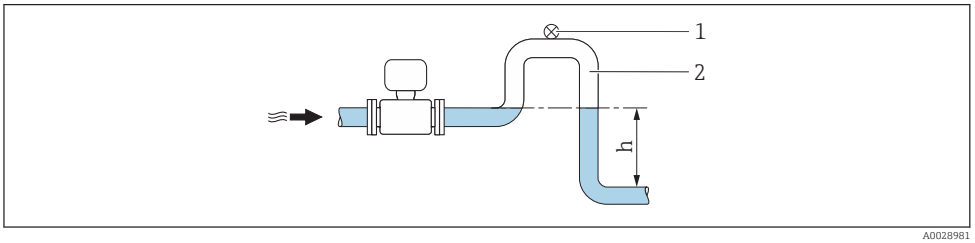

20 *Installation in a down pipe*

1 Vent valve
2 Pipe siphon
h Length of down pipe

Installation in partially filled pipes

A partially filled pipe with a gradient necessitates a drain-type configuration.

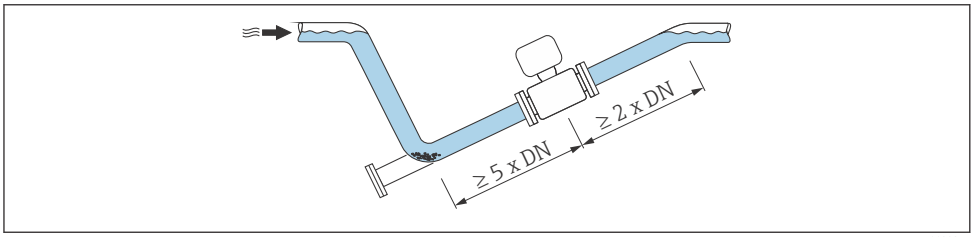

For heavy sensors DN ≥ 350 (14")

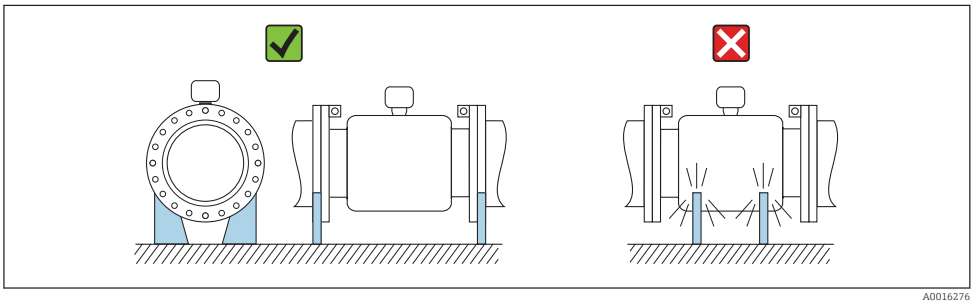

Orientation

The direction of the arrow on the sensor nameplate helps you to install the sensor according to the flow direction (direction of medium flow through the piping).

Orientation			Recommendation
A	Vertical orientation	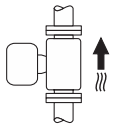 A0015591	✓✓
B	Horizontal orientation, transmitter at top	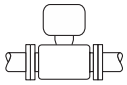 A0015589	✓✓ 1)
C	Horizontal orientation, transmitter at bottom	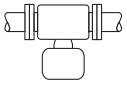 A0015590	✓✓ 2) 3) ✗ 4)
D	Horizontal orientation, transmitter at side	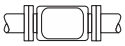 A0015592	✗

1) Applications with low process temperatures may decrease the ambient temperature. To maintain the minimum ambient temperature for the transmitter, this orientation is recommended.
2) Applications with high process temperatures may increase the ambient temperature. To maintain the maximum ambient temperature for the transmitter, this orientation is recommended.
3) To prevent the electronics module from overheating in the case of a sharp rise in temperature (e.g. CIP or SIP processes), install the device with the transmitter component pointing downwards.
4) With the empty pipe detection function switched on: empty pipe detection only works if the transmitter housing is pointing upwards.

Horizontal

- Ideally, the measuring electrode plane should be horizontal. This prevents brief insulation of the two measuring electrodes by entrained air bubbles.
- Empty pipe detection only works if the transmitter housing is pointing upwards as otherwise there is no guarantee that the empty pipe detection function will actually respond to a partially filled or empty measuring tube.

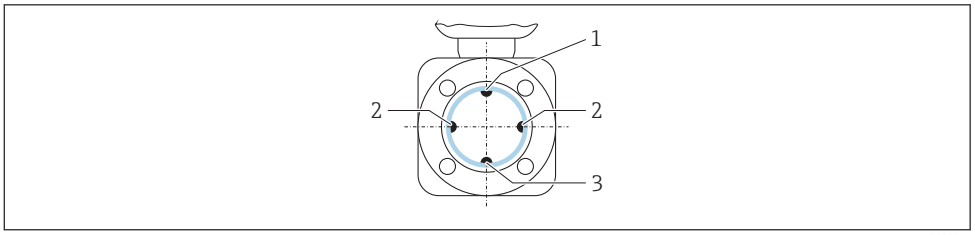

A0029344

1 EPD electrode for empty pipe detection
2 Measuring electrodes for signal detection
3 Reference electrode for potential equalization

Inlet and outlet runs

If possible, install the sensor upstream from fittings such as valves, T-pieces or elbows.

Observe the following inlet and outlet runs to comply with accuracy specifications:

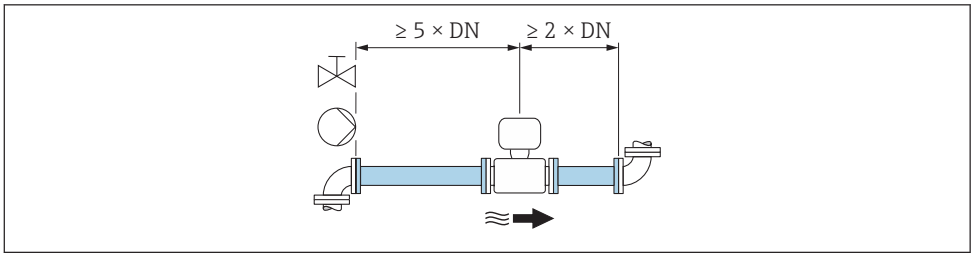

A0028997

For sensors with the order code for "Design", option C "fixed flange", no inlet and outlet runs must be taken into account.

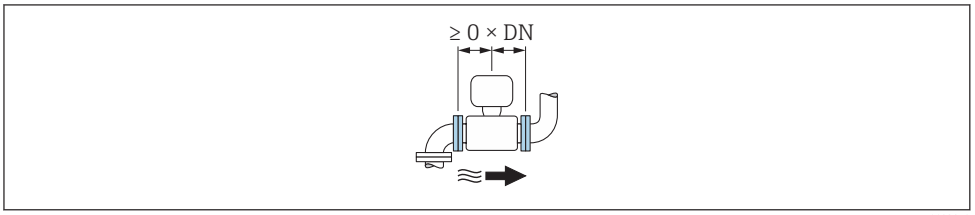

A0032859

To keep within the in-service maximum permissible errors for custody transfer no additional requirements apply with regard to the graphic illustrated above.

Adapters

Suitable adapters to DIN EN 545 (double-flange reducers) can be used to install the sensor in larger-diameter pipes. The resultant increase in the rate of flow improves measuring accuracy with very slow-moving fluids.

The nomogram shown here can be used to calculate the pressure loss caused by reducers and expanders:

- Calculate the ratio of the diameters d/D.
- From the nomogram read off the pressure loss as a function of flow velocity (downstream from the reduction) and the d/D ratio.

The nomogram only applies to liquids with a viscosity similar to that of water.

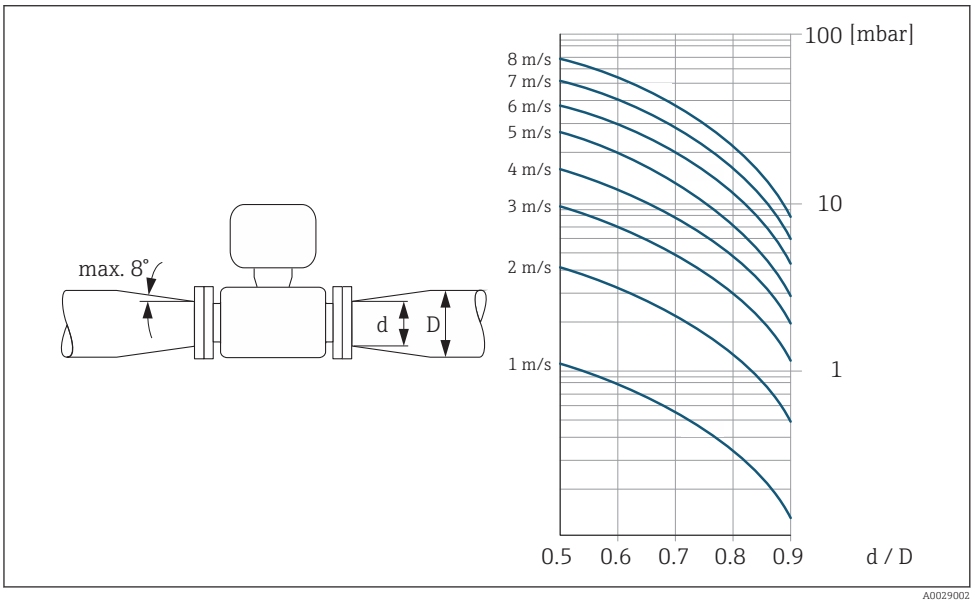

A0029002

Length of connecting cable

To obtain correct measurement results, observe the permitted connecting cable length of L_{max}. This length is determined by the conductivity of the fluid. If measuring liquids in general: 5 µS/cm

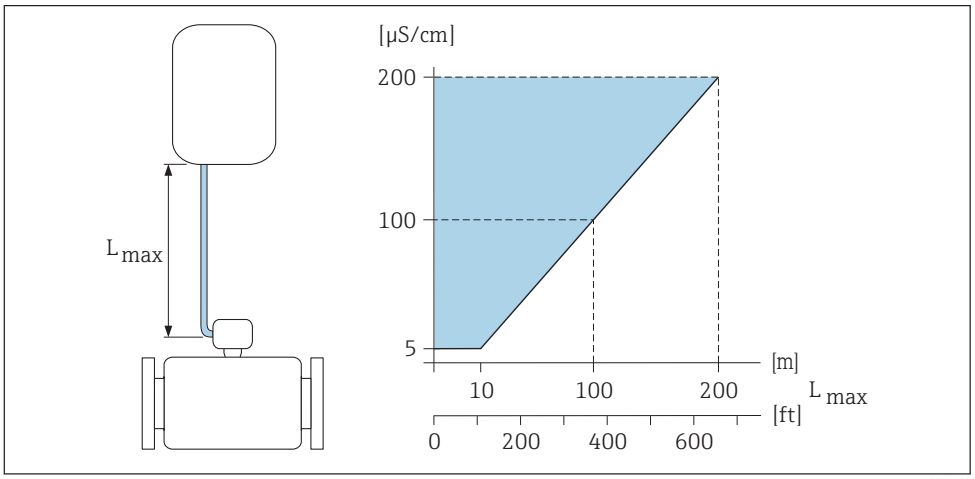

21 *Permitted length of connecting cable*

Colored area = permitted range
L_{max} = length of connecting cable in [m] ([ft])
[µS/cm] = fluid conductivity

Mounting the transmitter housing

Wall mounting

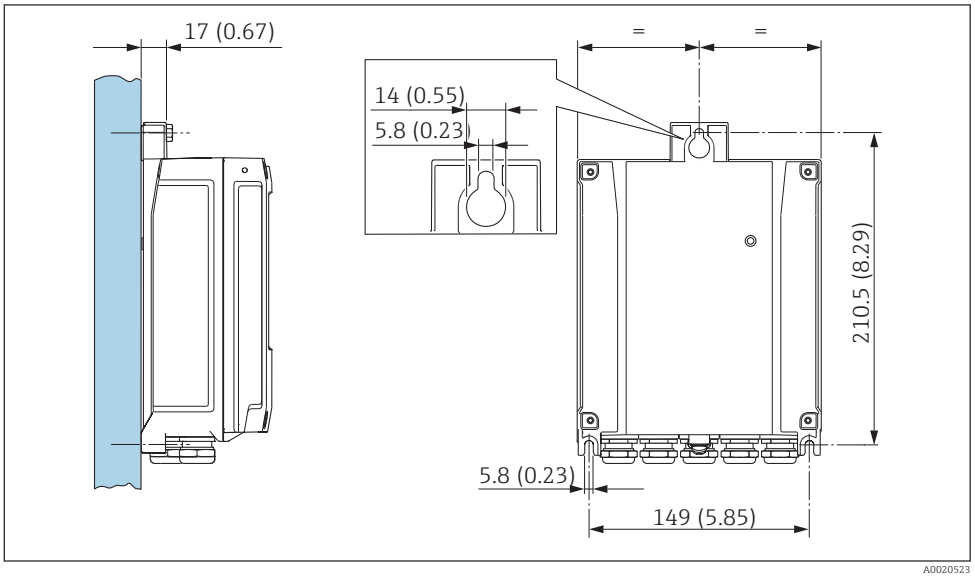

22 *Engineering unit mm (in)*

Post mounting

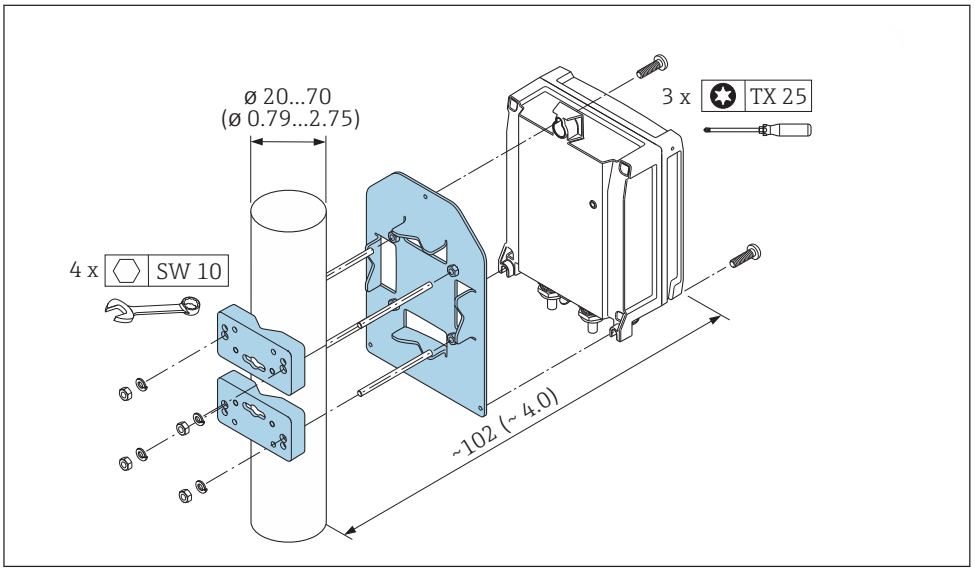

23 Engineering unit mm (in)

Special mounting instructions

Display guard

To ensure that the optional display guard can be easily opened, maintain the following minimum head clearance: 350 mm (13.8 in)

Permanent immersion in water

A fully welded remote version with IP68 protection is optionally available for permanent immersion in water ≤ 3 m (10 ft) or in exceptional cases for use for up to 48 hours at ≤ 10 m (30 ft). The measuring device meets the requirements of corrosion categories C5-M and Im1/Im2/Im3. The fully welded design along with the connection compartment sealing system ensure that moisture cannot enter the measuring device.

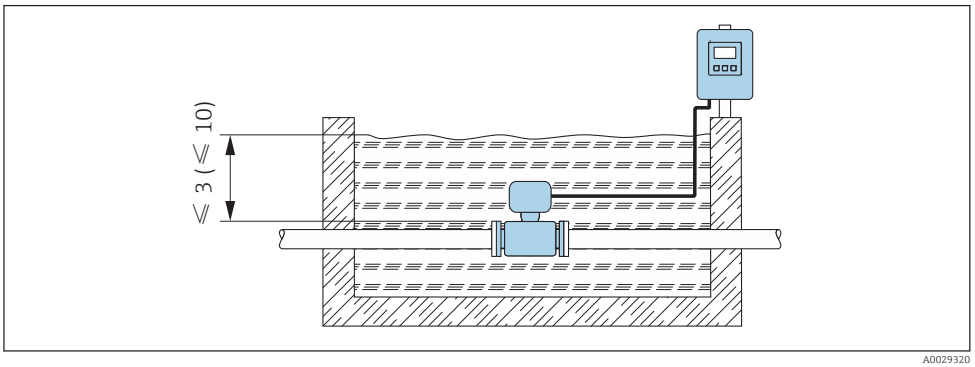

24 Engineering unit in m(ft)

Replacement of cable gland on connection housing

Buried applications

A remote version with IP68 protection is optionally available for buried applications. The measuring device satisfies the certified corrosion protection Im1/Im2/Im3 in accordance with EN ISO 12944. It can be used directly underground without the need for additional protective measures. The device is mounted in accordance with the usual regional installation regulations (e.g. EN DIN 1610).

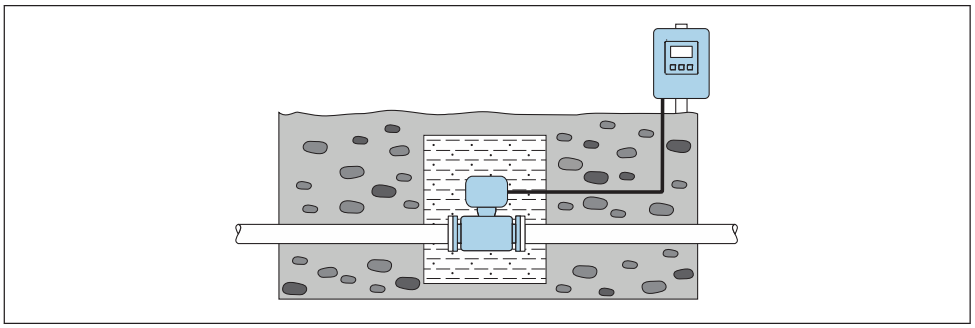

A0029321

Environment

Ambient temperature range

Transmitter	−40 to +60 °C (−40 to +140 °F)
Local display	−20 to +60 °C (−4 to +140 °F), the readability of the display may be impaired at temperatures outside the temperature range.
Sensor	▪ Process connection material, carbon steel: −10 to +60 °C (+14 to +140 °F) ▪ Process connection material, stainless steel: −40 to +60 °C (−40 to +140 °F) Mount the transmitter separately from the sensor if both the ambient and fluid temperatures are high.
Liner	Do not exceed or fall below the permitted temperature range of the liner .

If operating outdoors:
- Install the measuring device in a shady location.
- Avoid direct sunlight, particularly in warm climatic regions.
- Avoid direct exposure to weather conditions.
- If the compact version of the device is insulated at low temperatures, the insulation must also include the device neck.
- Protect the display against impact.
- Protect the display from abrasion by sand in desert areas.

Display guard available as an accessory → 96.

Temperature tables

Observe the interdependencies between the permitted ambient and fluid temperatures when operating the device in hazardous areas.

For detailed information on the temperature tables, see the separate document entitled "Safety Instructions" (XA) for the device.

Storage temperature

The storage temperature corresponds to the operating temperature range of the transmitter and the sensor → 41.

- Protect the measuring device against direct sunlight during storage in order to avoid unacceptably high surface temperatures.
- Select a storage location where moisture cannot collect in the measuring device as fungus or bacteria infestation can damage the liner.
- If protection caps or protective covers are mounted these should never be removed before installing the measuring device.

Atmosphere

If a plastic transmitter housing is permanently exposed to certain steam and air mixtures, this can damage the housing.

In cases of doubt, please contact the Sales Center.

Degree of protection

Transmitter
- As standard: IP66/67, type 4X enclosure
- When housing is open: IP20, type 1 enclosure

Sensor
- As standard: IP66/67, type 4X enclosure
- Optionally available for remote version:
  - IP66/67, type 4X enclosure; fully welded, with protective varnish EN ISO 12944 C5-M. Suitable for use in corrosive atmospheres.
  - IP68, type 6P enclosure; fully welded, with protective varnish as per EN ISO 12944 C5-M. Suitable for permanent immersion in water ≤ 3 m (10 ft) or up to 48 hours at depths ≤ 10 m (30 ft).
  - IP68, type 6P enclosure; fully welded, with protective varnish as per EN ISO 12944 Im1/Im2/Im3. Suitable for permanent immersion in saline water ≤ 3 m (10 ft) or up to 48 hours at depths ≤ 10 m (30 ft) or in buried applications.

Vibration resistance

Compact version
- Oscillation, sinusoidal, following IEC 60068-2-6
  - 2 to 8.4 Hz, 3.5 mm peak
  - 8.4 to 2 000 Hz, 1 g peak
- Oscillation, broadband noise following IEC 60068-2-64
  - 10 to 200 Hz, 0.003 g^2/Hz
  - 200 to 2 000 Hz, 0.001 g^2/Hz
  - Total: 1.54 g rms

Remote version
- Vibration, sinusoidal according to IEC 60068-2-6
  - 2 to 8.4 Hz, 7.5 mm peak
  - 8.4 to 2 000 Hz, 2 g peak
- Vibration broad-band random, according to IEC 60068-2-64
  - 10 to 200 Hz, 0.01 g^2/Hz
  - 200 to 2 000 Hz, 0.003 g^2/Hz
  - Total: 2.70 g rms

Shock resistance

Shock, half-sine according to IEC 60068-2-27
6 ms 50 g

Shock resistance

Shock due to rough handling following IEC 60068-2-31

Mechanical load
- Protect the transmitter housing against mechanical effects, such as shock or impact; the use of the remote version is sometimes preferable.
- Never use the transmitter housing as a ladder or climbing aid.

Electromagnetic compatibility (EMC)
- As per IEC/EN 61326 and NAMUR Recommendation 21 (NE 21)
- Complies with emission limits for industry as per EN 55011 (Class A)
- Device version with PROFIBUS DP: Complies with emission limits for industry as per EN 50170 Volume 2, IEC 61784

The following applies for PROFIBUS DP: If baud rates > 1.5 MBaud, an EMC cable entry must be used and the cable shield must continue as far as the terminal wherever possible.

Details are provided in the Declaration of Conformity.

Process

Medium temperature range
- 0 to +80 °C (+32 to +176 °F) for hard rubber, DN 50 to 2400 (2 to 90")
- −20 to +50 °C (−4 to +122 °F) for polyurethane, DN 25 to 1200 (1 to 48")
- −20 to +90 °C (−4 to +194 °F) for PTFE, DN 25 to 300 (1 to 12")

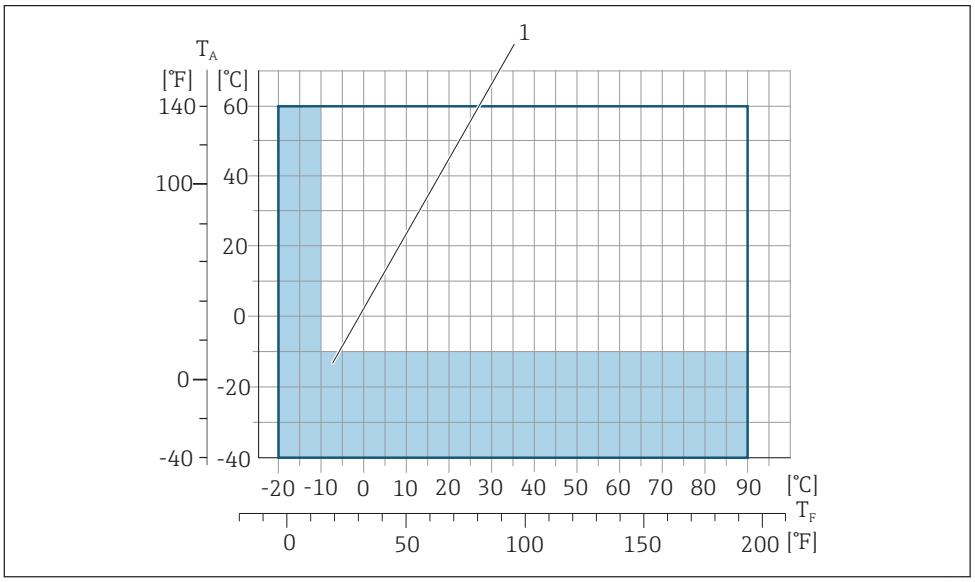

T_A *Ambient temperature range*
T_F *Fluid temperature*
1 *Colored area: the ambient temperature range of −10 to −40 °C (+14 to −40 °F) and the fluid temperature range of −10 to −20 °C (+14 to −4 °F) applies to stainless flanges only*

The permitted fluid temperature in custody transfer is 0 to +50 °C (+32 to +122 °F).

Conductivity

≥ 5 µS/cm for liquids in general.

Stronger filter damping is required for very low conductivity values.

Remote version
The necessary minimum conductivity also depends on the cable length → 38→ 38.

Pressure-temperature ratings

The following pressure/temperature diagrams apply to all pressure-bearing parts of the device and not just the process connection. The diagrams show the maximum permissible medium pressure depending on the specific medium temperature.

Process connection: fixed flange according to EN 1092-1 (DIN 2501)

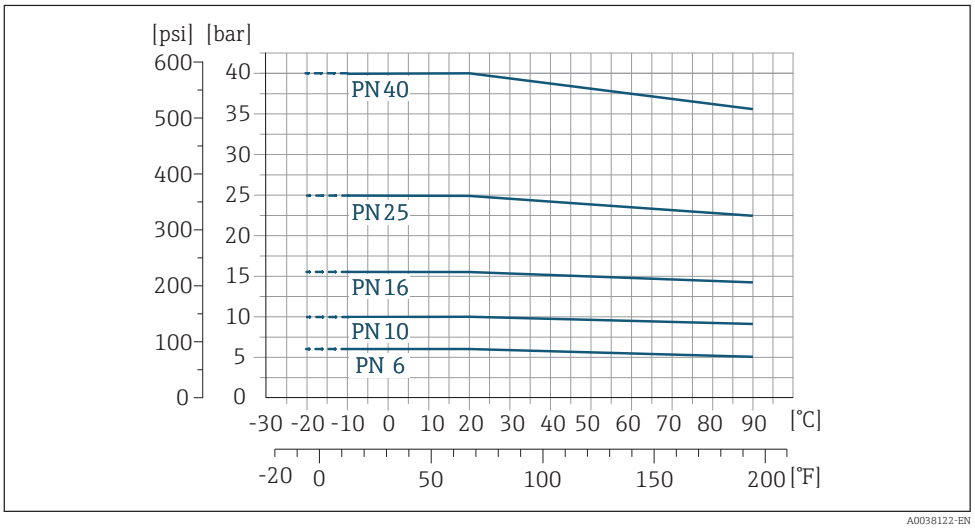

25 *Process connection material: stainless steel (−20 °C (−4 °F)); carbon steel (−10 °C (14 °F))*

Process connection: fixed flange according to ASME B16.5

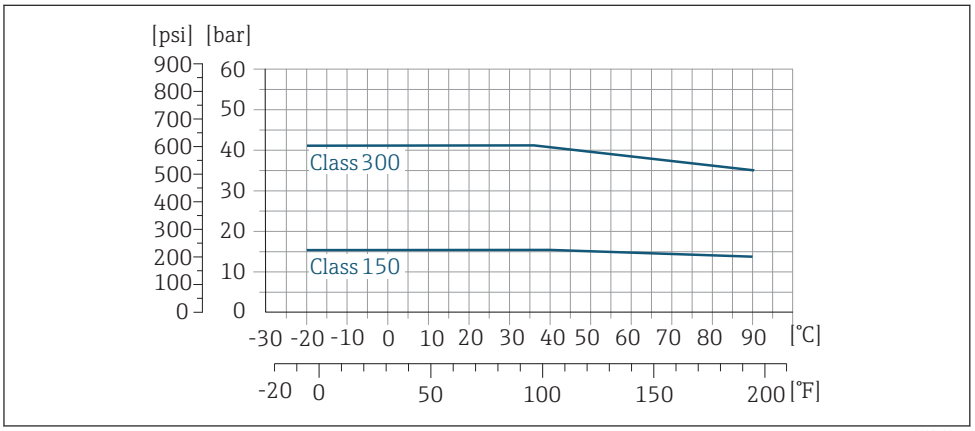

26 *Process connection material: stainless steel*

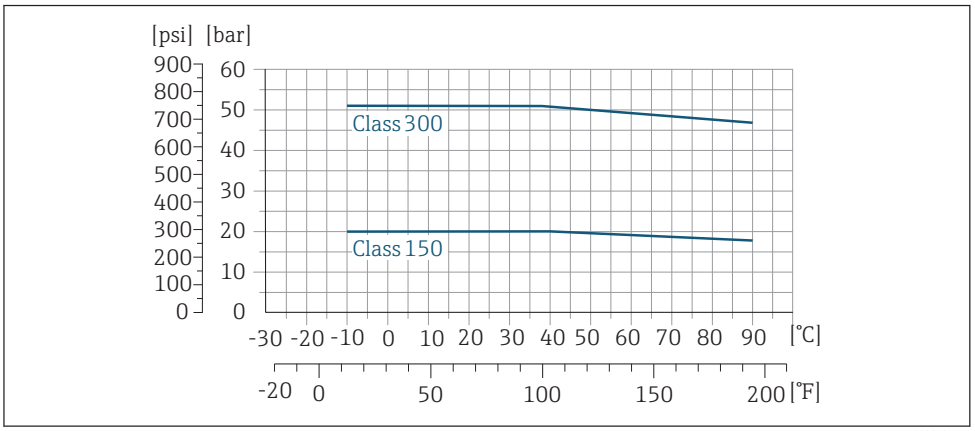

27 *Process connection material: carbon steel*

Process connection: fixed flange according to JIS B2220

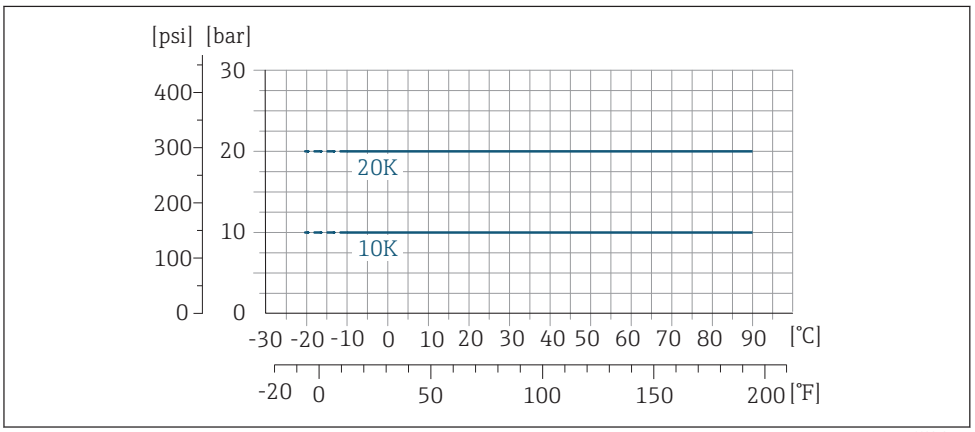

28 *Process connection material: stainless steel (−20 °C (−4 °F)); carbon steel (−10 °C (14 °F))*

Process connection: fixed flange according to AWWA C207

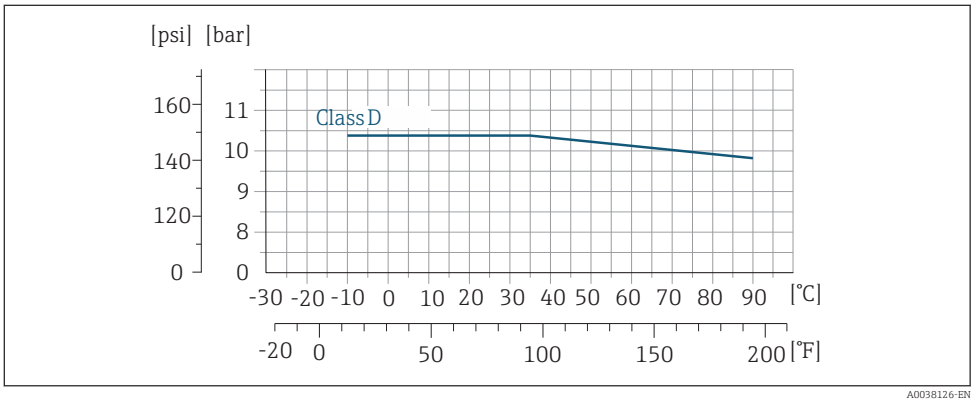

29 Process connection material: carbon steel

Process connection: fixed flange according to AS 2129

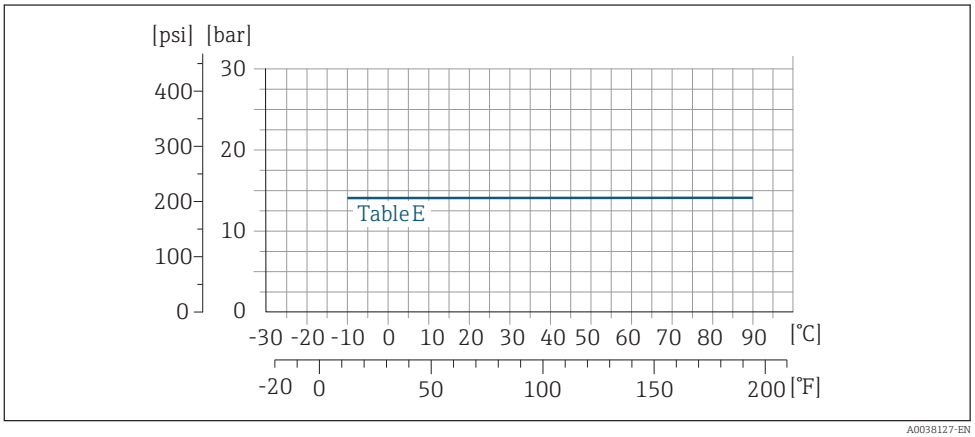

30 Process connection material: carbon steel

Process connection: fixed flange according to AS 4087

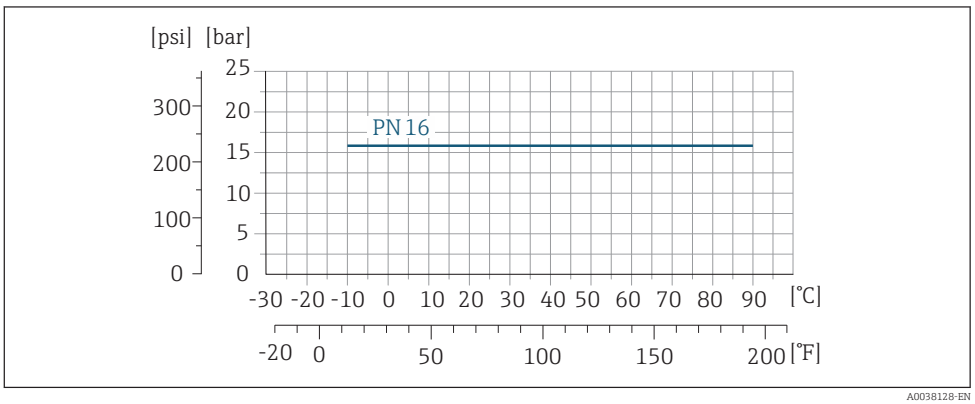

31 Process connection material: carbon steel

Process connection: lap joint flange/lap joint flange, stamped plate according to EN 1092-1 (DIN 2501) and ASME B16.5; DN 25 to 300 (1 to 12")

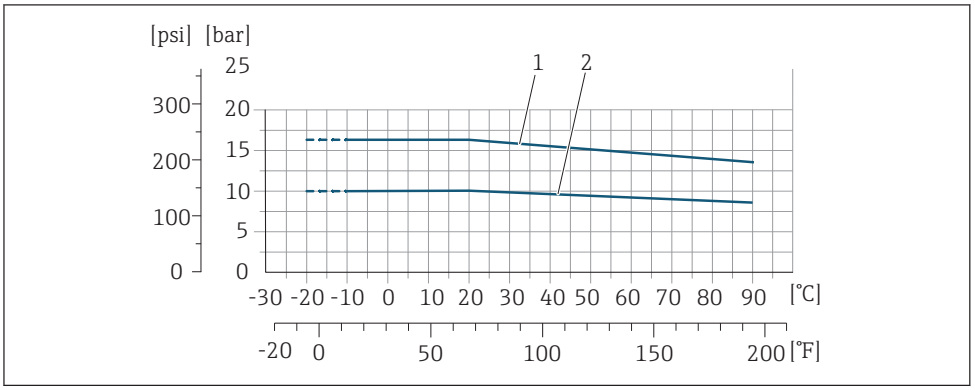

32 Process connection material: stainless steel (−20 °C (−4 °F)); carbon steel (−10 °C (14 °F))

1 Lap joint flange PN16/ Class150
2 Lap joint flange, stamped plate PN10, lap joint flange PN10

Pressure tightness

Liner: hard rubber

Nominal diameter		Limit values for absolute pressure in [mbar] ([psi]) for medium temperatures:		
[mm]	[in]	+25 °C (+77 °F)	+50 °C (+122 °F)	+80 °C (+176 °F)
50 … 2400	2 … 90	0 (0)	0 (0)	0 (0)

Liner: polyurethane

Nominal diameter		Limit values for absolute pressure in [mbar] ([psi]) for medium temperatures:	
[mm]	[in]	+25 °C (+77 °F)	+50 °C (+122 °F)
25 … 1200	1 … 48	0 (0)	0 (0)

Liner: PTFE

Nominal diameter		Limit values for absolute pressure in [mbar] ([psi]) for medium temperatures:	
[mm]	[in]	+25 °C (+77 °F)	+90 °C (+194 °F)
25	1	0 (0)	0 (0)
40	2	0 (0)	0 (0)
50	2	0 (0)	0 (0)
65	2 ½	0 (0)	40 (0.58)
80	3	0 (0)	40 (0.58)
100	4	0 (0)	135 (2.0)
125	5	135 (2.0)	240 (3.5)
150	6	135 (2.0)	240 (3.5)
200	8	200 (2.9)	290 (4.2)
250	10	330 (4.8)	400 (5.8)
300	12	400 (5.8)	500 (7.3)

Flow limit

The diameter of the pipe and the flow rate determine the nominal diameter of the sensor. The optimum velocity of flow is between 2 to 3 m/s (6.56 to 9.84 ft/s). Also match the velocity of flow (v) to the physical properties of the fluid:

- v < 2 m/s (6.56 ft/s): for abrasive fluids (e.g. potter's clay, lime milk, ore slurry)
- v > 2 m/s (6.56 ft/s): for fluids producing buildup (e.g. wastewater sludge)

A necessary increase in the flow velocity can be achieved by reducing the sensor nominal diameter.

For an overview of the full scale values for the measuring range, see the "Measuring range" section → 9

For custody transfer, the applicable approval determines the permitted measuring range.

Pressure loss

- No pressure loss occurs if the sensor is installed in a pipe with the same nominal diameter.
- Pressure losses for configurations incorporating adapters according to DIN EN 545 → 38

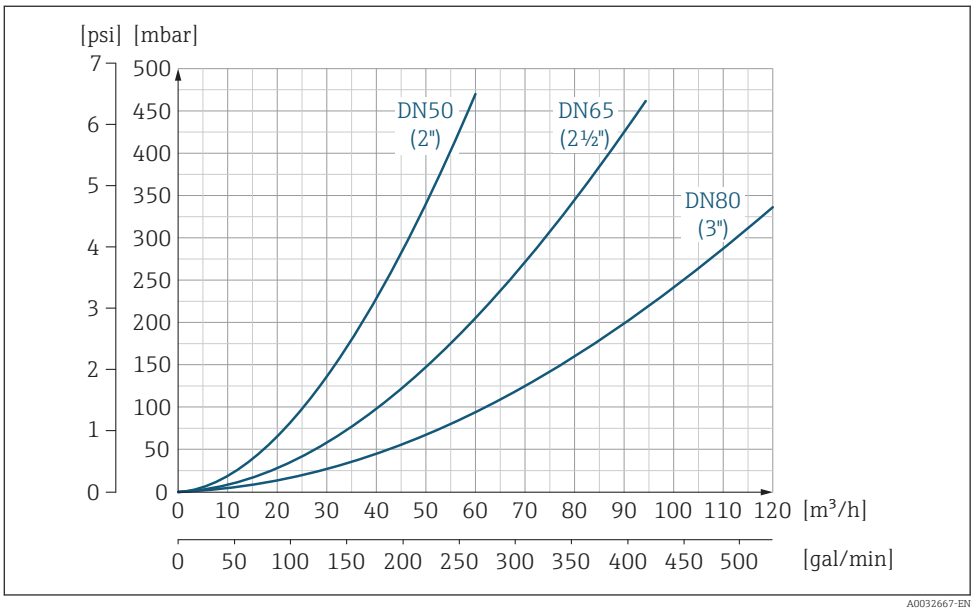

33 Pressure loss DN 50 to 80 (2 to 3") for order code for "Design", option C "fixed flange, without inlet/outlet runs"

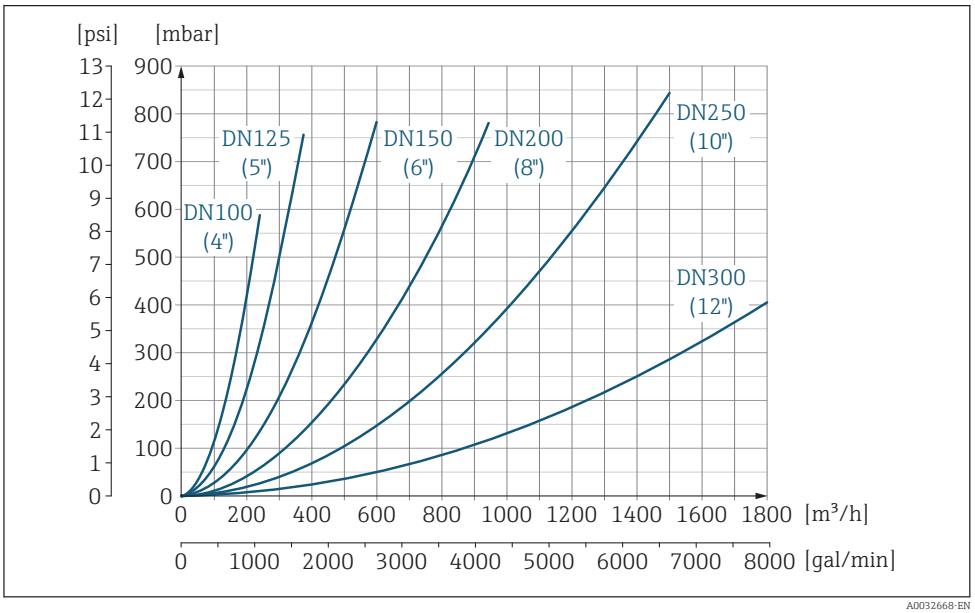

34 *Pressure loss DN 100 to 300 (4 to 12") for order code for "Design", option C "fixed flange, without inlet/ outlet runs"*

System pressure

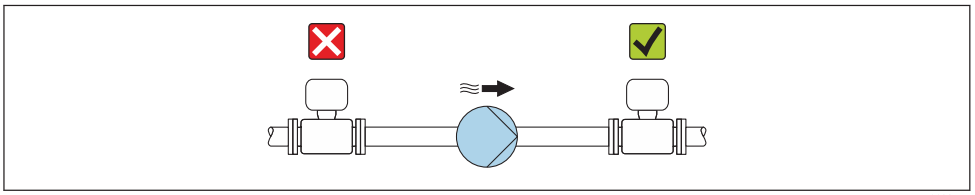

Never install the sensor on the pump suction side in order to avoid the risk of low pressure, and thus damage to the liner.

Furthermore, install pulse dampers if reciprocating, diaphragm or peristaltic pumps are used.

- Information on the liner's resistance to partial vacuum → 46
- Information on the shock resistance of the measuring system → 42
- Information on the vibration resistance of the measuring system → 42

Thermal insulation

If process fluids are very hot, it is necessary to insulate pipes in order to reduce energy loss and to prevent individuals from accidentally coming into contact with hot pipes. Please observe the applicable standards and guidelines for insulating pipes.

WARNING

Electronics overheating on account of thermal insulation!

► The housing support is used for heat dissipation and must be completely free (i.e. uncovered). At the very maximum, the sensor insulation may extend as far as the upper edge of the two sensor half-shells.

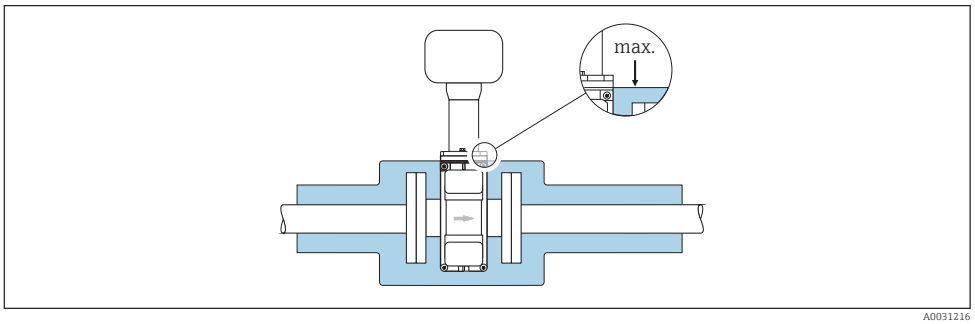

A0031216

Vibrations

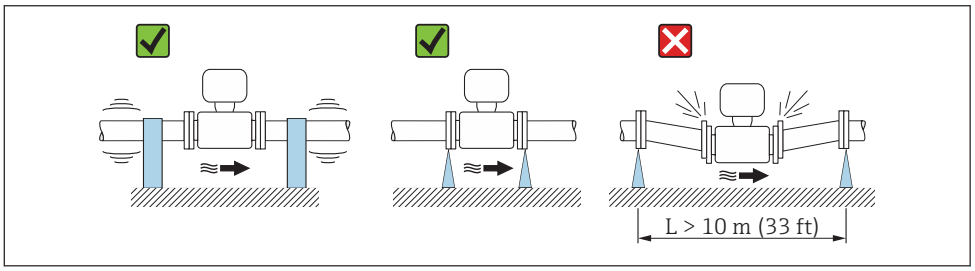

A0029004

35 *Measures to prevent vibration of the device*

In the event of very strong vibrations, the pipe and sensor must be supported and fixed.

It is also advisable to mount the sensor and transmitter separately.

- Information on the shock resistance of the measuring system → 42
- Information on the vibration resistance of the measuring system → 42

Custody transfer mode

The measuring device is optionally tested in accordance with OIML R137 and has an EU type-examination certificate according to Measuring Instruments Directive 2014/32/EU for service subject to legal metrological control ("custody transfer") for cold water (Annex III).

The permitted fluid temperature in these applications is 0 to +50 °C (+32 to +122 °F).

The device is used with a legally controlled totalizer on the local display and optionally with legally controlled outputs.

Measuring devices subject to legal metrological control totalize in both directions, i.e. all the outputs consider flow components in the positive (forward) and negative (reverse) flow direction.

Generally a measuring device subject to legal metrological control is secured against tampering by seals on the transmitter or sensor. These seals may normally only be opened by a representative of the competent authority for legal metrology controls.

After putting the device into circulation or after sealing the device, operation is only possible to a limited extent.

Detailed ordering information is available from your local Endress+Hauser sales center for national approvals (outside Europe) as cold water meters based on OIML R49.

Mechanical construction

Dimensions in SI units

Compact version

Order code for "Housing", option A "Compact, aluminum, coated" or option M "Compact, polycarbonate"

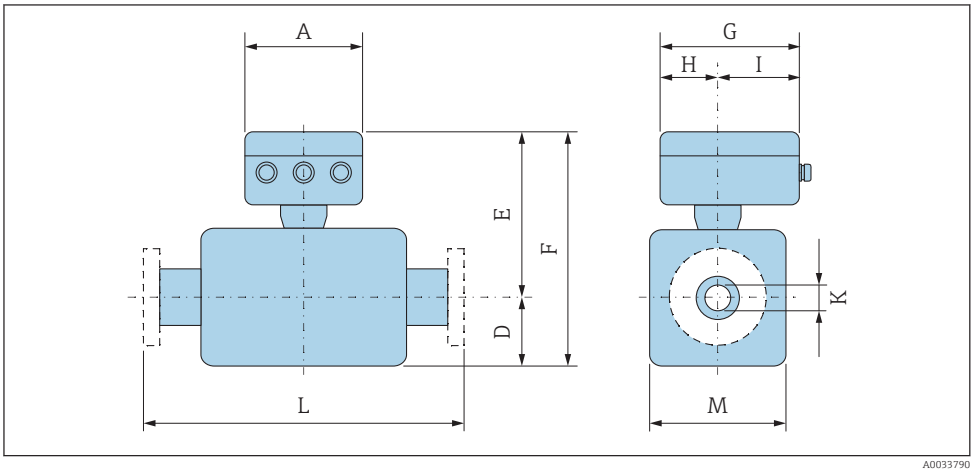

A [mm]	G [1] [mm]	H [mm]	I [1] [mm]
167	193	90	103

1) Depending on the cable gland used: values up to + 30 mm

DN 25 to 300 (1 to 12"): sensor with aluminum half-shell housing

DN		Order code for "Design"								K	L
		Options A, D, E				Option C					
		D [1]	E [1) 2)]	F [1) 2)]	M [1)]	D [1)]	E [1) 2)]	F [1) 2)]	M [1)]		
[mm]	[in]	[mm]	[mm]	[mm]	[mm]	[mm]	[mm]	[mm]	[mm]	[mm]	[mm]
25	1	84	201	285	120	–	–	–	–	[3)]	200
32	–	84	201	285	120	–	–	–	–	[3)]	200
40	1 ½	84	201	285	120	–	–	–	–	[3)]	200
50	2	84	201	285	120	84	201	285	120	[3)]	200
65	–	109	226	335	180	84	201	285	120	[3)]	200
80	3	109	226	335	180	84	201	285	120	[3)]	200
100	4	109	226	335	180	109	226	335	180	[3)]	250
125	–	150	266	416	260	109	226	335	180	[3)]	250
150	6	150	266	416	260	109	226	335	180	[3)]	300
200	8	180	291	471	324	150	266	416	260	[3)]	350
250	10	205	316	521	400	150	266	416	260	[3)]	450
300	12	230	341	571	460	180	291	471	324	[3)]	500

1) The dimensions are reference values. They may be different than indicated, depending on the pressure rating, design and order code.
2) With order code for "Sensor option", option CG "Sensor extended neck for insulation": values + 110 mm
3) Depends on the liner→ 🖹 81

DN 350 to 900 (14 to 36")

DN		Order code for "Design"								K	L	
		Options A, E, F				Option B, G						
		D [1)]	E [1) 2)]	F [1) 2)]	M [1)]	D [1)]	E [1) 2)]	F [1) 2)]	M [1)]			
[mm]	[in]	[mm]	[mm]	[mm]	[mm]	[mm]	[mm]	[mm]	[mm]	[mm]	[mm]	
350	14	245	412	658	490	–	–	–	–	[3)]	550	
375	15	271	438	709	542	–	–	–	–	[3)]	550	
400	16	271	438	709	542	–	–	–	–	[3)]	600	
450	18	299	466	765	598	333	450	783	666	[3)]	600 [4)]	650 [5)]
500	20	324	491	815	648	359	475	834	717	[3)]	600 [4)]	650 [5)]
600	24	365	542	907	730	411	528	939	821	[3)]	600 [4)]	780 [5)]
700	28	430	603	1033	860	512	630	1142	1024	[3)]	700 [4)]	910 [5)]
750	30	467	641	1108	934	512	630	1142	1024	[3)]	700 [4)]	910 [5)]
800	32	486	660	1146	972	534	650	1184	1065	[3)]	800 [4)]	1040 [5)]
900	36	536	710	1246	1072	610	727	1337	1218	[3)]	900 [4)]	1170 [5)]

1) The dimensions are reference values. They may be different than indicated, depending on the pressure rating, design and order code.
2) With order code for "Sensor option", option CG "Sensor extended neck for insulation": values + 110 mm
3) Depends on the liner→ 🖹 81
4) Order code for "Design", option F "Fixed flange, short installation length"
5) Order code for "Design", option G "Fixed flange, long installation length"

DN 1000 to 2400 (40 to 90")

DN		D [1]	E [1) 2)]	F [1) 2)]	K	L		M [1]
[mm]	[in]	[mm]	[mm]	[mm]	[mm]	[mm]		[mm]
1000	40	686	803	1489	[3]	1000 [4]	1300 [5]	1370
–	42	712	828	1540	[3]	1050 [4]	1365 [5]	1420
1200	48	811	929	1740	[3]	1200 [4]	1560 [5]	1620
–	54	912	1029	1941	[3]	1350 [4]	1755 [5]	1820
1400	–	987	1104	2091	[3]	1400 [4]	1820 [5]	1970
–	60	1011	1128	2139	[3]	1500 [4]	1950 [5]	2018
1600	–	1056	1173	2229	[3]	1600 [4]	2080 [5]	2108
–	66	1093	1209	2302	[3]	1650 [4]	2145 [5]	2180
1800	72	1188	1304	2492	[3]	1800 [4]	2340 [5]	2370
–	78	1238	1354	2592	[3]	2000 [4]	2600 [5]	2470
2000	–	1238	1354	2592	[3]	2000 [4]	2600 [5]	2470
–	84	1238	1354	2592	[3]	2200 [4]		2470
2200	–	1227	1346	2573	[3]	2200 [4]		2454
–	90	1227	1346	2573	[3]	2400 [4]		2454
2400	–	1332	1451	2783	[3]	2400 [4]		2664

1) The dimensions are reference values. They may be different than indicated, depending on the pressure rating, design and order code.
2) With order code for "Sensor option", option CG "Sensor extended neck for insulation": values + 110 mm
3) Depends on the liner→ 81
4) Order code for "Design", option F "Fixed flange, short installation length"
5) Order code for "Design", option G "Fixed flange, long installation length"

Remote version

Transmitter remote version

Order code for "Housing", option N "Remote, polycarbonate" or option P "Remote, aluminum coated"

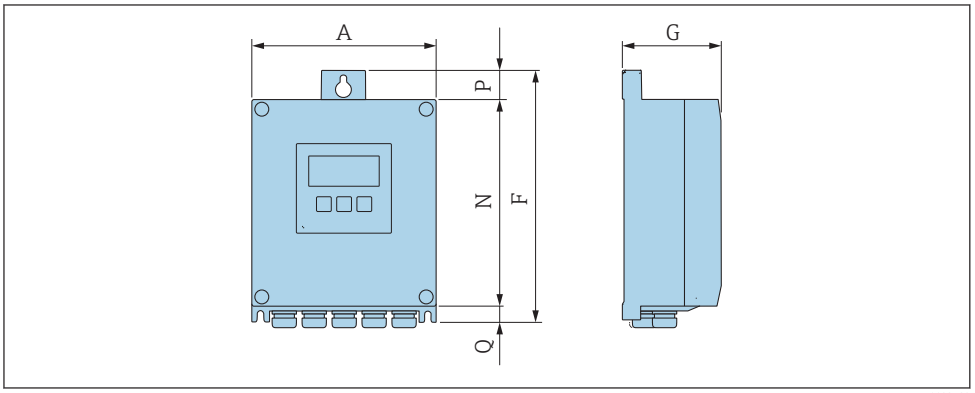

A0033789

A [mm]	F [mm]	G [mm]	N [mm]	P [mm]	Q [mm]
167	232	80	187	24	21

Sensor connection housing

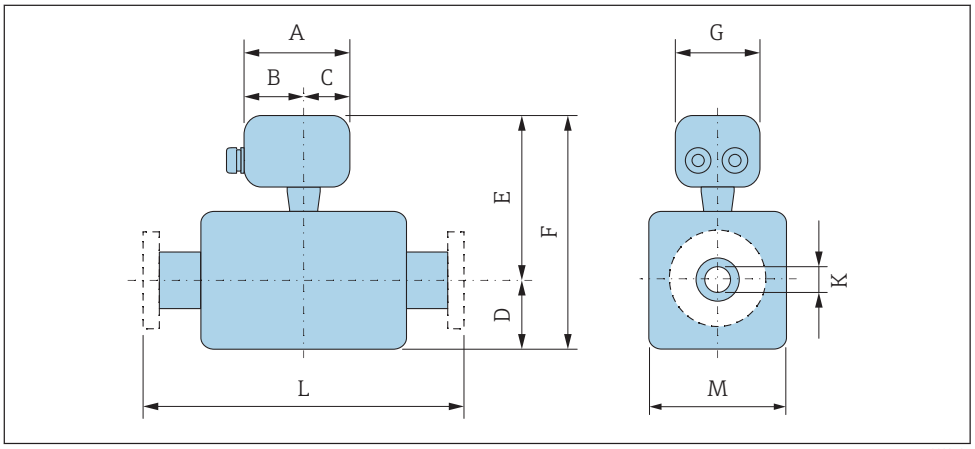

Order code for "Sensor connection housing", option A "Aluminum, coated"

A [mm]	B [mm]	C [mm]	G [mm]
148	94	54	136

Order code for "Sensor connection housing", option D "Polycarbonate"

A [mm]	B [mm]	C [mm]	G [mm]
113	62	51	112

DN 25 to 300 (1 to 12"): sensor with aluminum half-shell housing

DN		Order code for "Design"								K	L
		Options A, D, E				Option C					
		D [1]	E [1]	F [1]	M [1]	D [1]	E [1]	F [1]	M [1]		
[mm]	[in]	[mm]	[mm]	[mm]	[mm]	[mm]	[mm]	[mm]	[mm]	[mm]	[mm]
25	1	84	200	284	120	–	–	–	–	[2]	200
32	–	84	200	284	120	–	–	–	–	[2]	200
40	1 ½	84	200	284	120	–	–	–	–	[2]	200
50	2	84	200	284	120	84	200	284	120	[2]	200
65	–	109	225	334	180	84	200	284	120	[2]	200
80	3	109	225	334	180	84	200	284	120	[2]	200
100	4	109	225	334	180	109	225	334	180	[2]	250
125	–	150	265	415	260	109	225	334	180	[2]	250
150	6	150	265	415	260	109	225	334	180	[2]	300
200	8	180	290	470	324	150	265	415	260	[2]	350
250	10	205	315	520	400	150	265	415	260	[2]	450
300	12	230	340	570	460	180	290	470	324	[2]	500

1) The dimensions are reference values. They may be different than indicated, depending on the pressure rating, design and order code.
2) Depends on the liner→ 🖹 81

DN 25 to 300 (1 to 12"): sensor with fully welded carbon steel housing

DN		Order code for "Design"								K	L
		Options A, E				Option C					
		D [1]	E [1]	F [1]	M [1]	D [1]	E [1]	F [1]	M [1]		
[mm]	[in]	[mm]	[mm]	[mm]	[mm]	[mm]	[mm]	[mm]	[mm]	[mm]	[mm]
25	1	70	200	270	140	–	–	–	–	[2]	200
32	–	70	200	270	140	–	–	–	–	[2]	200
40	1 ½	70	200	270	140	–	–	–	–	[2]	200
50	2	70	200	270	140	70	200	270	140	[2]	200
65	–	82	225	307	165	70	200	270	140	[2]	200
80	3	87	225	312	175	70	200	270	140	[2]	200
100	4	100	225	325	200	82	225	307	165	[2]	250
125	–	113	265	378	226	87	225	312	175	[2]	250
150	6	134	265	399	269	100	225	325	200	[2]	300
200	8	160	290	450	320	113	265	378	226	[2]	350
250	10	193	315	508	387	134	265	399	269	[2]	450
300	12	218	340	558	437	160	290	450	320	[2]	500

1) The dimensions are reference values. They may be different than indicated, depending on the pressure rating, design and order code.
2) Depends on the liner→ 🖹 81

DN 350 to 900 (14 to 36")

DN		Order code for "Design"								K	L	
		Options A, E, F				Option B, G						
		D [1]	E [1]	F [1]	M [1]	D [1]	E [1]	F [1]	M [1]			
[mm]	[in]	[mm]	[mm]	[mm]	[mm]	[mm]	[mm]	[mm]	[mm]	[mm]	[mm]	
350	14	245	350	595	490	–	–	–	–	[2]	550	
375	15	271	375	646	542	–	–	–	–	[2]	550	
400	16	271	375	646	542	–	–	–	–	[2]	600	
450	18	299	403	702	598	333	447	780	666	[2]	600 [3]	650 [4]
500	20	324	428	752	648	359	472	831	717	[2]	600 [3]	650 [4]
600	24	365	479	844	730	411	525	936	821	[2]	600 [3]	780 [4]
700	28	430	540	970	860	512	627	1139	1024	[2]	700 [3]	910 [4]
750	30	467	578	1045	934	512	627	1139	1024	[2]	700 [3]	910 [4]
800	32	486	597	1083	972	534	647	1181	1065	[2]	800 [3]	1040 [4]
900	36	536	647	1183	1072	610	724	1334	1218	[2]	900 [3]	1170 [4]

1) The dimensions are reference values. They may be different than indicated, depending on the pressure rating, design and order code.
2) Depends on the liner→ 🖹 81
3) Order code for "Design", option F "Fixed flange, short installation length"
4) Order code for "Design", option G "Fixed flange, long installation length"

1000 … 2400 (40 … 90")

DN		D [1]	E [1]	F [1]	K	L		M [1]
[mm]	[in]	[mm]	[mm]	[mm]	[mm]	[mm]		[mm]
1000	40	686	800	1486	[2]	1000 [3]	1300 [4]	1370
–	42	712	825	1537	[2]	1050 [3]	1365 [4]	1420
1200	48	811	926	1737	[2]	1200 [3]	1560 [4]	1620
–	54	912	1026	1938	[2]	1350 [3]	1755 [4]	1820
1400	–	987	1101	2088	[2]	1400 [3]	1820 [4]	1970
–	60	1011	1125	2136	[2]	1500 [3]	1950 [4]	2018
1600	–	1056	1170	2226	[2]	1600 [3]	2080 [4]	2108
–	66	1093	1206	2299	[2]	1650 [3]	2145 [4]	2180
1800	72	1188	1301	2489	[2]	1800 [3]	2340 [4]	2370
–	78	1238	1351	2589	[2]	2000 [3]	2600 [4]	2470
2000	–	1238	1351	2589	[2]	2000 [3]	2600 [4]	2470
–	84	1238	1351	2589	[2]	2200 [3]		2470
2200	–	1227	1343	2570	[2]	2200 [3]		2454
–	90	1227	1343	2570	[2]	2400 [3]		2454
2400	–	1332	1448	2780	[2]	2400 [3]		2664

1) The dimensions are reference values. They may be different than indicated, depending on the pressure rating, design and order code.
2) Internal diameter depends on liner, see measuring tube specification → 🖹 81
3) Order code for "Design", option F "Fixed flange, short installation length"
4) Order code for "Design", option G "Fixed flange, long installation length"

Flange connections

Fixed flange

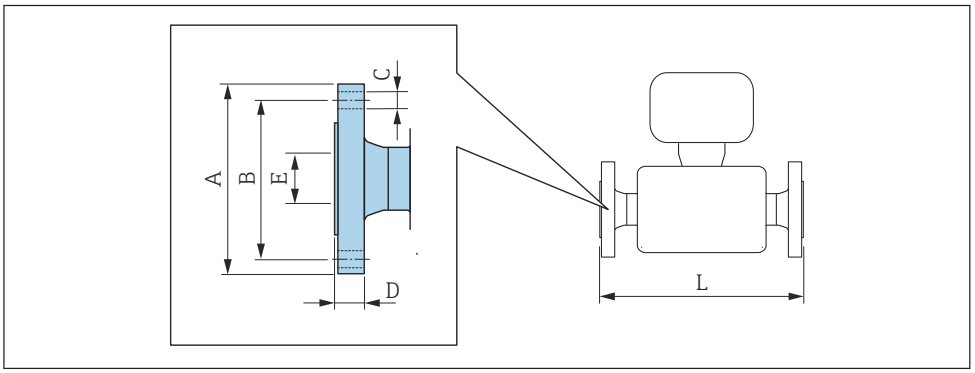

A0015621

Flange in accordance with EN 1092-1 (DIN 2501 / DIN 2512N): PN 6 **Carbon steel:** *order code for "Process connection", option* **D1K** **Stainless steel:** *order code for "Process connection", option* **D1S**						
DN **[mm]**	**A** **[mm]**	**B** **[mm]**	**C** **[mm]**	**D** **[mm]**	**E** **[mm]**	**L** **[mm]**
350	490	445	12 × Ø22	22	1)	2)
400	540	495	16 × Ø22	22		
450	595	565	20 × Ø26	26		
500	645	600	20 × Ø22	24		
600	755	705	20 × Ø26	30		
700	860	810	24 × Ø26	30		
800	975	920	24 × Ø30	30		
900	1075	1020	24 × Ø30	34		
1000	1175	1120	28 × Ø30	38		
1200	1405	1340	32 × Ø33	42		
1400	1630	1560	36 × Ø36	56		
1600	1830	1760	40 × Ø36	63		
1800	2045	1970	44 × Ø39	69		
2000	2265	2180	48 × Ø42	74		
2200	2475	2390	52 × Ø42	81		
2400	2685	2600	56 × Ø42	87		
Surface roughness (flange): EN 1092-1 Form B1 (DIN 2526 Form C), Ra 6.3 to 12.5 µm						

1) Depends on the liner→ 🖹 81
2) Total length is independent of the process connections. Length according to DVGW (German Technical and Scientific Association for Gas and Water) → 🖹 50 (compact version) → 🖹 53 (remote version)

Flange in accordance with EN 1092-1 (DIN 2501 / DIN 2512N): PN 10 **Carbon steel:** *order code for "Process connection", option* **D2K** **Stainless steel:** *order code for "Process connection", option* **D2S**						
DN **[mm]**	**A** **[mm]**	**B** **[mm]**	**C** **[mm]**	**D** **[mm]**	**E** **[mm]**	**L** **[mm]**
200	340	295	8 × Ø22	26	1)	2)
250	395	350	12 × Ø22	28		
300	445	400	12 × Ø22	28		
350	505	460	16 × Ø22	26		
400	565	515	16 × Ø26	26		
450	615	565	20 × Ø26	26		
500	670	620	20 × Ø26	28		
600	780	725	20 × Ø30	30		
700	895	840	24 × Ø30	35		
800	1015	950	24 × Ø33	38		
900	1115	1050	28 × Ø33	38		
1000	1230	1160	28 × Ø36	44		
1200	1455	1380	32 × Ø39	55		
1400	1675	1590	36 × Ø42	65		
1600	1915	1820	40 × Ø48	75		
1800	2115	2020	44 × Ø48	85		
2000	2325	2230	48 × Ø48	90		
2200	2550	2440	52 × Ø56	100		
2400	2760	2650	56 × Ø56	110		
Surface roughness (flange): EN 1092-1 Form B1 (DIN 2526 Form C), Ra 6.3 to 12.5 µm						

1) Depends on the liner→ 🖹 81
2) Total length is independent of the process connections. Length according to DVGW (German Technical and Scientific Association for Gas and Water) → 🖹 50 (compact version) → 🖹 53 (remote version)

Flange in accordance with EN 1092-1 (DIN 2501 / DIN 2512N): PN 16 **Carbon steel:** *order code for "Process connection", option* **D3K** **Stainless steel:** *order code for "Process connection", option* **D3S**						
DN **[mm]**	**A** **[mm]**	**B** **[mm]**	**C** **[mm]**	**D** **[mm]**	**E** **[mm]**	**L** **[mm]**
65	185	145	8 × Ø18	20	1)	2)
80	200	160	8 × Ø18	20		
100	220	180	8 × Ø18	22		
125	250	210	8 × Ø18	24		
150	285	240	8 × Ø22	24		
200	340	295	12 × Ø22	26		
250	405	355	12 × Ø26	32		
300	460	410	12 × Ø26	32		
350	520	470	16 × Ø26	30		
400	580	525	16 × Ø30	32		
450	640	585	20 × Ø30	34		
500	715	650	20 × Ø33	36		

Flange in accordance with EN 1092-1 (DIN 2501 / DIN 2512N): PN 16 **Carbon steel:** *order code for "Process connection", option* **D3K** **Stainless steel:** *order code for "Process connection", option* **D3S**						
DN [mm]	**A [mm]**	**B [mm]**	**C [mm]**	**D [mm]**	**E [mm]**	**L [mm]**
600	840	770	20 × Ø36	40		
700	910	840	24 × Ø36	40		
800	1025	950	24 × Ø39	41		
900	1125	1050	28 × Ø39	48		
1000	1255	1170	28 × Ø42	59		
1200	1485	1390	32 × Ø48	78		
1400	1685	1590	36 × Ø48	84		
1600	1930	1820	40 × Ø56	102		
1800	2130	2020	44 × Ø56	110		
2000	2345	2230	48 × Ø62	124		
Surface roughness (flange): EN 1092-1 Form B1 (DIN 2526 Form C), Ra 6.3 to 12.5 µm						

1) Depends on the liner→ 🖹 81
2) Total length is independent of the process connections. Length according to DVGW (German Technical and Scientific Association for Gas and Water) → 🖹 50 (compact version) → 🖹 53 (remote version)

Flange in accordance with EN 1092-1 (DIN 2501 / DIN 2512N): PN 25 **Carbon steel:** *order code for "Process connection", option* **D4K** **Stainless steel:** *order code for "Process connection", option* **D4S**						
DN [mm]	**A [mm]**	**B [mm]**	**C [mm]**	**D [mm]**	**E [mm]**	**L [mm]**
200	360	310	12 × Ø26	32	1)	2)
250	425	370	12 × Ø30	36		
300	485	430	16 × Ø30	40		
350	555	490	16 × Ø33	38		
400	620	550	16 × Ø36	40		
450	670	600	20 × Ø36	46		
500	730	660	20 × Ø36	48		
600	845	770	20 × Ø39	48		
700	960	875	24 × Ø42	50		
800	1085	990	24 × Ø48	53		
900	1185	1090	28 × Ø48	57		
1000	1320	1210	28 × Ø56	63		
Surface roughness (flange): EN 1092-1 Form B1 (DIN 2526 Form C), Ra 6.3 to 12.5 µm						

1) Depends on the liner→ 🖹 81
2) Total length is independent of the process connections. Length according to DVGW (German Technical and Scientific Association for Gas and Water) → 🖹 50 (compact version) → 🖹 53 (remote version)

Flange in accordance with EN 1092-1 (DIN 2501 / DIN 2512N): PN 40
Carbon steel: *order code for "Process connection", option* **D5K**
Stainless steel: *order code for "Process connection", option* **D5S**

DN [mm]	A [mm]	B [mm]	C [mm]	D [mm]	E [mm]	L [mm]
25	115	85	4 × Ø14	16	1)	2)
32	140	100	4 × Ø18	18		
40	150	110	4 × Ø18	18		
50	165	125	4 × Ø18	20		
65	185	145	8 × Ø18	24		
80	200	160	8 × Ø18	26		
100	235	190	8 × Ø22	26		
125	270	220	8 × Ø26	28		
150	300	250	8 × Ø26	30		
Surface roughness (flange): EN 1092-1 Form B1 (DIN 2526 Form C), Ra 6.3 to 12.5 µm						

1) Depends on the liner→ 🖹 81
2) Total length is independent of the process connections. Length according to DVGW (German Technical and Scientific Association for Gas and Water) → 🖹 50 (compact version) → 🖹 53 (remote version)

Flange according to ASME B16.5, Class 150
Carbon steel: *order code for "Process connection", option* **A1K**
Stainless steel: *order code for "Process connection", option* **A1S**

DN		A	B	C	D	E	L
[mm]	[in]	[mm]	[mm]	[mm]	[mm]	[mm]	[mm]
25	1	108	79.2	4 × Ø16	12.6	1)	2)
40	1 ½	127	98.6	4 × Ø16	15.9		
50	2	152.4	120.7	4 × Ø19.1	17.5		
80	3	190.5	152.4	4 × Ø19.1	22.3		
100	4	228.6	190.5	8 × Ø19.1	22.3		
150	6	279.4	241.3	8 × Ø22.4	23.8		
200	8	342.9	298.5	8 × Ø22.4	26.8		
250	10	406.4	362	12 × Ø25.4	29.6		
300	12	482.6	431.8	12 × Ø25.4	30.2		
350	14	535	476.3	12 × Ø28.6	35.4		
400	16	595	539.8	16 × Ø28.6	37		
450	18	635	577.9	16 × Ø31.8	40.1		
500	20	700	635	20 × Ø31.8	43.3		
600	24	815	749.3	20 × Ø34.9	48.1		
Surface roughness (flange): Ra 6.3 to 12.5 µm							

1) Depends on the liner→ 🖹 81
2) Total length is independent of the process connections. Length according to DVGW (German Technical and Scientific Association for Gas and Water) → 🖹 50 (compact version) → 🖹 53 (remote version)

Flange according to ASME B16.5, Class 300
Carbon steel: *order code for "Process connection", option* **A2K**
Stainless steel: *order code for "Process connection", option* **A2S**

DN		A	B	C	D	E	L
[mm]	[in]	[mm]	[mm]	[mm]	[mm]	[mm]	[mm]
25	1	123.9	88.9	4 × Ø19.1	15.9	1)	2)
40	1 ½	155.4	114.3	4 × Ø22.4	19		
50	2	165.1	127	8 × Ø19.1	20.8		
80	3	209.6	168.1	8 × Ø22.4	26.8		
100	4	254	200.2	8 × Ø22.4	30.2		
150	6	317.5	269.7	12 × Ø22.4	35		
Surface roughness (flange): Ra 6.3 to 12.5 µm							

1) Depends on the liner→ 🖹 81
2) Total length is independent of the process connections. Length according to DVGW (German Technical and Scientific Association for Gas and Water) → 🖹 50 (compact version) → 🖹 53 (remote version)

Flange according to JIS B2220, 10K
Carbon steel: *order code for "Process connection", option* **N3K**
Stainless steel: *order code for "Process connection", option* **N3S**

DN [mm]	A [mm]	B [mm]	C [mm]	D [mm]	E [mm]	L [mm]
50	155	120	4 × Ø19	16	1)	2)
65	175	140	4 × Ø19	18		
80	185	150	8 × Ø19	18		
100	210	175	8 × Ø19	18		
125	250	210	8 × Ø23	20		
150	280	240	8 × Ø23	22		
200	330	290	12 × Ø23	22		
250	400	355	12 × Ø25	24		
300	445	400	16 × Ø25	24		
Surface roughness (flange): Ra 6.3 to 12.5 µm						

1) Depends on the liner→ 🖹 81
2) Total length is independent of the process connections. Length according to DVGW (German Technical and Scientific Association for Gas and Water) → 🖹 50 (compact version) → 🖹 53 (remote version)

Flange according to JIS B2220, 20K
Carbon steel: *order code for "Process connection", option* **N4K**
Stainless steel: *order code for "Process connection", option* **N4S**

DN [mm]	A [mm]	B [mm]	C [mm]	D [mm]	E [mm]	L [mm]
25	125	90	4 × Ø19	16	1)	2)
32	135	100	4 × Ø19	18		
40	140	105	4 × Ø19	18		
50	155	120	8 × Ø19	18		
65	175	140	8 × Ø19	20		
80	200	160	8 × Ø23	22		
100	225	185	8 × Ø23	24		

Flange according to JIS B2220, 20K
Carbon steel: *order code for "Process connection", option* **N4K**
Stainless steel: *order code for "Process connection", option* **N4S**

DN [mm]	A [mm]	B [mm]	C [mm]	D [mm]	E [mm]	L [mm]
125	270	225	8 × Ø25	26		
150	305	260	12 × Ø25	28		
200	350	305	12 × Ø25	30		
250	430	380	12 × Ø27	34		
300	480	430	16 × Ø27	36		
Surface roughness (flange): Ra 6.3 to 12.5 µm						

1) Depends on the liner→ 🖹 81
2) Total length is independent of the process connections. Length according to DVGW (German Technical and Scientific Association for Gas and Water) → 🖹 50 (compact version) → 🖹 53 (remote version)

Flange according to AWWA, Class D
Order code for "Process connection", option **W1K**

DN		A	B	C	D	E	L
[mm]	[in]	[mm]	[mm]	[mm]	[mm]	[mm]	[mm]
700	28	927	863.6	28 × Ø35	33.4	1)	2)
750	30	984	914.4	28 × Ø35	35		
800	32	1060	977.9	28 × Ø42	38.1		
900	36	1168	1085.9	32 × Ø42	41.3		
1000	40	1289	1200.2	36 × Ø42	41.3		
–	42	1346	1257.3	36 × Ø42	44.5		
1200	48	1511	1422.4	44 × Ø42	47.7		
–	54	1683	1593.9	44 × Ø48	54		
–	60	1855	1759	52 × Ø48	57.2		
–	66	2032	1930.4	52 × Ø48	63.5		
1800	72	2197	2095.5	60 × Ø48	66.7		
–	78	2362	2260.6	64 × Ø54	69.9		
–	84	2535	2425.7	64 × Ø54	73.1		
–	90	2705	2717.8	68 × Ø60	76.2		
Surface roughness (flange): Ra 6.3 to 12.5 µm							

1) Depends on the liner→ 🖹 81
2) Total length is independent of the process connections. Length according to DVGW (German Technical and Scientific Association for Gas and Water) → 🖹 50 (compact version) → 🖹 53 (remote version)

Flange according to AS 2129, Tab. E
Order code for "Process connection", option **M2K**

DN [mm]	A [mm]	B [mm]	C [mm]	D [mm]	E [mm]	L [mm]
80	185	146	4 × Ø18	12	1)	2)
100	215	178	8 × Ø18	13		
150	280	235	8 × Ø22	17		
200	335	292	8 × Ø22	19		
250	405	356	12 × Ø22	22		

Flange according to AS 2129, Tab. E *Order code for "Process connection", option* **M2K**						
DN [mm]	**A [mm]**	**B [mm]**	**C [mm]**	**D [mm]**	**E [mm]**	**L [mm]**
300	455	406	12 × Ø26	25		
350	525	470	12 × Ø26	30		
400	580	521	12 × Ø26	32		
450	640	584	16 × Ø26	35		
500	705	641	16 × Ø26	38		
600	825	756	16 × Ø33	48		
700	910	845	20 × Ø33	51		
750	995	927	20 × Ø36	54		
800	1060	984	20 × Ø36	54		
900	1175	1092	24 × Ø36	64		
1000	1255	1175	24 × Ø39	67		
1200	1490	1410	32 × Ø39	79		
Surface roughness (flange): Ra 6.3 to 12.5 µm						

1) Depends on the liner→ 🖹 81
2) Total length is independent of the process connections. Length according to DVGW (German Technical and Scientific Association for Gas and Water) → 🖹 50 (compact version) → 🖹 53 (remote version)

Flange according to AS 4087, PN 16 *Order code for "Process connection", option* **M3K**						
DN [mm]	**A [mm]**	**B [mm]**	**C [mm]**	**D [mm]**	**E [mm]**	**L [mm]**
80	185	146	4 × Ø18	12	1)	2)
100	215	178	4 × Ø18	13		
150	280	235	8 × Ø18	13		
200	335	292	8 × Ø18	19		
250	405	356	8 × Ø22	19		
300	455	406	12 × Ø22	23		
350	525	470	12 × Ø26	30		
375	550	495	12 × Ø26	30		
400	580	521	12 × Ø26	32		
450	640	584	12 × Ø26	30		
500	705	641	16 × Ø26	38		
600	825	756	16 × Ø30	48		
700	910	845	20 × Ø30	56		
750	995	927	20 × Ø33	56		
800	1060	984	20 × Ø36	56		
900	1175	1092	24 × Ø36	66		
1000	1255	1175	24 × Ø36	66		

Flange according to AS 4087, PN 16 *Order code for "Process connection", option* **M3K**						
DN [mm]	**A [mm]**	**B [mm]**	**C [mm]**	**D [mm]**	**E [mm]**	**L [mm]**
1200	1490	1410	32 × Ø36	76		
Surface roughness (flange): Ra 6.3 to 12.5 µm						

1) Depends on the liner→ 🖹 81
2) Total length is independent of the process connections. Length according to DVGW (German Technical and Scientific Association for Gas and Water) → 🖹 50 (compact version) → 🖹 53 (remote version)

Lap joint flange

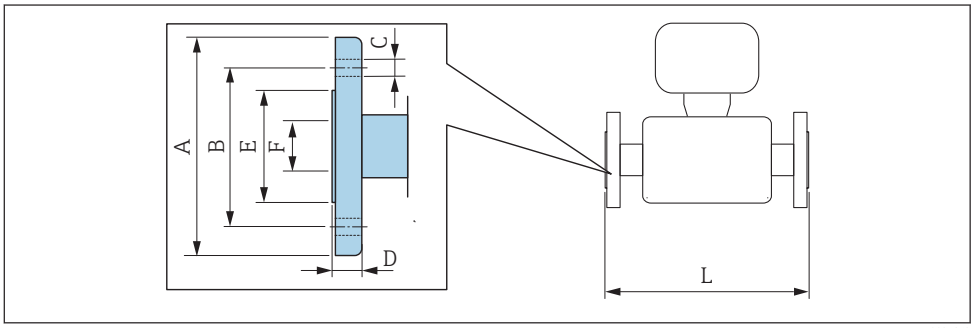

Lap joint flange in accordance with EN 1092-1 (DIN 2501 / DIN 2512N): PN 10 **Carbon steel:** *order code for "Process connection", option* **D22** **Stainless steel:** *order code for "Process connection", option* **D24**								
DN		**A**	**B**	**C**	**D**	**E**	**F**	**L**
[mm]	**[in]**	**[mm]**	**[mm]**	**[mm]**	**[mm]**	**[mm]**	**[mm]**	**[mm]**
200	8	340	295	8 × Ø22	24	264	1)	2)
250	10	395	350	12 × Ø22	26	317		
300	12	445	400	12 × Ø22	26	367		
Surface roughness (flange): Ra 6.3 to 12.5 µm								

1) Depends on the liner→ 🖹 81
2) Total length is independent of the process connections. Length according to DVGW (German Technical and Scientific Association for Gas and Water) → 🖹 50 (compact version) → 🖹 53 (remote version)

Lap joint flange in accordance with EN 1092-1 (DIN 2501 / DIN 2512N): PN 16 **Carbon steel:** *order code for "Process connection", option* **D32** **Stainless steel:** *order code for "Process connection", option* **D34**								
DN		**A**	**B**	**C**	**D**	**E**	**F**	**L**
[mm]	**[in]**	**[mm]**	**[mm]**	**[mm]**	**[mm]**	**[mm]**	**[mm]**	**[mm]**
25	1	115	85	4 × Ø14	16	49	1)	2)
32	-	140	100	4 × Ø18	18	65		
40	1 ½	150	110	4 × Ø18	18	71		
50	2	165	125	4 × Ø18	20	88		
65	-	185	145	8 × Ø18	20	103		
80	3	200	160	8 × Ø18	20	120		
100	4	220	180	8 × Ø18	22	148		
125	-	250	210	8 × Ø18	22	177		

Lap joint flange in accordance with EN 1092-1 (DIN 2501 / DIN 2512N): PN 16
Carbon steel: *order code for "Process connection", option* **D32**
Stainless steel: *order code for "Process connection", option* **D34**

DN		A	B	C	D	E	F	L
[mm]	[in]	[mm]	[mm]	[mm]	[mm]	[mm]	[mm]	[mm]
150	6	285	240	8 × Ø22	24	209		
200	8	340	295	12 × Ø22	26	264		
250	10	405	355	12 × Ø26	29	317		
300	12	460	410	12 × Ø26	32	367		
Surface roughness (flange): Ra 6.3 to 12.5 µm								

1) Depends on the liner→ 🖹 81
2) Total length is independent of the process connections. Length according to DVGW (German Technical and Scientific Association for Gas and Water) → 🖹 50 (compact version) → 🖹 53 (remote version)

Lap joint flange according to ASME B16.5, Class 150
Carbon steel: *order code for "Process connection", option* **A12**
Stainless steel: *order code for "Process connection", option* **A14**

DN		A	B	C	D	E	F	L
[mm]	[in]	[mm]	[mm]	[mm]	[mm]	[mm]	[mm]	[mm]
25	1	110	80	4 × Ø16	14	49	1)	2)
40	1 ½	125	98	4 × Ø16	17.5	71		
50	2	150	121	4 × Ø19	19	88		
80	3	190	152	4 × Ø19	24	120		
100	4	230	190	8 × Ø19	24	148		
150	6	280	241	8 × Ø23	25	209		
200	8	345	298	8 × Ø23	29	264		
250	10	405	362	12 × Ø25	30	317		
300	12	485	432	12 × Ø25	32	378		
Surface roughness (flange): Ra 6.3 to 12.5 µm								

1) Depends on the liner→ 🖹 81
2) Total length is independent of the process connections. Length according to DVGW (German Technical and Scientific Association for Gas and Water) → 🖹 50 (compact version) → 🖹 53 (remote version)

Lap joint flange, stamped plate

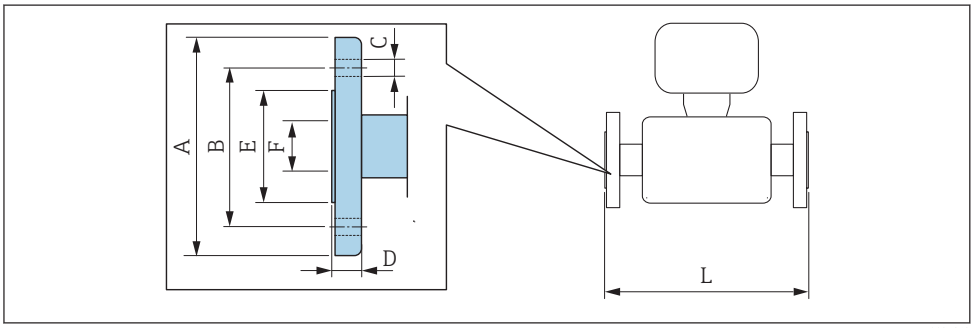

A0037862

Lap joint flange, stamped plate in accordance with EN 1092-1 (DIN 2501 / DIN 2512N): PN 10 **Carbon steel:** *order code for "Process connection", option* **D21** **Stainless steel:** *order code for "Process connection", option* **D23**							
DN **[mm]**	**A** **[mm]**	**B** **[mm]**	**C** **[mm]**	**D** **[mm]**	**E** **[mm]**	**F** **[mm]**	**L** **[mm]**
25	115	85	4 x Ø13.5	16.5	49	1)	2)
32	140	100	4 x Ø17.5	17	65		
40	150	110	4 x Ø17.5	16.5	71		
50	165	125	4 x Ø17.5	18.5	88		
65	185	145	4 x Ø17.5	20	103		
80	200	160	8 x Ø17.5	23.5	120		
100	220	180	8 x Ø17.5	24.5	148		
125	250	210	8 x Ø17.5	24	177		
150	285	240	8 x Ø21.5	25	209		
200	340	295	8 x Ø21.5	27.5	264		
250	405	350	12 x Ø21.5	30.5	317		
300	445	400	12 x Ø21.5	34.5	367		
Surface roughness (flange): Ra 6.3 to 12.5 µm							

1) Depends on the liner→ 🖹 81
2) Total length is independent of the process connections. Length according to DVGW (German Technical and Scientific Association for Gas and Water) → 🖹 50 (compact version) → 🖹 53 (remote version)

Accessories

Ground disks for flange connections

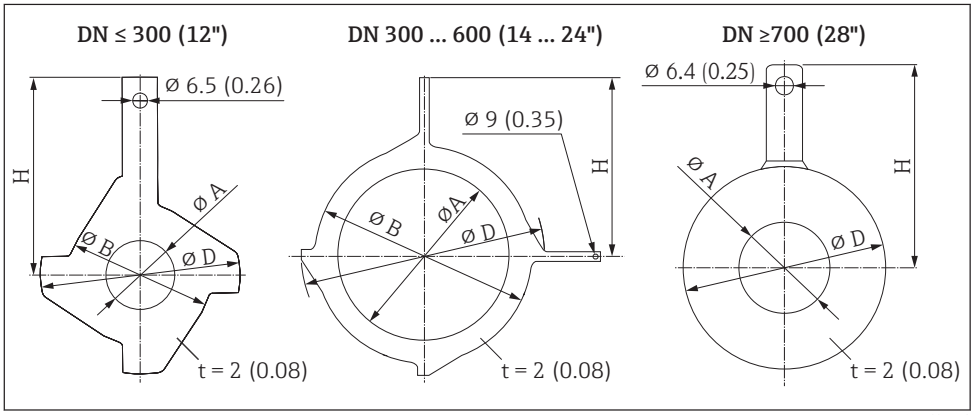

DN		**Pressure rating**	**A**		**B**		**D**		**H**	
[mm]	**[inch]**		**[mm]**	**[inch]**	**[mm]**	**[inch]**	**[mm]**	**[inch]**	**[mm]**	**[inch]**
25	1"	1)	26	1.02	62	2.44	77.5	3.05	87.5	3.44
32	1 ¼"	1)	35	1.38	80	3.15	87.5	3.44	94.5	3.72
40	1 ½"	1)	41	1.61	82	3.23	101	3.98	103	4.06
50	2"	1)	52	2.05	101	3.98	115.5	4.55	108	4.25
65	2 ½"	1)	68	2.68	121	4.76	131.5	5.18	118	4.65
80	3"	1)	80	3.15	131	5.16	154.5	6.08	135	5.31

DN		Pressure rating	A		B		D		H	
[mm]	[inch]		[mm]	[inch]	[mm]	[inch]	[mm]	[inch]	[mm]	[inch]
100	4"	1)	104	4.09	156	6.14	186.5	7.34	153	6.02
125	5"	1)	130	5.12	187	7.36	206.5	8.13	160	6.30
150	6"	1)	158	6.22	217	8.54	256	10.08	184	7.24
200	8"	1)	206	8.11	267	10.51	288	11.34	205	8.07
250	10"	1)	260	10.24	328	12.91	359	14.13	240	9.45
300	12"	PN 10 PN 16 Cl. 150	312	12.28	375	14.76	413	16.26	273	10.75
		PN 25 JIS 10K JIS 20K	310	12.20	375	14.76	404	15.91	268	10.55
350	14"	PN 6	343	13.50	420	16.54	479	18.86	365	14.37
		PN 10								
		PN 16								
375	15"	PN 16	393	15.5	461	18.2	523	20.6	395	15.6
400	16"	PN 6	393	15.5	470	18.50	542	21.34	395	15.55
		PN 10								
		PN 16								
450	18"	PN 6	439	17.28	525	20.67	583	22.95	417	16.42
		PN 10								
		PN 16								
500	20"	PN 6	493	19.41	575	22.64	650	25.59	460	18.11
		PN 10								
		PN 16								
600	24"	PN 6	593	23.35	676	26.61	766	30.16	522	20.55
		PN 10								
		PN 16								
700	28"	PN 6	697	27.44	–	–	786	30.94	460	18.11
		PN10	693	27.28	–	–	813	32.01	480	18.9
		PN16	687	27.05	–	–	807	31.77	490	19.29
		Cl, D	693	27.28	–	–	832	32.76	494	19.45
750	30"	Cl, D	743	29.25	–	–	833	32.8	523	20.59
800	32"	PN 6	799	31.46	–	–	893	35.16	520	20.47
		PN 10	795	31.3	–	–	920	36.22	540	21.26
		PN 16	789	31.06	–	–	914	35.98	550	21.65
		Cl, D	795	31.3	–	–	940	37.01	561	22.09
900	36"	PN 6	897	35.31	–	–	993	39.09	570	22.44
		PN 10	893	35.16	–	–	1020	40.16	590	23.23
		PN 16	886	34.88	–	–	1014	39.92	595	23.43
		Cl, D	893	35.16	–	–	1048	41.26	615	24.21
1000	40"	PN 6	999	39.33	–	–	1093	43.03	620	24.41
		PN 10	995	39.17	–	–	1127	44.37	650	25.59
		PN 16	988	38.9	–	–	1131	44.53	660	25.98

DN		Pressure rating	A		B		D		H	
[mm]	[inch]		[mm]	[inch]	[mm]	[inch]	[mm]	[inch]	[mm]	[inch]
		Cl, D	995	39.17	–	–	1163	45.79	675	26.57
–	42"	PN 6	1044	41.1	–	–	1220	48.03	704	27.72
1200	48"	PN 6	1203	47.36	–	–	1310	51.57	733	28.86
		PN 10	1196	47.09	–	–	1344	52.91	760	29.92
		PN 16	1196	47.09	–	–	1385	54.53	786	30.94
		Cl, D	1188	46.77	–	–	1345	52.95	775	30.51

1) In the case of DN 25 to 250, ground disks can be used for all the flange standards/pressure ratings which can be supplied in the standard version

Dimensions in US units

Compact version

Order code for "Housing", option A "Compact, aluminum, coated" or option M "Compact, polycarbonate"

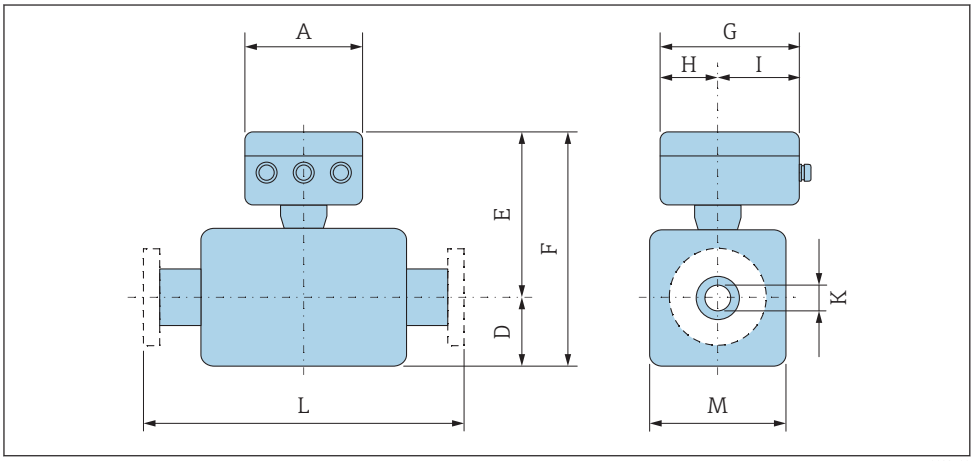

A [in]	G [1] [in]	H [in]	I [1] [in]
6.57	7.60	3.54	4.06

1) Depending on the cable gland used: values up to + 1.18 in

DN 25 to 300 (1 to 12"): sensor with aluminum half-shell housing

DN		Order code for "Design"								K	L
		Options A, D, E				Option C					
		D [1]	E [1] [2]	F [1] [2]	M [1]	D [1]	E [1] [2]	F [1] [2]	M [1]		
[mm]	[in]	[in]	[in]	[in]	[in]	[in]	[in]	[in]	[in]	[in]	[in]
25	1	3.31	7.91	11.22	4.72	–	–	–	–	[3]	7.87
32	–	3.31	7.91	11.22	4.72	–	–	–	–	[3]	7.87
40	1 ½	3.31	7.91	11.22	4.72	–	–	–	–	[3]	7.87
50	2	3.31	7.91	11.22	4.72	3.31	7.91	11.22	4.72	[3]	7.87
65	–	4.29	8.9	13.19	7.09	3.31	7.91	11.22	4.72	[3]	7.87
80	3	4.29	8.9	13.19	7.09	3.31	7.91	11.22	4.72	[3]	7.87
100	4	4.29	8.9	13.19	7.09	4.29	8.9	13.19	7.09	[3]	9.84
125	–	5.91	10.47	16.38	10.24	4.29	8.9	13.19	7.09	[3]	9.84
150	6	5.91	10.47	16.38	10.24	4.29	8.9	13.19	7.09	[3]	11.81
200	8	7.09	11.46	18.54	12.76	5.91	10.47	16.38	10.24	[3]	13.78
250	10	8.07	12.44	20.51	15.75	5.91	10.47	16.38	10.24	[3]	17.72
300	12	9.06	13.43	22.48	18.11	7.09	11.46	18.54	12.76	[3]	19.69

1) The dimensions are reference values. They may be different than indicated, depending on the pressure rating, design and order code.
2) With order code for "Sensor option", option CG "Sensor extended neck for insulation": values + 4.33 in
3) Depends on the liner→ 🖹 81

DN 350 to 900 (14 to 36")

DN		Order code for "Design"								K	L	
		Options A, E, F				Option B, G						
		D [1]	E [1) 2)]	F [1) 2)]	M [1)]	D [1)]	E [1) 2)]	F [1) 2)]	M [1)]			
[mm]	[in]	[mm]	[mm]	[mm]	[mm]	[mm]	[mm]	[mm]	[mm]	[mm]	[mm]	
350	14	9.65	16.2	25.91	19.29	–	–	–	–	[3)]	21.65	
375	15	10.67	17.24	27.91	21.34	–	–	–	–	[3)]	21.65	
400	16	10.67	17.24	27.91	21.34	–	–	–	–	[3)]	23.62	
450	18	11.77	18.35	30.12	23.54	13.11	17.72	30.83	26.22	[3)]	23.62 [4)]	25.59 [5)]
500	20	12.76	19.33	32.09	25.51	14.13	18.7	32.83	28.23	[3)]	23.62 [4)]	25.59 [5)]
600	24	14.37	21.34	35.71	28.74	16.18	20.79	36.97	32.32	[3)]	23.62 [4)]	30.71 [5)]
700	28	16.93	23.74	40.67	33.86	20.16	24.8	44.96	40.31	[3)]	27.56 [4)]	35.83 [5)]
750	30	18.39	25.24	43.62	36.77	20.16	24.8	44.96	40.31	[3)]	27.56 [4)]	35.83 [5)]
800	32	19.13	25.98	45.12	38.27	21.02	25.59	46.61	41.93	[3)]	31.5 [4)]	40.94 [5)]
900	36	21.1	27.95	49.06	42.2	24.02	28.62	52.64	47.95	[3)]	35.43 [4)]	46.06 [5)]

1) The dimensions are reference values. They may be different than indicated, depending on the pressure rating, design and order code.
2) With order code for "Sensor option", option CG "Sensor extended neck for insulation": values + 110 mm
3) Depends on the liner→ 🖹 81
4) Order code for "Design", option F "Fixed flange, short installation length"
5) Order code for "Design", option G "Fixed flange, long installation length"

DN 1000 to 2400 (40 to 90")

DN		D [1)]	E [1) 2)]	F [1) 2)]	K	L		M [1)]
[mm]	[in]	[in]	[in]	[in]	[in]	[in]		[in]
1000	40	27.01	31.61	58.62	[3)]	39.37 [4)]	51.18 [5)]	53.94
–	42	28.03	32.6	60.63	[3)]	41.34 [4)]	53.74 [5)]	55.91
1200	48	31.93	36.57	68.5	[3)]	47.24 [4)]	61.42 [5)]	63.78
–	54	35.91	40.51	76.42	[3)]	53.15 [4)]	69.09 [5)]	71.65
1400	–	38.86	43.46	82.32	[3)]	55.12 [4)]	71.65 [5)]	77.56
–	60	39.8	44.41	84.21	[3)]	59.06 [4)]	76.77 [5)]	79.45
1600	–	41.57	46.18	87.76	[3)]	62.99 [4)]	81.89 [5)]	82.99
–	66	43.03	47.6	90.63	[3)]	64.96 [4)]	84.45 [5)]	85.83
1800	72	46.77	51.34	98.11	[3)]	70.87 [4)]	92.13 [5)]	93.31
–	78	48.74	53.31	102.05	[3)]	78.74 [4)]	102.36 [5)]	97.24
2000	–	48.74	53.31	102.05	[3)]	78.74 [4)]	102.36 [5)]	97.24
–	84	48.74	53.31	102.05	[3)]	86.61 [4)]		97.24
2200	–	48.31	52.99	101.3	[3)]	86.61 [4)]		96.61
–	90	48.31	52.99	101.3	[3)]	94.49 [4)]		96.61
2400	–	52.44	57.13	109.57	[3)]	94.49 [4)]		104.88

1) The dimensions are reference values. They may be different than indicated, depending on the pressure rating, design and order code.
2) With order code for "Sensor option", option CG "Sensor extended neck for insulation": values + 4.33 in
3) Depends on the liner→ 🖹 81
4) Order code for "Design", option F "Fixed flange, short installation length"
5) Order code for "Design", option G "Fixed flange, long installation length"

Remote version

Transmitter remote version

Order code for "Housing", option N "Remote, polycarbonate" or option P "Remote, aluminum coated"

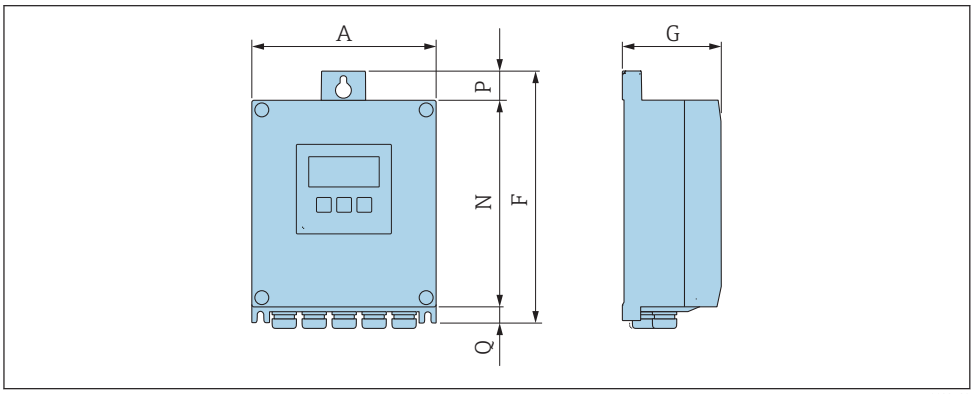

A0033789

A [in]	F [in]	G [in]	N [in]	P [in]	Q [in]
6.57	9.13	3.15	7.36	0.94	0.83

Sensor connection housing

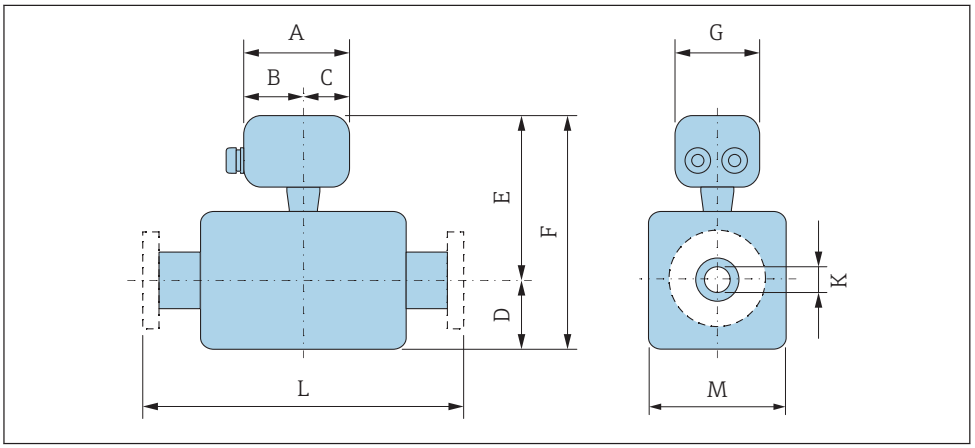

A0033784

Order code for "Sensor connection housing", option A "Aluminum, coated"

A [in]	B [in]	C [in]	G [in]
5.83	3.7	2.13	5.35

Order code for "Sensor connection housing", option D "Polycarbonate"

A [in]	B [in]	C [in]	G [in]
4.45	2.44	2.01	4.41

DN 25 to 300 (1 to 12"): sensor with aluminum half-shell housing

DN		Order code for "Design"								K	L
		Options A, D, E				Option C					
		D [1]	E [1]	F [1]	M [1]	D [1]	E [1]	F [1]	M [1]		
[mm]	[in]	[in]	[in]	[in]	[in]	[in]	[in]	[in]	[in]	[in]	[in]
25	1	3.31	7.87	11.18	4.72	–	–	–	–	[2]	7.87
32	–	3.31	7.87	11.18	4.72	–	–	–	–	[2]	7.87
40	1 ½	3.31	7.87	11.18	4.72	–	–	–	–	[2]	7.87
50	2	3.31	7.87	11.18	4.72	3.31	7.87	11.18	4.72	[2]	7.87
65	–	4.29	8.86	13.15	7.09	3.31	7.87	11.18	4.72	[2]	7.87
80	3	4.29	8.86	13.15	7.09	3.31	7.87	11.18	4.72	[2]	7.87
100	4	4.29	8.86	13.15	7.09	4.29	8.86	13.15	7.09	[2]	9.84
125	–	5.91	10.43	16.34	10.24	4.29	8.86	13.15	7.09	[2]	9.84
150	6	5.91	10.43	16.34	10.24	4.29	8.86	13.15	7.09	[2]	11.81
200	8	7.09	11.42	18.5	12.76	5.91	10.43	16.34	10.24	[2]	13.78
250	10	8.07	12.4	20.47	15.75	5.91	10.43	16.34	10.24	[2]	17.72
300	12	9.06	13.39	22.44	18.11	7.09	11.42	18.5	12.76	[2]	19.69

1) The dimensions are reference values. They may be different than indicated, depending on the pressure rating, design and order code.
2) Depends on the liner→ 🖹 81

DN 25 to 300 (1 to 12"): sensor with fully welded carbon steel housing

DN		Order code for "Design"								K	L
		Options A, E				Option C					
		D [1]	E [1]	F [1]	M [1]	D [1]	E [1]	F [1]	M [1]		
[mm]	[in]	[mm]	[in]	[in]	[in]	[in]	[in]	[in]	[in]	[in]	[in]
25	1	2.76	7.87	10.63	5.51	–	–	–	–	[2]	7.87
32	–	2.76	7.87	10.63	5.51	–	–	–	–	[2]	7.87
40	1 ½	2.76	7.87	10.63	5.51	–	–	–	–	[2]	7.87
50	2	2.76	7.87	10.63	5.51	2.76	7.87	10.63	5.51	[2]	7.87
65	–	3.23	8.86	12.09	6.5	2.76	7.87	10.63	5.51	[2]	7.87
80	3	3.43	8.86	12.28	6.89	2.76	7.87	10.63	5.51	[2]	7.87
100	4	3.94	8.86	12.8	7.87	3.23	8.86	12.09	6.5	[2]	9.84
125	–	4.45	10.43	14.88	8.9	3.43	8.86	12.28	6.89	[2]	9.84
150	6	5.28	10.43	15.71	10.59	3.94	8.86	12.8	7.87	[2]	11.81
200	8	6.3	11.42	17.72	12.6	4.45	10.43	14.88	8.9	[2]	13.78
250	10	7.6	12.4	20	15.24	5.28	10.43	15.71	10.59	[2]	17.72
300	12	8.58	13.39	21.97	17.2	6.3	11.42	17.72	12.6	[2]	19.69

1) The dimensions are reference values. They may be different than indicated, depending on the pressure rating, design and order code.
2) Depends on the liner→ 🖹 81

DN 350 to 900 (14 to 36")

DN		Order code for "Design"								K	L	
		Options A, E, F				Option B, G						
		D [1]	E [1]	F [1]	M [1]	D [1]	E [1]	F [1]	M [1]			
[mm]	[in]	[in]	[in]	[in]	[in]	[in]	[in]	[in]	[in]	[in]	[in]	
350	14	9.65	13.78	23.43	19.29	–	–	–	–	[2]	21.65	
375	15	10.67	14.76	25.43	21.34	–	–	–	–	[2]	21.65	
400	16	10.67	14.76	25.43	21.34	–	–	–	–	[2]	23.62	
450	18	11.77	15.87	27.64	23.54	13.11	17.6	30.71	26.22	[2]	23.62 [3]	25.59 [4]
500	20	12.76	16.85	29.61	25.51	14.13	18.58	32.72	28.23	[2]	23.62 [3]	25.59 [4]
600	24	14.37	18.86	33.23	28.74	16.18	20.67	36.85	32.32	[2]	23.62 [3]	30.71 [4]
700	28	16.93	21.26	38.19	33.86	20.16	24.69	44.84	40.31	[2]	27.56 [3]	35.83 [4]
750	30	18.39	22.76	41.14	36.77	20.16	24.69	44.84	40.31	[2]	27.56 [3]	35.83 [4]
800	32	19.13	23.5	42.64	38.27	21.02	25.47	46.5	41.93	[2]	31.5 [3]	40.94 [4]
900	36	21.1	25.47	46.57	42.2	24.02	28.5	52.52	47.95	[2]	35.43 [3]	46.06 [4]

1) The dimensions are reference values. They may be different than indicated, depending on the pressure rating, design and order code.
2) Depends on the liner→ 🖹 81
3) Order code for "Design", option F "Fixed flange, short installation length"
4) Order code for "Design", option G "Fixed flange, long installation length"

1000 ... 2400 (40 ... 90")

DN		D [1]	E [1]	F [1]	K	L		M [1]
[mm]	[in]	[in]	[in]	[in]	[in]	[in]		[in]
1000	40	27.01	31.5	58.5	[2]	39.37 [3]	51.18 [4]	53.94
–	42	28.03	32.48	60.51	[2]	41.34 [3]	53.74 [4]	55.91
1200	48	31.93	36.46	68.39	[2]	47.24 [3]	61.42 [4]	63.78
–	54	35.91	40.39	76.3	[2]	53.15 [3]	69.09 [4]	71.65
1400	–	38.86	43.35	82.2	[2]	55.12 [3]	71.65 [4]	77.56
–	60	39.8	44.29	84.09	[2]	59.06 [3]	76.77 [4]	79.45
1600	–	41.57	46.06	87.64	[2]	62.99 [3]	81.89 [4]	82.99
–	66	43.03	47.48	90.51	[2]	64.96 [3]	84.45 [4]	85.83
1800	72	46.77	51.22	97.99	[2]	70.87 [3]	92.13 [4]	93.31
–	78	48.74	53.19	101.93	[2]	78.74 [3]	102.36 [4]	97.24
2000	–	48.74	53.19	101.93	[2]	78.74 [3]	102.36 [4]	97.24
–	84	48.74	53.19	101.93	[2]	86.61 [3]		97.24
2200	–	48.31	52.87	101.18	[2]	86.61 [3]		96.61
–	90	48.31	52.87	101.18	[2]	94.49 [3]		96.61
2400	–	52.44	57.01	109.45	[2]	94.49 [3]		104.88

1) The dimensions are reference values. They may be different than indicated, depending on the pressure rating, design and order code.
2) Internal diameter depends on liner, see measuring tube specification → 🖹 81
3) Order code for "Design", option F "Fixed flange, short installation length"
4) Order code for "Design", option G "Fixed flange, long installation length"

Flange connections

Fixed flange

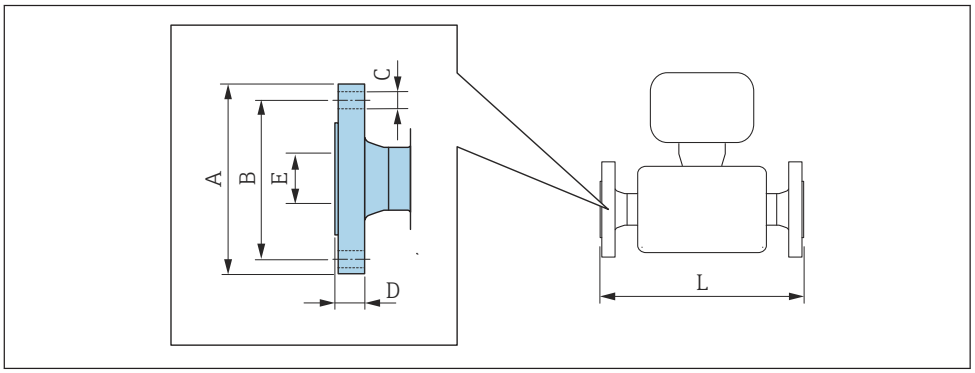

A0015621

Flange according to ASME B16.5, Class 150 **Carbon steel:** *order code for "Process connection", option* **A1K** **Stainless steel:** *order code for "Process connection", option* **A1S**							
DN		**A**	**B**	**C**	**D**	**E**	**L**
[mm]	**[in]**	**[in]**	**[in]**	**[in]**	**[in]**	**[in]**	**[in]**
25	1	4.25	3.12	4 × Ø0.63	0.5	1)	2)
40	1 ½	5	3.88	4 × Ø0.63	0.63		
50	2	6	4.75	4 × Ø0.75	0.69		
80	3	7.5	6	4 × Ø0.75	0.88		
100	4	9	7.5	8 × Ø0.75	0.88		
150	6	11	9.5	8 × Ø0.88	0.94		
200	8	13.5	11.75	8 × Ø0.88	1.06		
250	10	16	14.25	12 × Ø1	1.17		
300	12	19	17	12 × Ø1	1.19		
350	14	21.06	18.75	12 × Ø1.13	1.39		
400	16	23.43	21.25	16 × Ø1.13	1.46		
450	18	25	22.75	16 × Ø1.25	1.58		
500	20	27.56	25	20 × Ø1.25	1.7		
600	24	32.09	29.5	20 × Ø1.37	1.89		
Surface roughness (flange): Ra 250 to 492 µm							

1) Depends on the liner→ 🖹 81
2) Total length is independent of the process connections. Length according to DVGW (German Technical and Scientific Association for Gas and Water) → 🖹 68 (compact version) → 🖹 70 (remote version)

Flange according to ASME B16.5, Class 300 **Carbon steel:** *order code for "Process connection", option* **A2K** **Stainless steel:** *order code for "Process connection", option* **A2S**							
DN		**A**	**B**	**C**	**D**	**E**	**L**
[in]	**[mm]**	**[in]**	**[in]**	**[in]**	**[in]**	**[in]**	**[in]**
1	25	4.88	3.5	4 × Ø0.75	0.63	1)	2)
1 ½	40	6.12	4.5	4 × Ø0.88	0.75		
2	50	6.5	5	8 × Ø0.75	0.82		

Flange according to ASME B16.5, Class 300
Carbon steel: *order code for "Process connection", option* **A2K**
Stainless steel: *order code for "Process connection", option* **A2S**

DN		A	B	C	D	E	L
[in]	[mm]	[in]	[in]	[in]	[in]	[in]	[in]
3	80	8.25	6.62	8 × Ø0.88	1.06		
4	100	10	7.88	8 × Ø0.88	1.19		
6	150	12.5	10.62	12 × Ø0.88	1.38		
Surface roughness (flange): Ra 250 to 492 µm							

1) Depends on the liner→ 🖹 81
2) Total length is independent of the process connections. Length according to DVGW (German Technical and Scientific Association for Gas and Water) → 🖹 68 (compact version) → 🖹 70 (remote version)

Flange according to AWWA, Cl. D
Order code for "Process connection", option **W1K**

DN		A	B	C	D	E	L
[in]	[mm]	[in]	[in]	[in]	[in]	[in]	[in]
28	700	36.5	34	28 × Ø1.38	1.31	1)	2)
30	–	38.74	36	28 × Ø1.38	1.38		
32	800	41.73	38.5	28 × Ø1.65	1.5		
36	900	45.98	42.75	32 × Ø1.65	1.63		
40	1000	50.75	47.25	36 × Ø1.65	1.63		
42	–	52.99	49.5	36 × Ø1.65	1.75		
48	1200	59.49	56	44 × Ø1.65	1.88		
54	–	66.26	62.75	44 × Ø1.89	2.13		
60	–	73.03	69.25	52 × Ø1.89	2.25		
66	–	80	76	52 × Ø48	2.5		
72	1800	86.5	82.5	60 × Ø48	2.63		
78	–	92.99	89	64 × Ø54	2.75		
84	–	99.8	95.5	64 × Ø54	2.88		
90	–	106.5	107	68 × Ø60	3		
Surface roughness (flange): Ra 250 to 492 µin							

1) Depends on the liner→ 🖹 81
2) Total length is independent of the process connections. Length according to DVGW (German Technical and Scientific Association for Gas and Water) → 🖹 68 (compact version) → 🖹 70 (remote version)

Lap joint flange

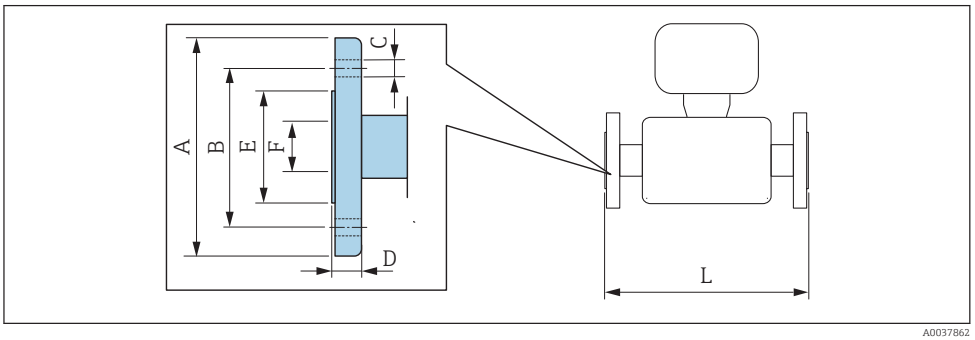

Lap joint flange according to ASME B16.5, Class 150
Carbon steel: *order code for "Process connection", option* **A12**
Stainless steel: *order code for "Process connection", option* **A14**

DN		A	B	C	D	E	F	L
[mm]	[in]	[in]	[in]	[in]	[in]	[in]	[in]	[in]
25	1	4.33	3.15	4 × Ø0.63	0.55	1.93	1)	2)
40	1 ½	4.92	3.86	4 × Ø0.63	0.69	2.8		
50	2	5.91	4.76	4 × Ø0.75	0.75	3.46		
80	3	7.48	5.98	4 × Ø0.75	0.94	4.72		
100	4	9.06	7.48	8 × Ø0.75	0.94	5.83		
150	6	11.02	9.49	8 × Ø0.91	0.98	8.23		
200	8	13.58	11.73	8 × Ø0.91	1.14	10.39		
250	10	15.94	14.25	12 × Ø0.98	1.18	12.48		
300	12	19.09	17.01	12 × Ø0.98	1.26	14.88		
Surface roughness (flange): Ra 248 to 492 µin								

1) Depends on the liner→ 🖹 81
2) Total length is independent of the process connections. Length according to DVGW (German Technical and Scientific Association for Gas and Water) → 🖹 68 (compact version) → 🖹 70 (remote version)

Accessories

Ground disks for flange connections

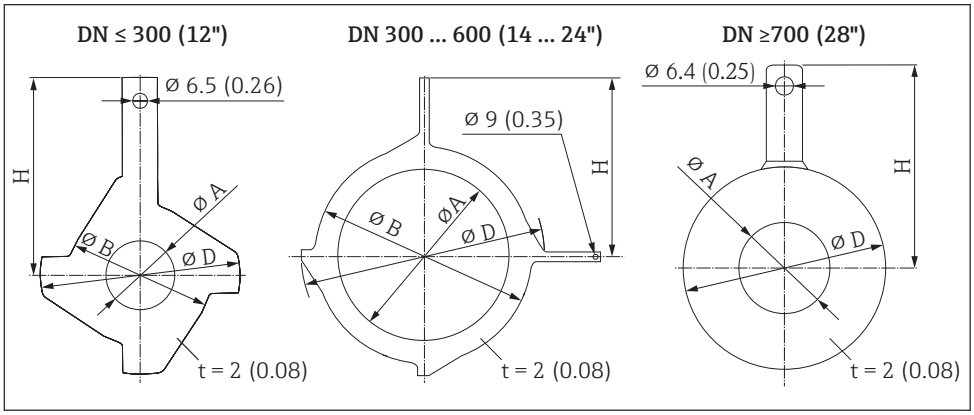

DN		Pressure rating	A		B		D		H	
[mm]	[inch]		[mm]	[inch]	[mm]	[inch]	[mm]	[inch]	[mm]	[inch]
25	1"	1)	26	1.02	62	2.44	77.5	3.05	87.5	3.44
32	1 ¼"	1)	35	1.38	80	3.15	87.5	3.44	94.5	3.72
40	1 ½"	1)	41	1.61	82	3.23	101	3.98	103	4.06
50	2"	1)	52	2.05	101	3.98	115.5	4.55	108	4.25
65	2 ½"	1)	68	2.68	121	4.76	131.5	5.18	118	4.65
80	3"	1)	80	3.15	131	5.16	154.5	6.08	135	5.31
100	4"	1)	104	4.09	156	6.14	186.5	7.34	153	6.02
125	5"	1)	130	5.12	187	7.36	206.5	8.13	160	6.30

DN		Pressure rating	A		B		D		H	
[mm]	[inch]		[mm]	[inch]	[mm]	[inch]	[mm]	[inch]	[mm]	[inch]
150	6"	1)	158	6.22	217	8.54	256	10.08	184	7.24
200	8"	1)	206	8.11	267	10.51	288	11.34	205	8.07
250	10"	1)	260	10.24	328	12.91	359	14.13	240	9.45
300	12"	PN 10 PN 16 Cl. 150	312	12.28	375	14.76	413	16.26	273	10.75
		PN 25 JIS 10K JIS 20K	310	12.20	375	14.76	404	15.91	268	10.55
350	14"	PN 6	343	13.50	420	16.54	479	18.86	365	14.37
		PN 10								
		PN 16								
375	15"	PN 16	393	15.5	461	18.2	523	20.6	395	15.6
400	16"	PN 6	393	15.5	470	18.50	542	21.34	395	15.55
		PN 10								
		PN 16								
450	18"	PN 6	439	17.28	525	20.67	583	22.95	417	16.42
		PN 10								
		PN 16								
500	20"	PN 6	493	19.41	575	22.64	650	25.59	460	18.11
		PN 10								
		PN 16								
600	24"	PN 6	593	23.35	676	26.61	766	30.16	522	20.55
		PN 10								
		PN 16								
700	28"	PN 6	697	27.44	–	–	786	30.94	460	18.11
		PN10	693	27.28	–	–	813	32.01	480	18.9
		PN16	687	27.05	–	–	807	31.77	490	19.29
		Cl, D	693	27.28	–	–	832	32.76	494	19.45
750	30"	Cl, D	743	29.25	–	–	833	32.8	523	20.59
800	32"	PN 6	799	31.46	–	–	893	35.16	520	20.47
		PN 10	795	31.3	–	–	920	36.22	540	21.26
		PN 16	789	31.06	–	–	914	35.98	550	21.65
		Cl, D	795	31.3	–	–	940	37.01	561	22.09
900	36"	PN 6	897	35.31	–	–	993	39.09	570	22.44
		PN 10	893	35.16	–	–	1020	40.16	590	23.23
		PN 16	886	34.88	–	–	1014	39.92	595	23.43
		Cl, D	893	35.16	–	–	1048	41.26	615	24.21
1000	40"	PN 6	999	39.33	–	–	1093	43.03	620	24.41
		PN 10	995	39.17	–	–	1127	44.37	650	25.59
		PN 16	988	38.9	–	–	1131	44.53	660	25.98
		Cl, D	995	39.17	–	–	1163	45.79	675	26.57
–	42"	PN 6	1044	41.1	–	–	1220	48.03	704	27.72

DN		Pressure rating	A		B		D		H	
[mm]	[inch]		[mm]	[inch]	[mm]	[inch]	[mm]	[inch]	[mm]	[inch]
1200	48"	PN 6	1203	47.36	–	–	1310	51.57	733	28.86
		PN 10	1196	47.09	–	–	1344	52.91	760	29.92
		PN 16	1196	47.09	–	–	1385	54.53	786	30.94
		Cl, D	1188	46.77	–	–	1345	52.95	775	30.51

1) In the case of DN 25 to 250, ground disks can be used for all the flange standards/pressure ratings which can be supplied in the standard version

Weight

All values (weight exclusive of packaging material) refer to devices with flanges of the standard pressure rating.
The weight may be lower than indicated depending on the pressure rating and design.

Weight in SI units

Order code for "Design", options A, B, C, D, E DN 25 to 400, DN 1" to 16"				
Nominal diameter		Reference values		
		EN (DIN), AS, JIS		ASME (Class 150)
[mm]	[in]	Pressure rating	[kg]	[kg]
25	1	PN 40	10	5
32	–	PN 40	11	–
40	1 ½	PN 40	12	7
50	2	PN 40	13	9
65	–	PN 16	13	–
80	3	PN 16	15	14
100	4	PN 16	18	19
125	–	PN 16	25	–
150	6	PN 16	31	33
200	8	PN 10	52	52
250	10	PN 10	81	90
300	12	PN 10	95	129
350	14	PN 6	106	172
375	15	PN 6	121	–
400	16	PN 6	121	203

Order code for "Design", options A, F ≥ DN 450 (18")				
Nominal diameter		Reference values		
		EN (DIN) (PN16)	AS (PN 16)	ASME (Class 150), AWWA (Class D)
[mm]	[in]	[kg]	[kg]	[kg]
450	18	142	138	191
500	20	182	186	228
600	24	227	266	302
700	28	291	369	266
–	30	–	447	318
800	32	353	524	383
900	36	444	704	470
1000	40	566	785	587
–	42	–	–	670
1200	48	843	1229	901
–	54	–	–	1273
1400	–	1204	–	–
–	60	–	–	1594

Order code for "Design", options A, F ≥ DN 450 (18")				
Nominal diameter		Reference values		
		EN (DIN) (PN16)	AS (PN 16)	ASME (Class 150), AWWA (Class D)
[mm]	[in]	[kg]	[kg]	[kg]
1600	–	1845	–	–
–	66	–	–	2131
1800	72	2357	–	2568
–	78	2929	–	3113
2000	–	2929	–	3113
–	84	–	–	3755
2200	–	3422	–	–
–	90	–	–	4797
2400	–	4094	–	–

Order code for "Design", options B, G ≥ DN 450 (18")			
Nominal diameter		Reference values	
		EN (DIN) (PN 6)	ASME (Class 150), AWWA (Class D)
[mm]	[in]	[kg]	[kg]
450	18	161	255
500	20	156	285
600	24	208	405
700	28	304	400
–	30	–	460
800	32	357	550
900	36	485	800
1000	40	589	900
–	42	–	1100
1200	48	850	1400
–	54	850	2200
1400	–	1300	–
–	60	–	2700
1600	–	1845	–
–	66	–	3700
1800	72	2357	4100
–	78	2929	4600
2000	–	2929	–

Weight in US units

Order code for "Design", options A, B, C, D, E DN 25 to 400, DN 1" to 16"		
Nominal diameter		Reference values ASME (Class 150)
[mm]	[in]	[lb]
25	1	11
32	–	–
40	1 ½	15
50	2	20
65	–	–
80	3	31
100	4	42
125	–	–
150	6	73
200	8	115
250	10	198
300	12	284
350	14	379
375	15	–
400	16	448

Order code for "Design", options A, F ≥ DN 450 (18")		
Nominal diameter		Reference values ASME (Class 150), AWWA (Class D)
[mm]	[in]	[lb]
450	18	421
500	20	503
600	24	666
700	28	587
–	30	701
800	32	845
900	36	1036
1000	40	1294
–	42	1477
1200	48	1987
–	54	2807
1400	–	–
–	60	3515
1600	–	–
–	66	4699
1800	72	5662
–	78	6864
2000	–	6864

Order code for "Design", options A, F ≥ DN 450 (18")		
Nominal diameter		Reference values ASME (Class 150), AWWA (Class D)
[mm]	[in]	[lb]
–	84	8280
2200	–	–
–	90	10577
2400	–	–

Order code for "Design", options B, G ≥ DN 450 (18")		
Nominal diameter		Reference values ASME (Class 150), AWWA (Class D)
[mm]	[in]	[lb]
450	18	562
500	20	628
600	24	893
700	28	882
–	30	1014
800	32	1213
900	36	1764
1000	40	1984
–	42	2426
1200	48	3087
–	54	4851
1400	–	–
–	60	5954
1600	–	–
–	66	8158
1800	72	9040
–	78	10143
2000	–	–

Measuring tube specification

Nominal diameter		Pressure rating				Measuring tube internal diameter					
		EN (DIN)	ASME AWWA	AS 2129 AS 4087	JIS	Hard rubber		Polyurethane		PTFE	
[mm]	[in]					[mm]	[in]	[mm]	[in]	[mm]	[in]
25	1	PN 40	Class 150	–	20K	–	–	24	0.94	25	0.98
32	–	PN 40	–	–	20K	–	–	32	1.26	34	1.34
40	1 ½	PN 40	Class 150	–	20K	–	–	38	1.50	40	1.57
50	2	PN 40	Class 150	Table E, PN 16	10K	50	1.97	50	1.97	52	2.05
50 [1)]	2	PN 40	Class 150	Table E, PN 16	10K	32	1.26	–	–	–	–
65	–	PN 16	–	–	10K	66	2.60	66	2.60	68	2.68

Nominal diameter		Pressure rating				Measuring tube internal diameter					
		EN (DIN)	ASME AWWA	AS 2129 AS 4087	JIS	Hard rubber		Polyurethane		PTFE	
[mm]	[in]					[mm]	[in]	[mm]	[in]	[mm]	[in]
65 [1]	–	PN 16	–	–	10K	38	1.50	–	–	–	–
80	3	PN 16	Class 150	Table E, PN 16	10K	79	3.11	79	3.11	80	3.15
80 [1]	3	PN 16	Class 150	Table E, PN 16	10K	50	1.97	–	–	–	–
100	4	PN 16	Class 150	Table E, PN 16	10K	102	4.02	102	4.02	104	4.09
100 [1]	4	PN 16	Class 150	Table E, PN 16	10K	66	2.60	–	–	–	–
125	–	PN 16	–	–	10K	127	5.00	127	5.00	130	5.12
125 [1]	–	PN 16	–	–	10K	79	3.11	–	–	–	–
150	6	PN 16	Class 150	Table E, PN 16	10K	156	6.14	156	6.14	156	6.14
150 [1]	6	PN 16	Class 150	Table E, PN 16	10K	102	4.02	–	–	–	–
200	8	PN 10	Class 150	Table E, PN 16	10K	204	8.03	204	8.03	202	7.95
200 [1]	8	PN 16	Class 150	Table E, PN 16	10K	127	5.00	–	–	–	–
250	10	PN 10	Class 150	Table E, PN 16	10K	258	10.2	258	10.2	256	10.08
250 [1]	10	PN 16	Class 150	Table E, PN 16	10K	156	6.14	–	–	–	–
300	12	PN 10	Class 150	Table E, PN 16	10K	309	12.2	309	12.2	306	12.05
300 [1]	12	PN 16	Class 150	Table E, PN 16	10K	204	8.03	–	–	–	–
350	14	PN 6	Class 150	Table E, PN 16	10K	337	13.3	342	13.5	–	–
375	15	–	–	PN 16	10K	389	15.3	–	–	–	–
400	16	PN 6	Class 150	Table E, PN 16	10K	387	15.2	392	15.4	–	–
450	18	PN 6	Class 150	–	10K	436	17.1	437	17.2	–	–
500	20	PN 6	Class 150	Table E, PN 16	10K	487	19.1	492	19.4	–	–
600	24	PN 6	Class 150	Table E, PN 16	10K	589	23.0	594	23.4	–	–
700	28	PN 6	Class D	Table E, PN 16	10K	688	27.1	692	27.2	–	–
750	30	–	Class D	Table E, PN 16	10K	737	29.1	742	29.2	–	–
800	32	PN 6	Class D	Table E, PN 16	–	788	31.0	794	31.3	–	–
900	36	PN 6	Class D	Table E, PN 16	–	889	35.0	891	35.1	–	–
1000	40	PN 6	Class D	Table E, PN 16	–	991	39.0	994	39.1	–	–
–	42	–	Class D	–	–	1043	41.1	1043	41.1	–	–
1200	48	PN 6	Class D	Table E, PN 16	–	1191	46.9	1197	47.1	–	–
–	54	–	Class D	–	–	1339	52.7	–	–	–	–
1400	–	PN 6	–	–	–	1402	55.2	–	–	–	–
–	60	–	Class D	–	–	1492	58.7	–	–	–	–
1600	–	PN 6	–	–	–	1600	63.0	–	–	–	–
–	66	–	Class D	–	–	1638	64.5	–	–	–	–
1800	72	PN 6	–	–	–	1786	70.3	–	–	–	–
–	78	–	Class D	–	–	1989	78.3	–	–	–	–
2000	–	PN 6	–	–	–	1989	78.3	–	–	–	–
–	84	–	Class D	–	–	2099	84.0	–	–	–	–
2200	–	PN 6	–	–	–	2194	87.8	–	–	–	–

Nominal diameter		Pressure rating				Measuring tube internal diameter					
		EN (DIN)	ASME AWWA	AS 2129 AS 4087	JIS	Hard rubber		Polyurethane		PTFE	
[mm]	[in]					[mm]	[in]	[mm]	[in]	[mm]	[in]
–	90	–	Class D	–	–	2 246	89.8	–	–	–	–
2400	–	PN 6	–	–	–	2 391	94.1	–	–	–	–

1) Order code for "Design", option C

Materials

Transmitter housing

Compact version

- Order code for "Housing", option **A** "Compact, alu, coated": Aluminum, AlSi10Mg, coated
- Order code for "Housing", option **M**: polycarbonate plastic
- Window material:
  - For order code for "Housing", option **A**: glass
  - For order code for "Housing", option **M**: plastic

Remote version (wall-mount housing)

- Order code for "Housing", option **P** "Remote, alu, coated": Aluminum, AlSi10Mg, coated
- Order code for "Housing", option **N**: polycarbonate plastic
- Window material:
  - For order code for "Housing", option **P**: glass
  - For order code for "Housing", option **N**: plastic

Sensor connection housing

- Order code for "Housing", option **P** "Remote, alu, coated": Aluminum, AlSi10Mg, coated
- Order code for "Housing", option **N**: polycarbonate plastic

Cable entries/cable glands

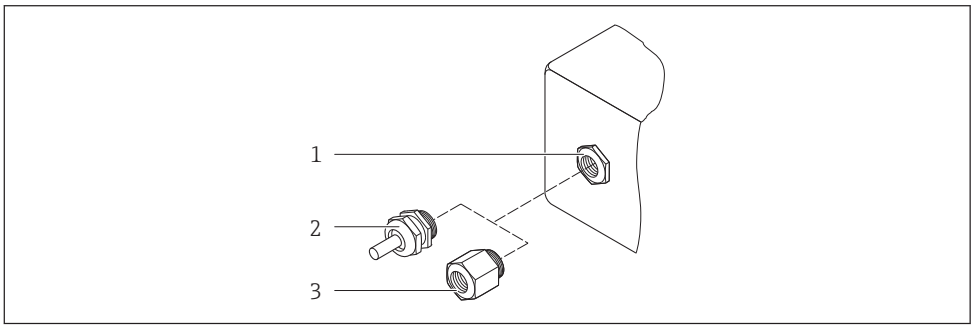

36 Possible cable entries/cable glands

1 Female thread M20 × 1.5
2 Cable gland M20 × 1.5
3 Adapter for cable entry with internal thread G ½" or NPT ½"

Compact and remote versions and sensor connection housing

Cable entry/cable gland	Material
Cable gland M20 × 1.5	Plastic
Remote version: cable gland M20 × 1.5 Option of reinforced connecting cable	▪ Sensor connection housing: Nickel-plated brass ▪ Transmitter wall-mount housing: Plastic
Adapter for cable entry with internal thread G ½" or NPT ½"	Nickel-plated brass

Device plug

Electrical connection	Material
Plug M12x1	▪ Socket: Stainless steel, 1.4404 (316L) ▪ Contact housing: Polyamide ▪ Contacts: Gold-plated brass

Connecting cable for remote version

Electrode and coil current cable
- Standard cable: PVC cable with copper shield
- Reinforced cable: PVC cable with copper shield and additional steel wire braided jacket

Sensor housing

- DN 25 to 300 (1 to 12")
  - Aluminum half-shell housing, aluminum, AlSi10Mg, coated
  - Fully welded carbon steel housing with protective varnish
- DN 350 to 2400 (14 to 90")
  Fully welded carbon steel housing with protective varnish

Measuring tubes

- DN 25 to 600 (1 to 24")
  Stainless steel: 1.4301, 1.4306, 304, 304L
- DN 700 to 2400 (28 to 90")
  Stainless steel: 1.4301, 304

Liner

- DN 25 to 300 (1 to 12"): PTFE
- DN 25 to 1200 (1 to 48"): polyurethane
- DN 50 to 2400 (2 to 90"): hard rubber

Electrodes

- Stainless steel, 1.4435 (316L)
- Alloy C22, 2.4602 (UNS N06022)
- Tantalum

Process connections

For flanges made of carbon steel:
- DN ≤ 300 (12"): with Al/Zn protective coating or protective varnish
- DN ≥ 350 (14"): protective varnish

All carbon steel lap joint flanges are supplied with a hot-dip galvanized finish.

EN 1092-1 (DIN 2501)

Fixed flange
- Carbon steel:
  - DN ≤ 300: S235JRG2, S235JR+N, P245GH, A105, E250C
  - DN 350 to 2400: P245GH, S235JRG2, A105, E250C
- Stainless steel:
  - DN ≤ 300: 1.4404, 1.4571, F316L
  - DN 350 to 600: 1.4571, F316L, 1.4404
  - DN 700 to 1000: 1.4404, F316L

Lap joint flange
- Carbon steel DN ≤ 300: S235JRG2, A105, E250C
- Stainless steel DN ≤ 300: 1.4306,1.4404, 1.4571, F316L

Lap joint flange, stamped plate
- Carbon steel DN ≤ 300: S235JRG2 similar to S235JR+AR or 1.0038
- Stainless steel DN ≤ 300: 1.4301 similar to 304

ASME B16.5

Fixed flange, lap joint flange
- Carbon steel: A105
- Stainless steel: F316L

JIS B2220

- Carbon steel: A105, A350 LF2
- Stainless steel: F316L

AWWA C207

Carbon steel: A105, P265GH, A181 Class 70, E250C, S275JR

AS 2129

Carbon steel: A105, E250C, P235GH, P265GH, S235JRG2

AS 4087

Carbon steel: A105, P265GH, S275JR

Seals

As per DIN EN 1514-1, form IBC

Accessories

Display guard

Stainless steel, 1.4301 (304L)

Ground disks

- Stainless steel, 1.4435 (316L)
- Alloy C22, 2.4602 (UNS N06022)
- Tantalum

Fitted electrodes

Measurement, reference and empty pipe detection electrodes available as standard with:
- 1.4435 (316L)
- Alloy C22, 2.4602 (UNS N06022)
- Tantalum

Process connections

- EN 1092-1 (DIN 2501)
  - DN ≤ 300: fixed flange (PN 10/16/25/40) = Form A, lap joint flange (PN 10/16), lap joint flange, stamped plate (PN 10) = Form A
  - DN ≥ 350: fixed flange (PN 6/10/16/25) = flat face (Form B)
  - DN 450 to 2400: fixed flange (PN 6/10/16) = flat face (Form B)
- ASME B16.5
  - DN 350 to 2400 (14 to 90"): fixed flange (Class 150)
  - DN 25 to 600 (1 to 24"): lap joint flange (Class 150)
  - DN 25 to 150 (1 to 6"): fixed flange (Class 300)
- JIS B2220
  - DN 50 to 750: fixed flange (10K)
  - DN 25 to 600: fixed flange (20K)
- AWWA C207
  - DN 48 to 72": fixed flange (Class D)
  - DN 48 to 90": fixed flange (Class D)
- AS 2129
  - DN 50 to 1200: fixed flange (Table E)
  - DN 350 to 1200: fixed flange (Table E)
- AS 4087
  - DN 50 to 1200): fixed flange (PN 16)
  - DN 350 to 1200: fixed flange (PN 16)

For information on the different materials used in the process connections → 84

Surface roughness

Electrodes with 1.4435 (316L); Alloy C22, 2.4602 (UNS N06022); tantalum:
≤ 0.3 to 0.5 µm (11.8 to 19.7 µin)
(All data relate to parts in contact with fluid)

Operability

Operating concept

Operator-oriented menu structure for user-specific tasks
- Commissioning
- Operation
- Diagnostics
- Expert level

Fast and safe commissioning
- Guided menus ("Make-it-run" wizards) for applications
- Menu guidance with brief descriptions of the individual parameter functions
- Device access via Web server or SmartBlue app → 97
- WLAN access to the device via mobile handheld terminal, tablet or smart phone

Reliable operation
- Operation in local language
- Uniform operating philosophy applied to device and operating tools
- If replacing electronic modules, transfer the device configuration via the integrated memory (HistoROM backup) which contains the process and measuring device data and the event logbook. No need to reconfigure.

Efficient diagnostics increase measurement availability
- Troubleshooting measures can be called up via the device and in the operating tools
- Diverse simulation options, logbook for events that occur and optional line recorder functions

Languages

Can be operated in the following languages:
- Via local operation:
  English, German, French, Spanish, Italian, Dutch, Portuguese, Polish, Russian, Turkish, Chinese, Japanese, Bahasa (Indonesian), Vietnamese, Czech, Swedish
- Via "FieldCare", "DeviceCare" operating tool:
  English, German, French, Spanish, Italian, Chinese, Japanese
- Via Web browser (only available for device versions with HART, PROFIBUS DP and EtherNet/IP):
  English, German, French, Spanish, Italian, Dutch, Portuguese, Polish, Russian, Turkish, Chinese, Japanese, Bahasa (Indonesian), Vietnamese, Czech, Swedish

Local display

Via display module

Features:
- Standard features 4-line, illuminated, graphic display; touch control
- Order code for "Display; operation", option BA "WLAN" = standard features plus access via Web browser

Information about WLAN interface → 89

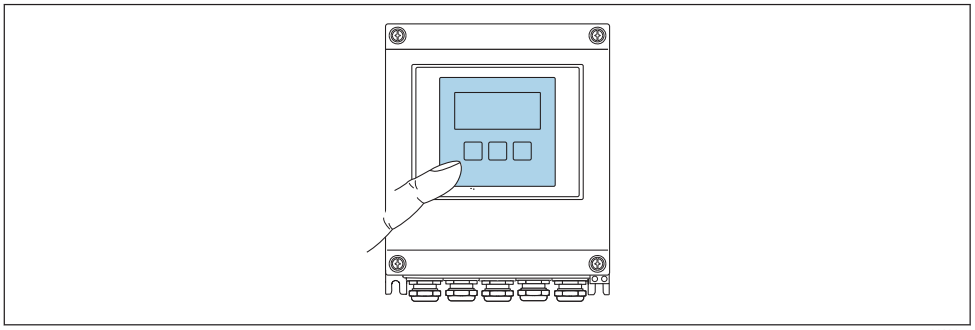

37 *Operation with touch control*

Display elements

- 4-line, illuminated, graphic display
- White background lighting; switches to red in event of device errors
- Format for displaying measured variables and status variables can be individually configured
- Permitted ambient temperature for the display: –20 to +60 °C (–4 to +140 °F)
  The readability of the display may be impaired at temperatures outside the temperature range.

Operating elements

- External operation via touch control (3 optical keys) without opening the housing: ⊞, ⊟, E
- Operating elements also accessible in the various zones of the hazardous area

Remote operation

Via HART protocol

This communication interface is available in device versions with a HART output.

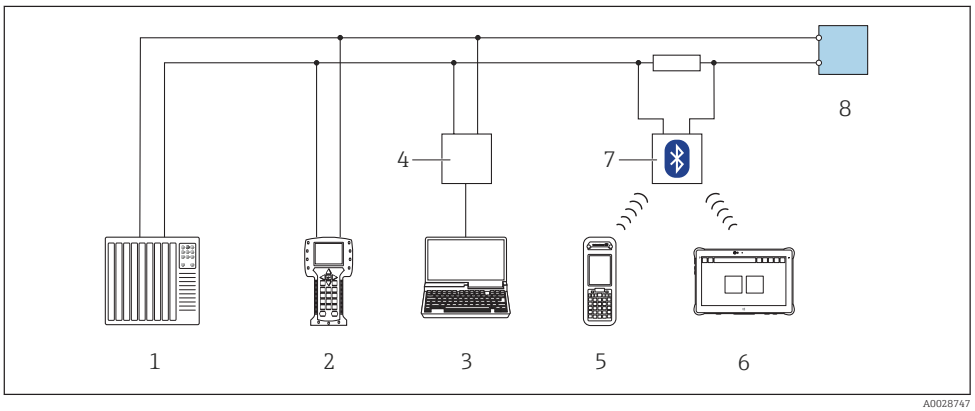

38 *Options for remote operation via HART protocol*

1 *Control system (e.g. PLC)*
2 *Field Communicator 475*
3 *Computer with operating tool (e.g. FieldCare, AMS Device Manager, SIMATIC PDM)*
4 *Commubox FXA195 (USB)*
5 *Field Xpert SFX350 or SFX370*
6 *Field Xpert SMT70*
7 *VIATOR Bluetooth modem with connecting cable*
8 *Transmitter*

Via PROFIBUS DP network

This communication interface is available in device versions with PROFIBUS DP.

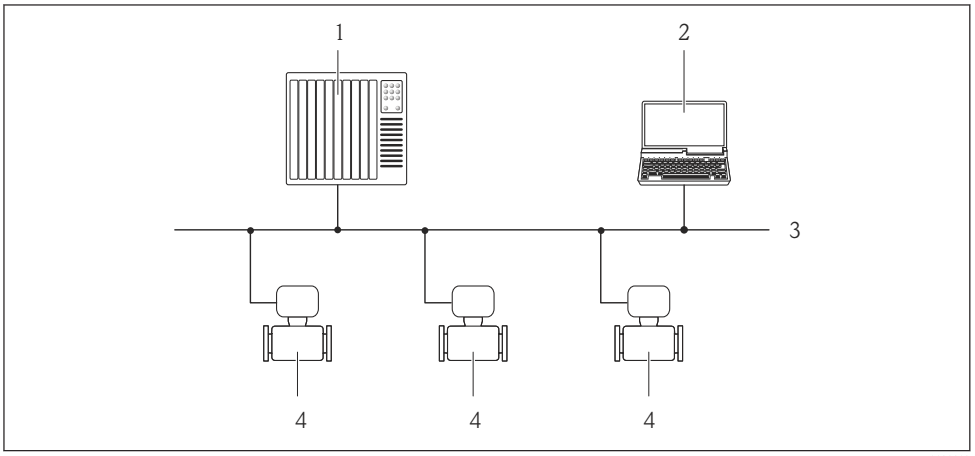

39 Options for remote operation via PROFIBUS DP network

1 Automation system
2 Computer with PROFIBUS network card
3 PROFIBUS DP network
4 Measuring device

Via Modbus RS485 protocol

This communication interface is available in device versions with a Modbus-RS485 output.

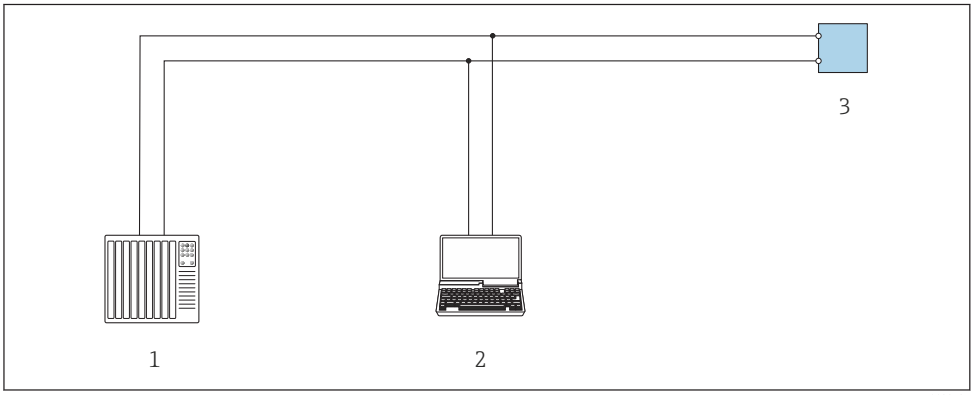

40 Options for remote operation via Modbus-RS485 protocol (active)

1 Control system (e.g. PLC)
2 Computer with Web browser (e.g. Internet Explorer) for accessing the integrated device Web server or with operating tool (e.g. FieldCare, DeviceCare) with COM DTM "CDI Communication TCP/IP" or Modbus DTM
3 Transmitter

Via EtherNet/IP network

This communication interface is available in device versions with EtherNet/IP.

Star topology

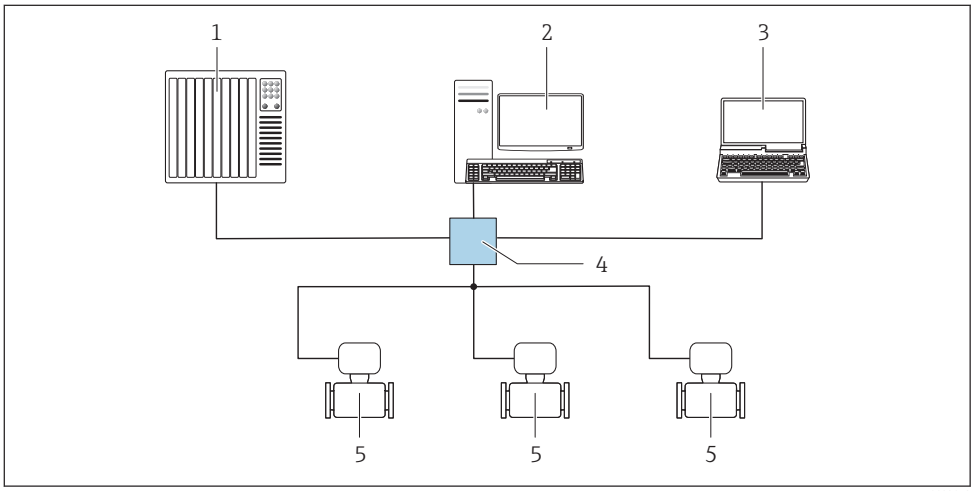

41 Options for remote operation via EtherNet/IP network: star topology

1 *Automation system, e.g. "RSLogix" (Rockwell Automation)*
2 *Workstation for measuring device operation: with Custom Add-On Profile for "RSLogix 5000" (Rockwell Automation) or with Electronic Data Sheet (EDS)*
3 *Computer with Web browser (e.g. Internet Explorer) for accessing the integrated device Web server or computer with operating tool (e.g. FieldCare, DeviceCare) with COM DTM "CDI Communication TCP/IP"*
4 *Ethernet switch*
5 *Measuring device*

Service interface

Via service interface (CDI-RJ45)

This communication interface is present in the following device version:
- Order code for "Output", option **H**: 4-20/0-20 mA HART, pulse/frequency/switch output
- Order code for "Output", option **I**: 4-20/0-20 mA HART, pulse/frequency/switch output, status input
- Order code for "Output", option **L**: PROFIBUS DP
- Order code for "Output", option **N**: EtherNet/IP
- Order code for "Output", option **M**: Modbus RS485

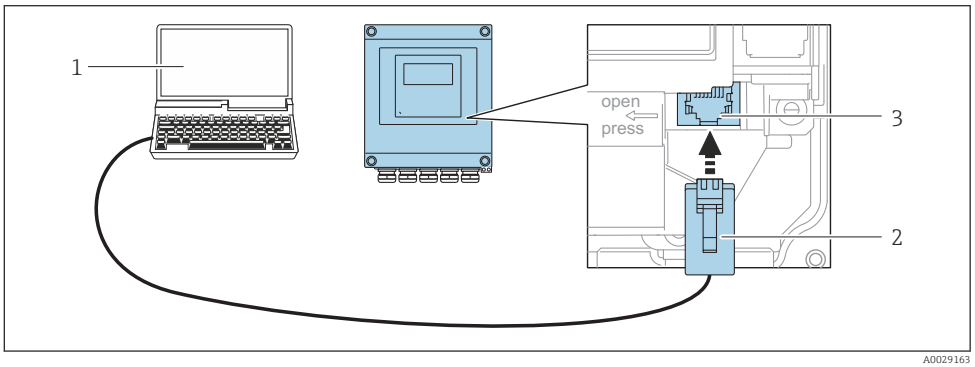

42 Connection via service interface (CDI-RJ45)

1 *Computer with Web browser (e.g. Microsoft Internet Explorer, Microsoft Edge) for accessing the integrated device Web server or with "FieldCare", "DeviceCare" operating tool with COM DTM "CDI Communication TCP/IP" or Modbus DTM*
2 *Standard Ethernet connecting cable with RJ45 plug*
3 *Service interface (CDI-RJ45) of the measuring device with access to the integrated Web server*

Via WLAN interface

The optional WLAN interface is available on the following device version:
Order code for "Display", option BA "WLAN":
4-line, illuminated, graphic display; touch control + WLAN

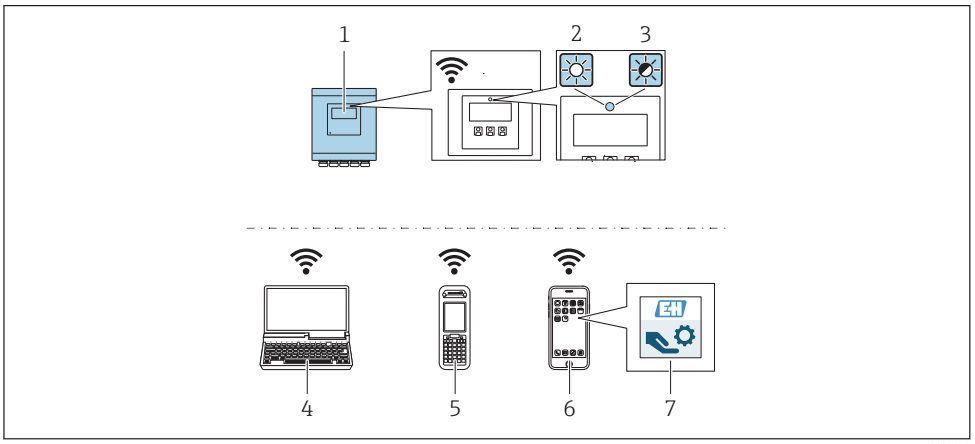

A0032079

1 *Transmitter with integrated WLAN antenna*
2 *LED lit constantly: WLAN reception is enabled on measuring device*
3 *LED flashing: WLAN connection established between operating unit and measuring device*
4 *Computer with WLAN interface and Web browser (e.g. Microsoft Internet Explorer, Microsoft Edge) for accessing the integrated device Web server or with operating tool (e.g. FieldCare, DeviceCare)*
5 *Mobile handheld terminal with WLAN interface and Web browser (e.g. Microsoft Internet Explorer, Microsoft Edge) for accessing the integrated device Web server or operating tool (e.g. FieldCare, DeviceCare)*
6 *Smart phone or tablet (e.g. Field Xpert SMT70)*
7 *SmartBlue App*

Function	WLAN: IEEE 802.11 b/g (2.4 GHz) ▪ Access point with DHCP server (default setting) ▪ Network
Encryption	WPA2-PSK AES-128 (in accordance with IEEE 802.11i)
Configurable WLAN channels	1 to 11
Degree of protection	IP67
Available antennas	▪ Internal antenna ▪ External antenna (optional) In the event of poor transmission/reception conditions at the place of installation. Available as an accessory . Only one antenna active in each case!
Range	▪ Internal antenna: typically 10 m (32 ft) ▪ External antenna: typically 50 m (164 ft)
Materials (external antenna)	▪ Antenna: ASA plastic (acrylic ester-styrene-acrylonitrile) and nickel-plated brass ▪ Adapter: Stainless steel and nickel-plated brass ▪ Cable: Polyethylene ▪ Connector: Nickel-plated brass ▪ Angle bracket: Stainless steel

Supported operating tools

Different operating tools can be used for local or remote access to the measuring device. Depending on the operating tool used, access is possible with different operating units and via a variety of interfaces.

Supported operating tools	Operating unit	Interface	Additional information
Web browser	Notebook, PC or tablet with Web browser	▪ CDI-RJ45 service interface ▪ WLAN interface ▪ Ethernet-based fieldbus (EtherNet/IP)	Special Documentation for device
DeviceCare SFE100	Notebook, PC or tablet with Microsoft Windows system	▪ CDI-RJ45 service interface ▪ WLAN interface ▪ Fieldbus protocol	→ 📄 97
FieldCare SFE500	Notebook, PC or tablet with Microsoft Windows system	▪ CDI-RJ45 service interface ▪ WLAN interface ▪ Fieldbus protocol	→ 📄 97
Device Xpert	Field Xpert SFX 100/350/370	HART and FOUNDATION Fieldbus fieldbus protocol	Operating Instructions BA01202S Device description files: Use update function of handheld terminal

Other operating tools based on FDT technology with a device driver such as DTM/iDTM or DD/EDD can be used for device operation. These operating tools are available from the individual manufacturers. Integration into the following operating tools, among others, is supported:

- FactoryTalk AssetCentre (FTAC) by Rockwell Automation → www.rockwellautomation.com
- Process Device Manager (PDM) by Siemens → www.siemens.com
- Asset Management Solutions (AMS) by Emerson → www.emersonprocess.com
- FieldCommunicator 375/475 by Emerson → www.emersonprocess.com
- Field Device Manager (FDM) by Honeywell → www.honeywellprocess.com
- FieldMate by Yokogawa → www.yokogawa.com
- PACTWare → www.pactware.com

The associated device description files are available at: www.endress.com → Downloads

Web server

Thanks to the integrated Web server, the device can be operated and configured via a Web browser and via a service interface (CDI-RJ45) or via a WLAN interface. The structure of the operating menu is the same as for the local display. In addition to the measured values, status information on the device is also displayed and allows the user to monitor the status of the device. Furthermore the device data can be managed and the network parameters can be configured.

A device that has a WLAN interface (can be ordered as an option) is required for the WLAN connection: order code for "Display", option BA "WLAN": 4-line, illuminated; touch control + WLAN. The device acts as an Access Point and enables communication by computer or a mobile handheld terminal.

Supported functions
Data exchange between the operating unit (such as a notebook for example) and the measuring device:
- Upload the configuration from the measuring device (XML format, configuration backup)
- Save the configuration to the measuring device (XML format, restore configuration)
- Export event list (.csv file)
- Export parameter settings (.csv file or PDF file, document the measuring point configuration)
- Export the Heartbeat verification log (PDF file, only available with the "Heartbeat Verification" application package)
- Flash firmware version for device firmware upgrade, for instance
- Download driver for system integration
- Visualize up to 1000 saved measured values (only available with the **Extended HistoROM** application package → 📄 95)

Web server special documentation → 📄 98

HistoROM data management

The measuring device features HistoROM data management. HistoROM data management comprises both the storage and import/export of key device and process data, making operation and servicing far more reliable, secure and efficient.

Additional information on the data storage concept

There are different types of data storage units in which device data are stored and used by the device:

	Device memory	T-DAT	S-DAT
Available data	▪ Device firmware package ▪ Driver for system integration e.g.: – GSD for PROFIBUS DP – EDS for EtherNet/IP	▪ Event history, such as diagnostic events ▪ Measured value memory ("Extended HistoROM" order option) ▪ Current parameter data record (used by firmware at run time) ▪ Maximum indicators (min/max values) ▪ Totalizer values	▪ Sensor data: diameter etc. ▪ Serial number ▪ User-specific access code (to use the "Maintenance" user role) ▪ Calibration data ▪ Device configuration (e.g. SW options, fixed I/O or multi I/O)
Storage location	Fixed on the user interface board in the connection compartment	Can be plugged into the user interface board in the connection compartment	In the sensor plug in the transmitter neck part

Data backup

Automatic
- The most important device data (sensor and transmitter) are automatically saved in the DAT modules
- If the transmitter or measuring device is replaced: once the T-DAT containing the previous device data has been exchanged, the new measuring device is ready for operation again immediately without any errors
- If the sensor is replaced: once the sensor has been replaced, new sensor data are transferred from the S-DAT in the measuring device and the measuring device is ready for operation again immediately without any errors

Data transfer

Manual
- Transfer of a device configuration to another device using the export function of the specific operating tool, e.g. with FieldCare, DeviceCare or Web server: to duplicate the configuration or to store in an archive (e.g. for backup purposes)
- Transmission of the drivers for system integration via Web server, e.g.:
  – GSD for PROFIBUS DP
  – EDS for EtherNet/IP

Event list

Automatic
- Chronological display of up to 20 event messages in the events list
- If the **Extended HistoROM** application package (order option) is enabled: up to 100 event messages are displayed in the events list along with a time stamp, plain text description and remedial measures
- The events list can be exported and displayed via a variety of interfaces and operating tools e.g. DeviceCare, FieldCare or Web server

Data logging

Manual

If the **Extended HistoROM** application package (order option) is enabled:
- Record up to 1000 measured values via 1 to 4 channels
- User configurable recording interval
- Record up to 250 measured values via each of the 4 memory channels
- Export the measured value log via a variety of interfaces and operating tools e.g. FieldCare, DeviceCare or web server

Certificates and approvals

Currently available certificates and approvals can be called up via the product configurator.

CE mark

The device meets the legal requirements of the applicable EU Directives. These are listed in the corresponding EU Declaration of Conformity along with the standards applied.

Endress+Hauser confirms successful testing of the device by affixing to it the CE mark.

RCM-Tick mark

The measuring system meets the EMC requirements of the "Australian Communications and Media Authority (ACMA)".

Ex approval

The devices are certified for use in hazardous areas and the relevant safety instructions are provided in the separate "Control Drawing" document. Reference is made to this document on the nameplate.

Drinking water approval

- ACS
- KTW/W270
- NSF 61
- WRAS BS 6920

HART certification

HART interface

The measuring device is certified and registered by the FieldComm Group. The measuring system meets all the requirements of the following specifications:
- Certified according to HART 7
- The device can also be operated with certified devices of other manufacturers (interoperability)

Certification PROFIBUS

PROFIBUS interface

The measuring device is certified and registered by the PNO (PROFIBUS User Organization Organization). The measuring system meets all the requirements of the following specifications:
- Certified in accordance with PROFIBUS PA Profile 3.02
- The device can also be operated with certified devices of other manufacturers (interoperability)

Modbus RS485 certification

The measuring device meets all the requirements of the MODBUS/TCP conformity test and has the "MODBUS/TCP Conformance Test Policy, Version 2.0". The measuring device has successfully passed all the test procedures carried out.

EtherNet/IP certification

The measuring device is certified and registered by the ODVA (Open Device Vendor Association). The measuring system meets all the requirements of the following specifications:
- Certified in accordance with the ODVA Conformance Test
- EtherNet/IP Performance Test
- EtherNet/IP PlugFest compliance
- The device can also be operated with certified devices of other manufacturers (interoperability)

Radio approval

The measuring device has radio approval.

For detailed information regarding radio approval, see Special Documentation → 98

Measuring instrument approval

The measuring device is (optionally) approved as a cold water meter (MI-001) for volume measurement in service subject to legal metrological control in accordance with the European Measuring Instruments Directive 2014/32/EU (MID).

The measuring device is qualified to OIML R49: 2013 and has an OIML Certificate of Conformity (optional).

Other standards and guidelines

- EN 60529
  Degrees of protection provided by enclosures (IP code)
- EN 61010-1
  Safety requirements for electrical equipment for measurement, control and laboratory use - general requirements
- IEC/EN 61326
  Emission in accordance with Class A requirements. Electromagnetic compatibility (EMC requirements).
- ANSI/ISA-61010-1 (82.02.01): 2004
  Safety Requirements for Electrical Equipment for Measurement, Control and Laboratory Use - Part 1 General Requirements
- CAN/CSA-C22.2 No. 61010-1-04
  Safety Requirements for Electrical Equipment for Measurement, Control and Laboratory Use - Part 1 General Requirements
- NAMUR NE 21
  Electromagnetic compatibility (EMC) of industrial process and laboratory control equipment
- NAMUR NE 32
  Data retention in the event of a power failure in field and control instruments with microprocessors
- NAMUR NE 43
  Standardization of the signal level for the breakdown information of digital transmitters with analog output signal.
- NAMUR NE 53
  Software of field devices and signal-processing devices with digital electronics
- NAMUR NE 105
  Specifications for integrating fieldbus devices in engineering tools for field devices
- NAMUR NE 107
  Self-monitoring and diagnosis of field devices
- NAMUR NE 131
  Requirements for field devices for standard applications

Ordering information

Detailed ordering information is available from the following sources:

- In the Product Configurator on the Endress+Hauser website: www.endress.com -> Click "Corporate" -> Select your country -> Click "Products" -> Select the product using the filters and search field -> Open product page -> The "Configure" button to the right of the product image opens the Product Configurator.
- From your Endress+Hauser Sales Center: www.addresses.endress.com

Product Configurator - the tool for individual product configuration

- Up-to-the-minute configuration data
- Depending on the device: Direct input of measuring point-specific information such as measuring range or operating language
- Automatic verification of exclusion criteria
- Automatic creation of the order code and its breakdown in PDF or Excel output format
- Ability to order directly in the Endress+Hauser Online Shop

Product generation index

Release date	Product root	Modification
01.07.2012	5W4B	Original
01.11.2016	5W4C	▪ Web server: current version ▪ Logbook: current concept, including Parameter Change ▪ Upload/download: current concept ▪ Heartbeat Technology: new hardware, diagnostics, events ▪ Security concept: encrypted password transmission ▪ WLAN ▪ Custody transfer mode

More information is available from your Sales Center or at:
www.service.endress.com → Downloads

Application packages

Many different application packages are available to enhance the functionality of the device. Such packages might be needed to address safety aspects or specific application requirements.

The application packages can be ordered with the device or subsequently from Endress+Hauser. Detailed information on the order code in question is available from your local Endress+Hauser sales center or on the product page of the Endress+Hauser website: www.endress.com.

Cleaning

Package	Description
Electrode cleaning circuit (ECC)	The electrode cleaning circuit (ECC) function has been developed to have a solution for applications where magnetite (Fe_3O_4) deposits frequently occur (e.g. hot water). Since magnetite is highly conductive this build up leads to measuring errors and ultimately to the loss of signal. The application package is designed to AVOID build up of highly conductive matter and thin layers (typical of magnetite).

Diagnostics functions

Package	Description
Extended HistoROM	Comprises extended functions concerning the event log and the activation of the measured value memory. Event log: Memory volume is extended from 20 message entries (standard version) to up to 100 entries. Data logging (line recorder): ▪ Memory capacity for up to 1000 measured values is activated. ▪ 250 measured values can be output via each of the 4 memory channels. The recording interval can be defined and configured by the user. ▪ Measured value logs can be accessed via the local display or operating tool e.g. FieldCare, DeviceCare or Web server.

Heartbeat Technology

Package	Description
Heartbeat Verification +Monitoring	**Heartbeat Verification** Meets the requirement for traceable verification to DIN ISO 9001:2008 Chapter 7.6 a) "Control of monitoring and measuring equipment". ▪ Functional testing in the installed state without interrupting the process. ▪ Traceable verification results on request, including a report. ▪ Simple testing process via local operation or other operating interfaces. ▪ Clear measuring point assessment (pass/fail) with high test coverage within the framework of manufacturer specifications. ▪ Extension of calibration intervals according to operator's risk assessment. **Heartbeat Monitoring** Continuously supplies data, which are characteristic of the measuring principle, to an external condition monitoring system for the purpose of preventive maintenance or process analysis. These data enable the operator to: ▪ Draw conclusions - using these data and other information - about the impact process influences (such as corrosion, abrasion, buildup etc.) have on the measuring performance over time. ▪ Schedule servicing in time. ▪ Monitor the process or product quality, e.g. gas pockets.

Accessories

Various accessories, which can be ordered with the device or subsequently from Endress+Hauser, are available for the device. Detailed information on the order code in question is available from your local Endress+Hauser sales center or on the product page of the Endress+Hauser website: www.endress.com.

Device-specific accessories

For the transmitter

Accessories	Description
Promag 400 transmitter	Transmitter for replacement or storage. Use the order code to define the following specifications: ▪ Approvals ▪ Output / input ▪ Display/operation ▪ Housing ▪ Software For details, see Installation Instructions EA00104D
Display guard	Is used to protect the display against impact or scoring from sand in desert areas. Order number: 71228792 Installation Instructions EA01093D
Connecting cable for remote version	Coil current and electrode cables, various lengths, reinforced cables available on request.
Ground cable	Set, consisting of two ground cables for potential equalization.
Post mounting kit	Post mounting kit for transmitter.
Compact → Remote conversion kit	For converting a compact device version to a remote device version.
Conversion kit Promag 50/53 → Promag 400	For converting a Promag with transmitter 50/53 to a Promag 400.

For the sensor

Accessories	Description
Ground disks	Are used to ground the medium in lined measuring tubes to ensure proper measurement. For details, see Installation Instructions EA00070D

Communication-specific accessories

Accessories	Description
Commubox FXA195 HART	For intrinsically safe HART communication with FieldCare via the USB interface. Technical Information TI00404F
Commubox FXA291	Connects Endress+Hauser field devices with a CDI interface (= Endress+Hauser Common Data Interface) and the USB port of a computer or laptop. Technical Information TI405C/07
HART Loop Converter HMX50	Is used to evaluate and convert dynamic HART process variables to analog current signals or limit values. ▪ Technical Information TI00429F ▪ Operating Instructions BA00371F
Wireless HART adapter SWA70	Is used for the wireless connection of field devices. The WirelessHART adapter can be easily integrated into field devices and existing infrastructures, offers data protection and transmission safety and can be operated in parallel with other wireless networks with minimum cabling complexity. Operating Instructions BA00061S
Fieldgate FXA320	Gateway for the remote monitoring of connected 4-20 mA measuring devices via a Web browser. Technical Information TI00025S Operating Instructions BA00053S

Fieldgate FXA520	Gateway for the remote diagnostics and remote configuration of connected HART measuring devices via a Web browser. Technical Information TI00025S Operating Instructions BA00051S
Field Xpert SFX350	Field Xpert SFX350 is a mobile computer for commissioning and maintenance. It enables efficient device configuration and diagnostics for HART and FOUNDATION Fieldbus devices and can be used in non-hazardous areas. Operating Instructions BA01202S
Field Xpert SFX370	Field Xpert SFX370 is a mobile computer for commissioning and maintenance. It enables efficient device configuration and diagnostics for HART and FOUNDATION Fieldbus devices and can be used in the non-hazardous area and in the hazardous area. Operating Instructions BA01202S

Service-specific accessories

Accessories	Description
Applicator	Software for selecting and sizing Endress+Hauser measuring devices: ▪ Choice of measuring devices for industrial requirements ▪ Calculation of all the necessary data for identifying the optimum flowmeter: e.g. nominal diameter, pressure loss, flow velocity and accuracy. ▪ Graphic illustration of the calculation results ▪ Determination of the partial order code, administration, documentation and access to all project-related data and parameters over the entire life cycle of a project. Applicator is available: ▪ Via the Internet: https://portal.endress.com/webapp/applicator ▪ As a downloadable DVD for local PC installation.
W@M	W@M Life Cycle Management Improved productivity with information at your fingertips. Data relevant to a plant and its components is generated from the first stages of planning and during the asset's complete life cycle. W@M Life Cycle Management is an open and flexible information platform with online and on-site tools. Instant access for your staff to current, in-depth data shortens your plant's engineering time, speeds up procurement processes and increases plant uptime. Combined with the right services, W@M Life Cycle Management boosts productivity in every phase. For more information, visit www.endress.com/lifecyclemanagement
FieldCare	FDT-based plant asset management tool from Endress+Hauser. It can configure all smart field units in your system and helps you manage them. By using the status information, it is also a simple but effective way of checking their status and condition. Operating Instructions BA00027S and BA00059S
DeviceCare	Tool to connect and configure Endress+Hauser field devices. Innovation brochure IN01047S
Commubox FXA291	Connects Endress+Hauser field devices with a CDI interface (= Endress+Hauser Common Data Interface) and the USB port of a computer or laptop. Technical Information TI00405C

System components

Accessories	Description
Memograph M graphic data manager	The Memograph M graphic data manager provides information on all the relevant measured variables. Measured values are recorded correctly, limit values are monitored and measuring points analyzed. The data are stored in the 256 MB internal memory and also on a SD card or USB stick. ▪ Technical Information TI00133R ▪ Operating Instructions BA00247R

Supplementary documentation

For an overview of the scope of the associated Technical Documentation, refer to the following:
- *W@M Device Viewer* (www.endress.com/deviceviewer): Enter the serial number from nameplate
- *Endress+Hauser Operations App*: Enter the serial number from the nameplate or scan the 2D matrix code (QR code) on the nameplate

Standard documentation

Brief Operating Instructions

Brief Operating Instructions for the sensor

Measuring device	Documentation code
Proline Promag W	KA01266D

Transmitter Brief Operating Instructions

Measuring device	Documentation code			
	HART	PROFIBUS DP	Modbus RS485	EtherNet/IP
Proline 400	KA01263D	KA01420D	KA01419D	KA01418D

Operating Instructions

Measuring device	Documentation code			
	HART	PROFIBUS DP	Modbus RS485	EtherNet/IP
Promag W 400	BA01063D	BA01234D	BA01231D	BA01214D

Description of device parameters

Measuring device	Documentation code			
	HART	PROFIBUS DP	Modbus RS485	EtherNet/IP
Promag 400	GP01043D	GP01044D	GP01045D	GP01046D

Supplementary device-dependent documentation

Special Documentation

Content	Documentation code
Heartbeat Technology	SD01847D
Display modules A309/A310	SD01793D
Information on Custody Transfer Measurement	SD02038D

Content	Documentation code			
	HART	PROFIBUS DP	Modbus RS485	EtherNet/IP
Web server	SD01811D	SD01813D	SD01812D	SD01814D

Installation Instructions

Contents	Comment
Installation instructions for spare part sets and accessories	Documentation code: specified for each individual accessory → 96.

Registered trademarks

HART®
Registered trademark of the FieldComm Group, Austin, Texas, USA

PROFIBUS®
Registered trademark of the PROFIBUS User Organization, Karlsruhe, Germany

Modbus®
Registered trademark of SCHNEIDER AUTOMATION, INC.

EtherNet/IP™
Trademark of ODVA, Inc.

Microsoft®
Registered trademark of the Microsoft Corporation, Redmond, Washington, USA

www.addresses.endress.com

Endress+Hauser

People for Process Automation

CS-413-300 : Identification sheet

VWTC PROJECT NUMBER:	Iqaluit WWTP	REV:	01
PROJECT NAME:	5000218036	SUBMITTED TO (COMPANY):	
ENGINEER:	G. HÉBERT	SUBMITTED TO (RESPONSIBLE)	
PROJECT MANAGER:	C. BEKAERT	PROJECT NUM REFERENCE.:	
PHONE NUMBER:		LOT NUMBER:	

SUPPLIER	EQPT CODE	EQPT TAG NO	DIA	DESCRIPTION	INFO 1	INFO 2	INFO 3	APPLIC.	NOTE	REV
CONVAL	ST-413-370	PI-02-409	2.5"	PRESSURE GAUGE	PRESSURE GAUGE C/W ISOLATOR // MANFUACTURER : ASHCROFT // MODEL : 25-1009-SW-L-02L-160# + 02-310SS-02T-CG // RANGE : 0/160 PSI	CRN # REQUIRED	N/A			1
CONVAL	ST-413-370	PI-02-424	2.5"	PRESSURE GAUGE	PRESSURE GAUGE C/W ISOLATOR // MANFUACTURER : ASHCROFT // MODEL : 25-1009-SW-L-02L-160# + 02-310SS-02T-CG // RANGE : 0/160 PSI	CRN # REQUIRED	N/A			1
CONVAL	ST-413-370	PI-02-439	2.5"	PRESSURE GAUGE	PRESSURE GAUGE C/W ISOLATOR // MANFUACTURER : ASHCROFT // MODEL : 25-1009-SW-L-02L-160# + 02-310SS-02T-CG // RANGE : 0/160 PSI	CRN # REQUIRED	N/A			1
CONVAL	ST-413-370	PI-02-459	2.5"	PRESSURE GAUGE	PRESSURE GAUGE C/W ISOLATOR // MANFUACTURER : ASHCROFT // MODEL : 25-1009-SW-L-02L-160# + 02-310SS-02T-CG // RANGE : 0/160 PSI	CRN # REQUIRED	N/A			1

SUPPLIER	EQPT CODE	EQPT TAG NO	DIA	DESCRIPTION	INFO 1	INFO 2	INFO 3	APPLIC.	NOTE	REV
CONVAL	ST-413-370	PI-02-474	2.5"	PRESSURE GAUGE	PRESSURE GAUGE C/W ISOLATOR // MANFUACTURER : ASHCROFT // MODEL : 25-1009-SW-L-02L-160# + 02-310SS-02T-CG // RANGE : 0/160 PSI	CRN # REQUIRED	N/A			1
CONVAL	ST-413-370	PI-02-489	2.5"	PRESSURE GAUGE	PRESSURE GAUGE C/W ISOLATOR // MANFUACTURER : ASHCROFT // MODEL : 25-1009-SW-L-02L-160# + 02-310SS-02T-CG // RANGE : 0/160 PSI	CRN # REQUIRED	N/A			1
CONVAL	ST-413-370	PI-02-510	2.5"	PRESSURE GAUGE	PRESSURE GAUGE C/W ISOLATOR // MANFUACTURER : ASHCROFT // MODEL : 25-1009-SW-L-02L-160# + 02-310SS-02T-CG // RANGE : 0/160 PSI	CRN # REQUIRED	N/A			1
CONVAL	ST-413-370	PI-02-520	2.5"	PRESSURE GAUGE	PRESSURE GAUGE C/W ISOLATOR // MANFUACTURER : ASHCROFT // MODEL : 25-1009-SW-L-02L-160# + 02-310SS-02T-CG // RANGE : 0/160 PSI	CRN # REQUIRED	N/A			1
CONVAL	ST-413-370	PI-02-530	2.5"	PRESSURE GAUGE	PRESSURE GAUGE C/W ISOLATOR // MANFUACTURER : ASHCROFT // MODEL : 25-1009-SW-L-02L-160# + 02-310SS-02T-CG // RANGE : 0/160 PSI	CRN # REQUIRED	N/A			1

SUPPLIER	EQPT CODE	EQPT TAG NO	DIA	DESCRIPTION	INFO 1	INFO 2	INFO 3	APPLIC.	NOTE	REV
CONVAL	ST-413-370	PI-02-540	2.5"	PRESSURE GAUGE	PRESSURE GAUGE C/W ISOLATOR // MANFUACTURER : ASHCROFT // MODEL : 25-1009-SW-L-02L-160# + 02-310SS-02T-CG // RANGE : 0/160 PSI	CRN # REQUIRED	N/A			1

This page is intentionally left blank

ASHCROFT®

Duralife® Pressure Gauge
Type 1009, ASME B 40.1
Grade 1A (±1% of span)

DESIGNED FOR SAFETY AND LONGER LIFE

- ***5-year limited warranty***
- ***Patented PowerFlex™ movement isolates movement from shock and vibration for longer life***
- ***All stainless, all-welded construction for long life***
- ***ASME Grade 1A, 1% accuracy full scale***
- ***True Zero™ pointer indication – no stop pin to mask false zero reading – ensures safety and process control***

The following Table is *not* for conversion purposes.

STANDARD RANGES [3][4][5]

Pressure psi	kg/cm² - bar	kPa
0/15	0/1	0/100
0/30	0/1.6	0/160
0/60	0/2.5	0/250
0/100	0/4	0/400
0/160	0/6	0/600
0/200	0/10	0/1000
0/300	0/16	0/1600
0/400	0/25	0/2500
0/600	0/40	0/4000
0/800	0/60	0/6000
0/1000	0/100	0/10,000
0/1500	0/160	0/16,000
0/2000	0/250	0/25,000
0/3000	0/400	0/40,000
0/4000	0/600	0/60,000
0/5000	0/1000	0/100,000
0/6000		
0/7500		
0/10,000		
0/15,000		
Vacuum		
30 in./0 in.Hg	–1/0	–100/0
Compound		
30 in.Hg/15 psi	–1/0/1.5	–100/0/150
30 in.Hg /30 psi	–1/0/3	–100/0/300
30 in.Hg /60 psi	–1/0/5	–100/0/500
30 in.Hg /100 psi	–1/0/9	–100/0/900
30 in.Hg /150 psi	–1/0/15	–100/0/1500
30 in.Hg /300 psi	–1/0/24	–100/0/2400

- ***New PLUS!™ Performance Option:***
  - ***Liquid-filled performance in a dry gauge***
  - ***Fights vibration and pulsations without liquid-fill headaches***
  - ***See pages 6-7 for details***
  - ***Order as option XLL***

OTHER FEATURES:

Available in 2½˝ and 3½˝ dial sizes, Duralife® pressure gauges are liquid fillable and field convertible for panel mounting. Both zero and span adjustments are standard.

The gauge is available dry, liquid-filled weatherproof or hermetically sealed and *now* with *PLUS!™* performance option. A five year limited warranty is standard with the Duralife® 1009.



BOURDON SYSTEM SELECTION[1]

Ordering Code	Bourdon Tube & Tip Material[1]	Socket Material	Tube Type	Range Selection Limits (psi)	NPT Conn.[6]
AW	316 stainless steel	Bronze	C-Tube	Vac/600	¼
AW	316 stainless steel	Bronze	Helical	1000	¼
SW	316 stainless steel	316 stainless steel	C-Tube	Vac/600	¼ & ½[2]
SW	316 stainless steel	316 stainless steel	Helical	800/15,000	¼ & ½[2]

(1) For selection of the correct Bourdon system material, see the media application table on page 243.
(2) ½ NPT available 3½˝ lower SW system only.
(3) Type 1009 gauges may be ordered with metric single-scale dial: kPa,bar or kg/cm².
(4) Dual-scale dials will be supplied with standard metric inner scale and equivalent psi outer scale or with standard psi inner scale and equivalent metric outer scale–please specify.
(5) Special logos and scales available upon request.
(6) ¼˝ JIS, BSP or DIN threads available on SW systems.

TO ORDER THIS 1009 DURALIFE PRESSURE GAUGE:

Select:	35	1009	SW	(L)	02L	XXX	1000#
1. Dial size–2½˝, 3½˝							
2. Case type–1009							
3. Tube and socket material							
4. Liquid filled (glycerin), leave blank if dry							
5. Connection size–⅛ (01), ¼ (02) ½ (04)							
6. Connection location–Lower (L), Back (B)							
7. Optional Features–see page 176							
8. Standard pressure range–1000 psi							

Accessories: see pages 233-238

Consult factory for guidance in product selection
Phone (203) 385-0217, Fax (203) 385-0602 or
visit our web site at www.ashcroft.com

DRESSER Instruments

This page is intentionally left blank

ASHCROFT®
Trust the shield.™

Type 310, 315 All-Welded "Mini" Diaphragm Seal



PRODUCT FEATURES

- Compact size to fit space-restricted areas
- Designed to protect transducers, mini-switches and 3½″ or smaller pressure gauges from corrosion, plugging or freeze-up
- All-welded metal construction prevents leakage of process media
- Rated for 2500 psi at 100°F
- Fill/bleed connection is standard
- Available with male process connection (Type 310)

The compact size of the Ashcroft® 310 mini-seal allows it to fit into space-restricted areas and is designed to protect transducers, mini-switches, and 3½" or smaller dial size pressure gauges from corrosion, plugging or freeze- up. All welded metal construction prevents leakage of process media. It is rated for 2500 psi at 100°F and has a 316L stainless steel top housing standard. Lower housing materials include 316L stainless steel or Hastelloy C. Diaphragm materials include 316L stainless, Hastelloy C or Tantalum. ¼ NPT or ½ NPT process connection sizes are available.

PRODUCT SPECIFICATIONS

Model Number:	Type 310, 315
Process Connection Size:	¼″, ½″ (⅛″, ¾″, 1″- 310 only) (see table A)
Instrument Connection Size:	⅛, ¼ NPT
Diaphragm Material:	316L SS, Hastelloy C276, Tantalum, Monel
Bottom Housing Materials:	316L SS, Hastelloy C276, Monel, Hastelloy B
Filling Fluid:	Glycerin, Silicone, Halocarbon, Syltherm

All specifications are subject to change without notice.
All sales subject to standard terms and conditions.
© Ashcroft Inc. 2015 09/15

Ashcroft Inc., 250 East Main Street, Stratford, CT 06614 USA
Tel: 203-378-8281 • Fax: 203-385-0408
email: info@ashcroft.com • www.ashcroft.com

Type 310, 315 All-Welded "Mini" Diaphragm Seal

Table A – Process Connection

Process Connection	Size	Code
Threaded – male NPT*	⅛	01
Threaded – male NPT*	¼	02
Threaded – male NPT*	½	04
Threaded – male NPT*	¾	06
Threaded – male NPT*	1	08
Threaded – female NPT†	¼	25
Threaded – female NPT†	½	50

*Available in Type 310 only.
†Available in Types 310 & 315.

Pressure Ratings – All 2500 psi except flanged seals are per ASME B 16.5, temperature limit determined by diaphragm, bottom housing and/or filling fluid.

Table B – Type

Description	Code
All-welded mini-seal	310
All-welded midi-seal w/flushing connection	315

Table C – Diaphragm Materials

Materials	Code
316L stainless steel	S
Hastelloy C-276	H
Tantalum	U
Monel	P

Table D – Housing Materials

Bottom(1)	Code	Top(2)
316L SS	S	316L SS
Hastelloy C-276	H	316L SS
Monel	M	Monel

(1) Other bottom housing materials on application.
(2) Top housing material is 316L SS (standard). Monel mini-seal standard with monel top housing.

Table E – Instrument Connection

Instrument Connection	Size	Code
Threaded – female NPT	¼	02T
Threaded – female NPT	⅛	01T

NOTES:
(1) For use with most 3½″ and smaller gauges. Movementless gauge 4½″ (exception).
(2) Other bottom housing materials on application.
(3) Top housing material is 316L SS (standard). Monel mini-seal standard with monel top housing.
(4) Not available with monel bottom housing.

Table F – Filling Fluid

Fill	Service	Connection to Instrument	Temperature Range °F	Code
Glycerin	Pressure	Direct Only	0/400	CG
Silicone	Pressure/Vacuum	Direct or Flexible Line	–40/600	CK
Halocarbon	Pressure/Vacuum in presence of strong oxidizing agent	Direct or Flexible Line	–70/300	CF
Syltherm	Pressure	Direct or Flexible Line	–40/750	HA

Monel is a registered trademark of Huntington Alloys, Inc.
Hastelloy is a registered trademark of Cabot Corp.
Halocarbon is a registered trademark of Halocarbon Products
GYLON 3510 is a registered trademark of Garlock Inc.

HOW TO ORDER:

1. **From Table A...** select PROCESS CONNECTION (e.g., 1/4″ process code 25)
2. **From Table B...** select TYPE (310)
3. **From Table B...** select DIAPHRAGM MATERIAL. (e.g., 316L stainless steel–code S)
4. **From Table C...** select BOTTOM HOUSING MATERIAL. (e.g., 316 stainless steel–code S)
5. **From Table D...** select INSTRUMENT CONNECTION size. (e.g., 1/4 NPT–code 02T)
6. **From Table E...** select FILLING FLUID, if diaphragm seal will be attached to instrument. (e.g., Glycerin–code CG)

Coded order: **25-310SS-02T-CG**

Dimension

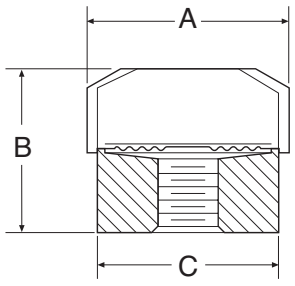

Types 310 mini-seal – Threaded ¼, ½, ¾, NPT

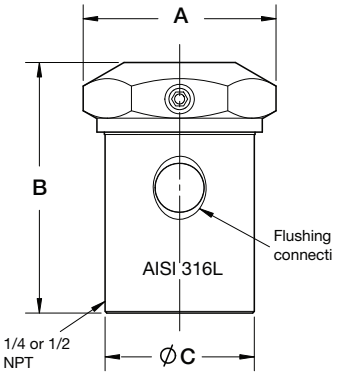

Types 315 mini-seal – Threaded ¼, ½, ¾, NPT

	A		B		C	
	in	mm	in	mm	in	mm
Type 310	1.75	(38)	.81	(30)	1.34	(34)
Type 315	1.73	(44)	2.25	(57.2)	1.34	(34)

All specifications are subject to change without notice.
All sales subject to standard terms and conditions.
© Ashcroft Inc. 2015 09/15

Ashcroft Inc., 250 East Main Street, Stratford, CT 06614 USA
Tel: 203-378-8281 • Fax: 203-385-0408
email: info@ashcroft.com • www.ashcroft.com

CS-999-013 : Identification sheet

VWTC PROJECT NUMBER:	Iqaluit WWTP	REV:	02
PROJECT NAME:	5000218036	SUBMITTED TO (COMPANY):	
ENGINEER:	F.VINCI	SUBMITTED TO (RESPONSIBLE)	
PROJECT MANAGER:	C. BEKAERT	PROJECT NUM REFERENCE.:	
PHONE NUMBER:		LOT NUMBER:	

SUPPLIER	EQPT CODE	EQPT TAG NO	DIA	DESCRIPTION	INFO 1	INFO 2	INFO 3	APPLIC.	NOTE	REV
CONVAL	ST-999-013	PI-02-404 PI-02-419 PI-02-434 PI-02-454 PI-02-469 PI-02-484		PRESSURE GAUGE	PRESSURE GAUGE/ MANUFACTURER: ASHCROFT// MODEL: 25-1009SWL-02L-30IMV&60 # WITH 02-310SS-02T-XCK					2

This page is intentionally left blank

ASHCROFT®

Duralife® Pressure Gauge
Type 1009, ASME B 40.1
Grade 1A (±1% of span)

DESIGNED FOR SAFETY AND LONGER LIFE

- ***5-year limited warranty***
- ***Patented PowerFlex™ movement isolates movement from shock and vibration for longer life***
- ***All stainless, all-welded construction for long life***
- ***ASME Grade 1A, 1% accuracy full scale***
- ***True Zero™ pointer indication – no stop pin to mask false zero reading – ensures safety and process control***

The following Table is *not* for conversion purposes.

STANDARD RANGES (3)(4)(5)

Pressure psi	kg/cm² - bar	kPa
0/15	0/1	0/100
0/30	0/1.6	0/160
0/60	0/2.5	0/250
0/100	0/4	0/400
0/160	0/6	0/600
0/200	0/10	0/1000
0/300	0/16	0/1600
0/400	0/25	0/2500
0/600	0/40	0/4000
0/800	0/60	0/6000
0/1000	0/100	0/10,000
0/1500	0/160	0/16,000
0/2000	0/250	0/25,000
0/3000	0/400	0/40,000
0/4000	0/600	0/60,000
0/5000	0/1000	0/100,000
0/6000		
0/7500		
0/10,000		
0/15,000		
Vacuum		
30 in./0 in.Hg	–1/0	–100/0
Compound		
30 in.Hg/15 psi	–1/0/1.5	–100/0/150
30 in.Hg /30 psi	–1/0/3	–100/0/300
30 in.Hg /60 psi	–1/0/5	–100/0/500
30 in.Hg /100 psi	–1/0/9	–100/0/900
30 in.Hg /150 psi	–1/0/15	–100/0/1500
30 in.Hg /300 psi	–1/0/24	–100/0/2400

- ***New PLUS!™ Performance Option:***
  - ***Liquid-filled performance in a dry gauge***
  - ***Fights vibration and pulsations without liquid-fill headaches***
  - ***See pages 6-7 for details***
  - ***Order as option XLL***

OTHER FEATURES:

Available in 2½˝ and 3½˝ dial sizes, Duralife® pressure gauges are liquid fillable and field convertible for panel mounting. Both zero and span adjustments are standard.

The gauge is available dry, liquid-filled weatherproof or hermetically sealed and *now* with *PLUS!™* performance option. A five year limited warranty is standard with the Duralife® 1009.



BOURDON SYSTEM SELECTION(1)

Ordering Code	Bourdon Tube & Tip Material(1)	Socket Material	Tube Type	Range Selection Limits (psi)	NPT Conn.(6)
AW	316 stainless steel	Bronze	C-Tube	Vac/600	¼
AW	316 stainless steel	Bronze	Helical	1000	¼
SW	316 stainless steel	316 stainless steel	C-Tube	Vac/600	¼ & ½(2)
SW	316 stainless steel	316 stainless steel	Helical	800/15,000	¼ & ½(2)

(1) For selection of the correct Bourdon system material, see the media application table on page 243.
(2) ½ NPT available 3½˝ lower SW system only.
(3) Type 1009 gauges may be ordered with metric single-scale dial: kPa,bar or kg/cm².
(4) Dual-scale dials will be supplied with standard metric inner scale and equivalent psi outer scale or with standard psi inner scale and equivalent metric outer scale–please specify.
(5) Special logos and scales available upon request.
(6) ¼˝ JIS, BSP or DIN threads available on SW systems.

TO ORDER THIS 1009 DURALIFE PRESSURE GAUGE:

Select:	35	1009	SW	(L)	02L	XXX	1000#
1. Dial size–2½˝, 3½˝							
2. Case type–1009							
3. Tube and socket material							
4. Liquid filled (glycerin), leave blank if dry							
5. Connection size–⅛ (01), ¼ (02) ½ (04)							
6. Connection location–Lower (L), Back (B)							
7. Optional Features–see page 176							
8. Standard pressure range–1000 psi							

Accessories: see pages 233-238

Consult factory for guidance in product selection
Phone (203) 385-0217, Fax (203) 385-0602 or
visit our web site at www.ashcroft.com

DRESSER Instruments

This page is intentionally left blank

ASHCROFT®
Trust the shield.™

Type 310, 315 All-Welded "Mini" Diaphragm Seal



PRODUCT FEATURES

- Compact size to fit space-restricted areas
- Designed to protect transducers, mini-switches and 3½″ or smaller pressure gauges from corrosion, plugging or freeze-up
- All-welded metal construction prevents leakage of process media
- Rated for 2500 psi at 100°F
- Fill/bleed connection is standard
- Available with male process connection (Type 310)

The compact size of the Ashcroft® 310 mini-seal allows it to fit into space-restricted areas and is designed to protect transducers, mini-switches, and 3½" or smaller dial size pressure gauges from corrosion, plugging or freeze- up. All welded metal construction prevents leakage of process media. It is rated for 2500 psi at 100°F and has a 316L stainless steel top housing standard. Lower housing materials include 316L stainless steel or Hastelloy C. Diaphragm materials include 316L stainless, Hastelloy C or Tantalum. ¼ NPT or ½ NPT process connection sizes are available.

PRODUCT SPECIFICATIONS

Model Number:	Type 310, 315
Process Connection Size:	¼″, ½″ (⅛″, ¾″, 1″- 310 only) (see table A)
Instrument Connection Size:	⅛, ¼ NPT
Diaphragm Material:	316L SS, Hastelloy C276, Tantalum, Monel
Bottom Housing Materials:	316L SS, Hastelloy C276, Monel, Hastelloy B
Filling Fluid:	Glycerin, Silicone, Halocarbon, Syltherm

All specifications are subject to change without notice.
All sales subject to standard terms and conditions.
© Ashcroft Inc. 2015 09/15

Ashcroft Inc., 250 East Main Street, Stratford, CT 06614 USA
Tel: 203-378-8281 • Fax: 203-385-0408
email: info@ashcroft.com • www.ashcroft.com

Type 310, 315 All-Welded "Mini" Diaphragm Seal

Table A – Process Connection

Process Connection	Size	Code
Threaded – male NPT*	⅛	01
Threaded – male NPT*	¼	02
Threaded – male NPT*	½	04
Threaded – male NPT*	¾	06
Threaded – male NPT*	1	08
Threaded – female NPT†	¼	25
Threaded – female NPT†	½	50

*Available in Type 310 only.
†Available in Types 310 & 315.

Pressure Ratings – All 2500 psi except flanged seals are per ASME B 16.5, temperature limit determined by diaphragm, bottom housing and/or filling fluid.

Table B – Type

Description	Code
All-welded mini-seal	310
All-welded midi-seal w/flushing connection	315

Table C – Diaphragm Materials

Materials	Code
316L stainless steel	S
Hastelloy C-276	H
Tantalum	U
Monel	P

Table D – Housing Materials

Bottom(1)	Code	Top(2)
316L SS	S	316L SS
Hastelloy C-276	H	316L SS
Monel	M	Monel

(1) Other bottom housing materials on application.
(2) Top housing material is 316L SS (standard). Monel mini-seal standard with monel top housing.

Table E – Instrument Connection

Instrument Connection	Size	Code
Threaded – female NPT	¼	02T
Threaded – female NPT	⅛	01T

NOTES:
(1) For use with most 3½″ and smaller gauges. Movementless gauge 4½″ (exception).
(2) Other bottom housing materials on application.
(3) Top housing material is 316L SS (standard). Monel mini-seal standard with monel top housing.
(4) Not available with monel bottom housing.

Table F – Filling Fluid

Fill	Service	Connection to Instrument	Temperature Range °F	Code
Glycerin	Pressure	Direct Only	0/400	CG
Silicone	Pressure/Vacuum	Direct or Flexible Line	–40/600	CK
Halocarbon	Pressure/Vacuum in presence of strong oxidizing agent	Direct or Flexible Line	–70/300	CF
Syltherm	Pressure	Direct or Flexible Line	–40/750	HA

Monel is a registered trademark of Huntington Alloys, Inc.
Hastelloy is a registered trademark of Cabot Corp.
Halocarbon is a registered trademark of Halocarbon Products
GYLON 3510 is a registered trademark of Garlock Inc.

HOW TO ORDER:

1. **From Table A...** select PROCESS CONNECTION (e.g., 1/4″ process code 25)
2. **From Table B...** select TYPE (310)
3. **From Table B...** select DIAPHRAGM MATERIAL. (e.g., 316L stainless steel–code S)
4. **From Table C...** select BOTTOM HOUSING MATERIAL. (e.g., 316 stainless steel–code S)
5. **From Table D...** select INSTRUMENT CONNECTION size. (e.g., 1/4 NPT–code 02T)
6. **From Table E...** select FILLING FLUID, if diaphragm seal will be attached to instrument. (e.g., Glycerin–code CG)

Coded order: **25-310SS-02T-CG**

Dimension

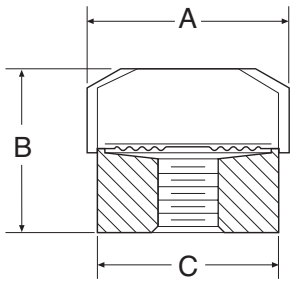

Types 310 mini-seal – Threaded ¼, ½, ¾, NPT

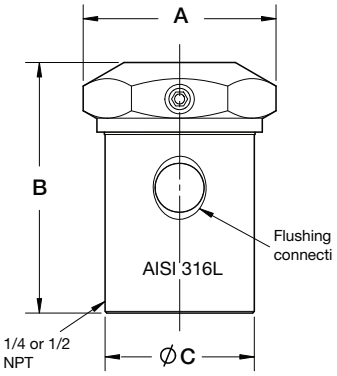

Types 315 mini-seal – Threaded ¼, ½, ¾, NPT

	A		B		C	
	in	mm	in	mm	in	mm
Type 310	1.75	(38)	.81	(30)	1.34	(34)
Type 315	1.73	(44)	2.25	(57.2)	1.34	(34)

All specifications are subject to change without notice.
All sales subject to standard terms and conditions.
© Ashcroft Inc. 2015 09/15

Ashcroft Inc., 250 East Main Street, Stratford, CT 06614 USA
Tel: 203-378-8281 • Fax: 203-385-0408
email: info@ashcroft.com • www.ashcroft.com

CS-451-100 : Identification sheet

VWTC PROJECT NUMBER:	Iqaluit WWTP	REV:	01
PROJECT NAME:	5000218036	SUBMITTED TO (COMPANY):	
ENGINEER:	G. HÉBERT	SUBMITTED TO (RESPONSIBLE)	
PROJECT MANAGER:	C. BEKAERT	PROJECT NUM REFERENCE.:	
PHONE NUMBER:		LOT NUMBER:	

SUPPLIER	EQPT CODE	EQPT TAG NO	DIA	DESCRIPTION	INFO 1	INFO 2	INFO 3	APPLIC.	NOTE	REV
XYLEM	ST-451-103	LSH-02-330	100	HIGH LEVEL FOAT	LEVEL SWITCH/MANUFACTURER:FLYGT// MODEL: ENM-10 (20m)	N/A	N/A			1
XYLEM	ST-451-103	LSH-02-340	100	HIGH LEVEL FOAT	LEVEL SWITCH/MANUFACTURER:FLYGT// MODEL: ENM-10 (20m)	N/A	N/A			1

This page is intentionally left blank

Technical
specification



ENM-10 Level regulator

FLYGT
a xylem brand

Table of Contents

PRODUCT DESCRIPTION....2
Product description....2

CHEMICAL RESISTANCE LIST....6
Chemical resistance list....6

PRODUCT RANGE....8
Product range....8

PRODUCT DESCRIPTION

Product description

The simplest possible method for level control! A mechanical switch in a plastic casing, freely suspended at the desired height from its own cable. When the liquid level reaches the regulator, the casing will tilt and the mechanical switch will close or break the circuit, thereby starting or stopping a pump or actuating an alarm device. No wear, no maintenance! In sewage pumping stations, for ground water and drainage pumping – in fact, for most level control applications – the ENM-10 is the ideal solution.

The regulator casing is made of polypropylene and the cable is sheathed with a special PVC or Nitrile/PVC rubber compound. The plastic components are welded and screwed together. Adhesive is never used. Impurities and deposits will not adhere to the smooth casing.

This level regulator is available in different versions, depending upon the medium in which it is to be used. As standard, the regulator can be obtained with 6, 13, 20, 30 or 50 metres (20, 42, 65, 100 or 167 feet) of cable for liquids with specific density between 0.95 and 1.10 g/cm3; for other specific densities and for the Ex-version, the regulator is only available with 20 metres (65 ft) of cable. The regulator can withstand up to 60°C (140°F).

Technical data

Liquid temperature:	min. 0°C (32°F) max. 60°C (140°F)
Liquid density:	min. 0.65 g/cm^3 max. 1.5 g/cm^3
Degree of protection:	IP68, 20 m (65 ft)
Interrupting capacity of micro switch:	AC, resistive load, 250V 10A AC, inductive load, 250V 3A cos ϕ = 0.5 DC, 30V 5A
With gold plated micro switch:	same as above, except: DC, 24V 10mA

Note that local regulations may limit the voltage.

Materials

Body:	Body:
Bending relief:	EPDM rubber
Cable:	special compound PVC or NBR/PVC nitrile/PVC rubber

Dimensions

Table 1

For density g/cm^3	Regulator length mm (in.)	Diameter mm (in.)
0.65–0.80	194 (7 10/16)	100 (4)
0.80–0.95	177 (7)	100 (4)
0.95–1.10	162 (6 3/8)	100 (4)
1.05–1.20	142 (5 9/16)	100 (4)
1.20–1.30	133 (5 1/4)	100 (4)

For density g/cm^3	Regulator length mm (in.)	Diameter mm (in.)
1.30–1.40	130 (5 2/16)	100 (4)
1.40–1.50	126 (5)	100 (4)

Weight: approx. 2 kg (4.5 lb) for a standard density regulator with 20 m cable.

Approvals: CE, CSA, SEMKO, NEMKO, DEMKO

LVD approval according to EN61058

CSA approval: Cert no. 1330172

Cl.I Zone 0, Gr. IIC;

CL.I Div.1 Gr A, B, C&D;

Cl.II Gr. E, F&G;

Cl.III when installed to the certified Intrinsically Safe relay, Ex ia, rated for the locations per submitter controll drawing and installation manual.

Intrincically safe circuits are required for the automatic control system. - Use a EX-safety barrier (e.g. Prod. no. 84 01 07).

0080

Figure 1

Wiring alternative

To conform to local regulations, the level regulators are normally connected through a transformer to a low-tension control circuit.

Two regulators are used; one for starting and one for stopping. A third regulator can be connected if an alarm is required at a given level.

Identical regulators can be used for all functions.

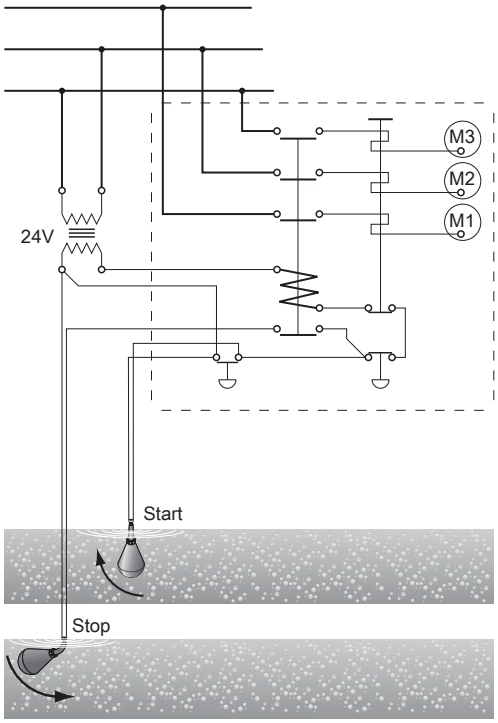

Connect the gray and black leads.

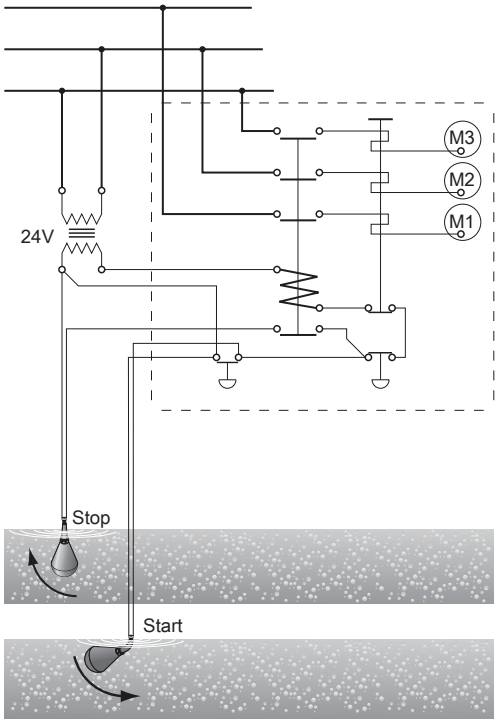

Connect the gray and brown leads.

Insulate the brown lead.
Figure 2: Connected for emptying

Insulate the black lead.
Figure 3: Connected for emptying

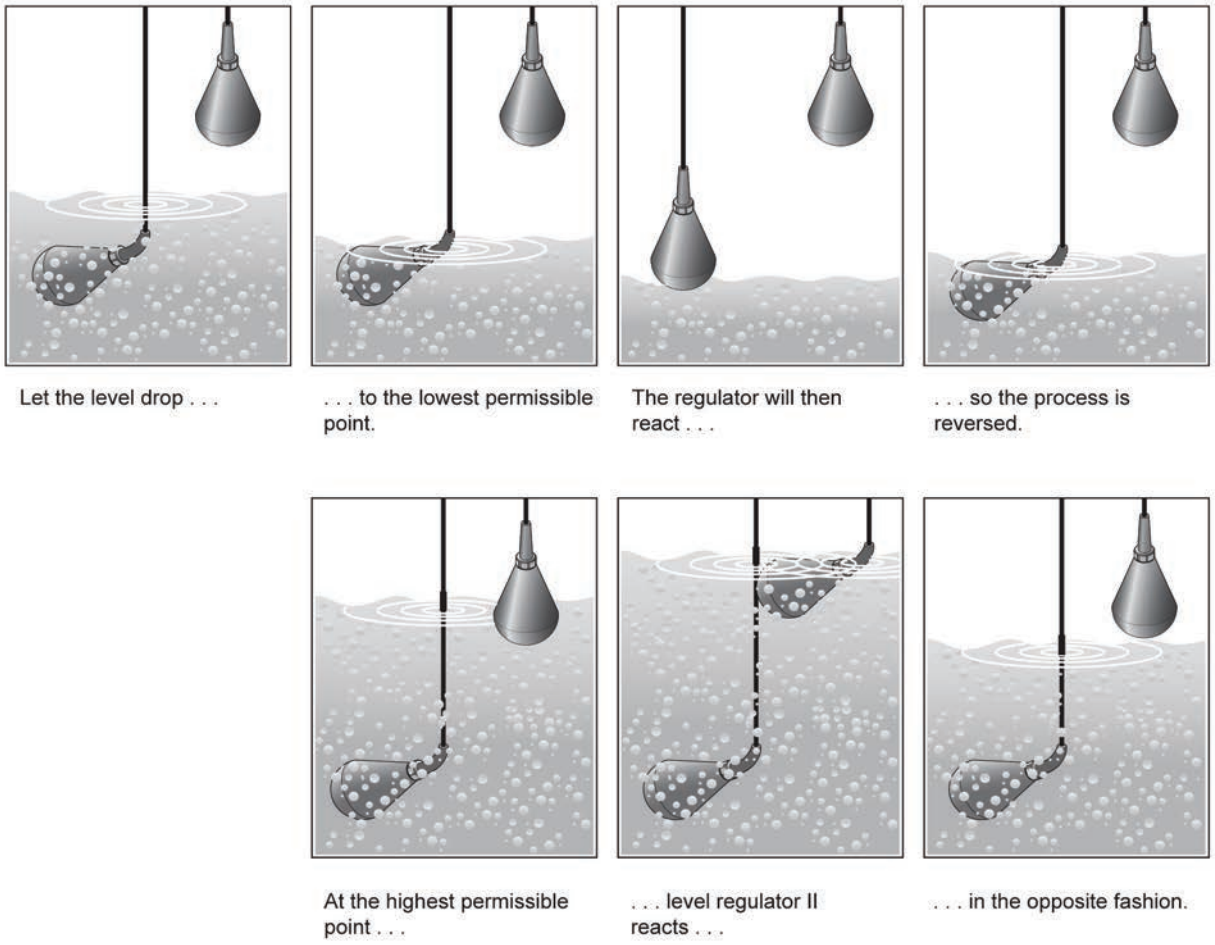

Figure 4

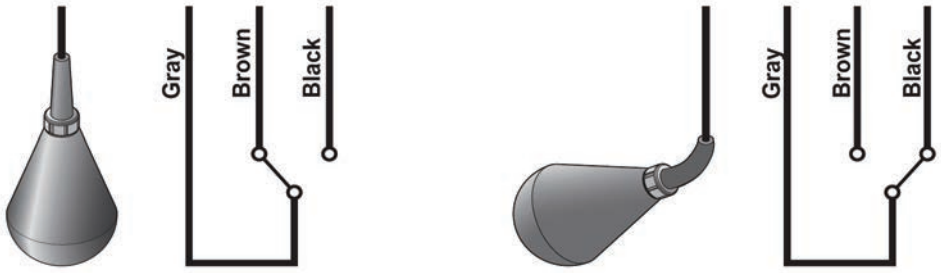

Figure 5: Colour code

Maintenance and repair

ENM-10 is very durable and practically maintenance free. You only have to check on it occasionally, to ensure its continual operation.

- It is recommended to occasionally clean ENM-10, and especially when fat/grease covers the plastic surface.
- At the same time, make an occular inspection of the regulator to make sure neither cable, protective sleeve or plastic casing show any signs of damage.

- A damaged ENM-10 cannot be repaired in any way, due to the hermetic encapsulation. If the unit is found to be damaged, replace it with a new one.
- For Ex-installations, also make absolutely sure that the Ex-barrier (e.g. Prod. no. 84 01 07) is operating correctly - The LED changes when the switch is toggled.

The manufacturers reserve the right to alter performance specification or design without notice.

CHEMICAL RESISTANCE LIST

Chemical resistance list

The liquid in which level regulation is practiced most frequently is, of course, water. Of the millions of regulators in use all over the world today, it is estimated that nine out of ten work in water.

However, with a float body of polypropylene, a cable of PVC or NBR/PVC nitrile/PVC rubber and a bending relief of EPDM rubber, the ENM-10 is virtually insensitive to many aggressive liquids.

The table shows how resistant the ENM-10 equipped with either PVC or NBR/PVC nitrile/PVC rubber cable, is to different chemicals at two different temperatures.

The classification is broken down into the following categories:

0 = No effect, 1 = Minor to moderate and 2 = Severe effect. The sign – means that information is not available.

Keep in mind also that the density of the liquid determines the bouyancy of the regulator. The ENM-10 is made for seven different densities. See *Product description* (page 2).

Always observe local regulations:

Take particular note of:

- risk of fire/explosion
- hygiene requirements

Acids	PVC cable		NBR/PVC nitrile/PVC rubber cable	
	20°C (68°F)	60°C (140°F)	20°C (68°F)	60°C (140°F)
Acetic Acid 50%	1	2	0	0
Acetic Acid 75%	2	2	0	0
Benzoic Acid	2	2	0	0
Boric Acid 5%	0	—	0	0
Butyric Acid	2	2	2	2
Chromic Acid 10%	0	2	2	2
Citric Acid	0	1	0	0
Hydrobromic Acid 5%	1	2	0	0
Hydrochloric Acid 10%	0	1	0	1
Hydrochloric Acid 37%	1	2	0	2
Hydrocyanic Acid 10%	0	0	1	2
Hydrofluoric Acid 5%	0	2	0	1
Hypochloric Acid	1	2	2	2
Maleic Acid	2	2	2	2
Nitric Acid 5%	1	1	1	1
Nitric Acid 65%	2	2	2	2
Oleic Acid	1	2	2	2
Oxalic Acid 50%	1	1	1	2
Phosphoric Acid 25%	0	0	1	2
Phosphoric Acid 85%	0	0	1	2
Sulphuric Acid 10%	1	2	1	2
Sulphuric Acid 78%	2	2	2	2
Tannic Acid	0	0	0	0
Tartaric Acid	1	1	1	1
Bases				
Ammonium Hydroxide	0	—	0	0
Calcium Hydroxide	0	0	0	0
Potassium Hydroxide	1	2	0	0
Sodium Hydroxide	1	2	0	0

Salts	PVC cable		NBR/PVC nitrile/PVC rubber cable	
	20°C (68°F)	60°C (140°F)	20°C (68°F)	60°C (140°F)
Aluminium Chloride	0	0	0	0
Calcium Sulphate	0	0	0	0
Calcium Chloride	0	0	0	0
Calcium Nitrate	0	0	0	0
Copper Chloride	0	0	0	0
Copper Sulphate	0	0	0	0
Ferric Chloride	0	0	0	0
Ferrous Sulphate	0	0	0	0
Magnesium Chloride	0	0	0	0
Potassium Sulphate	0	0	0	0
Potassium Nitrate	0	0	0	0
Potassium Carbonate	1	1	1	1
Potassium Bicarbonate	0	0	0	0
Sodium Sulphate	0	0	0	0
Sodium Chloride	0	0	0	0
Sodium Nitrate	0	0	0	0
Sodium Bicarbonate	0	0	0	0
Sodium Carbonate	0	0	0	0
Tin Chloride	1	1	1	1
Zinc Sulphate	0	0	0	0
Zinc Chloride	0	0	0	0
Oils				
Castor Oil	1	1	1	1
Cocoanut Oil	0	—	0	2
Corn Oil	2	2	2	2
Diesel Oil	2	2	2	2
Linseed Oil	2	2	2	2
Mineral Oils	2	2	2	2
Olive Oil	1	1	1	1
Silicone Oils	0	0	0	0

Solvents and miscellaneous	PVC cable		NBR/PVC nitrile/PVC rubber cable	
	20°C (68°F)	60°C (140°F)	20°C (68°F)	60°C (140°F)
Aceton	2	2	2	2
Aniline	2	2	1	2
Benzene	2	2	2	2
Butyl Alcohol	2	2	0	1
Carbon Tetrachloride	2	2	2	2
Chlorobenzene	2	2	2	2
Chloroform	2	2	2	2
Ethyl Alcohol	2	2	0	1
Ethyl Ether	2	2	2	2
Ethyl Acetate	2	2	2	2
Ethylene Dichloride	2	2	2	2
Ethylene Chloride	2	2	2	2
Formaldehyde 37%	1	2	0	0
Gasoline	2	2	2	2
Kerosene	2	2	2	2
Methyl Alcohol	2	2	0	0
Methyl Ethyl Ketone	2	2	2	2
Methylene Chloride	2	2	2	2
Nitrobenzene	2	2	2	2
Phenol	2	2	2	2
Toluene	2	2	2	2
Trichlorethylene	2	2	2	2
Turpentine	2	2	2	2
Xylene	2	2	2	2
Gases				
Carbon Dioxide	0	0	0	0
Carbon Monoxide	0	0	0	0
Chlorine (wet)	2	2	2	2
Hydrogen Sulphide	0	0	1	1
Sulphur Dioxide (wet)	1	1	2	2

0 = No effect, 1 = Minor to moderate, 2 = Severe effect. – = No information available.

Figure 6

PRODUCT RANGE

Product range

Part no.	For density [g/cm³]	Color of level switch	Type of cable	Cable length [m]	Approvals	For market	Notes
5828800	0,65-0,80	Blue	1	20	CE		
5828801	0,80-0,95	Blue	1	20	CE		
5828802	0,95-1,10	Blue	1	6	CE		
5828803	0,95-1,10	Blue	1	13	CE		
5828804	0,95-1,10	Blue	1	20	CE		
5828805	1,05-1,20	Blue	1	20	CE		
5828806	1,2-1,3	Blue	1	20	CE		
5828807	1,3-1,4	Blue	1	20	CE		
5828808	1,4-1,5	Blue	1	20	CE		
5828809	0,65-0,80	Grey	5	20	CSA/CE	Canada	
5828810	0,80-0,95	Grey	5	20	CSA/CE	Canada	
5828811	0,95-1,10	Grey	5	6	CSA/CE	Canada	
5828812	0,95-1,10	Grey	5	13	CSA/CE	Canada	
5828813	0,95-1,10	Grey	5	20	CSA/CE	Canada	
5828814	1,05-1,20	Grey	5	20	CSA/CE	Canada	
5828815	1,2-1,3	Grey	5	20	CSA/CE	Canada	
5828816	1,3-1,4	Grey	5	20	CSA/CE	Canada	
5828817	1,4-1,5	Grey	5	20	CSA/CE	Canada	
5828818	0,65-0,80	Grey	1	20	CSA/CE	Canada	
5828819	0,80-0,95	Grey	1	20	CSA/CE	Canada	
5828820	0,95-1,10	Grey	1	6	CSA/CE	Canada	
5828821	0,95-1,10	Grey	1	13	CSA/CE	Canada	
5828822	0,95-1,10	Grey	1	20	CSA/CE	Canada	
5828823	1,05-1,20	Grey	1	20	CSA/CE	Canada	
5828824	1,2-1,3	Grey	1	20	CSA/CE	Canada	
5828825	1,3-1,4	Grey	1	20	CSA/CE	Canada	
5828826	1,4-1,5	Grey	1	20	CSA/CE	Canada	
5828827	0,65-0,80	Blue	2	20	CE	USA	
5828828	0,80-0,95	Blue	2	20	CE	USA	
5828829	0,95-1,10	Blue	2	6	CE	USA	
5828830	0,95-1,10	Blue	2	13	CE	USA	
5828831	0,95-1,10	Blue	2	20	CE	USA	
5828832	1,05-1,20	Blue	2	20	CE	USA	
5828833	1,2-1,3	Blue	2	20	CE	USA	
5828834	1,3-1,4	Blue	2	20	CE	USA	
5828835	1,4-1,5	Blue	2	20	CE	USA	
5828836	0,95-1,10	Grey	5	30	CSA/CE	Canada	
5828837	0,95-1,10	Grey	5	50	CSA/CE	Canada	
5828838	0,95-1,10	Grey	5	100	CSA/CE	Canada	
5828839	0,95-1,10	Grey	5	150	CSA/CE	Canada	
5828851	0,95-1,10	Red	3	65	CE		
5828852	0,95-1,10	Red	3	6	CE		
5828853	0,95-1,10	Red	3	13	CE		
5828854	0,95-1,10	Red	3	20	CE		
5828855	0,95-1,10	Red	3	6	CSA/CE	Canada	
5828856	0,95-1,10	Red	3	13	CSA/CE	Canada	
5828857	0,95-1,10	Red	3	20	CSA/CE	Canada	

Cont. →

Figure 7

5828858	0,95-1,10	Red	4	6	CE	USA	
5828859	0,95-1,10	Red	4	13	CE	USA	
5828860	0,95-1,10	Red	4	20	CE	USA	
5828870	0,65-0,80	Blue	5	20	CE		
5828871	0,80-0,95	Blue	5	20	CE		
5828872	0,95-1,10	Blue	5	6	CE		
5828873	0,95-1,10	Blue	5	13	CE		
5828874	0,95-1,10	Blue	5	20	CE		
5828875	1,05-1,20	Blue	5	20	CE		
5828876	1,2-1,3	Blue	5	20	CE		
5828877	1,3-1,4	Blue	5	20	CE		
5828878	1,4-1,5	Blue	5	20	CE		
5828879	0,95-1,10	Blue	1	65	CE		
5828880	0,95-1,10	Blue	1	30	CE		
5828881	0,95-1,10	Blue	1	50	CE		
5828882	0,95-1,10	Grey	1	30	CSA/CE	Canada	
5828883	0,95-1,10	Grey	1	50	CSA/CE	Canada	
5828884	0,95-1,10	Blue	2	30	CE	USA	
5828885	0,95-1,10	Blue	2	50	CE	USA	
5828886	0,95-1,10	Red	3	30	CE		
5828887	0,95-1,10	Red	3	50	CE		
5828890	0,95-1,10	Blue	5	30	CE		
5828891	0,95-1,10	Blue	5	50	CE		
5828892	0,95-1,10	Red	3	6	CE	Japan	
5828893	0,95-1,10	Red	3	13	CE	Japan	
5828894	0,95-1,10	Red	3	20	CE	Japan	
5828895	0,95-1,10	Blue	1	6	CE	Japan	
5828896	0,95-1,10	Blue	1	13	CE	Japan	
5828897	0,95-1,10	Blue	1	20	CE	Japan	
5828898	0,95-1,10	Blue	1	50	CE	Japan	
5947919	0,95-1,10	Blue	5	20	CE		Designed for low current and slow movements
5947920	0,95-1,10	Grey	5	20	CSA/CE		Designed for low current and slow movements

Type of cable:

1. Blue PVC jacket with color coding of wires: Grey/Brown/Black
2. Blue PVC jacket with color coding of wires: Red/White/Black
3. Red PVC jacket with color coding of wires: Grey/Brown/Black
4. Red PVC jacket with color coding of wires: Red/White/Black
5. BLACK NBR/PVC jacket with color coding of wires: Grey/Brown/Black (NBR=Nitrile rubber)

Xylem |ˈzīləm|

1) The tissue in plants that brings water upward from the roots
2) A leading global water technology company

We're 12,000 people unified in a common purpose: creating innovative solutions to meet our world's water needs. Developing new technologies that will improve the way water is used, conserved, and re-used in the future is central to our work. We move, treat, analyze, and return water to the environment, and we help people use water efficiently, in their homes, buildings, factories and farms. In more than 150 countries, we have strong, long-standing relationships with customers who know us for our powerful combination of leading product brands and applications expertise, backed by a legacy of innovation.

For more information on how Xylem can help you, go to xyleminc.com

xylem
Let's Solve Water

Xylem Water Solutions AB
Gesällvägen 33
174 87 Sundbyberg
Sweden
Tel. +46-8-475 60 00
Fax +46-8-475 69 00
http://tpi.xyleminc.com

Visit our Web site for the latest version of this document and more information

The original instruction is in English. All non-English instructions are translations of the original instruction.

© 2011 Xylem Inc

891480_11.1_en.GB_2012-01_TS_ENM-10

This page is intentionally left blank

CS-912-008 : Identification sheet

VWTC PROJECT NUMBER:	Iqaluit WWTP	REV:	01
PROJECT NAME:	5000218036	SUBMITTED TO (COMPANY):	
ENGINEER:	G. HÉBERT	SUBMITTED TO (RESPONSIBLE)	
PROJECT MANAGER:	C. BEKAERT	PROJECT NUM REFERENCE.:	
PHONE NUMBER:		LOT NUMBER:	

SUPPLIER	EQPT CODE	EQPT TAG NO	DIA	DESCRIPTION	INFO 1	INFO 2	INFO 3	APPLIC.	NOTE	REV
HACH	ST-912-008	AE-02-334		TURBIDIMETER PROBE	IMMERSION TSS SOLITAX IN OPEN TANKS APPLICATIONS MODEL# LXV328.99.10002 // TSS EX1 SC // TURBIDITY AND SUSPENDED SOLIDS FOR CLASS1 DIV2 // MEASURING RANGE TSS: 0.001 - 500 G/L // MEASURING RANGE TURBIDITY: 0.001 - 4000 FNU	CLASS I, DIV. 2 (GROUPS. A, B, C, AND D)				1
HACH	ST-912-008	AE-02-344		TURBIDIMETER PROBE	IMMERSION TSS SOLITAX IN OPEN TANKS APPLICATIONS MODEL# LXV328.99.10002 // TSS EX1 SC // TURBIDITY AND SUSPENDED SOLIDS FOR CLASS1 DIV2 // MEASURING RANGE TSS: 0.001 - 500 G/L // MEASURING RANGE TURBIDITY: 0.001 - 4000 FNU	CLASS I, DIV. 2 (GROUPS. A, B, C, AND D)				1

This page is intentionally left blank

TSS sc Suspended Solids Family of Sensors



TSS sc probes measure online suspended solids from spring water to corrosive chemicals under the strictest regulatory conditions. With twelve different versions, it is possible to measure Suspended Solids over a wide range of concentrations with just one sensor.

Features and Benefits

One Family for All Applications

With twelve instrument versions and thirty different mounting styles, the Hach TSS sc probes can measure on-line Suspended Solids in virtually all applications under the strictest regulatory conditions.

TSS sc and TSS W sc probes are made of polished stainless steel with a scratch resistant and easy to clean sapphire window design to withstand harsh environments and keep particles from sticking to the surface. For high solids environments, the Hach TSS W sc is equipped with a wiper to maintain accuracy.

TSS HT sc optics and electrical systems are coated with a special material to withstand operating temperatures of 90°C and pressures of up to 10 Bar. The ability to withstand these conditions without the hassle of flow-through cells or cooling lines makes it the probe of choice for process control.

TSS XL sc and TSS VARI sc probes have been specially designed for measurement of Suspended Solids under the high hygienic requirements of the food, beverage, and pharmaceutical industry. An aseptic process connection is achieved with the installation of the Varivent® or XL in-line-housing and the acid, alkali-proof, and high temperature stable materials facilitate the use of the probe under CIP conditions.

TSS TITANIUM sc is the only titanium suspended solids probe in the market designed to provide process control in the most difficult environments. While offering the same high quality measuring properties as the TSS sc, its special titanium body enables it to perform in the most extreme applications.

TSS EX1 sc probes have been designed for measurement in hazardous locations with Class I Div 2 requirements. Depending on the application, it is possible to select either an immersion style or insertion style probe.

Two Parameters in One Instrument

The Hach TSS sc probes can measure both on-line Suspended Solids and Turbidity in one instrument. This flexibility enables the measurement of both parameters under the same application.

Method of Detection

The Hach TSS sc probes have a double optical system with two pulsating infrared LEDs and four receivers. As the transmitted light is scattered, the receivers pick up the incident light at 90° and 120° angles effectively doubling the accuracy of the instrument. This eight channel measurement system, with an integrated bubble and temperature compensating software, enables the instrument to have a wide measuring range that effectively covers most applications, from the darkest pre-treated water to the freshest of spring waters, with one instrument.

IW

FB

DW = drinking water WW = wastewater municipal PW = pure water / power
IW = industrial water E = environmental C = collections FB = food and beverage

HACH®

Be Right™

Stainless Steel

	Description	Type of Mounting
TSS sc	All purpose standard probe for Suspended Solids measurement.	Tank-side mounting - 5
TSS sc TriClamp	All purpose probe with TriClamp.	Weld-on fitting - 3
TSS sc In-line	All purpose probe for simple in-line installation.	Ball valve fitting - 1
TSS W sc	Same performance and functionality as the TSS sc but with a wiper for use in high solids environments.	Tank-side mounting - 5
TSS W sc TriClamp	TSS W probe with TriClamp.	Weld-on fitting - 3
TSS W sc In-line	Standard probe with wiper for simple in-line installation.	Ball valve fitting - 1
TSS HT sc	Suspended Solids probe for use in high temperature environments of up to 90 °C and 95 °C for short intervals.	Tank-side mounting - 5
TSS HT sc TriClamp	High temperature probe with TriClamp.	Weld-on fitting - 3
TSS HT sc In-line	High temperature probe for simple in-line installation.	Ball valve fitting - 1
TSS VARI sc	Suspended Solids probe with flush installation for use in food, pharmaceutical sectors, or in any VARIVENT industrial environment.	VARIVENT measuring tube - 4
TSS XL sc	Suspended Solids probe designed for use in the beverage and food industries.	XL measuring tube - 2
TSS EX1 sc	Suspended Solids and Turbidity probe designed for use in hazardous locations (Class I Div 2).	Tank-side mounting - 5
TSS EX1 sc TriClamp	Suspended Solids and Turbidity probe designed for use in hazardous locations (Class I Div 2).	Weld-on fitting - 3
TSS EX1 sc In-line	Class I Div 2 certified probe for simple in-line installation.	Ball valve fitting - 1

Titanium

	Description	Type of Mounting
TSS TITANIUM2 sc	Suspended Solids probe for use in aggressive or corrosive environments.	User defined
TSS TITANIUM2 sc TriClamp	Titanium2 probe with TriClamp for simple inline installation and quick access for maintenance.	User defined
TSS TITANIUM7 sc	Suspended Solids probe for use brine, seawater, or high salinity environments.	User defined
TSS TITANIUM7 sc TriClamp	Titanium7 probe with TriClamp for simple inline installation and quick access for maintenance	User defined

Types of Mounting

Whether tank-side mounting, inline installation, or hygienic fittings are required, the TSS sc family of probes has suitable mounting solution for any situation.

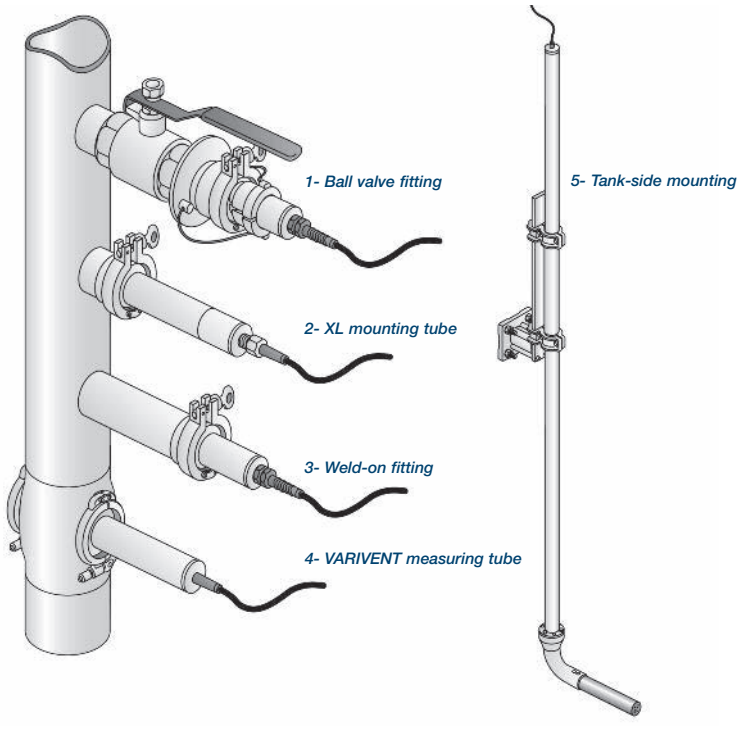

Specifications*

Measurement Method
Combined multiple beam alternating light method with infrared diode system and beam focusing
Turbidity (TRB): 2-channel 90° scattered light measurement in accordance with DIN/EN 27027/ISO 7027, wavelength = 860 nm
Solids (TS): 90° and 120° scattered light measurement, wavelength = 860 nm

Hazardous Locations
TSS EX1 sc Class I Div 2 certified

Measuring Range
Turbidity (TRB): 0.001 to 4,000 FNU
Solids (TS): 0.001 to 500 g/L
With SiO_2 standard solution

Measurement Accuracy
Turbidity (TRB): Up to 1,000 FNU/NTU: <5% of measured value ±0.01 FNU/NTU

Reproducibility
Turbidity (TRB): <3%
Solids (TS): <4%

Response Time
1 s < T90 < 300 s (adjustable)

Calibration
Turbidity (TRB): Factory calibrated
Solids (TS): To be calibrated by customer on site
Zero point: Permanently calibrated in the factory

Pressure Range
<6 bar: TSS W sc
<10 bar: TSS sc, TSS HT sc, TSS TITANIUM2 sc, TSS TITANIUM2 sc
<16 bar: TSS VARI sc, TSS XL sc
<=10 bar: TSS EX1 sc

Flow rate
3 m/s maximum

Ambient Temperature
0 to 50°C: TSS W sc
0 to 60°C: TSS sc, TSS TITANIUM2 sc, TSS TITANIUM7 sc
0 to 80°C: TSS VARI sc, TSS XL sc
0 to 90°C: TSS HT sc
0 to 50°C: TSS EX1 sc

Dimensions
Basin Sensor: D×L 40 × 330 mm
TSS EX1 sc: D×L 48.5 mm × 385 mm
Inline Sensor (TriClamp):
D×L 40 × 332 mm
TSS VARI sc, TSS XL sc:
D×L 40 × 232 mm

Weight
Tank Sensor, Inline Sensor (TriClamp):
Approx. 1.6 kg
TSS EX1 sc: Approx. 2.7 kg
TSS VARI sc, TSS XL sc:
Approx. 1.5 kg

**Specifications subject to change without notice.*

Engineering Specifications

1. The suspended solids and/or turbidity sensor shall consist of a digital sensor designed to connect to a universal controller.
2. The suspended solids and/or turbidity sensor shall use a double optical system with two pulsating infrared LEDs and four receivers effectively doubling the accuracy of the instrument.
3. As the transmitted light is scattered, the receivers pick up the incident light at 90° and 120° angles for suspended solids and at 90° for turbidity in accordance with DIN/EN 27027/ISO 7027. The wavelength for both parameters is 860nm.
4. The eight channel measurement system, with a integrated bubble and temperature compensating software enables the instrument to have a wide measuring range that effectively cover most applications, from the darkest pre-treated water to the freshest of spring waters, with one instrument.
5. All versions have a high polished head to use the self cleaning effect and scratch-resistant sapphire window to withstand harsh environments
6. All sensors shall be capable of immersion in a tank or insertion into a pipe depending on the sensor selection.
7. The materials of construction shall be stainless steel or titanium, depending on the sensor selection.
8. The sensor shall have an operating range of 0.001 to 400 g/L for suspended solids and 0.001 to 4000 NTU for turbidity depending.
9. The sensor shall have an operating temperature from >0–50°C–90°C depending on the model.
10. The initial response time shall be 1 second and user-adjustable up to 300 seconds.
11. Up to 1000 FNU/NTU the accuracy shall be less than 5% of measurement value reading or ±0.01 FNU/NTU, whichever is greater for turbidity.

Ordering Information

TSSsc Turbidity and Suspended Solids Sensors

Immersion in Open Tanks Applications

LXV323.99.10002	TSS sc	Turbidity and Suspended Solids (0.001-4,000 FNU & 0.001-500 g/L) without wiper
LXV324.99.10002	TSS W sc	Turbidity and Suspended Solids (0.001-4,000 FNU & 0.001-500 g/L) with wiper
LXV325.99.10002	TSS HT sc	Turbidity and Suspended Solids (0.001-4,000 FNU & 0.001-500 g/L) without wiper
LXV329.99.10002	TSS TITANIUM2 sc	Turbidity and Suspended Solids (0.001-4,000 FNU & 0.001-500 g/L) without wiper
LXV330.99.10002	TSS TITANIUM7 sc	Turbidity and Suspended Solids (0.001-4,000 FNU & 0.001-500 g/L) without wiper
LXV328.99.10002	TSS EX1 sc	Turbidity and Suspended Solids for hazardous locations (Class I Div 2)

TriClamp Applications

LXV323.99.20002	TSS sc TriClamp	Turbidity and Suspended Solids (0.001-4,000 FNU & 0.001-500 g/L) without wiper
LXV324.99.20002	TSS W sc TriClamp	Turbidity and Suspended Solids (0.001-4,000 FNU & 0.001-500 g/L) with wiper
LXV325.99.20002	TSS HT sc TriClamp	Turbidity and Suspended Solids (0.001-4,000 FNU & 0.001-500 g/L) without wiper
LXV329.99.20002	TSS TITANIUM2 sc TriClamp	Turbidity and Suspended Solids (0.001-4,000 FNU & 0.001-500 g/L) without wiper
LXV330.99.20002	TSS TITANIUM7 sc TriClamp	Turbidity and Suspended Solids (0.001-4,000 FNU & 0.001-500 g/L) without wiper
LXV328.99.20002	TSS EX1 sc TriClamp	Turbidity and Suspended Solids for hazardous locations (Class I Div 2)
LXV326.99.10002	TSS VARI sc	Turbidity and Suspended Solids (0.001-4,000 FNU & 0.001-500 g/L) without wiper
LXV327.99.10002	TSS XL sc TriClamp	Turbidity and Suspended Solids (0.001-4,000 FNU & 0.001-500 g/L) without wiper

Inline Applications

LXV323.99.30002	TSS sc Inline	Turbidity and Suspended Solids (0.001-4,000 FNU & 0.001-500 g/L) without wiper
LXV324.99.30002	TSS W sc Inline	Turbidity and Suspended Solids (0.001-4,000 FNU & 0.001-500 g/L) with wiper
LXV325.99.30002	TSS HT sc Inline	Turbidity and Suspended Solids (0.001-4,000 FNU & 0.001-500 g/L) without wiper
LXV328.99.30002	TSS EX1 sc Inline	Turbidity and Suspended Solids for hazardous locations (Class I Div 2) without wiper

Continued on next page.

Ordering Information *continued*

Accessories

LZY634	Wiper set TSS sc (for 5 changes with screws and screwdriver)
LZY635	Maintenance set wiper (consisting of wiper, wiper axis 2-parts and gaskets)
LZY653	Gasket Silicon for TriClamp mounting
LZY654	Gasket PTFE for TriClamp mounting
LZY655	Gasket FPM for TriClamp mounting
LZY656	Clamp 2-parts, with screw type clamp for TriClamp mounting
LZY657	Clamp 3-parts, with screw type clamp for TriClamp mounting (to use with PTFE gasket)

Mounting Hardware for All TSS sc InSitu Probes

LZX414.00.10000	Standard mounting hardware for all TSS sc InSitu probes

Mounting Hardware for All TSS sc InLine Probes

*Ball Valves**

LZY630.00.10000	Ball valve armature for TSS sc, TSS W sc and TSS HT sc Inline probes including non-coped stainless steel welding flange LZX660
LZY630.00.11000	Ball valve armature for TSS sc, TSS W sc and TSS HT sc Inline probes including non-coped carbon steel welding flange LZX661
LZY630.00.12000	Ball valve armature for TSS sc, TSS W sc and TSS HT sc Inline probes without welding flange
LZY630.00.20000	Ball valve armature for TSS EX1 sc Inline probe including non-coped stainless steel welding flange LZX660
LZY630.00.21000	Ball valve armature for TSS EX1 sc Inline probe including non-coped carbon steel welding flange LZX661
LZY630.00.22000	Ball valve armature for TSS EX1 sc Inline probe without welding flange
LZX660	Non-coped stainless steel welding flange for ball valve in-line armature
LZX661	Non-coped carbon steel welding flange for ball valve in-line armature
LZY441	Hand wheel for ball valve in-line armature
LZY462	Gasket for mounting flange of ball valve in-line armature

Measuring Tubes

LZU304.99.00010	Measuring tube DN65 for TSS VARI sc
LZU304.99.00020	Measuring tube DN80 for TSS VARI sc
LZU304.99.00030	Measuring tube DN100 for TSS VARI sc
LZU304.99.00040	Measuring tube DN125 for TSS VARI sc
LZU304.99.10010	Measuring tube DN65 for TSS XL sc
LZU304.99.10020	Measuring tube DN80 for TSS XL sc
LZU304.99.10030	Measuring tube DN100 for TSS XL sc
LZU304.99.10040	Measuring tube DN125 for TSS XL sc
LZU304.99.10050	Measuring tube DN150 for TSS XL sc
LZU304.99.10060	Measuring tube DN200 for TSS XL sc
LZU304.99.10070	Measuring tube DN250 for TSS XL sc

Welded Branch Pieces

LZU302.99.00000	Welded branch piece raw for all TSS sc TriClamp probes**
LZU302.99.00010	Welded branch piece DN65 for all TSS sc TriClamp probes**
LZU302.99.00020	Welded branch piece DN80 for all TSS sc TriClamp probes**
LZU302.99.00030	Welded branch piece DN100 for all TSS sc TriClamp probes**
LZU302.99.00040	Welded branch piece DN125 for all TSS sc TriClamp probes**
LZU302.99.00050	Welded branch piece DN150 for all TSS sc TriClamp probes**
LZU302.99.00060	Welded branch piece DN200 for all TSS sc TriClamp probes**
LZU302.99.00070	Welded branch piece DN250 for all TSS sc TriClamp probes**
LZU302.99.10000	Welded branch piece raw for TSS XL sc
LZU302.99.10010	Welded branch piece DN65 for TSS XL sc
LZU302.99.10020	Welded branch piece DN80 for TSS XL sc
LZU302.99.10030	Welded branch piece DN100 for TSS XL sc
LZU302.99.10040	Welded branch piece DN125 for TSS XL sc
LZU302.99.10050	Welded branch piece DN150 for TSS XL sc
LZU302.99.10060	Welded branch piece DN200 for TSS XL sc
LZU302.99.10070	Welded branch piece DN250 for TSS XL sc
LZU303.99.00000	Screwed branch piece for all TSS sc TriClamp probes**

** Maximum operating pressure: 6 bar. ** Beside VARI & XL.*

Lit. No. 2657 Rev 3
L11 Printed in U.S.A.
©Hach Company, 2011. All rights reserved.
In the interest of improving and updating its equipment, Hach Company reserves the right to alter specifications to equipment at any time.

At Hach, it's about learning from our customers and providing the right answers. It's more than ensuring the quality of water—it's about ensuring the quality of life. When it comes to the things that touch our lives...

Keep it pure.

Make it simple.

Be right.

For current price information, technical support, and ordering assistance, contact the Hach office or distributor serving your area.

In the United States, contact:

HACH COMPANY World Headquarters
P.O. Box 389
Loveland, Colorado 80539-0389
U.S.A.
Telephone: 800-227-4224
Fax: 970-669-2932
E-mail: orders@hach.com
www.hach.com

U.S. exporters and customers in Canada, Latin America, sub-Saharan Africa, Asia, and Australia/New Zealand, contact:

HACH COMPANY World Headquarters
P.O. Box 389
Loveland, Colorado 80539-0389
U.S.A.
Telephone: 970-669-3050
Fax: 970-461-3939
E-mail: intl@hach.com
www.hach.com

In Europe, the Middle East, and Mediterranean Africa, contact:

HACH LANGE GmbH
Willstätterstraße 11
D-40549 Düsseldorf
GERMANY
Tel: +49 (0) 211 5288-0
Fax: +49 (0) 211 5288-143
E-mail: info@hach-lange.de
www.hach-lange.com

HACH®

Be Right™

To complete your turbidity and suspended solids measurement system, choose from these Hach controllers...

Model sc200 Controller

(see Lit. #2665)



The sc200 Universal Controller is the most versatile controller on the market. The new sc200 controller is the only controller that allows the use of digital and analog sensors, either alone or in combination, to provide compatibility with the broadest range of sensors. It replaces the Hach sc100 digital and GLI53 analog controllers with advanced features for easier operator use.

Model sc1000 Controller

(see Lit. #2403)



Get the same great features as the sc200 Controller above—"plug and play", all digital operation and communication—but with the Hach sc1000 Controller, up to eight Hach sensors can be used with one controller in any combination. The sc1000 Controller is also expandable and upgradeable to easily adapt to your needs.

At Hach, it's about learning from our customers and providing the right answers. It's more than ensuring the quality of water—it's about ensuring the quality of life. When it comes to the things that touch our lives...

Keep it pure.

Make it simple.

Be right.

For current price information, technical support, and ordering assistance, contact the Hach office or distributor serving your area.

In the United States, contact:

HACH COMPANY World Headquarters
P.O. Box 389
Loveland, Colorado 80539-0389
U.S.A.
Telephone: 800-227-4224
Fax: 970-669-2932
E-mail: orders@hach.com
www.hach.com

U.S. exporters and customers in Canada, Latin America, sub-Saharan Africa, Asia, and Australia/New Zealand, contact:

HACH COMPANY World Headquarters
P.O. Box 389
Loveland, Colorado 80539-0389
U.S.A.
Telephone: 970-669-3050
Fax: 970-461-3939
E-mail: intl@hach.com
www.hach.com

In Europe, the Middle East, and Mediterranean Africa, contact:

HACH LANGE GmbH
Willstätterstraße 11
D-40549 Düsseldorf
GERMANY
Tel: +49 (0) 211 5288-0
Fax: +49 (0) 211 5288-143
E-mail: info@hach-lange.de
www.hach-lange.com

Lit. No. 2472 Rev 4
C11 Printed in U.S.A.
©Hach Company, 2011. All rights reserved.
In the interest of improving and updating its equipment, Hach Company reserves the right to alter specifications to equipment at any time.

HACH®

Be Right™

This page is intentionally left blank

Hach sc200™ Universal Controller

Product Overview

One Controller for the Broadest Range of Sensors

The sc200 Universal Controller is the most versatile controller on the market. The new sc200 controller is the only controller that allows the use of digital and analog sensors, either alone or in combination, to provide compatibility with the broadest range of sensors. It replaces the Hach sc100 digital and GLI53 analog controllers with advanced features for easier operator use.

The sc200 controller platform can be configured to operate either 2 Digital Sensor Inputs, or 1 or 2 Analog Sensor Inputs, or a combination of Digital and Analog Sensor Inputs. Customers may choose their communication options from a variety of offerings ranging from MODBUS RTU to Profibus DPV1.



Choose from up to 29 digital or analog sensors for up to 15 different parameters.

DW
WW
PW
IW

Features and Benefits

Maximum Versatility

- *Standardized controller eliminates the need for a variety of dedicated controllers*
- *Multi-channel controller operates either 1 or 2 sensors reducing inventory holding costs and providing an inexpensive option to add a second sensor at a later time*
- *"Plug and Play" operation with all Hach digital sensors*
- *True dual sensor controller provides 4-20 mA outputs to transmit primary and secondary measurement values*

Ease of Use and Confidence in Results

- *New display and guided calibration procedures reduce operator error*
- *Password protected SD card reader offers a simple solution for data download and transfer*
- *Visual warning system provides critical alerts*

Communication Options

- *MODBUS RS232/RS485 or Profibus DPV1*



Controller Configuration	Functionality
2 Channel Digital Controller	Maximum versatility and flexibility: • Plug and play with all Hach digital sensors • Mix and match with Hach digital and GLI analog sensors
2 Channel Controller with 1 Analog and 1 Digital Sensor Input	• Plug and play with any one Hach digital sensor • Mix and match with any one GLI analog sensor
1 or 2 Channel Analog Controller	• Mix and match up to two GLI analog sensors

DW = drinking water *WW = wastewater municipal* ***PW = pure water / power***
IW = industrial water ***E = environmental*** *C = collections* ***FB = food and beverage***

HACH®
Be Right™

Controller Comparison







Features	Current sc100™ Controller	GLI53 Controller	NEW! sc200™ Controller	Benefits
Display	64 x 128 pixels 33 x 66 mm (1.3 x 2.6 in.)	64 x 128 pixels 33 x 66 mm (1.3 x 2.6 in.)	160 x 240 pixels 48 x 68 mm (1.89 x 2.67 in.) Transreflective	• Improved user interface—50% bigger • Easier to read in daylight and sunlight
Data Management	irDA Port/PDA Service Cable	N/A	SD Card Service Cable	• Simplifies data transfer • Standardized accessories/ max compatibility
Sensor Inputs	2 Max Direct Digital Analog via External Gateway	2 Max Analog Depending on Parameter	2 Max Digital and/or Analog with Sensor Card	• Simplifies analog sensor connections • Works with GLI and Hach's digital sensors
Analog Inputs	N/A	N/A	1 Analog Input Signal Analog 4-20mA Card	• Enables non-sc analyzer monitoring • Accepts mA signals from other analyzers for local display • Consolidates analog mA signals to a digital output
4-20 mA Outputs	2 Standard	2 Standard	2 Standard Optional 4 Additional	• Total of six (6) 4-20 mA outputs enables up to 3 mA outputs per sensor input
Digital Communication	MODBUS 232/485 Profibus DP V1.0	N/A	MODBUS 232/485 Profibus DP V1.0	• Unprecedented combination of sensor breadth and digital communication options

To complete your measurement system, choose from Hach's portfolio of controller and sensor products...



Choose from Hach's Broad Range of Digital and Analog Sensors

Parameter	Sensor	Digital or Analog
Ammonia	AMTAX™ sc, NH4D sc	●
Chlorine	CLF10 sc, CLT10 sc, 9184 sc	●
Chlorine Dioxide	9185 sc	●
Conductivity	3400, 3700	△
Dissolved Oxygen	LDO™, 5740 sc	●
Dissolved Oxygen	5500	△
Flow	U53, F53 Sensors	△
Nitrate	NITRATAX™ sc, NO3D sc	●
Oil in Water	FP360 sc	●
Organics	UVAS sc	●
Ozone	9187 sc	●
pH/ORP	pHD	●
pH/ORP	pHD, pH Combination, LCP	△
Phosphate	PHOSPHAX™ sc	●
Sludge Level	SONATAX™ sc	●
Suspended Solids	SOLITAX™ sc, TSS sc	●
Turbidity	1720E, FT660 sc, SS7 sc, ULTRATURB sc, SOLITAX sc	●

● = Digital △ = Analog

The diagrams below demonstrate the versatility and flexibility for the base controller units. Connect any of the appropriate sensors listed above to meet your measurement needs. Operation of analog sensors require the controller to be equipped with the appropriate sensor card.

2 Channel Digital Controller Configurations

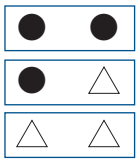

2 Channel Controller with 1 Analog and 1 Digital Sensor Input Configurations

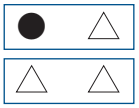

2 Channel Analog Controller Configurations



Engineering Specifications

The controller shall be a microprocessor based instrument.

2. The enclosure shall be 1/2 DIN format, NEMA4X rated for wall, pole and panel mounting.
3. The controller shall offer both 100–240 Vac 50/60 Hz and 24 Vdc power options.
4. The controller shall offer two analog 0/4-20 mA output signals with independent PID control functions and optional four additional 4-20 mA outputs.
5. The controller shall accept either Digital Sensors or Sensor Modules for pH, Conductivity, DO, Paddle Wheel Flow, and Ultra Sonic Flow sensors.
6. The controller shall have single channel and dual channel options.
7. The controller shall have options for MODBUS RS232, MODBUS RS485 and Profibus DPV1 communication.
8. The display contrast shall be adjustable.
9. The Menu shall be available in at least 19 different languages.
10. The controller shall have 2 Data logs, 128 kb each. The logged data shall be downloadable on a SD card in XML format.
11. The controller shall be Hach Company sc200 Universal Controller.

Specifications*

sc200 General Specifications

Display
Graphic dot matrix LCD with LED backlighting
Transreflective

Display Size
48 x 68 mm (1.89 x 2.67 in.)

Display Resolution
240 x 160 pixels

Height x Width x Depth
144 x 144 x 181 mm (5.7 x 5.7 x 7.1 in.)

Weight
1.70 kg (3.75 lb)

Power Requirements
100 – 240 Vac ±10%, 50/60 Hz
24 Vdc -15% + 20%

Operating Temperature
-20 to 60°C (-4 to 140°F), 0 to 95% RH non-condensing

Storage Temperature
-20 to 70°C (-4 to 158°F), 0 to 95% RH non-condensing

Analog Output Signal
Two 0/4 to 20 mA isolated current outputs, max 500Ω

Operational Mode
Primary or secondary measurement or calculated value (dual channel only)

Functional Mode
Linear, Logarithmic, Bi-linear, PID

Optional 4 additional 4/20 mA isolated current outputs, max 500Ω @ 18-24 Vdc (customer-supplied power source)

Security Levels
Two password protected levels

Enclosure Materials
Polycarbonate, Aluminum (powder coated), Stainless Steel

Mounting Configurations
Wall, pole and panel mounting

Enclosure Rating
NEMA4X / IP66

Conduit Openings
1/2" NPT Conduit

Relays
Four electromechanical SPDT (Form C) contacts, 1200W, 5 A, 250 Vac

Operational Mode
Primary or secondary measurement, calculated value (dual channel only) or timer

Functional Mode
Alarm, Timer, Feeder Control, PWM or FM Control, System Alarm

Digital Communication
MODBUS RS232/RS485, Profibus DPV1 optional

Memory Backup
Flash memory

Electrical Certifications
EMC: CE compliant for conducted and radiated emissions CISPR 11 (Class A limits), EMC Immunity EN 61326-1 (Industrial limits)

Safety: General Purpose UL/CSA 61010-1 with cETLus safety mark

sc200 for Hach Analog pH/ORP Sensors

Measuring Range
-2.0 to 14.0 pH or -2.00 to 14.00 pH
- 2,100 to 2,100 mV

Repeatability
±0.1% of range

Response Time
0.5 s

Temperature Range
PT100/PT1000: -20 to 200°C (-4 to 392°F)
NTC300: -20 to 110°C (-4 to 230°F)
Manual: -25 to 400°C (-13 to 752°F)

Temperature Accuracy
±0.5°C (0.9°F)

Temperature Drift
±0.03% of reading /°C

Temperature Compensation
Automatic from -20 to 110°C (-4 to 230°F) or manual

Temperature Sensors
PT100/PT1000/NTC300

Temperature Compensation Curves
Nernst, for Pure Water: Ammonia, Morpholine, User Defined (linear)

Sensor-to-Controller Distance (maximum)
pHD or LCP sensor: 914 m (3000 ft.)
pH Combination electrode w/ preamplifier: 300 m (958 ft.)
pH Combination electrode w/o preamplifier: 30 m (100 ft.), depending on environment this distance is shorter

Calibration Methods
2-point buffer (pH only)
1-point buffer (pH only)
2-point sample (pH only)
1-point sample (pH or ORP)

Specifications *continued*

sc200 for Hach Analog Contacting Conductivity Sensors

Measuring Range

Conductivity
µS/cm: 0-2.000, 0-20.00, 0-200.0 or 0-2,000
mS/cm: 0-2.000, 0-20.00 or 0-200.0

Resistivity
0-19.99 MΩ•cm or 0-999.9 kΩ•cm

TDS
0-9999 ppm or 0-9999 ppb

Repeatability, Precision (0-20 µS/cm, K=1)
±0.02 mS/cm

Repeatability (20-200,000 µS/cm, K=1)
±0.1% of reading

Response Time
0.5 s

Temperature Range
-20 to 200°C (-4 to 392°F)

Temperature Accuracy
±0.5°C (0.9°F)

Temperature Drift
> 20 µS/cm: ±0.02% of reading / °C
< 20 µS/cm: ±0.004 µS/cm

Temperature Compensation
Automatic from -20 to 200°C (-4 to 392°F) or manual

Temperature Sensor
PT100/PT1000

Temperature Compensation Curves
Linear, Ammonia, Natural water, User Defined, none

Sensor-to-Controller Distance (max)
91m (300 ft.)

Calibration Methods
Zero
GLI DRY-CAL
1-point sample

sc200 for Hach Analog Inductive Conductivity Sensors

Measuring Range

Conductivity
µS/cm: 0-200.0 or 0-2,000
mS/cm: 0-2.000, 0-20.00, 0-200.0 or 0-2,000
S/cm: 0-2.000

% Concentration
0-99.99% or 0-200.0%

TDS
0-9999 ppm repeatability

Repeatability > 500 µS/cm
±0.5% of reading

Repeatability < 500 µS/cm
±2.5 µS/cm

Response Time
1 s

Temperature Range
-20 to 200°C (-4 to 392°F)

Temperature Accuracy
±0.5°C (0.9°F)

Temperature Drift
> 500 µS/cm: ±0.02% of reading / °C
< 500 µS/cm: ±0.1 µS/cm

Temperature Compensation
Automatic from -20 to 200°C (-4 to 392°F) or manual

Temperature Sensors
PT1000

Temperature Compensation Curves
Linear, Natural water, User Defined, none**

Concentration Curves
H_3PO_4: 0-40%; HCl: 0-18%; HCl: 22-36%; NaOH: 0-16%; $CaCl_2$: 0-22%; HNO_3: 0-28%; HNO_3: 36-96%; H_2SO_4: 0-30%; H_2SO_4: 40-80%

Sensor-to-Controller Distance

Full-scale value	*Maximum length*
200 to 2,000 µS/cm	61m (200 ft.)
2,000–2,000,000 µS/cm	91m (300 ft.)

Calibration Methods
1-point Cond (or Concentration or TDS)
Zero

***Available curves depend on the selected type of measurement (Conductivity, Concentration or TDS).*

Continued on next page.

Specifications *continued*

Linearity 3700 Inductive Conductivity Sensors

1.5 mS/cm – 2 S/cm
1% or reading

< 1.5 mS/cm
±15 µS/cm

Linearity 3700 Inductive Conductivity Sensors with Multiple Point Calibration

1.5 mS/cm – 2 S/cm
0.5% or reading

< 1.5 mS/cm
±5 µS/cm

sc200 for Hach Analog Dissolved Oxygen Sensors

Measuring Range
0 to 40 ppm
200% saturation

Repeatability
±0.05% of range

Response Time
0.5 s

Temperature Range
0 to 50°C (32 to 122°F)

Temperature Accuracy
±0.5°C (0.9°F)

Temperature Drift
±0.02% of reading / °C

Temperature Compensation
Automatic from 0 to 40 ppm or manual

Temperature Sensor
NTC30K / Manual

Sensor-to-Controller Distance (max)
305 m (1000 ft.)

Calibration Methods
Sample
Air
Saturation

sc200 for Hach UltraSonic Flow Sensor

Flow Rate
0-9999, 0-999.9, 0-99.99 with selectable flow rate units and multiplier

Volume
0-9,999,999 with selectable volume units

Depth
0-1200.0 inches, 0-100.0 feet, 0-30,000 mm, or 0-30.00 meters

Input Filter
999 sec

Totalizers
8-digit resettable LCD software totalizer

Totalized Flow
Gal., $ft.^3$, acre-ft., lit., m^3

Repeatability
±0.1% of span

Sensor-to-Controller Distance (max)
100 m (328 ft.)

Calibration Methods
Cal Depth 1 point
Cal Depth 2 point

sc200 for Hach Paddle Wheel Flow Sensor

Flow Rate
Function of Structure Type: 0-9999, 0-999.9, 0-99.99 with selectable flow rate units and multiplier

Volume
0-9,999,999 with selectable volume units

Input Filter
999 sec

Totalizers
8-digit resettable LCD software totalizer

Totalized Flow
Gal., $ft.^3$, acre-ft., lit., m^3

Sensor-to-Controller Distance (max)
GLI impeller Sensors: 610m (2000 ft.)
Non-GLI Sensors: 91m (300 ft.)

**Specifications subject to change without notice.*

Dimensions

The sc200 controller unit can be installed on a surface, panel, or pipe (horizontally or vertically). No tools are needed to connect the controller unit to any Hach digital sensor. NOTE: Dimensions are in inches [millimeters].

Minimum Spacing Dimensions for Group Mounting

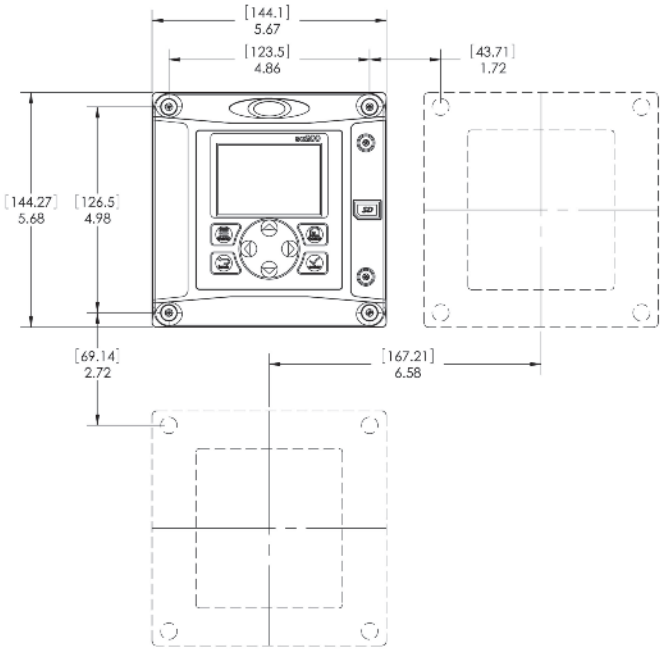

Mounting Dimensions

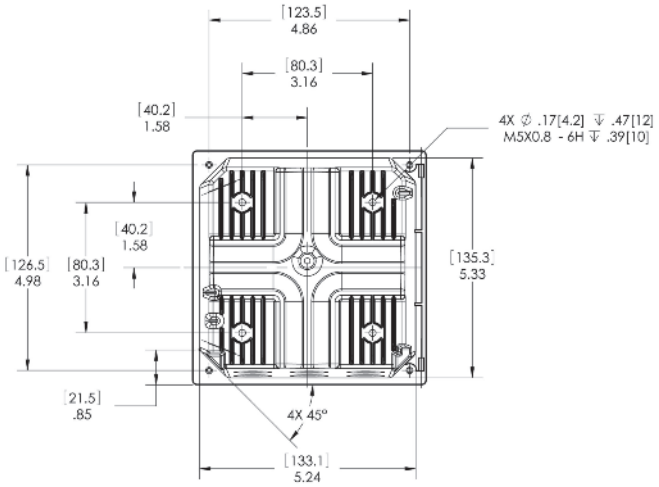

Bottom View

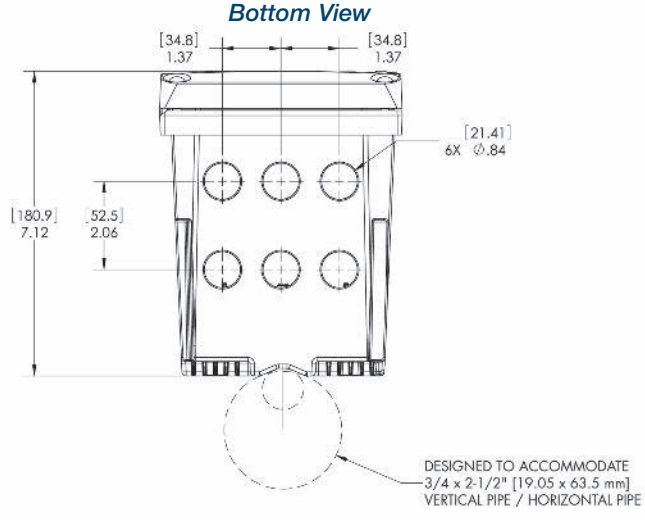

Ordering Information

sc200 for Hach Digital Sensors

LXV404.99.00552	sc200 controller, 2 channel, digital
LXV404.99.00502	sc200 controller, 1 channel, digital
LXV404.99.00542	sc200 controller, 2 channel, digital & mA input
LXV404.99.00512	sc200 controller, 2 channel, digital & pH/DO
LXV404.99.00522	sc200 controller, 2 channel, digital & Conductivity
LXV404.99.00532	sc200 controller, 2 channel, digital & Flow

sc200 for Hach Analog Sensors

LXV404.99.00102	sc200 controller, 1 channel, pH/DO
LXV404.99.00112	sc200 controller, 2 channel, pH/DO
LXV404.99.00202	sc200 controller, 1 channel, Conductivity
LXV404.99.00222	sc200 controller, 2 channel, Conductivity
LXV404.99.00212	sc200 controller, 2 channel, pH/DO & Conductivity
LXV404.99.00302	sc200 controller, 1 channel, Flow
LXV404.99.00332	sc200 controller, 2 channel, Flow
LXV404.99.00312	sc200 controller, 2 channel, Flow & pH/DO
LXV404.99.00322	sc200 controller, 2 channel, Flow & Conductivity

Note: Other Sensor combinations are available. Please contact Hach Technical Support or your Hach representative.

Note: Communication options (MODBUS and Profibus DPV1) are available. Please contact Hach Technical Support or your Hach representative.

Power Cords

9202900	sc200 power cord with strain relief, 125 Vac
9203000	sc200 power cord with strain relief, 230 Vac, European-style plug

Accessories

9220600	sc200 Weather and Sun Shield with UV Protection Screen
8809200	sc200 UV Protection Screen
1000G3088-001	Weather Protection Cover
9218200	SD card reader (USB) for connection to PC
9218100	4 GB SD card

At Hach, it's about learning from our customers and providing the right answers. It's more than ensuring the quality of water—it's about ensuring the quality of life. When it comes to the things that touch our lives...

Keep it pure.

Make it simple.

Be right.

For current price information, technical support, and ordering assistance, contact the Hach office or distributor serving your area.

In the United States, contact:

HACH COMPANY World Headquarters
P.O. Box 389
Loveland, Colorado 80539-0389
U.S.A.
Telephone: 800-227-4224
Fax: 970-669-2932
E-mail: orders@hach.com
www.hach.com

U.S. exporters and customers in Canada, Latin America, sub-Saharan Africa, Asia, and Australia/New Zealand, contact:

HACH COMPANY World Headquarters
P.O. Box 389
Loveland, Colorado 80539-0389
U.S.A.
Telephone: 970-669-3050
Fax: 970-461-3939
E-mail: intl@hach.com
www.hach.com

In Europe, the Middle East, and Mediterranean Africa, contact:

HACH LANGE GmbH
Willstätterstraße 11
D-40549 Düsseldorf
GERMANY
Tel: +49 (0) 211 5288-0
Fax: +49 (0) 211 5288-143
E-mail: info@hach-lange.de
www.hach-lange.com

Lit. No. 2665 Rev 3
K10 Printed in U.S.A.
©Hach Company, 2010. All rights reserved.
In the interest of improving and updating its equipment, Hach Company reserves the right to alter specifications to equipment at any time.

HACH®
Be Right™

CS-912-007 : Identification sheet

VWTC PROJECT NUMBER:	Iqaluit WWTP			REV:	01
PROJECT NAME:	5000218036	SUBMITTED TO (COMPANY):			
ENGINEER:	G. HÉBERT	SUBMITTED TO (RESPONSIBLE)			
PROJECT MANAGER:	C. BEKAERT	PROJECT NUM REFERENCE.:			
PHONE NUMBER:		LOT NUMBER:			

SUPPLIER	EQPT CODE	EQPT TAG NO	DIA	DESCRIPTION	INFO 1	INFO 2	INFO 3	APPLIC.	NOTE	REV
HACH	ST-912-007	AIT-02-334		TURBIDIMETER CONTROLLER	SC200 UNIVERSAL CONTROLLER: 100-240 V AC WITH TWO DIGITAL SENSOR INPUTS AND TWO 4-20 MA OUTPUTS // MODEL # LXV404.99.00552 // OPERATING TEMPERATURE RANGE: -20 - 60 °C AT 0 - 95% RH (NON-CONDENSING) //	POWER REQUIREMENTS (HZ): 50 - 60 HZ POWER REQUIREMENTS (VOLTAGE): 100 - 240 VAC // SENSOR INPUT #1: DIGITAL // SENSOR INPUT #2: DIGITAL //				1
HACH	ST-912-007	AIT-02-344		TURBIDIMETER CONTROLLER	SC200 UNIVERSAL CONTROLLER: 100-240 V AC WITH TWO DIGITAL SENSOR INPUTS AND TWO 4-20 MA OUTPUTS // MODEL # LXV404.99.00552 // OPERATING TEMPERATURE RANGE: -20 - 60 °C AT 0 - 95% RH (NON-CONDENSING) //	POWER REQUIREMENTS (HZ): 50 - 60 HZ POWER REQUIREMENTS (VOLTAGE): 100 - 240 VAC // SENSOR INPUT #1: DIGITAL // SENSOR INPUT #2: DIGITAL //				1

This page is intentionally left blank

sc200™ UNIVERSAL CONTROLLER

Applications
- Drinking Water
- Wastewater
- Industrial Water
- Power



One Controller for the Broadest Range of Sensors.

Choose from 30 digital and analog sensor families for up to 17 different parameters.

Maximum Versatility

The sc200 controller allows the use of digital and analog sensors, either alone or in combination, to provide compatibility with Hach's broad range of sensors, eliminating the need for dedicated, parameter-specific controllers.

Ease of Use and Confidence in Results

Large, high-resolution, transreflective display provides optimal viewing resolution in any lighting condition. Guided calibration procedures in 19 languages minimize complexity and reduce operator error. Password-protected SD card reader offers a simple solution for data download and transfer. Visual warning system provides critical alerts.

Wide Variety of Communication Options

Utilize two to five analog outputs to transmit primary and secondary values for each sensor, or integrate Hach sensors and analyzers into MODBUS RS232/RS485, Profibus® DP, and HART networks.



Password protected SD card reader offers a simple solution for data download and transfer, and sc200 and digital sensor configuration file duplication and backup.

HACH®
Be Right™

Controller Comparison







Features	Previous Models sc100™ Controller	Previous Models GLI53 Controller	sc200™ Controller	Benefits
Display	64 x 128 pixels 33 x 66 mm (1.3 x 2.6 in.)	64 x 128 pixels 33 x 66 mm (1.3 x 2.6 in.)	160 x 240 pixels 48 x 68 mm (1.89 x 2.67 in.) Transreflective	• Improved user interface—50% bigger • Easier to read in daylight and sunlight
Data Management	irDA Port/PDA Service Cable	N/A	SD Card Service Cable	• Simplifies data transfer • Standardized accessories/max compatibility
Sensor Inputs	2 Max Direct Digital Analog via External Gateway	2 Max Analog Depending on Parameter	2 Max Digital and/or Analog with Sensor Card	• Simplifies analog sensor connections • Works with analog and digital sensors
Analog Inputs	N/A	N/A	1 Analog Input Signal Analog 4-20mA Card	• Enables non-sc analyzer monitoring • Accepts mA signals from other analyzers for local display • Consolidates analog mA signals to a digital output
4-20 mA Outputs	2 Standard	2 Standard	2 Standard Optional 3 Additional	• Total of five (5) 4-20 mA outputs allows multiple mA outputs per sensor input
Digital Communication	MODBUS RS232/RS485 Profibus DP V1.0	HART	MODBUS RS232/RS485 Profibus DP V1.0 HART 7.2	• Unprecedented combination of sensor breadth and digital communication options

Choose from Hach's Broad Range of Digital and Analog Sensors

Parameter	Sensor	Digital or Analog
Ammonia	AMTAX™ sc, NH4D sc, AISE sc, AN-ISE sc	●
Chlorine	CLF10 sc, CLT10 sc, 9184 sc	●
Chlorine Dioxide	9185 sc	●
Conductivity	GLI 3400 Contacting, GLI 3700 Inductive	△
Dissolved Oxygen	LDO® Model 2, 5740 sc	●
Dissolved Oxygen	5500	△
Flow	U53, F53 Sensors	△
Nitrate	NITRATAX™ sc, NO3D sc, NISE sc, AN-ISE sc	●
Oil in Water	FP360 sc	●
Organics	UVAS sc	●
Ozone	9187 sc	●
pH/ORP	pHD	●
pH/ORP	pHD, pH Combination, LCP	△
Phosphate	PHOSPHAX™ sc	●
Sludge Level	SONATAX™ sc	●
Suspended Solids	SOLITAX™ sc, TSS sc	●
Turbidity	1720E, FT660 sc, SS7 sc, ULTRATURB sc, SOLITAX sc, TSS sc	●
Ultra Pure Conductivity	8310, 8311, 8312, 8315, 8316, 8317 Contacting	△
Ultra Pure pH/ORP	8362	△

● = Digital △ = Analog

Connect up to two of any of the sensors listed above, in any combination, to meet your application needs. The diagrams below demonstrate the potential configurations. Operation of analog sensors requires the controller to be equipped with the appropriate sensor module. Contact Hach Technical Support for help with selecting the appropriate module.

2 Channel Configurations

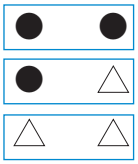

1 Channel Configurations

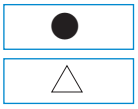

Specifications*

Dimensions (H x W x D)	5.7 in x 5.7 in x 7.1 in (144 mm x 144 mm x 181 mm)
Display	Graphic dot matrix LCD with LED backlighting, transreflective
Display Size	1.9 x 2.7 in. (48 mm x 68 mm)
Display Resolution	240 x 160 pixels
Weight	3.75 lbs. (1.70 kg)
Power Requirements (Voltage)	100 - 240 V AC, 24 V DC
Power Requirements (Hz)	50/60 Hz
Operating Temperature Range	-20 to 60 °C , 0 to 95% RH non-condensing
Analog Outputs	Two (Five with optional expansion module) to isolated current outputs, max 550 Ω , Accuracy: ± 0.1% of FS (20mA) at 25 °C, ± 0.5% of FS over -20 °C to 60 °C range Operational Mode: measurement or calculated value
Analog Output Functional Mode	Linear, Logarithmic, Bi-linear, PID
Security Levels	2 password-protected levels
Mounting Configurations	Wall, pole, and panel mounting
Enclosure Rating	NEMA 4X/IP66
Conduit Openings	1/2 in NPT Conduit
Relay: Operational Mode	Primary or secondary measurement, calculated value (dual channel only) or timer
Relay Functions	Scheduler (Timer), Alarm, Feeder Control, Event Control, Pulse Width Modulation, Frequency Control, and Warning
Relays	Four electromechanical SPDT (Form C) contacts, 1200 W, 5 A
Communication	MODBUS RS232/RS485, PROFIBUS DPV1, or HART 7.2 optional
Memory Backup	Flash memory
Electrical Certifications	EMC CE compliant for conducted and radiated emissions: - CISPR 11 (Class A limits) - EMC Immunity EN 61326-1 (Industrial limits) Safety cETLus safety mark for: - General Locations per ANSI/UL 61010-1 & CAN/CSA C22.2. No. 61010-1 - Hazardous Location Class I, Division 2, Groups A,B,C & D (Zone 2, Group IIC) per FM 3600 / FM 3611 & CSA C22.2 No. 213 M1987 with approved options and appropriately rated Class I, Division 2 or Zone 2 sensors cULus safety mark - General Locations per UL 61010-1 & CAN/CSA C22.2. No. 61010-1

Subject to change without notice.

Dimensions

Surface Mounting Dimensions

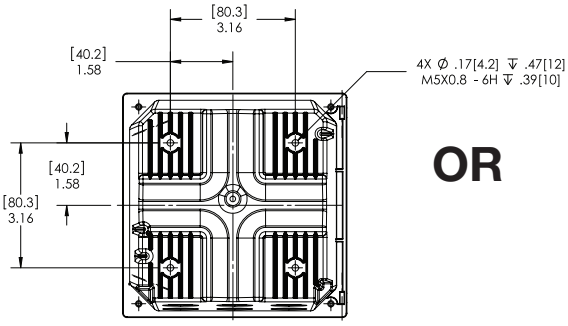

Mounting Dimensions
(Rear View)

OR

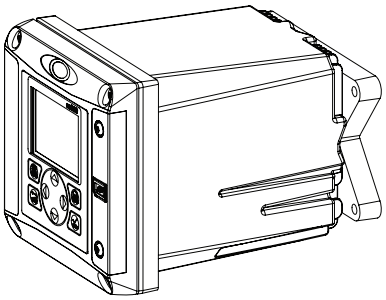

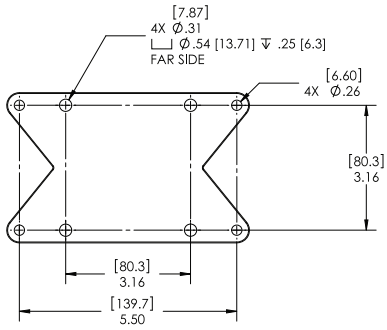

Bracket (supplied) for Surface Mounting
(Not compatible with Weather and Sun Shield
p/n 9220600 when surface mounting.)

Panel Mounting Dimensions

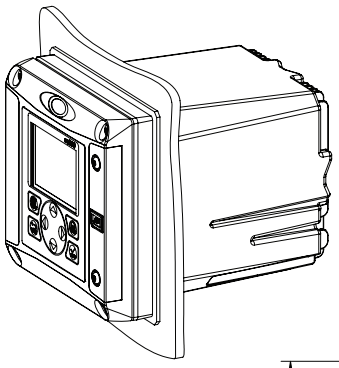

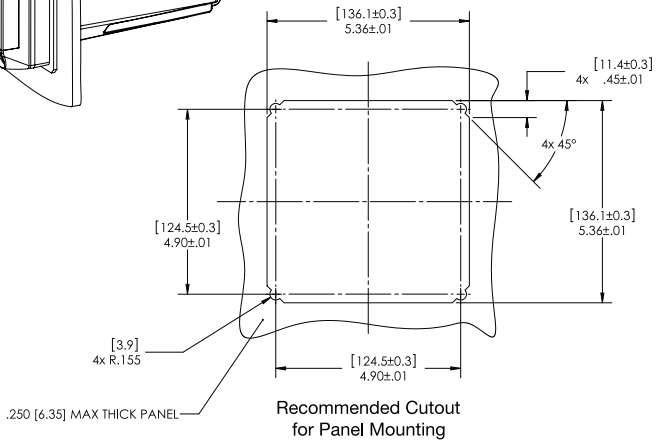

Recommended Cutout
for Panel Mounting

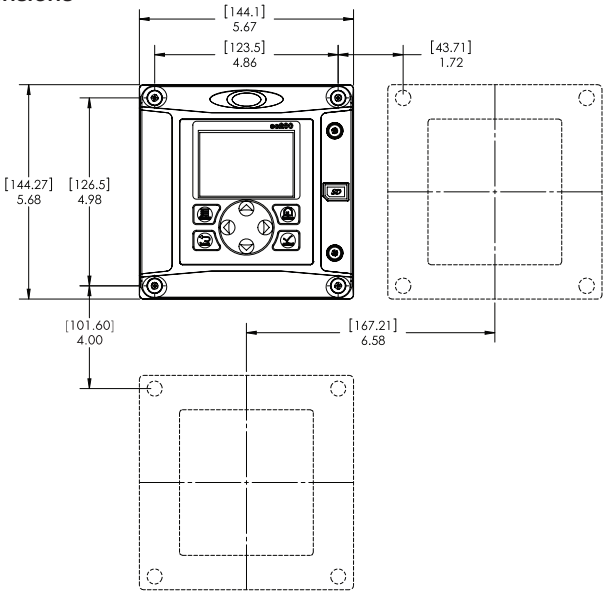

Minimum Spacing Dimensions
for Group Mounting

Top and Bottom Views

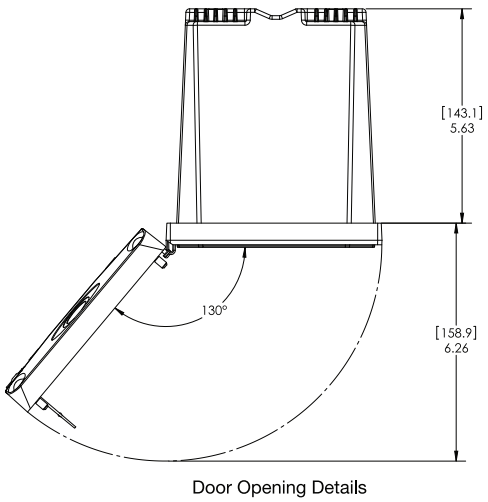

Door Opening Details

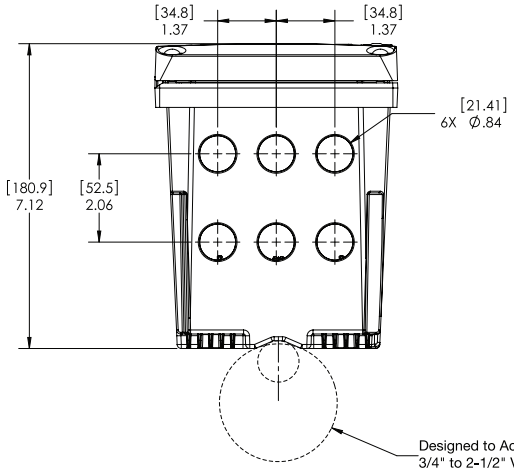

Ordering Information

sc200 for Hach Digital and Analog Sensors

LXV404.99.00552	sc200 controller, 2 channels, digital
LXV404.99.00502	sc200 controller, 1 channel, digital
LXV404.99.00102	sc200 controller, 1 channel, pH/DO
LXV404.99.00202	sc200 controller, 1 channel, Conductivity
LXV404.99.01552	sc200 controller, 2 channels, digital, Modbus RS232/RS485
LXV404.99.00112	sc200 controller, 2 channel, pH/DO

Note: Other Sensor combinations are available. Please contact Hach Technical Support or your Hach representative.

Note: Communication options (MODBUS, Profibus DPV1, and HART) are available. Please contact Hach Technical Support or your Hach representative.



sc200 for Ultrapure Sensors

9500.99.00602	sc200 controller, 1 channel, ultrapure conductivity
9500.99.00702	sc200 controller, 1 channel, ultrapure pH
9500.99.00662	sc200 controller, 2 channel, ultrapure conductivity
9500.99.00772	sc200 controller, 2 channel, ultrapure pH



Sensor and Communication Modules

9012900	Analog pH/ORP and DO module for GLI Sensors
9013000	Analog Conductivity module for GLI Sensors
9012700	Flow module
9012800	4-20 mA Input Module
9525700	Analog pH/ORP Module for Polymetron Sensors
9525800	Analog Conductivity Module for Polymetron Sensors
9013200	Modbus 232/485 Module
9173900	Profibus DP Module
9328100	HART Module
9334600	4-20 mA Output Module (Provides 3 additional mA Outputs)

Accessories

9220600	sc200 Weather and Sun Shield with UV Protection Screen
8809200	sc200 UV Protection Screen
9218200	SD card reader (USB) for connection to PC
9218100	4 GB SD card

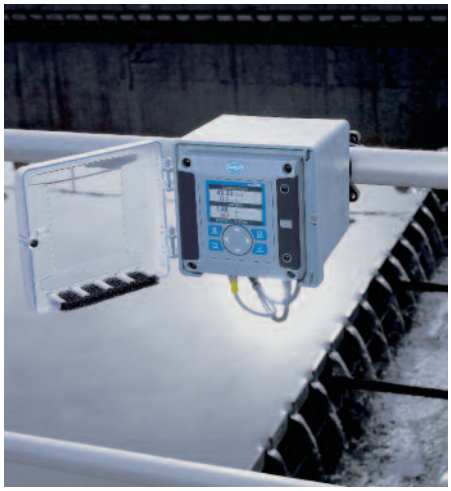

HACH COMPANY World Headquarters: Loveland, Colorado USA

United States: 800-227-4224 tel 970-669-2932 fax orders@hach.com
Outside United States: 970-669-3050 tel 970-461-3939 fax int@hach.com
hach.com

LIT2665 Rev 7
K13 Printed in U.S.A.
©Hach Company, 2013. All rights reserved.
In the interest of improving and updating its equipment,
Hach Company reserves the right to alter specifications to equipment at any time.

HACH®
Be Right™

CS-912-006 : Identification sheet

VWTC PROJECT NUMBER:	Iqaluit WWTP	REV:	02
PROJECT NAME:	5000218036	SUBMITTED TO (COMPANY):	
ENGINEER:	F.VINCI	SUBMITTED TO (RESPONSIBLE)	
PROJECT MANAGER:	C. BEKAERT	PROJECT NUM REFERENCE.:	
PHONE NUMBER:		LOT NUMBER:	

SUPPLIER	EQPT CODE	EQPT TAG NO	DIA	DESCRIPTION	INFO 1	INFO 2	INFO 3	APPLIC.	NOTE	REV
CONTROLES DAVIS QUEBEC	ST-912-006	LSH-02-332		HIGH LEVEL SLUDGE	SLUDGE LEVEL // 2 X INTRINSICALLY SAFE CONTROL SPST ISOLATED CONTACT # 27A1E0 // 1 X ELECTRICAL FITTING SUPPORT // 1X 2 FT SS316 ELECTRODE # 3R2C0 // 2 X 7 FT SS316 ELECTRODE #3R7C0					1
CONTROLES DAVIS QUEBEC	ST-912-006	LSH-02-342		HIGH LEVEL SLUDGE	SLUDGE LEVEL // 2 X INTRINSICALLY SAFE CONTROL SPST ISOLATED CONTACT # 27A1E0 // 1 X ELECTRICAL FITTING SUPPORT // 1X 2 FT SS316 ELECTRODE # 3R2C0 // 2 X 7 FT SS316 ELECTRODE #3R7C0					1
CONTROLES DAVIS QUEBEC	Included in ST-912-006	LSL-02-333		LOW LEVEL SLUDGE	SLUDGE LEVEL // 2 X INTRINSICALLY SAFE CONTROL SPST ISOLATED CONTACT # 27A1E0 // 1 X ELECTRICAL FITTING SUPPORT // 1X 2 FT SS316 ELECTRODE # 3R2C0 // 2 X 7 FT SS316 ELECTRODE #3R7C0					2
CONTROLES DAVIS QUEBEC	Included in ST-912-006	LSL-02-343		LOW LEVEL SLUDGE	SLUDGE LEVEL // 2 X INTRINSICALLY SAFE CONTROL SPST ISOLATED CONTACT # 27A1E0 // 1 X ELECTRICAL FITTING SUPPORT // 1X 2 FT SS316 ELECTRODE # 3R2C0 // 2 X 7 FT SS316 ELECTRODE #3R7C0					2

This page is intentionally left blank

Top Mounting Fixtures – General Purpose

Series	3F	3G
	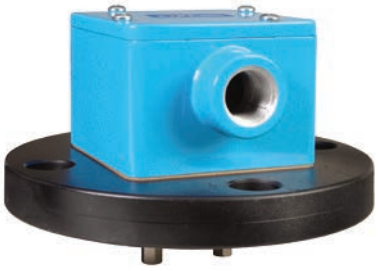	
Mounting Connection	Flange — 4.5" to 7.5" Dia.	NPT, Flange, Bracket (Plate)
Probe Quantity	1 thru 7	1 thru 7
Description	Designed for general purpose service, Series 3F flanged, pressure-tight fittings can handle up to 7 probes. They mate with standard pipe flanges coupled to the top of the vessel. Available in a variety of materials.	Series 3G fittings are designed for general purpose use, and are made of PVC to withstand corrosive conditions. The flanged assemblies are sized to accommodate up to 7 probes and to mate with standard flanges on the tops of vessels.
Materials		
Terminal Housing	Die-cast aluminum, epoxy coated	Polycarbonate
Body	Forged steel, red brass, 316 S.S., 1018 C.S, PVC	PVC
Probe Insulation	Teflon®	Teflon®
Pressure/Temperature	125 psig @ 323°F (cast iron) 225 psig @ 150°F (brass) 230 psig @ 100°F (316 S.S.) 275 psig @ 100°F (1018 C.S.) PVC – not rated	0 psig @ 150°F (PVC)
Approvals	CSA	—

Dimensions

No. of Probes	Nominal Pipe Flange Size	Diameter of Flange	Conduit Boss Thread Size	Terminal Housing Size (W" x D" x H")
1	1	4-1/2"	1/2" NPT	2-1/4 x 2-1/4 x 2-1/4
2-3	2	6"	1/2" NPT	3-1/4 x 3-1/4 x 2-3/8
4	2-1/2	7"	1/2" NPT	3-1/4 x 3-1/4 x 2-3/8
5-7	3	7-1/2"	3/4" NPT	4 x 4 x 2-1/2

How to Order

Use the **Bold** characters from the chart at right to construct a product code.

Electrode Probes are ordered separately.

3F X X

Series
3F

Number of Probes
1 thru **7**

Body Material
A – Forged Steel (Raised Face)
B – Red Brass (Flat Face)
C – 316 S.S. (Raised Face)
D – 1018 C.S. (Raised Face)
E – PVC (Flat Face)

3G X X X

Series
3G

Number of Probes
1 thru **7**

Base Size and Style
A – 2" Flange (6" O.D.)[3]
B – 3" Flange (7-1/2" O.D.)
C – 3-1/4" x 6" x 3/4" PVC Plate
E – 2" NPT[3]
H – 3" NPT

Probe Type
1 – 316 S.S. Inserts for Use with 1/4" Rod Extensions[4]
2 – Tapered Probe Assembly[5]
3 – Wire-Suspended Probes[6]

Compatible Electrode Probes (order separately)	3R, 3W[1], 3Y[2]
	3R, 3T, 3W[1], 3Y[2]

Custom options available. Consult factory.

Notes:
1. Requires 3Z1B Adapter and 3Z1A Wire.
2. Requires 3Z1B Adapter.
3. Maximum 4 probes.
4. Order 3R rods separately. See page E-21.
5. Order 3T rods separately. See page E-21.
6. Order 3W/3Y probes separately. See page E-22.

3E	3N	3B
		
1" to 3" NPT	#10 Machine Screws from Underside	3/8" - 18NPT, 5/8" - 18UNF, 5/8" - 24UNEF
1 thru 7	1 thru 3	1
Series 3E fittings are cast metal, pressure-tight assemblies capable of handling 1-7 probes. Attachment to vessels is accomplished with external pipe threading. 3E Fittings require the use of 3R rigid or 3W wire suspended electrodes.	Series 3N fittings accommodate 1-3 probes operating at atmospheric pressure. The assembly mounts on a flat surface atop open tanks or closed vessels. 3N Fittings require the use of 3R rigid or 3W wire suspended electrodes.	Series 3B fittings are compact pressure tight assemblies that hold a single electrode probe for use in water and chemicals. These fittings incorporate a 1/4-20 female thread that must be combined with a Series 3R (rigid rod electrode) or Series 3W/3Y (wire suspended electrode) to make a complete assembly.
Die-cast aluminum, epoxy coated	Die-cast aluminum, epoxy coated	—
Cast iron, red brass, 316 stainless steel	PVC, red brass, 316 stainless steel	316 stainless steel
Teflon®	Teflon®	Teflon®
125 psig @ 353°F (cast iron) 250 psig @ 406°F (brass, 316 S.S.)	0 psig @ 150°F (PVC) 0 psig @ 500°F (brass, 316 S.S.)	250 psig @ 406°F 500 psig @ 75°F
U.L. File #MP2489, Vol. 1 Sec. 1; CSA	CSA File #LR11644	U.L. File #MP2489, Vol. 1 Sec. 1; CSA

	No. of Probes	Attachment to Vessel	Conduit Boss Thread Size	Terminal Housing Size (W" x D" x H")
3E	1	1" NPT	1/2" NPT	2-1/4 x 2-1/4 x 2-1/4
	2-3	2" NPT	1/2" NPT	3-1/4 x 3-1/4 x 2-3/8
	4	2-1/2" NPT	1/2" NPT	3-1/4 x 3-1/4 x 2-3/8
	5-7	3" NPT	3/4" NPT	4 x 4 x 2-1/2
3N	1-3	2-1/4" square flat pad, 1-1/2" dia. hole in top of vessel secured with #10 machine screws at the corners of a 1-1/2" square	1/2" NPT	2-1/4 x 2-1/4 x 2-1/4

3E X X

Series
3E

Number of Probes
1 thru **7**

Body Material
A – Cast Iron
B – Red Brass
C – 316 Stainless Steel

3N X X

Series
3N

Number of Probes
1 thru **3**

Body Material
A – PVC
B – Red Brass
C – 316 Stainless Steel

3B X B

Series
3B

Thread
1 – 3/8" - 18 NPT
2 – 5/8" - 18 UNF
3 – 5/8" - 24 UNEF

Metal Parts
B – 316 Stainless Steel

3R, 3W[1]	3R, 3W[1]	3R solid rod (up to 4') 3W[1] or 3Y[2] (greater than 4')

Custom options available. Consult factory.

Series 17 and 27
Intrinsically Safe Controls

- Cannot Ignite Flammable Materials
- Solid State Reliability
- Up to 470K Ohm/cm Sensitivity (Series 17)
- Internal Surge Suppression
- SPST Contacts (Series 17)
- SPDT Contacts (Series 27)
- Can Be Used for Single Level or Differential Service



Series 17



Series 27

Series 17 – FM Approved

Series 17 is FM Approved for use in Class I or II, Division 1, Groups A-G hazardous atmospheres. SPST isolated contacts. Field adjustable sensitivity by use of external resistors.

Series 27 – UL-CSA Approved

Series 27 is UL approved for use in Class I, Groups A, B, C, D; Class II, Groups E, F, G; and Class III hazardous locations. SPDT output contacts. UL Pilot Duty rated.

CSA Certified for Class 1, Groups A, B, C and D; Class II, Groups E, F and G; Class III

Specifications

Contact Design	
Series 17	1 N.O. & 1 N.C. Isolated Contacts
Series 27	1 N.O. & 1 N.C. (1 form C)
Contact Rating (24/120/240VAC)	8 amp Resistive
Mode of Operation	Direct/Inverse, factory set
Sensitivity	
Series 17	0-470K ohm, field adjustable
Series 27	0-100K ohm, factory set
Primary Voltage	
Series 17	24 VAC, 120 VAC, 240 VAC (+10%/-15%) 50/60 Hz
Series 27	120 VAC, 240 VAC (+10%/-15%) 50/60Hz
Secondary Voltage	
Series 17	13 VAC, 4 mA
Series 27	11 VAC, 2.3 mA
Temperature	-40°F to +150°F (-40°C to +65°C)
Approvals	
Series 17	FM File # 1G9A1.AX
Series 27	U.L. 913 File # E44570; CSA #2174246
Connections	All screw type connections

How to Order

Use the **Bold** characters from the chart below to construct a product code.

17 X X X X

Series
17– FM Approved **27**– UL/CSA Approved

Mode of Operation
A – Direct **B** – Inverse

Supply Voltage
1 – 120 VAC **2** – 240 VAC[1] **3** – 24 VAC[2]

Sensitivity (ohms)[3]
D – 3K **E** – 10K **G** – 100K **X** – (17 only)[3]

Enclosure
0 – None **1** – NEMA 1 **4** – NEMA 4

Notes:
1. 240V standard in Series 17. Non-standard, but available in Series 27.
2. 24V available only in Series 17.
3. Series 27 only. Series 17 includes a full set of resistors (3.3K, 4.7K, 10K, 47K, 100K, 220K, 470K ohms) to allow modification of sensitivity in the field. Product code symbol in this position for Series 17 is "X."

Applications

- Hazardous Atmospheres
- Pumps
- Waste Treatment
- Alarms
- Sewage
- CP Industry

Dimensions

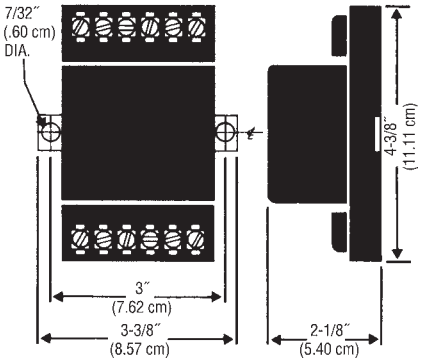

This page is intentionally left blank

Projet	IQALUIT
Projet#:	5000218036
Document #:	5000218036_DS_0001_PM_VWT
Par:	BB
Verif.:	GH
approb.:	CB

SPIDFLOW

PAINT SPECIFICATION

Section Manuel OM: 4.3.1.8

This page is intentionally left blank

CS-912-000 : Identification sheet

VWTC PROJECT NUMBER:	Iqaluit WWTP	REV:	01
PROJECT NAME:	5000218036	SUBMITTED TO (COMPANY):	
ENGINEER:	G. HÉBERT	SUBMITTED TO (RESPONSIBLE)	
PROJECT MANAGER:	C. BEKAERT	PROJECT NUM REFERENCE.:	
PHONE NUMBER:		LOT NUMBER:	

SUPPLIER	EQPT CODE	EQPT TAG NO	DIA	DESCRIPTION	INFO 1	INFO 2	INFO 3	APPLIC.	NOTE	REV
VEOLIA	ST-912-000	T-02-310		SPIDFLOW TANK	SPIDFLOW SFP-650 CABON STEEL PAINTED TANK // CARBON STEEL MUST CONFORM TO CSA G40.21 GRADE 44W, G40.21M-300W, G40.21M-350W AS A MINIMUM // STAINLESS STEEL AISI 304L // WELDS CSA W59 STANDARD	INTERNAL TREATMENT SSPC-SP-10 // ONE (1) COAT OF DURA-PLATE-UHS 18 to 28 DRY MILS PER COAT // EXTERNAL TREATMENT SSPC-SP-6 // ONE (1) COAT OF ENVIROLASTIC 940 6.0				1
VEOLIA	ST-912-000	T-02-320		SPIDFLOW TANK	SPIDFLOW SFP-650 CABON STEEL PAINTED TANK // CARBON STEEL MUST CONFORM TO CSA G40.21 GRADE 44W, G40.21M-300W, G40.21M-350W AS A MINIMUM // STAINLESS STEEL AISI 304L // WELDS CSA W59 STANDARD	INTERNAL TREATMENT SSPC-SP-10 // ONE (1) COAT OF DURA-PLATE-UHS 18 to 28 DRY MILS PER COAT // EXTERNAL TREATMENT SSPC-SP-6 // ONE (1) COAT OF ENVIROLASTIC 940 6.0				1

This page is intentionally left blank

Protective & Marine Coatings

NSF Certified to NSF/ANSI 61

DURA-PLATE® UHS

WITH OPTI-CHECK OAP TECHNOLOGY

PART A	B62-210	SERIES
PART A	B62W211	WHITE OAP (NSF)
PART B	B62V210	STANDARD HARDENER (NSF)
PART B	B62V211	LOW TEMP HARDENER (NSF)

Revised: December 3, 2014

PRODUCT INFORMATION

TRM.35

PRODUCT DESCRIPTION

DURA-PLATE UHS is an ultra high solids epoxy amine engineered specifically for immersion service in ballast tanks, oil tanks, and refined fuel storage tanks. The high build, edge-retentive properties of Dura-Plate UHS provide superior protection compared to conventional epoxies.

- Airless Spray
- One coat protection
- Low VOC
- Low odor
- High flash point, >200°F (93°C)
- Can be used with 1½ oz. fiberglass mat
- Low Temperature Hardener for applications down to 40°F (4.5°C).
- NSF approved to Standard 61 for potable water (tanks of 1000 gallons or greater and pipes of 30" diameter or greater.)

RECOMMENDED USES

For use over prepared steel or concrete surfaces in industrial and marine exposures such as:

- Meets MIL-PRF-23236, Type VII, Class 5, 7, 9 and 11, Grade C (standard hardener only)
- Ballast tank interiors, Oil storage tank interiors, Refined fuel storage tank and potable water tanks interiors and pipe.
- NSF approved for one coat application up to 50.0 mils (1250 microns) dft if required
- Water and waste treatment plants
- Buried Pipe Applications
- Primary and secondary containment areas
- Where edge protection film build properties are required
- Suitable for use with cathodic protection systems
- White B62W211 Contains OAP fluorescent pigment (NSF Approved)
- Suitable for use in the Mining & Minerals Industry

PRODUCT CHARACTERISTICS

Finish	Gloss
Color:	White OAP (NSF), White (NSF), Light Gray (NSF), Light Green (NSF), Black, Haze Gray
Volume Solids:	98% ± 2%, mixed
Weight Solids:	98% ± 2%, mixed
VOC (EPA Method 24):	
(with B62-V210 Hardeners)	<100 g/L; 0.83 lb/gal, mixed
(with B62V211 Hardener)	<100 g/L; 0.84 lb/gal, mixed
Mix Ratio:	4:1 by volume

Recommended Spreading Rate per coat*:

	1 coat system Min.		1 coat system Max.		2 coat system Min.		2 coat system Max.	
Wet mils (microns)	**18.0**	450	**22.0**	550	**10.0**	250	**12.0**	300
Dry mils (microns)	**18.0**	450	**22.0**	550	**10.0**	250	**12.0**	300
Total mils (microns)	**18.0**	450	**22.0**	550	**20.0**	500	**24.0**	600
~Coverage sq ft/gal (m^2/L)	**72**	1.76	**90**	2.2	**130**	3.18	**160**	3.9

Theoretical coverage **sq ft/gal** (m^2/L) @ 1 mil/25 micron dft: **1568** (38.4)

* See NSF Systems on next page.

NOTE: Brush or roll application recommended for stripe coating and repair only. Standard hardener preferred for brush & roll due to pot life.

Drying Schedule @ 10.0-22.0 mils wet (250-550 microns):

With B62-V210	@ 55°F/13°C 50% RH	@ 77°F/25°C	@ 100°F/38°C
To touch:	12 hours	5 hours	3 hours
To handle:	48 hours	14 hours	8 hours
To recoat:			
minimum:	48 hours	14 hours	8 hours
maximum:	21 days	14 days	14 days
Cure to service:	10 days	4 days	24 hours
Heat Cure:	8 hours @ ambient, then 16 hrs @ 140°F (60°C)*		

*Not NSF Approved. See Tips Section.

Pot Life*:	30-45 minutes	30-45 minutes	20-30 minutes
*Dependent upon temperature and mass			
Sweat-in-time:	15 minutes	None	None

PRODUCT CHARACTERISTICS (CONT'D)

With B62V211	@ 40°F/4.5°C	@ 55°F/13°C 50% RH	@ 77°F/25°C
To touch:	24 hours	5 hours	3 hours
To handle:	48 hours	24 hours	8 hours
To recoat:			
minimum:	48 hours	24 hours	8 hours
maximum:	30 days	21 days	14 days
Cure to service:	7 days	5 days	3 days
Heat Cure:	8 hours @ ambient, then 16 hrs @ 140°F (60°C)*		

Material should be at least 50°F (10°C) for optimal performance.

If maximum recoat time is exceeded, abrade surface before recoating.

Drying time is temperature, humidity, and film thickness dependent.

Sterilize and rinse per AWWA C652.

*Not NSF Approved. See Tips Section.

Pot Life*:	20 minutes	20 minutes	10 minutes
*Dependent upon temperature and mass			
Sweat-in-Time:	5 minutes	None	None

Shelf Life:	36 months Store indoors at 40°F (4.5°C) to 100°F (38°C).
Flash Point:	>200°F (93°C), PMCC, mixed
Reduction:	Not recommended
Clean Up:	MEK, R6K10 or R7K104 Reducer

PERFORMANCE CHARACTERISTICS

Substrate*: Steel

Surface Preparation*: SSPC-SP10/NACE 2

System Tested*:

1 ct. Dura-Plate UHS @ 18.0 mils (450 microns) dft with B62GV210 Hardener

*unless otherwise noted below

Test Name	Test Method	Results
Abrasion Resistance	ASTM D4060, CS17 wheel, 1000 cycles, 1 kg load	20.8 mg loss
Adhesion	ASTM D4541; ASTM D3359	800 psi, minimum (ASTM D4541); 5A (ASTM D3359)
Corrosion Weathering	ASTM D5894, 6 cycles, 2016 hours	Rating 10 per ASTM D610 for rusting and Rating 10 per ASTM D714 for blistering
Direct Impact Resistance	ASTM D2794; ASTM G14	30 in. lb. (ASTM D2794); 168 in. lb. (ASTM G14)
Dry Heat Resistance	ASTM D2485	250°F (121°C)
Flexibility	ASTM D522, 180° bend, 1/2" mandrel	Passes, 9.7% elongation
Immersion (Galvapac/1 ct Dura Plate UHS)	5 year potable water	Rating 10 per ASTM D610 for rusting and Rating 10 per ASTM D714 for blistering
Pencil Hardness	ASTM D3363	3H

IMMERSION (Ambient temperature):

- Ballast Tank mix ..... Recommended
- Crude oil ..... Recommended
- Diesel fuel ..... Recommended
- Ethanol or Gasohol ..... Recommended
- Fresh water/Potable Water ..... Recommended
- Fuel oil ..... Recommended
- Methanol or methanol blends ..... Not Recommended
- MTBE, TAME, ETBE ..... Recommended
- Refined petroleum products ..... Recommended
- Sea water ..... Recommended
- Hi-Aromatic Gasolines ..... Recommended

continued on back

Protective & Marine Coatings

NSF Certified to NSF/ANSI 61

DURA-PLATE® UHS

WITH OPTI-CHECK OAP TECHNOLOGY

PART A	B62-210	SERIES
PART A	B62W211	WHITE OAP (NSF)
PART B	B62V210	STANDARD HARDENER (NSF)
PART B	B62V211	LOW TEMP HARDENER (NSF)

Revised: December 3, 2014

PRODUCT INFORMATION

TRM.35

RECOMMENDED SYSTEMS

		Dry Film Thickness / ct. Mils	(Microns)
Steel, NSF Systems:			
1 ct.	Dura-Plate UHS Primer	4.0-8.0*	(100-200)
1 ct.	Dura-Plate UHS	10.0-12.0*	(250-300)
or			
1 ct.	Dura-Plate UHS	16.0-50.0	(400-1250)
or			
2 cts.	Dura-Plate UHS	8.0-25.0	(200-625)
or			
3 cts.	Dura-Plate UHS	8.0-16.0	(200-400)
Steel, OAP Fluorescent Pigment System			
1 ct.	Dura-Plate UHS (B62W211)	12.0-14.0	(300-350)
Steel:			
1 ct.	Dura-Plate UHS Primer	4.0-8.0**	(100-200)
1 ct.	Dura-Plate UHS	10.0-12.0	(250-300)
or			
2 cts.	Dura-Plate UHS	6.0-7.0	(150-175)
or			
1 ct.	Dura-Plate UHS	18.0-22.0	(450-550)
or			
2 cts.	Dura-Plate UHS	10.0-12.0	(250-300)
Steel, with hold primer:			
1 ct.	Macropoxy 5500 Primer (as required for blast hold primer)	1.0-1.5**	(25-40)
2 cts.	Dura-Plate UHS	10.0-12.0	(250-300)
Steel, Laminate System:			
1 ct.	Copoxy Shop Primer (as required for blast hold primer)	1.0-1.5	(25-40)
or			
1 ct.	Dura-Plate UHS Primer	4.0-8.0**	(100-200)
1 ct.	Steel-Seam FT910 as required for filling pits, and transitioning sharp edges, weld seams, etc.		
1 ct.	Dura-Plate UHS Clear Laminate Resin with 1½ oz. glass mat	40.0-45.0	(1000-1125)
1 ct.	Dura-Plate UHS as required to seal fiberglass mat	10.0-12.0	(250-300)
Concrete/Masonry:			
1 ct.	Corobond 100 Epoxy Primer/Sealer	4.0-6.0	(100-150)
	(or 1 ct Dura- Plate UHS Primer (as required for NSF)	4.0-8.0**	(100-200)
1 ct.	Dura-Plate UHS (as required for NSF)	10.0-12.0	(250-300)

* If primer is used, 10 mils (250 microns) dft maximum for primer and 14 mils (350 microns) dft maximum for topcoat.

** When using the B62L210 Primer containing the OAP fluorescent pigment, make sure a non-containing OAP fluorescent pigment Topcoat is used.

Refer to Application Bulletin for treatment of pitted tank bottoms.

The systems listed above are representative of the product's use, other systems may be appropriate.

DISCLAIMER

The information and recommendations set forth in this Product Data Sheet are based upon tests conducted by or on behalf of The Sherwin-Williams Company. Such information and recommendations set forth herein are subject to change and pertain to the product offered at the time of publication. Consult your Sherwin-Williams representative to obtain the most recent Product Data Information and Application Bulletin.

SURFACE PREPARATION

Surface must be clean, dry, and in sound condition. Remove all oil, dust, grease, dirt, loose rust, and other foreign material to ensure adequate adhesion.

Refer to product Application Bulletin for detailed surface preparation information.

Minimum recommended surface preparation:

Iron & Steel:

Atmospheric: SSPC-SP6/NACE 3, 2 mil (50 micron) profile or SSPC-SP12/NACE No. 5, WJ-3/NV-2

Immersion: SSPC-SP10/NACE2, 2-3 mil (50-75 micron)profile or SSPC- SP12/NACE No. 5, WJ-2/NV-2

Concrete & Masonry:

Atmospheric: SSPC-SP13/NACE 6, or ICRI No. 310.2R CSP 2-3

Immersion: SSPC-SP13/NACE 6-4.3.1 or 4.3.2, or ICRI No. 310.2R CSP 2-3

Surface Preparation Standards

Condition of Surface		ISO 8501-1 BS7079:A1	Swedish Std. SIS055900	SSPC	NACE
White Metal		Sa 3	Sa 3	SP 5	1
Near White Metal		Sa 2.5	Sa 2.5	SP 10	2
Commercial Blast		Sa 2	Sa 2	SP 6	3
Brush-Off Blast		Sa 1	Sa 1	SP 7	4
Hand Tool Cleaning	Rusted	C St 2	C St 2	SP 2	-
	Pitted & Rusted	D St 2	D St 2	SP 2	-
Power Tool Cleaning	Rusted	C St 3	C St 3	SP 3	-
	Pitted & Rusted	D St 3	D St 3	SP 3	-

TINTING

Do not tint Part A.

Clear Hardeners B62V210 and B62V211 may be tinted with up to 1½ oz. per gallon with Maxitoner Colorant, Phthalo Green or Black (both NSF approved) **ONLY**.

APPLICATION CONDITIONS

Temperature (air, surface):

B62-V210 Hardeners: 50°F (10°C) minimum, 110°F (43°C) maximum

B62V211 Hardener: 40°F (4.5°C) minimum, 77°F (25°C) maximum

At least 5°F (2.8°C) above dew point

Material should be 70°F (21°C) to 85°F (29°C) or optimal performance.

Relative humidity: 85% maximum

Refer to product Application Bulletin for detailed application information.

ORDERING INFORMATION

Packaging:

Part A: 4 gallon (15.1L) container

Part B: 1 gallon (3.78L) container

Weight: 10.52 ± 0.2 lb/gal ; 1.26 Kg/L, mixed

SAFETY PRECAUTIONS

Refer to the MSDS sheet before use.

Published technical data and instructions are subject to change without notice. Contact your Sherwin-Williams representative for additional technical data and instructions.

WARRANTY

The Sherwin-Williams Company warrants our products to be free of manufacturing defects in accord with applicable Sherwin-Williams quality control procedures. Liability for products proven defective, if any, is limited to replacement of the defective product or the refund of the purchase price paid for the defective product as determined by Sherwin-Williams. NO OTHER WARRANTY OR GUARANTEE OF ANY KIND IS MADE BY SHERWIN-WILLIAMS, EXPRESSED OR IMPLIED, STATUTORY, BY OPERATION OF LAW OR OTHERWISE, INCLUDING MERCHANTABILITY AND FITNESS FOR A PARTICULAR PURPOSE.

Protective & Marine Coatings

NSF Certified to NSF/ANSI 61

DURA-PLATE® UHS

WITH OPTI-CHECK OAP TECHNOLOGY

PART A	B62-210	SERIES
PART A	B62W211	WHITE OAP (NSF)
PART B	B62V210	STANDARD HARDENER (NSF)
PART B	B62V211	LOW TEMP HARDENER (NSF)

Revised: December 3, 2014

APPLICATION BULLETIN

TRM.35

SURFACE PREPARATIONS

Surface must be clean, dry, and in sound condition. Remove all oil, dust, grease, dirt, loose rust, and other foreign material to ensure adequate adhesion.

Iron & Steel (atmospheric service)
Minimum surface preparation is Commercial Blast Cleaning per SSPC-SP6/NACE 3 or SSPC-SP12/NACE No. 5. For surfaces prepared by SSPC SP6/NACE 3, first remove all oil and grease from surface by Solvent Cleaning per SSPC-SP1. For better performance, use Near White Metal Blast Cleaning per SSPC-SP10/NACE 2. Blast clean all surfaces using a sharp, angular abrasive for optimum surface profile (2-3 mils / 50-75 microns). For surfaces prepared by SSPC-SP12/NACE No. 5, all surfaces shall be cleaned in accordance with WJ-3/NV2. Pre-existing profile should be approximately 2 mils (50 microns). Prime any bare steel the same day as it is cleaned or before flash rusting occurs.

Iron & Steel (immersion service)
Remove all oil and grease from surface by Solvent Cleaning per SSPC-SP1. Minimum surface preparation is Near White Metal Blast Cleaning per SSPC-SP10/NACE 2, or SSPC-SP12/NACE No. 5. For SSPC-SP10/NACE 2 blast clean all surfaces using a sharp, angular abrasive for optimum surface profile (2-3 mils / 50-75 microns). For SSPC-SP12/NACE No.5, all surfaces to be coated shall be cleaned in accordance with WJ-2/NV2 standards. Pre-existing profile should be approximately 2 mils (50 microns). Remove all weld spatter. Prime any bare steel the same day as it is cleaned or before flash rusting occurs.

Concrete and Masonry
For surface preparation, refer to SSPC-SP13/NACE 6, or ICRI No. 310.2R, CSP 2-3. Surfaces should be thoroughly clean and dry. Concrete and mortar must be cured at least 28 days @ 75°F (24°C). Remove all loose mortar and foreign material. Surface must be free of laitance, concrete dust, dirt, form release agents, moisture curing membranes, loose cement and hardeners. Fill bug holes, air pockets and other voids with Steel-Seam FT910. Primer required.

Follow the standard methods listed below when applicable:
ASTM D4258 Standard Practice for Cleaning Concrete.
ASTM D4259 Standard Practice for Abrading Concrete.
ASTM D4260 Standard Practice for Etching Concrete.
ASTM F1869 Standard Test Method for Measuring Moisture Vapor Emission Rate of Concrete.
SSPC-SP 13/Nace 6 Surface Preparation of Concrete.
ICRI No. 310.2R Concrete Surface Preparation.

Concrete, Immersion Service:
For surface preparation, refer to SSPC-SP13/NACE 6, Section 4.3.1 or 1.3.2 or ICRI No. 310.2R, CSP 2-3.

Surface Preparation Standards

Condition of Surface		ISO 8501-1 BS7079:A1	Swedish Std. SIS055900	SSPC	NACE
White Metal		Sa 3	Sa 3	SP 5	1
Near White Metal		Sa 2.5	Sa 2.5	SP 10	2
Commercial Blast		Sa 2	Sa 2	SP 6	3
Brush-Off Blast		Sa 1	Sa 1	SP 7	4
Hand Tool Cleaning	Rusted	C St 2	C St 2	SP 2	-
	Pitted & Rusted	D St 2	D St 2	SP 2	-
Power Tool Cleaning	Rusted	C St 3	C St 3	SP 3	-
	Pitted & Rusted	D St 3	D St 3	SP 3	-

APPLICATION CONDITIONS

Temperature (air, surface):

B62-V210 Hardeners	50°F (10°C) minimum, 110°F (43°C) maximum
B62V211 Hardener	40°F (4.5°C) minimum, 77°F (25°C) maximum
	At least 5°F (2.8°C) above dew point

Material should be 70°F (21°C) to 85°F (29°C) or optimal performance.

Relative humidity: 85% maximum

APPLICATION EQUIPMENT

The following is a guide. Changes in pressures and tip sizes may be needed for proper spray characteristics. Always purge spray equipment before use with listed reducer. Any reduction must be compliant with existing VOC regulations and compatible with the existing environmental and application conditions.

Reduction .....Not recommended

Clean Up .....MEK, R6K10 or R7K104 Reducer

Airless Spray
Unit.....74:1 Pump, minimum
Pressure.....6000 psi minimum
Hose.....3/8" ID
Tip .....019" - .021"
Filter.....30 mesh

In order to avoid blockage of spray equipment and hose, flush equipment with MEK, R6K10 or R7K104 Reducer at least once every 30 minutes when using the B62V210 Hardener and after each kit when using the Low Temperature Hardener, and before periods of extended downtime.

Plural Component Equipment .....Acceptable

Brush .....For stripe coating and repair only
Brush.....Nylon/Polyester or Natural Bristle

Roller .....For stripe coating and repair only
Cover .....3/8" woven with solvent resistant core

If specific application equipment is not listed above, equivalent equipment may be substituted.

continued on back

Protective & Marine Coatings

NSF Certified to NSF/ANSI 61

DURA-PLATE® UHS

WITH OPTI-CHECK OAP TECHNOLOGY

PART A	B62-210	SERIES
PART A	B62W211	WHITE OAP (NSF)
PART B	B62V210	STANDARD HARDENER (NSF)
PART B	B62V211	LOW TEMP HARDENER (NSF)

Revised: December 3, 2014

APPLICATION BULLETIN

TRM.35

APPLICATION PROCEDURES

Surface preparation must be completed as indicated.

Mixing Instructions: Mix contents of each component thoroughly using low speed power agitation. Make certain no pigment remains on the bottom or the sides of the can. Then combine four parts by volume of Part A with one part by volume of Part B. Thoroughly agitate the mixture with power agitation.

To ensure that no unmixed material remains on the sides or bottom of the cans after mixing, visually observe the container by pouring the material into a separate container.

Apply paint at the recommended film thickness and spreading rate as indicated below:

Recommended Spreading Rate per coat*:

	1 coat system Min.	1 coat system Max.	2 coat system Min.	2 coat system Max.
Wet mils (microns)	**18.0** 450	**22.0** 550	**10.0** 250	**12.0** 300
Dry mils (microns)	**18.0** 450	**22.0** 550	**10.0** 250	**12.0** 300
Total mils (microns)	**18.0** 450	**22.0** 550	**20.0** 500	**24.0** 600
~Coverage sq ft/gal (m^2/L)	**72** 1.76	**90** 2.2	**130** 3.18	**160** 3.9
Theoretical coverage **sq ft/gal** (m^2/L) @ 1 mil/25 micron dft	**1568** (38.4)			

* See NSF Systems on next page.

NOTE: Brush or roll application recommended for stripe coating and repair only. Standard hardener preferred for brush & roll due to pot life.

Drying Schedule @ 10.0-22.0 mils wet (250-550 microns):

With B62-V210	@ 55°F/13°C *50% RH*	@ 77°F/25°C	@ 100°F/38°C
To touch:	12 hours	5 hours	3 hours
To handle:	48 hours	14 hours	8 hours
To recoat:			
minimum:	48 hours	14 hours	8 hours
maximum:	21 days	14 days	14 days
Cure to service:	10 days	4 days	24 hours
Heat Cure:	8 hours @ ambient, then 16 hrs @ 140°F (60°C)*		

*Not NSF Approved. See Tips Section.

Pot Life*:	30-45 minutes	30-45 minutes	20-30 minutes
*Dependent upon temperature and mass			
Sweat-in-time:	15 minutes	None	None

With B62V211	@ 40°F/4.5°C	@ 55°F/13°C *50% RH*	@ 77°F/25°C
To touch:	24 hours	5 hours	3 hours
To handle:	48 hours	24 hours	8 hours
To recoat:			
minimum:	48 hours	24 hours	8 hours
maximum:	30 days	21 days	14 days
Cure to service:	7 days	5 days	3 days
Heat Cure:	8 hours @ ambient, then 16 hrs @ 140°F (60°C)*		

Material should be at least 50°F (10°C) for optimal performance.

If maximum recoat time is exceeded, abrade surface before recoating.

Drying time is temperature, humidity, and film thickness dependent.

Sterilize and rinse per AWWA C652.

*Not NSF Approved. See Tips Section.

Pot Life*:	20 minutes	20 minutes	10 minutes
*Dependent upon temperature and mass			
Sweat-in-Time:	5 minutes	None	None

Note: Recommended application procedure direct to steel: Apply a 5.0-6.0 mil (125-150 micron) coat to the substrate. Allow material to "wet" the surface. Then apply additional material, to bring total film thickness to the recommended range.

Application of coating above maximum or below minimum recommended spreading rate may adversely affect coating performance.

CLEAN UP INSTRUCTIONS

Clean spills and spatters immediately with MEK, R6K10. Clean tools immediately after use with MEK, R6K10. Follow manufacturer's safety recommendations when using any solvent.

PERFORMANCE TIPS

Repair of Pitted Tank Bottoms
Extensive, deep pitting:
Options:
Option 1 ....Apply a full wet coat, by spray application, of Dura-Plate UHS Primer. Follow with rubber squeegee to work material into and fill the pitted areas. After recommended drying time, apply a full coat of Dura-Plate UHS at recommended film thickness.
Option 2 ....Apply Dura-Plate Laminant Resin with 1½ oz fiberglass mat over the pitted areas. After recommended drying time, apply a full coat of Dura-Plate UHS at recommended film thickness.
Option 3 ....Weld new steel plates, or use puddle welds, as required to repair pitted areas. Coat areas as recommended.
Shallow pitting, isolated areas:
Options:
Option 1 ....Same as number 1 above.
Option 2 ....Apply Steel-Seam FT910 as required to fill the pitted areas. Coat areas as recommended.

When using spray application, use a 50% overlap with each pass of the gun to avoid holidays, bare areas, and pinholes. If necessary, cross-coat spray at a right angle.

Spreading rates are calculated on volume solids and do not include an application loss factor due to surface profile, roughness or porosity of the surface, skill and technique of the applicator, method of application, various surface irregularities, material lost during mixing, spillage, overthinning, climatic conditions, and excessive film build.
No reduction of material is recommended as this can affect film build, appearance, and adhesion.

Do not mix previously catalyzed material with new.

Do not apply the material beyond recommended pot life.

In order to avoid blockage of spray equipment and hose, flush equipment with MEK, R6K10 or R7K104 Reducer at least once every 30 minutes when using the B62V210 Hardener and after each kit when using the Low Temperature Hardener, and before periods of extended downtime.

For Immersion Service: (if required) Holiday test in accordance with ASTM D5162 for steel, or ASTM D4787 for concrete.

May be applied up to 50.0-60.0 mils (1250-1500 microns) dft in one coat if required.

When using the B62L210 Primer containing the OAP fluorescent pigment, make sure a non-containing OAP fluorescent pigment Topcoat is used.

Stripe coat all crevices, welds, and sharp angles to prevent early failure in these areas.

Heat curing is not acceptable for NSF approval.

Guidance on techniques and required equipment to inspect a coating system incorporating Opti-Check OAP Technology can be found in SSPC-TU 11.

Refer to Product Information sheet for additional performance characteristics and properties.

SAFETY PRECAUTIONS

Refer to the MSDS sheet before use.

Published technical data and instructions are subject to change without notice. Contact your Sherwin-Williams representative for additional technical data and instructions.

WARRANTY

The Sherwin-Williams Company warrants our products to be free of manufacturing defects in accord with applicable Sherwin-Williams quality control procedures. Liability for products proven defective, if any, is limited to replacement of the defective product or the refund of the purchase price paid for the defective product as determined by Sherwin-Williams. NO OTHER WARRANTY OR GUARANTEE OF ANY KIND IS MADE BY SHERWIN-WILLIAMS, EXPRESSED OR IMPLIED, STATUTORY, BY OPERATION OF LAW OR OTHERWISE, INCLUDING MERCHANTABILITY AND FITNESS FOR A PARTICULAR PURPOSE.

DISCLAIMER

The information and recommendations set forth in this Product Data Sheet are based upon tests conducted by or on behalf of The Sherwin-Williams Company. Such information and recommendations set forth herein are subject to change and pertain to the product offered at the time of publication. Consult your Sherwin-Williams representative to obtain the most recent Product Data Information and Application Bulletin.

Protective & Marine Coatings

ENVIROLASTIC® 940 DTM
POLYASPARTIC URETHANE

PART A	B65-940	SERIES
PART B	B65V940	HARDENER

Revised: February 6, 2014

PRODUCT INFORMATION

5.52

PRODUCT DESCRIPTION

ENVIROLASTIC 940 DTM is a single coat, direct-to-metal urethane finish. It is a fast dry, polyaspartic urethane formulated to provide high build, high performance protection and gloss and color retention through airless spray.

- Single coat application
- Direct to metal
- Corrosion resistant
- High film build in one coat
- Cures quickly to improve productivity
- No gassing
- Outstanding application properties

PRODUCT CHARACTERISTICS

Finish:	Gloss
Color:	Wide range of colors possible
Volume Solids:	68% ± 2%, mixed, may vary by color
Weight Solids:	80% ± 2%, mixed, may vary by color
VOC (EPA Method 24):	265 g/L; 2.21 lb/gal, mixed, may vary by color
Mix Ratio:	2:1 by volume

Recommended Spreading Rate per coat:

	Minimum	Maximum
Wet mils (microns)	**9.0** (225)	**13.0** (325)
Dry mils (microns)	**6.0** (150)	**9.0** (225)
~Coverage sq ft/gal (m^2/L)	**121** (3.0)	**182** (4.5)
Theoretical coverage **sq ft/gal** (m^2/L) @ 1 mil / 25 microns dft	**1089** (26.7)	

NOTE: Brush or roll application may require multiple coats to achieve maximum film thickness and uniformity of appearance.

Drying Schedule @ 9.0 mils wet (225 microns):

	@ 35°F/1.6°C	@ 50°F/10°C	@ 77°F/25°C 50% RH	@ 120°F/49°C
To touch:	5 hours	3 hours	1 hour	30 minutes
To handle:	16 hours	7 hours	2 hours	1 hour
To recoat:				
minimum:	16 hours	7 hours	2 hours	1 hour
maximum:	3 months	3 months	3 months	45 days
To cure:	7 days	7 days	4 days	2 days
Pot Life:	4 hours	3 hours	2 hours	30 minutes
Sweat-in-Time:	None required			

If maximum recoat time is exceeded, abrade surface before recoating. Drying time is temperature, humidity, and film thickness dependent.

Shelf Life:	Part A - 24 months, unopened Part B - 24 months, unopened Store indoors at 40°F (4.5°C) to 100°F (38°C).
Flash Point:	57°F (14°C), mixed (Seta Flash)
Reducer/Clean Up:	
Below 80°F (27°C):	MEK, R6K10
Above 80°F (27°C):	Reducer R7K216
Brush / Roll:	Reducer R7K216

RECOMMENDED USES

- Direct to properly prepared steel and galvanizing in industrial environments
- Replaces conventional epoxy/urethane systems
- Ideal for maintenance or new construction applications
- Suitable for use in USDA inspected facilities
- Acceptable for use in high performance architectural applications
- Suitable for use in the Mining & Minerals Industry
- Not recommended for electrostatic spray or air-assisted airless spray

PERFORMANCE CHARACTERISTICS

Substrate*: Steel

Surface Preparation*: SSPC-SP10/NACE 2

System Tested*:

1 ct. Envirolastic 940 DTM @ 6.0-9.0 mils (150-225 microns) dft

*unless otherwise noted below

Test Name	Test Method	Results
Abrasion Resistance	ASTM D4060, CS17 wheel, 1000 cycles, 1 kg load	120 mg loss
Adhesion	ASTM D4541	1400 psi
Direct Impact Resistance	ASTM G14	60 in lb
Dry Heat Resistance	ASTM D2485	200°F (93°C)
Flexibility	ASTM D522, 180° bend, 3/4" mandrel	Passes
Pencil Hardness	ASTM D3363	H

continued on back

Protective & Marine Coatings

ENVIROLASTIC® 940 DTM
POLYASPARTIC URETHANE

PART A	B65-940	SERIES
PART B	B65V940	HARDENER

Revised: February 6, 2014

PRODUCT INFORMATION

5.52

RECOMMENDED SYSTEMS

	Dry Film Thickness / ct. Mils	(Microns)
Steel:		
1 ct. Envirolastic 940 DTM	6.0-9.0	(150-225)
Galvanizing:		
1 ct. DTM Wash Primer	0.7-1.3	(18-32)
1 ct. Envirolastic 940 DTM	6.0-9.0	(150-225)
Galvanizing:		
1 ct. Envirolastic 940 DTM	6.0-9.0	(150-225)
Steel, if primer is required:		
1 ct. Corothane I GalvaPac Zinc Primer	3.0-4.0*	(75-100)
1 ct. Envirolastic 940 DTM	6.0-9.0	(150-225)
Previously Painted Surfaces:		
1 ct. Envirolastic 940	4.0-7.0	(100-200)
Check Compatibility		

* other acceptable primers
- Fast Clad Zinc HS
- Macropoxy 646 Epoxy
- Steel Spec Epoxy Primer
- Zinc Clad III HS
- Zinc Clad IV

SURFACE PREPARATION

Surface must be clean, dry, and in sound condition. Remove all oil, dust, grease, dirt, loose rust, and other foreign material to ensure adequate adhesion.

Refer to product Application Bulletin for detailed surface preparation information.

The systems listed above are representative of the product's use, other systems may be appropriate.

DISCLAIMER

The information and recommendations set forth in this Product Data Sheet are based upon tests conducted by or on behalf of The Sherwin-Williams Company. Such information and recommendations set forth herein are subject to change and pertain to the product offered at the time of publication. Consult your Sherwin-Williams representative to obtain the most recent Product Data Information and Application Bulletin.

Minimum recommended surface preparation:

Iron & Steel: SSPC-SP6/NACE 3, 2 mil (50 micron) profile

Galvanizing: SSPC-SP16, 2 mil (50 micron) profile

Surface Preparation Standards

Condition of Surface	ISO 8501-1 BS7079:A1	Swedish Std. SIS055900	SSPC	NACE
White Metal	Sa 3	Sa 3	SP 5	1
Near White Metal	Sa 2.5	Sa 2.5	SP 10	2
Commercial Blast	Sa 2	Sa 2	SP 6	3
Brush-Off Blast	Sa 1	Sa 1	SP 7	4
Hand Tool Cleaning Rusted	C St 2	C St 2	SP 2	-
Hand Tool Cleaning Pitted & Rusted	D St 2	D St 2	SP 2	-
Power Tool Cleaning Rusted	C St 3	C St 3	SP 3	-
Power Tool Cleaning Pitted & Rusted	D St 3	D St 3	SP 3	-

TINTING

Tint with Maxitoner colorants only into Part A Ultra Deep at 100% tint strength and 150% tint strength for Extra White. Five minutes minimum mixing on a mechanical shaker is required for complete mixing of color.

APPLICATION CONDITIONS

Temperature: 35°F (1.6°C) minimum, 120°F (49°C) maximum
(air, surface, and material)
At least 5°F (2.8°C) above dew point

Relative humidity: 85% maximum

Refer to product Application Bulletin for detailed application information.

ORDERING INFORMATION

Packaging:

Part A: 2 qts. (1.9L) gallon can
Part B: 1 qt. (0.95L) quart can

Part A: 3 gallon (12.04L) pail
Part B: short filled 2 gallon (6.28L) pail

Weight: 11.4 ± 0.2 lb/gal ; 1.4 Kg/L
mixed, may vary with color

SAFETY PRECAUTIONS

Refer to the MSDS sheet before use.
Published technical data and instructions are subject to change without notice. Contact your Sherwin-Williams representative for additional technical data and instructions.

WARRANTY

The Sherwin-Williams Company warrants our products to be free of manufacturing defects in accord with applicable Sherwin-Williams quality control procedures. Liability for products proven defective, if any, is limited to replacement of the defective product or the refund of the purchase price paid for the defective product as determined by Sherwin-Williams. NO OTHER WARRANTY OR GUARANTEE OF ANY KIND IS MADE BY SHERWIN-WILLIAMS, EXPRESSED OR IMPLIED, STATUTORY, BY OPERATION OF LAW OR OTHERWISE, INCLUDING MERCHANTABILITY AND FITNESS FOR A PARTICULAR PURPOSE.

Protective & Marine Coatings

ENVIROLASTIC® 940 DTM
POLYASPARTIC URETHANE

PART A	B65-940	SERIES
PART B	B65V940	HARDENER

Revised: February 6, 2014

APPLICATION BULLETIN

5.52

SURFACE PREPARATIONS

Surface must be clean, dry, and in sound condition. Remove all oil, dust, grease, dirt, loose rust, and other foreign material to ensure adequate adhesion.

Iron & Steel
Remove all oil and grease from surface by Solvent Cleaning per SSPC-SP1. Minimum surface preparation is Commercial Blast Cleaning per SSPC-SP6/NACE 3. For better performance, use Near White Metal Blast Cleaning per SSPC-SP10/NACE 2. Blast clean all surfaces using a sharp, angular abrasive for optimum surface profile (2 mils / 50 microns). Prime any bare steel the same day as it is cleaned or before flash rusting occurs.

Aluminum
Remove all oil, grease, dirt, oxide and other foreign material by Solvent Cleaning per SSPC-SP1. Primer required.

Galvanized Steel
Surface Preparation Specification SSPC-SP 16 must be followed obtaining a surface profile of minimum 2.0 mils (50 microns).

Previously Painted Surfaces
If in sound condition, clean the surface of all foreign material. Smooth, hard or glossy coatings and surfaces should be dulled by abrading the surface. Apply a test area, allowing paint to dry one week before testing adhesion. If adhesion is poor, or if this product attacks the previous finish, removal of the previous coating may be necessary. If paint is peeling or badly weathered, clean surface to sound substrate and treat as a new surface as above.

Surface Preparation Standards

	Condition of Surface	ISO 8501-1 BS7079:A1	Swedish Std. SIS055900	SSPC	NACE
White Metal		Sa 3	Sa 3	SP 5	1
Near White Metal		Sa 2.5	Sa 2.5	SP 10	2
Commercial Blast		Sa 2	Sa 2	SP 6	3
Brush-Off Blast		Sa 1	Sa 1	SP 7	4
Hand Tool Cleaning	Rusted	C St 2	C St 2	SP 2	-
	Pitted & Rusted	D St 2	D St 2	SP 2	-
Power Tool Cleaning	Rusted	C St 3	C St 3	SP 3	-
	Pitted & Rusted	D St 3	D St 3	SP 3	-

APPLICATION CONDITIONS

Temperature:	35°F (1.6°C) minimum, 120°F (49°C) maximum (air, surface, and material) At least 5°F (2.8°C) above dew point
Relative humidity:	85% maximum

APPLICATION EQUIPMENT

The following is a guide. Changes in pressures and tip sizes may be needed for proper spray characteristics. Always purge spray equipment before use with listed reducer. Any reduction must be compliant with existing VOC regulations and compatible with the existing environmental and application conditions.

Reducer/Clean Up
Above 80°F .....Reducer R7K216
Below 80°F .....MEK, R6K10
Brush and roll.....Reducer R7K216

Airless Spray
Pump.....30:1
Pressure.....2800 - 3000 psi
Hose.....3/8" ID
Tip .....017" - .021"
Filter.....60 mesh
Reduction.....As needed up to 5% by volume

Conventional Spray
Gun .....Binks 95
Cap 63P
Fluid Tip 67
Atomization Pressure.....50-70 psi
Fluid Pressure.....20-25 psi
Reduction.....As needed, up to 10% by volume

Brush (small areas only)
Brush.....Natural bristle
Reduction.....As needed up to 5% by volume

Roller (small areas only)
Cover .....1/4" woven with solvent resistant core
Reduction.....As needed up to 5% by volume

If specific application equipment is not listed above, equivalent equipment may be substituted.

continued on back

Protective & Marine Coatings

ENVIROLASTIC® 940 DTM
POLYASPARTIC URETHANE

PART A	B65-940	SERIES
PART B	B65V940	HARDENER

Revised: February 6, 2014

APPLICATION BULLETIN

5.52

APPLICATION PROCEDURES

Surface preparation must be completed as indicated.

Mix contents of each component thoroughly with low speed power agitation. Make certain no pigment remains on the bottom of the can. Then combine 2 parts by volume of Part A with 1 part by volume of Part B. Thoroughly agitate the mixture with power agitation.

If reducer solvent is used, add only after both components have been thoroughly mixed.

Apply paint at the recommended film thickness and spreading rate as indicated below:

Recommended Spreading Rate per coat:

	Minimum	Maximum
Wet mils (microns)	**9.0** (225)	**13.0** (325)
Dry mils (microns)	**6.0** (150)	**9.0** (225)
~Coverage sq ft/gal (m^2/L)	**121** (3.0)	**182** (4.5)
Theoretical coverage **sq ft/gal** (m^2/L) @ 1 mil / 25 microns dft	**1089** (26.7)	

NOTE: Brush or roll application may require multiple coats to achieve maximum film thickness and uniformity of appearance.

Drying Schedule @ 9.0 mils wet (225 microns):

	@ 35°F/1.6°C	@ 50°F/10°C	@ 77°F/25°C *50% RH*	@ 120°F/49°C
To touch:	5 hours	3 hours	1 hour	30 minutes
To handle:	16 hours	7 hours	2 hours	1 hour
To recoat:				
minimum:	16 hours	7 hours	2 hours	1 hour
maximum:	3 months	3 months	3 months	45 days
To cure:	7 days	7 days	4 days	2 days
Pot Life:	4 hours	3 hours	2 hours	30 minutes
Sweat-in-Time:	None required			

If maximum recoat time is exceeded, abrade surface before recoating. Drying time is temperature, humidity, and film thickness dependent.

Application of coating above maximum or below minimum recommended spreading rate may adversely affect coating performance.

CLEAN UP INSTRUCTIONS

Clean spills and spatters immediately with MEK, R6K10. Clean tools immediately after use with MEK, R6K10. Follow manufacturer's safety recommendations when using any solvent.

DISCLAIMER

The information and recommendations set forth in this Product Data Sheet are based upon tests conducted by or on behalf of The Sherwin-Williams Company. Such information and recommendations set forth herein are subject to change and pertain to the product offered at the time of publication. Consult your Sherwin-Williams representative to obtain the most recent Product Data Information and Application Bulletin.

PERFORMANCE TIPS

Stripe coat all crevices, welds, and sharp angles to prevent early failure in these areas.

When using spray application, use a 50% overlap with each pass of the gun to avoid holidays, bare areas, and pinholes. If necessary, cross spray at a right angle.

Spreading rates are calculated on volume solids and do not include an application loss factor due to surface profile, roughness or porosity of the surface, skill and technique of the applicator, method of application, various surface irregularities, material lost during mixing, spillage, overthinning, climatic conditions, and excessive film build.

Excessive reduction of material can affect film build, appearance, and adhesion.

Do not use Quik-Thane Urethane Accelerator.

Do not apply the material beyond recommended pot life.

Do not mix previously catalyzed material with new.

In order to avoid blockage of spray equipment, clean equipment before use or before periods of extended downtime with MEK, R6K10.

Mixed coating is sensitive to water. Use water traps in all air lines. Moisture contact can reduce pot life and affect gloss and color.

Refer to Product Information sheet for additional performance characteristics and properties.

SAFETY PRECAUTIONS

Refer to the MSDS sheet before use.

Published technical data and instructions are subject to change without notice. Contact your Sherwin-Williams representative for additional technical data and instructions.

WARRANTY

The Sherwin-Williams Company warrants our products to be free of manufacturing defects in accord with applicable Sherwin-Williams quality control procedures. Liability for products proven defective, if any, is limited to replacement of the defective product or the refund of the purchase price paid for the defective product as determined by Sherwin-Williams. NO OTHER WARRANTY OR GUARANTEE OF ANY KIND IS MADE BY SHERWIN-WILLIAMS, EXPRESSED OR IMPLIED, STATUTORY, BY OPERATION OF LAW OR OTHERWISE, INCLUDING MERCHANTABILITY AND FITNESS FOR A PARTICULAR PURPOSE.

MATERIAL SAFETY DATA SHEET

B62W210
23 00

DATE OF PREPARATION
May 29, 2014

SECTION 1 — PRODUCT AND COMPANY IDENTIFICATION

PRODUCT NUMBER
B62W210
PRODUCT NAME
DURA-PLATE® UHS Ultra High Solids Epoxy (Part A), White Base
MANUFACTURER'S NAME
THE SHERWIN-WILLIAMS COMPANY
101 Prospect Avenue N.W.
Cleveland, OH 44115

Telephone Numbers and Websites

Product Information	(800) 524-5979 www.sherwin-williams.com
Regulatory Information	(216) 566-2902 www.paintdocs.com
Medical Emergency	(216) 566-2917
Transportation Emergency*	(800) 424-9300
**for Chemical Emergency ONLY (spill, leak, fire, exposure, or accident)*	

SECTION 2 — COMPOSITION/INFORMATION ON INGREDIENTS

% by Weight	CAS Number	Ingredient	Units	Vapor Pressure
9	**100-51-6**	**Phenylmethanol**		
		ACGIH TLV	Not Available	0.15 mm
		OSHA PEL	Not Available	
10	**17557-23-2**	**Alkyl Glycidyl Ether**		
		ACGIH TLV	Not Available	
		OSHA PEL	Not Available	
52	**25068-38-6**	**Epoxy Polymer**		
		ACGIH TLV	Not Available	
		OSHA PEL	Not Available	
4	**14807-96-6**	**Talc**		
		ACGIH TLV	2 mg/m3 as Resp. Dust	
		OSHA PEL	2 mg/m3 as Resp. Dust	
4	**13463-67-7**	**Titanium Dioxide**		
		ACGIH TLV	10 mg/m3 as Dust	
		OSHA PEL	10 mg/m3 Total Dust	
		OSHA PEL	5 mg/m3 Respirable Fraction	

SECTION 3 — HAZARDS IDENTIFICATION

ROUTES OF EXPOSURE
INHALATION of vapor or spray mist.
EYE or SKIN contact with the product, vapor or spray mist.

HMIS Codes

Health	2*
Flammability	1
Reactivity	0

EFFECTS OF OVEREXPOSURE
EYES: Irritation.
SKIN: Prolonged or repeated exposure may cause irritation.
INHALATION: Irritation of the upper respiratory system.

In a confined area vapors in high concentration may cause headache, nausea or dizziness.
Prolonged overexposure to hazardous ingredients in Section 2 may cause adverse chronic effects to the following organs or systems:
- the nervous system

SIGNS AND SYMPTOMS OF OVEREXPOSURE
Redness and itching or burning sensation may indicate eye or excessive skin exposure.
MEDICAL CONDITIONS AGGRAVATED BY EXPOSURE
May cause allergic skin reaction in susceptible persons or skin sensitization.

CANCER INFORMATION
For complete discussion of toxicology data refer to Section 11.

SECTION 4 — FIRST AID MEASURES

EYES: Flush eyes with large amounts of water for 15 minutes. Get medical attention.
SKIN: Wash affected area thoroughly with soap and water.
If irritation persists or occurs later, get medical attention.
Remove contaminated clothing and launder before re-use.
INHALATION: If affected, remove from exposure. Restore breathing. Keep warm and quiet.
INGESTION: Do not induce vomiting. Get medical attention immediately.

SECTION 5 — FIRE FIGHTING MEASURES

FLASH POINT	LEL	UEL	FLAMMABILITY CLASSIFICATION
> 200 °F PMCC	Not Applicable	Not Applicable	Not Applicable

EXTINGUISHING MEDIA
Carbon Dioxide, Dry Chemical, Foam
UNUSUAL FIRE AND EXPLOSION HAZARDS
Closed containers may explode (due to the build-up of pressure) when exposed to extreme heat.
During emergency conditions overexposure to decomposition products may cause a health hazard. Symptoms may not be immediately apparent. Obtain medical attention.
SPECIAL FIRE FIGHTING PROCEDURES
Full protective equipment including self-contained breathing apparatus should be used.
Water spray may be ineffective. If water is used, fog nozzles are preferable. Water may be used to cool closed containers to prevent pressure build-up and possible autoignition or explosion when exposed to extreme heat.

SECTION 6 — ACCIDENTAL RELEASE MEASURES

STEPS TO BE TAKEN IN CASE MATERIAL IS RELEASED OR SPILLED
Remove all sources of ignition. Ventilate the area.
Remove with inert absorbent.

SECTION 7 — HANDLING AND STORAGE

STORAGE CATEGORY
DOL Storage Class IIIB
PRECAUTIONS TO BE TAKEN IN HANDLING AND STORAGE
Keep container closed when not in use. Transfer only to approved containers with complete and appropriate labeling. Do not take internally. Keep out of the reach of children.

SECTION 8 — EXPOSURE CONTROLS/PERSONAL PROTECTION

PRECAUTIONS TO BE TAKEN IN USE
Use only with adequate ventilation.
Avoid contact with skin and eyes. Avoid breathing vapor and spray mist.
Wash hands after using.
This coating may contain materials classified as nuisance particulates (listed "as Dust" in Section 2) which may be present at hazardous levels only during sanding or abrading of the dried film. If no specific dusts are listed in Section 2, the applicable limits for nuisance dusts are ACGIH TLV 10 mg/m3 (total dust), 3 mg/m3 (respirable fraction), OSHA PEL 15 mg/m3 (total dust), 5 mg/m3 (respirable fraction).
VENTILATION
Local exhaust preferable. General exhaust acceptable if the exposure to materials in Section 2 is maintained below applicable exposure limits. Refer to OSHA Standards 1910.94, 1910.107, 1910.108.
RESPIRATORY PROTECTION
If personal exposure cannot be controlled below applicable limits by ventilation, wear a properly fitted organic vapor/particulate respirator approved by NIOSH/MSHA for protection against materials in Section 2.
When sanding or abrading the dried film, wear a dust/mist respirator approved by NIOSH/MSHA for dust which may be generated from this product, underlying paint, or the abrasive.
PROTECTIVE GLOVES
Wear gloves which are recommended by glove supplier for protection against materials in Section 2.
EYE PROTECTION
Wear safety spectacles with unperforated sideshields.
OTHER PROTECTIVE EQUIPMENT
Use of barrier cream on exposed skin is recommended.
OTHER PRECAUTIONS
This product must be mixed with other components before use. Before opening the packages, READ AND FOLLOW WARNING LABELS ON ALL COMPONENTS.

SECTION 9 — PHYSICAL AND CHEMICAL PROPERTIES

PRODUCT WEIGHT	11.20 lb/gal	1341 g/l
SPECIFIC GRAVITY	1.35	
BOILING POINT	396 - 405 °F	202 - 207 °C
MELTING POINT	Not Available	
VOLATILE VOLUME	11%	
EVAPORATION RATE	Slower than ether	
VAPOR DENSITY	Heavier than air	
SOLUBILITY IN WATER	Not Available	

VOLATILE ORGANIC COMPOUNDS (VOC Theoretical - As Packaged)

0.97 lb/gal	117 g/l	Less Water and Federally Exempt Solvents
0.97 lb/gal	117 g/l	Emitted VOC

SECTION 10 — STABILITY AND REACTIVITY

STABILITY — Stable

CONDITIONS TO AVOID

None known.

INCOMPATIBILITY

None known.

HAZARDOUS DECOMPOSITION PRODUCTS

By fire: Carbon Dioxide, Carbon Monoxide

HAZARDOUS POLYMERIZATION

Will not occur

SECTION 11 — TOXICOLOGICAL INFORMATION

CHRONIC HEALTH HAZARDS

IARC's Monograph No. 93 reports there is sufficient evidence of carcinogenicity in experimental rats exposed to titanium dioxide but inadequate evidence for carcinogenicity in humans and has assigned a Group 2B rating. In addition, the IARC summary concludes, "No significant exposure to titanium dioxide is thought to occur during the use of products in which titanium is bound to other materials, such as paint."

TOXICOLOGY DATA

CAS No.	Ingredient Name			
100-51-6	**Phenylmethanol**			
		LC50 RAT	4HR	Not Available
		LD50 RAT		Not Available
17557-23-2	**Alkyl Glycidyl Ether**			
		LC50 RAT	4HR	Not Available
		LD50 RAT		8870 mg/kg
25068-38-6	**Epoxy Polymer**			
		LC50 RAT	4HR	Not Available
		LD50 RAT		Not Available
14807-96-6	**Talc**			
		LC50 RAT	4HR	Not Available
		LD50 RAT		Not Available
13463-67-7	**Titanium Dioxide**			
		LC50 RAT	4HR	Not Available
		LD50 RAT		Not Available

SECTION 12 — ECOLOGICAL INFORMATION

ECOTOXICOLOGICAL INFORMATION

No data available.

SECTION 13 — DISPOSAL CONSIDERATIONS

WASTE DISPOSAL METHOD

Waste from this product is not hazardous as defined under the Resource Conservation and Recovery Act (RCRA) 40 CFR 261.

Incinerate in approved facility. Do not incinerate closed container. Dispose of in accordance with Federal, State/Provincial, and Local regulations regarding pollution.

SECTION 14 — TRANSPORT INFORMATION

Multi-modal shipping descriptions are provided for informational purposes and do not consider container sizes. The presence of a shipping description for a particular mode of transport (ocean, air, etc.), does not indicate that the product is packaged suitably for that mode of transport. All packaging must be reviewed for suitability prior to shipment, and compliance with the applicable regulations is the sole responsibility of the person offering the product for transport.

US Ground (DOT)

Not Regulated for Transportation.

Canada (TDG)

Not Regulated for Transportation.

IMO

Not Regulated for Transportation.

IATA/ICAO

Not Regulated for Transportation.

SECTION 15 — REGULATORY INFORMATION

SARA 313 *(40 CFR 372.65C)* SUPPLIER NOTIFICATION

CAS No.	CHEMICAL/COMPOUND	% by WT	% Element

No ingredients in this product are subject to SARA 313 (40 CFR 372.65C) Supplier Notification.

CALIFORNIA PROPOSITION 65

WARNING: This product contains chemicals known to the State of California to cause cancer and birth defects or other reproductive harm.

TSCA CERTIFICATION

All chemicals in this product are listed, or are exempt from listing, on the TSCA Inventory.

SECTION 16 — OTHER INFORMATION

This product has been classified in accordance with the hazard criteria of the Canadian Controlled Products Regulations (CPR) and the MSDS contains all of the information required by the CPR.

The above information pertains to this product as currently formulated, and is based on the information available at this time. Addition of reducers or other additives to this product may substantially alter the composition and hazards of the product. Since conditions of use are outside our control, we make no warranties, express or implied, and assume no liability in connection with any use of this information.

MATERIAL SAFETY DATA SHEET

B65V940
05 00

DATE OF PREPARATION
Jan 7, 2015

SECTION 1 — PRODUCT AND COMPANY IDENTIFICATION

PRODUCT NUMBER
B65V940
PRODUCT NAME
ENVIROLASTIC® 940 DTM (Part B), Hardener
MANUFACTURER'S NAME
THE SHERWIN-WILLIAMS COMPANY
101 Prospect Avenue N.W.
Cleveland, OH 44115

Telephone Numbers and Websites

Product Information	(800) 524-5979 www.sherwin-williams.com
Regulatory Information	(216) 566-2902 www.paintdocs.com
Medical Emergency	(216) 566-2917
Transportation Emergency*	(800) 424-9300
**for Chemical Emergency ONLY (spill, leak, fire, exposure, or accident)*	

SECTION 2 — COMPOSITION/INFORMATION ON INGREDIENTS

% by Weight	CAS Number	Ingredient	Units	Vapor Pressure
15	**123-86-4**	**n-Butyl Acetate**		
		ACGIH TLV	150 PPM	10 mm
		ACGIH TLV	200 PPM STEL	
		OSHA PEL	150 PPM	
		OSHA PEL	200 PPM STEL	
0.1	**822-06-0**	**Hexamethylene Diisocyanate (max.)**		
		ACGIH TLV	0.005 PPM	0.05 mm
		OSHA PEL	Not Available	
0.3	**4098-71-9**	**Isophorone Diisocyanate (max.)**		
		ACGIH TLV	0.005 ppm (Skin)	
		OSHA PEL	0.005 ppm (Skin)	
		OSHA PEL	0.02 ppm (Skin) STEL	
30	**Proprietary**	**Hexamethylene Diisocyanate Polymer**		
		ACGIH TLV	Not Available	
		OSHA PEL	Not Available	
55	**Proprietary**	**Isophorone Diisocyanate Polymer**		
		ACGIH TLV	Not Available	
		OSHA PEL	Not Available	

SECTION 3 — HAZARDS IDENTIFICATION

ROUTES OF EXPOSURE
INHALATION of vapor or spray mist.
EYE or SKIN contact with the product, vapor or spray mist.

HMIS Codes

Health	3*
Flammability	2
Reactivity	0

EFFECTS OF OVEREXPOSURE
EYES: Irritation.
SKIN: Prolonged or repeated exposure may cause irritation.
INHALATION: Irritation of the upper respiratory system.

May cause nervous system depression. Extreme overexposure may result in unconsciousness and possibly death.
Prolonged overexposure to hazardous ingredients in Section 2 may cause adverse chronic effects to the following organs or systems:
- the hematopoietic (blood-forming) system

SIGNS AND SYMPTOMS OF OVEREXPOSURE
Headache, dizziness, nausea, and loss of coordination are indications of excessive exposure to vapors or spray mists.
Redness and itching or burning sensation may indicate eye or excessive skin exposure.

MEDICAL CONDITIONS AGGRAVATED BY EXPOSURE

May cause allergic respiratory and/or skin reaction in susceptible persons or sensitization. This effect may be delayed several hours after exposure.

Persons sensitive to isocyanates will experience increased allergic reaction on repeated exposure.

CANCER INFORMATION

For complete discussion of toxicology data refer to Section 11.

SECTION 4 — FIRST AID MEASURES

EYES: Flush eyes with large amounts of water for 15 minutes. Get medical attention.

SKIN: Wash affected area thoroughly with soap and water.
Remove contaminated clothing and launder before re-use.

INHALATION: If any breathing problems occur during use, **LEAVE THE AREA** and get fresh air. If problems remain or occur later, **IMMEDIATELY** get medical attention.

INGESTION: Do not induce vomiting. Get medical attention immediately.

SECTION 5 — FIRE FIGHTING MEASURES

FLASH POINT	LEL	UEL	FLAMMABILITY CLASSIFICATION
113 °F PMCC	1.4	7.6	Combustible, Flash above 99 and below 200 °F

EXTINGUISHING MEDIA

Carbon Dioxide, Dry Chemical, Foam

UNUSUAL FIRE AND EXPLOSION HAZARDS

Closed containers may explode when exposed to extreme heat.

Application to hot surfaces requires special precautions.

During emergency conditions overexposure to decomposition products may cause a health hazard. Symptoms may not be immediately apparent. Obtain medical attention.

SPECIAL FIRE FIGHTING PROCEDURES

Full protective equipment including self-contained breathing apparatus should be used.

Water spray may be ineffective. If water is used, fog nozzles are preferable. Water may be used to cool closed containers to prevent pressure build-up and possible autoignition or explosion when exposed to extreme heat.

SECTION 6 — ACCIDENTAL RELEASE MEASURES

STEPS TO BE TAKEN IN CASE MATERIAL IS RELEASED OR SPILLED

Remove all sources of ignition. Ventilate the area.

All personnel in the area should be protected as in Section 8.

Cover spill with absorbent material. Deactivate spilled material with a 10% ammonium hydroxide solution (household ammonia). After 10 minutes, collect in open containers and add more ammonia. Cover loosely. Wash spill area with soap and water.

SECTION 7 — HANDLING AND STORAGE

STORAGE CATEGORY

DOL Storage Class II

PRECAUTIONS TO BE TAKEN IN HANDLING AND STORAGE

Contents are COMBUSTIBLE. Keep away from heat and open flame.

Consult NFPA Code. Use approved Bonding and Grounding procedures.

Keep container closed when not in use. Transfer only to approved containers with complete and appropriate labeling. Do not take internally. Keep out of the reach of children.

SECTION 8 — EXPOSURE CONTROLS/PERSONAL PROTECTION

PRECAUTIONS TO BE TAKEN IN USE

NO PERSON SHOULD USE THIS PRODUCT, OR BE IN THE AREA WHERE IT IS BEING USED, IF THEY HAVE CHRONIC (LONG-TERM) LUNG OR BREATHING PROBLEMS OR IF THEY EVER HAD A REACTION TO ISOCYANATES.

Use only with adequate ventilation.

Avoid contact with skin and eyes. Avoid breathing vapor and spray mist.

Wash hands after using.

This coating may contain materials classified as nuisance particulates (listed "as Dust" in Section 2) which may be present at hazardous levels only during sanding or abrading of the dried film. If no specific dusts are listed in Section 2, the applicable limits for nuisance dusts are ACGIH TLV 10 mg/m3 (total dust), 3 mg/m3 (respirable fraction), OSHA PEL 15 mg/m3 (total dust), 5 mg/m3 (respirable fraction).

VENTILATION

Local exhaust preferable. General exhaust acceptable if the exposure to materials in Section 2 is maintained below applicable exposure limits. Refer to OSHA Standards 1910.94, 1910.107, 1910.108.

RESPIRATORY PROTECTION

Where overspray is present, a positive pressure air supplied respirator (TC19C NIOSH/MSHA approved) should be worn. If unavailable, a properly fitted organic vapor/particulate respirator approved by NIOSH/MSHA for protection against materials in Section 2 may be effective. Follow respirator manufacturers directions for use. Wear the respirator for the whole time of spraying and until all vapors and mists are gone. **NO PERSONS SHOULD BE ALLOWED IN THE AREA WHERE THIS PRODUCT IS BEING USED UNLESS EQUIPPED WITH THE SAME RESPIRATOR PROTECTION RECOMMENDED FOR THE PAINTERS.**

When sanding or abrading the dried film, wear a dust/mist respirator approved by NIOSH/MSHA for dust which may be generated from this product, underlying paint, or the abrasive.

PROTECTIVE GLOVES

To prevent skin contact, wear gloves which are recommended by glove supplier for protection against materials in Section 2.

EYE PROTECTION

Wear safety spectacles with unperforated sideshields.

OTHER PROTECTIVE EQUIPMENT

Use barrier cream on exposed skin.

OTHER PRECAUTIONS

This product must be mixed with other components before use. Before opening the packages, READ AND FOLLOW WARNING LABELS ON ALL COMPONENTS.

Intentional misuse by deliberately concentrating and inhaling the contents can be harmful or fatal.

SECTION 9 — PHYSICAL AND CHEMICAL PROPERTIES

PRODUCT WEIGHT	8.80 lb/gal	1054 g/l
SPECIFIC GRAVITY	1.06	
BOILING POINT	255 - 264 °F	123 - 128 °C
MELTING POINT	Not Available	
VOLATILE VOLUME	18%	
EVAPORATION RATE	Slower than ether	
VAPOR DENSITY	Heavier than air	
SOLUBILITY IN WATER	Not Available	

VOLATILE ORGANIC COMPOUNDS (VOC Theoretical - As Packaged)

1.32 lb/gal	158 g/l	Less Water and Federally Exempt Solvents
1.32 lb/gal	158 g/l	Emitted VOC

SECTION 10 — STABILITY AND REACTIVITY

STABILITY — Stable

CONDITIONS TO AVOID

None known.

INCOMPATIBILITY

Contamination with Water, Alcohols, Amines and other compounds which react with isocyanates, may result in dangerous pressure in, and possible bursting of, closed containers.

HAZARDOUS DECOMPOSITION PRODUCTS

By fire: Carbon Dioxide, Carbon Monoxide , Oxides of Nitrogen, possibility of Hydrogen Cyanide

HAZARDOUS POLYMERIZATION

Will not occur

SECTION 11 — TOXICOLOGICAL INFORMATION

CHRONIC HEALTH HAZARDS

No ingredient in this product is an IARC, NTP or OSHA listed carcinogen.

Reports have associated repeated and prolonged overexposure to solvents with permanent brain and nervous system damage.

TOXICOLOGY DATA

CAS No.	Ingredient Name			
123-86-4	**n-Butyl Acetate**			
		LC50 RAT	4HR	2000 ppm
		LD50 RAT		13100 mg/kg
822-06-0	**Hexamethylene Diisocyanate (max.)**			
		LC50 RAT	4HR	Not Available
		LD50 RAT		738 mg/kg
4098-71-9	**Isophorone Diisocyanate (max.)**			
		LC50 RAT	4HR	Not Available
		LD50 RAT		2500. mg/kg
Proprietary	**Hexamethylene Diisocyanate Polymer**			
		LC50 RAT	4HR	Not Available
		LD50 RAT		Not Available
Proprietary	**Isophorone Diisocyanate Polymer**			
		LC50 RAT	4HR	Not Available
		LD50 RAT		5000 mg/kg

SECTION 12 — ECOLOGICAL INFORMATION

ECOTOXICOLOGICAL INFORMATION

No data available.

SECTION 13 — DISPOSAL CONSIDERATIONS

WASTE DISPOSAL METHOD

Waste from this product may be hazardous as defined under the Resource Conservation and Recovery Act (RCRA) 40 CFR 261.
Waste must be tested for ignitability to determine the applicable EPA hazardous waste numbers.
Incinerate in approved facility. Do not incinerate closed container. Dispose of in accordance with Federal, State/Provincial, and Local regulations regarding pollution.

SECTION 14 — TRANSPORT INFORMATION

Multi-modal shipping descriptions are provided for informational purposes and do not consider container sizes. The presence of a shipping description for a particular mode of transport (ocean, air, etc.), does not indicate that the product is packaged suitably for that mode of transport. All packaging must be reviewed for suitability prior to shipment, and compliance with the applicable regulations is the sole responsibility of the person offering the product for transport.

US Ground (DOT)

May be Classed as a Combustible Liquid for U.S. Ground.
UN1263, PAINT RELATED MATERIAL, 3, PG III, (ERG#128)

DOT (Dept of Transportation) Hazardous Substances & Reportable Quantities

n-Butyl acetate 5000 lb RQ

Bulk Containers may be Shipped as (check reportable quantities):

UN1263, PAINT RELATED MATERIAL, COMBUSTIBLE LIQUID, PG III, (ERG#128)

Canada (TDG)

May be Classed as a Combustible Liquid for Canadian Ground.
UN1263, PAINT RELATED MATERIAL, CLASS 3, PG III, (ERG#128)

IMO

5 Liters (1.3 Gallons) and Less may be Shipped as Limited Quantity.
UN1263, PAINT RELATED MATERIAL, CLASS 3, PG III, (45 C c.c.), EmS F-E, S-E

IATA/ICAO

UN1263, PAINT RELATED MATERIAL, 3, PG III

SECTION 15 — REGULATORY INFORMATION

SARA 313 *(40 CFR 372.65C)* SUPPLIER NOTIFICATION

CAS No.	CHEMICAL/COMPOUND	% by WT	% Element

No ingredients in this product are subject to SARA 313 (40 CFR 372.65C) Supplier Notification.

TSCA CERTIFICATION

All chemicals in this product are listed, or are exempt from listing, on the TSCA Inventory.

SECTION 16 — OTHER INFORMATION

This product has been classified in accordance with the hazard criteria of the Canadian Controlled Products Regulations (CPR) and the MSDS contains all of the information required by the CPR.

The above information pertains to this product as currently formulated, and is based on the information available at this time. Addition of reducers or other additives to this product may substantially alter the composition and hazards of the product. Since conditions of use are outside our control, we make no warranties, express or implied, and assume no liability in connection with any use of this information.

4 – DETAILED TECHNICAL DOCUMENTATION

4.3 – SHOP DRAWINGS SUBMITTAL PACKAGES

4.3.2 – MBBR

LEFT BLANK



TECHNICAL DOCUMENTATION

This page is intentionally left blank

Project name:	IQALUIT
Project#:	5000218036
Document #:	5000218036_DS_0002_GEN_VWT
by:	BB
chkd:	GH
appvd:	CB

SUBMITTAL PACKAGE

MBBR - REV 2

This page is intentionally left blank

Project name: IQALUIT

Project#: 5000218036

Document #: 5000218036_DS_0002_GEN_VWT

by: BB

chkd: GH

appvd: CB

PROCESS DATASHEET

OIM manual section: 4.3.2.1

This page is intentionally left blank

	VEOLIA				VWT DOC#	PDS_0002_MBBR		
					Project #	5000218036		
					Date	2019-05-24		
					MBBR			
CLIENT	REV	DESCRIPTION			DATE	By	Chkd	PAR	App
	1	FOR APPROVAL			2018-09-26	G.H.	G.P.		C.B.
CITY OF IQALUIT	2	FOR APPROVAL			2019-05-24	F.V.	G.P.		C.B.
	3								
Project	4								
	5								
WWTP IQALUIT	6								
	7								
	TAG:	MBBR#1 / MBBR#2					P&ID:		REV
GENERAL	Technology				-	MBBR			
	Number of Trains				-	2			
	Number of units				-	4			
	Number of units per train				-	2			
ENVIRONNMENT CONDITIONS	Equipment Location					Indoor			
	Min. Temperature				°C	5			
	Max . Temperature				°C	45			
	Max. Humidity				%	95			
	Corrosive Atmosphere					Non corrosif			
	Freeze					N/A			
	Comments					N/A			
SAFETY	Electrical Classification					Unclassified			
PERFORMANCE	Application					BOD Removal			
	Design Temperature				deg C	5			
	Nominal Capacity per unit				m3/d	2993			
	Max Capacity per unit (Hydraulic Design)				m3/d	6523			
	Hydraulic Retention time (at nominal flowrate)				hrs	2.1 AAF & 1.8 MMF			
	Effluent quality					Refer to Offer			
TECHNICAL DESCRIPTION	MBBR #1	Tank Dimensions	Type		-	Concrete / On site poured			
			Manufacturer		-	Tank connection			
			Model		-	N/A			
			Internal Length/Width (indicative)		mm	4930 /4845			2
			Total Height		mm	4725			
			Water depth		mm	4 100			
			Free board		mm	625			
		Media	Type		-	K5 AnoxKaldnes			
			Diameter / Thickness		mm	25 x4			
			Material		-	Polyethylene			
			Volume		m3	86			2
			Initial filling rate		%	45			
			Max. future filling rate		%	60			
		Aeration Grids	Number of grids per tank		-	2			
			Number of branches per grid		-	7			
			Holes size / Bubbles Type		mm	4 / Coarse bubbles			
			Number of holes per branch		-	20			
			Grids Header size		mm	100			
			Branches size		mm	32			
			Material		-	304L SS (sh10)			
		Sieve	Type		-	Perforated Basket			
			Total number of sieves per tank		-	4			
			Number of sieves per tank -inlet		-	0			
			Number of sieves per tank - outlet		-	4			
			Model		-	PRSNGU204034			
			Length		mm	1 000			
			Diameter		mm	450			
			Material		-	304L SS			
			Openings size		-	15 mm (R15T20)			

	VEOLIA				VWT DOC#		PDS_0002_MBBR		
					Project #		5000218036		
					Date		2019-05-24		
					MBBR				
CLIENT	REV	DESCRIPTION		DATE	By	Chkd	PAR	App	
	1	FOR APPROVAL		2018-09-26	G.H.	G.P.		C.B.	
CITY OF IQALUIT	2	FOR APPROVAL		2019-05-24	F.V.	G.P.		C.B.	
	3								
Project	4								
	5								
WWTP IQALUIT	6								
	7								
	TAG:	MBBR#1 / MBBR#2				P&ID:		REV	
TECHNICAL DESCRIPTION	MBBR #2	Tank Dimensions	Type	-	Concrete / On site poured				
			Manufacturer	-	Tank connection				
			Model	-	N/A				
			Internal Length/Width (indicative)	mm	4930 /4845			2	
			Total Height	mm	4725			2	
			Water depth	mm	4 100				
			Free board	mm	625				
		Media	Type	-	K5 AnoxKaldnes				
			Diameter / Thickness	mm	25 x4				
			Material	-	Polyethylene				
			Volume	m3	86			2	
			Initial filling rate	%	45				
			Max. future filling rate	%	60				
		Aeration Grids	Number of grids per tank	-	2				
			Number of branches per grid	-	7				
			Holes size / Bubbles Type	mm	4 / Coarse bubbles				
			Number of holes per branch	-	20				
			Grids Header size	mm	100				
			Branches size	mm	32				
			Material	-	304L SS (sh10)				
		Sieve	Type	-	Perforated Basket				
			Total number of sieves per tank	-	4				
			Number of sieves per tank -inlet	-	0				
			Number of sieves per tank - outlet	-	4				
			Model	-	PRSNGU204034				
			Length	mm	1 000				
			Diameter	mm	450				
			Material	-	304L SS				
			Openings size	-	15 mm (R15T20)				
TECHNICAL DESCRIPTION	REQUIRED AERATION	Blower	Brand/Model	-	AERZEN				
			Number	-	3				
			Flow	SCFM	460				
			Power	-	25 HP				
		Distribution	Diameter	mm	100 (By-others)				
			Number	-	2 (By-others)				
CHEMICALS	NA	Antimousse	Flowrate (@max. flowrate)	lph	NA				
			Flowrate (@avg. flowrate)	lph	NA				
			Note		NA				
			Recommend Product (municiapl MBBR)		NA				
UTILITIES	Service Air for probe cleaning		Flowrate	L/min	NA				
			Pressure	PSIG	NA				
OTHER MATERIALS OF CONSTRUCTION	Tank				Concrete / On site poured				
	Wall				N/A				
	Sieves supports				N/A				
	Piping				SS 304L				

	VEOLIA				VWT DOC#	PDS_0002_MBBR			
					Project #	5000218036			
					Date	2019-05-24			
					MBBR				
CLIENT	REV	DESCRIPTION		DATE	By	Chkd	PAR	App	
	1	FOR APPROVAL		2018-09-26	G.H.	G.P.		C.B.	
CITY OF IQALUIT	2	FOR APPROVAL		2019-05-24	F.V.	G.P.		C.B.	
	3								
Project	4								
	5								
WWTP IQALUIT	6								
	7								
	TAG:	MBBR#1 / MBBR#2				P&ID:		REV	
INSTRUMENTATIONS	X	High High Level Switch	Manufacturer	-	XYLEM				
			Diam. | Model	-	ENM10 (13m)				
			Quantity	-	4				
		Flowmeter (Influent Line)	Manufacturer	-	NA				
			Diam. | Model	-	NA	N/A			
			Quantity	-	NA				
	X	DO	Manufacturer	-	HACH				
			Diam. | Model	-	DO Probe/7,7 Cable/Air Blast Cap				
			Quantity	-	4				
	NA	Foam Detector	Manufacturer	-					
			Diam. | Model	-					
			Quantity	-					
	NA	Ammonia	Manufacturer	-					
			Diam. | Model	-					
			Quantity	-	0				
	NA	pH meter	Manufacturer	-					
			Diam. | Model	-					
			Quantity	-	0				
	NA	Level meter	Manufacturer	-					
			Diam. | Model	-					
			Quantity	-	0				
VALVES	NA	Influent Line Isolation Valve	Manufacturer	-					
			Diam. | Model	-					
			Quantity	-					
	NA	Influent Line Modulating Valve	Manufacturer	-					
			Diam. | Model	-					
			Quantity	-					
	NA	Blower Isolation Valve	Manufacturer	-					
			Diam. | Model	-					
			Quantity	-					
	NA	Reactor Inlet Isolation Valve	Manufacturer	-					
			Diam. | Model	-					
			Quantity						
	NA	Reactor Air Inlet Isolation Valve	Manufacturer	-					
			Diam. | Model	-					
			Quantity						
	NA	Chemical Cleaning Valve	Manufacturer	-					
			Diam. | Model	-					
			Quantity						
	NA	DO Sensor Solenoid valve	Manufacturer	-					
			Diam. | Model	-					
			Quantity						
	NA	Air DO Sensor Isolation valve	Manufacturer	-					
			Diam. | Model	-					
			Quantity						

	VEOLIA				VWT DOC#		PDS_0002_MBBR		
					Project #		5000218036		
					Date		2019-05-24		
					MBBR				
	CLIENT	REV	DESCRIPTION		DATE	By	Chkd	PAR	App
		1	FOR APPROVAL		2018-09-26	G.H.	G.P.		C.B.
	CITY OF IQALUIT	2	FOR APPROVAL		2019-05-24	F.V.	G.P.		C.B.
		3							
	Project	4							
	WWTP IQALUIT	5							
		6							
		7							
		TAG:	MBBR#1 / MBBR#2				P&ID:		REV
	METALWORKS	NA	Grating	Dimensions		N/A			
				Material		N/A			
		NA	Guardrails	Dimensions		N/A			
				Material		N/A			
		NA	Access Hatches	Dimensions		N/A			
				Material		N/A			
		NA		Dimensions		N/A			
				Material		N/A			
	ACCESSORIES	Lifting Lugs				N/A			
		Anchors				N/A			
	APPROVAL & CERTIFICATIONS	Control Panel				N/A			2
		Precast concrete				CSA			
		Specification				N/A			

Project name: IQALUIT

Project#: 5000218036

Document #: 5000218036_DS_0002_GEN_VWT

by: BB

chkd: GH

appvd: CB

SUPPLIER TECHNICAL DATASHEETS

OIM manual section: 4.3.2.2

This page is intentionally left blank

CS-418-000 : Identification sheet

VWTC PROJECT NUMBER:	Iqaluit WWTP	REV:	01
PROJECT NAME:	5000218036	SUBMITTED TO (COMPANY):	
ENGINEER:	G. HÉBERT	SUBMITTED TO (RESPONSIBLE)	
PROJECT MANAGER:	C. BEKAERT	PROJECT NUM REFERENCE.:	
PHONE NUMBER:		LOT NUMBER:	

SUPPLIER	EQPT CODE	EQPT TAG NO	DIA	DESCRIPTION	INFO 1	INFO 2	INFO 3	APPLIC.	NOTE	REV
HACH	ST-418-107	AIT-02-211 / AE-02-211	N/A	DO ANALYSER	MANUFACTURER: HACH// MODEL: 9020000/LXV404.99.00552/5796000/9253500/6860000 //NOTES: C/W CONTROLLER (2 inputs) /DIGITAL EXTENSION CABLE, 7.7m/AIR BLAST HARDWARE COMPONENTS/ADD. OUTPUT FOR TEMP./High Output Air Blast Cleaning System, 115 Vac	N/A	N/A			1
HACH	ST-418-107	AIT-02-212 / AE-02-212	N/A	DO ANALYSER	MANUFACTURER: HACH// MODEL: 9020000/LXV404.99.00552/5796000/9253500/6860000 //NOTES: C/W CONTROLLER (2 inputs) /DIGITAL EXTENSION CABLE, 7.7m/AIR BLAST HARDWARE COMPONENTS/ADD. OUTPUT FOR TEMP./High Output Air Blast Cleaning System, 115 Vac	N/A	N/A			1

SUPPLIER	EQPT CODE	EQPT TAG NO	DIA	DESCRIPTION	INFO 1	INFO 2	INFO 3	APPLIC.	NOTE	REV
HACH	ST-418-107	AIT-02-221 / AE-02-221	N/A	DO ANALYSER	MANUFACTURER: HACH// MODEL: 9020000/LXV404.99.00552/5796000/9253500/6860000 //NOTES: C/W CONTROLLER (2 inputs) /DIGITAL EXTENSION CABLE, 7.7m/AIR BLAST HARDWARE COMPONENTS/ADD. OUTPUT FOR TEMP./High Output Air Blast Cleaning System, 115 Vac	N/A	N/A			1
HACH	ST-418-107	AIT-02-222 / AE-02-222	N/A	DO ANALYSER	MANUFACTURER: HACH// MODEL: 9020000/LXV404.99.00552/5796000/9253500/6860000 //NOTES: C/W CONTROLLER (2 inputs) /DIGITAL EXTENSION CABLE, 7.7m/AIR BLAST HARDWARE COMPONENTS/ADD. OUTPUT FOR TEMP./High Output Air Blast Cleaning System, 115 Vac	N/A	N/A			1

Dissolved Oxygen: Hach LDO® Probe, Model 2

Applications

- Wastewater
- Industrial Water
- Drinking Water



Take "No" for an answer when measuring dissolved oxygen with the next generation Hach LDO probe.

No Calibration Required

The Hach LDO probe is ready to work in your process right out of the box with no calibration required for the entire 2 year life of the sensor cap.

No Membranes to Replace

There is virtually no maintenance with Hach's breakthrough luminescent technology, as there are no membranes to replace, no electrolyte solution to replenish, and no anode or cathode to clean.

No Missed Cleaning Cycles

Customizable service indicators trigger a service message so that a cleaning cycle is never missed.

No Drift

A cutting-edge 3D calibration procedure at the factory makes oxygen measurement with the Hach LDO probe more accurate than ever before.

No Complications

A robust new design gives the Hach LDO enhanced durability and reduced size for easier handling.

*Specifications**

Measuring Range	0 - 20.00 ppm 0 - 20.0 mg/L 0 - 200% saturation
Accuracy	±0.1 ppm Below 5 ppm ±0.2 ppm Above 5 ppm Temperature: ±0.2°C
Response Time	at 20ºC: To 95% in less than 60 seconds To 90% in less than 40 seconds
Resolution	0.01 ppm (mg/L) / 0.1% saturation
Repeatability	±0.1 ppm (mg/L)
Operating Temperature	0 to 50°C (32 to 122°F)
Flow Rate	None required
Sensor Immersion Depth	Pressure Limits at 34 m 345 kPa (112 ft.), 345 kPa (50 psi), maximum; accuracy may not be maintained at this depth
Transmission Distance	1000 m (3280 ft.) maximum when used with a termination box
Cable Length	10 m
Wetted Materials	Sensor Cap: Acrylic; Probe Body: CPVC, Polyurethane, Viton, Noryl, 316 Stainless Steel
Dimensions (D x L)	1.95 in x 10.05 in (49.53 mm x 255.27 mm)
Weight	2.2 lbs. (1 kg)

**Subject to change without notice.*

Principal of Operation

The HACH LDO sensor is coated with a luminescent material. Blue light from an LED is transmitted to the sensor surface. The blue light excites the luminescent material. As the material relaxes it emits red light. The time for the red light to be emitted is measured. Between the flashes of blue light, a red LED is flashed on the sensor and used as an internal reference.

Increased oxygen in the sample decreases the time it takes for the red light to be emitted. The time measurements correlate to the oxygen concentration.

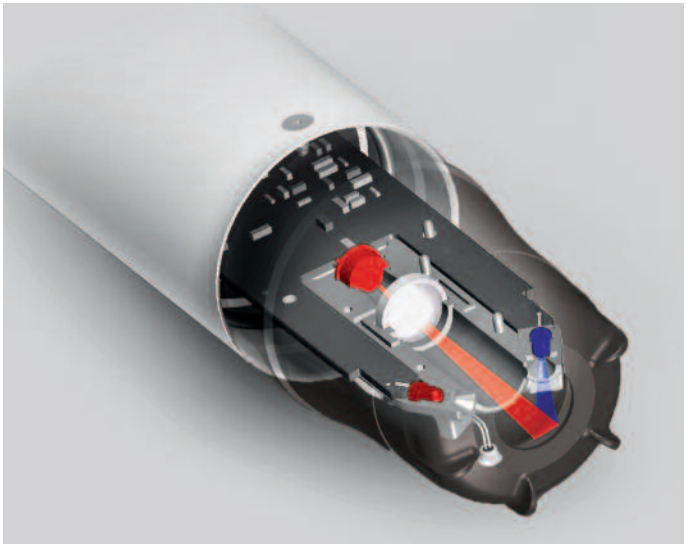

Dimensions

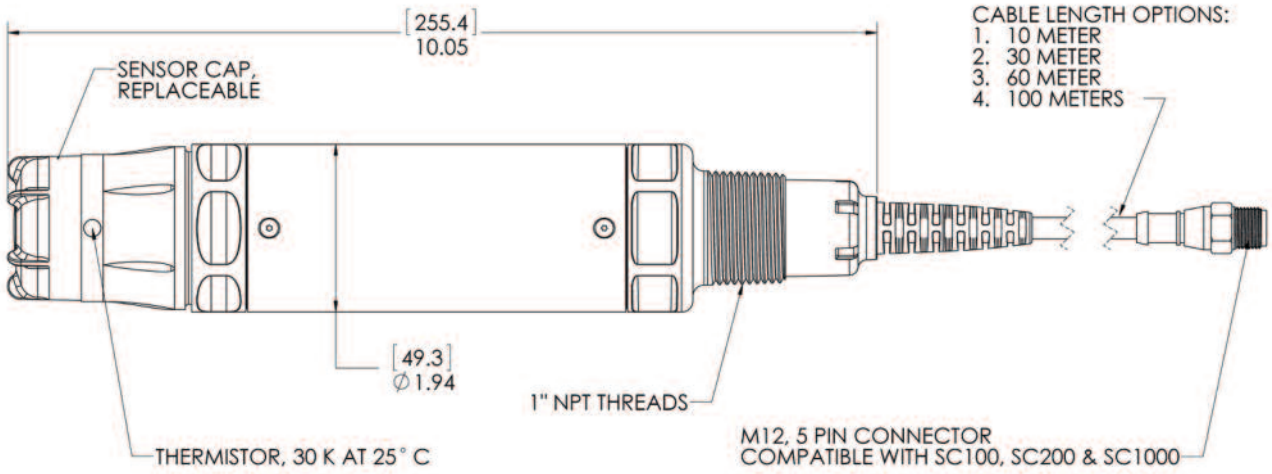

Installation / Mounting

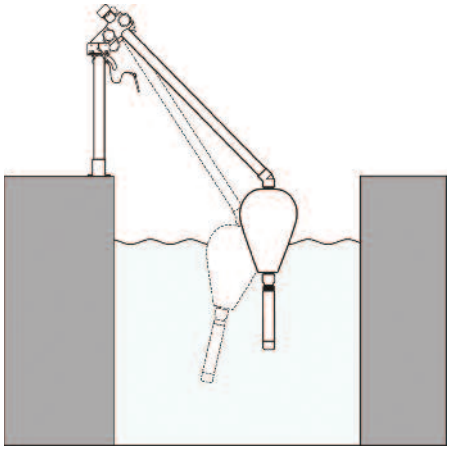

Float Mount Kit

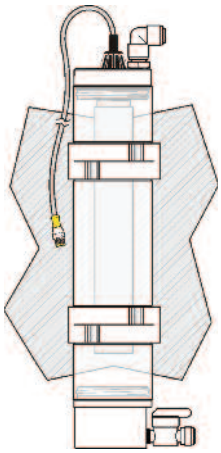

Flow Cell

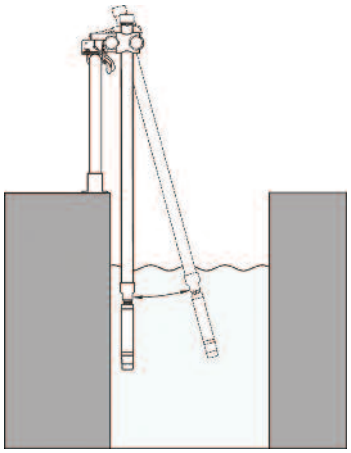

Pole Mount Kit

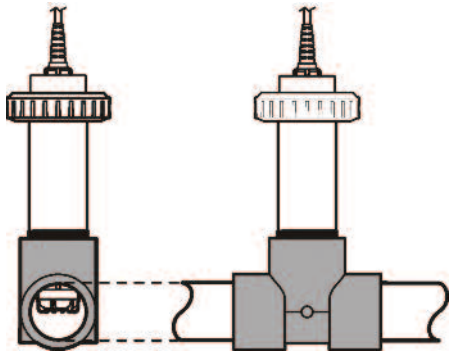

Union Mount Kit

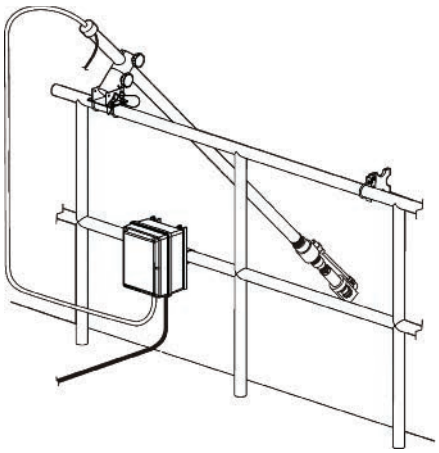

Air Blast Cleaning System

Ordering Information

9020000	Dissolved Oxygen: Hach LDO® Probe
9020000-UPGRADE	LDO Probe, Mounting Conversion Adapter
9020000-SC200	LDO Probe, Mounting Conversion Adapter, sc200 controller with 2 channels

Accessories

5867000	Digital Termination Box
5796000	Digital Extension Cable, 7.7 m (25 ft.)
5796100	Digital Extension Cable, 15 m (50 ft.)
5796200	Digital Extension Cable, 31 m (100 ft.)
6860000	High Output Air Blast Cleaning System, 115 Vac
6860100	High Output Air Blast Cleaning System, 230 Vac
9253500	Air Blast Hardware Components

Replacement Parts

9021100	LDO Model 2 Sensor Cap Replacement Kit

Mounting Kits

9253000	Pole Mount Kit, PVC
9253100	Ball Float Mount Kit, PVC
9257000	Union Mount Kit, PVC
9253400	Mounting Conversion Adapter, LDO Model 1 to LDO Model 2
7300800	1 NPT sc Sensors Flow Cell

Controllers

sc200 Digital Controllers

LXV404.99.00552	sc200 controllers, 2 channels, digital
LXV404.99.00542	sc200 controller, 2 channel, digital & mA input
LXV404.99.00502	sc200 controller, 1 channel, digital
LXV404.99.00512	sc200 controller, 2 channel, digital & pH/DO
LXV404.99.00522	sc200 controller, 2 channel, digital & Conductivity
LXV404.99.00532	sc200 controller, 2 channel, digital & Flow

sc1000 Digital Controllers

LXV402.99.00002	sc1000 Display Module
LXV400.99.1R572	sc1000 Probe Module, 4 sensors, 4 mA Out, 4 mA In, 4 Relays, 110-230V
LXV400.99.1B572	sc1000 Probe Module, 4 sensors, 4 mA Out, 4 mA In, 4 Relays, RS-485 (MODBUS), 110-230V
LXV400.99.1F572	sc1000 Probe Module, 4 sensors, 4 mA Out, 4 mA In, 4 Relays, PROFIBUS DP, 110-230V
LXV400.99.1R582	sc1000 Probe Module, 6 sensors, 4 mA Out, 4 mA In, 4 Relays, 110-230V







HACH COMPANY World Headquarters: Loveland, Colorado USA

United States:	800-227-4224 tel	970-669-2932 fax	orders@hach.com
Outside United States:	970-669-3050 tel	970-461-3939 fax	int@hach.com

www.hach.com

LIT2455 Rev 2
F12 Printed in U.S.A.
©Hach Company, 2012. All rights reserved.
In the interest of improving and updating its equipment, Hach Company reserves the right to alter specifications to equipment at any time.

HACH® Be Right™

sc200™ UNIVERSAL CONTROLLER

Applications
- Drinking Water
- Wastewater
- Industrial Water
- Power



One Controller for the Broadest Range of Sensors.

Choose from 30 digital and analog sensor families for up to 17 different parameters.

Maximum Versatility

The sc200 controller allows the use of digital and analog sensors, either alone or in combination, to provide compatibility with Hach's broad range of sensors, eliminating the need for dedicated, parameter-specific controllers.

Ease of Use and Confidence in Results

Large, high-resolution, transreflective display provides optimal viewing resolution in any lighting condition. Guided calibration procedures in 19 languages minimize complexity and reduce operator error. Password-protected SD card reader offers a simple solution for data download and transfer. Visual warning system provides critical alerts.

Wide Variety of Communication Options

Utilize two to five analog outputs to transmit primary and secondary values for each sensor, or integrate Hach sensors and analyzers into MODBUS RS232/RS485, Profibus® DP, and HART networks.



Password protected SD card reader offers a simple solution for data download and transfer, and sc200 and digital sensor configuration file duplication and backup.

HACH®
Be Right™

Controller Comparison







Features	Previous Models sc100™ Controller	Previous Models GLI53 Controller	sc200™ Controller	Benefits
Display	64 x 128 pixels 33 x 66 mm (1.3 x 2.6 in.)	64 x 128 pixels 33 x 66 mm (1.3 x 2.6 in.)	160 x 240 pixels 48 x 68 mm (1.89 x 2.67 in.) Transreflective	• Improved user interface—50% bigger • Easier to read in daylight and sunlight
Data Management	irDA Port/PDA Service Cable	N/A	SD Card Service Cable	• Simplifies data transfer • Standardized accessories/max compatibility
Sensor Inputs	2 Max Direct Digital Analog via External Gateway	2 Max Analog Depending on Parameter	2 Max Digital and/or Analog with Sensor Card	• Simplifies analog sensor connections • Works with analog and digital sensors
Analog Inputs	N/A	N/A	1 Analog Input Signal Analog 4-20mA Card	• Enables non-sc analyzer monitoring • Accepts mA signals from other analyzers for local display • Consolidates analog mA signals to a digital output
4-20 mA Outputs	2 Standard	2 Standard	2 Standard Optional 3 Additional	• Total of five (5) 4-20 mA outputs allows multiple mA outputs per sensor input
Digital Communication	MODBUS RS232/RS485 Profibus DP V1.0	HART	MODBUS RS232/RS485 Profibus DP V1.0 HART 7.2	• Unprecedented combination of sensor breadth and digital communication options

Choose from Hach's Broad Range of Digital and Analog Sensors

Parameter	Sensor	Digital or Analog
Ammonia	AMTAX™ sc, NH4D sc, AISE sc, AN-ISE sc	●
Chlorine	CLF10 sc, CLT10 sc, 9184 sc	●
Chlorine Dioxide	9185 sc	●
Conductivity	GLI 3400 Contacting, GLI 3700 Inductive	△
Dissolved Oxygen	LDO® Model 2, 5740 sc	●
Dissolved Oxygen	5500	△
Flow	U53, F53 Sensors	△
Nitrate	NITRATAX™ sc, NO3D sc, NISE sc, AN-ISE sc	●
Oil in Water	FP360 sc	●
Organics	UVAS sc	●
Ozone	9187 sc	●
pH/ORP	pHD	●
pH/ORP	pHD, pH Combination, LCP	△
Phosphate	PHOSPHAX™ sc	●
Sludge Level	SONATAX™ sc	●
Suspended Solids	SOLITAX™ sc, TSS sc	●
Turbidity	1720E, FT660 sc, SS7 sc, ULTRATURB sc, SOLITAX sc, TSS sc	●
Ultra Pure Conductivity	8310, 8311, 8312, 8315, 8316, 8317 Contacting	△
Ultra Pure pH/ORP	8362	△

● = Digital △ = Analog

Connect up to two of any of the sensors listed above, in any combination, to meet your application needs. The diagrams below demonstrate the potential configurations. Operation of analog sensors requires the controller to be equipped with the appropriate sensor module. Contact Hach Technical Support for help with selecting the appropriate module.

2 Channel Configurations

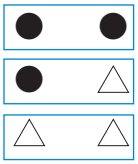

1 Channel Configurations

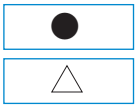

Specifications*

Dimensions (H x W x D)	5.7 in x 5.7 in x 7.1 in (144 mm x 144 mm x 181 mm)
Display	Graphic dot matrix LCD with LED backlighting, transreflective
Display Size	1.9 x 2.7 in. (48 mm x 68 mm)
Display Resolution	240 x 160 pixels
Weight	3.75 lbs. (1.70 kg)
Power Requirements (Voltage)	100 - 240 V AC, 24 V DC
Power Requirements (Hz)	50/60 Hz
Operating Temperature Range	-20 to 60 °C , 0 to 95% RH non-condensing
Analog Outputs	Two (Five with optional expansion module) to isolated current outputs, max 550 Ω , Accuracy: ± 0.1% of FS (20mA) at 25 °C, ± 0.5% of FS over -20 °C to 60 °C range Operational Mode: measurement or calculated value
Analog Output Functional Mode	Linear, Logarithmic, Bi-linear, PID
Security Levels	2 password-protected levels
Mounting Configurations	Wall, pole, and panel mounting
Enclosure Rating	NEMA 4X/IP66
Conduit Openings	1/2 in NPT Conduit
Relay: Operational Mode	Primary or secondary measurement, calculated value (dual channel only) or timer
Relay Functions	Scheduler (Timer), Alarm, Feeder Control, Event Control, Pulse Width Modulation, Frequency Control, and Warning
Relays	Four electromechanical SPDT (Form C) contacts, 1200 W, 5 A
Communication	MODBUS RS232/RS485, PROFIBUS DPV1, or HART 7.2 optional
Memory Backup	Flash memory
Electrical Certifications	EMC CE compliant for conducted and radiated emissions: - CISPR 11 (Class A limits) - EMC Immunity EN 61326-1 (Industrial limits) Safety cETLus safety mark for: - General Locations per ANSI/UL 61010-1 & CAN/CSA C22.2. No. 61010-1 - Hazardous Location Class I, Division 2, Groups A,B,C & D (Zone 2, Group IIC) per FM 3600 / FM 3611 & CSA C22.2 No. 213 M1987 with approved options and appropriately rated Class I, Division 2 or Zone 2 sensors cULus safety mark - General Locations per UL 61010-1 & CAN/CSA C22.2. No. 61010-1

**Subject to change without notice.*

Dimensions

Surface Mounting Dimensions

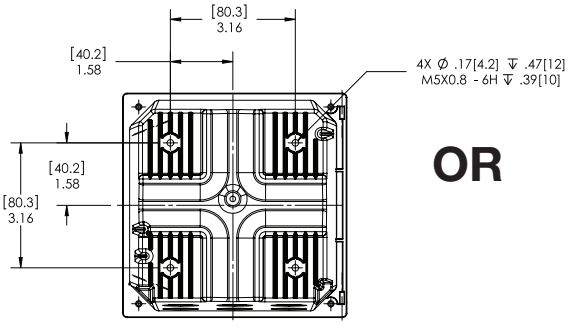

Mounting Dimensions
(Rear View)

OR

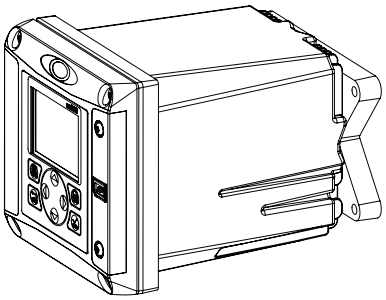

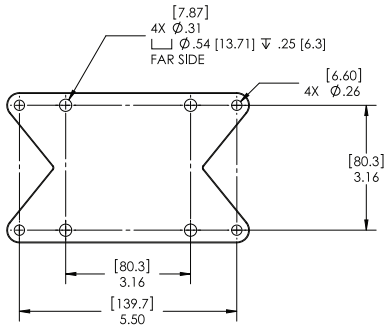

Bracket (supplied) for Surface Mounting
(Not compatible with Weather and Sun Shield p/n 9220600 when surface mounting.)

Panel Mounting Dimensions

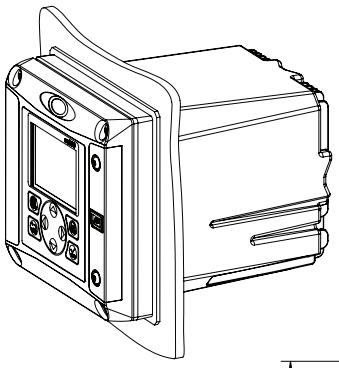

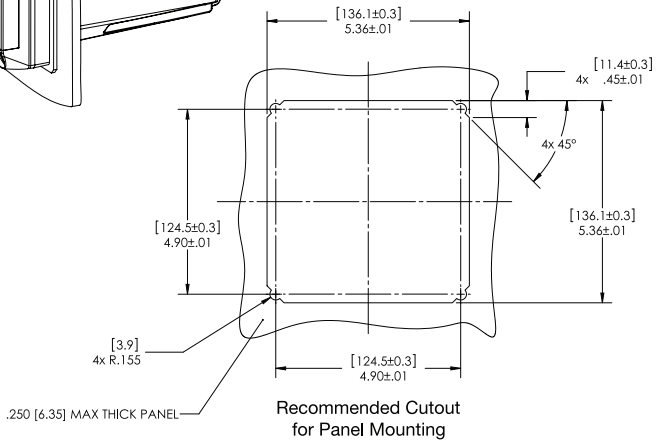

Recommended Cutout
for Panel Mounting

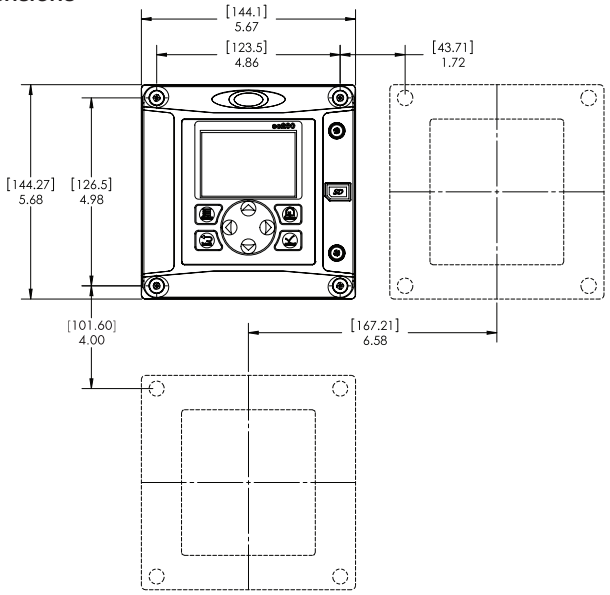

Minimum Spacing Dimensions
for Group Mounting

Top and Bottom Views

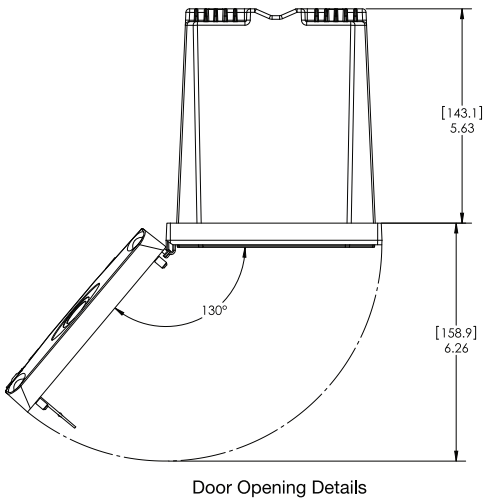

Door Opening Details

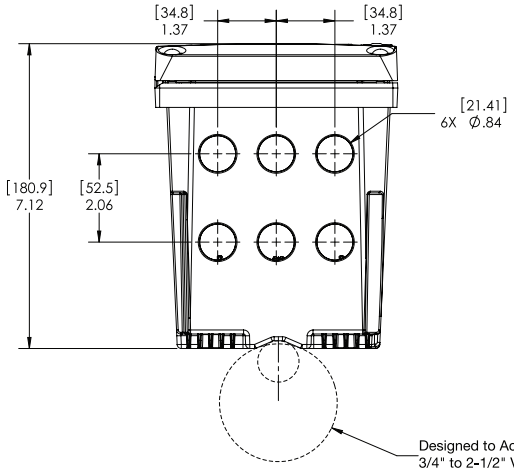

Ordering Information

sc200 for Hach Digital and Analog Sensors

LXV404.99.00552	sc200 controller, 2 channels, digital
LXV404.99.00502	sc200 controller, 1 channel, digital
LXV404.99.00102	sc200 controller, 1 channel, pH/DO
LXV404.99.00202	sc200 controller, 1 channel, Conductivity
LXV404.99.01552	sc200 controller, 2 channels, digital, Modbus RS232/RS485
LXV404.99.00112	sc200 controller, 2 channel, pH/DO

Note: Other Sensor combinations are available. Please contact Hach Technical Support or your Hach representative.

Note: Communication options (MODBUS, Profibus DPV1, and HART) are available. Please contact Hach Technical Support or your Hach representative.



sc200 for Ultrapure Sensors

9500.99.00602	sc200 controller, 1 channel, ultrapure conductivity
9500.99.00702	sc200 controller, 1 channel, ultrapure pH
9500.99.00662	sc200 controller, 2 channel, ultrapure conductivity
9500.99.00772	sc200 controller, 2 channel, ultrapure pH



Sensor and Communication Modules

9012900	Analog pH/ORP and DO module for GLI Sensors
9013000	Analog Conductivity module for GLI Sensors
9012700	Flow module
9012800	4-20 mA Input Module
9525700	Analog pH/ORP Module for Polymetron Sensors
9525800	Analog Conductivity Module for Polymetron Sensors
9013200	Modbus 232/485 Module
9173900	Profibus DP Module
9328100	HART Module
9334600	4-20 mA Output Module (Provides 3 additional mA Outputs)

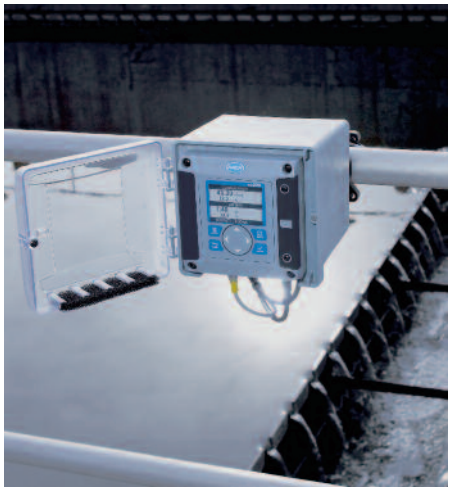

Accessories

9220600	sc200 Weather and Sun Shield with UV Protection Screen
8809200	sc200 UV Protection Screen
9218200	SD card reader (USB) for connection to PC
9218100	4 GB SD card

HACH COMPANY World Headquarters: Loveland, Colorado USA

United States: 800-227-4224 tel 970-669-2932 fax orders@hach.com
Outside United States: 970-669-3050 tel 970-461-3939 fax int@hach.com
hach.com

LIT2665 Rev 7
K13 Printed in U.S.A.
©Hach Company, 2013. All rights reserved.
In the interest of improving and updating its equipment,
Hach Company reserves the right to alter specifications to equipment at any time.

HACH®
Be Right™

CS-451-100 : Identification sheet

VWTC PROJECT NUMBER:	Iqaluit WWTP	REV:	01
PROJECT NAME:	5000218036	SUBMITTED TO (COMPANY):	
ENGINEER:	G. HÉBERT	SUBMITTED TO (RESPONSIBLE)	
PROJECT MANAGER:	C. BEKAERT	PROJECT NUM REFERENCE.:	
PHONE NUMBER:		LOT NUMBER:	

SUPPLIER	EQPT CODE	EQPT TAG NO	DIA	DESCRIPTION	INFO 1	INFO 2	INFO 3	APPLIC.	NOTE	REV
FLYGT	ST-451-102	LSH-02-213	Diameter: 100 mm, Cable: 13m, Tow	FLOAT INSTRUMENT	LEVEL SWITCH/MANUFACTURER:FLYGT// MODEL: ENM-10 (13m)	N/A	N/A			1
FLYGT	ST-451-102	LSH-02-214	Diameter: 100 mm, Cable: 13m, Tow	FLOAT INSTRUMENT	LEVEL SWITCH/MANUFACTURER:FLYGT// MODEL: ENM-10 (13m)	N/A	N/A			1
FLYGT	ST-451-102	LSH-02-223	Diameter: 100 mm, Cable: 13m, Tow	FLOAT INSTRUMENT	LEVEL SWITCH/MANUFACTURER:FLYGT// MODEL: ENM-10 (13m)	N/A	N/A			1
FLYGT	ST-451-102	LSH-02-224	Diameter: 100 mm, Cable: 13m, Tow	FLOAT INSTRUMENT	LEVEL SWITCH/MANUFACTURER:FLYGT// MODEL: ENM-10 (13m)	N/A	N/A			1

This page is intentionally left blank

Technical
specification



ENM-10 Level regulator

FLYGT
a xylem brand

Table of Contents

PRODUCT DESCRIPTION....2
Product description....2

CHEMICAL RESISTANCE LIST....6
Chemical resistance list....6

PRODUCT RANGE....8
Product range....8

PRODUCT DESCRIPTION

Product description

The simplest possible method for level control! A mechanical switch in a plastic casing, freely suspended at the desired height from its own cable. When the liquid level reaches the regulator, the casing will tilt and the mechanical switch will close or break the circuit, thereby starting or stopping a pump or actuating an alarm device. No wear, no maintenance! In sewage pumping stations, for ground water and drainage pumping – in fact, for most level control applications – the ENM-10 is the ideal solution.

The regulator casing is made of polypropylene and the cable is sheathed with a special PVC or Nitrile/PVC rubber compound. The plastic components are welded and screwed together. Adhesive is never used. Impurities and deposits will not adhere to the smooth casing.

This level regulator is available in different versions, depending upon the medium in which it is to be used. As standard, the regulator can be obtained with 6, 13, 20, 30 or 50 metres (20, 42, 65, 100 or 167 feet) of cable for liquids with specific density between 0.95 and 1.10 g/cm3; for other specific densities and for the Ex-version, the regulator is only available with 20 metres (65 ft) of cable. The regulator can withstand up to 60°C (140°F).

Technical data

Liquid temperature:	min. 0°C (32°F) max. 60°C (140°F)
Liquid density:	min. 0.65 g/cm^3 max. 1.5 g/cm^3
Degree of protection:	IP68, 20 m (65 ft)
Interrupting capacity of micro switch:	AC, resistive load, 250V 10A AC, inductive load, 250V 3A cos ϕ = 0.5 DC, 30V 5A
With gold plated micro switch:	same as above, except: DC, 24V 10mA

Note that local regulations may limit the voltage.

Materials

Body:	Body:
Bending relief:	EPDM rubber
Cable:	special compound PVC or NBR/PVC nitrile/PVC rubber

Dimensions

Table 1

For density g/cm^3	Regulator length mm (in.)	Diameter mm (in.)
0.65–0.80	194 (7 10/16)	100 (4)
0.80–0.95	177 (7)	100 (4)
0.95–1.10	162 (6 3/8)	100 (4)
1.05–1.20	142 (5 9/16)	100 (4)
1.20–1.30	133 (5 1/4)	100 (4)

For density g/cm^3	Regulator length mm (in.)	Diameter mm (in.)
1.30–1.40	130 (5 2/16)	100 (4)
1.40–1.50	126 (5)	100 (4)

Weight: approx. 2 kg (4.5 lb) for a standard density regulator with 20 m cable.

Approvals: CE, CSA, SEMKO, NEMKO, DEMKO

LVD approval according to EN61058

CSA approval: Cert no. 1330172

Cl.I Zone 0, Gr. IIC;

CL.I Div.1 Gr A, B, C&D;

Cl.II Gr. E, F&G;

Cl.III when installed to the certified Intrinsically Safe relay, Ex ia, rated for the locations per submitter controll drawing and installation manual.

Intrincically safe circuits are required for the automatic control system. - Use a EX-safety barrier (e.g. Prod. no. 84 01 07).

0080

Figure 1

Wiring alternative

To conform to local regulations, the level regulators are normally connected through a transformer to a low-tension control circuit.

Two regulators are used; one for starting and one for stopping. A third regulator can be connected if an alarm is required at a given level.

Identical regulators can be used for all functions.

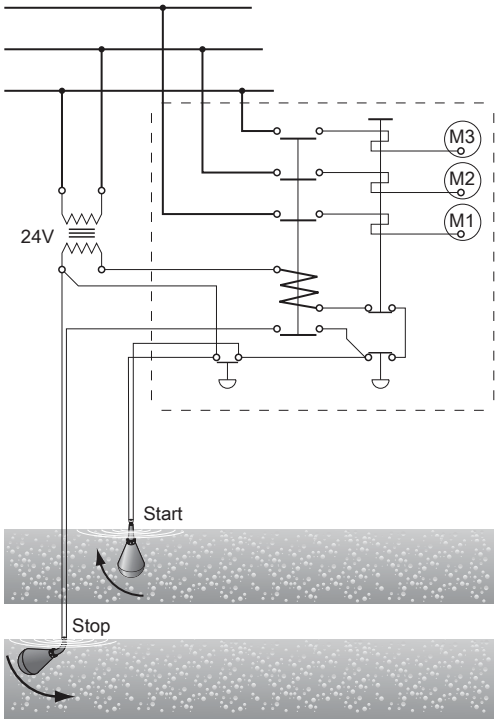

Connect the gray and black leads.

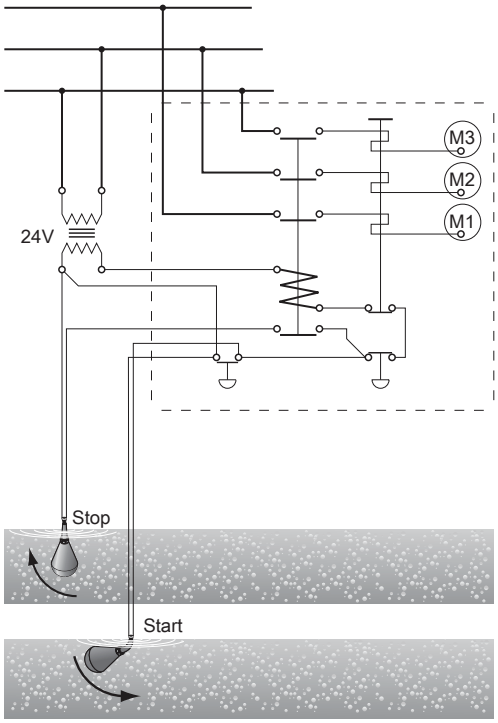

Connect the gray and brown leads.

Insulate the brown lead.
Figure 2: Connected for emptying

Insulate the black lead.
Figure 3: Connected for emptying

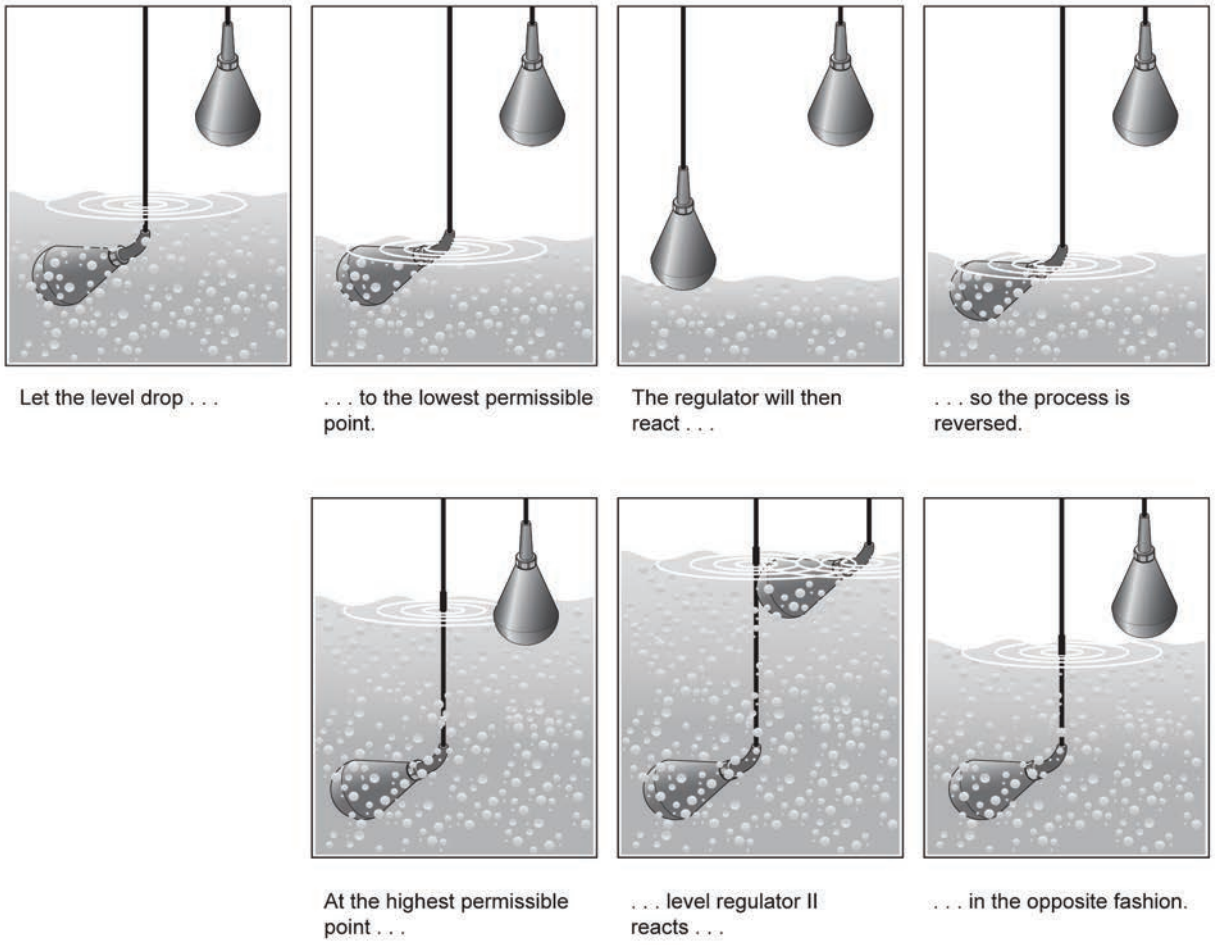

Figure 4

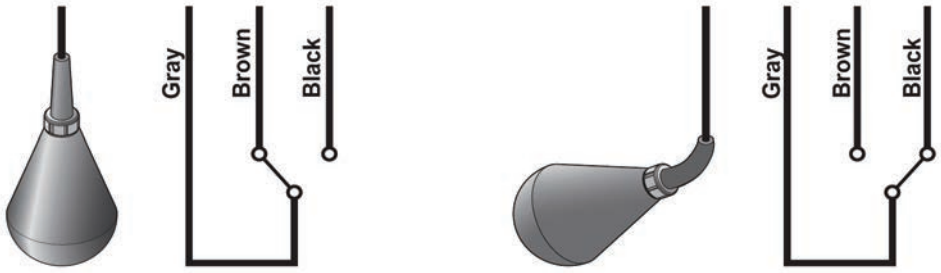

Figure 5: Colour code

Maintenance and repair

ENM-10 is very durable and practically maintenance free. You only have to check on it occasionally, to ensure its continual operation.

- It is recommended to occasionally clean ENM-10, and especially when fat/grease covers the plastic surface.
- At the same time, make an occular inspection of the regulator to make sure neither cable, protective sleeve or plastic casing show any signs of damage.

- A damaged ENM-10 cannot be repaired in any way, due to the hermetic encapsulation. If the unit is found to be damaged, replace it with a new one.
- For Ex-installations, also make absolutely sure that the Ex-barrier (e.g. Prod. no. 84 01 07) is operating correctly - The LED changes when the switch is toggled.

The manufacturers reserve the right to alter performance specification or design without notice.

CHEMICAL RESISTANCE LIST

Chemical resistance list

The liquid in which level regulation is practiced most frequently is, of course, water. Of the millions of regulators in use all over the world today, it is estimated that nine out of ten work in water.

However, with a float body of polypropylene, a cable of PVC or NBR/PVC nitrile/PVC rubber and a bending relief of EPDM rubber, the ENM-10 is virtually insensitive to many aggressive liquids.

The table shows how resistant the ENM-10 equipped with either PVC or NBR/PVC nitrile/PVC rubber cable, is to different chemicals at two different temperatures.

The classification is broken down into the following categories:

0 = No effect, 1 = Minor to moderate and 2 = Severe effect. The sign – means that information is not available.

Keep in mind also that the density of the liquid determines the bouyancy of the regulator. The ENM-10 is made for seven different densities. See *Product description* (page 2).

Always observe local regulations:

Take particular note of:

- risk of fire/explosion
- hygiene requirements

Acids	PVC cable		NBR/PVC nitrile/PVC rubber cable	
	20°C (68°F)	60°C (140°F)	20°C (68°F)	60°C (140°F)
Acetic Acid 50%	1	2	0	0
Acetic Acid 75%	2	2	0	0
Benzoic Acid	2	2	0	0
Boric Acid 5%	0	—	0	0
Butyric Acid	2	2	2	2
Chromic Acid 10%	0	2	2	2
Citric Acid	0	1	0	0
Hydrobromic Acid 5%	1	2	0	0
Hydrochloric Acid 10%	0	1	0	1
Hydrochloric Acid 37%	1	2	0	2
Hydrocyanic Acid 10%	0	0	1	2
Hydrofluoric Acid 5%	0	2	0	1
Hypochloric Acid	1	2	2	2
Maleic Acid	2	2	2	2
Nitric Acid 5%	1	1	1	1
Nitric Acid 65%	2	2	2	2
Oleic Acid	1	2	2	2
Oxalic Acid 50%	1	1	1	2
Phosphoric Acid 25%	0	0	1	2
Phosphoric Acid 85%	0	0	1	2
Sulphuric Acid 10%	1	2	1	2
Sulphuric Acid 78%	2	2	2	2
Tannic Acid	0	0	0	0
Tartaric Acid	1	1	1	1
Bases				
Ammonium Hydroxide	0	—	0	0
Calcium Hydroxide	0	0	0	0
Potassium Hydroxide	1	2	0	0
Sodium Hydroxide	1	2	0	0

Salts	PVC cable		NBR/PVC nitrile/PVC rubber cable	
	20°C (68°F)	60°C (140°F)	20°C (68°F)	60°C (140°F)
Aluminium Chloride	0	0	0	0
Calcium Sulphate	0	0	0	0
Calcium Chloride	0	0	0	0
Calcium Nitrate	0	0	0	0
Copper Chloride	0	0	0	0
Copper Sulphate	0	0	0	0
Ferric Chloride	0	0	0	0
Ferrous Sulphate	0	0	0	0
Magnesium Chloride	0	0	0	0
Potassium Sulphate	0	0	0	0
Potassium Nitrate	0	0	0	0
Potassium Carbonate	1	1	1	1
Potassium Bicarbonate	0	0	0	0
Sodium Sulphate	0	0	0	0
Sodium Chloride	0	0	0	0
Sodium Nitrate	0	0	0	0
Sodium Bicarbonate	0	0	0	0
Sodium Carbonate	0	0	0	0
Tin Chloride	1	1	1	1
Zinc Sulphate	0	0	0	0
Zinc Chloride	0	0	0	0
Oils				
Castor Oil	1	1	1	1
Cocoanut Oil	0	—	0	2
Corn Oil	2	2	2	2
Diesel Oil	2	2	2	2
Linseed Oil	2	2	2	2
Mineral Oils	2	2	2	2
Olive Oil	1	1	1	1
Silicone Oils	0	0	0	0

Solvents and miscellaneous	PVC cable		NBR/PVC nitrile/PVC rubber cable	
	20°C (68°F)	60°C (140°F)	20°C (68°F)	60°C (140°F)
Aceton	2	2	2	2
Aniline	2	2	1	2
Benzene	2	2	2	2
Butyl Alcohol	2	2	0	1
Carbon Tetrachloride	2	2	2	2
Chlorobenzene	2	2	2	2
Chloroform	2	2	2	2
Ethyl Alcohol	2	2	0	1
Ethyl Ether	2	2	2	2
Ethyl Acetate	2	2	2	2
Ethylene Dichloride	2	2	2	2
Ethylene Chloride	2	2	2	2
Formaldehyde 37%	1	2	0	0
Gasoline	2	2	2	2
Kerosene	2	2	2	2
Methyl Alcohol	2	2	0	0
Methyl Ethyl Ketone	2	2	2	2
Methylene Chloride	2	2	2	2
Nitrobenzene	2	2	2	2
Phenol	2	2	2	2
Toluene	2	2	2	2
Trichlorethylene	2	2	2	2
Turpentine	2	2	2	2
Xylene	2	2	2	2
Gases				
Carbon Dioxide	0	0	0	0
Carbon Monoxide	0	0	0	0
Chlorine (wet)	2	2	2	2
Hydrogen Sulphide	0	0	1	1
Sulphur Dioxide (wet)	1	1	2	2

0 = No effect, 1 = Minor to moderate, 2 = Severe effect. – = No information available.

Figure 6

PRODUCT RANGE

Product range

Part no.	For density [g/cm³]	Color of level switch	Type of cable	Cable length [m]	Approvals	For market	Notes
5828800	0,65-0,80	Blue	1	20	CE		
5828801	0,80-0,95	Blue	1	20	CE		
5828802	0,95-1,10	Blue	1	6	CE		
5828803	0,95-1,10	Blue	1	13	CE		
5828804	0,95-1,10	Blue	1	20	CE		
5828805	1,05-1,20	Blue	1	20	CE		
5828806	1,2-1,3	Blue	1	20	CE		
5828807	1,3-1,4	Blue	1	20	CE		
5828808	1,4-1,5	Blue	1	20	CE		
5828809	0,65-0,80	Grey	5	20	CSA/CE	Canada	
5828810	0,80-0,95	Grey	5	20	CSA/CE	Canada	
5828811	0,95-1,10	Grey	5	6	CSA/CE	Canada	
5828812	0,95-1,10	Grey	5	13	CSA/CE	Canada	
5828813	0,95-1,10	Grey	5	20	CSA/CE	Canada	
5828814	1,05-1,20	Grey	5	20	CSA/CE	Canada	
5828815	1,2-1,3	Grey	5	20	CSA/CE	Canada	
5828816	1,3-1,4	Grey	5	20	CSA/CE	Canada	
5828817	1,4-1,5	Grey	5	20	CSA/CE	Canada	
5828818	0,65-0,80	Grey	1	20	CSA/CE	Canada	
5828819	0,80-0,95	Grey	1	20	CSA/CE	Canada	
5828820	0,95-1,10	Grey	1	6	CSA/CE	Canada	
5828821	0,95-1,10	Grey	1	13	CSA/CE	Canada	
5828822	0,95-1,10	Grey	1	20	CSA/CE	Canada	
5828823	1,05-1,20	Grey	1	20	CSA/CE	Canada	
5828824	1,2-1,3	Grey	1	20	CSA/CE	Canada	
5828825	1,3-1,4	Grey	1	20	CSA/CE	Canada	
5828826	1,4-1,5	Grey	1	20	CSA/CE	Canada	
5828827	0,65-0,80	Blue	2	20	CE	USA	
5828828	0,80-0,95	Blue	2	20	CE	USA	
5828829	0,95-1,10	Blue	2	6	CE	USA	
5828830	0,95-1,10	Blue	2	13	CE	USA	
5828831	0,95-1,10	Blue	2	20	CE	USA	
5828832	1,05-1,20	Blue	2	20	CE	USA	
5828833	1,2-1,3	Blue	2	20	CE	USA	
5828834	1,3-1,4	Blue	2	20	CE	USA	
5828835	1,4-1,5	Blue	2	20	CE	USA	
5828836	0,95-1,10	Grey	5	30	CSA/CE	Canada	
5828837	0,95-1,10	Grey	5	50	CSA/CE	Canada	
5828838	0,95-1,10	Grey	5	100	CSA/CE	Canada	
5828839	0,95-1,10	Grey	5	150	CSA/CE	Canada	
5828851	0,95-1,10	Red	3	65	CE		
5828852	0,95-1,10	Red	3	6	CE		
5828853	0,95-1,10	Red	3	13	CE		
5828854	0,95-1,10	Red	3	20	CE		
5828855	0,95-1,10	Red	3	6	CSA/CE	Canada	
5828856	0,95-1,10	Red	3	13	CSA/CE	Canada	
5828857	0,95-1,10	Red	3	20	CSA/CE	Canada	

Cont. →

Figure 7

5828858	0,95-1,10	Red	4	6	CE	USA	
5828859	0,95-1,10	Red	4	13	CE	USA	
5828860	0,95-1,10	Red	4	20	CE	USA	
5828870	0,65-0,80	Blue	5	20	CE		
5828871	0,80-0,95	Blue	5	20	CE		
5828872	0,95-1,10	Blue	5	6	CE		
5828873	0,95-1,10	Blue	5	13	CE		
5828874	0,95-1,10	Blue	5	20	CE		
5828875	1,05-1,20	Blue	5	20	CE		
5828876	1,2-1,3	Blue	5	20	CE		
5828877	1,3-1,4	Blue	5	20	CE		
5828878	1,4-1,5	Blue	5	20	CE		
5828879	0,95-1,10	Blue	1	65	CE		
5828880	0,95-1,10	Blue	1	30	CE		
5828881	0,95-1,10	Blue	1	50	CE		
5828882	0,95-1,10	Grey	1	30	CSA/CE	Canada	
5828883	0,95-1,10	Grey	1	50	CSA/CE	Canada	
5828884	0,95-1,10	Blue	2	30	CE	USA	
5828885	0,95-1,10	Blue	2	50	CE	USA	
5828886	0,95-1,10	Red	3	30	CE		
5828887	0,95-1,10	Red	3	50	CE		
5828890	0,95-1,10	Blue	5	30	CE		
5828891	0,95-1,10	Blue	5	50	CE		
5828892	0,95-1,10	Red	3	6	CE	Japan	
5828893	0,95-1,10	Red	3	13	CE	Japan	
5828894	0,95-1,10	Red	3	20	CE	Japan	
5828895	0,95-1,10	Blue	1	6	CE	Japan	
5828896	0,95-1,10	Blue	1	13	CE	Japan	
5828897	0,95-1,10	Blue	1	20	CE	Japan	
5828898	0,95-1,10	Blue	1	50	CE	Japan	
5947919	0,95-1,10	Blue	5	20	CE		Designed for low current and slow movements
5947920	0,95-1,10	Grey	5	20	CSA/CE		Designed for low current and slow movements

Type of cable:

1. Blue PVC jacket with color coding of wires: Grey/Brown/Black
2. Blue PVC jacket with color coding of wires: Red/White/Black
3. Red PVC jacket with color coding of wires: Grey/Brown/Black
4. Red PVC jacket with color coding of wires: Red/White/Black
5. BLACK NBR/PVC jacket with color coding of wires: Grey/Brown/Black (NBR=Nitrile rubber)

Xylem |ˈzīləm|

1) The tissue in plants that brings water upward from the roots
2) A leading global water technology company

We're 12,000 people unified in a common purpose: creating innovative solutions to meet our world's water needs. Developing new technologies that will improve the way water is used, conserved, and re-used in the future is central to our work. We move, treat, analyze, and return water to the environment, and we help people use water efficiently, in their homes, buildings, factories and farms. In more than 150 countries, we have strong, long-standing relationships with customers who know us for our powerful combination of leading product brands and applications expertise, backed by a legacy of innovation.

For more information on how Xylem can help you, go to xyleminc.com

xylem
Let's Solve Water

Xylem Water Solutions AB
Gesällvägen 33
174 87 Sundbyberg
Sweden
Tel. +46-8-475 60 00
Fax +46-8-475 69 00
http://tpi.xyleminc.com

Visit our Web site for the latest version of this document and more information

The original instruction is in English. All non-English instructions are translations of the original instruction.

© 2011 Xylem Inc

891480_11.1_en.GB_2012-01_TS_ENM-10

This page is intentionally left blank

CS-304-100 : Identification sheet

VWTC PROJECT NUMBER:	Iqaluit WWTP	REV:	01
PROJECT NAME:	5000218036	SUBMITTED TO (COMPANY):	
ENGINEER:	F.VINCI	SUBMITTED TO (RESPONSIBLE)	
PROJECT MANAGER:	C. BEKAERT	PROJECT NUM REFERENCE.:	
PHONE NUMBER:		LOT NUMBER:	

SUPPLIER	EQPT CODE	EQPT TAG NO	DIA	DESCRIPTION	INFO 1	INFO 2	INFO 3	APPLIC.	NOTE	REV
ASCO	VASDBR303370	SV-02-211		SOLENOID VALVE	TYPE: SOLENOID VALVE// MANUFACTURER : ASCO//MODEL : 8210G094//120VAC// CONNECTION TYPE : THREADED | 13 mm (1/2") | 13 mm (1/2")//BODY : BRASS					1
		SV-02-212								
		SV-02-221								
		SV-02-222								

This page is intentionally left blank

Features

- Wide range of pressure ratings, sizes, and resilient materials provide long service life and low internal leakage
- High flow valves for liquid, corrosive, and air/inert gas service
- Industrial applications include:
  - Car wash
  - Laundry equipment
  - Air compressors
  - Industrial water control
  - Pumps

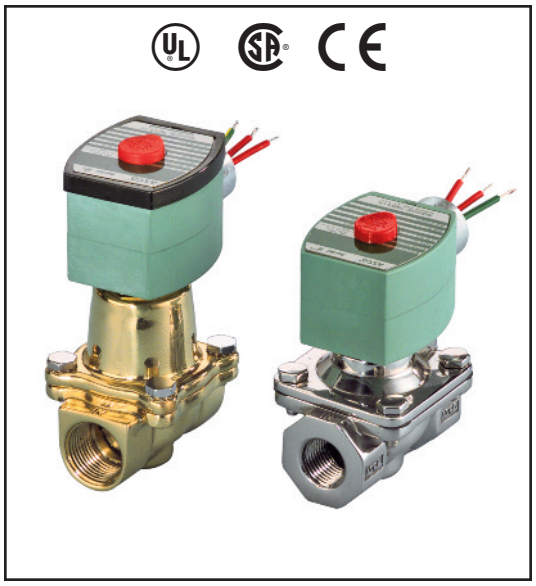

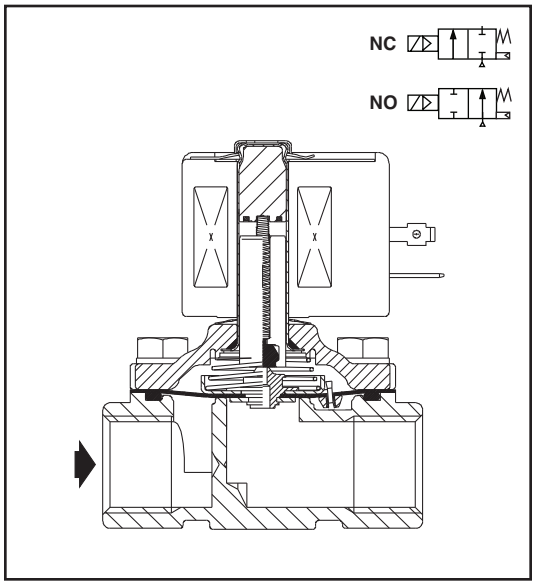

Construction

Valve Parts in Contact with Fluids		
Body	Brass	304 Stainless Steel*
Seals and Discs	NBR or PTFE	
Disc-Holder	PA	
Core Tube	305 Stainless Steel	
Core and Plugnut	430F Stainless Steel	
Springs	302 Stainless Steel	
Shading Coil	Copper	Silver

*Catalog Numbers 8210G127, 8210G129, 8210G132, 8210G133 have 316L Stainless Steel bodies.

Electrical

Standard Coil and Class of Insulation	Watt Rating and Power Consumption				Spare Coil Part Number			
		AC			General Purpose		Explosionproof	
	DC Watts	Watts	VA Holding	VA Inrush	AC	DC	AC	DC
F	-	6.1	16	40	238210	-	238214	-
F	11.6	10.1	25	70	238610	238710	238614	238714
F	16.8	16.1	35	180	272610	97617	272614	97617
F	-	17.1	40	93	238610	-	238614	-
F	-	20	43	240	99257	-	99257	-
F	-	20.1	48	240	272610	-	272614	-
F	30.8	-	-	-	-	501695	-	501696
H	40.6	-	-	-	-	238910	-	238914

Standard Voltages: 24, 120, 240, 480 volts AC, 60 Hz (or 110, 220 volts AC, 50 Hz). 6, 12, 24, 120, 240 volts DC. Must be specified when ordering.
Other voltages available when required.

Solenoid Enclosures

Standard: RedHat II - Watertight, Types 1, 2, 3, 3S, 4, and 4X; RedHat - Type I.

Optional: RedHat II - Explosionproof and Watertight, Types 3, 3S, 4, 4X, 6, 6P, 7, and 9; Red-Hat - Explosionproof and Watertight, Types 3, 4, 4X, 7, and 9.

(To order, add prefix "EF" to catalog number, except Catalog Numbers 8210B057, 8210B058, and 8210B059, which are not available with Explosionproof enclosures.)
See Optional Features Section for other available options.

Nominal Ambient Temp. Ranges

RedHat II/RedHat AC: 32˚F to 125˚F (0˚C to 52˚C)
RedHat II DC: 32˚F to 104˚F (0˚C to 40˚C)
RedHat DC: 32˚F to 77˚F (0˚C to 25˚C)
(104˚F/40˚C occasionally)
8210G227 AC: 32˚F to 130˚F (0˚C to 54˚C)
DC: 32˚F to 90˚F (0˚C to 32˚C)
Refer to Engineering Section for details.

Approvals

UL listed as indicated. CSA certified.
RedHat II meets applicable CE directives.
Refer to Engineering Section for details.

ATEX/IECEx certified with prefix "EV" as listed. *Refer to Optional Features Electrical Section for details.*

2/2 SERIES 8210

Specifications (English units)

Pipe Size (in)	Orifice Size (in)	Cv Flow Factor	Operating Pressure Differential (psi) Min.	Max. AC Air-Inert Gas	Max. AC Water	Max. AC Light Oil @ 300 SSU	Max. DC Air-Inert Gas	Max. DC Water	Max. DC Light Oil @ 300 SSU	Max. Fluid Temp. ˚F AC	Max. Fluid Temp. ˚F DC	Brass Body Catalog Number	Brass Body Const. Ref. ④	Brass Body UL ⑤ Listing	Stainless Steel Body Catalog Number	Stainless Steel Body Const. Ref. ④	Stainless Steel Body UL ⑤ Listing	Watt Rating/ Class of Coil Insulation ⑦ AC	Watt Rating/ Class of Coil Insulation ⑦ DC
NORMALLY CLOSED (Closed when de-energized), NBR or PTFE ② Seating																			
3/8	3/8	1.5	①	150	125	-	40	40	-	180	150	8210G073 ③	1P	●	8210G036 ③	1P	●	6.1/F	11.6/F
3/8	5/8	3	0	150	150	-	40	40	-	180	150	8210G093	5D	❍	-	-	-	10.1/F	11.6/F
3/8	5/8	3	5	200	150	135	125	100	100	180	150	8210G001 ▼	6D	❍	-	-	-	6.1/F	11.6/F
3/8	5/8	3	5	300	300	300	-	-	-	175	-	8210G006 ✓	5D	❍	-	-	-	17.1/F	-
1/2	7/16	2.2	①	150	125	-	40	40	-	180	150	8210G015 ③	2P	●	8210G037 ③	2P	●	6.1/F	11.6/F
1/2	5/8	4	0	150	150	-	40	40	-	180	150	8210G094 ✓	5D	❍	-	-	-	10.1/F	11.6/F
1/2	5/8	4	0	150	150	125	40	40	-	175	150	-	-	-	8210G087 ✓	7D	●	17.1/F	11.6/F
1/2	5/8	4	5	200	150	135	125	100	100	180	150	8210G002 ▼	6D	❍	-	-	-	6.1/F	11.6/F
1/2	5/8	4	5	300	300	300	-	-	-	175	-	8210G007	5D	❍	-	-	-	17.1/F	-
1/2	3/4	4	5	-	300	-	-	300	-	130	90	8210G227	5D	❍ †	-	-	-	17.1/F	40.6/H
3/4	5/8	4.5	0	150	150	125	40	40	-	175	150	-	-	-	8210G088 ✓	7D	●	17.1/F	11.6/F
3/4	3/4	5	5	125	125	125	100	90	75	180	150	8210G009 ▼	9D	❍	-	-	-	6.1/F	11.6/F
3/4	3/4	5	0	150	150	-	40	40	-	180	150	8210G095 ✓	8D	❍	-	-	-	10.1/F	11.6/F
3/4	3/4	6.5	5	250	150	100	125	125	125	180	150	8210G003 ▼	11D	❍	-	-	-	6.1/F	11.6/F
3/4	3/4	6	0	350	300	200	200	200	200	200	180	8210G026 ② ‡ ◆	40P/10D	●	-	-	-	16.1F	30.8/F
1	1	13	0	150	125	125	135	120	120	180	180	8210G054 ‡ ◆	41D/31D	●	8210G089 ‡ ◆	45D/15D	●	16.1/F	30.8/F
1	1	13	5	150	150	100	125	125	125	180	150	8210G004 ▼	12D	❍	-	-	-	6.1/F	11.6/F
1	1	13.5	0	300	225	115	-	-	-	200	-	8210G027 ‡	42P	●	-	-	-	20.1/F	-
1	1	13.5	10	300	300	300	-	-	-	175	-	8210G078 ②	13P	-	-	-	-	17.1/F	-
1 1/4	1 1/8	15	0	150	125	125	135	120	120	180	180	8210G055 ‡ ◆	43D/32D	●	-	-	-	16.1/F	30.8/F
1 1/4	1 1/8	15	5	150	150	100	125	125	125	180	150	8210G008 ▼	16D	❍	-	-	-	6.1/F	11.6/F
1 1/2	1 1/4	22.5	0	150	125	125	135	120	120	180	180	8210G056 ‡ ◆	44D/33D	●	-	-	-	16.1/F	30.8/F
1 1/2	1 1/4	22.5	5	150	150	100	125	125	125	180	150	8210G022 ▼	18D	●	8210G127	-	-	6.1/F	11.6/F
2	1 3/4	43	5	150	125	90	50	50	50	180	150	8210G100	20P	●	8210G129	-	-	6.1/F	11.6/F
2 1/2	1 3/4	45	5	150	125	90	50	50	50	180	150	8210G101	21P	●	-	-	-	6.1/F	11.6/F
NORMALLY OPEN (Open when de-energized), NBR Seating (PA Disc-Holder, except as noted)																			
3/8	5/8	3	0	150	150	125	125	125	80	180	150	8210G033	23D	●	-	-	-	10.1/F	11.6/F
3/8	5/8	3	5	250	200	200	250	200	200	180	180	8210G011 ⑧ ⑨	39D	●	-	-	-	10.1/F	11.6/F
1/2	5/8	4	0	150	150	125	125	125	80	180	150	8210G034 ✓	23D	●	-	-	-	10.1/F	11.6/F
1/2	5/8	3	0	150	150	100	125	125	80	180	150	-	-	-	8210G030 ✓	37D	●	10.1/F	11.6/F
1/2	5/8	4	5	250	200	200	250	200	200	180	180	8210G012 ⑧ ⑨	39D	●	-	-	-	10.1/F	11.6/F
3/4	3/4	5.5	0	150	150	125	125	125	80	180	150	8210G035 ✓	25D	●	-	-	-	10.1/F	11.6/F
3/4	5/8	3	0	150	150	100	125	125	80	180	150	-	-	-	8210G038 ✓	38D	●	10.1/F	11.6/F
3/4	3/4	6.5	5	-	-	-	250	200	200	-	180	8210C013	24D	●	-	-	-	-	16.8/F
3/4	3/4	6.5	5	250	200	200	-	-	-	180	-	8210G013	46D	●	-	-	-	16.1/F	-
1	1	13	0	125	125	125	-	-	-	180	-	8210B057 ⑥ ⑩	34D	●	-	-	-	20/F	-
1	1	13	5	-	-	-	125	125	125	-	180	8210D014	26D	●	-	-	-	-	16.8/F
1	1	13	5	150	150	125	-	-	-	180	-	8210G014	47D	●	-	-	-	16.1/F	-
1 1/4	1 1/8	15	0	125	125	125	-	-	-	180	-	8210B058 ⑥ ⑩	35D	●	-	-	-	20/F	-
1 1/4	1 1/8	15	5	-	-	-	125	125	125	-	180	8210D018	28D	●	-	-	-	-	16.8/F
1 1/4	1 1/8	15	5	150	150	125	-	-	-	180	-	8210G018	48D	●	-	-	-	16.1/F	-
1 1/2	1 1/4	22.5	0	125	125	125	-	-	-	180	-	8210B059 ⑥ ⑩	36D	●	-	-	-	20/F	-
1 1/2	1 1/4	22.5	5	-	-	-	125	125	125	-	180	8210D032	29D	●	-	-	-	-	16.8/F
1 1/2	1 1/4	22.5	5	150	150	125	-	-	-	180	-	8210G032	49D	●	8210G132	-	-	16.1/F	-
2	1 3/4	43	5	-	-	-	125	125	125	-	150	8210 103	30P	●	-	-	-	-	16.8/F
2	1 3/4	43	5	125	125	125	-	-	-	180	-	8210G103	50P	●	8210G133	-	-	16.1/F	-
2 1/2	1 3/4	45	5	-	-	-	125	125	125	-	150	8210 104	27P	●	-	-	-	-	16.8/F
2 1/2	1 3/4	45	5	125	125	125	-	-	-	180	-	8210G104	51P	●	-			16.1/F	-

① 5 psi on Air; 1 psi on Water.
② Valve provided with PTFE main disc.
③ Valve includes Ultem (G.E. trademark) piston.
④ Letter "D" denotes diaphragm construction; "P" denotes piston construction.
⑤ ❍ Safety Shutoff Valve; ● General Purpose Valve.
Refer to Engineering Section (Approvals) for details.

⑥ Valves not available with Explosionproof enclosures.
⑦ On 50 hertz service, the watt rating for the 6.1/F solenoid is 8.1 watts.
⑧ AC construction also has PA seating.
⑨ No disc-holder.
⑩ Stainless steel disc-holder.
† UL listed for fire protection systems per UL429A.

‡ DC constructions must have solenoid mounted vertical and upright.
✓ ATEX/IECEx certified with prefix "EV".
▼ ATEX/IECEx certified for DC only with prefix "EV".
◆ Not available in 6 Volt DC. EF and HB prefix only.

Specifications (Metric units)

Pipe Size (in)	Orifice Size (mm)	Kv Flow Factor (m^3/hr)	Operating Pressure Differential (bar)							Max. Fluid Temp. ˚C		Brass Body			Stainless Steel Body			Watt Rating/ Class of Coil Insulation ⑦	
				Max. AC			Max. DC												
			Min.	Air-Inert Gas	Water	Light Oil @ 300 SSU	Air-Inert Gas	Water	Light Oil @ 300 SSU	AC	DC	Catalog Number	Const. Ref. ④	UL ⑤ Listing	Catalog Number	Const. Ref. ④	UL ⑤ Listing	AC	DC
NORMALLY CLOSED (Closed when de-energized), NBR or PTFE ② Seating																			
3/8	10	1.3	①	10	9	-	3	3	-	82	65	8210G073 ③	1P	●	8210G036 ③	1P	●	6.1/F	11.6/F
3/8	16	2.6	0	10	10	-	3	3	-	82	65	8210G093	5D	❍	-	-	-	10.1/F	11.6/F
3/8	16	2.6	0.3	14	10	9	9	7	7	82	65	8210G001 ▼	6D	❍	-	-	-	6.1/F	11.6/F
3/8	16	2.6	0.3	21	21	21	-	-	-	79	-	8210G006 ✓	5D	❍	-	-	-	17.1/F	-
1/2	11	1.9	①	10	9	-	3	3	-	82	65	8210G015 ③	2P	●	8210G037 ③	2P	●	6.1/F	11.6/F
1/2	16	3.4	0	10	10	-	3	3	-	82	65	8210G094 ✓	5D	❍	-	-	-	10.1/F	11.6/F
1/2	16	3.4	0	10	10	9	3	3	-	79	65	-	-	-	8210G087 ✓	7D	●	17.1/F	11.6/F
1/2	16	3.4	0.3	14	10	9	9	7	7	82	65	8210G002 ▼	6D	❍	-	-	-	6.1/F	11.6/F
1/2	16	3.4	0.3	21	21	21	-	-	-	79	-	8210G007	5D	❍	-	-	-	17.1/F	-
1/2	19	3.4	0.3	-	21	-	-	21	-	54	32	8210G227	5D	❍ †	-	-	-	17.1/F	40.6H
3/4	16	3.9	0	10	10	9	3	3	-	79	65	-	-	-	8210G088 ✓	7D	●	17.1/F	11.6/F
3/4	19	4.3	0.3	9	9	9	7	6	5	82	65	8210G009 ▼	9D	❍	-	-	-	6.1/F	11.6/F
3/4	19	4.3	0	10	10	-	3	3	-	82	65	8210G095 ✓	8D	❍	-	-	-	10.1/F	11.6/F
3/4	19	5.6	0.3	17	10	7	9	9	9	82	65	8210G003 ▼	11D	❍	-	-	-	6.1/F	11.6/F
3/4	19	5.1	0	24	21	14	14	14	14	93	82	8210G026 ② ‡ ◆	40P/10D	●	-	-	-	16.1F	30.8/F
1	25	11	0	10	9	9	9	8	8	82	82	8210G054 ‡ ◆	41D/31D	●	8210G089 ‡ ◆	45D/15D	●	16.1/F	30.8/F
1	25	11	0.3	10	10	7	9	9	9	82	65	8210G004 ▼	12D	❍	-	-	-	6.1/F	11.6/F
1	25	11.5	0	21	16	8	-	-	-	93	-	8210G027 ‡	42P	●	-	-	-	20.1/F	-
1	25	11.5	0.7	21	21	21	-	-	-	79	-	8210G078 ②	13P	-	-	-	-	17.1/F	-
1 1/4	29	13	0	10	9	9	9	8	8	82	82	8210G055 ‡ ◆	43D/32D	●	-	-	-	16.1/F	30.8/F
1 1/4	29	13	0.3	10	10	7	9	9	9	82	65	8210G008 ▼	16D	❍	-	-	-	6.1/F	11.6/F
1 1/2	32	19.5	0	10	9	9	9	8	8	82	82	8210G056 ‡ ◆	44D/33D	●	-	-	-	16.1/F	30.8/F
1 1/2	32	19.5	0.3	10	10	7	9	9	9	82	65	8210G022 ▼	18D	●	8210G127	-	-	6.1/F	11.6/F
2	44	37	0.3	10	9	6	3	3	3	82	65	8210G100	20P	●	8210G129	-	-	6.1/F	11.6/F
2 1/2	44	39	0.3	10	9	6	3	3	3	82	65	8210G101	21P	●	-	-	-	6.1/F	11.6/F
NORMALLY OPEN (Open when de-energized), NBR Seating (PA Disc-Holder, except as noted)																			
3/8	16	2.6	0.0	10	10	9	9	9	6	82	65	8210G033	23D	●	-	-	-	10.1/F	11.6/F
3/8	16	2.6	0.3	17	14	14	17	14	14	82	82	8210G011 ⑧ ⑨	39D	●	-	-	-	10.1/F	11.6/F
1/2	16	3.4	0	10	10	9	9	9	6	82	65	8210G087 ✓	7D	●	-	-	-	10.1/F	11.6/F
1/2	16	2.6	0	10	10	7	9	9	6	82	65	-	-	-	8210G087 ✓	7D	●	10.1/F	11.6/F
1/2	16	3.4	0.3	17	14	14	17	14	14	82	82	8210G012 ⑧ ⑨	39D	●	-	-	-	10.1/F	11.6/F
3/4	19	4.7	0	10	10	9	9	9	6	82	65	8210G087 ✓	7D	●	-	-	-	10.1/F	11.6/F
3/4	16	2.6	0	10	10	7	9	9	6	82	65	-	-	-	8210G087 ✓	7D	●	10.1/F	11.6/F
3/4	19	5.6	0.3	-	-	-	17	14	14	-	82	8210C013	24D	●	-	-	-	-	16.8/F
3/4	19	5.6	0.3	17	14	14	-	-	-	82	-	8210G013	46D	●	-	-	-	16.1/F	-
1	25	11	0	9	9	9	-	-	-	82	-	8210B057 ⑥ ⑩	34D	●	-	-	-	20/F	-
1	25	11	0.3	-	-	-	9	9	9	-	82	8210D014	26D	●	-	-	-	-	16.8/F
1	25	11	0.3	10	10	9	-	-	-	82	-	8210G014	47D	●	-	-	-	16.1/F	-
1 1/4	29	13	0	9	9	9	-	-	-	82	-	8210B058 ⑥ ⑩	35D	●	-	-	-	20/F	-
1 1/4	29	13	0.3	-	-	-	9	9	9	-	82	8210D018	28D	●	-	-	-	-	16.8/F
1 1/4	29	13	0.3	10	10	9	-	-	-	82	-	8210G018	48D	●	-	-	-	16.1/F	-
1 1/2	32	19.5	0	9	9	9	-	-	-	82	-	8210B059 ⑥ ⑩	36D	●	-	-	-	20/F	-
1 1/2	32	19.5	0.3	-	-	-	9	9	9	-	82	8210D032	29D	●	-	-	-	-	16.8/F
1 1/2	32	19.5	0.3	10	10	9	-	-	-	82	-	8210G032	49D	●	8210G132	-	-	16.1/F	-
2	44	37	0.3	-	-	-	9	9	9	-	65	8210 103	30P	●	-	-	-	-	16.8/F
2	44	37	0.3	9	9	9	-	-	-	82	-	8210G103	50P	●	8210G133	-	-	16.1/F	-
2 1/2	44	39	0.3	-	-	-	9	9	9	-	65	8210 104	27P	●	-	-	-	-	16.8/F
2 1/2	44	39	0.3	9	9	9	-	-	-	82	-	8210G104	51P	●	-	-	-	16.1/F	-

① 0.3 bar on Air; 0.0 bar on Water.
② Valve provided with PTFE main disc.
③ Valve includes UItem (G.E. trademark) piston.
④ Letter "D" denotes diaphragm construction; "P" denotes piston construction.
⑤ ❍ Safety Shutoff Valve; ● General Purpose Valve.
Refer to Engineering Section (Approvals) for details.

⑥ Valves not available with Explosionproof enclosures.
⑦ On 50 hertz service, the watt rating for the 6.1/F solenoid is 8.1 watts.
⑧ AC construction also has PA seating.
⑨ No disc-holder.
⑩ Stainless steel disc-holder.
† UL listed for fire protection systems per UL429A.

‡ DC constructions must have solenoid mounted vertical and upright.
✓ ATEX/IECEx certified with prefix "EV".
▼ ATEX/IECEx certified for DC only with prefix "EV".
◆ Not available in 6 Volt DC. EF and HB prefix only.

Dimensions: inches (mm)

Const. Ref.		H	K	L	P	W
1*	in	3.85	3.00	1.91	3.41	1.69
	mm	98	76	49	87	43
2*	in	4.17	3.25	2.28	3.63	1.69
	mm	106	83	58	92	43
5	in	3.84	2.31	2.75	3.28	2.28
	mm	98	59	70	83	58
6*	in	3.38	1.94	2.75	2.80	2.28
	mm	86	49	70	71	58
7	in	4.19	2.50	2.81	3.47	2.39
	mm	106	64	71	88	61
8	in	4.13	2.47	2.81	3.44	2.29
	mm	105	63	71	87	58
9*	in	3.66	2.10	2.81	2.96	2.28
	mm	93	53	71	75	58
10*	in	5.20	3.40	2.80	4.50	2.50
	mm	131	86	71	114	62
11*	in	4.16	2.66	3.84	3.52	2.75
	mm	106	68	98	89	70
12	in	5.64	3.15	3.75	4.01	3.36
	mm	143	80	95	102	85
13	in	4.44	3.22	3.75	4.19	5.81
	mm	113	82	95	106	147
15*	in	5.20	3.30	3.80	4.40	3.80
	mm	133	83	98	111	98
16	in	5.64	3.15	3.66	4.01	3.56
	mm	143	80	93	102	90
18*	in	6.11	3.30	4.38	4.16	3.92
	mm	155	84	111	106	100
20*	in	7.33	3.71	5.06	4.57	4.87
	mm	186	94	129	116	124
21*	in	7.33	3.71	5.50	4.57	4.87
	mm	186	94	140	116	124
23	in	4.35	2.65	2.75	3.79	2.28
	mm	110	67	70	96	58
24	in	5.06	X	3.78	4.44	2.75
	mm	129	X	96	113	70
25	in	4.64	2.81	2.81	3.94	2.28
	mm	118	71	71	100	58
26	in	6.53	X	3.75	4.91	3.19
	mm	166	X	95	125	81
27	in	8.22	X	5.50	5.47	4.87
	mm	209	X	140	139	124
28	in	6.53	X	3.66	4.91	3.19
	mm	166	X	93	125	81
29	in	7.03	X	4.38	5.06	4.40
	mm	179	X	111	129	112

* DC dimensions slightly larger.
IMPORTANT: Valves may be mounted in any position, except as noted in specifications table.

Const. Ref. 1, 2

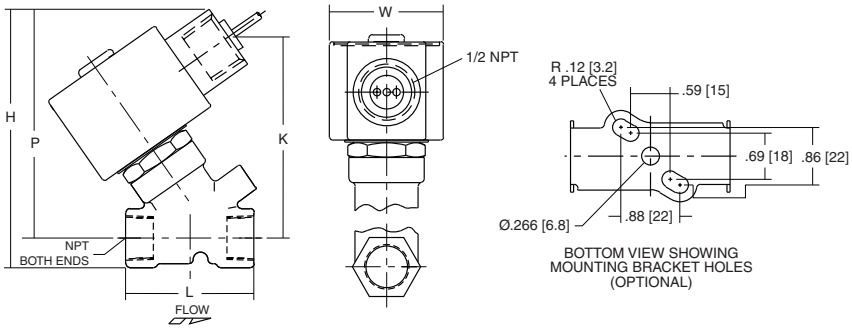

Const. Ref. 13

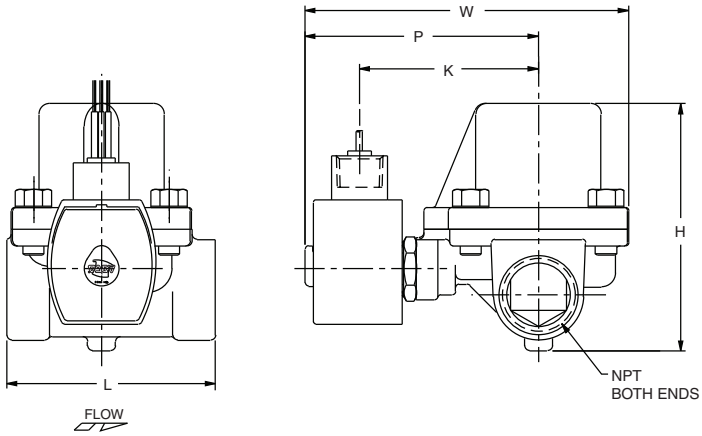

Const. Ref. 5-9, 11, 23 , 25, 37,38, 40-46

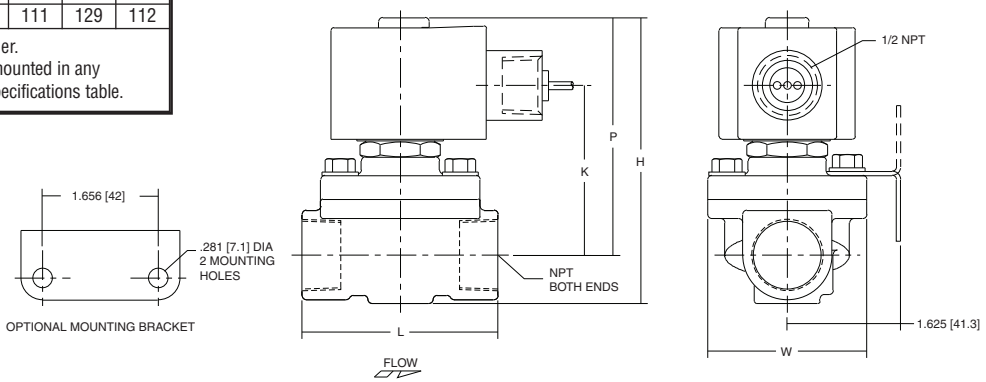

Dimensions: inches (mm)

Const. Ref.		H	K	L	P	W
30	in	8.22	X	5.06	5.47	4.87
	mm	209	X	129	139	124
31	in	5.13	3.19	3.76	4.32	3.27
	mm	130	81	95	110	83
32	in	5.60	3.44	3.66	4.57	3.27
	mm	142	87	93	116	83
33	in	5.92	3.66	4.51	4.80	3.89
	mm	150	93	115	122	99
34	in	6.91	X	3.75	6.09	3.25
	mm	176	X	95	155	83
35	in	7.34	X	3.66	6.34	3.25
	mm	186	X	93	161	83
36	in	7.66	X	4.38	6.56	3.91
	mm	1.95	X	111	167	99
37	in	4.61	2.75	2.81	3.89	2.39
	mm	117	70	71	99	61
38	in	4.61	2.75	2.81	3.89	2.39
	mm	117	70	71	99	61
39	in	5.42	2.31	2.75	4.86	3.80
	mm	138	59	70	123	97
40	in	5.20	3.29	2.81	4.50	2.28
	mm	132	83	71	114	58
41	in	5.13	3.10	3.75	4.32	3.25
	mm	130	79	95	110	83
42	in	6.43	4.40	3.93	5.62	3.25
	mm	163	112	100	143	83
43	in	5.57	3.35	3.66	4.57	3.25
	mm	142	85	93	116	83
44	in	5.90	3.57	4.38	4.79	3.91
	mm	150	91	111	122	99
45	in	5.26	3.17	3.75	4.38	3.84
	mm	134	81	95	111	98
46	in	4.95	3.10	3.84	4.31	2.75
	mm	126	79	98	110	70
47	in	6.43	3.59	3.75	4.81	3.52
	mm	163	91	95	122	90
48	in	6.43	3.59	3.66	4.81	3.73
	mm	163	91	93	122	95
49	in	6.91	3.75	4.38	4.96	4.40
	mm	176	95	111	126	112
50	in	8.13	4.15	5.06	5.37	4.87
	mm	207	105	129	136	124
51	in	8.13	4.15	5.50	5.37	5.18
	mm	207	105	140	136	132

IMPORTANT: Valves may be mounted in any position, except as noted in specifications table.

Const. Ref. 10, 15, 31, 32, 33

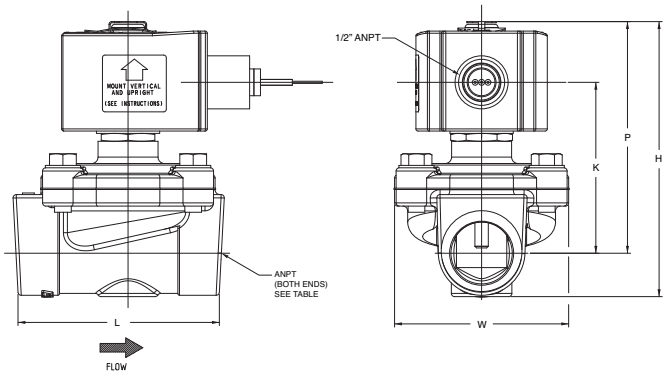

Const. Ref. 24, 34, 35, 36

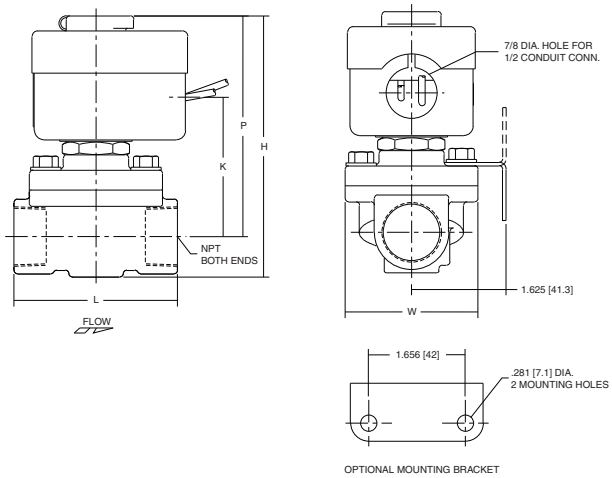

Const. Ref. 12, 16, 26, 28, 47, 48

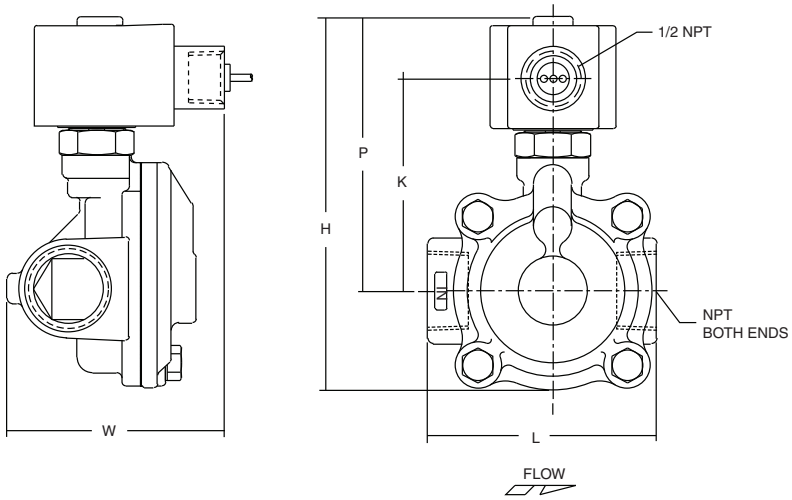

Dimensions: inches (mm)

Const. Ref. 39

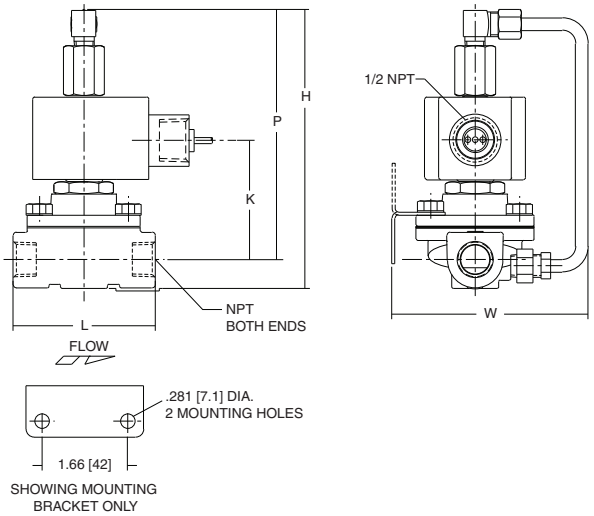

Const. Ref. 18, 29, 49

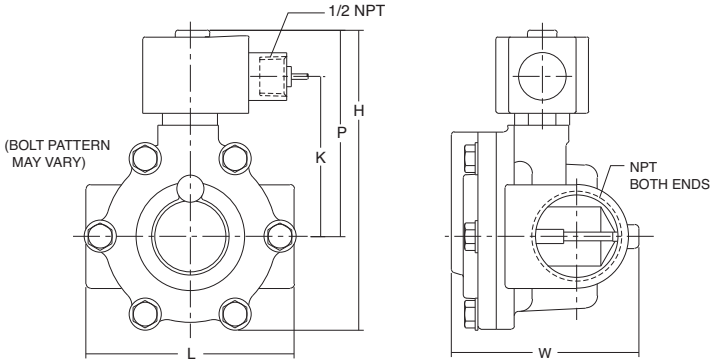

Const. Ref. 20, 21, 27, 30, 50, 51

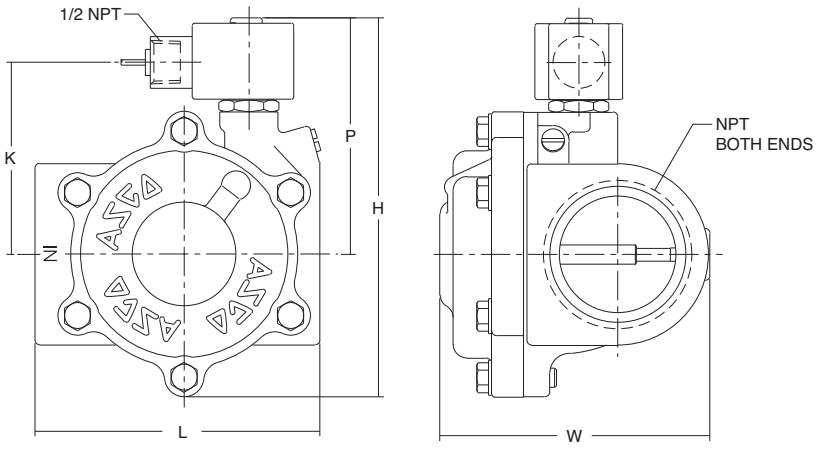

CS-999-130 : Identification sheet

VWTC PROJECT NUMBER:	Iqaluit WWTP	REV:	01
PROJECT NAME:	5000218036	SUBMITTED TO (COMPANY):	
ENGINEER:	G. HÉBERT	SUBMITTED TO (RESPONSIBLE)	
PROJECT MANAGER:	C. BEKAERT	PROJECT NUM REFERENCE.:	
PHONE NUMBER:		LOT NUMBER:	

SUPPLIER	EQPT CODE	EQPT TAG NO	DIA	DESCRIPTION	INFO 1	INFO 2	INFO 3	APPLIC.	NOTE	REV
K5	ST-999-130	BM-02-210		BIOMEDIA	BIOMEDIA K5 / 232 m3					1

This page is intentionally left blank

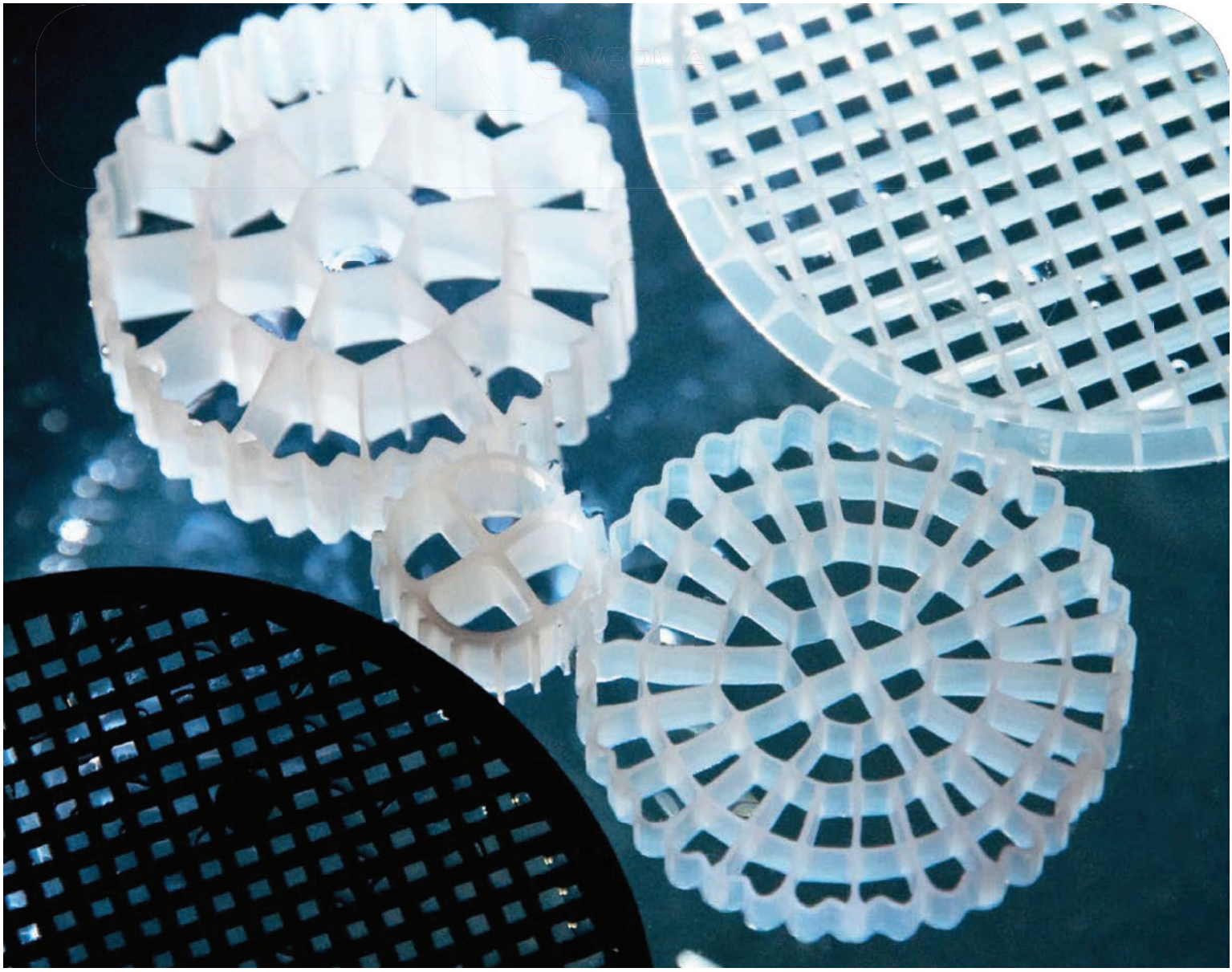

VEOLIA

AnoxKaldnes™

Anox™ K5

WATER TECHNOLOGIES

Anox™ K5

Product specification

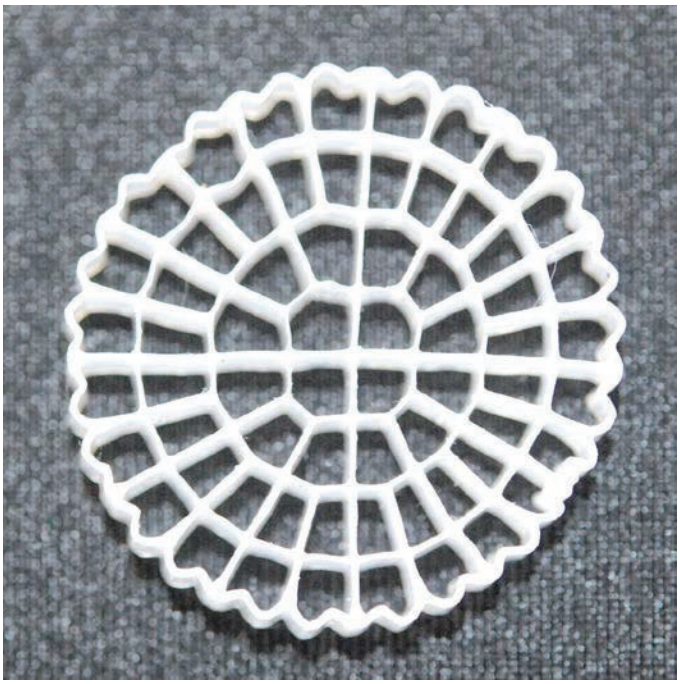

Use

Carrier media for biofilm in biological wastewater treatment. For use in MBBR reactors, with tank and reactor equipment designed for carrier media.

Production

Extrusion. The carriers are produced in several extrusion machines. A combination of phenolic antioxidant and phosphite is added to the material to improve stabilization for the extruding process. Minor differences can be seen between individual pieces but this does not influence performance.

Form and size

Disk shaped carrier with a nominal diameter of 25 mm and a thickness between 3.5 to 4 mm. Minor differences in the measures can be seen between individual pieces but this does not influence performance.

Protected surface area for biofilm growth

Approximately 800 m^2/m^3 ± 1 %

Number per m^3

Approximately 331,000

Composition

High-density polyethylene.

Density

Adjustable. For most applications the carrier exists in density 0.95. The density tolerance is ±0.02 kg/dm^3.

Weight per m^3

118 kg at a density of 0.95 kg/dm^3.

Handling

The carriers are packed and shipped in bags containing 1 m^3 carrier volume. When the carriers are emptied into the reactor, the reactor must already be filled with water and the aeration or mixing system must be running in order to avoid any impact damage to the carriers. Impact damages can be caused by a free fall of several meters and collisions with hard surfaces or other carriers. When filling, the suspended bags are usually simply cut open from the bottom with a knife.

The carriers should be stored in the bags and the bags must not be stacked on one and another as the underlying carriers may be damaged by the extra weight. If the bags are stored, it is important that they are protected against sun light (UV light) and high temperatures.

If the carriers have to be moved from one reactor to another, centrifugal pumps or pneumatic conveyors are not suitable and will cause carrier breakage. The carriers can be safely moved using an air lift pump or a belt conveyor.

Service Life

The service life with normal use in a steel tank is more than 20 years and more than 15 years in a concrete tank with smooth walls. A rough concrete tank will wear the carriers and shorten the life expectancy. In concrete tanks, the rate of wear will depend on the aeration intensity and the roughness of the concrete. It is important that there are no sharp edges on the grid or other equipment in the reactor in order to avoid impact damage that can reduce service life.

Resourcing the world

Veolia Water Technologies

2000 Argentia Road, Plaza IV, suite 430 • Mississauga, Ontario •
L5N 1W1 Canada tel: 905-286-4846 • fax: 905-286-0488
salescanada@veolia.com •

Veolia Water Technologies Communications - 08/2014 - © Veolia Photo Library

4 – DETAILED TECHNICAL DOCUMENTATION

4.3 – SHOP DRAWINGS SUBMITTAL PACKAGES

4.3.3 – BLOWERS

LEFT BLANK

TECHNICAL DOCUMENTATION

This page is intentionally left blank

Project name:	IQALUIT
Project#:	5000218036
Document #:	5000218036_DS_0003_GEN_VWT
by:	BB
chkd:	GH
appvd:	CB

SUBMITTAL PACKAGE

BLOWER(S)

5000218036_DS_0003_GEN_VWT Rev 2

This page is intentionally left blank

Project name: IQALUIT

Project#: 5000218036

Document #: 5000218036_DS_0003_GEN_VWT

by: BB

chkd: GH

appvd: CB

SUPPLIER TECHNICAL DATASHEETS

OIM manual section: 4.3.3.1

This page is intentionally left blank

CS-999-100 : Identification sheet

VWTC PROJECT NUMBER:	Iqaluit WWTP	REV:	02
PROJECT NAME:	5000218036	SUBMITTED TO (COMPANY):	
ENGINEER:	F.Vinci	SUBMITTED TO (RESPONSIBLE)	
PROJECT MANAGER:	C. BEKAERT	PROJECT NUM REFERENCE.:	
PHONE NUMBER:		LOT NUMBER:	

SUPPLIER	EQPT CODE	EQPT TAG NO	DIA	DESCRIPTION	INFO 1	INFO 2	INFO 3	APPLIC.	NOTE	REV
AERZEN	ST-999-100	B02-110		MBBR ROTARY BLOWER	AERZEN - GM 15L DN 100 BLOWER // TECO MODEL # PDH02545, PREMIUM EFFICIENCY, 25HP, 1800RPM, TEFC, 575V/60HZ // BASE WITH INTEGRATED REACTIVE TYPE DISCHARGE SILENCER // INTAKE FILTER SILENCER // HINGED MOTOR SUPPORT AS AUTOMATIC BELT TENSIONING DEVICE //	SET OF VIBRATION ISOLATION MOUNTS // NARROW V-BELT DRIVE WITH GUARD - 1 SET SPRING LOADED RELIEF VALVE PRESET TO: 750 MBAR DISCHARGE MANIFOLD WITH EXTERNALLY ACCESSIBLE INTEGRATED CHECK VALVE // FLANGE ANSI CLASS 125 // ACOUSTIC ENCLOSURE	// CW PRESSURE GAUGE, ISOLATION BALL VALVE, VACUUM GAUGE, TEMPERATURE SWITCH C/W THERMOWELL, DIRTY FILTER INDICATOR, PRESSURE SWITCH, VACUUM SWITCH, NEMA 4X, THERMOMETER 4 1/2" // 2 YEARS SPARE KIT			2
AERZEN	ST-999-100	B02-120		MBBR ROTARY BLOWER	AERZEN - GM 15L DN 100 BLOWER // TECO MODEL # PDH02545, PREMIUM EFFICIENCY, 25HP, 1800RPM, TEFC, 575V/60HZ // BASE WITH INTEGRATED REACTIVE TYPE DISCHARGE SILENCER // INTAKE FILTER SILENCER // HINGED MOTOR SUPPORT AS AUTOMATIC BELT TENSIONING DEVICE //	SET OF VIBRATION ISOLATION MOUNTS // NARROW V-BELT DRIVE WITH GUARD - 1 SET SPRING LOADED RELIEF VALVE PRESET TO: 750 MBAR DISCHARGE MANIFOLD WITH EXTERNALLY ACCESSIBLE INTEGRATED CHECK VALVE // FLANGE ANSI CLASS 125 // ACOUSTIC ENCLOSURE	// CW PRESSURE GAUGE, ISOLATION BALL VALVE, VACUUM GAUGE, TEMPERATURE SWITCH C/W THERMOWELL, DIRTY FILTER INDICATOR, PRESSURE SWITCH, VACUUM SWITCH, NEMA 4X, THERMOMETER 4 1/2" // 2 YEARS SPARE KIT			2

SUPPLIER	EQPT CODE	EQPT TAG NO	DIA	DESCRIPTION	INFO 1	INFO 2	INFO 3	APPLIC.	NOTE	REV
AERZEN	ST-999-100	B02-130		MBBR ROTARY BLOWER	AERZEN - GM 15L DN 100 BLOWER // TECO MODEL # PDH02545, PREMIUM EFFICIENCY, 25HP, 1800RPM, TEFC, 575V/60HZ // BASE WITH INTEGRATED REACTIVE TYPE DISCHARGE SILENCER // INTAKE FILTER SILENCER // HINGED MOTOR SUPPORT AS AUTOMATIC BELT TENSIONING DEVICE //	SET OF VIBRATION ISOLATION MOUNTS // NARROW V-BELT DRIVE WITH GUARD - 1 SET SPRING LOADED RELIEF VALVE PRESET TO: 750 MBAR DISCHARGE MANIFOLD WITH EXTERNALLY ACCESSIBLE INTEGRATED CHECK VALVE // FLANGE ANSI CLASS 125 // ACOUSTIC ENCLOSURE	// CW PRESSURE GAUGE, ISOLATION BALL VALVE, VACUUM GAUGE, TEMPERATURE SWITCH C/W THERMOWELL, DIRTY FILTER INDICATOR, PRESSURE SWITCH, VACUUM SWITCH, NEMA 4X, THERMOMETER 4 1/2" // 2 YEARS SPARE KIT		2

Aerzen Canada
1995 Montée Labossière, Vaudreuil-Dorion, Québec J7V 8P2

Customer Reference: Iqaluit blowers

SCOPE OF SUPPLY

3 Aerzen Generation 5 Blower Package - GM 15L DN 100 - Pressure - including:
Aerzen GM 15L Blower
Drive Motor: 25hp, 1800rpm, TEFC, 575V/60Hz

Base with integrated reactive type discharge silencer
Intake filter silencer
Hinged motor support as automatic belt tensioning device
Set of vibration isolation mounts
Narrow v-belt drive with guard - 1 set
Spring loaded relief valve preset to: 750 mbar
Discharge manifold with externally accessible integrated check valve
Flanged connections to ANSI Class 125 Standard - inlet and discharge
Acoustic Enclosure - Indoor/Outdoor

Instruments
Pressure gauge c/w isolation ball valve (3x)
Vacuum gauge c/w isolation ball valve (3x)
Temperature switch c/w thermowell - Nema 4x (3x)
Dirty filter indicator (3x)
Pressure switch - Nema 4x (3x)
Vacuum switch - Nema 4x (3x)
Thermometer 4 1/2" (Panel mount) (3x)
Flanged connections (3x)

Aerzen recommended spare parts :

2 Year Spare Kit includes :
2 sets of filters
1 set of V-belts
1 oil change

Connection Points:
Intake Connection: Flanged connections 4” to ANSI Class 125 Standard
Discharge Connection: Flanged connections 4” to ANSI Class 125 Standard

Exclusions: See page 2

Aerzen Canada
1995 Montée Labossière, Vaudreuil-Dorion, Québec J7V 8P2

Customer Reference: Iqaluit blowers
Aerzen Reference: SQ-17-019191d

PERFORMANCE DATA

Aerzen Blower Package - GM 15L DN 100 - Pressure

Configuration: **G5**

Conditions:		**Design**	**min flow**	
Flow at inlet conditions	m³/min	13.1	1.62	12.9
	Icfm	463	57	455
Inlet pressure (abs.)	bar	1.01	1.01	1.010
	Psi	14.6	14.6	14.6
Pressure differential	mbar(g)	460	460	470
	Psig	**6.67**	**6.67**	**6.8**
Inlet temperature	°C	15	15	15
Discharge temperature	°C	60	109	61
Blower speed	RPM	3770	980	3724
Blower maximum speed	RPM	4800	4800	4800
% of maximum blower speed		79%	20%	78%
Power required at shaft (with accessories) **	kW	13.6	3.2	13.6
	HP	18.3	4.3	18.3
Total Power (Wire to Air):	HP	20.0	4.9	20.0
Motor rating	HP	25		
Motor speed	RPM	1765	459	1744
Motor frequency	Hz	60	16	59

Noise level without acoustic hood dB(A) 89
Noise level with acoustic hood dB(A) 70

Tolerances as per EN 10204, in accordance with standard ISO 1217:
Flow at inlet conditions / Power required at shaft +/- 5%

Blower package noise level:
Free field measurement at 1m from the complete blower package (tolerance +/- 2 dB(A))

Tests and measurements:
Blower stage: 1.5 hour flow test at the factory (Germany) on a calibrated test bed, at maximum operating conditions and according to DIN 1945. acceptance tolerance: +/- 5%.
A complete test report is available upon request.

On Site Commissioning
Available upon request, charges to be advised.
- Any commissioning activity is subject to two weeks prior notice and completion of commissioning checklist.
- Any on-site activity outside the time indicated will be billed according to the Aerzen Standard Rate Sheet

Exclusions
Control Panels, Motor Starters, Piping and Electrical Connections
* Unloading valves are required for reduced voltage starters

Warranty
Blowers including accessories are warranted for a period of 12mo / max 18mo after delivery and after provisional acceptance of the work against defects in workmanship and design. This warranty does not cover wearing parts unless such parts are defective during shipping / commissioning.
As per Aerzen standard warranty terms.

** Power at shaft excludes drive motor and belt drive

ROTARY LOBE BLOWERS

DELTA BLOWER GENERATION 5

Intake volume streams from 30 m^3/h to 15,000 m^3/h

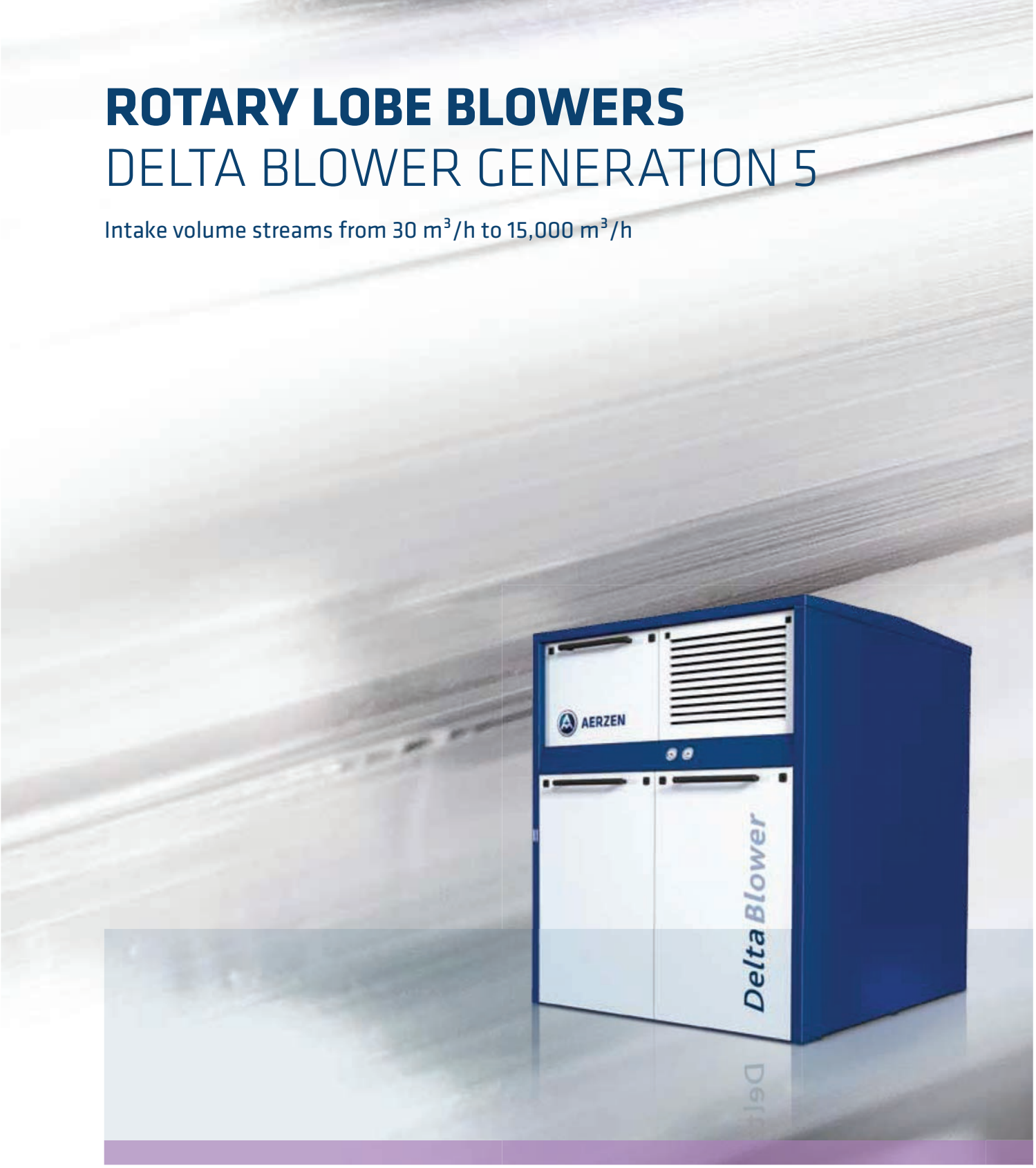

AERZEN

THE DELTA BLOWERS. ROBUST, DURABLE MACHINES FOR COUNTLESS COMPRESSOR PROCESSES.



Delta Blower Generation 5

They are the driving force behind countless processes, the heart of a powerful machine assembly: the Delta Generation 5 rotary lobe blowers. They represent the distillation of almost 150 years of AERZEN experience and development work, but are more innovative than ever. AERZEN has packed a number of new features into its latest generation of delta blowers: oil-free conveyance of air and neutral gases; a broad control range for volume streams of from 30 m^3/h to 15,000 m^3/h; reduced life-cycle costs; easy handling; quieter operation. What hasn't changed: the extremely robust, extremely reliable, and extremely durable nature of this global success story. No wonder that their owners are so enthusiastic about putting them into continuous service – year in and year out, decade after decade.


AERZEN
Delta Blower



Applications
- Water and waste water treatment
- Aeration
- Filter backwashing
- Pneumatic conveyance of bulk materials
- Gas conveyance
- Degassing
- Dust removal
- Vacuum production
- Biogas treatment

and many others

Industries
- Sewage treatment
- Chemical and process technology
- Power plants
- Cement and lime
- Foodstuffs
- Paper

and many others

THE UNIVERSAL GENIUS FOR EVERY APPLICATION.

The versatile and compact Delta Blower units can be deployed in any climate zone on Earth. In the most challenging outdoor environments just as safely as in covered indoor spaces. They can be used as both standalone units or in complex assemblies. They are as reliable in earthquake zones as they are aboard ships or in other mobile applications.

Versatility in Detail.
Delta Blowers are powerful all-round geniuses. Miniature units can be mounted on silo vehicles, the largest machines can be used in lifting units. They are used to unload ships – at up to 1,000 tons an hour.

Control range from 25% to 100%

Intake volumes streams from 30 m^3/h to 15,000 m^3/h

Positive pressure up to 1,000 mbar

Nominal widths from DN 50 to DN 400



Indispensable for power plant



Powerful performer for loading and unloading ships

MACHINES AND SERVICES FROM AERZEN. HIGHLY ACCESSIBLE AND AVAILABLE AROUND THE WORLD.

The durability of Delta Blower units is legendary. Just like their proverbial reliability, lifespan, and intelligent operating and maintenance design. Why bring up AERZEN services at all, then? Because service is necessary. And because the service teams we have on call across the globe are an important decision criterion for plant operators: a decision for blowers "made by AERZEN".



The heart of the Delta unit: the triple-lobed AERZEN blower stage

High availability.
The best blower units are the ones you don't notice. Because they do their work reliably, year in and year out. The Delta Blowers from AERZEN are just this kind of unit. There's a reason they have a reputation for robust nature and long service life: AERZEN makes all the components itself. Right down to the control system. From the initial idea through engineering to configuration. Which is how we can guarantee the productivity of our machines. Our contribution to the "made in Germany" quality designation.



A reliable partner – the world over

There for you – the world over.
Typically AERZEN: that our solutions should be so reliably available. That means our machines, of course, but also our services. Our teams will take care of your units throughout their entire operational life, thus helping to protect the value of your investment. And the fact that we have a network of over 40 affiliates and service representatives in more than 100 countries around the world means we're never far away. We can be there for you quickly – when you need us.

AERZEN: always the right choice.
- Commissioning done by qualified personnel
- Individualized training for customer's specialists
- Customer-specific service and maintenance contracts
- Delta-real time monitoring for your unit
- On-site machine modifications (if needed)

Intelligently made.
What do they mean, the terms "compact, easy handling, maintenance-friendly"? These are our promises to you for the day-to-day operation of our products, and they're worth their weight in gold. Some concrete examples:

- Small footprint
- Flexible machine mounts
- Easy to move with a fork lift or pallet truck
- Space-saving side-by-side setup
- Plug and play installation and commissioning
- Easy access to all parts subject to wear
- Oil levels can be checked while machine is in operation
- Maintenance work such as changing oil and filters done from the front of the machine
- Low noise levels
- Belt-driven for optimal volume streams; retrofitting is fast and easy

100% clean.
How can we offer machines that can be used for handling foodstuffs, without the need for extensive cleaning that would interrupt production? By eliminating absorption material in the muffler. AERZEN designed the base support to function as a discharge muffler, reducing noise by air deflection alone. 100% free of absorption material that would otherwise cause wear and contaminate downstream systems. The base supports, by the way, are AERZEN patents and are also certified as spark arresters for use in ATEX applications.

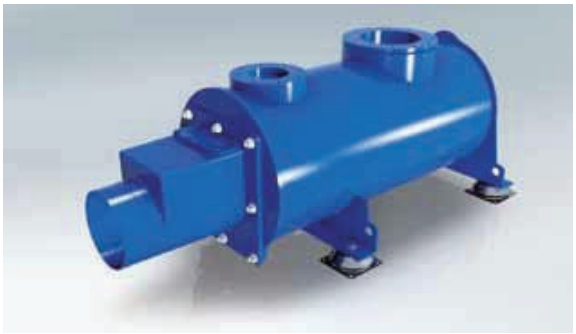

Intelligent noise reduction: the AERZEN discharge muffler with no absorption material

BLOWERS ARE BLOWERS, RIGHT? AN END TO PRECONCEPTIONS.

AERZEN is one of the world's most innovative providers of compressor technology. For over 150 years. And it was almost 150 years ago – 1868, to be exact – that we produced Europe's first rotary lobe blower. Since then we have raised the bar for each generation of this technology. Let yourself be surprised. Discover the extraordinary blowers: the Delta Blower Generation 5.

Extremely robust
- For a broad range of applications in control ranges from 25 to 100%
- Many types of possible modifications

Compact design
- Space-saving side-by-side setup
- Smaller engine rooms

Operation-friendly, low-maintenance design
- High availability in continuous operation under difficult environmental conditions
- Control and maintenance from the front of the machine

Plug&play
- Pre-configured, parameterized, ready to run
- Integrated service package with funnel and initial oil fill

Oil-free per Class 0
- Per ISO 8573-1, TÜV certified

No absorption material
- For use in the pneumatic conveyance of bulk food items (no contamination).
- Secure, energy-efficient water treatment (no deposits of absorption material on aeration plates, no clogging of filter media, no pressure losses)

Integrated power component (optional)
- Frequency inverter, delta-star, direct/soft start
- Intelligent AERtronic control

Smart oil system
- Oil levels can be checked with the machine running
- Readable from outside the machine
- Oil instead of grease: bearings lubricated with oil last longer





A plus for the environment
- Energy-efficient Class IE3 motors as standard equipment
- Intake on the cold side of the unit
- Basic unit integrated into a highly efficient machine network with rotary lobe compressors and turbo blowers from AERZEN
- Retrofitting is fast and easy

Belt-tensioning hinged motor mounting plate
- Fully automatic and maintenance-free belt tensioning
- No need to monitor V-belt tension
- Very easy to mount or replace V-belts

Multifunctional hinged motor mounting plate and lifting jack
- Safer transport
- Easy, secure V-belt installation
- Mobile installation (e.g. aboard ship/ in earthquake zones)
- Hinged motor mounting plate as support for heavy motors

Low noise levels
- For easy compliance with noise level regulations near populated areas and production facilities
- Minimal noise levels with optimized acoustic hood
- Integrated pulsation reduction process (patented AERZEN blower stage)

Approval per PDE guidelines (pressure valve)

ATEX compliant
- AERZEN base plates certified as spark extinguishers for ATEX applications

TÜV-certified zone separation filter

WANT TO KNOW MORE ABOUT WHAT'S INSIDE? DESIGN AND CONSTRUCTION.

It's good to know what all is inside each and every AERZEN Delta blower unit: The wealth of experience of a global market leader. The quality expected of a family firm with a long history of excellence. The goal of providing the best solutions for our customers. And a principle that underlies thousands and thousands of successful applications: Roots.

Innovative pulsation reduction.
AERZEN has developed a unique process especially for the Delta Blower series and integrated it into all its models: pulsation reduction. This patented AERZEN process prevents disruptions in the machine even before they arise. The triple-lobed rotors in the Delta blowers have two channels cast in the cylinder. These channels control backflow into the conveyance chamber to eliminate the blowback and crimping impulses that were typical of double-lobed blowers. A patented interference process that means an end to pulsation.

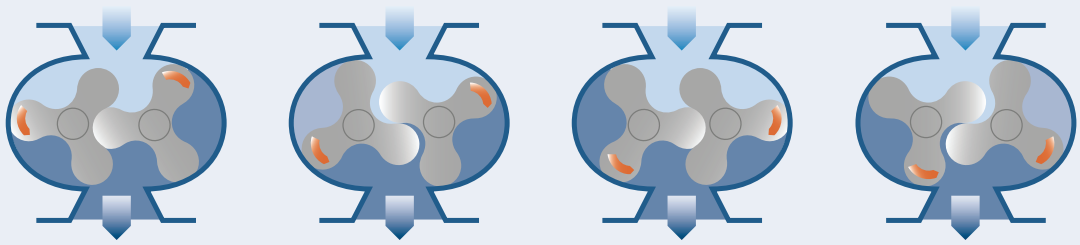

Conveyance process in AERZEN blowers

Intelligent technical details are your guarantee for the lasting value of the Delta blowers. One example from among many: the patented pulsation reduction process, an AERZEN innovation that increases the lifespan of the bearings.

The inner values are what count: a view into an AERZEN blower

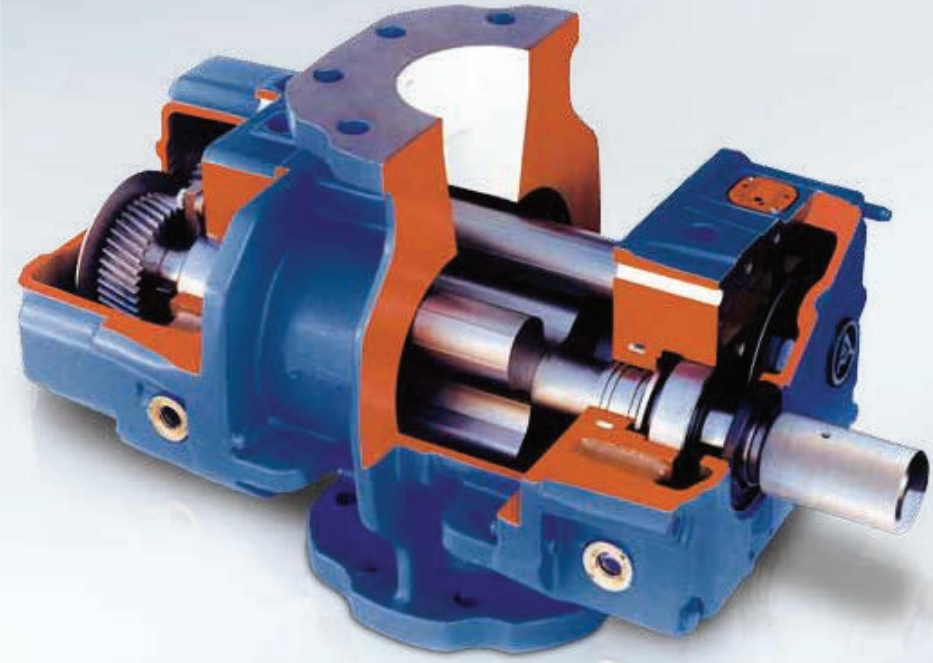

Blower stage
- Triple-lobed blower with integrated pulsation reduction
- Housing: cylinder (with two integrated, pressure-side pre-inlet channels to reduce noise through pulsation reduction), wheel well, housing lid, and side plates
- Made of EN-GJL-200
- Ribbed surface

Rotors

Models GM 3 S to GM 80 L:
- Rotors and shafts drop forged from C45N

Models GM 90 S and GM 30 L:
- Rotors and shaft drop forged from EN-GJS-500-7

Models GM 150 S to GM 240 S:
- Rotors made of EN-GJS-400-18-LT, shafts of C45N

Drive type
- Overhung via narrow V-belt
- Direct drive (option)

Cooling
- Convection cooling

Lubrication
- Oil bath for bearings and timing gears

Oil-free conveyance
- Oil-free operation per ISO 8573-1 Class 0 is guaranteed by using proven piston ring labyrinth seals combined with neutral chambers (open to the atmosphere)

Timing gears
- Made of case-hardening steel, hardened and ground, with helical gears
- Attached to the shaft via taper interference fit
- Extremely smooth running, very long operational life

Refer to Technical Datasheet on page 34/41 for materials

EXCEEDING STANDARDS. AERZEN DELIVERABLES.

Some do comfortable. Others do efficient. We do both. When your Delta Blower unit is delivered, it comes completely configured, parameterized, ready to plug and run. Designed especially for your processes, of course. And including all the standardized accessories and components you'll need for flawless operation at the push of a button.

The AERZEN "All-in" concept: Standard deliverables.



1 **Triple-lobe blower stage**
- With integrated pulsation reduction (see page 10/11)

2 **Base plate with integrated discharge muffler**
- Certified as ATEX spark arrester per EU guideline 1999/92/EC
- Muffler free of absorption material



3 **Intake muffler with integrated air filter**
- Normal intake from the surrounding area
- Conduit intake optional

4 **Flexible rubber bushing**
- With clamps

5 **Flexible machine mounts**
- To decouple machine-borne noise

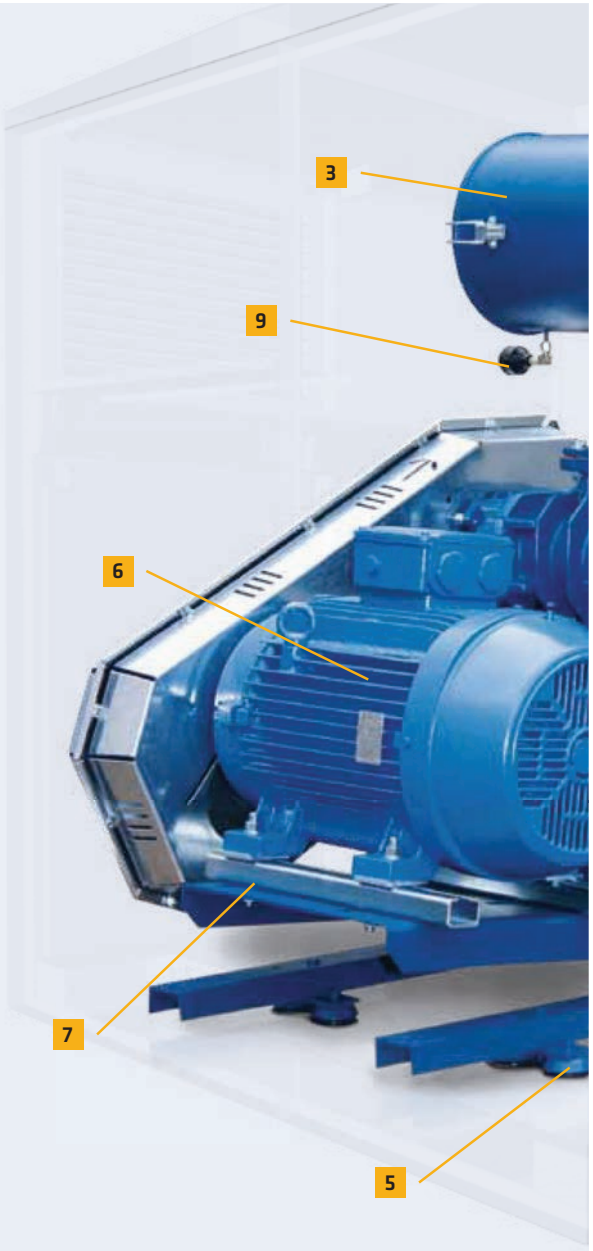

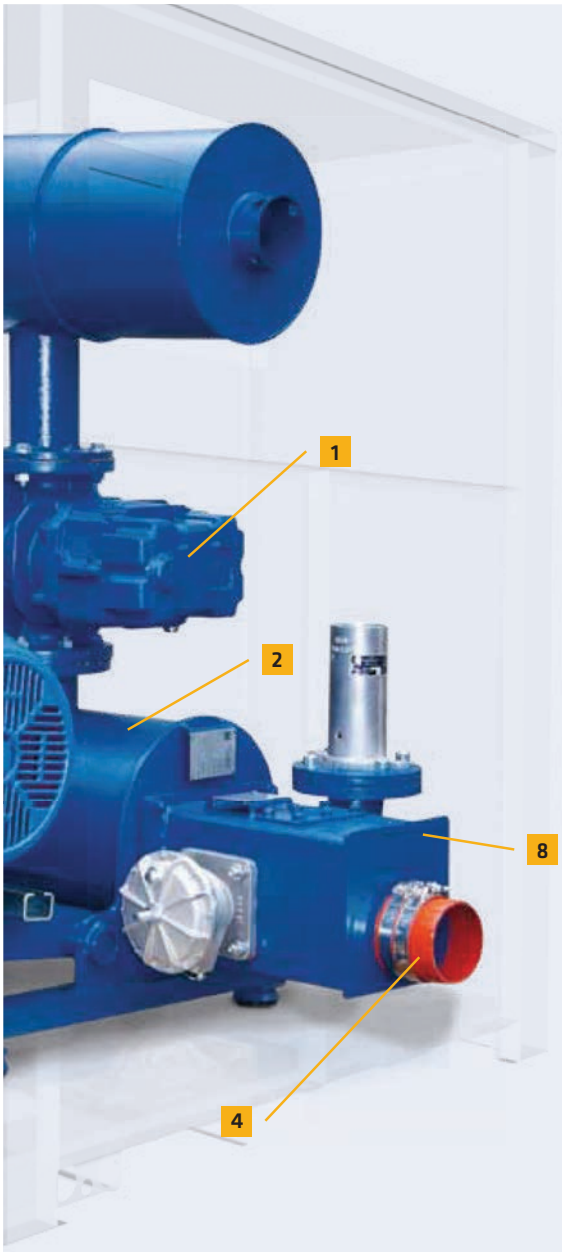

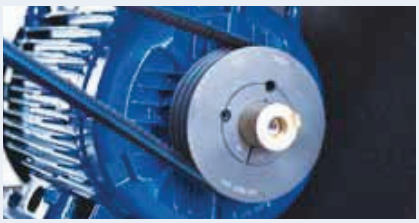

6 **Motor**

- High-performance narrow V-belt drive with three-phase AC motor
- Energy-efficient Class IE3 motors (up to motor size 315) as standard equipment



7 **Hinged motor mounting plate**

- Automatic V-belt tensioning
- Multifunctional hinged motor mounting plate and lifting jack

8 **Terminal box**

- With pressure valve (8) per PED guideline 97/23/EC
- Built-in non-return flap

9 **Instrumentation**

- Pressure gauge for displaying conveying pressure
- Maintenance indicator for monitoring intake filter

Added value: Accessory components.

- Acoustic hood for indoor and outdoor installation, force-air ventilated via mechanical fan
- Startup load relief (10), needed with delta-star motor startup
- Pressure-side axial compensator in place of flexible rubber bushing
- Control cabinet: delta-star, frequency inverter, soft-starter
- AERZEN AERtronic blower control
- Additional accessories on demand



AERZEN startup load relief

Modifications.

- Special motors
- Special finishes
- ATEX-compliant design
- Acoustic hood with special sand collector for use in desert locations
- Acoustic hood for low temperatures (to -40° C) with heater and gravity-activated blinds
- Acoustic hood for earthquake safety and increased wind resistance
- For use aboard ships and in motor vehicles
- For conveying specialty gases by using specialized materials
- Customer-specific documentation



Always a safe choice: ATEX-compliant AERZEN design

Efficient control.

AERtonic is easy to use. But above all, AERZEN's control system is an important part of the unit's safety design: it guarantees that your facility will be operating at optimal efficiency levels at all times. The AERtronic offers a broad spectrum of functions. It can visualize operational data, run the operating hours counter, provide early notifications of operational events, and save all this information in memory. AERtronic will also keep you informed about upcoming maintenance and service cycles, meaning that service calls can be planned for more efficiently, helping to increase the lifespan of your machine's components significantly.



WEIGHTY ADVANTAGES. IN A LEAN MACHINE.

Dimensions and weights (Technical data subject to change – Products subject to technical alteration).

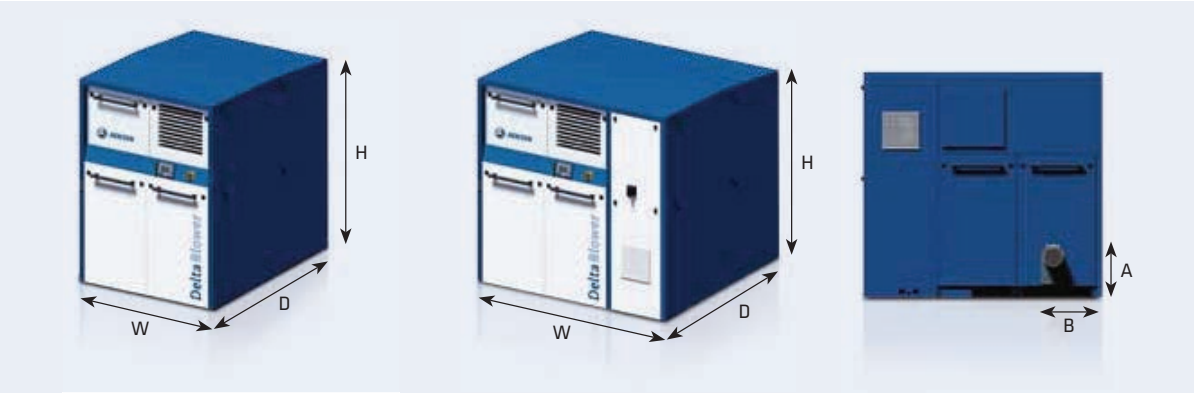

Delta Blower.

Model	H	D	W	A	B	Nozzle size DN	Weight without acoustic hood	Weight with acoustic hood
3 S	1055	800	800	228	245	50	148 kg	212 kg
4 S	1280	1135	925	258	258	80	207 kg	299 kg
7 L	1280	1135	925	258	258	80	212 kg	304 kg
10 S	1280	1135	925	258	258	80	236 kg	328 kg
10 S	1500	1350	1250	294	375	100	336 kg	496 kg
15 L	1500	1350	1250	294	375	100	351 kg	511 kg
25 S	1500	1350	1250	294	375	125	407 kg	567 kg
30 L	1900	1800	1500	356	435	150	690 kg	1020 kg
35 S	1900	1800	1500	356	435	150	780 kg	1110 kg
50 L	1900	1800	1500	356	435	150	830 kg	1160 kg
50 L	2111	2055	1700	357	525	200	905 kg	1475 kg
60 S	2111	2055	1700	357	525	200	1035 kg	1605 kg
80 L	2308	2200	1900	456	600	250	1550 kg	2200 kg
90 S	2308	2200	1900	456	600	250	1620 kg	2270 kg
130 L	2345	2850	2100	410	635	300	2436 kg	3410 kg
150 S	2345	2850	2100	410	635	300	2796 kg	3750 kg
220 L *	3500	4304	2800	410	800	400	4981 kg	8240 kg
240 S *	3500	4304	2800	410	800	400	5371 kg	8630 kg

** Implementation in Kompakt IV*

Weights without motor and belt drive

15L blower total weight (blower package + acoustic hood + motor): 764 kg

Delta Blower with integrated power supply.

Model	H	D	W	A	B	Nozzle size DN	Weight with acoustic hood
10 S	1500	1350	1850	294	375	100	619 kg
15 L	1500	1350	1850	294	375	100	661 kg
25 S	1500	1350	1850	294	375	125	717 kg
30 L	1900	1800	2100	356	435	150	1322 kg
35 S	1900	1800	2100	356	435	150	1412 kg
50 L	1900	1800	2100	356	435	150	1462 kg
50 L	2111	2055	2300	357	525	200	1825 kg
60 S	2111	2055	2300	357	525	200	1955 kg

Weights without motor, electrical equipment, and belt drive

BLOWER POWER IN DETAIL. THE PERFORMANCE TABLES.

The Delta rotary lobe blowers are high-performance products. They were designed for use in many different areas of application: 16 models in 9 nominal widths from DN 50 to DN 400, intake volume streams from about 30 to 15,000 m^3/h, positive pressures up to 1,000 mbar, negative pressures down to -500 mbar.

Noise values.
The sound pressure levels from machine noise (Lp(A)) per individual unit are based measurements taken outdoors at a distance of 1 M from the exterior of the machine (tolerance of ± 2 dB). Noise measurement per DIN 45 635, DIN ISO 3744 and DIN EN ISO 2151.

Using the performance tables.
You will find all the important performance data for the Delta series in the performance tables: intake volume stream ($\dot{V}1$), required coupling power (Pk), motor size and noise level (Lp(A)). The intake volumes shown are based on commonly available belt drive ratios in increments of about 12%. Lower drive speeds are also possible, depending on the final temperature.

Parameters.

$\dot{V}1$	[m^3/min]	Intake volume stream (t1 = 20 °C, p1 = 1 bar, RH = 0 %)
p1	[bar abs]	Intake pressure
Δp	[mbar]	Pressure differential
t_1	[°C]	Intake temperature
t_2	[°C]	Final temperature
nG	[rpm]	Blower rotational speed
nM	[rpm]	Motor rotational speed
Pk	[kW]	Shaft power
P_{mot}	[kW]	Nominal motor power
Lp(A) o. H.	[dB]	Noise pressure level for blower unit without hood
Lp(A) m. H.	[dB]	Noise pressure level for blower unit with hood

Delta Blower is the driving force in countless processes. There is a good reason for the exceptional range of applications: the robust power units from AERZEN can be configured for just about any requirement, even in standard implementations.

Δp mbar	Blower size		GM 3 S / DN 50										GM 4 S / DN 80								
300	$\dot{V}_1$	[m³/min]	**0.66**	**1.1**	**1.61**	**2.13**	**2.48**	**2.94**	**3.18**	**3.66**	**3.87**	**4.12**	**1.01**	**1.66**	**2.17**	**3**	**3.54**	**4.16**	**4.78**	**5.41**	**5.7**
	t_2	[°C]	74	62	57	54	53	52	51	50	50	50	68	59	56	53	52	51	50	49	49
	nG	[rpm]	1400	1830	2330	2840	3190	3640	3880	4350	4560	4800	1400	1870	2240	2840	3230	3680	4130	4590	4800
	nM	[rpm]	2800	2800	2800	2840	2840	2840	2870	2870	2870	2890	2800	2800	2840	2840	2870	2870	2890	2890	2890
	Pk	[kW]	0.89	1.14	1.43	1.76	2.01	2.34	2.54	2.94	3.13	3.37	1.14	1.49	1.78	2.29	2.64	3.06	3.52	4.01	4.25
	P_{mot}	[kW]	1.5	1.5	2.2	3	3	3	4	4	4	5.5	1.5	2.2	3	3	4	4	5.5	5.5	5.5
	Motor size		90 S	90 S	90 L	100 L	100 L	100 L	112 M	112 M	112 M	132 S	90 S	90 L	100 L	100 L	112 M	112 M	132 S	132 S	132 S
	Lp(A)[dB]	w/o.H./w.H.	78/<65	80/<65	83/66	87/66	87/66	89/66	90/67	92/67	93/67	93/66	77/<65	78/<65	79/<65	79/<65	84/<65	86/<65	87/<65	88/<65	89/<65
400	$\dot{V}_1$	[m³/min]	**0.55**	**0.98**	**1.53**	**2.01**	**2.4**	**2.86**	**3.07**	**3.57**	**3.79**	**4**	**0.87**	**1.5**	**2.21**	**2.9**	**3.42**	**4.06**	**4.64**	**5.27**	**5.56**
	t_2	[°C]	107	83	73	68	66	64	63	62	61	61	94	77	70	66	64	62	61	60	60
	nG	[rpm]	1400	1830	2370	2840	3220	3680	3880	4380	4590	4800	1400	1860	2370	2870	3250	3710	4130	4590	4800
	nM	[rpm]	2800	2800	2840	2840	2870	2870	2870	2890	2890	2890	2800	2840	2840	2870	2890	2890	2890	2890	2890
	Pk	[kW]	1.13	1.45	1.86	2.24	2.57	3	3.19	3.71	3.94	4.18	1.46	1.91	2.43	2.97	3.4	3.94	4.47	5.07	5.35
	P_{mot}	[kW]	1.5	2.2	3	3	4	4	4	5.5	5.5	5.5	2.2	3	3	4	5.5	5.5	5.5	7.5	7.5
	Motor size		90 S	90 L	100 L	100 L	112 M	112 M	112 M	132 S	132 S	132 S	90 L	100 L	100 L	112 M	132 S	132 S	132 S	132 S	132 S
	Lp(A)[dB]	w/o.H./w.H.	80/<65	81/<65	84/66	87/66	87/67	90/67	91/67	93/67	94/67	94/67	77/<65	79/<65	81/<65	83/<65	85/<65	87/<65	88/<65	89/<65	89/<65
500	$\dot{V}_1$	[m³/min]		**0.91**	**1.43**	**1.94**	**2.29**	**2.78**	**3.04**	**3.47**	**3.68**	**3.9**	**0.77**	**1.42**	**2.11**	**2.8**	**3.3**	**3.93**	**4.51**	**5.14**	**5.43**
	t_2	[°C]		107	91	83	80	77	75	74	73	72	126	97	85	80	77	75	73	72	71
	nG	[rpm]		1860	2370	2870	3220	3700	3960	4380	4590	4800	1420	1890	2390	2890	3250	3710	4130	4590	4800
	nM	[rpm]		2840	2840	2870	2870	2890	2890	2890	2890	2890	2840	2840	2870	2890	2890	2890	2890	2890	2890
	Pk	[kW]		1.78	2.26	2.76	3.12	3.64	3.94	4.45	4.72	4.99	1.81	2.38	3	3.66	4.15	4.8	5.42	6.12	6.45
	P_{mot}	[kW]		3	3	4	4	5.5	5.5	5.5	7.5	7.5	3	3	4	5.5	5.5	7.5	7.5	7.5	7.5
	Motor size			100 L	100 L	112 M	112 M	132 S	132 S	132 S	132 S	132 S	100 L	100 L	112 M	132 S	132 S	132 S	132 S	132 S	132 S
	Lp(A)[dB]	w/o.H./w.H.		83/65	85/66	88/67	88/67	91/68	93/68	95/67	95/67	95/68	77/<65	80/<65	82/<65	85/66	87/65	88/<65	90/<65	89/<65	89/66
600	$\dot{V}_1$	[m³/min]			**1.36**	**1.84**	**2.26**	**2.69**	**2.95**	**3.38**	**3.59**	**3.8**		**1.33**	**2.02**	**2.69**	**3.39**	**3.82**	**4.4**	**5.11**	**5.32**
	t_2	[°C]			110	99	94	90	88	86	85	84		119	103	95	90	87	85	83	83
	nG	[rpm]			2390	2870	3280	3700	3960	4380	4590	4800		1910	2410	2890	3400	3710	4130	4650	4800
	nM	[rpm]			2870	2870	2890	2890	2890	2890	2890	2890		2870	2890	2890	2890	2890	2890	2930	2930
	Pk	[kW]			2.69	3.24	3.74	4.27	4.61	5.19	5.49	5.8		2.84	3.58	4.32	5.14	5.65	6.37	7.29	7.56
	P_{mot}	[kW]			4	4	5.5	5.5	7.5	7.5	7.5	7.5		4	5.5	5.5	7.5	7.5	7.5	11	11
	Motor size				112 M	112 M	132 S	132 S	132 S	132 S	132 S	132 S		112 M	132 S	132 S	132 S	132 S	132 S	160 M	160 M
	Lp(A)[dB]	w/o.H./w.H.			87/66	89/67	89/68	92/68	95/68	96/68	96/68	96/68		81/<65	84/<65	87/68	87/67	88/66	91/66	89/66	89/67
700	$\dot{V}_1$	[m³/min]			**1.27**	**1.78**	**2.17**	**2.6**	**2.86**	**3.29**	**3.5**	**3.72**			**1.92**	**2.58**	**3.28**	**3.71**	**4.37**	**5.01**	**5.22**
	t_2	[°C]			132	117	110	105	102	99	98	97			122	111	104	101	97	95	94
	nG	[rpm]			2390	2890	3280	3700	3960	4380	4590	4800			2410	2890	3400	3710	4190	4650	4800
	nM	[rpm]			2870	2890	2890	2890	2890	2890	2890	2890			2890	2890	2890	2890	2930	2930	2930
	Pk	[kW]			3.09	3.76	4.29	4.9	5.28	5.93	6.27	6.62			4.14	4.99	5.92	6.5	7.43	8.35	8.66
	P_{mot}	[kW]			4	5.5	5.5	7.5	7.5	7.5	7.5	7.5			5.5	7.5	7.5	7.5	11	11	11
	Motor size				112 M	132 S	132 S	132 S	132 S	132 S	132 S	132 S			132 S	132 S	132 S	132 S	160 M	160 M	160 M
	Lp(A)[dB]	w/o.H./w.H.			87/67	90/67	90/68	93/69	94/69	95/69	95/69	96/68			85/<6	89/68	86/68	89/67	93/67	90/68	89/69
800	$\dot{V}_1$	[m³/min]					**2.1**	**2.52**	**2.78**	**3.21**						**2.48**	**3.26**	**3.68**	**4.28**	**4.91**	**5.12**
	t_2	[°C]					126	120	117	113						128	118	114	111	107	107
	nG	[rpm]					3290	3700	3960	4380						2890	3450	3760	4190	4650	4800
	nM	[rpm]					2890	2890	2890	2890						2890	2930	2930	2930	2930	2930
	Pk	[kW]					4.86	5.52	5.95	6.68						5.65	6.81	7.46	8.4	9.42	9.77
	P_{mot}	[kW]					7.5	7.5	7.5	7.5						7.5	11	11	11	11	11
	Motor size						132 S	132 S	132 S	132 S						132 S	160 M	160 M	160 M	160 M	160 M
	Lp(A)[dB]	w/o.H./w.H.					91/68	94/69	93/69	94/70							87/68	91/68	95/68	91/70	90/70
900	$\dot{V}_1$	[m³/min]							**2.71**								**3.17**	**3.59**	**4.19**	**4.82**	**5.03**
	t_2	[°C]							132								133	129	124	120	119
	nG	[rpm]							3960								3450	3760	4190	4650	4800
	nM	[rpm]							2890								2930	2930	2930	2930	2930
	Pk	[kW]							6.63								7.6	8.33	9.36	10.5	10.9
	P_{mot}	[kW]							7.5								11	11	11	15	15
	Motor size								132 S								160 M	160 M	160 M	160 M	160 M
	Lp(A)[dB]	w/o.H./w.H.							94/70								88/69	92/69	96/69	92/70	92/70
1000	$\dot{V}_1$	[m³/min]																		**4.74**	**4.94**
	t_2	[°C]																		133	132
	nG	[rpm]																		4650	4800
	nM	[rpm]																		2930	2930
	Pk	[kW]																		11.6	12
	P_{mot}	[kW]																		15	15
	Motor size																			160 M	160 M
	Lp(A)[dB]	w/o.H./w.H.																		94/70	94/70

Lower differential pressures on request. Performance data are non-binding examples only.

Δp mbar	Blower size		GM 7 L / DN 80									GM 10 S / DN 80						GM 10 S / DN 100		
300	$\dot{V}_1$	[m³/min]	**1.54**	**2.56**	**3.59**	**4.63**	**5.35**	**6.35**	**7.19**	**7.71**	**8.21**	**2.59**	**3.96**	**5.36**	**6.7**	**7.68**	**9.03**	**10.3**	**11**	**11.6**
	t_2	[°C]	67	58	55	52	51	50	50	50	49	59	54	52	50	50	49	48	48	48
	nG	[rpm]	1400	1890	2390	2890	3240	3720	4130	4380	4620	1420	1910	2410	2890	3240	3720	4190	4440	4650
	nM	[rpm]	2800	2840	2870	2890	2890	2890	2890	2890	2890	2840	2870	2890	2890	2890	2890	2930	2930	2930
	Pk	[kW]	1.64	2.19	2.78	3.42	3.89	4.59	5.25	5.67	6.1	2.29	3.06	3.88	4.72	5.37	6.36	7.43	8.05	8.61
	P_{mot}	[kW]	2.2	3	4	5.5	5.5	7.5	7.5	7.5	7.5	3	4	5.5	7.5	7.5	7.5	11	11	11
	Motor size		90 L	100 L	112 M	132 S	132 S	132 S	132 S	132 S	132 S	100 L	112 M	132 S	132 S	132 S	132 S	160 M	160 M	160 M
	Lp(A)[dB]	w/o.H./w.H.	80/<65	82/<65	83/<65	85/68	85/67	88/66	89/66	89/<65	89/66	76/<65	78/69	80/66	82/65	84/65	86/66	91/71	91/71	92/71
400	$\dot{V}_1$	[m³/min]	**1.38**	**2.39**	**3.42**	**4.42**	**5.14**	**6.14**	**7.11**	**7.63**	**8.14**	**2.41**	**3.8**	**5.14**	**6.49**	**7.58**	**8.95**	**10.1**	**10.8**	**11.4**
	t_2	[°C]	92	75	69	65	64	62	61	60	60	76	68	64	62	61	59	59	58	58
	nG	[rpm]	1420	1910	2410	2890	3240	3720	4190	4440	4690	1435	1930	2410	2890	3280	3770	4190	4440	4650
	nM	[rpm]	2840	2870	2890	2890	2890	2890	2930	2930	2930	2870	2890	2890	2890	2930	2930	2930	2930	2930
	Pk	[kW]	2.16	2.87	3.64	4.41	5.01	5.88	6.79	7.31	7.85	2.99	3.99	5	6.07	6.98	8.23	9.39	10.1	10.8
	P_{mot}	[kW]	3	4	5.5	5.5	7.5	7.5	11	11	11	4	5.5	7.5	7.5	11	11	11	15	15
	Motor size		100 L	112 M	132 S	132 S	132 S	132 S	160M	160M	160M	112 M	132 S	132 S	132 S	160 M	160 M	160 M	160 M	160 M
	Lp(A)[dB]	w/o.H./w.H.	80/<65	82/<65	84/<65	86/68	86/68	89/67	90/67	90/67	91/68	77/<65	78/70	80/67	83/66	84/66	87/67	91/70	92/71	93/70
500	$\dot{V}_1$	[m³/min]	**1.22**	**2.18**	**3.24**	**4.23**	**5.31**	**6.05**	**6.92**	**7.44**	**7.96**	**2.25**	**3.61**	**4.95**	**6.41**	**7.39**	**8.76**	**9.94**	**10.6**	**11.2**
	t_2	[°C]	122	95	84	79	76	74	72	72	71	95	83	77	74	72	70	69	69	69
	nG	[rpm]	1435	1900	2410	2890	3410	3770	4190	4440	4690	1445	1930	2410	2930	3280	3770	4190	4440	4650
	nM	[rpm]	2870	2890	2890	2890	2890	2930	2930	2930	2930	2890	2890	2890	2930	2930	2930	2930	2930	2930
	Pk	[kW]	2.67	3.51	4.47	5.41	6.49	7.27	8.24	8.84	9.46	3.68	4.89	6.13	7.52	8.51	9.99	11.3	12.2	12.9
	P_{mot}	[kW]	4	5.5	5.5	7.5	7.5	11	11	11	11	5.5	7.5	7.5	11	11	15	15	15	15
	Motor size		112 M	132 S	132 S	132 S	132 S	160M	160M	160M	160M	132 S	132 S	132 S	160 M	160 M	160 M	160 M	160 M	160 M
	Lp(A)[dB]	w/o.H./w.H.	80/<65	82/<65	84/<65	87/68	89/68	90/68	91/68	91/69	92/70	77/<65	78/70	80/67	83/66	84/67	87/68	88/67	92/70	93/70
600	$\dot{V}_1$	[m³/min]		**2.08**	**3.07**	**4.07**	**4.87**	**5.89**	**6.76**	**7.27**	**7.79**	**2.08**	**3.44**	**4.5**	**6.24**	**7.22**	**8.59**	**9.76**	**10.5**	**11.1**
	t_2	[°C]		116	102	94	90	87	84	83	83	118	99	92	86	84	82	80	80	79
	nG	[rpm]		1930	2410	2890	3280	3770	4190	4440	4690	1445	1930	2310	2930	3280	3770	4190	4440	4650
	nM	[rpm]		2890	2890	2890	2930	2930	2930	2930	2930	2890	2890	2930	2930	2930	2930	2930	2930	2930
	Pk	[kW]		4.24	5.3	6.41	7.34	8.57	9.68	10.4	11.1	4.35	5.8	6.94	8.89	10	11.7	13.3	14.3	15.1
	P_{mot}	[kW]		5.5	7.5	7.5	11	11	11	15	15	5.5	7.5	11	11	15	15	15	18.5	18.5
	Motor size			132 S	132 S	132 S	160M	160M	160M	160 M	160 M	132 S	132 S	160 M	160 M	160 M	160 M	160 M	160 L	160 L
	Lp(A)[dB]	w/o.H./w.H.		84/<65	86/66	88/68	89/68	91/68	91/69	92/69	92/70	77/<65	78/71	80/68	84/67	85/68	87/69	88/68	92/70	94/70
700	$\dot{V}_1$	[m³/min]			**2.92**	**4.00**	**4.72**	**5.71**	**6.60**	**7.12**	**7.64**		**3.28**	**4.34**	**6.08**	**7.06**	**8.43**	**9.61**	**10.3**	**10.9**
	t_2	[°C]			120	109	104	100	97	96	94		117	107	99	96	93	92	91	90
	nG	[rpm]			2410	2930	3280	3760	4190	4440	4690		1930	2310	2930	3280	3770	4190	4440	4650
	nM	[rpm]			2890	2930	2930	2930	2930	2930	2930		2890	2930	2930	2930	2930	2930	2930	2930
	Pk	[kW]			6.13	7.51	8.47	9.84	11.1	11.9	12.7		6.7	8.02	10.3	11.6	13.5	15.3	16.3	17.3
	P_{mot}	[kW]			7.5	11	11	11	15	15	15		7.5	11	15	15	18.5	18.5	18.5	22
	Motor size				132 S	160M	160M	160M	160 M	160 M	160 M		132 S	160 M	160 M	160 M	160 L	160 L	160 L	180 M
	Lp(A)[dB]	w/o.H./w.H.			88/67	89/68	90/68	92/69	92/70	92/70	92/70		79/71	80/69	84/67	84/68	88/69	89/69	92/68	94/69
800	$\dot{V}_1$	[m³/min]												**4.2**	**5.93**	**6.91**	**7.98**	**9.46**	**10.2**	**10.7**
	t_2	[°C]												123	113	109	106	103	102	101
	nG	[rpm]												2310	2930	3280	3660	4190	4440	4650
	nM	[rpm]												2930	2930	2930	2930	2930	2930	2930
	Pk	[kW]												9.1	11.6	13.1	14.8	17.2	18.4	19.5
	P_{mot}	[kW]												11	15	15	18.5	22	22	22
	Motor size													160 M	160 M	160 M	160 L	180 M	180 M	180 M
	Lp(A)[dB]	w/o.H./w.H.												81/69	84/67	85/69	87/60	90/70	92/67	93/68
900	$\dot{V}_1$	[m³/min]														**6.77**	**7.84**	**9.32**	**10.1**	**10.7**
	t_2	[°C]														122	118	115	113	112
	nG	[rpm]														3280	3660	4190	4460	4680
	nM	[rpm]														2930	2930	2930	2945	2945
	Pk	[kW]														14.6	16.5	19.2	20.6	21.8
	P_{mot}	[kW]														18.5	18.5	22	30	30
	Motor size															160 L	160 L	180 M	200 L	200 L
	Lp(A)[dB]	w/o.H./w.H.														85/69	88/70	89/70	92/69	93/69
1000	$\dot{V}_1$	[m³/min]															**7.71**	**8.72**	**9.95**	**10.6**
	t_2	[°C]															131	128	125	124
	nG	[rpm]															3660	4020	4460	4680
	nM	[rpm]															2930	2945	2945	2945
	Pk	[kW]															18.2	20.2	22.7	24
	P_{mot}	[kW]															22	30	30	30
	Motor size																180 M	200 L	200 L	200 L
	Lp(A)[dB]	w/o.H./w.H.															89/70	89/70	92/70	93/72

Lower differential pressures on request. GM 10 S from 10 m³/min - accessories DN 100. Performance data are non-binding examples only.

Δp mbar	Blower size		GM 15 L / DN 100									GM 25 S / DN 125								
300	$\dot{V}_1$	[m³/min]	3.95	5.84	7.99	10.1	11.6	13.6	15.4	16.4	17.3	6.18	8.69	11.1	14.5	16.6	18.7	20.6	22.7	24.2
	t_2	[°C]	58	54	51	50	49	49	48	48	48	53	51	50	48	48	48	47	47	47
	nG	[rpm]	1435	1890	2410	2930	3290	3760	4190	4440	4650	1445	1890	2310	2930	3290	3660	4010	4370	4650
	nM	[rpm]	2870	2890	2890	2930	2930	2930	2930	2930	2930	2890	2890	2930	2930	2930	2930	2930	2930	2930
	Pk	[kW]	3.26	4.34	5.64	7.04	8.07	9.52	10.9	11.8	12.6	4.46	5.86	7.3	9.64	11.1	12.8	14.4	16.2	17.7
	P_{mot}	[kW]	4	5.5	7.5	11	11	11	15	15	15	5.5	7.5	11	11	15	15	18.5	18.5	22
	Motor size							0 M	160 M	160 M	160 M	132 S	132 S	160 M	160 M	160 M	160 M	160 L	160 L	180 M
	Lp(A)[dB]	w/o.H./w.H.						/65	89/66	91/67	91/68	91/69	81/66	85/66	87/70	92/69	92/69	93/69	92/69	94/71	96/72
400	$\dot{V}_1$	[m³/min]	3.69	5.53	7.27	9.84	11.3	13.3	15.1	16.1	17	5.88	8.56	10.8	14.2	16.3	18.4	20.3	22.5	24.1
	t_2	[°C]	74	67	64	61	60	59	59	58	58	66	62	60	59	58	58	57	57	57
	nG	[rpm]	1445	1890	2310	2930	3290	3760	4190	4440	4650	1445	1920	2310	2930	3290	3660	4010	4400	4680
	nM	[rpm]	2890	2890	2930	2930	2930	2930	2930	2930	2930	2890	2930	2930	2930	2930	2930	2930	2945	2950
	Pk	[kW]	4.28	5.64	6.97	9.06	10.3	12.1	13.8	14.9	15.8	5.82	7.76	9.47	12.4	14.2	16.2	18.2	20.5	22.2
	P_{mot}	[kW]	5.5	7.5	11	11	15	15	18.5	18.5	18.5	7.5	11	11	15	18.5	18.5	22	30	30
	Motor size		132 S	132 S	160 M	160 M	160 M	160 M	160 L	160 L	160 L	132 S	160 M	160 M	160 M	160 L	160 L	180 M	200 L	200 L
	Lp(A)[dB]	w/o.H./w.H.	83/68	85/<65	86/<65	88/<65	87/<65	88/67	92/67	92/69	94/71	83/67	86/67	87/71	92/69	93/69	93/70	93/70	95/71	98/72
500	$\dot{V}_1$	[m³/min]	3.42	5.38	7	9.57	11.1	12.6	14	15.8	16.7	5.73	8.29	10.5	14	16	18.1	20.2	22.3	23.8
	t_2	[°C]	93	82	77	73	72	70	69	69	68	80	75	72	69	68	68	67	67	66
	nG	[rpm]	1445	1920	2310	2930	3290	3660	4010	4440	4650	1465	1920	2310	2930	3290	3660	4030	4400	4680
	nM	[rpm]	2890	2930	2930	2930	2930	2930	2930	2930	2930	2930	2930	2930	2930	2930	2930	2945	2945	2950
	Pk	[kW]	5.28	7.06	8.57	11.1	12.6	14.3	15.9	18	19	7.27	9.56	11.6	15.1	17.3	19.6	22.1	24.6	26.6
	P_{mot}	[kW]	7.5	11	11	15	15	18.5	18.5	22	22	11	11	15	18.5	22	22	30	30	30
	Motor size		132 S	160 M	160 M	160 M	160 M	160 L	160 L	180 M	180 M	160 M	160 M	160 M	160 L	180 M	180 M	200 L	200 L	200 L
	Lp(A)[dB]	w/o.H./w.H.	84/67	87/<65	88/<65	90/<65	88/<65	88/67	91/68	94/70	96/72	85/67	88/68	88/71	93/69	93/70	94/71	94/71	97/72	99/72
600	$\dot{V}_1$	[m³/min]	3.17	5.14	6.75	9.32	10.8	12.3	14.5	15.7	16.6	5.49	8.05	10.2	13.7	15.9	18	19.9	22	23.6
	t_2	[°C]	115	98	91	85	83	82	80	79	79	95	87	84	80	79	78	77	77	76
	nG	[rpm]	1445	1920	2310	2930	3290	3660	4190	4460	4680	1465	1920	2310	2930	3310	3680	4030	4400	4680
	nM	[rpm]	2890	2930	2930	2930	2930	2930	2930	2945	2945	2930	2930	2930	2930	2945	2945	2945	2950	2950
	Pk	[kW]	6.28	8.38	10.2	13.1	14.9	16.8	19.6	21.1	22.4	8.65	11.4	13.8	17.9	20.5	23.2	25.8	28.7	31
	P_{mot}	[kW]	7.5	11	15	15	18.5	22	22	30	30	11	15	18.5	22	30	30	30	37	37
	Motor size		132 S	160 M	160 M	160 M	160 L	180 M	180 M	200 L	200 L	160 M	160 M	160 L	180 M	200 L	200 L	200 L	200 L	200 L
	Lp(A)[dB]	w/o.H./w.H.	86/68	88/<65	88/<65	89/<65	88/66	88/68	92/68	95/70	97/72	86/69	89/69	89/71	93/70	94/71	95/72	96/72	98/72	100/73
700	$\dot{V}_1$	[m³/min]		4.91	6.53	9.1	10.6	12.1	13.6	15.4	16.3	5.27	7.83	10	13.6	15.7	17.7	20.1	21.8	23.3
	t_2	[°C]		115	106	98	95	93	92	90	89	112	101	96	91	90	88	87	87	86
	nG	[rpm]		1920	2310	2930	3290	3660	4030	4460	4680	1465	1920	2310	2945	3310	3680	4100	4400	4670
	nM	[rpm]		2930	2930	2930	2930	2930	2945	2945	2945	2930	2930	2930	2945	2945	2945	2950	2950	2940
	Pk	[kW]		9.71	11.8	15.1	17.2	19.3	21.5	24.2	25.6	10	13.2	16	20.8	23.6	26.7	30.2	32.9	35.3
	P_{mot}	[kW]		11	15	18.5	22	22	30	30	30	15	15	18.5	30	30	30	37	37	45
	Motor size			160 M	160 M	160 L	180 M	180 M	200 L	200 L	200 L	160 M	160 M	160 L	200 L	200 L	200 L	200 L	200 L	225 M
	Lp(A)[dB]	w/o.H./w.H.		88/<65	88/<65	89/<65	89/67	89/70	90/68	96/70	99/72	87/69	90/69	91/72	93/70	94/70	96/71	97/71	98/72	100/73
800	$\dot{V}_1$	[m³/min]										5.06	7.68	9.8	13.4	15.4	17.6	19.8	21.5	23.1
	t_2	[°C]										129	115	109	103	101	99	98	97	96
	nG	[rpm]										1465	1930	2310	2945	3310	3690	4080	4390	4670
	nM	[rpm]										2930	2930	2930	2945	2945	2950	2940	2940	2940
	Pk	[kW]										11.4	15	18.1	23.5	26.7	30.2	33.9	36.9	39.7
	P_{mot}	[kW]										15	18.5	22	30	30	37	45	45	45
	Motor size											160 M	160 L	180 M	200 L	200 L	200 L	225 M	225 M	225 M
	Lp(A)[dB]	w/o.H./w.H.										88/70	91/70	92/73	94/71	95/70	96/70	97/70	99/71	101/73
900	$\dot{V}_1$	[m³/min]											7.49	9.68	13.2	15.3	17.3	19.6	21.4	23
	t_2	[°C]											129	122	115	112	110	108	107	106
	nG	[rpm]											1930	2320	2945	3320	3680	4080	4410	4690
	nM	[rpm]											2930	2945	2945	2950	2950	2940	2960	2960
	Pk	[kW]											16.9	20.4	26.3	30	33.6	37.7	41.2	44.3
	P_{mot}	[kW]											22	30	30	37	37	45	55	55
	Motor size												180 M	200 L	200 L	200 L	200 L	225 M	250 M	250 M
	Lp(A)[dB]	w/o.H./w.H.											92/70	94/73	95/71	96/71	97/71	97/72	99/72	101/73
1000	$\dot{V}_1$	[m³/min]													13	15.1	17.2	19.5	21.3	22.8
	t_2	[°C]													127	123	121	119	118	117
	nG	[rpm]													2950	3320	3680	4100	4410	4690
	nM	[rpm]													2950	2950	2940	2960	2960	2960
	Pk	[kW]													29.1	33.1	37	41.8	45.4	48.7
	P_{mot}	[kW]													37	37	45	55	55	55
	Motor size														200 L	200 L	225 M	250 M	250 M	250 M
	Lp(A)[dB]	w/o.H./w.H.													97/71	97/71	98/72	98/73	100/73	102/73

Operating Pressure differential 460 mbar

Lower differential pressures on request. Performance data are non-binding examples only.

Δp mbar	Blower size		GM 30 L / DN 150									GM 35 S / DN 150							
300	$\dot{V}_1$	[m³/min]	**8.68**	**11.7**	**15.6**	**20.5**	**23.3**	**26.3**	**29.2**	**32.7**	**34.7**	**14**	**18.2**	**23.6**	**27.1**	**30.6**	**34.6**	**38.8**	**40.3**
	t_2	[°C]	53	51	50	49	48	48	48	47	47	50	49	48	48	47	47	47	47
	nG	[rpm]	1445	1830	2310	2930	3280	3660	4020	4460	4710	1490	1860	2330	2640	2945	3300	3670	3800
	nM	[rpm]	2890	2930	2930	2930	2930	2930	2945	2945	2945	2930	2930	2930	2930	2945	2945	2950	2950
	Pk	[kW]	6.38	8.13	10.5	13.7	15.7	17.9	20.2	23.1	24.8	9.56	12.2	15.8	18.4	21.2	24.9	29.1	30.7
	P_{mot}	[kW]	7.5	11	15	18.5	18.5	22	30	30	30	11	15	18.5	22	30	30	37	37
	Motor size		132 S	160 M	160 M	160 M	160 L	180 M	200 L	200 L	200 L	160 M	160 M	160 L	180 M	200 L	200 L	200 L	200 L
	Lp(A)[dB]	w/o.H./w.H.	84/71	86/70	88/73	91/72	93/73	95/74	96/74	97/74	97/75	86/67	90/68	92/72	92/71	91/71	92/71	96/71	99/71
400	$\dot{V}_1$	[m³/min]	**8.41**	**12**	**15.1**	**20.1**	**23**	**26**	**28.7**	**32.3**	**34.3**	**13.6**	**17.8**	**23.2**	**26.4**	**30.1**	**34.2**	**38.2**	**39.8**
	t_2	[°C]	66	63	61	59	58	58	57	57	57	62	60	58	58	57	57	56	56
	nG	[rpm]	1465	1920	2310	2930	3300	3680	4020	4470	4720	1490	1860	2340	2620	2945	3300	3660	3800
	nM	[rpm]	2930	2930	2930	2930	2945	2945	2945	2950	2950	2930	2930	2945	2945	2945	2950	2940	2940
	Pk	[kW]	8.41	11.1	13.5	17.6	20.2	22.9	25.5	29.1	31.2	12.4	15.7	20.3	23.2	26.8	31.1	35.9	37.9
	P_{mot}	[kW]	11	15	18.5	22	30	30	30	37	37	15	18.5	30	30	30	37	45	45
	Motor size		160 M	160 M	160 L	180 M	200 L	200 L	200 L	200 L	200 L	160 M	160 L	200 L	200 L	200 L	200 L	225 M	225 M
	Lp(A)[dB]	w/o.H./w.H.	85/71	88/71	89/74	91/72	93/72	95/73	96/73	98/74	99/75	87/68	90/69	93/73	92/72	92/71	94/71	97/72	99/72
500	$\dot{V}_1$	[m³/min]	**8.02**	**11.7**	**14.7**	**19.8**	**22.6**	**25.7**	**28.4**	**31.3**	**33.8**	**12.9**	**17.4**	**22.9**	**26**	**29.8**	**33.6**	**38.1**	**39.4**
	t_2	[°C]	81	75	72	70	69	68	67	67	66	74	71	69	68	67	66	66	66
	nG	[rpm]	1465	1930	2310	2945	3300	3690	4020	4390	4700	1465	1860	2340	2620	2950	3290	3680	3800
	nM	[rpm]	2930	2930	2930	2945	2945	2950	2950	2940	2940	2930	2930	2945	2950	2950	2940	2955	2955
	Pk	[kW]	10.4	13.7	16.6	21.6	24.6	27.9	30.9	34.3	37.2	14.9	19.2	24.7	28.2	32.5	37.2	43.2	45.1
	P_{mot}	[kW]	15	18.5	22	30	30	37	37	45	45	18.5	22	30	37	37	45	55	55
	Motor size		160 M	160 L	180 M	200 L	200 L	200 L	200 L	225 M	225 M	160 L	180 M	200 L	200 L	200 L	225 M	250 M	250 M
	Lp(A)[dB]	w/o.H./w.H.	86/72	90/72	90/75	91/73	93/72	95/72	97/72	99/73	100/75	87/69	91/70	94/73	93/72	93/72	97/72	98/73	100/73
600	$\dot{V}_1$	[m³/min]	**7.68**	**10.6**	**14.6**	**19.5**	**22.3**	**25.4**	**28.5**	**31**	**33.7**	**12.6**	**16.8**	**22.5**	**25.7**	**29.3**	**33.5**	**37.9**	**39.1**
	t_2	[°C]	96	89	84	81	79	78	77	77	76	87	82	79	78	77	76	76	75
	nG	[rpm]	1465	1830	2330	2945	3300	3690	4080	4390	4730	1465	1840	2340	2620	2940	3310	3700	3800
	nM	[rpm]	2930	2930	2950	2945	2950	2950	2940	2940	2960	2930	2945	2950	2950	2940	2955	2970	2970
	Pk	[kW]	12.3	15.4	19.8	25.5	28.9	32.8	36.8	40.1	43.8	17.7	22.5	29.2	33.1	37.9	43.8	50.5	52.3
	P_{mot}	[kW]	15	18.5	30	30	37	37	45	45	55	22	30	37	37	45	55	75	75
	Motor size		160 M	160 L	200 L	200 L	200 L	200 L	225 M	225 M	250 M	180 M	200 L	200 L	200 L	225 M	250 M	280 S	280 S
	Lp(A)[dB]	w/o.H./w.H.	86/72	88/72	90/75	92/73	94/73	97/73	99/74	99/74	100/75	88/71	91/70	95/73	94/72	93/72	99/73	99/74	100/74
700	$\dot{V}_1$	[m³/min]	**7.36**	**10.3**	**14.2**	**19.2**	**22**	**24.8**	**28.3**	**30.8**	**33.6**	**12.3**	**16.5**	**22.2**	**25.7**	**29.2**	**33.4**	**37.6**	**38.8**
	t_2	[°C]	113	103	96	92	90	89	87	87	86	100	94	90	89	87	86	85	85
	nG	[rpm]	1465	1830	2330	2950	3300	3660	4100	4410	4760	1475	1840	2340	2650	2955	3330	3700	3800
	nM	[rpm]	2930	2930	2945	2950	2950	2940	2955	2960	2970	2945	2945	2950	2940	2955	2970	2970	2970
	Pk	[kW]	14.2	17.8	22.9	29.5	33.3	37.4	42.5	46.2	50.5	20.6	26	33.6	38.6	43.7	50.4	57.5	59.5
	P_{mot}	[kW]	18.5	22	30	37	37	45	55	55	75	30	30	37	45	55	75	75	75
	Motor size		160 L	180 M	200 L	200 L	200 L	225 M	250 M	250 M	280 S	200 L	200 L	200 L	225 M	250 M	280 S	280 S	280 S
	Lp(A)[dB]	w/o.H./w.H.	86/73	89/72	90/75	94/73	96/73	101/74	102/75	99/75	100/75	88/71	91/71	94/74	95/73	96/72	100/72	100/73	101/73
800	$\dot{V}_1$	[m³/min]										**12**	**16.2**	**21.7**	**25.5**	**28.8**	**33.1**	**35.3**	**38.4**
	t_2	[°C]										113	106	101	99	98	97	96	95
	nG	[rpm]										1475	1840	2330	2660	2955	3330	3520	3800
	nM	[rpm]										2945	2950	2940	2960	2955	2970	2970	2970
	Pk	[kW]										23.4	29.4	37.8	43.8	49.3	56.7	60.7	66.7
	P_{mot}	[kW]										30	37	45	55	55	75	75	75
	Motor size											200 L	200 L	225 M	250 M	250 M	280 S	280 S	280 S
	Lp(A)[dB]	w/o.H./w.H.										89/72	91/72	94/75	96/73	99/73	101/72	101/72	102/72
900	$\dot{V}_1$	[m³/min]										**11.8**	**15.9**	**21.7**	**24.9**	**28.7**	**32.8**	**37**	**38.2**
	t_2	[°C]										127	119	113	110	108	107	106	105
	nG	[rpm]										1475	1840	2350	2630	2970	3330	3700	3800
	nM	[rpm]										2945	2950	2955	2955	2970	2970	2970	2970
	Pk	[kW]										26.2	32.9	42.6	48.2	55.2	63	71.5	73.9
	P_{mot}	[kW]										30	37	55	55	75	75	90	90
	Motor size											200 L	200 L	250 M	250 M	280 S	280 S	280 M2	280 M2
	Lp(A)[dB]	w/o.H./w.H.										89/72	92/72	95/75	96/73	99/73	101/73	102/73	103/73
1000	$\dot{V}_1$	[m³/min]											**15.6**	**21.4**	**24.7**	**28.5**	**30.3**	**36.8**	**37.9**
	t_2	[°C]											132	124	122	119	118	116	115
	nG	[rpm]											1840	2350	2640	2970	3130	3700	3800
	nM	[rpm]											2940	2955	2970	2970	2970	2970	2970
	Pk	[kW]											36.4	47.1	53.4	60.9	64.6	78.5	81.1
	P_{mot}	[kW]											45	55	75	75	75	90	90
	Motor size												225 M	250 M	280 S	280 S	280 S	280 M2	280 M2
	Lp(A)[dB]	w/o.H./w.H.											92/72	95/75	97/74	100/73	101/73	102/74	104/75

Lower differential pressures on request. Performance data are non-binding examples only.

Δp mbar	Blower size		GM 50 L / DN 150							GM 50 L / DN 200			GM 60 S / DN 200							
300	$\dot{V}_1$	[m³/min]	19.7	22.5	26	33.7	38.2	41.1	43.5	49.1	52.2	55.1	20.1	26.9	30.9	35.7	40.1	45.9	52.4	55.7	59
	t_2	[°C]	50	49	49	48	48	47	47	47	47	47	51	50	49	49	48	48	47	47	47
	nG	[rpm]	1465	1640	1860	2340	2620	2800	2950	3300	3490	3670	1150	1465	1650	1870	2070	2340	2640	2790	2940
	nM	[rpm]	2930	2930	2930	2945	2945	2950	2950	2950	2940	2940	2930	2930	2945	2945	2945	2950	2940	2940	2940
	Pk	[kW]	13.2	15	17.5	23.4	27.2	29.8	32.1	32.8	35.4	38	13.4	17.4	19.9	23	26	30.1	34.9	37.4	40
	P_{mot}	[kW]	15	18.5	22	30	30	37	37	37	45	45	15	22	30	30	30	37	45	45	45
	Motor size		160 M	160 L	180 M	200 L	200 L	200 L	200 L	200 L	225 M	225 M	160 M	180 M	200 L	200 L	200 L	200 L	225 M	225 M	225 M
	Lp(A)[dB]	w/o.H./w.H.	87/71	87/70	90/70	92/70	91/70	92/69	92/70	98/71	98/72	100/74	86/73	89/73	93/73	97/74	96/74	97/75	98/75	99/76	99/76
400	$\dot{V}_1$	[m³/min]	19.1	21.9	25.1	33.2	38.1	40.4	42.8	48.7	51.4	54.8	19.3	26.4	30.2	35	39.7	45	52.1	55.2	58.8
	t_2	[°C]	61	60	59	58	57	57	57	56	56	56	63	61	60	59	58	58	57	57	57
	nG	[rpm]	1465	1640	1840	2340	2650	2790	2940	3310	3480	3690	1150	1475	1650	1870	2090	2330	2660	2800	2970
	nM	[rpm]	2930	2930	2945	2950	2940	2940	2940	2955	2955	2960	2930	2945	2945	2950	2940	2940	2955	2955	2970
	Pk	[kW]	17.1	19.4	22.2	29.6	34.7	37.2	39.8	41.8	44.6	48.1	17.5	22.9	25.9	29.8	33.9	38.4	44.9	47.7	51.2
	P_{mot}	[kW]	22	22	30	37	45	45	45	55	55	55	22	30	30	37	45	45	55	55	75
	Motor size		180 M	180 M	200 L	200 L	225 M	225 M	225 M	250 M	250 M	250 M	180 M	200 L	200 L	200 L	225 M	225 M	250 M	250 M	280 S
	Lp(A)[dB]	w/o.H./w.H.	87/69	88/69	91/70	92/71	92/71	92/71	92/70	98/71	99/73	100/75	87/74	90/73	93/73	97/74	97/74	97/75	99/76	99/76	101/76
500	$\dot{V}_1$	[m³/min]	18.8	21.6	24.6	32.5	37.8	40	42.5	48.4	51.2	54.6	18.9	25.7	29.5	34.3	39.3	44.5	51.5	54.9	58.2
	t_2	[°C]	73	71	70	68	67	67	67	66	66	66	76	72	71	70	69	68	67	67	66
	nG	[rpm]	1475	1650	1840	2330	2660	2800	2955	3320	3500	3710	1160	1475	1650	1870	2100	2340	2660	2820	2970
	nM	[rpm]	2945	2945	2945	2940	2955	2955	2955	2970	2970	2970	2945	2950	2950	2940	2955	2955	2970	2970	2970
	Pk	[kW]	21.2	24	27.1	35.7	42	44.8	48	50.9	54.3	58.4	21.9	28.2	31.9	36.6	41.6	47.1	54.5	58.3	62
	P_{mot}	[kW]	30	30	30	45	55	55	55	75	75	75	30	37	37	45	55	55	75	75	75
	Motor size		200 L	200 L	200 L	225 M	250 M	250 M	250 M	280 S	280 S	280 S	200 L	200 L	200 L	225 M	250 M	250 M	280 S	280 S	280 S
	Lp(A)[dB]	w/o.H./w.H.	88/68	90/69	92/70	93/74	92/74	92/72	93/71	99/72	99/73	101/76	88/74	91/74	93/74	97/74	97/74	97/75	100/76	100/76	102/77
600	$\dot{V}_1$	[m³/min]	18.3	21.1	24.1	32.3	37.3	39.9	42.3	47.9	50.8	54.1	18.3	25.1	28.9	33.7	38.7	44.3	50.9	53.2	57.4
	t_2	[°C]	85	83	81	79	77	77	77	76	76	75	89	84	82	80	79	78	77	77	76
	nG	[rpm]	1475	1650	1840	2350	2660	2820	2970	3320	3500	3710	1160	1475	1650	1870	2100	2360	2660	2770	2960
	nM	[rpm]	2945	2950	2950	2955	2955	2970	2970	2970	2970	2970	2945	2950	2940	2955	2955	2970	2970	2970	1480
	Pk	[kW]	25.2	28.4	32	42.3	49.1	52.8	56.3	59.7	63.6	68.3	26.1	33.6	37.8	43.3	49.2	56.1	64.1	67.2	72.5
	P_{mot}	[kW]	30	37	37	55	55	75	75	75	75	90	30	37	45	55	55	75	75	75	90
	Motor size		200 L	200 L	200 L	250 M	250 M	280 S	280 S	280 S	280 S	280 M	200 L	200 L	225 M	250 M	250 M	280 S	280 S	280 S	280 M
	Lp(A)[dB]	w/o.H./w.H.	88/69	90/69	92/70	94/75	93/74	94/74	95/73	100/72	101/74	103/76	90/75	92/75	94/74	97/74	97/75	98/75	100/76	101/77	103/78
700	$\dot{V}_1$	[m³/min]	17.9	20.7	23.7	31.7	36.6	39.4	41.8	44.7	50.3	53.7	17.7	24.5	28.2	33.4	38.4	43.8	49.9	52.5	57.2
	t_2	[°C]	98	95	93	89	88	87	87	86	85	85	103	96	94	92	90	89	87	87	86
	nG	[rpm]	1475	1650	1840	2340	2640	2820	2970	3150	3500	3710	1160	1470	1640	1880	2110	2360	2640	2760	2980
	nM	[rpm]	2950	2950	2940	2955	2970	2970	2970	2970	2970	2970	2950	2940	2955	2970	2970	2970	1480	1480	1485
	Pk	[kW]	29.1	32.8	36.9	48.4	55.7	60.3	64.2	64.6	73	78.2	30.3	38.8	43.5	50.4	57.1	64.6	73.2	76.9	83.8
	P_{mot}	[kW]	37	37	45	55	75	75	75	75	90	90	37	45	55	75	75	75	90	90	110
	Motor size		200 L	200 L	225 M	250 M	280 S	280 S	280 S	280 S	280 M	280 M	200 L	225 M	250 M	280 S	280 S	280 S	280 M	280 M	315 S
	Lp(A)[dB]	w/o.H./w.H.	89/69	91/69	92/70	95/75	95/75	95/75	97/75	99/75	102/74	105/76	91/75	94/74	95/74	98/75	98/75	99/77	100/77	102/77	103/78
800	$\dot{V}_1$	[m³/min]											17.2	24.1	27.6	32.9	37.8	43.1	49.6	52.2	56.7
	t_2	[°C]											118	109	106	103	101	99	98	97	96
	nG	[rpm]											1160	1475	1640	1880	2110	2350	2650	2770	2980
	nM	[rpm]											2940	2955	2955	2970	2970	1480	1485	1485	1485
	Pk	[kW]											34.5	44.2	49.5	57.2	64.8	72.8	83.1	87.2	94.6
	P_{mot}	[kW]											45	55	55	75	75	90	110	110	110
	Motor size												225 M	250 M	250 M	280 S	280 S	280 M	315 S	315 S	315 S
	Lp(A)[dB]	w/o.H./w.H.											92/75	98/74	98/74	101/75	100/76	101/78	102/78	103/78	104/78
900	$\dot{V}_1$	[m³/min]											16.7	23.6	27.4	32.4	37.4	42.4	49.1	51.7	56.2
	t_2	[°C]											133	122	119	115	112	110	108	108	107
	nG	[rpm]											1160	1475	1650	1880	2110	2340	2650	2770	2980
	nM	[rpm]											2940	2955	2970	2970	1480	1480	1485	1485	1485
	Pk	[kW]											38.7	49.6	55.8	64	72.4	80.9	92.6	97.2	105
	P_{mot}	[kW]											45	55	75	75	90	90	110	110	132
	Motor size												225 M	250 M	280 S	280 S	280 M	280 M	315 S	315 S	315 M
	Lp(A)[dB]	w/o.H./w.H.											92/75	97/74	99/75	101/75	101/76	100/77	102/78	103/78	104/78
1000	$\dot{V}_1$	[m³/min]												23.3	26.9	31.9	36.3	42.1	48.6	51.2	55.8
	t_2	[°C]												135	131	127	124	121	119	118	117
	nG	[rpm]												1485	1650	1880	2080	2350	2650	2770	2980
	nM	[rpm]												2970	2970	1480	1480	1485	1485	1485	1485
	Pk	[kW]												55.3	61.7	70.8	78.8	89.8	102	107	116
	P_{mot}	[kW]												75	75	90	90	110	132	132	132
	Motor size													280 S	280 S	280 M	280 M	315 S	315 M	315 M	315 M
	Lp(A)[dB]	w/o.H./w.H.												98/75	100/76	102/76	101/77	100/78	102/78	103/78	105/78

Lower differential pressures on request. GM 50 L from 45 m³/min - accessories DN 200. Performance data are non-binding examples only.

Δp mbar	Blower size		GM 80 L / DN 250									GM 90 S / DN 250								
300	$\dot{V}_1$	[m³/min]	**22.8**	**33.1**	**37.9**	**46.4**	**56.2**	**64.2**	**73.5**	**78.7**	**83.9**	**33.7**	**43.8**	**54.2**	**58.7**	**66.6**	**70.8**	**80.3**	**85.7**	**90.3**
	t_2	[°C]	53	51	50	49	48	48	48	47	47	50	49	48	48	48	48	47	47	47
	nG	[rpm]	975	1310	1465	1740	2060	2320	2620	2790	2960	978	1220	1470	1580	1770	1870	2100	2230	2340
	nM	[rpm]	1460	1465	1465	1470	1470	1475	1480	1480	1480	1465	1465	1470	1470	1475	1475	1480	1480	1480
	Pk	[kW]	15.8	21.7	24.5	29.9	36.7	42.8	50.5	55.2	60.3	21.3	27.1	33.7	36.8	42.6	45.8	53.7	58.4	62.7
	P_{mot}	[kW]	18.5	30	30	37	45	55	75	75	75	30	30	45	45	55	55	75	75	75
	Motor size		180 M	200 L	200 L	225 S	225 M	250 M	280 S	280 S	280 S	200 L	200 L	225 M	225 M	250 M	250 M	280 S	280 S	280 S
	Lp(A)[dB]	w/o.H./w.H.	86/73	89/75	90/75	94/73	97/75	96/76	97/78	98/78	101/79	88/73	91/74	94/75	94/74	100/75	101/76	100/79	99/78	100/78
400	$\dot{V}_1$	[m³/min]	**21.7**	**32.0**	**36.9**	**45.2**	**56.0**	**63.4**	**72.7**	**77.6**	**82.8**	**32.8**	**43.1**	**53.3**	**57.7**	**64.7**	**70.1**	**79.3**	**84.7**	**89.2**
	t_2	[°C]	66	62	61	60	58	58	57	57	57	62	60	58	58	58	57	57	57	56
	nG	[rpm]	975	1310	1470	1740	2090	2330	2630	2790	2960	980	1230	1475	1580	1750	1880	2100	2230	2340
	nM	[rpm]	1465	1470	1470	1470	1475	1480	1480	1480	1480	1470	1470	1475	1475	1480	1480	1480	1480	1480
	Pk	[kW]	20.8	28.4	32.2	38.8	48.1	55.0	64.3	69.6	75.5	28.1	35.9	44.1	47.8	54.1	59.1	68.2	73.9	78.9
	P_{mot}	[kW]	30	37	37	45	55	75	75	90	90	37	45	55	55	75	75	90	90	90
	Motor size		200 L	225 S	225 S	225 M	250 M	280 S	280 S	280 M	280 M	225 S	225 M	250 M	250 M	280 S	280 S	280 M	280 M	280 M
	Lp(A)[dB]	w/o.H./w.H.	86/73	90/75	92/75	95/74	96/75	96/77	98/78	99/79	102/80	89/74	92/75	95/76	97/75	100/76	101/76	100/79	100/78	100/77
500	$\dot{V}_1$	[m³/min]	**20.7**	**31.0**	**35.9**	**44.3**	**55.4**	**62.4**	**72.0**	**76.6**	**82.1**	**31.8**	**42.2**	**52.6**	**56.3**	**63.8**	**69.2**	**79.2**	**83.7**	**90.0**
	t_2	[°C]	81	74	73	71	69	68	67	67	67	74	71	69	68	68	67	67	66	66
	nG	[rpm]	975	1310	1470	1740	2100	2330	2640	2790	2970	980	1230	1480	1570	1750	1880	2120	2230	2380
	nM	[rpm]	1465	1470	1470	1475	1480	1480	1480	1485	1485	1470	1475	1480	1480	1480	1480	1485	1485	1485
	Pk	[kW]	25.8	35.1	39.7	47.8	59.2	67.0	78.2	83.9	91.1	34.9	44.4	54.5	58.3	66.2	72.1	83.7	89.3	97.2
	P_{mot}	[kW]	30	45	45	55	75	75	90	110	110	45	55	75	75	75	90	110	110	110
	Motor size		200 L	225 M	225 M	250 M	280 S	280 S	280 M	315 S	315 S	225 M	250 M	280 S	280 S	280 S	280 M	315 S	315 S	315 S
	Lp(A)[dB]	w/o.H./w.H.	87/74	92/75	93/75	95/74	95/76	96/77	99/78	101/79	103/80	89/74	92/76	96/77	97/76	101/76	102/76	101/79	100/78	101/77
600	$\dot{V}_1$	[m³/min]	**20.0**	**30.1**	**35.2**	**43.7**	**54.5**	**61.9**	**72.0**	**75.7**	**81.3**	**31.1**	**41.4**	**51.7**	**55.5**	**63.0**	**68.4**	**78.3**	**82.9**	**89.5**
	t_2	[°C]	96	87	85	82	80	79	77	77	77	86	82	80	79	78	77	76	76	76
	nG	[rpm]	980	1310	1475	1750	2100	2340	2670	2790	2970	982	1230	1480	1570	1750	1880	2120	2230	2390
	nM	[rpm]	1470	1475	1475	1480	1480	1480	1485	1485	1485	1475	1480	1480	1480	1480	1485	1485	1485	1485
	Pk	[kW]	31.0	41.8	47.4	57.1	70.0	79.3	93.0	98.2	106	41.8	52.9	64.7	69.1	78.3	85.1	98.4	105	114
	P_{mot}	[kW]	37	55	55	75	90	90	110	110	132	55	75	75	90	90	110	110	132	132
	Motor size		225 S	250 M	250 M	280 S	280 M	280 M	315 S	315 S	315 M	250 M	280 S	280 S	280 M	280 M	315 S	315 S	315 M	315 M
	Lp(A)[dB]	w/o.H./w.H.	89/74	91/75	93/75	95/75	95/76	96/78	99/78	101/79	103/80	90/74	93/77	97/78	98/77	102/76	103/76	101/79	101/78	102/77
700	$\dot{V}_1$	[m³/min]	**19.1**	**29.3**	**34.5**	**42.9**	**53.6**	**61.0**	**71.2**	**74.9**	**80.1**	**30.3**	**40.6**	**51.0**	**54.7**	**62.6**	**67.6**	**77.5**	**82.1**	**87.5**
	t_2	[°C]	112	101	97	94	91	89	88	87	87	99	94	91	90	88	88	87	86	86
	nG	[rpm]	980	1310	1480	1750	2100	2340	2670	2790	2960	982	1230	1480	1570	1760	1880	2120	2230	2360
	nM	[rpm]	1470	1475	1480	1480	1480	1485	1485	1485	1480	1475	1480	1480	1480	1485	1485	1485	1480	1480
	Pk	[kW]	36.0	48.6	55.2	66.1	80.8	91.4	107	113	121	48.6	61.4	75.0	80.0	91.0	98.2	113	120	129
	P_{mot}	[kW]	45	55	75	75	90	110	132	132	160	55	75	90	90	110	110	132	160	160
	Motor size		225 M	250 M	280 S	280 S	280 M	315 S	315 M	315 M	315 M	250 M	280 S	280 M	280 M	315 S	315 S	315 M	315 M	315 M
	Lp(A)[dB]	w/o.H./w.H.	88/75	91/75	93/75	95/76	95/77	97/78	101/79	102/79	104/80	91/75	94/77	98/78	99/77	103/77	104/76	102/78	102/78	103/79
800	$\dot{V}_1$	[m³/min]										**29.7**	**39.9**	**50.4**	**54.0**	**61.9**	**67.3**	**76.8**	**81.0**	**86.8**
	t_2	[°C]										112	106	102	101	99	98	97	96	96
	nG	[rpm]										985	1230	1485	1570	1760	1890	2120	2220	2360
	nM	[rpm]										1480	1480	1485	1485	1485	1485	1480	1480	1480
	Pk	[kW]										55.6	69.9	85.5	90.9	103	112	128	135	145
	P_{mot}	[kW]										75	90	110	110	132	132	160	160	160
	Motor size											280 S	280 M	315 S	315 S	315 M	315 M	315 M	315 M	315 M
	Lp(A)[dB]	w/o.H./w.H.										91/75	95/77	99/78	100/77	104/77	105/77	104/78	103/79	104/81
900	$\dot{V}_1$	[m³/min]										**29.0**	**39.2**	**49.8**	**53.3**	**61.2**	**66.6**	**76.1**	**80.3**	**86.1**
	t_2	[°C]										126	118	113	112	110	109	107	106	106
	nG	[rpm]										985	1230	1485	1570	1760	1890	2120	2220	2360
	nM	[rpm]										1480	1480	1485	1485	1485	1480	1480	1485	1485
	Pk	[kW]										62.4	78.4	95.8	102	115	125	142	150	161
	P_{mot}	[kW]										75	90	110	132	132	160	160	200	200
	Motor size											280 S	280 M	315 S	315 M	315 M	315 M	315 M	315 M	315 M
	Lp(A)[dB]	w/o.H./w.H.										91/75	95/77	98/79	100/78	104/79	105/78	104/78	103/80	104/81
1000	$\dot{V}_1$	[m³/min]											**38.5**	**49.1**	**52.7**	**60.5**	**65.9**	**75.5**	**79.6**	**85.5**
	t_2	[°C]											131	125	124	121	120	118	117	116
	nG	[rpm]											1230	1485	1570	1760	1890	2120	2220	2360
	nM	[rpm]											1485	1485	1485	1480	1480	1485	1485	1485
	Pk	[kW]											86.9	106	113	128	138	157	166	178
	P_{mot}	[kW]											110	132	132	160	160	200	200	200
	Motor size												315 S	315 M	315 M	315 M	315 M	315 M	315 M	315 M
	Lp(A)[dB]	w/o.H./w.H.											95/78	98/79	100/79	104/80	105/80	104/80	104/81	104/81

Lower differential pressures on request. Performance data are non-binding examples only.

Δp mbar	Blower size		GM 130 L / DN 300									GM 150 S / DN 300							
300	$\dot{V}_1$	[m³/min]	**47.8**	**62.9**	**78.0**	**82.2**	**94.3**	**102**	**115**	**131**	**134**	**77.3**	**94.4**	**102**	**116**	**122**	**132**	**147**	**152**
	t_2	[°C]	51	50	49	49	48	48	48	47	47	49	48	48	48	48	47	47	47
	nG	[rpm]	980	1230	1480	1550	1750	1880	2100	2350	2400	982	1170	1250	1410	1480	1580	1750	1800
	nM	[rpm]	1470	1470	1480	1480	1480	1480	1480	1485	1485	1475	1480	1480	1480	1480	1485	1485	1485
	Pk	[kW]	32.0	40.8	50.5	53.3	61.9	67.9	78.7	92.1	95.0	48.4	59.4	64.5	75.3	80.3	87.8	102	106
	P_{mot}	[kW]	37	45	75	75	75	75	90	110	110	55	75	75	90	90	110	132	132
	Motor size		225 S	225 M	280 S	280 S	280 S	280 S	280 M	315 S	315 S	250 M	280 S	280 S	280 M	280 M	315 S	315 M	315 M
	Lp(A)[dB]	w/o.H./w.H.	93/75	95/77	101/79	100/79	101/80	101/80	103/81	104/82	104/82	95/79	97/79	97/79	97/80	98/80	99/80	101/81	101/81
400	$\dot{V}_1$	[m³/min]	**46.2**	**61.2**	**76.3**	**80.5**	**93.2**	**100**	**115**	**130**	**132**	**75.8**	**92.6**	**101**	**114**	**121**	**130**	**146**	**150**
	t_2	[°C]	63	61	59	59	58	58	57	57	57	59	58	58	57	57	57	57	57
	nG	[rpm]	982	1230	1480	1550	1760	1880	2120	2370	2400	985	1170	1260	1410	1485	1580	1760	1800
	nM	[rpm]	1475	1480	1480	1480	1480	1485	1485	1485	1485	1480	1480	1485	1485	1485	1485	1480	1480
	Pk	[kW]	41.9	53.2	65.4	68.9	80.1	86.8	101	117	119	63.4	77.1	84.2	96.6	103	112	129	133
	P_{mot}	[kW]	55	75	75	90	90	110	132	132	132	75	90	110	110	132	132	160	160
	Motor size		250 M	280 S	280 S	280 M	280 M	315 S	315 M	315 M	315 M	280 S	280 M	315 S	315 S	315 M	315 M	315 M	315 M
	Lp(A)[dB]	w/o.H./w.H.	93/76	96/78	102/80	101/79	102/80	103/81	103/81	105/83	106/83	96/79	97/79	98/79	98/80	98/80	99/80	101/81	102/82
500	$\dot{V}_1$	[m³/min]	**44.8**	**60.8**	**74.7**	**86.2**	**91.6**	**98.9**	**113**	**128**	**130**	**74.2**	**91**	**100**	**113**	**120**	**127**	**144**	**148**
	t_2	[°C]	76	72	70	69	69	68	67	67	67	70	69	68	67	67	67	66	66
	nG	[rpm]	985	1250	1480	1670	1760	1880	2120	2370	2400	985	1170	1270	1410	1485	1570	1760	1800
	nM	[rpm]	1480	1480	1480	1485	1485	1485	1480	1480	1480	1480	1485	1485	1485	1480	1480	1485	1485
	Pk	[kW]	52.0	66.8	80.3	92.0	97.8	106	122	141	143	78.3	94.8	104	118	126	135	156	160
	P_{mot}	[kW]	75	75	90	110	110	132	160	160	160	90	110	132	132	160	160	200	200
	Motor size		280 S	280 S	280 M	315 S	315 S	315 M	315 M	315 M	315 M	280 M	315 S	315 M	315 M	315 M	315 M	315 M	315 M
	Lp(A)[dB]	w/o.H./w.H.	92/77	97/79	102/80	101/80	103/81	104/81	104/81	107/83	107/83	97/79	97/79	98/79	98/79	98/80	99/81	101/82	102/82
600	$\dot{V}_1$	[m³/min]	**43.4**	**59.4**	**73.6**	**84.8**	**90.2**	**97.5**	**112**	**119**	**126**	**72.7**	**89.5**	**101**	**110**	**118**	**126**	**143**	**147**
	t_2	[°C]	89	84	81	80	79	79	77	77	77	82	80	78	78	77	77	76	76
	nG	[rpm]	985	1250	1485	1670	1760	1880	2120	2230	2360	985	1170	1300	1400	1485	1570	1760	1800
	nM	[rpm]	1480	1480	1485	1485	1485	1480	1480	1485	1485	1485	1485	1480	1480	1485	1485	1485	1485
	Pk	[kW]	61.9	79.3	95.5	109	116	125	144	153	164	93.2	113	127	138	148	158	182	188
	P_{mot}	[kW]	75	90	110	132	132	160	160	200	200	110	132	160	160	200	200	250	250
	Motor size		280 S	280 M	315 S	315 M	315 M	315 M	315 M	315 M	315 M	315 S	315 M	315 M	315 M	315 M	315 M	315 L	315 L
	Lp(A)[dB]	w/o.H./w.H.	94/78	97/80	104/82	102/82	104/83	105/83	107/83	107/83	107/84	99/79	99/79	99/79	99/80	100/80	100/82	102/83	102/83
700	$\dot{V}_1$	[m³/min]										**71.4**	**88.2**	**96.3**	**109**	**117**	**125**	**142**	**145**
	t_2	[°C]										93	91	89	88	88	87	86	86
	nG	[rpm]										985	1170	1260	1400	1485	1580	1760	1800
	nM	[rpm]										1485	1480	1480	1485	1485	1485	1485	1485
	Pk	[kW]										108	130	141	159	170	183	209	215
	P_{mot}	[kW]										132	160	160	200	200	250	250	250
	Motor size											315 M	315 M	315 M	315 M	315 M	315 L	315 L	315 L
	Lp(A)[dB]	w/o.H./w.H.										100/80	100/80	100/80	100/80	101/81	101/82	102/83	102/83
800	$\dot{V}_1$	[m³/min]										**70.2**	**88.8**	**96.0**	**108**	**116**	**124**	**140**	**144**
	t_2	[°C]										105	101	100	99	98	97	96	96
	nG	[rpm]										985	1190	1270	1400	1488	1580	1760	1800
	nM	[rpm]										1480	1485	1485	1485	1485	1485	1490	1490
	Pk	[kW]										123	151	162	180	193	207	235	242
	P_{mot}	[kW]										160	200	200	200	250	250	315	315
	Motor size											315 M	315 M	315 M	315 M	315 L	315 L	315 L	315 L
	Lp(A)[dB]	w/o.H./w.H.										101/80	100/80	100/80	100/80	102/82	102/83	102/83	103/84
900	$\dot{V}_1$	[m³/min]										**69**	**87.6**	**94.9**	**107**	**115**	**123**	**139**	**143**
	t_2	[°C]										118	113	111	110	109	108	106	106
	nG	[rpm]										985	1190	1270	1400	1488	1580	1760	1800
	nM	[rpm]										1480	1485	1485	1485	1485	1490	1490	1490
	Pk	[kW]										138	169	181	202	216	231	262	269
	P_{mot}	[kW]										160	200	200	250	250	315	315	315
	Motor size											315 M	315 M	315 M	315 L	315 L	315 L	315 L	315 L
	Lp(A)[dB]	w/o.H./w.H.										102/81	101/80	101/80	101/81	102/83	103/84	103/84	103/84
1000	$\dot{V}_1$	[m³/min]										**68.4**	**86.5**	**93.8**	**106**	**114**	**122**	**138**	**142**
	t_2	[°C]										130	124	123	121	120	118	117	116
	nG	[rpm]										990	1190	1270	1400	1488	1580	1760	1800
	nM	[rpm]										1485	1485	1485	1485	1490	1490	1490	1490
	Pk	[kW]										154	187	200	223	238	255	289	296
	P_{mot}	[kW]										200	250	250	250	315	315	355	355
	Motor size											315 M	315 L	315 L	315 L	315 L	315 L	355 M	355 M
	Lp(A)[dB]	w/o.H./w.H.										103/82	102/81	102/80	102/81	103/84	104/84	103/84	104/84

Lower differential pressures on request. Higher intake volume flows on request. Performance data are non-binding examples only.



AERZEN. Compression as success factor.
AERZEN was founded in 1864 as Aerzener Maschinenfabrik. In 1868 we built Europe's first rotary lobe blower. The first turbo blowers followed in 1911, the first screw compressors in 1943, and in 2010 the world's first rotary lobe compressor unit. AERZEN innovations are a driving force behind the development of compressor technology. Today AERZEN is one of the world's oldest and most important manufacturers of rotary lobe blowers, rotary lobe compressors, rotary lobe gas meters, screw compressors, and turbo blowers. And in many areas of application, AERZEN is among the undisputed leaders.

There are more than 2,000 experienced AERZEN employees in over 40 affiliates worldwide working hard to advance compressor technology. Their technological expertise, our international network of experts, and the constant feedback from our customers are what make us successful. AERZEN products and services have become standards in the industry for reliability, lasting value, and efficiency. Go ahead: challenge us!

Aerzener Maschinenfabrik GmbH
Reherweg 28 – 31855 Aerzen / Germany
Telephone: +49 5154 81-0 – Fax: +49 5154 81-9191
info@aerzener.de – www.aerzen.com

AERZEN
EXPECT PERFORMANCE

G1-068 – 04 – EN – 1000 – 03.2015

NOTICE: THIS DRAWING AND ALL INFORMATION HEREIN IS THE PROPERTY OF AERZEN CANADA AND ITS SUBSIDIARIES AND SHALL NOT BE REPRODUCED BY ANY MEANS IN WHOLE OR IN PART OR USED AS THE BASIS FOR MANUFACTURE WITHOUT WRITTEN PERMISSION.

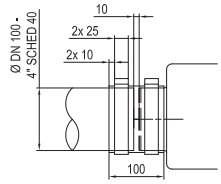

CONNECTION DETAILS

for straddling dowels A/B 12/15 - Liebig - dowel
(not included in Aerzen's scope of supply)

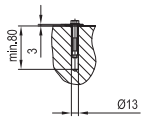

ANCHORING BY OTHER
ANCHORING DETAILS

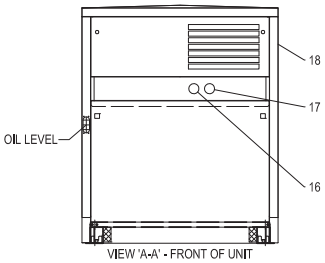

VIEW 'A-A' - FRONT OF UNIT

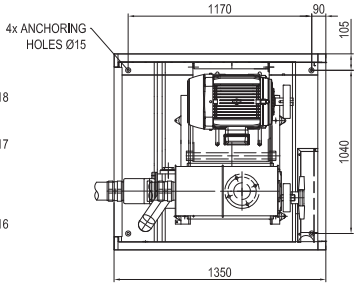

NOTE	QTY.	POS	DESCRIPTION
	2	1	BLOWER - GM 15L - 120 KG
D	2	2	MOTOR - WEG REPRESENTED, FRAME 284T
	2	3	BASE FRAME / DISCHARGE SILENCER - DN 100
	2	4	CONNECTION HOUSING WITH CHECK VALVE - DN 100
	2	5	4 SET OF VIBRATION ISOLATORS - DN 100
	2	6	DISCHARGE FLEXIBLE SLEEVE - DN 100 / 4" SCHED. 40
	2	7	PRESSURE RELIEF VALVE - DN 80 - SET TO 750 mbar
	2	8	INLET FILTER / SILENCER ASSEMBLY - DN 100
	2	9	INLET FILTER ELEMENT - G5 DN 100
E	2	10	BELT GUARD
	2	11	DRIVER SHEAVE
E	2	12	DRIVER BUSHING
	2	13	DRIVEN SHEAVE
E	2	14	DRIVEN BUSHING
	2	15	V-BELT SET
	2	16	FILTER MAINTENANCE INDICATOR - WIKA
	2	17	DISCHARGE PRESSURE GAUGE W/ ISOLATION BALL VALVE - WIKA
	2	18	ACOUSTIC ENCLOSURE - G5 DN 100 - INDOOR INSTALLATION
	2	19	FAN - MOUNTED ON BLOWER SHAFT - GM 15L
G	2	20	INLET FLEXIBLE SLEEVE - DN 100 / 4" SCHED. 40

NOTES:

A. ASSEMBLY WEIGHT: 725 KG
B. PAINT: AERZEN STANDARD BLUE
C. 1M OF FREE SPACE AT THE FRONT AND BACK OF THE PACKAGE IS RECOMMENDED FOR MAINTENANCE ACCESS
D. ELECTRIC MOTOR: WEG W22 REPRESENTED, 25HP, 1765 RPM, ~~460/3/60~~, TEFC, NEMA PREMIUM EFFICIENCY, SF=1.25, INVERTER DUTY RATED
575 V
E. NOT SHOWN ON DRAWING
F. FOR VARIABLE SPEED APPLICATIONS, CONSTANT TORQUE VFD ARE REQUIRED

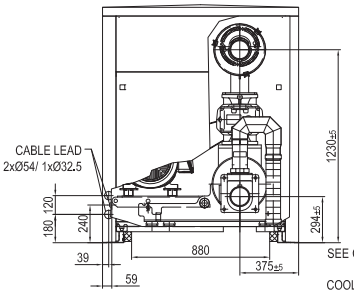

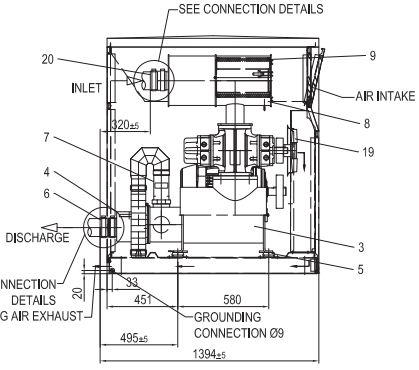

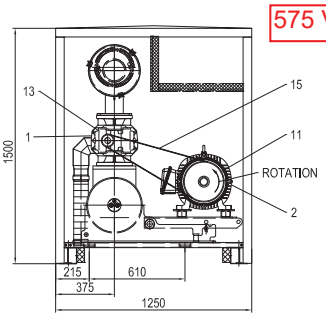

REVISION DETAILS						
REV	DRAWN BY	DATE	REVIEWED	DATE	DETAILS	AREA
A	CV	DEC/19-2013	CV	DEC/19-2013	RELEASE	-

AERZEN
AERZEN CANADA
1966 MONTEE LABOSSIERE, VAUDREUIL QC. J7V 8P2
(450) 424-3666 PH. (450) 424-3665 FX

THIRD ANGLE PROJECTION

TITLE	G5 - GM 15L DN 100 - PRESSURE
DWG NO.	ZG-00813
DRAWN BY	C.VAILLANCOURT
REVIEWED BY	C.VAILLANCOURT
DATE	DECEMBER 19, 2013
REV	A
SCALE: NONE	SIZE: A
SHEET: 1 OF 1	

This page is intentionally left blank

Aerzener Maschinenfabrik GmbH
Reherweg 28 - D-31855 Aerzen - Telefon (0 51 54) 81 0 - info@aerzener.de - www.aerzener.com

4000323911 | ZTD | 00

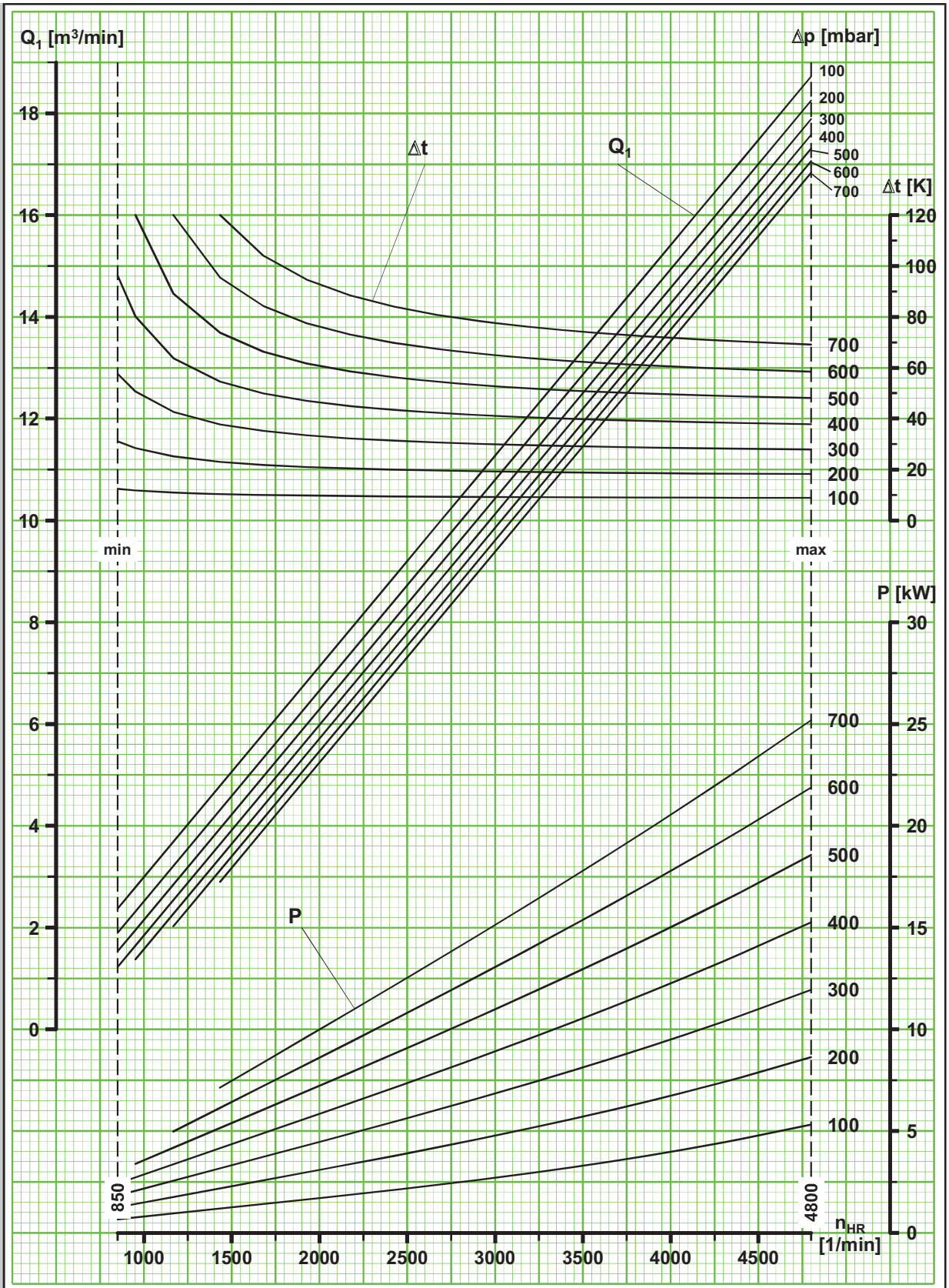

Q_1 : Ansaugvolumenstrom (Luft) bei p_1 = 1,0 bar und t_1 = 20°C	intake volume flow (air) at p_1 = 1.0 bar and t_1 = 20°C	débit aspiré (air) pour p_1 = 1,0 bar et t_1 = 20°C
n_{HR} : Hauptrotordrehzahl	main rotor speed	vitesse du rotor principal
n_V : Antriebswellendrehzahl	drive shaft speed	vitesse de l'arbre d'entraînement
P : Leistungsbedarf an der Kupplung	power required at the coupling	puissance absorbée à l'accouplement
t : Temperaturerhöhung	temperature rise	élévation de température
p : Druckerhöhung	pressure difference	pression différentielle

Leistungsdiagramm - Überdruck - für Drehkolbengebläsestufe
performance diagram - overpressure - for stage of rotary piston blower
courbes de fonctionnement - fonctionnement en pression - pour étage de surpresseur à pistons rotatifs

GM 15 L

n_V / n_{HR} = 1	04/2016 TRD - Hallemann	G2 - 410 - XL SAP - 4000323911 - 00

Technical data sheet Aerzen Positive Displacement Blower GM 15 L

Aerzener Maschinenfabrik GmbH

AERZEN

1	**Design and function**	
1.1	Manufacturer	Aerzener Maschinenfabrik GmbH / Germany
1.2	Type	3-lobe positive displacement blower with integrated pulsation cancellation
1.3	Working principle	Positive Displacement Blower
1.4	Applicable standards	DIN / EN
1.5	Direction of flow	from top to bottom (vertical)
1.6	Position of the driving shaft	left (viewed onto shaft)
1.7	Direction of rotation	counter clockwise (ccw, viewed onto shaft)
1.8	Possible driving types	belt drive, coupling, gearbox
1.9	ESNR air pressure- / exhaust service	032795000 / 032795000
1.10	ESNR gastight	033511000
1.11	Moment of inertia	0.049 kgm²
1.12	Weight (bare blower)	126 kg
2	**Design details and materials**	
2.1	**Housing**	
2.1.1	Components	cylinder, 2 side plates, gear case cover, housing cover
2.1.2	Division of housing	vertical
2.1.3	Design cylinder	Pre-inlet chamber in cylinder part discharge side for pulsation cancellation
2.1.4	Material	EN-GJL-200 (GG-20) equivalent to ASTM A48 class 30
2.1.5	Design temperature	-10 / +150 °C
2.1.6	Admissible operating pressure	0,7 bar
2.1.7	Leakage test	0.77 bar
2.1.8	Hydrostatic pressure test	1.4 bar
2.2	**Rotors and shafts**	
2.2.1	Type of rotors	3-lobe
2.2.2	Material rotors	C45N equivalent to AISI 1043
2.2.3	Material shafts	C45N equivalent to AISI 1043
2.2.4	Type of connection rotors / shafts	One piece
2.2.5	Balancing quality	Q 6.3 acc. to DIN ISO 1940
2.2.6	Ratio of length-diameter (L/D)	2.42
2.2.7	Diameter rotor	128 mm
2.2.8	Shaft distance	85.33 mm
2.2.9	Diameter driving shaft	38 mm
2.3	**Sealings**	
2.3.1	Conveying chamber	Labyrinth sealing with 4 piston rings and oil thrower
2.3.2	Driving shaft	2 radial seal rings
2.3.3	Material shaft sealing	Viton
2.3.4	Shaft sleeve	100Cr6 equivalent to AISI 52100
2.4	**Bearings**	
2.4.1	Design	Roller bearing axial / radial
2.4.2	Bearing type	Cyl. roller bearing, deep groove ball bearing, ang. contact ball bearing
2.4.3	Place of installation	Side plate
2.5	**Gearbox**	
2.5.1	Type	Helically geared synchronization gearbox
2.5.2	Material	16MnCr5E comparable with AISI 5115
2.5.3	Type of fastening	Conical press on taper with shaft nut
2.5.4	Diameter gear wheels	84.893 mm
2.6	**Lubrication**	
2.6.1	Design	Oil splash lubrication
2.6.2	Filling quantity	0.86 l
2.7	**Cooling**	
2.7.1	Design	Aircooled by considerably ribbed housing surface
3	**Connections**	
3.1	Piping suction- / discharge side	DN 100
3.2	Measuring points suction- / discharge side	G 1/4"
3.3	Condensate drain at neutral chamber of the labyrinth seal	G 1/2"
4	**Finish**	
4.1	Manufacturer standard	QH00402 and QH00408
4.2	Primer	Alkyd resin, 40µm, RAL 6006
4.3	Coating	Alkyd resin, 40µm, RAL 5001
5	**Admissible operating data**	
5.1	qo	4.14 l / U
5.2	Qv100	1.1 m³/min
5.3	Max. differential pressure, pressure service	700 mbar
5.4	Max. differential pressure, exhaust service	-500 mbar
5.5	Intake temperature min./max.	-10 / +50 °C
5.6	Speed min./max.	850 / 4800 1/min
5.7	Performance test	Simplified inspection test acc. to DIN 1945 part 1 (ISO 1217)
6	**Documentation**	
6.1	Performance diagram, pressure- /exhaust service	G2-410 / G2-510
6.2	Dimensional sheet	3ZG-7584
6.3	Sectional drawing	1ZG-3585
6.4	Bill of materials	032795
6.5	Operating manual	G4-001

issued by: F.Schneider Dept.: VI 02.10.2007 Rev.:

Acoustic Hood

Mechanical cooling fan mounted directly on the shaft end of the blower stage.

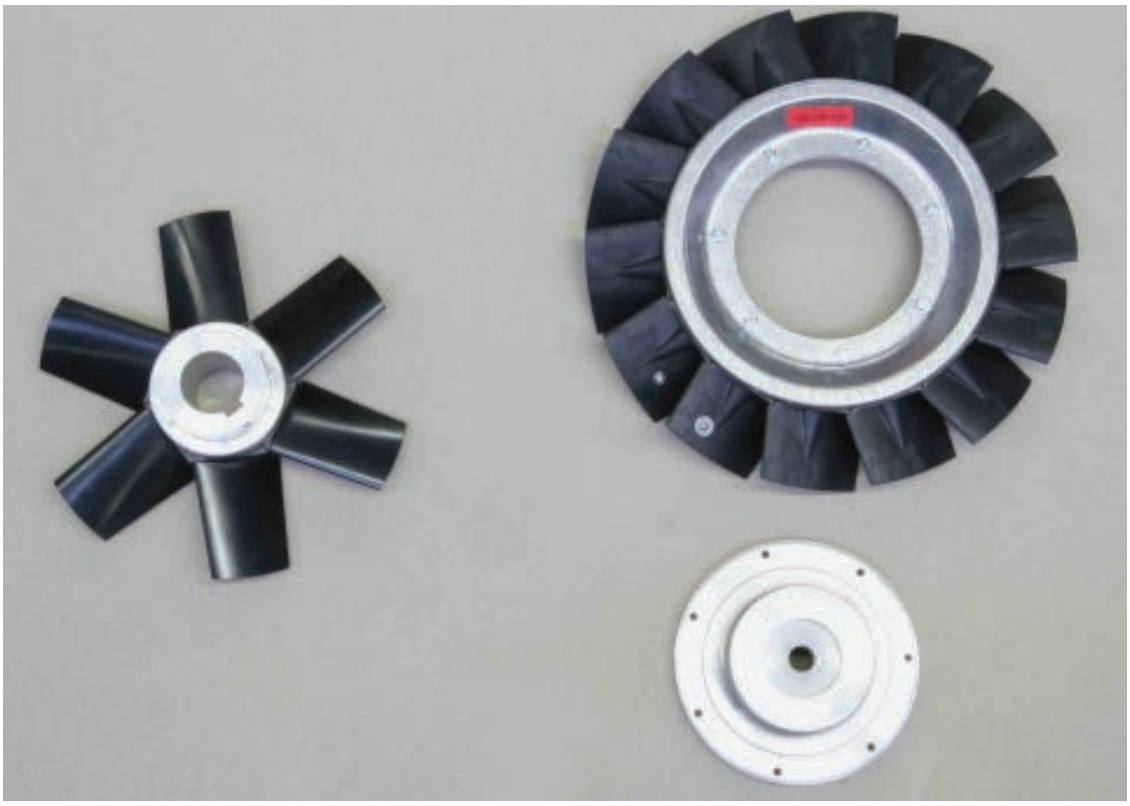

Fan Wheel: Mounted directly on the drive shaft of the blower, no additional accessory drive necessary. Ventilating air is sucked on the “cold” side of the unit (inlet-air opening), directed by diagonal air flow across the driving motor through to the acoustic hood and across the exhaust-air opening.

Selection of fan wheels is subject to blower speed.

Selection Sheets: 4TVs-1924

Admissible Pressing: 150- 250 Pa.

Amount of air and input: 3862-4TG

Material: hub aluminium, blades plastic

This page is intentionally left blank

TECO Westinghouse MOTORS (CANADA) INC.	
	Date: October 19, 2015

Technical Documentation

PDH02545

Optim TEFC | AEHH8N

Date: October 19, 2015

TECO Westinghouse
MOTORS (CANADA) INC.

Date: October 19, 2015

Dimensional Drawing

Catalogue	Model	HP	Pole	kW	Rating	Voltage	Hz	RPM
PDH02545	AEHH8N	25	4	19	Continuous	575 V	60	1800

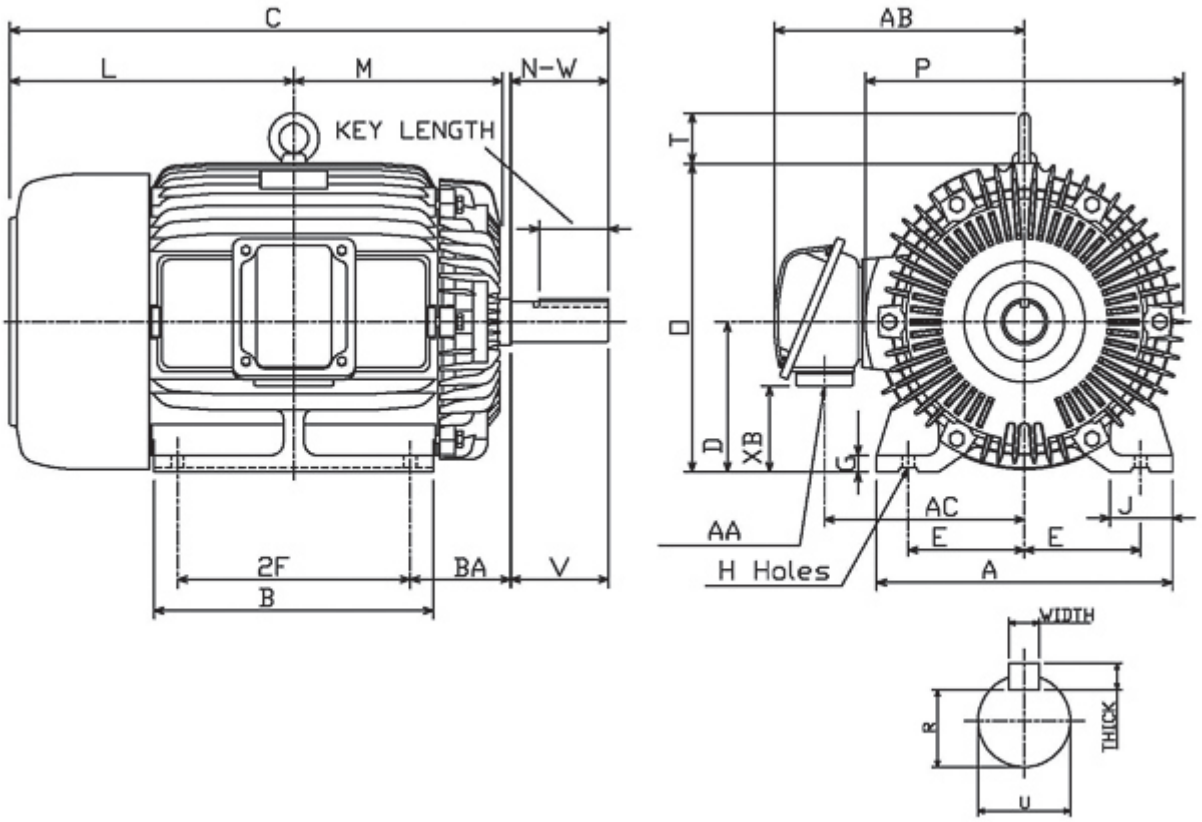

Frame Size	Mounting					A	B	C	CD	D
	E	2F	2F2	H	BA					
284T	5.5	9.5		0.53	4.75	14	11.7	26.8		7

G	J	K	L	M	O	P	T	Key			Keyseat
								Width	Thick	Length	R
0.7	2.95		12.68	9.23	14.52	15.04	1.97	0.5	0.5	3.28	1.591

Terminal Housing				Aux Box		C/D Flange					
AA	AB	AC	XB	AE	AX	BB	AH	AK	BD	AJ	BF
1.25 NPT	12.28	9.84	3.97								

Shaft Extension			Bearings		Approx. Weight Lbs	SPL dBA/3ft	Ins. Class	S.F.	Drive Method	Dimensions
N-W	U	V	DE	NDE						
4.62	1.875	4.5	6311ZZ	6310ZZ	464	68	F	1.15	Direct Coupling / Belt Drive	Inches

TECO Westinghouse
MOTORS (CANADA) INC.

Date: October 19, 2015

Technical Data Sheet

Motor Type: AEHH8N	Catalogue No: PDH02545

Nameplate Information

HP	Pole	RPM	Frame	Voltage	Hz	Phase
25	4	1765	284T	575	60	3

Enclosure	Ins. Class	Service Factor	Time Rating	NEMA Design	Rated Amb.	Rated Altitude
TEFC	F	1.15	Continuous	C	-40 to 40 °C	<3300 ft

Typical Performance

Efficiency (%)				Power Factor (%)		
Full Load		3/4 Load	1/2 Load	Full Load	3/4 Load	1/2 Load
Nom.	Min.					
93.6	92.4	93.6	93.6	86.0	83.0	77.0

Torque				Current (A)		
Full Load (lb-ft)	Locked Rotor (% FLT)	Pull Up (% FLT)	Break Down (% FLT)	No Load	Full Load	Locked Rotor
74.37	205	165	240	5.7	23.3	146

NEMA KVA Code	Inertia (WR^2)			Safe Stall Time (s)		Noise Level Sound Press. dB(A)
	Rotor ($lb\text{-}ft^2$)	NEMA Load ($lb\text{-}ft^2$)	Max. Allowable ($lb\text{-}ft^2$)	Cold	Hot	
G	4.586	122.0	255.0	28	20	68

VFD Duty Information

Speed Range			VFD		S.F.
Constant Torque	Variable Torque	Constant Power	Carrier	Type	
6-60Hz	3-60Hz	60-120Hz	≤ 5 kHz	VPWM or CPWM	1.0 Only

Additional Information

Bearings		Approx. Weight
DE	NDE	lbs
6311ZZ	6310ZZ	464

Hazardous Locations Information

CSA Certified	
Class I, Div 2, Groups B, C & D Class I, Zone 2, Groups IIB+H2, IIB & IIA	
Temp Code (Sinewave / VFD)	T3C / T3B

Connection Diagram

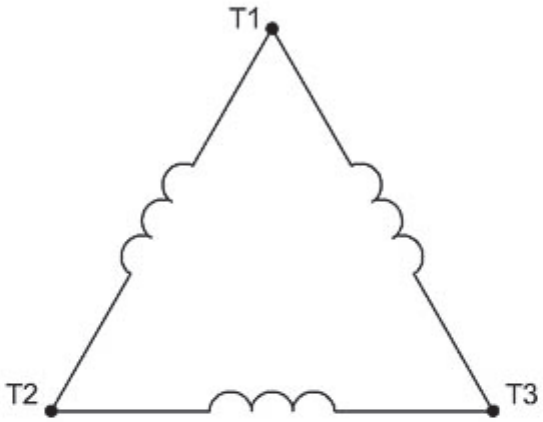

3 LEAD SINGLE VOLTAGE DELTA					
VOLTAGE	CONN.	L1	L2	L3	
-	DELTA	1	2	3	

WD_3D

TECO Westinghouse MOTORS (CANADA) INC.	
	Date: October 19, 2015

Thermal Limit Curves

Motor Type: AEHH8N		Catalogue No: PDH02545		Family: Optim TEFC	
HP	25	Safe Stall Time		Full Load A	0.0 / 23.3 A
Voltage	0 / 575V 60Hz	Hot	20 s	Locked Rotor A	628 %
RPM	1800	Cold	28 s	Locked Rotor A	0.0 / 146 A

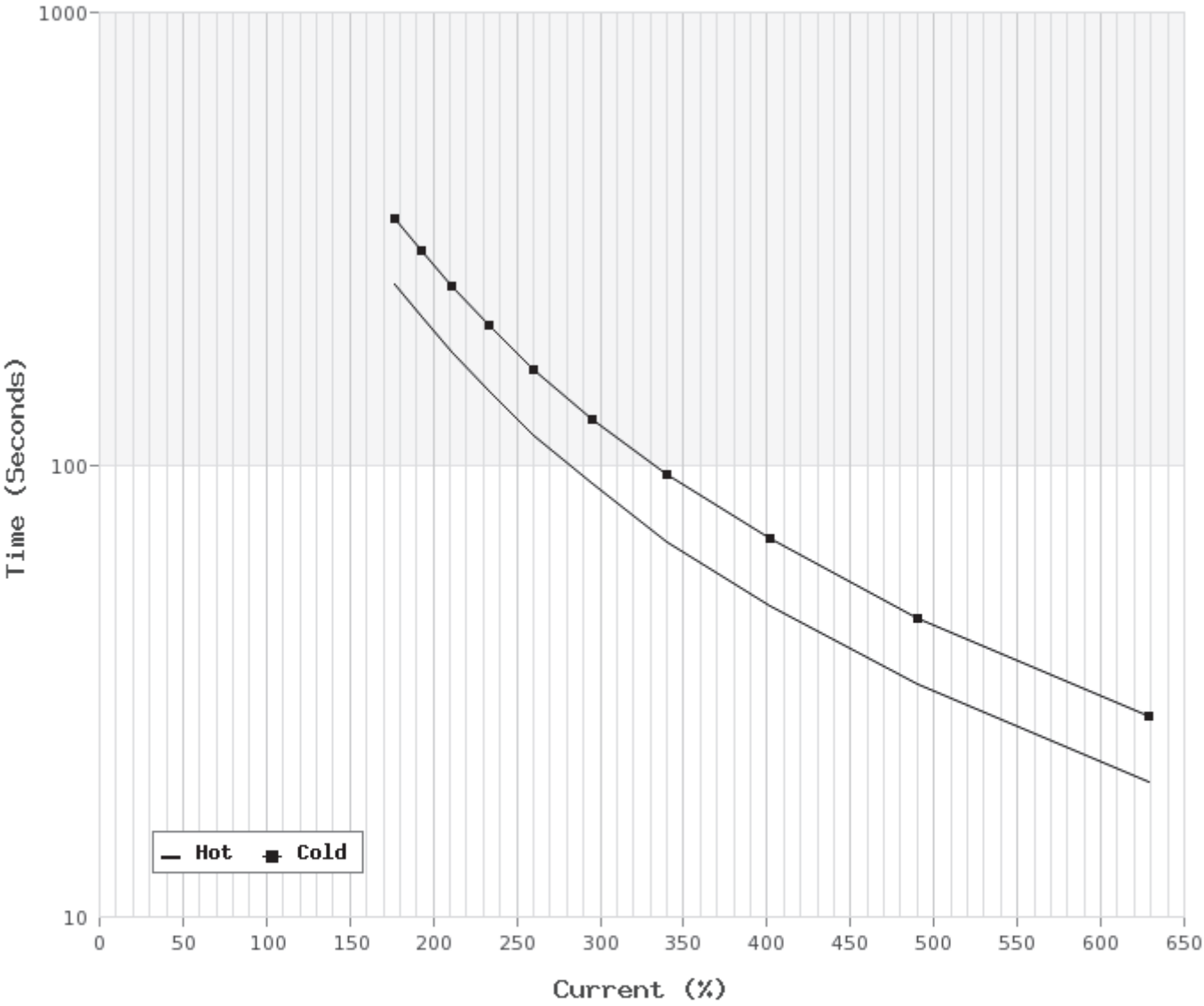

TECO Westinghouse MOTORS (CANADA) INC.	
	Date: October 19, 2015

T-N and I-N Curves

Motor Type: AEHH8N		Catalogue No: PDH02545		Family: Optim TEFC	
HP	25	Full Load T	74.37 lb-ft	Full Load A	23.3 A
Voltage	575V 60Hz	Locked Rotor T	205 %	Locked Rotor A	146.0 A
RPM	1800	Pull Up T	165 %	Break Down T	240 %

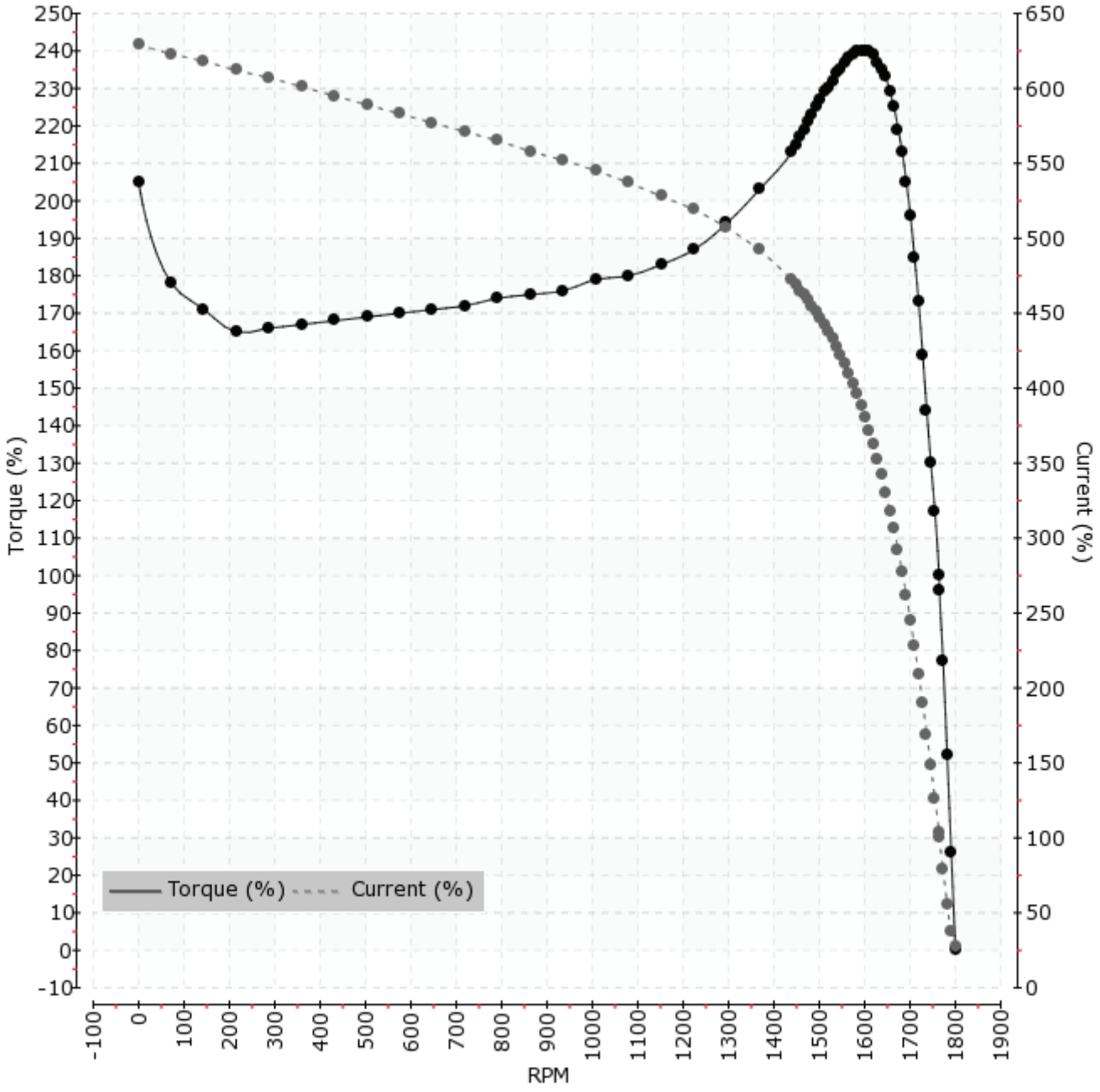

4 – DETAILED TECHNICAL DOCUMENTATION

4.3 – SHOP DRAWINGS SUBMITTAL PACKAGES

4.3.4 – POLYMER PREPARATION SYSTEM FOR BELT FILTER PRESS – HYDRA-POL 500

LEFT BLANK

SHOP DRAWINGS

Hydrapol 500 Submittal package Date : 2019-01-24

General Information			
Project	**WWTP UPGRADE - IQALUIT**		
Client:	Kudlik Construction Ltd.	Project Number	2018-062
To:	Sandra Rousseau P.Eng., Project Manger	E-mail:	srousseau@kudlik.biz
Contractor	Veolia Water Technologies Canad Inc.	Project Number	5000218036
Address	4105 Sartelon, Ville St. Laurent PQ, H4S 2B3		
Project Manger:	Clément Bekaert	E-mail:	clement.bekaert@veolia.com
Phone:	514-334-7230 x 3243	Cell:	514-246-6232

Information on the Equipment		
Specialty:	Process	
Equipment:	Hydrapol 500	
Drawing Reference:		
Specification reference:	46 36 11	
Article:		
Revision:	Rev02	
Titre:	HP 500 submittal package	
Numero client:	DA-Veolia-DS-04-Hydrapol 500	
Numero Veolia	5000218036_DS_0004_PM_VWT	
Envoyer pour:	Approbation/Information:	Approbation

Consultant Approval

4105 Sartelon
Ville St. Laurent, PQ
H4S-2B3

Phone: 514-334-7230
Fax: 514-334-5070
www.veoliawatertechnologies.ca

This page is intentionally left blank

Project name:	IQALUIT
Project#:	5000218036
Document #:	5000218036_DS_0004_PM_VWT
by:	BB
chkd:	GH
appvd:	CB

SUBMITTAL PACKAGE REV2

HYDRAPOL 500

This page is intentionally left blank

Project name:	IQALUIT
Project#:	5000218036
Document #:	5000218036_DS_0004_PM_VWT
by:	BB
chkd:	GH
appvd:	CB

HYDRAPOL 500

PROCESS DATASHEET

OIM manual section: 4.3.4.1

This page is intentionally left blank

	VEOLIA				VWT CANADA #		PDS_0004_HYDP-500		
					Project #		5000218036		
					Date		2018-09-11		
					HYDRA-POL				
CLIENT	REV	DESCRIPTION		DATE	By		Chkd	App.	
	1	FOR APPROVAL		2018-09-11	G.H.		C.B.	G.P.	
CITY OF IQALUIT	2	FOR APPROVAL		2019-01-24	F.V.		C.B.	G.P.	
	3								
PROJECT	4								
	5								
IQALUIT WATER TREATMENT PLANT	6								
	7								
	TAG:	APPLICATION :							REV
GENERAL	Manufacturer				VEOLIA WATER TECHNOLOGIES CANADA				
	Model Serie				HP500				
	VEOLIA Model Number				HP500S-CT-MBF-VC100F-AB575T-S2W-AAS-SSCEP-AC44				
PROCESS REQUIREMENT	Powder Type			-	Anionic Polymer				
	Solution Concentration			%	0,50%				
	Powder Density			kg/L	0,8				
	Recommended Maturation Time			min	60				
	Min Flowrate			lph	6				
	Avg Flowrate			lph	25				
	Max Flowrate			lph	40,8				
ENVIRONMENT	Equipment Location				Indoor				
	Min. Temperature			°C	2				
	Max . Temperature			°C	38				
	Max. Humidity			%	95				
	Corrosive Atmosphere				Non Corrosif				
	Freeze				N/A				
	Comments								
SAFETY	Electrical Classification				Non Hazardous Area				
	Province				Nunavut				2
OPERATING CONDITIONS	Batch size			L	*453*				
	Kg / batch			Kg	*2,26*				
	Theoretical feeder cap/rev			Kg/rev	*0,09867*				
	Feeder rpm			rpm	*24,8*				
	Effective mass flowrate			kg/min	*1,83*				
	Pre-rinsing time			min	*2,6*				
	Dosing time			sec	*74,1*				
	Maturing time (incl transf)			min	60				
	Emptying time			min	0,69				
	Total time			min	63,1				
TECHNICAL DESCRIPTION	Mechanical Components	Skid Frame	Manufacturer | Model	- | -	VWTC	LATIS#			
			Material	-	SS304				
			Color	-	N/A				
			Dry Polymer Storage Type	-	Vacuum Conveyor & Hopper				
		Vacuum Conveyor	Manufacturer | Model	- | -	Tiger-Vac				
		-	Manufacturer | Model	- | -		Motor Head EC-12 (210951)			
		Dry Feeder	Manufacturer | Model	- | -	WAM	MBF 073 I:70 4-5-D-E//575V//NEMA			
			Motor's Manufacturer |Type	-	BALDOR	NEMA		2	
			Horsepower	HP	0.75	0.5			
		Eductor	Manufacturer | Model	- | -	SCHUTTE&KOERTING	1,5"- Fig264 PVC Eductor			
			Material		PVC				
		Maturation Mixer	Manufacturer | Model	- | -	ENVIREQUIP / NORD	HP500-EVG01-0.5			
			Motor's Manufacturer |Type	-	NORD				
			Horsepower	HP	0.5				
		Maturation Tank	Manufacturer | Model	- | -	VWTC				
			Material |Nominal Capacity	- | L	304L S.S.	508			
			Transfer Type		Stacked Maturation Tank				
		Storage Tank	Manufacturer | Model	- | -	VWTC				
			Material |Nominal Capacity	- | L	304L S.S.	508			
		Tanks Location / Feeder			Right (Standard)				
		Isolation Valve - Driving Water	Manufacturer | Model	-	CHEMLINE	21A010EC			
			Diameter | Quantity	-	1"	1			
		Solenoid Valve - Driving Valve	Manufacturer | Model	120VAC	ASCO	8210G004-120VAC			
			Diameter | Quantity	-	1"	1			
		Metering Valve- Wetting Cone	Manufacturer | Model	-	CHEMLINE	SM2A005ES			
			Diameter | Quantity	-	1/2"	1			
		Solenoid Valve - Feeder	Manufacturer | Model	120VAC	ASCO	8345G001-120VAC			
			Diameter | Quantity	-	1/4"	1			
		Actuated Transfer Valve	Manufacturer | Model	120VAC	CHEMLINE	57A020AEL-A/ER20.12			
			Diameter | Quantity	-	2"	1			
		Check Valve- Liquid Polymer	Manufacturer | Model	-	CHEMLINE	BTA015EC			
			Diameter | Quantity	-	11/2"	1			
		Isolation Valve- Tank Outlet	Manufacturer | Model	-	CHEMLINE	21A015EC			
			Diameter | Quantity	-	11/2"	1			
		Isolation Valves- Tanks Drains	Manufacturer | Model	-	CHEMLINE	21A015EC			
			Diameter | Quantity	-	1 1/2"	2			
		Static Mixer	Manufacturer | Model	-	KOFLO	1,5-40C-4-6-2			
			Diameter | Quantity	-	1.5"	1			
		Tuyauterie	VWTC Piping Class Code	-	A050C				
			Pipe Material	-	PVC sh80				
			Design Pressure	psig	80				2
			Design Temperature	°C	38				
			Operating Pressure	psig	65				
			Test Pressure	psig	120				2
			Test duration	min	60				
			Test Fluid	-	Eau				

1	VEOLIA					VWT CANADA #		PDS_0004_HYDP-500		
2						Project #		5000218036		
3						Date		2018-09-11		
4						HYDRA-POL				
5	CLIENT	REV	DESCRIPTION			DATE	By	Chkd	App.	
6		1	FOR APPROVAL			2018-09-11	G.H.	C.B.	G.P.	
7	CITY OF IQALUIT	2	FOR APPROVAL			2019-01-24	F.V.	C.B.	G.P.	
8		3								
9	PROJECT	4								
10	IQALUIT WATER TREATMENT PLANT	5								
11		6								
12		7								
13		TAG:	APPLICATION :							REV
89	TECHNICAL DESCRIPTION	ELECTRICITY, INSTRUMENTATION & CONTROLS	INSTRUMENTS	Hopper Low Level Switch	Manufacturer | Model	24 VDC	Endress&Hauser	FTE31-C6DB11-A		
90					Diameter | Quantity		MNPT 1-1/2	1		
91				Service Water Pressure Switch	Manufacturer | Model		Allen-Bradley	836T-T253J		
92					Diameter | Quantity		1/4" MNPT	1		
93				Service Water Pressure Gauge	Manufacturer | Model		Ashcroft 2.5"	25-1009SWL-02L-0/160PSIG + Glycerine		
94					Diameter | Quantity		N/A	1		
95				Tanks Level Transmitter	Manufacturer | Model	24 VDC	Endress&Hauser (Pressure)	PMC21-CA1V1ECVXJJ		
96					Diameter | Quantity		1/2" MNPT	2		
97				HYDRASTAT	Manufacturer | Model		Hach	D3725E2T		
				HYDRASTAT controller	Manufacturer | Model	120 VAC	Hach	LXV404.99.00552		
98			CONTROL PANEL	PLC	Manufacturer | Model		Allen-Bradley	CompactLogix L16 (1769L16ERBB1B)		
99				HMI	Manufacturer | Model		Allen-Bradley	PanelView Plus 7 400 (2711PT4W21D8S)		
100					HMI Screen Size		4"			
101				Panel Enclosure	Material | Enclosure Rating		Painted steel	NEMA-4		
102			ELECTRICITY	Power Supply	Voltage | Amps		575V/3Ph/60Hz	30 Amps		
103				Frame Grounding			By others			
104				Wiring	Pre wired (Yes/No)		Yes			
105					Cable Type		TECK 90-Armoured Cable			
106	UTILITIES	Service Water for Chemical Transport		Required Driving Water Flowrate		m^3/h	5.2			
107				Min. Pressure (in operation at Qmax)		psig	70			
108				Residual Chlorine Concentration		mg Cl_2/L	<0.5 mg Cl2/L			
109				Driving Water Temperature Range		Deg C	10 deg C <T<25 deg C			
110	CONNECTIONS	Driving Water Inlet			Diameter (NPS)	in	1"			
111					Type		Socket Union			
112		Storage Tank Outlet			Diameter (NPS)	in	1-1/2"			
113					Type		Socket Union			
114		Drain			Diameter (NPS)	in	1-1/2"			
115					Type		Socket Union			
116		Overflow			Diameter (NPS)	in	2"			
117					Type		By others			
118		Anchors			Qty		See General Arrangement DWG			
119					Supply		By others			
120	CODE, APPROVAL & TESTS	Piping Design Code					ASME B31.3 Non Certified			
121		Control Panel Approval					CSA/cUL			
122										
123	OVERALL DIMENSIONS AND WEIGTH	Weight (dry)				kg	See General Arrangement DWG			
124		Overall Length				mm				
125		Overall Width				mm				
126		Overall Heigth				mm				

Project name:	IQALUIT
Project#:	5000218036
Document #:	5000218036_DS_0004_PM_VWT
by:	GH
chkd:	GP
appvd:	CB

HYDRAPOL 500

SUPPLIER TECHNICAL DATASHEETS

OIM manual section: 4.3.4.2

This page is intentionally left blank

CS-300-2003 : Identification sheet

VWTC PROJECT NUMBER:	Iqaluit WWTP	REV:	01
PROJECT NAME:	5000218036	SUBMITTED TO (COMPANY):	
ENGINEER:	G. HÉBERT	SUBMITTED TO (RESPONSIBLE)	
PROJECT MANAGER:	C. BEKAERT	PROJECT NUM REFERENCE.:	
PHONE NUMBER:		LOT NUMBER:	

SUPPLIER	EQPT CODE	EQPT TAG NO	DIA	DESCRIPTION	INFO 1	INFO 2	INFO 3	APPLIC.	NOTE	REV
CHEMLINE	VABFPV352256	BV-04-943	50 mm (2")	HP-500 VALVE	TYPE: BUTTERFLY | 150 PSI//MANUFACTURER : CHEMLINE//MODEL : 57A020AEL-A / ER20.12//CONNECTION TYPE : WAFER | //BODY : PVC// SEAL | SEAT :EPDM | EPDM// STEM : 403 SS	ACTUATOR TYPE : ELECTRIC// MANUFACTURER : CHEMLINE// MODEL # :ER20.12// 115/220 VAC		HP-500		1

This page is intentionally left blank

PDF Published December 13, 2017

Type 57α/56/75 Wafer Elastomer Seated Butterfly Valves

CHEMLINE PLASTICS
SUPERIOR FLOW SOLUTIONS

Chemline elastomer seated butterfly valves have a successful history of over 40 years and have replaced metal valves in many difficult process applications. Type 57α body, disc and seat are designed to offer excellent flow characteristics and low closing torques. Stem torques are unaffected by excessive flange bolt torques. Valves up to 16" have corrosion resistant FRP gear operators. Top flange and shaft dimensions are to ISO 5211 standard for easy mounting of actuators. A large selection of body, disc and seat materials permit these valves into a wide range of on/off and throttling control applications in lines up to 24" size.

PVC PP PVDF PDCPD[1]

CRN Registered Consult Chemline

NSF[3] Certified to NSF/ANSI 61

BODY TYPE: Type 57α: 1-1/2" – 14"
Type 56: 16"
Type 75: 18" – 24"

MATERIALS: Body: PVC, PP, PVDF, PDCPD[1]
Disc: PP (standard), PVC, PVDF

SEAT & O-RINGS: EPDM, FKM (Viton®)[2]



Gear Operated
- 8" to 24"

Lever Operated
- 1-1/2" to 8"

features

Compact and Light Weight

High Corrosion Resistance
- Solid plastic body and disc
- Polypropylene hand levers up to 8"
- FRP gear operators up to 16"

Abrasion Resistant
- Solid plastic disc
- PVDF disc available for high abrasion resistance

Easy Actuator Mounting
- Valves up to 16" have standard ISO 5211 top flange and shaft dimensions

Easily Installed
- Full bolt hole circle makes installation and alignment easy

Better Sealing
- Spherical disc/seat seal design offers effective sealing at lower stem torques, and long life for the seat

Better Flow
- Streamlined disc offers higher C_V values

Protection against Flange Bolt Over Tightening
- Body gussets and new seat design prevent excessive flange bolt torques from affecting valve stem torques

CRN Registration numbers by province
- Ontario: OC11045.5
- Newfoundland: OC11045.50
- Saskatchewan/Manitoba/Quebec: OC11045.56
- New Brunswick: OC11045.57
- Nova Scotia: OC11045.58
- P.E.I.: OC11045.59
- British Columbia: not required
- Alberta: not required[4]

[1] PDCPD=Polydicyclopenthadiene.
[2] Other materials are available.
[3] Type 57α PVC valves are certified under NSF/ANSI Standard 61 for contact with drinking water.
[4] Not required for non-expandable fluids.

12/17 ©Chemline Plastics Limited 2017
Chemline is a registered trade mark of Chemline Plastics Limited

Type 57α Butterfly Valves 1-1/4" to 14"

engineered for superior performance

Polypropylene Hand Lever
- Lockable

Sturdy PPG Position Lock
- 19 stops for fine flow control
- Resists high torque loads

Deluxe FRP Gear Operator
- Yellow position indicator is NAMUR design for easy mounting of a limit switch box
- IP 67 enclosure resists short term immersion



Full Bolt Circle
- For easy installation

Gussets on Body
- Prevent excessive compression of seat

Moulded Elastomer Seat
- Easily replaceable
- Flange face has raised "o-ring" profile
  – *Low flange bolt torques to seal*

PP Bushing with Double O-Rings
- Proven superior shaft seal design

Special Sealing Design
- Seals and disc have spherical sealing surfaces
  – *Lower stem torques to seal*
  – *Longer seat life compared to conventional designs*



Streamlined Disc
- High C_V values
- Good flow characteristics, important for control applications

Shaft O-Ring
- For vacuum resistance

Stainless Steel Shaft
- Not wetted
- Engagement over full length of the disc

Type 57α Butterfly Valves 1-1/4" to 14"

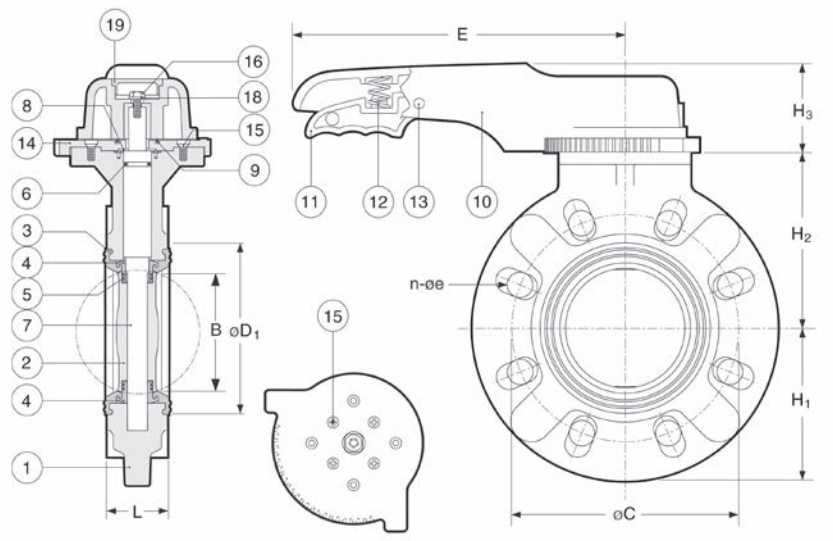

1-1/2" – 8" Lever Operated

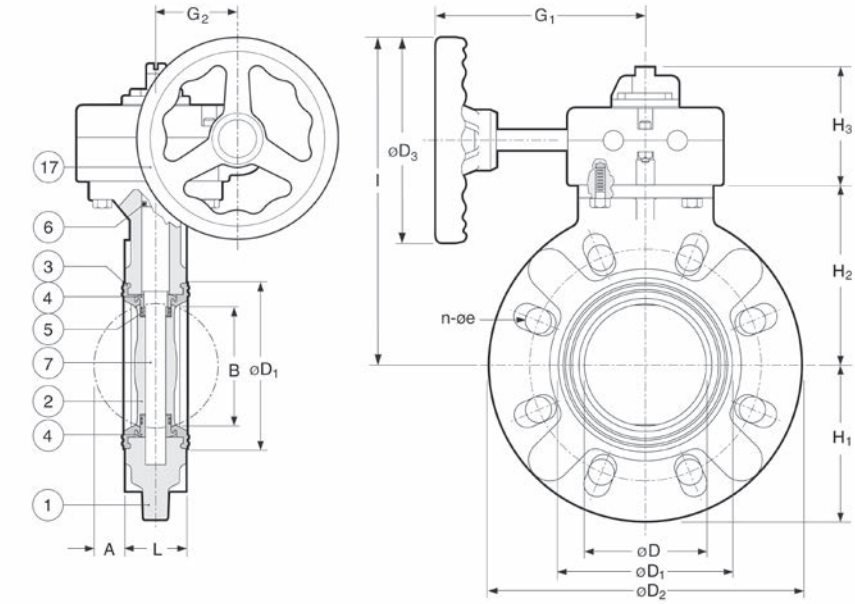

8" to 14" Gear Operated

PARTS

▲ Recommended Spare Parts

No.	Part	Pcs.	Materials
1	Body	1	PVC, PP PVDF, PDCPD[1]
2	Disc	1	PP, PVC, PVDF
3▲	Seat	1	EPDM, FKM (Viton®)
4	Seat Bushing	2	PP, PVC, PVDF
5▲	Bushing O-Ring	4	EPDM, FKM (Viton®)
6▲	Shaft O-Ring	1	EPDM, FKM (Viton®)
7	Shaft	1	403 SS
8	Shaft Retainer	1	PP
9▲	Plate O-Ring	1	EPDM, FKM (Viton®)
10	Hand Lever	1	PP
11	Trigger	1	PPG
12	Spring	1	304 SS
13	Pin	1	PPG
14	Position Lock Plate	1	PPG
15	Plate Screw	4	304 SS
16	Hand Lever Bolt	1	304 SS
17	Gear Operator	1	FRP housing, PP handwheel & 304 SS shaft
18	Handle Lever Washer	1	304 SS
19	Hand Lever Cap	1	PPG

[1] PDCPD=Polydicyclopenthadiene.

DIMENSIONS INCHES

Size	L	A	B*	C	n	e	D	D_1	D_2	D_3	E/G_1	G_2	H_1	H_2	H_3	I
1-1/2"	1.54	0.12	0.87	3.88	4	0.62	1.77	2.80	5.91	–	8.7	–	3.0	3.9	2.2	–
2"	1.65	0.28	1.46	4.75	4	0.75	2.20	3.19	6.50	–	8.7	–	3.3	4.3	2.2	–
2-1/2"	1.81	0.46	2.03	5.50	4	0.75	2.72	3.74	7.28	–	8.7	–	3.6	4.7	2.2	–
3"	1.81	0.61	2.43	6.00	4	0.75	3.03	4.13	8.31	–	9.8	–	4.2	5.3	2.2	–
4"	2.20	0.91	3.36	7.50	8	0.75	4.02	5.28	9.37	–	9.8	–	4.7	5.9	2.2	–
5"	2.60	1.24	4.36	8.50	8	0.88	5.08	6.65	10.35	–	12.6	–	5.2	6.6	2.7	–
6"	2.80	1.56	5.20	9.51	8	0.88	5.91	7.48	11.22	–	12.6	–	5.6	7.2	2.7	–
8" Lever	3.43	2.13	6.87	11.75	8	0.88	7.68	9.53	13.39	–	15.8	–	6.7	8.4	2.7	–
8" Gear	3.43	2.13	6.87	11.75	8	0.88	7.68	9.53	13.39	6.3	6.6	2.5	6.7	8.1	3.6	12.64
10"	4.41	2.72	8.80	14.25	12	1.00	9.84	11.89	16.57	6.3	6.6	2.5	8.3	9.5	3.6	14.02
12"	5.08	3.43	10.79	17.00	12	1.00	11.93	14.17	19.21	11.8	9.5	3.9	9.6	11.7	4.3	19.29
14"	5.08	4.37	12.85	18.75	12	1.12	13.82	15.47	21.22	11.8	9.5	3.9	10.6	12.8	4.3	20.35

* **B**=Minimum inside diameter (I.D.) of mating pipe. If I.D. of pipe is **B** dimension or less, the inside of pipe and must be chamfered or spacers provided. Consult Chemline.

Type 56/75 Series Butterfly Valves 16" to 24"

New PDCPD bodies have full thickness design

- Prevents excessive compression of seat if flange bolts are over torqued

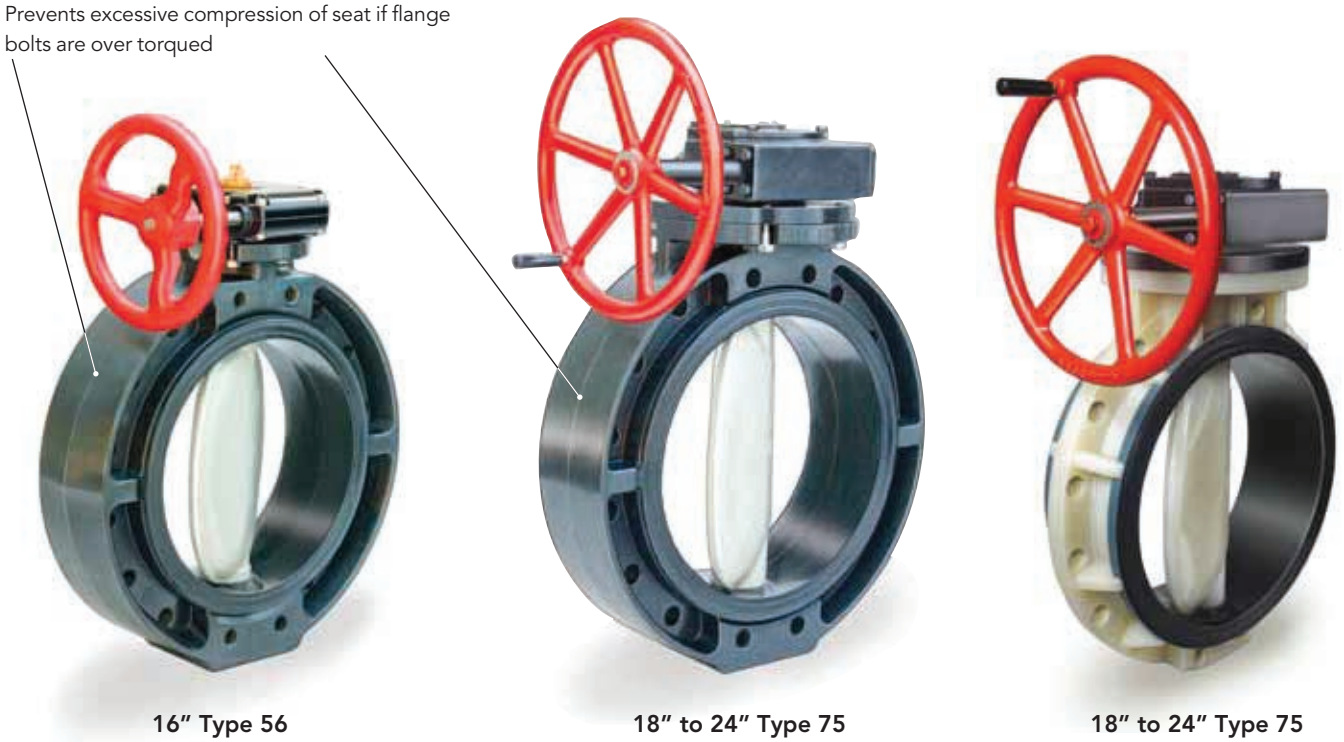

16" Type 56 with PDCPD body, PP disc

18" to 24" Type 75 with PDCPD body, PP disc

18" to 24" Type 75 with PVDF body, PVDF disc

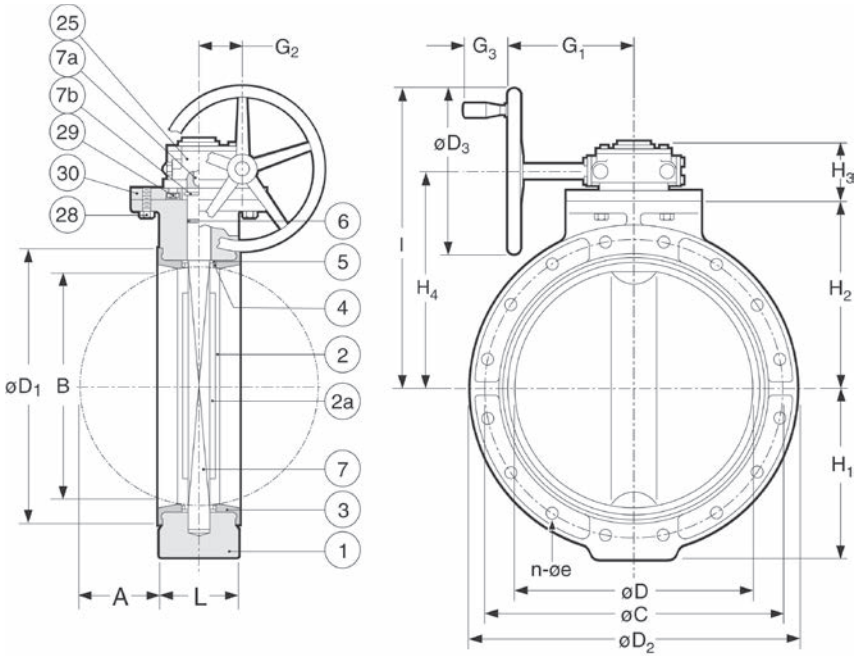

Drawing body detail is for PDCPD version. Detail for PP and PVDF body versions are slightly different. Consult Chemline.

PARTS

▲ Recommended Spare Parts

No.	Part	Pcs.	Materials
1	Body	1	PDCPD[1], PP, PVDF
2	Disc	1	PP, PVDF
2a	Disc Insert	1	Carbon Steel
3▲	Seat	1	EPDM, FKM (Viton®)
4▲	Large Disc O-Ring	2	EPDM, FKM (Viton®)
5▲	Small Disc O-Ring	2	EPDM, FKM (Viton®)
6▲	Shaft O-Ring	1	EPDM, FKM (Viton®)
7	Shaft	1	403 SS
7a	Shaft Key	1	Carbon Steel
7b	Snap Ring	1	304 SS
17	Gear Operator[2]	1	Cast Aluminum Epoxy Coated
28	Bolt	4	304 SS
29	Bolt	4	304 SS
30	Gear Operator Stand	1	400 SS

[1] PDCPD=Polydicyclopenthadiene.

[2] Gear Operator for 16" only is FRP with PP hand wheel and 304 SS shaft.

DIMENSIONS INCHES

Size	Type	L	A	B*	C	n	e	D	D_1	D_2	D_3	G_1	G_2	G_3	H_1	H_2	H_3	H_4	I
16"	56	6.65	4.67	14.53	21.25	16	1.12	15.98	18.50	24.41	11.81	10.7	3.9	–	12.4	13.8	4.3	15.35	21.3
18"	75	7.05	5.38	16.34	22.75	16	1.26	17.80	20.67	26.18	16.14	12.6	4.3	3.4	13.2	14.6	5.5	17.44	25.6
20"	75	7.48	6.15	18.29	25.00	20	1.26	19.76	22.64	28.35	16.14	12.6	4.3	3.4	14.4	15.8	5.5	18.62	26.8
24"	75	8.23	7.76	22.27	29.50	20	1.38	23.74	27.01	32.01	16.14	12.6	4.3	3.4	16.7	18.3	5.5	21.18	29.3

* **B**=Minimum inside diameter (I.D.) of mating pipe. If I.D. of pipe is **B** dimension or less, the inside of pipe and must be chamfered or spacers provided. Consult Chemline. **Note:** Type 75 was formerly referred to as TB Series.

Elastomer Seated Butterfly Valves

WORKING PRESSURES PSI

NET WEIGHTS LB.

Size	Valve Type	PVC Body/PP Disc			PP Body/PP Disc		PVDF Body/PVDF Disc/FKM(Viton®)				Body/Disc		
		0-50°C 32-122°F	60°C 140°F	83°C 181°F	–20-60°C –4-140°F	80°C 176°F	–20-60°C –4-140°F	79°C 175°F	100°C 212°F	121°C 250°F	PVC/ PP	PP/ PP	PVDF/ PVDF
1-1/2″	57α	150	70	30	150	105	150	105	90	75	2.9	2.4	3.1
2″	57α	150	70	30	150	105	150	105	90	75	3.3	2.6	3.7
2-1/2″	57α	150	70	30	150	105	150	105	90	75	3.7	3.1	4.2
3″	57α	150	70	30	150	105	150	105	90	75	4.2	3.5	4.9
4″	57α	150	45	30	150	105	150	105	90	75	5.5	4.4	6.4
5″	57α	150	45	30	150	105	150	105	90	75	10.8	8.8	12.6
6″	57α	150	45	30	150	105	150	105	90	75	12.8	10.1	15.2
8″ Lever	57α	150	40	20	150	90	150	90	75	60	20.5	16.3	24.3
8″ Gear	57α	150	40	20	150	90	150	90	75	60	23.6	19.6	27.6
10″	57α	150	40	20	150	90	150	90	75	60	32.4	26.9	41.0
12″	57α	112	30	15	112	60	112	60	45	30	61.7	52.9	76.1
14″	57α	112	30	7	112	60	112	60	45	30	66.6	58.0	81.1

WORKING PRESSURES PSI

NET WEIGHTS[1] LB.

Size	Valve Type	PDCPD Body/ PP Disc			PDCPD Body/ PVDF Disc/FKM(Viton®)				PP Body/ PP Disc		PVDF Body/ PVDF Disc/FKM(Viton®)				Body/Disc		
		0-50°C 32-122°F	60°C 140°F	83°C 181°F	0-30°C 32-86°F	60°C 140°F	80°C 176°F	100°C 212°F	–20-60°C –4-140°F	80°C 176°F	–20-60°C –4-140°F	79°C 175°F	100°C 212°F	121°C 250°F	PDCPD/ PP	PDCPD/ PVDF	PVDF/ PVDF
16″	56	110	90	15	110	90	45	30	90	45	90	45	30	15	79.4	103	101
18″	75	110	90	15	110	90	45	30	75	45	70	45	30	15	140.	221	227
20″	75	110	90	15	110	90	45	30	50	45	50	30	20	15	170.	252	273
24″	75	110	90	15	110	90	45	30	50	45	50	30	20	15	251.	309	346

Note: Type 75 was formerly referred to as TB Series.

[1] Weights are for valves excluding lugs.

Cv VALUES VS. DISC ANGLE

BOLT TORQUES

Size	15°	30°	45°	60°	75°	90°	Recommended Flange Bolt Torques Foot-Lbs.
1-1/2″	0	3.6	14.2	30.5	49.7	71.	15
2″	0	6.0	24.	51.6	84.	120.	17
2-1/2″	0	12.5	50.	108.	175.	250.	17
3″	0	15.0	60.	129.	210.	300.	22
4″	0	23.5	94.	202.	329.	470.	22
5″	0	41.5	166.	357.	581.	830.	30
6″	0	55.	220.	473.	770.	1,100.	30
8″	0	125.	500.	1,075.	1,750.	2,500.	41
10″	0	193.	772.	1,660.	2,702.	3,860.	41
12″	0	285.	1,140.	2,451.	3,990.	5,700.	44
14″	0	322.	1,288.	2,769.	4,508.	6,440.	44
16″	0	300.	2,277.	4929.	6,822.	8,340.	58
18″	0	392.	2,973.	6436.	8,908.	10,890.	58
20″	0	506.	3,838.	8309.	11,501.	14,060.	72
24″	0	666.	5,051.	10,934.	15,133.	18,500.	72

options + accessories



Shaft Extensions

- Different materials and lengths are available
- Several designs:
  - with no housing for indoors
  - with waterproofed PVC housing for indoors or outdoors
  - with stainless steel housing for buried services

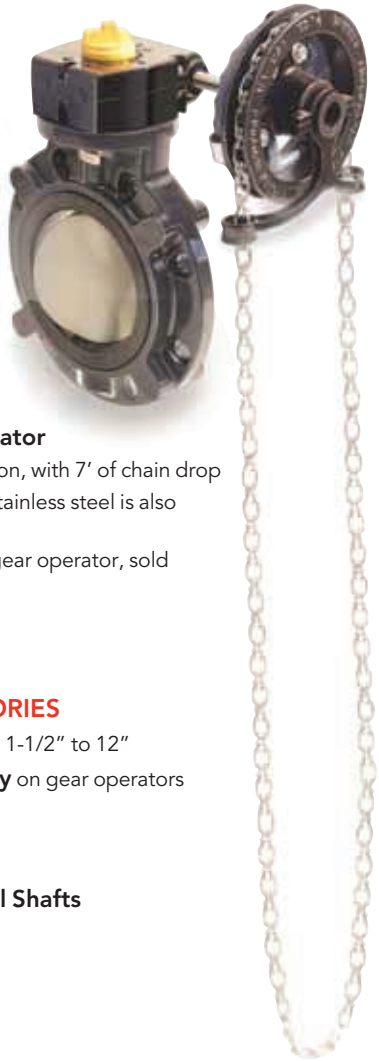

Chain Wheel Operator

- For overhead opeation, with 7' of chain drop
- Cast iron standard, stainless steel is also available
- Requires the use of gear operator, sold separately

OTHER ACCESSORIES

- **Gear Operator** on 1-1/2" to 12"
- **Locking Capability** on gear operators

OPTIONS

- **Different Seats**
- **Different Material Shafts**



Optional Lock-out Handle & Hasp

- To prevent unauthorized operation of the valve during maintenance shut-downs
- Padlocks go through holes in hasp

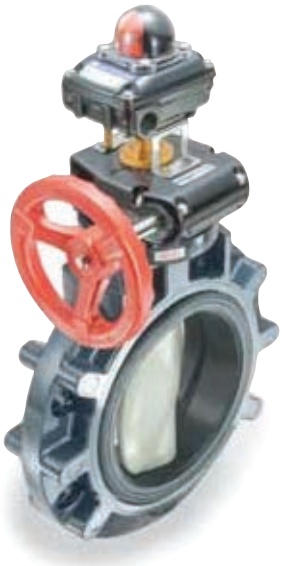

Limit Switches

- Available for lever and gear operated valves
- Electrical feedback of manual valve position
- NEMA 4X enclosure, position indicator beacon, 2x SPDT switches, stainless steel hardware



Municipal Operating Nut

- For buried service

Elastomer Seated Butterfly Valves

electric + pneumatic actuation

Pneumatic and Electric Actuators

- A complete range of actuators and control accessories are available, mounted to valves using PPG plastic brackets and 304 stainless steel couplings. Refer to separate data sheets.
- All actuators are CSA approved, have NEMA 4S enclosures, stainless steel hardware and permanently lubricated gear train



A Series Electric

- butterfly valves up to 6"
- up to 2000 in-lbs torque
- On-Off (3 wire) adjustable travel, optional On-Off (2 wire), failsafe multi-turn, 3 position modulating, BUS
- Visual feedback, optional 2 feedback switches, feedback potentiometer and feedback transmitter



Q Series Electric

- butterfly valves up to 3"
- 300 in-lbs torque
- On-Off (3 wire) adjustable travel, optional On-Off (2 wire), failsafe 3-position, modulating
- Visual feedback, optional 2 feedback switches, feedback potentiometer and feedback transmitter



V Series Electric

- butterfly valves up to 20"
- up to 8850 in-lbs torque
- On-Off (2/3 wire) adjustable travel, optional failsafe, modulating, BUS
- Visual feedback, 2 feedback switches, optional 2 extra feedback switches, feedback potentiometer and feedback transmitter



Pneumatic Actuators

PA Series

- butterfly valves up to 24"
- up to 40,660 in-lbs torque
- industrial process, submerged
- bleach/water washdown
- Rilsan-coated aluminum

PP Series

- butterfly valves up to 6"
- up to 1,335 in-lbs torque
- industrial process with minimal use of metal
- Glass-filled Polyamide

P3 Series

- butterfly valves up to 10"
- up to 8,850 in-lbs torque
- corrosive, submerged and off-shore applications
- 316 stainless steel

ORDERING EXAMPLE

| Chemline Butterfly Valves | | |

This page is intentionally left blank

PDF Published January 10, 2018

E Series Electric Actuators

CHEMLINE PLASTICS
SUPERIOR FLOW SOLUTIONS

The Chemline E Series Electric Actuator is a reversible rotary unit with output torques up to 880 in.-lb. These units are ideal for all Chemline ball and butterfly valves up to 4". The E Series is compact, light weight and has a plastic housing. A large black handle provides manual override and position indicator.

Chemline also offers complete actuated ball, butterfly and diaphragm valves, assembled and bench tested. Actuation service is also available for all quarter-turn metal valves.

for Chemline ball & butterfly valves up to 4"

SERIES: ER10 – 90 in.lb.
ER20 – 180 in.lb.
ER35 – 310 in.lb.
ER60 – 530 in.lb.
ER100 – 880 in.lb.

VOLTAGES: 115/220 VAC, 12/24 VDC, 24 VAC

ENCLOSURE: Polyamide 6.6
NEMA 4X



E Series on SM2 Series True Union Ball Valve

features

Multiple Operation/Control Options
- 2 & 3-wire (standard)
- Adjustable Travel (standard)
- Manual Override (standard)
- Bus communication (optional)
- Digital Positioner (optional)
- Failsafe (optional)
- Cold Weather Heater/Thermostat (standard)

Multiple Feedback Options
- Visual (standard)
- Feedback Switches (standard)
- Extra Feedback Switches (optional)
- Feedback Potentiometer (optional)
- Feedback Transmitter (optional)

Special Inspection Labelled by CSA
(Canadian Standards Association)

NEMA 4X Enclosure
- Waterproof, corrosion proof with high impact Polyamide 6.6 housing and stainless steel fasteners

No Maintenance
- Permanently lubricated gear train
- Designed for 250,000 + cycles

Thermal Overload Protection
- Thermal switch embedded onto control board

Extended Operating Temperature Range
- –10 to 60C (15 to 140°F) (standard)

Standard Mounting Dimensions
- ISO-5211 mounting bolt circle and drive

technical

Operating Voltage
- 115/220 VAC (standard)
- 12/24 VDC or 12 VAC (optional)

Electrical Conduit Entry
- 2 x 1/2" NPT

Motor Direction
- Reversing

Motor Cycle Time
- Fixed (standard)

01/18 ©Chemline Plastics Limited 2018
Chemline is a registered trade mark of Chemline Plastics Limited

DIMENSIONS INCHES

Port View

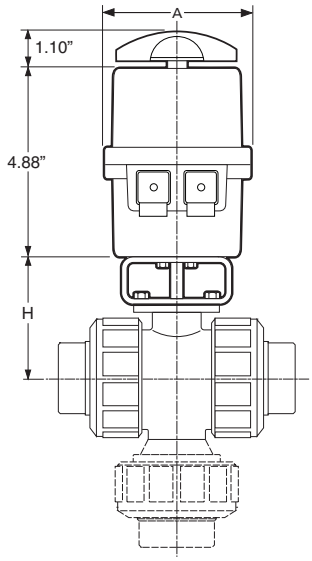

Type 21 True Union and
Type 23 Multi Port Ball Valves

Port View

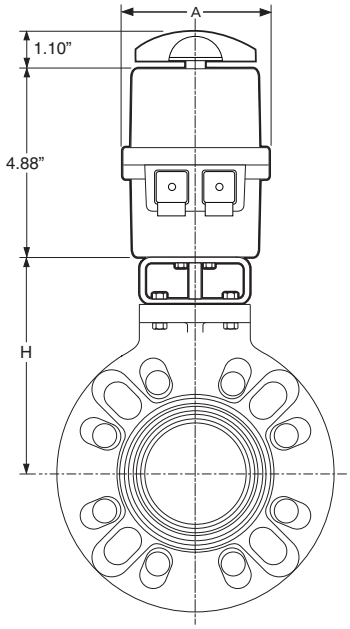

Type 57 Butterfly Valves

Side View / Port View

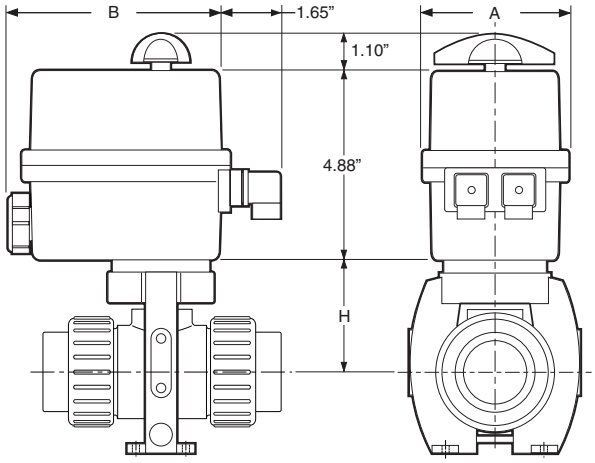

SM Metering and SP Proportional
True Union Ball Valves

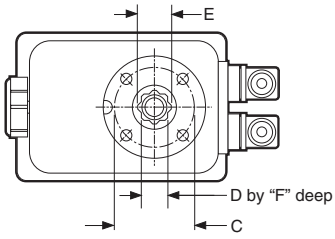

Bottom View

DIMENSION INCHES

Model	A	B	C/Thread	D	E Inches (ISO)	F
ER10	3.62	5.35	1.42 (F03) M5	0.55	0.551" 14mm	0.640
ER20	3.62	5.35	1.65 (F04) M5	0.55	0.551" 14mm	0.640
ER35	5.04	5.94	1.97 (F05) M6	0.87	0.551" 14mm	0.945
ER60	5.04	5.94	1.97 (F05) M6	0.87	0.866" 22mm	0.945
ER100	5.04	5.94	2.76 (F07) M8	0.87	0.866" 22mm	0.945

DIMENSION "H" INCHES

Valve Size	Valve Type				
	Type 21 Ball	Type 23 Multiport Ball	SM Metering/SP Proportional Ball	Type 57 Butterfly	ChemValve Butterfly
1/2"	2.76	2.76	1.97	–	–
3/4"	3.01	3.01	2.36	–	–
1"	3.29	3.29	2.60	–	–
1-1/4"	3.64	3.98	2.91	–	–
1-1/2"	3.98	3.98	3.76	5.65	–
2"	4.43	4.43	4.90	5.95	6.89
2-1/2"	5.12	5.47	–	6.35	7.52
3"	5.47	5.47	–	6.65	8.27
4"	–	–	–	7.35	9.05

Valves not to scale. For valve dimensions and parts refer to separate valve data sheets.

E Series Electric Actuators

SPECIFICATIONS

Model	Running Torques (in.-lbs.)	Nm	115 VAC / 220 VAC (x=12) Power Draw (Watts)[1]	Duty Cycle	12 to 24 VDC & 24 VAC (x=346) Power Draw (Watts)[1]	Duty Cycle	Cycle Time/90° (sec.)	Weight (lbs.)
ER10	90	10	15W	80%	15W	80%	11	3.0
ER20	180	20	15W	80%	15W	80%	12	3.0
ER35	310	35	15W	80%	15W	80%	7	6.2
ER60	530	60	45W	80%	45W	80%	12	6.9
ER100	880	100	45W	80%	45W	80%	23	6.9

[1] Power draw values are for actuators with locked rotors.

AC WIRING 115 VAC/220 VAC

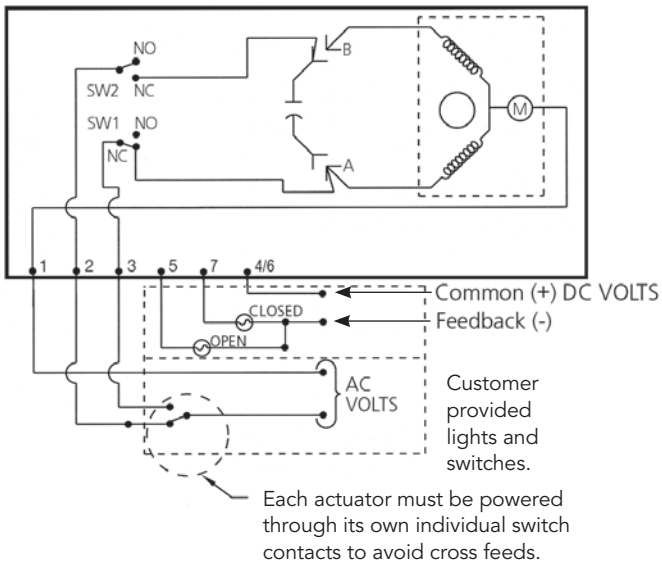

VALVE OPERATION

Neutral – To Terminal 1
To Open – Power to Terminal 2
To Close – Power to Terminal 3

NOTES:

1. Actuator shown in counter clockwise extreme of travel, or 'open' position.
2. Motor has a thermal protector as shown by (M) in the diagram.

OPERATION/CONTROL OPTIONS

- **Bus Communication** – Proprietary bus communication/operation capability
- **Digital Positioner** – Onboard digital position controller accepts 4 to 20 mA, 0 to 20 mA, 0 to 10 VDC or other inputs. These units are easier to calibrate, have faster response and provide more precise proportional control.
- **Failsafe Capability** – Onboard backup battery pack powers actuator in case of power failure

FEEDBACK OPTIONS

- **Extra Feedback Switches** – For extra end-of-travel position feedback
- **Feedback Potentiometer** – To feedback the precise valve position to a remote location, or to allow "jogging" control
- **Feedback Transmitter** – A circuit board coupled with a feedback potentiometer provides 4 to 20 mA output used by other equipment (PLC, data logger, etc.)

55 Guardsman Road, Thornhill, ON, L3T 6L2, Canada | ISO 9001:2008 Certified
1.800.930.2436 (CHEM) | fax.905.889.8553 | request@chemline.com | chemline.com

This page is intentionally left blank

CS-301-100 : Identification sheet

VWTC PROJECT NUMBER:	Iqaluit WWTP	REV:	01
PROJECT NAME:	5000218036	SUBMITTED TO (COMPANY):	
ENGINEER:	G. HÉBERT	SUBMITTED TO (RESPONSIBLE)	
PROJECT MANAGER:	C. BEKAERT	PROJECT NUM REFERENCE.:	
PHONE NUMBER:		LOT NUMBER:	

SUPPLIER	EQPT CODE	EQPT TAG NO	DIA	DESCRIPTION	INFO 1	INFO 2	INFO 3	APPLIC.	NOTE	REV
CHEMLINE	VABLPV200251	BV-04-910	DIA: 25 mm (1")	HP-500 VALVE	TYPE: BALL VALVE//MANUFACTURER : CHEMLINE//MODEL : Type21-A-010-E-C//CONNECTION TYPE : COMBO | 25 mm (1")//BODY : PVC (ASTM D1784)// SEAL | SEAT :PTFE | EPDM// STEM : PVC			HP-500		1
CHEMLINE	VABLPV200253	BV-04-944	DIA: 38 mm (1-1/2")	HP-500 VALVE	TYPE: BALL VALVE//MANUFACTURER : CHEMLINE//MODEL : Type21-A-015-E-C//CONNECTION TYPE : COMBO | 38 mm (1-1/2")//BODY : PVC (ASTM D1784)// SEAL | SEAT :PTFE | EPDM// STEM : PVC			HP-500		1
CHEMLINE	VABLPV200253	BV-04-947	DIA: 38 mm (1-1/2")	HP-500 VALVE	TYPE: BALL VALVE//MANUFACTURER : CHEMLINE//MODEL : Type21-A-015-E-C//CONNECTION TYPE : COMBO | 38 mm (1-1/2")//BODY : PVC (ASTM D1784)// SEAL | SEAT :PTFE | EPDM// STEM : PVC			HP-500		1

SUPPLIER	EQPT CODE	EQPT TAG NO	DIA	DESCRIPTION	INFO 1	INFO 2	INFO 3	APPLIC.	NOTE	REV
CHEMLINE	VABLPV200253	BV-04-950	DIA: 38 mm (1-1/2")	HP-500 VALVE	TYPE: BALL VALVE//MANUFACTURER : CHEMLINE//MODEL : Type21-A-015-E-C//CONNECTION TYPE : COMBO | 38 mm (1-1/2")//BODY : PVC (ASTM D1784)// SEAL | SEAT :PTFE | EPDM// STEM : PVC			HP-500		1

PDF Published March 1, 2013

Type 21 Ball Valves

CHEMLINE PLASTICS
SUPERIOR FLOW SOLUTIONS

The Chemline Type 21 True Union Ball valve incorporates state of the art features for long term performance. This is a full port, full blocking True Union valve pressure rated at 16 bar (230 psi)[4]. Double stem o-rings and Safety Shear stem design provide for a high degree of safety on hazardous fluid applications. All sizes have an ISO standard actuator mounting platform integral to the valve body. This provides for sturdy and secure mounting of pneumatic or electric actuators.

PVC | CPVC | PP | PVDF

CRN Registered Consult Chemline

NSF[5] Certified to NSF/ANSI 61

SERIES: Type 21

SIZES: 3/8" – 4"

ENDS: Socket, Threaded, Flanged, Butt[1] or ChemFlare™

SEATS: PTFE

SEALS[2]: EPDM, FKM (Viton®), CPE[3]



features

Pressure rated to 230 psi[4]
- Provides a high factor of safety

Integral Actuator Mounting Platform
- Actuation is easy. Electric or pneumatic actuators may be mounted in the field.

Full Port
- High capacity and low pressure drops

Fully Blocking
- Downstream union nut may be safely disassembled for piping maintenance while valve is closed off under full system pressure

Built-In Spanner Wrench
- Top of the handle is designed to be used as a tool for accessing internal parts

Safety Shear Stem Design
- Stem has double o-rings
- Designed to hold full pressure even if stem breaks due to excessive torque

High Chemical Resistant Material
- PVC and CPVC compounds have an "A" chemical resistance rating as per ASTM D-1784. They have outperformed other PVC and CPVC compounds on aggressive chemicals.

[1] Butt ends for fusion to Chemline metric PP, PVDF or ECTFE (Halar®) piping.
[2] Other materials are available.
[3] CPE=Chlorinated Polyethylene.
[4] PVC, CPVC and PVDF 1/2" to 2" are rated at 230 psi; 2-1/2" to 4" and all size PP valves are rated at 150 psi at 20°C.
[5] PVC valves with EPDM or FKM (Viton®) seals are certified under NSF/ANSI Standard 61 for contact with drinking water.

03/13 ©Chemline Plastics Limited 2013
Chemline is a registered trade mark of Chemline Plastics Limited

Type 21 Ball Valves

features

Double Stem O-Rings – Safety Shear Design

- Upper o-ring groove is deeper than lower. In case of excessive stem torque, stem will shear at the upper groove, leaving the inner o-ring intact to seal against full line pressure.

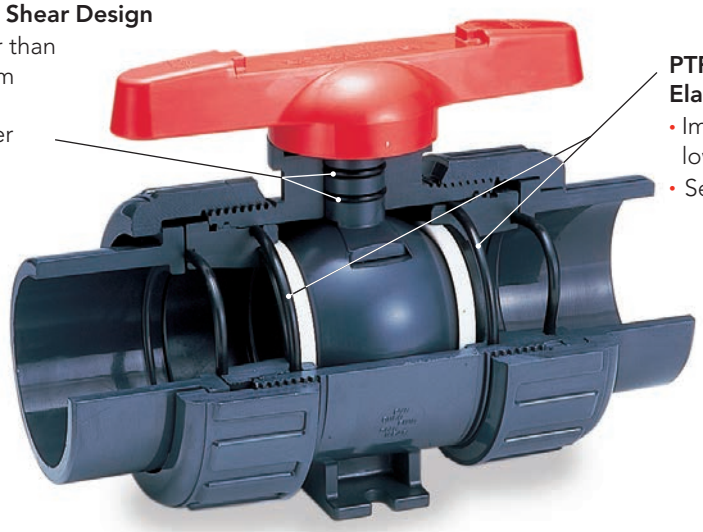

PTFE Seats have Elastomer Cushions

- Improved sealing while lowering stem torques
- Self adjusts for seat wear

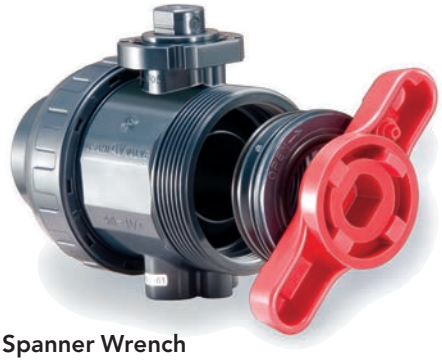

Built in Spanner Wrench

- For removing or tightening the seat carrier
- All parts are replaceable



Integral Actuator Mounting Platform

- Actuation is easy. Electric or pneumatic actuators may be mounted in the field. Simply pull off the handle to reveal a standard ISO 5211 mounting platform which accepts bolt-on hardware.



Fully Blocking

- Downstream pipe may be removed while upstream side is still pressurized. This may be done with valve installed in either direction.



Base Mounting Pad

- Optional threaded inserts allow valves to be securely anchored
- Supplied standard with actuated valves

options + accessories



ChemFlare™ Ends

- For connection to PFA tube. Leak-free connections for difficult services such as sodium hypochlorite

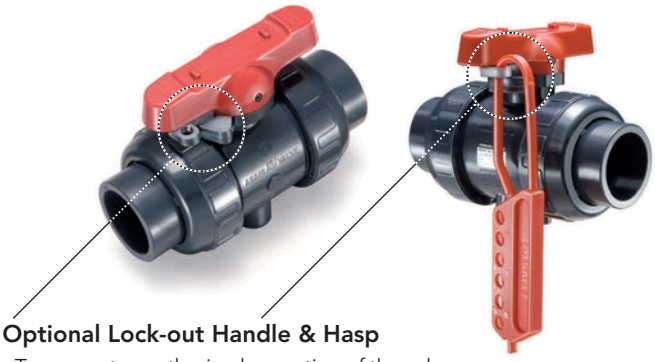

Optional Lock-out Handle & Hasp

- To prevent unauthorized operation of the valve
- Used during maintenance shut-downs



One-piece moulded PVC and CPVC 6" socket ends

- Allows installation of 4" valve in 6" line
- Factory moulded, not fabricated with couplings and reducers cemented together
- Fixed to valve mechanically just like the one-piece moulded factory flanges



Different Colour Handles

- Choose a handle colour other than standard red for colour coding different services

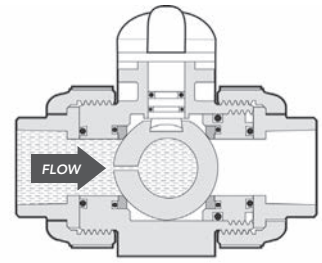

Vented Ball

- For sodium hypochlorite services at any concentration
- Valve shown in closed position

electric + pneumatic actuation

Pneumatic and Electric Actuators

- A complete range of actuators and control accessories are available, mounted to valves using PPG plastic brackets and stainless steel couplings. Refer to separate data sheets.



Electromni® Electric



Q Series Electric



A Series Electric



V Series Electric
with Local Control Station



PA Series Pneumatic

Type 21 Ball Valves

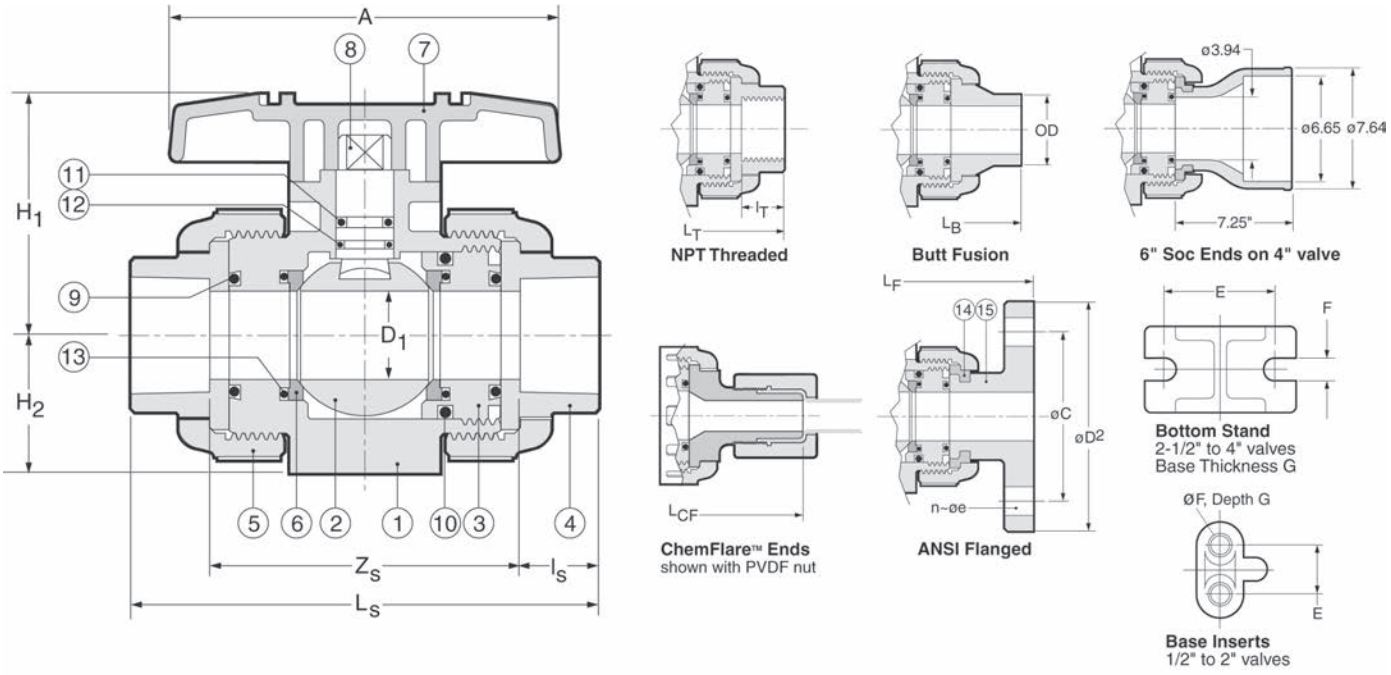

PARTS

▲ Recommended Spare Parts

No.	Part	Pcs.	Materials
1	Body	1	PVC, CPVC, PP, PVDF
2	Ball	1	PVC, CPVC, PP, PVDF
3	Carrier[1]	1/2	PVC, CPVC, PP, PVDF
4	End Connector	2	PVC, CPVC, PP, PVDF
5	Union Nut	2	PVC, CPVC, PP, PVDF
6▲	Ball Seat	2	PTFE
7	Handle	1	ABS

[1] 1 carrier for sizes 1/2" to 2", 2 carriers for sizes 2-1/2" to 4"
[2] EPDM seals standard with PVC, CPVC, PP; FKM (Viton®) with PVDF valves
[3] 2 pcs 1/2" to 2", 6 pcs 2-1/2" to 4"

PARTS

▲ Recommended Spare Parts

No.	Part	Pcs.	Materials
8	Stem	1	PVC, CPVC, PP, PVDF
9▲	Face O-Ring[2]	2	EPDM, FKM (Viton®)
10▲	Carrier O-Ring[2]	2	EPDM, FKM (Viton®)
11▲	Upper Thicker Stem O-Ring[2]	1	EPDM, FKM (Viton®)
12▲	Lower Thinner Stem O-Ring[2]	1	EPDM, FKM (Viton®)
13	Seat Cushion[2]	2	EPDM, FKM (Viton®)
14	Flange Retainer[3]	2/6	PVDF
15	Flange	2	PVC, CPVC, PP, PVDF

DIMENSIONS INCHES

					End Connections																	
	D				Socket			Threaded		Factory Flanged					Butt		ChemFlare™		Valve Base		
Size	Bore	A	H_1	H_2	L_S	Z_S	l_S	l_T	L_T	L_F	D_2	C	n	e	L_B	OD	L_{CF}	Tube[4]	E	F[5]	G
1/2"	.59	3.6	2.03	1.14	4.45	2.70	.875	.64	4.02	5.63	3.50	2.38	4	.62	4.88	.79	6.12	1/2"	.75	.29	.43
3/4"	.79	3.9	2.34	1.38	5.08	3.08	1.00	.65	4.72	6.77	3.88	2.75	4	.62	5.67	.98	6.52	3/4"	.75	.29	.43
1"	.98	4.3	2.68	1.54	5.75	3.50	1.13	.81	5.16	7.36	4.25	3.12	4	.62	6.06	1.26	7.26	1"	.75	.29	.43
1-1/4"	1.22	4.8	3.17	1.85	6.46	5.21	1.25	.85	5.91	7.48	4.62	3.50	4	.62	6.85	1.57	9.58	1-1/4"	1.18	.35	.59
1-1/2"	1.57	5.2	3.50	2.17	7.24	4.49	1.38	.85	6.42	8.35	5.00	3.88	4	.62	7.64	1.97	–	–	1.18	.35	.59
2"	2.01	6.3	4.02	2.60	8.23	5.23	1.50	1.90	7.76	9.21	6.00	4.75	4	.75	8.82	2.48	–	–	1.18	.35	.59
2-1/2"	2.28	7.87	4.96	2.83	9.45	5.95	1.75	1.21	8.46	10.20	7.00	5.49	4	.75	9.72	2.95	–	–	1.89	.35	.23
3"	2.70	9.45	5.51	3.35	11.10	7.35	1.88	1.30	10.39	11.97	7.50	6.00	4	.75	11.61	3.54	–	–	2.17	.43	.28
4"	3.54	11.81	7.01	4.33	13.88	9.87	2.00	1.38	14.17	14.65	9.00	7.50	8	.75	14.76	4.33	–	–	2.56	.43	.32

[4] ChemFlare™ ends are available for reduced tube sizes down to 1/4".
[5] Optional threaded inserts: 1/2" to 1" valves – UNC 1/4"-20; 1-1/4" to 2" valves – UNC 5/16"-18. 'Recoil' brand inserts require drilling before insertion.

Type 21 Ball Valves

WORKING PRESSURES PSI, Water, Non-Shock

VACUUM RATING • 29.9 inches mercury

Size	PVC			CPVC						PP			PVDF				
	20°C 68°F	40°C 104°F	50°C 122°F	20°C 68°F	40°C 104°F	50°C 122°F	60°C 140°F	80°C 176°F	90°C 194°F	20°C 68°F	60°C 140°F	80°C 176°F	20°C 68°F	40°C 104°F	60°C 140°F	80°C 176°F	100°C 212°F
1/2"– 2"	230	165	150	230	165	150	120	75	55	150	85	55	230	185	150	110	85
2-1/2"– 4"	150	150	150	150	150	150	120	75	55	150	70	40	150	150	150	110	85

Temperature Ranges: PVC 0 to 60°C (32 to 140°F), **CPVC** 0 to 95°C (32 to 203°F), **PP** –20 to 80°C (–4 to 176°F), **PVDF** –40 to 100°C (–40 to 212°F)

WEIGHTS LB. THREADED or SOCKET

WEIGHTS LB. FLANGED

Size	PVC	CPVC	PP	PVDF	PVC	CPVC	PP	PVDF
1/2"	0.4	0.4	0.4	0.4	0.9	0.9	0.7	1.1
3/4"	0.7	0.7	0.7	0.9	1.3	1.5	1.1	1.5
1"	0.9	1.1	0.9	1.1	1.8	2.0	1.5	2.2
1-1/4"	1.5	1.5	1.3	1.8	2.6	2.9	2.0	3.3
1-1/2"	2.4	2.6	1.5	2.9	3.7	4.0	2.6	4.4
2"	4.0	4.4	2.6	4.9	5.5	6.0	4.0	8.2
2-1/2"	5.1	5.5	3.7	6.2	7.3	7.7	5.3	8.8
3"	8.2	8.8	5.5	9.9	10.1	11.0	7.5	12.6
4"	19.4	21.8	13.2	24.9	21.6	23.4	15.4	26.7

Cv VALUES VS. BALL ANGLE

Size	0%	25%	50%	75%	100%
1/2"	0	0.35	1.3	5.5	14.
3/4"	0	0.73	2.8	11.5	29.
1"	0	1.2	4.5	18.6	47.
1-1/4"	0	1.8	6.8	28.4	72.
1-1/2"	0	3.9	14.7	61.2	155.
2"	0	4.8	18.0	75.0	190.
2-1/2"	0	9.1	34.7	144.0	365.
3"	0	10.2	39.0	162.0	410.
4"	0	17.0	64.6	269.0	680.

SAMPLE SPECIFICATION

1. All True Union Ball Valves in PVC, CPVC, PP or PVDF shall be Chemline Type 21 or equal sizes 1/2" to 2" in PVC, CPVC, and PVDF rated at 230 psi and in PP 150 psi maximum working pressure. Sizes 2-1/2", 3" and 4" rated at 150 psi maximum working pressure with EPDM, FKM (Viton®) or CPE seals. Ball seats shall be PTFE with elastomer cushions for closure with minimum stem torques.
2. All valves will have Safety Shear stem design, blowout-proof with double o-rings for safety. The top o-ring groove shall be deeper so that if the stem breaks off under excessive torque the lower o-ring will remain intact and the valve will hold pressure.
3. All valves shall be full port and two-way blocking design.
4. All valves will be CRN (Canadian Registration Number) registered with TSSA.
5. PVC valves with EPDM or FKM (Viton®) seals shall be certified under NSF/ANSI Standard 61 for contact with drinking water.
6. All valves shall have chemical resistant labels permanently marked with manufacturing number to provide production level traceability.
7. PVC compound shall have an ASTM cell classification 12454-A with a minimum suffix "A" designation for chemical resistance as per ASTM D-1784 (CSA report LO 4000-172).
8. CPVC compound shall have an ASTM cell classification 23567-A with a minimum suffix "A" designation for chemical resistance as per ASTM D-1784.
9. PP material will conform to ASTM D-4101 PP 021 B 67272 material requirements.
10. PVDF material shall be unpigmented conforming to ASTM D-3222 material requirements and to be USDA Title 21 Chapter 1 Part 177. 2510 requirements for contact with food.
11. Socket ends in PVC and CPVC shall be Schedule 80 and conform to ASTM D-2467.
12. Threaded ends shall be Schedule 80 and conform to ASTM D-2464.
13. Butt fusion ends in PP or PVDF will be compatible with Chemline PP or PVDF metric piping systems.
14. Flanged ends shall be ANSI Class 150 one-piece factory moulded (not fabricated) to ensure maximum strength and close tolerance end to end dimensions.

ORDERING EXAMPLE

Chemline True Union Ball Valves	21	A	020	E	S
Body Material	**A** – PVC **B** – PP	**C** – CPVC **K** – PVDF			
Size[1]	**002** – 1/4" **010** – 1" **025** – 2-1/2"	**003** – 3/8" **012** – 1-1/4" **030** – 3"	**005** – 1/2" **015** – 1-1/2" **040** – 4"	**007** – 3/4" **020** – 2" **060** – 6"	
Seals	**E** – EPDM	**V** – FKM (Viton®)	**C** – CPE	**B** – Nitrile	**A** – Aflas®
Ends	**S** – Socket	**T** – Threaded	**F** – Flanged	**B** – Butt[2]	**CF** – ChemFlare™

Example: Chemline Type 21 True Union Ball Valve, PVC, 2", with EPDM seals, socket ends.

[1] 1/4" is normally the 3/8" valve reduced. 6" is 4" valve with 6" end connections.

[2] PP, PVDF and ECTFE (Halar®) metric butt fusion ends (1/2" to 4") connect to Chemline PP, PVDF and ECTFE (Halar®) piping systems.

OTHER OPTIONS & ACCESSORIES

- **Alternate O-Ring Seals**
- **Stem Extensions** made to any length
- **Limit Switches** – For open and/or closed position indication
- **Municipal Operating Nut**
- **Lubrication-free Valves** – Factory clean room assembled
- **Vented Ball** – For sodium hypochlorite applications

CHEMLINE PLASTICS
SUPERIOR FLOW SOLUTIONS

55 Guardsman Road, Thornhill, ON, L3T 6L2, Canada | ISO 9001:2008 Certified
tel.905.889.7890 | fax.905.889.8553 | request@chemline.com | chemline.com

This page is intentionally left blank

CS-301-501 : Identification sheet

VWTC PROJECT NUMBER:	Iqaluit WWTP	REV:	01
PROJECT NAME:	5000218036	SUBMITTED TO (COMPANY):	
ENGINEER:	G. HÉBERT	SUBMITTED TO (RESPONSIBLE)	
PROJECT MANAGER:	C. BEKAERT	PROJECT NUM REFERENCE.:	
PHONE NUMBER:		LOT NUMBER:	

SUPPLIER	EQPT CODE	EQPT TAG NO	DIA	DESCRIPTION	INFO 1	INFO 2	INFO 3	APPLIC.	NOTE	REV
CHEMLINE	VABLPV346917	BV-04-916	DIA: 13 mm (1/2")	HP-500 VALVE	TYPE: BALL VALVE//MANUFACTURER : CHEMLINE//MODEL : SM2-A-005-E-S//CONNECTION TYPE : SOCKET | 13 mm (1/2")//BODY : PVC (ASTM D1784)// SEAL | SEAT : | EPDM// STEM : N/A			HP-500		1
CHEMLINE	VABLPV346917	BV-04-917	DIA: 13 mm (1/2")	HP-500 VALVE	TYPE: BALL VALVE//MANUFACTURER : CHEMLINE//MODEL : SM2-A-005-E-S//CONNECTION TYPE : SOCKET | 13 mm (1/2")//BODY : PVC (ASTM D1784)// SEAL | SEAT : | EPDM// STEM : N/A			HP-500		1

This page is intentionally left blank

PDF Published October 18, 2017

Metering Ball Valves

CHEMLINE PLASTICS
SUPERIOR FLOW SOLUTIONS

Chemline SM Series Metering Ball Valve is designed for fine linear flow control of chemicals or clean fluids. The ball is solid with graduated V-groove cut on the outside surface. Precise linear flow control is accomplished through 180° rotation of the handle. With a positioning electric actuator, this becomes an inexpensive control valve. If higher C_V values are required, refer to SP Series Proportional ball valves.

PVC PP

SERIES: SM2
SIZES: 1/2" – 1"
ENDS: Threaded, Socket, Butt[1] or ChemFlare™ [2]
SEATS: PTFE
O-RINGS: EPDM, FPM (Viton®)





Integral 180° Scale with 5° Increments
- Linear flow control and settable flow rates

features

Precise Linear Flow Control
- Provided by a special V-groove ball and wide handle travel (0° to 180°)

Full Size Range
- 6 valves sizes 1/2" to 2" offers a large selection of C_V values

High End Ball Valve Features
- Full Blocking design
- Double Stem O-Rings for safety
- PTFE seats with elastomer cushion
  – Automatically compensates for seat wear or expansion
- 230 psi pressure rated (PVC)

Low Stem Torques
- Due to floating ball design and cushioned PTFE seats

Bidirectional
- Works with flow in either direction

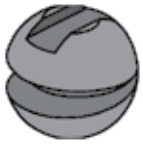

Ball Detail



[1]Butt ends for fusion to Chemline metric PP piping.
[2]For ChemFlare™ end connectors, consult Chemline.

10/17 ©Chemline Plastics Limited 2017
Chemline is a registered trade mark of Chemline Plastics Limited

Metering Ball Valves

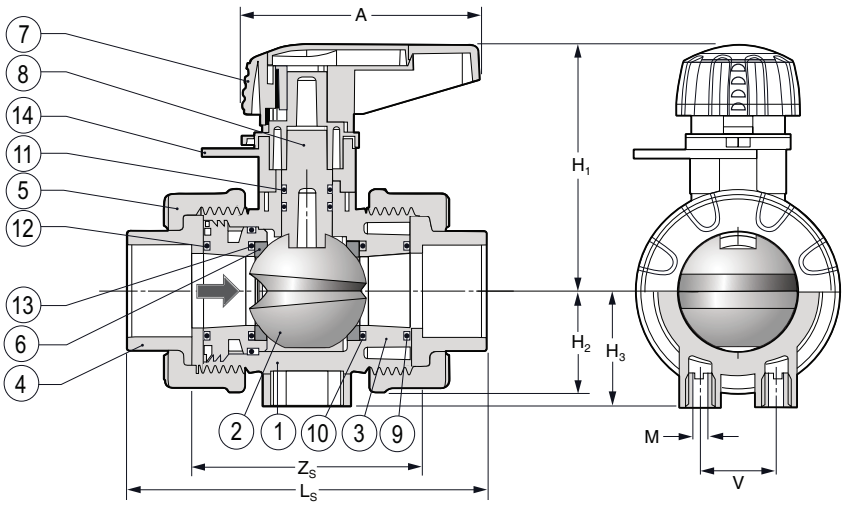

PARTS

No.	Part	Pcs.	Materials
1	Body	1	PVC, PP, PVDF
2	Ball	1	PVC, PP, PVDF
3	Carrier	1	PVC, PP, PVDF
4	End Connector	2	PVC, PP, PVDF
5	Union Nut	5	PVC, PP, PVDF
6	Ball Seat	2	PTFE
7	Handle	1	PVC
8	Stem	1	PVC, PP, PVDF
9	Carrier Face O-Ring	1	EPDM, FPM(Viton®)
10	Carrier O-Ring	1	EPDM, FPM(Viton®)
11	Stem O-Ring[1]	2	EPDM, FPM(Viton®)
12	Face O-Ring	1	EPDM, FPM(Viton®)
13	Seat Cushion[1]	2	EPDM, FPM(Viton®)
14	Position Indicator Scale	1	PVC

DIMENSIONS INCHES

							PVC			PP		
Size	A	H_1	H_3	H	M	V	Z_s	L_s	H_2	Z_s	L_s	H_2
1/2"	2.62	2.48	1.10	2.50	M5	0.98	2.48	3.74	0.99	2.64	3.74	1.06
3/4"	3.21	3.03	1.20	2.70	M5	0.98	2.83	4.33	1.16	3.03	4.29	1.18
1"	3.21	3.39	1.60	3.00	M6	1.02	3.11	4.84	1.39	3.27	4.69	1.57

ELECTRICALLY OR PNEUMATICALLY ACTUATED

The metering ball valve becomes a proportional control valve with the addition of a Q or E Series electric or P Series pneumatic actuator with 4-20 mA positioner

- Thermoplastic housing and mounting bracket
- Manual override
- Position indication
- Mechanical travel stops
- Different voltages are available



Q Series Electric



E Series Electric



P Series Pneumatic

E Series Electric Actuator on a SM2 Valve

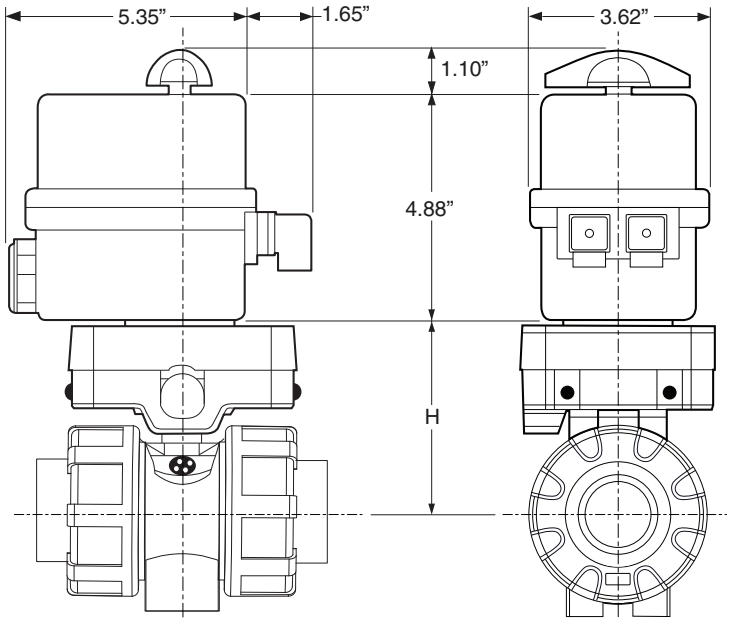

Side View

Port View

Metering Ball Valves

WORKING PRESSURES PSI

NET WEIGHTS LB. Cv VALUES

Size	PVC 20°C 68°F	PVC 40°C 104°F	PVC 60°C 140°F	PP 20°C 68°F	PP 40°C 104°F	PP 60°C 140°F	PP 80°C 176°F	PVC	PP	USGPM Flow at 1 psi △P
1/2″	230	130	30	150	100	65	20	0.35	0.29	1.4
3/4″	230	130	30	150	100	65	20	0.60	0.44	1.9
1″	230	130	30	150	100	65	20	0.84	0.64	2.3

Temperature Ranges: PVC 0 to 60°C (32 to 140°F), PP 0 to 95°C (32 to 203°F)

Cv VALUE vs. VALVE OPENING

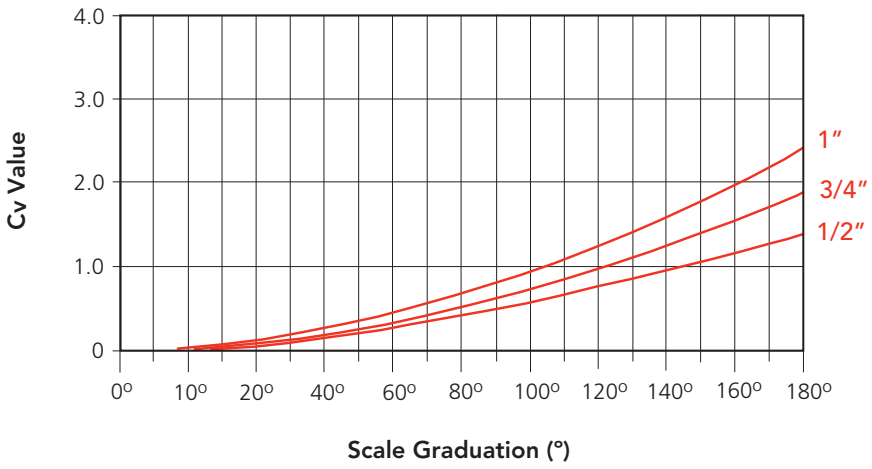

SAMPLE SPECIFICATION

1. All low flow control valves, 1/2″ to 1″, will be Chemline SM Series metering ball valves.
2. Body material will be PVC or PP, and o-rings will be EPDM or FPM (Viton®).
3. Body will be full blocking design with double stem o-rings for safety, rated at 230 psi maximum working pressure for PVC and 150 psi for PP material.
4. Ball will be floating design, molded solid with a V-groove for linear flow control over a 180° range of handle rotation.
5. Seats will be PTFE with elastomer cushions for positive closure with minimum stem torques and automatic compensation for seat wear and expansion.
6. Position indicating scale will be 0° to 180° with 5° increments for fine flow control and settable flow rates.
7. End connections will be 1/2″ to 1″ ANSI socket or FNPT threaded or 150 lb flanged or butt fusion for Chemline metric PP pipe or ChemFlare™ for PFA tubing.

ORDERING EXAMPLE

Chemline Metering Ball Valves	SM2	A	010	E	S
Valve Material	**A** – PVC	**B** – PP			
Size	**005** – 1/2″	**007** – 3/4″	**010** – 1″		
Seals	**E** – EPDM	**V** – FPM (Viton®)			
Ends	**S** – Socket	**T** – Threaded	**B** – Butt[1]	**CF** – ChemFlare™	

Example: SM2 Series Ball Valve, PVC, 1″, EPDM seals, socket ends.

[1] PP metric butt fusion ends (1/2″ to 2″) connect to Chemline PP piping systems.

VACUUM RATING

- 29.9 inches mercury

OPTIONS & ACCESSORIES

- **Reduced Ends**
- **Electric or Pneumatic Actuator with Positioner**
  – Operates as a linear control valve

CHEMLINE PLASTICS
SUPERIOR FLOW SOLUTIONS

55 Guardsman Road, Thornhill, ON, L3T 6L2, Canada | ISO 9001:2008 Certified
1.800.930.2436 (CHEM) | fax.905.889.8553 | request@chemline.com | chemline.com

This page is intentionally left blank

CS-302-100 : Identification sheet

VWTC PROJECT NUMBER:	Iqaluit WWTP	REV:	01
PROJECT NAME:	5000218036	SUBMITTED TO (COMPANY):	
ENGINEER:	G. HÉBERT	SUBMITTED TO (RESPONSIBLE)	
PROJECT MANAGER:	C. BEKAERT	PROJECT NUM REFERENCE.:	
PHONE NUMBER:		LOT NUMBER:	

SUPPLIER	EQPT CODE	EQPT TAG NO	DIA	DESCRIPTION	INFO 1	INFO 2	INFO 3	APPLIC.	NOTE	REV
CHEMLINE	VANRPV200667	CV-04-918	DIA: 38 mm (1-1/2")	HP-500 VALVE	TYPE: CHECK | 150 PSI//MANUFACTURER : CHEMLINE//MODEL : BTA015EC//CONNECTION TYPE : COMBO | 1-1/2"//BODY : PVC// SEAL | SEAT :EPDM | // STEM : N/A			HP-500		1

This page is intentionally left blank

PDF Published March 1, 2013

Ball Check & Foot Valves

CHEMLINE PLASTICS
SUPERIOR FLOW SOLUTIONS

The economical and versatile Chemline Ball Check Valve is the most popular type of non-return valves for pipe sizes under 6". A wide selection of body and seat materials, and end connections are available for many different applications. It has good flow capacity and will handle many slurry and suspended solid services. This valve works in both horizontal and vertical lines. The Foot Valve is for end of line services such as sumps.

PVC | CPVC | PP | PVDF

CRN Registered Consult Chemline

NSF[3] Certified to NSF/ANSI 61

SERIES: BT: True Union Check
BC: Single Union Check
FT: True Union Check
FV: Single Union Check

SIZES: 1/2" – 4"

ENDS: Threaded, Socket, Flanged, Butt[1] or ChemFlare™[2]

SEAT/SEALS: EPDM, FKM (Viton®), PTFE coated FKM (Viton®)

features

- **True Union to 2"**
- **Full Port to 4"**
- **NSF Certified[3]**
- **Built-in Union Design** – For easy installation and maintenance
- **Free Floating Ball** – The only moving part
- **Uniseat/Seal** – Easily removable
- **May be used either horizontally or vertically**
- **Excellent flow characteristics**
- **Low seating and opening pressures**



True Union Check
1/2" to 2" in all materials



Single Union Check
1/2" to 4" in PVC
2-1/2" to 4" in CPVC, PP and PVDF



Foot Valve is light weight and has a low profile basket

[1] PP and PVDF Butt fusion ends (available 1/2" to 2") connect to Chemline PP and PVDF piping systems.
[2] For ChemFlare™ end connectors, consult Chemline.
[3] PVC valves with EPDM or FKM (Viton®) seals are certified under NSF/ANSI Standard 61 for contact with drinking water.

03/13 ©Chemline Plastics Limited 2013
Chemline is a registered trade mark of Chemline Plastics Limited

Ball Check Valves

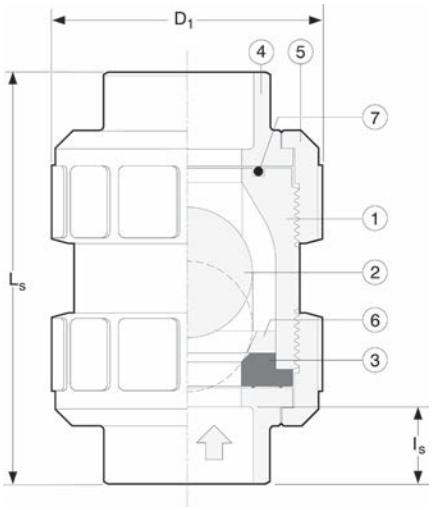

True Union Valve

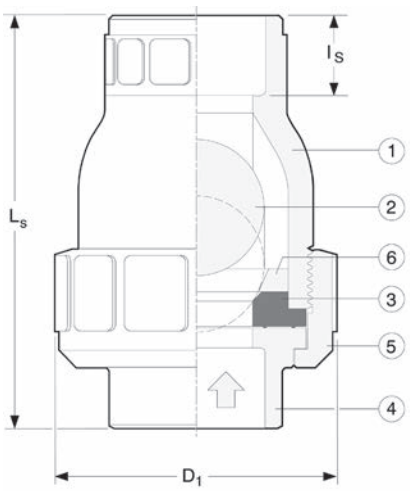

Single Union Valve

PARTS

▲ Recommended Spare Parts

No.	Part	Pcs. T/U	Pcs. S/U	Materials
1	Body	1	1	PVC, CPVC, PP, PVDF
2	Ball	1	1	PVC, CPVC, PP, PVDF
3▲	Uniseat/Seal[1]	1	1	EPDM, FKM(Viton®), PTFE coated FKM (Viton®)
4	End Connector	2	1	PVC, CPVC, PP, PVDF
5	Union Nut	2	1	PVC, CPVC, PP, PVDF
6	Stop Ring	1	1	PVC, CPVC, PP, PVDF
7	Face O-Ring	1	1	EPDM, FKM(Viton®)
9	Flange Retainer[2]	2	1	PVDF
10	Factory Flange[3]	2	1	PVC, CPVC, PP, PVDF

[1] Standard seals are EPDM in PVC, CPVC and PP valves, PTFE coated FKM (Viton®) in PVDF valves. Coating is .002" thick.

[2] True Union: 2 pcs 1/2" to 2", 6 pcs 1-1/2" to 4" Single Union: 1 pcs 1/2" to 2", 3 pcs 2-1/2" to 4".

[3] True Union flanged valves have two factory flanges. Single Union valves have one factory flange and one fabricated flange. Consult Chemline for details on fabricated type.

UNION END CONNECTIONS

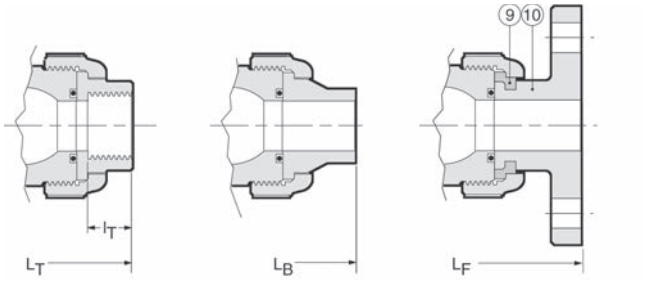

NPT Threaded | Butt Fusion PP and PVDF | Factory Flanged

DIMENSIONS INCHES

WEIGHTS LB.

Size	D_1	I_s	I_T	True Union PVC & CPVC L_T	L_S	L_F	True Union PP & PVDF L_T	L_B	L_F	Single Union PVC L_T	L_S	L_F	True Union Socket or Butt PVC	CPVC	PP	PVDF	Single Union PVC
1/2"	1.9	0.69	0.59	3.4	3.4	5.1	3.4	4.0	5.1	3.2	3.4	5.6	0.3	0.3	0.2	0.3	0.2
3/4"	2.4	0.72	0.67	4.1	3.9	6.1	4.1	4.4	6.1	3.8	3.7	6.6	0.5	0.5	0.3	0.6	0.4
1"	2.8	0.88	0.79	4.5	4.4	6.5	4.5	4.8	6.5	4.2	4.3	7.3	0.7	0.8	0.4	0.9	0.6
1-1/4"	3.1	0.94	0.87	5.0	4.9	6.6	5.0	5.9	6.6	6.2	6.3	12.3	1.1	1.2	0.7	1.5	1.5
1-1/2"	3.7	1.09	0.98	5.9	5.9	7.6	5.9	5.8	7.6	5.6	5.7	9.1	1.6	1.7	1.0	2.0	1.3
2"	4.2	1.16	1.10	7.0	6.8	8.4	7.0	6.5	8.4	6.5	6.5	10.5	2.2	2.4	1.4	2.7	1.8

DIMENSIONS INCHES

WEIGHTS LB.

Size	D_1	I_s[4]	I_T	Single Union PVC & CPVC L_T	L_S	L_F	Single Union PP & PVDF L_T	L_B	L_F	Single Union PVC	CPVC	PP	PVDF
2-1/2"	6.0	2.10	2.17	10.0	10.4	14.3	8.7	*	*	5.7	6.2	*	*
3"	6.0	1.88	1.38	8.7	9.6	12.2	8.7	*	*	5.1	5.5	3.3	6.3
4"	8.3	2.00	1.77	12.1	12.2	15.0	12.1	*	*	12.7	13.9	8.1	15.7

[4] Consult Chemline.

Foot Valves

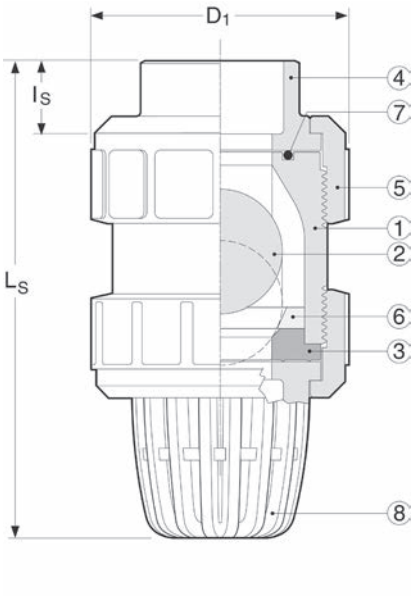

True Union Valve

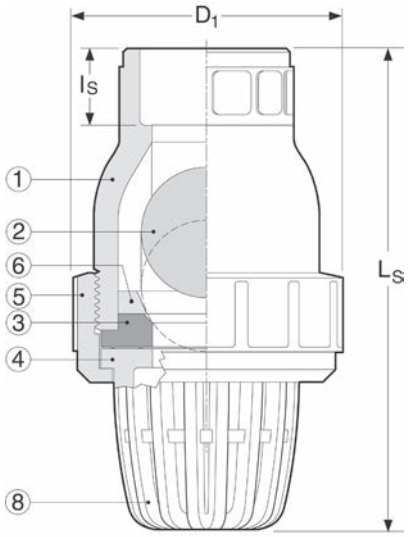

Single Union Valve

PARTS

▲ Recommended Spare Parts

No.	Part	Pcs. T/U	Pcs. S/U	Materials
1	Body	1	1	PVC, CPVC, PP, PVDF
2	Ball	1	1	PVC, CPVC, PP, PVDF
3▲	Uniseat/Seal[1]	1	1	EPDM, FKM(Viton®), PTFE coated FKM (Viton®)
4	End Connector	2	1	PVC, CPVC, PP, PVDF
5	Union Nut	2	1	PVC, CPVC, PP, PVDF
6	Stop Ring	1	1	PVC, CPVC, PP, PVDF
7	Face O-Ring	1	1	EPDM, FKM(Viton®)
8	Foot Valve Basket	1	1	PVC, CPVC, PP, PVDF
9	Flange Retainer[2]	3	0	PVDF
10	Factory Flange[3]	1	0	PVC, CPVC, PP, PVDF

[1] Standard seals are EPDM in PVC, CPVC and PP valves, PTFE coated FKM (Viton®) in PVDF valves. Coating is .002" thick.

[2] True Union: 1 pc 1/2" to 2", 3 pcs 2-1/2" to 4".

[3] True Union valves have factory flanges. Single Union have fabricated flanges. Consult Chemline for details on fabricated type.

END CONNECTIONS FOR TRUE UNION VALVE

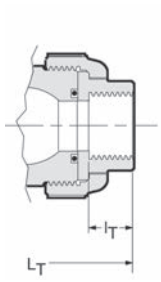

NPT Threaded

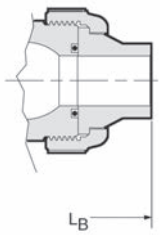

Butt Fusion
PP and PVDF

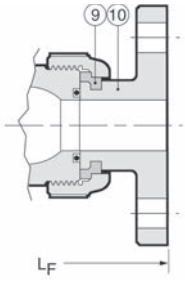

Factory Flanged

DIMENSIONS INCHES

WEIGHTS LB.

Size	D_1	I_s Soc	I_T Thd	True Union PVC & CPVC L_T	True Union PVC & CPVC L_S	True Union PVC & CPVC L_F	Single Union PVC L_T	Single Union PVC L_S	Single Union PVC L_F	Single Union PVC Socket
1/2"	1.9	0.69	0.59	2.8	2.9	3.7	3.5	3.7	4.7	0.3
3/4"	2.4	0.72	0.67	3.3	3.3	4.4	4.1	4.2	5.4	0.4
1"	2.8	0.88	0.79	3.7	3.7	4.8	4.5	4.8	6.1	0.8
1-1/4"	3.7	0.94	0.87	*	*	*	*	*	*	1.8
1-1/2"	3.7	1.09	0.98	5.4	5.4	6.3	6.8	7.0	8.5	1.7
2"	4.2	1.16	1.10	6.4	6.4	7.2	7.4	7.6	9.3	2.1
2-1/2"	6.0	2.10	2.17	–	–	–	*	*	*	7.4
3"	6.0	1.88	1.38	–	–	–	11.6	12.1	14.2	7.1
4"	8.3	2.00	1.77	–	–	–	14.7	15.0	17.4	15.7

* Consult Chemline for dimensions.

For CPVC (2-1/2" to 4"), PP and PVDF Foot Valve lengths, consult Chemline.

Ball Check & Foot Valves

WORKING PRESSURES PSI

Size	PVC	CPVC				Polypropylene			PVDF			
	0-50°C 32-122°F	0-50°C 32-122°F	60°C 140°F	80°C 176°F	90°C 194°F	–20-30°C –4-90°F	60°C 140°F	80°C 176°F	–20-60°C –4-140°F	80°C 176°F	90°C 194°F	100°C 212°F
1/2″	150	150	115	85	60	150	90	60	150	120	110	85
3/4″	150	150	115	85	60	150	90	60	150	120	110	85
1″	150	150	115	85	60	150	90	60	150	120	110	85
1-1/4″	150	150	115	85	60	150	90	60	150	120	110	85
1-1/2″	150	150	115	85	60	150	90	60	150	120	110	85
2″	150	150	115	85	60	150	90	60	150	120	110	85
2-1/2″	100	100	90	60	45	100	60	45	100	90	60	45
3″	100	100	90	60	45	100	60	45	100	90	60	45
4″	100	100	90	60	45	100	60	45	100	90	60	45

Maximum Temperatures: PVC 0 to 60°C (32 to 140°F), **CPVC** 0 to 95°C (32 to 203°F), **PP** –20 to 90°C (–4 to194°F), **PVDF** –40 to 100°C (–40 to 212°F)

MINIMUM SEATING AND OPENING PRESSURE PSI

Size	Vertical Piping		Horizontal Piping	
	Open	Seating	Open	Seating
1/2″	0.7	2.8	0.1	2.8
3/4″	0.7	4.3	0.1	4.3
1″	0.7	4.3	0.1	4.3
1-1/4″	1.4	4.3	0.3	4.3
1-1/2″	1.4	4.3	0.3	4.3
2″	1.4	4.3	0.3	4.3
2-1/2″	1.4	2.8	0.3	2.8
3″	1.4	2.8	0.3	2.8
4″	1.4	2.8	0.3	2.8

Cv VALVES

Check Valves
6.5
17.
25.
86.
86.
130.
280.
280.
500.

VACUUM RATING

- 29.9 inches mercury
- Maximum recommended velocity 5 m/s

SAMPLE SPECIFICATION

All Ball Check valves in PVC, CPVC, PP or PVDF shall be Chemline BT or BC Series or equal with EPDM [FKM (Viton®) or PTFE coated FKM (Viton®)] seats and union ends. Sizes 1/2″ to 2″ shall be slip-out True Union style, sizes 2-1/2″ to 4″ shall be single union. The elastomer uniseat/seal shall function as both the ball seat and the union seal. Ball Check valves shall be rated 150 psi up to 2″ and 100 psi for sizes 2-1/2″ to 4″.

ORDERING EXAMPLE

Chemline Ball Check/Foot Valves	BT	A	020	E	S
Valve Type	**BT** – True Union Ball Check **BC** – Single Union Ball Check **FV** – Single Union Foot Valve **FT** – True Union Foot Valve				
Body Material	**A** – PVC **C** – CPVC **B** – PP **K** – PVDF				
Size	**005** – 1/2″ **007** – 3/4″ **010** – 1″ **012** – 1-1/4″ **015** – 1-1/2″ **020** – 2″ **025** – 2-1/2″ **030** – 3″ **040** – 4″				
Seals	**E** – EPDM **V** – FKM (Viton®) **T** – PTFE coated FKM (Viton®)				
Ends	**S** – Socket **T** – Threaded **F** – Flanged **B** – Butt[1] **CF** – ChemFlare™				

Example: Ball Check Valve, PVC, 2″, with EPDM seat, socket ends.

[1] PP and PVDF metric butt fusion ends (1/2″ to 2″) connect to Chemline PP and PVDF piping systems.

OPTIONS & ACCESSORIES

- **PTFE coated Uniseat/Seal**
- **Spring Loaded Ball** – Assists ball to seat faster

55 Guardsman Road, Thornhill, ON, L3T 6L2, Canada | ISO 9001:2008 Certified
tel.905.889.7890 | fax.905.889.8553 | request@chemline.com | chemline.com

CS-304-100 : Identification sheet

VWTC PROJECT NUMBER:	Iqaluit WWTP	REV:	01
PROJECT NAME:	5000218036	SUBMITTED TO (COMPANY):	
ENGINEER:	G. HÉBERT	SUBMITTED TO (RESPONSIBLE)	
PROJECT MANAGER:	C. BEKAERT	PROJECT NUM REFERENCE.:	
PHONE NUMBER:		LOT NUMBER:	

SUPPLIER	EQPT CODE	EQPT TAG NO	DIA	DESCRIPTION	INFO 1	INFO 2	INFO 3	APPLIC.	NOTE	REV
TEKNO VALVE	VASDBR308797	SV-04-914	DIA: 1"	HP-500 VALVE	TYPE: SOLENOID VALVE//MANUFACTURER : ASCO//MODEL : 8210G004-120VAC//CONNECTION TYPE : THREADED | 25 mm (1") | 25 mm (1")//BODY : BRASS// SEAL | SEAT :NBR | PA// STEM : N/A	ACTING : PILOT	NORMALLY : FERMÉ/CLOSED	HP-500		1

This page is intentionally left blank

Features

- Wide range of pressure ratings, sizes, and resilient materials provide long service life and low internal leakage
- High flow valves for liquid, corrosive, and air/inert gas service
- Industrial applications include:
  - Car wash
  - Laundry equipment
  - Air compressors
  - Industrial water control
  - Pumps

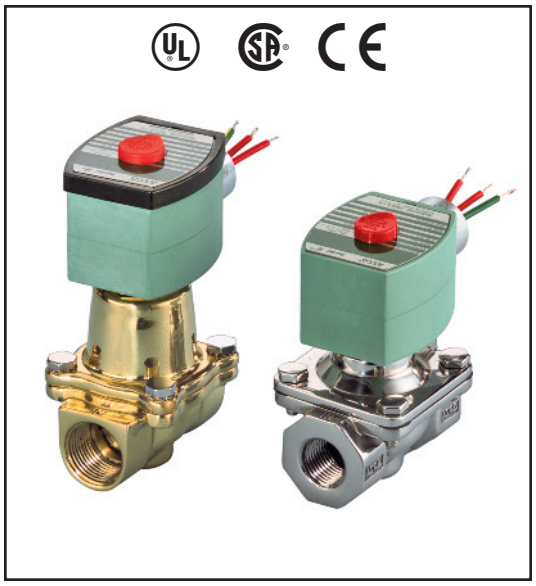

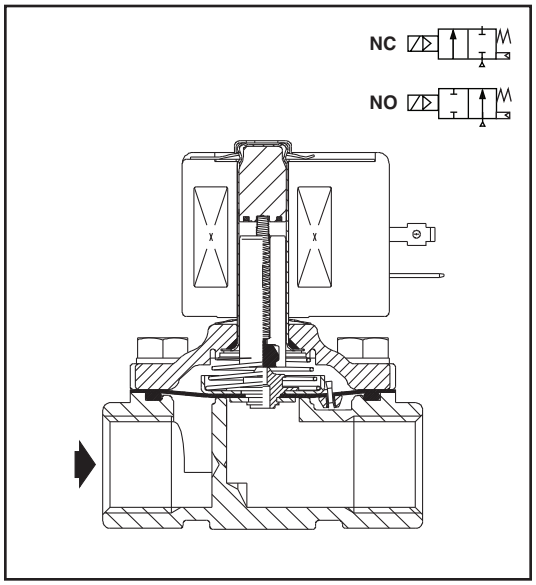

Construction

Valve Parts in Contact with Fluids		
Body	Brass	304 Stainless Steel*
Seals and Discs	NBR or PTFE	
Disc-Holder	PA	
Core Tube	305 Stainless Steel	
Core and Plugnut	430F Stainless Steel	
Springs	302 Stainless Steel	
Shading Coil	Copper	Silver

*Catalog Numbers 8210G127, 8210G129, 8210G132, 8210G133 have 316L Stainless Steel bodies.

Electrical

Standard Coil and Class of Insulation	Watt Rating and Power Consumption				Spare Coil Part Number			
		AC			General Purpose		Explosionproof	
	DC Watts	Watts	VA Holding	VA Inrush	AC	DC	AC	DC
F	-	6.1	16	40	238210	-	238214	-
F	11.6	10.1	25	70	238610	238710	238614	238714
F	16.8	16.1	35	180	272610	97617	272614	97617
F	-	17.1	40	93	238610	-	238614	-
F	-	20	43	240	99257	-	99257	-
F	-	20.1	48	240	272610	-	272614	-
F	30.8	-	-	-	-	501695	-	501696
H	40.6	-	-	-	-	238910	-	238914

Standard Voltages: 24, 120, 240, 480 volts AC, 60 Hz (or 110, 220 volts AC, 50 Hz). 6, 12, 24, 120, 240 volts DC. Must be specified when ordering.
Other voltages available when required.

Solenoid Enclosures

Standard: RedHat II - Watertight, Types 1, 2, 3, 3S, 4, and 4X; RedHat - Type I.

Optional: RedHat II - Explosionproof and Watertight, Types 3, 3S, 4, 4X, 6, 6P, 7, and 9; Red-Hat - Explosionproof and Watertight, Types 3, 4, 4X, 7, and 9.

(To order, add prefix "EF" to catalog number, except Catalog Numbers 8210B057, 8210B058, and 8210B059, which are not available with Explosionproof enclosures.)
See Optional Features Section for other available options.

Nominal Ambient Temp. Ranges

RedHat II/RedHat AC: 32˚F to 125˚F (0˚C to 52˚C)
RedHat II DC: 32˚F to 104˚F (0˚C to 40˚C)
RedHat DC: 32˚F to 77˚F (0˚C to 25˚C)
(104˚F/40˚C occasionally)
8210G227 AC: 32˚F to 130˚F (0˚C to 54˚C)
DC: 32˚F to 90˚F (0˚C to 32˚C)
Refer to Engineering Section for details.

Approvals

UL listed as indicated. CSA certified.
RedHat II meets applicable CE directives.
Refer to Engineering Section for details.

ATEX/IECEx certified with prefix "EV" as listed. *Refer to Optional Features Electrical Section for details.*

Specifications (English units)

Pipe Size (in)	Orifice Size (in)	Cv Flow Factor	Operating Pressure Differential (psi)							Max. Fluid Temp. ˚F		Brass Body			Stainless Steel Body			Watt Rating/ Class of Coil Insulation ⑦	
				Max. AC			Max. DC												
			Min.	Air-Inert Gas	Water	Light Oil @ 300 SSU	Air-Inert Gas	Water	Light Oil @ 300 SSU	AC	DC	Catalog Number	Const. Ref. ④	UL ⑤ Listing	Catalog Number	Const. Ref. ④	UL ⑤ Listing	AC	DC
NORMALLY CLOSED (Closed when de-energized), NBR or PTFE ② Seating																			
3/8	3/8	1.5	①	150	125	-	40	40	-	180	150	8210G073 ③	1P	●	8210G036 ③	1P	●	6.1/F	11.6/F
3/8	5/8	3	0	150	150	-	40	40	-	180	150	8210G093	5D	❍	-	-	-	10.1/F	11.6/F
3/8	5/8	3	5	200	150	135	125	100	100	180	150	8210G001 ▼	6D	❍	-	-	-	6.1/F	11.6/F
3/8	5/8	3	5	300	300	300	-	-	-	175	-	8210G006 ✓	5D	❍	-	-	-	17.1/F	-
1/2	7/16	2.2	①	150	125	-	40	40	-	180	150	8210G015 ③	2P	●	8210G037 ③	2P	●	6.1/F	11.6/F
1/2	5/8	4	0	150	150	-	40	40	-	180	150	8210G094 ✓	5D	❍	-	-	-	10.1/F	11.6/F
1/2	5/8	4	0	150	150	125	40	40	-	175	150	-	-	-	8210G087 ✓	7D	●	17.1/F	11.6/F
1/2	5/8	4	5	200	150	135	125	100	100	180	150	8210G002 ▼	6D	❍	-	-	-	6.1/F	11.6/F
1/2	5/8	4	5	300	300	300	-	-	-	175	-	8210G007	5D	❍	-	-	-	17.1/F	-
1/2	3/4	4	5	-	300	-	-	300	-	130	90	8210G227	5D	❍ †	-	-	-	17.1/F	40.6/H
3/4	5/8	4.5	0	150	150	125	40	40	-	175	150	-	-	-	8210G088 ✓	7D	●	17.1/F	11.6/F
3/4	3/4	5	5	125	125	125	100	90	75	180	150	8210G009 ▼	9D	❍	-	-	-	6.1/F	11.6/F
3/4	3/4	5	0	150	150	-	40	40	-	180	150	8210G095 ✓	8D	❍	-	-	-	10.1/F	11.6/F
3/4	3/4	6.5	5	250	150	100	125	125	125	180	150	8210G003 ▼	11D	❍	-	-	-	6.1/F	11.6/F
3/4	3/4	6	0	350	300	200	200	200	200	200	180	8210G026 ② ‡ ◆	40P/10D	●	-	-	-	16.1F	30.8/F
1	1	13	0	150	125	125	135	120	120	180	180	8210G054 ‡ ◆	41D/31D	●	8210G089 ‡ ◆	45D/15D	●	16.1/F	30.8/F
1	1	13	5	150	150	100	125	125	125	180	150	8210G004 ▼	12D	❍	-	-	-	6.1/F	11.6/F
1	1	13.5	0	300	225	115	-	-	-	200	-	8210G027 ‡	42P	●	-	-	-	20.1/F	-
1	1	13.5	10	300	300	300	-	-	-	175	-	8210G078 ②	13P	-	-	-	-	17.1/F	-
1 1/4	1 1/8	15	0	150	125	125	135	120	120	180	180	8210G055 ‡ ◆	43D/32D	●	-	-	-	16.1/F	30.8/F
1 1/4	1 1/8	15	5	150	150	100	125	125	125	180	150	8210G008 ▼	16D	❍	-	-	-	6.1/F	11.6/F
1 1/2	1 1/4	22.5	0	150	125	125	135	120	120	180	180	8210G056 ‡ ◆	44D/33D	●	-	-	-	16.1/F	30.8/F
1 1/2	1 1/4	22.5	5	150	150	100	125	125	125	180	150	8210G022 ▼	18D	●	8210G127	-	-	6.1/F	11.6/F
2	1 3/4	43	5	150	125	90	50	50	50	180	150	8210G100	20P	●	8210G129	-	-	6.1/F	11.6/F
2 1/2	1 3/4	45	5	150	125	90	50	50	50	180	150	8210G101	21P	●	-	-	-	6.1/F	11.6/F
NORMALLY OPEN (Open when de-energized), NBR Seating (PA Disc-Holder, except as noted)																			
3/8	5/8	3	0	150	150	125	125	125	80	180	150	8210G033	23D	●	-	-	-	10.1/F	11.6/F
3/8	5/8	3	5	250	200	200	250	200	200	180	180	8210G011 ⑧ ⑨	39D	●	-	-	-	10.1/F	11.6/F
1/2	5/8	4	0	150	150	125	125	125	80	180	150	8210G034 ✓	23D	●	-	-	-	10.1/F	11.6/F
1/2	5/8	3	0	150	150	100	125	125	80	180	150	-	-	-	8210G030 ✓	37D	●	10.1/F	11.6/F
1/2	5/8	4	5	250	200	200	250	200	200	180	180	8210G012 ⑧ ⑨	39D	●	-	-	-	10.1/F	11.6/F
3/4	3/4	5.5	0	150	150	125	125	125	80	180	150	8210G035 ✓	25D	●	-	-	-	10.1/F	11.6/F
3/4	5/8	3	0	150	150	100	125	125	80	180	150	-	-	-	8210G038 ✓	38D	●	10.1/F	11.6/F
3/4	3/4	6.5	5	-	-	-	250	200	200	-	180	8210C013	24D	●	-	-	-	-	16.8/F
3/4	3/4	6.5	5	250	200	200	-	-	-	180	-	8210G013	46D	●	-	-	-	16.1/F	-
1	1	13	0	125	125	125	-	-	-	180	-	8210B057 ⑥ ⑩	34D	●	-	-	-	20/F	-
1	1	13	5	-	-	-	125	125	125	-	180	8210D014	26D	●	-	-	-	-	16.8/F
1	1	13	5	150	150	125	-	-	-	180	-	8210G014	47D	●	-	-	-	16.1/F	-
1 1/4	1 1/8	15	0	125	125	125	-	-	-	180	-	8210B058 ⑥ ⑩	35D	●	-	-	-	20/F	-
1 1/4	1 1/8	15	5	-	-	-	125	125	125	-	180	8210D018	28D	●	-	-	-	-	16.8/F
1 1/4	1 1/8	15	5	150	150	125	-	-	-	180	-	8210G018	48D	●	-	-	-	16.1/F	-
1 1/2	1 1/4	22.5	0	125	125	125	-	-	-	180	-	8210B059 ⑥ ⑩	36D	●	-	-	-	20/F	-
1 1/2	1 1/4	22.5	5	-	-	-	125	125	125	-	180	8210D032	29D	●	-	-	-	-	16.8/F
1 1/2	1 1/4	22.5	5	150	150	125	-	-	-	180	-	8210G032	49D	●	8210G132	-	-	16.1/F	-
2	1 3/4	43	5	-	-	-	125	125	125	-	150	8210 103	30P	●	-	-	-	-	16.8/F
2	1 3/4	43	5	125	125	125	-	-	-	180	-	8210G103	50P	●	8210G133	-	-	16.1/F	-
2 1/2	1 3/4	45	5	-	-	-	125	125	125	-	150	8210 104	27P	●	-	-	-	-	16.8/F
2 1/2	1 3/4	45	5	125	125	125	-	-	-	180	-	8210G104	51P	●	-			16.1/F	-

① 5 psi on Air; 1 psi on Water.
② Valve provided with PTFE main disc.
③ Valve includes Ultem (G.E. trademark) piston.
④ Letter "D" denotes diaphragm construction; "P" denotes piston construction.
⑤ ❍ Safety Shutoff Valve; ● General Purpose Valve.
Refer to Engineering Section (Approvals) for details.

⑥ Valves not available with Explosionproof enclosures.
⑦ On 50 hertz service, the watt rating for the 6.1/F solenoid is 8.1 watts.
⑧ AC construction also has PA seating.
⑨ No disc-holder.
⑩ Stainless steel disc-holder.
† UL listed for fire protection systems per UL429A.

‡ DC constructions must have solenoid mounted vertical and upright.
✓ ATEX/IECEx certified with prefix "EV".
▼ ATEX/IECEx certified for DC only with prefix "EV".
◆ Not available in 6 Volt DC. EF and HB prefix only.

Specifications (Metric units)

Pipe Size (in)	Orifice Size (mm)	Kv Flow Factor (m^3/hr)	Operating Pressure Differential (bar)							Max. Fluid Temp. ˚C		Brass Body			Stainless Steel Body			Watt Rating/ Class of Coil Insulation ⑦	
				Max. AC			Max. DC												
			Min.	Air-Inert Gas	Water	Light Oil @ 300 SSU	Air-Inert Gas	Water	Light Oil @ 300 SSU	AC	DC	Catalog Number	Const. Ref. ④	UL ⑤ Listing	Catalog Number	Const. Ref. ④	UL ⑤ Listing	AC	DC
NORMALLY CLOSED (Closed when de-energized), NBR or PTFE ② Seating																			
3/8	10	1.3	①	10	9	-	3	3	-	82	65	8210G073 ③	1P	●	8210G036 ③	1P	●	6.1/F	11.6/F
3/8	16	2.6	0	10	10	-	3	3	-	82	65	8210G093	5D	❍	-	-	-	10.1/F	11.6/F
3/8	16	2.6	0.3	14	10	9	9	7	7	82	65	8210G001 ▼	6D	❍	-	-	-	6.1/F	11.6/F
3/8	16	2.6	0.3	21	21	21	-	-	-	79	-	8210G006 ✓	5D	❍	-	-	-	17.1/F	-
1/2	11	1.9	①	10	9	-	3	3	-	82	65	8210G015 ③	2P	●	8210G037 ③	2P	●	6.1/F	11.6/F
1/2	16	3.4	0	10	10	-	3	3	-	82	65	8210G094 ✓	5D	❍	-	-	-	10.1/F	11.6/F
1/2	16	3.4	0	10	10	9	3	3	-	79	65	-	-	-	8210G087 ✓	7D	●	17.1/F	11.6/F
1/2	16	3.4	0.3	14	10	9	9	7	7	82	65	8210G002 ▼	6D	❍	-	-	-	6.1/F	11.6/F
1/2	16	3.4	0.3	21	21	21	-	-	-	79	-	8210G007	5D	❍	-	-	-	17.1/F	-
1/2	19	3.4	0.3	-	21	-	-	21	-	54	32	8210G227	5D	❍ †	-	-	-	17.1/F	40.6H
3/4	16	3.9	0	10	10	9	3	3	-	79	65	-	-	-	8210G088 ✓	7D	●	17.1/F	11.6/F
3/4	19	4.3	0.3	9	9	9	7	6	5	82	65	8210G009 ▼	9D	❍	-	-	-	6.1/F	11.6/F
3/4	19	4.3	0	10	10	-	3	3	-	82	65	8210G095 ✓	8D	❍	-	-	-	10.1/F	11.6/F
3/4	19	5.6	0.3	17	10	7	9	9	9	82	65	8210G003 ▼	11D	❍	-	-	-	6.1/F	11.6/F
3/4	19	5.1	0	24	21	14	14	14	14	93	82	8210G026 ② ‡ ◆	40P/10D	●	-	-	-	16.1F	30.8/F
1	25	11	0	10	9	9	9	8	8	82	82	8210G054 ‡ ◆	41D/31D	●	8210G089 ‡ ◆	45D/15D	●	16.1/F	30.8/F
1	25	11	0.3	10	10	7	9	9	9	82	65	8210G004 ▼	12D	❍	-	-	-	6.1/F	11.6/F
1	25	11.5	0	21	16	8	-	-	-	93	-	8210G027 ‡	42P	●	-	-	-	20.1/F	-
1	25	11.5	0.7	21	21	21	-	-	-	79	-	8210G078 ②	13P	-	-	-	-	17.1/F	-
1 1/4	29	13	0	10	9	9	9	8	8	82	82	8210G055 ‡ ◆	43D/32D	●	-	-	-	16.1/F	30.8/F
1 1/4	29	13	0.3	10	10	7	9	9	9	82	65	8210G008 ▼	16D	❍	-	-	-	6.1/F	11.6/F
1 1/2	32	19.5	0	10	9	9	9	8	8	82	82	8210G056 ‡ ◆	44D/33D	●	-	-	-	16.1/F	30.8/F
1 1/2	32	19.5	0.3	10	10	7	9	9	9	82	65	8210G022 ▼	18D	●	8210G127	-	-	6.1/F	11.6/F
2	44	37	0.3	10	9	6	3	3	3	82	65	8210G100	20P	●	8210G129	-	-	6.1/F	11.6/F
2 1/2	44	39	0.3	10	9	6	3	3	3	82	65	8210G101	21P	●	-	-	-	6.1/F	11.6/F
NORMALLY OPEN (Open when de-energized), NBR Seating (PA Disc-Holder, except as noted)																			
3/8	16	2.6	0.0	10	10	9	9	9	6	82	65	8210G033	23D	●	-	-	-	10.1/F	11.6/F
3/8	16	2.6	0.3	17	14	14	17	14	14	82	82	8210G011 ⑧ ⑨	39D	●	-	-	-	10.1/F	11.6/F
1/2	16	3.4	0	10	10	9	9	9	6	82	65	8210G087 ✓	7D	●	-	-	-	10.1/F	11.6/F
1/2	16	2.6	0	10	10	7	9	9	6	82	65	-	-	-	8210G087 ✓	7D	●	10.1/F	11.6/F
1/2	16	3.4	0.3	17	14	14	17	14	14	82	82	8210G012 ⑧ ⑨	39D	●	-	-	-	10.1/F	11.6/F
3/4	19	4.7	0	10	10	9	9	9	6	82	65	8210G087 ✓	7D	●	-	-	-	10.1/F	11.6/F
3/4	16	2.6	0	10	10	7	9	9	6	82	65	-	-	-	8210G087 ✓	7D	●	10.1/F	11.6/F
3/4	19	5.6	0.3	-	-	-	17	14	14	-	82	8210C013	24D	●	-	-	-	-	16.8/F
3/4	19	5.6	0.3	17	14	14	-	-	-	82	-	8210G013	46D	●	-	-	-	16.1/F	-
1	25	11	0	9	9	9	-	-	-	82	-	8210B057 ⑥ ⑩	34D	●	-	-	-	20/F	-
1	25	11	0.3	-	-	-	9	9	9	-	82	8210D014	26D	●	-	-	-	-	16.8/F
1	25	11	0.3	10	10	9	-	-	-	82	-	8210G014	47D	●	-	-	-	16.1/F	-
1 1/4	29	13	0	9	9	9	-	-	-	82	-	8210B058 ⑥ ⑩	35D	●	-	-	-	20/F	-
1 1/4	29	13	0.3	-	-	-	9	9	9	-	82	8210D018	28D	●	-	-	-	-	16.8/F
1 1/4	29	13	0.3	10	10	9	-	-	-	82	-	8210G018	48D	●	-	-	-	16.1/F	-
1 1/2	32	19.5	0	9	9	9	-	-	-	82	-	8210B059 ⑥ ⑩	36D	●	-	-	-	20/F	-
1 1/2	32	19.5	0.3	-	-	-	9	9	9	-	82	8210D032	29D	●	-	-	-	-	16.8/F
1 1/2	32	19.5	0.3	10	10	9	-	-	-	82	-	8210G032	49D	●	8210G132	-	-	16.1/F	-
2	44	37	0.3	-	-	-	9	9	9	-	65	8210 103	30P	●	-	-	-	-	16.8/F
2	44	37	0.3	9	9	9	-	-	-	82	-	8210G103	50P	●	8210G133	-	-	16.1/F	-
2 1/2	44	39	0.3	-	-	-	9	9	9	-	65	8210 104	27P	●	-	-	-	-	16.8/F
2 1/2	44	39	0.3	9	9	9	-	-	-	82	-	8210G104	51P	●	-	-	-	16.1/F	-

① 0.3 bar on Air; 0.0 bar on Water.
② Valve provided with PTFE main disc.
③ Valve includes UItem (G.E. trademark) piston.
④ Letter "D" denotes diaphragm construction; "P" denotes piston construction.
⑤ ❍ Safety Shutoff Valve; ● General Purpose Valve.
Refer to Engineering Section (Approvals) for details.

⑥ Valves not available with Explosionproof enclosures.
⑦ On 50 hertz service, the watt rating for the 6.1/F solenoid is 8.1 watts.
⑧ AC construction also has PA seating.
⑨ No disc-holder.
⑩ Stainless steel disc-holder.
† UL listed for fire protection systems per UL429A.

‡ DC constructions must have solenoid mounted vertical and upright.
✓ ATEX/IECEx certified with prefix "EV".
▼ ATEX/IECEx certified for DC only with prefix "EV".
◆ Not available in 6 Volt DC. EF and HB prefix only.

Dimensions: inches (mm)

Const. Ref.		H	K	L	P	W
1*	in	3.85	3.00	1.91	3.41	1.69
	mm	98	76	49	87	43
2*	in	4.17	3.25	2.28	3.63	1.69
	mm	106	83	58	92	43
5	in	3.84	2.31	2.75	3.28	2.28
	mm	98	59	70	83	58
6*	in	3.38	1.94	2.75	2.80	2.28
	mm	86	49	70	71	58
7	in	4.19	2.50	2.81	3.47	2.39
	mm	106	64	71	88	61
8	in	4.13	2.47	2.81	3.44	2.29
	mm	105	63	71	87	58
9*	in	3.66	2.10	2.81	2.96	2.28
	mm	93	53	71	75	58
10*	in	5.20	3.40	2.80	4.50	2.50
	mm	131	86	71	114	62
11*	in	4.16	2.66	3.84	3.52	2.75
	mm	106	68	98	89	70
12	in	5.64	3.15	3.75	4.01	3.36
	mm	143	80	95	102	85
13	in	4.44	3.22	3.75	4.19	5.81
	mm	113	82	95	106	147
15*	in	5.20	3.30	3.80	4.40	3.80
	mm	133	83	98	111	98
16	in	5.64	3.15	3.66	4.01	3.56
	mm	143	80	93	102	90
18*	in	6.11	3.30	4.38	4.16	3.92
	mm	155	84	111	106	100
20*	in	7.33	3.71	5.06	4.57	4.87
	mm	186	94	129	116	124
21*	in	7.33	3.71	5.50	4.57	4.87
	mm	186	94	140	116	124
23	in	4.35	2.65	2.75	3.79	2.28
	mm	110	67	70	96	58
24	in	5.06	X	3.78	4.44	2.75
	mm	129	X	96	113	70
25	in	4.64	2.81	2.81	3.94	2.28
	mm	118	71	71	100	58
26	in	6.53	X	3.75	4.91	3.19
	mm	166	X	95	125	81
27	in	8.22	X	5.50	5.47	4.87
	mm	209	X	140	139	124
28	in	6.53	X	3.66	4.91	3.19
	mm	166	X	93	125	81
29	in	7.03	X	4.38	5.06	4.40
	mm	179	X	111	129	112

* DC dimensions slightly larger.
IMPORTANT: Valves may be mounted in any position, except as noted in specifications table.

Const. Ref. 1, 2

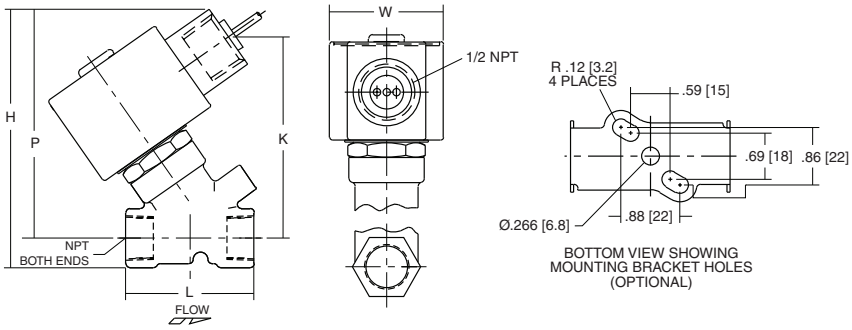

Const. Ref. 13

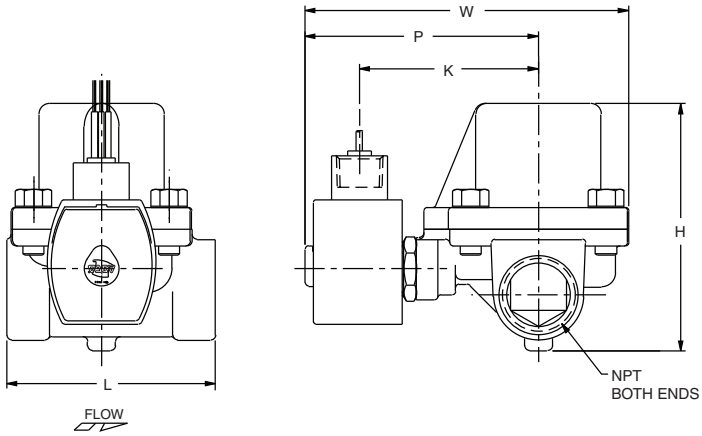

Const. Ref. 5-9, 11, 23 , 25, 37,38, 40-46

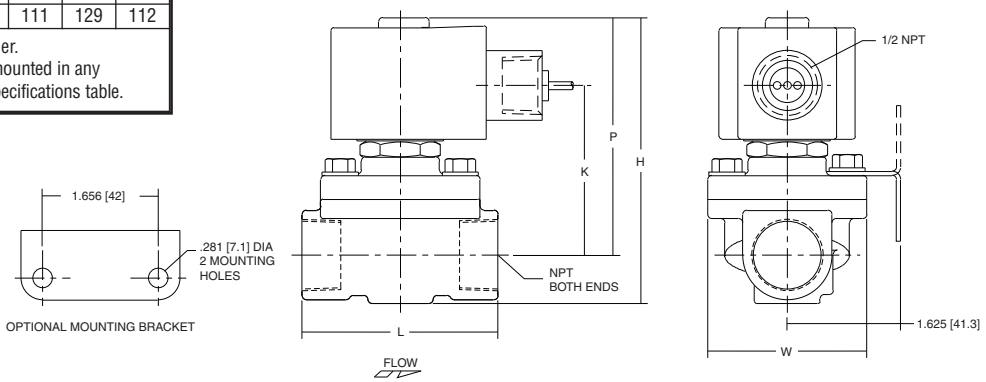

Dimensions: inches (mm)

Const. Ref.		H	K	L	P	W
30	in	8.22	X	5.06	5.47	4.87
	mm	209	X	129	139	124
31	in	5.13	3.19	3.76	4.32	3.27
	mm	130	81	95	110	83
32	in	5.60	3.44	3.66	4.57	3.27
	mm	142	87	93	116	83
33	in	5.92	3.66	4.51	4.80	3.89
	mm	150	93	115	122	99
34	in	6.91	X	3.75	6.09	3.25
	mm	176	X	95	155	83
35	in	7.34	X	3.66	6.34	3.25
	mm	186	X	93	161	83
36	in	7.66	X	4.38	6.56	3.91
	mm	1.95	X	111	167	99
37	in	4.61	2.75	2.81	3.89	2.39
	mm	117	70	71	99	61
38	in	4.61	2.75	2.81	3.89	2.39
	mm	117	70	71	99	61
39	in	5.42	2.31	2.75	4.86	3.80
	mm	138	59	70	123	97
40	in	5.20	3.29	2.81	4.50	2.28
	mm	132	83	71	114	58
41	in	5.13	3.10	3.75	4.32	3.25
	mm	130	79	95	110	83
42	in	6.43	4.40	3.93	5.62	3.25
	mm	163	112	100	143	83
43	in	5.57	3.35	3.66	4.57	3.25
	mm	142	85	93	116	83
44	in	5.90	3.57	4.38	4.79	3.91
	mm	150	91	111	122	99
45	in	5.26	3.17	3.75	4.38	3.84
	mm	134	81	95	111	98
46	in	4.95	3.10	3.84	4.31	2.75
	mm	126	79	98	110	70
47	in	6.43	3.59	3.75	4.81	3.52
	mm	163	91	95	122	90
48	in	6.43	3.59	3.66	4.81	3.73
	mm	163	91	93	122	95
49	in	6.91	3.75	4.38	4.96	4.40
	mm	176	95	111	126	112
50	in	8.13	4.15	5.06	5.37	4.87
	mm	207	105	129	136	124
51	in	8.13	4.15	5.50	5.37	5.18
	mm	207	105	140	136	132

IMPORTANT: Valves may be mounted in any position, except as noted in specifications table.

Const. Ref. 10, 15, 31, 32, 33

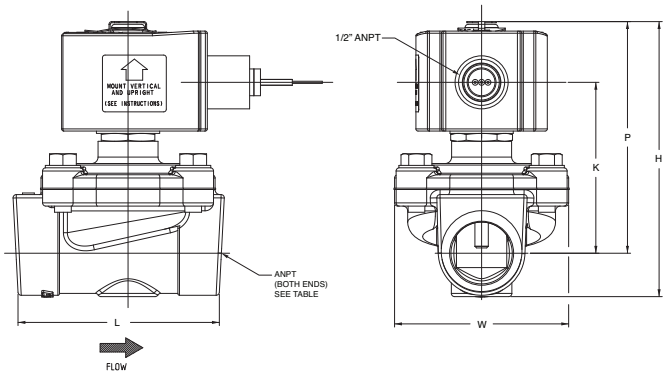

Const. Ref. 24, 34, 35, 36

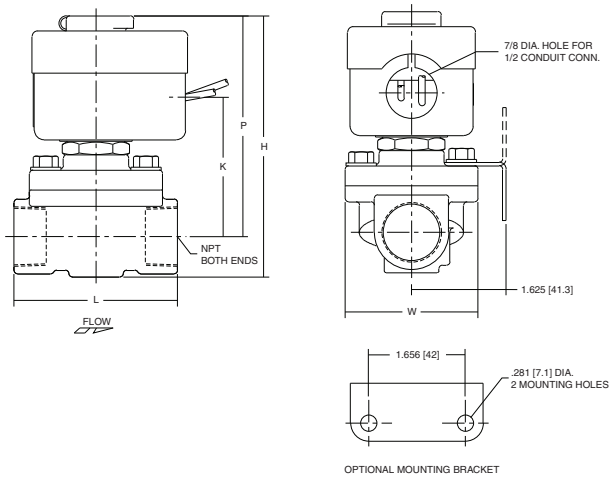

Const. Ref. 12, 16, 26, 28, 47, 48

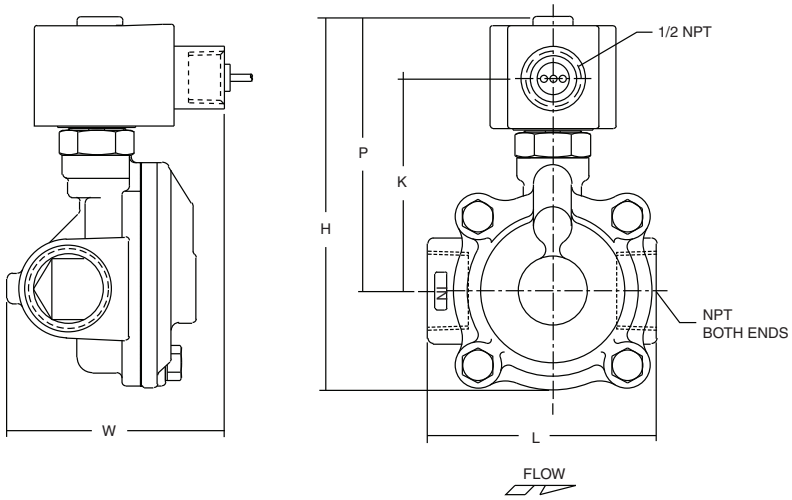

Dimensions: inches (mm)

Const. Ref. 39

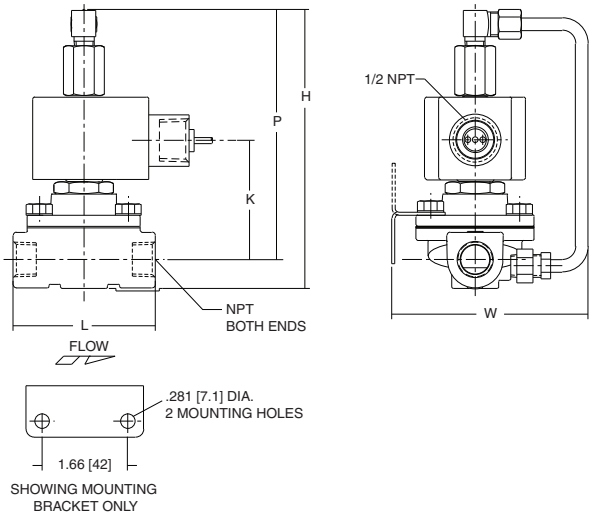

Const. Ref. 18, 29, 49

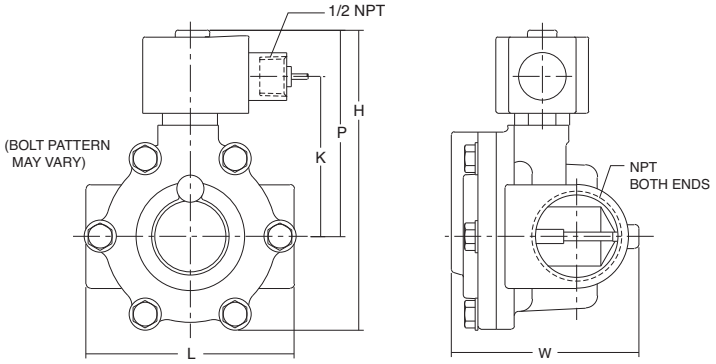

Const. Ref. 20, 21, 27, 30, 50, 51

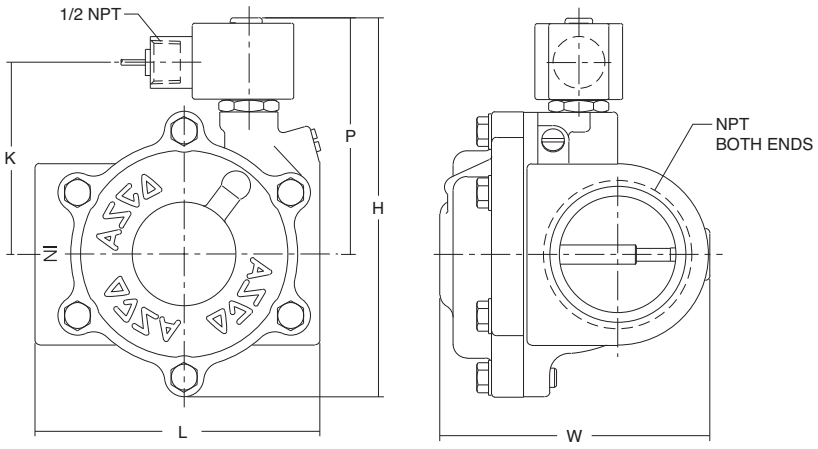

CS-304-500 : Identification sheet

VWTC PROJECT NUMBER:	Iqaluit WWTP	REV:	01
PROJECT NAME:	5000218036	SUBMITTED TO (COMPANY):	
ENGINEER:	G. HÉBERT	SUBMITTED TO (RESPONSIBLE)	
PROJECT MANAGER:	C. BEKAERT	PROJECT NUM REFERENCE.:	
PHONE NUMBER:		LOT NUMBER:	

SUPPLIER	EQPT CODE	EQPT TAG NO	DIA	DESCRIPTION	INFO 1	INFO 2	INFO 3	APPLIC.	NOTE	REV
TEKNO VALVE	VASDBR330455	SV-04-913	N/A	HP-500 VALVE	TYPE: SOLENOID VALVE//MANUFACTURER : ASCO//MODEL : 8345G001-120VAC//CONNECTION TYPE : THREADED | 6 mm (1/4") | 6 mm (1/4")//BODY : BRASS// SEAL | SEAT :NBR | // STEM : N/A	ACTING : PILOT	NORMALLY : CLOSED	HP-500		1

This page is intentionally left blank

Features

- Compact valves for general service applications
- Low-cost, 4-way valve when low flow is sufficient
- Mountable in any position

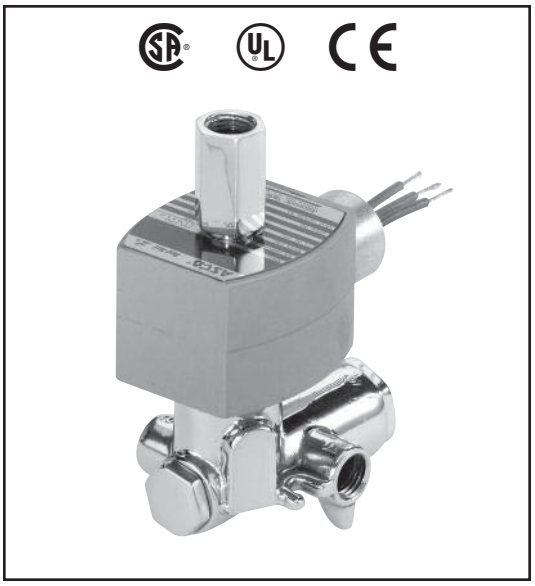

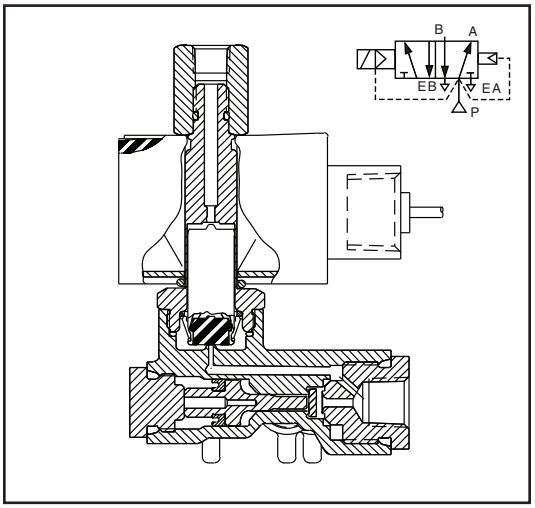

Construction

Valve Parts in Contact with Fluids		
Body	Brass	316 Stainless Steel
Seals and Disc	NBR and PA	
Core Tube	305 Stainless Steel	
Core and Plugnut	430F Stainless Steel	
Springs	302 Stainless Steel	
Shading Coil	Copper	Silver
Piston	PA	

Electrical

Standard Coil and Class of Insulation	Watt Rating and Power Consumption				Spare Coil Part Number					
		AC			General Purpose		Explosionproof (EF)		Explosionproof (EV)	
	DC Watts	Watts	VA Holding	VA Inrush	AC	DC	AC	DC	AC	DC
F	11.6	10.1	25	50	238610	238710	238614	238714	274614	274714

Standard Voltages: 24, 120, 240, 480 volts AC, 60 Hz (or 110, 220 volts AC, 50 Hz).
6, 12, 24, 120, 240 volts DC. Must be specified when ordering.
Other voltages are available when required.

Solenoid Enclosures

Standard: Watertight, Types 1, 2, 3, 3S, 4, and 4X.

Optional: Explosionproof and Watertight, Types 3, 3S, 4, 4X, 6, 6P, 7, and 9. (To order, add prefix "EF" or, for Explosionproof Stainless Steel trim and hub on Brass-Bodied valves, add "EV" to catalog number.)

See Optional Features Section for other available options.

Nominal Ambient Temp. Ranges

AC: 32˚F to 125˚F (0˚C to 52˚C)
DC: 32˚F to 104˚F (0˚C to 40˚C)

Refer to Engineering Section for details.

Approvals

CSA certified. UL listed as General Purpose Valve.
EV8345G081 solenoid only UL approved.
Meets applicable CE directives.
Refer to Engineering Section for details.

ATEX/IECEx certified with prefix "EV" as listed.
Refer to Optional Features Electrical Section for details.

Important

A Minimum Operating Pressure Differential must be maintained between the pressure and exhaust ports. Supply and exhaust piping must be full area, unrestricted. ASCO flow controls and other similar components must be installed in the cylinder lines only.

Refer to Engineering Section for details.

ASCO®

Specifications (English units)

Pipe Size (in)	Orifice Size (in)		Cv Flow Factor		Operating Pressure Differential (psi)							Max. Fluid Temp. ˚F		Brass Body	Stainless Steel Body		Watt Rating/ Class of Coil Insulation	
					Max. AC				Max. DC									
	Press.	Exh.	Inlet	Exh.	Min.	Air-Inert Gas	Water	Lt. Oil @ 50 SSU	Air-Inert Gas	Water	Lt. Oil @ 50 SSU	AC	DC	Catalog Number	Catalog Number	Const. Ref.	AC	DC
SINGLE SOLENOID																		
1/4	1/16	3/32	.09	.09	10	150	150	150	100	100	100	180	104	8345G001 ①	EV8345G081 ①	1	10.1/F	11.6/F
SINGLE SOLENOID AIR-ONLY CONSTRUCTION - Exhaust to Atmosphere																		
1/4	1/16	3/32	.09	.09	10	150	-	-	100	-	-	180	104	8345H003	-	1	10.1/F	11.6/F

① ATEX/IECEx certified with prefix "EV".

Specifications (Metric units)

Pipe Size (in)	Orifice Size (mm)		Kv Flow Factor (m^3/h)		Operating Pressure Differential (bar)							Max. Fluid Temp. ˚C		Brass Body	Stainless Steel Body		Watt Rating/ Class of Coil Insulation	
					Max. AC				Max. DC									
	Press.	Exh.	Inlet	Exh.	Min.	Air-Inert Gas	Water	Lt. Oil @ 50 SSU	Air-Inert Gas	Water	Lt. Oil @ 50 SSU	AC	DC	Catalog Number	Catalog Number	Const. Ref.	AC	DC
SINGLE SOLENOID																		
1/4	2	2	.08	.08	0.7	10	10	10	7	7	7	82	40	8345G001 ①	EV8345G081 ①	1	10.1/F	11.6/F
SINGLE SOLENOID AIR-ONLY CONSTRUCTION - Exhaust to Atmosphere																		
1/4	2	2	.08	.08	0.7	10	-	-	7	-	-	82	40	8345H003	-	1	10.1/F	11.6/F

① ATEX/IECEx certified with prefix "EV".

Dimensions inches (mm)

Const. Ref. 1

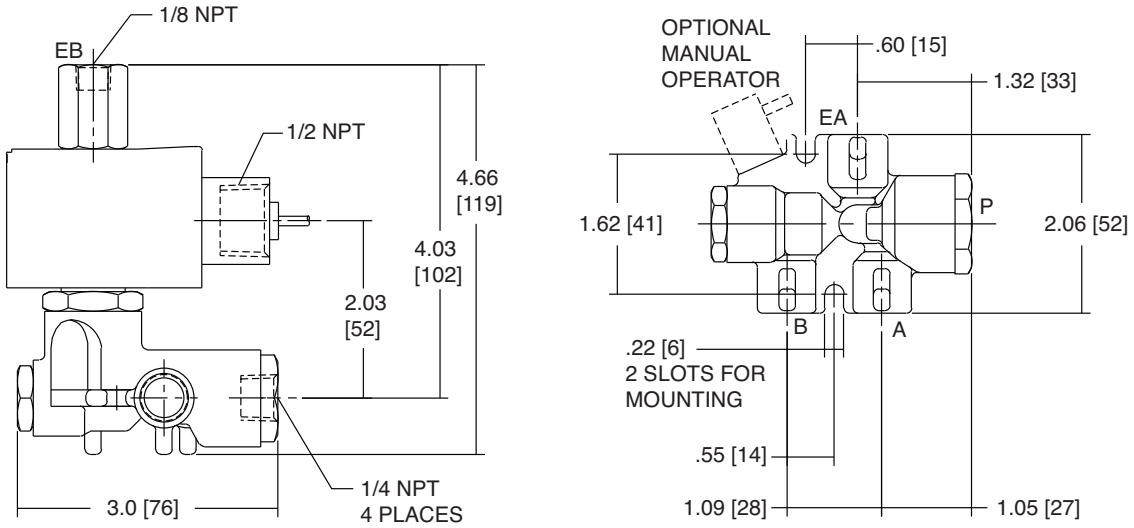

CS-405-112 : Identification sheet

VWTC PROJECT NUMBER:	Iqaluit WWTP	REV:	01
PROJECT NAME:	5000218036	SUBMITTED TO (COMPANY):	
ENGINEER:	G. HÉBERT	SUBMITTED TO (RESPONSIBLE)	
PROJECT MANAGER:	C. BEKAERT	PROJECT NUM REFERENCE.:	
PHONE NUMBER:		LOT NUMBER:	

SUPPLIER	EQPT CODE	EQPT TAG NO	DIA	DESCRIPTION	INFO 1	INFO 2	INFO 3	APPLIC.	NOTE	REV
ENDRESS & HAUSER	IEMRLE344048	LIT-04-942		HP-500 INSTRUMENT	LEVEL TRANSMITTER/MANUFACTURER : ENDRESS AND HAUSER/MODEL: PMC21-CA1V1ECVXJJ/ CA: Approval CSA GU / 1: Output 4-20mA / V: Electrical Connection Valve plug ISO4400 NPT1/2 / 1E: Sensor range 250mbar / C: Sensor range; kPa/Mpa	VXJ: Process connection: MNPT1/2 FNPT 1/4, 316L / J: Seal EPDM		HP-500		1
ENDRESS & HAUSER	IEMRLE344048	LIT-04-946		HP-500 INSTRUMENT	LEVEL TRANSMITTER/MANUFACTURER : ENDRESS AND HAUSER/MODEL: PMC21-CA1V1ECVXJJ/ CA: Approval CSA GU / 1: Output 4-20mA / V: Electrical Connection Valve plug ISO4400 NPT1/2 / 1E: Sensor range 250mbar / C: Sensor range; kPa/Mpa	VXJ: Process connection: MNPT1/2 FNPT 1/4, 316L / J: Seal EPDM		HP-500		1

This page is intentionally left blank

Technical Information
Cerabar PMC11, PMC21, PMP11, PMP21

Process pressure measurement



Pressure transducer with ceramic and metal sensors

Application

The Cerabar is a pressure transducer for the measurement of absolute and gauge pressure in gases, vapors, liquids and dust. The Cerabar can be used internationally thanks to a wide range of approvals and process connections.

Your benefits

- High reproducibility and long-term stability
- Reference accuracy: up to 0.3%
- Customized measuring ranges
  - Turn down up to 5:1
  - Sensor for measuring ranges up to 400 bar (6 000 psi)
- Housing and process isolating diaphragm made of 316L

Endress+Hauser
People for Process Automation

Table of contents

Document information 4
Document function 4
Symbols used 4
Documentation 5
Terms and abbreviations 6
Turn down calculation 7

Function and system design 8
Measuring principle - process pressure measurement 8
Measuring system 8
Device features 9
Product design 11
System integration 11

Input 12
Measured variable 12
Measuring range 12

Output 15
Output signal 15
Signal range 4 to 20 mA 15
Load (for 4 to 20 mA devices) 15
Load resistance (for 0 to 10 V devices) 15
Signal on alarm 4 to 20 mA 15
Dead time, time constant 15
Dynamic behavior 16

Power supply 17
Terminal assignment 17
Supply voltage 17
Current consumption and alarm signal 17
Power supply fault 18
Electrical connection 18
Cable specification 18
Residual ripple 18
Influence of power supply 18
Overvoltage protection 18

Performance characteristics of ceramic process isolating diaphragm 19
Reference operating conditions 19
Measuring uncertainty for small absolute pressure measuring ranges 19
Influence of the installation position 19
Resolution 19
Reference accuracy 19
Thermal change of the zero output and the output span . . . 19
Long-term stability 20
Switch-on time 20

Performance characteristics of metallic process isolating diaphragm 21
Reference operating conditions 21
Measuring uncertainty for small absolute pressure measuring ranges 21
Influence of the installation position 21
Resolution 21
Reference accuracy 21
Thermal change of the zero output and the output span . . . 21
Long-term stability 21
Switch-on time 21

Installation 22
Installation conditions 22
Influence of the installation position 22
Mounting location 22
Mounting instructions for oxygen applications 23

Environment 25
Ambient temperature range 25
Storage temperature range 25
Climate class 25
Degree of protection 25
Vibration resistance 25
Electromagnetic compatibility 25

Process 26
Process temperature range for devices with ceramic process isolating diaphragm 26
Process temperature range for devices with metallic process isolating diaphragm 26
Pressure specifications 27

Mechanical construction 28
Design, dimensions 28
Electrical connection 28
Housing 29
Process connections with internal, ceramic process isolating diaphragm 30
Process connections with internal, ceramic process isolating diaphragm 31
Process connections with internal, ceramic process isolating diaphragm 32
Process connections with internal, ceramic process isolating diaphragm 32
Process connections with internal, metal process isolating diaphragm 33
Process connections with internal, metal process isolating diaphragm 34
Process connections with internal, metal process isolating diaphragm 35
Process connections with internal, metal process isolating diaphragm 35
Process connections with flush-mounted, metal process isolating diaphragm 36
Materials in contact with process 37
Materials not in contact with process 38
Cleaning 39

Operability 40
Plug-on display PHX20 (optional) 40

Certificates and approvals 41
CE mark 41

RoHS 41
RCM-Tick marking 41
EAC conformity 41
Approval 41
Safety Instructions (XA) 41
Marine approval (pending) 42
Pressure Equipment Directive 2014/68/EU (PED) 42
Other standards and guidelines 42
CRN approval 43
Calibration unit 43
Calibration 43
Inspection certificates 43

Ordering information 44
Scope of delivery 44

Accessories 45
Weld-in adapter 45
Plug-on display PHX20 45
M12 plug connectors 45

Documentation 46
Field of Activities 46
Technical Information 46
Operating Instructions 46
Brief Operating Instructions 46
Safety Instructions (XA) 46

Document information

Document function

The document contains all the technical data on the device and provides an overview of the accessories and other products that can be ordered for the device.

Symbols used

Safety symbols

Symbol	Meaning
DANGER	**DANGER!** This symbol alerts you to a dangerous situation. Failure to avoid this situation will result in serious or fatal injury.
WARNING	**WARNING!** This symbol alerts you to a dangerous situation. Failure to avoid this situation can result in serious or fatal injury.
CAUTION	**CAUTION!** This symbol alerts you to a dangerous situation. Failure to avoid this situation can result in minor or medium injury.
NOTICE	**NOTE!** This symbol contains information on procedures and other facts which do not result in personal injury.

Electrical symbols

Symbol	Meaning	Symbol	Meaning
	**Protective ground connection** A terminal which must be connected to ground prior to establishing any other connections.		**Ground connection** A grounded terminal which, as far as the operator is concerned, is grounded via a grounding system.

Symbols for certain types of information

Symbol	Meaning
	**Permitted** Procedures, processes or actions that are permitted.
	**Forbidden** Procedures, processes or actions that are forbidden.
	**Tip** Indicates additional information.
	Reference to documentation
	Reference to page
	Reference to graphic
	Visual inspection

Symbols in graphics

Symbol	Meaning
1, 2, 3 ...	Item numbers
1., 2., 3., ...	Series of steps
A, B, C, ...	Views

Documentation

The document types listed are available:
In the Download Area of the Endress+Hauser Internet site: www.endress.com → Download

Brief Operating Instructions (KA): getting the 1st measured value quickly

The Brief Operating Instructions contain all the essential information from incoming acceptance to initial commissioning.

Operating Instructions (BA): your comprehensive reference

These Operating Instructions contain all the information that is required in various phases of the life cycle of the device: from product identification, incoming acceptance and storage, to mounting, connection, operation and commissioning through to troubleshooting, maintenance and disposal.

Safety Instructions (XA)

Safety Instructions (XA) are supplied with the device depending on the approval. These instructions are an integral part of the Operating Instructions.

Device	Directive	Documentation	Option [1]
PMP21	ATEX II 1/2G Ex ia IIC T4 Ga/Gb	XA01271P	BA
PMC21	ATEX II 2G Ex ia IIC T4 Gb	XA01271P	BB
PMC21 PMP21	ATEX II 3G Ex ec IIC T4 Gc	XA01533P	BC
PMC21 PMP21	FM IS Cl. I, Div.1 Gr. A-D T4	XA01321P	FA
PMC21 PMP21	CSA C/US IS Cl. I Div. 1 Gr. A-D	XA01322P	CB
PMC21 PMP21	EAC Ex ia IIC T4 Ga/Gb	XA01540P	GA
PMC21 PMP21	IEC Ex ia IIC T4 Ga/Gb	XA01271P	IA
PMC21 PMP21	NEPSI Ex ia IIC T4	XA01363P	NA
PMC21 PMP21	TIIS Ex ia IIC T4	In preparation	TA

1) Product Configurator, order code for "Approval"

The nameplate provides information on the Safety Instructions (XA) that are relevant for the device.

Terms and abbreviations

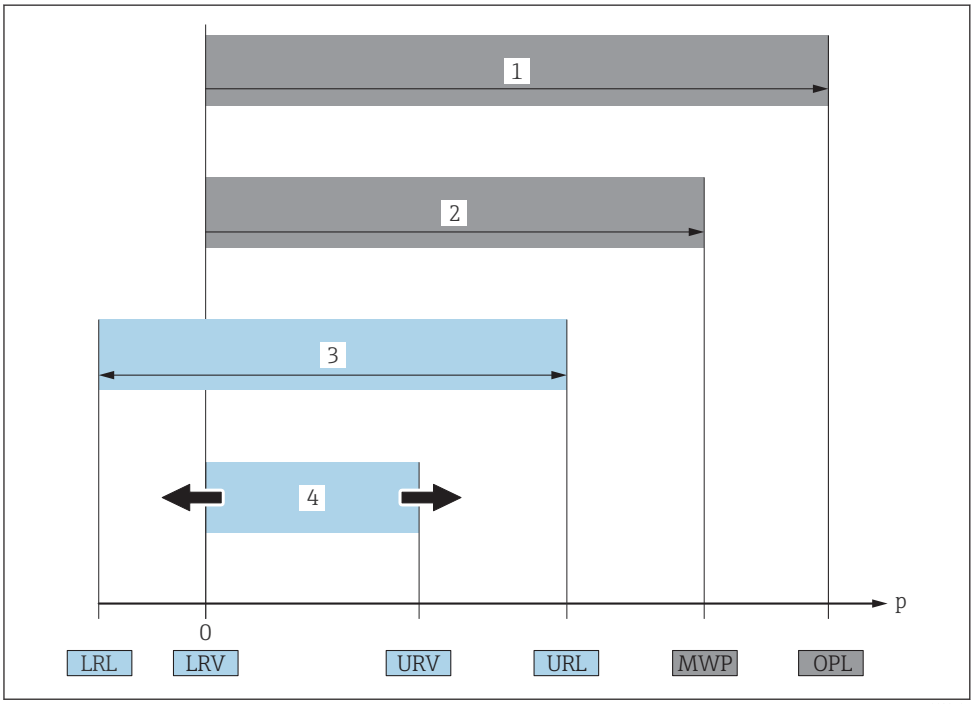

Item	Term/ abbreviation	Explanation
1	OPL	The OPL (over pressure limit = sensor overload limit) for the measuring device depends on the lowest-rated element, with regard to pressure, of the selected components, i.e. the process connection has to be taken into consideration in addition to the measuring cell. Also observe pressure-temperature dependency. For the relevant standards and additional notes, see the "Pressure specifications" section → 27 . The OPL may only be applied for a limited period of time.
2	MWP	The MWP (maximum working pressure) for the sensors depends on the lowest-rated element, with regard to pressure, of the selected components, i.e. the process connection has to be taken into consideration in addition to the measuring cell. Also observe pressure-temperature dependency. For the relevant standards and additional notes, see the "Pressure specifications" section → 27 . The MWP may be applied at the device for an unlimited period. The MWP can also be found on the nameplate.
3	Maximum sensor measuring range	Span between LRL and URL This sensor measuring range is equivalent to the maximum calibratable/adjustable span.
4	Calibrated/ adjusted span	Span between LRV and URV Factory setting: 0 to URL Other calibrated spans can be ordered as customized spans.
p	-	Pressure
-	LRL	Lower range limit
-	URL	Upper range limit
-	LRV	Lower range value
-	URV	Upper range value
-	TD (turn down)	Turn down The turn down is preset at the factory and cannot be changed. Example - see the following section.

Turn down calculation

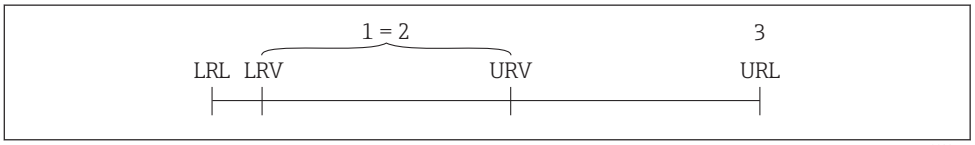

1 Calibrated/adjusted span
2 Zero point-based span
3 URL sensor

Example

- Sensor:10 bar (150 psi)
- Upper range value (URL) = 10 bar (150 psi)

Turn down (TD):

$$TD = \frac{URL}{|URV - LRV|}$$

$$TD = \frac{10\ \text{bar (150 psi)}}{|5\ \text{bar (75 psi)} - 0\ \text{bar (0 psi)}|} = 2$$

In this example, the TD is 2:1.
This span is based on the zero point.

- Calibrated/adjusted span: 0 to 5 bar (0 to 75 psi)
- Lower range value (LRV) = 0 bar (0 psi)
- Upper range value (URV) = 5 bar (75 psi)

Function and system design

Measuring principle - process pressure measurement

Devices with ceramic process isolating diaphragm (Ceraphire®)

The ceramic sensor is an oil-free sensor, i.e. the process pressure acts directly on the robust ceramic process isolating diaphragm and causes it to deflect. A pressure-dependent change in capacitance is measured at the electrodes of the ceramic substrate and the process isolating diaphragm. The measuring range is determined by the thickness of the ceramic process isolating diaphragm.

Advantages:
- Guaranteed overload resistance up to 40 times the nominal pressure
- The ultrapure 99.9% ceramic (Ceraphire®, see also "www.endress.com/ceraphire") ensures:
  - Extremely high chemical durability
  - High mechanical durability
- Can be used in absolute vacuum
- Small measuring ranges

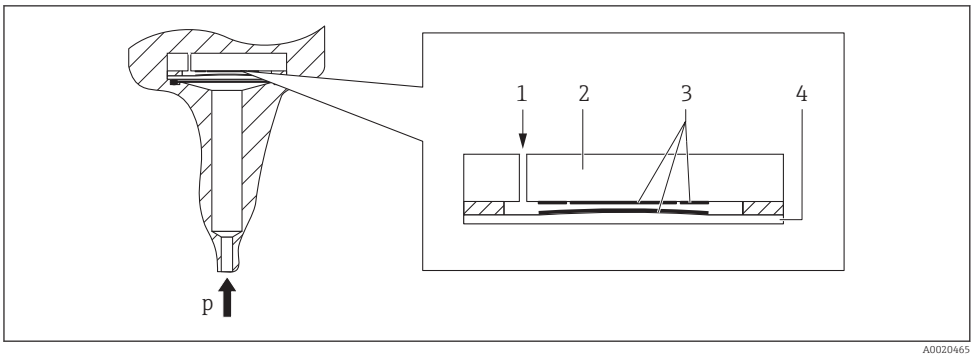

A0020465

1 Air pressure (gauge pressure sensors)
2 Ceramic substrate
3 Electrodes
4 Ceramic process isolating diaphragm

Devices with metallic process isolating diaphragm

The process pressure deflects the metal process isolating diaphragm of the sensor and a fill fluid transfers the pressure to a Wheatstone bridge (semiconductor technology). The pressure-dependent change in the bridge output voltage is measured and evaluated.

Advantages:
- Can be used for high process pressures
- Fully welded sensor
- Slim, flush-mounted process connections available

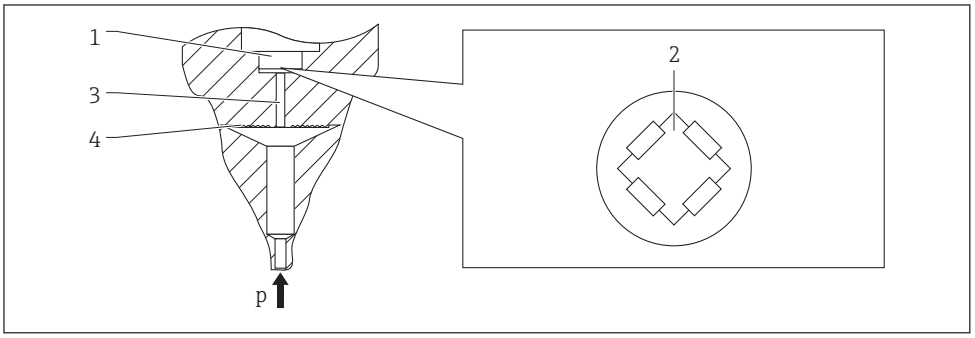

A0016448

1 Silicon measuring element, substrate
2 Wheatstone bridge
3 Channel with fill fluid
4 Metal process isolating diaphragm

Measuring system

A complete measuring system comprises:

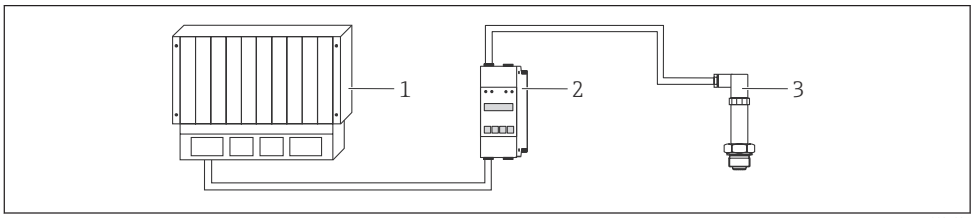

1 PLC (programmable logic control)
2 e.g. RN221N / RMA42 (if required)
3 Pressure transducer

Device features

	PMC11
Field of application	Gauge pressure
Process connections	▪ Thread ISO 228 ▪ Thread ASME ▪ DIN 13
Measuring ranges	From −400 to +400 mbar (−6 to +6 psi) to −1 to +40 bar (−15 to +600 psi).
OPL (depends on the measuring range)	Max. 0 to +60 bar (0 to +900 psi)
Process temperature range	−25 to +85 °C (−13 to +185 °F)
Ambient temperature range	−40 to +70 °C (−40 to +158 °F)
Reference accuracy	Up to 0.5 %, TD 5:1, for details see the "Reference accuracy" section.
Supply voltage	▪ 4 to 20 mA output: 10 to 30V DC ▪ 0 to 10 V output: 12 to 30V DC
Output	▪ 4 to 20 mA ▪ 0 to 10 V
Material	▪ Housing made from 316L (1.4404) ▪ Process connections made from 316L ▪ Process isolating diaphragm made from Al_2O_3 aluminum-oxide ceramic, (Ceraphire®), ultrapure 99.9 %
Options	▪ Certificate of calibration ▪ Cleaned from oil+grease

	PMP11
Field of application	Gauge pressure
Process connections	▪ Thread ISO 228, also flush-mount ▪ Thread ASME ▪ DIN 13
Measuring ranges	From −400 to +400 mbar (−6 to +6 psi) to −1 to +40 bar (−15 to +600 psi).
OPL (depends on the measuring range)	Max. 0 to +160 bar (0 to +2 400 psi)
Process temperature range	−25 to +85 °C (−13 to +185 °F)
Ambient temperature range	−40 to +70 °C (−40 to +158 °F)
Reference accuracy	Up to 0.5 %, TD 5:1, for details see the "Reference accuracy" section.
Supply voltage	▪ 4 to 20 mA output: 10 to 30V DC ▪ 0 to 10 V output: 12 to 30V DC
Output	▪ 4 to 20 mA ▪ 0 to 10 V

	PMP11
Material	▪ Housing made from 316L (1.4404) ▪ Process connections made from 316L (1.4404) ▪ Process isolating diaphragm made from 316L (1.4435)
Options	▪ Certificate of calibration ▪ Cleaned from oil+grease

	PMC21
Field of application	Gauge pressure and absolute pressure
Process connections	▪ Thread ISO 228 ▪ Thread DIN 13 ▪ Thread ASME ▪ Thread JIS
Measuring ranges	From −100 to +100 mbar (−1.5 to +1.5 psi) to −1 to +40 bar (−15 to +600 psi).
OPL (depends on the measuring range)	Max. 0 to +60 bar (0 to +900 psi)
Process temperature range	−25 to +100 °C (−13 to +212 °F)
Ambient temperature range	▪ −40 to +85 °C (−40 to +185 °F) ▪ Devices for hazardous areas: −40 to +70 °C (−40 to +158 °F)
Reference accuracy	Up to 0.3 %, TD 5:1, for details see the "Reference accuracy" section.
Supply voltage	10 to 30 V DC
Output	4 to 20 mA
Material	▪ Housing made from 316L (1.4404) ▪ Process connections made from 316L ▪ Process isolating diaphragm made from Al_2O_3 aluminum-oxide ceramic, (Ceraphire®), ultrapure 99.9 %
Options	▪ Ex approvals ▪ Marine certificate ▪ Min. alarm current setting ▪ 3.1 Material certificates ▪ Certificate of calibration ▪ Cleaned from oil+grease ▪ Cleaned for O_2 service

	PMP21
Field of application	Gauge pressure and absolute pressure
Process connections	▪ Thread ISO 228, also flush-mount ▪ Thread DIN 13 ▪ Thread ASME ▪ Thread JIS
Measuring ranges	From −400 to +400 mbar (−6 to +6 psi) to −1 to +400 bar (−15 to +6 000 psi).
OPL (depends on the measuring range)	Max. 0 to +600 bar (0 to +9 000 psi)
Process temperature range	−40 to +100 °C (−40 to +212 °F)
Ambient temperature range	−40 to +85 °C (−40 to +185 °F)
Reference accuracy	Up to 0.3 %, TD 5:1, for details see the "Reference accuracy" section.
Supply voltage	10 to 30 V DC
Output	4 to 20 mA

	PMP21
Material	▪ Housing made from 316L (1.4404) ▪ Process connections made from 316L (1.4404) ▪ Process isolating diaphragm made from 316L (1.4435)
Options	▪ Ex approvals ▪ Marine certificate ▪ Min. alarm current setting ▪ 3.1 Material certificates ▪ Certificate of calibration ▪ Cleaned from oil+grease

Product design

Overview	Position	Description
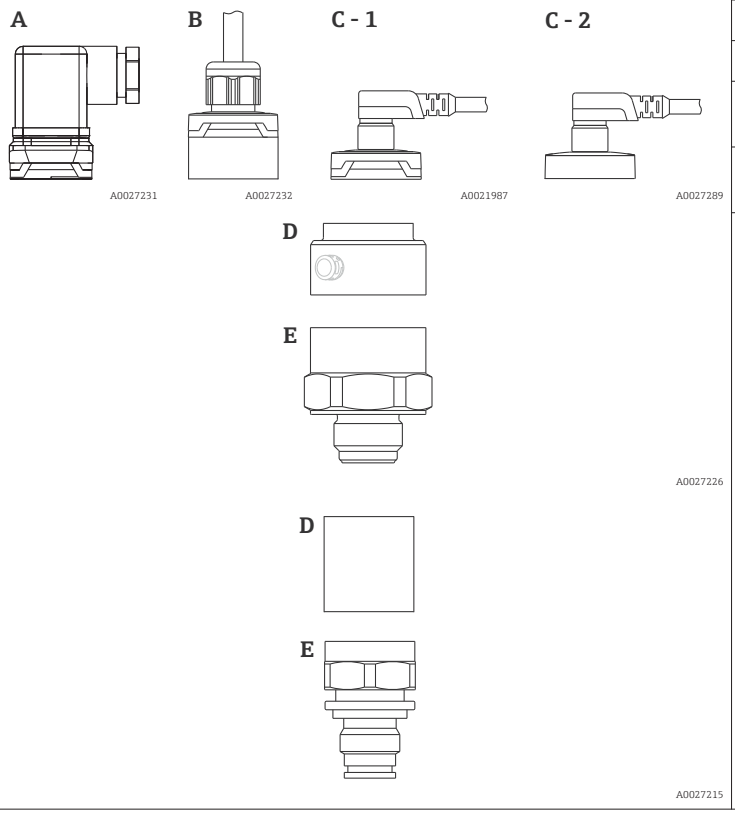	A	Valve plug
	B	Cable
	C- 1	M12 plug Housing cap made of plastic
	C- 2	M12 plug For Ex ec and IP69: metal housing cap
	D E	Housing Process connection (sample illustration)

System integration

The device can be given a tag name (max. 8 alphanumeric characters).

Description	Option [1]
Measuring point (TAG), see additional specifications	Z1

1) Product Configurator, order code for "Identification"

Input

Measured variable

Measured process variable

- PMC11: gauge pressure
- PMP11: gauge pressure
- PMC21: gauge pressure or absolute pressure
- PMP21: gauge pressure or absolute pressure

Calculated process variable

Pressure

Measuring range

Ceramic process isolating diaphragm

Sensor	Device	Maximum Sensor measuring range		Lowest calibratable span [1]	MWP	OPL	Factory settings [2]	Option [3]
		lower (LRL)	upper (URL)					
		[bar (psi)]	[bar (psi)]	[bar (psi)]	[bar (psi)]	[bar (psi)]		
Devices for gauge pressure measurement								
100 mbar (1.5 psi) [4]	PMC21	−0.1 (−1.5)	+0.1 (+1.5)	0.02 (0.3)	2.7 (40.5)	4 (60)	0 to 100 mbar (0 to 1.5 psi)	1C
250 mbar (4 psi) [5]	PMC21	−0.25 (−4)	+0.25 (+4)	0.05 (1)	3.3 (49.5)	5 (75)	0 to 250 mbar (0 to 4 psi)	1E
400 mbar (6 psi) [6]	PMC11 PMC21	−0.4 (−6)	+0.4 (+6)	0.08 (1.2)	5.3 (79.5)	8 (120)	0 to 400 mbar (0 to 6 psi)	1F
1 bar (15 psi) [6]	PMC11 PMC21	−1 (−15)	+1 (+15)	0.2 (3)	6.7 (100.5)	10 (150)	0 to 1 bar (0 to 15 psi)	1H
2 bar (30 psi) [6]	PMC11 PMC21	−1 (−15)	+2 (+30)	0.4 (0.6)	12 (180)	18 (270)	0 to 2 bar (0 to 30 psi)	1K
4 bar (60 psi) [6]	PMC11 PMC21	−1 (−15)	+4 (+60)	0.8 (1.2)	16.7 (250.5)	25 (375)	0 to 4 bar (0 to 60 psi)	1M
6 bar (90 psi) [6]	PMC11 PMC21	−1 (−15)	+6 (+90)	2.4 (36)	26.7 (400.5)	40 (600)	0 to 6 bar (0 to 90 psi)	1N
10 bar (150 psi) [6]	PMC11 PMC21	−1 (−15)	+10 (+150)	2 (30)	26.7 (400.5)	40 (600)	0 to 10 bar (0 to 150 psi)	1P
16 bar (240 psi) [6]	PMC11 PMC21	−1 (−15)	+16 (+240)	6.4 (96)	40 (600)	60 (900)	0 to 16 bar (0 to 240 psi)	1Q
25 bar (375 psi) [6]	PMC11 PMC21	−1 (−15)	+25 (+375)	10 (150)	40 (600)	60 (900)	0 to 25 bar (0 to 375 psi)	1R
40 bar (600 psi) [6]	PMC11 PMC21	−1 (−15)	+40 (+600)	8 (120)	40 (600)	60 (900)	0 to 40 bar (0 to 600 psi)	1S

Sensor	Device	Maximum Sensor measuring range		Lowest calibratable span [1]	MWP	OPL	Factory settings [2]	Option [3]
		lower (LRL)	upper (URL)					
		[bar (psi)]	[bar (psi)]	[bar (psi)]	[bar (psi)]	[bar (psi)]		
Devices for absolute pressure measurement								
100 mbar (1.5 psi) [6]	PMC21	0	+0.1 (+1.5)	0.1 (1.5)	2.7 (40.5)	4 (60)	0 to 100 mbar (0 to 1.5 psi)	2C
250 mbar (4 psi) [6]	PMC21	0	+0.25 (+4)	0.25 (4)	3.3 (49.5)	5 (75)	0 to 250 mbar (0 to 4 psi)	2E
400 mbar (6 psi) [6]	PMC21	0	+0.4 (+6)	0.4 (6)	5.3 (79.5)	8 (120)	0 to 400 mbar (0 to 6 psi)	2F
1 bar (15 psi) [6]	PMC21	0	+1 (+15)	0.4 (6)	6.7 (100.5)	10 (150)	0 to 1 bar (0 to 15 psi)	2H
2 bar (30 psi) [6]	PMC21	0	+2 (+30)	0.4 (0.6)	12 (180)	18 (270)	0 to 2 bar (0 to 30 psi)	2K
4 bar (60 psi) [6]	PMC21	0	+4 (+60)	0.8 (1.2)	16.7 (250.5)	25 (375)	0 to 4 bar (0 to 60 psi)	2M
10 bar (150 psi) [6]	PMC21	0	+10 (+150)	2 (30)	26.7 (400.5)	40 (600)	0 to 10 bar (0 to 150 psi)	2P
40 bar (600 psi) [6]	PMC21	0	+40 (+600)	8 (120)	40 (600)	60 (900)	0 to 40 bar (0 to 600 psi)	2S

1) Highest turn down that can be set at the factory: 5:1. The turn down is preset and cannot be changed.
2) Other measuring ranges (e.g. −1 to +5 bar (−15 to 75 psi)) can be ordered with customer-specific settings (see the Product Configurator, order code for "Calibration; Unit" option "J"). It is possible to invert the output signal (LRV = 20 mA; URV = 4 mA). Prerequisite: URV < LRV
3) Product Configurator, order code for "Sensor range"
4) Vacuum resistance: 0.7 bar (10.5 psi) abs
5) Vacuum resistance: 0.5 bar (7.5 psi) abs
6) Vacuum resistance: 0 bar (0 psi) abs

Maximum turn down which can be ordered for absolute pressure and gauge pressure sensors

Devices for gauge pressure measurement
- 6 bar (90 psi), 16 bar (240 psi), 25 bar (375 psi): TD 1:1 to TD 2.5:1
- All other measuring ranges: TD 1:1 to TD 5:1

Devices for absolute pressure measurement
- 100 mbar (1.5 psi), 250 mbar (4 psi), 400 mbar (6 psi): TD 1:1
- 1 bar (15 psi): TD 1:1 to TD 2.5:1
- All other measuring ranges: TD 1:1 to TD 5:1

Metal process isolating diaphragm

Sensor	Device	Maximum Sensor measuring range		Lowest calibratable span [1]	MWP	OPL	Factory settings [2]	Option [3]
		lower (LRL)	upper (URL)					
		[bar (psi)]	[bar (psi)]	[bar (psi)]	[bar (psi)]	[bar (psi)]		
Devices for gauge pressure measurement								
400 mbar (6 psi) [4]	PMP11 PMP21	−0.4 (−6)	+0.4 (+6)	0.4 (6)	1 (15)	1.6 (24)	0 to 400 mbar (0 to 6 psi)	1F
1 bar (15 psi) [4]	PMP11 PMP21	−1 (−15)	+1 (+15)	0.4 (6)	2.7 (40.5)	4 (60)	0 to 1 bar (0 to 15 psi)	1H
2 bar (30 psi) [4]	PMP11 PMP21	−1 (−15)	+2 (+30)	0.4 (6)	6.7 (100.5)	10 (150)	0 to 2 bar (0 to 30 psi)	1K
4 bar (60 psi) [4]	PMP11 PMP21	−1 (−15)	+4 (+60)	0.8 (12)	10.7 (160.5)	16 (240)	0 to 4 bar (0 to 60 psi)	1M
6 bar (90 psi) [4]	PMP11 PMP21	−1 (−15)	+6 (+90)	2.4 (36)	16 (240)	24 (360)	0 to 6 bar (0 to 90 psi)	1N
10 bar (150 psi) [4]	PMP11 PMP21	−1 (−15)	+10 (+150)	2 (30)	25 (375)	40 (600)	0 to 10 bar (0 to 150 psi)	1P
16 bar (240 psi) [4]	PMP11 PMP21	−1 (−15)	+16 (+240)	5 (75)	25 (375)	64 (960)	0 to 16 bar (0 to 240 psi)	1Q
25 bar (375 psi) [4]	PMP11 PMP21	−1 (−15)	+25 (+375)	5 (75)	25 (375)	100 (1500)	0 to 25 bar (0 to 375 psi)	1R
40 bar (600 psi) [4]	PMP11 PMP21	−1 (−15)	+40 (+600)	8 (120)	100 (1500)	160 (2400)	0 to 40 bar (0 to 600 psi)	1S
100 bar (1 500 psi) [4]	PMP21	−1 (−15)	+100 (+1500)	20 (300)	100 (1500)	160 (2400)	0 to 100 bar (0 to 1 500 psi)	1U
400 bar (6 000 psi) [4]	PMP21	−1 (−15)	+400 (+6000)	80 (1200)	400 (6000)	600 (9000)	0 to 400 bar (0 to 6 000 psi)	1W
Devices for absolute pressure measurement								
400 mbar (6 psi) [4]	PMP21	0 (0)	0.4 (+6)	0.4 (6)	1 (15)	1.6 (24)	0 to 400 mbar (0 to 6 psi)	2F
1 bar (15 psi) [4]	PMP21	0 (0)	1 (+15)	0.4 (6)	2.7 (40.5)	4 (60)	0 to 1 bar (0 to 15 psi)	2H
2 bar (30 psi) [4]	PMP21	0 (0)	2 (+30)	0.4 (6)	6.7 (100.5)	10 (150)	0 to 2 bar (0 to 30 psi)	2K
4 bar (60 psi) [4]	PMP21	0 (0)	4 (+60)	0.8 (12)	10.7 (160.5)	16 (240)	0 to 4 bar (0 to 60 psi)	2M
10 bar (150 psi) [4]	PMP21	0 (0)	10 (+150)	2 (30)	25 (375)	40 (600)	0 to 10 bar (0 to 150 psi)	2P
40 bar (600 psi) [4]	PMP21	0 (0)	+40 (+600)	8 (120)	100 (1500)	160 (2400)	0 to 40 bar (0 to 600 psi)	2S
100 bar (1 500 psi) [4]	PMP21	0 (0)	+100 (+1500)	20 (300)	100 (1500)	160 (2400)	0 to 100 bar (0 to 1 500 psi)	2U
400 bar (6 000 psi) [4]	PMP21	0 (0)	+400 (+6000)	80 (1200)	400 (6000)	600 (9000)	0 to 400 bar (0 to 6 000 psi)	2W

1) Highest turn down that can be set at the factory: 5:1. The turn down is preset and cannot be changed.
2) Other measuring ranges (e.g. −1 to +5 bar (−15 to 75 psi)) can be ordered with customer-specific settings (see the Product Configurator, order code for "Calibration; Unit" option "J"). It is possible to invert the output signal (LRV = 20 mA; URV = 4 mA). Prerequisite: URV < LRV
3) Product Configurator, order code for "Sensor range"
4) Vacuum resistance: 0.01 bar (0.145 psi) abs

Maximum turn down which can be ordered for absolute pressure and gauge pressure sensors

Device	Range	400 mbar (6 psi)	1 bar (15 psi) 6 bar (90 psi) 16 bar (240 psi)	2 bar (30 psi) 4 bar (60 psi) 10 bar (150 psi) 25 to 400 bar (375 to 6 000 psi)
PMP11	0.5%	TD 1:1	TD 1:1 to TD 2.5:1	TD 1:1 to TD 5:1
PMP21	0.3%	TD 1:1	TD 1:1 to TD 2.5:1	TD 1:1 to TD 5:1

Output

Output signal

Description	Option [1]
4 to 20 mA (2-wire)	1
PMC11: 0 to 10 V output (3-wire) PMP11: 0 to 10 V output (3-wire)	2

1) Product Configurator, order code for "Output"

Signal range 4 to 20 mA

3.8 mA to 20.5 mA

Load (for 4 to 20 mA devices)

In order to guarantee sufficient terminal voltage in two-wire devices, a maximum load resistance R_L (including line resistance) must not be exceeded, depending on the supply voltage U_B of the supply unit.

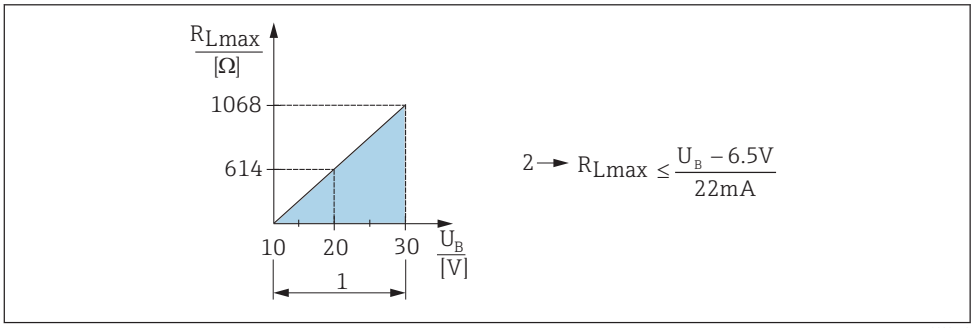

A0029452

1 Power supply 10 to 30 V DC
2 R_{Lmax} maximum load resistance
U_B Supply voltage

Load resistance (for 0 to 10 V devices)

The load resistance must be ≥ 5 [kΩ].

Signal on alarm 4 to 20 mA

The response of the output to error is regulated in accordance with NAMUR NE43.

Factory setting MAX alarm: >21 mA

alarm current

Device	Description	Option
PMC21 PMP21	Adjusted min. alarm current	IA [1]

1) Product Configurator order code for "Service"

Dead time, time constant

Presentation of the dead time and the time constant:

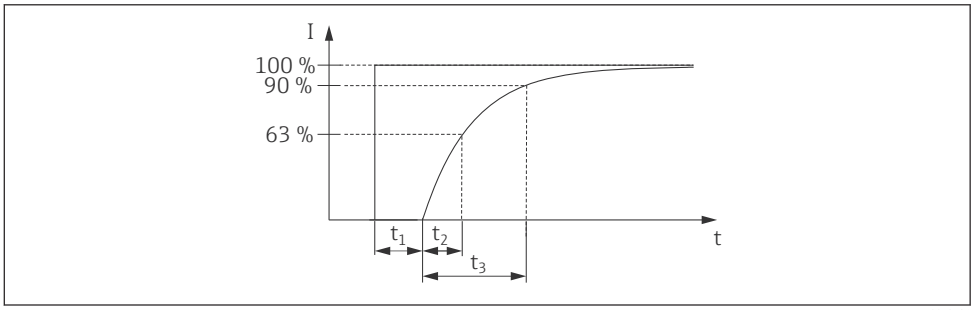

A0019786

Dynamic behavior

Analog electronics

Dead time (t_1) [ms]	Time constant (T63), t_2 [ms]	Time constant (T90), t_3 [ms]
6 ms	10 ms	15 ms

Power supply

WARNING

Limitation of electrical safety due to incorrect connection!

- In accordance with IEC/EN61010 a separate circuit breaker must be provided for the device .
- When using the measuring device in hazardous areas, installation must comply with the corresponding national standards and regulations and the Safety Instructions or Installation or Control Drawings.
- All explosion protection data are given in separate documentation which is available upon request. The Ex documentation is supplied as standard with all devices approved for use in explosion hazardous areas.
- Protective circuits against reverse polarity, HF influences and overvoltage peaks are integrated.
- The device must be operated with a 500 mA fine-wire fuse (slow-blow).

Terminal assignment

4 to 20 mA output

Device	M12 plug	Valve plug	Cable
PMC11 PMP11 PMC21 PMP21	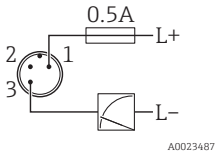	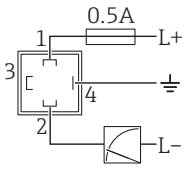	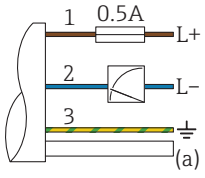 *1 brown = L+* *2 blue = L-* *3 green/yellow = ground connection* *(a) reference air hose*

0 to 10 V output

Device	M12 plug	Valve plug	Cable
PMC11 PMP11	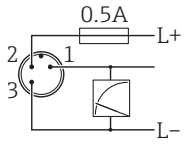	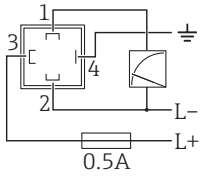	-

Supply voltage

Electronic version	Device	Supply voltage
4 to 20 mA output	PMC11 PMP11 PMC21 PMP21	10 to 30 V DC
0 to 10 V output	PMC11 PMP11	12 to 30 V DC

Current consumption and alarm signal

Number of wires	Device	Normal operation	Alarm signal [1]
2	PMC11 PMP11 PMC21 PMP21	≤ 26 mA	> 21 mA
3	PMC11 PMP11	< 12 mA	11 V

1) For MAX alarm (factory setting)

Power supply fault

- Behavior in the event of overvoltage (>30 V):
  The device works continuously up to 34 V DC without damage. If the supply voltage is exceeded, the specified characteristics are no longer guaranteed.
- Behavior in the event of undervoltage:
  If the supply voltage falls below the minimum value, the device switches off in a defined manner (status same as for no power supply).

Electrical connection

Degree of protection

Device	Connection	Climate class	Option [1]
PMP21 PMP21	Cable5 m (16 ft)	IP66/68 [2] NEMA type 4X/6P enclosure	A
PMP21 PMP21	Cable10 m (33 ft)	IP66/68 [2] NEMA type 4X/6P enclosure	B
PMP21 PMP21	Cable25 m (82 ft)	IP66/68 [2] NEMA type 4X/6P enclosure	C
PMC11 PMP11	M12 plug	IP65 NEMA type 4X enclosure	L
PMC21 PMP21	M12 plug	IP65/67 NEMA type 4X enclosure	M
PMC11 PMP11 PMC21 PMP21	Valve plug ISO4400 M16	IP65 NEMA type 4X enclosure	U
PMC11 PMP11 PMC21 PMP21	Valve plug ISO4400 NPT ½	IP65 NEMA type 4X enclosure	V

1) Product Configurator, order code for "Electrical connection"
2) IP 68 (1.83m H2O for 24 h)

Cable specification

For valve plug: < 1.5 mm^2 (16 AWG) and Ø3.5 to 6.5 mm (0.14 to 0.26 in)

Residual ripple

The device operates within the reference accuracy up to ±5 % of the residual ripple of the supply voltage, within the permitted voltage range.

Influence of power supply

≤0.005 % of the URL/1 V

Overvoltage protection

The device does not contain any special elements to protect against overvoltage ("wire to ground"). Nevertheless the requirements of the applicable EMC standard EN 61000-4-5 (testing voltage 1kV EMC wire/ground) are met.

Performance characteristics of ceramic process isolating diaphragm

Reference operating conditions

- As per IEC 60770
- Ambient temperature T_A = constant, in the range of:+21 to +33 °C (+70 to +91 °F)
- Humidity φ = constant, in the range of 5 to 80 % rH
- Ambient pressure p_A = constant, in the range of:860 to 1060 mbar (12.47 to 15.37 psi)
- Position of measuring cell = constant, in range: horizontal ±1° (see also "Influence of the installation position" section → 🖹 22)
- Zero based span
- Material of process isolating diaphragm: Al_2O_3 (aluminum-oxide ceramic, Ceraphire®)
- Supply voltage: 24 V DC ±3 V DC
- Load: 320 Ω (at 4 to 20 mA output)

Measuring uncertainty for small absolute pressure measuring ranges

The smallest extended uncertainty of measurement that can delivered by our standards is:

- in range 1 to 30 mbar (0.0145 to 0.435 psi): 0.4 % of reading
- in range < 1 mbar (0.0145 psi): 1 % of reading.

Influence of the installation position

→ 🖹 22

Resolution

Current output: min. 1.6 µA

Reference accuracy

The reference accuracy contains the non-linearity [DIN EN 61298-2 3.11] including the pressure hysteresis [DIN EN 61298-23.13] and non-repeatability [DIN EN 61298-2 3.11] in accordance with the limit point method as per [DIN EN 60770].

Device	% of the calibrated span to the maximum turn down		
	Reference accuracy	Non-linearity [1]	Non-repeatability
PMC11 [2]	±0.5	±0.1	±0.1
PMC21	±0.3	±0.1	±0.1

1) The non-linearity for the 40 bar (600 psi) sensor can be up to ± 0.15% of the calibrated span up to the maximum turn down.
2) For devices with 0 to 10 V output, a non-linearity of up to max. 0.3 V can occur for signal values below 0.03 V.

Overview of the turn down ranges → 🖹 13

Measuring ranges	Turn down	Device	% of URL
100 mbar (1.5 psi)to 40 bar (600 psi)	1:1 to TD 5:1	PMC11	±0.5
		PMC21	±0.3 [1]

1) For the 100 mbar (1.5 psi) and 250 mbar (4 psi) measuring ranges, the following applies: In the event of heat effects on the initial reference conditions, an additional deviation of max. 0.3 mbar (4.5 psi) from the zero point or the output span is possible.

Thermal change of the zero output and the output span

Measuring cell	−20 to +85 °C (−4 to +185 °F)	−40 to −20 °C (−40 to −4 °F) +85 to +100 °C (+185 to +212 °F)
	% of URL for TD 1:1	
<1 bar (15 psi)	<1	<1.2
≥ 1 bar (15 psi)	<0.8	<1

Long-term stability

1 year	5 years	8 years
% of URL		
±0.2	±0.4	±0.45

Switch-on time

≤2 s (For small measuring ranges, pay attention to the thermal compensation effects.)

Performance characteristics of metallic process isolating diaphragm

Reference operating conditions

- As per IEC 60770
- Ambient temperature T_A = constant, in the range of:+21 to +33 °C (+70 to +91 °F)
- Humidity φ = constant, in the range of 5 to 80 % rH
- Ambient pressure p_A = constant, in the range of:860 to 1 060 mbar (12.47 to 15.37 psi)
- Position of measuring cell = constant, in range: horizontal ±1° (see also "Influence of the installation position" section → 🖹 22)
- Zero based span
- Process isolating diaphragm material: AISI 316L (1.4435)
- Filling oil: NSF-H1 synthetic oil in accordance with FDA 21 CFR 178.3570
- Supply voltage: 24 V DC ±3 V DC
- Load: 320 Ω (at 4 to 20 mA output)

Measuring uncertainty for small absolute pressure measuring ranges

The smallest extended uncertainty of measurement that can delivered by our standards is:

- in range 1 to 30 mbar (0.0145 to 0.435 psi): 0.4 % of reading
- in range < 1 mbar (0.0145 psi): 1 % of reading.

Influence of the installation position

→ 🖹 22

Resolution

Current output: min. 1.6 µA

Reference accuracy

The reference accuracy contains the non-linearity [DIN EN 61298-2 3.11] including the pressure hysteresis [DIN EN 61298-23.13] and non-repeatability [DIN EN 61298-2 3.11] in accordance with the limit point method as per [DIN EN 60770].

Device	% of the calibrated span to the maximum turn down		
	Reference accuracy	Non-linearity	Non-repeatability
PMP11 [1)]	±0.5	±0.1	±0.1
PMP21	±0.3	±0.1	±0.1

1) For devices with 0 to 10 V output, a non-linearity of up to max. 0.3 V can occur for signal values below 0.015 V.

Overview of the turn down ranges → 🖹 14

Thermal change of the zero output and the output span

Measuring cell	−20 to +85 °C (−4 to +185 °F)	−20 to −40 °C (−4 to −40 °F) +85 to +100 °C (+185 to +212 °F)
	% of the calibrated span for TD 1:1	
<1 bar (15 psi)	<1	<1.2
≥ 1 bar (15 psi)	<0.8	<1

Long-term stability

1 year	5 years	8 years
% of URL		
±0.2	±0.4	±0.45

Switch-on time

≤2 s

Installation

Installation conditions

- No moisture may enter the housing when installing or operating the device, or when establishing the electrical connection.
- Point the cable and connector downwards where possible to prevent moisture from entering (e.g. rain or condensation water).

Influence of the installation position

Any orientation is possible. However, the orientation may cause a zero point shift i.e. the measured value does not show zero when the vessel is empty or partially full.

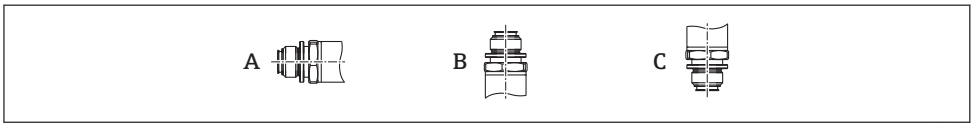

A0024708

Type	Process isolating diaphragm axis is horizontal (A)	Process isolating diaphragm pointing upwards (B)	Process isolating diaphragm pointing downwards (C)
PMP11 PMP21	Calibration position, no effect	Up to +4 mbar (+0.058 psi)	Up to −4 mbar (−0.058 psi)
PMC11, PMC21 < 1 bar (15 psi)	Calibration position, no effect	Up to +0.3 mbar (+0.0044 psi)	Up to −0.3 mbar (−0.0044 psi)
PMC11, PMC21 ≥1 bar (15 psi)	Calibration position, no effect	Up to +3 mbar (+0.0435 psi)	Up to −3 mbar (−0.0435 psi)

Mounting location

Pressure measurement

Pressure measurement in gases

Mount the device with shutoff device above the tapping point so that any condensate can flow into the process.

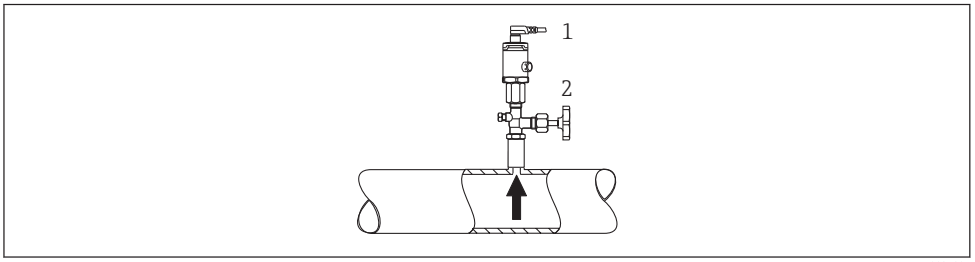

A0021904

1 Device
2 Shutoff device

Pressure measurement in vapors

For pressure measurement in vapors, use a siphon. The siphon reduces the temperature to almost ambient temperature. Mount the device with a shutoff device at the same height as the tapping point.

Advantage:
only minor/negligible heat effects on the device.

Note the max. permitted ambient temperature of the transmitter!

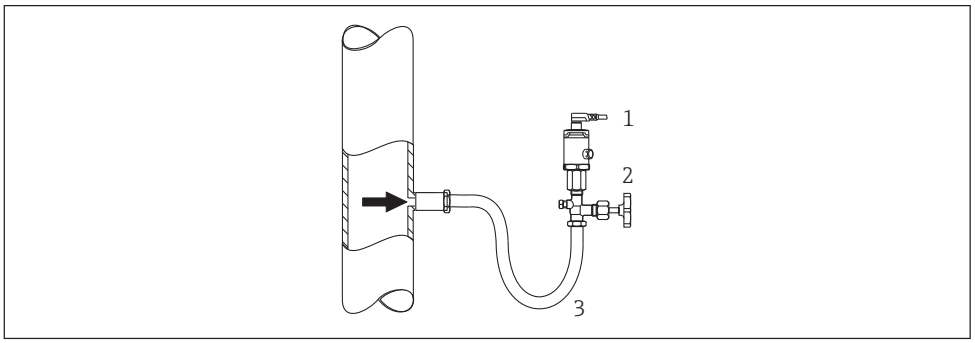

1 *Device*
2 *Shutoff device*
3 *Siphon*

Pressure measurement in liquids

Mount the device with a shutoff device at the same height as the tapping point.

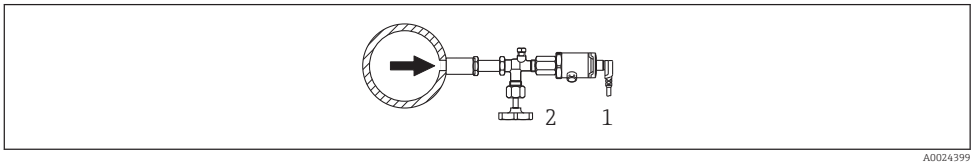

1 *Device*
2 *Shutoff device*

Level measurement

- Always install the device below the lowest measuring point.
- Do not install the device at the following positions:
  - In the filling curtain
  - In the tank outlet
  - In the suction area of a pump
  - Or at a point in the tank which could be affected by pressure pulses from the agitator.

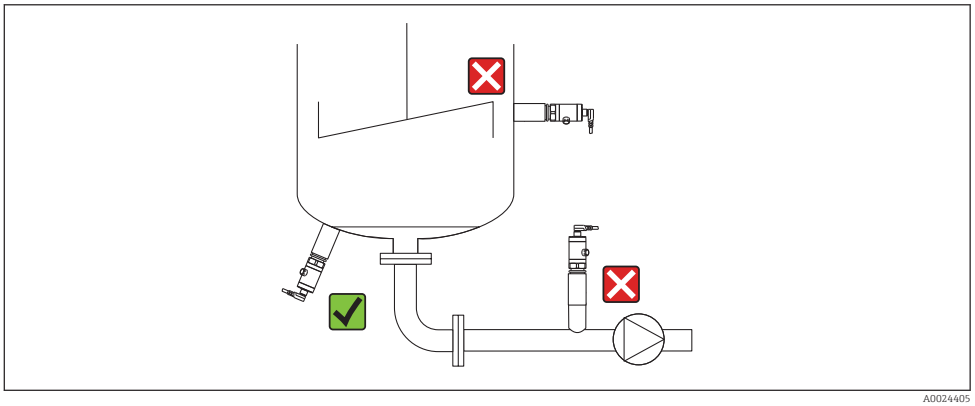

Mounting instructions for oxygen applications

Oxygen and other gases can react explosively to oils, grease and plastics, such that, among other things, the following precautions must be taken:

- All components of the system, such as measuring devices, must be cleaned in accordance with the BAM requirements.
- Dependent on the materials used, a certain maximum temperature and a maximum pressure for oxygen applications must not be exceeded.
- The following table lists devices (devices only, not accessories or enclosed accessories), which are suitable for gaseous oxygen applications.

Device	p_{max} for oxygen applications	T_{max} for oxygen applications	Option [1]
PMC21	40 bar (600 psi)	−10 to +60 °C (+14 to +140 °F)	HB

1) Product Configurator, order code for "Service"

Environment

Ambient temperature range

Device	Ambient temperature range [1]
PMC11 PMP11	−40 to +70 °C (−40 to +158 °F)
PMC21 PMP21	−40 to +85 °C (−40 to +185 °F)
PMC21 PMP21	Devices for hazardous areas: −40 to +70 °C (−40 to +158 °F)

1) Exception: the following cable is designed for an operating temperature range of −25 to +70 °C (−13 to +158 °F): Product Configurator order code for "Accessory enclosed", option "RZ".

Storage temperature range

−40 to +85 °C (−40 to +185 °F)

Climate class

Device	Climate class	Note
PMC11 PMP11 PMC21 PMP21	Class 3K5	Air temperature: −5 to +45 °C (+23 to +113 °F), relative humidity: 4 to 95 % satisfied according to IEC 721-3-3 (condensation not possible)

Degree of protection

Device	Connection	Climate class	Option [1]
PMP21 PMP21	Cable5 m (16 ft)	IP66/68 [2] NEMA type 4X/6P enclosure	A
PMP21 PMP21	Cable10 m (33 ft)	IP66/68 [2] NEMA type 4X/6P enclosure	B
PMP21 PMP21	Cable25 m (82 ft)	IP66/68 [2] NEMA type 4X/6P enclosure	C
PMC11 PMP11	M12 plug	IP65 NEMA type 4X enclosure	L
PMC21 PMP21	M12 plug	IP65/67 NEMA type 4X enclosure	M
PMC11 PMP11 PMC21 PMP21	Valve plug ISO4400 M16	IP65 NEMA type 4X enclosure	U
PMC11 PMP11 PMC21 PMP21	Valve plug ISO4400 NPT ½	IP65 NEMA type 4X enclosure	V

1) Product Configurator, order code for "Electrical connection"
2) IP 68 (1.83m H2O for 24 h)

Vibration resistance

Test standard	Vibration resistance
IEC 60068-2-64:2008	Guaranteed for 5 to 2000Hz: 0.05 g^2/Hz

Electromagnetic compatibility

- Interference emission as per EN 61326-1 equipment B
- Interference immunity as per EN 61326-1 (industrial environment)
- NAMUR recommendation EMC (NE21)
- Maximum deviation: 1.5% for TD 1:1

For more details, refer to the Declaration of Conformity.

Process

Process temperature range for devices with ceramic process isolating diaphragm

Device	Process temperature range
PMC11	−25 to +85 °C (−13 to +185 °F)
PMC21	−25 to +100 °C (−13 to +212 °F)
PMC21 for oxygen applications	−10 to +60 °C (+14 to +140 °F)

- For saturated steam applications, use a device with a metal process isolating diaphragm, or provide a siphon for temperature isolation when installing.
- Pay attention to the process temperature range of the seal. See also the following table.

Seal	Notes	Process temperature range	Option
FKM	-	−20 to +100 °C (−4 to +212 °F)	A [1]
FKM	Cleaned for oxygen service	−10 to +60 °C (+14 to +140 °F)	A [1] and HB [2]
EPDM 70	-	−25 to +100 °C (−13 to +212 °F)	J [1]

1) Product Configurator, order code for "Seal"
2) Product Configurator, order code for "Service"

Applications with changes in temperature

Frequent extreme changes in temperatures can temporarily cause measuring errors. Temperature compensation takes place after a few minutes. Internal temperature compensation is faster the smaller the change in temperature and the longer the time interval.

For further information please contact your local Endress+Hauser Sales Center.

Process temperature range for devices with metallic process isolating diaphragm

Device	Process temperature range
PMP11	−25 to +85 °C (−13 to +185 °F)
PMP21	−40 to +100 °C (−40 to +212 °F)

Applications with changes in temperature

Frequent extreme changes in temperatures can temporarily cause measuring errors. Internal temperature compensation is faster the smaller the change in temperature and the longer the time interval.

For further information please contact your local Endress+Hauser Sales Center.

Pressure specifications

WARNING

The maximum pressure for the measuring device depends on the lowest-rated element with regard to pressure.

- For pressure specifications, see the "Measuring range" section and the "Mechanical construction" section.
- The Pressure Equipment Directive (2014/68/EU) uses the abbreviation "PS". The abbreviation "PS" corresponds to the MWP (maximum working pressure) of the measuring device.
- MWP (maximum working pressure): The MWP (maximum working pressure) is specified on the nameplate. This value is based on a reference temperature of +20 °C (+68 °F) and may be applied to the device for an unlimited period of time. Observe the temperature dependency of the MWP.
- OPL (over pressure limit): The test pressure corresponds to the over pressure limit of the sensor and may only be applied temporarily to ensure that the measurement is within the specifications and no permanent damage develops. In the case of sensor range and process connections where the over pressure limit (OPL) of the process connection is smaller than the nominal value of the sensor, the device is set at the factory, at the very maximum, to the OPL value of the process connection. If you want to use the entire sensor range, select a process connection with a higher OPL value.
- Oxygen applications: In oxygen applications, the values for "p_{max} and T_{max} for oxygen applications may not be exceeded .
- Devices with ceramic process isolating diaphragm: avoid steam hammering! Steam hammering can cause zero point drifts. Recommendation: Residue (water droplets or condensation) may remain on the process isolating diaphragm following CIP cleaning and can result in local steam hammering the next time steam cleaning takes place. In practice, drying the process isolating diaphragm (e.g. by blowing) has proved to prevent steam hammering.

Mechanical construction

Design, dimensions

Device height

The device height is calculated from
- the height of the electrical connection
- the height of the housing and
- the height of the individual process connection.

The individual heights of the components are listed in the following sections. To calculate the device height simply add up the individual heights of the components. Where applicable also take into consideration the installation distance (space that is used to install the device). You can use the following table for this purpose:

Section	Page	Height	Example
Electrical connection	→ 28	(A)	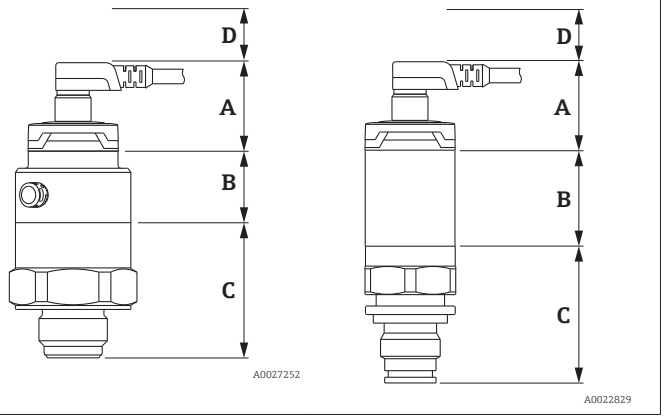
Housing height	→ 29	(B)	
Process connection height	→ 30 → 33	(C)	
Installation distance	-	(D)	

Electrical connection

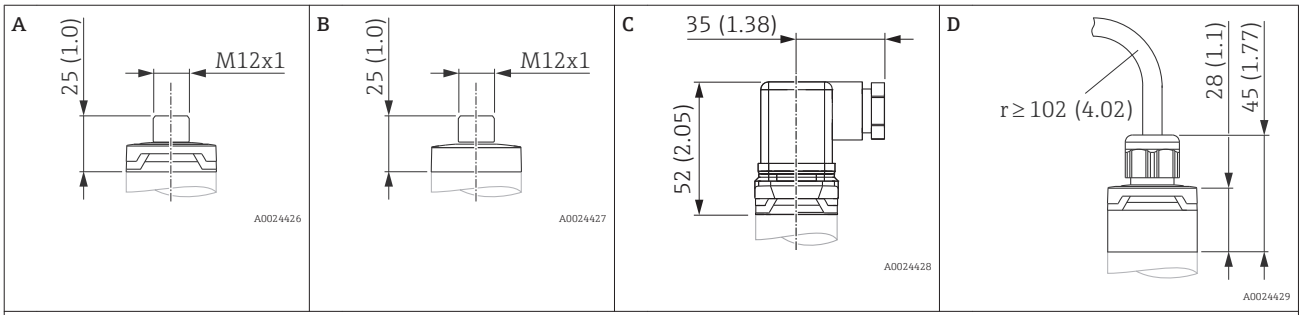

Engineering unit mm (in)

Position	Description	Material	Weight kg (lbs)	Device	Option [1]
A	M12 plug IP65 (Additional dimensions → 45)	Housing cap made of plastic	0.012 (0.03)	PMC11 PMP11	L
A	M12 plug IP65/67 (Additional dimensions → 45)	Housing cap made of plastic	0.012 (0.03)	PMC21 PMP21	M Plug connector with cable can be ordered as an accessory → 45
B	M12 plug IP66/67	Housing cap made of metal	0.030 (0.07)	PMC21 PMP21	In the case of Ex ec type of protection, the housing cap is made of metal.
C	M16 valve plug	Plastic PPSU	0.060 (0.14)	PMC11 PMP11 PMC21 PMP21	U

Position	Description	Material	Weight kg (lbs)	Device	Option [1]
C	NPT ½ valve plug	Plastic PPSU	0.060 (0.14)	PMC11 PMP11 PMC21 PMP21	V
D	Cable5 m (16 ft)	PUR (UL94V0)	0.280 (0.62)	PMC21 PMP21	A
D	Cable10 m (33 ft)	PUR (UL94V0)	0.570 (1.26)	PMC21 PMP21	B
D	Cable25 m (82 ft)	PUR (UL94V0)	1.400 (3.09)	PMC21 PMP21	C

1) Product Configurator, order code for "Electrical connection"

Housing

A

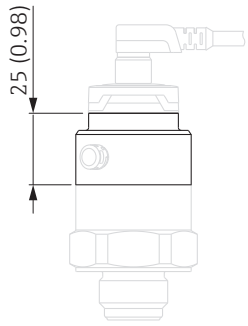

A0022243

Engineering unit mm (in)

B

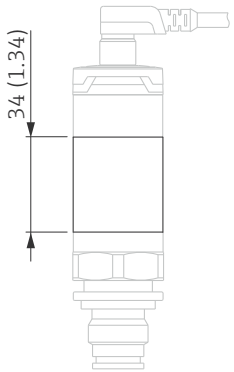

A0027288

Engineering unit mm (in)

Item	Device	Material	Weight kg (lbs)
A	PMC11 PMC21	Stainless steel 316L	0.150 (0.33)
B	PMP11 PMP21	Stainless steel 316L	0.090 (0.20)

Process connections with internal, ceramic process isolating diaphragm

Thread ISO 228 G

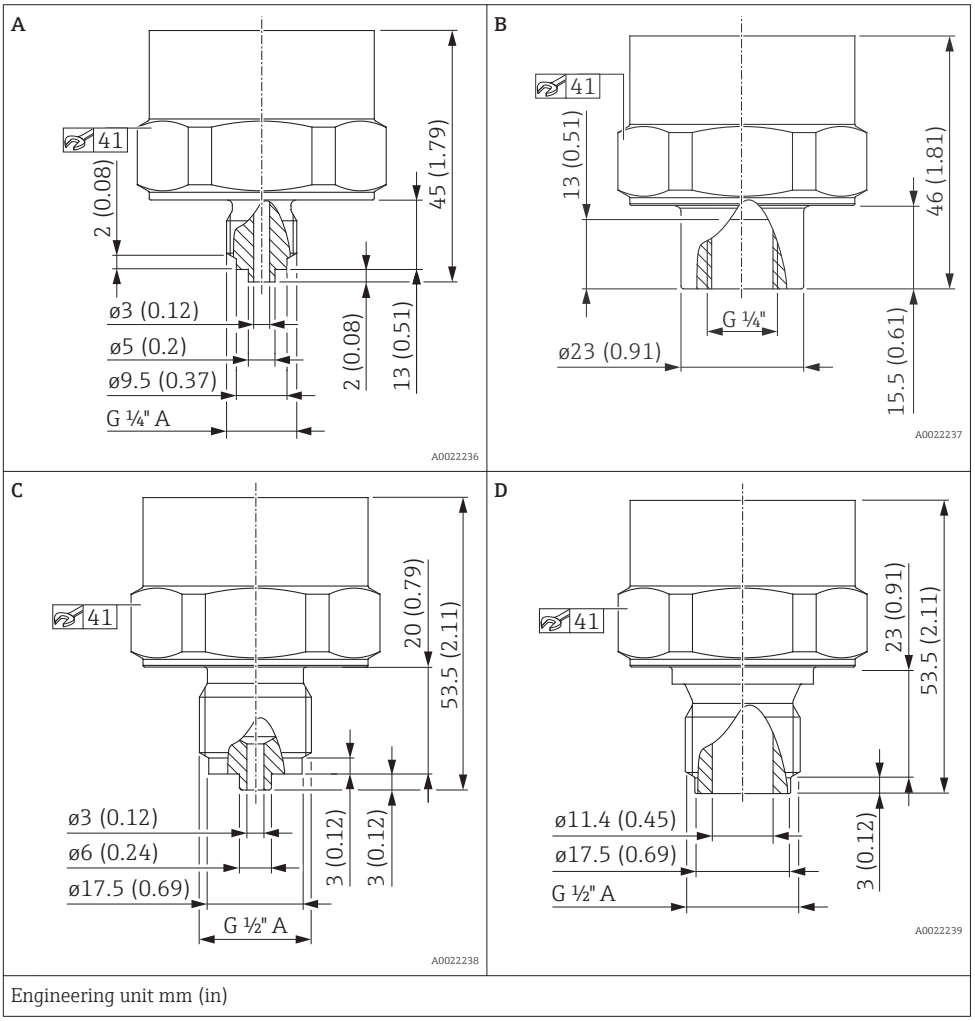

Engineering unit mm (in)

Device	Item	Description	Material	Weight	Option [1]
				kg (lbs)	
▪ PMC11 ▪ PMC21	A	Thread ISO 228 G ¼" A, EN 837	316L	0.160 (0.35)	WTJ
▪ PMC11 ▪ PMC21	B	Thread ISO 228 G ¼" (female)	316L	0.180 (0.40)	WAJ
▪ PMC11 ▪ PMC21	C	Thread ISO 228 G ½" A, EN 837	316L	0.180 (0.40)	WBJ
▪ PMC11 ▪ PMC21	D	Thread ISO 228 G ½" A, bore11.4 mm (0.45 in)	316L	0.180 (0.40)	WWJ

1) Product Configurator, order code for "Process connection"

Process connections with internal, ceramic process isolating diaphragm

Thread ASME

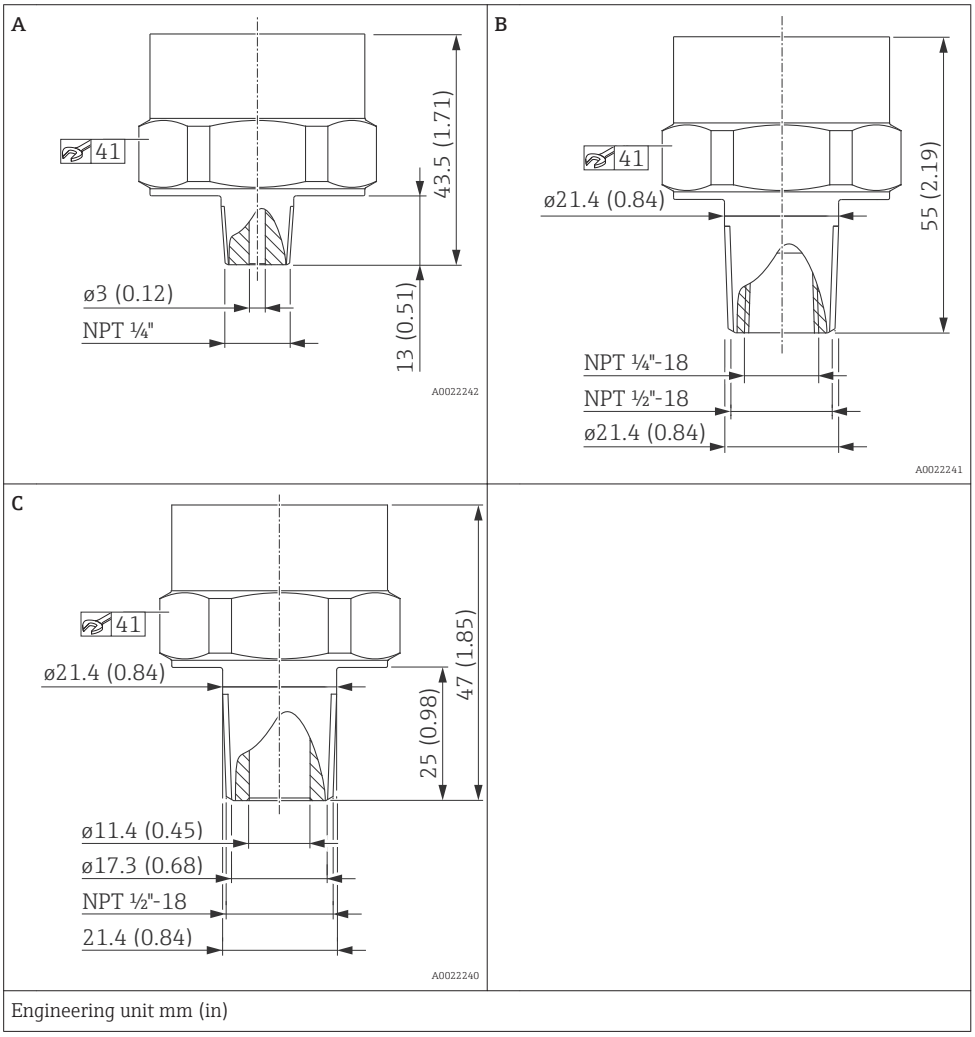

Engineering unit mm (in)

Device	Item	Description	Material	Weight	Approval	Option [1]
				kg (lbs)		
▪ PMC11 ▪ PMC21	A	ASME ¼" MNPT, bore3 mm (0.12 in)	316L	0.160 (0.35)	CRN	VUJ
▪ PMC11 ▪ PMC21	B	ASME ½" MNPT, ¼" FNPT (female)	316L	0.190 (0.42)	CRN	VXJ
▪ PMC11 ▪ PMC21	C	ASME ½" MNPT, bore11.4 mm (0.45 in)	316L	0.190 (0.42)	CRN	VWJ

1) Product Configurator, order code for "Process connection"

Process connections with internal, ceramic process isolating diaphragm

Thread DIN13

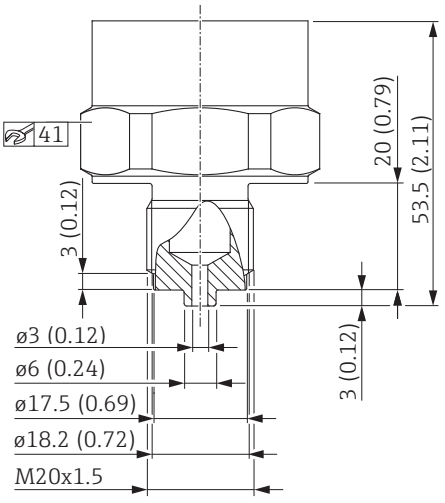

Engineering unit mm (in)

Device	Description	Material	Weight	Option [1]
			kg (lbs)	
▪ PMC11 ▪ PMC21	DIN 13 M20 x 1.5, EN 837, bore 3 mm (0.12 in)	316L	0.180 (0.40)	X4J

1) Product Configurator, order code for "Process connection"

Process connections with internal, ceramic process isolating diaphragm

Thread JIS B0203

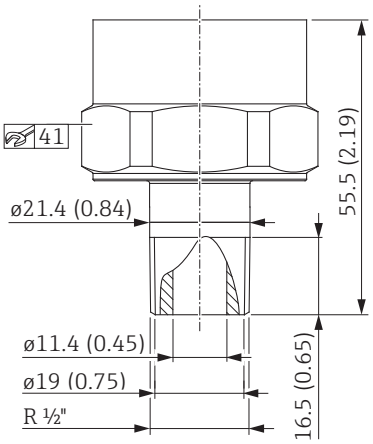

Engineering unit mm (in)

Device	Description	Material	Weight	Option [1]
			kg (lbs)	
PMC21	JIS B0203 R 1/2 (male)	316L	0.180 (0.40)	ZJJ

1) Product Configurator, order code for "Process connection"

Process connections with internal, metal process isolating diaphragm

Thread ISO 228 G

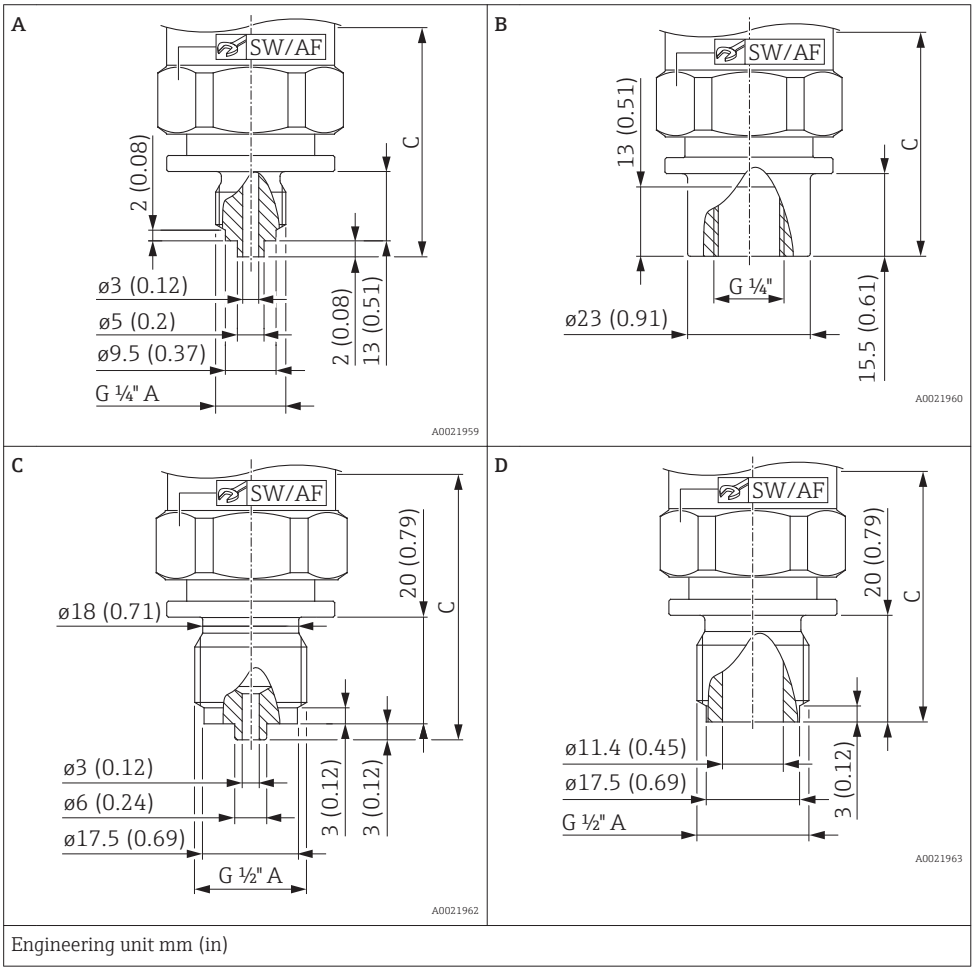

Engineering unit mm (in)

Position	Device	Description	Material	Nominal value to 100 bar (1 500 psi)			Nominal value 400 bar (6 000 psi)			Option [1]
				Weight kg (lbs)	Height C	SW/ AF	Weight kg (lbs)	Height C	SW/ AF	
A	PMP11 PMP21	Thread ISO 228 G ¼" A, EN 837	316L	0.200 (0.44)	57 (2.24)	32	0.240 (0.53)	69 (2.72)	27	WTJ
B	PMP11 PMP21	Thread ISO 228 G ¼" (female)	316L	0.220 (0.49)	57 (2.24)	32	0.260 (0.57)	69 (2.72)	27	WAJ
C	PMP11 PMP21	Thread ISO 228 G ½" A, EN 837	316L	0.220 (0.49)	65 (2.56)	32	0.270 (0.60)	77 (3.03)	27	WBJ
D	PMP11 PMP21	Thread ISO 228 G ½" A, bore11.4 mm (0.45 in)	316L	0.220 (0.49)	62 (2.44)	32	0.260 (0.57)	74 (2.91)	27	WWJ

1) Product Configurator, order code for "Process connection"

Process connections with internal, metal process isolating diaphragm

Thread ASME

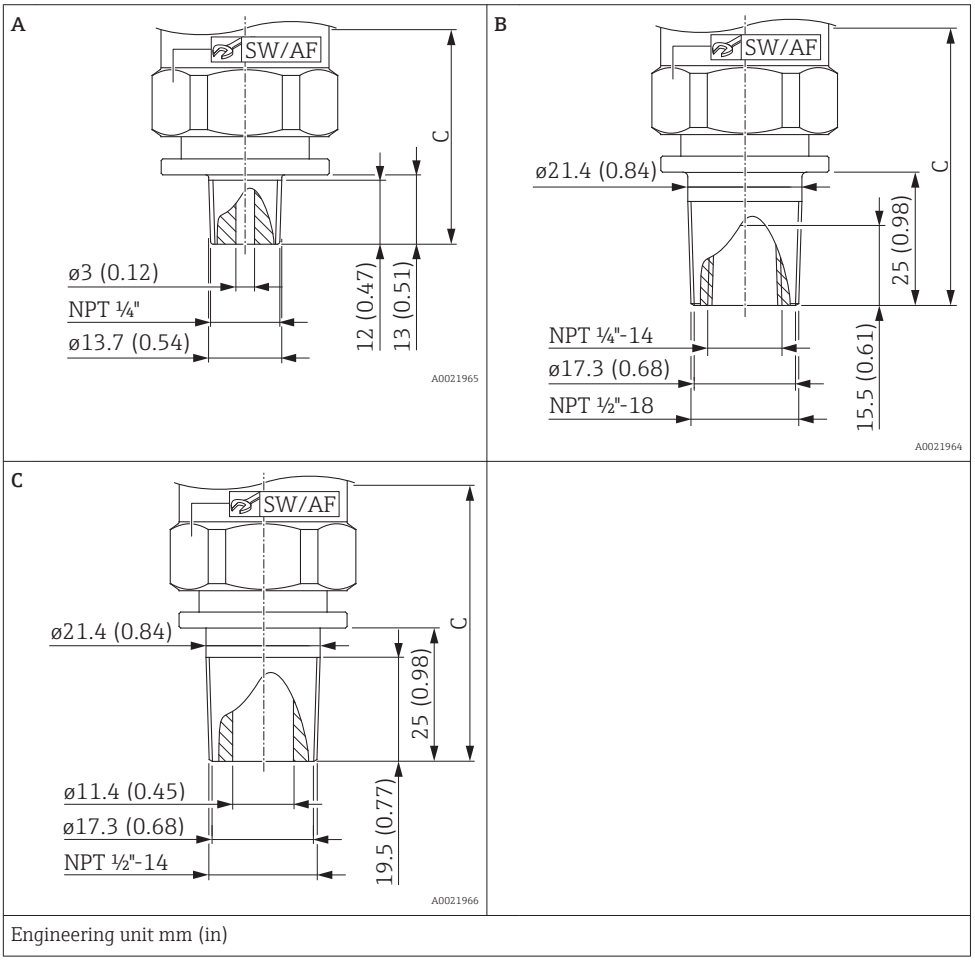

Engineering unit mm (in)

Position	Device	Description	Material	Nominal value to 100 bar (1 500 psi)			Nominal value 400 bar (6 000 psi)			Approval	Option [1]
				Weight kg (lbs)	Height C	SW/ AF	Weight kg (lbs)	Height C	SW/ AF		
A	PMP11 PMP21	ASME ¼" MNPT, bore3 mm (0.12 in)	316L	0.200 (0.44)	55 (2.17)	32	0.240 (0.53)	67 (2.64)	27	CRN	VUJ
B	PMP11 PMP21	ASME ½" MNPT, ¼" FNPT (female)	316L	0.230 (0.51)	67 (2.64)	32	0.260 (0.57)	79 (3.11)	27	CRN	VXJ
C	PMP11 PMP21	ASME ½" MNPT, bore11.4 mm (0.45 in)	316L	0.230 (0.51)	67 (2.67)	32	0.270 (0.60)	79 (3.11)	27	CRN	VWJ

1) Product Configurator, order code for "Process connection"

Process connections with internal, metal process isolating diaphragm

Thread DIN13

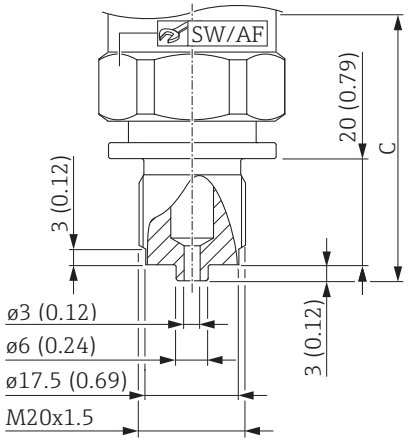

Engineering unit mm (in)

Description	Device	Material	Nominal value to 100 bar (1 500 psi)			Nominal value 400 bar (6 000 psi)			Option [1]
			Weight kg (lbs)	Height C	SW/ AF	Weight kg (lbs)	Height C	SW/ AF	
DIN 13 M20 x 1.5, EN 837, bore 3 mm (0.12 in)	PMP11 PMP21	316L	0.220 (0.49)	65 (2.56)	32	0.260 (0.57)	77 (3.03)	27	X4J

1) Product Configurator, order code for "Process connection"

Process connections with internal, metal process isolating diaphragm

Thread JIS B0203

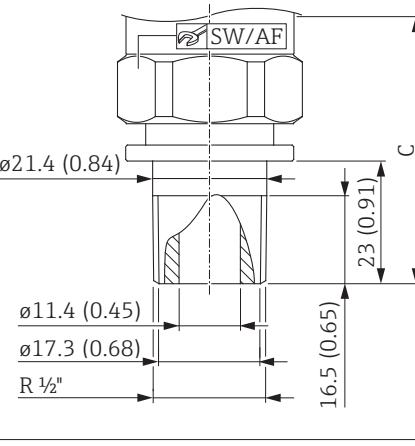

Engineering unit mm (in). Diameter of process isolating diaphragm: 17.2 mm (0.68 in)

Description	Device	Material	Nominal value to 100 bar (1 500 psi)			Nominal value 400 bar (6 000 psi)			Option [1]
			Weight kg (lbs)	Height C	SW/ AF	Weight kg (lbs)	Height C	SW/ AF	
JIS B0203 R ½" (male)	PMP21	316L	0.230 (0.51)	65 (2.56)	32	0.260 (0.57)	77 (3.03)	27	ZJJ

1) Product Configurator, order code for "Process connection"

Process connections with flush-mounted, metal process isolating diaphragm

Thread ISO 228 G

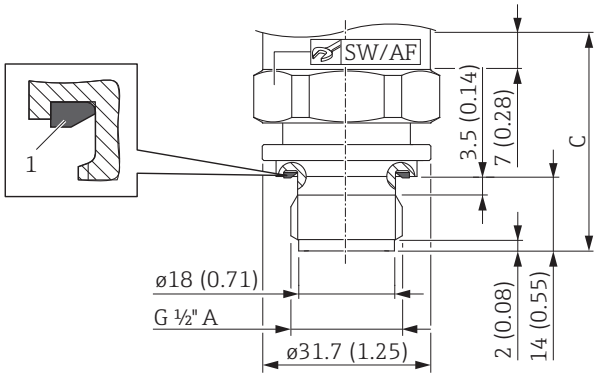

1 FKM form seal, pre-mounted

Engineering unit mm (in). Diameter of process isolating diaphragm: 17.2 mm (0.68 in)

Device	Description	Material	Nominal value to 100 bar (1 500 psi)			Nominal value 400 bar (6 000 psi)			Option [1]
			Weight	Height C	SW/ AF	Weight	Height C	SW/ AF	
			kg (lbs)			kg (lbs)			
PMP11 PMP21	Thread ISO 228 G ½" A DIN3852	316L	0.140 (0.31)	41 (1.61)	32	0.120 (0.26)	35 (1.38)	32	WJJ

1) Product Configurator, order code for "Process connection"

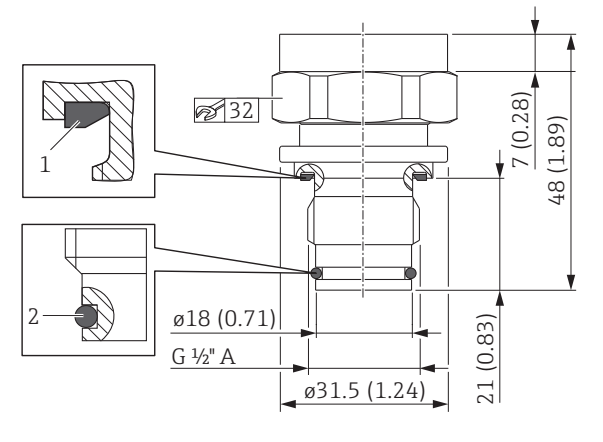

1 FKM form seal, pre-mounted
2 FKM O-ring, pre-mounted

Engineering unit mm (in). Diameter of process isolating diaphragm: 17.2 mm (0.68 in)

Device [1]	Description	Material	Weight	Option [2]
			kg (lbs)	
PMP11 PMP21	Thread ISO 228 G ½" A O-ring seal, flush-mounted	316L	0.150 (0.33)	WUJ

1) Suitable for weld-in adapter 52002643 and 52010172
2) Product Configurator, order code for "Process connection"

Materials in contact with process

NOTICE

- ▶ Device components in contact with the process are listed in the "Mechanical construction" and "Ordering information" sections.

TSE Certificate of Suitability

The following applies to all device components in contact with the process:

- They do not contain any materials derived from animals.
- No additives or operating materials derived from animals are used in production or processing.

Process connections

Endress+Hauser supplies a threaded connection made of stainless steel in accordance with AISI 316L (DIN/ EN material number 1.4404 or 1.4435). With regard to their stability-temperature property, the materials 1.4404 and 1.4435 are grouped together under 13E0 in EN 1092-1: 2001 Tab. 18. The chemical composition of the two materials can be identical.

Process isolating diaphragm

Description	Material
Ceramic process isolating diaphragm	Al_2O_3 aluminum-oxide ceramic, Ceraphire® FDA, ultrapure 99.9 % (see also www.endress.com/ceraphire) The US Food & Drug Administration (FDA) has no objections to the use of ceramics made from aluminum oxide as a surface material in contact with foodstuffs. This declaration is based on the FDA certificates of our ceramic suppliers.
Metal process isolating diaphragm	AISI 316L (DIN/EN material number 1.4435)

Seals

See the specific process connection.

Materials not in contact with process

Housing

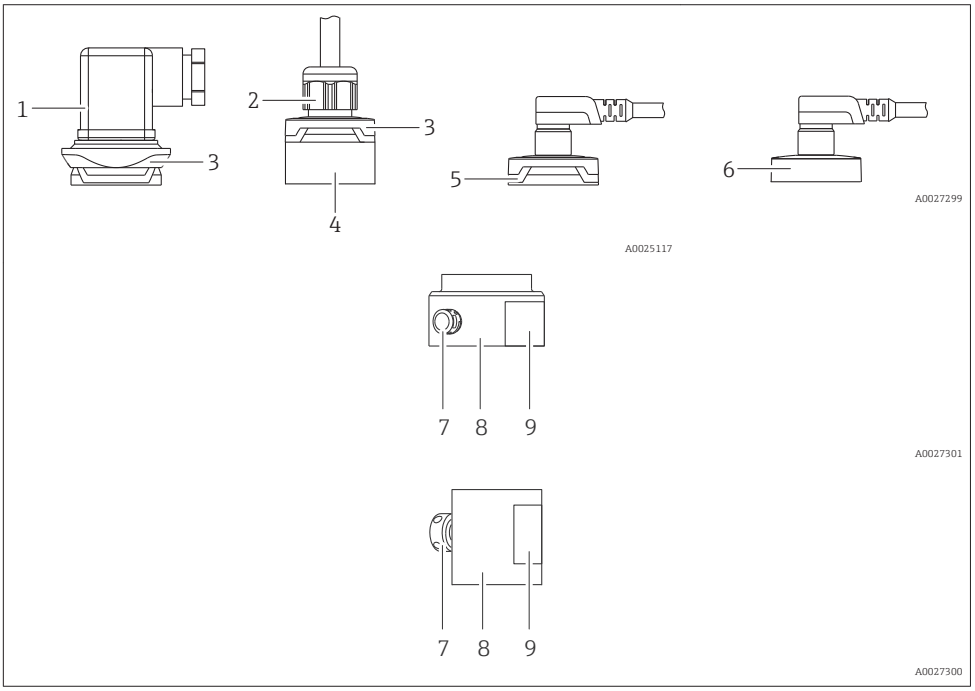

Item number	Component part	Material
1	Valve plug	▪ Seal: NBR ▪ Plug: PA ▪ Screw: V2A
2	Cable	▪ Pressure screw: PVDF ▪ Seal: TPE-V ▪ Cable: PUR (UL 94 V0)
3	Design element	PBT/PC
4	Connection	PPSU
5	M12 plug	Plastic: PPSU
6	M12 plug	Metal 316L (1.4404) For Ex ec: metal housing cap
7	Pressure compensation element	PMP11: PBT/PC PMP21 standard: PBT/PC PMP21 with Ex ec approval: 1.4404
8	Housing	316L (1.4404)
9	Nameplates	Plastic foil (attached to housing) or directly lasered onto the housing

Filling oil

Device	Filling oil
PMP11 PMP21	NSF-H1 synthetic oil in accordance with FDA 21 CFR 178.3570

Cleaning

Device	Description	Option [1]
PMC11 PMP11 PMC21 PMP21	Cleaned from oil+grease	HA
PMC21	Cleaned for oxygen service	HB

1) Product Configurator, order code for "Service"

Operability

Plug-on display PHX20 (optional)

No display or other operation facility is required to operate the device. However, devices with a valve plug can be fitted with the optional local display PHX20.

Description	Option [1]
Plug-on display PHX20, IP65	RU

1) Product Configurator, order code for "Accessories"

A 1-line liquid crystal display (LCD) is used. The local display shows measured values, fault messages and information messages. The device display can be turned in 90° steps. Depending on the orientation of the device, it is therefore easy to read the measured values.

Technical data

Display:	4-digit, red LED display
Digit height:	7.62 mm; programmable decimal point setting
Display range:	-1999 to 9999
Accuracy:	0.2% of the span ±1 digit
Electrical connection:	To transmitter with 4 to 20 mA output and elbow plug DIN 43 650, reverse polarity protection
Display power supply:	Not required, powered automatically from the power loop
Voltage drop:	≤ 5 V (corresponds to load: max. 250 Ω)
Rate of conversion:	3 measurements per second
Damping:	0.3 to 20 s (configurable)
Data backup:	Non-volatile EEPROM
Error message:	▪ HI: overrange ▪ LO: below range
Programming:	Via 2 keys, menu-guided, display range scaling, decimal point, damping, error message
Degree of protection:	IP 65
Influence of temperature on the display:	0.1% / 10 K
Electromagnetic compatibility (EMC):	Interference emission as per EN 50081, interference immunity as per EN 50082
Permitted current load:	Max. 60 mA
Ambient temperature:	0 to +60 °C (+32 to +140 °F)
Housing material:	Pa6 GF30 plastic, blue Front screen made from red PMMA
Order number:	52022914

Certificates and approvals

CE mark

The device meets the legal requirements of the relevant EC directives. Endress+Hauser confirms that the device has been successfully tested by applying the CE mark.

RoHS

The measuring system complies with the substance restrictions of the Restriction on Hazardous Substances Directive 2011/65/EU (RoHS 2).

RCM-Tick marking

The supplied product or measuring system meets the ACMA (Australian Communications and Media Authority) requirements for network integrity, interoperability, performance characteristics as well as health and safety regulations. Here, especially the regulatory arrangements for electromagnetic compatibility are met. The products are labelled with the RCM- Tick marking on the name plate.



A0029561

EAC conformity

The PMC21, PMP21 and PMP23 devices meet the legal requirements of the applicable EAC directives. These are listed in the corresponding EAC Declaration of Conformity along with the standards applied.

Endress+Hauser confirms successful testing of the device by affixing to it the EAC mark.

Approval

CSA C/US General Purpose

Safety Instructions (XA)

Safety Instructions (XA) are supplied with the device depending on the approval. These instructions are an integral part of the Operating Instructions.

Device	Directive	Documentation	Option [1]
PMP21	ATEX II 1/2G Ex ia IIC T4 Ga/Gb	XA01271P	BA
PMC21	ATEX II 2G Ex ia IIC T4 Gb	XA01271P	BB
PMC21 PMP21	ATEX II 3G Ex ec IIC T4 Gc	XA01533P	BC
PMC21 PMP21	FM IS Cl. I, Div.1 Gr. A-D T4	XA01321P	FA
PMC21 PMP21	CSA C/US IS Cl. I Div. 1 Gr. A-D	XA01322P	CB
PMC21 PMP21	EAC Ex ia IIC T4 Ga/Gb	XA01540P	GA
PMC21 PMP21	IEC Ex ia IIC T4 Ga/Gb	XA01271P	IA
PMC21 PMP21	NEPSI Ex ia IIC T4	XA01363P	NA
PMC21 PMP21	TIIS Ex ia IIC T4	In preparation	TA

1) Product Configurator, order code for "Approval"

The nameplate provides information on the Safety Instructions (XA) that are relevant for the device.

Marine approval (pending)

Device	Description	Option [1]
PMC21 PMP21	DNV GL	LE
PMC21 PMP21	ABS	LF

1) Product Configurator, order code for "Additional approval"

Pressure Equipment Directive 2014/68/EU (PED)

Pressure equipment with allowable pressure ≤ 200 bar (2 900 psi)

Pressure equipment (with a maximum allowable pressure PS ≤ 200 bar (2 900 psi)) can be classified as pressure accessories in accordance with Pressure Equipment Directive 2014/68/EU. If the maximum allowable pressure is ≤ 200 bar (2 900 psi) and the pressurized volume of the pressure equipment is ≤ 0.1 l, the pressure equipment is subject to the Pressure Equipment Directive (cf. Pressure Equipment Directive 2014/68/EU, Article 4, point 3). The Pressure Equipment Directive only requires that the pressure equipment shall be designed and manufactured in accordance with the "sound engineering practice of a Member State".

Reasons:

- Pressure Equipment Directive (PED) 2014/68/EU Article 4, point 3
- Pressure equipment directive 2014/68/EU, Commission's Working Group "Pressure", Guideline A-05 + A-06

Note:

A partial examination shall be performed for pressure instruments that are part of safety equipment for the protection of a pipe or vessel from exceeding allowable limits (safety accessory in accordance with Pressure Equipment Directive 2014/68/EU, Article 2, point 4).

Pressure equipment with allowable pressure > 200 bar (2 900 psi)

Pressure equipment designated for application in every process fluid having a pressurized volume of <0.1 l and a max. allowable pressure PS > 200 bar (2 900 psi) shall satisfy the essential safety requirements set out in Annex I of the Pressure Equipment Directive 2014/68/EU. According to Article 13 pressure equipment shall be classified by category in accordance with Annex II. The conformity assessment of the pressure equipment shall be determined by the category I under consideration of the above-mentioned low pressurized volume. These devices shall be provided with CE marking.

Reasons:

- Pressure Equipment Directive 2014/68/EU, Article 13, Annex II
- Pressure equipment directive 2014/68/EU, Commission's Working Group "Pressure", Guideline A-05

Note:

A partial examination shall be performed for pressure instruments that are part of safety equipment for the protection of a pipe or vessel from exceeding allowable limits (safety accessory in accordance with Pressure Equipment Directive 2014/68/EU, Article 2, point 4).

The following also applies:

PMP21 with threaded connection and internal process isolating diaphragm PN > 200 :

Suitable for stable gases in group 1, category I, module A

Other standards and guidelines

The applicable European guidelines and standards can be found in the relevant EU Declarations of Conformity. The following were also applied:

DIN EN 60770 (IEC 60770):

Transmitters for use in industrial process control systems Part 1: Methods for performance evaluation

Methods for evaluating the performance of transmitters for control and regulation in industrial process control systems.

DIN 16086:

Electrical pressure measuring instruments, pressure sensors, pressure transmitters, pressure measuring instruments, concepts, specifications on data sheets

Procedure for writing specifications in data sheets for electrical pressure measuring instruments, pressure sensors and pressure transmitters.

EN 61326-X:

EMC product family standard for electrical equipment for measurement, control and laboratory use.

EN 60529:

Degrees of protection provided by enclosures (IP code)

NAMUR - User association of automation technology in process industries.

NE21 - Electromagnetic Compatibility (EMC) of Industrial Process and Laboratory Control Equipment.

NE43 - Standardization of the Signal Level for the Failure Information of Digital Transmitters.

NE44 - Standardization of Status Indicators on PCT Instruments with the Help of Light Emitting Diodes

NE53 - Software of Field Devices and Signal-processing Devices with Digital Electronics

CRN approval

A CRN approval is available for some device versions. A CRN-approved process connection with a CSA approval must be ordered for a CRN-approved device. The CRN-approved devices are assigned the registration number 0F18141.5C.

Ordering information: Product Configurator, order code for "Process connection" (the CRN process connections are indicated appropriately in the "Mechanical construction" section.)

Calibration unit

Description	Option [1]
Sensor range; %	A
Sensor range; mbar/bar	B
Sensor range; kPa/MPa	C
Sensor range; psi	F
Customer-specific; see additional spec.	J

1) Product Configurator, order code for "Calibration; unit"

Calibration

Description	Option [1]
3-point certificate of calibration	F3

1) Product Configurator order code for "Calibration"

Inspection certificates

Device	Description	Option [1]
PMC21 PMP21	3.1 Material documentation, wetted metal parts, EN10204-3.1 inspection certificate	JA

1) Product Configurator, order code for "Test, Certificate"

Ordering information

Detailed ordering information is available from the following sources:
- In the Product Configurator on the Endress+Hauser website: www.endress.com -> Click "Corporate" -> Select your country -> Click "Products" -> Select the product using the filters and search field -> Open product page -> The "Configure" button to the right of the product image opens the Product Configurator.
- From your Endress+Hauser Sales Center: www.addresses.endress.com

Product Configurator - the tool for individual product configuration
- Up-to-the-minute configuration data
- Depending on the device: Direct input of measuring point-specific information such as measuring range or operating language
- Automatic verification of exclusion criteria
- Automatic creation of the order code and its breakdown in PDF or Excel output format
- Ability to order directly in the Endress+Hauser Online Shop

Scope of delivery
- Measuring device
- Optional accessories
- Brief Operating Instructions
- Certificates

Accessories

Weld-in adapter

Various weld-in adapters are available for installation in vessels or pipes.

Device	Description	Option [1]	Order number
PMP21	Weld-in adapter G½, 316L	QA	52002643
PMP21	Weld-in adapter G½, 316L 3.1 EN10204-3.1 material, inspection certificate	QB	52010172
PMP21	Weld-in tool adapter G½, brass	QC	52005082

1) Product Configurator, order code for "Enclosed accessories"

If installed horizontally and weld-in adapters with a leakage hole are used, ensure that the leakage hole is pointing down. This allows leaks to be detected as quickly as possible.

Plug-on display PHX20

→ 🖹 40

M12 plug connectors

Connector	Degree of protection	Material	Option [1]	Order number
M12 (self-terminated connection at M12 plug) 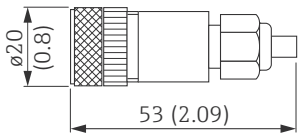	IP67	▪ Union nut: Cu Sn/Ni ▪ Body: PBT ▪ Seal: NBR	R1	52006263
M12 90 degrees with 5m (16 ft) cable 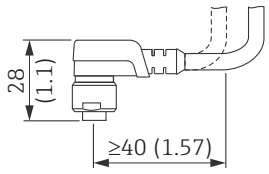	IP67	▪ Union nut: GD Zn/Ni ▪ Body: PUR ▪ Cable: PVC	RZ	52010285
M12 90 degrees (self-terminated connection at M12 plug) 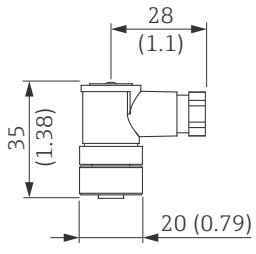	IP67	▪ Union nut: GD Zn/Ni ▪ Body: PBT ▪ Seal: NBR	RM	71114212

1) Product Configurator, order code for "Enclosed accessories"

Documentation

Field of Activities

Pressure measurement, powerful instruments for process pressure, differential pressure, level and flow:

FA00004P/00/EN

Technical Information

- TI00241F/00/EN: EMC test procedures
- TI00426F/00/EN: Weld-in adapters, process adapters and flanges (overview)

Operating Instructions

BA01271P/00/EN

Brief Operating Instructions

KA01164P/00/EN

Safety Instructions (XA)

Safety Instructions (XA) are supplied with the device depending on the approval. These instructions are an integral part of the Operating Instructions.

Device	Directive	Documentation	Option [1]
PMP21	ATEX II 1/2G Ex ia IIC T4 Ga/Gb	XA01271P	BA
PMC21	ATEX II 2G Ex ia IIC T4 Gb	XA01271P	BB
PMC21 PMP21	ATEX II 3G Ex ec IIC T4 Gc	XA01533P	BC
PMC21 PMP21	FM IS Cl. I, Div.1 Gr. A-D T4	XA01321P	FA
PMC21 PMP21	CSA C/US IS Cl. I Div. 1 Gr. A-D	XA01322P	CB
PMC21 PMP21	EAC Ex ia IIC T4 Ga/Gb	XA01540P	GA
PMC21 PMP21	IEC Ex ia IIC T4 Ga/Gb	XA01271P	IA
PMC21 PMP21	NEPSI Ex ia IIC T4	XA01363P	NA
PMC21 PMP21	TIIS Ex ia IIC T4	In preparation	TA

1) Product Configurator, order code for "Approval"

The nameplate provides information on the Safety Instructions (XA) that are relevant for the device.



www.addresses.endress.com

Endress+Hauser

People for Process Automation

This page is intentionally left blank

CS-407-100 : Identification sheet

VWTC PROJECT NUMBER:	Iqaluit WWTP	REV:	02
PROJECT NAME:	5000218036	SUBMITTED TO (COMPANY):	
ENGINEER:	F.VINCI	SUBMITTED TO (RESPONSIBLE)	
PROJECT MANAGER:	C. BEKAERT	PROJECT NUM REFERENCE.:	
PHONE NUMBER:		LOT NUMBER:	

SUPPLIER	EQPT CODE	EQPT TAG NO	DIA	DESCRIPTION	INFO 1	INFO 2	INFO 3	APPLIC.	NOTE	REV
HACH	IEPOCY201499	AE-04-941	N/A	HP-500 INSTRUMENT	CONDUCTIVITY SENSOR/MANUFACTURER: HACH// MODEL: D3725E2T // SENSOR CABLE: 22FT // CALIBRATED RANGE: 200 - 2,000,000 uS/cm // BODY: PP	N/A	N/A	HP-500		1
HACH	IEPOCY201499	AE-04-945	N/A	HP-500 INSTRUMENT	CONDUCTIVITY SENSOR/MANUFACTURER: HACH// MODEL: D3725E2T // SENSOR CABLE: 22FT // CALIBRATED RANGE: 200 - 2,000,000 uS/cm // BODY: PP	N/A	N/A	HP-500		2

This page is intentionally left blank

Inductive Conductivity Sensors



The innovative technology of Hach's Inductive Conductivity Sensors eliminates polarization and electrode coating problems in harsh environments. Available in sanitary (CIP) flange style and convertible styles in PFA Teflon®, polypropylene, PEEK®, and PVDF.

Features and Benefits

Wide Measuring Range

Hach's Inductive Conductivity Sensors measure 200 up to 2,000,000 microSiemens/cm. A built-in Pt 1000 RTD compensates the measured conductivity for changes in process temperature.

Low-maintenance Design

The inductive sensor design eliminates polarization and electrode coating problems that commonly affect conventional contacting electrode-type conductivity sensors.

Complete Digital System

All 3700 sc sensors come complete with a Digital Gateway for use with a Hach sc Digital Controller.

Principal of Operation

Inductive conductivity sensors induce a low current in a closed loop of solution, then measure the magnitude of this current to determine the solution's conductivity. The conductivity analyzer drives Torroid A, inducing an alternating current in the solution. This current signal flows in a closed loop through the sensor bore and surrounding solution. Torroid B senses the magnitude of the induced current which is proportional to the conductance of the solution. The analyzer processes this signal and displays the corresponding reading.

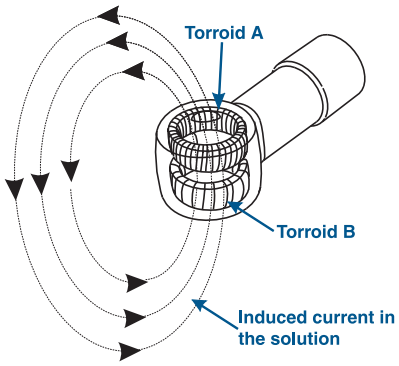

Versatile Mounting Styles

Sensors can be installed using a choice of four mounting styles—immersion, insertion, union, and sanitary. Please turn to page 6 for more information.

Full-Featured "Plug and Play" Hach sc Digital Controllers

There are no complicated wiring or set up procedures with any Hach sc controller. Just plug in any combination of Hach digital sensors and it's ready to use—it's "plug and play."

One or multiple sensors—The sc controller family allows you to receive data from up to eight Hach digital sensors in any combination using a single controller.

Communications—Multiple alarm/control schemes are available using the relays and PID control outputs. Available communications include analog 4-20 mA, digital MODBUS® (RS485 and RS232) or Profibus DP protocols. (Other digital protocols are available. Contact your Hach representative for details.)

Data logger—A built-in data logger collects measurement data, calibration, verification points, and alarm history.

Specifications*

Measuring Range
From 200 microSiemens/cm up to 2,000,000 microSiemens/cm

Operating Temperature Range
-10 to 200°C (14 to 392°F); limited only by sensor body material and mounting hardware; see below

Flow Rate
3 m (10 ft.) per second, maximum

Temperature Compensator
Pt 1000 RTD

Sensor Cable
Polypropylene and PVDF Sensors:
5 conductor (plus two isolated shields) cable with XLPE (cross-linked polyethylene) jacket; rated to 150°C (302°F); 6 m (20 ft.) long

PEEK® and PFA Teflon® Sensors:
5 conductor (plus two isolated shields) cable with Teflon-coated jacket; rated to 200°C (392°F); 6 m (20 ft.) long

Wetted Materials
Polypropylene, PVDF, PEEK® or PFA Teflon®

Model 3700 sc-series Material Compatibility

	Polypropylene	PVDF	PEEK®	Teflon®
Calcium Chloride		•	•	•
Hydrochloric Acid		•		•
Hydrofluoric Acid		•		•
Nitric Acid				•
Phosphoric Acid		•	•	•
Potassium Hydroxide	•		•	•
Seawater	•	•	•	•
Sodium Hydroxide	•		•	•
Sulfuric Acid				•
Water	•	•	•	•

NOTE: Compatibilities are valid for temperatures up to 115°C. For other applications or conditions, please contact Hach Technical Support.

Temperature/Pressure Limits
Sensor Only (no hardware):

Polypropylene
6.9 bar at 100°C (100 psi at 212°F)
PVDF
6.9 bar at 120°C (100 psi at 248°F)
PEEK®
13.8 bar at 200°C (200 psi at 392°F)
PFA Teflon®
13.8 bar at 200°C (200 psi at 392°F)

Temperature/Pressure Limits (continued)
Sensor with Hardware:

Immersion and Union†
See graphs below for specific Hach sensor and mounting hardware combinations

CPVC Mounting Hardware
(All Sensor Materials)

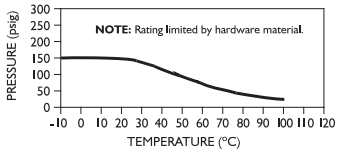

PVDF Mounting Hardware
(All Sensor Materials)

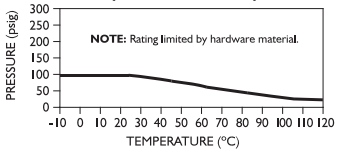

316 Stainless Steel Mounting Hardware

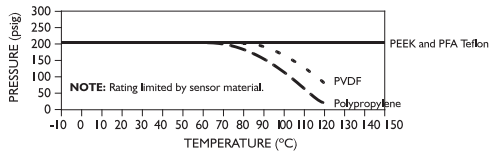

304 Stainless Steel Sanitary Mounting Hardware††
With Polypropylene Sensor

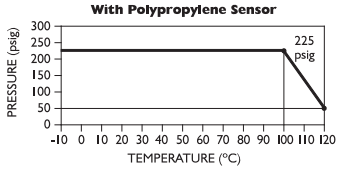

With PVDF Sensor

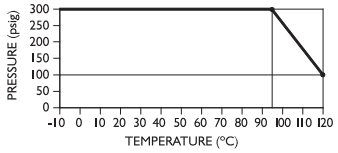

With PFA Teflon Sensor

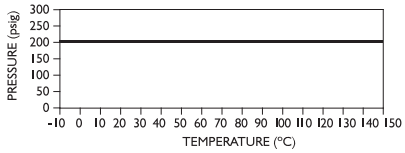

†Ratings for the above Hach sensor and mounting hardware combinations are based upon water service. More severe service may require a correction factor.

††Sanitary hardware ratings are for MH018S8SZ hardware. Other hardware and clamp combinations may reduce the listed ratings.

Insertion Hardware only:	MH118M9NZ	MH138M9NZ
Temperature Range**	-5 to 95°C (23 to 203°F) supported or unsupported	-5 to 80°C (23 to 176°F) unsupported if installed vertically; -5 to 95°C (23 to 203°F) when supported with bracket
Maximum Pressure**	5.5 bar at 95°C (80 psig at 203°F)	3.5 bar at 90°C (50 psig at 194°F)
Wetted Materials	316 stainless steel, Teflon® valve seats, and Viton® O-rings	CPVC, brass, Teflon® valve seats, and Viton® O-ring seals

***These sensor/hardware temperature and pressure ratings are limited by the hardware material, maximum pressure, and whether the assembly is supported or unsupported.*

**Specifications subject to change without notice.*

PEEK® is a registered Trademark of ICI Americas, Inc.; Teflon® is a registered Trademark of DuPont Co.; Viton® is a registered trademark of E.I. DuPont de Nemours + Co.

Engineering Specifications

1. The electrodeless conductivity sensor shall measure from 0-200 to 0-2,000,000 microSiemens/cm, and shall have a built-in Pt 1000 RTD element to compensate measured conductivity for changes in process temperature.

2. The sensor shall be constructed of only one wetted body material which shall be polypropylene, PVDF, PEEK® or PFA Teflon®.

3. The sensor cable shall be water resistant and rated to 150ºC (302ºF) for polypropylene and PVDF sensors or 200ºC (392ºF) for PEEK® and PFA Teflon® sensors.

4. The sensor shall have a 1/2-inch nominal diameter bore for operation in slurries.

5. The sensor shall be a:

   a) Convertible style that can be directly fastened onto the end of a pipe for immersion mounting or, by using a special Hach union-mount adapter, mounted into any 2-inch NPT fitting (tee, weldolet, pipe saddle, etc.). The convertible style sensor can also be insertion mounted into a 2-inch ball valve assembly.

   b) Sanitary style with materials that conform to the provisions of 3-A Sanitary Standards to withstand CIP cleaning, and with an integral 2-inch sanitary-mount flange to mount into a standard 2-inch sanitary tee.

6. An optional sensor module or Digital Gateway shall be available for connecting to a Hach sc Digital Controller.

7. The sensor shall be Hach Company 3700 sc or 3700 Inductive Conductivity Sensor.

Dimensions

Convertible Style

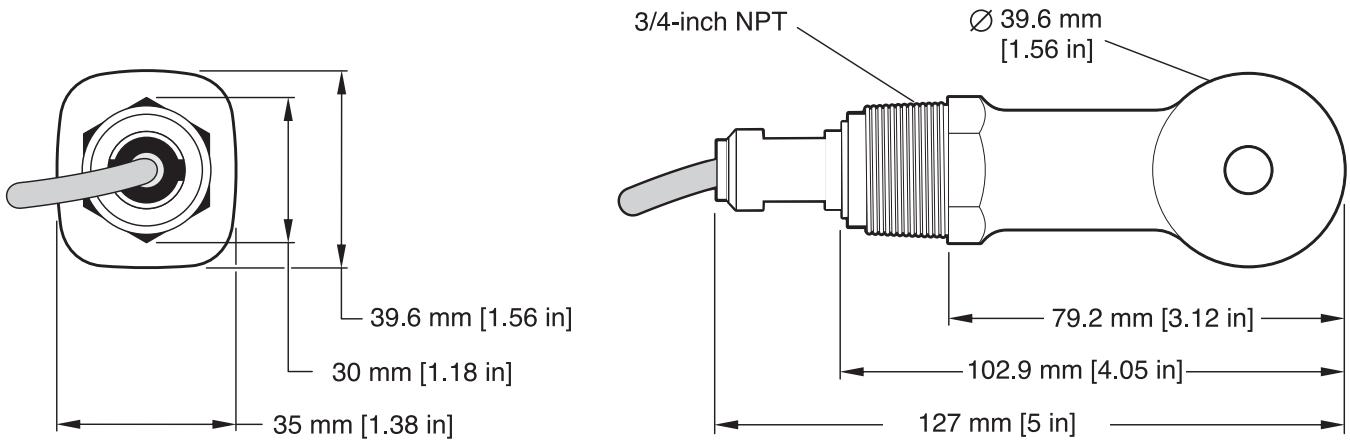

Sanitary Style

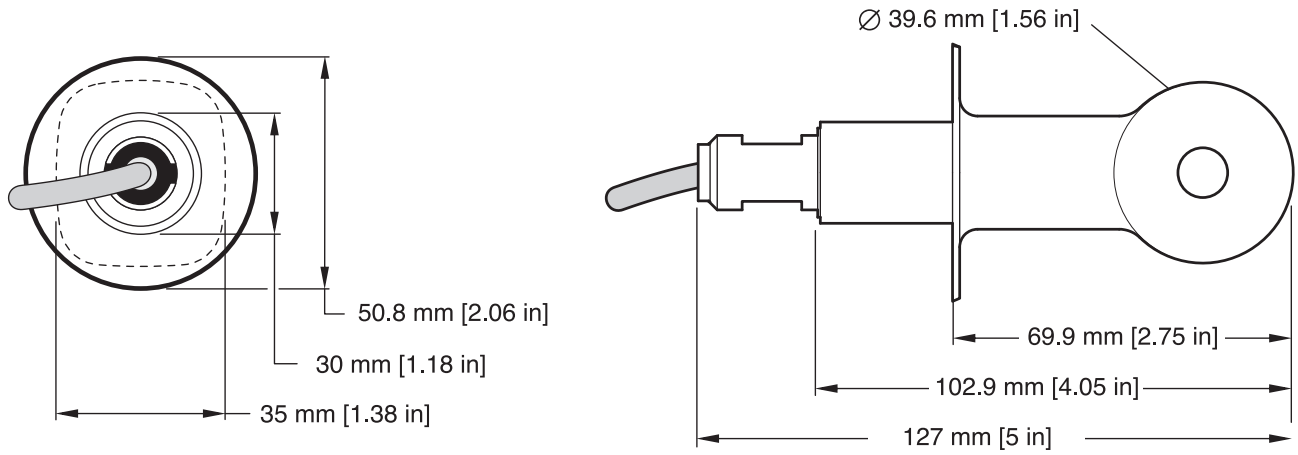

Ordering Information

3700 sc Digital Inductive Conductivity Sensors

All digital inductive sensors come complete with standard sensor cable length of 6 m (20 ft.), digital gateway, and a 1 m (3.3 ft.) digital extension cable.

Choice of body styles:

- *Convertible – 2-inch NPT, designed for tee, other flow through, insertion, and pipe mountings for immersion.*
- *Sanitary (CIP) –2-inch flange, special cap, and EPDM compound gasket. Conforms to provisions of 3-A Sanitary Standards.*

Product Number	Body Style	Body Material
D3705E2T	Sanitary	Polypropylene
D3706E2T	Sanitary	PVDF
D3708E2T	Sanitary	PFA Teflon
D3725E2T	Convertible	Polypropylene
D3726E2T	Convertible	PVDF
D3727E2T	Convertible	PEEK
D3728E2T	Convertible	PFA Teflon

Digital Gateway

6120800 Use the Digital Gateway to connect analog Hach 3700 inductive conductivity sensors to the Hach sc1000 digital controller

3700 Analog Inductive Conductivity Sensors

All Analog sensors come complete with standard sensor cable length of 6 m (20 ft.).

Choice of body styles:

- *Convertible – 2-inch NPT, designed for tee, other flow through, insertion, and pipe mountings for immersion.*
- *Sanitary (CIP) –2-inch flange, special cap, and EPDM compound gasket. Conforms to provisions of 3-A Sanitary Standards.*

Product Number	Body Style	Body Material
3705E2T	Sanitary	Polypropylene
3706E2T	Sanitary	PVDF
3708E2T	Sanitary	PFA Teflon
3725E2T	Convertible	Polypropylene
3726E2T	Convertible	PVDF
3727E2T	Convertible	PEEK
3728E2T	Convertible	PFA Teflon

Accessories

Cables

Digital cables are used only with digital sensors or gateways when connecting to a Hach sc Digital Controller.

6122400 Digital Extension Cable, 1 m (3.2 ft.)

5796000 Digital Extension Cable, 7.7 m (25 ft.)

5796100 Digital Extension Cable, 15 m (50 ft.)

5796200 Digital Extension Cable, 31 m (100 ft.)

Analog cables are used only with analog sensors, junction box, and controller.

1W1100 Analog Interconnect Cable (order per foot)

Digital Termination Box

Used with digital extension cables when the desired cable length between the digital sensor/digital gateway and sc Digital Controller is between 100 m (328 ft) and 1000 m (3280 ft).

5867000 Digital Termination Box

Analog Junction Box

Used with analog interconnect cable when the desired cable length between analog sensor and analog controller is greater than the standard length of sensor cable. Each junction box includes terminal strip and gasket.

60A2053 Junction Box, Surface-mount, aluminum (includes mounting hardware)

60A9944 Junction Box, Pipe-mount, PVC for 1/2-inch diameter pipe (includes mounting hardware)

60G2052 Junction Box, Pipe-mount, PVC for 1-inch diameter pipe (includes mounting hardware)

76A4010-001 Junction Box, NEMA 4X (no mounting hardware included)

Conductivity Reference Solutions

Please specify the desired conductivity value when placing your order.

Product Number	Description	Volume
25M3A2000-119	100-1000 µS/cm	1 liter
25M3A2050-119	1000-2000 µS/cm	1 liter
25M3A2100-119	2000-150,000 µS/cm	1 liter
25M3A2200-119	200,000-300,000 µS/cm	1 liter

Ordering Information *continued*

Mounting Hardware

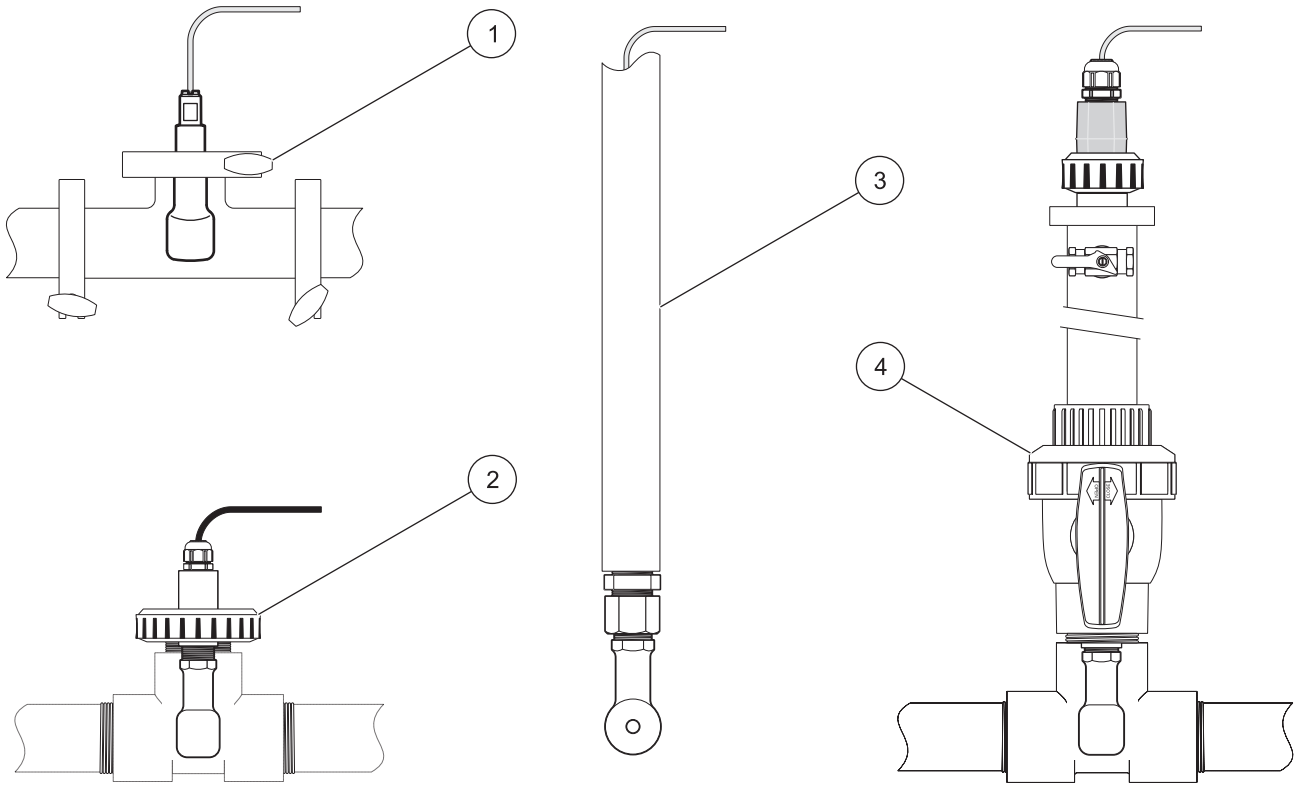

1. Sanitary Style sensor sanitary clamp mounting

2. Convertible Style sensor union mounting

3. Convertible Style sensor immersion mounting

4. Convertible Style sensor ball valve mounting

Sanitary Mount

MH018S8SZ 316SS

Includes 316 SS sanitary 2-inch tee, heavy-duty clamp, special cap, and EPDM compound gasket.

Union Mount

MH518N3NZ 316 SS

MH538N3NZ CPVC

MH568N3NZ PVDF

Includes adapter and a 2-inch pipe tee. Union adapters are used with convertible style sensors that are to be union or flange mounted into a standard 2-inch NPT pipe tee or insertion mounted into a 2-inch ball valve assembly.

Immersion Mount

MH432G CPVC Pipe

Includes 1/2-inch diameter x 4-foot pipe, 1/2- x 3/4-inch NPT coupling, and plastic pipe-mount junction box with terminal strip.

Insertion Mount

MH138M9NZ CPVC

MH118M9NZ 316 SS

Includes 2-inch NPT insertion assembly with ball valve.

Common Applications

Refer to page 2 for sensor temperature and pressure limits.

Industry	Application	Recommended Sensor Style (and Material)
Metals Finishing and Mining	Plating bath monitoring	Convertible (polypropylene)
	Alkaline/caustic wash	Convertible (polypropylene)
	Rinse water	Convertible (polypropylene)
	Pickling processes	Convertible (PVDF)
	Metals recovery	Convertible (PEEK)
	Copper floatation	Convertible (PEEK)
	Scrubbers	Convertible (polypropylene)
Chemicals and Refining	Acid production	Convertible (PFA Teflon)
	Caustic production	Convertible (PFA Teflon
	Phosphates	Convertible (PFA Teflon)
	Fertilizers	Convertible (PFA Teflon)
	Detergents	Convertible (PFA Teflon)
	Glycerin	Convertible (PVDF)
	Moisture detection	Convertible (PVDF or PFA Teflon)
	Scrubbers	Convertible (PVDF)
	Wastewater	Convertible (PVDF)
	Oil well drilling mud	Convertible (PEEK)
	Leak detection	Convertible (PEEK)
	Alkylation	Convertible (PFA Teflon)
	Spill detection	Convertible (PEEK)
Food and Beverage	Brine concentration	Convertible (polypropylene)
	Desalting	Convertible (polypropylene)
	Cheese production	Sanitary (PFA Teflon)
	Caustic peeling	Convertible (PFA Teflon)
	Pickle making	Sanitary (polypropylene)
	CIP applications	Sanitary (PFA Teflon)
	Rinse water control	Convertible (polypropylene)
	Sugar carbonation	Convertible (PFA Teflon)
Pulp and Paper	White, black and green liquor	Convertible (PEEK)
	Stock washing	Convertible (PEEK)
	Wash and cooking liquor control	Convertible (PEEK)
	Scrubbers	Convertible (PEEK)
	Spill detection	Convertible (PEEK)
Textile Manufacturing	Rinse water	Convertible (polypropylene)
	Dye baths	Convertible (polypropylene)
	Bleaching	Convertible (polypropylene)
	Mercerizing	Convertible (polypropylene)
	Acid washing	Convertible (polypropylene)
	Carbonizing and scouring baths	Convertible (polypropylene)
Natural Waters, Lakes, Streams, and Sea Water	Water pollution monitoring	Convertible (polypropylene)
	Salt intrusion	Convertible (polypropylene)
	Salinity	Convertible (polypropylene)
Clean Water Treatment	Ion exchange regeneration	Convertible (polypropylene)
	Reverse osmosis concentrate monitoring	Convertible (polypropylene)
	Softener regeneration	Convertible (polypropylene)
	Acid/caustic concentration control	Convertible (PVDF)
Wastewater Treatment	Acid/caustic concentration control	Convertible (PEEK)
	Spill detection	Convertible (PEEK)
Steam Generation	Boiler blowdown	Convertible (polypropylene)
	Flue gas scrubbers	Convertible (polypropylene)

To complete your conductivity measurement system, choose from these Hach controllers...

Model sc200 Controller

(see Lit. #2665)

The sc200 controller platform can be configured to operate either 2 Digital Sensor Inputs, or 1 or 2 Analog Sensor Inputs, or a combination of Digital and Analog Sensor Inputs. Customers may choose their communication options from a variety of offerings ranging from MODBUS RTU to Profibus DPV1.

sc200 for Hach Digital Sensors

LXV404.99.00552 sc200 controller, 2 channel, digital
LXV404.99.00502 sc200 controller, 1 channel, digital
LXV404.99.00542 sc200 controller, 2 channel, digital & mA input
LXV404.99.00512 sc200 controller, 2 channel, digital & pH/DO
LXV404.99.00522 sc200 controller, 2 channel, digital & Conductivity
LXV404.99.00532 sc200 controller, 2 channel, digital & Flow

sc200 for Hach Analog Sensors

LXV404.99.00102 sc200 controller, 1 channel, pH/DO
LXV404.99.00112 sc200 controller, 2 channel, pH/DO
LXV404.99.00202 sc200 controller, 1 channel, Conductivity
LXV404.99.00222 sc200 controller, 2 channel, Conductivity
LXV404.99.00212 sc200 controller, 2 channel, pH/DO & Conductivity
LXV404.99.00302 sc200 controller, 1 channel, Flow
LXV404.99.00332 sc200 controller, 2 channel, Flow
LXV404.99.00312 sc200 controller, 2 channel, Flow & pH/DO
LXV404.99.00322 sc200 controller, 2 channel, Flow & Conductivity

Note: Other sensor combinations are available. Please contact Hach Technical Support or your Hach representative.
Note: Communication options (MODBUS and Profibus DPV1) are available.

Model sc1000 Controller

(see Lit. #2403)

Each sc1000 Probe Module provides power to the system and can accept up to 8 digital sensors/expansion boards. Probe Modules can be networked together to accommodate up to 32 digital sensors/expansion boards attached to the same network.

LXV402.99.00002 sc1000 Display Module
LXV400.99.1R572 sc1000 Probe Module, 4 sensors, 4 mA Out, 4 mA In, 4 Relays, 110-230V
LXV400.99.1B572 sc1000 Probe Module, 4 sensors, 4 mA Out, 4 mA In, 4 Relays, RS-485 (MODBUS), 110-230V
LXV400.99.1F572 sc1000 Probe Module, 4 sensors, 4 mA Out, 4 mA In, 4 Relays, PROFIBUS DP, 110-230V
LXV400.99.1R582 sc1000 Probe Module, 6 sensors, 4 mA Out, 4 mA In, 4 Relays, 110-230V

si792 2-wire Transmitter (for 3700 Analog Inductive Conductivity Sensors)

(see Lit. #2605)

The Hach si792 2-wire electrochemistry transmitters are full-featured, intuitive to operate, and work with Hach's world-class water quality sensors. Rugged construction is designed for Class I, Division 2 (C1, D2) respectively Class I, Division 1 (C1, D1) application. Digital communication capabilities are available.

LXV503.99.70002 si792 E; Class 1 Division 2; HART
LXV503.99.70102 si792x E; Class 1 Division 1; HART
LXV503.99.76102 si792x E-PA; Class 1 Division 1; PROFIBUS PA
LXV503.99.77102 si792x E-FF; Class 1 Division 1; FOUNDATION FIELDBUS

Lit. No. 2465 Rev 2
J10 Printed in U.S.A.
©Hach Company, 2010. All rights reserved.
In the interest of improving and updating its equipment, Hach Company reserves the right to alter specifications to equipment at any time.

At Hach, it's about learning from our customers and providing the right answers. It's more than ensuring the quality of water—it's about ensuring the quality of life. When it comes to the things that touch our lives...

Keep it pure.

Make it simple.

Be right.

For current price information, technical support, and ordering assistance, contact the Hach office or distributor serving your area.

In the United States, contact:

HACH COMPANY World Headquarters
P.O. Box 389
Loveland, Colorado 80539-0389
U.S.A.
Telephone: 800-227-4224
Fax: 970-669-2932
E-mail: orders@hach.com
www.hach.com

U.S. exporters and customers in Canada, Latin America, sub-Saharan Africa, Asia, and Australia/New Zealand, contact:

HACH COMPANY World Headquarters
P.O. Box 389
Loveland, Colorado 80539-0389
U.S.A.
Telephone: 970-669-3050
Fax: 970-461-3939
E-mail: intl@hach.com
www.hach.com

In Europe, the Middle East, and Mediterranean Africa, contact:

HACH LANGE GmbH
Willstätterstraße 11
D-40549 Düsseldorf
GERMANY
Tel: +49 (0) 211 5288-0
Fax: +49 (0) 211 5288-143
E-mail: info@hach-lange.de
www.hach-lange.com

HACH®

Be Right™

sc200™ UNIVERSAL CONTROLLER

Applications
- Drinking Water
- Wastewater
- Industrial Water
- Power



One Controller for the Broadest Range of Sensors.

Choose from 30 digital and analog sensor families for up to 17 different parameters.

Maximum Versatility

The sc200 controller allows the use of digital and analog sensors, either alone or in combination, to provide compatibility with Hach's broad range of sensors, eliminating the need for dedicated, parameter-specific controllers.

Ease of Use and Confidence in Results

Large, high-resolution, transreflective display provides optimal viewing resolution in any lighting condition. Guided calibration procedures in 19 languages minimize complexity and reduce operator error. Password-protected SD card reader offers a simple solution for data download and transfer. Visual warning system provides critical alerts.

Wide Variety of Communication Options

Utilize two to five analog outputs to transmit primary and secondary values for each sensor, or integrate Hach sensors and analyzers into MODBUS RS232/RS485, Profibus® DP, and HART networks.



Password protected SD card reader offers a simple solution for data download and transfer, and sc200 and digital sensor configuration file duplication and backup.

HACH®
Be Right™

Controller Comparison







Features	Previous Models sc100™ Controller	Previous Models GLI53 Controller	sc200™ Controller	Benefits
Display	64 x 128 pixels 33 x 66 mm (1.3 x 2.6 in.)	64 x 128 pixels 33 x 66 mm (1.3 x 2.6 in.)	160 x 240 pixels 48 x 68 mm (1.89 x 2.67 in.) Transreflective	• Improved user interface—50% bigger • Easier to read in daylight and sunlight
Data Management	irDA Port/PDA Service Cable	N/A	SD Card Service Cable	• Simplifies data transfer • Standardized accessories/max compatibility
Sensor Inputs	2 Max Direct Digital Analog via External Gateway	2 Max Analog Depending on Parameter	2 Max Digital and/or Analog with Sensor Card	• Simplifies analog sensor connections • Works with analog and digital sensors
Analog Inputs	N/A	N/A	1 Analog Input Signal Analog 4-20mA Card	• Enables non-sc analyzer monitoring • Accepts mA signals from other analyzers for local display • Consolidates analog mA signals to a digital output
4-20 mA Outputs	2 Standard	2 Standard	2 Standard Optional 3 Additional	• Total of five (5) 4-20 mA outputs allows multiple mA outputs per sensor input
Digital Communication	MODBUS RS232/RS485 Profibus DP V1.0	HART	MODBUS RS232/RS485 Profibus DP V1.0 HART 7.2	• Unprecedented combination of sensor breadth and digital communication options

Choose from Hach's Broad Range of Digital and Analog Sensors

Parameter	Sensor	Digital or Analog
Ammonia	AMTAX™ sc, NH4D sc, AISE sc, AN-ISE sc	●
Chlorine	CLF10 sc, CLT10 sc, 9184 sc	●
Chlorine Dioxide	9185 sc	●
Conductivity	GLI 3400 Contacting, GLI 3700 Inductive	△
Dissolved Oxygen	LDO® Model 2, 5740 sc	●
Dissolved Oxygen	5500	△
Flow	U53, F53 Sensors	△
Nitrate	NITRATAX™ sc, NO3D sc, NISE sc, AN-ISE sc	●
Oil in Water	FP360 sc	●
Organics	UVAS sc	●
Ozone	9187 sc	●
pH/ORP	pHD	●
pH/ORP	pHD, pH Combination, LCP	△
Phosphate	PHOSPHAX™ sc	●
Sludge Level	SONATAX™ sc	●
Suspended Solids	SOLITAX™ sc, TSS sc	●
Turbidity	1720E, FT660 sc, SS7 sc, ULTRATURB sc, SOLITAX sc, TSS sc	●
Ultra Pure Conductivity	8310, 8311, 8312, 8315, 8316, 8317 Contacting	△
Ultra Pure pH/ORP	8362	△

● = Digital △ = Analog

Connect up to two of any of the sensors listed above, in any combination, to meet your application needs. The diagrams below demonstrate the potential configurations. Operation of analog sensors requires the controller to be equipped with the appropriate sensor module. Contact Hach Technical Support for help with selecting the appropriate module.

2 Channel Configurations

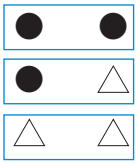

1 Channel Configurations

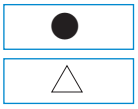

Specifications*

Dimensions (H x W x D)	5.7 in x 5.7 in x 7.1 in (144 mm x 144 mm x 181 mm)
Display	Graphic dot matrix LCD with LED backlighting, transreflective
Display Size	1.9 x 2.7 in. (48 mm x 68 mm)
Display Resolution	240 x 160 pixels
Weight	3.75 lbs. (1.70 kg)
Power Requirements (Voltage)	100 - 240 V AC, 24 V DC
Power Requirements (Hz)	50/60 Hz
Operating Temperature Range	-20 to 60 °C , 0 to 95% RH non-condensing
Analog Outputs	Two (Five with optional expansion module) to isolated current outputs, max 550 Ω , Accuracy: ± 0.1% of FS (20mA) at 25 °C, ± 0.5% of FS over -20 °C to 60 °C range Operational Mode: measurement or calculated value
Analog Output Functional Mode	Linear, Logarithmic, Bi-linear, PID
Security Levels	2 password-protected levels
Mounting Configurations	Wall, pole, and panel mounting
Enclosure Rating	NEMA 4X/IP66
Conduit Openings	1/2 in NPT Conduit
Relay: Operational Mode	Primary or secondary measurement, calculated value (dual channel only) or timer
Relay Functions	Scheduler (Timer), Alarm, Feeder Control, Event Control, Pulse Width Modulation, Frequency Control, and Warning
Relays	Four electromechanical SPDT (Form C) contacts, 1200 W, 5 A
Communication	MODBUS RS232/RS485, PROFIBUS DPV1, or HART 7.2 optional
Memory Backup	Flash memory
Electrical Certifications	EMC CE compliant for conducted and radiated emissions: - CISPR 11 (Class A limits) - EMC Immunity EN 61326-1 (Industrial limits) Safety cETLus safety mark for: - General Locations per ANSI/UL 61010-1 & CAN/CSA C22.2. No. 61010-1 - Hazardous Location Class I, Division 2, Groups A,B,C & D (Zone 2, Group IIC) per FM 3600 / FM 3611 & CSA C22.2 No. 213 M1987 with approved options and appropriately rated Class I, Division 2 or Zone 2 sensors cULus safety mark - General Locations per UL 61010-1 & CAN/CSA C22.2. No. 61010-1

**Subject to change without notice.*

Dimensions

Surface Mounting Dimensions

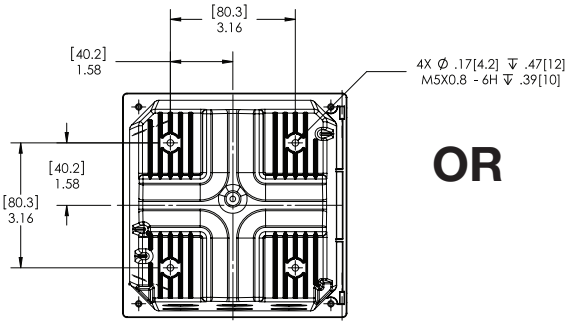

Mounting Dimensions
(Rear View)

OR

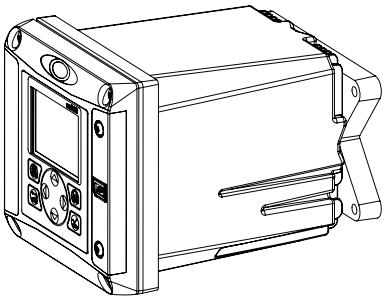

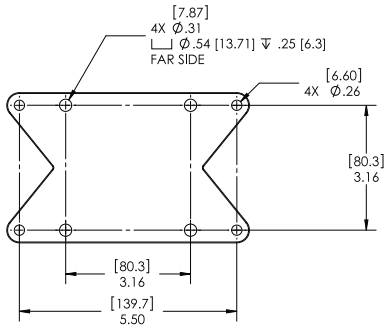

Bracket (supplied) for Surface Mounting
(Not compatible with Weather and Sun Shield p/n 9220600 when surface mounting.)

Panel Mounting Dimensions

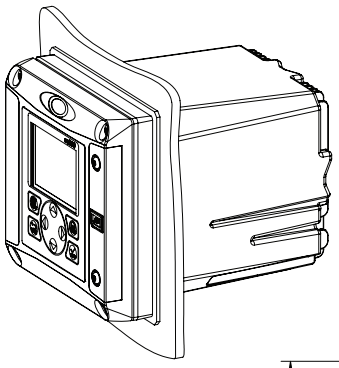

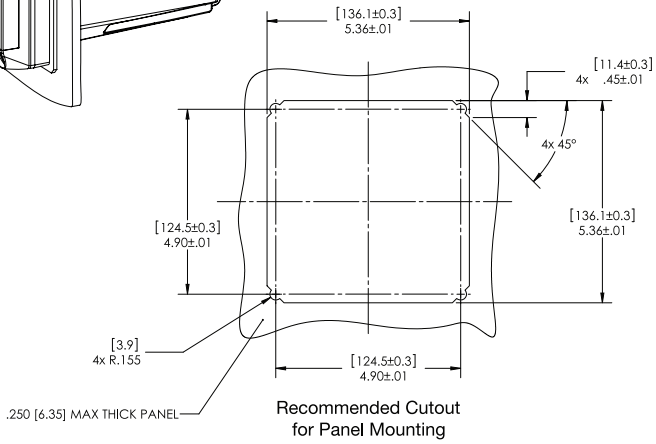

Recommended Cutout
for Panel Mounting

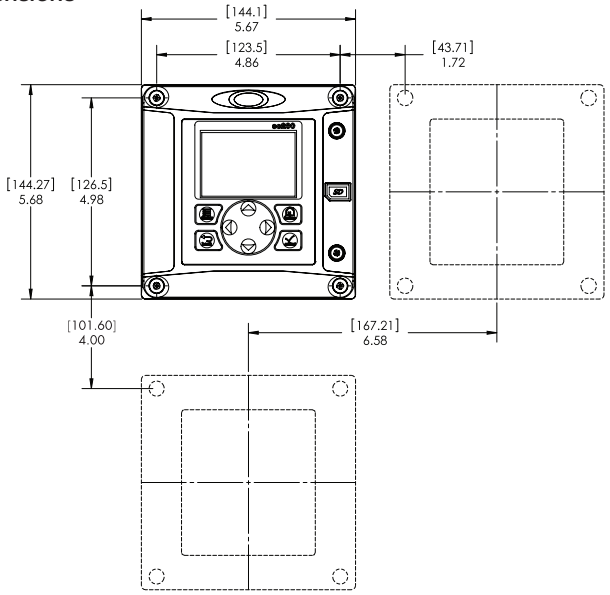

Minimum Spacing Dimensions
for Group Mounting

Top and Bottom Views

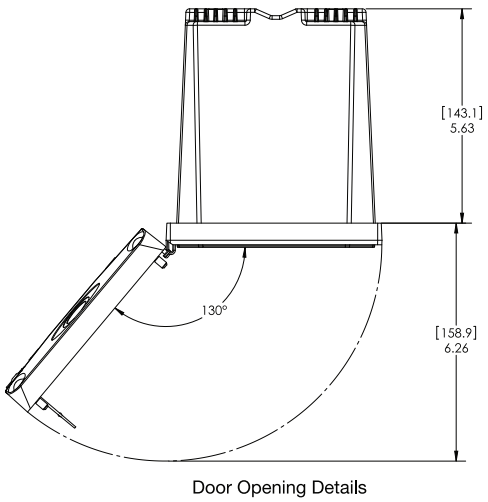

Door Opening Details

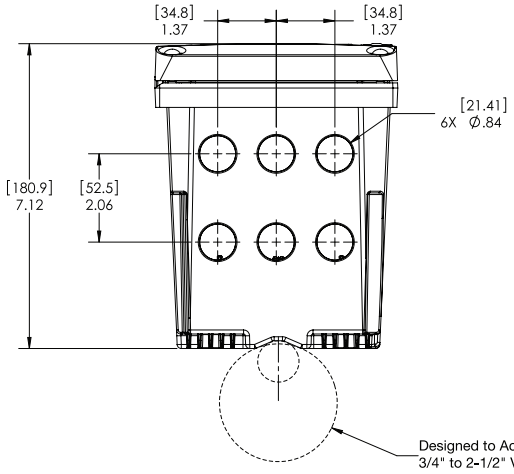

Ordering Information

sc200 for Hach Digital and Analog Sensors

LXV404.99.00552	sc200 controller, 2 channels, digital
LXV404.99.00502	sc200 controller, 1 channel, digital
LXV404.99.00102	sc200 controller, 1 channel, pH/DO
LXV404.99.00202	sc200 controller, 1 channel, Conductivity
LXV404.99.01552	sc200 controller, 2 channels, digital, Modbus RS232/RS485
LXV404.99.00112	sc200 controller, 2 channel, pH/DO

Note: Other Sensor combinations are available. Please contact Hach Technical Support or your Hach representative.

Note: Communication options (MODBUS, Profibus DPV1, and HART) are available. Please contact Hach Technical Support or your Hach representative.



sc200 for Ultrapure Sensors

9500.99.00602	sc200 controller, 1 channel, ultrapure conductivity
9500.99.00702	sc200 controller, 1 channel, ultrapure pH
9500.99.00662	sc200 controller, 2 channel, ultrapure conductivity
9500.99.00772	sc200 controller, 2 channel, ultrapure pH



Sensor and Communication Modules

9012900	Analog pH/ORP and DO module for GLI Sensors
9013000	Analog Conductivity module for GLI Sensors
9012700	Flow module
9012800	4-20 mA Input Module
9525700	Analog pH/ORP Module for Polymetron Sensors
9525800	Analog Conductivity Module for Polymetron Sensors
9013200	Modbus 232/485 Module
9173900	Profibus DP Module
9328100	HART Module
9334600	4-20 mA Output Module (Provides 3 additional mA Outputs)

Accessories

9220600	sc200 Weather and Sun Shield with UV Protection Screen
8809200	sc200 UV Protection Screen
9218200	SD card reader (USB) for connection to PC
9218100	4 GB SD card

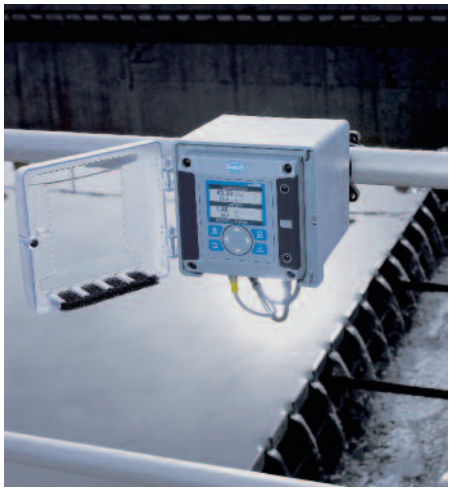

HACH COMPANY World Headquarters: Loveland, Colorado USA

United States: 800-227-4224 tel 970-669-2932 fax orders@hach.com
Outside United States: 970-669-3050 tel 970-461-3939 fax int@hach.com
hach.com

LIT2665 Rev 7
K13 Printed in U.S.A.
©Hach Company, 2013. All rights reserved.
In the interest of improving and updating its equipment,
Hach Company reserves the right to alter specifications to equipment at any time.

HACH®
Be Right™

CS-407-108 : Identification sheet

VWTC PROJECT NUMBER:	Iqaluit WWTP	REV:	01
PROJECT NAME:	5000218036	SUBMITTED TO (COMPANY):	
ENGINEER:	G. HÉBERT	SUBMITTED TO (RESPONSIBLE)	
PROJECT MANAGER:	C. BEKAERT	PROJECT NUM REFERENCE.:	
PHONE NUMBER:		LOT NUMBER:	

SUPPLIER	EQPT CODE	EQPT TAG NO	DIA	DESCRIPTION	INFO 1	INFO 2	INFO 3	APPLIC.	NOTE	REV
HACH	IECNGU201988	AIT-04-941	144 mm x 144 mm x 181 mm	HP-500 INSTRUMENT	DIGITAL SC 200 TRANSMITTER / MANUF. : HACH / MODEL : LXV404.99.00552	100-240V AC, No Power Cord // 2x 4-20mA Out // 1x Digital input // 1x analog conductivity sensor input	N/A	HP-500		1

This page is intentionally left blank

sc200™ UNIVERSAL CONTROLLER

Applications
- Drinking Water
- Wastewater
- Industrial Water
- Power



One Controller for the Broadest Range of Sensors.

Choose from 30 digital and analog sensor families for up to 17 different parameters.

Maximum Versatility

The sc200 controller allows the use of digital and analog sensors, either alone or in combination, to provide compatibility with Hach's broad range of sensors, eliminating the need for dedicated, parameter-specific controllers.

Ease of Use and Confidence in Results

Large, high-resolution, transreflective display provides optimal viewing resolution in any lighting condition. Guided calibration procedures in 19 languages minimize complexity and reduce operator error. Password-protected SD card reader offers a simple solution for data download and transfer. Visual warning system provides critical alerts.

Wide Variety of Communication Options

Utilize two to five analog outputs to transmit primary and secondary values for each sensor, or integrate Hach sensors and analyzers into MODBUS RS232/RS485, Profibus® DP, and HART networks.



Password protected SD card reader offers a simple solution for data download and transfer, and sc200 and digital sensor configuration file duplication and backup.

HACH®
Be Right™

Controller Comparison







Features	Previous Models sc100™ Controller	Previous Models GLI53 Controller	sc200™ Controller	Benefits
Display	64 x 128 pixels 33 x 66 mm (1.3 x 2.6 in.)	64 x 128 pixels 33 x 66 mm (1.3 x 2.6 in.)	160 x 240 pixels 48 x 68 mm (1.89 x 2.67 in.) Transreflective	• Improved user interface—50% bigger • Easier to read in daylight and sunlight
Data Management	irDA Port/PDA Service Cable	N/A	SD Card Service Cable	• Simplifies data transfer • Standardized accessories/max compatibility
Sensor Inputs	2 Max Direct Digital Analog via External Gateway	2 Max Analog Depending on Parameter	2 Max Digital and/or Analog with Sensor Card	• Simplifies analog sensor connections • Works with analog and digital sensors
Analog Inputs	N/A	N/A	1 Analog Input Signal Analog 4-20mA Card	• Enables non-sc analyzer monitoring • Accepts mA signals from other analyzers for local display • Consolidates analog mA signals to a digital output
4-20 mA Outputs	2 Standard	2 Standard	2 Standard Optional 3 Additional	• Total of five (5) 4-20 mA outputs allows multiple mA outputs per sensor input
Digital Communication	MODBUS RS232/RS485 Profibus DP V1.0	HART	MODBUS RS232/RS485 Profibus DP V1.0 HART 7.2	• Unprecedented combination of sensor breadth and digital communication options

Choose from Hach's Broad Range of Digital and Analog Sensors

Parameter	Sensor	Digital or Analog
Ammonia	AMTAX™ sc, NH4D sc, AISE sc, AN-ISE sc	●
Chlorine	CLF10 sc, CLT10 sc, 9184 sc	●
Chlorine Dioxide	9185 sc	●
Conductivity	GLI 3400 Contacting, GLI 3700 Inductive	△
Dissolved Oxygen	LDO® Model 2, 5740 sc	●
Dissolved Oxygen	5500	△
Flow	U53, F53 Sensors	△
Nitrate	NITRATAX™ sc, NO3D sc, NISE sc, AN-ISE sc	●
Oil in Water	FP360 sc	●
Organics	UVAS sc	●
Ozone	9187 sc	●
pH/ORP	pHD	●
pH/ORP	pHD, pH Combination, LCP	△
Phosphate	PHOSPHAX™ sc	●
Sludge Level	SONATAX™ sc	●
Suspended Solids	SOLITAX™ sc, TSS sc	●
Turbidity	1720E, FT660 sc, SS7 sc, ULTRATURB sc, SOLITAX sc, TSS sc	●
Ultra Pure Conductivity	8310, 8311, 8312, 8315, 8316, 8317 Contacting	△
Ultra Pure pH/ORP	8362	△

● = Digital △ = Analog

Connect up to two of any of the sensors listed above, in any combination, to meet your application needs. The diagrams below demonstrate the potential configurations. Operation of analog sensors requires the controller to be equipped with the appropriate sensor module. Contact Hach Technical Support for help with selecting the appropriate module.

2 Channel Configurations

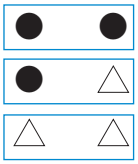

1 Channel Configurations

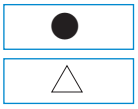

Specifications*

Dimensions (H x W x D)	5.7 in x 5.7 in x 7.1 in (144 mm x 144 mm x 181 mm)
Display	Graphic dot matrix LCD with LED backlighting, transreflective
Display Size	1.9 x 2.7 in. (48 mm x 68 mm)
Display Resolution	240 x 160 pixels
Weight	3.75 lbs. (1.70 kg)
Power Requirements (Voltage)	100 - 240 V AC, 24 V DC
Power Requirements (Hz)	50/60 Hz
Operating Temperature Range	-20 to 60 °C , 0 to 95% RH non-condensing
Analog Outputs	Two (Five with optional expansion module) to isolated current outputs, max 550 Ω , Accuracy: ± 0.1% of FS (20mA) at 25 °C, ± 0.5% of FS over -20 °C to 60 °C range Operational Mode: measurement or calculated value
Analog Output Functional Mode	Linear, Logarithmic, Bi-linear, PID
Security Levels	2 password-protected levels
Mounting Configurations	Wall, pole, and panel mounting
Enclosure Rating	NEMA 4X/IP66
Conduit Openings	1/2 in NPT Conduit
Relay: Operational Mode	Primary or secondary measurement, calculated value (dual channel only) or timer
Relay Functions	Scheduler (Timer), Alarm, Feeder Control, Event Control, Pulse Width Modulation, Frequency Control, and Warning
Relays	Four electromechanical SPDT (Form C) contacts, 1200 W, 5 A
Communication	MODBUS RS232/RS485, PROFIBUS DPV1, or HART 7.2 optional
Memory Backup	Flash memory
Electrical Certifications	EMC CE compliant for conducted and radiated emissions: - CISPR 11 (Class A limits) - EMC Immunity EN 61326-1 (Industrial limits) Safety cETLus safety mark for: - General Locations per ANSI/UL 61010-1 & CAN/CSA C22.2. No. 61010-1 - Hazardous Location Class I, Division 2, Groups A,B,C & D (Zone 2, Group IIC) per FM 3600 / FM 3611 & CSA C22.2 No. 213 M1987 with approved options and appropriately rated Class I, Division 2 or Zone 2 sensors cULus safety mark - General Locations per UL 61010-1 & CAN/CSA C22.2. No. 61010-1

**Subject to change without notice.*

Dimensions

Surface Mounting Dimensions

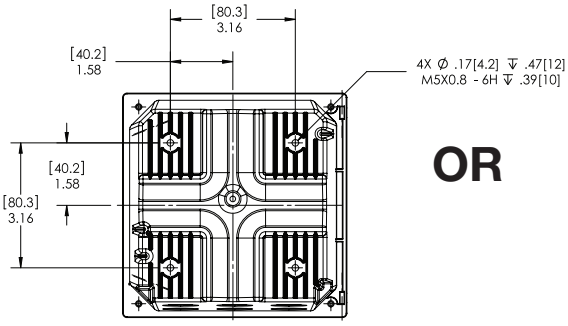

Mounting Dimensions
(Rear View)

OR

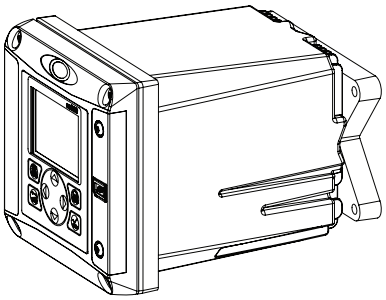

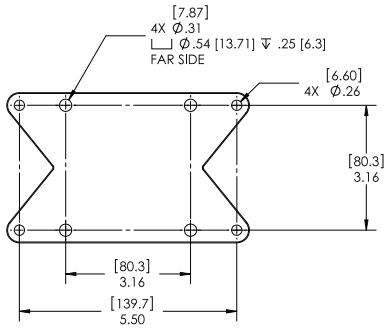

Bracket (supplied) for Surface Mounting
(Not compatible with Weather and Sun Shield p/n 9220600 when surface mounting.)

Panel Mounting Dimensions

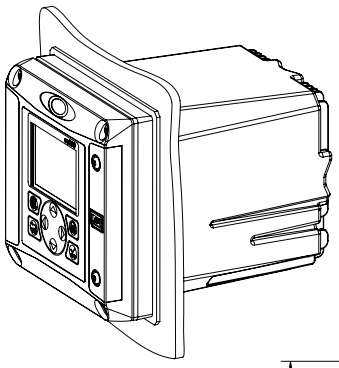

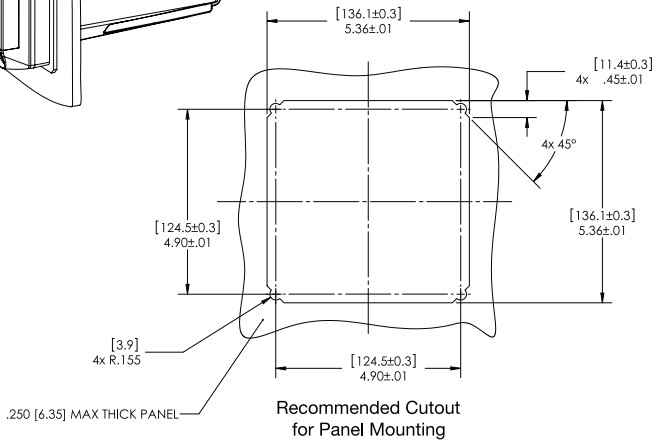

Recommended Cutout
for Panel Mounting

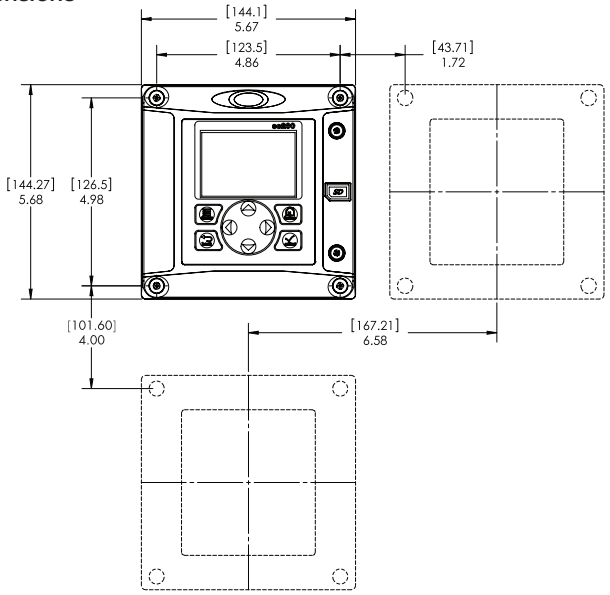

Minimum Spacing Dimensions
for Group Mounting

Top and Bottom Views

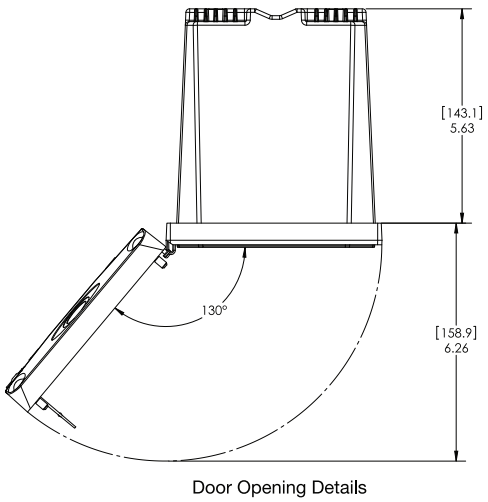

Door Opening Details

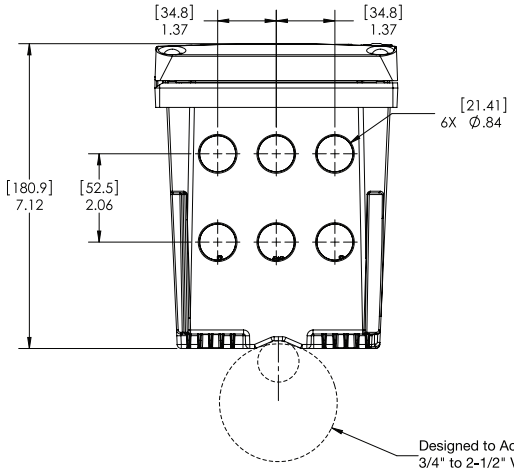

Ordering Information

sc200 for Hach Digital and Analog Sensors

LXV404.99.00552	sc200 controller, 2 channels, digital
LXV404.99.00502	sc200 controller, 1 channel, digital
LXV404.99.00102	sc200 controller, 1 channel, pH/DO
LXV404.99.00202	sc200 controller, 1 channel, Conductivity
LXV404.99.01552	sc200 controller, 2 channels, digital, Modbus RS232/RS485
LXV404.99.00112	sc200 controller, 2 channel, pH/DO

Note: Other Sensor combinations are available. Please contact Hach Technical Support or your Hach representative.

Note: Communication options (MODBUS, Profibus DPV1, and HART) are available. Please contact Hach Technical Support or your Hach representative.



sc200 for Ultrapure Sensors

9500.99.00602	sc200 controller, 1 channel, ultrapure conductivity
9500.99.00702	sc200 controller, 1 channel, ultrapure pH
9500.99.00662	sc200 controller, 2 channel, ultrapure conductivity
9500.99.00772	sc200 controller, 2 channel, ultrapure pH



Sensor and Communication Modules

9012900	Analog pH/ORP and DO module for GLI Sensors
9013000	Analog Conductivity module for GLI Sensors
9012700	Flow module
9012800	4-20 mA Input Module
9525700	Analog pH/ORP Module for Polymetron Sensors
9525800	Analog Conductivity Module for Polymetron Sensors
9013200	Modbus 232/485 Module
9173900	Profibus DP Module
9328100	HART Module
9334600	4-20 mA Output Module (Provides 3 additional mA Outputs)

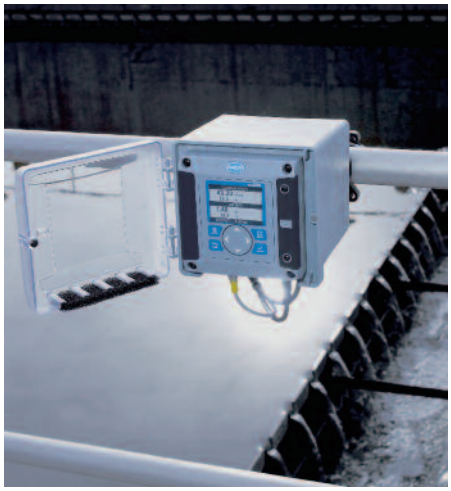

Accessories

9220600	sc200 Weather and Sun Shield with UV Protection Screen
8809200	sc200 UV Protection Screen
9218200	SD card reader (USB) for connection to PC
9218100	4 GB SD card

HACH COMPANY World Headquarters: Loveland, Colorado USA

United States: 800-227-4224 tel 970-669-2932 fax orders@hach.com
Outside United States: 970-669-3050 tel 970-461-3939 fax int@hach.com
hach.com

LIT2665 Rev 7
K13 Printed in U.S.A.
©Hach Company, 2013. All rights reserved.
In the interest of improving and updating its equipment,
Hach Company reserves the right to alter specifications to equipment at any time.

HACH®
Be Right™

CS-413-300 : Identification sheet

VWTC PROJECT NUMBER:	Iqaluit WWTP	REV:	01
PROJECT NAME:	5000218036	SUBMITTED TO (COMPANY):	
ENGINEER:	G. HÉBERT	SUBMITTED TO (RESPONSIBLE)	
PROJECT MANAGER:	C. BEKAERT	PROJECT NUM REFERENCE.:	
PHONE NUMBER:		LOT NUMBER:	

SUPPLIER	EQPT CODE	EQPT TAG NO	DIA	DESCRIPTION	INFO 1	INFO 2	INFO 3	APPLIC.	NOTE	REV
ASHCROFT	IMPSGG300380	PI-04-911	DIA. CADRAN: 2.5"	HP-500 INSTRUMENT	PRESSURE GAUGE/MANUFACTURER: ASHCROFT// MODEL: 25-1009SWL-02L-160PSIG// 1/4''	N/A	N/A	HP-500		1

This page is intentionally left blank

ASHCROFT®

Duralife® Pressure Gauge
Type 1009, ASME B 40.1
Grade 1A (±1% of span)

DESIGNED FOR SAFETY AND LONGER LIFE

- ***5-year limited warranty***
- ***Patented PowerFlex™ movement isolates movement from shock and vibration for longer life***
- ***All stainless, all-welded construction for long life***
- ***ASME Grade 1A, 1% accuracy full scale***
- ***True Zero™ pointer indication – no stop pin to mask false zero reading – ensures safety and process control***

The following Table is *not* for conversion purposes.

STANDARD RANGES (3)(4)(5)

Pressure psi	kg/cm² - bar	kPa
0/15	0/1	0/100
0/30	0/1.6	0/160
0/60	0/2.5	0/250
0/100	0/4	0/400
0/160		
0/200	0/6	0/600
0/300	0/10	0/1000
0/400	0/16	0/1600
0/600	0/25	0/2500
0/800	0/40	0/4000
0/1000	0/60	0/6000
0/1500	0/100	0/10,000
0/2000	0/160	0/16,000
0/3000	0/250	0/25,000
0/4000	0/400	0/40,000
0/5000	0/600	0/60,000
0/6000	0/1000	0/100,000
0/7500		
0/10,000		
0/15,000		
Vacuum		
30 in./0 in.Hg	–1/0	–100/0
Compound		
30 in.Hg/15 psi	–1/0/1.5	–100/0/150
30 in.Hg /30 psi	–1/0/3	–100/0/300
30 in.Hg /60 psi	–1/0/5	–100/0/500
30 in.Hg /100 psi	–1/0/9	–100/0/900
30 in.Hg /150 psi	–1/0/15	–100/0/1500
30 in.Hg /300 psi	–1/0/24	–100/0/2400

- ***New PLUS!™ Performance Option:***
  - ***Liquid-filled performance in a dry gauge***
  - ***Fights vibration and pulsations without liquid-fill headaches***
  - ***See pages 6-7 for details***
  - ***Order as option XLL***

OTHER FEATURES:

Available in 2½˝ and 3½˝ dial sizes, Duralife® pressure gauges are liquid fillable and field convertible for panel mounting. Both zero and span adjustments are standard.

The gauge is available dry, liquid-filled weatherproof or hermetically sealed and *now* with *PLUS!™* performance option. A five year limited warranty is standard with the Duralife® 1009.



BOURDON SYSTEM SELECTION(1)

Ordering Code	Bourdon Tube & Tip Material(1)	Socket Material	Tube Type	Range Selection Limits (psi)	NPT Conn.(6)
AW	316 stainless steel	Bronze	C-Tube	Vac/600	¼
AW	316 stainless steel	Bronze	Helical	1000	¼
SW	316 stainless steel	316 stainless steel	C-Tube	Vac/600	¼ & ½(2)
SW	316 stainless steel	316 stainless steel	Helical	800/15,000	¼ & ½(2)

(1) For selection of the correct Bourdon system material, see the media application table on page 243.
(2) ½ NPT available 3½˝ lower SW system only.
(3) Type 1009 gauges may be ordered with metric single-scale dial: kPa,bar or kg/cm².
(4) Dual-scale dials will be supplied with standard metric inner scale and equivalent psi outer scale or with standard psi inner scale and equivalent metric outer scale–please specify.
(5) Special logos and scales available upon request.
(6) ¼˝ JIS, BSP or DIN threads available on SW systems.

TO ORDER THIS 1009 DURALIFE PRESSURE GAUGE:

Select: 35 1009 SW (L) 02L XXX 1000#

1. Dial size–2½˝, 3½˝
2. Case type–1009
3. Tube and socket material
4. Liquid filled (glycerin), leave blank if dry
5. Connection size–⅛ (01), ¼ (02) ½ (04)
6. Connection location–Lower (L), Back (B)
7. Optional Features–see page 176
8. Standard pressure range–1000 psi

Accessories: see pages 233-238

Consult factory for guidance in product selection
Phone (203) 385-0217, Fax (203) 385-0602 or
visit our web site at www.ashcroft.com

DRESSER Instruments

This page is intentionally left blank

Type 310, 315 All-Welded "Mini" Diaphragm Seal



PRODUCT FEATURES

- Compact size to fit space-restricted areas
- Designed to protect transducers, mini-switches and 3½″ or smaller pressure gauges from corrosion, plugging or freeze-up
- All-welded metal construction prevents leakage of process media
- Rated for 2500 psi at 100°F
- Fill/bleed connection is standard
- Available with male process connection (Type 310)

The compact size of the Ashcroft® 310 mini-seal allows it to fit into space-restricted areas and is designed to protect transducers, mini-switches, and 3½" or smaller dial size pressure gauges from corrosion, plugging or freeze- up. All welded metal construction prevents leakage of process media. It is rated for 2500 psi at 100°F and has a 316L stainless steel top housing standard. Lower housing materials include 316L stainless steel or Hastelloy C. Diaphragm materials include 316L stainless, Hastelloy C or Tantalum. ¼ NPT or ½ NPT process connection sizes are available.

PRODUCT SPECIFICATIONS

Model Number:	Type 310, 315
Process Connection Size:	¼″, ½″ (⅛″, ¾″, 1″- 310 only) (see table A)
Instrument Connection Size:	⅛, ¼ NPT
Diaphragm Material:	316L SS, Hastelloy C276, Tantalum, Monel
Bottom Housing Materials:	316L SS, Hastelloy C276, Monel, Hastelloy B
Filling Fluid:	Glycerin, Silicone, Halocarbon, Syltherm

All specifications are subject to change without notice.
All sales subject to standard terms and conditions.
© Ashcroft Inc. 2015 09/15

Ashcroft Inc., 250 East Main Street, Stratford, CT 06614 USA
Tel: 203-378-8281 • Fax: 203-385-0408
email: info@ashcroft.com • www.ashcroft.com

Type 310, 315 All-Welded "Mini" Diaphragm Seal

Table A – Process Connection

Process Connection	Size	Code
Threaded – male NPT*	⅛	01
Threaded – male NPT*	¼	02
Threaded – male NPT*	½	04
Threaded – male NPT*	¾	06
Threaded – male NPT*	1	08
Threaded – female NPT†	¼	25
Threaded – female NPT†	½	50

*Available in Type 310 only.
†Available in Types 310 & 315.

Pressure Ratings – All 2500 psi except flanged seals are per ASME B 16.5, temperature limit determined by diaphragm, bottom housing and/or filling fluid.

Table B – Type

Description	Code
All-welded mini-seal	310
All-welded midi-seal w/flushing connection	315

Table C – Diaphragm Materials

Materials	Code
316L stainless steel	S
Hastelloy C-276	H
Tantalum	U
Monel	P

Table D – Housing Materials

Bottom(1)	Code	Top(2)
316L SS	S	316L SS
Hastelloy C-276	H	316L SS
Monel	M	Monel

(1) Other bottom housing materials on application.
(2) Top housing material is 316L SS (standard). Monel mini-seal standard with monel top housing.

Table E – Instrument Connection

Instrument Connection	Size	Code
Threaded – female NPT	¼	02T
Threaded – female NPT	⅛	01T

NOTES:
(1) For use with most 3½″ and smaller gauges. Movementless gauge 4½″ (exception).
(2) Other bottom housing materials on application.
(3) Top housing material is 316L SS (standard). Monel mini-seal standard with monel top housing.
(4) Not available with monel bottom housing.

Table F – Filling Fluid

Fill	Service	Connection to Instrument	Temperature Range °F	Code
Glycerin	Pressure	Direct Only	0/400	CG
Silicone	Pressure/Vacuum	Direct or Flexible Line	–40/600	CK
Halocarbon	Pressure/Vacuum in presence of strong oxidizing agent	Direct or Flexible Line	–70/300	CF
Syltherm	Pressure	Direct or Flexible Line	–40/750	HA

Monel is a registered trademark of Huntington Alloys, Inc.
Hastelloy is a registered trademark of Cabot Corp.
Halocarbon is a registered trademark of Halocarbon Products
GYLON 3510 is a registered trademark of Garlock Inc.

HOW TO ORDER:

1. **From Table A...** select PROCESS CONNECTION (e.g., 1/4″ process code 25)
2. **From Table B...** select TYPE (310)
3. **From Table B...** select DIAPHRAGM MATERIAL. (e.g., 316L stainless steel–code S)
4. **From Table C...** select BOTTOM HOUSING MATERIAL. (e.g., 316 stainless steel–code S)
5. **From Table D...** select INSTRUMENT CONNECTION size. (e.g., 1/4 NPT–code 02T)
6. **From Table E...** select FILLING FLUID, if diaphragm seal will be attached to instrument. (e.g., Glycerin–code CG)

Coded order: **25-310SS-02T-CG**

Dimension

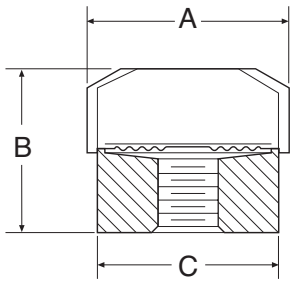

Types 310 mini-seal – Threaded ¼, ½, ¾, NPT

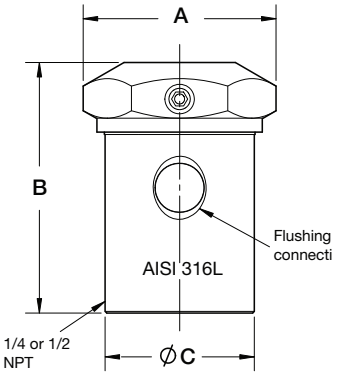

Types 315 mini-seal – Threaded ¼, ½, ¾, NPT

	A		B		C	
	in	mm	in	mm	in	mm
Type 310	1.75	(38)	.81	(30)	1.34	(34)
Type 315	1.73	(44)	2.25	(57.2)	1.34	(34)

All specifications are subject to change without notice.
All sales subject to standard terms and conditions.
© Ashcroft Inc. 2015 09/15

Ashcroft Inc., 250 East Main Street, Stratford, CT 06614 USA
Tel: 203-378-8281 • Fax: 203-385-0408
email: info@ashcroft.com • www.ashcroft.com

CS-434-100 : Identification sheet

VWTC PROJECT NUMBER:	Iqaluit WWTP	REV:	01
PROJECT NAME:	5000218036	SUBMITTED TO (COMPANY):	
ENGINEER:	G. HÉBERT	SUBMITTED TO (RESPONSIBLE)	
PROJECT MANAGER:	C. BEKAERT	PROJECT NUM REFERENCE.:	
PHONE NUMBER:		LOT NUMBER:	

SUPPLIER	EQPT CODE	EQPT TAG NO	DIA	DESCRIPTION	INFO 1	INFO 2	INFO 3	APPLIC.	NOTE	REV
ALLEN BRADLEY	IEPOPS201955	PSL-04-911	N/A	HP-500 INSTRUMENT	PRESSURE SWITCH/MANUFACTURER: ALLEN BRADLEY// MODEL: 836T-T253J	1/4" FNPT female pipe connection	Adjustable Range : 12-150 psi	HP-500		1

This page is intentionally left blank



Bulletin 836T Pressure Controls

- Operating ranges from 30 in. Hg vacuum…5000 psi
- Independently adjustable range and differential
- Copper alloy and stainless steel bellows
- 2- and 4-Circuit contact block
- Pressure difference controls available
- 1/4 in. and 3/8 in. N.P.T. and O-ring straight thread connections
- Type 4 & 13 and Type 7 & 9 and 4 & 13 combination enclosures

Table of Contents

Product Overview ..... this page
Technical Data 13-26
Product Selection 13-34
Modifications 13-41
Accessories 13-42
Conversion Kits 13-43
Factory Options 13-44
Wiring Diagrams 13-45
Approximate Dimensions 13-48

Standards Compliance and Certification

(For file and guide numbers, see page 13-44)

Product Overview

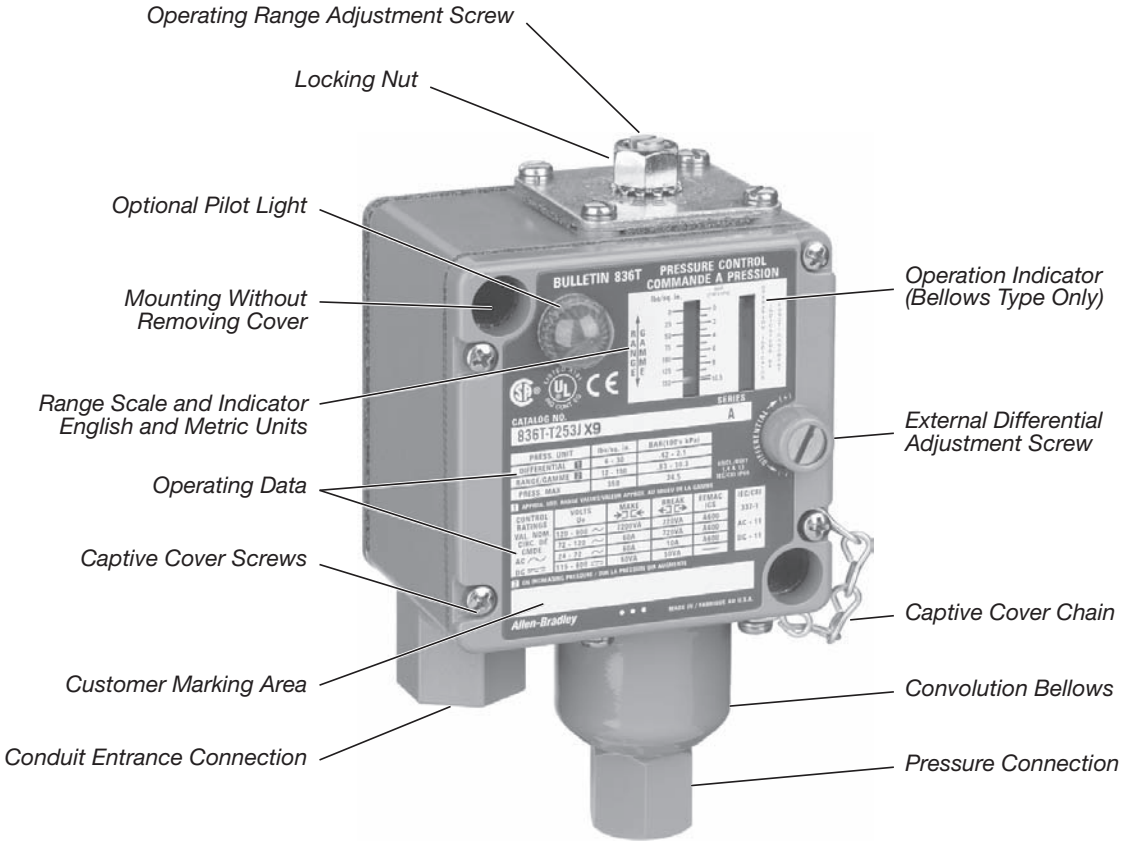

Bulletin 836T Style T Bellows Type Enclosure Type 1, 4 & 13, IEC IP66

Description

Bulletin 836T Pressure Controls are control circuit devices designed to meet the traditional requirements of the transportation, machine tool, and other heavy-duty industries. Allen-Bradley Bulletin 836T Pressure Controls can be used in pneumatic and hydraulic applications. The copper alloy bellows actuators can be used with air, water, oil, vapor, and other non-corrosive gases and liquids. Type 316 stainless steel bellows are available for more corrosive gases, vapors, and fluids.

A rugged stainless steel cylinder and stainless steel piston assembly is used for the higher-pressure coolant and hydraulic oil applications. May also be used with water and water-based fluids. The controls feature snap-action precision switches equipped with silver contacts. A relatively friction-free mechanism provides consistent operation regardless of mounting position. Devices are designed to allow easy adjustment of pressure settings.

Allen-Bradley Bulletin 836T Pressure Controls are used in many types of applications with adjustable ranges from 30 in. Hg vacuum…5000 psi. They can be used to control pneumatic systems and maintain a pressure tank within a preset and constant pressure range. They can be used to detect over-pressures of gases and liquids to prevent damage to valuable equipment. Pressure controls can also detect low pressure to protect equipment from loss of coolants and lubrication.

Bulletin 836T Pressure Controls are offered in a variety of styles to fit a wide range of applications. The devices are available with either a Type 1, 4 & 13, or 7 & 9 and 4 & 13 combined enclosure. They are available with two-circuit or four-circuit contact blocks. Accessories and modifications are available to tailor the devices to meet most application requirements.

Applications

- Machine tools
- Machine hydraulic pressures
- Material clamping fixtures
- Lubricant and coolant pressures
- Compactor ram pressures
- Air compressors

Style T — Pressure Control



Style T

- Independently adjustable operating range and differential
- Single bellows or piston operation

Copper Alloy Bellows

- 1/4 in. N.P.T. female pipe connection
- Adjustable operating range — 30 in. Hg vacuum…650 psi
- Maximum line pressure — up to 1300 psi
- Occasional surge pressure — up to 1600 psi

Type 316 Stainless Steel Bellows

- 1/4 in. N.P.T. female pipe connection
- Adjustable operating range — 30 in. Hg vacuum…375 psi
- Maximum line pressure — up to 600 psi
- Occasional surge pressure — up to 600 psi

Piston

- 3/8 in. N.P.T. female pipe connection
- SAE 7/16-20 UNF-2B thread O-ring boss seal
- SAE 9/16-18 UNF-2B thread O-ring boss seal
- Adjustable operating range — 40…5000 psi
- Occasional surge pressure — up to 15,000 psi

Style D — Pressure Difference Control



Style D

- Independently adjustable system difference range and differential
- Two-bellows operation, one bellows connected to each system

Copper Alloy Bellows

- 1/4 in. N.P.T. female pipe connection
- Adjustable system difference range — 1…70 psi
- Maximum line pressure — up to 600 psi
- Occasional surge pressure — up to 650 psi

Type 316 Stainless Steel Bellows

- 1/4 in. N.P.T. female pipe connection
- Adjustable system difference range — 1…70 psi
- Maximum line pressure — up to 500 psi
- Occasional surge pressure — up to 500 psi

Technical Terms

Adjustable operating range — Total span within which the contacts can be adjusted to trip and reset.

Trip setting — Higher pressure setting at which value the contacts transfer from their normal state to a change state.

Reset setting — Lower pressure setting at which value the contacts return to their normal state.

Adjustable differential — Difference between the trip and reset values

Minimum differential — When the differential is set to the lowest possible difference between trip and reset.

Maximum differential — When the differential is set to the highest possible difference between trip and reset.

Max. occasional surge pressure — Maximum surge pressure that can be applied to the actuator. Surges or ransients can occur during start-up and shut-down of a machine or system. Expressed in milliseconds, complex electronic instrumentation is required to measure the varying amplitude, frequency, and duration of this wave form. Extreme surges that occur approximately 8 times in a 24-hour period are negligible.

Maximum line pressure — Maximum sustained pressure that can be applied to the actuator without permanent damage. The control should not be cycled at this pressure. **Note:** Does not apply to piston type controls.

psi — Pounds per square inch gauge (positive pressure). Devices listed are in gauge pressure units which use atmospheric pressure as a reference. Atmospheric pressure at sea level is approximately 14.7 psi or 30 in. Hg.

Vacuum — Inches of mercury (in. Hg) vacuum (negative pressure).

Operating range adjustment screw — This screw is used to adjust the trip setting by varying the force of the main spring.

Differential adjustment screw — This screw is used to adjust reset setting by varying the force of the differential blade spring.

Pressure media — There are many types of pressure media that can be controlled. Examples include air, water, hydraulic fluids, and other types of gases and liquids. The type of media and the maximum system pressure will determine the type of actuator used for the pressure control application. See page 13-33.

Pressure connection — Common standard types of pressure connections used in control systems are 1/4 in. and 3/8 in. N.P.T. female pipe threads. SAE 7/16 and SAE 9/16 O-ring boss seals are also available (piston versions only).

Contact configuration — Bulletin 836T controls are available with either a 2-circuit or 4-circuit contact block. See page 13-31.

Style D

Style D — pressure difference controls adjustable system difference range — The adjustable operating range for a pressure difference control.

System difference pressure bushing — This bushing is used to adjust the trip setting by varying the force on the main spring.

Trip setting — Desired difference in pressure between the two bellows at which value the contacts transfer from their normal state to a changed state. This occurs in one of the following conditions:

- The pressure in the bottom bellows is higher than the pressure in the top bellows by a value equal to the trip setting.
- The pressure in the bottom bellows remains constant and the pressure in the top bellows decreases by a value equal to the trip setting.

Reset setting — Predetermined normal difference in pressure between the two bellows, at which value the contacts return to their normal state. This occurs in one of the following conditions:

- The pressure in the bottom bellows is lower than the top bellows.
- The pressure in the bottom bellows remains constant and the pressure in the top bellows increases.

Figure 1
Graphics to illustrate technical terms

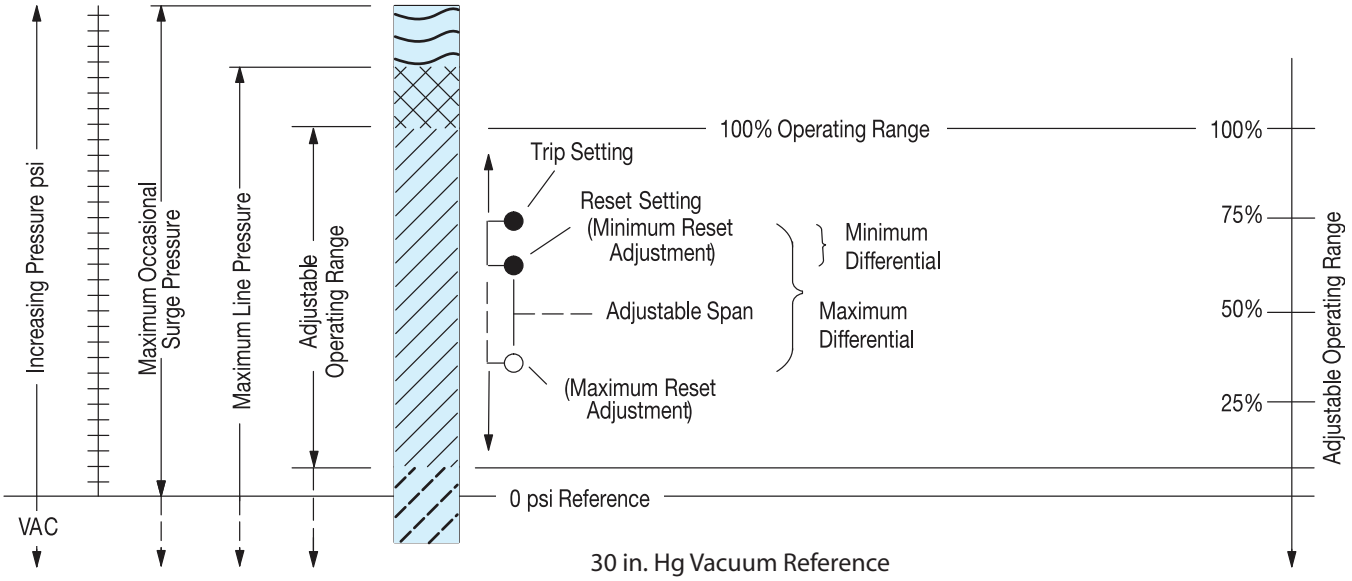

Visit our website: www.ab.com/catalogs
Preferred availability cat. nos. are printed in **bold**

Allen-Bradley

Theory of Operation

Bulletin 836T Pressure Controls are designed to open or close electrical circuits in response to changes in pneumatic (air or gas) or hydraulic (oil or non-corrosive liquids) pressure. Piston controls are not intended for use with air or water. Figure 2 shows the basic operating mechanism.

Pressure is applied to the actuator which can be either a bellows or piston type. As pressure rises, the actuator exerts force on the main spring. When the threshold force of the main spring is overcome, levers transfer the motion to the contact block, displacing the contacts — this is referred to as the trip setting. The unique lever design amplifies the actuator motion, providing shorter stroke, which results in maximizing bellows life.

The lever assembly also includes a virtually friction-free over-center toggle arrangement, providing positive snap action to the contact block for long contact life. As pressure falls, force on the differential spring increases and contacts return to their normal state — this is referred to as reset setting. Varying the force of the main spring (by turning the operating range adjustment screw) determines when the contacts will trip. Varying the force of the differential spring (by turning the differential adjustment screw) determines when the contacts will reset. Setting trip and reset values determines the operating parameters of the application.

Figure 2
Basic mechanical structure

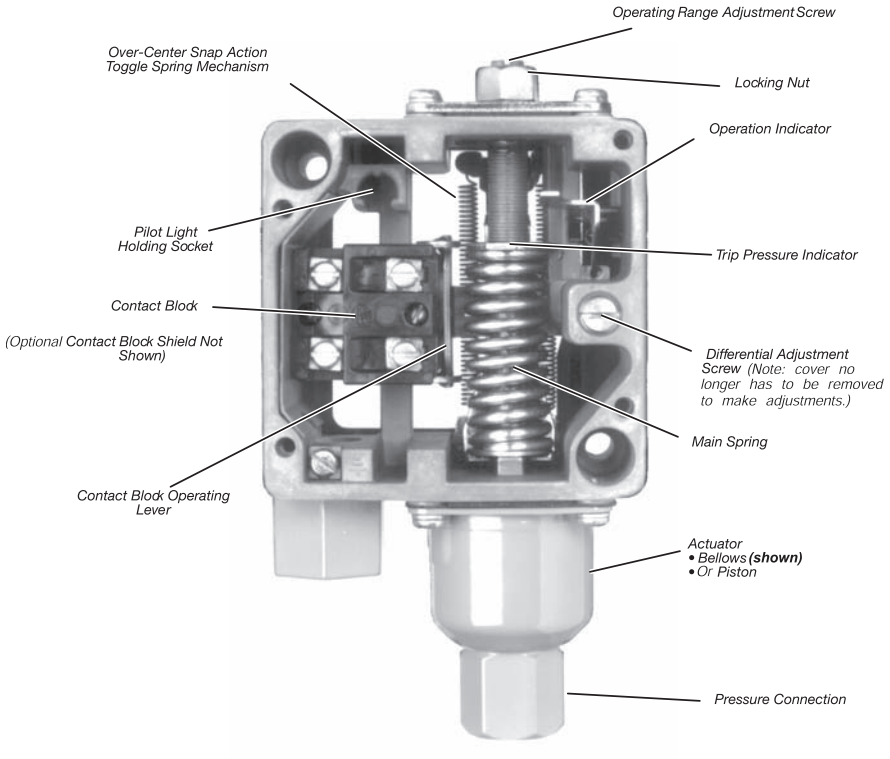

Applications for Control

Pressure controls can be used to either control or monitor a machine or process. Figure 3 shows a typical control application. Here, pressure is controlled within predetermined high and low values. Figure 4 shows a typical monitoring application. Here, pressure is monitored between a high and low value, signaling when a preset limit has been exceeded.

Figure 3
Typical control application

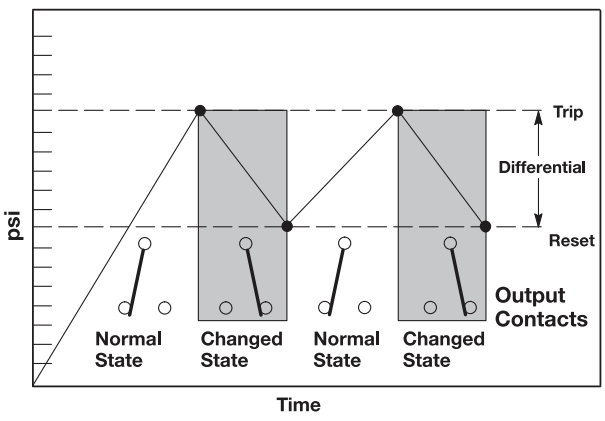

Figure 4
Typical monitoring application

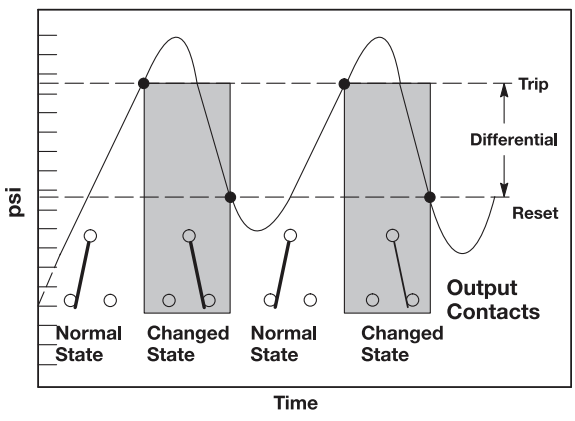

Control Setting — Style T Pressure Controls

Allen-Bradley controls are designed for ease of setting to help minimize installation time. Standard pressure controls shipped from the factory are set at the maximum operating range and minimum differential. By using a pressure gauge and following these simple directions, the control can be set to the specific requirements for each application. See Figure 5.

Step 1 — Adjust trip setting
The trip setting is controlled by the operating range adjustment screw and is adjusted externally. After loosening the lock nut, the trip setting is set by turning the operating range adjustment screw counterclockwise to lower the trip setting or clockwise to raise the trip setting. The approximate trip setting is shown on the indicating scale. When the proper setting is reached, simply tighten the lock nut.
Note: Turning the operating range adjustment screw will cause both the trip and reset settings to change in virtually equal increments.

Step 2 — Adjust reset setting
The reset setting is controlled by an external differential adjustment screw. The reset setting is set by turning the differential adjustment screw clockwise to increase the differential or counterclockwise to decrease the differential.
Note: Adjusting the differential has little or no affect on the trip setting.

Figure 5
Trip and reset adjustment for pressure controls

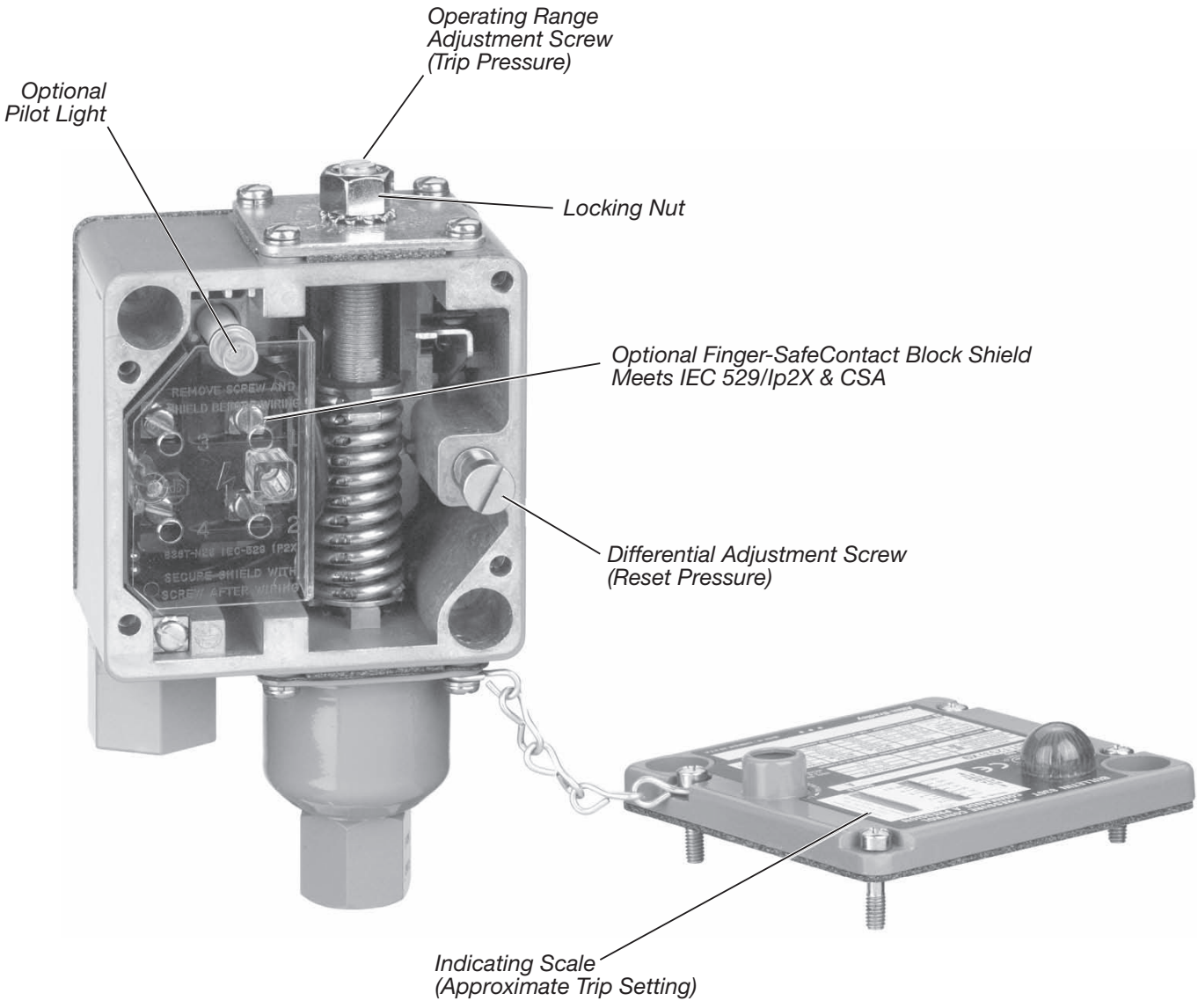

Control Setting — Style D Pressure Difference Controls

Standard pressure difference controls shipped from the factory are set at the maximum adjustable difference range and minimum differential. Remove the front cover and use a pressure gauge to make the following adjustments. See Figure 6.

Step 1 — Adjust trip setting (difference pressure)

The trip setting is controlled by the system difference pressure bushing and is adjusted internally. With no pressure (open to atmosphere) applied to top bellows, apply a constant pressure to bottom bellows equal to the desired difference in pressure at which the contacts are to trip. Insert a 1/8 in. diameter rod into a hole in the bushing and turn bushing to the left. Continue to turn bushing until the mechanism trips; circuit 1-2 will open. At this value, the trip setting is set at the pressure which is being applied to the bottom bellows.
Note: Turning the system difference pressure bushing will cause both the trip and reset settings to change in virtually equal increments.

Step 2 — Adjust reset setting (differential pressure)

The reset setting is controlled by differential adjustment screw (this adjustment can be made with the cover on). The reset setting is adjusted by turning the differential adjustment screw clockwise to increase the differential or counterclockwise to decrease the differential.
Note: Adjusting the differential has little or no affect upon the trip setting (difference pressure).

Figure 6
Trip and reset adjustment for pressure difference controls — 4-circuit contact block

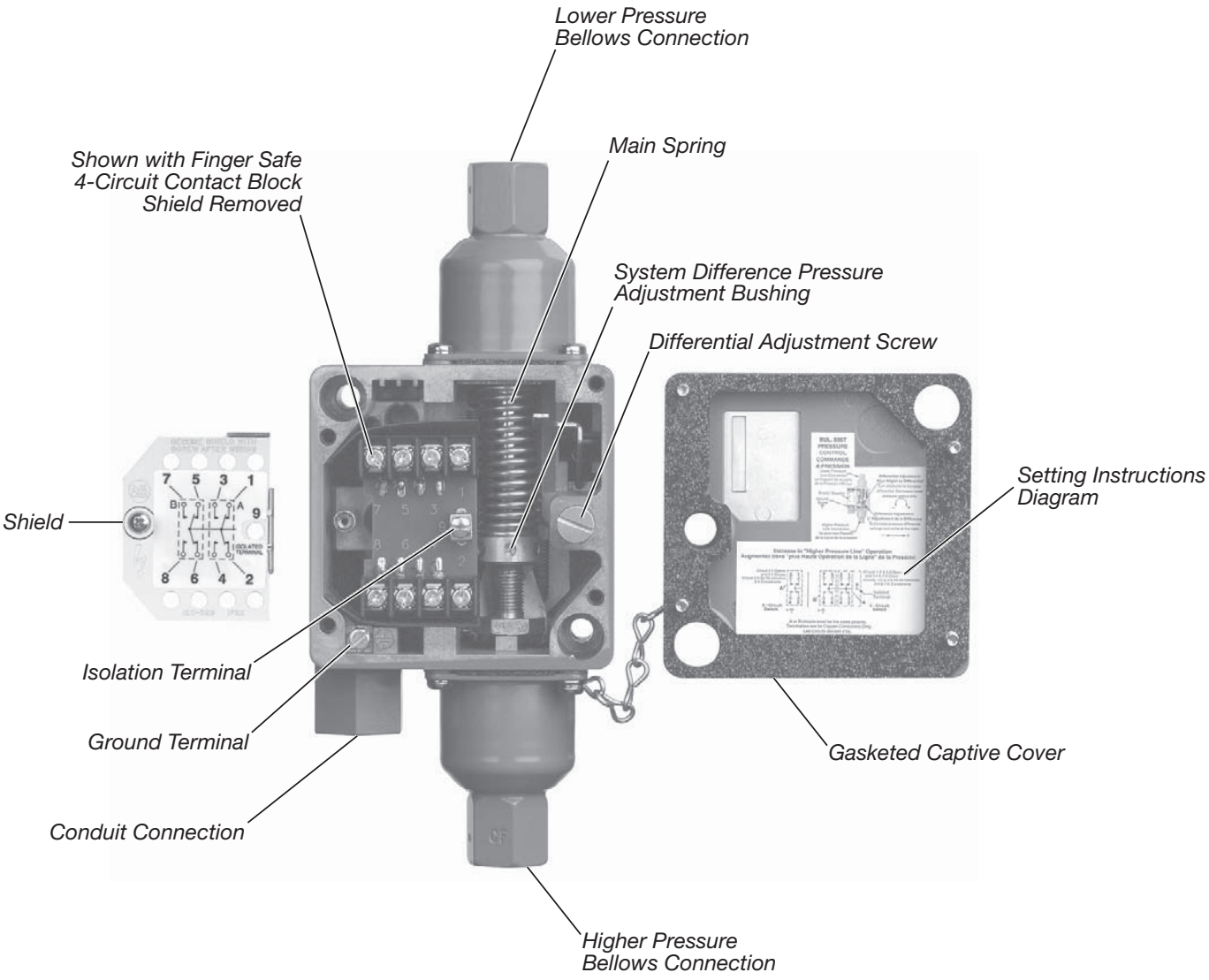

Repeat Accuracy and Mechanical Life

The design and construction of Bulletin 836T Pressure Controls provide a typical repeat accuracy equal to or better than the values shown in the repeat accuracy table below. Repeat accuracy is based on percent of maximum range, evaluated from test data and calculated using the formula per ICS 2-225 standards. Repeat accuracy and mechanical life of bellows type controls is graphically illustrated in Figure 7. The life curve does not apply to piston type controls.

For general applications, controls selected where the contacts operate between 30% and 80% of the operating range and where the maximum line and surge pressures do not exceed the specified values will provide excellent life and repeat accuracy. For more specific applications, it is important to note that the controls are designed to operate below or above these values. However, there may be a small trade-off between the factors of repeat accuracy and mechanical life.

Figure 7
Repeat accuracy versus mechanical life graph

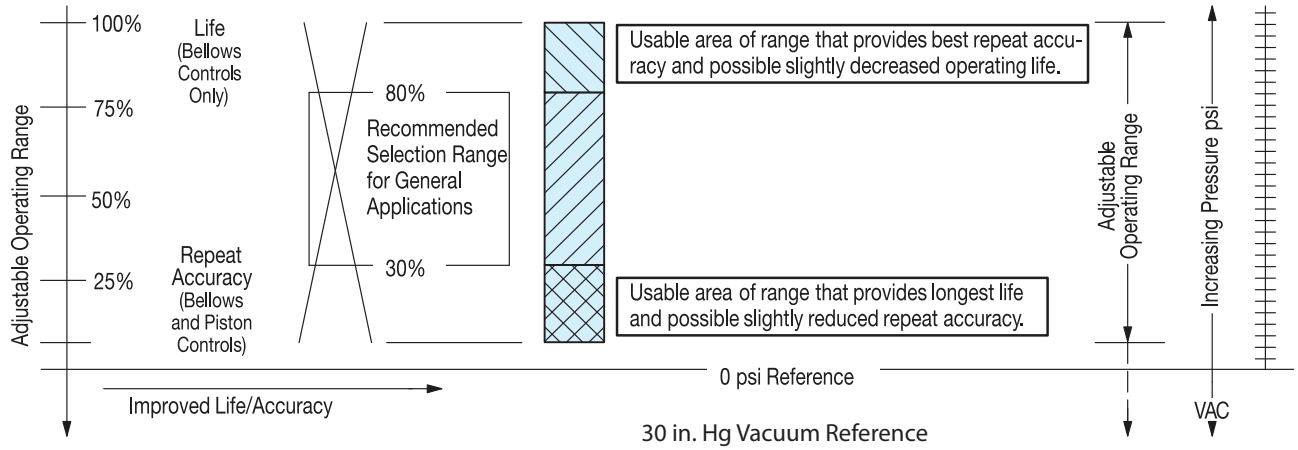

Repeat Accuracy

Type	Typical Characteristics (% of Maximum Range) ✶
Bellows	± 1%
Piston with seal	± 5% ❄
Piston without seal	± 3%

✶ Evaluation made from test data and calculated using formula per ICS 2-225 standards.

❄ Seal adds additional friction and value shown takes into consideration initial breakaway frictional force incurred during start-up or infrequent cycle operation. On continual cycle operation the repeat accuracy approaches ±3%.

Conversion Factors (Rounded)

psi x 703.1 = mmH_2O
psi x 27.68 = in. H_2O
psi x 51.71 = mm/Hg
psi x 2.036 = in. Hg
psi x 0.0703 = kg/cm^2
psi x 0.0689 = bar
psi x 68.95 = mbar
psi x 6895 = Pa
psi x 6.895 = kPa

Note: psi - pounds per square inch (gauge).
H_2O at 39.2 °F
Hg at 32 °F

Mounting without Removing Cover

Bulletin 836T controls can be mounted without removing the front cover. This helps prevent foreign materials from entering the opened enclosure during the interval between mounting and wiring of the control.

Factory Set Pressure Controls

Rockwell Automation will factory set pressure controls to customer specified values. Unspecified pressure controls shipped from the factory are set at the maximum operating range and minimum differential. See Factory-Set Pressure Controls, page 13-44.

Temperature Range

The temperature range at +32 °F (0 °C) or below is based on the absence of freezing moisture, water, or other fluids that may solidify and impede the operation of the control. Temperature ratings:

Operating: –22… +150 °F (–30…+66 °C)
Storage: –22…+200 °F (–30…+93 °C)

Contacts

Bulletin 836T controls feature 2- and 4-circuit contact blocks for added control circuit flexibility. Two-circuit contact blocks have one normally open contact and one normally closed contact and may be arranged for single-pole double-throw operation or separate circuit operation having the same polarity. Four-circuit contact blocks may be arranged for double-pole double-throw operation or separate circuit operation having the same polarity.

2-Circuit Contact Ratings — NEMA A600 (ICS 2-125)

AC						DC	
Maximum AC Voltage	A		Continuous Carrying Current	VA		Maximum Voltage	[A]
	Make	Break		Make	Break		
120	60	6.00	10	7200	720	115…125	0.4
240	30	3.00	10	7200	720	230…250	0.2
480	15	1.50	10	7200	720	550…600	0.1
600	12	1.20	10	7200	720	—	—

IEC 337-1					
Maximum Operational Voltage U_e	Utilization Category	Maximum Continuous Current I_{th}	Volts U_e	Rated Operational Current Make	Rated Operational Current Break
AC600	AC-11	10	120…600 AC	7200 VA	720 VA
		10	72…120 AC	60 A	720 VA
DC600	DC-11	10	24…72 AC	60 A	10 A
		—	115…600 DC	50 VA	50 VA

4-Circuit Contact Ratings — NEMA B150 (ICS 2-125)

AC						DC	
Maximum AC Voltage	A		Continuous Carrying Current	VA		Maximum Voltage	[A]
	Make	Break		Make	Break		
120	30	3.00	5	3600	360	115…120	0.33
240	27.5	2.80	5	6600	660	230…240	0.17

IEC 337-1					
Maximum Operational Voltage U_e	Utilization Category	Maximum Continuous Current I_{th}	Volts U_e	Rated Operational Current Make	Rated Operational Current Break
AC150	AC-11	5	72…120 AC	30 A	360 VA
		5	24…72 AC	30 A	3 A
DC150	DC-11	—	115…240 DC	40 VA	40 VA

Note: NEMA does not rate contacts to switch low voltage and current. Bulletin 836T Styles T and D Pressure Controls are supplied with silver contacts. The devices are designed to deliver high force snap action to the contacts. This provides exceptional contact fidelity at 24V DC I/O card current level entry when the integrity of the enclosure is maintained.

Contact Wiring Configurations

2-Circuit Contact Blocks

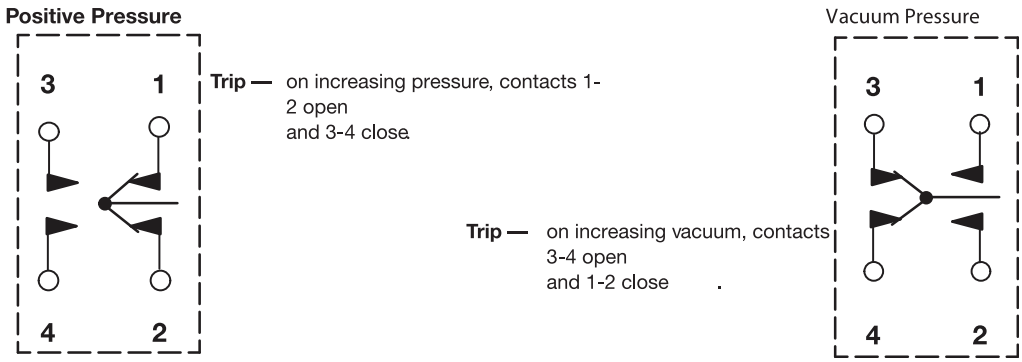

4-Circuit Contact Blocks

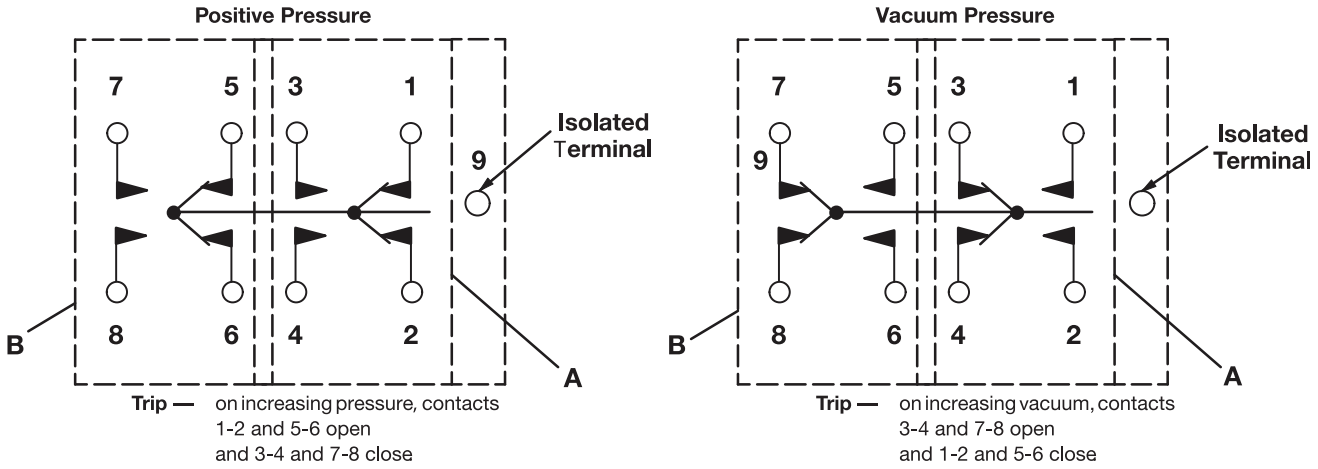

Note: Circuits A and B are electrically isolated from one another.
A or B circuits must be the same polarity.

Nameplate with Removable Paint Mask

The masks are convenient for the many users who repaint controls to match the machine or color code equipment. Saves costly time-consuming hand masking necessary so as not to conceal product functional specifications and approval listings. This feature is standard on most controls at no additional cost. The paint mask feature cannot be supplied on controls with pilot lights. They are also not available on those devices where it is necessary to remove the mask and add suffix modifications to the catalog number or specific customer identification in the space provided.

Figure 8
Removable paint mask



Cover with Transparent Mask and Instruction Label in Place



Cover with Mask Partially Removed

Pressure Control Selection

The selection table below is an overview of the five types of Bulletin 836T Pressure Controls Rockwell Automation offers. Each type of control is suitable for use on many types of applications. Pressure ranges, pressure connections, enclosure types, and the compatibility of the actulator with different types of pressure media are given to assist in the selection of which type of control to use.

836T				
Actuator Type	Copper Alloy Bellows	Type 316 Stainless Steel Bellows	Piston Type Without Seal	Piston Type With Seal
Adjustable operating ranges	30 in. Hg vacuum…650 psi	30 in. Hg vacuum…375 psi	40…5000 psi	80…5000 psi
Adjustable differentials	2…125 psi	2…90 psi	20…650 psi	40…650 psi
Maximum line pressures	up to 1300 psi	up to 600 psi	—	—
Occasional surge pressures	up to 1600 psi	up to 600 psi	up to 15,000 psi	up to 15,000 psi
Pressure Media				
Air	•	•		
Water	•	•	•	•
Hydraulic fluids	•	•	•	•
Corrosive liquids ∗		•		
Non-corrosive liquids	•	•	•	•
Corrosive gases ∗		•		
Non-corrosive gases	•	•		
Enclosures				
Type 1, 4 & 13	•	•	•	•
Type 7 & 9 and 4 & 13, IP66	•	•	•	•
Pipe Connections				
Standard pressure connection	1/4 in. N.P.T. female pipe thread	1/4 in. N.P.T. female pipe thread	3/8 in. N.P.T. female pipe thread SAE 7/16-20 UNF-2B thread O-ring boss seal SAE 9/16-18 UNF-2B thread O-ring boss seal	3/8 in. N.P.T. female pipe thread SAE 7/16-20 UNF-2B thread O-ring boss seal SAE 9/16-18 UNF-2B thread O-ring boss seal

∗ Corrosive liquids and gases must be compatible with Type 316 Stainless Steel Bellows.

Note: Pressure difference controls are supplied with either copper alloy or stainless steel bellows. See Product Selection on page 13-39 and page 13-40 for details.

Ordering Bulletin 836T Pressure Controls

When ordering Bulletin 836T Pressure Controls, consider the following:

- Device style
- Adjustable operating range
- Adjustable differential
- Maximum line pressure
- Occasional surge pressure
- Pressure media
- Enclosure type
- Pressure connection

How to Order

Step 1: Basic Device
Select a catalog number for the basic device.....**See pages 13-35…13-40.**

Step 2: Modifications
If required, add the appropriate modification suffix code(s) to the catalog number of the basic device.....**See page 13-41.**

Step 3: Accessories
If required, order accessories.....**See page 13-42.**

Step 4: Factory Options
Factory-set pressure controls.....**See page 13-44 .**

Catalog Number Explanation

Note: Catalog number must not include blank spaces.

836T –	T	25	1	J	X40	X15
	a	*b*	*c*	*d*	*e*	*f*

a

Style of Device	
Code	**Description**
T	Pressure control
D	Pressure difference control

b

Operator Type		
Code	**Style**	**Description**
25	T	Copper alloy bellows
26	T	Type 316 stainless steel bellows
30	T	Piston without seal
35	T	Piston with seal
40	T	Piston with seal (independent trip and reset adjustment)
45	D	Copper alloy bellows
46	D	Type 316 stainless steel bellows

c

Pressure Specifications
See “Pressure Specifications” on pages 13-35…13-40

d

Enclosure Type	
Code	**Description**
J	1, 4 & 13 Industrial use
E	7 & 9 and 4 & 13 Combined hazardous locations

e

Contact Block Type	
Code	**Description**
None	2-circuit contact block - standard
X40	4-circuit contact block

f

Modification 1
Add suffix codes in descending order whenever possible. (Optional. See page 13-41.)

Product Selection



Style T — Type 1, 4 & 13 with Pilot Light Option



Style T — Type 1, 4 & 13 with Pilot Light, Range Locking Cap, and 5-Pin Mini-Receptacle

Style T Pressure Controls with Copper Alloy Bellows∗ — S.P.D.T. 2-Circuit Contact Block

Standard Pressure Controls shipped from the factory are set at the maximum operating range and minimum differential.

Pressure Specifications				Enclosure Type	
	Adjustable Differential [psi] (Approximate Mid-Range Values)	Maximum psi		Type 1, 4 & 13	Type 7 & 9 and 4 & 13 ‡
Adjustable Operating Range [psi]		Line Pressure	Occasional Surge Pressure❄	Cat. No.	Cat. No.
30 in. Hg vacuum…35	2…7	80	90	**836T-T251J**	836T-T251E
6…75	3…15	200	220	**836T-T252J**	836T-T252E
12…150	6…30	350	450	**836T-T253J**	836T-T253E
20…300	10…55	600	750	**836T-T254J**	836T-T254E
40…450	20…90	900	1200	**836T-T255J**	836T-T255E
60…650	30…125	1300	1600	**836T-T256J**	836T-T256E

Style T Pressure Controls with Copper Alloy Bellows∗ — D.P.D.T. 4-Circuit Contact Block

Standard Pressure Controls shipped from the factory are set at the maximum operating range and minimum differential.

Pressure Specifications				Enclosure Type	
	Adjustable Differential [psi] (Approximate Mid-Range Values)	Maximum psi		Type 1, 4 & 13	Type 7 & 9 and 4 & 13 ‡
Adjustable Operating Range [psi]		Line Pressure	Occasional Surge Pressure❄	Cat. No.	Cat. No.
30 in. Hg vacuum…35	2.2…7	80	90	836T-T251JX40	836T-T251EX40
6…75	4.5…15	200	220	**836T-T252JX40**	836T-T252EX40
12…150	9…30	350	450	**836T-T253JX40**	836T-T253EX40
20…300	15…55	600	750	836T-T254JX40	836T-T254EX40
40…450	30…90	900	1200	836T-T255JX40	836T-T255EX40
60…650	45…125	1300	1600	836T-T256JX40	836T-T256EX40

∗ Copper alloy bellows may be used on water or air, and other liquids or gases not corrosive to this alloy.

❄ Transients (pulses) can occur in a system prior to reaching a steady-state condition. Surge pressures within published values generated during startup or shutdown of a machine or system, not exceeding eight times in a 24-hour period, are negligible.

‡ The combined Type 7 & 9 and 4 & 13 hazardous gas and dust service enclosure is supplied with special gasket and O-ring seal to diminish/exclude moisture, fluids, and dust from entering the enclosure. Enclosure is rated for the following environments:
CLASS I Groups C,D
CLASS II Groups E,F,G
CLASS III

Ordering Modifications

Modifications are ordered by adding the appropriate modification suffix code to the catalog number of the basic device. Add suffix codes to the catalog number in descending order.

Item	Description	Suffix Code
Oxygen/nitrous oxide service	Bellows and fittings specially prepared for oxygen and nitrous oxide service. Devices tested with pure oxygen, bellows plugged for protection from contamination and a tag warning against contamination is applied.	X2
External adjustment sealed	The 836T external adjustment is sealed, requiring cover removal to adjust differential (includes contact block shield)	X3
Tamper resistant setting	Range and differential adjustments are factory sealed. Price includes factory setting charge.✶	X4
SAE 7/16-20 UNF thread O-ring boss seal (piston type pressure control)	Female SAE straight thread O-ring seal designed to prevent leaks and minimize loss of hydraulic fluids.	X6
SAE 9/16-18 UNF thread O-ring boss seal (piston type pressure control)		X7
Neon pilot light 120V AC	A high-intensity neon pilot light for 120V AC, 60 Hz applications is available and can be wired for ON or OFF operation. The current rating is 1.0 mA.❄	X9
Red LED pilot light 24V DC	A high-intensity LED 24V DC pilot light is available to meet the requirements of the automotive, machine tool builders, and other industries. The current rating is 22 mA and can be wired for ON or OFF operation.❄	X15
Green LED pilot light 24V DC		X18
Special diaphragm assembly (piston type pressure control)	Diaphragm is made of Viton® and Nomex® fabric. Required when phosphate ester base and other adverse hydraulic fluids are present. Use on Catalog Numbers **836T-T300J** through **836T-T303J** series controls.	X25
Special diaphragm and O-ring assembly (piston type pressure control)	Diaphragm is made of Viton® and Nomex® fabric, O-ring is made of Viton® . Required when phosphate esterbase and other adverse hydraulic fluids are present. Use on Catalog Numbers **836T-T350J, -T351J, -T352J, -T353J** and **-T400J** series controls.	X26
Viton® enclosure gaskets	Special enclosure gaskets made of Viton® are available for applications where the standard gasket materials are not fluid compatible. Viton® is generally specified by the user for use with existing and newly developed coolants and hydraulic fluids to maintain enclosure integrity. These include cover, backplate, cover, and bellows or piston gaskets. **Note**: Viton® enclosure gaskets are often used with special diaphragm assemblies **(X25 or X26)**. See description above.	X29
5-Pin mini-type receptacle without pilot light❄	Select the desired pin wiring configuration from the diagrams on pages 13-45…13-47. Rated at 8 A, 600V.	See pages 13-45…13-47.
5-Pin mini-type receptacle with prewired pilot light❄	Select the desired pin wiring, pilot light wiring, and voltage from the diagrams on pages 13-45…13-47. Includes receptacle and pilot light. Rated at 8 A, 600V.	See pages 13-45…13-47.
5-Pin micro-connect receptacle without pilot light❄	Select the desired pin wiring configuration from the diagrams on pages 13-45…13-47. Add number "1" to the suffix number immediately following the letter "X." **Example: "X19" becomes "X119."** Rated at 3 A, 300V. Pin/Wiring Code: 1 – Red with white tracer, 2 – Red, 3 – Green (Gnd), 4 – Red with yellow tracer, 5 – Red with Black Tracer	See pages 13-45…13-47.
5-Pin micro-connect receptacle with prewired pilot light❄	Select the desired pin wiring configuration and pilot light (X9 or X15, see above for specifications) from the diagrams on pages 13-45…13-47. Add number "1" to the Suffix Number immediately following the letter "X." **Example: "X12X9" becomes "X121X9."** Rated at 3 A, 300V. Pin/Wiring Code: 1 – Red with white tracer, 2 – Red, 3 – Green (Gnd), 4 – Red with yellow tracer, 5 – Red with black tracer	See pages 13-45…13-47.
Additional optional receptacles and wiring❄	For assistance, please consult your local Rockwell Automation sales office or Allen-Bradley distributor.	

✶ See paragraph entitled "Factory-Set Pressure Controls" on page 13-44.
❄ Not available on the Type 7 & 9 and 4 & 13 combined enclosed devices.

Ordering Accessories

Accessories are ordered as separate catalog numbers. Select the required accessories from the accessories table below.

Item	Description	Type	Cat. No.
External fixed pulsation snubbers	Controls are supplied as standard with an internal pulsation snubber. However, a control properly selected and used within the adjustable range values, yet having a short bellows life, is a good indication of the presence of extreme surge pressures. External fixed pulsation snubbers are available to provide **additional** dampening when extreme pulsations or surges are present. Recommended if more than eight line surges occur in a 24-hour time period.	Snubber for bellows control 1/4-18 N.P.T. thread	**836-N7**
		Snubber for piston control 3/8-18 N.P.T. thread	**836T-N8**
Selectable element pulsation snubbers	Controls are supplied as standard with an internal pulsation snubber. However, a control properly selected and used within the adjustable range values, yet having a short bellows life, is a good indication of the presence of extreme surge pressures. Selectable element pulsation snubbers are supplied with five different elements to provide a selectable balance between maximizing pressure control life and minimizing control response time. Pulsation snubbers are supplied with the mid-range element already mounted and four other color-coded porosity elements included in the package. See "Selectable Pulsation Snubber Porosity Elements" table on this page for porosity specifications.	Snubber for bellows control 1/4-18 N.P.T. thread	**836-N40**
		Snubber for piston control 3/8-18 N.P.T. thread	**836T-N41**
	Female SAE straight thread O-ring seal designed to prevent leaks and minimize loss of hydraulic fluids. Use on applications with a pressure range of 550…5000 psi.	SAE 7/16-20 UNF-2B thread O-ring boss seal for piston controls	836T-N49
		SAE 9/16-18 UNF-2B thread O-ring boss seal for piston controls	**836T-N50**
Selectable pulsation snubber porosity elements	Package consists of five porosity elements and complete instructions. Elements are color-coded for easy identification. Elements are available in five different porosities for a wide range of applications. See selectable pulsation snubber porosity elements table.		See Table on this page
Locking cap	Deters unauthorized tampering of range setting. Once installed, the locking cap can be removed with a screwdriver to re-adjust the control.	—	**836T-N13**
Isolation trap with two 1/4 in. male pipe fittings	An isolation trap is available for high-temperature media applications from 150…600 °F or corrosive applications compatible with Type 316 stainless steel tubing and fittings. The isolation coil is inserted between the bellows of the pressure control and the elevated temperature line of the system. The isolation trap will fill with condensed water or can be filled with water or suitable fluid when installed. A silicone buffer fluid is available in a convenient dispenser. Copper alloy lower and higher pressure range bellows can be applied to many applications using the isolation trap. The silicone buffer fluid is used to isolate many corrosive substances from coming in contact with the bellows. The isolation trap is rated at 3000 psi working pressure. Not available for piston-type controls. See photo on this page.		836-N25
Isolation trap with one 1/4 in. male and one 1/4 in. female pipe fittings			836-N26
2 oz. of buffer fluid to fill bellows and tubing			836-N27
Metric electrical entry conduit adapters	BS 20 mm thread adapter		**836T-N36**
	Pg 13.5 thread adapter		836T-N37

Selectable Pulsation Snubber Porosity Elements

Recommended Type of Service	Color Code	Porosity	Cat. No.
Viscous fluids (over 500 SSU)∗	None	Coarser	836-N43
Medium type oils (225…500 SSU)∗	Black		**836-N44**
Water and light oils (30… 225 SSU)∗	Brown		**836-N45**
Low viscosity fluids (under 30 SSU)∗	Green		**836-N46**
Air and other gases	Red	Finer	**836-N47**
One of each of the above	—	Assorted	836-N48

∗ Saybolt Seconds Universal (SSU) — units of viscosity measurement.

Note: Color code is located on end of element.



Isolation Trap and Silicone Buffer Fluid

Fixed Pulsation Snubbers



Male/Female Pipe Threads

Selectable Element Pulsation Snubbers



Male/Female Pipe Threads

Pulsation Snubbers

Visit our website: www.ab.com/catalogs

Preferred availability cat. nos. are printed in **bold**

Conversion Kits

Ordering Conversion Kits

Conversion Kits are ordered by adding the appropriate suffix code to the catalog number of the basic device. Select the required conversion kits from the table below.

Conversion Kits

Item	Description	Suffix Code
Neon pilot light conversion kit	Converts standard control to control with 120V AC neon pilot light. Not available on Type 7 & 9 devices. Kit includes pilot light and cover assembly.	N9
Red LED pilot light conversion kit	Converts standard control to control with 24V DC LED pilot light; has a 22 mA current rating. Not available on Type 7 & 9 devices. Kit includes pilot light and cover assembly.	N15
Green LED pilot light conversion kit	Converts standard control to control with 24V DC LED pilot light; has a 22 mA current rating. Not available on Type 7 & 9 devices. Kit includes pilot light and cover assembly.	N18

Example:
To convert a **Cat. No. 836T-T301J** to a **Cat. No. 836T-T301JX15**, order **Cat. No. 836T-T301JN15**.

Renewal Parts

Ordering Renewal Parts

Renewal Parts are ordered as separate catalog numbers. Select the required renewal parts from the table below.

Renewal Parts

Item	Description	Cat. No.
2-Circuit contact block renewal kit	Allows renewal of worn contacts for Bulletin 836T controls.	**836T-N1**
4-Circuit contact block renewal kit	Allows renewal of worn contacts for Bulletin 836T controls.	836T-N2
Renewal seals for piston-type controls	For use on Cat. No. 836T-T350J.	836T-N20
	For use on Cat. No. 836T-T351J.	836T-N21
	For use on Cat. No. 836T-T352J and 836T-T400J.	836T-N22
	For use on Cat. No. 836T-T353J.	836T-N23

Factory-Set Pressure Controls

Ordering factory-set pressure controls

- When a specific factory setting is requested, the specific terminal connections must be specified — e.g., N.O. or N.C. It must also be specified whether the contact operation is occurring on either increasing or decreasing pressure. For example:

Normally Closed (N.C.) contacts to open at∗ psi increasing pressure and close at∗ psi decreasing pressure.

—OR—

Normally Open (N.O.) contacts to close at∗ psi increasing pressure and open at∗ psi decreasing pressure.

- If minimum differential is not critical and the inherent minimum differential satisfies the application, specify the factory setting as follows:

Normally Closed (N.C.) contacts to open at∗ psi increasing pressure minimum differential.

—OR—

Normally Open (N.O.) contacts to close at∗ psi increasing pressure minimum differential.

Quality analog test gauges§ are used when applying requested factory settings to these rugged industrial grade pressure controls. (Gauges are calibrated and accuracy is traceable to the The National Institute of Standards and Technology.)

The actual requested setting is applied to the control by reading the set point directly from the test gauge being used. However, traceable gauge tolerance variance between source and user, and possible severe shock during shipping and installation, may contribute to the factory settings deviating slightly from the specified values. Slight recalibration can easily be accomplished upon final installation to meet specific requirements for the more demanding applications.

When installed, the controls will perform with a repeat accuracy as established in the paragraph entitled “Repeat Accuracy" (see page 13-54). Special service is available to factory-set controls on digital laboratory instruments, up to 600 psi, when required for more critical applications. An additional charge may be added for this service contingent upon setting tolerance and quantity. Please contact your local Rockwell Automation sales office or Allen-Bradley distributor.

∗ Specify psi (pounds per square inch) or, in. Hg vac (inches of mercury vacuum).

❄ Per ANSI B40.1 Grade 2A (0.5% accuracy full scale), Grade 3A (0.25% accuracy full scale).

If not specified, setting tolerances will be as shown in the table below.

Pressure Range	Tolerance
30 in. Hg Vac....0	+/- 1 in. Hg vac.
> 0...100 psi	+/- 1 psi
> 100...300 psi	+/- 2 psi
> 300...500 psi	+/- 5 psi
> 500...1000 psi	+/- 10 psi
> 1000...5000 psi	+/- 50 psi

Standards Compliance

- UL508
- CSA 22,2 No. 14
- UL698, 1604 (Haz. Loc.)
- NEMA ICS-2

Certifications

File and Guide Numbers

	UL		CSA	
	File Number	Guide Number	File Number	Class
Bulletin 836T	E14842	NKPZ	LR1234	3211-03
	E53048 (Haz. Loc.)	NOWT	LR11924 (Haz. Loc.)	3218-05
	Hazardous Location enclosure devices are not CE compliant. All other enclosed devices are CE compliant.			

Approximate Dimensions and Shipping Weights

Dimensions in inches (millimeters). Dimensions are not intended to be used for manufacturing purposes.

Type 4 & 13 (Bellows)

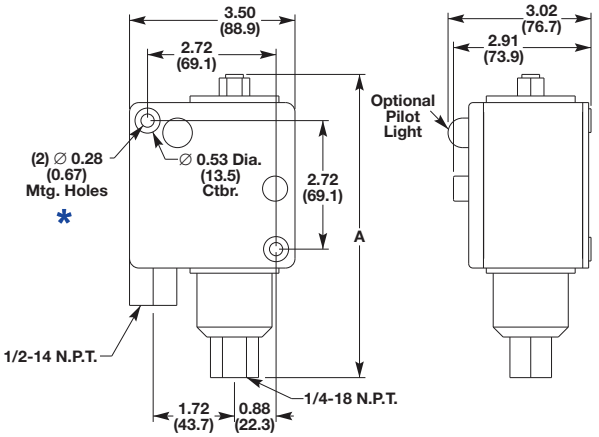

Approximate Shipping Weight 3-1/2 lbs. (1.6 kg)

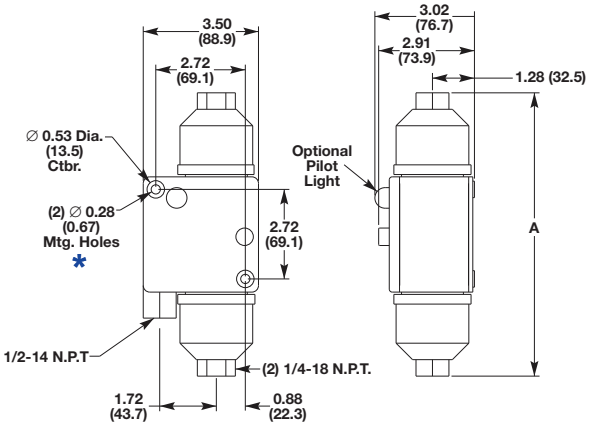

Approximate Shipping Weight 4 lbs. (1.8 kg)

Cat. No.	A Dimensions	Cat. No.	A Dimensions	Cat. No.	A Dimensions	Cat. No.	A Dimensions
836T-T251J	6.65 (169)	**836T-T254J**	6.95 (176)	**836T-D450J**	8.60 (218)	836T-D460J	8.60 (218)
836T-T260J		**836T-T255J**					
—	—	**836T-T256J**	7.09 (180)	**836T-D451J**	8.14 (207)		
836T-T252J	6.41(163)	**836T-T262J**	7.33 (186)	**836T-D452J**		**836T-T252J**	8.5 (216)
836T-T253J		**836T-T263J**	7.25 (184)			836T-D463J	10.06 (256)
836T-T261J				**836T-D453J**	9.5 (241)		

Type 4 & 13 (Piston)

(Does not include Dual Bellows Devices)

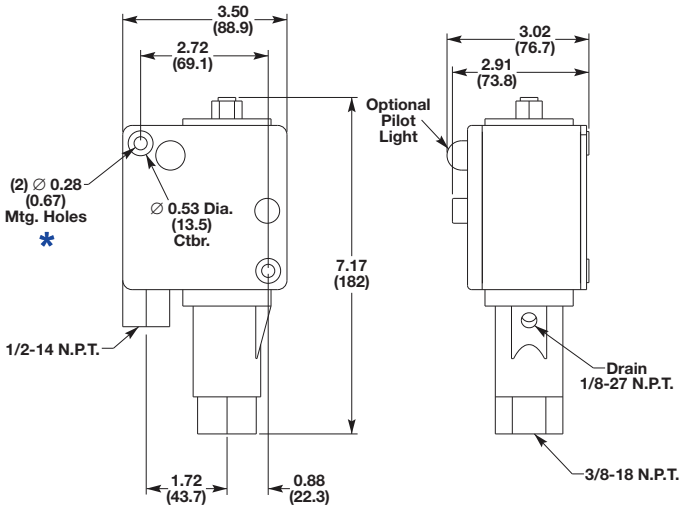

Approximate Shipping Weight 4.5 lbs. (2.0 kg)

Type 4 & 13 and 7 & 9 Bellows and Piston Type

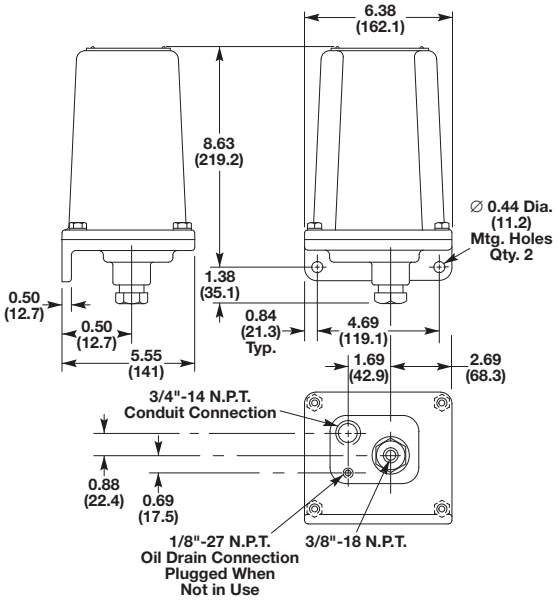

Approximate Shipping Weight 10 lbs. (4.5 kg)

∗ (2) mounting screws are required: 3/16 x 20 x 2 in. Counterbore depth is 1-1/8 in. Overall depth of mtg hole (front to back) is 2-1/4 in.

Cat. No.	
836T-T300J	836T-T350J
	836T-T351J
836T-T301J	836T-T352J
836T-T302J	836T-T353J
836T-T303J	836T-T400J

This page is intentionally left blank

CS-451-200 : Identification sheet

VWTC PROJECT NUMBER:	Iqaluit WWTP	REV:	01
PROJECT NAME:	5000218036	SUBMITTED TO (COMPANY):	
ENGINEER:	G. HÉBERT	SUBMITTED TO (RESPONSIBLE)	
PROJECT MANAGER:	C. BEKAERT	PROJECT NUM REFERENCE.:	
PHONE NUMBER:		LOT NUMBER:	

SUPPLIER	EQPT CODE	EQPT TAG NO	DIA	DESCRIPTION	INFO 1	INFO 2	INFO 3	APPLIC.	NOTE	REV
ENDRESS & HAUSER	IESWLE5204819	LSL-04-910		HP-500 INSTRUMENT	LEVEL SWITCH // MANUF: E&H// MODEL :FTE31-C6DB11 Soliswitch FTE31, thread NPT Level limit switch, Paddel. Solid >= 100 g/dm3. 1x relay double pole change over switch.	Housing: Plastics PBT, IP65 NEMA4 Rod: steel 1.4305 (303). 1x Cable entry NPT 1/2. Appval:C CSA DIP Cl. II,III, Div.1, Gr.EFG Power : 24VDC, relay	Paddel; Additional Option:1 316Ti; basic version Version:1 Basic version B Marking: 71072711: TAG on device	HP-500		1

This page is intentionally left blank

Level Pressure Flow Temperature Liquid Analysis Registration Systems Components Services Solutions

Technical Information

Soliswitch FTE31

Level Limit Switch
Economical paddle limit switch
For application in dust hazardous explosive areas



Application areas

The universal paddle level limit switch FTE 31 is used as a full, empty and demand alarm on silos containing solids. Its construction and materials make the unit suitable for use in the food industry.
The unit is suitable as a level limit switch in dust explosion hazardous areas.
Typical applications are level detection in:

- Cereals
- Sugar
- Cacao
- Animal feeds
- Washing powders
- Chalk
- Dry plaster
- Cement
- Granulates
- Wood chips

Features and benefits

- Simple operation
- Proven principle
- Slip clutch
- Ingress protection to IP 65 / NEMA 4x / Type 4x

TI068R/09/en
51002384

Endress+Hauser
People for Process Automation

Function and system construction

Measurement principle

The shaft and paddle are driven using a reduction gear and synchronous motor. If the paddle is stopped by material covering it, the hinged motor in the housing moves from the rest to the switch position. This movement operates two switch contacts, the first is for external level indication and the second switches the power off to the motor.
The paddle starts to rotate once the medium level falls below the paddle, the hinged motor returns to its rest position and the two contacts switch to normal operation. Intermittent loads that operate against or even in the same direction of rotation are evened out by using a slip clutch.

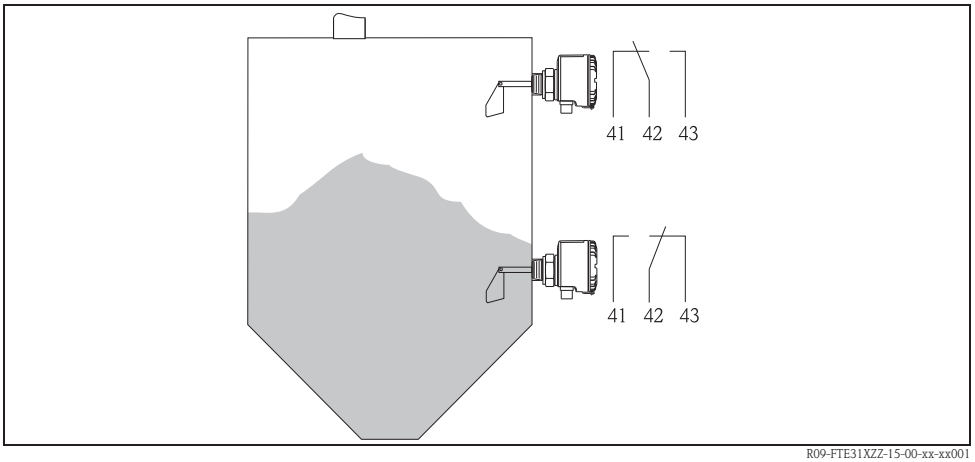

Level measurement changeover contact

System

Complete level measurement limit switch, paddle, shaft with synchronous motor and slip clutch, single pole double throw switch.

Input values

Measurement value

Level of solids

Range

Variable types dependent on:
- Installation point
- Length of shaft or rope

Output values

Output signal

Binary, once the set level is reached the micro switch contact changes.

Output circuit

Connectable load:
≤ 250 VAC, 10 A nominal current, 3 A on motor

Switch output

Potential free changeover contact (SPDT)

Switch delay

Approx. 2 seconds

Mechanical life time

min. 500 000 switch cycles

Power supply

Electrical connection

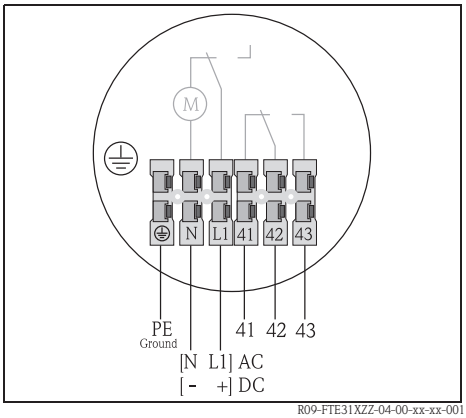

Terminal layout FTE31

AC	DC	
PE		Earth (ground) connection
N	-	Power connection
L	+	Power connection
41		Normally closed contact
42		Common contact
43		Normally open contact

Cable entry

Power supply and signal cable (in-/output):
- Thread for cable gland [½" NPT]

Power supply

Standard:
- 230 V AC, 50/60 Hz (±10%)

Option:
- 115 V AC, 50/60 Hz (±10%)
- 20...28 V DC

Power consumption

AC: P < 4,5 VA; DC: P < 3,5 W

Current requirement

DC: $I_{max} \leq 66$ mA

Installation conditions

Installation hints

Installation position:
- horizontal up to shaft length > 300 mm (11.8") or vertical (see diagram)
- side load on the shaft max. 60 N
- Load on the rope max. 1500 N

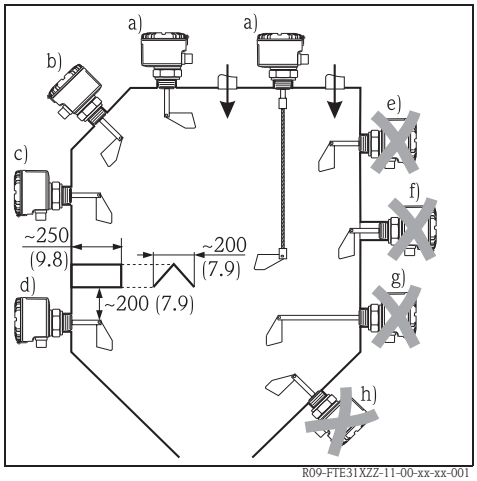

Installation of the FTE31 paddle level limit switch, dimensions in mm (inch).

Correct installation	Incorrect installation
a) Vertical from top of silo	e) In dierction of solids flow
b) Angled from the top	f) Installation coupling too long
c) From the side	g) Horizontal with shaft length > 300 mm
d) With protective cover against falling solids	h) Angled from below

The FTE31 paddle limit switch can be installed in solids silos as shown under points a, b, c and d.

Environment conditions

Ambient temperature	- 20 °C ... + 60 °C (-4 °F ... + 140 °F)
Storage temperature	- 20 °C ... + 60 °C (-4 °F ... + 140 °F)
Ingress protection	■ IP 65 / NEMA 4x / Type 4x with closed cover ■ IP 20 / NEMA 1 with open cover
Vibration protection	IEC 654-3, dimension V.S.1 (v<3 mm/s, 1<f<150 Hz)
EMC	To EN 61 326, Class B
Protection class	I
Over voltage protection category	II
Altitude	Up to 2000 m (6560 ft) above sea level.

Process conditions

Material temperature range	- 20 °C ... + 80 °C (-4 °F ... 176 °F)
Operating pressure range	0.5 bar ... 1.8 bar (7.25 PSI ... 26.1 PSI)
Material conditions	Solids - grain size ≤ 50 mm (1.97")
Product density (solids weight)	100 g/l

Mechanical construction

Model/dimensions

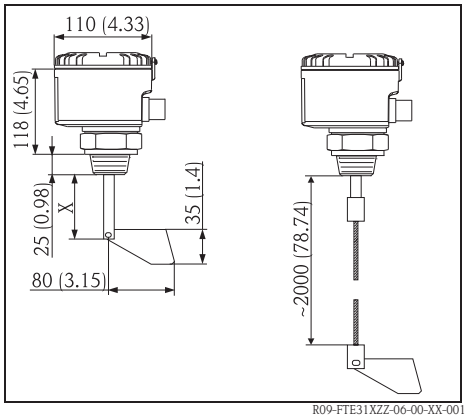

Construction of the compact unit - dimensions in mm (inch).

Shaft variations:

Standard shaft X = 75 mm (2.95")
Special length X:
100 mm (3.94"), 200 mm (7.87"), 300 mm (11.8"), 400 mm (15.75"), 500 mm (19.7"), 600 mm (23.6")

Rope version:

Rope length approx. 2000 mm (78.7"), can be shortened.

Caution!
If the shaft length is > 300 mm (11.8") the FTE31 can only be installed vertically downwards.

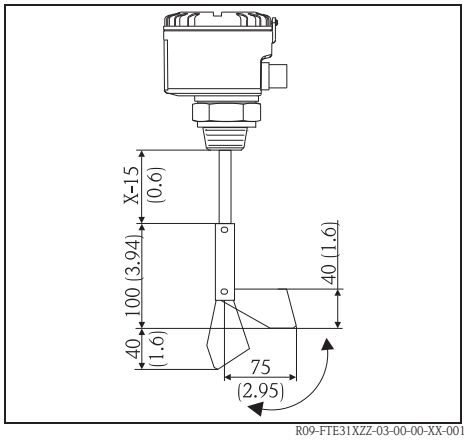

Hinged paddle - dimensions in mm (inch)

Option hinged paddle:

The paddle is hinged so that it can be easily mounted through a threaded mounting boss. Because it is spring loaded the paddle retuns to its normal operation once inside the vessel. Removal of the unit is always possible.

The hinged paddle can be mounted to both the solid shaft as well as the rope extension versions.

Weight	approx. 1 kg (2.2 lb)
Materials	Housing, cover and process connection: – VALOX 553 plastic with 30% fibre glass. Shaft: – Corrosion resistant steel 1.4435 Paddle: – Corrosion reseitant steel 1.4435 Option: – Process connection - corrosion resistant steel 1.4435 – Rope extension- corrosion resistant1.4571 with corrosion resistant steel 1.4305 weight – Hinged paddle - corrosion resistant steel 1.4435 O-ring seal: – NBR Shaft sealing ring: – NBR Perbunan Cable entries NPT ½": – Nickel plated brass
Shaft bearing	High performance friction bearing - maintenance free
Shaft revolution	approx. 1 revolution per minute
Process connection	Threaded boss - thread NPT 1¼" or NPT 1½"
Electrical connection	Plug-in terminals 2.5 mm^2 (14 AWG) solid core, 1.5 mm^2 (16 AWG) stranded with ferrule

Certification

CE approval	The measurement system fulfils the requirements demanded by the EU regulations. Endress+Hauser acknowledges successful unit testing by adding the CE mark.
FM	DIP Class II, Div. 1+2, Groups E, F, G and Class III
CSA	DIP Class II, Div. 1+2, Groups E, F, G and Class III

Ordering information

Soliswitch FTE31, Thread NPT

	Approval:
A	Non-hazardous area
B	FM DIP Cl. II, III, Div. 1, Gr. EFG
C	CSA DIP Cl. II, III, Div. 1, Gr. EFG

	Power supply:
1	230 V AC, relay 250 V AC, 100 mA-10 A
2	115 V AC, relay 250 V AC, 100 mA-10 A
3	20...28 V DC, relay 250 V AC, 100 mA-10 A
4	230 V AC, relay PLC 48 V DC, 10 mA-100 mA
5	115 V AC, relay PLC 48 V DC, 10 mA-100 mA
6	20...28 V DC, relay PLC 48 V DC, 10 mA-100 mA

	Process connection:
A	Thread NPT 1¼", Valox553 (PBT)
B	Thread NPT 1¼", 316L
C	Thread NPT 1½", Valox553 (PBT)
D	Thread NPT 1½", 316L

	Version:
A	Shaft 100 mm
B	Shaft 200 mm
C	Shaft 300 mm
D	Shaft 400 mm, vertical installation
E	Shaft 500 mm, vertical installation
F	Shaft 600 mm, vertical installation
Y	Other
1	Shaft 75 mm, compact
2	Rope 2 m, 316, shortable

	Paddle; Additionla option:
1	316Ti; basic version
2	316L; fold-away, w/o signal lamp

FTE31-	⇐ Ordercode

This ordering information can give an overview about the available order options. The Endress+Hauser sales organization can provide detailed ordering information and information on the order code.

Accessories

Hinged paddle for retro-fitting
Order no. 50089768

Further documentation

Short form operating manual KA094R/09/a3

Instruments International

Endress+Hauser
Instruments International AG
Kaegenstrasse 2
4153 Reinach
Switzerland

Tel. +41 61 715 81 00
Fax +41 61 715 25 00
www.endress.com
info@ii.endress.com

Endress+Hauser
People for Process Automation

CS-504-100 : Identification sheet

VWTC PROJECT NUMBER:	Iqaluit WWTP	REV:	01
PROJECT NAME:	5000218036	SUBMITTED TO (COMPANY):	
ENGINEER:	G. HÉBERT	SUBMITTED TO (RESPONSIBLE)	
PROJECT MANAGER:	C. BEKAERT	PROJECT NUM REFERENCE.:	
PHONE NUMBER:		LOT NUMBER:	

SUPPLIER	EQPT CODE	EQPT TAG NO	DIA	DESCRIPTION	INFO 1	INFO 2	INFO 3	APPLIC.	NOTE	REV
SCHUTTE&KOERTING	EJGUEJ200371	IJ-04-915	N/A	HP-500 EDUCTOR	MANUFACTURER: SHUTTE&KOERTING / MODEL: 1,5"- Fig264 PVC Eductor	N/A	N/A	HP-500		1

This page is intentionally left blank

Schutte & Koerting

Water Jet Eductors

Introduction

The Water Jet Eductor is a type of ejector which utilizes the kinetic energy of a pressurized liquid to entrain another liquid, mix the two, and discharge the mixture against a counter pressure. Ejectors of this type are used throughout industry for pumping and mixing operations.

Application

Water jet eductors have numerous uses in the plant such as lifting, pumping, mixing and agitation of liquids, granular solids and slurries. Some specific applications are: draining flooded areas, emptying tanks and sumps, pumping and mixing operations in oil treating systems, dewatering sand and coal barges, introducing anti-knock agents and coloring additives into gasoline, continuous blending, acidifying, causticizing of oils, producing emulsions, pumping food products, pumping sand and filter clay, tank mixing, and various proportioning operations. As an example of eductor performance in a typical use, a jet eductor measuring 8½" in length will empty a 500 gallon water tank in less than half an hour, using water at 60 psig, as the sole source of motive power.

Features

Self Priming Eductors require no priming and can be used for either continuous or intermittent operation.
Simple and Reliable Since the basic eductor has no moving parts to wear or break, only periodic inspection is required.
Corrosion and Erosion Resistant Because they can be made from most materials, or coated with corrosion resistant materials, eductors can be made resistant to the corrosive effects of the liquids handled and the environment.
Automatic Control Units can be adapted for automatic operation by means of a regulating spindle or a snap valve and float arrangement.
Non-Electrical Eductors can be used in hazardous locations where electrically operated alternatives would require expensive explosion-proofing.
Easy to Install Either threaded or flanged connections are available. Units are compact, relatively light and can be adapted to a variety of piping configurations.
Low Cost Water eductors are inexpensive in relation to the work they do.

Construction

Water Jet Eductors consist of only three basic components: a converging nozzle, a diffuser (or venturi) and a body to hold these parts in their proper relative positions and provide a suction chamber.



Converging Nozzle | Diffuser (or Venturi) | Body - holds diffuser and nozzle in position

Jet ejectors can be made from most workable materials, such as: cast iron, bronze, stainless steel, aluminum, polyvinyl chloride, polyester fiberglass, Phenolic Fiberglass Reinforced Plastic (FRP), Teflon[2] and Hastelloy[3].

A variety of types and sizes are available as noted on the following pages. Certain variables such as pressure, temperature, viscosity, density, operating conditions of suction and discharge fluids, and desired results must be considered in determining the type of eductor best suited to your needs. S&K engineers will work with you to select the proper eductor for your application.

Request Performance Data Supplement 2M for operating characteristics of water jet eductors.

Index

Description	Page
Fig. 264 Water Jet Eductor	2
Fig. 266 Water Jet Eductor	2
Fig. 264 PVC and Kynar Water Jet Eductor	3
Fig. 2645 Automatic Eductor	4
Fig. 265 Liquid Jet Eductor	5
Fig. 242 Condensate and Mixing Eductor	6
Fig. 258 Tank Mixing Eductor	7
Fig. 268 Tank Mixing Eductor	7
Fig. 254 Hopper-Equipped Eductor	9
Fig. 267 Hopper-Equipped Eductor	9
Fig. 227 Hopper-Equipped Eductor	9
Fig. 224 Water Jet Sand and Mud Eductor	10
Fig. 235 Annular Multi-Nozzle Water Jet Eductor	11
Fig. 222 Portable Eductor	12
Fig. 212 Corrosion Resistant Eductor	12
Typical Applications of S&K Water Jet Eductors	12

Fig. 264 and Fig. 266 Water Jet Eductors

S&K Fig. 264 and Fig. 266 Water Jet Eductors are designed for liquid pumping and mixing operations and for the handling of some solids where requirements do not necessitate capacities greater than those obtained with sizes up to and including 6". They are considered the standard eductors within this size range. Typical applications begin on page 12.

In operation, pressure liquid enters the eductor through the pressure nozzle and produces a high velocity jet. This jet action creates a vacuum in the line which causes the suction liquid to flow up into the body of the eductor where it is entrained by the pressure liquid. Both liquids are thoroughly mixed in the throat of the eductor and are discharged against back pressure. The streamlined body with no pockets permits the pressure liquid to move straight through the eductor and reduces the possibility of solids in the suction material collecting and clogging. In addition, pressure drop in the suction chamber is held to a minimum.

Accompanying Bulletin 2M Supplement Performance Data provides performance information.

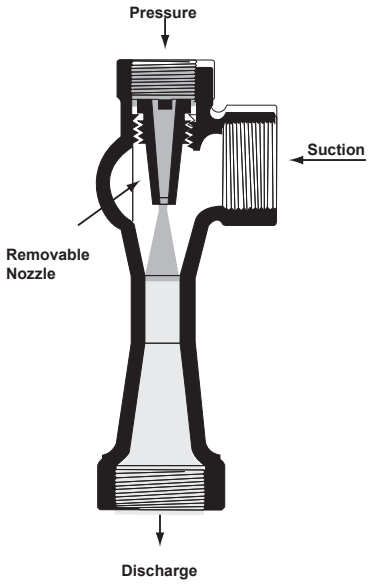

Fig 1. FIG. 264 EDUCTOR
Eductors of this type have streamlined bodies with threaded pipe connections. They are made in sizes ranging from 1/2" to 3" and are stocked in these sizes in ductile iron and bronze and Fig. 316 stainless steel. They are stocked in sizes from 1/2", 2", and 3" in PVC. Other materials are available on order.



Fig. 2. FIG. 264 EDUCTOR

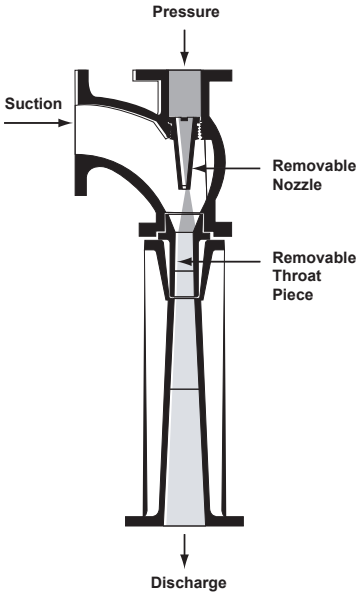

Fig. 3. FIG. 266 EDUCTOR.
These eductors are similar to Fig. 264 Eductors except that they have flanged connections and removable throat bushings along with removable nozzles. They are supplied in cast iron, bronze-mounted in 4" and 6" sizes. Other materials can be supplied on special order.

Table 1. Sizes and Dimensions, Fig. 264 and Fig. 266 Water Jet Eductors

Size In Inches	Connections In Inches		Wgt. In Lbs.	Working Pressures						Dimensions in Inches			Max. Round Particle Size In Inches
	Suction Disch.	Pressure		Cast Iron		Bronze		Stainless Steel		A	B	C	
				Motive psi	Body psi	Motive psi	Body psi	Motive psi	Body psi				
Fig. 264 Eductor													
1/2	1/2	3/8	3/4	150	125	125	100	600	500	1 1/16	2 9/16	1 1/8	1/16
3/4	3/4	1/2	1 1/4	125	125	100	100	500	500	1 3/8	3 3/8	1 1/4	1/8
1	1	3/4	2	150	150	150	125	600	600	1 1/2	4 3/16	1 5/8	5/32
1 1/2	1 1/2	1	4	150	100	125	90	600	400	2	6 1/2	2	5/16
2	2	1 1/4	6	150	100	125	85	600	400	2 1/4	7 5/8	2 1/4	3/8
2 1/2	2 1/2	1 1/2	11	200	150	200	125	600	300	2 11/16	9 1/4	3 1/8	3/8
3	3	2	20	250	150	225	125	600	400	3 1/8	11 1/4	3 1/2	13/16
Fig. 266 Eductor													
4	4	2 1/2	100	125	125	-	-	-	-	4 3/8	19 1/4	7 13/16	1
6	6	4	180	125	125	-	-	-	-	6 1/16	28 3/8	9 1/8	1 1/8

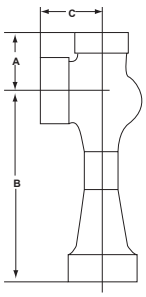

Fig. 264

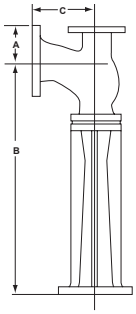

Fig. 266

Fig. 264 PVC and Kynar Water Jet Eductors

Fig. 264 PVC and Kynar Eductors offer resistance to many corrosive media. PVC Eductors are not recommended, however, for acetone, ketones, ether, esters, aromatic hydrocarbons or chlorinated hydrocarbons. A table of recommended uses is available on request. Maximum temperature rating is 150°F. Kynar Eductors will handle PVC applications including those mentioned above. Kynar's temperature limitation is 250°F. Pressure ratings are given in Table 2.

Fig. 264 PVC and Kynar Eductors operate on the same principle as do all other S&K Eductors. Performance characteristics with water are shown in Bulletin 2M Supplement Technical Data. For performance with other liquids, contact S&K.

Nozzles and diffusers are not removable on these eductors. Sizes 1" and smaller are of molded construction.

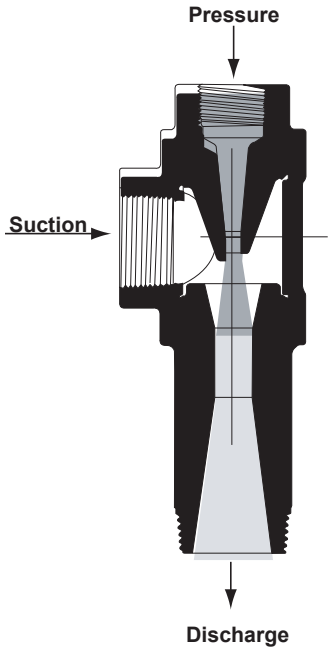

Fig. 4. FIG. 264 PVC EDUCTOR.
Sizes from 1 1/2" up are designed as shown here and in Fig. 5. On these sizes, the pressure and suction connections are female and the discharge connection is male. All connections are threaded.



Fig. 5. FIG. 264 PVC EDUCTOR.

Table 2. Sizes, Dimensions, and Particle Size Data, Fig. 264 Water Jet Eductor

Size in Inches	Connections in Inches		Wgt. In Lbs.	Dimensions in Inches			Working Pressure (psig) at 75°F	Max. Round Particle Sizes (in inches) Eductors will Handle
	Suction Disch.	Pressure		A	B	C		
1/2s	1/2s	3/8s	1/2	1 7/16	3 1/4	1 7/16	325	1/16
1/2	1/2	3/8	1/2	1 7/16	3 1/4	1 7/16	325	1/16
3/4	3/4	1/2	1/2	1 11/16	3 1/2	1 11/16	275	1/8
1	1	3/4	1/2	1 7/8	3 11/16	1 7/8	250	5/32
1 1/2	1 1/2	1	1 1/2	2 9/16	5 11/32	2 1/16	200	5/16
2	2	1 1/4	2 1/2	3 1/32	6 21/32	2 5/32	185	3/8
3	3	2	6 3/4	4 1/8	9 1/2	3 7/8	165	13/16

s = denotes smaller internals.

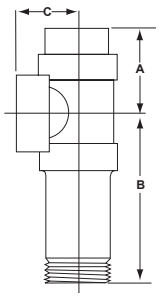



Fig. 6. FIG. 264 KYNAR EDUCTOR.
1/2" to 1" Design. Sizes 1/2", 3/4", and 1" look like this. All connections are female and are threaded.

Fig. 2645 Automatic Eductor

Fig. 2645 Automatic Water Jet Eductors are used to pump out sumps (pits, tanks, etc.) where liquid accumulates slowly but must be evacuated when it reaches a predetermined level.

As the liquid in the sump (basin, tank, cellar, bilge, etc.) accumulates, it raises the ball float until the upward action of the float opens the snap-acting valve, admitting motive fluid into the pressure connection of the eductor.

The jet action of the motive fluid creates a vacuum in the eductor and entrains the suction fluid, discharging both fluids under pressure. As the suction fluid is thus pumped out, the sump level drops to a point where the snap-acting valve shuts off. No further pumping action takes place until the sump again fills to the operating level.

Operation of the Fig. 2645 Eductor is completely automatic. It is self-operated, requires no electrical connections or any external power other than the motive fluid. The snap-acting valve and ball float are the only moving parts. The full assembly is so compact it can be installed in tanks as small as 13 1/2" diameter.

For performance information, see accompanying Bulletin 2M Supplement Performance Data.

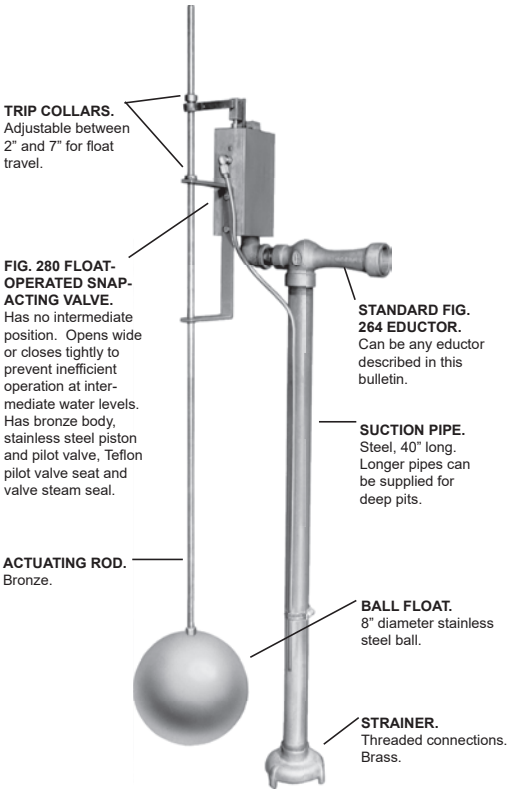

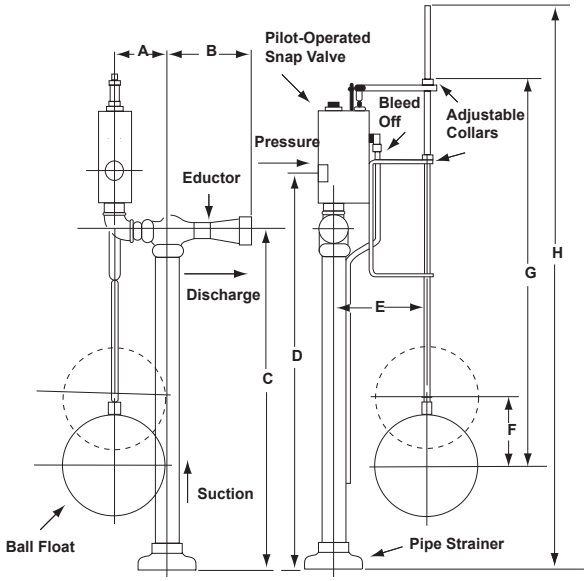

Table 3. Sizes and Dimensions, Fig. 2645 Automatic Eductor

Eductor Size In Inches	Connections In Inches N.P.T.		Wgt. In Lbs.	Working Pressure (Bronze)		Dimensions in Inches							
	Suc.-Disch.	Pressure (Snap-Valve)		Motive* (psig)	Body (psig)	A	B	C	D	E	F	G	H
3/4	3/4	1	24	100	100	3 11/16	3 3/8	41	44 7/8	7 5/6	5 3/8	47 1/8	60
1	1	1	26	150	125	4 5/16	4 3/16	41	44 7/8	7 5/6	5 3/8	47 1/8	60
1 1/2	1 1/2	1	32	125	90	4 1/8	6 1/2	41	44 7/8	7 5/6	5 3/8	47 1/8	60
2	2	2	43	125	85	6 1/4	7 5/8	38 3/8	43 15/16	7 7/16	5 3/8	47 1/8	60
2 1/2	2 1/2	2	65	200	125	6 11/16	9 1/4	38 3/8	43 15/16	7 7/16	5 3/8	47 1/8	60
3	3	2	81	200	125	6 3/8	11 1/4	38 3/8	43 15/16	7 7/16	5 3/8	47 1/8	60

*Minimum motive pressure for all Fig. 2645 Eductors: 40 psig

Fig. 265 Liquid Jet Eductor

Fig. 265 Liquid Jet Eductor is similar in design to the Fig. 264 Water Jet Eductor and is made for liquid pumping and mixing operations and for handling some solids where requirements do not necessitate capacities greater than those obtained with sizes up to and including 3". Typical applications begin on page 12.

The Fig. 265 Liquid Jet Eductor provides higher discharge pressures and higher suction flow capacities than other standard eductors.

In operation, pressure liquid enters the eductor through the pressure nozzle and produces a high velocity jet. This jet action creates a vacuum in the line which causes the suction liquid to flow up into the body of the eductor where it is entrained by the pressure liquid. Both liquids are thoroughly mixed in the throat of the eductor and are discharged against back pressure. The streamlined body with no pockets permits the pressure liquid to move straight through the eductor and reduces the possibility of solids in the suction material collecting and clogging. In addition, pressure drop in the suction chamber is held to a minimum.

Accompanying Bulletin 2M Supplement Performance Data provides performance information.

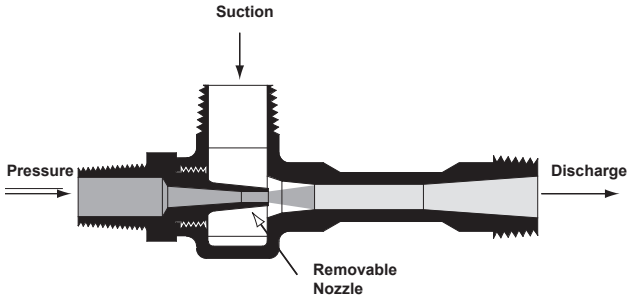

Fig 8. FIG. 265 LIQUID JET EDUCTOR
Eductors of this type have streamlined investment cast bodies with threaded NPT male pipe connections. They are made in sizes ranging from 3/4" to 3" and are stocked in these sizes in Fig. 316 stainless steel. Other materials are available on order.



Fig. 9. FIG. 265 EDUCTOR.

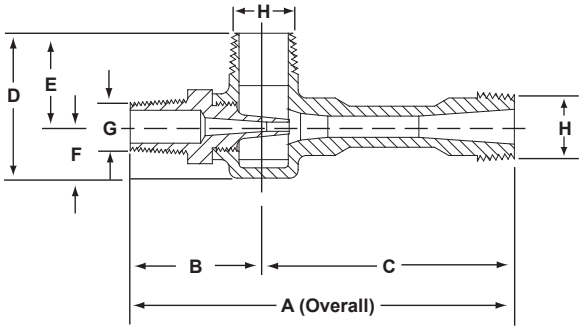

Table 265. Sizes and Dimensions, Fig. 265 Liquid Jet Eductor

Size (In Inches)	Wgt.	Dimensions						Connections	
		A	B	C	D	E	F	G	H
3/4	1	5 7/8	2	3 7/8	2 1/4	1 1/2	3/4	3/8	3/4
1	2	7 1/8	2 1/4	4 7/8	2 3/4	1 3/4	1	1/2	1
1 1/2	4	11	2 3/4	8 1/4	3 21/32	2 1/2	1 5/16	1	1 1/2
2	8	14 3/8	3 1/8	11 1/4	5	2 7/8	2 1/8	1 1/4	2
3	30	23 7/8	4	19 7/8	8	5	3	2	3

Fig. 242 Condensate and Mixing Eductor

Fig. 242 Water Jet Eductors are designed to mix two liquids intimately in various proportions in operations where the pressure liquid is the greater proportion of the mixture. Typical applications include: removal of condensate; mixing gasoline with acid; blending and proportioning chemical solutions; and diluting acids and alkali.

In operation, the pressure liquid issues from the nozzle at high velocity and entrains the suction liquid. The extreme turbulence in the throat of the eductor mixes the two liquids, blending and emulsifying thoroughly and completely. Colloidal suspensions can also be produced.

Entrainment ratio is dependent upon the eductor design. Close regulation within the design limits is usually obtained by a valve in the suction liquid line.

The pressure drop between the pressure liquid and the discharge should be at least 10 psi to give adequate mixing, and the difference between the discharge pressure and the suction pressure should not exceed 75% of the difference between the operating pressure and the suction pressure.

When used for removal of condensate, the eductor should be installed three feet below the condensate level at the drain of the condenser. For performance information, see Technical Data Supplement to Bulletin 2M.



Fig. 10. FIG. 242 EDUCTOR.

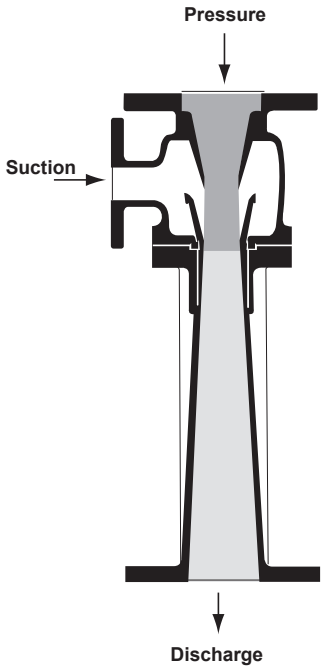

Fig. 11. FIG. 242 EDUCTOR.
The 242 is the flanged type Condensate and Mixing Eductor. This style, too, is made in bronze or cast iron, bronze mounted, but can be supplied in other materials. Nozzles and throat bushings are removable.

Table 4. Sizes and Dimensions, Fig. 242 Condensate and Mixing Eductor

Size No.	Connection in Inches			Dimensions in Inches			Weight in Lbs.
	Pressure	Suction*	Discharge	A	B	C	
2	2	1 - 2	2	4 3/4	11 3/4	3 3/4	50
2 1/2	2 1/2	1 1/4 - 2 1/2	2 1/2	3 1/2	15 1/4	4	60
3	3	2 - 3	3	4	17 15/16	4 5/8	70
4	4	2 - 4	4	5 9/16	20 3/8	5 1/2	80
6	6	3 - 6	6	6 1/4	29	6	270
8	8	4 - 8	8	14 1/16	35 1/2	7 13/16	450

*Note: Suction connection may vary to suit conditions.

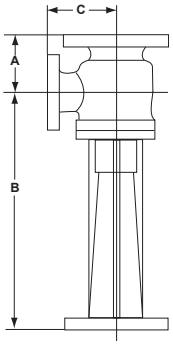

Fig. 258 and Fig. 268 Tank Mixing Eductors

Fig. 258 and Fig. 268 Tank Mixing Eductors are used to agitate liquid, dissolve powdered solids in liquid, and to mix two or more liquids intimately within a tank or other vessel without the use of baffles or moving parts inside the tank. These units take the place of mechanical agitators.

The 268 is used in preference to the 258 in operations where it is desirable to start mixing from a shallow level or where uniform local agitation is required over large, shallow tank area. Typical applications of each are shown in the application section beginning on page 12.

Fig. 258 and 268 Eductors are operated by a flow of pressure liquid through the nozzle. As shown in the sectional drawings, the motive liquid entrains suction liquid, the two are mixed intimately in the venturi, and the mixture is discharged into the tank. Pressure liquid can be taken from the tank by means of a pump or it can be a new liquid. Standard, stock units are designed to entrain 3 gallons of suction fluid for each gallon of motive fluid. (Special designs of the 258 Eductor can be made to give 1 to 1 ratio.)

Normally, the tank is filled by means of the eductors. Mixing occurs as soon as the level of liquid in the tank covers the suction of the eductor. In addition to the mixing obtained between suction and motive fluids in the eductor, the jet action of the discharge from the eductor serves to agitate the tank and prevents stratification.

If a drawing or sketch of the mixing tank is furnished, S&K will recommend and quote on the proper type of distribution system.

Performance information is given in accompanying Performance Data, Bulletin 2M Supplement. Similar units using steam as motive fluid for heating, circulating and mixing are described in Bulletin 3A as “Fig. 314” units.

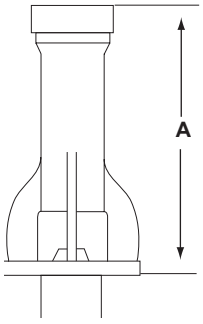

Table 5. Sizes and Dimensions, Fig. 258 Tank Mixing Eductor

Size in Inches	Connections in Inches		Wgt. in Lbs.	Dimensions in Inches
	Disch.	Pressure		A
1/2	1	1/2	2	5 1/2
3/4	1 1/2	3/4	6	8 1/2
1	2	1	22 1/2	12 5/16
1 1/4	2 1/2	1 1/4	29	11 1/8
1 1/2	3	1 1/2	36 1/2	15 7/8
2	4*	2	78	19 5/8
3	6*	3	ON APPL.	28 13/16
4	†	4*		†
5	†	5*		†
6	†	6*		†

*Flanged Connection
† Varies with performance and application
Note: A discharge flange is not supplied on large fabricated units unless required by the application.
(See Fig. 16 for dimensions of Fig. 268 Eductor).

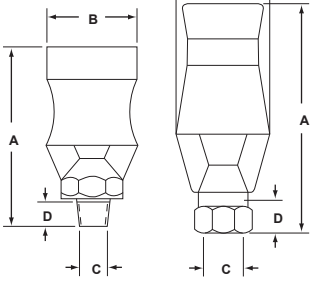

Sizes 3/8, 3/4 Sizes 1 1/2, 2, 3

Table 5-A. Sizes and Dimensions, Fig. 268 Tank Mixing Eductor

Size in Inches	A	B	C	D	Wgt. in Lbs.
3/8	3 3/4	1 3/4	3/8	7/16	3/4
3/4	5 1/4	2 3/8	3/4	9/16	2 1/2
1 1/2	8 13/16	4 1/16	1 1/2	13/16	6 1/4
2	12 1/4	5 13/16	2	45/64	22
3	17	8 1/8	3	15/16	48

Fig. 258 and Fig. 268 Tank Mixing Eductors



Fig. 12. FIG. 258 TANK MIXING EDUCTOR.

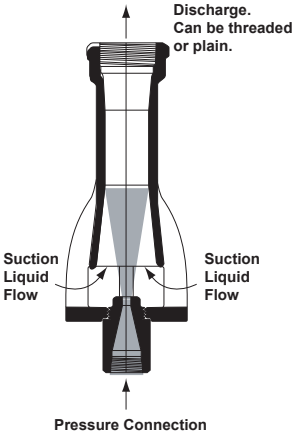

Fig. 13. FIG. 258 TANK MIXING EDUCTOR.
Standard units are made in cast iron and bronze but can be made in many other materials on special order. Large sizes can be fabricated instead of cast.



Fig. 14. FIG. 268 TANK MIXING EDUCTOR. 3/8" and 3/4" sizes.

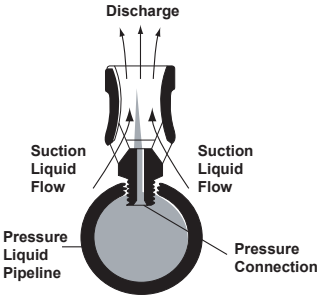

Fig. 15. FIG. 268 TANK MIXING EDUCTOR.
This design is used for 3/8" (3 3/4" overall length and 1 3/4" overall width), and 3/4" (5 1/4" overall length and 2 3/8" overall width) pressure connection sizes. It is threaded directly into threads tapped into the 1 1/2" diameter or larger pressure liquid pipeline. It is cast in one piece and is stocked in cast iron, bronze and 316 stainless steel. Other materials can be supplied on special order.



Fig. 17. FIG. 268 TANK MIXING EDUCTOR. 1 1/2" size and over.

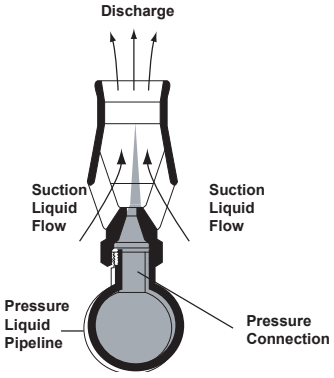

Fig. 16. FIG. 268 TANK MIXING EDUCTOR.
This design is used for 1 1/2" (8 7/8" overall length x 4 1/8" overall width), 2" (12 1/4" overall length x 5 7/8" overall width) and 3" (17" overall length x 8 1/8" overall width) pressure connection sizes. All are cast in one piece and have female thread connections for installation on nipples welded into the pressure liquid piping. The 1 1/2" and 2" sizes are stocked in cast iron, bronze, and 316 stainless steel. The 3" size is stocked in cast iron and stainless steel only. Other materials can be supplied on special order.

Fig. 254 and Fig. 267 and Fig. 227 Hopper-Equipped Eductors

Fig. 254 and Fig. 267 Hopper-Type Eductors are made for handling slurries or dry solids in granular form and are used extensively for ejecting sludges from tank bottoms, for pumping sand from filter beds and for washing and conveying granular materials. Typical materials handled include: borax, charcoal, diatomaceous earth, lime, mash, fly ash, rosin, rock and granulated salt, sand, dry sawdust, light soda ash, dry sodium nitrate, powdered sulphur, wheat and many others.

A typical application of Fig. 254 Eductor is shown in the application section of this bulletin, beginning on page 12. the material from adhering to the sides of the hopper and keep it moving down into the eductor. Pressure water, passing through the eductor nozzle, entrains the sand, sludge or other materials and discharges into the piping system.

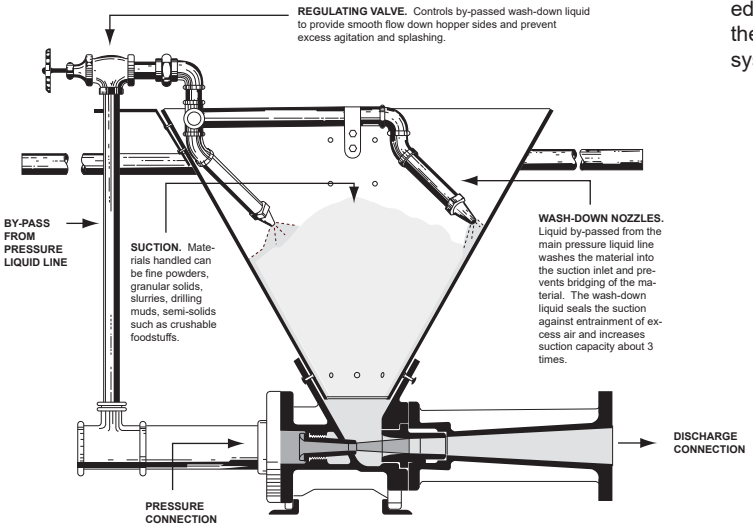

Fig. 18. FIG. 254 HOPPER-EQUIPPED EDUCTOR.
Standard units are made in cast iron and have hardened steel nozzles and throat bushings. Special materials are also available on special order. Both nozzles and throat pieces are removable and pressure and discharge connections can be fitted for hose where maximum portability is desired. Handles and supporting feet are optional.

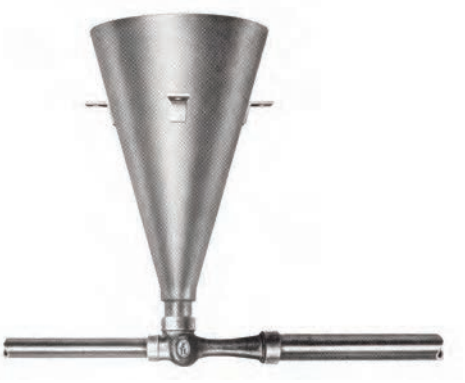

Fig. 19. FIG. 267 HOPPER-EQUIPPED EDUCTOR.
This economical unit is available from stock with body and nozzle in cast iron, bronze, 316 stainless steel, Kynar and PVC. Hoppers are stocked in Type 304 stainless steel (1, 1 1/2 & 2" sizes) and are also available in galvanized steel, brass, aluminum and PVC.

Table 6. Sizes and Dimensions, Fig. 254(1) and Fig. 267(2) Hopper-Equipped Eductors

Size in Inches	Connection (Inches)		Dimension (Inches)			
	Disch.	Press.	A	B	C	D
FIG. 254(1)						
1 1/2	1 1/2	1 1/2	13 1/4	11 1/2	18	15 1/4
2	2	2	14 1/2	13 3/4	21	17 3/4
3	3	2 1/2	17 3/4	17 1/2	23 3/8	19 3/4
4	4	4	19 5/8	24 3/16	27	22 1/2
6	6	6	28 1/16	36 7/16	38	28 5/16
FIG. 267(2)						
1	1	3/4	1 1/2	4 3/16	24	42
1 1/2	1 1/2	1	2	6 1/2	24	41 1/2
2	2	1 1/4	2 1/4	7 5/8	24	41
2 1/2	2 1/2	1 1/2	2 11/16	9 1/4	24	41 1/4
3	3	2	3 1/8	11 1/4	24	40 3/4

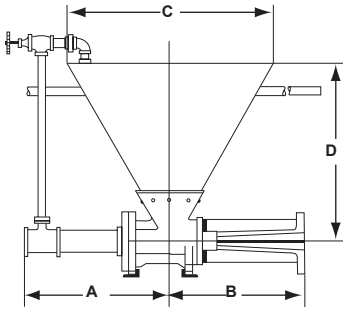

Fig. 254(1)

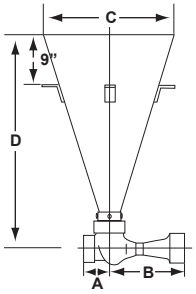

Fig. 267(2)

Fig. 227 Hopper-Equipped Eductor

Furnished with a stainless steel funnel, the eductor can be made of any machinable material. Bronze units up to and including 3" and cast iron units up to and including 4" sizes are available from stock. Prices, delivery or a sectional outline drawing 67-XS-081-J will be furnished on request. Stainless steel funnels are stocked in 1-1/4", 1-1/2" and 2" sizes.

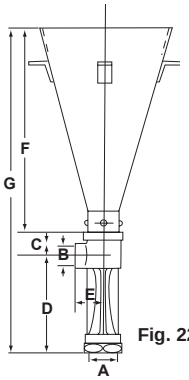

Fig. 227

Table 227. Sizes and Dimensions of Fig. 227 Hopper-Equipped Eductor

Dimensions in Inches							Wgt. (Lbs)
A	B	C	D	E	F	G	
1 1/4	3/4	1 9/16	6 7/16	1 13/16	39 5/8	47 5/8	31
1 1/2	3/4	2	8 13/16	2	39 1/4	50	36
2	1	2 1/2	9 1/8	2 1/4	38 1/2	49 7/8	45
2 1/2	1 1/4	2 3/4	11 1/4	2 3/8	37 7/8	51 7/8	51
3	1 1/2	3 1/16	13 5/16	2 3/4	37	53 3/8	58
4	2	3 5/8	17 1/16	3 3/16	35 1/2	56 3/16	70

Fig. 224 Water Jet Sand and Mud Eductor

Fig. 224 Water Jet Sand and Mud Eductors are used in pumping out wells, pits, tanks, or sumps where there is an accumulation of sand, mud, or other material not easily handled by the standard eductor. They are ideal for handling the heavy sludge residue from refining operations. A typical application of a Fig. 224 Eductor is shown in the application section beginning on page 12.

These eductors have an open suction and are designed to be submerged in the material being handled. The pressure liquid, passing through the nozzle, produces a high velocity jet which entrains the sludge or mud. This mixture is then discharged through a vertical pipe or hose. For performance information, see Bulletin 2M Supplement.

Similar units which use steam as the motive power are described in Bulletin 2A under “Fig. 225 Syphons”.

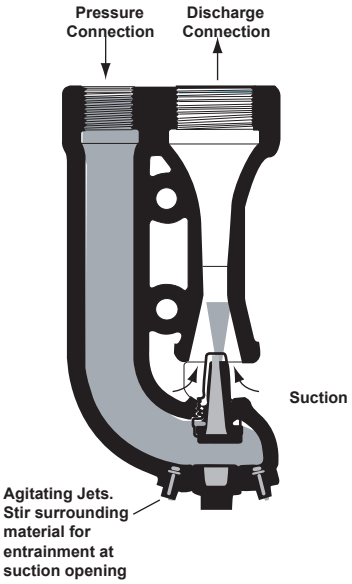

Fig. 20. FIG. 224 WATER JET SAND AND MUD EDUCTOR.
Standard units are made of cast iron with bronze pressure nozzles. Other corrosion-resistant materials are available on special order.



Fig. 21. FIG. 224 EDUCTOR.

Table 7. Sizes and Dimensions, Fig. 224 Sand and Mud Eductor

Size in Inches	Connections in Inches		Wgt in Lbs.	Dimensions in Inches	
	Disch.	Pressure		A	B
1 1/2	1 1/2	1	8	9 3/8	4 5/8
2 1/2	2 1/2	2	42	16 3/4	7 7/8
3	3	2 1/2	87	21 7/8	10 1/4
4	4	3	130	25 1/2	11
5*	5	4	-	30 1/4	17 3/8
6*	6	4	-	35 5/16	18

*Flanged Connections.

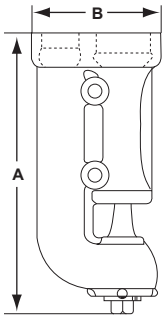

Fig. 235 Annular Multi-Nozzle Water Jet Eductor

Fig. 235 Annular Multi-Nozzle Water Jet Eductors are designed to handle solids and semi-solids. They operate at highest efficiency in large sizes and at low discharge heads. Because these eductors have high air handling capacities, they are particularly well suited for priming large pumps such as dredging pumps which frequently encounter air pockets.

Nozzles on the periphery of the throat introduce the pressure water. The pressure water creates a vacuum which draws in and entrains the material being handled and all flow discharges through the discharge connection. All suction flow is in a straight line through the eductor. For performance information, see Bulletin 2M Supplement.

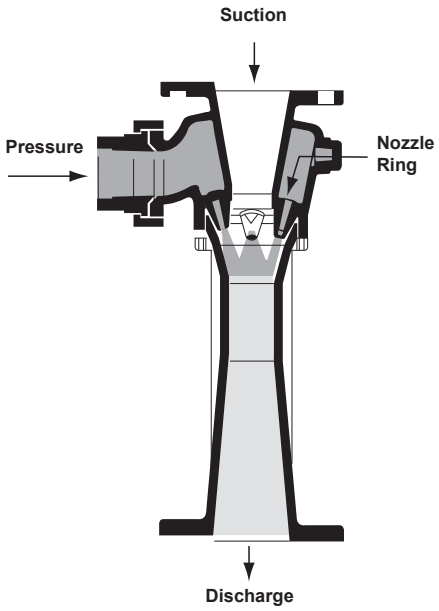

Fig. 22. FIG. 235 ANNULAR MULTI-NOZZLE WATER JET EDUCTOR.
These eductors are made to order from any workable material. Sizes from 1 1/2" to 6" are cast with flanged suction, discharge and pressure connections, except 2" size which has sil-brazed pressure connection. Sizes above 6" (to 28" and up) are generally fabricated.

Table 8. Sizes and Dimensions, Fig. 235 Annular Multi-Nozzle Water Jet Eductor

Size in Inches	Connections in Inches		Wgt. In Lbs.	Dimensions in Inches		
	Suction Disch.	Pressure		A	B	C
1 1/2	1 1/2	1	16	2 7/8	8 7/16	3 3/8
2	2	1 1/4	22	3 1/8	11 7/8	3 3/4
2 1/2	2 1/2	1 1/2	27	3 1/4	12 5/16	4
4	4	2 1/2	65	4 1/8	18 11/16	5 1/8
5	5	3	100	4 5/8	24 7/16	6
6	6	4	150	5 1/4	30	7 1/4

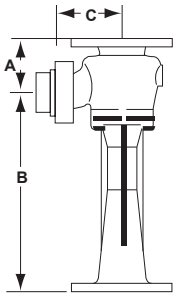



Fig. 23. FIG. 235 EDUCTOR.
(2" size with sil-brazed connection).

Special Purpose Eductors

The special-purpose eductors illustrated here are similar in operation to the basic Fig. 264 Eductor described on page 3.



Fig. 24. FIG. 222 PORTABLE EDUCTOR.
Is designed for use as an auxiliary with a pump where the suction lift is too great for the pump alone. Made of anodized aluminum, bronze or other materials as required.



Fig. 25. FIG. 212 CORROSION RESISTANT EDUCTOR.
Is made of Phenolic Fiberglass Reinforced Plastic (FRP). Body is of one-piece construction.

TYPICAL APPLICATIONS OF S&K WATER JET EDUCTORS

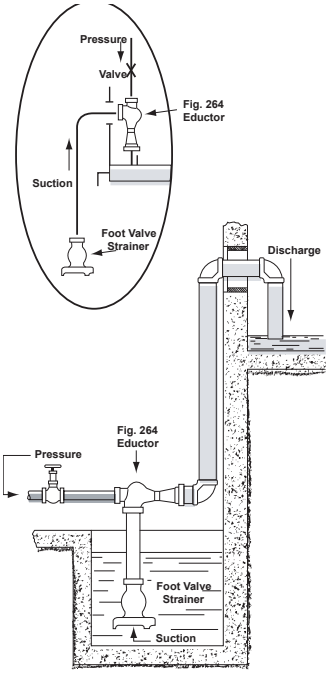

Fig. 26. FIG. 264 EDUCTOR USED TO EMPTY TANKS.
Water jet eductors are often used to empty tanks or to pump out sumps, penstocks, cellars, and the like. The pressure line should be fitted with a regulating stop valve and a pressure gauge while the suction line should be provided with an S&K Strainer. Discharge lines should be sealed for a positive pick-up of the liquid by turning the discharge line up or by submerging the end of the discharge line. It is recommended that the eductor be installed a short distance above the liquid to be handled and that short suction lines be used. Eductors will operate with long suction lines, as shown in the line drawing, however, with suction lifts greater than 15', capacities are reduced considerably. When handling hot liquid the eductor must be arranged with a short suction line or must be submerged.

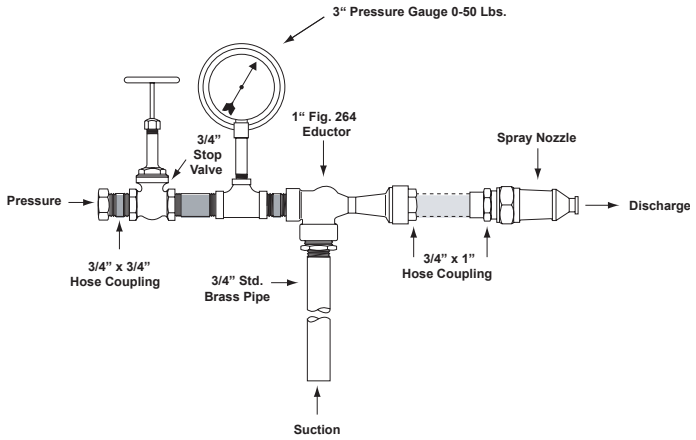

Fig. 27. FIG. 264 EDUCTOR USED IN MIXING LIQUIDS.
This illustration shows a typical arrangement used in mixing liquids such as chemicals or fertilizers in proportion for spraying. The solution to be applied is mixed in a container in approximately twice the strength at which it is to be used. The water jet proportioning apparatus is operated by a jet of high pressure water and is controlled by a 3/4" stop valve. A 3" pressure gauge indicates pressure. The jet action of the pressure water draws the solution from the container and the water and solution are mixed in the throat of the eductor and are discharged through a standard 3/4" hose to a spray nozzle. Solids can be handled and sprayed through a non-clogging type spray nozzle.

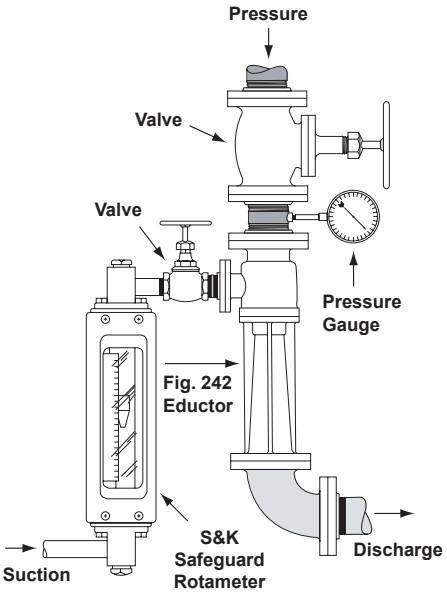

Fig. 28. FIG. 242 EDUCTOR USED IN TYPICAL PROPORTIONING SYSTEM.
This shows a typical proportioning system using a Fig. 242 Eductor. Rate of flow is measured by a Rotameter and is controlled by a valve in the line. A valve in the pressure line and orifice of the eductor nozzle control the flow of the pressure liquid. Fluids are thoroughly mixed in the desired proportions and are then discharged.

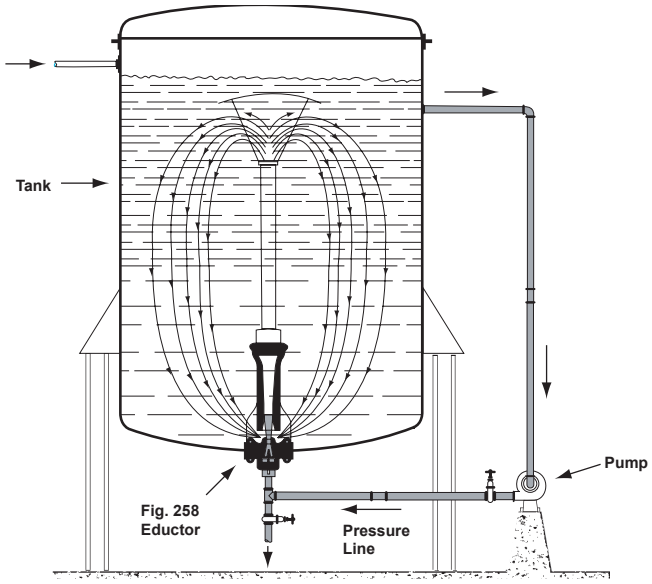

Fig. 30. FIG. 258 EDUCTOR IN BATCH MIXING APPLICATION.
This illustrates the batch mixing of two or more liquids with an S&K Fig. 258 Eductor. The pressure liquid, taken from the top of the tank is passed through a pump to the eductor. The jet action of this fluid entrains the liquid at the bottom of the tank and proper mixing results.

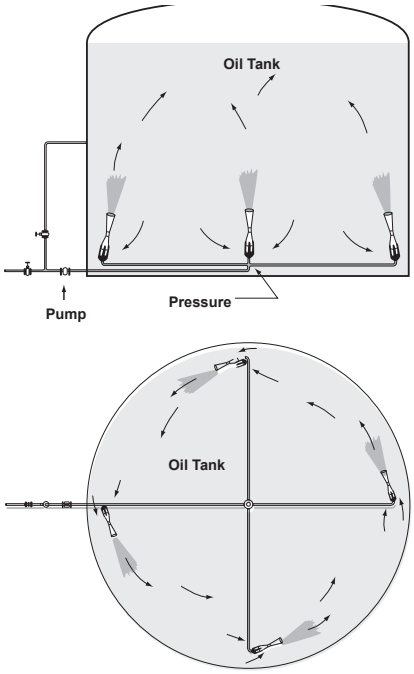

Fig. 29. FIG. 258 EDUCTORS FOR TANK BLENDING OF OILS.
For the tank blending of oils, the arrangement shown has proved highly satisfactory. In this particular installation five 8" Fig. 258 Eductors are used in a 100' tank. Initially, the eductors are used to fill the tank during which time they provide continuous agitation. After the tank is filled, the oil is drawn off and recirculated by means of the same pumps. Oil from the top of the tank issues through the eductor nozzle and entrains oil from the bottom of the tank. The two are mixed in the throat of the eductor and are discharged with sufficient force to maintain constant agitation and further blending in the tank.

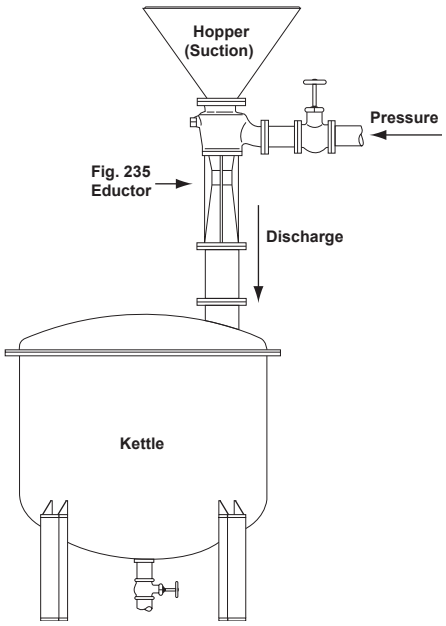

Fig. 31. FIG. 235 EDUCTOR USED IN MIXING DRY POWDER.
Mixing dry powder and a liquid prior to discharge into a tank is accomplished through the use of a Fig. 235 Eductor as shown here.
Pressure liquid enters the eductor, entrains the powder, mixes the two in the venturi of the eductor and discharges the mixture into a receptacle. The streamline eductor design provides maximum efficiency in this operation.

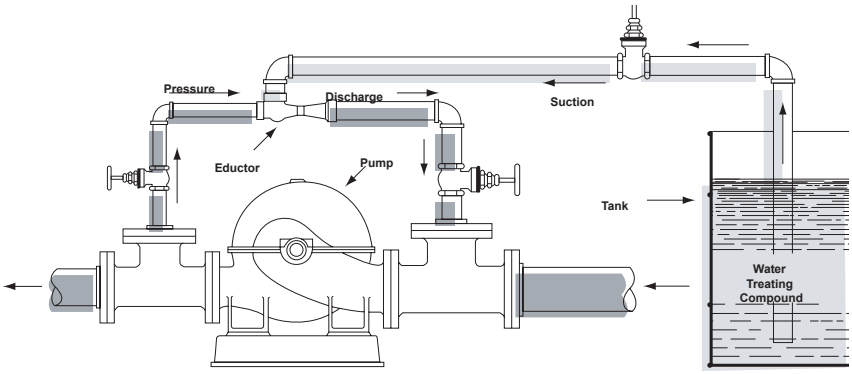

Fig. 32. FIG. 264 OR FIG. 265 WATER JET EDUCTORS USED TO ENTRAIN ANOTHER LIQUID.
This illustration shows a Fig. 264 or Fig. 265 Eductor being used to introduce a water treating compound into boiler feed water. A portion of the water issuing from the pump is bypassed into the eductor where it acts as the pressure medium to draw in and entrain the water treating compound.

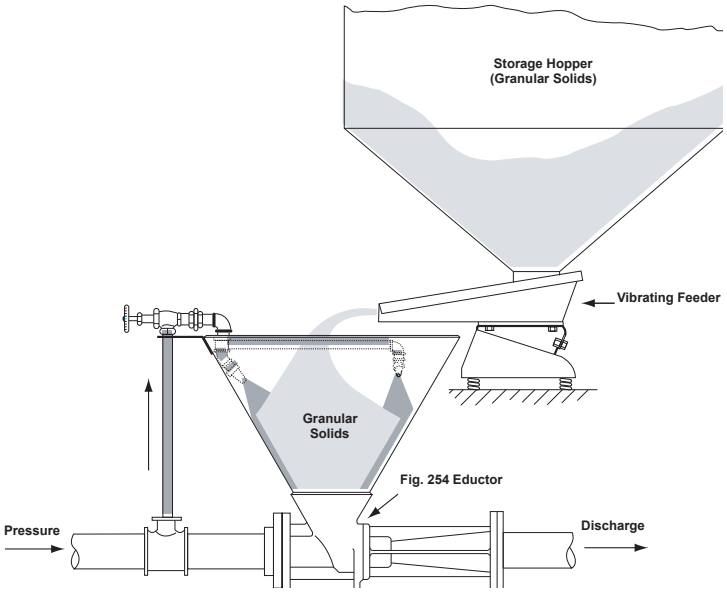

Fig. 33. APPLICATION OF FIG. 254 SOLIDS/LIQUID HOPPER EDUCTOR.
One arrangement for handling granular solids with the Fig. 254 Eductor is illustrated here. In this installation, granular solids drop from a storage hopper into a vibrating feeder which feeds the solids into the eductor hopper at a controlled rate. Water, bypassed from the pressure line, flows through nozzles located in the hopper and washes the solids into the eductor. There they are entrained by the jet action of the pressure water and are discharged. Although the material can be placed in the hopper manually, this system reduces handling and controls the flow of solids.

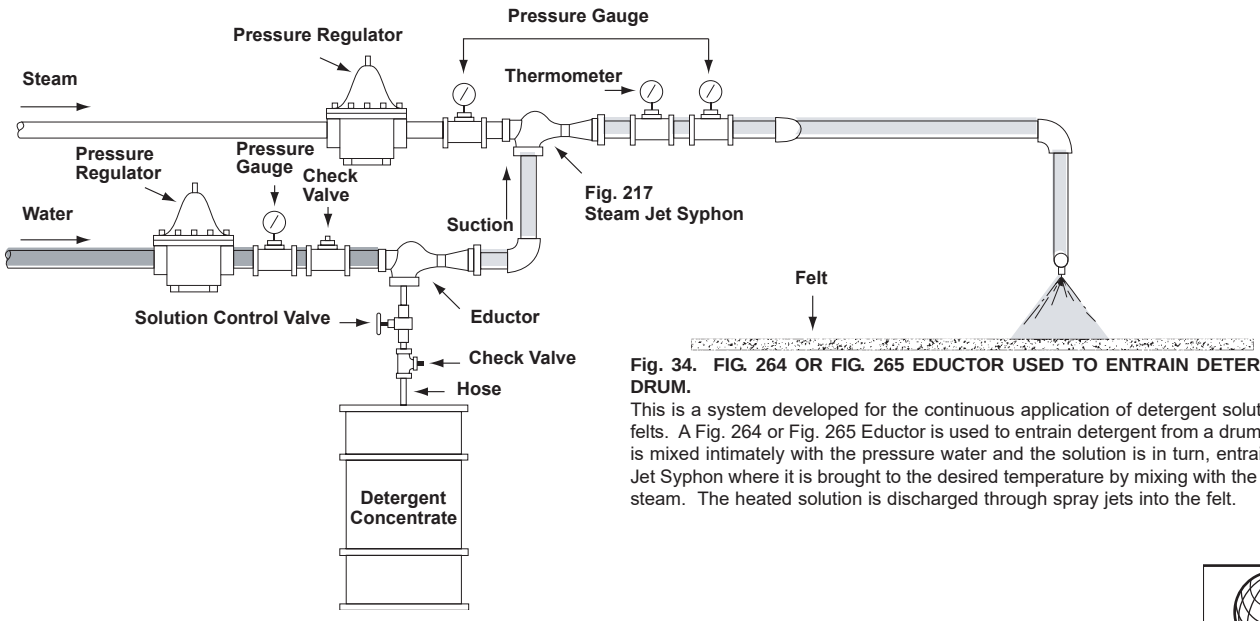

Fig. 34. FIG. 264 OR FIG. 265 EDUCTOR USED TO ENTRAIN DETERGENT FROM A DRUM.
This is a system developed for the continuous application of detergent solution to paper mill felts. A Fig. 264 or Fig. 265 Eductor is used to entrain detergent from a drum. This detergent is mixed intimately with the pressure water and the solution is in turn, entrained by a Steam Jet Syphon where it is brought to the desired temperature by mixing with the syphon's motive steam. The heated solution is discharged through spray jets into the felt.

ISO 9001 Certified

CS-650-600 : Identification sheet

VWTC PROJECT NUMBER:	Iqaluit WWTP	REV:	01
PROJECT NAME:	5000218036	SUBMITTED TO (COMPANY):	
ENGINEER:	G. HÉBERT	SUBMITTED TO (RESPONSIBLE)	
PROJECT MANAGER:	C. BEKAERT	PROJECT NUM REFERENCE.:	
PHONE NUMBER:		LOT NUMBER:	

SUPPLIER	EQPT CODE	EQPT TAG NO	DIA	DESCRIPTION	INFO 1	INFO 2	INFO 3	APPLIC.	NOTE	REV
KOFLO	FPMIPV202516	SM-04-919		HP-500 MIXER	STATIC MIXER / MANUFACTURER : KOFLO / MODEL : / 1.5-40C-4-6-21-1/2"	N/A	N/A	HP-500		1

This page is intentionally left blank

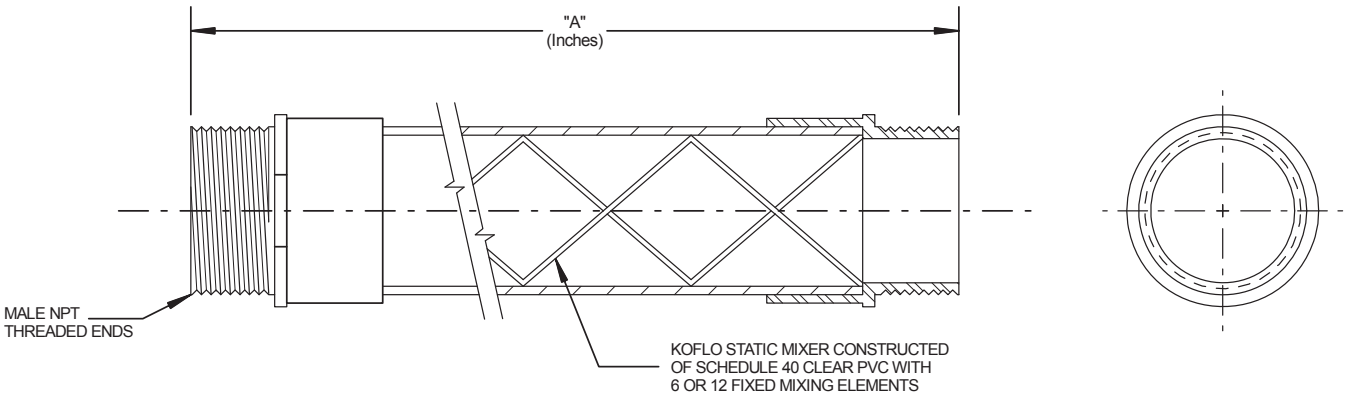

Size	6 Element Model Number	"A" 6 Element	12 Element Model Number	"A" 12 Element
3/8"	3/8-40C-4-6-2	6-1/2	3/8-40C-4-12-2	11
1/2"	1/2-40C-4-6-2	7	1/2-40C-4-12-2	12
3/4"	3/4-40C-4-6-2	9	3/4-40C-4-12-2	15
1"	1-40C-4-6-2	11	1-40C-4-12-2	18
1-1/4"	1.25-40C-4-6-2	14	1.25-40C-4-12-2	25
1-1/2"	1.5-40C-4-6-2	15	1.5-40C-4-12-2	28
2"	2-40C-4-6-2	19	2-40C-4-12-2	35

Koflo Corporation
309 CARY POINT DR.
CARY, IL 60013

SCALE: NONE	APPROVED BY JJ7	DRAWN BY NJF
DATE: 1/18/94		REVISED 10/15/01
CUSTOMER:		REVISED 5/22/08
		REVISED 6/12/09
MODEL NO: CLEAR PVC SCHEDULE 40 MIXER		DRAWING NUMBER: KD-993

This page is intentionally left blank

CS-910-502 : Identification sheet

VWTC PROJECT NUMBER:	Iqaluit WWTP	REV:	01
PROJECT NAME:	5000218036	SUBMITTED TO (COMPANY):	
ENGINEER:	G. HÉBERT	SUBMITTED TO (RESPONSIBLE)	
PROJECT MANAGER:	C. BEKAERT	PROJECT NUM REFERENCE.:	
PHONE NUMBER:		LOT NUMBER:	

SUPPLIER	EQPT CODE	EQPT TAG NO	DIA	DESCRIPTION	INFO 1	INFO 2	INFO 3	APPLIC.	NOTE	REV
ENVIREQUIP	CMSPMI319898	MXR-04-960	N/A	HP-500 MIXER	HP500 (2016) MIXER // Manuf : Envirequip // Model: EVG01-0.5 // Mtl : 304L SS	Impeller Dia : 13.5" // 181,24 RPM // Shaft lg : 29.25"	Nord Motor 0.5 HP / 575/3/60	HP-500		1

This page is intentionally left blank

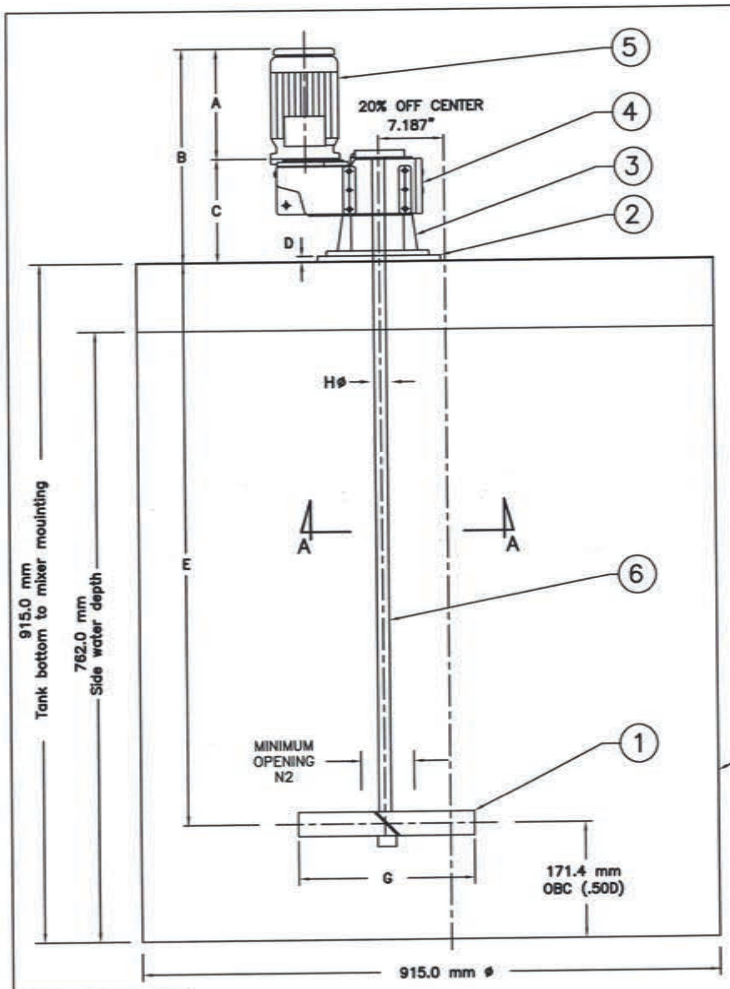

ITEM	DESCRIPTION	MATERIAL
1	Axial impeller (P-4) 342.9 mm (13.50") ø @ 45.0°	304L
2	Base 304.8 mm x 304.8 mm (12.0" X 12.0")	Steel
3	Pedestal <B5 Flange>	
4	NORD Reducer 180.24 RPM	
5	NORD Motor 0.5 Hp, 575/3/60, TEFC	
6	Shaft: (1) section 742.9 mm (29.25") @ 1.25"ø	304L

APPL'N: POLYMER (QTY 1)
MIX-TECH MIXERS
MODEL: EVG01-0.50
0.37 kW @ 180.24 RPM
S/N
Rotation: Clockwise
Thrust: Down
Tag #:

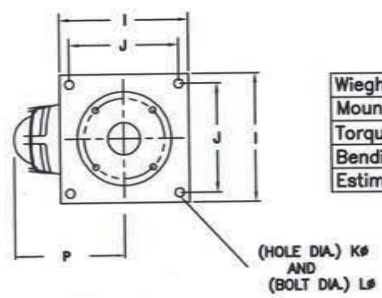

"A-A"

Wieght: 75 Lbs
Mounting loads
Torque reaction = 435 in lb
Bending moment= 490 in lb
Estimated beam: 7C @ 9.8 # up to 4 Ft.

ST #: 910-502
LATIS #: CMSPMI319898

HP 500

NO	DATE	REVISION	P/B

PROJET/PROJECT
EVG01-0.5/304/575 (CIRT)

ENVIREQUIP WTEM INC.
490 Boul du Lac - Suite 2
Dorval, QC H9S 3R8
Montreal Tel: (514) 336-1043
RR1 (21494 Little Russia Rd.)
Glen Robertson, Ont K0G 1H0
Ontario Tel: (613) 874-2618
Fax: (613) 874-2828
E-mail: envireqp@glen-net.ca

TITRE/TITLE
"MIX-TECH" Mixers
Veolia Water Technologies
EVG SERIES

DESSINÉ PAR: DRAWN BY: PJ	DATE: March 2016
DESS. NO: DWG NO: EVG	ÉCH./SCALE: N.T.S
VÉRIFIÉ PAR: CHECKED BY: PJ	PROJ.NO:
APPROUVÉ PAR: APPROVED BY: RJ	REV: D1

Ce dessin et l'information qu'il contient est la propriété de ENVIREQUIP WTEM Inc. Il est interdit de le copier, le photographier, l'imprimer, le prêter ou de l'utiliser sans la permission de ENVIREQUIP WTEM Inc.

This drawing and the information contained thereon is the property of ENVIREQUIP WTEM Inc. It is not to be printed, photographed, copied, loaned or used without the permission of ENVIREQUIP WTEM Inc.

Dimensions: Inches

MOD.:	A	B	C	D	E	E2	F	Gø	Hø SHAFT	I	J	Kø	Lø	M	N2	P
EVG01	8.12	13.98	5.36	.50	29.25	–	–	13.50	1.25	12.0	10.5	.562	.50	–	6.25	6.0

Dimensions: mm

MOD.:	A	B	C	D	E	E2	F	Gø	Hø SHAFT	I	J	Kø	Lø	M	N2	P
EVG01	206.2	355.1	136.1	12.7	742.9	–	–	342.9	31.8	304.8	266.7	14.3	12.7	–	158.8	152.4

This page is intentionally left blank

CS-910-400 : Identification sheet

VWTC PROJECT NUMBER:	Iqaluit WWTP	REV:	01
PROJECT NAME:	5000218036	SUBMITTED TO (COMPANY):	
ENGINEER:	G. HÉBERT	SUBMITTED TO (RESPONSIBLE)	
PROJECT MANAGER:	C. BEKAERT	PROJECT NUM REFERENCE.:	
PHONE NUMBER:		LOT NUMBER:	

SUPPLIER	EQPT CODE	EQPT TAG NO	DIA	DESCRIPTION	INFO 1	INFO 2	INFO 3	APPLIC.	NOTE	REV
WAM	CMSPGU320680	PAG-04-920, PSF-04-930	N/A	HP-500 FEEDER	SCREW FEEDER // Manuf : WAM // Model : MBF/073.A/TT/UD4.SST.UO2/F.0.Q.+.++++.++++ Feeding rate: 2,3 Liter/min at 25 rpm For material: dry polymer powder, approx.. 0.8 Kg/Ltr Blending tool: nbr. 1, plowshare shape	Feeding screw: nbr. 4, full flighting on pipe, SS304 Drive blending tool: varvel gear box ratio 1:40 Drive feeding screw: varvel gear box ratio 1:70 Shaft sealing: SS with	Baldor 0.75 HP blending tool motor 1750rpm Baldor 0.5 HP feeding screw motor 1750rpm Nema 056, 575V-60Hz, Inverter duty Discharge tube :MDXSC24	HP-500		1

This page is intentionally left blank

WAM®

WAMGROUP

1

TECHNICAL CATALOGUE

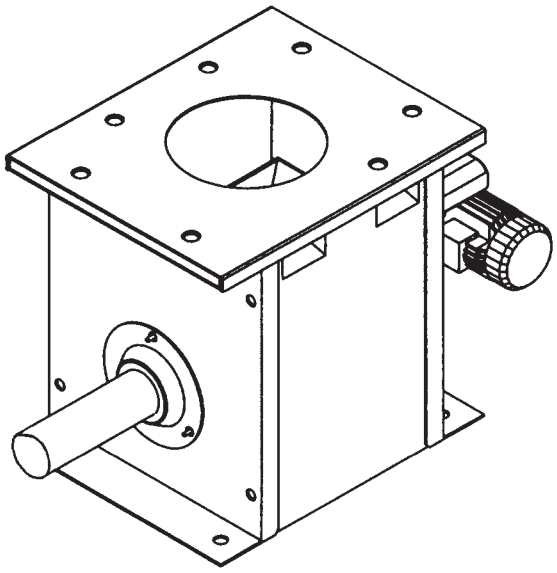

MBF

- **MICRO - BATCH FEEDERS**
  TECHNICAL CATALOGUE
- ***MIKRODOSIERER***
  TECHNISCHER KATALOG
- **MICRODOSEURS**
  CATALOGUE TECHNIQUE
- ***MICRODOSATORI***
  CATALOGO TECNICO

All rights reserved © WAMGROUP S.p.A.

CATALOGUE No.		VAL.062.-.T.4L	CREATION DATE
ISSUE **A17**	CIRCULATION **100**	DATE OF LATEST UPDATE **02.11**	**03.00**

All the products described in this catalogue are manufactured according to **WAMGROUP S.p.A. Quality System procedures**. The Company's Quality System, certified in July 1994 according to International Standards **UNI EN ISO 9002** and extended to the latest release of **UNI EN ISO 9001**, ensures that the entire production process, starting from the processing of the order to the technical service after delivery, is carried out in a controlled manner that guarantees the quality standard of the product.

*Alle in diesem Katalog beschriebenen Produkte werden gemäß dem **Qualitätssystem der WAMGROUP S.p.A.** hergestellt. Das im Juli 1994 gemäß der internationalen Norm **UNI EN ISO 9002** und auf die neueste Version der **UNI EN ISO 9001** erweiterte, zertifizierte Qualitätssystem der Firma gewährleistet, dass der gesamte Produktionsprozess von der Auftragsbearbeitung bis zum technischen Kundendienst nach Lieferung in kontrollierter Art und Weise erfolgt, so dass der Qualitätsstandard des Produkts gewährleistet ist.*

Tous les produits décrits dans ce catalogue sont fabriqués selon les procédures du **Système de Qualité de WAMGROUP S.p.A.**, certifié en Juillet 1994 selon les normes internationales **UNI EN ISO 9002** et étendu à la dernière version de la norme **UNI EN ISO 9001**. Cela garantit que le processus de production, à partir de la gestion de la commande au service technique après-vente, est effectué de manière contrôlée garantissant la norme de qualité du produit.

*Tutti i prodotti descritti nel catalogo sono stati realizzati secondo le **procedure del Sistema Qualità di WAMGROUP S.p.A.** Il Sistema Qualità aziendale, certificato dal luglio 1994 in conformità alle normative internazionali **UNI EN ISO 9002** e successivamente esteso all' ultima versione delle normative **UNI EN ISO 9001**, garantisce che l'intero processo produttivo, dalla formulazione dell'ordine fino all'assistenza tecnica dopo la consegna, si svolga secondo modalità controllate che garantiscono lo standard qualitativo del prodotto.*

This publication cancels and replaces any previous edition and revision.
We reserve the right to implement modifications without notice.
This catalogue cannot be reproduced, even partially, without prior written consent by the Manufacturer.

Diese Veröffentlichung storniert und ersetzt alle früheren Ausgaben und überarbeiteten Fassungen.
Wir behalten uns das Recht vor, Änderungen ohne vorherige Information durchzuführen.
Dieser Katalog darf selbst auszugsweise nicht ohne das schriftliche Einverständnis der Herstellers vervielfältigt werden.

Cette publication annule et remplace toute édition et révision antérieure.
Nous nous réservons le droit de mettre en place des modifications sans préavis.
Aucune reproduction, partielle ou intégrale du catalogue, ne pourra être faite sans l'accord préalable et écrit du Fabricant.

Questa pubblicazione annulla e sostituisce le edizioni e revisioni precedenti.
Ci riserviamo la facoltà di apportare modifiche senza preavviso.
Il presente catalogo non può essere riprodotto, nemmeno parzialmente, senza previo consenso scritto del Costruttore.

1 TECHNICAL CATALOGUE — **TECHNISCHER KATALOG**

DESCRIPTION AND TECHNICAL CHARACTERISTICS ... BESCHREIBUNG UND TECHNISCE MERKMALE ... **T. 6 → .23**
ORDER CODES ... BESTELLCODES ... **24 → .27**
ACCESSORIES ... ZUBEHÖR ... **28 → .42**
OPERATION AND MAINTENANCE ... BETRIEBS- UND WARTUNGSANLEITUNG ... **43**
INQUIRY AND ORDER FORM ... ANFRAGE- UND BESTELLBLATT ... **44**

1 CATALOGUE TECNIQUE — **CATALOGO TECNICO**

DESCRIPTION ET CARACTERISTIQUES TECHNIQUES ... DESCRIZIONE E CARATTERISTICHE TECNICHE ... **T. 6 → .23**
CODES DE COMMANDE ... CODICI DI ORDINAZIONE ... **24 → .27**
ACCESSOIRES ... ACCESSORI ... **28 → .42**
UTILISATION ET ENTRETIEN ... USO E MANUTENZIONE ... **43**
QUESTIONNAIRE ... MODULO DI RICHIESTA ... **44**

2 MAINTENANCE CATALOGUE — **WARTUNGSKATALOG**

OPERATION AND MAINTENANCE ... BETRIEBS- UND WARTUNGSANLEITUNG ... **M. 4 → .24**

2 CATALOGUE D'ENTRETIEN — **CATALOGO DI MANUTENZIONE**

UTILISATION ET ENTRETIEN ... USO E MANUTENZIONE ... **M. 4 → .24**

3 SPARE PARTS CATALOGUE — **ERSAITZTEILKATALOG**

SPARE PARTS ... ERSATZTEIL ... **R. 4 → .12**

3 CATALOGUE PIECES DE RECHANGE — **CATALOGO RICAMBI**

PIECES DE RECHANGE ... PEZZI DI RICAMBIO ... **R. 4 → .12**

CODES - *CODEBEZEICHNUNGEN* - SIGLES - *SIGLE*

MBF	Micro batch feeder	Mikrodosierer	Microdoseur modulaire	Microdosatore per polveri
MDXCR	Round cover	Runde Abdeckung	Couvercle rond	Coperchio tondo
MDXGS	Cutter grille for square hopper	Quadratischer Aufreißgrill	Grille carré	Griglia quadrata
MDXSV	Vertical spout	Ablaufrohr	Sortie verticale	Scarico verticale
MDXTR	Round hopper	Runder Aufgabetrichter	Trémie ronde	Tramoggia verticale
MDXTS	Square hopper	Quadratischer Aufgabetricher	Trémie carrée	Tramoggia quadrata
UTD	Metering screw	Dosierwerkzeug	Outil dosage	Utensile dosaggio
UTO	Blending tool	Homogenisierwerkzeug	Homogénéisateur	Utensile omogenizzazione
MBT	Seal	Wellenabdichtung	Etanchéité	Tenuta
MBTP	Extendend pipe	Verlängert Innenrohr	Tube rallongé	Tubo prolungato
MBPR	Linerfeeder pipe	Dosierrohr mit innernaiskleidung	Tube de dosage avec revetement interieeur	Scarico rivestito internamente
MBPI	STD inspection hatch	STD inspektionstür	Trappe de visite	Portello di ispezione
MBPIP	Inspection hatch with extended tube	Inspektionstür mit länglichrohr	Trappe de visite avec tube prolonge	Portello di ispezione con tubo prolungato

MBF micro-batch feeders are used in gravimetric and volumetric dosing plants for powders and granular materials of various kinds. The body is made of WAM®'s engineering polymers SINT®ER ,SINT®AL or AISI 304L/316L, while all other feeder parts including nuts and bolts are made of staimless steel 304.

On request micro-batch feeders are supplied in a food-grade version.

Unless otherwise specified, all the dimensions are given in millimetres.

MBF Mikrodosierer werden in gravimetrischen und volumetrischen Dosieranlagen von Pulvern und Granulaten aller Art eingesetzt. Das Gehäuse besteht aus den Polymeren SINT®ER, SINT®AL oder edelstahl 1.4301/1.4401. Alle anderen Komponenten einschließlich Schraubenmaterial sind aus Edelstahl 1.4301.

Auf Wunsch ist eine nahrungsmitteltaugliche Version lieferbar.

Wenn nicht anders angegeben, alle Maßangaben in Millimetern.

Les microdoseurs MBF sont utilisés dans toutes les installations de dosage à poids ou volumétriques pour les plus divers matériaux en poudre ou granulés. Le corps est construit en SINT®ER, SINT®AL ou AISI 304L/316L. Les autres composants sont en acier inox 304L, boulonnerie comprise.

Sur demande le microdoseur est fourni en version indiquée pour des produits alimentaires.

Sauf indication contraire, toutes les dimensions sont exprimées en millimètres.

I microdosatori MBF sono utilizzati in tutti gli impianti di dosaggio a peso o volumetrici per polveri e materiali granulari di vario tipo. Il corpo è costruito in SINT®ER, SINT®AL o AISI 304L/316L, mentre le altre parti sono in AISI 304L, bulloneria compresa.

Su richiesta, queste macchine possono essere fornite idonee per prodotti alimentari.

Se non specificato altrimenti, tutte le dimensioni sono in millimetri.

FINISHING - *FINISH* - FINITION - *FINITURE*

End plate	Endschild	Bride d'extremité	Frontale	**AISI 304L EDELSTAHL 1.4301**
Drive support	Antriebshaltung	Plaque de fixation	Piastra d'attacco	**ALUMINIUM ALLUMINIO**
Reducer	Getriebe	Reducteur	Riduttore	**ALUMINIUM ALLUMINIO**
Speed variator	Regelgetriebe	Variateur	Variatore	**RAL 5010**
Motor	Elektromotor	Moteur	Motore	**RAL7001**

SELECTION CRITERIA - *AUSWAHLKRITEREN* - CRITERES DE CHOIX - *CRITERI DI SCELTA*

CF = [dm³/ J] = theoretical capacity per hour at 1 RPM.
CE = [dm³/ h] = real capacity of MBF
CR = [dm³/ h] requested capacity.
CT = [dm³/ h] theoretical capacity
N = [RPM] = metering screw speed.
mvs = material efficiency

Given:
- the characteristics of the material to be handled, the application and the feeding system into the microbatch feeder;
- CR (=capacity requested by customer), in order to choose correct MBF type proceed as follows:
- Check from material table mvs and all other important characteristics (e.g. metering screw type, accessories, others)
- Calculate real capacity CE of standard MBF (with fixed or variable speed as required by customer)

CE = CT x mvs

where for CT refer to page T.10. If difference between CE and CT is too big (that is, if customer does not accept standard MBF) it is necessary to find correct MBF speed in order to obtain the requested capacity, using the following formula:

$$N = \frac{CR}{CF \times mvs}$$

Subsequently, select ratio nearest to specific requirements (see page T.11). In carrying out these calculations it has to be born in mind that mvs given in materials table is empirical. The real value depends on a number of factors which may be difficult to control, such as the condition of the material, atmospheric conditions, height of material column inside the hopper, speed of rotation etc. For material efficiency mvs see pag. T10.

CF = [dm³/J] = theoretische Stundenleistung bei 1 U/min
CE = [dm³/ h] =effektive Dosierleistung MBF
CR = [dm³/ h] = kundenseits geforderte Dosierleistung
CT = [dm³/ h] = theoretische Dosierleistung
N = [Upm] = Drehzahl des Dosierwerkzeugs
mvs = Material-Wirkungsgrad

Gegeben:
- Bezeichnung und Beschreibung des Dosierguts, zu erwartende Betriebs- und Beschickungsart
- CR (= kundenseits geforderte Dosierleistung). Um den MBF-Dosierer korrekt auszulegen, muß nun wie folgt vorgegangen werden:
- Eigenschaften des Dosierguts der Materialtabelle entnehmen z.B. mvs, Dosierwerkzeug, Zubehör etc.)
- Effektive Dosierleistung CE des Standard-Dosierers errechnen (mit fester oder variabler Drehzahl, je nach Kundenwunsch)

CE = CT x mvs

wobei CT wie auf Seite T.10 angegeben. Wenn Differenz zwischen GE und CT zu groß, bzw. Kunde MBF Standard-Dosierer nicht akzeptiert, muß jene Drehzahl gefunden werden, bei welcher der Dosierer die kundenseits geforderte Stundenleistung erbringt. Hierzu ist folgende Formel zu verwenden :

$$N = \frac{CR}{CF \times mvs}$$

Demzufolge wählt man eine Getriebeuntersetzung (siehe Seite T.11), die den Wünschen des Kunden am nächsten kommt. Bei der Ermittlung der vorgenannten Werte ist zu berücksichtigen, daß der in der Materialtabelle aufgeführte Parameter mvs ein rein empirischer Durchschnittswert aus der Summe der bisher gemachten Erfahrungen mit dem jeweiligen Medium ist, welcher im Einzelfall teilweise stark schwankt. In der Tat hängt mvs von mehreren, zum Teil schwer kontrollierbaren Variablen ab (z.B. Zustand des Dosierguts, Witterungseinflüsse, Materialsäule im Aufgabetrichter, Dosierer-Drehzahl etc.). Für Material-Wirkungsgrad siehe Seite T.10.

CF = [dm³/J] = débit horaire théorique pour 1 RPM
CE = [dm³/h] = débit effectif MBF
CR = [dm³/h] débit souhaité par le client
CT = [dm³/h] débit théorique MBF
N = [TPM] = vitesse de rotation de la spire doseuse.
mvs = coefficient du matériau

Donné:
- la description du matériau à doser, le fonctionnement prévu et le système d'alimentation du microdoseur,
- CR (= débit souhaité par le client), là succession correcte des opérations pour la choix d'un microdoseur est la suivante:
- Contrôler dans le tableau des matériaux mvs et toutes les autres caractéristiques impor-tantes (ex.; type de spire doseuse, accessoires, autres)
- Calculer le débit effectif CE du MBF standard (vitesse fixe ou variable suivant la demande du client)

CE = CT x mvs

où CT est à la page T.10. Si la différence entre CE et CT est trop grande (c'est à dire, le client n'accepte pas le MBF standard), il est nécessaire de trouver à quelle vitesse de rotation devra tourner le MBF pour obtenir le débit souhaité par le client. On utilisera la formule:

$$N = \frac{CR}{CF \times mvs}$$

Ensuite il faut choisir (voir page T.11) le rapport qui se rapproche le plus de celui souhaité par le client. A ce point du calcul quoi qu'il en soit, il est nécessaire de tenir compte que mvs figurant dans le tableau matériaux est en realité une donnée empirique obtenue comme une moyenne des résultas de l'expérience passée. Cette donnée peut dépendre en fait de multiple facteurs difficiles à contrôler (ex. état du matériau, conditions atmosphériques, hauteur de la colonne du matériau dans la trémie, vitesse de rotation etc.).
Le coefficient du matériau mvs est indiqué a page T.10.

CF = [dm³/J] = portata teorica oraria per 1 RPM
CE = [dm³/h] = portata effettiva MBF
CR = [dm³/h] = portata richiesta dal cliente
CT = [dm³/h] = portata teorica MBF
N = [RPM] = velocità di rotazione dell'utensile di dosaggio
mvs= efficienza del materiale

Dati:
- la descrizione dei materiale da dosare, il funzionamento previsto e il sistema di alimentazione dei microdosatore,
- CR (= portata richiesta dal cliente), la successione corretta delle operazioni per la scelta dei MBF è la seguente:
- controllare mvs e tutte le altre caratteristiche importanti nella tabella materiali (es.: tipo di utensile di dosaggio, accessori, vari, etc.)
- calcolare la portata effettiva CE del MBF standard (a velocità fissa o variabile in base alla richiesta dei cliente)

CE = CT x mvs

dove CT è a pag. T.10. Se la differenza tra CE e CT è troppo grande (cioè il cliente non accetta il ns. MBF standard) è necessario trovare a quale velocità di rotazione deve ruotare l' MBF per ottenere la portata richiesta dal cliente. Si usa la formula:

$$N = \frac{CR}{CF \times mvs}$$

Poi si sceglie (vedi pag. T.11) il rapporto che più si avvicina ai desideri del cliente. In questi calcoli è comunque necessario tenere presente che mvs riportato nella tabella materiali, è in realtà un dato empirico ottenuto come media dei risultati delle esperienze fatte, risultati talvolta anche distanti tra di loro. Esso può dipendere infatti da molteplici variabili, alcuni delle quali di difficile controllo (es. stato del materiale, condizioni atmosferiche, altezza colonna materiale nella tramoggia, velocità di rotazione, etc.).
Il coefficiente mvs è indicato a pagina T.10.

DIMENSIONS - *EINBAUMASSE* - ENCOMBREMENT - *INGOMBRO*

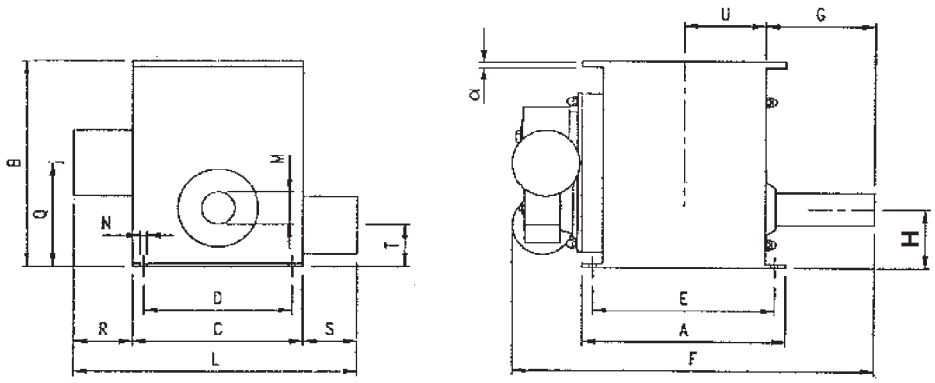

MBF	A	B	C	D	E	F	G	H	L*	M	N	Q	R*	S**	T	U	α	dm³	kg
042	310	295	250	200	253	595	200	100	535	42	12.5	235	160	125	100	105	12	5	20
073	464	486	390	305	410	855	250	135	600	76	12.5	240	135	75	95	185	15	28	60
114	464	486	390	305	410	855	250	135	600	114	12.5	259	135	75	95	185	15	35	65

* Without variable speed reducer
* *Ohne Regelgetriebe*
* Sans variateur
* *Senza variatore*

** According to IEC - Standards
** *Gemäß IEC - Norm*
** Selon normes IEC
** *Secondo norme IEC*

MBF 042

TOP FLANGE
FLANSCH OBEN
BRIDE SUPERIEURE
FLANGIATURA SUPERIORE

BOTTOM FLANGE
FLANSCH UNTEN
BRIDE INFERIEURE
FLANGIATURA INFERIORE

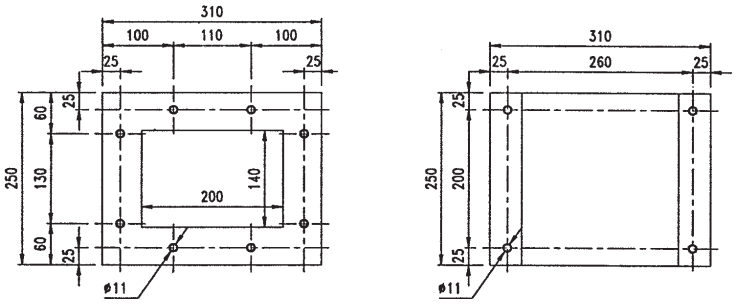

MBF 073

MBF 114

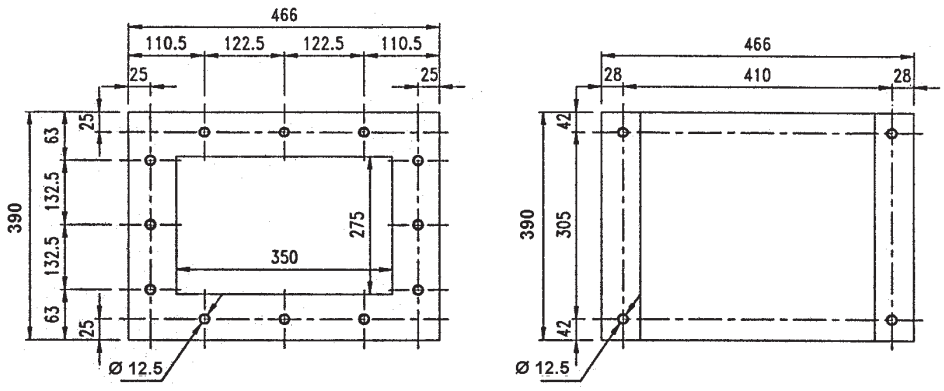

STANDARD SUPPLY - *STANDARD-LIEFERUMFANG* - FORNITURE STANDARD - *FORNITURE STANDARD*

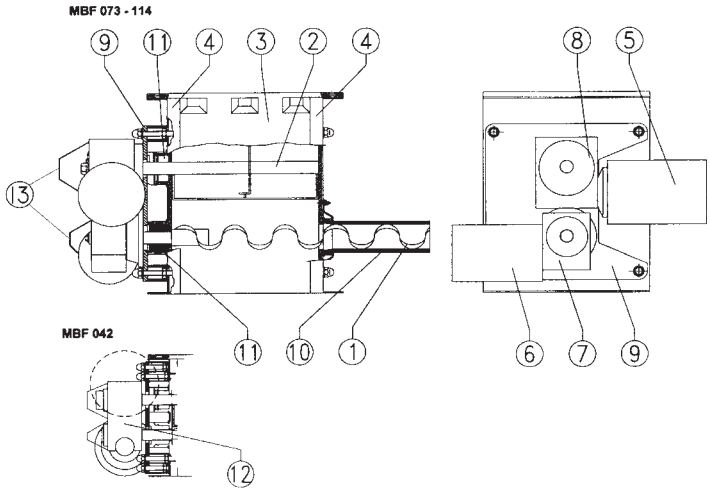

1	Metering screw	Dosierwerkzeug	Vis de dosage	Utensile dosaggio
2	Blending tool	Homogenisierwerkzeug	Homogénéisateur	Utensile omogeneiz.
3	Elastomer trough	Dosiertrog	Corps	Corpo
4	End plate	Endschild	Bride d'extremité	Frontale
5	Agitator motor	E- Motor Homogenisierer	Moteur electr. outil de homogé	Motore elect. omogen.
6	Metering screw motor	E- Motor Dosierer	Moteur elect. outil de dosage	Motore elect. dosaggio
7	Metering screw reducer	Getriebe Dosierer	Réducteur outil de dosage	Riduttore dosaggio
8	Blending tool reducer	Getriebe Homogenisierer	Réducteur outil de homogén.	Riduttore omogeneiz.
9	Drive support	Antriebshalterung	Plaque de fixation	Piastra d'attacco
10	Feeder pipe	Dosierrohr	Sortie	Uscita
11	Seals	Wellenabdichtungen	Etancheitées	Tenute
12	Reducer	Getriebe	Réducteur	Riduttore
13	Cover	Abdeckung	Couvercle	Coperchio

N.B. Item 4 in the stainless steel version, front panel can be opened for inspection.
N.B. Pos.4 in der Edelstahlversion mit abnehmbarer Frontplatte zu Inspektionszwecken.
N.B. Pos.4 dans la version en acier inox, plaque frontale peut être ouverte pour inspection.
N.B. Pos.4 nella versione in AISI, frontale apribile per ispezione.

The batch feeder must not be starded before the screw conveyor itself, as well as the plant it is going to be installed in, have been declared in conformity with the European Directive 14/06/1982 (89/392/EEC).

It is the plant designer's / plant fitter's responsability to design and install all necessary protection in order to avoid that breaking and / or yielding of the equipment or of parts of it might damage people and / or parts of the plant (e.g. adequate protection against falling down of the motor etc.).
For dangerous materials, i.e. those that must not get in contact with the human body or be inhaled, for flammable, explosive and bacteriologically dangerous materials the plant manufacturer or fitter must provide for the required safety devices and measures.

Der Dosier darf nicht in Betrieb genommen werden, bevor sowohl sie selbst, als auch die Anlage, in die sie eingebaut wird, mit den Vorschriften der Direktive 14/06/1982 (89/392/ ECC) für konform erklärt wurde.
Es liegt in der Verantwortung des Anlagenplaners bzw. -aufstellers, alle notwendigen Schutzvorrichtungen vorzusehen, welche es verhindern, daß durch einen Geräte- oder Teiledefekt Personen- und/oder Sachschäden verursacht werden (z.B. geeigneter Schutz gegen das Herunterfallen des Motors etc.).
Für Gefahrenprodukte, bzw. solche, die nicht mit dem menschlichen Körper in Kontakt geraten oder eingeatmet werden dürfen, für leicht entzündbare, explosive sowie bakteriologisch gefährliche Medien muß der Anlagenbauer bzw. –errichter die für die Sicherheit erforderlichen Vorrichtungen vorsehen und Maßnahmen treffen.

Il est interdit de mettre le doseur en fonction avant que la machine / l'installation dans laquelle elles doivent être montées a été déclarée conforme aux dispositions de la Directive 14/06/1982 (89/392/ECC).

Dans ce cadre il est la responsabilité du constructeur de l'installation ou de l'installateur de projeter et d'installer tout équipement de protection nécessaire afin d'eviter que des ruptures et / ou des parties d'elle puissent causer de dégâts à des personnes et / ou des choses (par ex.: des protections appropriées contre la chaute du moteur etc.).
Pour des produits dangereux, nuisibles au contact et/ou à l'inhalation, inflammables, explosifs et dangereux du point de vue bactériologique et/ou viral, le constructeur de l'installation ou l'installateur devront prévoir des dispositifs appropriés au besoin.

E' vietato mettere il dosatore in funzione prima che la macchina/ impianto, nel quale devono essere installate, sia dichiarato conforme alle disposizioni della direttiva 14/06/1982 (89/392/EEC).

In quest'ambito è cura dell'impiantista / installatore predisporre ed installare tutti gli accorgimenti / protezioni al fine di evitare danni a cose o persone in caso di rotture e conseguente caduta di pezzi della macchina (ad es.: rottura del motore).
Per prodotti pericolosi, nocivi al contatto e/o all'inalzione, infiammabili, esplosivi e pericolosi dal punto di vista batteriologico e/o virale, l'impiantista e/o l'installatore, dovranno prevedere idonei dispositivi all'uopo.

THEORETICAL STANDARD FEED RATES - *THEORETISCHE STANDARD - DOSIERLEISTUNGEN*
DEBITS THEORIQUES STANDARD - *PORTATE TEORICHE STANDARD*

TAB. 1

MBF		THEORETICAL STANDARD FEED RATES *THEORETISCHE STANDARD-DOSIERLEISTUNGEN* DEBITS THEORIQUES STANDARD *PORTATE TEORICHE STANDARD*		CT
	Metering screws *Dosierwerkzeuge* Outils dosage *Utensili dosatori*	Hourly feed rate at *Dosierleistung pro Stunde bei* Débit horaïre à *Portata oraria a* 1 rpm	Fixed speed feed rate *Leistung bei Konstanter Drehzahl* Débit à vitesse fixe *Portata a velocità fissa* 93 rpm	Feed rate with variable speed *Leistung bei variabler Drehzahl* Débit à vitesse variable *Portata a velocità variabile* 13 - 67 rpm	Capacity whit diff. variator *Leist. bei var. Drehz. + Diff.* Débit à vites. var. avec différ. *Port.a vel. variab. con differ.* 4 - 60 rpm
	Type	**dm³ / h**	**dm³ / h**	**dm³ / h**	**dm³ / h**
042	1 - 4 - D - 2 - B	0.7	65	9 - 48	
	3	0.6	56	8 - 40	
	5	0.64	60	8 - 45	
	7	0.95	88	12 - 64	
073	1 - 2 - B	5.7	530	74 - 382	23 - 342
	3	4.4	410	57 - 295	18 - 264
	4 - 5 - D - E	7.4	688	96 - 496	31 - 421
114	1 - 2 - B	26	2418	338 - 1742	104 - 1560
	3	13.6	1265	177 - 911	55 - 816
	4 - 5 - D- E	29.7	2762	386 - 1990	130 - 1930

N.B. The theoretical feed rate has to be multiplied by the efficient factor which depends on the type of feeder screw and on the material fed.
N.B. Die theoretische Dosierleistung ist dem Wirkungsfactor zu multiplizieren, der wierderum abhängig ist vom Dosierwendeltyp und vom dosierten Medium.
N.B. La débit théorique doit être multiplié pae le facteurs d'efficience qui est en fonction de la spire et du produit dosé.
N.B. La portata teorica deve essere moltiplicata per il fattore di efficenza che è in funzione dell'elica e del prodotto trasportato.

General efficiency coefficient mvs depeneding on feeder screw used
Allgemeiner Wirkungsgrad mvs in Abhängigkeit von der eingesetzten Dosierwendel
Coefficient d'efficacité général en fonction du type de spire utilisée
Coefficienti di efficienza generico mvs, in funzione del tipo di elica utilizzata

TAB. 3

UTD. 12 UTD. 32	UTD. 22 UTD. B2	UTD. 42 UTD. D2	UTD. 5 UTD. G UTD. E
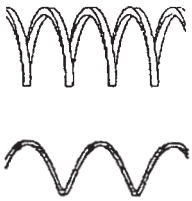	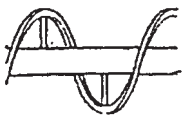	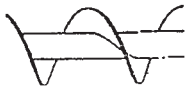	
Efficiency: 1.1	**Wirkungsgrad: 0.6**	**Coefficient: 0.75**	**Efficienza: 0.7**

The theoretical feeds rate (pag.T.11)has to be multiplied by the efficient factor which depends on the type of feeder screw fed.

Note:
The efficiency factor can vary due to grain size, bulk density, degree of humidity and all the other material properties that have an influence on handling the material.

Die theoretischen Dosierleistungen gem. Seite T.11 müssen mit diesem Faktor je nach eingestzter Dosierwendeltype multipliziert werden.

Anm.:
Der Wirkungsgrad kann sich aufgrund der Körnung, des Schüttgewichts, des Feuchtegrads sowie aller übrigen, sich auf das Handling auswirkenden Produkte.

Les débits théoriques comme à page T.11 doivent être multipliés par ce facteur en fonction des spires choisies.

Note:
Le facteur d'efficacité peut subir des variations à cause de la granulométrie, du poids spécifique, de l'humidité et de tous les composants imputables au matériau transporté.

Le portate teoriche come a pag. T.11 debbono essere moltiplicate per questo fattore in funzione delle eliche scelte.

Nota:
Il fattore di efficienza può subire delle variazioni dovute a granulometria, al peso specifico, umidità e a tutte quelle componenti imputabili al prodotto trasportato.

THEORETICAL CAPACITIES SPC - *THEORETISCHE DOSIERLEIST.SPEZ.*
DEBITS THEORIQUES SPC. - *PORTATE TEORICHE SPECIALI*

TAB. 2

MBF				THEORETICAL FEED RATES *THEORETISCHE DOSIERLEISTUNGEN* DEBITS THEORIQUES *PORTATE TEORICHE*			CT
	Metering screws *Dosierwerkzeuge* Outils dosage *Utensili dosatori*	Hourly feed rate at *Dosierleistung pro Stunde bei* Débit horaïre à *Portata oraria a* 1 rpm	Gear ratios *Getriebeuntersetzungen* Rapports réducteurs *Rapporti riduttori*	Fixed speed feed rate *Leistung bei Konstanter Drehzahl* Débit à vitesse fixe *Portata a velocità fissa*	Feed rate with variable speed *Leistung bei variabler Drehzahl* Débit à vitesse variable *Portata a velocità variabile*		Capacity with diff. variator *Leist. bei var. Drehz. + Diff.* Débit à vites. var. avec différ. *Port.a vel. variab. con differ.*
	Type	dm^3 / h	1 / ..	dm^3 / h	dm^3 / h MIN	dm^3 / h MAX	dm^3 / h
42	1-2-4-B-D	0.70	10 15 28 40(std)	98 65 35 24	14 9 5 3	70 47 25 17	
	3	0.6	10 15 28 40 (std)	82 55 29 20	11 8 4 3	59 39 21 15	
	5-E	0.64	10 15 28 40(std)	90 60 32 22	12 8 4 3	64 43 23 16	
	7-G	0.95	10 15 28 40 (std)	133 89 48 33	19 12 7 5	95 63 34 24	
73	1-2-B	5.7	10 15 20 28 40 (std) 70	798 532 399 285 199 114	111 74 56 40 28 16	570 380 285 203 142 81	33-513 22-342 17-256 12-183 8-128 5-73
	3	4.4	10 15 20 28 40 (std) 70	616 411 308 220 154 88	86 57 43 31 21 12	440 293 220 157 110 63	26-396 17-264 13-198 9-141 6-99 4-57
	4-5-D-E	7.4	10 15 20 28 40(std) 70	1,036 691 518 370 259 148	144 96 72 52 36 21	740 493 370 264 185 106	43-66 29-444 21-333 15-238 11-167 6-95
114	1-2-B	26	10 15 20 28 40 (std) 70	3,640 2,427 1,820 1,300 910 520	507 338 254 181 127 72	2,600 1,733 1,300 929 650 371	151-2,340 101-1,560 75-1,170 54-836 38-585 22-334
	3	13.6	10 15 20 28 40 (std) 70	1,904 1,269 952 680 476 272	265 177 133 95 66 38	1,360 907 680 486 340 194	79-1,224 53-816 39-612 28-437 20-306 11-175
	4-5-D-E	29.7	10 15 20 28 40 (std) 70	4,158 2,772 2,079 1,485 1,040 594	579 386 290 207 145 83	2,970 1,980 1,485 1,061 743 424	172-2,673 115-1,782 86-1,337 62-955 43-668 25-382

N.B. The theoretical feed rate has to be multiplied by the efficient factor which depends on the type of feeder screw and on the material fed.
(See tab. 3 pag. T.10)

N.B. Die theoretische Dosierleistung ist dem Wirkungsfactor zu multiplizieren, der wierderum abhängig ist vom Dosierwendeltyp und vom dosierten Medium.(Siehe Tabelle 3 Seite T.10)

N.B. La débit théorique doit être multiplié pae le facteurs d'efficience qui est en fonction de la spire et du produit dosé.(Voir tab. 3 pag. T.10)

N.B. La portata teorica deve essere miltiplicata per il fattore di efficenza che è in funzione dell'elica e del prodotto trasportato.(vedi tab.3 pag. T.10)

FIXED SPEED DRIVES - *ANTRIEBE MIT KONSTANTER DREHZAHL*
MOTORISATIONS A VITESSE FIXE - *MOTORIZZAZIONI A VELOCITA' FISSA*

MBF 042	**METERING SCREW - *DOSIERWERKZEUG* - OUTIL DOSAGE - *UTENSILE DOSAGGIO***				
	RPM	**STANDARD**	**SPECIAL**		
		93	140	50	35
	Ratio - *Untersetzung* Rapport - *Rapporto*	1:15	1:10	1:28	1:40
	Gear red. - *Getriebe* Réduct. - *Riduttore*	RW BB ØØ	RW AA ØØ	RW DA ØØ	RW EA ØØ
	Motors - *E-Motoren* Moteurs - *Motori*	**0.12 kW 4P 50 Hz 63A B5 (std)** (0.18 kW/0.25 kW 4P 50 Hz 63b/63c B5)			
	BLENDING TOOL - *HOMOGENISIERWERKZEUG* - OUTIL DE HOMOGENEISATION - *OMOGENEIZZATORE*				
	RPM	35			
	Ratio - *Untersetzung* Rapport - *Rapporto*	1:40			
	Motors - *E-Motoren* Moteurs - *Motori*	**0.25 kW 4P 50 Hz 71A B5 (std)** (0.37 kW 4P 50 Hz 71B B5)			

MBF 073 114	**METERING SCREW - *DOSIERWERKZEUG* - OUTIL DOSAGE - *UTENSILE DOSAGGIO***						
	RPM	**STANDARD**	**SPECIAL**				
		93	140	70	50	35	20
	Ratio - *Untersetzung* Rapport - *Rapporto*	1:15	1:10	1:20	1:28	1:40	1:70
	Gear red. - *Getriebe* Réduct. - *Riduttore*	B5 PAM 71 Ø Flange = 160 mm Ø M* = 14 mm Ø U* = 24 mm					
	Motors - *E-Motoren* Moteurs - *Motori*	**0.25 kW 4P 50 Hz 71A B5 (std)** (0.37 kW 4P 50 Hz 71B B5)					
	BLENDING TOOL - *HOMOGENISIERWERKZEUG* - OUTIL DE HOMOGENEISATION - *OMOGENEIZZATORE*						
	RPM	**STANDARD**	**SPECIAL**				
		35	14				
	Ratio - *Untersetzung* Rapport - *Rapporto*	1:40	1:100				
	Gearbox - *Getriebe* Réduct. - *Riduttore*	B5bi PAM 80 Ø Flange = 200 mm Ø M* = 19 mm Ø U* = 25 mm					
	Motors - *E-Motoren* Moteurs - *Motori*	**0.55 kW 4P 50 Hz 80A B5 (std)** (0.75 kW 4P 50 Hz 80B B5)					

*** ØM** = Ø Electric motor shaft - *Welle elektromotore* - Arbre moteur electrique - *Albero motore elettrico*

*** ØU** = Ø Screw shaft - *Werkzeugwelle* - Arbre outil - *Albero utensile*

VARIABLE SPEED DRIVES - *ANTRIEBE MIT VARIABLER DREHZAHL*
MOTORISATIONS A VITESSE VARIABLE - *MOTORIZZAZIONI A VELOCITA' VARIABILE*

MBF 042	**METERING SCREW - *DOSIERWERKZEUG* - OUTIL DOSAGE - *UTENSILE DOSAGGIO***				
	RPM	**STANDARD**	**SPECIAL**		
		93	140	50	35
	Ratio - *Untersetzung* Rapport - *Rapporto*	1:15	1:10	1:28	1:40
	Gear red. - *Getriebe* Réduct. - *Riduttore*	RW NB ØØ	RW MA ØØ	RW QA ØØ	RW RA ØØ
	Variator - *Regelgetr.* Variateur - *Variatore*	B5/B5 PAM 63/63 n° 190-910 rpm Ø Flange 140/140 mm Ø M* = 11 mm Ø U* = 11 mm			
	Motors - *E-Motoren* Moteurs - *Motori*	**0.12 kW 4P 50 Hz 63C B5 (std)** **(0.18 kW/0.25 kW 4P 50 Hz 63b/63c B5)**			
	BLENDING TOOL - *HOMOGENISIERWERKZEUG* - OUTIL DE HOMOGENEISATION - *OMOGENEIZZATORE*				
	RPM	35			
	Ratio - *Untersetzung* Rapport - *Rapporto*	1:40			
	Motors - *E-Motoren* Moteurs - *Motori*	**0.25 kW 4P 50 Hz 71A B5 (std)** (0.37 kW 4P 50 Hz 71B B5)			

N.B.: the motors provided on the speed variator are special and can therefore be 0.22-0.25 kW, depending on the supplier
Anm.: Die auf dem Drehzahlregler vorhandenen Motoren sind Spezialausführungen und können je nach Hersteller 0,22 -0,25 kW haben
N.B.: Etant donnée que les moteurs prévus sur variateur sont spéciaux, ils peuvent être de 0.22-0.25 kW, en fonction du fournisseur
N.B.: i motori previsti su variatore, essendo speciali, potranno essere, 0.22-0.25 kW in funzione del fornitore

MBF 073 114	**METERING SCREW - *DOSIERWERKZEUG* - OUTIL DOSAGE - *UTENSILE DOSAGGIO***						
	RPM	**STANDARD**	**SPECIAL**				
		93	140	70	50	35	20
	Ratio - *Untersetzung* Rapport - *Rapporto*	1:15	1:10	1:20	1:28	1:40	1:70
	Gear red. - *Getriebe* Réduct. - *Riduttore*	B5/B5 PAM 71 Ø Flange = 160 mm Ø M* = 14 mm Ø U* = 24 mm					
	Variator - *Regelgetr.* Variateur - *Variatore*	B5/B5 PAM 71/71 n° 190-1000 rpm Ø Flange 160/160 mm Ø M* =14 mm Ø U* =14 mm					
	Differrent. - *Different.* Différént. - *Differenz.*	B5/B5 PAM 71/71 n° 0-1000 rpm Ø Flange 160/160 mm Ø M* =14 mm Ø U* =14 mm					
	Motors - *E-Motoren* Moteurs - *Motori*	**0.25 kW 4P 50 Hz 71A B5 (std)** (0.37 kW 4P 50 Hz 71B B5)					
	BLENDING TOOL - *HOMOGENISIERWERKZEUG* - OUTIL DE HOMOGENEISATION - *OMOGENEIZZATORE*						
	RPM	**STANDARD**	**SPECIAL**				
		35	14				
	Ratio - *Untersetzung* Rapport - *Rapporto*	1:40	1:100				
	Gear red. - *Getriebe* Réduct. - *Riduttore*	B5bi PAM 80 Ø Flange = 200 mm Ø M* = 19 mm Ø U* = 25 mm					
	Motors - *E-Motoren* Moteurs - *Motori*	**0.55 kW 4P 50 Hz 80A B5 (std)** (0.75 kW 4P 50 Hz 80B B5)					

*** ØM** = Ø Electric motor shaft - *Welle elektromotor* - Arbre moteur electrique - *Albero motore elettrico*
*** ØU** = Ø Screw shaft - *Werkzeugwelle* - Arbre outil - *Albero utensile*

FINISHING - *FINISH* - FINITION - *FINITURE*

End plate	Endschild	Bride d'extremité	Frontale	**St. St. 304 / EDELSTAHL 1.4301 / AISI 304**
Drive support	Antriebshalter.	Plaque de fixation	Piastra d'attacco	**ALUMINIUM / ALLUMINIO**
Reducer	Getriebe	Reducteur	Riduttore	**ALUMINIUM / ALLUMINIO**
Speed variator	Regelgetriebe	Variateur	Variatore	**RAL 5010**
Motor	Elektromotor	Moteur	Motore	**RAL 7001**

STANDARD METERING SCREWS - *STANDARD-DOSIERWERKZEUGE*
OUTILS DE DOSAGE STANDARD - *UTENSILI DOSAGGI STD*



UTD. 12 — **TYPE 1**

RECTANGULAR SECTION SPIRAL WITHOUT CENTRE PIPE	WENDEL MIT RECHTECKIGEM QUERSCHNITT OHNE INNENROHR	HELICE A SECTION RECTANGULAIRE SANS TUBE INTERIEUR	ELICHE A SEZIONE RETTANGOLARE PRIVE DI TUBO INTERNO
Light sticky materials: flour, sugar, cocoa, pellets, granular products, light and slightly sticky oxides.	Geeignet für Medien mit geringem Schüttgewicht und mit Tendenz zum Anbacken: Mehl, Zucker, Kakao, Pellets, Granulate, Oxyde mit geringem Schüttgewicht und gewisser Tendenz zum Anbacken.	Matériaux légers avec une tendance au tassement: farines, sucre, cacao, pellets, poduits granulaires, oxides légers.	Materiali leggeri con tendenza all'impaccamento: farine, zucchero, cacao, pellets, prodotti granulari, ossidi leggeri moderatamente impaccati.

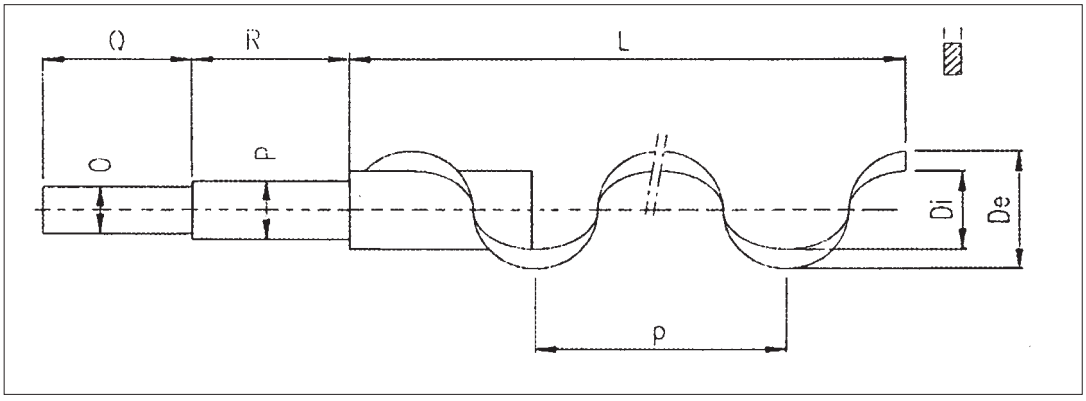

TYPE1 Rectangular section spiral withhout centre pipe
TYPE1 *Wendel mit rechteckigem Querschnitt ohne Innenrohr*
TYPE1 Hélice à section rectangulaire sans tube intérieur
TIPO 1 *Eliche a sezione rettangolare senza tubo interno*

MBF	Code	De	Di	p	S	L	Ø O	Ø P	Q	R	kg
042	**UTD 212**	26	16	30	5	403	14	25	58	81	0.5
073	**UTD 312**	60	40	60	5	607	24	29	96	119	3
114	**UTD 412**	100	67	100	5	607	24	29	96	119	5

STD BLENDING TOOLS - STD - *HOMOGENISIERWERKZEUGE*
HOMOGENEISATEURS STD - *UTENSILI OMOGENEIZZAZIONE STD*

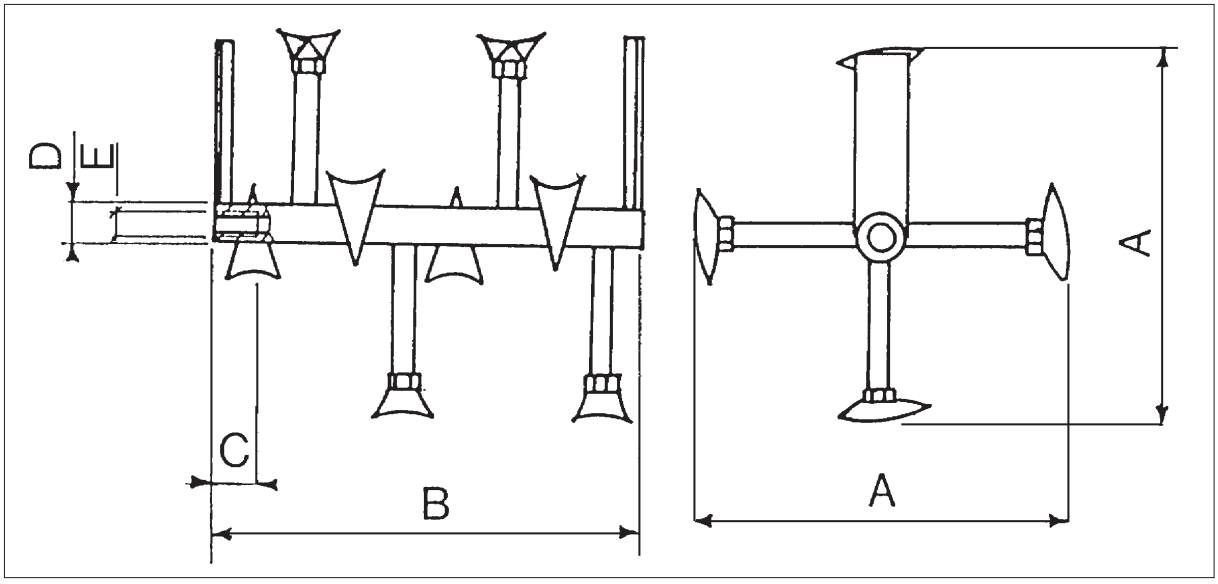

TYPE 2

MBF	Code	A	B	C	D	E	kg
042	**UTO 22**	130	199	25	25	M 12	1
073	**UTO 23**	269	349	35	35	M 16	3.5
114	**UTO 24**	269	349	35	35	M 16	3.5

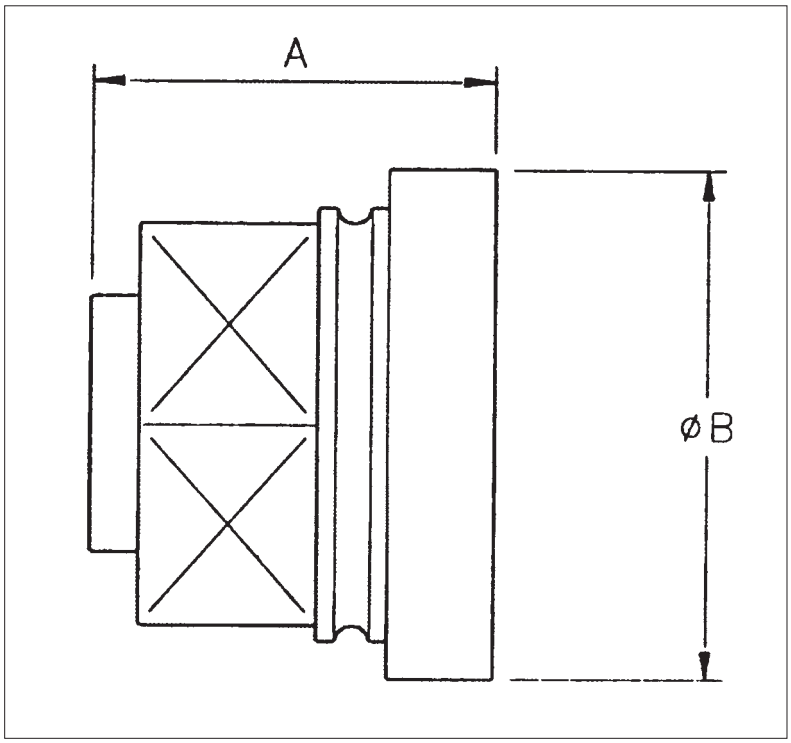

SINT®ER

MBF	Code	A	B
042	**MBT N2**	54	60
073	**MBT N3**	57	80
114	**MBT N4**	57	80

SINT®AL

MBF	Code	A	B
042	**MBT F2**	54	60
073	**MBT F3**	57	80
114	**MBT F4**	57	80

SPECIAL METERING SCREWS - *SPEZIALDOSIERWERKZEUGE* - OUTILS DOSAGE SPECIAUX - *UTENSILI DOSAGGIO SPECIALI*

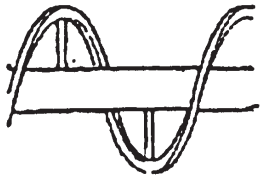

UTD. 22 — TYPE 2

RIBBON SPIRAL ON PIPE	BRANDWENDEL MIT INNENROHR	HELICE A RUBAN AVEC TUBE INTERIEUR	ELICHE A NASTRO CON TUBO INTERNO
Heavy sticky materials, heavy oxides, clay	Geeignet für Medien mit höherem Schüttgewicht und mit Tendenz zum Anbacken: Oxyde mit höherem Schüttgewicht, Ton	Matériaux lourds avec tendance au tassement, oxides lourdes, argiles	Materiali pesanti con tendenza all'impaccamento ossidi pesanti, argille



UTD. 32 — TYPE 3

ROUND SECTION SPIRAL WITHOUT CENTRE PIPE	WENDEL MIT RUNDEM QUERSCHNITT OHNE INNENROHR	HELICE A SECTION RONDE SANS TUBE INTERIEUR	ELICHE A SEZIONE TONDA PRIVE DI TUBO INTERNO
Light materials, granular products, pellets, PVC, polymers in pellets.	Geeignet für Medien mit geringem Schüttgewicht, ohne Tendenz zum Anbacken: Granulate, Pellets; PVC, Polymere in Pellets.	Matériaux légers, produits granulaires, pellets, PVC, polymers en pellets.	Materiali leggeri non impaccati, prodotti granulari, pellets, PVC, polimeri in pellets.

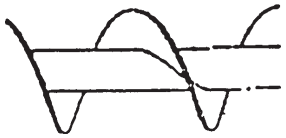

UTD.42 — TYPE 4

STANDARD SCREW	VOLLBLATTWENDEL MIT INNENROHR	HELICE AVEC TUBE INTERIEUR	ELICHE CONTINUE CON TUBO INTERNO
Heavy fluid materials metallic granules.	Geeignet für gut fließende Medien mit höherem Schüttgewicht: Schiefer gemahlen, Metallgranulate.	Matériaux lourds et fluides, grains de métal.	Materiali pesanti e scorrevoli, graniglia di metalli.



UTD. 5. — TYPE 5

HELICOID SCREW ON TAPERED PIPE MADE FROM SINT®ER OR SINT®AL	WENDEL MIT KONISCHER WELLE AUS SINT®ER ODER SINT®AL	HELICE AVEC TUBE CONIQUE EN SINT®ER OU SINT®AL	ELICA CON TUBO CONICO IN SINT®ER O SINT®AL
Whenever even metering on the entire surface along with mixing of materials with different particle size, bulk density and/or fluency is required.	Findet überall Verwendung, wo eine homogene Dosierung auf der gesamten Fläche in Verbindung mit einer Durchmischung von Medien mit unterschiedlicher Körnung, Fließfähigkeit und/ oder Schüttdichte erforderlich ist.	Où qu'une extraction homogéne sur toute la surface avec des mélanges de produits à granulométries différentes, à poids spécifiques différents et/ ou degrés différents de fluidité.	Dovunque sia necessaria una estrazione omogenea su tutta la superficie con miscele di prodotti a diversa granulometria, diverso peso specifico, diverso grado di scorrevolezza.

SPECIAL METERING SCREWS - *SPEZIAL-DOSIERWERKZEUGE* - OUTILS DOSAGE SPECIAUX - *UTENSILI DOSAGGIO SPECIAL*

	**UTD. 7.**	TYPE 7		
	SAME AS TYPE 5 BUT WITH DIFFERENT PITCH	WIE TYP 5, JEDOCH MIT UNTERSCHIEDLICHER STEIGUNG	SIMILAIRE AU TYPE 5, MAIS AVEC PAS DIFFERENT	SIMILE AL TIPO 5, MA CON PASSO DIVERSO
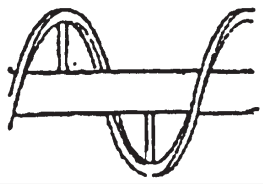	**UTD. B2**	TYPE B		
	SAME AS TYPE 2 BUT EXTENDED	WIE TYP 2, JEDOCH VERLÄNGERT	SIMILAIRE AU TYPE 2, MAIS PROLONGÉ	SIMILE AL TIPO 2, MA PROLUNGATO
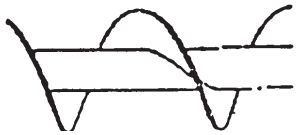	**UTD. D2**	TYPE D		
	SAME AS TYPE 4 BUT EXTENDED	WIE TYP 4, JEDOCH VERLÄNGERT	SIMILAIRE AU TYPE 4, MAIS PROLONGÉ	SIMILE AL TIPO 4, MA PROLUNGATO
	**UTD. E.**	TYPE E		
	SAME AS TYPE 5 BUT EXTENDED	WIE TYP 5, JEDOCH VERLÄNGERT	SIMILAIRE AU TYPE 5, MAIS PROLONGÉ	SIMILE AL TIPO 5, MA PROLUNGATO
	**UTD. G.**	TYPE G		
	SAME AS TYPE 7 BUT EXTENDED	WIE TYP 7, JEDOCH VERLÄNGERT	SIMILAIRE AU TYPE 7, MAIS PROLONGÉ	SIMILE AL TIPO 7, MA PROLUNGATO

SPECIAL METERING SCREWS - *SPEZIAL-DOSIERWERKZEUGE* - OUTILS DOSAGE SPECIAUX - *UTENSILI DOSAGGIO SPECIAL*

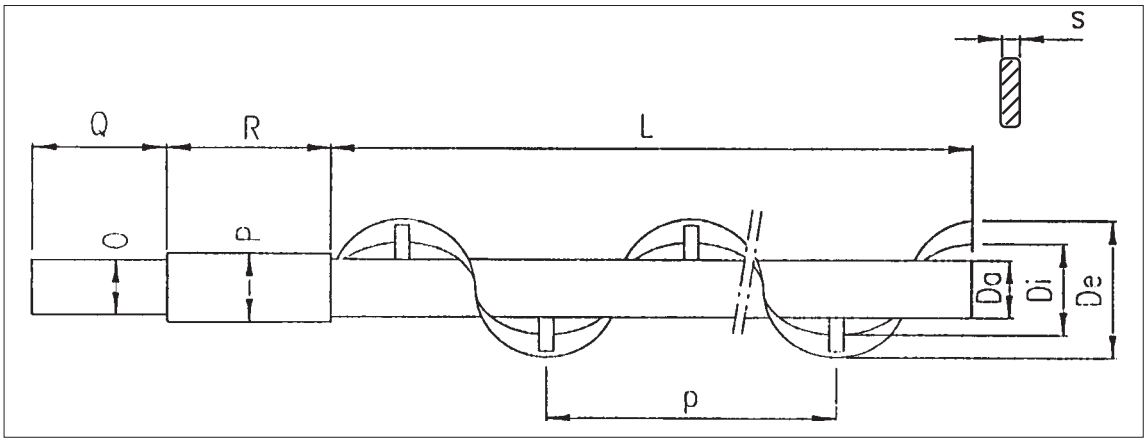

TYPE 2 and TYPE B Ribbon flight on pipe
TYPE 2 und TYPE B *Bandwendel mit Innenrohr*
TYPE 2 et TYPE B à ruban avec tube interieur
TIPO 2 e TIPO B *a nastro con tubo interno*

Type	MBF	Code	De	Di	Da	p	S	L	Ø O	Ø P	Q	R	kg
2	**042**	**UTD222**	30	20	10	30	5	403	14	25	58	81	2
	073	**UTD322**	60	40	25	60	5	607	24	29	96	119	3
	114	**UTD422**	100	67	25	100	5	607	24	29	96	119	4
B	**042**	**UTD2B2**	30	20	10	30	5	573	14	25	58	81	3
	073	**UTD3B2**	60	40	25	60	5	857	24	29	96	119	4
	114	**UTD4B2**	100	67	25	100	5	857	24	29	96	119	4,5

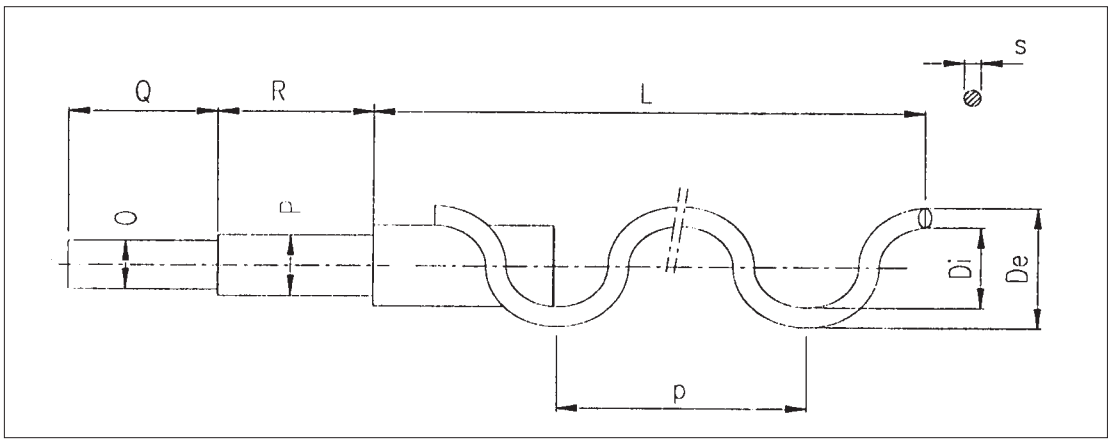

TYPE 3 Round section spiral without centre pipe
TYPE 3 *Wendel mit rundem Querschnitt ohne Innenrohr*
TYPE 3 Hélice à section rectangulaire sans tube intérieur
TIPO 3 *Eliche sezione tonda senza tubo interno*

Type	MBF	Code	De	Di	p	S	L	Ø O	Ø P	Q	R	kg
3	**042**	**UTD 232**	26	16	30	5	403	14	25	58	81	0.5
	073	**UTD 332**	57	40	60	8	607	24	29	96	119	3
	114	**UTD 432**	90	70	75	10	607	24	29	96	119	5

SPECIAL METERING SCREWS - *SPEZIAL-DOSIERWERKZEUGE* - OUTILS DOSAGE SPECIAUX - *UTENSILI DOSAGGIO SPECIAL*

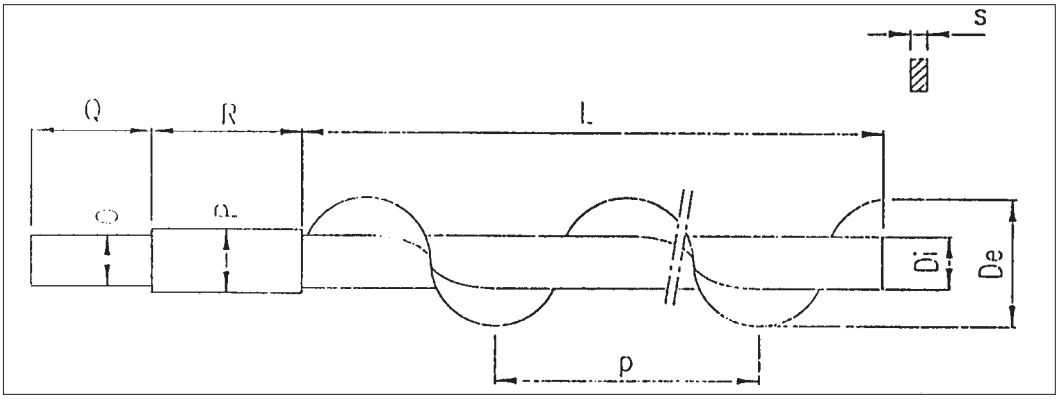

TYPE 4 **and** **TYPE D** standard screws
TYPE 4 ***und*** ***TYPE D*** *Vollblattwendeln mit Innenrohr*
TYPE 4 **et** **TYPE D** hélices continues avec tube interieur
TIPO 4 ***e*** ***TIPO D*** *eliche continue con tubo interno*

EXTENDED
VERLÄNGERT
RALLONGE
ALLUNGATO

Type	MBF	Code	De	Di	p	S	L	Ø O	Ø P	Q	R	kg
4	042	UTD 242	30	20	30	5	403	14	25	58	81	1.5
	073	UTD 342	57	25	60	5	607	24	29	96	119	3.5
	114	UTD 442	90	32	100	5	607	24	29	96	119	6
D	042	UTD 2D2	30	20	30	5	573	14	25	58	81	2
	073	UTD 3D2	57	25	60	5	857	24	29	96	118	5
	114	UTD 4D2	90	32	100	5	857	24	29	96	119	7.5

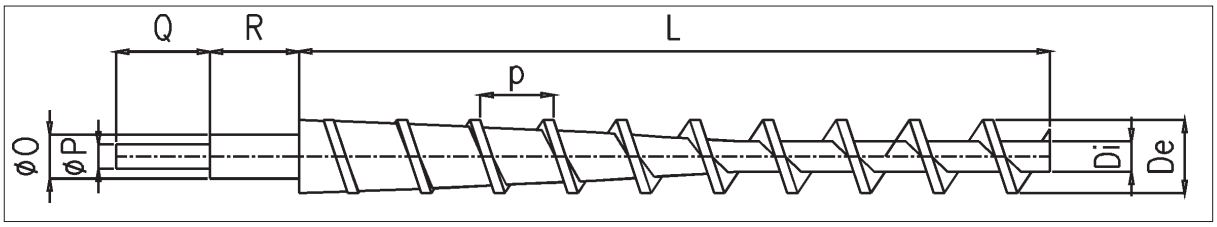

TYPE 5 **and** **TYPE E** screws made of SINT®ER or SINT®AL with tapered pipe
TYPE 5 ***und*** ***TYPE E*** *Wendeln aus SINT®ER oder SINT®AL mit konischem Innenrohr*
TYPE 5 **et** **TYPE E** Hélices en SINT®ER ou SINT®AL avec tube conique
TIPO 5 ***e*** ***TIPO E*** *Eliche in SINT®ER o SINT®AL con tubo conico*

EXTENDED
VERLÄNGERT
RALLONGE
ALLUNGATO

Type	MBF	Code	De	Di	p	L	Ø O	Ø P	Q	R	kg
5	042	UTD 25.	30	15	20	403	25	14	58	81	0.6
	073	UTD 35.	60	25	60	607	30	24	96	119	2
	114	UTD 45.	100	35	100	607	30	24	96	119	3
E	042	UTD 2E.	30	15	20	573	25	14	58	81	0.85
	073	UTD 3E.	60	25	60	857	30	24	96	119	2
	114	UTD 4E.	100	35	100	857	30	24	96	119	3.5

4	SINT®ER
5	SINT®AL

SPECIAL METERING SCREWS - *SPEZIAL-DOSIERWERKZEUGE* - OUTILS DOSAGE SPECIAUX - *UTENSILI DOSAGGIO SPECIAL*

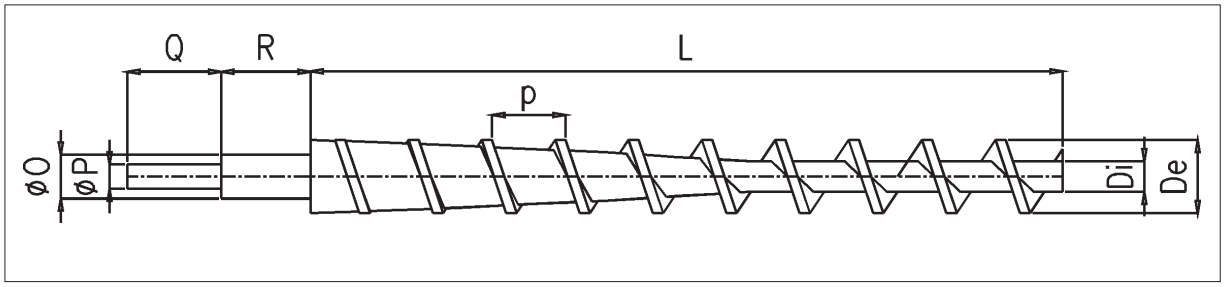

TYPE 7- G Screw with tapered centre pipe made of SINT®ER or SINT®AL
TYPE 7- G *Vollblattwendel mit konischem Innenrohr aus SINT®ER oder SINT®AL*
TYPE 7- G Hélice continue avec tube intérieur conique en SINT®ER ou SINT®AL
TIPO 7- G *Elica continua con yubo interno conico in SINT®ER o SINT®AL*

Type	MBF	Code	De	Di	p	L	Ø O	Ø P	Q	R	kg
7	042	UTD 27 .	30	20	30	403	25	14	58	81	0.6
G	042	UTD 2G .	30	20	30	573	25	14	58	81	0.7

4	SINT®ER
5	SINT®AL

SPECIAL SHAFT SEAL - *SONDER-WELLENABDICHTUNG* - ETANCHEITE SPECIALE - *TENUTA SPECIALE*

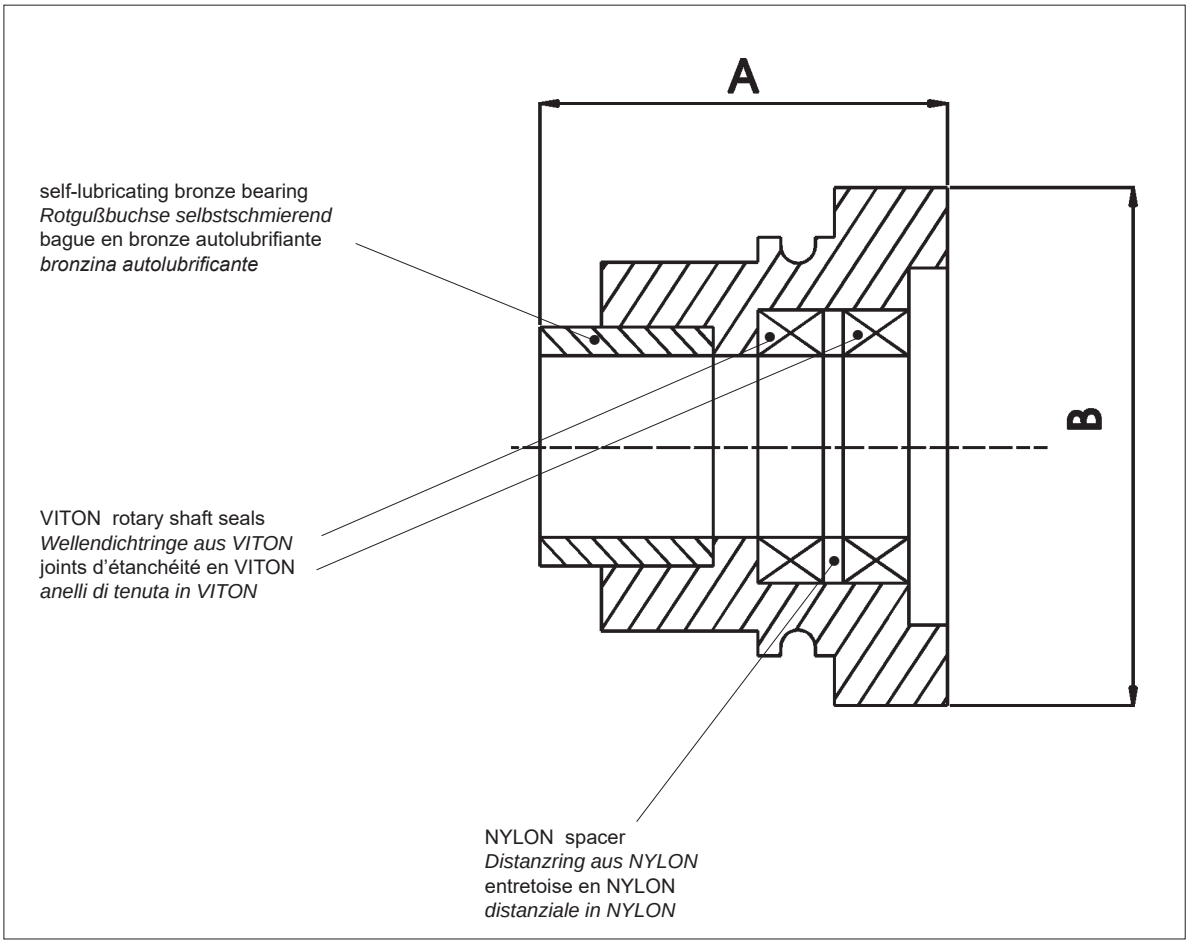

MBF	Code	A	B	kg
042	**MBTX2**	54	60	0.35
073	**MBTX3**	57	80	0.5
114	**MBTX4**	57	80	0.5

SPECIAL SHAFT SEAL WITH GREASING - *SONDER-WELLENABDICHTUNG MIT FETT*
ETANCHEITE SPECIALE AVEC GRAISSE - *TENUTA SPECIALE CON INGRASSAGGIO*

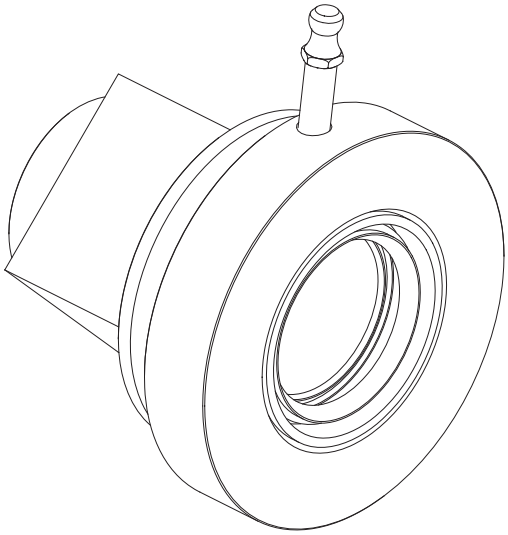

MBTT 2

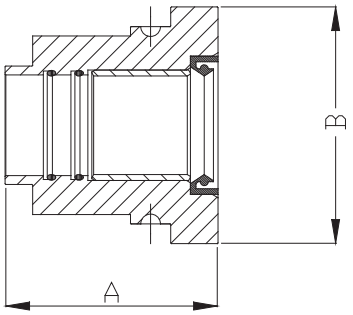

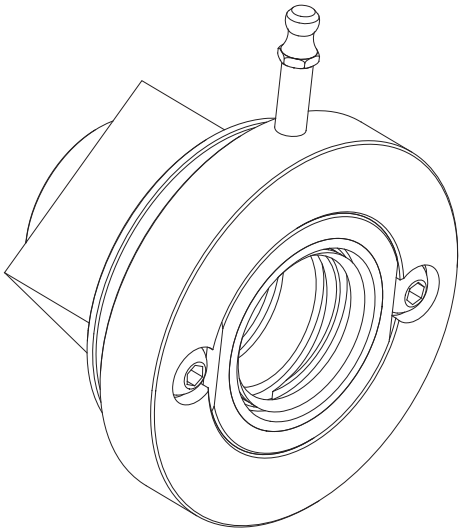

MBTT 3 - 4

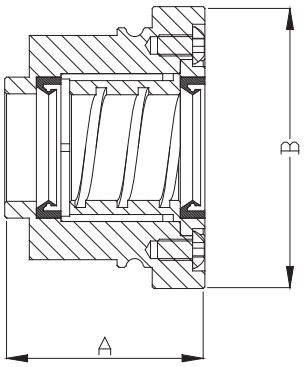

MBF	Code	A	B	kg
042	MBTT2	54	60	0.35
073	MBTT3	57	80	0.5
114	MBTT4	57	80	0.5

N.B. : The MBTT seal is standard with stainless steel version only
N.B. : MBTT-Wellenabdichtung ist nur für Edelstahlversion Standard
N.B. : L'étanchéité MBTT est standard seulement pour la version en acier inox
N.B. : La tenuta MBTT è STD solo sulla versione in AISI

①	②	③	④	⑤	⑥	⑦	⑧	⑨	⑩	⑪	⑫
MBF	073	N	TN	UD 1	SST	UO 2	B	0	Q	1	0025	0055

MICROBATCH FEEDER
TYPE “MBF”

DIAMETER
042 - 073 - 114

BODY MATERIAL
N =Standard SINT® polymer
F= Food SINT® polymer
A= St.Steel 304L
B= St.steel 316L

SEAL
TN= SINT®ER
TF= SINT®AL
TT= 304 ST.STEEL WITH GREASING
TA= 304 ST.STEEL WITH TEFLON
TX= 304 ST.STEEL WITH BRONZE

FEEDER SCREW
+++ - UD1 (©)- UD2- UD3- UD4- UD5- UD7(#)- UDB- UDD- UDE- UDG(#)

FEEDER PIPE
SST= STANDARD FEEDER PIPE
SPL= EXTENDED FEEDER PIPE
SSR= LINER FEEDER PIPE
SPR= EXTENDED LINER FEEDER PIPE

BLENDING TOOL
+++ = WITHOUT
UO1= SHAPED PADDLES
UO2= STANDARD PLOUGHSHARE

FEEDER DRIVE
+ = WITHOUT 0 rpm (§)
A = FIXED SPEED 1/10 -140 rpm
B = FIXED SPEED 1/15 -93 rpm (©)
C = FIXED SPEED 1/20 -70 rpm (§)
D = FIXED SPEED 1/28 -50 rpm
E = FIXED SPEED 1/40 -35 rpm
F = FIXED SPEED 1/70 -20 rpm (§)

VARIABLE SPEED
0 = WITHOUT (©)
1= VARIABLE SPEED 1000 rpm-190 rpm
2= VARIABLE SPEED WITH DIFFERENTIAL 900 rpm-10 rpm (§)

BLENDING DRIVE
+ = WITHOUT GEAR (§)
Q = STANDARD SPEED 35 rpm
S = SPECIAL SPEED 14 rpm (§)

VOLTAGE
+ = WITHOUT MOTOR
1 = 220-240 / 380-420 V 50 Hz; 440-480 V 60 Hz (©)
6 = 210-230 / 360-400 V 60 Hz
575V / 60 Hz

DRIVE POWER FEEDER SCREW
++++ = WITHOUT MOTOR
0012= 0,12 kW for D=042 (©)
0018 = 0,18 kW for D=042
0025= 0,25 kW for D= 042-073-114 (©)
0037= 0,37 kW for D= 042-073-114

DRIVE POWER FEEDER SCREW
++++ = WITHOUT MOTOR
0025= 0,25 kW for D=042 (©)
0037= 0,37 kW for D= 042
0055= 0,25 kW for D= 073-114 (©)
0075= 0,75 kW for D= 073-114

LEGENDA:
© STANDARD
§ NO MBF042
# ONLY MBF042

①	②	③	④	⑤	⑥	⑦	⑧	⑨	⑩	⑪	⑫
MBF	073	N	TN	UD 1	SST	UO 2	B	0	Q	1	0025	0055

MIKRODOSIERER
TYP “MBF”

DURCHMESSER
042 - 073 - 114

WERKSTOFF GEHÄUSE
N =Standard SINT®ER Technisches Polymer
F= SINT®AL Technisches Polymer
A= Edelstahl 1.4301
B= Edelstahl 1.4401

WELLENABDICHTUNG
TN= SINT®ER
TF= SINT®AL
TT= Edelstahl 1.4301 MIT FETT
TA= Edelstahl 1.4301 MIT TEFLON-BUCHSE
TX= Edelstahl 1.4301

DOSIERWERKZEUGE
+++ - UD1 (©)- UD2- UD3- UD4- UD5- UD7(#)- UDB-
UDD- UDE- UDG(#)

DOSIERROHR MIT INNENAUSKLEIDUNG
SST= STANDARD DOSIERROHR
SPL= VERLÄNGERTES DOSIERROHR
SSR= DOSIEROHR MIT INNENAUSKLEIDUG
SPR= VERLÄNGERTES DOSIERROHR MIT INNENAUSKLEIDUG

HOMOGENISIERWEKZEUG
+++ = OHNE HOMOGENISIERWEKZEUG
UO1= HOMOGENISIERWEKZEUG MIT PADDEL
UO2= STANDARD PFLUGSCHAR-HOMOGENISIERWEKZEUG

DREHZAHL DES DOSIERANTRIEBS
+ = OHNE GETRIEBE 0 rpm (§)
A = KOSTANTE DREHZAHL 1/10 -140 rpm
B = KOSTANTE DREHZAHL 1/15 -93 rpm (©)
C = KOSTANTE DREHZAHL 1/20 -70 rpm (§)
D = KOSTANTE DREHZAHL 1/28 -50 rpm
E = KOSTANTE DREHZAHL 1/40 -35 rpm
F = KOSTANTE DREHZAHL 1/70 -20 rpm (§)

REGELBARE DREHZAHL
0 = KOSTANTE DREHZAHL (©)
1 = REGELBARE DREHZAHL 1000 rpm-190 rpm
2 = REGELBARE DREHZAHL MIT DIFFERENTIAL 900 rpm-10 rpm (§)

ANTRIEB HOMOGENISIERWERKZEUG
+ = OHNE GETRIEBE (§)
Q = STANDARD-DREHZAHL 35 rpm
S = SONDER-DREHZAHL14 rpm (§)

SPANNUNG- FREQUENZ
+ = OHNE VERSORGUNG
1 = 220-240 / 380-420 V 50 Hz; 440-480 V 60 Hz (©)
6 = 210-230 / 360-400 V 60 Hz

ANTRIEBSLEISTUNG DOSIERWERKZEUG
++++ = OHNE ANTRIEB
0012= 0,12 kW mit D=042 (©)
0018 = 0,18 kW mit D=042
0025= 0,25 kW mit D= 042-073-114 (©)
0037= 0,37 kW mit D= 042-073-114

ANTRIEBSLEISTUNG HOMOGENISIERWERKZEUG
++++ = OHNE ANTRIEB
0025= 0,25 kW mit D=042 (©)
0037= 0,37 kW mit D= 042
0055= 0,25 kW mit D= 073-114 (©)
0075= 0,75 kW mit D= 073-114

LEGENDA:
© STANDARD
§ NO MBF042
# NUR MBF042

①	②	③	④	⑤	⑥	⑦	⑧	⑨	⑩	⑪	⑫
MBF	073	N	TN	UD 1	SST	UO 2	B	0	Q	1	0025	0055

MICRODOSEUR
TYPE “MBF”

DIAMETRE
042 - 073 - 114

MATERIAU CORPS
N =Standard SINT® Tecnopolmero
F= SINT® Tecnopolimero Alimentare
A= AISI 304L
B= AISI 316L

ETANCHEITES
TN= SINT®ER
TF= SINT®AL
TT= AISI 304 AVEC GRAISEE
TA= AISI 304 AVEC TEFLON
TX= AISI 304 SPECIALE

OUTIL DE DOSAGE
+++ - UD1 (©)- UD2- UD3- UD4- UD5- UD7(#)- UDB- UDD- UDE- UDG(#)

TUBE DE DOSAGE
SST= TUBE DE DOSAGE STANDAR
SPL= TUBE DE DOSAGE RALLONGEE
SSR= TUBE DE DOSAGE AVEC REVETEMENT INTERIEU
SPR= TUBE DE DOSAGE RALLONGE AVEC REVETEMENT INTERIEUR

OUTILS HOMOGENEISATEUR
+++ = AVEC HOMOGENEISATEUR
UO1= SPECIAL
UO2= STANDARD

MOTORISATION DE DOSAGE
+ = AVEC MOTORISATION 0 rpm (§)
A = VITESSE COSTANTE 1/10 -140 rpm
B = VITESSE COSTANTE 1/15 -93 rpm (©)
C = VITESSE COSTANTE 1/20 -70 rpm (§)
D = VITESSE COSTANTE 1/28 -50 rpm
E = VITESSE COSTANTE 1/40 -35 rpm
F = VITESSE COSTANTE 1/70 -20 rpm (§)

VITESSE VARIABLE
0 = VITESSE COSTANTE (©)
1= VITESSE VARIABLE 1000 rpm-190 rpm
2= VITESSE VARIABLE AVEC DIFFÉRENZIALE 900 rpm-10 rpm (§)

MOTORISATION DE HOMOGENEISATION
+ = AVEC MOTORISATION (§)
Q = STANDARD 35 rpm
S = SPECIAL 14 rpm (§)

VOLTAGE ET FREQUENCE D’ALIMENTATION
+ = SANS MOTEUR
1 = 220-240 / 380-420 V 50 Hz; 440-480 V 60 Hz (©)
6 = 210-230 / 360-400 V 60 Hz

PUISSANCE MOT. OUTIL DE DOSAGE
++++ = SANS MOTEUR
0012= 0,12 kW per D=042 (©)
0018 = 0,18 kW per D=042
0025= 0,25 kW per D= 042-073-114 (©)
0037= 0,37 kW per D= 042-073-114

PUISSANCE MOT. OUTIL DE HOMOGENEISATION
++++ = SANS MOTEUR
0025= 0,25 kW per D=042 (©)
0037= 0,37 kW per D= 042
0055= 0,25 kW per D= 073-114 (©)
0075= 0,75 kW per D= 073-114

LEGENDA:
© STANDARD
§ NO MBF042
# SEULEMENT POUR MBF042

WAM®

MBF

- **ORDER CODES**
- **BESTELLCODE**
- **CODES DE COMMANDE**
- **CODICI DI ORDINAZIONE**

ITALIANO

①	②	③	④	⑤	⑥	⑦	⑧	⑨	⑩	⑪	⑫
MBF	**073**	**N**	**TN**	**UD 1**	**SST**	**UO 2**	**B**	**0**	**Q**	**1**	**0025**	**0055**

MICRODOSATORE
TIPO “MBF”

DIAMETRO
042 - 073 - 114

MATERIALE CORPO
N =Standard SINT® Tecnopolimero
F= SINT® Tecnopolimero Alimentare
A= AISI 304L
B= AISI 316L

TENUTE
TN= SINT®ER
TF= SINT®AL
TT= AISI 304 INGRASSATE
TA= AISI 304 CON TEFLON
TX= AISI 304 CON BRONZO

UTENSILE DI DOSAGGIO
+++ - UD1 (©)- UD2- UD3- UD4- UD5 - UD7(#) - UDB- UDD- UDE- UDG(#)

TUBO DI SCARICO
SST= SCARICO STANDARD
SPL= SCARICO PROLUNGATO
SSR= SCARICO INTERNAMENTE RIVESTITO
SPR= SCARICO PROLUNGATO INTERNAMENTE RIVESTITO

UTENSILE DI OMOGENIZZAZIONE
+++ = SENZA
UO1= SPECIALE
UO2= STANDARD A VOMERI

MOTORIZZAZIONE DOSAGGIO
+ = ASSENTE 0 rpm (§)
A = VELOCITA’ FISSA 1/10 -140 rpm
B = VELOCITA’ FISSA 1/15 -93 rpm (©)
C = VELOCITA’ FISSA 1/20 -70 rpm (§)
D = VELOCITA’ FISSA 1/28 -50 rpm
E = VELOCITA’ FISSA 1/40 -35 rpm
F = VELOCITA’ FISSA 1/70 -20 rpm (§)

VELOCITA’ VARIABILE
0 = VELOCITA’ COSTANTE (©)
1= VELOCITA’ VARIABILE 1000 rpm-190 rpm
2= VELOCITA’ VARIABILE DIFFERENZIALE 900 rpm-10 rpm (§)

MOTORIZZAZIONE OMOGENIZZATORE
+ = ASSENTE (§)
Q = STANDARD 35 rpm
S = SPECIALE 14 rpm (§)

TENSIONE E FREQUENZA
+ = SENZA MOTORE
1 = 220-240 / 380-420 V 50 Hz; 440-480 V 60 Hz (©)
6 = 210-230 / 360-400 V 60 Hz

MOTORIZZAZIONE UTENSILE DOSAGGIO
++++ = SENZA MOTORE
0012= 0,12 kW per D=042 (©)
0018 = 0,18 kW per D=042
0025= 0,25 kW per D= 042-073-114 (©)
0037= 0,37 kW per D= 042-073-114

MOTORIZZAZIONE UTENSILE OMOGENIZZAZIONE
++++ = SENZA MOTORE
0025= 0,25 kW per D=042 (©)
0037= 0,37 kW per D= 042
0055= 0,25 kW per D= 073-114 (©)
0075= 0,75 kW per D= 073-114

LEGENDA:
© STANDARD
§ NO MBF042
# SOLO MBF042

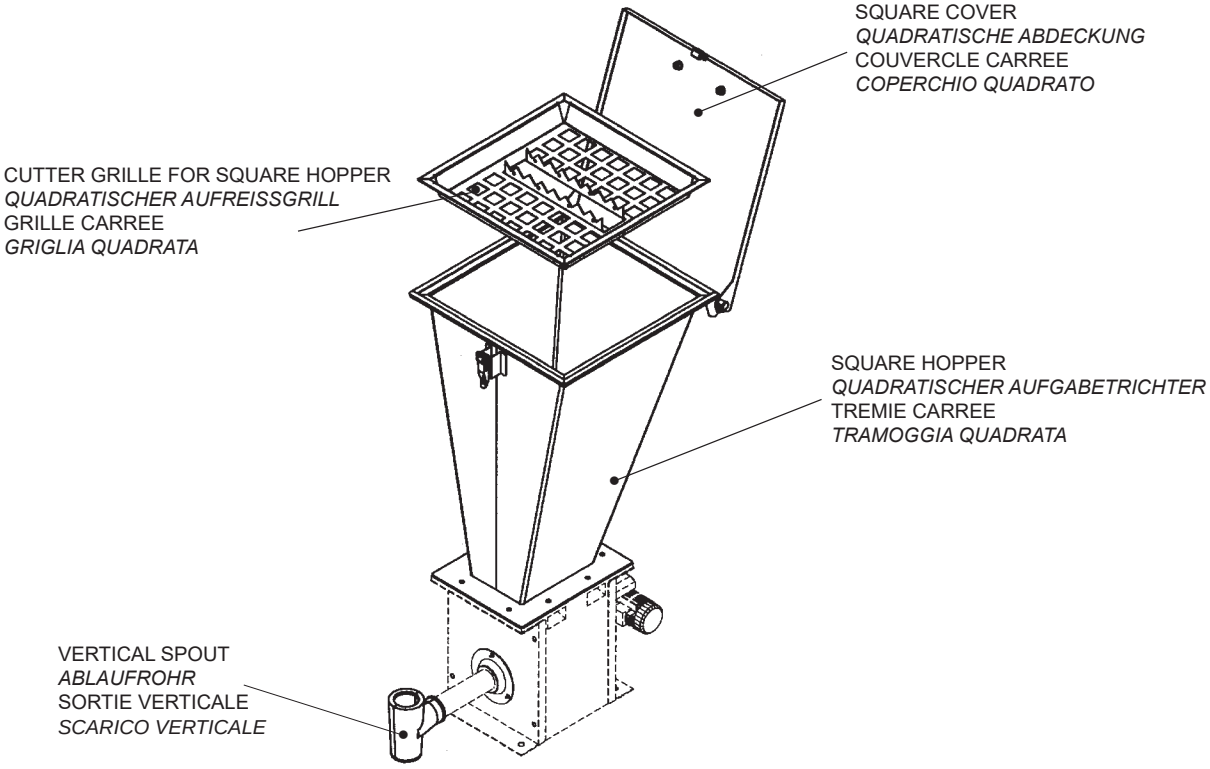
SQUARE COVER
QUADRATISCHE ABDECKUNG
COUVERCLE CARREE
COPERCHIO QUADRATO
CUTTER GRILLE FOR SQUARE HOPPER
QUADRATISCHER AUFREISSGRILL
GRILLE CARREE
GRIGLIA QUADRATA
SQUARE HOPPER
QUADRATISCHER AUFGABETRICHTER
TREMIE CARREE
TRAMOGGIA QUADRATA
VERTICAL SPOUT
ABLAUFROHR
SORTIE VERTICALE
SCARICO VERTICALE

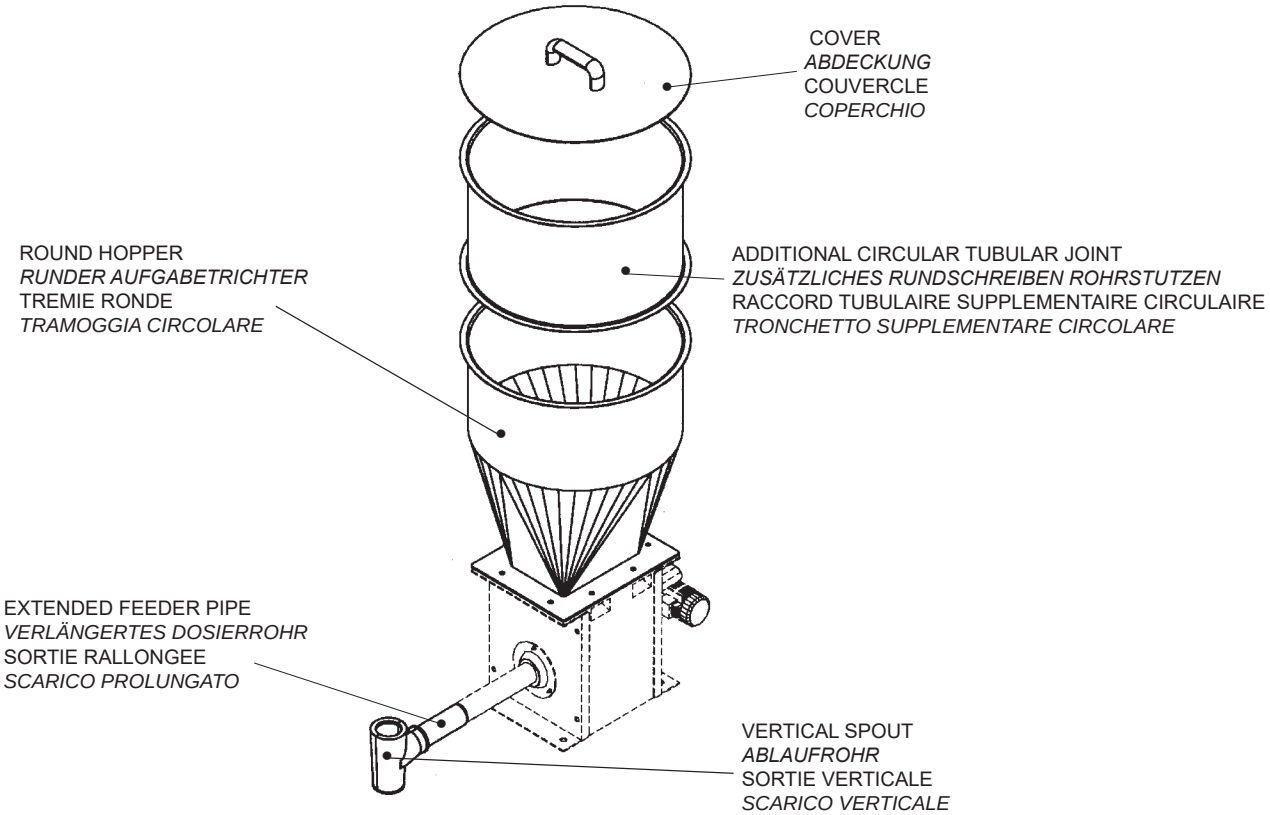
COVER
ABDECKUNG
COUVERCLE
COPERCHIO
ROUND HOPPER
RUNDER AUFGABETRICHTER
TREMIE RONDE
TRAMOGGIA CIRCOLARE
ADDITIONAL CIRCULAR TUBULAR JOINT
ZUSÄTZLICHES RUNDSCHREIBEN ROHRSTUTZEN
RACCORD TUBULAIRE SUPPLEMENTAIRE CIRCULAIRE
TRONCHETTO SUPPLEMENTARE CIRCOLARE
EXTENDED FEEDER PIPE
VERLÄNGERTES DOSIERROHR
SORTIE RALLONGEE
SCARICO PROLUNGATO
VERTICAL SPOUT
ABLAUFROHR
SORTIE VERTICALE
SCARICO VERTICALE

SQUARE HOPPER - *QUADRATISCER AUFGABETRICHTER* -TREMIE CARREE - *TRAMOGGIA QUADRATA*

M	D	X	T	S	1	2

2: Stainless steel - *Edelstahl 1.4301* - Inox 304 - *AISI 304*

Type hopper
Trichtergröße
Type de trémie
Grandezza tramoggia

1	MBF 042
2	MBF 073 -114

Square hopper
Quadratischer Aufgabetrichter
Trémie carrée
Tramoggia quadrata

Micro batch feeder accessories
Zubehör Mikrodosierer
Accessoires microdoseur
Accessori microdosatore

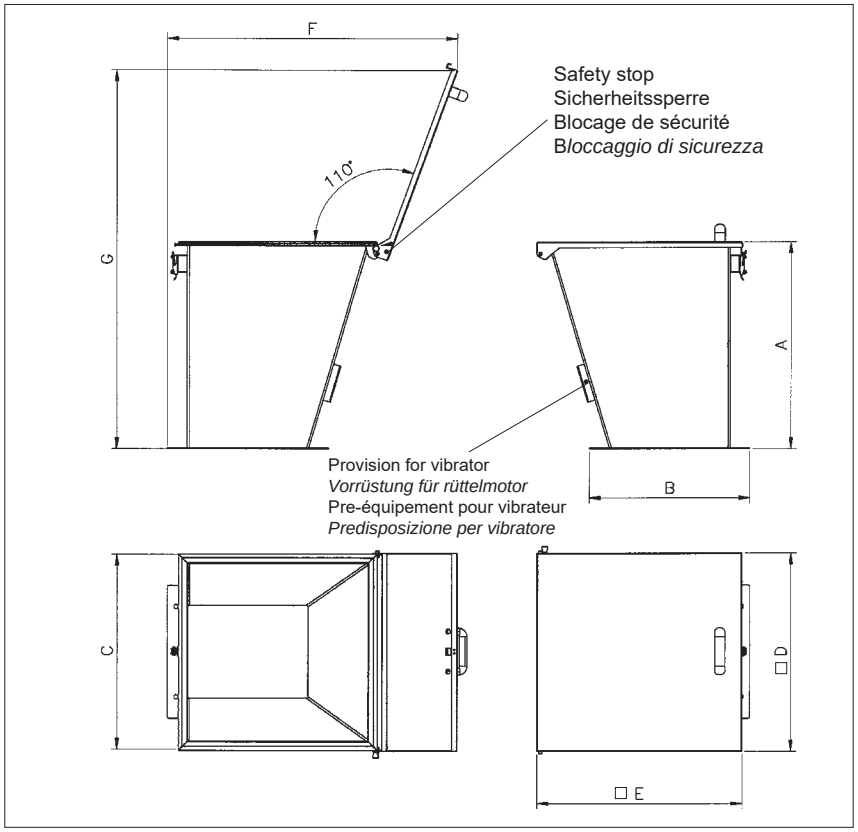

MDXTS	Suitable for - *Passend zu* Pour type - *Idoneo* MBF	A	B	C	□ D	□ E	F	G	dm³	kg
12	042	600	310	428	434	445	640	980	25	12
22	073 - 114	600	466	575	582	595	840	1120	75	19

ROUND HOPPER - *RUNDER AUFGABETRICHTER* - TREMIE RONDE - *TRAMOGGIA CIRCOLARE*

M	D	X	T	R	1	2

2: Stainless steel - *Edelstahl 1.4301* - Inox 304 - *AISI 304*

Type hopper
Trichtergröße
Type de trémie
Grandezza tramoggia

1	MBF 042
2	MBF 073 -114

Round hopper
Runder Aufgabetrichter
Trémie ronde
Tramoggia circolare

Micro batch feeder accessories
Zubehör zu Mikrodosierer
Accessoires microdoseur
Accessori microdosatore

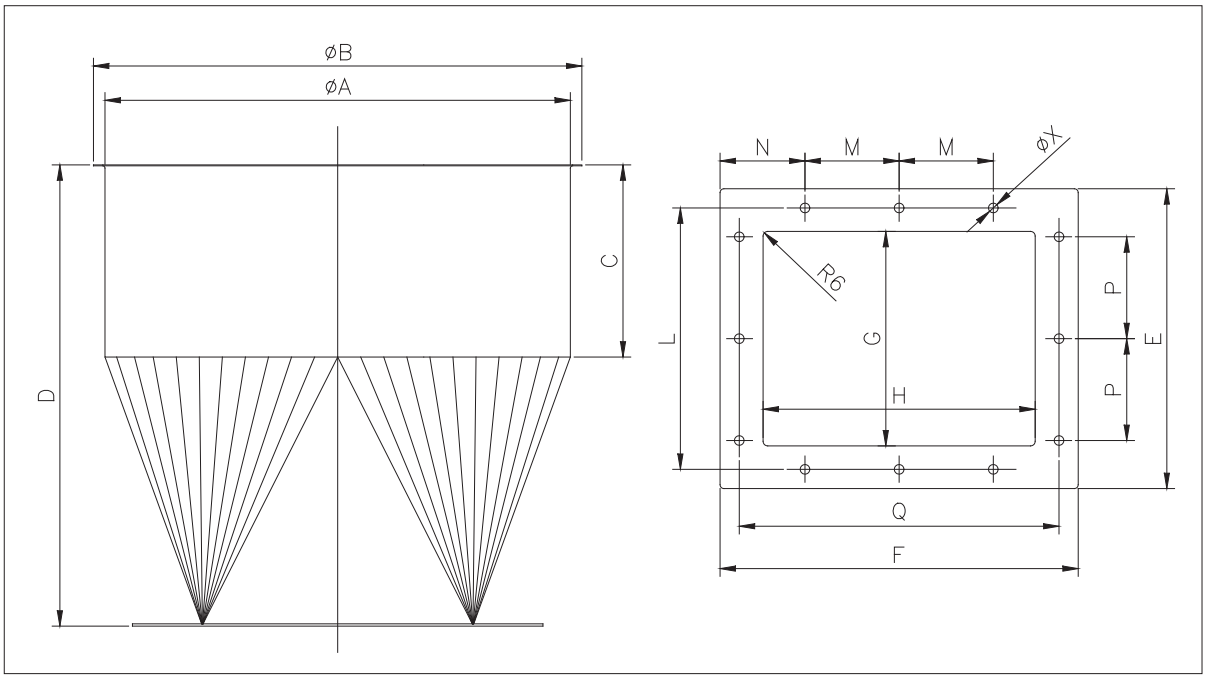

MDXTR	Suitable for - *Passend zu* Pour type - *Idoneo* MBF	Ø A	Ø B	C	D	E	F	G	H	L	M	N	P	Q	Holes - *Bohrungen* Trous - *Fori* X		dm³	kg
															Ø	n°		
12	042	408	436	200	500	250	310	140	200	200	110	100	130	260	9	8	52	12
22	073 - 114	630	636	250	600	390	466	279	354	340	122.5	110.5	132.5	416	12.5	12	120	20

ADDITIONAL CIRCULAR TUBULAR JOINT - *ZUSÄTZLICHES RUNDSCHREIBEN ROHRSTUTZEN*
RACCORD TUBULAIRE SUPPLEMENTAIRE CIRCULAIRE - *TRONCHETTO SUPPLEMENTARE CIRCOLARE*

M	D	X	A	R	1	2

2: Stainless steel - *Edelstahl 1.4301* - Inox 304 - *AISI 304*

Type hopper
Trichtergröße
Type de trémie
Grandezza tramoggia

1	MBF 042
2	MBF 073 -114

Additional circular tubular joint
Zusätzliches rundschreiben Rohrstutzen
Raccord tubulaire supplementaire circulaire
Tronchetto supplementare circolare

Micro batch feeder accessories
Zubehör zu Mikrodosierer
Accessoires microdoseur
Accessori microdosatore

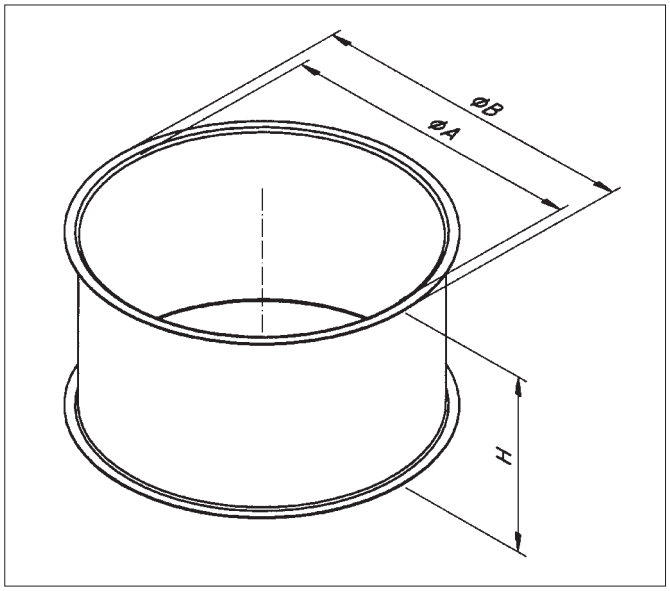

MDXAR	Suitable for - *Passend zu* Pour type - *Idoneo* MBF	Ø A	Ø B	H	dm^3
12	042	406	436	200	25
22	073-114	605	635	180	50

CUTTER GRILLE FOR SQUARE HOPPER - *QUADRATISCHER AUFREISSGRILL* - GRILLE CARREE - *GRIGLIA QUADRATA*

M	D	X	G	S	1	2

2: Stainless steel - *Edelstahl 1.4301* - Inox 304 - *AISI 304*

Type hopper
Trichtergröße
Type de trémie
Grandezza tramoggia

1	MBF 042
2	MBF 073 -114

Type hopper cutter grille
Grill
Type de grille
Griglia quadrata tagliasacchi

Micro batch feeder accessories
Zubehör Mikrodosierer
Accessoires microdoseur
Accessori per microdosatore

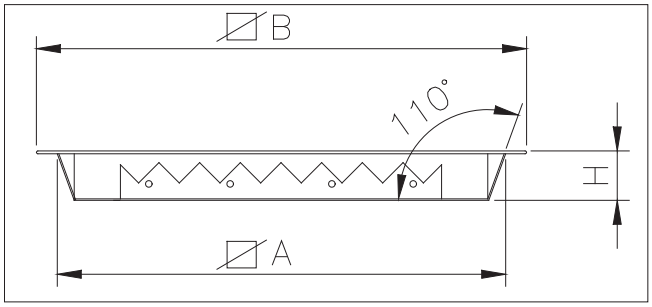

MDXGS	Suitable for - *Passend zu* Pour type - *Idoneo* MBF	□ A	□ B	H	kg
12	042	345	410	40	2
22	073 - 114	495	555	40	3

FLANGES - *FLANSCHE*
BRIDES - *FLANGIATURE*

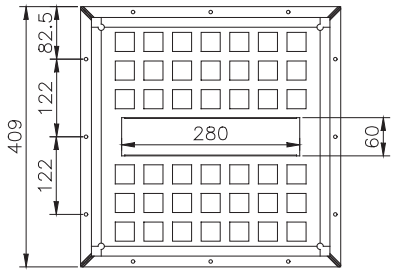

MDXGS12

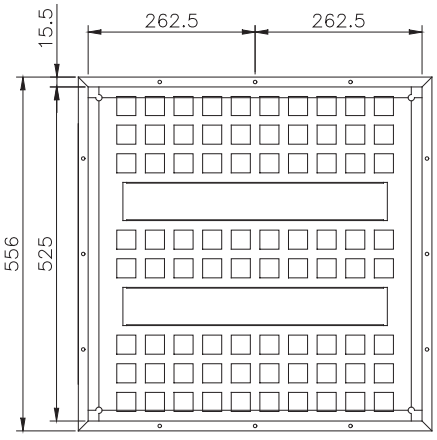

MDXGS22

ROUND COVER - *RUNDE ABDECKUNG* - COUVERCLE ROND - *COPERCHIO TONDO*

M	D	X	C	R	1	2

2: Stainless steel - *Edelstahl 1.4301* - Inox 304 - *AISI 304*

Type hopper
Trichtergröße
Type de trémie
Grandezza tramoggia

1	MBF 042
2	MBF 073 -114

Round cover
Runde Abdeckung
Couvercle rond
Coperchio tondo

Micro- batch fedeer accessories
Zubehör Mikrodosierer
Accessoires microdoseur
Accessori per microdosatore

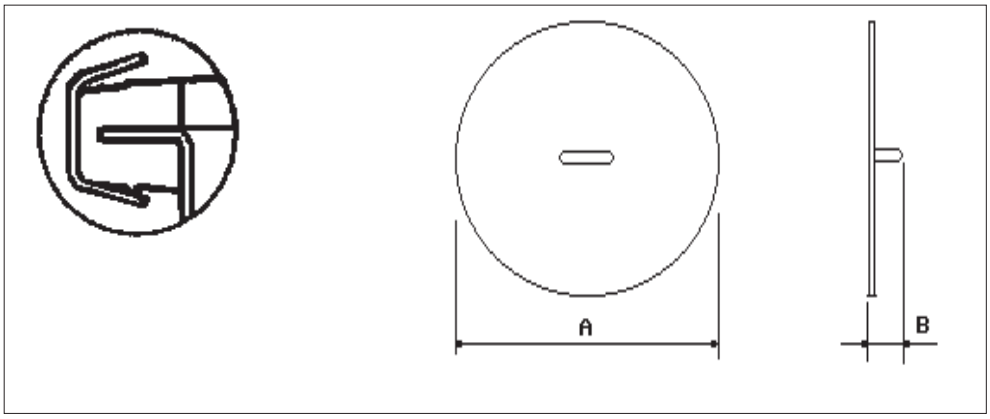

MDXCR	Suitable for - *Passend zu* Pour type - *Idoneo* MBF	A	B	kg
12	042	436	50	2
22	073 - 114	635	50	3

PNEUMATIC BALL VIBRATORS - *DRUCKLUFT-KUGELVIBRATOREN*
VIBRATEURS PNEUMATIQUES A BILLE - *VIBRATORI PNEUMATICI A SFERA*
"S"

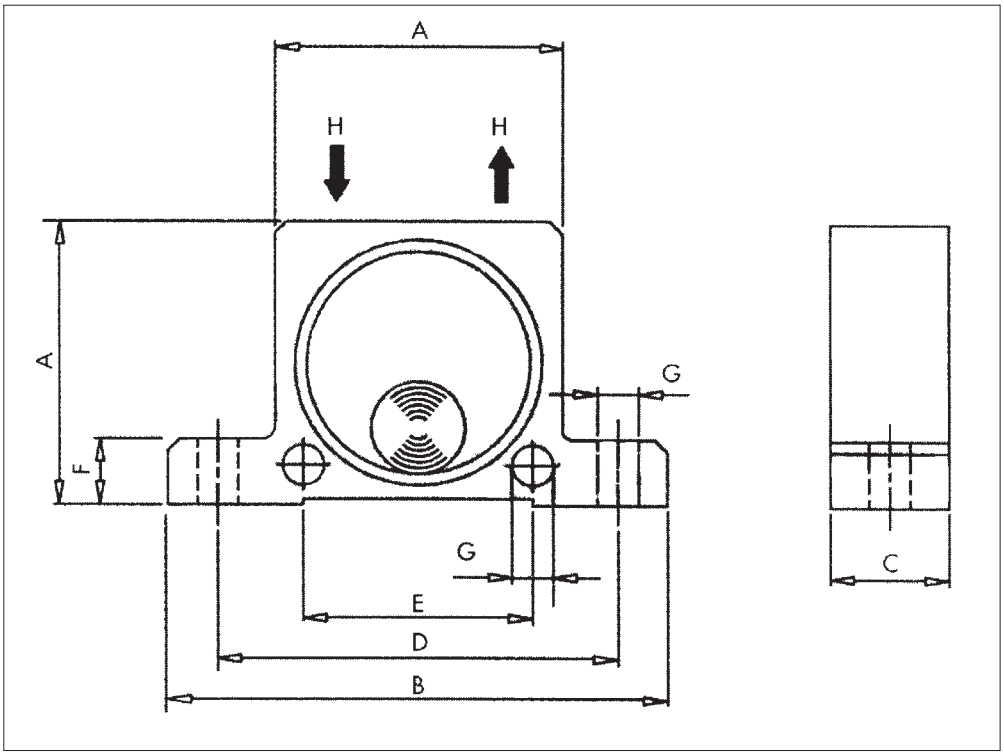

Dimensions - *Abmessungen* - Dimensions - *Dimensioni*

Type	A		B		C		D		E		F		G		H	kg	
	mm	in	mm	in	mm	in	mm	in	mm	in	mm	in	mm	in		kg	lbs
S 20	80	3.15	128	5.04	33	1.30	104	4.09	60	2.36	16	0.63	9	0.35	1/4"	0.53	1.17
S 25					38	1.50										0.63	1.39

Performance data - *Leistungsdaten* - Performances - *Prestazioni*

Type	Vibrations - *Schwingungwen* Vibrations - *Vibrazioni* min			Fc max. kg						Air consumption - *Luftverbrauch* Consommation d'air - *Consumo d'aria* l/min					
	2 bar 29 psi	4 bar 58 psi	6 bar 87 psi	2 bar = 29 psi		4 bar = 58 psi		6 bar = 87 psi		2 bar = 29 psi		4 bar = 58 psi		62 bar = 87psi	
				kg	lbs	kg	lbs	kg	lbs	dm^3	cf	dm^3	cf	dm^3	cf
S 20	10.500	14.500	16.500	72	162	122	275	172	387	130	4.6	230	81	340	12.0
S 25	9.200	12.200	14.000	93	209	157	353	205	461	160	5.6	290	10.2	425	15.0

ELECTRIC EXTERNAL MOTOVIBRATORS - *ELEKTRISCHE VIBRATIONSMOTOREN*
MOTOVIBRATEURS EXTERNES ELECTRIQUES - *MOTOVIBRATORI ELETTRICI*
MVE

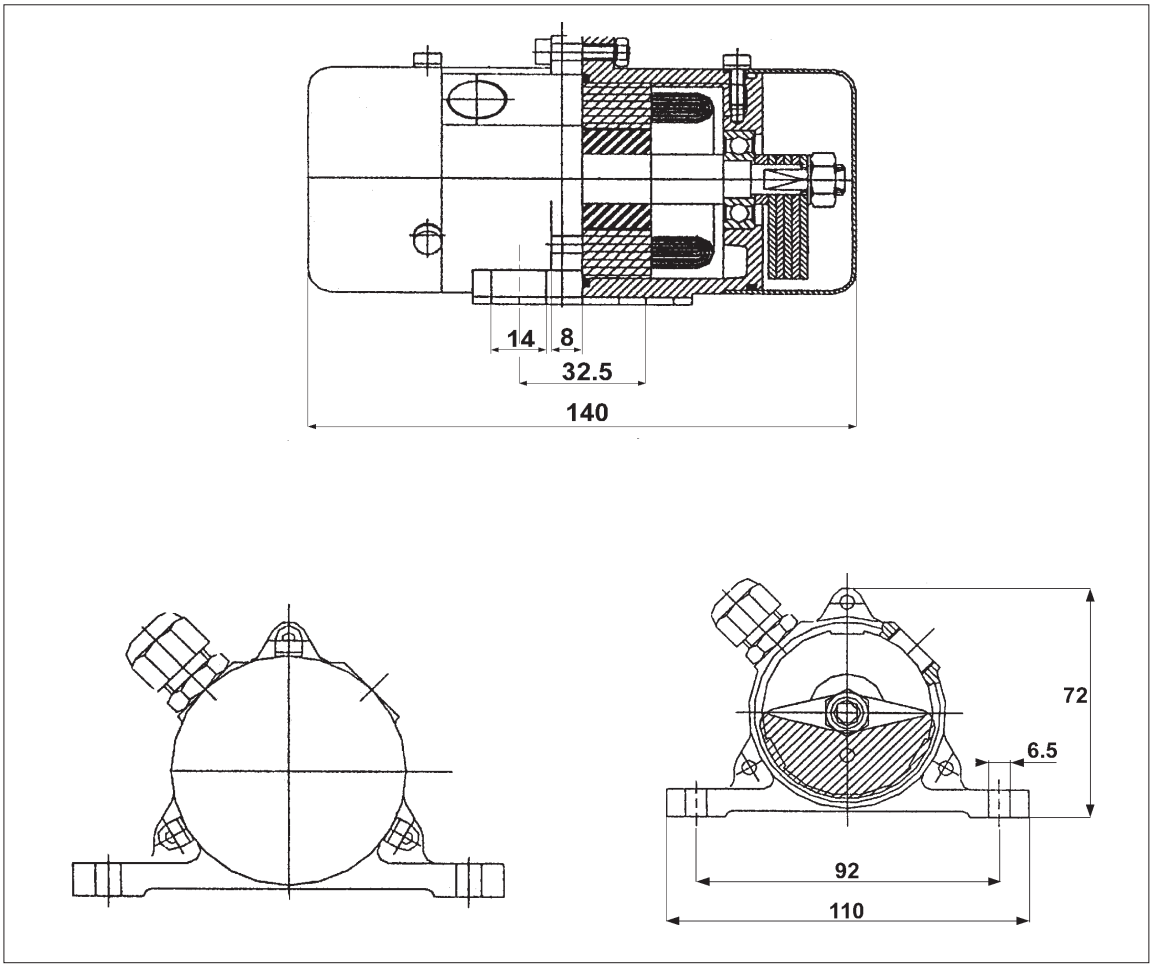

Type	Max. power *Max. Leistung* Puissance max. *Potenza max.* W		Max. current *Max. Stromaufnahme* Courant max. *Assorbimento max.* A		RPM *U/min* TPM *Giri/min*		Centrifugal force *Zentrifugalkraft* Force centrifuge *Forza centrifuga* kg		Weight *Gewicht* Poids *Peso*
	50 Hz	60 Hz	220 V 50 Hz	115 V 60 Hz	50 Hz	60 Hz	50 Hz	60 Hz	kg
MVE 20	32	36	0.10	0.23	2750	3300	0-22	0-32	1.5

TECNICAL FEATURES

- Adjustable Centrifugal Force
- Protection IP 65
- Insulation Class “F”
- Continuous Duty

TECHNISCHE MERKMALE

- Einstellbare Zentrifugalkraft
- Schutzart IP 65
- Iso-Klasse F
- 100% ED

CARACTERISTIQUES TECHNIQUES

- Force centrifuge réglable
- Protection IP 65
- Classe d’isolation F
- Service continu

CARATTERISTICHE TECNICHE

- Forza centrifuga regolabile
- Protezione IP 65
- Classe d’isolamento F
- Servizio continuo

SPECIAL BLENDING TOOLS - *SPEZIAL-HOMOGENISIERWERKZEUGE*
OUTILS DE HOMOGENEISATION SPECIAUX - *UTENSILI OMOGENEIZZAZIONE SPECIALI*

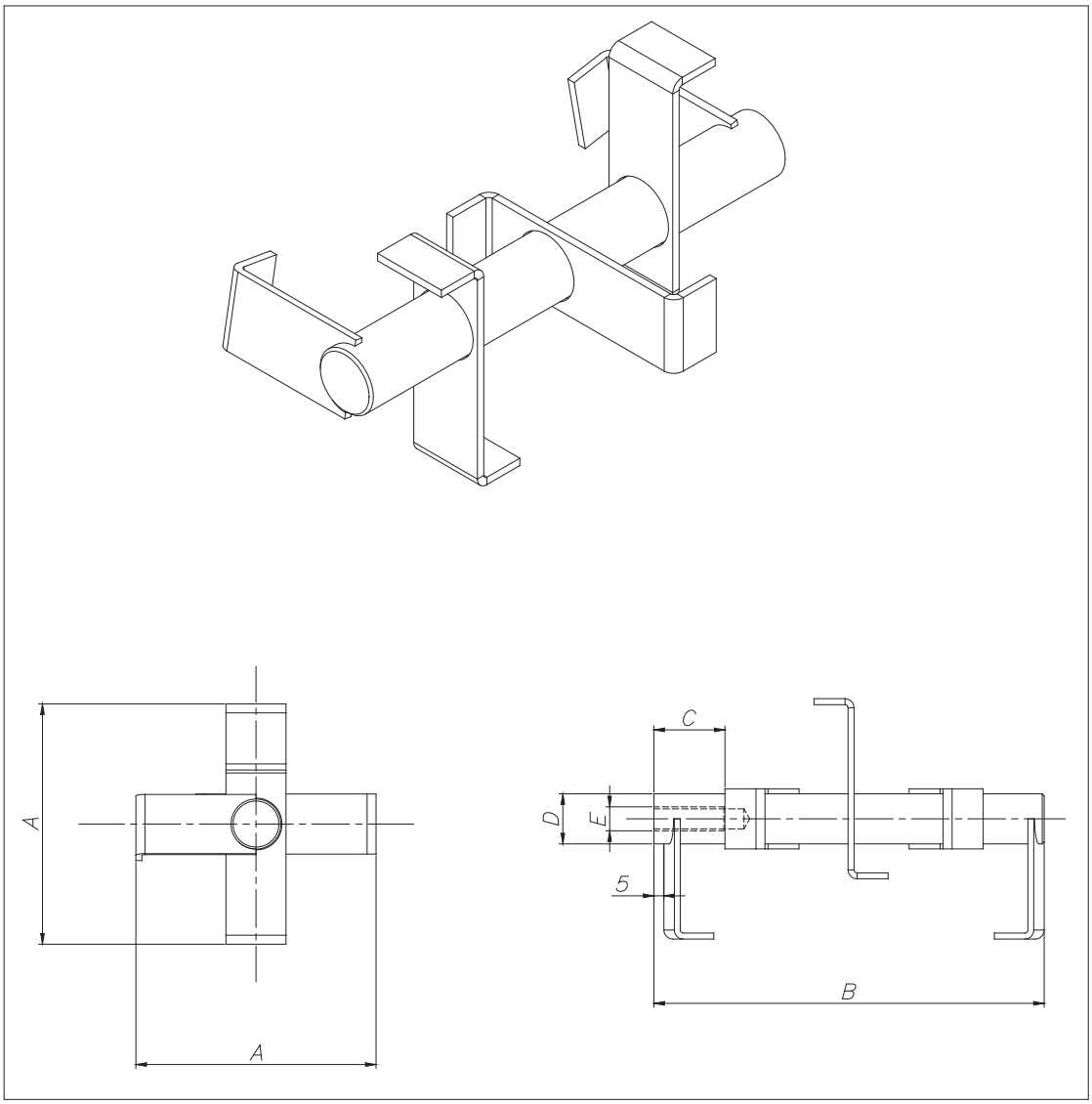

TYPE1

MBF	Code	A	B	D	E	kg
042	**UTO 12**	130	199	25	M 12	1
073	**UTO 13**	260	349	35	M 16	3.5
114	**UTO 13**	260	349	35	M 16	3.5

STD INSPECTION HATCH FOR AISI 304L MBF TYPE - *STD INSPEKTIONSTÜR FÜR MBF IN EDELSTAHL 1.4301*
TRAPPE DE VISITE STD POUR MBF DANS AISI 304L - *PORTELLO DI ISPEZIONE STD PER MBF IN AISI 304L*

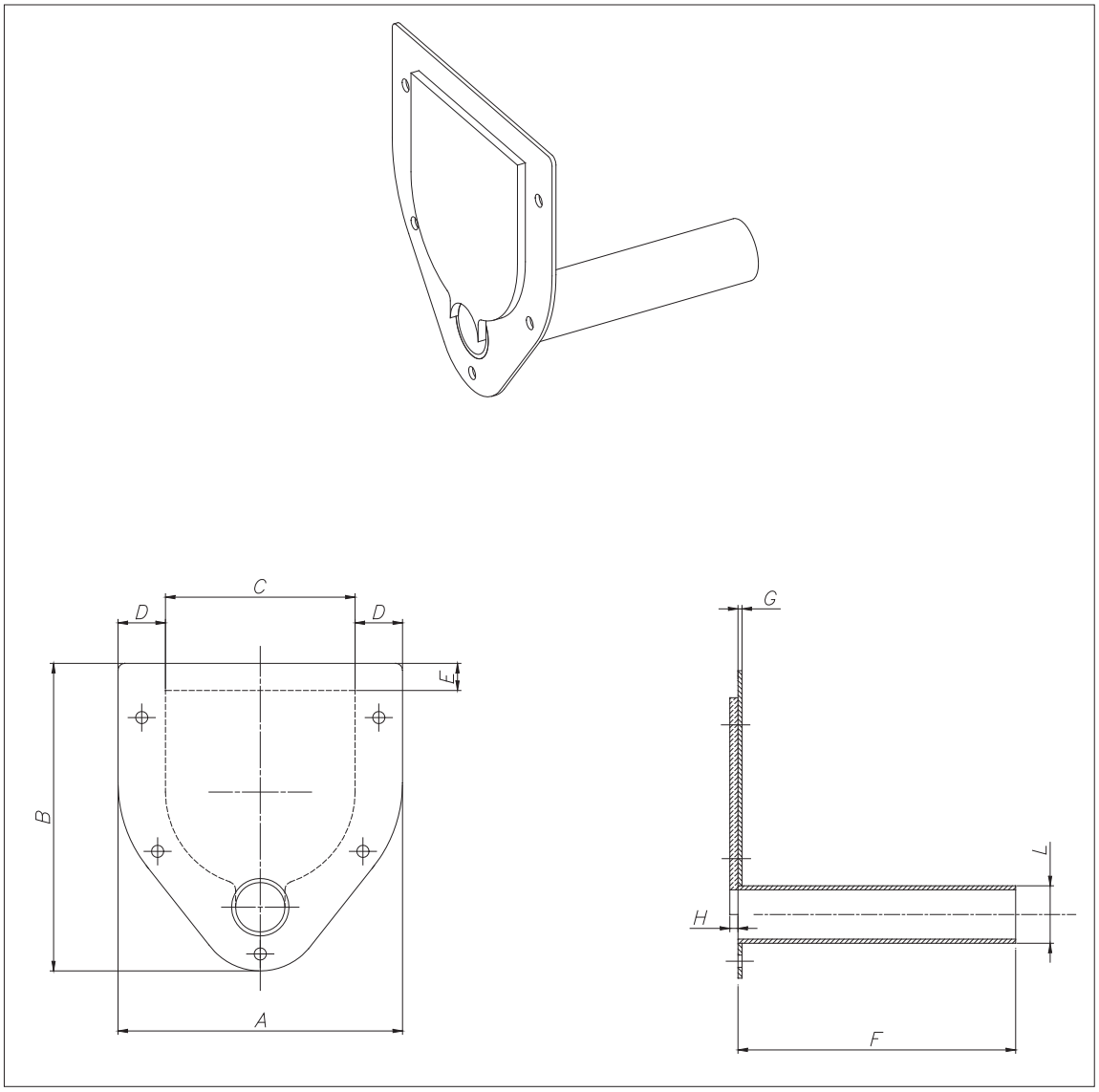

MBF	Code	A	B	C	D	E	F	G	H	Ø L	kg
042	**MBPI 2**	210	227	140	35	20	205	3	6	42	1.4
073	**MBPI 3**	345	395	275	35	20	255	3	6	76	5.6
114	**MBPI 4**	350	431	275	37	20	255	3	6	114	6.3

INSPECTION HATCH FOR AISI 304L MBF TYPE WITH EXTENDED TUBE
INSPEKTIONSTÜR FÜR MBF IN EDELSTAHL 1.4301 MIT* LÄNGLICH*ROHR
TRAPPE DE VISITE POUR MBF DANS AISI 304L AVEC TUBE PROLONGE
PORTELLO DI ISPEZIONE PER MBF IN AISI 304L CON TUBO PROLUNGATO

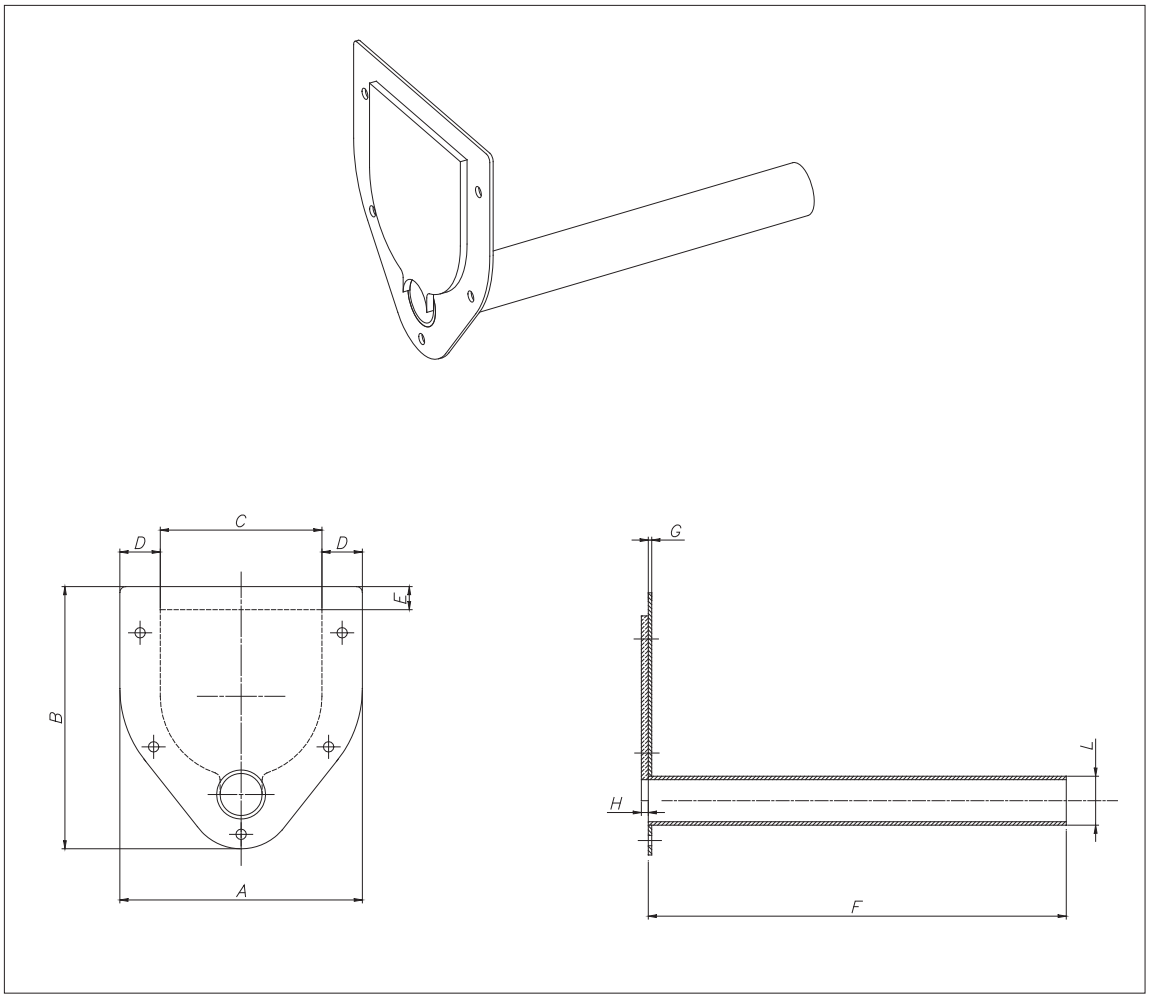

MBF	Code	A	B	C	D	E	F	G	H	Ø L	kg
042	**MBPIP 2**	210	227	140	35	20	362	3	6	42	1.8
073	**MBPIP 3**	345	395	275	35	20	505	3	6	76	6.8
114	**MBPIP 4**	350	431	275	37	20	505	3	6	114	7.4

FEEDER PIPE - *DOSIERROHR* - TUBE DE DOSAGE - *SCARICO*

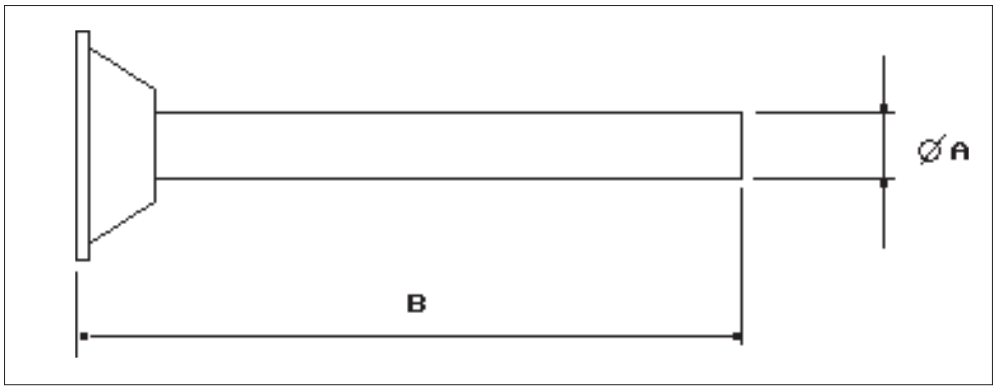

STANDARD FEEDER PIPE - *STANDARD DOSIERROHR* - TUBE DE DOSAGE STANDARD - *SCARICO STANDARD*				
Code	**Suitable for - *Passend zu* Pour type - *Idoneo per* MBF**	**Ø A**	**B**	**kg**
MBT 2	042	42	200	1.0
MBT 3	073	76	250	2.4
MBT 4	114	114	250	4.0

EXTENDED FEEDER PIPE - *VERLÄNGERTES DOSIERROHR* - SORTIE RALLONGEE - *SCARICO PROLUNGATO*				
Code	**Suitable for - *Passend zu* Pour type - *Idoneo per* MBF**	**Ø A**	**B**	**kg**
MBTP 2	042	42	370	1.2
MBTP 3	073	76	500	2.7
MBTP 4	114	114	500	4.4

LINERFEEDER PIPE - *DOSIERROHR MIT INNENAUSKLEIDUNG*
TUBE DE DOSAGE AVEC REVETEMENT INTERIEUR - *SCARICO INTERNAMENTE RIVESTITO*

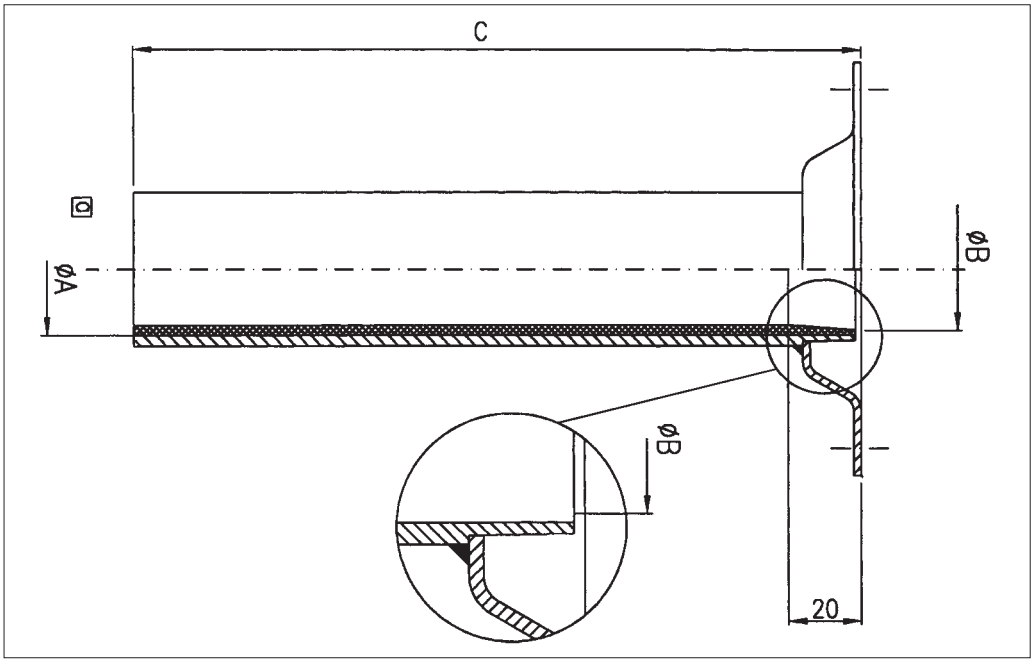

4 SINT®ER
5 SINT®AL

STANDARD LINED FEEDER PIPE - *STANDARD DOSIERROHR MIT INNENAUSKLEIDUNG* TUBE DE DOSAGE AVEC REVETEMENT INTERIEUR - *SCARICO STD INTERNAMENTE RIVESTITO*					
Code	**Suitable for - *Passend zu* Pour type - *Idoneo per* MBF**	**Ø A**	**Ø B**	**C**	**kg**
MBTR 2 .	042	31	34	200	1.2
MBTR 3 .	073	61	63	250	2.7
MBTR 4 .	114	101	104	250	4.4

4 SINT®ER
5 SINT®AL

EXTENDED LINED FEEDER PIPE - *VERLÄNGERTES DOSIERROHR MIT INNENAUSKLEIDUNG* TUBE DE DOSAGE RALLONGE AVEC REVETEMENT INTERIEUR - *SCARICO PROLUNGATO INTERNAMENTE RIVESTITO*					
Code	**Suitable for - *Passend zu* Pour type - *Idoneo per* MBF**	**Ø A**	**Ø B**	**C**	**kg**
MBTRP 2 .	042	31	34	370	1.6
MBTRP 3 .	073	61	63	500	3.2
MBTRP 4 .	114	101	104	500	5.2

VERTICAL SPOUT - *ABLAUFROHR* - SORTIE VERTICALE - *SCARICO VERTICALE*

M	D	X	S	V	2	4

4: SINT®ER
5: SINT®AL

2 = MBF 042
3 = MBF 073
4 = MBF 114

Vertical spout
Ablaufrohr
Sortie verticale
Scarico verticale

Micro-batch fedeer accessories
Zubehör Mikrodosierer
Accessoires microdoseur
Accessori microdosatore

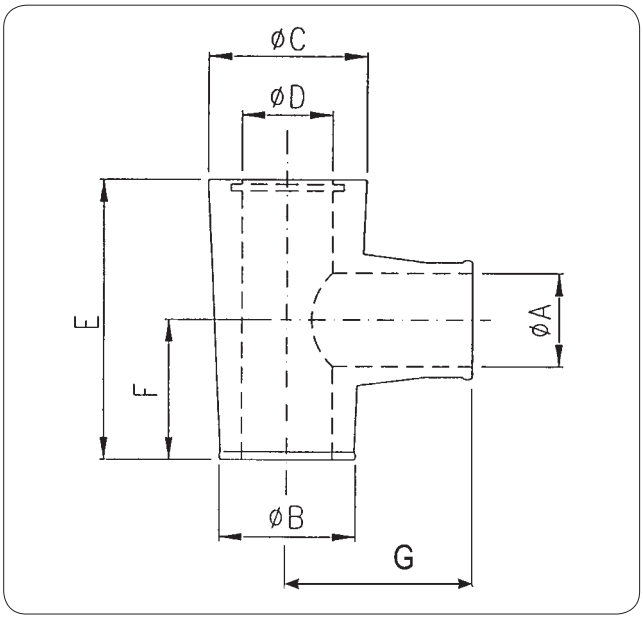

MDXSV	Suitable for - *Passend zu* Pour type - *Idoneo* MBF	Ø A	Ø B	Ø C	Ø D	E	F	G	kg
2.	042	42	60	70	50	126	63	81	0.27
3.	073	75	121	130	100	187.5	95	143.5	1.3
4.	114	114	175	190	150	230	115	191	3

4	SINT®ER
5	SINT®AL

VERTICAL SPOUT WITH PNEUMATIC CLOSURE - *ABLAUFROHR MIT PNEUMATISCHEM VERSCHLUSS*
SORTIE VERTICALE AVEC FERMETEURE PNEUMATIQUE - *SCARICO VERTICALE CON CHIUSURA PNEUMATICA*

M	D	X	S	C	2	4

4: SINT®ER
5: SINT®AL

2 = MBF 042
3 = MBF 073
4 = MBF 114

vertical spout with pneumatic cover
Ablaufrohr mit pneumatischem verschluss
Sortie verticale avec fermeteure pneumatique
Scarico verticale con chiusura pneumatica

Micro-batch fedeer accessories
Zubehör Mikrodosierer
Accessoires microdoseur
Accessori microdosatore

N.B.: Operation P_{max} 4 bar !
N.B.: Betrieb P_{max} 4 bar !
N.B.: P_{max} de travail 4 bar !
N.B.: P_{max} di lavoro 4 bar !

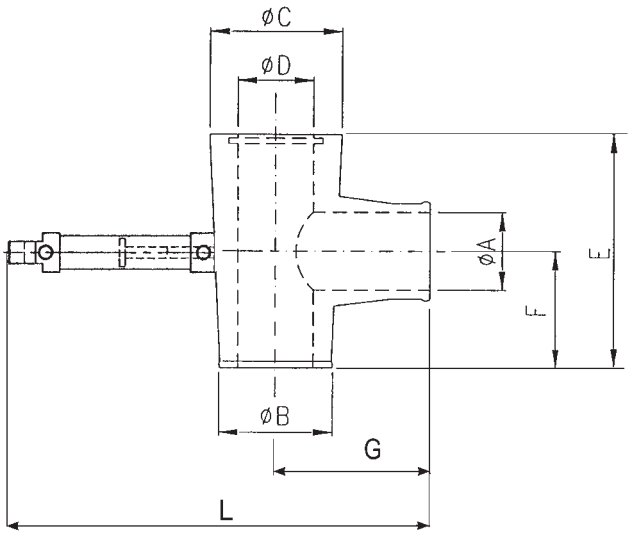

MDXSC	Suitable for - *Passend zu* Pour type - *Idoneo* MBF	Ø A	Ø B	Ø C	Ø D	E	F	G	L	kg
2.	042	42	60	70	50	126	63	81	214.5	0.5
3.	073	75	121	130	100	187.5	95	143.5	353.5	2.8
4.	114	114	175	190	150	230	115	191	472	4.5

4	SINT®ER
5	SINT®AL

Note: Microcylinder ISO 6432 - Anm.: Mikrozylinder ISO 6432
Remarque: Micro-cylindre ISO 6432 - *Nota: Microcilindro ISO 6432*

MAGENTIC SENSOR KIT FOR MICRO-CYLINDER - *MAGNETISCHES SENSORKIT FÜR MIKROZYLINDER*
KIT SENSEUR MEGNETIQUE POUR MICRO-CYLINDRE - *KIT SENSORE MAGNETICO RILEVAMENTO PER MICROCILINDRO*

KXM	Suitable for - *Passend zu* Pour type - *Idoneo* MBF
16	MDXSC2
20	MDXSC3
25	MDXSC4

AUTOMATIC LUBRICATOR | **AUTOMATISCHE SCHMIERVORRICHTUNG** | **GRAISSEUR AUTOMATIQUE** | **LUBRIFICATORE AUTOMATICO**

CARTRIDGE GREASE NIPPLE LIT - *SCHMIERPATRONENSATZ*
KIT GRAISSEUR CARTOUCHE - *KIT INGRASSATORE CARTUCCIA*

M	D	X	I	125

Capacity - *Kapazität* - Capacité - *Capacità*

Grease nipple - *Schmiernippel* - Graisseur - *Ingrassatore*

Micro-batch feeders accessories - *Mikrodosierer zubehör*
Accessoires microdoseurs - *Accessori microdosatore*

TECHNICAL SPECIFICATIONS	
Capacity	125 ml
Operating period	Adjustable at 1-12 months
Operating temperature	-20°C a + 55°C°
Max. operating pressure	5 bar**
Activation mechanism	Hydrogen gas release battery (H2)
Threading	G 1/4
Recommended storage temperature	+20°C
Storage period	2 years***
Weight	Approx. 190g (including grease)
Appellative	LAGD 125/WA (filled with SKF LGWA 2 grease) LAGD 125/"lubricant"

TECHNISCHE DATEN	
Kapazität	125 ml
Betriebsdauer	Von 1 bis 12 Monate einstellbar
Betriebstemperatur	-20°C bis + 55°C°
Max. Betriebsdruck	5 bar**
Einschaltmechanismus	Wasserstoff freisetzende Batterie (H2)
Gewinde	G 1/4
Empfohlene Lagerhaltungstemperatur	+20°C
Lagerzeit	2 Jahre ***
Gewicht	circa 190 g (Fett inbegriffen)
Bezeichnung	LAGD 125/WA (mit Fett SKF LGWA 2 gefüllt) LAGD 125/"Schmierstoff"

CARACTÉRISTIQUES TECHNIQUES	
Capacité	125 ml
Période de fonctionnement	Réglable de 1 à 12 mois
Température de fonctionnement	-20°C a + 55°C°
Pression max. de fonctionnement	5 bar**
Mécanisme d'activation	Batterie à dégagement de gaz hydrogène (H2)
Filetage	G 1/4
Température conseillée pour le stockage	+20°C
Période de stockage	2 ans***
Poids	Env. 190jj (graisse incluse)
Désignation	LAGD 125/WA (avec le plein de graisse SKF LGWA 2 grease) LAGD 125/"lubrifiant"

DATI TECNICI	
Capacità	125 ml
Periodo di funzionamento	Regolabile da 1 a 12 mesi
Temperatura di funzionamento	-20°C a + 55°C°
Pressione max. di funzionamento	5 bar**
Meccanismo di attivazione	Batteria a sviluppo di gas idrogeno (H_2)
Filettatura	G 1/4
Temperatura consigliata per lo stoccaggio	+20°C
Periodo di stoccaggio	2 anni***
Peso	Circa 190g (grasso incluso)
Appellativo	LAGD 125/WA (riempito con grasso SKF LGWA 2) LAGD 125/"lubrificante"

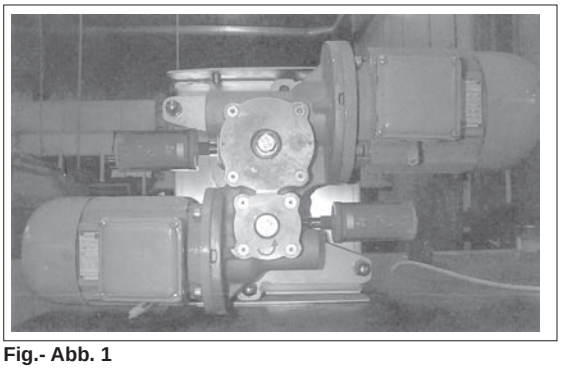

Fig.- Abb. 1
SKF assembly on Batch feeder - *Montage SKF auf Dosierer*
Montage SKF sur doseur - *Montaggio SKF su dosatore*

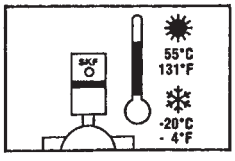

Operatin temperature - *Betriebstemperatur*
Température de fonctionnement
Temperatura di funzionamento

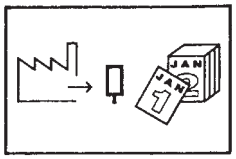

Production date - *Produktionsdatum*
Date de production - *Data di produzione*



WAM®

MBF

- **INQUIRY AND ORDER FORM**
- **ANFRAGE- UND BESTELLBLATT**
- **QUESTIONNAIRE**
- **MODULO DI RICHIESTA**

02.11

1

VAL.062.-.T.4L. 44

MATERIAL TO DOSE
PHYSICAL AND CHEMICAL CHARACTERISTICS

- ☐☐ ☐☐ DENSITY
- ☐☐☐☐ GRANULOMETRY
- ☐ FLUIDITY
- ☐ ABRASIVITY
- ☐ BUILDS UP AND HARDENS
- ☐ STATIC ELECTRICITY GENERATOR
- ☐ DECOMPOSITION - DAMAGING
- ☐ FLAMMABILITY
- ☐ PLASTICITY - TENDENCY TO SOFTEN
- ☐ DUSTINESS
- ☐ AIRATED - FLUIDITY
- ☐ EXPLOSIVITY
- ☐ VISCOSITY - ADHESIVENENESS
- ☐ CONTAMINABILITY
- ☐ DEGRADABILITY
- ☐ PRESENCE OF TOXIC GAS
- ☐ HIGH CORROSIVITY
- ☐ MEDIUM CORROSIVITY
- ☐ HYGROSCOPICITY
- ☐ FORMATION OF GRANULES
- ☐ INTERLOCKS, AGGLOMERATES
- ☐ PRESENCE OF OILS AND GREASE
- ☐ TENDENCY TO COMPACT UNDER PRESSURE
- ☐ LIGHT AND SOFT
- ☐ HIGH TEMPERATURE

REQUEST CAPACITY (dm^3/h) ☐☐☐☐ (kg/h) ☐☐☐☐

TOLERANCE ☐ ☐

LOADING AND HOPPER CAPACITY

MBW MODEL

FEED SCREW AND AGITATOR ☐ ☐ R ☐

ACCESSORIES

MOTORS V Hz

NOTES

DOSIERMEDIUM
PHYSIKALISCHE UND CHEMISCHE EIGENSCHAFTEN

- ☐☐ ☐☐ SCHÜTTGEWICHT
- ☐☐☐☐ KÖRNUNG
- ☐ FLIESSFÄHIGKEIT
- ☐ ABRASIVITÄT
- ☐ HÄRTET LEICHT AUS
- ☐ LÄDT SICH STATICH AUF
- ☐ VERROTTET LEICHT
- ☐ LEICHT ENTZÜNDBAR
- ☐ PLASTIFIZIERT
- ☐ HOHE STAUBENTWICKLUNG
- ☐ HOHER LUFTANTEIL
- ☐ EXPLOSIV
- ☐ VISKOS, STARK HAFTEND
- ☐ LEICHT ZU VERUNREINIGEN
- ☐ ZERFALLT LEICHT
- ☐ ENTWICKELT GIFTIGE GASE ODER RAUCH
- ☐ SEHR KORROSIV
- ☐ HYGROSKOPISCH
- ☐ NEIGT ZUR KORN-ODER KLUMPENBILDUNG
- ☐ ÖL-ODER FETTHALTIG
- ☐ NEIGT ZUM ANBACKEN
- ☐ SEHR LEICHT
- ☐ HOHE TEMPERATUR

GEFORDERTE DURCHSATZLEISTUNG (dm^3/h) ☐☐☐☐ (kg/h) ☐☐☐☐

TOLERANZ %____*☐ ☐

ART DER BESCHICKUNG:
TRICHTERKAPAZITÄT:
BETRIEBSDAUER :(h/Tag)
EINSCHALTUNGEN PRO STUNDE:
WOHIN WIRD DOSIERT ?
WENN VARIABLE DURCHSATZLEISTUNG GEFORDERT, WARUM ?
DOSIERER TYPE:

DOSIER-/HOMOGENISIERWERKZEUG ☐ ☐ R ☐
ZUBEHÖR:

ELEKTROMOTOR (E) V Hz

BEMERKUNGEN :

MATERIAU A DOSER
CARACTERISTIQUES PHYSICO - CHIMIQUES

- ☐☐ ☐☐ POIDS SPECIFIQUE
- ☐☐☐☐ GRANULOMETRIE
- ☐ CORROSION
- ☐ ABRASIVITE
- ☐ DELATATION ET DURCISEMENT
- ☐ ENGENDRE DE L' ELECTRICITE STATIQUE
- ☐ DECOMPOSITION - DETERIOSATION
- ☐ IMFLAMABLE
- ☐ PLASTIQUE
- ☐ SOUPLE
- ☐ AERE - FLUIDE
- ☐ EXPLOSIF
- ☐ VISCOSITE
- ☐ CONTAMINABLE
- ☐ DEGRADABLE
- ☐ CREATION DE GAZ TOXIDE ET DE FUME NUISIBLE
- ☐ HAUTE CORROSION
- ☐ MOYEN CORROSION
- ☐ HYGROSCOPIQUE
- ☐ FORMATION DE GRANULE
- ☐ PRESENTE HUILE ET GRAISSE
- ☐ TASSEMENT SOUS PRESSION
- ☐ TRES LEGER
- ☐ TEMPERATURE ELEVEE
- ☐

DEBIT DEMANDE (dm^3/h) ☐☐☐☐ (kg/h) ☐☐☐☐

TOLERANCE ☐ ☐

SYSTEME DE CHARGEMENT ET CAPACITE DE LA TREMIE

MICRODOSEUR TYPE

VIS DOSAGE ET HO-MOGENEISATION ☐ ☐ R ☐

ACCESSOIRES

MOTEURS V Hz

NOTES

MATERIALE DA DOSARE
CARATTERISTICHE FISICO CHIMICHE

- ☐☐ ☐☐ PESO SPECIFICO
- ☐☐☐☐ GRANULOMETRIA
- ☐ SCORREVOLEZZA
- ☐ ABRASIVITA'
- ☐ ACCRESCIMENTO E INDURIMENTO
- ☐ GENERA ELETTRICITA' STATICA
- ☐ DECOMPOSIZIONE - DETERIORAMENTO
- ☐ INFIAMMABILITA'
- ☐ PLASTICITA ' - TENDENZA ALL'AMMORBIDIMENTO
- ☐ POLVEROSITA'
- ☐ AERAZIONE - FLUIDITA'
- ☐ ESPLOSIVITA'
- ☐ VISCOSITA' E ADESIONE
- ☐ CONTABILITA'
- ☐ DEGRADABILITA'
- ☐ CREAZIONE DI GAS TOSSICO DI FUMO NOCIVO
- ☐ ALTA CORROSIVITA'
- ☐ MEDIA CORROSIVITA'
- ☐ IGROSCOPICITA'
- ☐ FORMAZIONE DI GRANULI,INTRECCIAMENTI, E
- ☐ AGGLOMERATI
- ☐ PRESENZA DI OLII E GRASSI
- ☐ IMPACCAMENTO SOTTO PRESSIONE
- ☐ MOLTO LEGGERO E SOFFICE
- ☐ TEMPERATURA ELEVATA

PORTATA RICHIESTA(dm^3/h) ☐☐☐☐ (kg/h) ☐☐☐☐

TOLLERANZA ☐ ☐

SISTEMA DI CARICO E CAPACITA' TRAMOGGIA

MICRODOSATORE TIPO

UTENSILE DOSAGGIO E OMOG. ☐ ☐ R ☐

ACCESSORI

MOTORI V Hz

NOTE

N.B. Rights reserved to modify technical specifications
N.B. Angaben ohne Gewähr. Änderungen können ohne Vorankündigung vorgenommen werden.
N.B. Toutes données portées dans le présent catalogue n'engagent pas le fabricant. Elles peuvent être modifiéés à tout moment.
N.B. Tutti i dati riportati nel presente catalogo non sono impegnativi e possono subire variazioni in qualsiasi momento.

WAM®

WAMGROUP S.p.A.
Via Cavour, 338
I - 41030 Ponte Motta
Cavezzo (MO) - ITALY

☎ +39 / 0535 / 618111
fax +39 / 0535 / 618226
e-mail info@wamgroup.it
internet www.wamgroup.com
videoconference + 39 / 0535 / 49032

CS-910-555 : Identification sheet

VWTC PROJECT NUMBER:	Iqaluit WWTP	REV:	02
PROJECT NAME:	5000218036	SUBMITTED TO (COMPANY):	
ENGINEER:	F.VINCI	SUBMITTED TO (RESPONSIBLE)	
PROJECT MANAGER:	C. BEKAERT	PROJECT NUM REFERENCE.:	
PHONE NUMBER:		LOT NUMBER:	

SUPPLIER	EQPT CODE	EQPT TAG NO	DIA	DESCRIPTION	INFO 1	INFO 2	INFO 3	APPLIC.	NOTE	REV
TIGER-VAC	TOIEGU317247	VAC-04-910		HP-500 HOISTING	POWERHEAD ASSEMBLY FOR EC-12 w/CLOTH FILTER // Manuf: Tiger-Vac // Model : EC-12 // Silencer 212440 // 240 Vac / 60Hz			HP-500		2

This page is intentionally left blank

Model EC-12(G) HEPA electrically operated industrial vaccuum cleaner

With HEPA fi ltration for Wet & Dry recovery
Filtration effi ency of 99.99% on 0.3 microns

1



- Made of heavy-duty epoxy coated metal and mounted on a 4-wheel base
- Exhaust silencer for a quieter operation

Technical data	Performance	Recovery Capacity	Dimensions
220-240V/60Hz Watts: 1250 Amps: 5.5	Airflow: 110CFM Vacuum Pressure: 110" H_2O	12 gallons (46 litres)	Height: 32" (81 cm) Width: 22" (56 cm) Weight: 45 lbs (20.5 kg)

1. **Model EC-12** 220-240V
2. **Exhaust Silencer** (#212440)
3. **Complete tool kit:**

- HEPA Filter (#213146)
- Polyester main filter (#211311B)
- Floater shut-off mechanism (#211277)
- 10' crush-proof suction hose (#381137A)
- 2-piece wand (#381163)
- Floor tool for dry recovery (#381380)
- Floor tool for wet recovery (# 381381)
- Crevice tool (#381197)

2



Optional Exhaust Silencer

3



Optional

LEFT BLANK

4 – DETAILED TECHNICAL DOCUMENTATION

4.3 – SHOP DRAWINGS SUBMITTAL PACKAGES

4.3.5 – POLYMER PREPARATION SYSTEM FOR DAF – HYDRA-POL 250

LEFT BLANK

SHOP DRAWINGS

Hydrapol 250 Submittal package Date : 2019-01-24

General Information			
Project	**WWTP UPGRADE - IQALUIT**		
Client:	Kudlik Construction Ltd.	Project Number	2018-062
To:	Sandra Rousseau P.Eng., Project Manger	E-mail:	srousseau@kudlik.biz
Contractor	Veolia Water Technologies Canad Inc.	Project Number	5000218036
Address	4105 Sartelon, Ville St. Laurent PQ, H4S 2B3		
Project Manger:	Clément Bekaert	E-mail:	clement.bekaert@veolia.com
Phone:	514-334-7230 x 3243	Cell:	514-246-6232

Information on the Equipment		
Specialty:	Process	
Equipment:	Hydrapol 250	
Drawing Reference:		
Specification reference:	46 36 11	
Article:		
Revision:	Rev02	
Titre:	HP 250 submittal package	
Numero client:	DA-Veolia-DS-05-Hydrapol 250	
Numero Veolia	5000218036_DS_0005_PM_VWT	
Envoyer pour:	Approbation/Information:	Approbation

Consultant Approval

4105 Sartelon
Ville St. Laurent, PQ
H4S-2B3

Phone: 514-334-7230
Fax: 514-334-5070
www.veoliawatertechnologies.ca

This page is intentionally left blank

Project:	IQALUIT
Project#:	5000218036
Document #:	5000218036_DS_0005_PM_VWT
by:	BB
chkd:	GH
appvd:	CB

SUBMITTAL PACKAGE - REV 2

HYDRAPOL 250

This page is intentionally left blank

Project:	IQALUIT
Project#:	5000218036
Document #:	5000218036_DS_0005_PM_VWT
by:	BB
chkd:	GH
appvd:	CB

HYDRAPOL 250

PROCESS DATASHEET

OIM manual section: 4.3.5.1

This page is intentionally left blank

1	VEOLIA					VWT CANADA #	PDS_0005_HYDP-250		
2						Project #	5000218036		
3						Date	2018-09-11		
4						HYDRA-POL			
5	CLIENT	REV	DESCRIPTION		DATE	By	Chkd	App.	
6		1	FOR APPROVAL		2018-09-11	G.H.	C.B.	G.P.	
7	CITY OF IQALUIT	2	FOR APPROVAL		2019-01-24	F.V.	C.B.	G.P.	
8		3							
9	PROJECT	4							
10	IQALUIT	5							
11		6							
12		7							
13		TAG:	APPLICATION :						REV
14	GENERAL	Manufacturer				VEOLIA WATER TECHNOLOGIES CANADA			
15		Model Serie				HP250			
16		VEOLIA Model Number				HP250S-CT-MBF-VC100F-AB575T-S2W-AAS-SSCEP-AC44			
17	PROCESS REQUIREMENT	Powder Type			-	Anionic Polymer			
18		Solution Concentration			%	0,25%			
19		Powder Density			kg/L	0,8			
20		Recommended Maturation Time			min	90			
21		Min Flowrate			lph	6			
22		Avg Flowrate			lph	25			
23		Max Flowrate			lph	40,8			
24	ENVIRONMENT	Equipment Location				Indoor			
25		Min. Temperature			°C	2			
26		Max . Temperature			°C	38			
27		Max. Humidity			%	95			
28		Corrosive Atmosphere				Non Corrosif			
29		Freeze				N/A			
30		Comments							
31	SAFETY	Electrical Classification				Non Hazardous Area			
32		Province				Nunavut			2
33	OPERATING CONDITIONS	Batch size			L	*288*			
34		Kg / batch			Kg	*0,72*			
35		Theoretical feeder cap/rev			Kg/rev	*0,09867*			
36		Feeder rpm			rpm	*24,8*			
37		Effective mass flowrate			kg/min	*1,83*			
38		Pre-rinsing time			min	*1,9*			
39		Dosing time			sec	*23,6*			
40		Maturing time (incl transf)			min	60			
41		Emptying time			min	0,49			
42		Total time			min	61,8			
43	TECHNICAL DESCRIPTION	Mechanical Components	Skid Frame	Manufacturer | Model	- | -	VWTC	LATIS#		
44				Material	-	SS304			
45				Color	-	N/A			
46				Dry Polymer Storage Type	-	Vacuum Conveyor & Hopper			
47			Vacuum Conveyor	Manufacturer | Model	- | -	Tiger-Vac			
48			-	Manufacturer | Model	- | -		Motor Head EC-12 (210951)		
49			Dry Feeder	Manufacturer | Model	- | -	WAM	MBF 073 I:70 4-5-D-E//575V//NEMA		
50				Motor's Manufacturer |Type	-	BALDOR	NEMA		2
51				Horsepower	HP	0.75	0.5		
52			Eductor	Manufacturer | Model	- | -	SCHUTTE&KOERTING	1,5"- Fig264 PVC Eductor		
53				Material		PVC			
54			Maturation Mixer	Manufacturer | Model	- | -	ENVIREQUIP / NORD	HP250-EVG01-0.33		
55				Motor's Manufacturer |Type	-	NORD			
56				Horsepower	HP	0.33			
57			Maturation Tank	Manufacturer | Model	- | -	VWTC			
58				Material |Nominal Capacity	- | L	304L S.S.	250		
59				Transfer Type		Stacked Maturation Tank			
60			Storage Tank	Manufacturer | Model	- | -	VWTC			
61				Material |Nominal Capacity	- | L	304L S.S.	250		
62			Tanks Location / Feeder			Right (Standard)			
63			Isolation Valve - Driving Water	Manufacturer | Model	-	CHEMLINE	21A010EC		
64				Diameter | Quantity	-	1"	1		
65			Solenoid Valve - Driving Valve	Manufacturer | Model	120VAC	ASCO	8210G004-120VAC		
66				Diameter | Quantity	-	1"	1		
67			Metering Valve- Wetting Cone	Manufacturer | Model	-	CHEMLINE	SM2A005ES		
68				Diameter | Quantity	-	1/2"	1		
69			Solenoid Valve - Feeder	Manufacturer | Model	120VAC	ASCO	8345G001-120VAC		
70				Diameter | Quantity	-	1/4"	1		
71			Actuated Transfer Valve	Manufacturer | Model	120VAC	CHEMLINE	57A020AEL-A/ER20.12		
72				Diameter | Quantity	-	2"	1		
73			Check Valve- Liquid Polymer	Manufacturer | Model	-	CHEMLINE	BTA015EC		
74				Diameter | Quantity	-	11/2"	1		
75			Isolation Valve- Tank Outlet	Manufacturer | Model	-	CHEMLINE	21A015EC		
76				Diameter | Quantity	-	11/2"	1		
77			Isolation Valves- Tanks Drains	Manufacturer | Model	-	CHEMLINE	21A015EC		
78				Diameter | Quantity	-	1 1/2"	2		
79			Static Mixer	Manufacturer | Model	-	KOFLO	1,5-40C-4-6-2		
80				Diameter | Quantity	-	1.5"	1		
81			Tuyauterie	VWTC Piping Class Code	-	A050C			
82				Pipe Material	-	PVC sh80			
83				Design Pressure	psig	80			2
84				Design Temperature	°C	38			
85				Operating Pressure	psig	65			
86				Test Pressure	psig	120			2
87				Test duration	min	60			
88				Test Fluid	-	Eau			

1	VEOLIA					VWT CANADA #		PDS_0005_HYDP-250		
2						Project #		5000218036		
3						Date		2018-09-11		
4						HYDRA-POL				
5	CLIENT	REV	DESCRIPTION			DATE	By	Chkd	App.	
6		1	FOR APPROVAL			2018-09-11	G.H.	C.B.	G.P.	
7	CITY OF IQALUIT	2	FOR APPROVAL			2019-01-24	F.V.	C.B.	G.P.	
8		3								
9	PROJECT	4								
10	IQALUIT	5								
11		6								
12		7								
13		TAG:	APPLICATION :							REV
89	TECHNICAL DESCRIPTION	ELECTRICITY, INSTRUMENTATION & CONTROLS	INSTRUMENTS	Hopper Low Level Switch	Manufacturer | Model	24 VDC	Endress&Hauser	FTE31-C6DB11-A		
90					Diameter | Quantity		MNPT 1-1/2	1		
91				Service Water Pressure Switch	Manufacturer | Model		Allen-Bradley	836T-T253J		
92					Diameter | Quantity		1/4" MNPT	1		
93				Service Water Pressure Gauge	Manufacturer | Model		Ashcroft 2.5"	25-1009SWL-02L-0/160PSIG + Glycerine		
94					Diameter | Quantity		N/A	1		
95				Tanks Level Transmitter	Manufacturer | Model	24 VDC	Endress&Hauser (Pressure)	PMC21-CA1V1ECVXJJ		
96					Diameter | Quantity		1/2" MNPT	2		
97				HYDRASTAT	Manufacturer | Model		Hach	D3725E2T		
				HYDRASTAT controller	Manufacturer | Model	120 VAC	Hach	LXV404.99.00552		
98			CONTROL PANEL	PLC	Manufacturer | Model		Allen-Bradley	CompactLogix L16 (1769L16ERBB1B)		
99				HMI	Manufacturer | Model		Allen-Bradley	PanelView Plus 7 400 (2711PT4W21D8S)		
100					HMI Screen Size		4"			
101				Panel Enclosure	Material | Enclosure Rating		Painted steel	NEMA-4		
102			ELECTRICITY	Power Supply	Voltage | Amps		575V/3Ph/60Hz	30 Amps		
103				Frame Grounding			By others			
104				Wiring	Pre wired (Yes/No)		Yes			
105					Cable Type		TECK 90-Armoured Cable			
106	UTILITIES	Service Water for Chemical Transport		Required Driving Water Flowrate		m^3/h	5.2			
107				Min. Pressure (in operation at Qmax)		psig	70			
108				Residual Chlorine Concentration		mg Cl_2/L	<0.5 mg Cl2/L			
109				Driving Water Temperature Range		Deg C	10 deg C <T<25 deg C			
110	CONNECTIONS	Driving Water Inlet			Diameter (NPS)	in	1"			
111					Type		Socket Union			
112		Storage Tank Outlet			Diameter (NPS)	in	1-1/2"			
113					Type		Socket Union			
114		Drain			Diameter (NPS)	in	1-1/2"			
115					Type		Socket Union			
116		Overflow			Diameter (NPS)	in	2"			
117					Type		By others			
118		Anchors			Qty		See General Arrangement DWG			
119					Supply		By others			
120	CODE, APPROVAL & TESTS	Piping Design Code					ASME B31.3 Non Certified			
121		Control Panel Approval					CSA/cUL			
122										
123	OVERALL DIMENSIONS AND WEIGTH	Weight (dry)				kg	See General Arrangement DWG			
124		Overall Length				mm				
125		Overall Width				mm				
126		Overall Heigth				mm				

Project:	IQALUIT
Project#:	5000218036
Document #:	5000218036_DS_0005_PM_VWT
by:	GH
chkd:	GP
appvd:	CB

HYDRAPOL 250

SUPPLIER TECHNICAL DATASHEETS

OIM manual section: 4.3.5.2

This page is intentionally left blank

CS-300-2003 : Identification sheet

VWTC PROJECT NUMBER:	Iqaluit WWTP	REV:	01
PROJECT NAME:	5000218036	SUBMITTED TO (COMPANY):	
ENGINEER:	G. HÉBERT	SUBMITTED TO (RESPONSIBLE)	
PROJECT MANAGER:	C. BEKAERT	PROJECT NUM REFERENCE.:	
PHONE NUMBER:		LOT NUMBER:	

SUPPLIER	EQPT CODE	EQPT TAG NO	DIA	DESCRIPTION	INFO 1	INFO 2	INFO 3	APPLIC.	NOTE	REV
CHEMLINE	VABFPV352256	BV-04-743	50 mm (2")	HP-250 VALVE	TYPE: BUTTERFLY | 150 PSI//MANUFACTURER : CHEMLINE//MODEL : 57A020AEL-A / ER20.12//CONNECTION TYPE : WAFER | //BODY : PVC// SEAL | SEAT :EPDM | EPDM// STEM : 403 SS	ACTUATOR TYPE : ELECTRIC// MANUFACTURER : CHEMLINE// MODEL # :ER20.12// 115/220 VAC		HP-250		1

This page is intentionally left blank

PDF Published December 13, 2017

Type 57α/56/75 Wafer Elastomer Seated Butterfly Valves

CHEMLINE PLASTICS
SUPERIOR FLOW SOLUTIONS

Chemline elastomer seated butterfly valves have a successful history of over 40 years and have replaced metal valves in many difficult process applications. Type 57α body, disc and seat are designed to offer excellent flow characteristics and low closing torques. Stem torques are unaffected by excessive flange bolt torques. Valves up to 16" have corrosion resistant FRP gear operators. Top flange and shaft dimensions are to ISO 5211 standard for easy mounting of actuators. A large selection of body, disc and seat materials permit these valves into a wide range of on/off and throttling control applications in lines up to 24" size.

PVC PP PVDF PDCPD[1]

CRN Registered Consult Chemline

NSF[3] Certified to NSF/ANSI 61

BODY TYPE: Type 57α: 1-1/2" – 14"
Type 56: 16"
Type 75: 18" – 24"

MATERIALS: Body: PVC, PP, PVDF, PDCPD[1]
Disc: PP (standard), PVC, PVDF

SEAT & O-RINGS: EPDM, FKM (Viton®)[2]



Gear Operated
- 8" to 24"

Lever Operated
- 1-1/2" to 8"

features

Compact and Light Weight

High Corrosion Resistance
- Solid plastic body and disc
- Polypropylene hand levers up to 8"
- FRP gear operators up to 16"

Abrasion Resistant
- Solid plastic disc
- PVDF disc available for high abrasion resistance

Easy Actuator Mounting
- Valves up to 16" have standard ISO 5211 top flange and shaft dimensions

Easily Installed
- Full bolt hole circle makes installation and alignment easy

Better Sealing
- Spherical disc/seat seal design offers effective sealing at lower stem torques, and long life for the seat

Better Flow
- Streamlined disc offers higher C_V values

Protection against Flange Bolt Over Tightening
- Body gussets and new seat design prevent excessive flange bolt torques from affecting valve stem torques

CRN Registration numbers by province
- Ontario: OC11045.5
- Newfoundland: OC11045.50
- Saskatchewan/Manitoba/Quebec: OC11045.56
- New Brunswick: OC11045.57
- Nova Scotia: OC11045.58
- P.E.I.: OC11045.59
- British Columbia: not required
- Alberta: not required[4]

[1] PDCPD=Polydicyclopenthadiene.
[2] Other materials are available.
[3] Type 57α PVC valves are certified under NSF/ANSI Standard 61 for contact with drinking water.
[4] Not required for non-expandable fluids.

12/17 ©Chemline Plastics Limited 2017
Chemline is a registered trade mark of Chemline Plastics Limited

Type 57α Butterfly Valves 1-1/4" to 14"

engineered for superior performance

Polypropylene Hand Lever
- Lockable

Sturdy PPG Position Lock
- 19 stops for fine flow control
- Resists high torque loads

Deluxe FRP Gear Operator
- Yellow position indicator is NAMUR design for easy mounting of a limit switch box
- IP 67 enclosure resists short term immersion



Full Bolt Circle
- For easy installation

Gussets on Body
- Prevent excessive compression of seat

Moulded Elastomer Seat
- Easily replaceable
- Flange face has raised "o-ring" profile
  – *Low flange bolt torques to seal*

PP Bushing with Double O-Rings
- Proven superior shaft seal design

Special Sealing Design
- Seals and disc have spherical sealing surfaces
  – *Lower stem torques to seal*
  – *Longer seat life compared to conventional designs*



Streamlined Disc
- High C_V values
- Good flow characteristics, important for control applications

Shaft O-Ring
- For vacuum resistance

Stainless Steel Shaft
- Not wetted
- Engagement over full length of the disc

Type 57α Butterfly Valves 1-1/4" to 14"

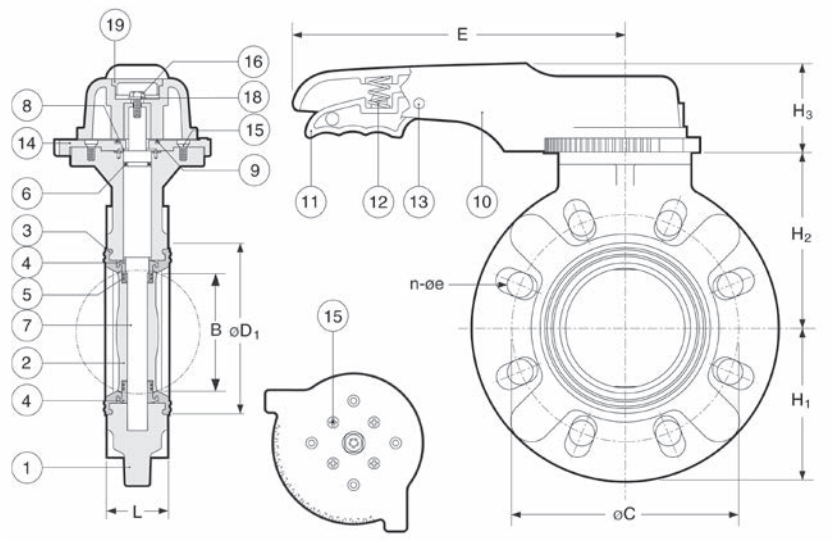

1-1/2" – 8" Lever Operated

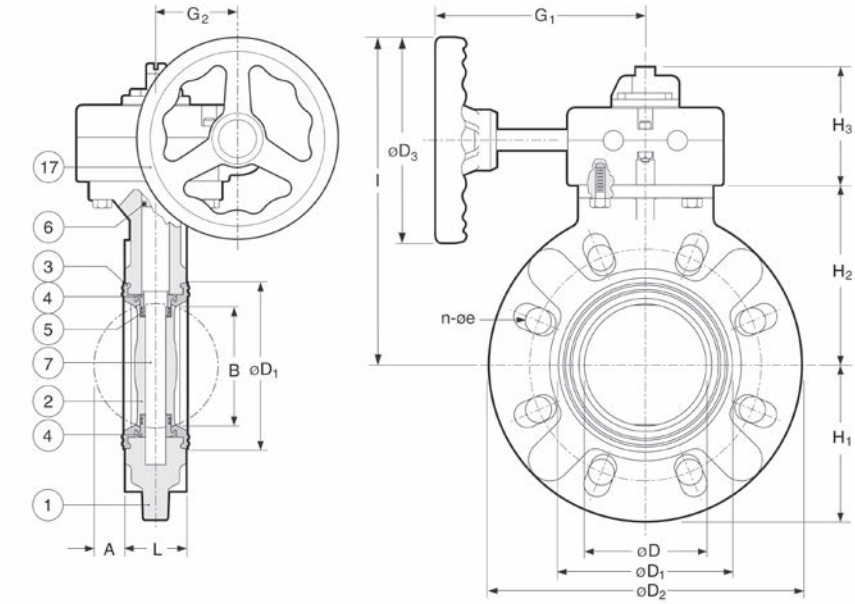

8" to 14" Gear Operated

PARTS

▲ Recommended Spare Parts

No.	Part	Pcs.	Materials
1	Body	1	PVC, PP PVDF, PDCPD[1]
2	Disc	1	PP, PVC, PVDF
3▲	Seat	1	EPDM, FKM (Viton®)
4	Seat Bushing	2	PP, PVC, PVDF
5▲	Bushing O-Ring	4	EPDM, FKM (Viton®)
6▲	Shaft O-Ring	1	EPDM, FKM (Viton®)
7	Shaft	1	403 SS
8	Shaft Retainer	1	PP
9▲	Plate O-Ring	1	EPDM, FKM (Viton®)
10	Hand Lever	1	PP
11	Trigger	1	PPG
12	Spring	1	304 SS
13	Pin	1	PPG
14	Position Lock Plate	1	PPG
15	Plate Screw	4	304 SS
16	Hand Lever Bolt	1	304 SS
17	Gear Operator	1	FRP housing, PP handwheel & 304 SS shaft
18	Handle Lever Washer	1	304 SS
19	Hand Lever Cap	1	PPG

[1] PDCPD=Polydicyclopenthadiene.

DIMENSIONS INCHES

Size	L	A	B*	C	n	e	D	D_1	D_2	D_3	E/G_1	G_2	H_1	H_2	H_3	I
1-1/2"	1.54	0.12	0.87	3.88	4	0.62	1.77	2.80	5.91	–	8.7	–	3.0	3.9	2.2	–
2"	1.65	0.28	1.46	4.75	4	0.75	2.20	3.19	6.50	–	8.7	–	3.3	4.3	2.2	–
2-1/2"	1.81	0.46	2.03	5.50	4	0.75	2.72	3.74	7.28	–	8.7	–	3.6	4.7	2.2	–
3"	1.81	0.61	2.43	6.00	4	0.75	3.03	4.13	8.31	–	9.8	–	4.2	5.3	2.2	–
4"	2.20	0.91	3.36	7.50	8	0.75	4.02	5.28	9.37	–	9.8	–	4.7	5.9	2.2	–
5"	2.60	1.24	4.36	8.50	8	0.88	5.08	6.65	10.35	–	12.6	–	5.2	6.6	2.7	–
6"	2.80	1.56	5.20	9.51	8	0.88	5.91	7.48	11.22	–	12.6	–	5.6	7.2	2.7	–
8" Lever	3.43	2.13	6.87	11.75	8	0.88	7.68	9.53	13.39	–	15.8	–	6.7	8.4	2.7	–
8" Gear	3.43	2.13	6.87	11.75	8	0.88	7.68	9.53	13.39	6.3	6.6	2.5	6.7	8.1	3.6	12.64
10"	4.41	2.72	8.80	14.25	12	1.00	9.84	11.89	16.57	6.3	6.6	2.5	8.3	9.5	3.6	14.02
12"	5.08	3.43	10.79	17.00	12	1.00	11.93	14.17	19.21	11.8	9.5	3.9	9.6	11.7	4.3	19.29
14"	5.08	4.37	12.85	18.75	12	1.12	13.82	15.47	21.22	11.8	9.5	3.9	10.6	12.8	4.3	20.35

* **B**=Minimum inside diameter (I.D.) of mating pipe. If I.D. of pipe is **B** dimension or less, the inside of pipe and must be chamfered or spacers provided. Consult Chemline.

Type 56/75 Series Butterfly Valves 16" to 24"

New PDCPD bodies have full thickness design

- Prevents excessive compression of seat if flange bolts are over torqued

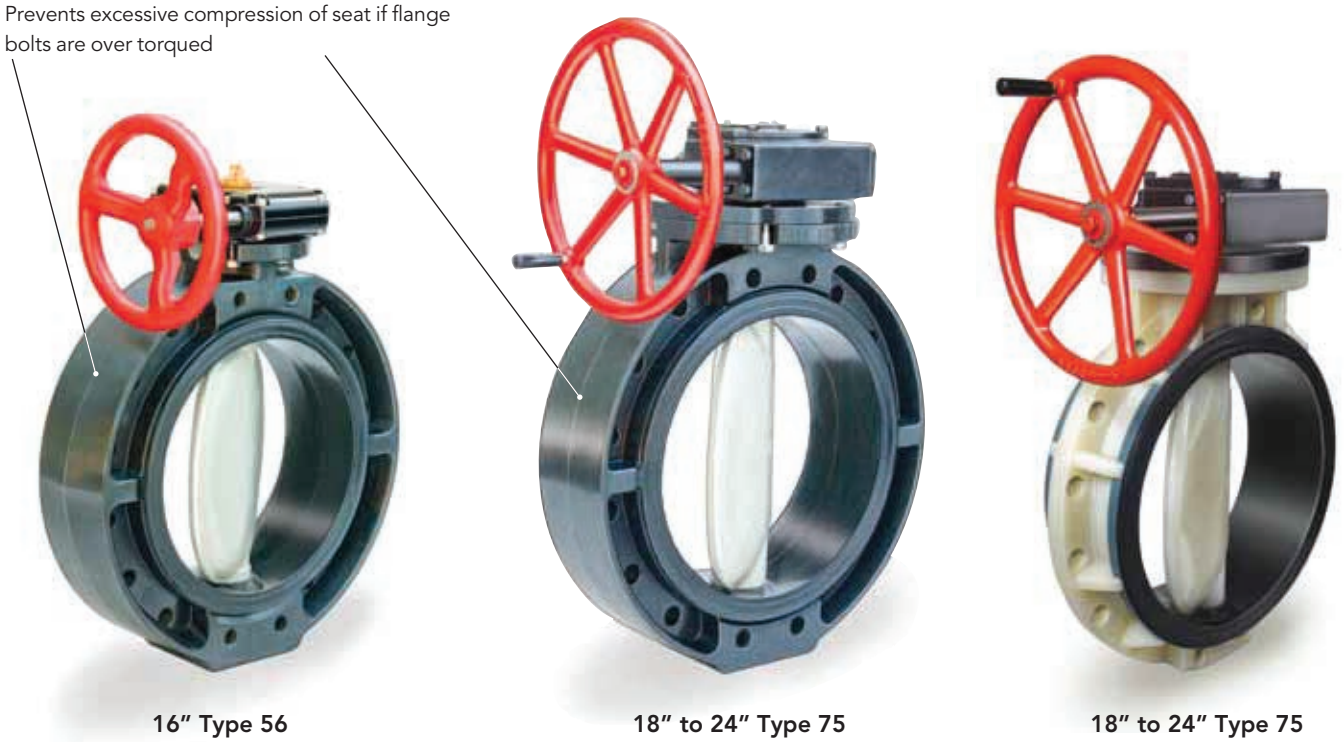

16" Type 56 with PDCPD body, PP disc

18" to 24" Type 75 with PDCPD body, PP disc

18" to 24" Type 75 with PVDF body, PVDF disc

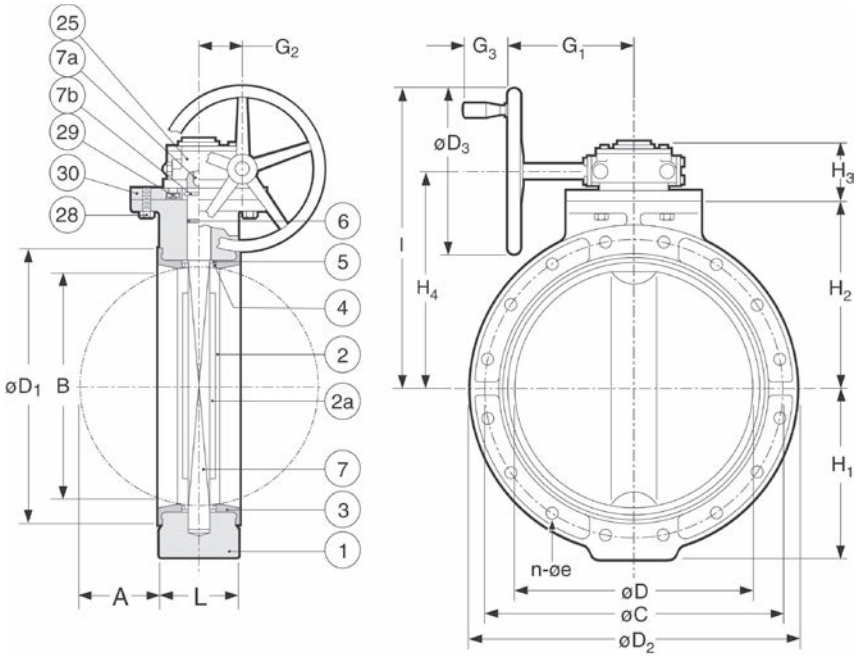

Drawing body detail is for PDCPD version. Detail for PP and PVDF body versions are slightly different. Consult Chemline.

PARTS

▲ Recommended Spare Parts

No.	Part	Pcs.	Materials
1	Body	1	PDCPD[1], PP, PVDF
2	Disc	1	PP, PVDF
2a	Disc Insert	1	Carbon Steel
3▲	Seat	1	EPDM, FKM (Viton®)
4▲	Large Disc O-Ring	2	EPDM, FKM (Viton®)
5▲	Small Disc O-Ring	2	EPDM, FKM (Viton®)
6▲	Shaft O-Ring	1	EPDM, FKM (Viton®)
7	Shaft	1	403 SS
7a	Shaft Key	1	Carbon Steel
7b	Snap Ring	1	304 SS
17	Gear Operator[2]	1	Cast Aluminum Epoxy Coated
28	Bolt	4	304 SS
29	Bolt	4	304 SS
30	Gear Operator Stand	1	400 SS

[1] PDCPD=Polydicyclopenthadiene.

[2] Gear Operator for 16" only is FRP with PP hand wheel and 304 SS shaft.

DIMENSIONS INCHES

Size	Type	L	A	B*	C	n	e	D	D_1	D_2	D_3	G_1	G_2	G_3	H_1	H_2	H_3	H_4	I
16"	56	6.65	4.67	14.53	21.25	16	1.12	15.98	18.50	24.41	11.81	10.7	3.9	–	12.4	13.8	4.3	15.35	21.3
18"	75	7.05	5.38	16.34	22.75	16	1.26	17.80	20.67	26.18	16.14	12.6	4.3	3.4	13.2	14.6	5.5	17.44	25.6
20"	75	7.48	6.15	18.29	25.00	20	1.26	19.76	22.64	28.35	16.14	12.6	4.3	3.4	14.4	15.8	5.5	18.62	26.8
24"	75	8.23	7.76	22.27	29.50	20	1.38	23.74	27.01	32.01	16.14	12.6	4.3	3.4	16.7	18.3	5.5	21.18	29.3

* **B**=Minimum inside diameter (I.D.) of mating pipe. If I.D. of pipe is **B** dimension or less, the inside of pipe and must be chamfered or spacers provided. Consult Chemline. **Note:** Type 75 was formerly referred to as TB Series.

Elastomer Seated Butterfly Valves

WORKING PRESSURES PSI

NET WEIGHTS LB.

Size	Valve Type	PVC Body/PP Disc			PP Body/PP Disc		PVDF Body/PVDF Disc/FKM(Viton®)				Body/Disc		
		0-50°C 32-122°F	60°C 140°F	83°C 181°F	–20-60°C –4-140°F	80°C 176°F	–20-60°C –4-140°F	79°C 175°F	100°C 212°F	121°C 250°F	PVC/ PP	PP/ PP	PVDF/ PVDF
1-1/2″	57α	150	70	30	150	105	150	105	90	75	2.9	2.4	3.1
2″	57α	150	70	30	150	105	150	105	90	75	3.3	2.6	3.7
2-1/2″	57α	150	70	30	150	105	150	105	90	75	3.7	3.1	4.2
3″	57α	150	70	30	150	105	150	105	90	75	4.2	3.5	4.9
4″	57α	150	45	30	150	105	150	105	90	75	5.5	4.4	6.4
5″	57α	150	45	30	150	105	150	105	90	75	10.8	8.8	12.6
6″	57α	150	45	30	150	105	150	105	90	75	12.8	10.1	15.2
8″ Lever	57α	150	40	20	150	90	150	90	75	60	20.5	16.3	24.3
8″ Gear	57α	150	40	20	150	90	150	90	75	60	23.6	19.6	27.6
10″	57α	150	40	20	150	90	150	90	75	60	32.4	26.9	41.0
12″	57α	112	30	15	112	60	112	60	45	30	61.7	52.9	76.1
14″	57α	112	30	7	112	60	112	60	45	30	66.6	58.0	81.1

WORKING PRESSURES PSI

NET WEIGHTS[1] LB.

Size	Valve Type	PDCPD Body/ PP Disc			PDCPD Body/ PVDF Disc/FKM(Viton®)				PP Body/ PP Disc		PVDF Body/ PVDF Disc/FKM(Viton®)				Body/Disc		
		0-50°C 32-122°F	60°C 140°F	83°C 181°F	0-30°C 32-86°F	60°C 140°F	80°C 176°F	100°C 212°F	–20-60°C –4-140°F	80°C 176°F	–20-60°C –4-140°F	79°C 175°F	100°C 212°F	121°C 250°F	PDCPD/ PP	PDCPD/ PVDF	PVDF/ PVDF
16″	56	110	90	15	110	90	45	30	90	45	90	45	30	15	79.4	103	101
18″	75	110	90	15	110	90	45	30	75	45	70	45	30	15	140.	221	227
20″	75	110	90	15	110	90	45	30	50	45	50	30	20	15	170.	252	273
24″	75	110	90	15	110	90	45	30	50	45	50	30	20	15	251.	309	346

Note: Type 75 was formerly referred to as TB Series.

[1] Weights are for valves excluding lugs.

Cv VALUES VS. DISC ANGLE

BOLT TORQUES

Size	15°	30°	45°	60°	75°	90°	Recommended Flange Bolt Torques Foot-Lbs.
1-1/2″	0	3.6	14.2	30.5	49.7	71.	15
2″	0	6.0	24.	51.6	84.	120.	17
2-1/2″	0	12.5	50.	108.	175.	250.	17
3″	0	15.0	60.	129.	210.	300.	22
4″	0	23.5	94.	202.	329.	470.	22
5″	0	41.5	166.	357.	581.	830.	30
6″	0	55.	220.	473.	770.	1,100.	30
8″	0	125.	500.	1,075.	1,750.	2,500.	41
10″	0	193.	772.	1,660.	2,702.	3,860.	41
12″	0	285.	1,140.	2,451.	3,990.	5,700.	44
14″	0	322.	1,288.	2,769.	4,508.	6,440.	44
16″	0	300.	2,277.	4929.	6,822.	8,340.	58
18″	0	392.	2,973.	6436.	8,908.	10,890.	58
20″	0	506.	3,838.	8309.	11,501.	14,060.	72
24″	0	666.	5,051.	10,934.	15,133.	18,500.	72

options + accessories



Shaft Extensions

- Different materials and lengths are available
- Several designs:
  - with no housing for indoors
  - with waterproofed PVC housing for indoors or outdoors
  - with stainless steel housing for buried services

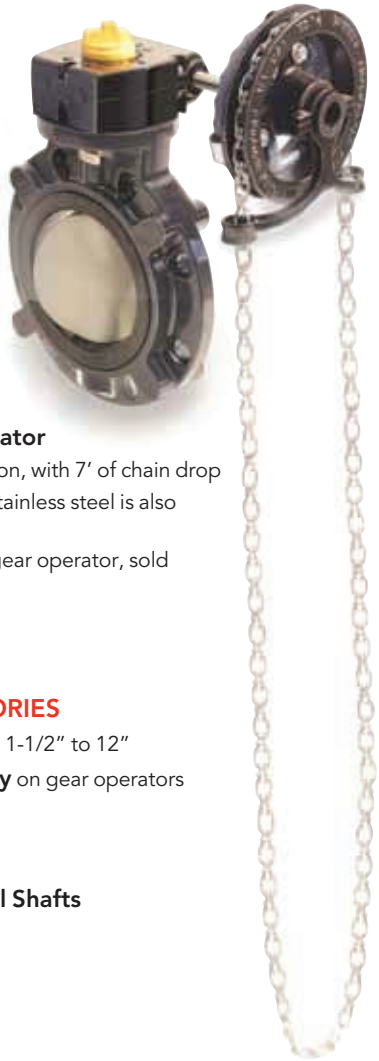

Chain Wheel Operator

- For overhead opeation, with 7' of chain drop
- Cast iron standard, stainless steel is also available
- Requires the use of gear operator, sold separately

OTHER ACCESSORIES

- **Gear Operator** on 1-1/2" to 12"
- **Locking Capability** on gear operators

OPTIONS

- **Different Seats**
- **Different Material Shafts**



Optional Lock-out Handle & Hasp

- To prevent unauthorized operation of the valve during maintenance shut-downs
- Padlocks go through holes in hasp

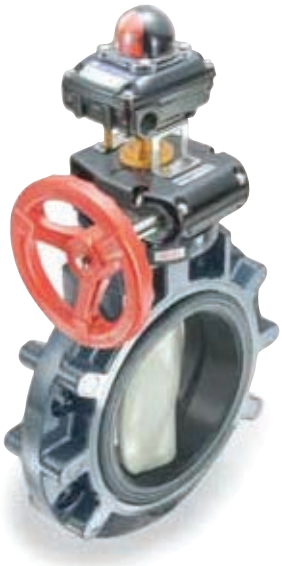

Limit Switches

- Available for lever and gear operated valves
- Electrical feedback of manual valve position
- NEMA 4X enclosure, position indicator beacon, 2x SPDT switches, stainless steel hardware



Municipal Operating Nut

- For buried service

Elastomer Seated Butterfly Valves

electric + pneumatic actuation

Pneumatic and Electric Actuators

- A complete range of actuators and control accessories are available, mounted to valves using PPG plastic brackets and 304 stainless steel couplings. Refer to separate data sheets.
- All actuators are CSA approved, have NEMA 4S enclosures, stainless steel hardware and permanently lubricated gear train



A Series Electric

- butterfly valves up to 6"
- up to 2000 in-lbs torque
- On-Off (3 wire) adjustable travel, optional On-Off (2 wire), failsafe multi-turn, 3 position modulating, BUS
- Visual feedback, optional 2 feedback switches, feedback potentiometer and feedback transmitter



Q Series Electric

- butterfly valves up to 3"
- 300 in-lbs torque
- On-Off (3 wire) adjustable travel, optional On-Off (2 wire), failsafe 3-position, modulating
- Visual feedback, optional 2 feedback switches, feedback potentiometer and feedback transmitter



V Series Electric

- butterfly valves up to 20"
- up to 8850 in-lbs torque
- On-Off (2/3 wire) adjustable travel, optional failsafe, modulating, BUS
- Visual feedback, 2 feedback switches, optional 2 extra feedback switches, feedback potentiometer and feedback transmitter



Pneumatic Actuators

PA Series

- butterfly valves up to 24"
- up to 40,660 in-lbs torque
- industrial process, submerged
- bleach/water washdown
- Rilsan-coated aluminum

PP Series

- butterfly valves up to 6"
- up to 1,335 in-lbs torque
- industrial process with minimal use of metal
- Glass-filled Polyamide

P3 Series

- butterfly valves up to 10"
- up to 8,850 in-lbs torque
- corrosive, submerged and off-shore applications
- 316 stainless steel

ORDERING EXAMPLE

Chemline Butterfly Valves					57	A		060		B	E	L
Type 57α 1-1/2" to 14": **57** **Type 56** 16": **56** **Type 75** 18" to 24": **75**												
Body	**A** – PVC	**B** – PP	**K** – PVDF	**D** – PDCPD[1]								
Size	**015** – 1-1/2"	**020** – 2"	**025** – 2-1/2"	**030** – 3"	**040** – 4"	**050** – 5"	**060** – 6"	**080** – 8"				
	100– 10"	**120** – 12"	**140** – 14"	**160** – 16"	**180** – 18"	**200** – 20"	**240** – 24"					
Disc	**B** – PP	**K** – PVDF		**A** – PVC								
Seat	**E** – EPDM	**V** – FKM (Viton®)		**N** – Nitrile		**F** – FKM-F (Viton®)[2]		**C** – FKM-C (Viton®)[2]				
Operator		**L** – Hand Lever		**G** – Gear Operator								

Example: Chemline Type 57α Butterfly Valve, PVC body, 6", with PP disc, EPDM seat, hand lever.

[1] PDCPD=Polydicyclopenthadiene. [2] FKM-F is special "Viton®" for concentrated acids and FKM-C is special "Viton®" for chlorines.

CHEMLINE PLASTICS
SUPERIOR FLOW SOLUTIONS

55 Guardsman Road, Thornhill, ON, L3T 6L2, Canada | ISO 9001:2008 Certified
1.800.930.2436 (CHEM) | fax.905.889.8553 | request@chemline.com | chemline.com

This page is intentionally left blank

PDF Published January 10, 2018

E Series Electric Actuators

CHEMLINE PLASTICS
SUPERIOR FLOW SOLUTIONS

The Chemline E Series Electric Actuator is a reversible rotary unit with output torques up to 880 in.-lb. These units are ideal for all Chemline ball and butterfly valves up to 4". The E Series is compact, light weight and has a plastic housing. A large black handle provides manual override and position indicator.

Chemline also offers complete actuated ball, butterfly and diaphragm valves, assembled and bench tested. Actuation service is also available for all quarter-turn metal valves.

for Chemline ball & butterfly valves up to 4"

SERIES: ER10 – 90 in.lb.
ER20 – 180 in.lb.
ER35 – 310 in.lb.
ER60 – 530 in.lb.
ER100 – 880 in.lb.

VOLTAGES: 115/220 VAC, 12/24 VDC, 24 VAC

ENCLOSURE: Polyamide 6.6
NEMA 4X



E Series on SM2 Series True Union Ball Valve

features

Multiple Operation/Control Options
- 2 & 3-wire (standard)
- Adjustable Travel (standard)
- Manual Override (standard)
- Bus communication (optional)
- Digital Positioner (optional)
- Failsafe (optional)
- Cold Weather Heater/Thermostat (standard)

Multiple Feedback Options
- Visual (standard)
- Feedback Switches (standard)
- Extra Feedback Switches (optional)
- Feedback Potentiometer (optional)
- Feedback Transmitter (optional)

Special Inspection Labelled by CSA
(Canadian Standards Association)

NEMA 4X Enclosure
- Waterproof, corrosion proof with high impact Polyamide 6.6 housing and stainless steel fasteners

No Maintenance
- Permanently lubricated gear train
- Designed for 250,000 + cycles

Thermal Overload Protection
- Thermal switch embedded onto control board

Extended Operating Temperature Range
- –10 to 60C (15 to 140°F) (standard)

Standard Mounting Dimensions
- ISO-5211 mounting bolt circle and drive

technical

Operating Voltage
- 115/220 VAC (standard)
- 12/24 VDC or 12 VAC (optional)

Electrical Conduit Entry
- 2 x 1/2" NPT

Motor Direction
- Reversing

Motor Cycle Time
- Fixed (standard)

01/18 ©Chemline Plastics Limited 2018
Chemline is a registered trade mark of Chemline Plastics Limited

DIMENSIONS INCHES

Port View

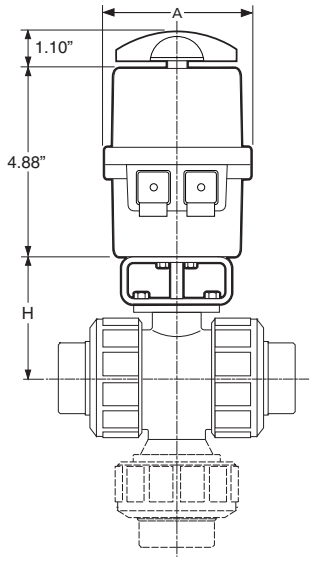

Type 21 True Union and
Type 23 Multi Port Ball Valves

Port View

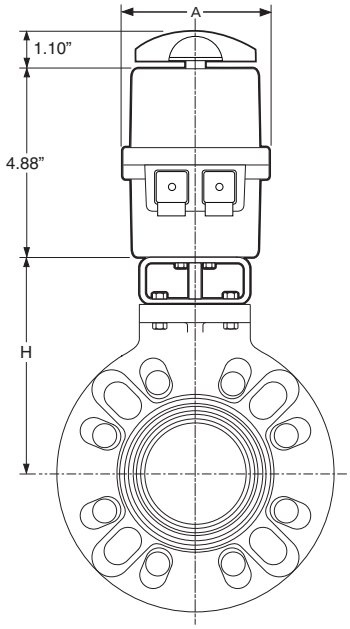

Type 57 Butterfly Valves

Side View / Port View

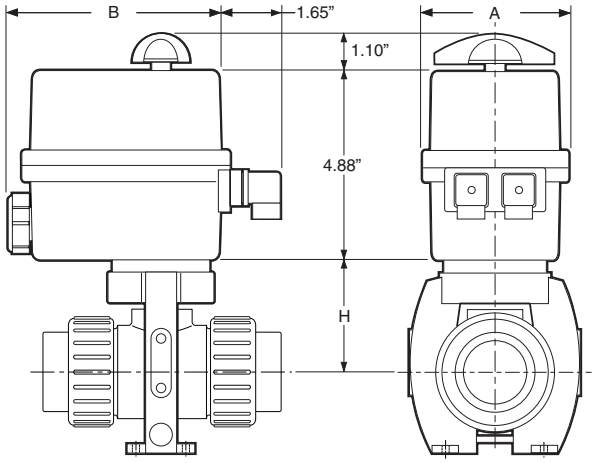

SM Metering and SP Proportional
True Union Ball Valves

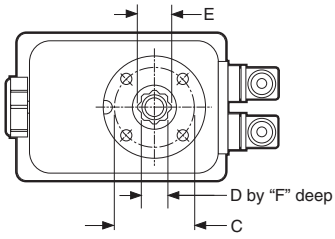

Bottom View

DIMENSION INCHES

Model	A	B	C/Thread	D	E Inches (ISO)	F
ER10	3.62	5.35	1.42 (F03) M5	0.55	0.551" 14mm	0.640
ER20	3.62	5.35	1.65 (F04) M5	0.55	0.551" 14mm	0.640
ER35	5.04	5.94	1.97 (F05) M6	0.87	0.551" 14mm	0.945
ER60	5.04	5.94	1.97 (F05) M6	0.87	0.866" 22mm	0.945
ER100	5.04	5.94	2.76 (F07) M8	0.87	0.866" 22mm	0.945

DIMENSION "H" INCHES

Valve Size	Valve Type				
	Type 21 Ball	Type 23 Multiport Ball	SM Metering/SP Proportional Ball	Type 57 Butterfly	ChemValve Butterfly
1/2"	2.76	2.76	1.97	–	–
3/4"	3.01	3.01	2.36	–	–
1"	3.29	3.29	2.60	–	–
1-1/4"	3.64	3.98	2.91	–	–
1-1/2"	3.98	3.98	3.76	5.65	–
2"	4.43	4.43	4.90	5.95	6.89
2-1/2"	5.12	5.47	–	6.35	7.52
3"	5.47	5.47	–	6.65	8.27
4"	–	–	–	7.35	9.05

Valves not to scale. For valve dimensions and parts refer to separate valve data sheets.

E Series Electric Actuators

SPECIFICATIONS

Model	Running Torques (in.-lbs.)	Nm	115 VAC / 220 VAC (x=12) Power Draw (Watts)[1]	Duty Cycle	12 to 24 VDC & 24 VAC (x=346) Power Draw (Watts)[1]	Duty Cycle	Cycle Time/90° (sec.)	Weight (lbs.)
ER10	90	10	15W	80%	15W	80%	11	3.0
ER20	180	20	15W	80%	15W	80%	12	3.0
ER35	310	35	15W	80%	15W	80%	7	6.2
ER60	530	60	45W	80%	45W	80%	12	6.9
ER100	880	100	45W	80%	45W	80%	23	6.9

[1] Power draw values are for actuators with locked rotors.

AC WIRING 115 VAC/220 VAC

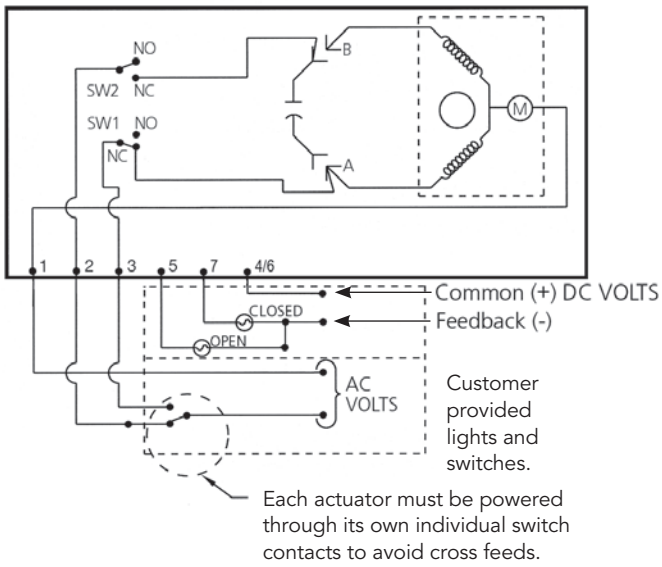

VALVE OPERATION

Neutral – To Terminal 1
To Open – Power to Terminal 2
To Close – Power to Terminal 3

NOTES:

1. Actuator shown in counter clockwise extreme of travel, or 'open' position.
2. Motor has a thermal protector as shown by (M) in the diagram.

OPERATION/CONTROL OPTIONS

- **Bus Communication** – Proprietary bus communication/operation capability
- **Digital Positioner** – Onboard digital position controller accepts 4 to 20 mA, 0 to 20 mA, 0 to 10 VDC or other inputs. These units are easier to calibrate, have faster response and provide more precise proportional control.
- **Failsafe Capability** – Onboard backup battery pack powers actuator in case of power failure

FEEDBACK OPTIONS

- **Extra Feedback Switches** – For extra end-of-travel position feedback
- **Feedback Potentiometer** – To feedback the precise valve position to a remote location, or to allow "jogging" control
- **Feedback Transmitter** – A circuit board coupled with a feedback potentiometer provides 4 to 20 mA output used by other equipment (PLC, data logger, etc.)

55 Guardsman Road, Thornhill, ON, L3T 6L2, Canada | ISO 9001:2008 Certified
1.800.930.2436 (CHEM) | fax.905.889.8553 | request@chemline.com | chemline.com

This page is intentionally left blank

CS-301-100 : Identification sheet

VWTC PROJECT NUMBER:	Iqaluit WWTP	REV:	01
PROJECT NAME:	5000218036	SUBMITTED TO (COMPANY):	
ENGINEER:	G. HÉBERT	SUBMITTED TO (RESPONSIBLE)	
PROJECT MANAGER:	C. BEKAERT	PROJECT NUM REFERENCE.:	
PHONE NUMBER:		LOT NUMBER:	

SUPPLIER	EQPT CODE	EQPT TAG NO	DIA	DESCRIPTION	INFO 1	INFO 2	INFO 3	APPLIC.	NOTE	REV
CHEMLINE	VABLPV200251	BV-04-710	DIA: 25 mm (1")	HP-250 VALVE	TYPE: BALL VALVE//MANUFACTURER : CHEMLINE//MODEL : Type21-A-010-E-C//CONNECTION TYPE : COMBO | 25 mm (1")//BODY : PVC (ASTM D1784)// SEAL | SEAT :PTFE | EPDM// STEM : PVC			HP-250		1
CHEMLINE	VABLPV200253	BV-04-744	DIA: 38 mm (1-1/2")	HP-250 VALVE	TYPE: BALL VALVE//MANUFACTURER : CHEMLINE//MODEL : Type21-A-015-E-C//CONNECTION TYPE : COMBO | 38 mm (1-1/2")//BODY : PVC (ASTM D1784)// SEAL | SEAT :PTFE | EPDM// STEM : PVC			HP-250		1
CHEMLINE	VABLPV200253	BV-04-747	DIA: 38 mm (1-1/2")	HP-250 VALVE	TYPE: BALL VALVE//MANUFACTURER : CHEMLINE//MODEL : Type21-A-015-E-C//CONNECTION TYPE : COMBO | 38 mm (1-1/2")//BODY : PVC (ASTM D1784)// SEAL | SEAT :PTFE | EPDM// STEM : PVC			HP-250		1

SUPPLIER	EQPT CODE	EQPT TAG NO	DIA	DESCRIPTION	INFO 1	INFO 2	INFO 3	APPLIC.	NOTE	REV
CHEMLINE	VABLPV200253	BV-04-750	DIA: 38 mm (1-1/2")	HP-250 VALVE	TYPE: BALL VALVE//MANUFACTURER : CHEMLINE//MODEL : Type21-A-015-E-C//CONNECTION TYPE : COMBO | 38 mm (1-1/2")//BODY : PVC (ASTM D1784)// SEAL | SEAT :PTFE | EPDM// STEM : PVC			HP-250		1

PDF Published March 1, 2013

Type 21 Ball Valves

CHEMLINE PLASTICS
SUPERIOR FLOW SOLUTIONS

The Chemline Type 21 True Union Ball valve incorporates state of the art features for long term performance. This is a full port, full blocking True Union valve pressure rated at 16 bar (230 psi)[4]. Double stem o-rings and Safety Shear stem design provide for a high degree of safety on hazardous fluid applications. All sizes have an ISO standard actuator mounting platform integral to the valve body. This provides for sturdy and secure mounting of pneumatic or electric actuators.

PVC | CPVC | PP | PVDF

CRN Registered Consult Chemline

NSF[5] Certified to NSF/ANSI 61

SERIES: Type 21

SIZES: 3/8" – 4"

ENDS: Socket, Threaded, Flanged, Butt[1] or ChemFlare™

SEATS: PTFE

SEALS[2]: EPDM, FKM (Viton®), CPE[3]



features

Pressure rated to 230 psi[4]
- Provides a high factor of safety

Integral Actuator Mounting Platform
- Actuation is easy. Electric or pneumatic actuators may be mounted in the field.

Full Port
- High capacity and low pressure drops

Fully Blocking
- Downstream union nut may be safely disassembled for piping maintenance while valve is closed off under full system pressure

Built-In Spanner Wrench
- Top of the handle is designed to be used as a tool for accessing internal parts

Safety Shear Stem Design
- Stem has double o-rings
- Designed to hold full pressure even if stem breaks due to excessive torque

High Chemical Resistant Material
- PVC and CPVC compounds have an "A" chemical resistance rating as per ASTM D-1784. They have outperformed other PVC and CPVC compounds on aggressive chemicals.

[1] Butt ends for fusion to Chemline metric PP, PVDF or ECTFE (Halar®) piping.
[2] Other materials are available.
[3] CPE=Chlorinated Polyethylene.
[4] PVC, CPVC and PVDF 1/2" to 2" are rated at 230 psi; 2-1/2" to 4" and all size PP valves are rated at 150 psi at 20°C.
[5] PVC valves with EPDM or FKM (Viton®) seals are certified under NSF/ANSI Standard 61 for contact with drinking water.

03/13 ©Chemline Plastics Limited 2013
Chemline is a registered trade mark of Chemline Plastics Limited

Type 21 Ball Valves

features

Double Stem O-Rings – Safety Shear Design

- Upper o-ring groove is deeper than lower. In case of excessive stem torque, stem will shear at the upper groove, leaving the inner o-ring intact to seal against full line pressure.

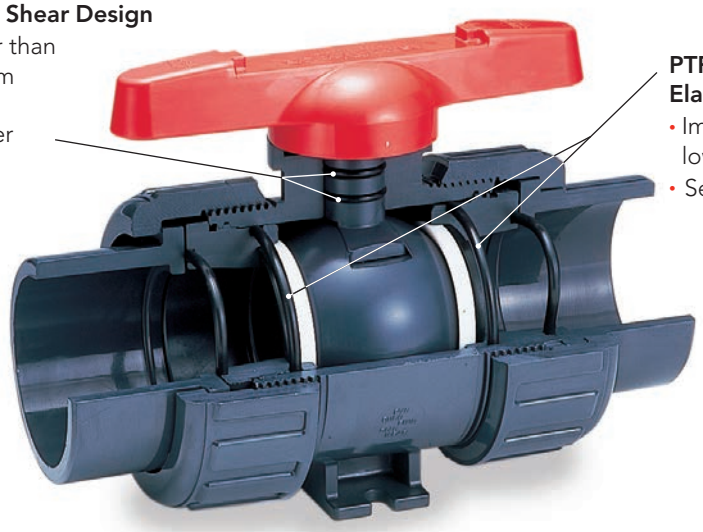

PTFE Seats have Elastomer Cushions

- Improved sealing while lowering stem torques
- Self adjusts for seat wear

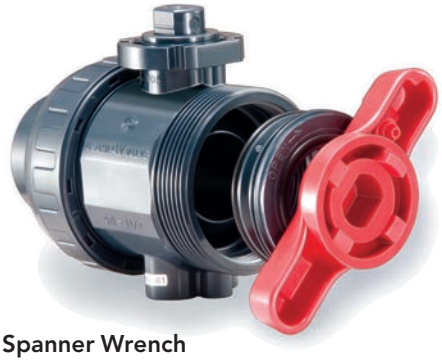

Built in Spanner Wrench

- For removing or tightening the seat carrier
- All parts are replaceable



Integral Actuator Mounting Platform

- Actuation is easy. Electric or pneumatic actuators may be mounted in the field. Simply pull off the handle to reveal a standard ISO 5211 mounting platform which accepts bolt-on hardware.



Fully Blocking

- Downstream pipe may be removed while upstream side is still pressurized. This may be done with valve installed in either direction.



Base Mounting Pad

- Optional threaded inserts allow valves to be securely anchored
- Supplied standard with actuated valves

options + accessories



ChemFlare™ Ends

- For connection to PFA tube. Leak-free connections for difficult services such as sodium hypochlorite

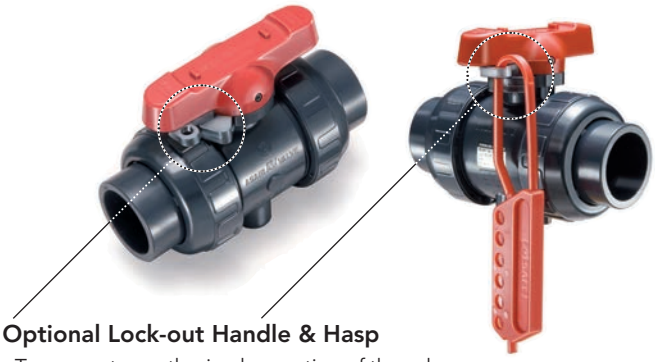

Optional Lock-out Handle & Hasp

- To prevent unauthorized operation of the valve
- Used during maintenance shut-downs



One-piece moulded PVC and CPVC 6" socket ends

- Allows installation of 4" valve in 6" line
- Factory moulded, not fabricated with couplings and reducers cemented together
- Fixed to valve mechanically just like the one-piece moulded factory flanges



Different Colour Handles

- Choose a handle colour other than standard red for colour coding different services

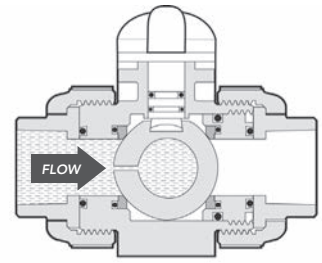

Vented Ball

- For sodium hypochlorite services at any concentration
- Valve shown in closed position

electric + pneumatic actuation

Pneumatic and Electric Actuators

- A complete range of actuators and control accessories are available, mounted to valves using PPG plastic brackets and stainless steel couplings. Refer to separate data sheets.



Electromni® Electric



Q Series Electric



A Series Electric



V Series Electric
with Local Control Station



PA Series Pneumatic

Type 21 Ball Valves

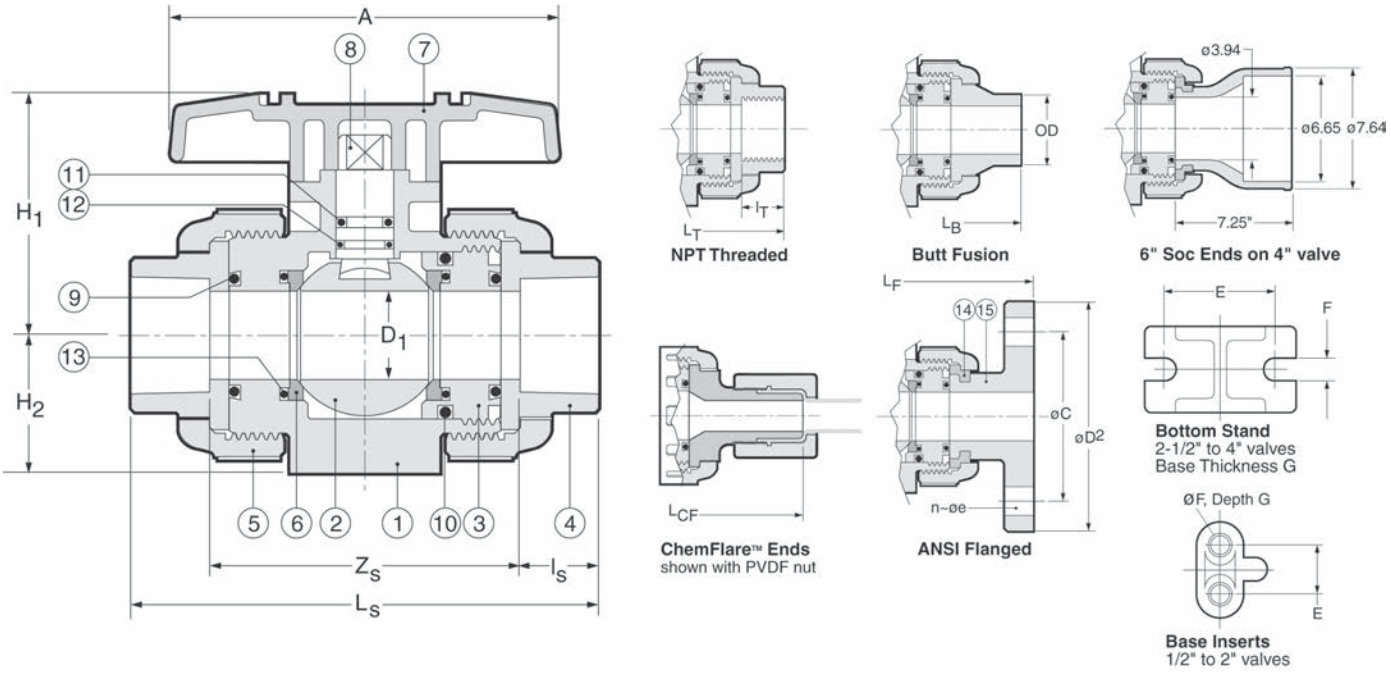

PARTS

▲ Recommended Spare Parts

No.	Part	Pcs.	Materials
1	Body	1	PVC, CPVC, PP, PVDF
2	Ball	1	PVC, CPVC, PP, PVDF
3	Carrier[1]	1/2	PVC, CPVC, PP, PVDF
4	End Connector	2	PVC, CPVC, PP, PVDF
5	Union Nut	2	PVC, CPVC, PP, PVDF
6▲	Ball Seat	2	PTFE
7	Handle	1	ABS

[1] 1 carrier for sizes 1/2" to 2", 2 carriers for sizes 2-1/2" to 4"
[2] EPDM seals standard with PVC, CPVC, PP; FKM (Viton®) with PVDF valves
[3] 2 pcs 1/2" to 2", 6 pcs 2-1/2" to 4"

PARTS

▲ Recommended Spare Parts

No.	Part	Pcs.	Materials
8	Stem	1	PVC, CPVC, PP, PVDF
9▲	Face O-Ring[2]	2	EPDM, FKM (Viton®)
10▲	Carrier O-Ring[2]	2	EPDM, FKM (Viton®)
11▲	Upper Thicker Stem O-Ring[2]	1	EPDM, FKM (Viton®)
12▲	Lower Thinner Stem O-Ring[2]	1	EPDM, FKM (Viton®)
13	Seat Cushion[2]	2	EPDM, FKM (Viton®)
14	Flange Retainer[3]	2/6	PVDF
15	Flange	2	PVC, CPVC, PP, PVDF

DIMENSIONS INCHES

					End Connections														Valve Base		
					Socket			Threaded		Factory Flanged					Butt		ChemFlare™				
Size	D Bore	A	H_1	H_2	L_S	Z_S	l_S	l_T	L_T	L_F	D_2	C	n	e	L_B	OD	L_{CF}	Tube[4]	E	F[5]	G
1/2"	.59	3.6	2.03	1.14	4.45	2.70	.875	.64	4.02	5.63	3.50	2.38	4	.62	4.88	.79	6.12	1/2"	.75	.29	.43
3/4"	.79	3.9	2.34	1.38	5.08	3.08	1.00	.65	4.72	6.77	3.88	2.75	4	.62	5.67	.98	6.52	3/4"	.75	.29	.43
1"	.98	4.3	2.68	1.54	5.75	3.50	1.13	.81	5.16	7.36	4.25	3.12	4	.62	6.06	1.26	7.26	1"	.75	.29	.43
1-1/4"	1.22	4.8	3.17	1.85	6.46	5.21	1.25	.85	5.91	7.48	4.62	3.50	4	.62	6.85	1.57	9.58	1-1/4"	1.18	.35	.59
1-1/2"	1.57	5.2	3.50	2.17	7.24	4.49	1.38	.85	6.42	8.35	5.00	3.88	4	.62	7.64	1.97	–	–	1.18	.35	.59
2"	2.01	6.3	4.02	2.60	8.23	5.23	1.50	1.90	7.76	9.21	6.00	4.75	4	.75	8.82	2.48	–	–	1.18	.35	.59
2-1/2"	2.28	7.87	4.96	2.83	9.45	5.95	1.75	1.21	8.46	10.20	7.00	5.49	4	.75	9.72	2.95	–	–	1.89	.35	.23
3"	2.70	9.45	5.51	3.35	11.10	7.35	1.88	1.30	10.39	11.97	7.50	6.00	4	.75	11.61	3.54	–	–	2.17	.43	.28
4"	3.54	11.81	7.01	4.33	13.88	9.87	2.00	1.38	14.17	14.65	9.00	7.50	8	.75	14.76	4.33	–	–	2.56	.43	.32

[4] ChemFlare™ ends are available for reduced tube sizes down to 1/4".
[5] Optional threaded inserts: 1/2" to 1" valves – UNC 1/4"-20; 1-1/4" to 2" valves – UNC 5/16"-18. 'Recoil' brand inserts require drilling before insertion.

Type 21 Ball Valves

WORKING PRESSURES PSI, Water, Non-Shock

VACUUM RATING • 29.9 inches mercury

Size	PVC			CPVC						PP			PVDF				
	20°C 68°F	40°C 104°F	50°C 122°F	20°C 68°F	40°C 104°F	50°C 122°F	60°C 140°F	80°C 176°F	90°C 194°F	20°C 68°F	60°C 140°F	80°C 176°F	20°C 68°F	40°C 104°F	60°C 140°F	80°C 176°F	100°C 212°F
1/2"– 2"	230	165	150	230	165	150	120	75	55	150	85	55	230	185	150	110	85
2-1/2"– 4"	150	150	150	150	150	150	120	75	55	150	70	40	150	150	150	110	85

Temperature Ranges: PVC 0 to 60°C (32 to 140°F), **CPVC** 0 to 95°C (32 to 203°F), **PP** –20 to 80°C (–4 to 176°F), **PVDF** –40 to 100°C (–40 to 212°F)

WEIGHTS LB. THREADED or SOCKET

WEIGHTS LB. FLANGED

Size	PVC	CPVC	PP	PVDF	PVC	CPVC	PP	PVDF
1/2"	0.4	0.4	0.4	0.4	0.9	0.9	0.7	1.1
3/4"	0.7	0.7	0.7	0.9	1.3	1.5	1.1	1.5
1"	0.9	1.1	0.9	1.1	1.8	2.0	1.5	2.2
1-1/4"	1.5	1.5	1.3	1.8	2.6	2.9	2.0	3.3
1-1/2"	2.4	2.6	1.5	2.9	3.7	4.0	2.6	4.4
2"	4.0	4.4	2.6	4.9	5.5	6.0	4.0	8.2
2-1/2"	5.1	5.5	3.7	6.2	7.3	7.7	5.3	8.8
3"	8.2	8.8	5.5	9.9	10.1	11.0	7.5	12.6
4"	19.4	21.8	13.2	24.9	21.6	23.4	15.4	26.7

Cv VALUES VS. BALL ANGLE

Size	0%	25%	50%	75%	100%
1/2"	0	0.35	1.3	5.5	14.
3/4"	0	0.73	2.8	11.5	29.
1"	0	1.2	4.5	18.6	47.
1-1/4"	0	1.8	6.8	28.4	72.
1-1/2"	0	3.9	14.7	61.2	155.
2"	0	4.8	18.0	75.0	190.
2-1/2"	0	9.1	34.7	144.0	365.
3"	0	10.2	39.0	162.0	410.
4"	0	17.0	64.6	269.0	680.

SAMPLE SPECIFICATION

1. All True Union Ball Valves in PVC, CPVC, PP or PVDF shall be Chemline Type 21 or equal sizes 1/2" to 2" in PVC, CPVC, and PVDF rated at 230 psi and in PP 150 psi maximum working pressure. Sizes 2-1/2", 3" and 4" rated at 150 psi maximum working pressure with EPDM, FKM (Viton®) or CPE seals. Ball seats shall be PTFE with elastomer cushions for closure with minimum stem torques.
2. All valves will have Safety Shear stem design, blowout-proof with double o-rings for safety. The top o-ring groove shall be deeper so that if the stem breaks off under excessive torque the lower o-ring will remain intact and the valve will hold pressure.
3. All valves shall be full port and two-way blocking design.
4. All valves will be CRN (Canadian Registration Number) registered with TSSA.
5. PVC valves with EPDM or FKM (Viton®) seals shall be certified under NSF/ANSI Standard 61 for contact with drinking water.
6. All valves shall have chemical resistant labels permanently marked with manufacturing number to provide production level traceability.
7. PVC compound shall have an ASTM cell classification 12454-A with a minimum suffix "A" designation for chemical resistance as per ASTM D-1784 (CSA report LO 4000-172).
8. CPVC compound shall have an ASTM cell classification 23567-A with a minimum suffix "A" designation for chemical resistance as per ASTM D-1784.
9. PP material will conform to ASTM D-4101 PP 021 B 67272 material requirements.
10. PVDF material shall be unpigmented conforming to ASTM D-3222 material requirements and to be USDA Title 21 Chapter 1 Part 177. 2510 requirements for contact with food.
11. Socket ends in PVC and CPVC shall be Schedule 80 and conform to ASTM D-2467.
12. Threaded ends shall be Schedule 80 and conform to ASTM D-2464.
13. Butt fusion ends in PP or PVDF will be compatible with Chemline PP or PVDF metric piping systems.
14. Flanged ends shall be ANSI Class 150 one-piece factory moulded (not fabricated) to ensure maximum strength and close tolerance end to end dimensions.

ORDERING EXAMPLE

Chemline True Union Ball Valves	21	A	020	E	S
Body Material	**A** – PVC **B** – PP	**C** – CPVC **K** – PVDF			
Size[1]	**002** – 1/4" **010** – 1" **025** – 2-1/2"	**003** – 3/8" **012** – 1-1/4" **030** – 3"	**005** – 1/2" **015** – 1-1/2" **040** – 4"	**007** – 3/4" **020** – 2" **060** – 6"	
Seals	**E** – EPDM	**V** – FKM (Viton®)	**C** – CPE	**B** – Nitrile	**A** – Aflas®
Ends	**S** – Socket	**T** – Threaded	**F** – Flanged	**B** – Butt[2]	**CF** – ChemFlare™

Example: Chemline Type 21 True Union Ball Valve, PVC, 2", with EPDM seals, socket ends.

[1] 1/4" is normally the 3/8" valve reduced. 6" is 4" valve with 6" end connections.

[2] PP, PVDF and ECTFE (Halar®) metric butt fusion ends (1/2" to 4") connect to Chemline PP, PVDF and ECTFE (Halar®) piping systems.

OTHER OPTIONS & ACCESSORIES

- **Alternate O-Ring Seals**
- **Stem Extensions** made to any length
- **Limit Switches** – For open and/or closed position indication
- **Municipal Operating Nut**
- **Lubrication-free Valves** – Factory clean room assembled
- **Vented Ball** – For sodium hypochlorite applications

CHEMLINE PLASTICS
SUPERIOR FLOW SOLUTIONS

55 Guardsman Road, Thornhill, ON, L3T 6L2, Canada | ISO 9001:2008 Certified
tel.905.889.7890 | fax.905.889.8553 | request@chemline.com | chemline.com

This page is intentionally left blank

CS-301-501 : Identification sheet

VWTC PROJECT NUMBER:	Iqaluit WWTP	REV:	01
PROJECT NAME:	5000218036	SUBMITTED TO (COMPANY):	
ENGINEER:	G. HÉBERT	SUBMITTED TO (RESPONSIBLE)	
PROJECT MANAGER:	C. BEKAERT	PROJECT NUM REFERENCE.:	
PHONE NUMBER:		LOT NUMBER:	

SUPPLIER	EQPT CODE	EQPT TAG NO	DIA	DESCRIPTION	INFO 1	INFO 2	INFO 3	APPLIC.	NOTE	REV
CHEMLINE	VABLPV346917	BV-04-716	DIA: 13 mm (1/2")	HP-250 VALVE	TYPE: BALL VALVE//MANUFACTURER : CHEMLINE//MODEL : SM2-A-005-E-S//CONNECTION TYPE : SOCKET | 13 mm (1/2")//BODY : PVC (ASTM D1784)// SEAL | SEAT : | EPDM// STEM : N/A			HP-250		1
CHEMLINE	VABLPV346917	BV-04-717	DIA: 13 mm (1/2")	HP-250 VALVE	TYPE: BALL VALVE//MANUFACTURER : CHEMLINE//MODEL : SM2-A-005-E-S//CONNECTION TYPE : SOCKET | 13 mm (1/2")//BODY : PVC (ASTM D1784)// SEAL | SEAT : | EPDM// STEM : N/A			HP-250		1

This page is intentionally left blank

PDF Published October 18, 2017

Metering Ball Valves

CHEMLINE PLASTICS
SUPERIOR FLOW SOLUTIONS

Chemline SM Series Metering Ball Valve is designed for fine linear flow control of chemicals or clean fluids. The ball is solid with graduated V-groove cut on the outside surface. Precise linear flow control is accomplished through 180° rotation of the handle. With a positioning electric actuator, this becomes an inexpensive control valve. If higher C_V values are required, refer to SP Series Proportional ball valves.

PVC PP

SERIES: SM2
SIZES: 1/2" – 1"
ENDS: Threaded, Socket, Butt[1] or ChemFlare™ [2]
SEATS: PTFE
O-RINGS: EPDM, FPM (Viton®)





Integral 180° Scale with 5° Increments
- Linear flow control and settable flow rates

features

Precise Linear Flow Control
- Provided by a special V-groove ball and wide handle travel (0° to 180°)

Full Size Range
- 6 valves sizes 1/2" to 2" offers a large selection of C_V values

High End Ball Valve Features
- Full Blocking design
- Double Stem O-Rings for safety
- PTFE seats with elastomer cushion
  – Automatically compensates for seat wear or expansion
- 230 psi pressure rated (PVC)

Low Stem Torques
- Due to floating ball design and cushioned PTFE seats

Bidirectional
- Works with flow in either direction

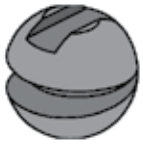

Ball Detail



[1]Butt ends for fusion to Chemline metric PP piping.
[2]For ChemFlare™ end connectors, consult Chemline.

10/17 ©Chemline Plastics Limited 2017
Chemline is a registered trade mark of Chemline Plastics Limited

Metering Ball Valves

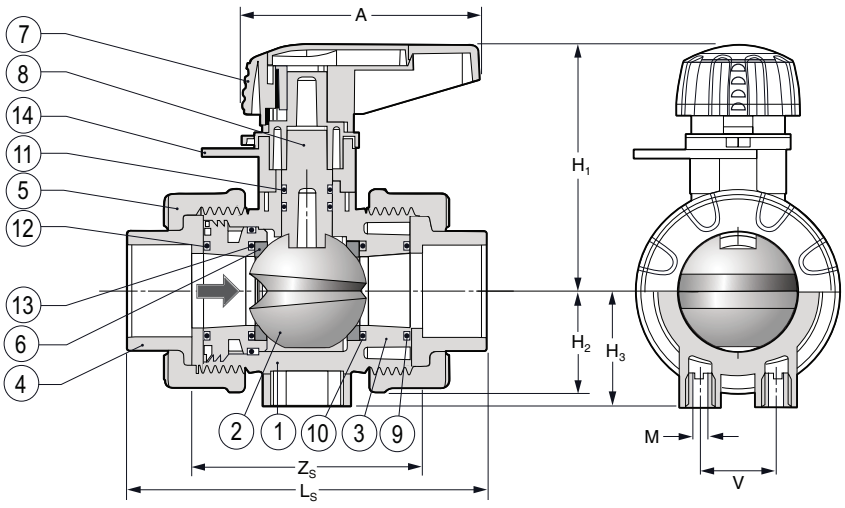

PARTS

No.	Part	Pcs.	Materials
1	Body	1	PVC, PP, PVDF
2	Ball	1	PVC, PP, PVDF
3	Carrier	1	PVC, PP, PVDF
4	End Connector	2	PVC, PP, PVDF
5	Union Nut	5	PVC, PP, PVDF
6	Ball Seat	2	PTFE
7	Handle	1	PVC
8	Stem	1	PVC, PP, PVDF
9	Carrier Face O-Ring	1	EPDM, FPM(Viton®)
10	Carrier O-Ring	1	EPDM, FPM(Viton®)
11	Stem O-Ring[1]	2	EPDM, FPM(Viton®)
12	Face O-Ring	1	EPDM, FPM(Viton®)
13	Seat Cushion[1]	2	EPDM, FPM(Viton®)
14	Position Indicator Scale	1	PVC

DIMENSIONS INCHES

							PVC			PP		
Size	A	H_1	H_3	H	M	V	Z_s	L_s	H_2	Z_s	L_s	H_2
1/2"	2.62	2.48	1.10	2.50	M5	0.98	2.48	3.74	0.99	2.64	3.74	1.06
3/4"	3.21	3.03	1.20	2.70	M5	0.98	2.83	4.33	1.16	3.03	4.29	1.18
1"	3.21	3.39	1.60	3.00	M6	1.02	3.11	4.84	1.39	3.27	4.69	1.57

ELECTRICALLY OR PNEUMATICALLY ACTUATED

The metering ball valve becomes a proportional control valve with the addition of a Q or E Series electric or P Series pneumatic actuator with 4-20 mA positioner

- Thermoplastic housing and mounting bracket
- Manual override
- Position indication
- Mechanical travel stops
- Different voltages are available



Q Series Electric



E Series Electric



P Series Pneumatic

E Series Electric Actuator on a SM2 Valve

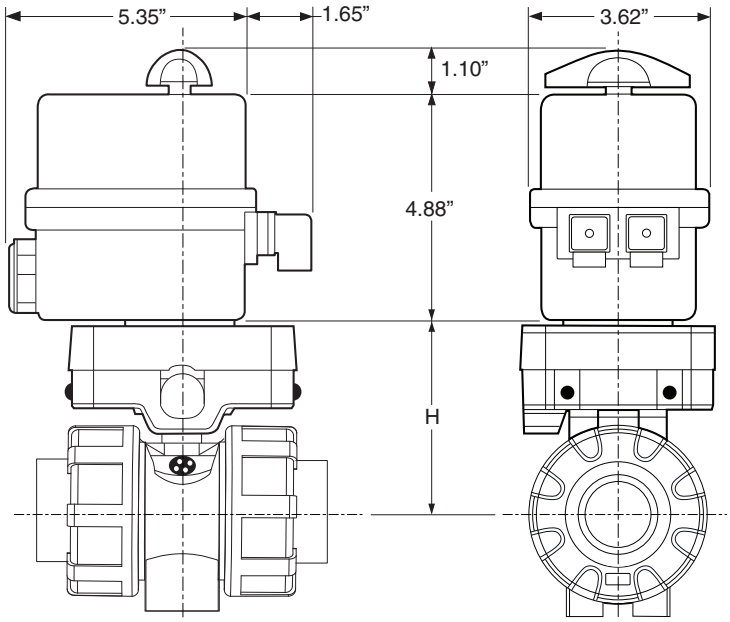

Side View

Port View

Metering Ball Valves

WORKING PRESSURES PSI

NET WEIGHTS LB. Cv VALUES

Size	PVC 20°C 68°F	PVC 40°C 104°F	PVC 60°C 140°F	PP 20°C 68°F	PP 40°C 104°F	PP 60°C 140°F	PP 80°C 176°F	PVC	PP	USGPM Flow at 1 psi △P
1/2″	230	130	30	150	100	65	20	0.35	0.29	1.4
3/4″	230	130	30	150	100	65	20	0.60	0.44	1.9
1″	230	130	30	150	100	65	20	0.84	0.64	2.3

Temperature Ranges: PVC 0 to 60°C (32 to 140°F), PP 0 to 95°C (32 to 203°F)

Cv VALUE vs. VALVE OPENING

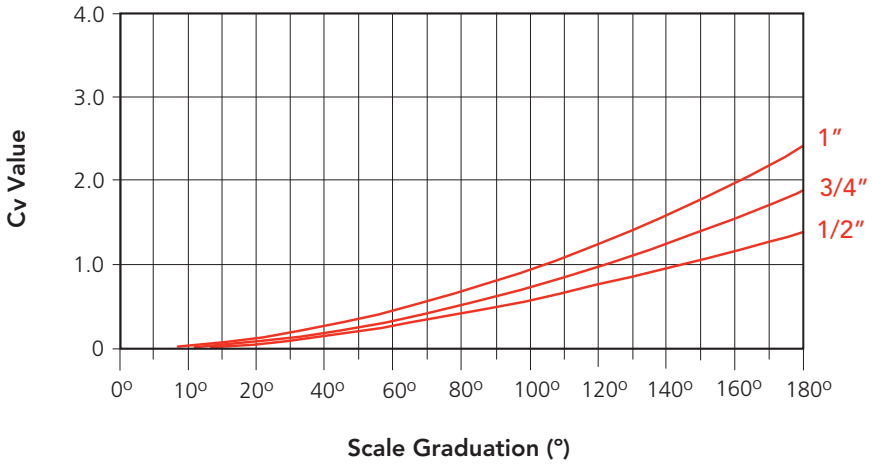

SAMPLE SPECIFICATION

1. All low flow control valves, 1/2″ to 1″, will be Chemline SM Series metering ball valves.
2. Body material will be PVC or PP, and o-rings will be EPDM or FPM (Viton®).
3. Body will be full blocking design with double stem o-rings for safety, rated at 230 psi maximum working pressure for PVC and 150 psi for PP material.
4. Ball will be floating design, molded solid with a V-groove for linear flow control over a 180° range of handle rotation.
5. Seats will be PTFE with elastomer cushions for positive closure with minimum stem torques and automatic compensation for seat wear and expansion.
6. Position indicating scale will be 0° to 180° with 5° increments for fine flow control and settable flow rates.
7. End connections will be 1/2″ to 1″ ANSI socket or FNPT threaded or 150 lb flanged or butt fusion for Chemline metric PP pipe or ChemFlare™ for PFA tubing.

ORDERING EXAMPLE

Chemline Metering Ball Valves	SM2	A	010	E	S
Valve Material	**A** – PVC	**B** – PP			
Size	**005** – 1/2″	**007** – 3/4″	**010** – 1″		
Seals	**E** – EPDM	**V** – FPM (Viton®)			
Ends	**S** – Socket	**T** – Threaded	**B** – Butt[1]	**CF** – ChemFlare™	

Example: SM2 Series Ball Valve, PVC, 1″, EPDM seals, socket ends.

[1] PP metric butt fusion ends (1/2″ to 2″) connect to Chemline PP piping systems.

VACUUM RATING

- 29.9 inches mercury

OPTIONS & ACCESSORIES

- **Reduced Ends**
- **Electric or Pneumatic Actuator with Positioner**
  – Operates as a linear control valve

CHEMLINE PLASTICS
SUPERIOR FLOW SOLUTIONS

55 Guardsman Road, Thornhill, ON, L3T 6L2, Canada | ISO 9001:2008 Certified
1.800.930.2436 (CHEM) | fax.905.889.8553 | request@chemline.com | chemline.com

This page is intentionally left blank

CS-302-100 : Identification sheet

VWTC PROJECT NUMBER:	Iqaluit WWTP	REV:	01
PROJECT NAME:	5000218036	SUBMITTED TO (COMPANY):	
ENGINEER:	G. HÉBERT	SUBMITTED TO (RESPONSIBLE)	
PROJECT MANAGER:	C. BEKAERT	PROJECT NUM REFERENCE.:	
PHONE NUMBER:		LOT NUMBER:	

SUPPLIER	EQPT CODE	EQPT TAG NO	DIA	DESCRIPTION	INFO 1	INFO 2	INFO 3	APPLIC.	NOTE	REV
CHEMLINE	VANRPV200667	CV-04-718	DIA: 38 mm (1-1/2")	HP-250 VALVE	TYPE: CHECK | 150 PSI//MANUFACTURER : CHEMLINE//MODEL : BTA015EC//CONNECTION TYPE : COMBO | 1-1/2"//BODY : PVC// SEAL | SEAT :EPDM | // STEM : N/A			HP-250		1

This page is intentionally left blank

PDF Published March 1, 2013

Ball Check & Foot Valves

CHEMLINE PLASTICS
SUPERIOR FLOW SOLUTIONS

The economical and versatile Chemline Ball Check Valve is the most popular type of non-return valves for pipe sizes under 6". A wide selection of body and seat materials, and end connections are available for many different applications. It has good flow capacity and will handle many slurry and suspended solid services. This valve works in both horizontal and vertical lines. The Foot Valve is for end of line services such as sumps.

PVC | CPVC | PP | PVDF

CRN Registered Consult Chemline

NSF[3] Certified to NSF/ANSI 61

SERIES: BT: True Union Check
BC: Single Union Check
FT: True Union Check
FV: Single Union Check

SIZES: 1/2" – 4"

ENDS: Threaded, Socket, Flanged, Butt[1] or ChemFlare™[2]

SEAT/SEALS: EPDM, FKM (Viton®), PTFE coated FKM (Viton®)

features

- **True Union to 2"**
- **Full Port to 4"**
- **NSF Certified[3]**
- **Built-in Union Design** – For easy installation and maintenance
- **Free Floating Ball** – The only moving part
- **Uniseat/Seal** – Easily removable
- **May be used either horizontally or vertically**
- **Excellent flow characteristics**
- **Low seating and opening pressures**



True Union Check
1/2" to 2" in all materials



Single Union Check
1/2" to 4" in PVC
2-1/2" to 4" in CPVC, PP and PVDF



Foot Valve is light weight and has a low profile basket

[1] PP and PVDF Butt fusion ends (available 1/2" to 2") connect to Chemline PP and PVDF piping systems.
[2] For ChemFlare™ end connectors, consult Chemline.
[3] PVC valves with EPDM or FKM (Viton®) seals are certified under NSF/ANSI Standard 61 for contact with drinking water.

03/13 ©Chemline Plastics Limited 2013
Chemline is a registered trade mark of Chemline Plastics Limited

Ball Check Valves

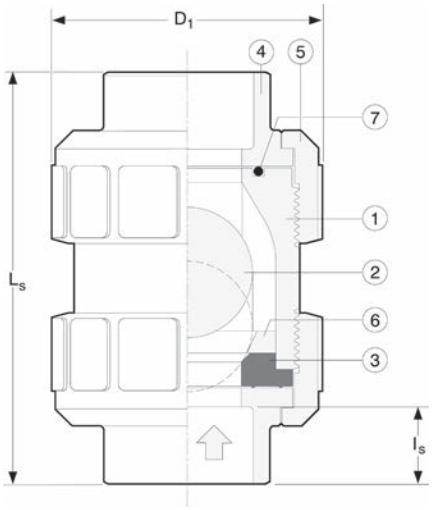

True Union Valve

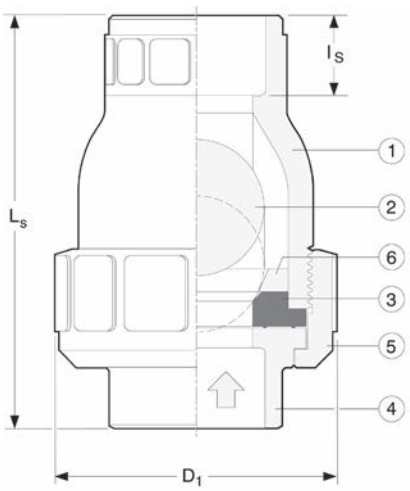

Single Union Valve

PARTS

▲ Recommended Spare Parts

No.	Part	Pcs. T/U	Pcs. S/U	Materials
1	Body	1	1	PVC, CPVC, PP, PVDF
2	Ball	1	1	PVC, CPVC, PP, PVDF
3▲	Uniseat/Seal[1]	1	1	EPDM, FKM(Viton®), PTFE coated FKM (Viton®)
4	End Connector	2	1	PVC, CPVC, PP, PVDF
5	Union Nut	2	1	PVC, CPVC, PP, PVDF
6	Stop Ring	1	1	PVC, CPVC, PP, PVDF
7	Face O-Ring	1	1	EPDM, FKM(Viton®)
9	Flange Retainer[2]	2	1	PVDF
10	Factory Flange[3]	2	1	PVC, CPVC, PP, PVDF

[1] Standard seals are EPDM in PVC, CPVC and PP valves, PTFE coated FKM (Viton®) in PVDF valves. Coating is .002" thick.

[2] True Union: 2 pcs 1/2" to 2", 6 pcs 1-1/2" to 4" Single Union: 1 pcs 1/2" to 2", 3 pcs 2-1/2" to 4".

[3] True Union flanged valves have two factory flanges. Single Union valves have one factory flange and one fabricated flange. Consult Chemline for details on fabricated type.

UNION END CONNECTIONS

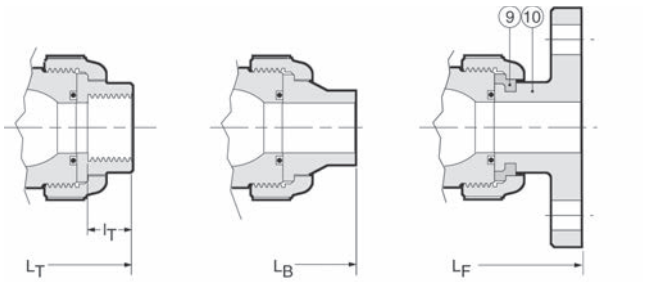

NPT Threaded

Butt Fusion PP and PVDF

Factory Flanged

DIMENSIONS INCHES

WEIGHTS LB.

Size	D_1	I_s	I_T	True Union PVC & CPVC L_T	L_S	L_F	True Union PP & PVDF L_T	L_B	L_F	Single Union PVC L_T	L_S	L_F	True Union Socket or Butt PVC	CPVC	PP	PVDF	Single Union PVC
1/2"	1.9	0.69	0.59	3.4	3.4	5.1	3.4	4.0	5.1	3.2	3.4	5.6	0.3	0.3	0.2	0.3	0.2
3/4"	2.4	0.72	0.67	4.1	3.9	6.1	4.1	4.4	6.1	3.8	3.7	6.6	0.5	0.5	0.3	0.6	0.4
1"	2.8	0.88	0.79	4.5	4.4	6.5	4.5	4.8	6.5	4.2	4.3	7.3	0.7	0.8	0.4	0.9	0.6
1-1/4"	3.1	0.94	0.87	5.0	4.9	6.6	5.0	5.9	6.6	6.2	6.3	12.3	1.1	1.2	0.7	1.5	1.5
1-1/2"	3.7	1.09	0.98	5.9	5.9	7.6	5.9	5.8	7.6	5.6	5.7	9.1	1.6	1.7	1.0	2.0	1.3
2"	4.2	1.16	1.10	7.0	6.8	8.4	7.0	6.5	8.4	6.5	6.5	10.5	2.2	2.4	1.4	2.7	1.8

DIMENSIONS INCHES

WEIGHTS LB.

Size	D_1	I_s[4]	I_T	Single Union PVC & CPVC L_T	L_S	L_F	Single Union PP & PVDF L_T	L_B	L_F	Single Union PVC	CPVC	PP	PVDF
2-1/2"	6.0	2.10	2.17	10.0	10.4	14.3	8.7	*	*	5.7	6.2	*	*
3"	6.0	1.88	1.38	8.7	9.6	12.2	8.7	*	*	5.1	5.5	3.3	6.3
4"	8.3	2.00	1.77	12.1	12.2	15.0	12.1	*	*	12.7	13.9	8.1	15.7

[4] Consult Chemline.

Foot Valves

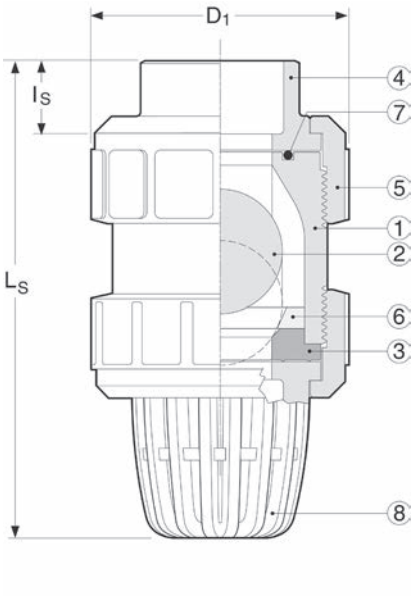

True Union Valve

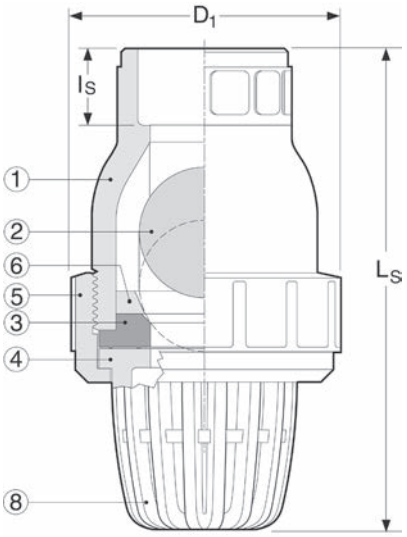

Single Union Valve

PARTS

▲ Recommended Spare Parts

No.	Part	Pcs. T/U	Pcs. S/U	Materials
1	Body	1	1	PVC, CPVC, PP, PVDF
2	Ball	1	1	PVC, CPVC, PP, PVDF
3▲	Uniseat/Seal[1]	1	1	EPDM, FKM(Viton®), PTFE coated FKM (Viton®)
4	End Connector	2	1	PVC, CPVC, PP, PVDF
5	Union Nut	2	1	PVC, CPVC, PP, PVDF
6	Stop Ring	1	1	PVC, CPVC, PP, PVDF
7	Face O-Ring	1	1	EPDM, FKM(Viton®)
8	Foot Valve Basket	1	1	PVC, CPVC, PP, PVDF
9	Flange Retainer[2]	3	0	PVDF
10	Factory Flange[3]	1	0	PVC, CPVC, PP, PVDF

[1] Standard seals are EPDM in PVC, CPVC and PP valves, PTFE coated FKM (Viton®) in PVDF valves. Coating is .002" thick.

[2] True Union: 1 pc 1/2" to 2", 3 pcs 2-1/2" to 4".

[3] True Union valves have factory flanges. Single Union have fabricated flanges. Consult Chemline for details on fabricated type.

END CONNECTIONS FOR TRUE UNION VALVE

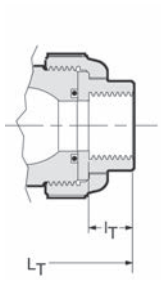

NPT Threaded

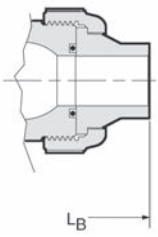

Butt Fusion
PP and PVDF

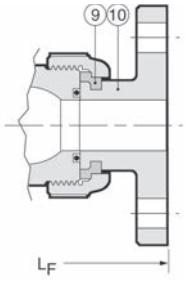

Factory Flanged

DIMENSIONS INCHES

WEIGHTS LB.

Size	D_1	I_s Soc	I_T Thd	True Union PVC & CPVC L_T	True Union PVC & CPVC L_S	True Union PVC & CPVC L_F	Single Union PVC L_T	Single Union PVC L_S	Single Union PVC L_F	Single Union PVC Socket
1/2"	1.9	0.69	0.59	2.8	2.9	3.7	3.5	3.7	4.7	0.3
3/4"	2.4	0.72	0.67	3.3	3.3	4.4	4.1	4.2	5.4	0.4
1"	2.8	0.88	0.79	3.7	3.7	4.8	4.5	4.8	6.1	0.8
1-1/4"	3.7	0.94	0.87	*	*	*	*	*	*	1.8
1-1/2"	3.7	1.09	0.98	5.4	5.4	6.3	6.8	7.0	8.5	1.7
2"	4.2	1.16	1.10	6.4	6.4	7.2	7.4	7.6	9.3	2.1
2-1/2"	6.0	2.10	2.17	–	–	–	*	*	*	7.4
3"	6.0	1.88	1.38	–	–	–	11.6	12.1	14.2	7.1
4"	8.3	2.00	1.77	–	–	–	14.7	15.0	17.4	15.7

* Consult Chemline for dimensions.

For CPVC (2-1/2" to 4"), PP and PVDF Foot Valve lengths, consult Chemline.

Ball Check & Foot Valves

WORKING PRESSURES PSI

Size	PVC	CPVC				Polypropylene			PVDF			
	0-50°C 32-122°F	0-50°C 32-122°F	60°C 140°F	80°C 176°F	90°C 194°F	–20-30°C –4-90°F	60°C 140°F	80°C 176°F	–20-60°C –4-140°F	80°C 176°F	90°C 194°F	100°C 212°F
1/2″	150	150	115	85	60	150	90	60	150	120	110	85
3/4″	150	150	115	85	60	150	90	60	150	120	110	85
1″	150	150	115	85	60	150	90	60	150	120	110	85
1-1/4″	150	150	115	85	60	150	90	60	150	120	110	85
1-1/2″	150	150	115	85	60	150	90	60	150	120	110	85
2″	150	150	115	85	60	150	90	60	150	120	110	85
2-1/2″	100	100	90	60	45	100	60	45	100	90	60	45
3″	100	100	90	60	45	100	60	45	100	90	60	45
4″	100	100	90	60	45	100	60	45	100	90	60	45

Maximum Temperatures: PVC 0 to 60°C (32 to 140°F), **CPVC** 0 to 95°C (32 to 203°F), **PP** –20 to 90°C (–4 to194°F), **PVDF** –40 to 100°C (–40 to 212°F)

MINIMUM SEATING AND OPENING PRESSURE PSI

Size	Vertical Piping		Horizontal Piping		Cv VALVES
	Open	Seating	Open	Seating	Check Valves
1/2″	0.7	2.8	0.1	2.8	6.5
3/4″	0.7	4.3	0.1	4.3	17.
1″	0.7	4.3	0.1	4.3	25.
1-1/4″	1.4	4.3	0.3	4.3	86.
1-1/2″	1.4	4.3	0.3	4.3	86.
2″	1.4	4.3	0.3	4.3	130.
2-1/2″	1.4	2.8	0.3	2.8	280.
3″	1.4	2.8	0.3	2.8	280.
4″	1.4	2.8	0.3	2.8	500.

VACUUM RATING

- 29.9 inches mercury
- Maximum recommended velocity 5 m/s

SAMPLE SPECIFICATION

All Ball Check valves in PVC, CPVC, PP or PVDF shall be Chemline BT or BC Series or equal with EPDM [FKM (Viton®) or PTFE coated FKM (Viton®)] seats and union ends. Sizes 1/2″ to 2″ shall be slip-out True Union style, sizes 2-1/2″ to 4″ shall be single union. The elastomer uniseat/seal shall function as both the ball seat and the union seal. Ball Check valves shall be rated 150 psi up to 2″ and 100 psi for sizes 2-1/2″ to 4″.

ORDERING EXAMPLE

Chemline Ball Check/Foot Valves	BT	A	020	E	S
Valve Type	**BT** – True Union Ball Check **BC** – Single Union Ball Check **FV** – Single Union Foot Valve **FT** – True Union Foot Valve				
Body Material	**A** – PVC **C** – CPVC **B** – PP **K** – PVDF				
Size	**005** – 1/2″ **007** – 3/4″ **010** – 1″ **012** – 1-1/4″ **015** – 1-1/2″ **020** – 2″ **025** – 2-1/2″ **030** – 3″ **040** – 4″				
Seals	**E** – EPDM **V** – FKM (Viton®) **T** – PTFE coated FKM (Viton®)				
Ends	**S** – Socket **T** – Threaded **F** – Flanged **B** – Butt[1] **CF** – ChemFlare™				

Example: Ball Check Valve, PVC, 2″, with EPDM seat, socket ends.

[1] PP and PVDF metric butt fusion ends (1/2″ to 2″) connect to Chemline PP and PVDF piping systems.

OPTIONS & ACCESSORIES

- **PTFE coated Uniseat/Seal**
- **Spring Loaded Ball** – Assists ball to seat faster

CHEMLINE PLASTICS
SUPERIOR FLOW SOLUTIONS

55 Guardsman Road, Thornhill, ON, L3T 6L2, Canada | ISO 9001:2008 Certified
tel.905.889.7890 | fax.905.889.8553 | request@chemline.com | chemline.com

CS-304-100 : Identification sheet

VWTC PROJECT NUMBER:	Iqaluit WWTP	REV:	01
PROJECT NAME:	5000218036	SUBMITTED TO (COMPANY):	
ENGINEER:	G. HÉBERT	SUBMITTED TO (RESPONSIBLE)	
PROJECT MANAGER:	C. BEKAERT	PROJECT NUM REFERENCE.:	
PHONE NUMBER:		LOT NUMBER:	

SUPPLIER	EQPT CODE	EQPT TAG NO	DIA	DESCRIPTION	INFO 1	INFO 2	INFO 3	APPLIC.	NOTE	REV
TEKNO VALVE	VASDBR308797	SV-04-714	DIA: 1"	HP-250 VALVE	TYPE: SOLENOID VALVE//MANUFACTURER : ASCO//MODEL : 8210G004-120VAC//CONNECTION TYPE : THREADED | 25 mm (1") | 25 mm (1")//BODY : BRASS// SEAL | SEAT :NBR | PA// STEM : N/A	ACTING : PILOT	NORMALLY : FERMÉ/CLOSED	HP-250		1

This page is intentionally left blank

Features

- Wide range of pressure ratings, sizes, and resilient materials provide long service life and low internal leakage
- High flow valves for liquid, corrosive, and air/inert gas service
- Industrial applications include:
  - Car wash
  - Laundry equipment
  - Air compressors
  - Industrial water control
  - Pumps

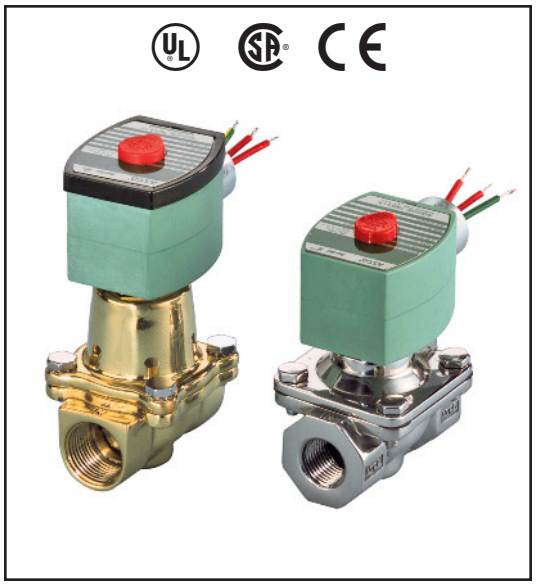

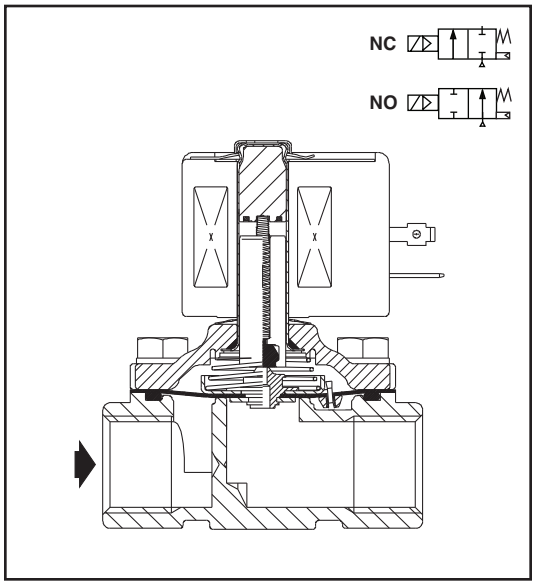

Construction

Valve Parts in Contact with Fluids		
Body	Brass	304 Stainless Steel*
Seals and Discs	NBR or PTFE	
Disc-Holder	PA	
Core Tube	305 Stainless Steel	
Core and Plugnut	430F Stainless Steel	
Springs	302 Stainless Steel	
Shading Coil	Copper	Silver

*Catalog Numbers 8210G127, 8210G129, 8210G132, 8210G133 have 316L Stainless Steel bodies.

Electrical

Standard Coil and Class of Insulation	Watt Rating and Power Consumption				Spare Coil Part Number			
		AC			General Purpose		Explosionproof	
	DC Watts	Watts	VA Holding	VA Inrush	AC	DC	AC	DC
F	-	6.1	16	40	238210	-	238214	-
F	11.6	10.1	25	70	238610	238710	238614	238714
F	16.8	16.1	35	180	272610	97617	272614	97617
F	-	17.1	40	93	238610	-	238614	-
F	-	20	43	240	99257	-	99257	-
F	-	20.1	48	240	272610	-	272614	-
F	30.8	-	-	-	-	501695	-	501696
H	40.6	-	-	-	-	238910	-	238914

Standard Voltages: 24, 120, 240, 480 volts AC, 60 Hz (or 110, 220 volts AC, 50 Hz). 6, 12, 24, 120, 240 volts DC. Must be specified when ordering.
Other voltages available when required.

Solenoid Enclosures

Standard: RedHat II - Watertight, Types 1, 2, 3, 3S, 4, and 4X; RedHat - Type I.

Optional: RedHat II - Explosionproof and Watertight, Types 3, 3S, 4, 4X, 6, 6P, 7, and 9; Red-Hat - Explosionproof and Watertight, Types 3, 4, 4X, 7, and 9.

(To order, add prefix "EF" to catalog number, except Catalog Numbers 8210B057, 8210B058, and 8210B059, which are not available with Explosionproof enclosures.)
See Optional Features Section for other available options.

Nominal Ambient Temp. Ranges

RedHat II/RedHat AC: 32˚F to 125˚F (0˚C to 52˚C)
RedHat II DC: 32˚F to 104˚F (0˚C to 40˚C)
RedHat DC: 32˚F to 77˚F (0˚C to 25˚C)
(104˚F/40˚C occasionally)
8210G227 AC: 32˚F to 130˚F (0˚C to 54˚C)
DC: 32˚F to 90˚F (0˚C to 32˚C)
Refer to Engineering Section for details.

Approvals

UL listed as indicated. CSA certified.
RedHat II meets applicable CE directives.
Refer to Engineering Section for details.

ATEX/IECEx certified with prefix "EV" as listed. *Refer to Optional Features Electrical Section for details.*

Specifications (English units)

Pipe Size (in)	Orifice Size (in)	Cv Flow Factor	Operating Pressure Differential (psi)							Max. Fluid Temp. ˚F		Brass Body			Stainless Steel Body			Watt Rating/ Class of Coil Insulation ⑦	
				Max. AC			Max. DC												
			Min.	Air-Inert Gas	Water	Light Oil @ 300 SSU	Air-Inert Gas	Water	Light Oil @ 300 SSU	AC	DC	Catalog Number	Const. Ref. ④	UL ⑤ Listing	Catalog Number	Const. Ref. ④	UL ⑤ Listing	AC	DC
NORMALLY CLOSED (Closed when de-energized), NBR or PTFE ② Seating																			
3/8	3/8	1.5	①	150	125	-	40	40	-	180	150	8210G073 ③	1P	●	8210G036 ③	1P	●	6.1/F	11.6/F
3/8	5/8	3	0	150	150	-	40	40	-	180	150	8210G093	5D	❍	-	-	-	10.1/F	11.6/F
3/8	5/8	3	5	200	150	135	125	100	100	180	150	8210G001 ▼	6D	❍	-	-	-	6.1/F	11.6/F
3/8	5/8	3	5	300	300	300	-	-	-	175	-	8210G006 ✓	5D	❍	-	-	-	17.1/F	-
1/2	7/16	2.2	①	150	125	-	40	40	-	180	150	8210G015 ③	2P	●	8210G037 ③	2P	●	6.1/F	11.6/F
1/2	5/8	4	0	150	150	-	40	40	-	180	150	8210G094 ✓	5D	❍	-	-	-	10.1/F	11.6/F
1/2	5/8	4	0	150	150	125	40	40	-	175	150	-	-	-	8210G087 ✓	7D	●	17.1/F	11.6/F
1/2	5/8	4	5	200	150	135	125	100	100	180	150	8210G002 ▼	6D	❍	-	-	-	6.1/F	11.6/F
1/2	5/8	4	5	300	300	300	-	-	-	175	-	8210G007	5D	❍	-	-	-	17.1/F	-
1/2	3/4	4	5	-	300	-	-	300	-	130	90	8210G227	5D	❍ †	-	-	-	17.1/F	40.6/H
3/4	5/8	4.5	0	150	150	125	40	40	-	175	150	-	-	-	8210G088 ✓	7D	●	17.1/F	11.6/F
3/4	3/4	5	5	125	125	125	100	90	75	180	150	8210G009 ▼	9D	❍	-	-	-	6.1/F	11.6/F
3/4	3/4	5	0	150	150	-	40	40	-	180	150	8210G095 ✓	8D	❍	-	-	-	10.1/F	11.6/F
3/4	3/4	6.5	5	250	150	100	125	125	125	180	150	8210G003 ▼	11D	❍	-	-	-	6.1/F	11.6/F
3/4	3/4	6	0	350	300	200	200	200	200	200	180	8210G026 ② ‡ ◆	40P/10D	●	-	-	-	16.1F	30.8/F
1	1	13	0	150	125	125	135	120	120	180	180	8210G054 ‡ ◆	41D/31D	●	8210G089 ‡ ◆	45D/15D	●	16.1/F	30.8/F
1	1	13	5	150	150	100	125	125	125	180	150	8210G004 ▼	12D	❍	-	-	-	6.1/F	11.6/F
1	1	13.5	0	300	225	115	-	-	-	200	-	8210G027 ‡	42P	●	-	-	-	20.1/F	-
1	1	13.5	10	300	300	300	-	-	-	175	-	8210G078 ②	13P	-	-	-	-	17.1/F	-
1 1/4	1 1/8	15	0	150	125	125	135	120	120	180	180	8210G055 ‡ ◆	43D/32D	●	-	-	-	16.1/F	30.8/F
1 1/4	1 1/8	15	5	150	150	100	125	125	125	180	150	8210G008 ▼	16D	❍	-	-	-	6.1/F	11.6/F
1 1/2	1 1/4	22.5	0	150	125	125	135	120	120	180	180	8210G056 ‡ ◆	44D/33D	●	-	-	-	16.1/F	30.8/F
1 1/2	1 1/4	22.5	5	150	150	100	125	125	125	180	150	8210G022 ▼	18D	●	8210G127	-	-	6.1/F	11.6/F
2	1 3/4	43	5	150	125	90	50	50	50	180	150	8210G100	20P	●	8210G129	-	-	6.1/F	11.6/F
2 1/2	1 3/4	45	5	150	125	90	50	50	50	180	150	8210G101	21P	●	-	-	-	6.1/F	11.6/F
NORMALLY OPEN (Open when de-energized), NBR Seating (PA Disc-Holder, except as noted)																			
3/8	5/8	3	0	150	150	125	125	125	80	180	150	8210G033	23D	●	-	-	-	10.1/F	11.6/F
3/8	5/8	3	5	250	200	200	250	200	200	180	180	8210G011 ⑧ ⑨	39D	●	-	-	-	10.1/F	11.6/F
1/2	5/8	4	0	150	150	125	125	125	80	180	150	8210G034 ✓	23D	●	-	-	-	10.1/F	11.6/F
1/2	5/8	3	0	150	150	100	125	125	80	180	150	-	-	-	8210G030 ✓	37D	●	10.1/F	11.6/F
1/2	5/8	4	5	250	200	200	250	200	200	180	180	8210G012 ⑧ ⑨	39D	●	-	-	-	10.1/F	11.6/F
3/4	3/4	5.5	0	150	150	125	125	125	80	180	150	8210G035 ✓	25D	●	-	-	-	10.1/F	11.6/F
3/4	5/8	3	0	150	150	100	125	125	80	180	150	-	-	-	8210G038 ✓	38D	●	10.1/F	11.6/F
3/4	3/4	6.5	5	-	-	-	250	200	200	-	180	8210C013	24D	●	-	-	-	-	16.8/F
3/4	3/4	6.5	5	250	200	200	-	-	-	180	-	8210G013	46D	●	-	-	-	16.1/F	-
1	1	13	0	125	125	125	-	-	-	180	-	8210B057 ⑥ ⑩	34D	●	-	-	-	20/F	-
1	1	13	5	-	-	-	125	125	125	-	180	8210D014	26D	●	-	-	-	-	16.8/F
1	1	13	5	150	150	125	-	-	-	180	-	8210G014	47D	●	-	-	-	16.1/F	-
1 1/4	1 1/8	15	0	125	125	125	-	-	-	180	-	8210B058 ⑥ ⑩	35D	●	-	-	-	20/F	-
1 1/4	1 1/8	15	5	-	-	-	125	125	125	-	180	8210D018	28D	●	-	-	-	-	16.8/F
1 1/4	1 1/8	15	5	150	150	125	-	-	-	180	-	8210G018	48D	●	-	-	-	16.1/F	-
1 1/2	1 1/4	22.5	0	125	125	125	-	-	-	180	-	8210B059 ⑥ ⑩	36D	●	-	-	-	20/F	-
1 1/2	1 1/4	22.5	5	-	-	-	125	125	125	-	180	8210D032	29D	●	-	-	-	-	16.8/F
1 1/2	1 1/4	22.5	5	150	150	125	-	-	-	180	-	8210G032	49D	●	8210G132	-	-	16.1/F	-
2	1 3/4	43	5	-	-	-	125	125	125	-	150	8210 103	30P	●	-	-	-	-	16.8/F
2	1 3/4	43	5	125	125	125	-	-	-	180	-	8210G103	50P	●	8210G133	-	-	16.1/F	-
2 1/2	1 3/4	45	5	-	-	-	125	125	125	-	150	8210 104	27P	●	-	-	-	-	16.8/F
2 1/2	1 3/4	45	5	125	125	125	-	-	-	180	-	8210G104	51P	●	-			16.1/F	-

① 5 psi on Air; 1 psi on Water.
② Valve provided with PTFE main disc.
③ Valve includes Ultem (G.E. trademark) piston.
④ Letter "D" denotes diaphragm construction; "P" denotes piston construction.
⑤ ❍ Safety Shutoff Valve; ● General Purpose Valve.
Refer to Engineering Section (Approvals) for details.

⑥ Valves not available with Explosionproof enclosures.
⑦ On 50 hertz service, the watt rating for the 6.1/F solenoid is 8.1 watts.
⑧ AC construction also has PA seating.
⑨ No disc-holder.
⑩ Stainless steel disc-holder.
† UL listed for fire protection systems per UL429A.

‡ DC constructions must have solenoid mounted vertical and upright.
✓ ATEX/IECEx certified with prefix "EV".
▼ ATEX/IECEx certified for DC only with prefix "EV".
◆ Not available in 6 Volt DC. EF and HB prefix only.

Specifications (Metric units)

Pipe Size (in)	Orifice Size (mm)	Kv Flow Factor (m^3/hr)	Operating Pressure Differential (bar)							Max. Fluid Temp. ˚C		Brass Body			Stainless Steel Body			Watt Rating/ Class of Coil Insulation ⑦	
			Min.	Max. AC			Max. DC												
				Air-Inert Gas	Water	Light Oil @ 300 SSU	Air-Inert Gas	Water	Light Oil @ 300 SSU	AC	DC	Catalog Number	Const. Ref. ④	UL ⑤ Listing	Catalog Number	Const. Ref. ④	UL ⑤ Listing	AC	DC
NORMALLY CLOSED (Closed when de-energized), NBR or PTFE ② Seating																			
3/8	10	1.3	①	10	9	-	3	3	-	82	65	8210G073 ③	1P	●	8210G036 ③	1P	●	6.1/F	11.6/F
3/8	16	2.6	0	10	10	-	3	3	-	82	65	8210G093	5D	❍	-	-	-	10.1/F	11.6/F
3/8	16	2.6	0.3	14	10	9	9	7	7	82	65	8210G001 ▼	6D	❍	-	-	-	6.1/F	11.6/F
3/8	16	2.6	0.3	21	21	21	-	-	-	79	-	8210G006 ✓	5D	❍	-	-	-	17.1/F	-
1/2	11	1.9	①	10	9	-	3	3	-	82	65	8210G015 ③	2P	●	8210G037 ③	2P	●	6.1/F	11.6/F
1/2	16	3.4	0	10	10	-	3	3	-	82	65	8210G094 ✓	5D	❍	-	-	-	10.1/F	11.6/F
1/2	16	3.4	0	10	10	9	3	3	-	79	65	-	-	-	8210G087 ✓	7D	●	17.1/F	11.6/F
1/2	16	3.4	0.3	14	10	9	9	7	7	82	65	8210G002 ▼	6D	❍	-	-	-	6.1/F	11.6/F
1/2	16	3.4	0.3	21	21	21	-	-	-	79	-	8210G007	5D	❍	-	-	-	17.1/F	-
1/2	19	3.4	0.3	-	21	-	-	21	-	54	32	8210G227	5D	❍ †	-	-	-	17.1/F	40.6H
3/4	16	3.9	0	10	10	9	3	3	-	79	65	-	-	-	8210G088 ✓	7D	●	17.1/F	11.6/F
3/4	19	4.3	0.3	9	9	9	7	6	5	82	65	8210G009 ▼	9D	❍	-	-	-	6.1/F	11.6/F
3/4	19	4.3	0	10	10	-	3	3	-	82	65	8210G095 ✓	8D	❍	-	-	-	10.1/F	11.6/F
3/4	19	5.6	0.3	17	10	7	9	9	9	82	65	8210G003 ▼	11D	❍	-	-	-	6.1/F	11.6/F
3/4	19	5.1	0	24	21	14	14	14	14	93	82	8210G026 ② ‡ ◆	40P/10D	●	-	-	-	16.1F	30.8/F
1	25	11	0	10	9	9	9	8	8	82	82	8210G054 ‡ ◆	41D/31D	●	8210G089 ‡ ◆	45D/15D	●	16.1/F	30.8/F
1	25	11	0.3	10	10	7	9	9	9	82	65	8210G004 ▼	12D	❍	-	-	-	6.1/F	11.6/F
1	25	11.5	0	21	16	8	-	-	-	93	-	8210G027 ‡	42P	●	-	-	-	20.1/F	-
1	25	11.5	0.7	21	21	21	-	-	-	79	-	8210G078 ②	13P	-	-	-	-	17.1/F	-
1 1/4	29	13	0	10	9	9	9	8	8	82	82	8210G055 ‡ ◆	43D/32D	●	-	-	-	16.1/F	30.8/F
1 1/4	29	13	0.3	10	10	7	9	9	9	82	65	8210G008 ▼	16D	❍	-	-	-	6.1/F	11.6/F
1 1/2	32	19.5	0	10	9	9	9	8	8	82	82	8210G056 ‡ ◆	44D/33D	●	-	-	-	16.1/F	30.8/F
1 1/2	32	19.5	0.3	10	10	7	9	9	9	82	65	8210G022 ▼	18D	●	8210G127	-	-	6.1/F	11.6/F
2	44	37	0.3	10	9	6	3	3	3	82	65	8210G100	20P	●	8210G129	-	-	6.1/F	11.6/F
2 1/2	44	39	0.3	10	9	6	3	3	3	82	65	8210G101	21P	●	-	-	-	6.1/F	11.6/F
NORMALLY OPEN (Open when de-energized), NBR Seating (PA Disc-Holder, except as noted)																			
3/8	16	2.6	0.0	10	10	9	9	9	6	82	65	8210G033	23D	●	-	-	-	10.1/F	11.6/F
3/8	16	2.6	0.3	17	14	14	17	14	14	82	82	8210G011 ⑧ ⑨	39D	●	-	-	-	10.1/F	11.6/F
1/2	16	3.4	0	10	10	9	9	9	6	82	65	8210G087 ✓	7D	●	-	-	-	10.1/F	11.6/F
1/2	16	2.6	0	10	10	7	9	9	6	82	65	-	-	-	8210G087 ✓	7D	●	10.1/F	11.6/F
1/2	16	3.4	0.3	17	14	14	17	14	14	82	82	8210G012 ⑧ ⑨	39D	●	-	-	-	10.1/F	11.6/F
3/4	19	4.7	0	10	10	9	9	9	6	82	65	8210G087 ✓	7D	●	-	-	-	10.1/F	11.6/F
3/4	16	2.6	0	10	10	7	9	9	6	82	65	-	-	-	8210G087 ✓	7D	●	10.1/F	11.6/F
3/4	19	5.6	0.3	-	-	-	17	14	14	-	82	8210C013	24D	●	-	-	-	-	16.8/F
3/4	19	5.6	0.3	17	14	14	-	-	-	82	-	8210G013	46D	●	-	-	-	16.1/F	-
1	25	11	0	9	9	9	-	-	-	82	-	8210B057 ⑥ ⑩	34D	●	-	-	-	20/F	-
1	25	11	0.3	-	-	-	9	9	9	-	82	8210D014	26D	●	-	-	-	-	16.8/F
1	25	11	0.3	10	10	9	-	-	-	82	-	8210G014	47D	●	-	-	-	16.1/F	-
1 1/4	29	13	0	9	9	9	-	-	-	82	-	8210B058 ⑥ ⑩	35D	●	-	-	-	20/F	-
1 1/4	29	13	0.3	-	-	-	9	9	9	-	82	8210D018	28D	●	-	-	-	-	16.8/F
1 1/4	29	13	0.3	10	10	9	-	-	-	82	-	8210G018	48D	●	-	-	-	16.1/F	-
1 1/2	32	19.5	0	9	9	9	-	-	-	82	-	8210B059 ⑥ ⑩	36D	●	-	-	-	20/F	-
1 1/2	32	19.5	0.3	-	-	-	9	9	9	-	82	8210D032	29D	●	-	-	-	-	16.8/F
1 1/2	32	19.5	0.3	10	10	9	-	-	-	82	-	8210G032	49D	●	8210G132	-	-	16.1/F	-
2	44	37	0.3	-	-	-	9	9	9	-	65	8210 103	30P	●	-	-	-	-	16.8/F
2	44	37	0.3	9	9	9	-	-	-	82	-	8210G103	50P	●	8210G133	-	-	16.1/F	-
2 1/2	44	39	0.3	-	-	-	9	9	9	-	65	8210 104	27P	●	-	-	-	-	16.8/F
2 1/2	44	39	0.3	9	9	9	-	-	-	82	-	8210G104	51P	●	-	-	-	16.1/F	-

① 0.3 bar on Air; 0.0 bar on Water.
② Valve provided with PTFE main disc.
③ Valve includes UItem (G.E. trademark) piston.
④ Letter "D" denotes diaphragm construction; "P" denotes piston construction.
⑤ ❍ Safety Shutoff Valve; ● General Purpose Valve.
Refer to Engineering Section (Approvals) for details.

⑥ Valves not available with Explosionproof enclosures.
⑦ On 50 hertz service, the watt rating for the 6.1/F solenoid is 8.1 watts.
⑧ AC construction also has PA seating.
⑨ No disc-holder.
⑩ Stainless steel disc-holder.
† UL listed for fire protection systems per UL429A.

‡ DC constructions must have solenoid mounted vertical and upright.
✓ ATEX/IECEx certified with prefix "EV".
▼ ATEX/IECEx certified for DC only with prefix "EV".
◆ Not available in 6 Volt DC. EF and HB prefix only.

Dimensions: inches (mm)

Const. Ref.		H	K	L	P	W
1*	in	3.85	3.00	1.91	3.41	1.69
	mm	98	76	49	87	43
2*	in	4.17	3.25	2.28	3.63	1.69
	mm	106	83	58	92	43
5	in	3.84	2.31	2.75	3.28	2.28
	mm	98	59	70	83	58
6*	in	3.38	1.94	2.75	2.80	2.28
	mm	86	49	70	71	58
7	in	4.19	2.50	2.81	3.47	2.39
	mm	106	64	71	88	61
8	in	4.13	2.47	2.81	3.44	2.29
	mm	105	63	71	87	58
9*	in	3.66	2.10	2.81	2.96	2.28
	mm	93	53	71	75	58
10*	in	5.20	3.40	2.80	4.50	2.50
	mm	131	86	71	114	62
11*	in	4.16	2.66	3.84	3.52	2.75
	mm	106	68	98	89	70
12	in	5.64	3.15	3.75	4.01	3.36
	mm	143	80	95	102	85
13	in	4.44	3.22	3.75	4.19	5.81
	mm	113	82	95	106	147
15*	in	5.20	3.30	3.80	4.40	3.80
	mm	133	83	98	111	98
16	in	5.64	3.15	3.66	4.01	3.56
	mm	143	80	93	102	90
18*	in	6.11	3.30	4.38	4.16	3.92
	mm	155	84	111	106	100
20*	in	7.33	3.71	5.06	4.57	4.87
	mm	186	94	129	116	124
21*	in	7.33	3.71	5.50	4.57	4.87
	mm	186	94	140	116	124
23	in	4.35	2.65	2.75	3.79	2.28
	mm	110	67	70	96	58
24	in	5.06	X	3.78	4.44	2.75
	mm	129	X	96	113	70
25	in	4.64	2.81	2.81	3.94	2.28
	mm	118	71	71	100	58
26	in	6.53	X	3.75	4.91	3.19
	mm	166	X	95	125	81
27	in	8.22	X	5.50	5.47	4.87
	mm	209	X	140	139	124
28	in	6.53	X	3.66	4.91	3.19
	mm	166	X	93	125	81
29	in	7.03	X	4.38	5.06	4.40
	mm	179	X	111	129	112

* DC dimensions slightly larger.
IMPORTANT: Valves may be mounted in any position, except as noted in specifications table.

Const. Ref. 1, 2

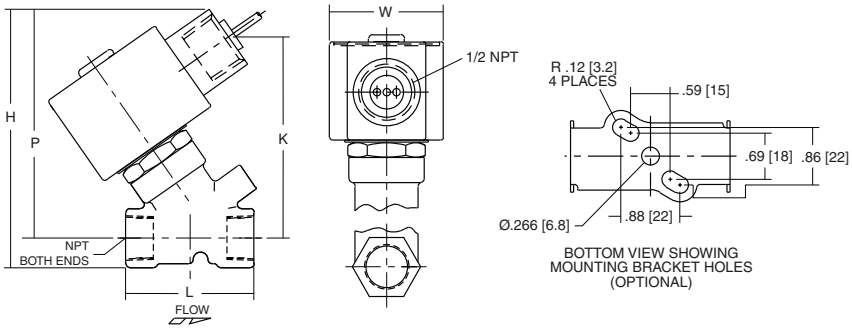

Const. Ref. 13

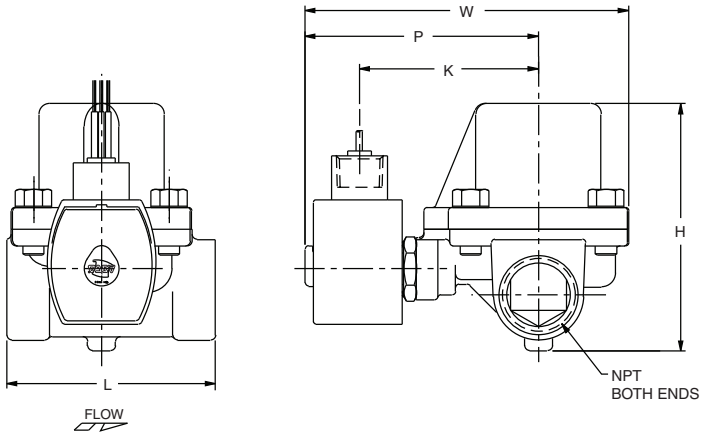

Const. Ref. 5-9, 11, 23 , 25, 37,38, 40-46

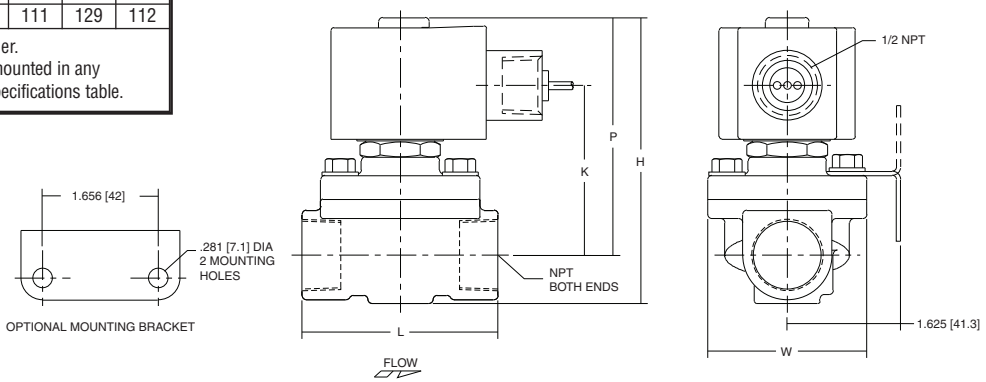

Dimensions: inches (mm)

Const. Ref.		H	K	L	P	W
30	in	8.22	X	5.06	5.47	4.87
	mm	209	X	129	139	124
31	in	5.13	3.19	3.76	4.32	3.27
	mm	130	81	95	110	83
32	in	5.60	3.44	3.66	4.57	3.27
	mm	142	87	93	116	83
33	in	5.92	3.66	4.51	4.80	3.89
	mm	150	93	115	122	99
34	in	6.91	X	3.75	6.09	3.25
	mm	176	X	95	155	83
35	in	7.34	X	3.66	6.34	3.25
	mm	186	X	93	161	83
36	in	7.66	X	4.38	6.56	3.91
	mm	1.95	X	111	167	99
37	in	4.61	2.75	2.81	3.89	2.39
	mm	117	70	71	99	61
38	in	4.61	2.75	2.81	3.89	2.39
	mm	117	70	71	99	61
39	in	5.42	2.31	2.75	4.86	3.80
	mm	138	59	70	123	97
40	in	5.20	3.29	2.81	4.50	2.28
	mm	132	83	71	114	58
41	in	5.13	3.10	3.75	4.32	3.25
	mm	130	79	95	110	83
42	in	6.43	4.40	3.93	5.62	3.25
	mm	163	112	100	143	83
43	in	5.57	3.35	3.66	4.57	3.25
	mm	142	85	93	116	83
44	in	5.90	3.57	4.38	4.79	3.91
	mm	150	91	111	122	99
45	in	5.26	3.17	3.75	4.38	3.84
	mm	134	81	95	111	98
46	in	4.95	3.10	3.84	4.31	2.75
	mm	126	79	98	110	70
47	in	6.43	3.59	3.75	4.81	3.52
	mm	163	91	95	122	90
48	in	6.43	3.59	3.66	4.81	3.73
	mm	163	91	93	122	95
49	in	6.91	3.75	4.38	4.96	4.40
	mm	176	95	111	126	112
50	in	8.13	4.15	5.06	5.37	4.87
	mm	207	105	129	136	124
51	in	8.13	4.15	5.50	5.37	5.18
	mm	207	105	140	136	132

IMPORTANT: Valves may be mounted in any position, except as noted in specifications table.

Const. Ref. 10, 15, 31, 32, 33

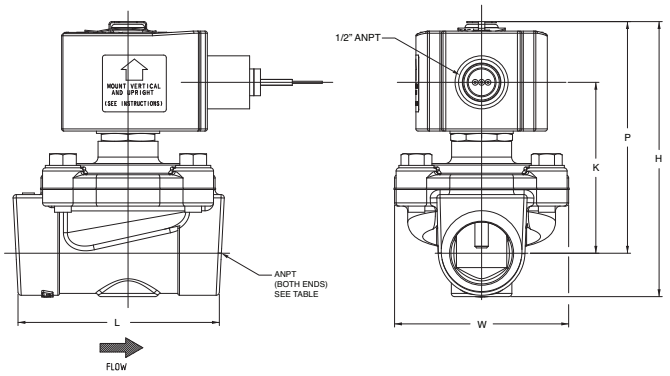

Const. Ref. 24, 34, 35, 36

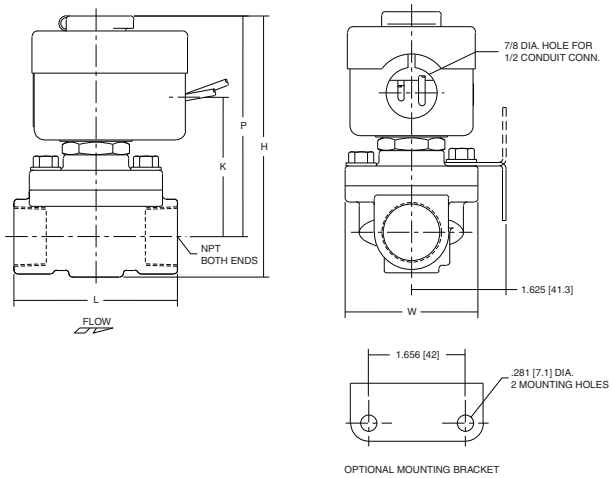

Const. Ref. 12, 16, 26, 28, 47, 48

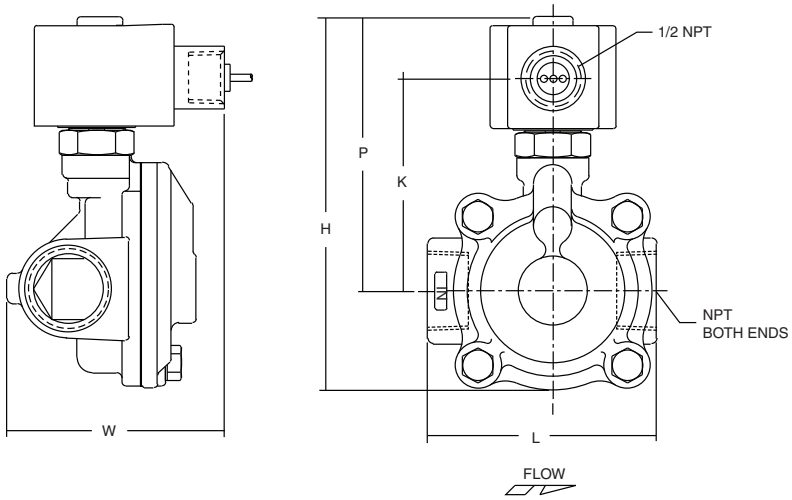

Dimensions: inches (mm)

Const. Ref. 39

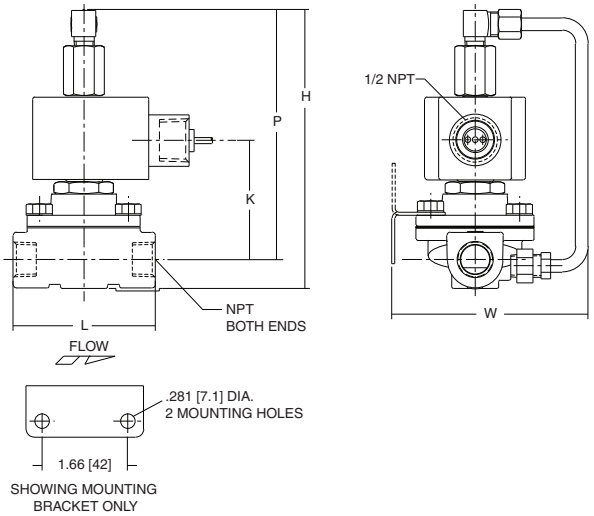

Const. Ref. 18, 29, 49

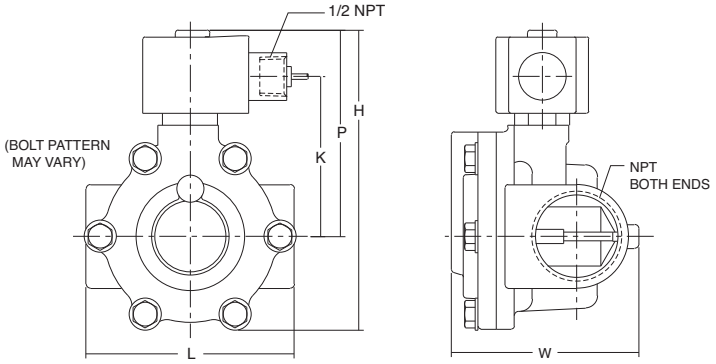

Const. Ref. 20, 21, 27, 30, 50, 51

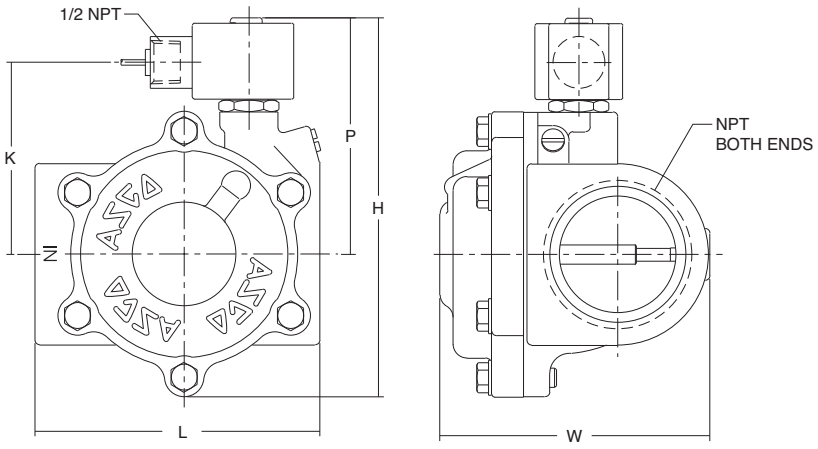

CS-304-500 : Identification sheet

VWTC PROJECT NUMBER:	Iqaluit WWTP	REV:	01
PROJECT NAME:	5000218036	SUBMITTED TO (COMPANY):	
ENGINEER:	G. HÉBERT	SUBMITTED TO (RESPONSIBLE)	
PROJECT MANAGER:	C. BEKAERT	PROJECT NUM REFERENCE.:	
PHONE NUMBER:		LOT NUMBER:	

SUPPLIER	EQPT CODE	EQPT TAG NO	DIA	DESCRIPTION	INFO 1	INFO 2	INFO 3	APPLIC.	NOTE	REV
TEKNO VALVE	VASDBR330455	SV-04-713	N/A	HP-250 VALVE	TYPE: SOLENOID VALVE//MANUFACTURER : ASCO//MODEL : 8345G001-120VAC//CONNECTION TYPE : THREADED | 6 mm (1/4") | 6 mm (1/4")//BODY : BRASS// SEAL | SEAT :NBR | // STEM : N/A	ACTING : PILOT	NORMALLY : CLOSED	HP-250		1

This page is intentionally left blank

Features

- Compact valves for general service applications
- Low-cost, 4-way valve when low flow is sufficient
- Mountable in any position

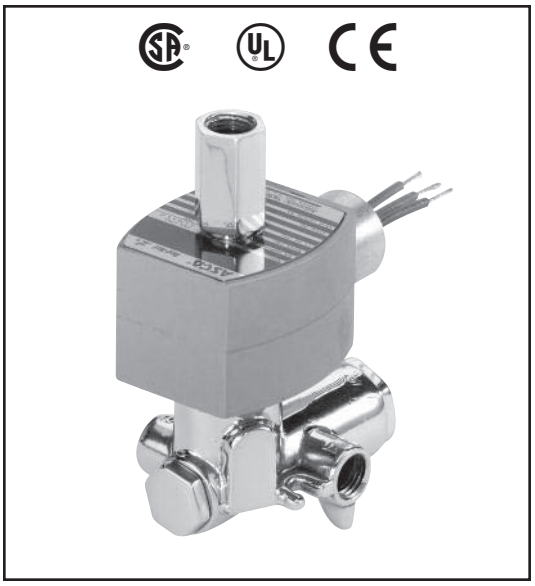

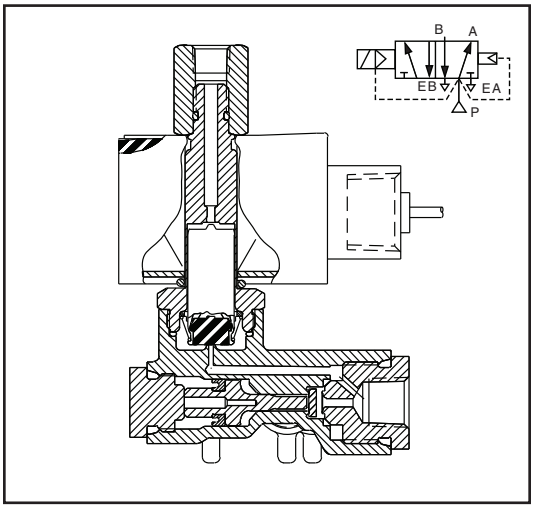

Construction

Valve Parts in Contact with Fluids		
Body	Brass	316 Stainless Steel
Seals and Disc	NBR and PA	
Core Tube	305 Stainless Steel	
Core and Plugnut	430F Stainless Steel	
Springs	302 Stainless Steel	
Shading Coil	Copper	Silver
Piston	PA	

Electrical

Standard Coil and Class of Insulation	Watt Rating and Power Consumption				Spare Coil Part Number					
		AC			General Purpose		Explosionproof (EF)		Explosionproof (EV)	
	DC Watts	Watts	VA Holding	VA Inrush	AC	DC	AC	DC	AC	DC
F	11.6	10.1	25	50	238610	238710	238614	238714	274614	274714

Standard Voltages: 24, 120, 240, 480 volts AC, 60 Hz (or 110, 220 volts AC, 50 Hz).
6, 12, 24, 120, 240 volts DC. Must be specified when ordering.
Other voltages are available when required.

Solenoid Enclosures

Standard: Watertight, Types 1, 2, 3, 3S, 4, and 4X.

Optional: Explosionproof and Watertight, Types 3, 3S, 4, 4X, 6, 6P, 7, and 9. (To order, add prefix "EF" or, for Explosionproof Stainless Steel trim and hub on Brass-Bodied valves, add "EV" to catalog number.)

See Optional Features Section for other available options.

Nominal Ambient Temp. Ranges

AC: 32˚F to 125˚F (0˚C to 52˚C)
DC: 32˚F to 104˚F (0˚C to 40˚C)

Refer to Engineering Section for details.

Approvals

CSA certified. UL listed as General Purpose Valve.
EV8345G081 solenoid only UL approved.
Meets applicable CE directives.
Refer to Engineering Section for details.

ATEX/IECEx certified with prefix "EV" as listed.
Refer to Optional Features Electrical Section for details.

Important

A Minimum Operating Pressure Differential must be maintained between the pressure and exhaust ports. Supply and exhaust piping must be full area, unrestricted. ASCO flow controls and other similar components must be installed in the cylinder lines only.

Refer to Engineering Section for details.

ASCO®

Specifications (English units)

Pipe Size (in)	Orifice Size (in)		Cv Flow Factor		Operating Pressure Differential (psi)							Max. Fluid Temp. ˚F		Brass Body	Stainless Steel Body		Watt Rating/ Class of Coil Insulation	
					Max. AC				Max. DC									
	Press.	Exh.	Inlet	Exh.	Min.	Air-Inert Gas	Water	Lt. Oil @ 50 SSU	Air-Inert Gas	Water	Lt. Oil @ 50 SSU	AC	DC	Catalog Number	Catalog Number	Const. Ref.	AC	DC
SINGLE SOLENOID																		
1/4	1/16	3/32	.09	.09	10	150	150	150	100	100	100	180	104	8345G001 ①	EV8345G081 ①	1	10.1/F	11.6/F
SINGLE SOLENOID AIR-ONLY CONSTRUCTION - Exhaust to Atmosphere																		
1/4	1/16	3/32	.09	.09	10	150	-	-	100	-	-	180	104	8345H003	-	1	10.1/F	11.6/F

① ATEX/IECEx certified with prefix "EV".

Specifications (Metric units)

Pipe Size (in)	Orifice Size (mm)		Kv Flow Factor (m^3/h)		Operating Pressure Differential (bar)							Max. Fluid Temp. ˚C		Brass Body	Stainless Steel Body		Watt Rating/ Class of Coil Insulation	
					Max. AC				Max. DC									
	Press.	Exh.	Inlet	Exh.	Min.	Air-Inert Gas	Water	Lt. Oil @ 50 SSU	Air-Inert Gas	Water	Lt. Oil @ 50 SSU	AC	DC	Catalog Number	Catalog Number	Const. Ref.	AC	DC
SINGLE SOLENOID																		
1/4	2	2	.08	.08	0.7	10	10	10	7	7	7	82	40	8345G001 ①	EV8345G081 ①	1	10.1/F	11.6/F
SINGLE SOLENOID AIR-ONLY CONSTRUCTION - Exhaust to Atmosphere																		
1/4	2	2	.08	.08	0.7	10	-	-	7	-	-	82	40	8345H003	-	1	10.1/F	11.6/F

① ATEX/IECEx certified with prefix "EV".

Dimensions inches (mm)

Const. Ref. 1

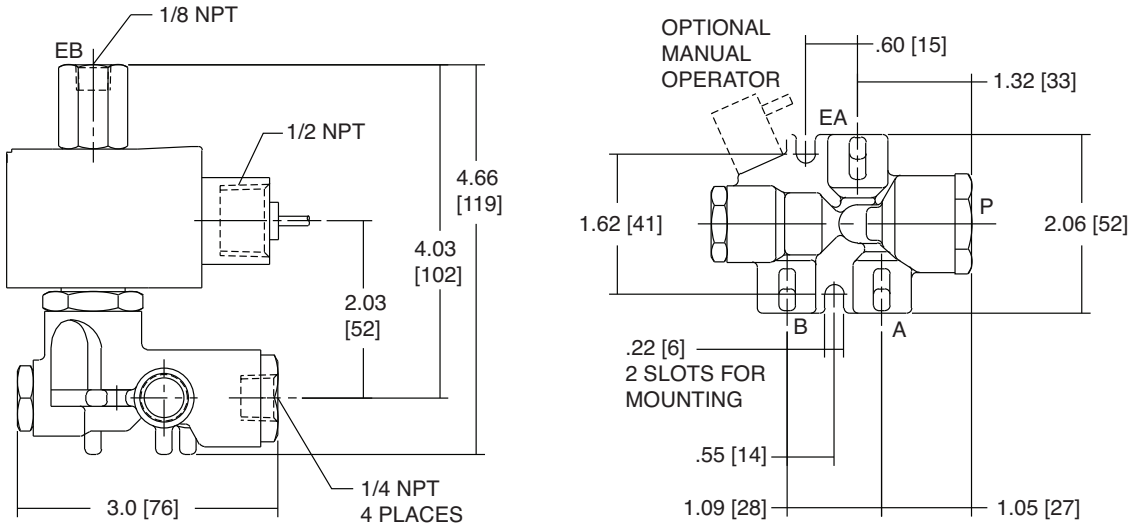

CS-405-112 : Identification sheet

VWTC PROJECT NUMBER:	Iqaluit WWTP	REV:	01
PROJECT NAME:	5000218036	SUBMITTED TO (COMPANY):	
ENGINEER:	G. HÉBERT	SUBMITTED TO (RESPONSIBLE)	
PROJECT MANAGER:	C. BEKAERT	PROJECT NUM REFERENCE.:	
PHONE NUMBER:		LOT NUMBER:	

SUPPLIER	EQPT CODE	EQPT TAG NO	DIA	DESCRIPTION	INFO 1	INFO 2	INFO 3	APPLIC.	NOTE	REV
ENDRESS & HAUSER	IEMRLE344048	LIT-04-742		HP-250 INSTRUMENT	LEVEL TRANSMITTER/MANUFACTURER : ENDRESS AND HAUSER/MODEL: PMC21-CA1V1ECVXJJ/ CA: Approval CSA GU / 1: Output 4-20mA / V: Electrical Connection Valve plug ISO4400 NPT1/2 / 1E: Sensor range 250mbar / C: Sensor range; kPa/Mpa	VXJ: Process connection: MNPT1/2 FNPT 1/4, 316L / J: Seal EPDM		HP-250		1
ENDRESS & HAUSER	IEMRLE344048	LIT-04-746		HP-250 INSTRUMENT	LEVEL TRANSMITTER/MANUFACTURER : ENDRESS AND HAUSER/MODEL: PMC21-CA1V1ECVXJJ/ CA: Approval CSA GU / 1: Output 4-20mA / V: Electrical Connection Valve plug ISO4400 NPT1/2 / 1E: Sensor range 250mbar / C: Sensor range; kPa/Mpa	VXJ: Process connection: MNPT1/2 FNPT 1/4, 316L / J: Seal EPDM		HP-250		1

This page is intentionally left blank

Technical Information
Cerabar PMC11, PMC21, PMP11, PMP21

Process pressure measurement



Pressure transducer with ceramic and metal sensors

Application

The Cerabar is a pressure transducer for the measurement of absolute and gauge pressure in gases, vapors, liquids and dust. The Cerabar can be used internationally thanks to a wide range of approvals and process connections.

Your benefits

- High reproducibility and long-term stability
- Reference accuracy: up to 0.3%
- Customized measuring ranges
  - Turn down up to 5:1
  - Sensor for measuring ranges up to 400 bar (6 000 psi)
- Housing and process isolating diaphragm made of 316L

Endress+Hauser
People for Process Automation

Table of contents

Document information 4
Document function 4
Symbols used 4
Documentation 5
Terms and abbreviations 6
Turn down calculation 7

Function and system design 8
Measuring principle - process pressure measurement 8
Measuring system 8
Device features 9
Product design 11
System integration 11

Input 12
Measured variable 12
Measuring range 12

Output 15
Output signal 15
Signal range 4 to 20 mA 15
Load (for 4 to 20 mA devices) 15
Load resistance (for 0 to 10 V devices) 15
Signal on alarm 4 to 20 mA 15
Dead time, time constant 15
Dynamic behavior 16

Power supply 17
Terminal assignment 17
Supply voltage 17
Current consumption and alarm signal 17
Power supply fault 18
Electrical connection 18
Cable specification 18
Residual ripple 18
Influence of power supply 18
Overvoltage protection 18

Performance characteristics of ceramic process isolating diaphragm 19
Reference operating conditions 19
Measuring uncertainty for small absolute pressure measuring ranges 19
Influence of the installation position 19
Resolution 19
Reference accuracy 19
Thermal change of the zero output and the output span . . . 19
Long-term stability 20
Switch-on time 20

Performance characteristics of metallic process isolating diaphragm 21
Reference operating conditions 21
Measuring uncertainty for small absolute pressure measuring ranges 21
Influence of the installation position 21
Resolution 21
Reference accuracy 21
Thermal change of the zero output and the output span . . . 21
Long-term stability 21
Switch-on time 21

Installation 22
Installation conditions 22
Influence of the installation position 22
Mounting location 22
Mounting instructions for oxygen applications 23

Environment 25
Ambient temperature range 25
Storage temperature range 25
Climate class 25
Degree of protection 25
Vibration resistance 25
Electromagnetic compatibility 25

Process 26
Process temperature range for devices with ceramic process isolating diaphragm 26
Process temperature range for devices with metallic process isolating diaphragm 26
Pressure specifications 27

Mechanical construction 28
Design, dimensions 28
Electrical connection 28
Housing 29
Process connections with internal, ceramic process isolating diaphragm 30
Process connections with internal, ceramic process isolating diaphragm 31
Process connections with internal, ceramic process isolating diaphragm 32
Process connections with internal, ceramic process isolating diaphragm 32
Process connections with internal, metal process isolating diaphragm 33
Process connections with internal, metal process isolating diaphragm 34
Process connections with internal, metal process isolating diaphragm 35
Process connections with internal, metal process isolating diaphragm 35
Process connections with flush-mounted, metal process isolating diaphragm 36
Materials in contact with process 37
Materials not in contact with process 38
Cleaning 39

Operability 40
Plug-on display PHX20 (optional) 40

Certificates and approvals 41
CE mark 41

RoHS 41
RCM-Tick marking 41
EAC conformity 41
Approval 41
Safety Instructions (XA) 41
Marine approval (pending) 42
Pressure Equipment Directive 2014/68/EU (PED) 42
Other standards and guidelines 42
CRN approval 43
Calibration unit 43
Calibration 43
Inspection certificates 43

Ordering information 44
Scope of delivery 44

Accessories 45
Weld-in adapter 45
Plug-on display PHX20 45
M12 plug connectors 45

Documentation 46
Field of Activities 46
Technical Information 46
Operating Instructions 46
Brief Operating Instructions 46
Safety Instructions (XA) 46

Document information

Document function

The document contains all the technical data on the device and provides an overview of the accessories and other products that can be ordered for the device.

Symbols used

Safety symbols

Symbol	Meaning
DANGER	**DANGER!** This symbol alerts you to a dangerous situation. Failure to avoid this situation will result in serious or fatal injury.
WARNING	**WARNING!** This symbol alerts you to a dangerous situation. Failure to avoid this situation can result in serious or fatal injury.
CAUTION	**CAUTION!** This symbol alerts you to a dangerous situation. Failure to avoid this situation can result in minor or medium injury.
NOTICE	**NOTE!** This symbol contains information on procedures and other facts which do not result in personal injury.

Electrical symbols

Symbol	Meaning	Symbol	Meaning
	**Protective ground connection** A terminal which must be connected to ground prior to establishing any other connections.		**Ground connection** A grounded terminal which, as far as the operator is concerned, is grounded via a grounding system.

Symbols for certain types of information

Symbol	Meaning
	**Permitted** Procedures, processes or actions that are permitted.
	**Forbidden** Procedures, processes or actions that are forbidden.
	**Tip** Indicates additional information.
	Reference to documentation
	Reference to page
	Reference to graphic
	Visual inspection

Symbols in graphics

Symbol	Meaning
1, 2, 3 ...	Item numbers
1., 2., 3., ...	Series of steps
A, B, C, ...	Views

Documentation

The document types listed are available:
In the Download Area of the Endress+Hauser Internet site: www.endress.com → Download

Brief Operating Instructions (KA): getting the 1st measured value quickly

The Brief Operating Instructions contain all the essential information from incoming acceptance to initial commissioning.

Operating Instructions (BA): your comprehensive reference

These Operating Instructions contain all the information that is required in various phases of the life cycle of the device: from product identification, incoming acceptance and storage, to mounting, connection, operation and commissioning through to troubleshooting, maintenance and disposal.

Safety Instructions (XA)

Safety Instructions (XA) are supplied with the device depending on the approval. These instructions are an integral part of the Operating Instructions.

Device	Directive	Documentation	Option [1]
PMP21	ATEX II 1/2G Ex ia IIC T4 Ga/Gb	XA01271P	BA
PMC21	ATEX II 2G Ex ia IIC T4 Gb	XA01271P	BB
PMC21 PMP21	ATEX II 3G Ex ec IIC T4 Gc	XA01533P	BC
PMC21 PMP21	FM IS Cl. I, Div.1 Gr. A-D T4	XA01321P	FA
PMC21 PMP21	CSA C/US IS Cl. I Div. 1 Gr. A-D	XA01322P	CB
PMC21 PMP21	EAC Ex ia IIC T4 Ga/Gb	XA01540P	GA
PMC21 PMP21	IEC Ex ia IIC T4 Ga/Gb	XA01271P	IA
PMC21 PMP21	NEPSI Ex ia IIC T4	XA01363P	NA
PMC21 PMP21	TIIS Ex ia IIC T4	In preparation	TA

1) Product Configurator, order code for "Approval"

The nameplate provides information on the Safety Instructions (XA) that are relevant for the device.

Terms and abbreviations

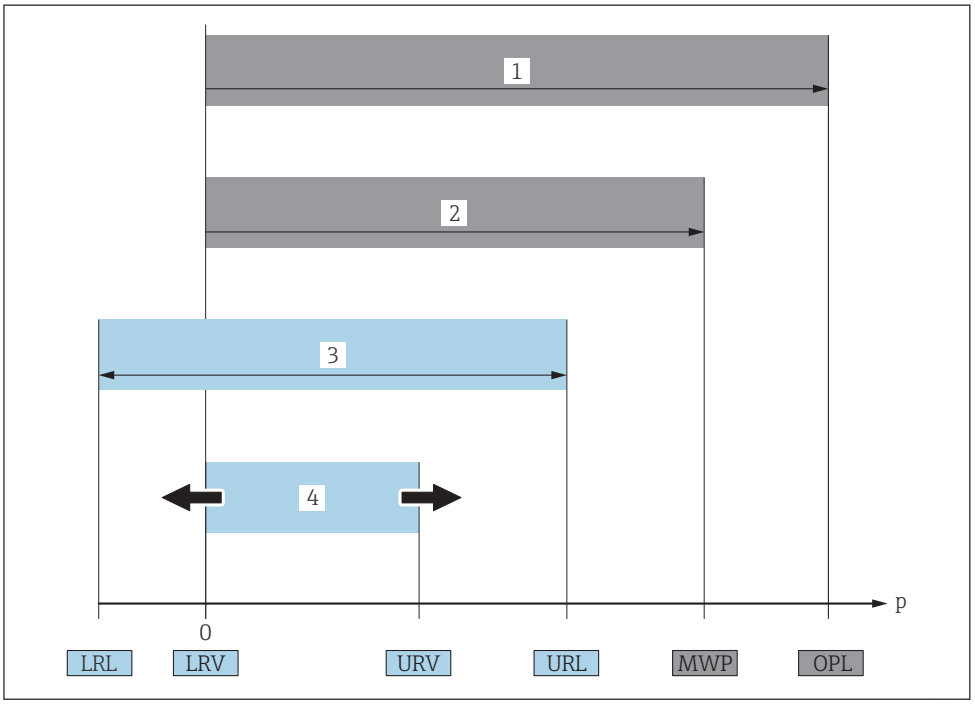

Item	Term/ abbreviation	Explanation
1	OPL	The OPL (over pressure limit = sensor overload limit) for the measuring device depends on the lowest-rated element, with regard to pressure, of the selected components, i.e. the process connection has to be taken into consideration in addition to the measuring cell. Also observe pressure-temperature dependency. For the relevant standards and additional notes, see the "Pressure specifications" section → 27 . The OPL may only be applied for a limited period of time.
2	MWP	The MWP (maximum working pressure) for the sensors depends on the lowest-rated element, with regard to pressure, of the selected components, i.e. the process connection has to be taken into consideration in addition to the measuring cell. Also observe pressure-temperature dependency. For the relevant standards and additional notes, see the "Pressure specifications" section → 27 . The MWP may be applied at the device for an unlimited period. The MWP can also be found on the nameplate.
3	Maximum sensor measuring range	Span between LRL and URL This sensor measuring range is equivalent to the maximum calibratable/adjustable span.
4	Calibrated/ adjusted span	Span between LRV and URV Factory setting: 0 to URL Other calibrated spans can be ordered as customized spans.
p	-	Pressure
-	LRL	Lower range limit
-	URL	Upper range limit
-	LRV	Lower range value
-	URV	Upper range value
-	TD (turn down)	Turn down The turn down is preset at the factory and cannot be changed. Example - see the following section.

Turn down calculation

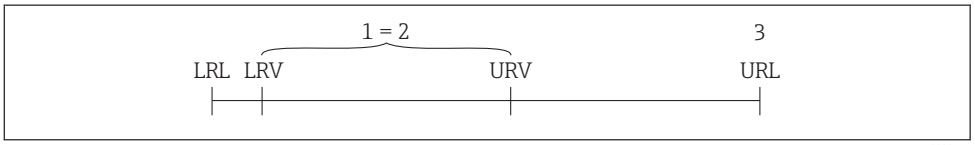

1 Calibrated/adjusted span
2 Zero point-based span
3 URL sensor

Example

- Sensor:10 bar (150 psi)
- Upper range value (URL) = 10 bar (150 psi)

Turn down (TD):

$$TD = \frac{URL}{|URV - LRV|}$$

$$TD = \frac{10\ \text{bar (150 psi)}}{|5\ \text{bar (75 psi)} - 0\ \text{bar (0 psi)}|} = 2$$

In this example, the TD is 2:1.
This span is based on the zero point.

- Calibrated/adjusted span: 0 to 5 bar (0 to 75 psi)
- Lower range value (LRV) = 0 bar (0 psi)
- Upper range value (URV) = 5 bar (75 psi)

Function and system design

Measuring principle - process pressure measurement

Devices with ceramic process isolating diaphragm (Ceraphire®)

The ceramic sensor is an oil-free sensor, i.e. the process pressure acts directly on the robust ceramic process isolating diaphragm and causes it to deflect. A pressure-dependent change in capacitance is measured at the electrodes of the ceramic substrate and the process isolating diaphragm. The measuring range is determined by the thickness of the ceramic process isolating diaphragm.

Advantages:
- Guaranteed overload resistance up to 40 times the nominal pressure
- The ultrapure 99.9% ceramic (Ceraphire®, see also "www.endress.com/ceraphire") ensures:
  - Extremely high chemical durability
  - High mechanical durability
- Can be used in absolute vacuum
- Small measuring ranges

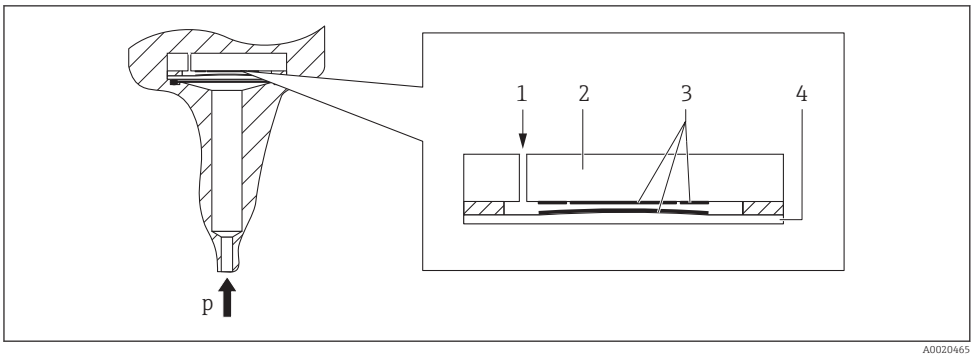

A0020465

1 Air pressure (gauge pressure sensors)
2 Ceramic substrate
3 Electrodes
4 Ceramic process isolating diaphragm

Devices with metallic process isolating diaphragm

The process pressure deflects the metal process isolating diaphragm of the sensor and a fill fluid transfers the pressure to a Wheatstone bridge (semiconductor technology). The pressure-dependent change in the bridge output voltage is measured and evaluated.

Advantages:
- Can be used for high process pressures
- Fully welded sensor
- Slim, flush-mounted process connections available

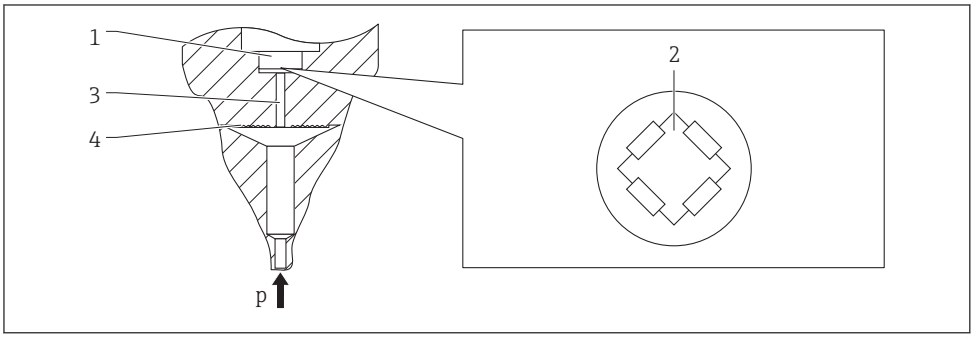

A0016448

1 Silicon measuring element, substrate
2 Wheatstone bridge
3 Channel with fill fluid
4 Metal process isolating diaphragm

Measuring system

A complete measuring system comprises:

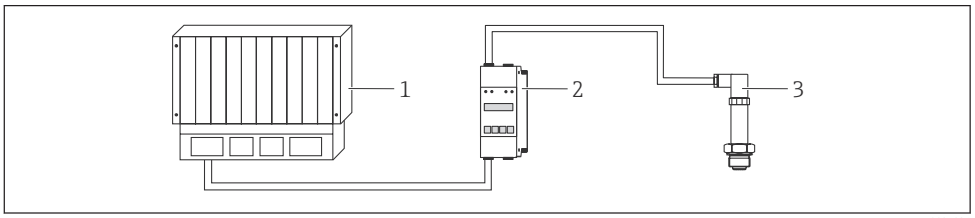

1 PLC (programmable logic control)
2 e.g. RN221N / RMA42 (if required)
3 Pressure transducer

Device features

	PMC11
Field of application	Gauge pressure
Process connections	▪ Thread ISO 228 ▪ Thread ASME ▪ DIN 13
Measuring ranges	From −400 to +400 mbar (−6 to +6 psi) to −1 to +40 bar (−15 to +600 psi).
OPL (depends on the measuring range)	Max. 0 to +60 bar (0 to +900 psi)
Process temperature range	−25 to +85 °C (−13 to +185 °F)
Ambient temperature range	−40 to +70 °C (−40 to +158 °F)
Reference accuracy	Up to 0.5 %, TD 5:1, for details see the "Reference accuracy" section.
Supply voltage	▪ 4 to 20 mA output: 10 to 30V DC ▪ 0 to 10 V output: 12 to 30V DC
Output	▪ 4 to 20 mA ▪ 0 to 10 V
Material	▪ Housing made from 316L (1.4404) ▪ Process connections made from 316L ▪ Process isolating diaphragm made from Al_2O_3 aluminum-oxide ceramic, (Ceraphire®), ultrapure 99.9 %
Options	▪ Certificate of calibration ▪ Cleaned from oil+grease

	PMP11
Field of application	Gauge pressure
Process connections	▪ Thread ISO 228, also flush-mount ▪ Thread ASME ▪ DIN 13
Measuring ranges	From −400 to +400 mbar (−6 to +6 psi) to −1 to +40 bar (−15 to +600 psi).
OPL (depends on the measuring range)	Max. 0 to +160 bar (0 to +2 400 psi)
Process temperature range	−25 to +85 °C (−13 to +185 °F)
Ambient temperature range	−40 to +70 °C (−40 to +158 °F)
Reference accuracy	Up to 0.5 %, TD 5:1, for details see the "Reference accuracy" section.
Supply voltage	▪ 4 to 20 mA output: 10 to 30V DC ▪ 0 to 10 V output: 12 to 30V DC
Output	▪ 4 to 20 mA ▪ 0 to 10 V

	PMP11
Material	▪ Housing made from 316L (1.4404) ▪ Process connections made from 316L (1.4404) ▪ Process isolating diaphragm made from 316L (1.4435)
Options	▪ Certificate of calibration ▪ Cleaned from oil+grease

	PMC21
Field of application	Gauge pressure and absolute pressure
Process connections	▪ Thread ISO 228 ▪ Thread DIN 13 ▪ Thread ASME ▪ Thread JIS
Measuring ranges	From −100 to +100 mbar (−1.5 to +1.5 psi) to −1 to +40 bar (−15 to +600 psi).
OPL (depends on the measuring range)	Max. 0 to +60 bar (0 to +900 psi)
Process temperature range	−25 to +100 °C (−13 to +212 °F)
Ambient temperature range	▪ −40 to +85 °C (−40 to +185 °F) ▪ Devices for hazardous areas: −40 to +70 °C (−40 to +158 °F)
Reference accuracy	Up to 0.3 %, TD 5:1, for details see the "Reference accuracy" section.
Supply voltage	10 to 30 V DC
Output	4 to 20 mA
Material	▪ Housing made from 316L (1.4404) ▪ Process connections made from 316L ▪ Process isolating diaphragm made from Al_2O_3 aluminum-oxide ceramic, (Ceraphire®), ultrapure 99.9 %
Options	▪ Ex approvals ▪ Marine certificate ▪ Min. alarm current setting ▪ 3.1 Material certificates ▪ Certificate of calibration ▪ Cleaned from oil+grease ▪ Cleaned for O_2 service

	PMP21
Field of application	Gauge pressure and absolute pressure
Process connections	▪ Thread ISO 228, also flush-mount ▪ Thread DIN 13 ▪ Thread ASME ▪ Thread JIS
Measuring ranges	From −400 to +400 mbar (−6 to +6 psi) to −1 to +400 bar (−15 to +6 000 psi).
OPL (depends on the measuring range)	Max. 0 to +600 bar (0 to +9 000 psi)
Process temperature range	−40 to +100 °C (−40 to +212 °F)
Ambient temperature range	−40 to +85 °C (−40 to +185 °F)
Reference accuracy	Up to 0.3 %, TD 5:1, for details see the "Reference accuracy" section.
Supply voltage	10 to 30 V DC
Output	4 to 20 mA

	PMP21
Material	▪ Housing made from 316L (1.4404) ▪ Process connections made from 316L (1.4404) ▪ Process isolating diaphragm made from 316L (1.4435)
Options	▪ Ex approvals ▪ Marine certificate ▪ Min. alarm current setting ▪ 3.1 Material certificates ▪ Certificate of calibration ▪ Cleaned from oil+grease

Product design

Overview	Position	Description
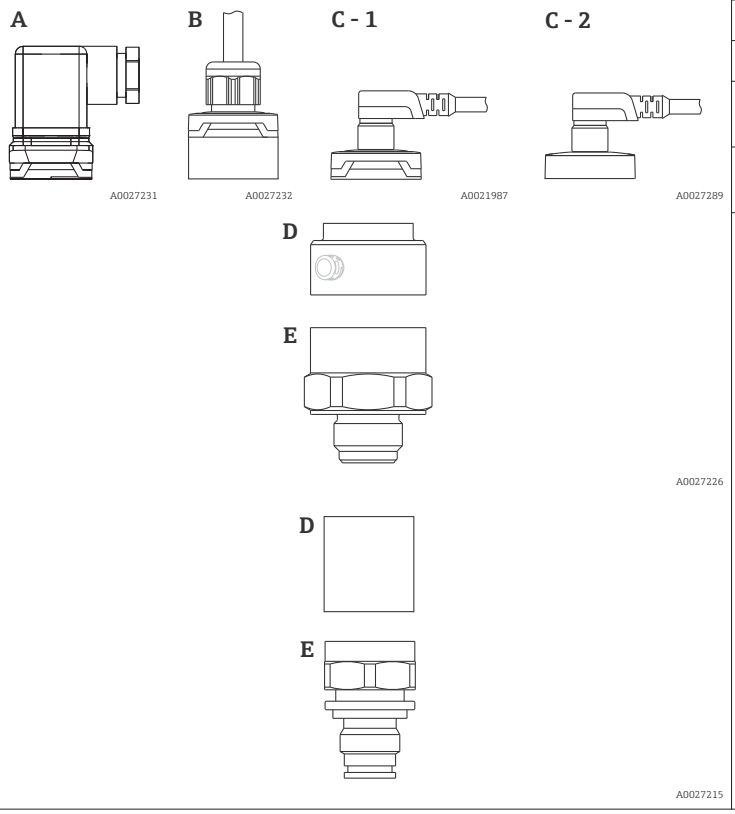	A	Valve plug
	B	Cable
	C- 1	M12 plug Housing cap made of plastic
	C- 2	M12 plug For Ex ec and IP69: metal housing cap
	D E	Housing Process connection (sample illustration)

System integration

The device can be given a tag name (max. 8 alphanumeric characters).

Description	Option [1]
Measuring point (TAG), see additional specifications	Z1

1) Product Configurator, order code for "Identification"

Input

Measured variable

Measured process variable

- PMC11: gauge pressure
- PMP11: gauge pressure
- PMC21: gauge pressure or absolute pressure
- PMP21: gauge pressure or absolute pressure

Calculated process variable

Pressure

Measuring range

Ceramic process isolating diaphragm

Sensor	Device	Maximum Sensor measuring range		Lowest calibratable span [1]	MWP	OPL	Factory settings [2]	Option [3]
		lower (LRL)	upper (URL)					
		[bar (psi)]	[bar (psi)]	[bar (psi)]	[bar (psi)]	[bar (psi)]		
Devices for gauge pressure measurement								
100 mbar (1.5 psi) [4]	PMC21	−0.1 (−1.5)	+0.1 (+1.5)	0.02 (0.3)	2.7 (40.5)	4 (60)	0 to 100 mbar (0 to 1.5 psi)	1C
250 mbar (4 psi) [5]	PMC21	−0.25 (−4)	+0.25 (+4)	0.05 (1)	3.3 (49.5)	5 (75)	0 to 250 mbar (0 to 4 psi)	1E
400 mbar (6 psi) [6]	PMC11 PMC21	−0.4 (−6)	+0.4 (+6)	0.08 (1.2)	5.3 (79.5)	8 (120)	0 to 400 mbar (0 to 6 psi)	1F
1 bar (15 psi) [6]	PMC11 PMC21	−1 (−15)	+1 (+15)	0.2 (3)	6.7 (100.5)	10 (150)	0 to 1 bar (0 to 15 psi)	1H
2 bar (30 psi) [6]	PMC11 PMC21	−1 (−15)	+2 (+30)	0.4 (0.6)	12 (180)	18 (270)	0 to 2 bar (0 to 30 psi)	1K
4 bar (60 psi) [6]	PMC11 PMC21	−1 (−15)	+4 (+60)	0.8 (1.2)	16.7 (250.5)	25 (375)	0 to 4 bar (0 to 60 psi)	1M
6 bar (90 psi) [6]	PMC11 PMC21	−1 (−15)	+6 (+90)	2.4 (36)	26.7 (400.5)	40 (600)	0 to 6 bar (0 to 90 psi)	1N
10 bar (150 psi) [6]	PMC11 PMC21	−1 (−15)	+10 (+150)	2 (30)	26.7 (400.5)	40 (600)	0 to 10 bar (0 to 150 psi)	1P
16 bar (240 psi) [6]	PMC11 PMC21	−1 (−15)	+16 (+240)	6.4 (96)	40 (600)	60 (900)	0 to 16 bar (0 to 240 psi)	1Q
25 bar (375 psi) [6]	PMC11 PMC21	−1 (−15)	+25 (+375)	10 (150)	40 (600)	60 (900)	0 to 25 bar (0 to 375 psi)	1R
40 bar (600 psi) [6]	PMC11 PMC21	−1 (−15)	+40 (+600)	8 (120)	40 (600)	60 (900)	0 to 40 bar (0 to 600 psi)	1S

Sensor	Device	Maximum Sensor measuring range		Lowest calibratable span [1]	MWP	OPL	Factory settings [2]	Option [3]
		lower (LRL)	upper (URL)					
		[bar (psi)]	[bar (psi)]	[bar (psi)]	[bar (psi)]	[bar (psi)]		
Devices for absolute pressure measurement								
100 mbar (1.5 psi) [6]	PMC21	0	+0.1 (+1.5)	0.1 (1.5)	2.7 (40.5)	4 (60)	0 to 100 mbar (0 to 1.5 psi)	2C
250 mbar (4 psi) [6]	PMC21	0	+0.25 (+4)	0.25 (4)	3.3 (49.5)	5 (75)	0 to 250 mbar (0 to 4 psi)	2E
400 mbar (6 psi) [6]	PMC21	0	+0.4 (+6)	0.4 (6)	5.3 (79.5)	8 (120)	0 to 400 mbar (0 to 6 psi)	2F
1 bar (15 psi) [6]	PMC21	0	+1 (+15)	0.4 (6)	6.7 (100.5)	10 (150)	0 to 1 bar (0 to 15 psi)	2H
2 bar (30 psi) [6]	PMC21	0	+2 (+30)	0.4 (0.6)	12 (180)	18 (270)	0 to 2 bar (0 to 30 psi)	2K
4 bar (60 psi) [6]	PMC21	0	+4 (+60)	0.8 (1.2)	16.7 (250.5)	25 (375)	0 to 4 bar (0 to 60 psi)	2M
10 bar (150 psi) [6]	PMC21	0	+10 (+150)	2 (30)	26.7 (400.5)	40 (600)	0 to 10 bar (0 to 150 psi)	2P
40 bar (600 psi) [6]	PMC21	0	+40 (+600)	8 (120)	40 (600)	60 (900)	0 to 40 bar (0 to 600 psi)	2S

1) Highest turn down that can be set at the factory: 5:1. The turn down is preset and cannot be changed.
2) Other measuring ranges (e.g. −1 to +5 bar (−15 to 75 psi)) can be ordered with customer-specific settings (see the Product Configurator, order code for "Calibration; Unit" option "J"). It is possible to invert the output signal (LRV = 20 mA; URV = 4 mA). Prerequisite: URV < LRV
3) Product Configurator, order code for "Sensor range"
4) Vacuum resistance: 0.7 bar (10.5 psi) abs
5) Vacuum resistance: 0.5 bar (7.5 psi) abs
6) Vacuum resistance: 0 bar (0 psi) abs

Maximum turn down which can be ordered for absolute pressure and gauge pressure sensors

Devices for gauge pressure measurement
- 6 bar (90 psi), 16 bar (240 psi), 25 bar (375 psi): TD 1:1 to TD 2.5:1
- All other measuring ranges: TD 1:1 to TD 5:1

Devices for absolute pressure measurement
- 100 mbar (1.5 psi), 250 mbar (4 psi), 400 mbar (6 psi): TD 1:1
- 1 bar (15 psi): TD 1:1 to TD 2.5:1
- All other measuring ranges: TD 1:1 to TD 5:1

Metal process isolating diaphragm

Sensor	Device	Maximum Sensor measuring range		Lowest calibratable span [1]	MWP	OPL	Factory settings [2]	Option [3]
		lower (LRL)	upper (URL)					
		[bar (psi)]	[bar (psi)]	[bar (psi)]	[bar (psi)]	[bar (psi)]		
Devices for gauge pressure measurement								
400 mbar (6 psi) [4]	PMP11 PMP21	−0.4 (−6)	+0.4 (+6)	0.4 (6)	1 (15)	1.6 (24)	0 to 400 mbar (0 to 6 psi)	1F
1 bar (15 psi) [4]	PMP11 PMP21	−1 (−15)	+1 (+15)	0.4 (6)	2.7 (40.5)	4 (60)	0 to 1 bar (0 to 15 psi)	1H
2 bar (30 psi) [4]	PMP11 PMP21	−1 (−15)	+2 (+30)	0.4 (6)	6.7 (100.5)	10 (150)	0 to 2 bar (0 to 30 psi)	1K
4 bar (60 psi) [4]	PMP11 PMP21	−1 (−15)	+4 (+60)	0.8 (12)	10.7 (160.5)	16 (240)	0 to 4 bar (0 to 60 psi)	1M
6 bar (90 psi) [4]	PMP11 PMP21	−1 (−15)	+6 (+90)	2.4 (36)	16 (240)	24 (360)	0 to 6 bar (0 to 90 psi)	1N
10 bar (150 psi) [4]	PMP11 PMP21	−1 (−15)	+10 (+150)	2 (30)	25 (375)	40 (600)	0 to 10 bar (0 to 150 psi)	1P
16 bar (240 psi) [4]	PMP11 PMP21	−1 (−15)	+16 (+240)	5 (75)	25 (375)	64 (960)	0 to 16 bar (0 to 240 psi)	1Q
25 bar (375 psi) [4]	PMP11 PMP21	−1 (−15)	+25 (+375)	5 (75)	25 (375)	100 (1500)	0 to 25 bar (0 to 375 psi)	1R
40 bar (600 psi) [4]	PMP11 PMP21	−1 (−15)	+40 (+600)	8 (120)	100 (1500)	160 (2400)	0 to 40 bar (0 to 600 psi)	1S
100 bar (1 500 psi) [4]	PMP21	−1 (−15)	+100 (+1500)	20 (300)	100 (1500)	160 (2400)	0 to 100 bar (0 to 1 500 psi)	1U
400 bar (6 000 psi) [4]	PMP21	−1 (−15)	+400 (+6000)	80 (1200)	400 (6000)	600 (9000)	0 to 400 bar (0 to 6 000 psi)	1W
Devices for absolute pressure measurement								
400 mbar (6 psi) [4]	PMP21	0 (0)	0.4 (+6)	0.4 (6)	1 (15)	1.6 (24)	0 to 400 mbar (0 to 6 psi)	2F
1 bar (15 psi) [4]	PMP21	0 (0)	1 (+15)	0.4 (6)	2.7 (40.5)	4 (60)	0 to 1 bar (0 to 15 psi)	2H
2 bar (30 psi) [4]	PMP21	0 (0)	2 (+30)	0.4 (6)	6.7 (100.5)	10 (150)	0 to 2 bar (0 to 30 psi)	2K
4 bar (60 psi) [4]	PMP21	0 (0)	4 (+60)	0.8 (12)	10.7 (160.5)	16 (240)	0 to 4 bar (0 to 60 psi)	2M
10 bar (150 psi) [4]	PMP21	0 (0)	10 (+150)	2 (30)	25 (375)	40 (600)	0 to 10 bar (0 to 150 psi)	2P
40 bar (600 psi) [4]	PMP21	0 (0)	+40 (+600)	8 (120)	100 (1500)	160 (2400)	0 to 40 bar (0 to 600 psi)	2S
100 bar (1 500 psi) [4]	PMP21	0 (0)	+100 (+1500)	20 (300)	100 (1500)	160 (2400)	0 to 100 bar (0 to 1 500 psi)	2U
400 bar (6 000 psi) [4]	PMP21	0 (0)	+400 (+6000)	80 (1200)	400 (6000)	600 (9000)	0 to 400 bar (0 to 6 000 psi)	2W

1) Highest turn down that can be set at the factory: 5:1. The turn down is preset and cannot be changed.
2) Other measuring ranges (e.g. −1 to +5 bar (−15 to 75 psi)) can be ordered with customer-specific settings (see the Product Configurator, order code for "Calibration; Unit" option "J"). It is possible to invert the output signal (LRV = 20 mA; URV = 4 mA). Prerequisite: URV < LRV
3) Product Configurator, order code for "Sensor range"
4) Vacuum resistance: 0.01 bar (0.145 psi) abs

Maximum turn down which can be ordered for absolute pressure and gauge pressure sensors

Device	Range	400 mbar (6 psi)	1 bar (15 psi) 6 bar (90 psi) 16 bar (240 psi)	2 bar (30 psi) 4 bar (60 psi) 10 bar (150 psi) 25 to 400 bar (375 to 6 000 psi)
PMP11	0.5%	TD 1:1	TD 1:1 to TD 2.5:1	TD 1:1 to TD 5:1
PMP21	0.3%	TD 1:1	TD 1:1 to TD 2.5:1	TD 1:1 to TD 5:1

Output

Output signal

Description	Option [1]
4 to 20 mA (2-wire)	1
PMC11: 0 to 10 V output (3-wire) PMP11: 0 to 10 V output (3-wire)	2

1) Product Configurator, order code for "Output"

Signal range 4 to 20 mA

3.8 mA to 20.5 mA

Load (for 4 to 20 mA devices)

In order to guarantee sufficient terminal voltage in two-wire devices, a maximum load resistance R_L (including line resistance) must not be exceeded, depending on the supply voltage U_B of the supply unit.

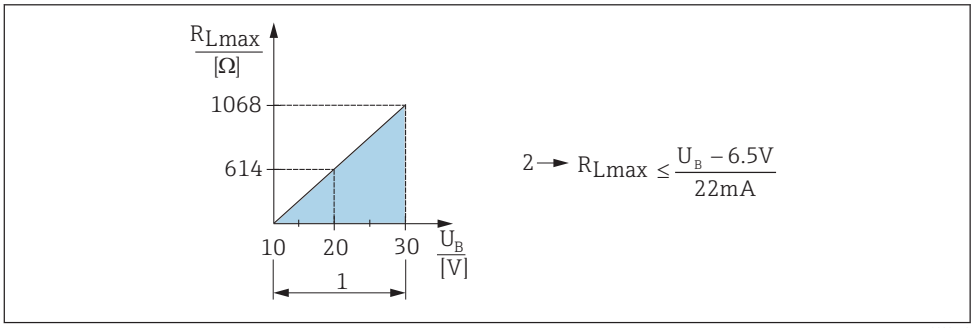

A0029452

1 Power supply 10 to 30 V DC
2 R_{Lmax} maximum load resistance
U_B Supply voltage

Load resistance (for 0 to 10 V devices)

The load resistance must be ≥ 5 [kΩ].

Signal on alarm 4 to 20 mA

The response of the output to error is regulated in accordance with NAMUR NE43.

Factory setting MAX alarm: >21 mA

alarm current

Device	Description	Option
PMC21 PMP21	Adjusted min. alarm current	IA [1]

1) Product Configurator order code for "Service"

Dead time, time constant

Presentation of the dead time and the time constant:

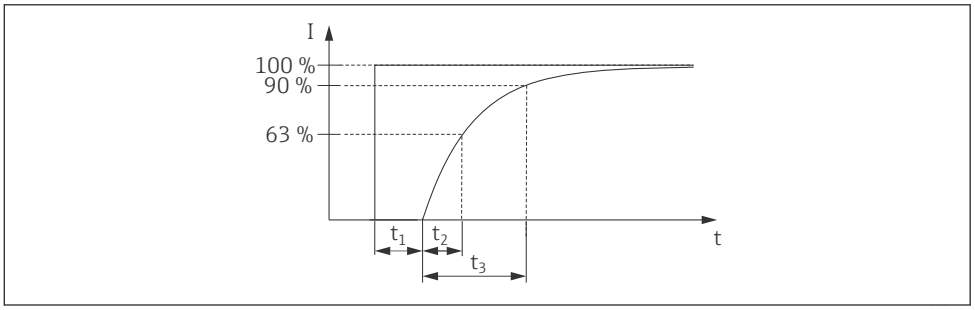

A0019786

Dynamic behavior

Analog electronics

Dead time (t_1) [ms]	Time constant (T63), t_2 [ms]	Time constant (T90), t_3 [ms]
6 ms	10 ms	15 ms

Power supply

WARNING

Limitation of electrical safety due to incorrect connection!

- In accordance with IEC/EN61010 a separate circuit breaker must be provided for the device .
- When using the measuring device in hazardous areas, installation must comply with the corresponding national standards and regulations and the Safety Instructions or Installation or Control Drawings.
- All explosion protection data are given in separate documentation which is available upon request. The Ex documentation is supplied as standard with all devices approved for use in explosion hazardous areas.
- Protective circuits against reverse polarity, HF influences and overvoltage peaks are integrated.
- The device must be operated with a 500 mA fine-wire fuse (slow-blow).

Terminal assignment

4 to 20 mA output

Device	M12 plug	Valve plug	Cable
PMC11 PMP11 PMC21 PMP21	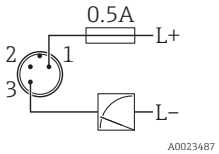	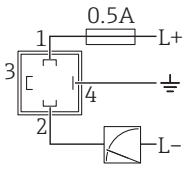	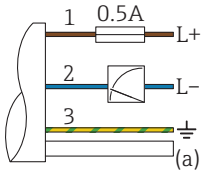 *1 brown = L+* *2 blue = L-* *3 green/yellow = ground connection* *(a) reference air hose*

0 to 10 V output

Device	M12 plug	Valve plug	Cable
PMC11 PMP11	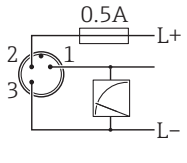	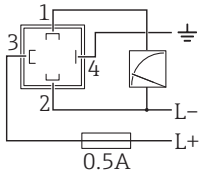	-

Supply voltage

Electronic version	Device	Supply voltage
4 to 20 mA output	PMC11 PMP11 PMC21 PMP21	10 to 30 V DC
0 to 10 V output	PMC11 PMP11	12 to 30 V DC

Current consumption and alarm signal

Number of wires	Device	Normal operation	Alarm signal [1]
2	PMC11 PMP11 PMC21 PMP21	≤ 26 mA	> 21 mA
3	PMC11 PMP11	< 12 mA	11 V

1) For MAX alarm (factory setting)

Power supply fault

- Behavior in the event of overvoltage (>30 V):
  The device works continuously up to 34 V DC without damage. If the supply voltage is exceeded, the specified characteristics are no longer guaranteed.
- Behavior in the event of undervoltage:
  If the supply voltage falls below the minimum value, the device switches off in a defined manner (status same as for no power supply).

Electrical connection

Degree of protection

Device	Connection	Climate class	Option [1]
PMP21 PMP21	Cable5 m (16 ft)	IP66/68 [2] NEMA type 4X/6P enclosure	A
PMP21 PMP21	Cable10 m (33 ft)	IP66/68 [2] NEMA type 4X/6P enclosure	B
PMP21 PMP21	Cable25 m (82 ft)	IP66/68 [2] NEMA type 4X/6P enclosure	C
PMC11 PMP11	M12 plug	IP65 NEMA type 4X enclosure	L
PMC21 PMP21	M12 plug	IP65/67 NEMA type 4X enclosure	M
PMC11 PMP11 PMC21 PMP21	Valve plug ISO4400 M16	IP65 NEMA type 4X enclosure	U
PMC11 PMP11 PMC21 PMP21	Valve plug ISO4400 NPT ½	IP65 NEMA type 4X enclosure	V

1) Product Configurator, order code for "Electrical connection"
2) IP 68 (1.83m H2O for 24 h)

Cable specification

For valve plug: < 1.5 mm^2 (16 AWG) and Ø3.5 to 6.5 mm (0.14 to 0.26 in)

Residual ripple

The device operates within the reference accuracy up to ±5 % of the residual ripple of the supply voltage, within the permitted voltage range.

Influence of power supply

≤0.005 % of the URL/1 V

Overvoltage protection

The device does not contain any special elements to protect against overvoltage ("wire to ground"). Nevertheless the requirements of the applicable EMC standard EN 61000-4-5 (testing voltage 1kV EMC wire/ground) are met.

Performance characteristics of ceramic process isolating diaphragm

Reference operating conditions

- As per IEC 60770
- Ambient temperature T_A = constant, in the range of:+21 to +33 °C (+70 to +91 °F)
- Humidity φ = constant, in the range of 5 to 80 % rH
- Ambient pressure p_A = constant, in the range of:860 to 1060 mbar (12.47 to 15.37 psi)
- Position of measuring cell = constant, in range: horizontal ±1° (see also "Influence of the installation position" section → 🖹 22)
- Zero based span
- Material of process isolating diaphragm: Al_2O_3 (aluminum-oxide ceramic, Ceraphire®)
- Supply voltage: 24 V DC ±3 V DC
- Load: 320 Ω (at 4 to 20 mA output)

Measuring uncertainty for small absolute pressure measuring ranges

The smallest extended uncertainty of measurement that can delivered by our standards is:

- in range 1 to 30 mbar (0.0145 to 0.435 psi): 0.4 % of reading
- in range < 1 mbar (0.0145 psi): 1 % of reading.

Influence of the installation position

→ 🖹 22

Resolution

Current output: min. 1.6 µA

Reference accuracy

The reference accuracy contains the non-linearity [DIN EN 61298-2 3.11] including the pressure hysteresis [DIN EN 61298-23.13] and non-repeatability [DIN EN 61298-2 3.11] in accordance with the limit point method as per [DIN EN 60770].

Device	% of the calibrated span to the maximum turn down		
	Reference accuracy	Non-linearity [1]	Non-repeatability
PMC11 [2]	±0.5	±0.1	±0.1
PMC21	±0.3	±0.1	±0.1

1) The non-linearity for the 40 bar (600 psi) sensor can be up to ± 0.15% of the calibrated span up to the maximum turn down.
2) For devices with 0 to 10 V output, a non-linearity of up to max. 0.3 V can occur for signal values below 0.03 V.

Overview of the turn down ranges → 🖹 13

Measuring ranges	Turn down	Device	% of URL
100 mbar (1.5 psi)to 40 bar (600 psi)	1:1 to TD 5:1	PMC11	±0.5
		PMC21	±0.3 [1]

1) For the 100 mbar (1.5 psi) and 250 mbar (4 psi) measuring ranges, the following applies: In the event of heat effects on the initial reference conditions, an additional deviation of max. 0.3 mbar (4.5 psi) from the zero point or the output span is possible.

Thermal change of the zero output and the output span

Measuring cell	−20 to +85 °C (−4 to +185 °F)	−40 to −20 °C (−40 to −4 °F) +85 to +100 °C (+185 to +212 °F)
	% of URL for TD 1:1	
<1 bar (15 psi)	<1	<1.2
≥ 1 bar (15 psi)	<0.8	<1

Long-term stability

1 year	5 years	8 years
% of URL		
±0.2	±0.4	±0.45

Switch-on time

≤2 s (For small measuring ranges, pay attention to the thermal compensation effects.)

Performance characteristics of metallic process isolating diaphragm

Reference operating conditions

- As per IEC 60770
- Ambient temperature T_A = constant, in the range of:+21 to +33 °C (+70 to +91 °F)
- Humidity φ = constant, in the range of 5 to 80 % rH
- Ambient pressure p_A = constant, in the range of:860 to 1 060 mbar (12.47 to 15.37 psi)
- Position of measuring cell = constant, in range: horizontal ±1° (see also "Influence of the installation position" section → 🖹 22)
- Zero based span
- Process isolating diaphragm material: AISI 316L (1.4435)
- Filling oil: NSF-H1 synthetic oil in accordance with FDA 21 CFR 178.3570
- Supply voltage: 24 V DC ±3 V DC
- Load: 320 Ω (at 4 to 20 mA output)

Measuring uncertainty for small absolute pressure measuring ranges

The smallest extended uncertainty of measurement that can delivered by our standards is:

- in range 1 to 30 mbar (0.0145 to 0.435 psi): 0.4 % of reading
- in range < 1 mbar (0.0145 psi): 1 % of reading.

Influence of the installation position

→ 🖹 22

Resolution

Current output: min. 1.6 µA

Reference accuracy

The reference accuracy contains the non-linearity [DIN EN 61298-2 3.11] including the pressure hysteresis [DIN EN 61298-23.13] and non-repeatability [DIN EN 61298-2 3.11] in accordance with the limit point method as per [DIN EN 60770].

Device	% of the calibrated span to the maximum turn down		
	Reference accuracy	Non-linearity	Non-repeatability
PMP11 [1)]	±0.5	±0.1	±0.1
PMP21	±0.3	±0.1	±0.1

1) For devices with 0 to 10 V output, a non-linearity of up to max. 0.3 V can occur for signal values below 0.015 V.

Overview of the turn down ranges → 🖹 14

Thermal change of the zero output and the output span

Measuring cell	−20 to +85 °C (−4 to +185 °F)	−20 to −40 °C (−4 to −40 °F) +85 to +100 °C (+185 to +212 °F)
	% of the calibrated span for TD 1:1	
<1 bar (15 psi)	<1	<1.2
≥ 1 bar (15 psi)	<0.8	<1

Long-term stability

1 year	5 years	8 years
% of URL		
±0.2	±0.4	±0.45

Switch-on time

≤2 s

Installation

Installation conditions

- No moisture may enter the housing when installing or operating the device, or when establishing the electrical connection.
- Point the cable and connector downwards where possible to prevent moisture from entering (e.g. rain or condensation water).

Influence of the installation position

Any orientation is possible. However, the orientation may cause a zero point shift i.e. the measured value does not show zero when the vessel is empty or partially full.

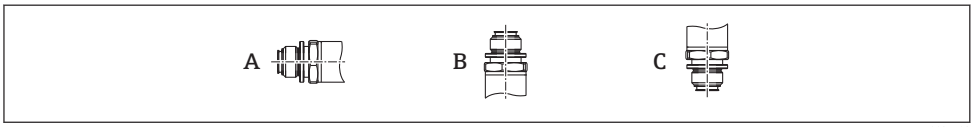

A0024708

Type	Process isolating diaphragm axis is horizontal (A)	Process isolating diaphragm pointing upwards (B)	Process isolating diaphragm pointing downwards (C)
PMP11 PMP21	Calibration position, no effect	Up to +4 mbar (+0.058 psi)	Up to −4 mbar (−0.058 psi)
PMC11, PMC21 < 1 bar (15 psi)	Calibration position, no effect	Up to +0.3 mbar (+0.0044 psi)	Up to −0.3 mbar (−0.0044 psi)
PMC11, PMC21 ≥1 bar (15 psi)	Calibration position, no effect	Up to +3 mbar (+0.0435 psi)	Up to −3 mbar (−0.0435 psi)

Mounting location

Pressure measurement

Pressure measurement in gases

Mount the device with shutoff device above the tapping point so that any condensate can flow into the process.

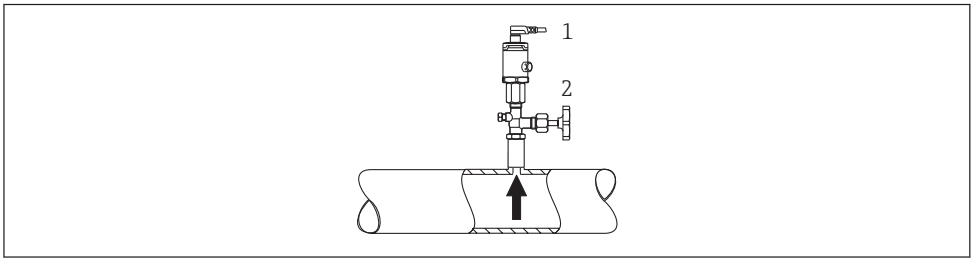

A0021904

1 Device
2 Shutoff device

Pressure measurement in vapors

For pressure measurement in vapors, use a siphon. The siphon reduces the temperature to almost ambient temperature. Mount the device with a shutoff device at the same height as the tapping point.

Advantage:
only minor/negligible heat effects on the device.

Note the max. permitted ambient temperature of the transmitter!

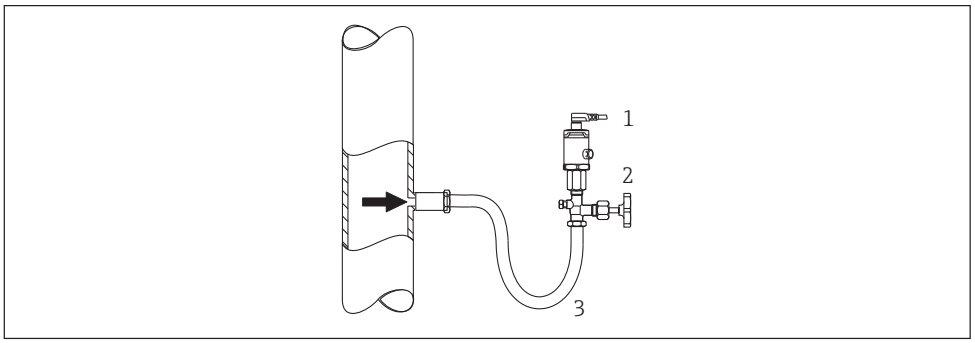

1 *Device*
2 *Shutoff device*
3 *Siphon*

Pressure measurement in liquids

Mount the device with a shutoff device at the same height as the tapping point.

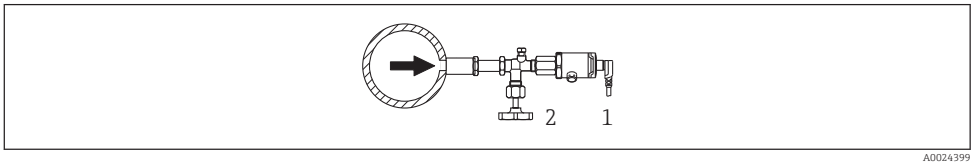

1 *Device*
2 *Shutoff device*

Level measurement

- Always install the device below the lowest measuring point.
- Do not install the device at the following positions:
  - In the filling curtain
  - In the tank outlet
  - In the suction area of a pump
  - Or at a point in the tank which could be affected by pressure pulses from the agitator.

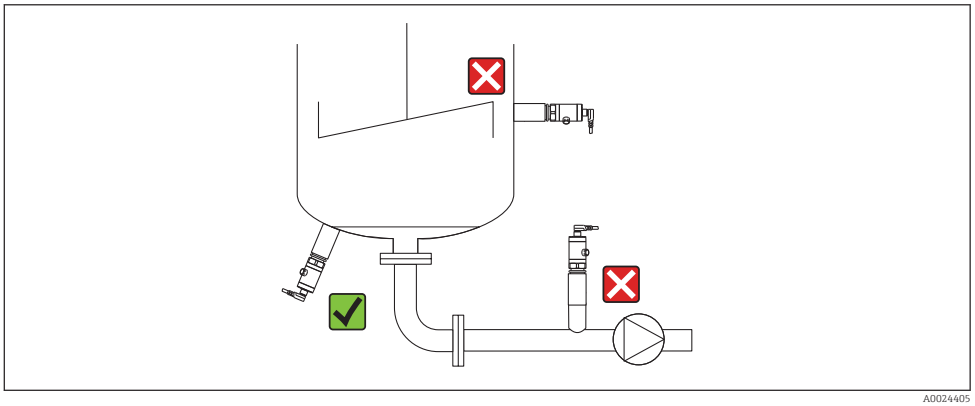

Mounting instructions for oxygen applications

Oxygen and other gases can react explosively to oils, grease and plastics, such that, among other things, the following precautions must be taken:

- All components of the system, such as measuring devices, must be cleaned in accordance with the BAM requirements.
- Dependent on the materials used, a certain maximum temperature and a maximum pressure for oxygen applications must not be exceeded.
- The following table lists devices (devices only, not accessories or enclosed accessories), which are suitable for gaseous oxygen applications.

Device	p_{max} for oxygen applications	T_{max} for oxygen applications	Option [1]
PMC21	40 bar (600 psi)	−10 to +60 °C (+14 to +140 °F)	HB

1) Product Configurator, order code for "Service"

Environment

Ambient temperature range

Device	Ambient temperature range [1]
PMC11 PMP11	−40 to +70 °C (−40 to +158 °F)
PMC21 PMP21	−40 to +85 °C (−40 to +185 °F)
PMC21 PMP21	Devices for hazardous areas: −40 to +70 °C (−40 to +158 °F)

1) Exception: the following cable is designed for an operating temperature range of −25 to +70 °C (−13 to +158 °F): Product Configurator order code for "Accessory enclosed", option "RZ".

Storage temperature range

−40 to +85 °C (−40 to +185 °F)

Climate class

Device	Climate class	Note
PMC11 PMP11 PMC21 PMP21	Class 3K5	Air temperature: −5 to +45 °C (+23 to +113 °F), relative humidity: 4 to 95 % satisfied according to IEC 721-3-3 (condensation not possible)

Degree of protection

Device	Connection	Climate class	Option [1]
PMP21 PMP21	Cable5 m (16 ft)	IP66/68 [2] NEMA type 4X/6P enclosure	A
PMP21 PMP21	Cable10 m (33 ft)	IP66/68 [2] NEMA type 4X/6P enclosure	B
PMP21 PMP21	Cable25 m (82 ft)	IP66/68 [2] NEMA type 4X/6P enclosure	C
PMC11 PMP11	M12 plug	IP65 NEMA type 4X enclosure	L
PMC21 PMP21	M12 plug	IP65/67 NEMA type 4X enclosure	M
PMC11 PMP11 PMC21 PMP21	Valve plug ISO4400 M16	IP65 NEMA type 4X enclosure	U
PMC11 PMP11 PMC21 PMP21	Valve plug ISO4400 NPT ½	IP65 NEMA type 4X enclosure	V

1) Product Configurator, order code for "Electrical connection"
2) IP 68 (1.83m H2O for 24 h)

Vibration resistance

Test standard	Vibration resistance
IEC 60068-2-64:2008	Guaranteed for 5 to 2000Hz: 0.05 g^2/Hz

Electromagnetic compatibility

- Interference emission as per EN 61326-1 equipment B
- Interference immunity as per EN 61326-1 (industrial environment)
- NAMUR recommendation EMC (NE21)
- Maximum deviation: 1.5% for TD 1:1

For more details, refer to the Declaration of Conformity.

Process

Process temperature range for devices with ceramic process isolating diaphragm

Device	Process temperature range
PMC11	−25 to +85 °C (−13 to +185 °F)
PMC21	−25 to +100 °C (−13 to +212 °F)
PMC21 for oxygen applications	−10 to +60 °C (+14 to +140 °F)

- For saturated steam applications, use a device with a metal process isolating diaphragm, or provide a siphon for temperature isolation when installing.
- Pay attention to the process temperature range of the seal. See also the following table.

Seal	Notes	Process temperature range	Option
FKM	-	−20 to +100 °C (−4 to +212 °F)	A [1]
FKM	Cleaned for oxygen service	−10 to +60 °C (+14 to +140 °F)	A [1] and HB [2]
EPDM 70	-	−25 to +100 °C (−13 to +212 °F)	J [1]

1) Product Configurator, order code for "Seal"
2) Product Configurator, order code for "Service"

Applications with changes in temperature

Frequent extreme changes in temperatures can temporarily cause measuring errors. Temperature compensation takes place after a few minutes. Internal temperature compensation is faster the smaller the change in temperature and the longer the time interval.

For further information please contact your local Endress+Hauser Sales Center.

Process temperature range for devices with metallic process isolating diaphragm

Device	Process temperature range
PMP11	−25 to +85 °C (−13 to +185 °F)
PMP21	−40 to +100 °C (−40 to +212 °F)

Applications with changes in temperature

Frequent extreme changes in temperatures can temporarily cause measuring errors. Internal temperature compensation is faster the smaller the change in temperature and the longer the time interval.

For further information please contact your local Endress+Hauser Sales Center.

Pressure specifications

WARNING

The maximum pressure for the measuring device depends on the lowest-rated element with regard to pressure.

- For pressure specifications, see the "Measuring range" section and the "Mechanical construction" section.
- The Pressure Equipment Directive (2014/68/EU) uses the abbreviation "PS". The abbreviation "PS" corresponds to the MWP (maximum working pressure) of the measuring device.
- MWP (maximum working pressure): The MWP (maximum working pressure) is specified on the nameplate. This value is based on a reference temperature of +20 °C (+68 °F) and may be applied to the device for an unlimited period of time. Observe the temperature dependency of the MWP.
- OPL (over pressure limit): The test pressure corresponds to the over pressure limit of the sensor and may only be applied temporarily to ensure that the measurement is within the specifications and no permanent damage develops. In the case of sensor range and process connections where the over pressure limit (OPL) of the process connection is smaller than the nominal value of the sensor, the device is set at the factory, at the very maximum, to the OPL value of the process connection. If you want to use the entire sensor range, select a process connection with a higher OPL value.
- Oxygen applications: In oxygen applications, the values for "p_{max} and T_{max} for oxygen applications may not be exceeded .
- Devices with ceramic process isolating diaphragm: avoid steam hammering! Steam hammering can cause zero point drifts. Recommendation: Residue (water droplets or condensation) may remain on the process isolating diaphragm following CIP cleaning and can result in local steam hammering the next time steam cleaning takes place. In practice, drying the process isolating diaphragm (e.g. by blowing) has proved to prevent steam hammering.

Mechanical construction

Design, dimensions

Device height

The device height is calculated from
- the height of the electrical connection
- the height of the housing and
- the height of the individual process connection.

The individual heights of the components are listed in the following sections. To calculate the device height simply add up the individual heights of the components. Where applicable also take into consideration the installation distance (space that is used to install the device). You can use the following table for this purpose:

Section	Page	Height	Example
Electrical connection	→ 28	(A)	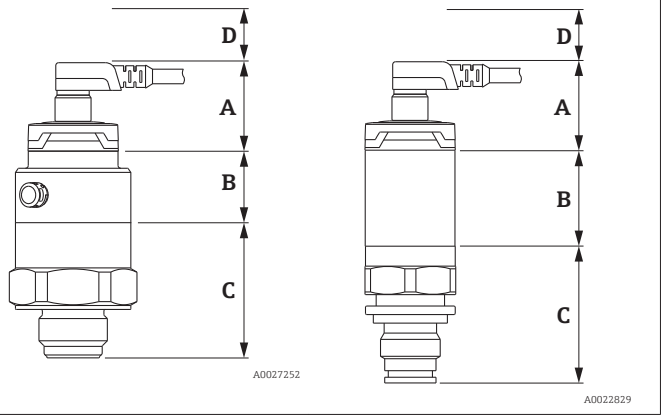
Housing height	→ 29	(B)	
Process connection height	→ 30 → 33	(C)	
Installation distance	-	(D)	

Electrical connection

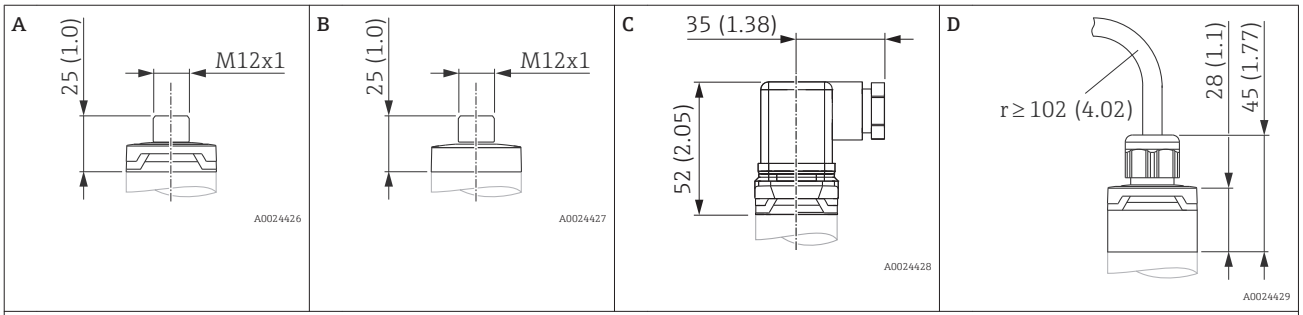

Engineering unit mm (in)

Position	Description	Material	Weight kg (lbs)	Device	Option [1]
A	M12 plug IP65 (Additional dimensions → 45)	Housing cap made of plastic	0.012 (0.03)	PMC11 PMP11	L
A	M12 plug IP65/67 (Additional dimensions → 45)	Housing cap made of plastic	0.012 (0.03)	PMC21 PMP21	M Plug connector with cable can be ordered as an accessory → 45
B	M12 plug IP66/67	Housing cap made of metal	0.030 (0.07)	PMC21 PMP21	In the case of Ex ec type of protection, the housing cap is made of metal.
C	M16 valve plug	Plastic PPSU	0.060 (0.14)	PMC11 PMP11 PMC21 PMP21	U

Position	Description	Material	Weight kg (lbs)	Device	Option [1]
C	NPT ½ valve plug	Plastic PPSU	0.060 (0.14)	PMC11 PMP11 PMC21 PMP21	V
D	Cable5 m (16 ft)	PUR (UL94V0)	0.280 (0.62)	PMC21 PMP21	A
D	Cable10 m (33 ft)	PUR (UL94V0)	0.570 (1.26)	PMC21 PMP21	B
D	Cable25 m (82 ft)	PUR (UL94V0)	1.400 (3.09)	PMC21 PMP21	C

1) Product Configurator, order code for "Electrical connection"

Housing

A

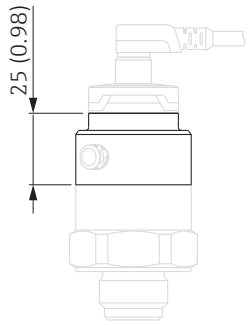

A0022243

Engineering unit mm (in)

B

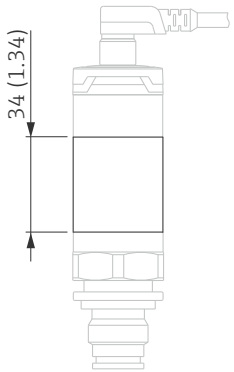

A0027288

Engineering unit mm (in)

Item	Device	Material	Weight kg (lbs)
A	PMC11 PMC21	Stainless steel 316L	0.150 (0.33)
B	PMP11 PMP21	Stainless steel 316L	0.090 (0.20)

Process connections with internal, ceramic process isolating diaphragm

Thread ISO 228 G

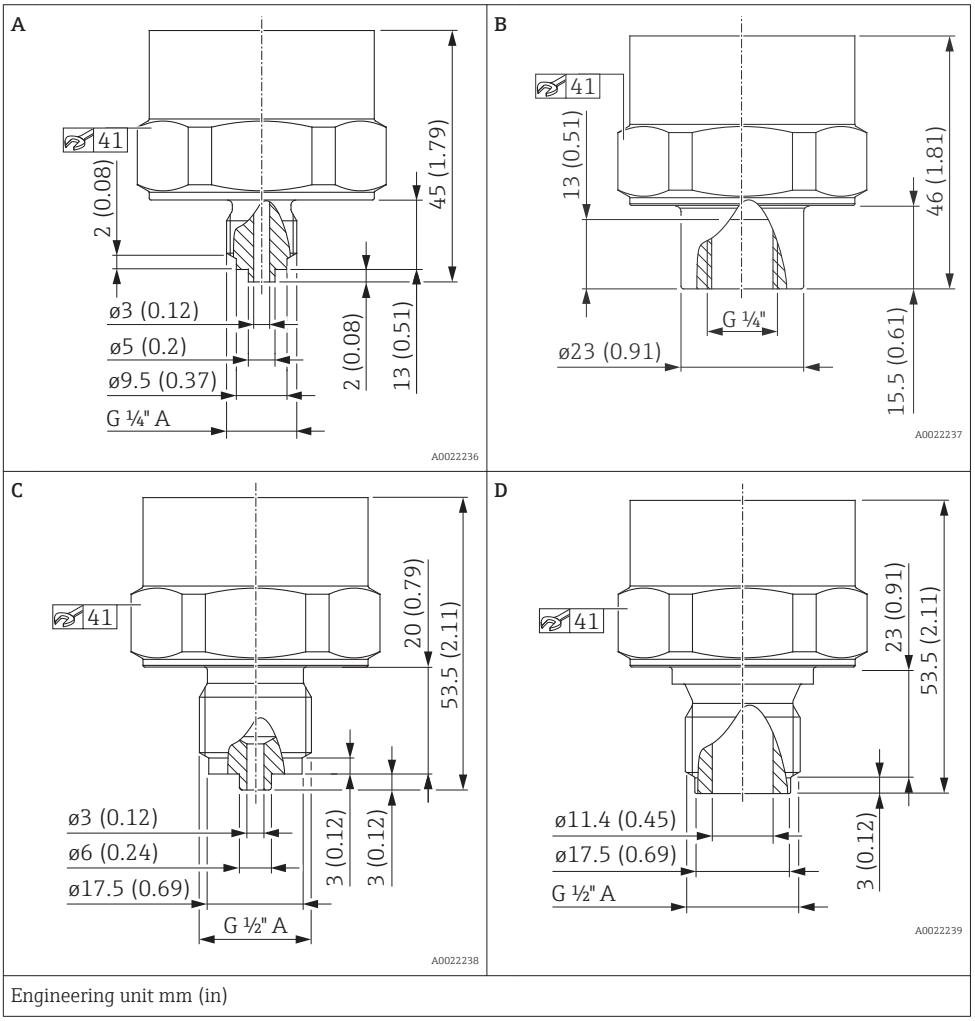

Engineering unit mm (in)

Device	Item	Description	Material	Weight	Option [1]
				kg (lbs)	
▪ PMC11 ▪ PMC21	A	Thread ISO 228 G ¼" A, EN 837	316L	0.160 (0.35)	WTJ
▪ PMC11 ▪ PMC21	B	Thread ISO 228 G ¼" (female)	316L	0.180 (0.40)	WAJ
▪ PMC11 ▪ PMC21	C	Thread ISO 228 G ½" A, EN 837	316L	0.180 (0.40)	WBJ
▪ PMC11 ▪ PMC21	D	Thread ISO 228 G ½" A, bore11.4 mm (0.45 in)	316L	0.180 (0.40)	WWJ

1) Product Configurator, order code for "Process connection"

Process connections with internal, ceramic process isolating diaphragm

Thread ASME

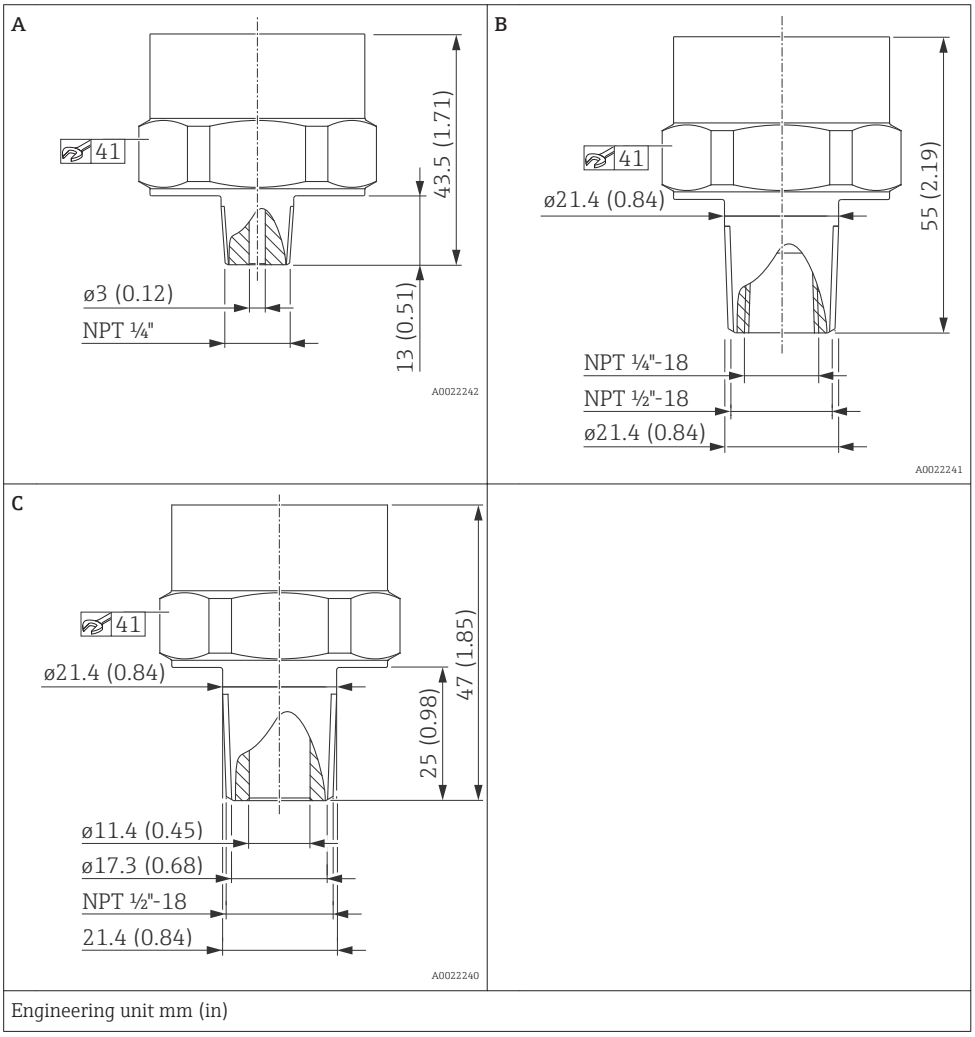

Engineering unit mm (in)

Device	Item	Description	Material	Weight	Approval	Option [1]
				kg (lbs)		
▪ PMC11 ▪ PMC21	A	ASME ¼" MNPT, bore3 mm (0.12 in)	316L	0.160 (0.35)	CRN	VUJ
▪ PMC11 ▪ PMC21	B	ASME ½" MNPT, ¼" FNPT (female)	316L	0.190 (0.42)	CRN	VXJ
▪ PMC11 ▪ PMC21	C	ASME ½" MNPT, bore11.4 mm (0.45 in)	316L	0.190 (0.42)	CRN	VWJ

1) Product Configurator, order code for "Process connection"

Process connections with internal, ceramic process isolating diaphragm

Thread DIN13

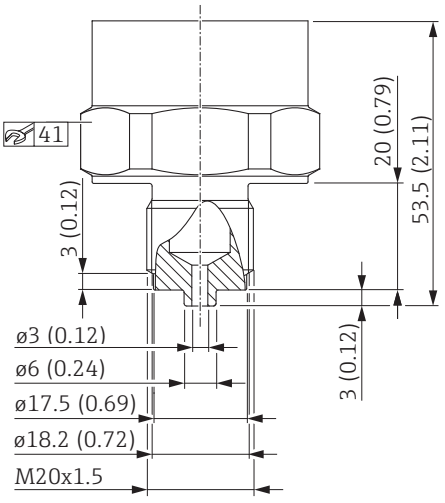

Engineering unit mm (in)

Device	Description	Material	Weight	Option [1]
			kg (lbs)	
▪ PMC11 ▪ PMC21	DIN 13 M20 x 1.5, EN 837, bore 3 mm (0.12 in)	316L	0.180 (0.40)	X4J

1) Product Configurator, order code for "Process connection"

Process connections with internal, ceramic process isolating diaphragm

Thread JIS B0203

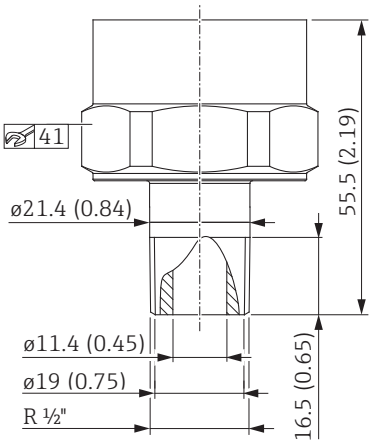

Engineering unit mm (in)

Device	Description	Material	Weight	Option [1]
			kg (lbs)	
PMC21	JIS B0203 R 1/2 (male)	316L	0.180 (0.40)	ZJJ

1) Product Configurator, order code for "Process connection"

Process connections with internal, metal process isolating diaphragm

Thread ISO 228 G

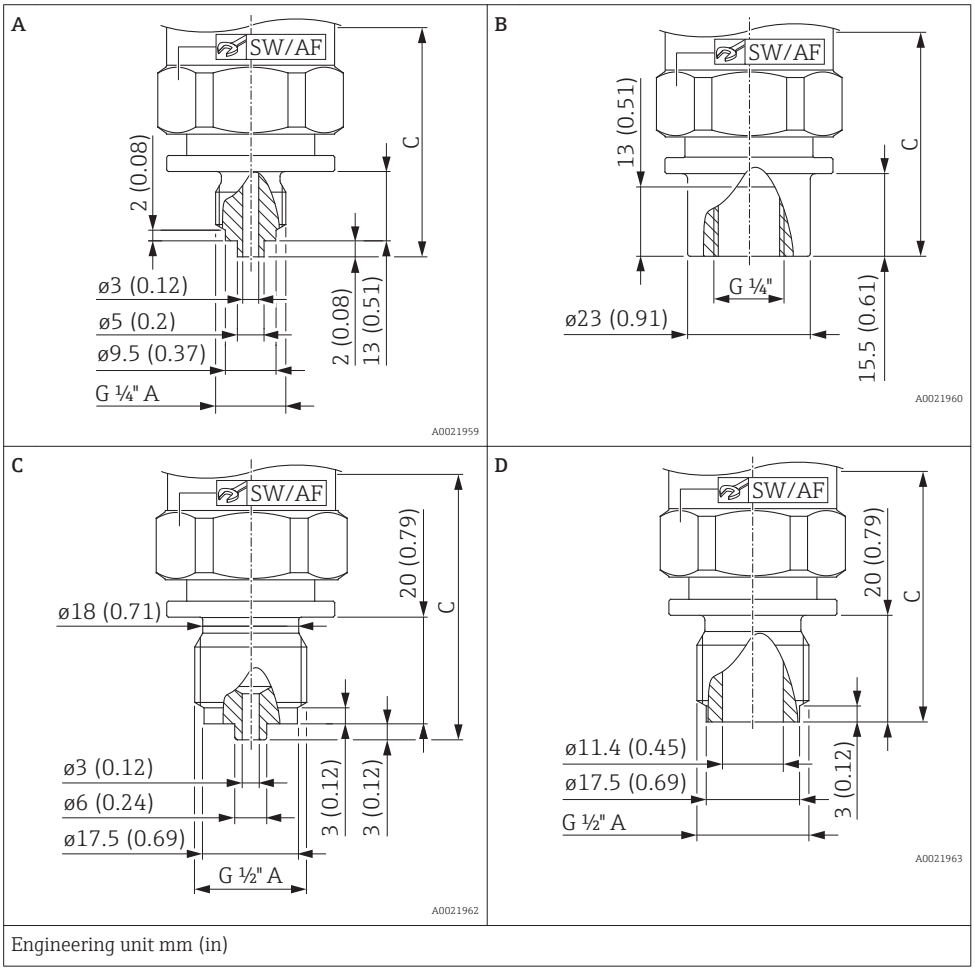

Engineering unit mm (in)

Position	Device	Description	Material	Nominal value to 100 bar (1 500 psi)			Nominal value 400 bar (6 000 psi)			Option [1]
				Weight kg (lbs)	Height C	SW/ AF	Weight kg (lbs)	Height C	SW/ AF	
A	PMP11 PMP21	Thread ISO 228 G ¼" A, EN 837	316L	0.200 (0.44)	57 (2.24)	32	0.240 (0.53)	69 (2.72)	27	WTJ
B	PMP11 PMP21	Thread ISO 228 G ¼" (female)	316L	0.220 (0.49)	57 (2.24)	32	0.260 (0.57)	69 (2.72)	27	WAJ
C	PMP11 PMP21	Thread ISO 228 G ½" A, EN 837	316L	0.220 (0.49)	65 (2.56)	32	0.270 (0.60)	77 (3.03)	27	WBJ
D	PMP11 PMP21	Thread ISO 228 G ½" A, bore11.4 mm (0.45 in)	316L	0.220 (0.49)	62 (2.44)	32	0.260 (0.57)	74 (2.91)	27	WWJ

1) Product Configurator, order code for "Process connection"

Process connections with internal, metal process isolating diaphragm

Thread ASME

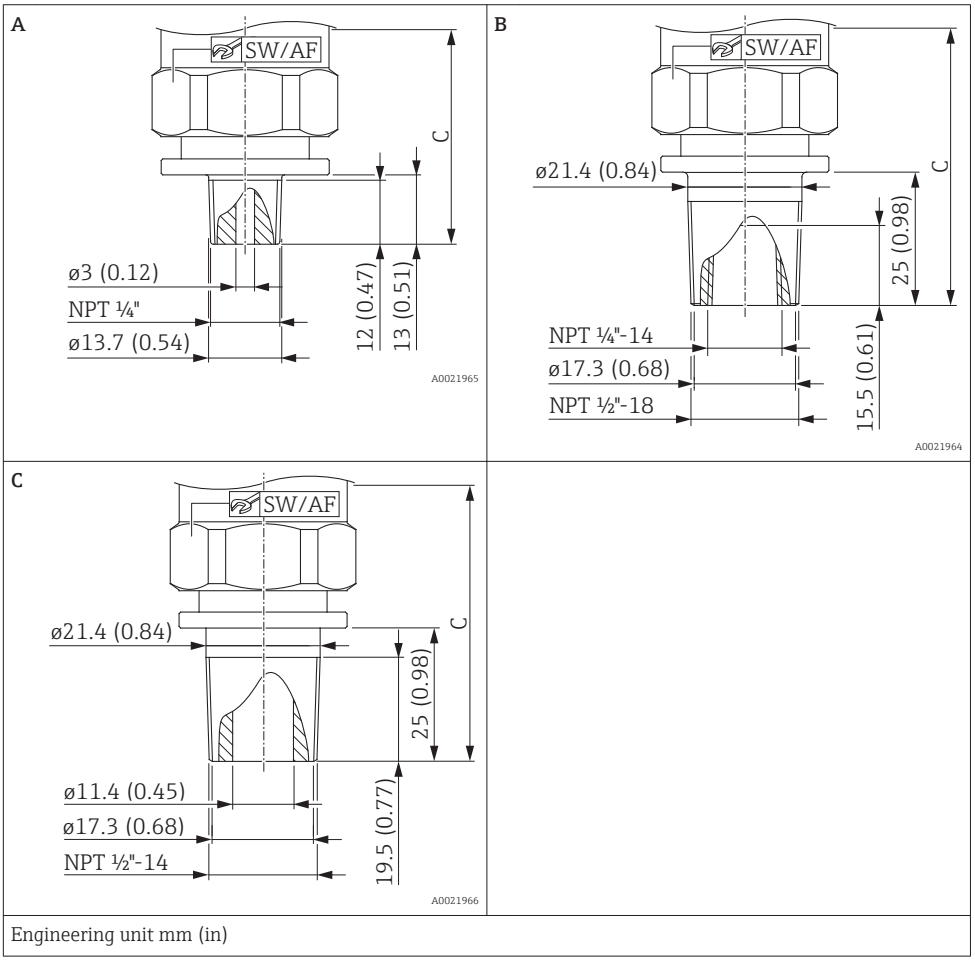

Engineering unit mm (in)

Position	Device	Description	Material	Nominal value to 100 bar (1 500 psi)			Nominal value 400 bar (6 000 psi)			Approval	Option [1]
				Weight kg (lbs)	Height C	SW/ AF	Weight kg (lbs)	Height C	SW/ AF		
A	PMP11 PMP21	ASME ¼" MNPT, bore3 mm (0.12 in)	316L	0.200 (0.44)	55 (2.17)	32	0.240 (0.53)	67 (2.64)	27	CRN	VUJ
B	PMP11 PMP21	ASME ½" MNPT, ¼" FNPT (female)	316L	0.230 (0.51)	67 (2.64)	32	0.260 (0.57)	79 (3.11)	27	CRN	VXJ
C	PMP11 PMP21	ASME ½" MNPT, bore11.4 mm (0.45 in)	316L	0.230 (0.51)	67 (2.67)	32	0.270 (0.60)	79 (3.11)	27	CRN	VWJ

1) Product Configurator, order code for "Process connection"

Process connections with internal, metal process isolating diaphragm

Thread DIN13

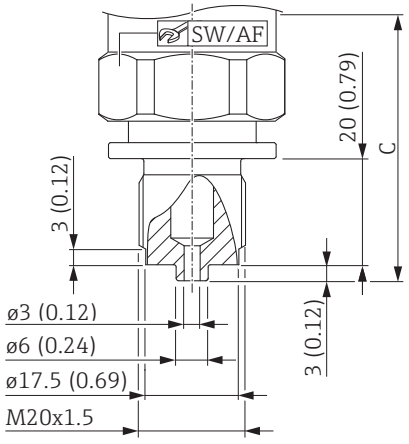

Engineering unit mm (in)

Description	Device	Material	Nominal value to 100 bar (1 500 psi)			Nominal value 400 bar (6 000 psi)			Option [1]
			Weight kg (lbs)	Height C	SW/ AF	Weight kg (lbs)	Height C	SW/ AF	
DIN 13 M20 x 1.5, EN 837, bore 3 mm (0.12 in)	PMP11 PMP21	316L	0.220 (0.49)	65 (2.56)	32	0.260 (0.57)	77 (3.03)	27	X4J

1) Product Configurator, order code for "Process connection"

Process connections with internal, metal process isolating diaphragm

Thread JIS B0203

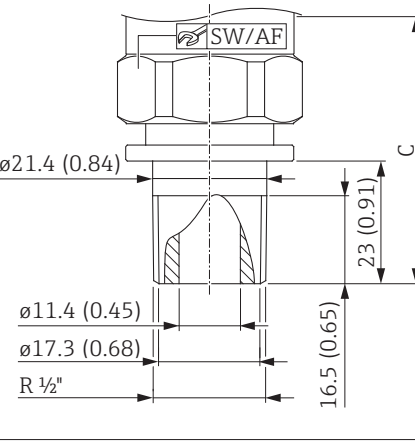

Engineering unit mm (in). Diameter of process isolating diaphragm: 17.2 mm (0.68 in)

Description	Device	Material	Nominal value to 100 bar (1 500 psi)			Nominal value 400 bar (6 000 psi)			Option [1]
			Weight kg (lbs)	Height C	SW/ AF	Weight kg (lbs)	Height C	SW/ AF	
JIS B0203 R ½" (male)	PMP21	316L	0.230 (0.51)	65 (2.56)	32	0.260 (0.57)	77 (3.03)	27	ZJJ

1) Product Configurator, order code for "Process connection"

Process connections with flush-mounted, metal process isolating diaphragm

Thread ISO 228 G

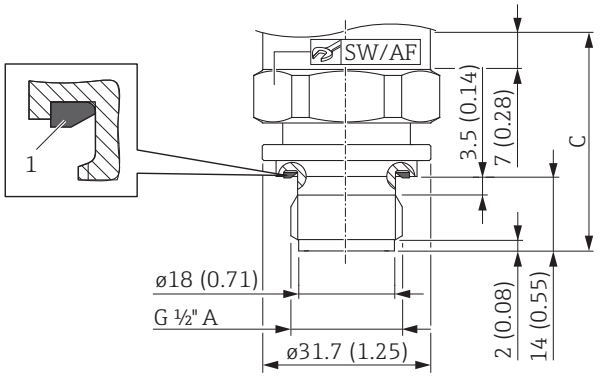

1 FKM form seal, pre-mounted

Engineering unit mm (in). Diameter of process isolating diaphragm: 17.2 mm (0.68 in)

Device	Description	Material	Nominal value to 100 bar (1 500 psi)			Nominal value 400 bar (6 000 psi)			Option [1]
			Weight	Height C	SW/ AF	Weight	Height C	SW/ AF	
			kg (lbs)			kg (lbs)			
PMP11 PMP21	Thread ISO 228 G ½" A DIN3852	316L	0.140 (0.31)	41 (1.61)	32	0.120 (0.26)	35 (1.38)	32	WJJ

1) Product Configurator, order code for "Process connection"

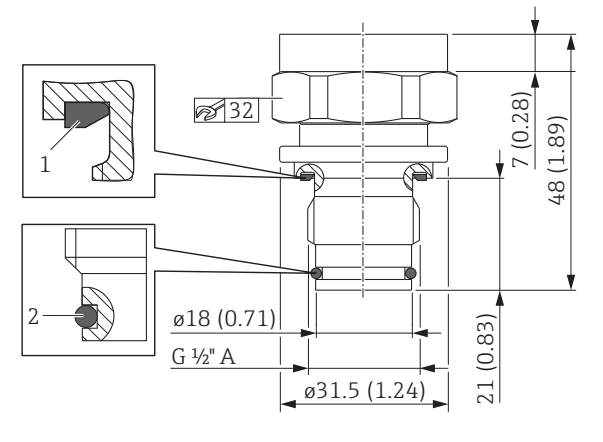

1 FKM form seal, pre-mounted
2 FKM O-ring, pre-mounted

Engineering unit mm (in). Diameter of process isolating diaphragm: 17.2 mm (0.68 in)

Device [1]	Description	Material	Weight	Option [2]
			kg (lbs)	
PMP11 PMP21	Thread ISO 228 G ½" A O-ring seal, flush-mounted	316L	0.150 (0.33)	WUJ

1) Suitable for weld-in adapter 52002643 and 52010172
2) Product Configurator, order code for "Process connection"

Materials in contact with process

NOTICE

- ▶ Device components in contact with the process are listed in the "Mechanical construction" and "Ordering information" sections.

TSE Certificate of Suitability

The following applies to all device components in contact with the process:

- They do not contain any materials derived from animals.
- No additives or operating materials derived from animals are used in production or processing.

Process connections

Endress+Hauser supplies a threaded connection made of stainless steel in accordance with AISI 316L (DIN/ EN material number 1.4404 or 1.4435). With regard to their stability-temperature property, the materials 1.4404 and 1.4435 are grouped together under 13E0 in EN 1092-1: 2001 Tab. 18. The chemical composition of the two materials can be identical.

Process isolating diaphragm

Description	Material
Ceramic process isolating diaphragm	Al_2O_3 aluminum-oxide ceramic, Ceraphire® FDA, ultrapure 99.9 % (see also www.endress.com/ceraphire) The US Food & Drug Administration (FDA) has no objections to the use of ceramics made from aluminum oxide as a surface material in contact with foodstuffs. This declaration is based on the FDA certificates of our ceramic suppliers.
Metal process isolating diaphragm	AISI 316L (DIN/EN material number 1.4435)

Seals

See the specific process connection.

Materials not in contact with process

Housing

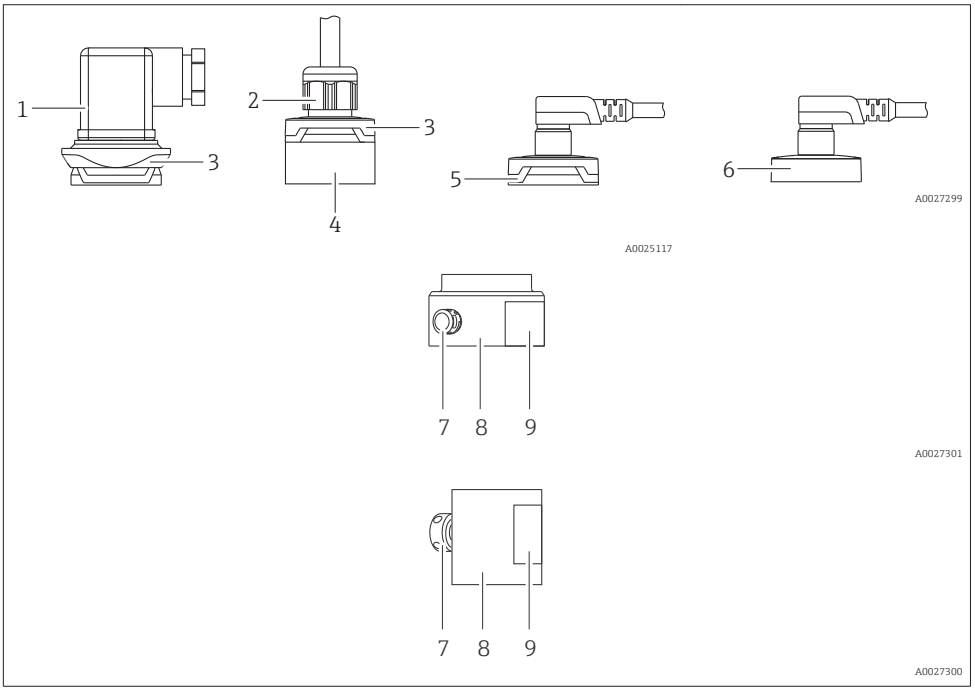

Item number	Component part	Material
1	Valve plug	▪ Seal: NBR ▪ Plug: PA ▪ Screw: V2A
2	Cable	▪ Pressure screw: PVDF ▪ Seal: TPE-V ▪ Cable: PUR (UL 94 V0)
3	Design element	PBT/PC
4	Connection	PPSU
5	M12 plug	Plastic: PPSU
6	M12 plug	Metal 316L (1.4404) For Ex ec: metal housing cap
7	Pressure compensation element	PMP11: PBT/PC PMP21 standard: PBT/PC PMP21 with Ex ec approval: 1.4404
8	Housing	316L (1.4404)
9	Nameplates	Plastic foil (attached to housing) or directly lasered onto the housing

Filling oil

Device	Filling oil
PMP11 PMP21	NSF-H1 synthetic oil in accordance with FDA 21 CFR 178.3570

Cleaning

Device	Description	Option [1]
PMC11 PMP11 PMC21 PMP21	Cleaned from oil+grease	HA
PMC21	Cleaned for oxygen service	HB

1) Product Configurator, order code for "Service"

Operability

Plug-on display PHX20 (optional)

No display or other operation facility is required to operate the device. However, devices with a valve plug can be fitted with the optional local display PHX20.

Description	Option [1]
Plug-on display PHX20, IP65	RU

1) Product Configurator, order code for "Accessories"

A 1-line liquid crystal display (LCD) is used. The local display shows measured values, fault messages and information messages. The device display can be turned in 90° steps. Depending on the orientation of the device, it is therefore easy to read the measured values.

Technical data

Display:	4-digit, red LED display
Digit height:	7.62 mm; programmable decimal point setting
Display range:	-1999 to 9999
Accuracy:	0.2% of the span ±1 digit
Electrical connection:	To transmitter with 4 to 20 mA output and elbow plug DIN 43 650, reverse polarity protection
Display power supply:	Not required, powered automatically from the power loop
Voltage drop:	≤ 5 V (corresponds to load: max. 250 Ω)
Rate of conversion:	3 measurements per second
Damping:	0.3 to 20 s (configurable)
Data backup:	Non-volatile EEPROM
Error message:	▪ HI: overrange ▪ LO: below range
Programming:	Via 2 keys, menu-guided, display range scaling, decimal point, damping, error message
Degree of protection:	IP 65
Influence of temperature on the display:	0.1% / 10 K
Electromagnetic compatibility (EMC):	Interference emission as per EN 50081, interference immunity as per EN 50082
Permitted current load:	Max. 60 mA
Ambient temperature:	0 to +60 °C (+32 to +140 °F)
Housing material:	Pa6 GF30 plastic, blue Front screen made from red PMMA
Order number:	52022914

Certificates and approvals

CE mark

The device meets the legal requirements of the relevant EC directives. Endress+Hauser confirms that the device has been successfully tested by applying the CE mark.

RoHS

The measuring system complies with the substance restrictions of the Restriction on Hazardous Substances Directive 2011/65/EU (RoHS 2).

RCM-Tick marking

The supplied product or measuring system meets the ACMA (Australian Communications and Media Authority) requirements for network integrity, interoperability, performance characteristics as well as health and safety regulations. Here, especially the regulatory arrangements for electromagnetic compatibility are met. The products are labelled with the RCM- Tick marking on the name plate.



A0029561

EAC conformity

The PMC21, PMP21 and PMP23 devices meet the legal requirements of the applicable EAC directives. These are listed in the corresponding EAC Declaration of Conformity along with the standards applied.

Endress+Hauser confirms successful testing of the device by affixing to it the EAC mark.

Approval

CSA C/US General Purpose

Safety Instructions (XA)

Safety Instructions (XA) are supplied with the device depending on the approval. These instructions are an integral part of the Operating Instructions.

Device	Directive	Documentation	Option [1]
PMP21	ATEX II 1/2G Ex ia IIC T4 Ga/Gb	XA01271P	BA
PMC21	ATEX II 2G Ex ia IIC T4 Gb	XA01271P	BB
PMC21 PMP21	ATEX II 3G Ex ec IIC T4 Gc	XA01533P	BC
PMC21 PMP21	FM IS Cl. I, Div.1 Gr. A-D T4	XA01321P	FA
PMC21 PMP21	CSA C/US IS Cl. I Div. 1 Gr. A-D	XA01322P	CB
PMC21 PMP21	EAC Ex ia IIC T4 Ga/Gb	XA01540P	GA
PMC21 PMP21	IEC Ex ia IIC T4 Ga/Gb	XA01271P	IA
PMC21 PMP21	NEPSI Ex ia IIC T4	XA01363P	NA
PMC21 PMP21	TIIS Ex ia IIC T4	In preparation	TA

1) Product Configurator, order code for "Approval"

The nameplate provides information on the Safety Instructions (XA) that are relevant for the device.

Marine approval (pending)

Device	Description	Option [1]
PMC21 PMP21	DNV GL	LE
PMC21 PMP21	ABS	LF

1) Product Configurator, order code for "Additional approval"

Pressure Equipment Directive 2014/68/EU (PED)

Pressure equipment with allowable pressure ≤ 200 bar (2 900 psi)

Pressure equipment (with a maximum allowable pressure PS ≤ 200 bar (2 900 psi)) can be classified as pressure accessories in accordance with Pressure Equipment Directive 2014/68/EU. If the maximum allowable pressure is ≤ 200 bar (2 900 psi) and the pressurized volume of the pressure equipment is ≤ 0.1 l, the pressure equipment is subject to the Pressure Equipment Directive (cf. Pressure Equipment Directive 2014/68/EU, Article 4, point 3). The Pressure Equipment Directive only requires that the pressure equipment shall be designed and manufactured in accordance with the "sound engineering practice of a Member State".

Reasons:

- Pressure Equipment Directive (PED) 2014/68/EU Article 4, point 3
- Pressure equipment directive 2014/68/EU, Commission's Working Group "Pressure", Guideline A-05 + A-06

Note:

A partial examination shall be performed for pressure instruments that are part of safety equipment for the protection of a pipe or vessel from exceeding allowable limits (safety accessory in accordance with Pressure Equipment Directive 2014/68/EU, Article 2, point 4).

Pressure equipment with allowable pressure > 200 bar (2 900 psi)

Pressure equipment designated for application in every process fluid having a pressurized volume of <0.1 l and a max. allowable pressure PS > 200 bar (2 900 psi) shall satisfy the essential safety requirements set out in Annex I of the Pressure Equipment Directive 2014/68/EU. According to Article 13 pressure equipment shall be classified by category in accordance with Annex II. The conformity assessment of the pressure equipment shall be determined by the category I under consideration of the above-mentioned low pressurized volume. These devices shall be provided with CE marking.

Reasons:

- Pressure Equipment Directive 2014/68/EU, Article 13, Annex II
- Pressure equipment directive 2014/68/EU, Commission's Working Group "Pressure", Guideline A-05

Note:

A partial examination shall be performed for pressure instruments that are part of safety equipment for the protection of a pipe or vessel from exceeding allowable limits (safety accessory in accordance with Pressure Equipment Directive 2014/68/EU, Article 2, point 4).

The following also applies:

PMP21 with threaded connection and internal process isolating diaphragm PN > 200 :

Suitable for stable gases in group 1, category I, module A

Other standards and guidelines

The applicable European guidelines and standards can be found in the relevant EU Declarations of Conformity. The following were also applied:

DIN EN 60770 (IEC 60770):

Transmitters for use in industrial process control systems Part 1: Methods for performance evaluation

Methods for evaluating the performance of transmitters for control and regulation in industrial process control systems.

DIN 16086:

Electrical pressure measuring instruments, pressure sensors, pressure transmitters, pressure measuring instruments, concepts, specifications on data sheets

Procedure for writing specifications in data sheets for electrical pressure measuring instruments, pressure sensors and pressure transmitters.

EN 61326-X:

EMC product family standard for electrical equipment for measurement, control and laboratory use.

EN 60529:

Degrees of protection provided by enclosures (IP code)

NAMUR - User association of automation technology in process industries.

NE21 - Electromagnetic Compatibility (EMC) of Industrial Process and Laboratory Control Equipment.

NE43 - Standardization of the Signal Level for the Failure Information of Digital Transmitters.

NE44 - Standardization of Status Indicators on PCT Instruments with the Help of Light Emitting Diodes

NE53 - Software of Field Devices and Signal-processing Devices with Digital Electronics

CRN approval

A CRN approval is available for some device versions. A CRN-approved process connection with a CSA approval must be ordered for a CRN-approved device. The CRN-approved devices are assigned the registration number 0F18141.5C.

Ordering information: Product Configurator, order code for "Process connection" (the CRN process connections are indicated appropriately in the "Mechanical construction" section.)

Calibration unit

Description	Option [1]
Sensor range; %	A
Sensor range; mbar/bar	B
Sensor range; kPa/MPa	C
Sensor range; psi	F
Customer-specific; see additional spec.	J

1) Product Configurator, order code for "Calibration; unit"

Calibration

Description	Option [1]
3-point certificate of calibration	F3

1) Product Configurator order code for "Calibration"

Inspection certificates

Device	Description	Option [1]
PMC21 PMP21	3.1 Material documentation, wetted metal parts, EN10204-3.1 inspection certificate	JA

1) Product Configurator, order code for "Test, Certificate"

Ordering information

Detailed ordering information is available from the following sources:
- In the Product Configurator on the Endress+Hauser website: www.endress.com -> Click "Corporate" -> Select your country -> Click "Products" -> Select the product using the filters and search field -> Open product page -> The "Configure" button to the right of the product image opens the Product Configurator.
- From your Endress+Hauser Sales Center: www.addresses.endress.com

Product Configurator - the tool for individual product configuration
- Up-to-the-minute configuration data
- Depending on the device: Direct input of measuring point-specific information such as measuring range or operating language
- Automatic verification of exclusion criteria
- Automatic creation of the order code and its breakdown in PDF or Excel output format
- Ability to order directly in the Endress+Hauser Online Shop

Scope of delivery
- Measuring device
- Optional accessories
- Brief Operating Instructions
- Certificates

Accessories

Weld-in adapter

Various weld-in adapters are available for installation in vessels or pipes.

Device	Description	Option [1]	Order number
PMP21	Weld-in adapter G½, 316L	QA	52002643
PMP21	Weld-in adapter G½, 316L 3.1 EN10204-3.1 material, inspection certificate	QB	52010172
PMP21	Weld-in tool adapter G½, brass	QC	52005082

1) Product Configurator, order code for "Enclosed accessories"

If installed horizontally and weld-in adapters with a leakage hole are used, ensure that the leakage hole is pointing down. This allows leaks to be detected as quickly as possible.

Plug-on display PHX20

→ 🖹 40

M12 plug connectors

Connector	Degree of protection	Material	Option [1]	Order number
M12 (self-terminated connection at M12 plug) 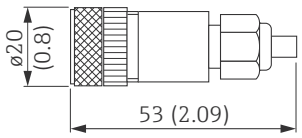	IP67	▪ Union nut: Cu Sn/Ni ▪ Body: PBT ▪ Seal: NBR	R1	52006263
M12 90 degrees with 5m (16 ft) cable 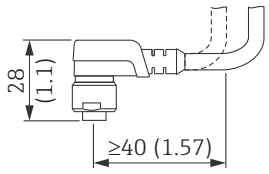	IP67	▪ Union nut: GD Zn/Ni ▪ Body: PUR ▪ Cable: PVC	RZ	52010285
M12 90 degrees (self-terminated connection at M12 plug) 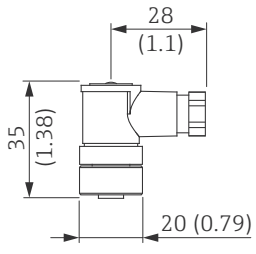	IP67	▪ Union nut: GD Zn/Ni ▪ Body: PBT ▪ Seal: NBR	RM	71114212

1) Product Configurator, order code for "Enclosed accessories"

Documentation

Field of Activities

Pressure measurement, powerful instruments for process pressure, differential pressure, level and flow:

FA00004P/00/EN

Technical Information

- TI00241F/00/EN: EMC test procedures
- TI00426F/00/EN: Weld-in adapters, process adapters and flanges (overview)

Operating Instructions

BA01271P/00/EN

Brief Operating Instructions

KA01164P/00/EN

Safety Instructions (XA)

Safety Instructions (XA) are supplied with the device depending on the approval. These instructions are an integral part of the Operating Instructions.

Device	Directive	Documentation	Option [1]
PMP21	ATEX II 1/2G Ex ia IIC T4 Ga/Gb	XA01271P	BA
PMC21	ATEX II 2G Ex ia IIC T4 Gb	XA01271P	BB
PMC21 PMP21	ATEX II 3G Ex ec IIC T4 Gc	XA01533P	BC
PMC21 PMP21	FM IS Cl. I, Div.1 Gr. A-D T4	XA01321P	FA
PMC21 PMP21	CSA C/US IS Cl. I Div. 1 Gr. A-D	XA01322P	CB
PMC21 PMP21	EAC Ex ia IIC T4 Ga/Gb	XA01540P	GA
PMC21 PMP21	IEC Ex ia IIC T4 Ga/Gb	XA01271P	IA
PMC21 PMP21	NEPSI Ex ia IIC T4	XA01363P	NA
PMC21 PMP21	TIIS Ex ia IIC T4	In preparation	TA

1) Product Configurator, order code for "Approval"

The nameplate provides information on the Safety Instructions (XA) that are relevant for the device.



www.addresses.endress.com

Endress+Hauser

People for Process Automation

This page is intentionally left blank

CS-407-100 : Identification sheet

VWTC PROJECT NUMBER:	Iqaluit WWTP			REV:	02
PROJECT NAME:	5000218036	SUBMITTED TO (COMPANY):			
ENGINEER:	F.VINCI	SUBMITTED TO (RESPONSIBLE)			
PROJECT MANAGER:	C. BEKAERT	PROJECT NUM REFERENCE.:			
PHONE NUMBER:		LOT NUMBER:			

SUPPLIER	EQPT CODE	EQPT TAG NO	DIA	DESCRIPTION	INFO 1	INFO 2	INFO 3	APPLIC.	NOTE	REV
HACH	IEPOCY201499	AE-04-741	N/A	HP-250 INSTRUMENT	CONDUCTIVITY SENSOR/MANUFACTURER: HACH// MODEL: D3725E2T // SENSOR CABLE: 22FT // CALIBRATED RANGE: 200 - 2,000,000 uS/cm // BODY: PP	N/A	N/A	HP-250		1
HACH	IEPOCY201499	AE-04-745	N/A	HP-250 INSTRUMENT	CONDUCTIVITY SENSOR/MANUFACTURER: HACH// MODEL: D3725E2T // SENSOR CABLE: 22FT // CALIBRATED RANGE: 200 - 2,000,000 uS/cm // BODY: PP	N/A	N/A	HP-250		2

This page is intentionally left blank

Inductive Conductivity Sensors



The innovative technology of Hach's Inductive Conductivity Sensors eliminates polarization and electrode coating problems in harsh environments. Available in sanitary (CIP) flange style and convertible styles in PFA Teflon®, polypropylene, PEEK®, and PVDF.

Features and Benefits

Wide Measuring Range

Hach's Inductive Conductivity Sensors measure 200 up to 2,000,000 microSiemens/cm. A built-in Pt 1000 RTD compensates the measured conductivity for changes in process temperature.

Low-maintenance Design

The inductive sensor design eliminates polarization and electrode coating problems that commonly affect conventional contacting electrode-type conductivity sensors.

Complete Digital System

All 3700 sc sensors come complete with a Digital Gateway for use with a Hach sc Digital Controller.

Principal of Operation

Inductive conductivity sensors induce a low current in a closed loop of solution, then measure the magnitude of this current to determine the solution's conductivity. The conductivity analyzer drives Torroid A, inducing an alternating current in the solution. This current signal flows in a closed loop through the sensor bore and surrounding solution. Torroid B senses the magnitude of the induced current which is proportional to the conductance of the solution. The analyzer processes this signal and displays the corresponding reading.

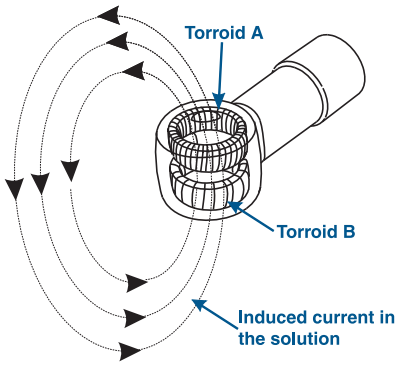

Versatile Mounting Styles

Sensors can be installed using a choice of four mounting styles—immersion, insertion, union, and sanitary. Please turn to page 6 for more information.

Full-Featured "Plug and Play" Hach sc Digital Controllers

There are no complicated wiring or set up procedures with any Hach sc controller. Just plug in any combination of Hach digital sensors and it's ready to use—it's "plug and play."

One or multiple sensors—The sc controller family allows you to receive data from up to eight Hach digital sensors in any combination using a single controller.

Communications—Multiple alarm/control schemes are available using the relays and PID control outputs. Available communications include analog 4-20 mA, digital MODBUS® (RS485 and RS232) or Profibus DP protocols. (Other digital protocols are available. Contact your Hach representative for details.)

Data logger—A built-in data logger collects measurement data, calibration, verification points, and alarm history.

Specifications*

Measuring Range
From 200 microSiemens/cm up to 2,000,000 microSiemens/cm

Operating Temperature Range
-10 to 200°C (14 to 392°F); limited only by sensor body material and mounting hardware; see below

Flow Rate
3 m (10 ft.) per second, maximum

Temperature Compensator
Pt 1000 RTD

Sensor Cable
Polypropylene and PVDF Sensors:
5 conductor (plus two isolated shields) cable with XLPE (cross-linked polyethylene) jacket; rated to 150°C (302°F); 6 m (20 ft.) long

PEEK® and PFA Teflon® Sensors:
5 conductor (plus two isolated shields) cable with Teflon-coated jacket; rated to 200°C (392°F); 6 m (20 ft.) long

Wetted Materials
Polypropylene, PVDF, PEEK® or PFA Teflon®

Model 3700 sc-series Material Compatibility

	Polypropylene	PVDF	PEEK®	Teflon®
Calcium Chloride		•	•	•
Hydrochloric Acid		•		•
Hydrofluoric Acid		•		•
Nitric Acid				•
Phosphoric Acid		•	•	•
Potassium Hydroxide	•		•	•
Seawater	•	•	•	•
Sodium Hydroxide	•		•	•
Sulfuric Acid				•
Water	•	•	•	•

NOTE: Compatibilities are valid for temperatures up to 115°C. For other applications or conditions, please contact Hach Technical Support.

Temperature/Pressure Limits
Sensor Only (no hardware):

Polypropylene
6.9 bar at 100°C (100 psi at 212°F)
PVDF
6.9 bar at 120°C (100 psi at 248°F)
PEEK®
13.8 bar at 200°C (200 psi at 392°F)
PFA Teflon®
13.8 bar at 200°C (200 psi at 392°F)

Temperature/Pressure Limits (continued)
Sensor with Hardware:

Immersion and Union†
See graphs below for specific Hach sensor and mounting hardware combinations

CPVC Mounting Hardware
(All Sensor Materials)

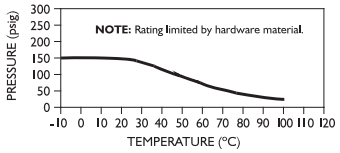

PVDF Mounting Hardware
(All Sensor Materials)

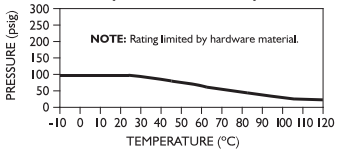

316 Stainless Steel Mounting Hardware

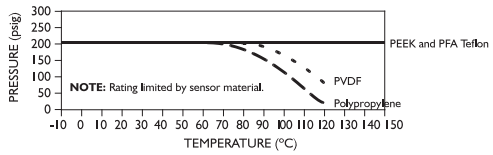

304 Stainless Steel Sanitary Mounting Hardware††
With Polypropylene Sensor

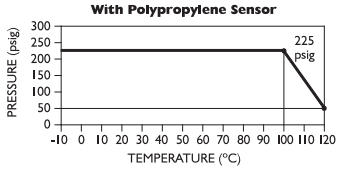

With PVDF Sensor

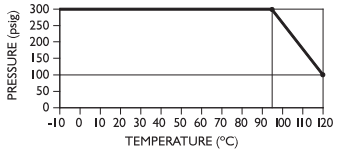

With PFA Teflon Sensor

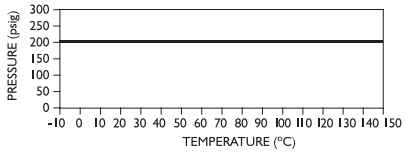

†Ratings for the above Hach sensor and mounting hardware combinations are based upon water service. More severe service may require a correction factor.

††Sanitary hardware ratings are for MH018S8SZ hardware. Other hardware and clamp combinations may reduce the listed ratings.

Insertion Hardware only:	MH118M9NZ	MH138M9NZ
Temperature Range**	-5 to 95°C (23 to 203°F) supported or unsupported	-5 to 80°C (23 to 176°F) unsupported if installed vertically; -5 to 95°C (23 to 203°F) when supported with bracket
Maximum Pressure**	5.5 bar at 95°C (80 psig at 203°F)	3.5 bar at 90°C (50 psig at 194°F)
Wetted Materials	316 stainless steel, Teflon® valve seats, and Viton® O-rings	CPVC, brass, Teflon® valve seats, and Viton® O-ring seals

***These sensor/hardware temperature and pressure ratings are limited by the hardware material, maximum pressure, and whether the assembly is supported or unsupported.*

**Specifications subject to change without notice.*

PEEK® is a registered Trademark of ICI Americas, Inc.; Teflon® is a registered Trademark of DuPont Co.; Viton® is a registered trademark of E.I. DuPont de Nemours + Co.

Engineering Specifications

1. The electrodeless conductivity sensor shall measure from 0-200 to 0-2,000,000 microSiemens/cm, and shall have a built-in Pt 1000 RTD element to compensate measured conductivity for changes in process temperature.

2. The sensor shall be constructed of only one wetted body material which shall be polypropylene, PVDF, PEEK® or PFA Teflon®.

3. The sensor cable shall be water resistant and rated to 150ºC (302ºF) for polypropylene and PVDF sensors or 200ºC (392ºF) for PEEK® and PFA Teflon® sensors.

4. The sensor shall have a 1/2-inch nominal diameter bore for operation in slurries.

5. The sensor shall be a:

   a) Convertible style that can be directly fastened onto the end of a pipe for immersion mounting or, by using a special Hach union-mount adapter, mounted into any 2-inch NPT fitting (tee, weldolet, pipe saddle, etc.). The convertible style sensor can also be insertion mounted into a 2-inch ball valve assembly.

   b) Sanitary style with materials that conform to the provisions of 3-A Sanitary Standards to withstand CIP cleaning, and with an integral 2-inch sanitary-mount flange to mount into a standard 2-inch sanitary tee.

6. An optional sensor module or Digital Gateway shall be available for connecting to a Hach sc Digital Controller.

7. The sensor shall be Hach Company 3700 sc or 3700 Inductive Conductivity Sensor.

Dimensions

Convertible Style

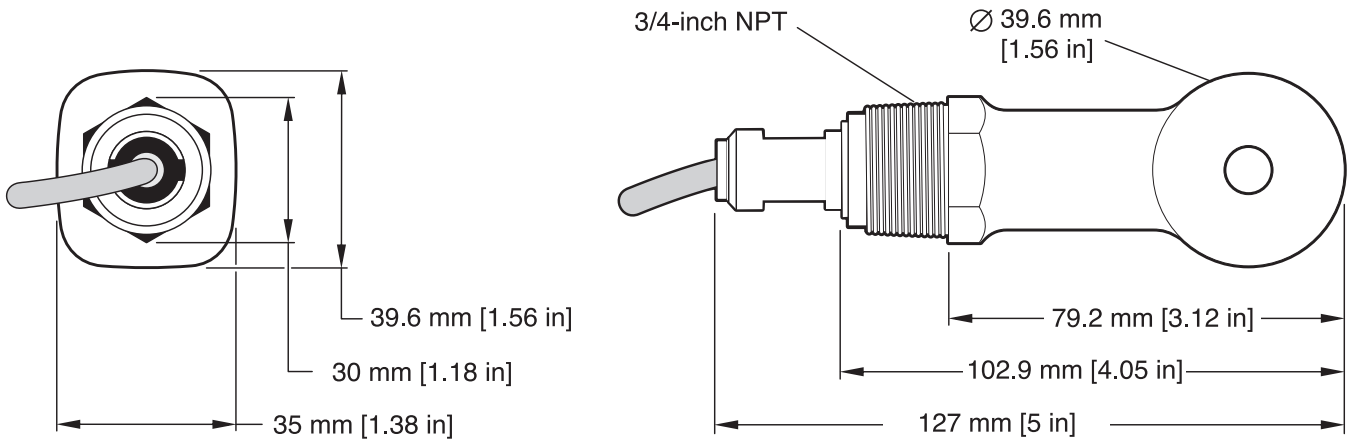

Sanitary Style

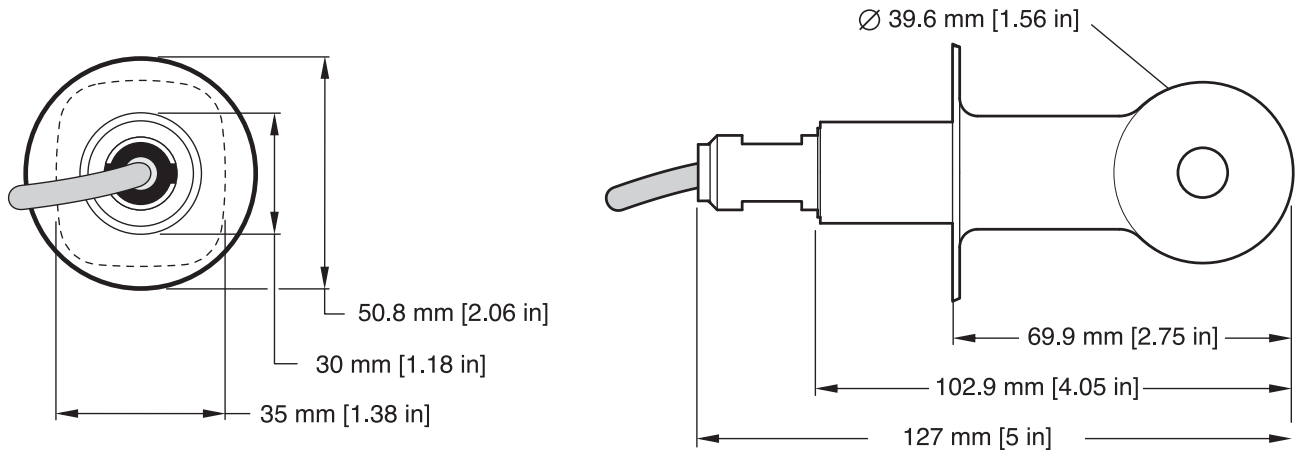

Ordering Information

3700 sc Digital Inductive Conductivity Sensors

All digital inductive sensors come complete with standard sensor cable length of 6 m (20 ft.), digital gateway, and a 1 m (3.3 ft.) digital extension cable.

Choice of body styles:

- *Convertible – 2-inch NPT, designed for tee, other flow through, insertion, and pipe mountings for immersion.*
- *Sanitary (CIP) –2-inch flange, special cap, and EPDM compound gasket. Conforms to provisions of 3-A Sanitary Standards.*

Product Number	Body Style	Body Material
D3705E2T	Sanitary	Polypropylene
D3706E2T	Sanitary	PVDF
D3708E2T	Sanitary	PFA Teflon
D3725E2T	Convertible	Polypropylene
D3726E2T	Convertible	PVDF
D3727E2T	Convertible	PEEK
D3728E2T	Convertible	PFA Teflon

Digital Gateway

6120800 Use the Digital Gateway to connect analog Hach 3700 inductive conductivity sensors to the Hach sc1000 digital controller

3700 Analog Inductive Conductivity Sensors

All Analog sensors come complete with standard sensor cable length of 6 m (20 ft.).

Choice of body styles:

- *Convertible – 2-inch NPT, designed for tee, other flow through, insertion, and pipe mountings for immersion.*
- *Sanitary (CIP) –2-inch flange, special cap, and EPDM compound gasket. Conforms to provisions of 3-A Sanitary Standards.*

Product Number	Body Style	Body Material
3705E2T	Sanitary	Polypropylene
3706E2T	Sanitary	PVDF
3708E2T	Sanitary	PFA Teflon
3725E2T	Convertible	Polypropylene
3726E2T	Convertible	PVDF
3727E2T	Convertible	PEEK
3728E2T	Convertible	PFA Teflon

Accessories

Cables

Digital cables are used only with digital sensors or gateways when connecting to a Hach sc Digital Controller.

6122400 Digital Extension Cable, 1 m (3.2 ft.)

5796000 Digital Extension Cable, 7.7 m (25 ft.)

5796100 Digital Extension Cable, 15 m (50 ft.)

5796200 Digital Extension Cable, 31 m (100 ft.)

Analog cables are used only with analog sensors, junction box, and controller.

1W1100 Analog Interconnect Cable (order per foot)

Digital Termination Box

Used with digital extension cables when the desired cable length between the digital sensor/digital gateway and sc Digital Controller is between 100 m (328 ft) and 1000 m (3280 ft).

5867000 Digital Termination Box

Analog Junction Box

Used with analog interconnect cable when the desired cable length between analog sensor and analog controller is greater than the standard length of sensor cable. Each junction box includes terminal strip and gasket.

60A2053 Junction Box, Surface-mount, aluminum (includes mounting hardware)

60A9944 Junction Box, Pipe-mount, PVC for 1/2-inch diameter pipe (includes mounting hardware)

60G2052 Junction Box, Pipe-mount, PVC for 1-inch diameter pipe (includes mounting hardware)

76A4010-001 Junction Box, NEMA 4X (no mounting hardware included)

Conductivity Reference Solutions

Please specify the desired conductivity value when placing your order.

Product Number	Description	Volume
25M3A2000-119	100-1000 µS/cm	1 liter
25M3A2050-119	1000-2000 µS/cm	1 liter
25M3A2100-119	2000-150,000 µS/cm	1 liter
25M3A2200-119	200,000-300,000 µS/cm	1 liter

Ordering Information *continued*

Mounting Hardware

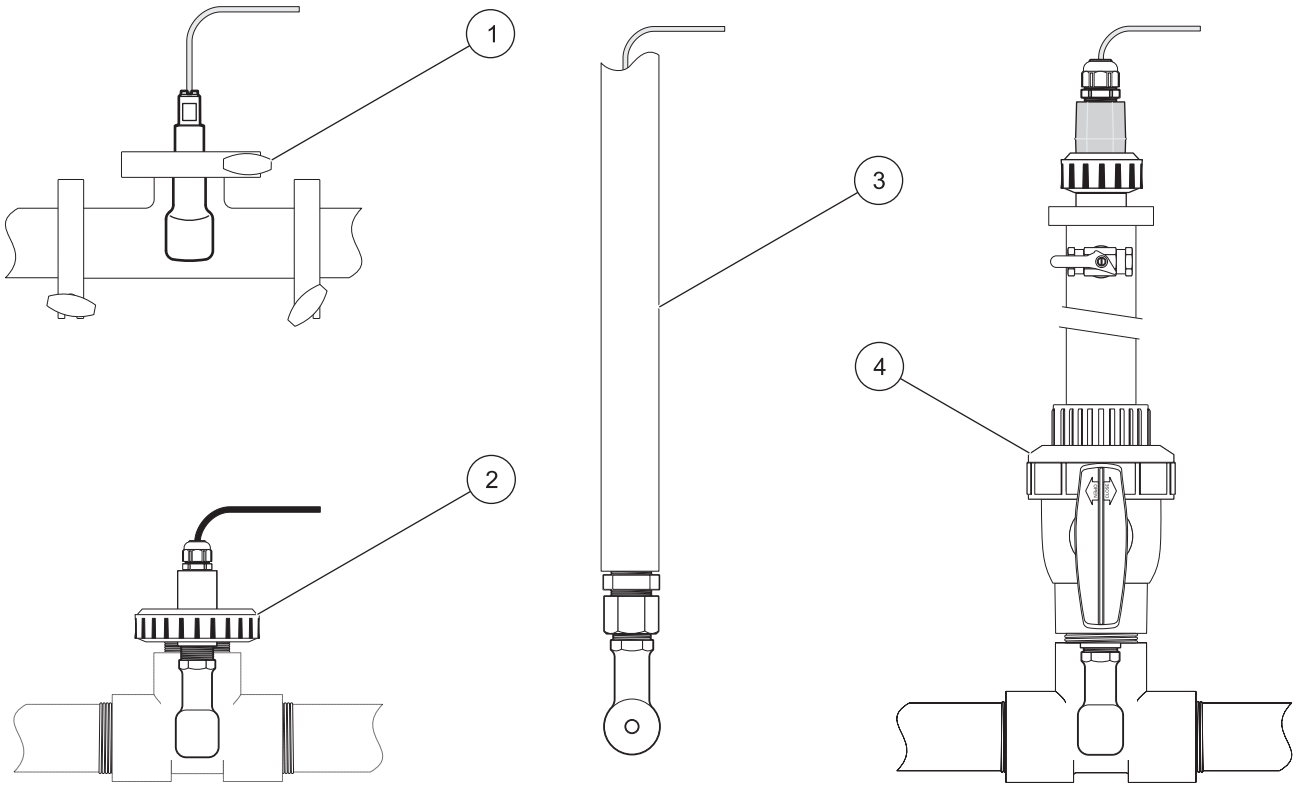

1. Sanitary Style sensor sanitary clamp mounting

2. Convertible Style sensor union mounting

3. Convertible Style sensor immersion mounting

4. Convertible Style sensor ball valve mounting

Sanitary Mount

MH018S8SZ 316SS

Includes 316 SS sanitary 2-inch tee, heavy-duty clamp, special cap, and EPDM compound gasket.

Union Mount

MH518N3NZ 316 SS

MH538N3NZ CPVC

MH568N3NZ PVDF

Includes adapter and a 2-inch pipe tee. Union adapters are used with convertible style sensors that are to be union or flange mounted into a standard 2-inch NPT pipe tee or insertion mounted into a 2-inch ball valve assembly.

Immersion Mount

MH432G CPVC Pipe

Includes 1/2-inch diameter x 4-foot pipe, 1/2- x 3/4-inch NPT coupling, and plastic pipe-mount junction box with terminal strip.

Insertion Mount

MH138M9NZ CPVC

MH118M9NZ 316 SS

Includes 2-inch NPT insertion assembly with ball valve.

Common Applications

Refer to page 2 for sensor temperature and pressure limits.

Industry	Application	Recommended Sensor Style (and Material)
Metals Finishing and Mining	Plating bath monitoring	Convertible (polypropylene)
	Alkaline/caustic wash	Convertible (polypropylene)
	Rinse water	Convertible (polypropylene)
	Pickling processes	Convertible (PVDF)
	Metals recovery	Convertible (PEEK)
	Copper floatation	Convertible (PEEK)
	Scrubbers	Convertible (polypropylene)
Chemicals and Refining	Acid production	Convertible (PFA Teflon)
	Caustic production	Convertible (PFA Teflon
	Phosphates	Convertible (PFA Teflon)
	Fertilizers	Convertible (PFA Teflon)
	Detergents	Convertible (PFA Teflon)
	Glycerin	Convertible (PVDF)
	Moisture detection	Convertible (PVDF or PFA Teflon)
	Scrubbers	Convertible (PVDF)
	Wastewater	Convertible (PVDF)
	Oil well drilling mud	Convertible (PEEK)
	Leak detection	Convertible (PEEK)
	Alkylation	Convertible (PFA Teflon)
	Spill detection	Convertible (PEEK)
Food and Beverage	Brine concentration	Convertible (polypropylene)
	Desalting	Convertible (polypropylene)
	Cheese production	Sanitary (PFA Teflon)
	Caustic peeling	Convertible (PFA Teflon)
	Pickle making	Sanitary (polypropylene)
	CIP applications	Sanitary (PFA Teflon)
	Rinse water control	Convertible (polypropylene)
	Sugar carbonation	Convertible (PFA Teflon)
Pulp and Paper	White, black and green liquor	Convertible (PEEK)
	Stock washing	Convertible (PEEK)
	Wash and cooking liquor control	Convertible (PEEK)
	Scrubbers	Convertible (PEEK)
	Spill detection	Convertible (PEEK)
Textile Manufacturing	Rinse water	Convertible (polypropylene)
	Dye baths	Convertible (polypropylene)
	Bleaching	Convertible (polypropylene)
	Mercerizing	Convertible (polypropylene)
	Acid washing	Convertible (polypropylene)
	Carbonizing and scouring baths	Convertible (polypropylene)
Natural Waters, Lakes, Streams, and Sea Water	Water pollution monitoring	Convertible (polypropylene)
	Salt intrusion	Convertible (polypropylene)
	Salinity	Convertible (polypropylene)
Clean Water Treatment	Ion exchange regeneration	Convertible (polypropylene)
	Reverse osmosis concentrate monitoring	Convertible (polypropylene)
	Softener regeneration	Convertible (polypropylene)
	Acid/caustic concentration control	Convertible (PVDF)
Wastewater Treatment	Acid/caustic concentration control	Convertible (PEEK)
	Spill detection	Convertible (PEEK)
Steam Generation	Boiler blowdown	Convertible (polypropylene)
	Flue gas scrubbers	Convertible (polypropylene)

To complete your conductivity measurement system, choose from these Hach controllers...

Model sc200 Controller

(see Lit. #2665)

The sc200 controller platform can be configured to operate either 2 Digital Sensor Inputs, or 1 or 2 Analog Sensor Inputs, or a combination of Digital and Analog Sensor Inputs. Customers may choose their communication options from a variety of offerings ranging from MODBUS RTU to Profibus DPV1.

sc200 for Hach Digital Sensors

LXV404.99.00552 sc200 controller, 2 channel, digital
LXV404.99.00502 sc200 controller, 1 channel, digital
LXV404.99.00542 sc200 controller, 2 channel, digital & mA input
LXV404.99.00512 sc200 controller, 2 channel, digital & pH/DO
LXV404.99.00522 sc200 controller, 2 channel, digital & Conductivity
LXV404.99.00532 sc200 controller, 2 channel, digital & Flow

sc200 for Hach Analog Sensors

LXV404.99.00102 sc200 controller, 1 channel, pH/DO
LXV404.99.00112 sc200 controller, 2 channel, pH/DO
LXV404.99.00202 sc200 controller, 1 channel, Conductivity
LXV404.99.00222 sc200 controller, 2 channel, Conductivity
LXV404.99.00212 sc200 controller, 2 channel, pH/DO & Conductivity
LXV404.99.00302 sc200 controller, 1 channel, Flow
LXV404.99.00332 sc200 controller, 2 channel, Flow
LXV404.99.00312 sc200 controller, 2 channel, Flow & pH/DO
LXV404.99.00322 sc200 controller, 2 channel, Flow & Conductivity

Note: Other sensor combinations are available. Please contact Hach Technical Support or your Hach representative.
Note: Communication options (MODBUS and Profibus DPV1) are available.

Model sc1000 Controller

(see Lit. #2403)

Each sc1000 Probe Module provides power to the system and can accept up to 8 digital sensors/expansion boards. Probe Modules can be networked together to accommodate up to 32 digital sensors/expansion boards attached to the same network.

LXV402.99.00002 sc1000 Display Module
LXV400.99.1R572 sc1000 Probe Module, 4 sensors, 4 mA Out, 4 mA In, 4 Relays, 110-230V
LXV400.99.1B572 sc1000 Probe Module, 4 sensors, 4 mA Out, 4 mA In, 4 Relays, RS-485 (MODBUS), 110-230V
LXV400.99.1F572 sc1000 Probe Module, 4 sensors, 4 mA Out, 4 mA In, 4 Relays, PROFIBUS DP, 110-230V
LXV400.99.1R582 sc1000 Probe Module, 6 sensors, 4 mA Out, 4 mA In, 4 Relays, 110-230V

si792 2-wire Transmitter (for 3700 Analog Inductive Conductivity Sensors)

(see Lit. #2605)

The Hach si792 2-wire electrochemistry transmitters are full-featured, intuitive to operate, and work with Hach's world-class water quality sensors. Rugged construction is designed for Class I, Division 2 (C1, D2) respectively Class I, Division 1 (C1, D1) application. Digital communication capabilities are available.

LXV503.99.70002 si792 E; Class 1 Division 2; HART
LXV503.99.70102 si792x E; Class 1 Division 1; HART
LXV503.99.76102 si792x E-PA; Class 1 Division 1; PROFIBUS PA
LXV503.99.77102 si792x E-FF; Class 1 Division 1; FOUNDATION FIELDBUS

Lit. No. 2465 Rev 2
J10 Printed in U.S.A.
©Hach Company, 2010. All rights reserved.
In the interest of improving and updating its equipment, Hach Company reserves the right to alter specifications to equipment at any time.

At Hach, it's about learning from our customers and providing the right answers. It's more than ensuring the quality of water—it's about ensuring the quality of life. When it comes to the things that touch our lives...

Keep it pure.

Make it simple.

Be right.

For current price information, technical support, and ordering assistance, contact the Hach office or distributor serving your area.

In the United States, contact:

HACH COMPANY World Headquarters
P.O. Box 389
Loveland, Colorado 80539-0389
U.S.A.
Telephone: 800-227-4224
Fax: 970-669-2932
E-mail: orders@hach.com
www.hach.com

U.S. exporters and customers in Canada, Latin America, sub-Saharan Africa, Asia, and Australia/New Zealand, contact:

HACH COMPANY World Headquarters
P.O. Box 389
Loveland, Colorado 80539-0389
U.S.A.
Telephone: 970-669-3050
Fax: 970-461-3939
E-mail: intl@hach.com
www.hach.com

In Europe, the Middle East, and Mediterranean Africa, contact:

HACH LANGE GmbH
Willstätterstraße 11
D-40549 Düsseldorf
GERMANY
Tel: +49 (0) 211 5288-0
Fax: +49 (0) 211 5288-143
E-mail: info@hach-lange.de
www.hach-lange.com

HACH®

Be Right™

sc200™ UNIVERSAL CONTROLLER

Applications
- Drinking Water
- Wastewater
- Industrial Water
- Power



One Controller for the Broadest Range of Sensors.

Choose from 30 digital and analog sensor families for up to 17 different parameters.

Maximum Versatility

The sc200 controller allows the use of digital and analog sensors, either alone or in combination, to provide compatibility with Hach's broad range of sensors, eliminating the need for dedicated, parameter-specific controllers.

Ease of Use and Confidence in Results

Large, high-resolution, transreflective display provides optimal viewing resolution in any lighting condition. Guided calibration procedures in 19 languages minimize complexity and reduce operator error. Password-protected SD card reader offers a simple solution for data download and transfer. Visual warning system provides critical alerts.

Wide Variety of Communication Options

Utilize two to five analog outputs to transmit primary and secondary values for each sensor, or integrate Hach sensors and analyzers into MODBUS RS232/RS485, Profibus® DP, and HART networks.



Password protected SD card reader offers a simple solution for data download and transfer, and sc200 and digital sensor configuration file duplication and backup.

HACH®
Be Right™

Controller Comparison







Features	Previous Models sc100™ Controller	Previous Models GLI53 Controller	sc200™ Controller	Benefits
Display	64 x 128 pixels 33 x 66 mm (1.3 x 2.6 in.)	64 x 128 pixels 33 x 66 mm (1.3 x 2.6 in.)	160 x 240 pixels 48 x 68 mm (1.89 x 2.67 in.) Transreflective	• Improved user interface—50% bigger • Easier to read in daylight and sunlight
Data Management	irDA Port/PDA Service Cable	N/A	SD Card Service Cable	• Simplifies data transfer • Standardized accessories/max compatibility
Sensor Inputs	2 Max Direct Digital Analog via External Gateway	2 Max Analog Depending on Parameter	2 Max Digital and/or Analog with Sensor Card	• Simplifies analog sensor connections • Works with analog and digital sensors
Analog Inputs	N/A	N/A	1 Analog Input Signal Analog 4-20mA Card	• Enables non-sc analyzer monitoring • Accepts mA signals from other analyzers for local display • Consolidates analog mA signals to a digital output
4-20 mA Outputs	2 Standard	2 Standard	2 Standard Optional 3 Additional	• Total of five (5) 4-20 mA outputs allows multiple mA outputs per sensor input
Digital Communication	MODBUS RS232/RS485 Profibus DP V1.0	HART	MODBUS RS232/RS485 Profibus DP V1.0 HART 7.2	• Unprecedented combination of sensor breadth and digital communication options

Choose from Hach's Broad Range of Digital and Analog Sensors

Parameter	Sensor	Digital or Analog
Ammonia	AMTAX™ sc, NH4D sc, AISE sc, AN-ISE sc	●
Chlorine	CLF10 sc, CLT10 sc, 9184 sc	●
Chlorine Dioxide	9185 sc	●
Conductivity	GLI 3400 Contacting, GLI 3700 Inductive	△
Dissolved Oxygen	LDO® Model 2, 5740 sc	●
Dissolved Oxygen	5500	△
Flow	U53, F53 Sensors	△
Nitrate	NITRATAX™ sc, NO3D sc, NISE sc, AN-ISE sc	●
Oil in Water	FP360 sc	●
Organics	UVAS sc	●
Ozone	9187 sc	●
pH/ORP	pHD	●
pH/ORP	pHD, pH Combination, LCP	△
Phosphate	PHOSPHAX™ sc	●
Sludge Level	SONATAX™ sc	●
Suspended Solids	SOLITAX™ sc, TSS sc	●
Turbidity	1720E, FT660 sc, SS7 sc, ULTRATURB sc, SOLITAX sc, TSS sc	●
Ultra Pure Conductivity	8310, 8311, 8312, 8315, 8316, 8317 Contacting	△
Ultra Pure pH/ORP	8362	△

● = Digital △ = Analog

Connect up to two of any of the sensors listed above, in any combination, to meet your application needs. The diagrams below demonstrate the potential configurations. Operation of analog sensors requires the controller to be equipped with the appropriate sensor module. Contact Hach Technical Support for help with selecting the appropriate module.

2 Channel Configurations

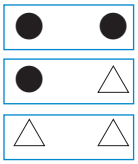

1 Channel Configurations

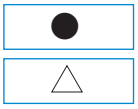

Specifications*

Dimensions (H x W x D)	5.7 in x 5.7 in x 7.1 in (144 mm x 144 mm x 181 mm)
Display	Graphic dot matrix LCD with LED backlighting, transreflective
Display Size	1.9 x 2.7 in. (48 mm x 68 mm)
Display Resolution	240 x 160 pixels
Weight	3.75 lbs. (1.70 kg)
Power Requirements (Voltage)	100 - 240 V AC, 24 V DC
Power Requirements (Hz)	50/60 Hz
Operating Temperature Range	-20 to 60 °C , 0 to 95% RH non-condensing
Analog Outputs	Two (Five with optional expansion module) to isolated current outputs, max 550 Ω , Accuracy: ± 0.1% of FS (20mA) at 25 °C, ± 0.5% of FS over -20 °C to 60 °C range Operational Mode: measurement or calculated value
Analog Output Functional Mode	Linear, Logarithmic, Bi-linear, PID
Security Levels	2 password-protected levels
Mounting Configurations	Wall, pole, and panel mounting
Enclosure Rating	NEMA 4X/IP66
Conduit Openings	1/2 in NPT Conduit
Relay: Operational Mode	Primary or secondary measurement, calculated value (dual channel only) or timer
Relay Functions	Scheduler (Timer), Alarm, Feeder Control, Event Control, Pulse Width Modulation, Frequency Control, and Warning
Relays	Four electromechanical SPDT (Form C) contacts, 1200 W, 5 A
Communication	MODBUS RS232/RS485, PROFIBUS DPV1, or HART 7.2 optional
Memory Backup	Flash memory
Electrical Certifications	EMC CE compliant for conducted and radiated emissions: - CISPR 11 (Class A limits) - EMC Immunity EN 61326-1 (Industrial limits) Safety cETLus safety mark for: - General Locations per ANSI/UL 61010-1 & CAN/CSA C22.2. No. 61010-1 - Hazardous Location Class I, Division 2, Groups A,B,C & D (Zone 2, Group IIC) per FM 3600 / FM 3611 & CSA C22.2 No. 213 M1987 with approved options and appropriately rated Class I, Division 2 or Zone 2 sensors cULus safety mark - General Locations per UL 61010-1 & CAN/CSA C22.2. No. 61010-1

**Subject to change without notice.*

Dimensions

Surface Mounting Dimensions

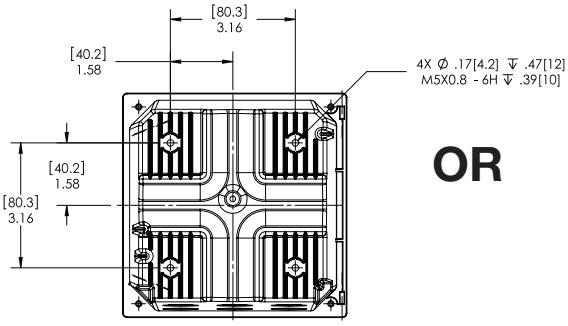

Mounting Dimensions
(Rear View)

OR

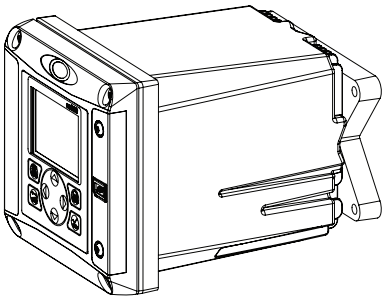

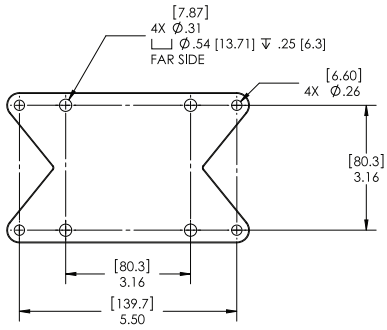

Bracket (supplied) for Surface Mounting
(Not compatible with Weather and Sun Shield p/n 9220600 when surface mounting.)

Panel Mounting Dimensions

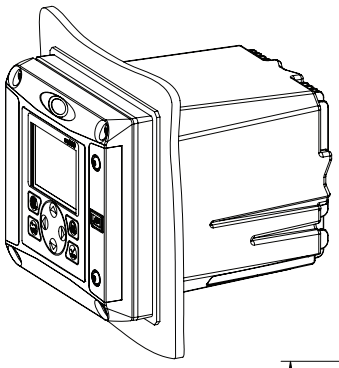

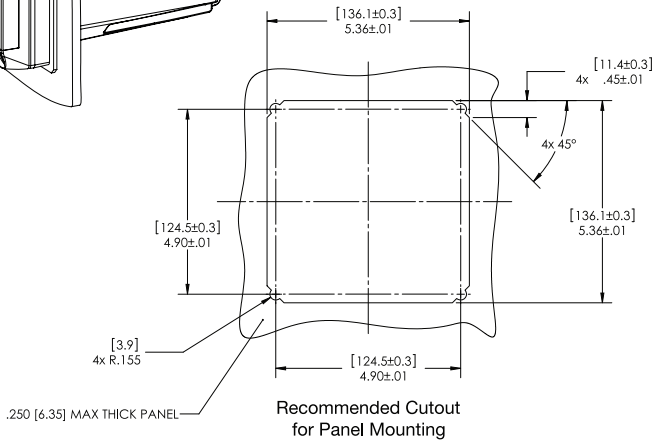

Recommended Cutout
for Panel Mounting

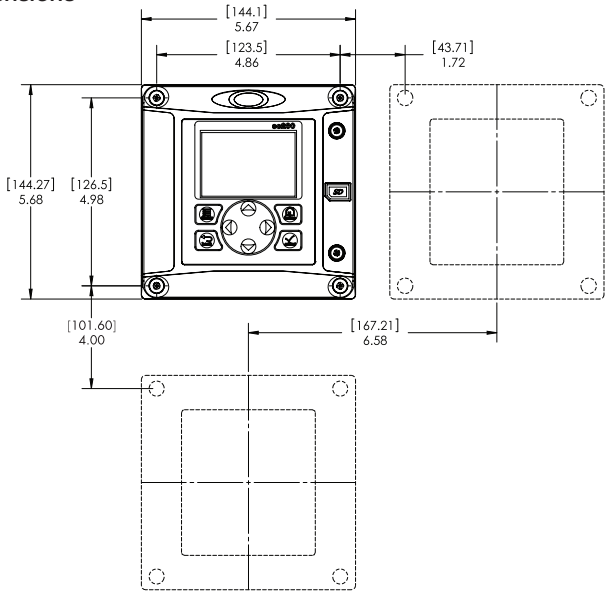

Minimum Spacing Dimensions
for Group Mounting

Top and Bottom Views

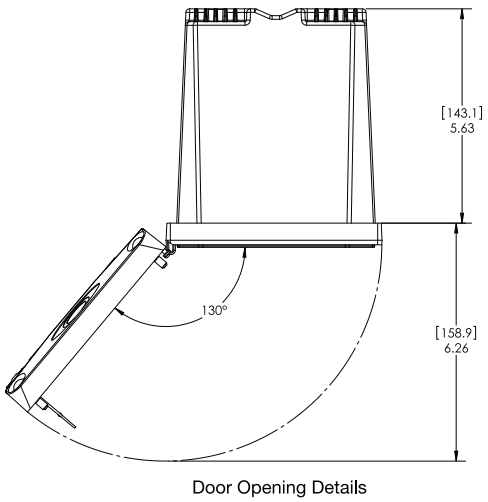

Door Opening Details

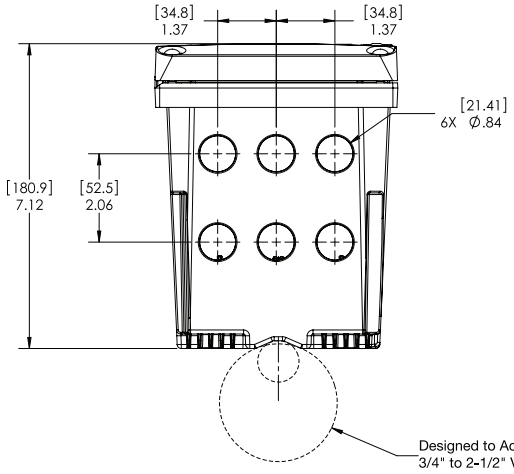

Ordering Information

sc200 for Hach Digital and Analog Sensors

LXV404.99.00552	sc200 controller, 2 channels, digital
LXV404.99.00502	sc200 controller, 1 channel, digital
LXV404.99.00102	sc200 controller, 1 channel, pH/DO
LXV404.99.00202	sc200 controller, 1 channel, Conductivity
LXV404.99.01552	sc200 controller, 2 channels, digital, Modbus RS232/RS485
LXV404.99.00112	sc200 controller, 2 channel, pH/DO

Note: Other Sensor combinations are available. Please contact Hach Technical Support or your Hach representative.

Note: Communication options (MODBUS, Profibus DPV1, and HART) are available. Please contact Hach Technical Support or your Hach representative.



sc200 for Ultrapure Sensors

9500.99.00602	sc200 controller, 1 channel, ultrapure conductivity
9500.99.00702	sc200 controller, 1 channel, ultrapure pH
9500.99.00662	sc200 controller, 2 channel, ultrapure conductivity
9500.99.00772	sc200 controller, 2 channel, ultrapure pH



Sensor and Communication Modules

9012900	Analog pH/ORP and DO module for GLI Sensors
9013000	Analog Conductivity module for GLI Sensors
9012700	Flow module
9012800	4-20 mA Input Module
9525700	Analog pH/ORP Module for Polymetron Sensors
9525800	Analog Conductivity Module for Polymetron Sensors
9013200	Modbus 232/485 Module
9173900	Profibus DP Module
9328100	HART Module
9334600	4-20 mA Output Module (Provides 3 additional mA Outputs)

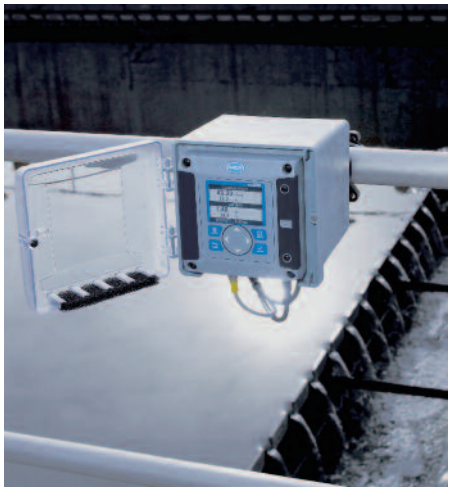

Accessories

9220600	sc200 Weather and Sun Shield with UV Protection Screen
8809200	sc200 UV Protection Screen
9218200	SD card reader (USB) for connection to PC
9218100	4 GB SD card

HACH COMPANY World Headquarters: Loveland, Colorado USA

United States: 800-227-4224 tel 970-669-2932 fax orders@hach.com
Outside United States: 970-669-3050 tel 970-461-3939 fax int@hach.com
hach.com

LIT2665 Rev 7
K13 Printed in U.S.A.
©Hach Company, 2013. All rights reserved.
In the interest of improving and updating its equipment,
Hach Company reserves the right to alter specifications to equipment at any time.

HACH®
Be Right™

CS-407-108 : Identification sheet

VWTC PROJECT NUMBER:	Iqaluit WWTP	REV:	01
PROJECT NAME:	5000218036	SUBMITTED TO (COMPANY):	
ENGINEER:	G. HÉBERT	SUBMITTED TO (RESPONSIBLE)	
PROJECT MANAGER:	C. BEKAERT	PROJECT NUM REFERENCE.:	
PHONE NUMBER:		LOT NUMBER:	

SUPPLIER	EQPT CODE	EQPT TAG NO	DIA	DESCRIPTION	INFO 1	INFO 2	INFO 3	APPLIC.	NOTE	REV
HACH	IECNGU201988	AIT-04-741	144 mm x 144 mm x 181 mm	HP-250 INSTRUMENT	DIGITAL SC 200 TRANSMITTER / MANUF. : HACH / MODEL : LXV404.99.00552	100-240V AC, No Power Cord // 2x 4-20mA Out // 1x Digital input // 1x analog conductivity sensor input	N/A	HP-250		1

This page is intentionally left blank

sc200™ UNIVERSAL CONTROLLER

Applications
- Drinking Water
- Wastewater
- Industrial Water
- Power



One Controller for the Broadest Range of Sensors.

Choose from 30 digital and analog sensor families for up to 17 different parameters.

Maximum Versatility

The sc200 controller allows the use of digital and analog sensors, either alone or in combination, to provide compatibility with Hach's broad range of sensors, eliminating the need for dedicated, parameter-specific controllers.

Ease of Use and Confidence in Results

Large, high-resolution, transreflective display provides optimal viewing resolution in any lighting condition. Guided calibration procedures in 19 languages minimize complexity and reduce operator error. Password-protected SD card reader offers a simple solution for data download and transfer. Visual warning system provides critical alerts.

Wide Variety of Communication Options

Utilize two to five analog outputs to transmit primary and secondary values for each sensor, or integrate Hach sensors and analyzers into MODBUS RS232/RS485, Profibus® DP, and HART networks.



Password protected SD card reader offers a simple solution for data download and transfer, and sc200 and digital sensor configuration file duplication and backup.

HACH®
Be Right™

Controller Comparison







Features	Previous Models sc100™ Controller	Previous Models GLI53 Controller	sc200™ Controller	Benefits
Display	64 x 128 pixels 33 x 66 mm (1.3 x 2.6 in.)	64 x 128 pixels 33 x 66 mm (1.3 x 2.6 in.)	160 x 240 pixels 48 x 68 mm (1.89 x 2.67 in.) Transreflective	• Improved user interface—50% bigger • Easier to read in daylight and sunlight
Data Management	irDA Port/PDA Service Cable	N/A	SD Card Service Cable	• Simplifies data transfer • Standardized accessories/max compatibility
Sensor Inputs	2 Max Direct Digital Analog via External Gateway	2 Max Analog Depending on Parameter	2 Max Digital and/or Analog with Sensor Card	• Simplifies analog sensor connections • Works with analog and digital sensors
Analog Inputs	N/A	N/A	1 Analog Input Signal Analog 4-20mA Card	• Enables non-sc analyzer monitoring • Accepts mA signals from other analyzers for local display • Consolidates analog mA signals to a digital output
4-20 mA Outputs	2 Standard	2 Standard	2 Standard Optional 3 Additional	• Total of five (5) 4-20 mA outputs allows multiple mA outputs per sensor input
Digital Communication	MODBUS RS232/RS485 Profibus DP V1.0	HART	MODBUS RS232/RS485 Profibus DP V1.0 HART 7.2	• Unprecedented combination of sensor breadth and digital communication options

Choose from Hach's Broad Range of Digital and Analog Sensors

Parameter	Sensor	Digital or Analog
Ammonia	AMTAX™ sc, NH4D sc, AISE sc, AN-ISE sc	●
Chlorine	CLF10 sc, CLT10 sc, 9184 sc	●
Chlorine Dioxide	9185 sc	●
Conductivity	GLI 3400 Contacting, GLI 3700 Inductive	△
Dissolved Oxygen	LDO® Model 2, 5740 sc	●
Dissolved Oxygen	5500	△
Flow	U53, F53 Sensors	△
Nitrate	NITRATAX™ sc, NO3D sc, NISE sc, AN-ISE sc	●
Oil in Water	FP360 sc	●
Organics	UVAS sc	●
Ozone	9187 sc	●
pH/ORP	pHD	●
pH/ORP	pHD, pH Combination, LCP	△
Phosphate	PHOSPHAX™ sc	●
Sludge Level	SONATAX™ sc	●
Suspended Solids	SOLITAX™ sc, TSS sc	●
Turbidity	1720E, FT660 sc, SS7 sc, ULTRATURB sc, SOLITAX sc, TSS sc	●
Ultra Pure Conductivity	8310, 8311, 8312, 8315, 8316, 8317 Contacting	△
Ultra Pure pH/ORP	8362	△

● = Digital △ = Analog

Connect up to two of any of the sensors listed above, in any combination, to meet your application needs. The diagrams below demonstrate the potential configurations. Operation of analog sensors requires the controller to be equipped with the appropriate sensor module. Contact Hach Technical Support for help with selecting the appropriate module.

2 Channel Configurations

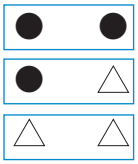

1 Channel Configurations

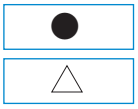

Specifications*

Dimensions (H x W x D)	5.7 in x 5.7 in x 7.1 in (144 mm x 144 mm x 181 mm)
Display	Graphic dot matrix LCD with LED backlighting, transreflective
Display Size	1.9 x 2.7 in. (48 mm x 68 mm)
Display Resolution	240 x 160 pixels
Weight	3.75 lbs. (1.70 kg)
Power Requirements (Voltage)	100 - 240 V AC, 24 V DC
Power Requirements (Hz)	50/60 Hz
Operating Temperature Range	-20 to 60 °C , 0 to 95% RH non-condensing
Analog Outputs	Two (Five with optional expansion module) to isolated current outputs, max 550 Ω , Accuracy: ± 0.1% of FS (20mA) at 25 °C, ± 0.5% of FS over -20 °C to 60 °C range Operational Mode: measurement or calculated value
Analog Output Functional Mode	Linear, Logarithmic, Bi-linear, PID
Security Levels	2 password-protected levels
Mounting Configurations	Wall, pole, and panel mounting
Enclosure Rating	NEMA 4X/IP66
Conduit Openings	1/2 in NPT Conduit
Relay: Operational Mode	Primary or secondary measurement, calculated value (dual channel only) or timer
Relay Functions	Scheduler (Timer), Alarm, Feeder Control, Event Control, Pulse Width Modulation, Frequency Control, and Warning
Relays	Four electromechanical SPDT (Form C) contacts, 1200 W, 5 A
Communication	MODBUS RS232/RS485, PROFIBUS DPV1, or HART 7.2 optional
Memory Backup	Flash memory
Electrical Certifications	EMC CE compliant for conducted and radiated emissions: - CISPR 11 (Class A limits) - EMC Immunity EN 61326-1 (Industrial limits) Safety cETLus safety mark for: - General Locations per ANSI/UL 61010-1 & CAN/CSA C22.2. No. 61010-1 - Hazardous Location Class I, Division 2, Groups A,B,C & D (Zone 2, Group IIC) per FM 3600 / FM 3611 & CSA C22.2 No. 213 M1987 with approved options and appropriately rated Class I, Division 2 or Zone 2 sensors cULus safety mark - General Locations per UL 61010-1 & CAN/CSA C22.2. No. 61010-1

**Subject to change without notice.*

Dimensions

Surface Mounting Dimensions

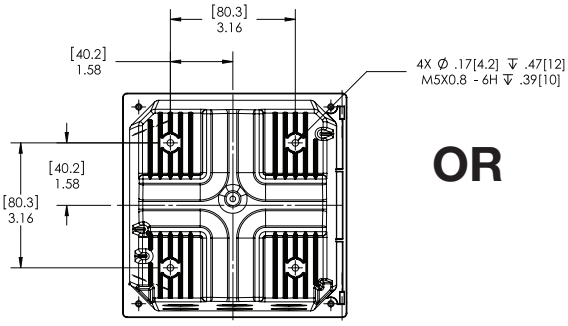

Mounting Dimensions
(Rear View)

OR

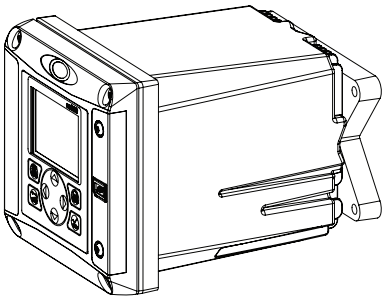

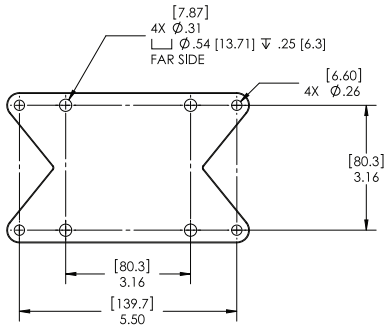

Bracket (supplied) for Surface Mounting
(Not compatible with Weather and Sun Shield p/n 9220600 when surface mounting.)

Panel Mounting Dimensions

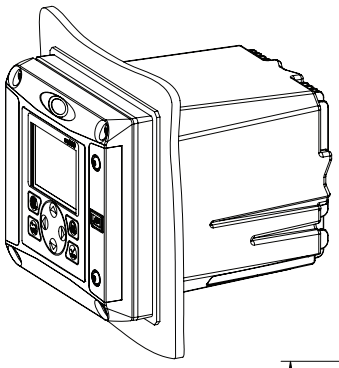

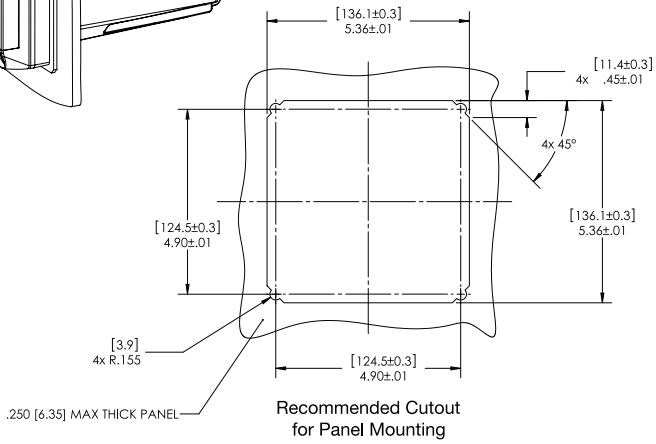

Recommended Cutout
for Panel Mounting

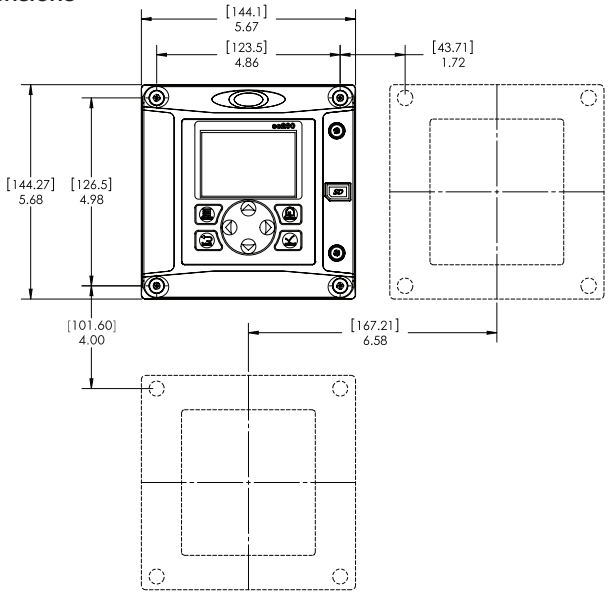

Minimum Spacing Dimensions
for Group Mounting

Top and Bottom Views

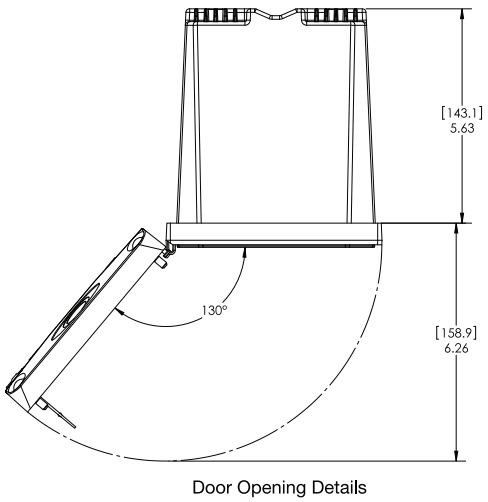

Door Opening Details

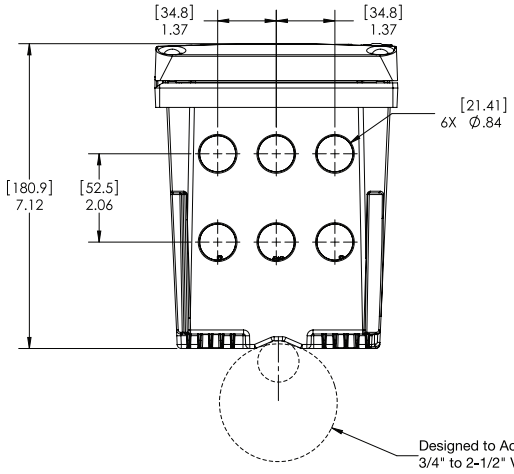

Ordering Information

sc200 for Hach Digital and Analog Sensors

LXV404.99.00552	sc200 controller, 2 channels, digital
LXV404.99.00502	sc200 controller, 1 channel, digital
LXV404.99.00102	sc200 controller, 1 channel, pH/DO
LXV404.99.00202	sc200 controller, 1 channel, Conductivity
LXV404.99.01552	sc200 controller, 2 channels, digital, Modbus RS232/RS485
LXV404.99.00112	sc200 controller, 2 channel, pH/DO

Note: Other Sensor combinations are available. Please contact Hach Technical Support or your Hach representative.

Note: Communication options (MODBUS, Profibus DPV1, and HART) are available. Please contact Hach Technical Support or your Hach representative.



sc200 for Ultrapure Sensors

9500.99.00602	sc200 controller, 1 channel, ultrapure conductivity
9500.99.00702	sc200 controller, 1 channel, ultrapure pH
9500.99.00662	sc200 controller, 2 channel, ultrapure conductivity
9500.99.00772	sc200 controller, 2 channel, ultrapure pH



Sensor and Communication Modules

9012900	Analog pH/ORP and DO module for GLI Sensors
9013000	Analog Conductivity module for GLI Sensors
9012700	Flow module
9012800	4-20 mA Input Module
9525700	Analog pH/ORP Module for Polymetron Sensors
9525800	Analog Conductivity Module for Polymetron Sensors
9013200	Modbus 232/485 Module
9173900	Profibus DP Module
9328100	HART Module
9334600	4-20 mA Output Module (Provides 3 additional mA Outputs)

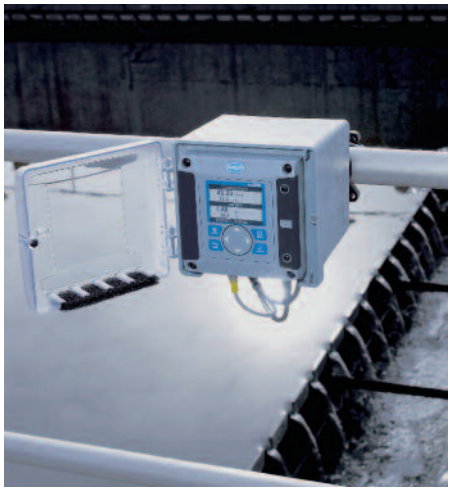

Accessories

9220600	sc200 Weather and Sun Shield with UV Protection Screen
8809200	sc200 UV Protection Screen
9218200	SD card reader (USB) for connection to PC
9218100	4 GB SD card

HACH COMPANY World Headquarters: Loveland, Colorado USA

United States: 800-227-4224 tel 970-669-2932 fax orders@hach.com
Outside United States: 970-669-3050 tel 970-461-3939 fax int@hach.com
hach.com

LIT2665 Rev 7
K13 Printed in U.S.A.
©Hach Company, 2013. All rights reserved.
In the interest of improving and updating its equipment,
Hach Company reserves the right to alter specifications to equipment at any time.

HACH®
Be Right™

CS-413-300 : Identification sheet

VWTC PROJECT NUMBER:	Iqaluit WWTP	REV:	01
PROJECT NAME:	5000218036	SUBMITTED TO (COMPANY):	
ENGINEER:	G. HÉBERT	SUBMITTED TO (RESPONSIBLE)	
PROJECT MANAGER:	C. BEKAERT	PROJECT NUM REFERENCE.:	
PHONE NUMBER:		LOT NUMBER:	

SUPPLIER	EQPT CODE	EQPT TAG NO	DIA	DESCRIPTION	INFO 1	INFO 2	INFO 3	APPLIC.	NOTE	REV
ASHCROFT	IMPSGG300380	PI-04-711	DIA. CADRAN: 2.5"	HP-250 INSTRUMENT	PRESSURE GAUGE/MANUFACTURER: ASHCROFT// MODEL: 25-1009SWL-02L-160PSIG// 1/4''	N/A	N/A	HP-250		1

This page is intentionally left blank

ASHCROFT®

Duralife® Pressure Gauge
Type 1009, ASME B 40.1
Grade 1A (±1% of span)

DESIGNED FOR SAFETY AND LONGER LIFE

- ***5-year limited warranty***
- ***Patented PowerFlex™ movement isolates movement from shock and vibration for longer life***
- ***All stainless, all-welded construction for long life***
- ***ASME Grade 1A, 1% accuracy full scale***
- ***True Zero™ pointer indication – no stop pin to mask false zero reading – ensures safety and process control***

The following Table is *not* for conversion purposes.

STANDARD RANGES (3)(4)(5)

Pressure psi	kg/cm² - bar	kPa
0/15	0/1	0/100
0/30	0/1.6	0/160
0/60	0/2.5	0/250
0/100	0/4	0/400
0/160	0/6	0/600
0/200	0/10	0/1000
0/300	0/16	0/1600
0/400	0/25	0/2500
0/600	0/40	0/4000
0/800	0/60	0/6000
0/1000	0/100	0/10,000
0/1500	0/160	0/16,000
0/2000	0/250	0/25,000
0/3000	0/400	0/40,000
0/4000	0/600	0/60,000
0/5000	0/1000	0/100,000
0/6000		
0/7500		
0/10,000		
0/15,000		
Vacuum		
30 in./0 in.Hg	–1/0	–100/0
Compound		
30 in.Hg/15 psi	–1/0/1.5	–100/0/150
30 in.Hg /30 psi	–1/0/3	–100/0/300
30 in.Hg /60 psi	–1/0/5	–100/0/500
30 in.Hg /100 psi	–1/0/9	–100/0/900
30 in.Hg /150 psi	–1/0/15	–100/0/1500
30 in.Hg /300 psi	–1/0/24	–100/0/2400

- ***New PLUS!™ Performance Option:***
  - ***Liquid-filled performance in a dry gauge***
  - ***Fights vibration and pulsations without liquid-fill headaches***
  - ***See pages 6-7 for details***
  - ***Order as option XLL***

OTHER FEATURES:

Available in 2½˝ and 3½˝ dial sizes, Duralife® pressure gauges are liquid fillable and field convertible for panel mounting. Both zero and span adjustments are standard.

The gauge is available dry, liquid-filled weatherproof or hermetically sealed and *now* with *PLUS!™* performance option. A five year limited warranty is standard with the Duralife® 1009.



BOURDON SYSTEM SELECTION(1)

Ordering Code	Bourdon Tube & Tip Material(1)	Socket Material	Tube Type	Range Selection Limits (psi)	NPT Conn.(6)
AW	316 stainless steel	Bronze	C-Tube	Vac/600	¼
AW	316 stainless steel	Bronze	Helical	1000	¼
SW	316 stainless steel	316 stainless steel	C-Tube	Vac/600	¼ & ½(2)
SW	316 stainless steel	316 stainless steel	Helical	800/15,000	¼ & ½(2)

(1) For selection of the correct Bourdon system material, see the media application table on page 243.
(2) ½ NPT available 3½˝ lower SW system only.
(3) Type 1009 gauges may be ordered with metric single-scale dial: kPa,bar or kg/cm².
(4) Dual-scale dials will be supplied with standard metric inner scale and equivalent psi outer scale or with standard psi inner scale and equivalent metric outer scale–please specify.
(5) Special logos and scales available upon request.
(6) ¼˝ JIS, BSP or DIN threads available on SW systems.

TO ORDER THIS 1009 DURALIFE PRESSURE GAUGE:

Select: 35 1009 SW (L) 02L XXX 1000#

1. Dial size–2½˝, 3½˝
2. Case type–1009
3. Tube and socket material
4. Liquid filled (glycerin), leave blank if dry
5. Connection size–⅛ (01), ¼ (02), ½ (04)
6. Connection location–Lower (L), Back (B)
7. Optional Features–see page 176
8. Standard pressure range–1000 psi

Accessories: see pages 233-238

Consult factory for guidance in product selection
Phone (203) 385-0217, Fax (203) 385-0602 or
visit our web site at www.ashcroft.com

DRESSER Instruments

This page is intentionally left blank

ASHCROFT®
Trust the shield.™

Type 310, 315 All-Welded "Mini" Diaphragm Seal



PRODUCT FEATURES

- Compact size to fit space-restricted areas
- Designed to protect transducers, mini-switches and 3½″ or smaller pressure gauges from corrosion, plugging or freeze-up
- All-welded metal construction prevents leakage of process media
- Rated for 2500 psi at 100°F
- Fill/bleed connection is standard
- Available with male process connection (Type 310)

The compact size of the Ashcroft® 310 mini-seal allows it to fit into space-restricted areas and is designed to protect transducers, mini-switches, and 3½" or smaller dial size pressure gauges from corrosion, plugging or freeze- up. All welded metal construction prevents leakage of process media. It is rated for 2500 psi at 100°F and has a 316L stainless steel top housing standard. Lower housing materials include 316L stainless steel or Hastelloy C. Diaphragm materials include 316L stainless, Hastelloy C or Tantalum. ¼ NPT or ½ NPT process connection sizes are available.

PRODUCT SPECIFICATIONS

Model Number:	Type 310, 315
Process Connection Size:	¼″, ½″ (⅛″, ¾″, 1″- 310 only) (see table A)
Instrument Connection Size:	⅛, ¼ NPT
Diaphragm Material:	316L SS, Hastelloy C276, Tantalum, Monel
Bottom Housing Materials:	316L SS, Hastelloy C276, Monel, Hastelloy B
Filling Fluid:	Glycerin, Silicone, Halocarbon, Syltherm

All specifications are subject to change without notice.
All sales subject to standard terms and conditions.
© Ashcroft Inc. 2015 09/15

Ashcroft Inc., 250 East Main Street, Stratford, CT 06614 USA
Tel: 203-378-8281 • Fax: 203-385-0408
email: info@ashcroft.com • www.ashcroft.com

Type 310, 315 All-Welded "Mini" Diaphragm Seal

Table A – Process Connection

Process Connection	Size	Code
Threaded – male NPT*	⅛	01
Threaded – male NPT*	¼	02
Threaded – male NPT*	½	04
Threaded – male NPT*	¾	06
Threaded – male NPT*	1	08
Threaded – female NPT†	¼	25
Threaded – female NPT†	½	50

*Available in Type 310 only.
†Available in Types 310 & 315.

Pressure Ratings – All 2500 psi except flanged seals are per ASME B 16.5, temperature limit determined by diaphragm, bottom housing and/or filling fluid.

Table B – Type

Description	Code
All-welded mini-seal	310
All-welded midi-seal w/flushing connection	315

Table C – Diaphragm Materials

Materials	Code
316L stainless steel	S
Hastelloy C-276	H
Tantalum	U
Monel	P

Table D – Housing Materials

Bottom(1)	Code	Top(2)
316L SS	S	316L SS
Hastelloy C-276	H	316L SS
Monel	M	Monel

(1) Other bottom housing materials on application.
(2) Top housing material is 316L SS (standard). Monel mini-seal standard with monel top housing.

Table E – Instrument Connection

Instrument Connection	Size	Code
Threaded – female NPT	¼	02T
Threaded – female NPT	⅛	01T

NOTES:
(1) For use with most 3½″ and smaller gauges. Movementless gauge 4½″ (exception).
(2) Other bottom housing materials on application.
(3) Top housing material is 316L SS (standard). Monel mini-seal standard with monel top housing.
(4) Not available with monel bottom housing.

Table F – Filling Fluid

Fill	Service	Connection to Instrument	Temperature Range °F	Code
Glycerin	Pressure	Direct Only	0/400	CG
Silicone	Pressure/Vacuum	Direct or Flexible Line	–40/600	CK
Halocarbon	Pressure/Vacuum in presence of strong oxidizing agent	Direct or Flexible Line	–70/300	CF
Syltherm	Pressure	Direct or Flexible Line	–40/750	HA

Monel is a registered trademark of Huntington Alloys, Inc.
Hastelloy is a registered trademark of Cabot Corp.
Halocarbon is a registered trademark of Halocarbon Products
GYLON 3510 is a registered trademark of Garlock Inc.

HOW TO ORDER:

1. **From Table A...** select PROCESS CONNECTION (e.g., 1/4″ process code 25)
2. **From Table B...** select TYPE (310)
3. **From Table B...** select DIAPHRAGM MATERIAL. (e.g., 316L stainless steel–code S)
4. **From Table C...** select BOTTOM HOUSING MATERIAL. (e.g., 316 stainless steel–code S)
5. **From Table D...** select INSTRUMENT CONNECTION size. (e.g., 1/4 NPT–code 02T)
6. **From Table E...** select FILLING FLUID, if diaphragm seal will be attached to instrument. (e.g., Glycerin–code CG)

Coded order: **25-310SS-02T-CG**

Dimension

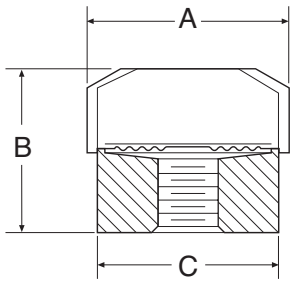

Types 310 mini-seal – Threaded ¼, ½, ¾, NPT

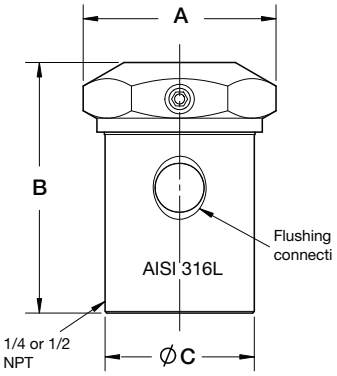

Types 315 mini-seal – Threaded ¼, ½, ¾, NPT

	A		B		C	
	in	mm	in	mm	in	mm
Type 310	1.75	(38)	.81	(30)	1.34	(34)
Type 315	1.73	(44)	2.25	(57.2)	1.34	(34)

All specifications are subject to change without notice.
All sales subject to standard terms and conditions.
© Ashcroft Inc. 2015 09/15

Ashcroft Inc., 250 East Main Street, Stratford, CT 06614 USA
Tel: 203-378-8281 • Fax: 203-385-0408
email: info@ashcroft.com • www.ashcroft.com

CS-434-100 : Identification sheet

VWTC PROJECT NUMBER:	Iqaluit WWTP	REV:	01
PROJECT NAME:	5000218036	SUBMITTED TO (COMPANY):	
ENGINEER:	G. HÉBERT	SUBMITTED TO (RESPONSIBLE)	
PROJECT MANAGER:	C. BEKAERT	PROJECT NUM REFERENCE.:	
PHONE NUMBER:		LOT NUMBER:	

SUPPLIER	EQPT CODE	EQPT TAG NO	DIA	DESCRIPTION	INFO 1	INFO 2	INFO 3	APPLIC.	NOTE	REV
ALLEN BRADLEY	IEPOPS201955	PSL-04-711	N/A	HP-250 INSTRUMENT	PRESSURE SWITCH/MANUFACTURER: ALLEN BRADLEY// MODEL: 836T-T253J	1/4" FNPT female pipe connection	Adjustable Range : 12-150 psi	HP-250		1

This page is intentionally left blank



Bulletin 836T Pressure Controls

- Operating ranges from 30 in. Hg vacuum…5000 psi
- Independently adjustable range and differential
- Copper alloy and stainless steel bellows
- 2- and 4-Circuit contact block
- Pressure difference controls available
- 1/4 in. and 3/8 in. N.P.T. and O-ring straight thread connections
- Type 4 & 13 and Type 7 & 9 and 4 & 13 combination enclosures

Table of Contents

Product Overview ..... this page
Technical Data 13-26
Product Selection 13-34
Modifications 13-41
Accessories 13-42
Conversion Kits 13-43
Factory Options 13-44
Wiring Diagrams 13-45
Approximate Dimensions 13-48

Standards Compliance and Certification

(For file and guide numbers, see page 13-44)

Product Overview

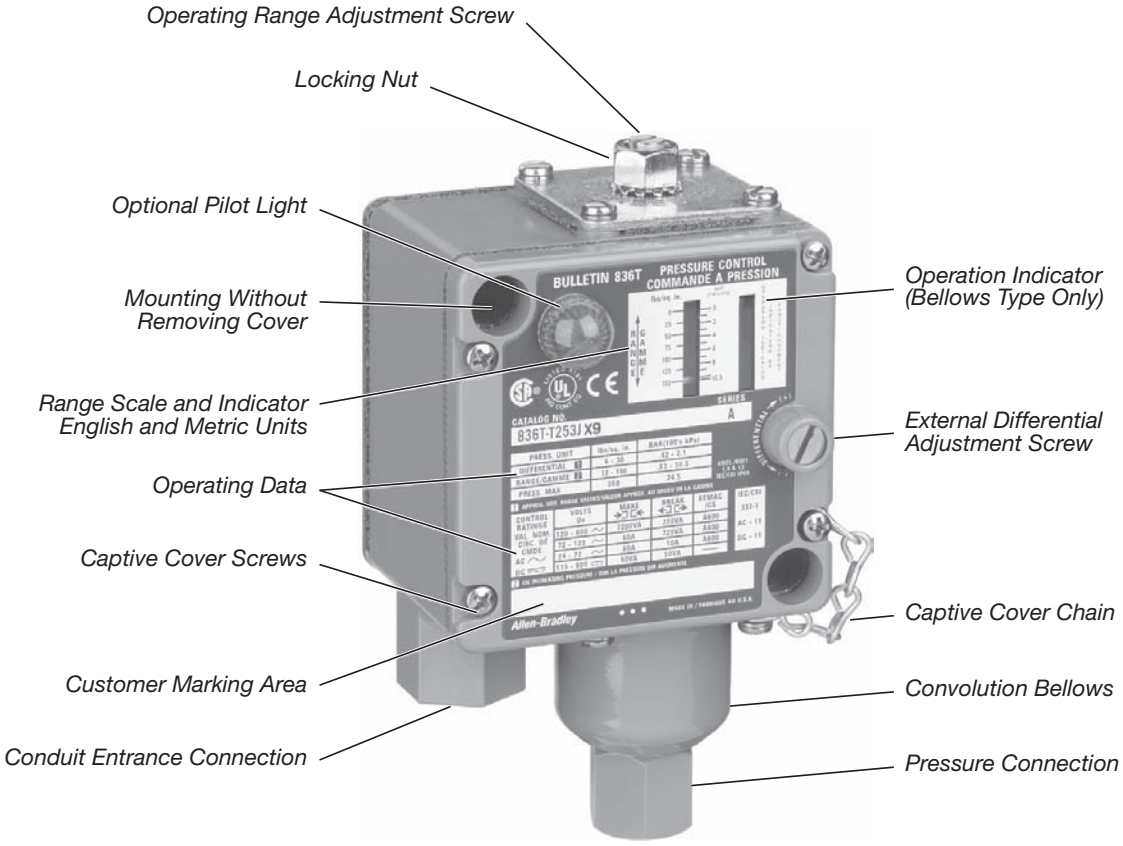

Bulletin 836T Style T Bellows Type Enclosure Type 1, 4 & 13, IEC IP66

Description

Bulletin 836T Pressure Controls are control circuit devices designed to meet the traditional requirements of the transportation, machine tool, and other heavy-duty industries. Allen-Bradley Bulletin 836T Pressure Controls can be used in pneumatic and hydraulic applications. The copper alloy bellows actuators can be used with air, water, oil, vapor, and other non-corrosive gases and liquids. Type 316 stainless steel bellows are available for more corrosive gases, vapors, and fluids.

A rugged stainless steel cylinder and stainless steel piston assembly is used for the higher-pressure coolant and hydraulic oil applications. May also be used with water and water-based fluids. The controls feature snap-action precision switches equipped with silver contacts. A relatively friction-free mechanism provides consistent operation regardless of mounting position. Devices are designed to allow easy adjustment of pressure settings.

Allen-Bradley Bulletin 836T Pressure Controls are used in many types of applications with adjustable ranges from 30 in. Hg vacuum…5000 psi. They can be used to control pneumatic systems and maintain a pressure tank within a preset and constant pressure range. They can be used to detect over-pressures of gases and liquids to prevent damage to valuable equipment. Pressure controls can also detect low pressure to protect equipment from loss of coolants and lubrication.

Bulletin 836T Pressure Controls are offered in a variety of styles to fit a wide range of applications. The devices are available with either a Type 1, 4 & 13, or 7 & 9 and 4 & 13 combined enclosure. They are available with two-circuit or four-circuit contact blocks. Accessories and modifications are available to tailor the devices to meet most application requirements.

Applications

- Machine tools
- Machine hydraulic pressures
- Material clamping fixtures
- Lubricant and coolant pressures
- Compactor ram pressures
- Air compressors

Style T — Pressure Control



Style T

- Independently adjustable operating range and differential
- Single bellows or piston operation

Copper Alloy Bellows

- 1/4 in. N.P.T. female pipe connection
- Adjustable operating range — 30 in. Hg vacuum…650 psi
- Maximum line pressure — up to 1300 psi
- Occasional surge pressure — up to 1600 psi

Type 316 Stainless Steel Bellows

- 1/4 in. N.P.T. female pipe connection
- Adjustable operating range — 30 in. Hg vacuum…375 psi
- Maximum line pressure — up to 600 psi
- Occasional surge pressure — up to 600 psi

Piston

- 3/8 in. N.P.T. female pipe connection
- SAE 7/16-20 UNF-2B thread O-ring boss seal
- SAE 9/16-18 UNF-2B thread O-ring boss seal
- Adjustable operating range — 40…5000 psi
- Occasional surge pressure — up to 15,000 psi

Style D — Pressure Difference Control



Style D

- Independently adjustable system difference range and differential
- Two-bellows operation, one bellows connected to each system

Copper Alloy Bellows

- 1/4 in. N.P.T. female pipe connection
- Adjustable system difference range — 1…70 psi
- Maximum line pressure — up to 600 psi
- Occasional surge pressure — up to 650 psi

Type 316 Stainless Steel Bellows

- 1/4 in. N.P.T. female pipe connection
- Adjustable system difference range — 1…70 psi
- Maximum line pressure — up to 500 psi
- Occasional surge pressure — up to 500 psi

Technical Terms

Adjustable operating range — Total span within which the contacts can be adjusted to trip and reset.

Trip setting — Higher pressure setting at which value the contacts transfer from their normal state to a change state.

Reset setting — Lower pressure setting at which value the contacts return to their normal state.

Adjustable differential — Difference between the trip and reset values

Minimum differential — When the differential is set to the lowest possible difference between trip and reset.

Maximum differential — When the differential is set to the highest possible difference between trip and reset.

Max. occasional surge pressure — Maximum surge pressure that can be applied to the actuator. Surges or ransients can occur during start-up and shut-down of a machine or system. Expressed in milliseconds, complex electronic instrumentation is required to measure the varying amplitude, frequency, and duration of this wave form. Extreme surges that occur approximately 8 times in a 24-hour period are negligible.

Maximum line pressure — Maximum sustained pressure that can be applied to the actuator without permanent damage. The control should not be cycled at this pressure. **Note:** Does not apply to piston type controls.

psi — Pounds per square inch gauge (positive pressure). Devices listed are in gauge pressure units which use atmospheric pressure as a reference. Atmospheric pressure at sea level is approximately 14.7 psi or 30 in. Hg.

Vacuum — Inches of mercury (in. Hg) vacuum (negative pressure).

Operating range adjustment screw — This screw is used to adjust the trip setting by varying the force of the main spring.

Differential adjustment screw — This screw is used to adjust reset setting by varying the force of the differential blade spring.

Pressure media — There are many types of pressure media that can be controlled. Examples include air, water, hydraulic fluids, and other types of gases and liquids. The type of media and the maximum system pressure will determine the type of actuator used for the pressure control application. See page 13-33.

Pressure connection — Common standard types of pressure connections used in control systems are 1/4 in. and 3/8 in. N.P.T. female pipe threads. SAE 7/16 and SAE 9/16 O-ring boss seals are also available (piston versions only).

Contact configuration — Bulletin 836T controls are available with either a 2-circuit or 4-circuit contact block. See page 13-31.

Style D

Style D — pressure difference controls adjustable system difference range — The adjustable operating range for a pressure difference control.

System difference pressure bushing — This bushing is used to adjust the trip setting by varying the force on the main spring.

Trip setting — Desired difference in pressure between the two bellows at which value the contacts transfer from their normal state to a changed state. This occurs in one of the following conditions:

- The pressure in the bottom bellows is higher than the pressure in the top bellows by a value equal to the trip setting.
- The pressure in the bottom bellows remains constant and the pressure in the top bellows decreases by a value equal to the trip setting.

Reset setting — Predetermined normal difference in pressure between the two bellows, at which value the contacts return to their normal state. This occurs in one of the following conditions:

- The pressure in the bottom bellows is lower than the top bellows.
- The pressure in the bottom bellows remains constant and the pressure in the top bellows increases.

Figure 1
Graphics to illustrate technical terms

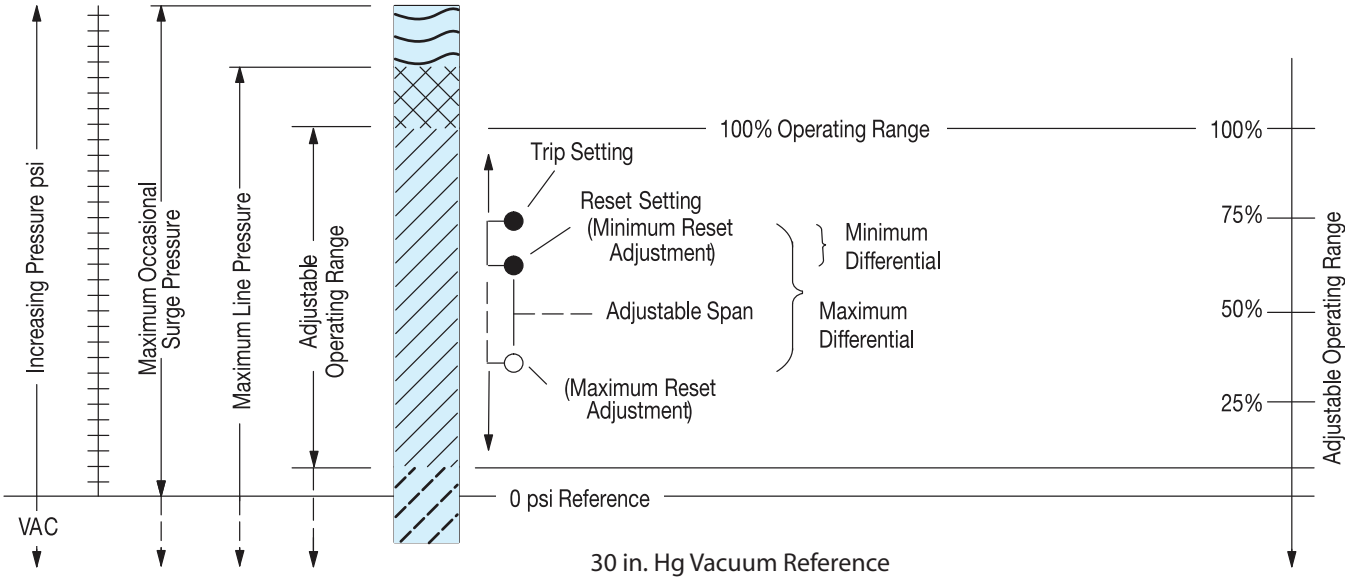

Visit our website: www.ab.com/catalogs
Preferred availability cat. nos. are printed in **bold**

Allen-Bradley

Theory of Operation

Bulletin 836T Pressure Controls are designed to open or close electrical circuits in response to changes in pneumatic (air or gas) or hydraulic (oil or non-corrosive liquids) pressure. Piston controls are not intended for use with air or water. Figure 2 shows the basic operating mechanism.

Pressure is applied to the actuator which can be either a bellows or piston type. As pressure rises, the actuator exerts force on the main spring. When the threshold force of the main spring is overcome, levers transfer the motion to the contact block, displacing the contacts — this is referred to as the trip setting. The unique lever design amplifies the actuator motion, providing shorter stroke, which results in maximizing bellows life.

The lever assembly also includes a virtually friction-free over-center toggle arrangement, providing positive snap action to the contact block for long contact life. As pressure falls, force on the differential spring increases and contacts return to their normal state — this is referred to as reset setting. Varying the force of the main spring (by turning the operating range adjustment screw) determines when the contacts will trip. Varying the force of the differential spring (by turning the differential adjustment screw) determines when the contacts will reset. Setting trip and reset values determines the operating parameters of the application.

Figure 2
Basic mechanical structure

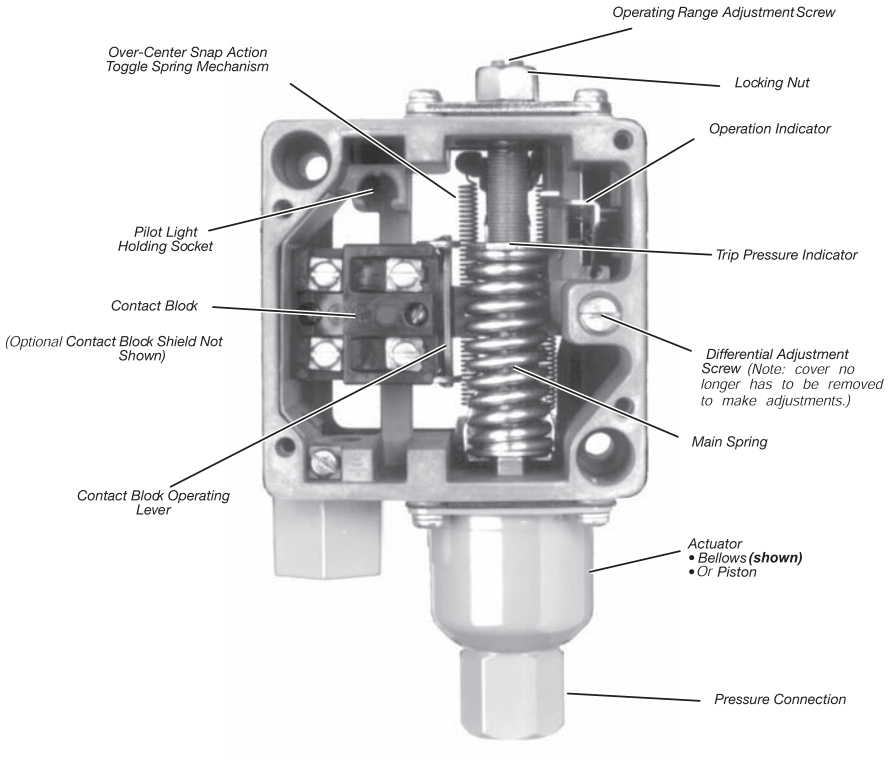

Applications for Control

Pressure controls can be used to either control or monitor a machine or process. Figure 3 shows a typical control application. Here, pressure is controlled within predetermined high and low values. Figure 4 shows a typical monitoring application. Here, pressure is monitored between a high and low value, signaling when a preset limit has been exceeded.

Figure 3
Typical control application

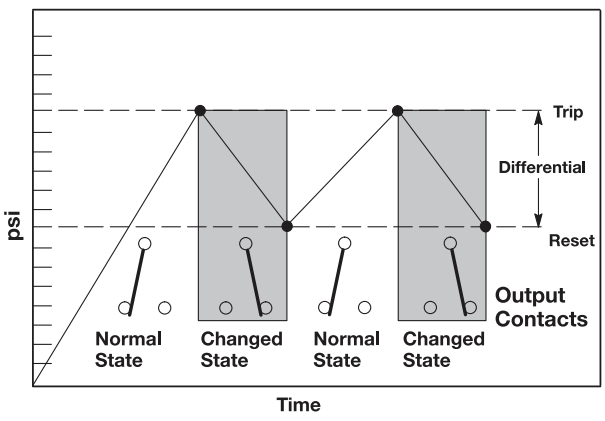

Figure 4
Typical monitoring application

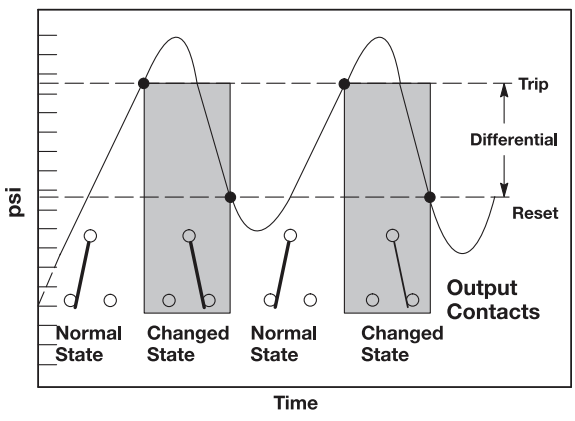

Control Setting — Style T Pressure Controls

Allen-Bradley controls are designed for ease of setting to help minimize installation time. Standard pressure controls shipped from the factory are set at the maximum operating range and minimum differential. By using a pressure gauge and following these simple directions, the control can be set to the specific requirements for each application. See Figure 5.

Step 1 — Adjust trip setting
The trip setting is controlled by the operating range adjustment screw and is adjusted externally. After loosening the lock nut, the trip setting is set by turning the operating range adjustment screw counterclockwise to lower the trip setting or clockwise to raise the trip setting. The approximate trip setting is shown on the indicating scale. When the proper setting is reached, simply tighten the lock nut.
Note: Turning the operating range adjustment screw will cause both the trip and reset settings to change in virtually equal increments.

Step 2 — Adjust reset setting
The reset setting is controlled by an external differential adjustment screw. The reset setting is set by turning the differential adjustment screw clockwise to increase the differential or counterclockwise to decrease the differential.
Note: Adjusting the differential has little or no affect on the trip setting.

Figure 5
Trip and reset adjustment for pressure controls

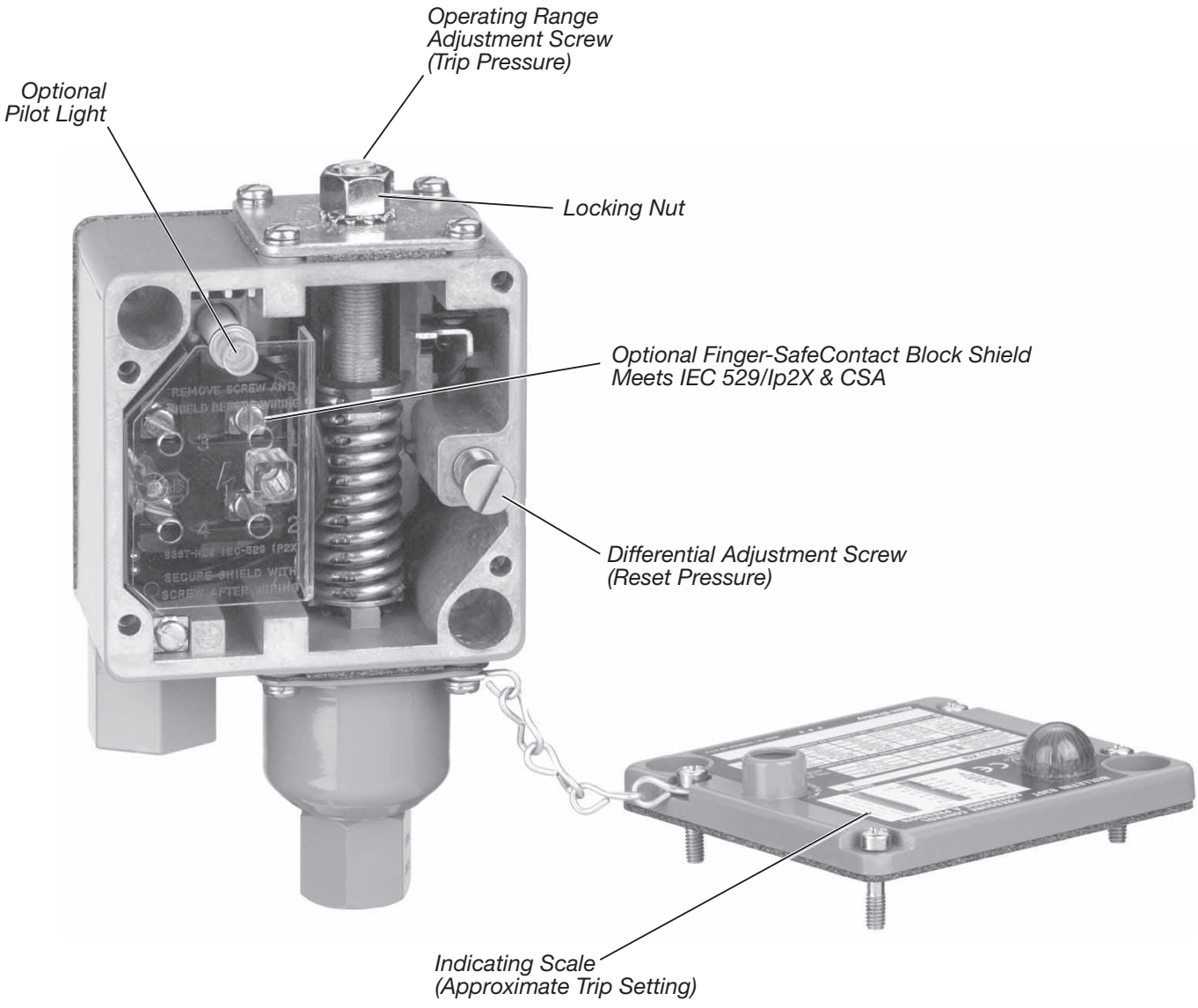

Control Setting — Style D Pressure Difference Controls

Standard pressure difference controls shipped from the factory are set at the maximum adjustable difference range and minimum differential. Remove the front cover and use a pressure gauge to make the following adjustments. See Figure 6.

Step 1 — Adjust trip setting (difference pressure)

The trip setting is controlled by the system difference pressure bushing and is adjusted internally. With no pressure (open to atmosphere) applied to top bellows, apply a constant pressure to bottom bellows equal to the desired difference in pressure at which the contacts are to trip. Insert a 1/8 in. diameter rod into a hole in the bushing and turn bushing to the left. Continue to turn bushing until the mechanism trips; circuit 1-2 will open. At this value, the trip setting is set at the pressure which is being applied to the bottom bellows.
Note: Turning the system difference pressure bushing will cause both the trip and reset settings to change in virtually equal increments.

Step 2 — Adjust reset setting (differential pressure)

The reset setting is controlled by differential adjustment screw (this adjustment can be made with the cover on). The reset setting is adjusted by turning the differential adjustment screw clockwise to increase the differential or counterclockwise to decrease the differential.
Note: Adjusting the differential has little or no affect upon the trip setting (difference pressure).

Figure 6
Trip and reset adjustment for pressure difference controls — 4-circuit contact block

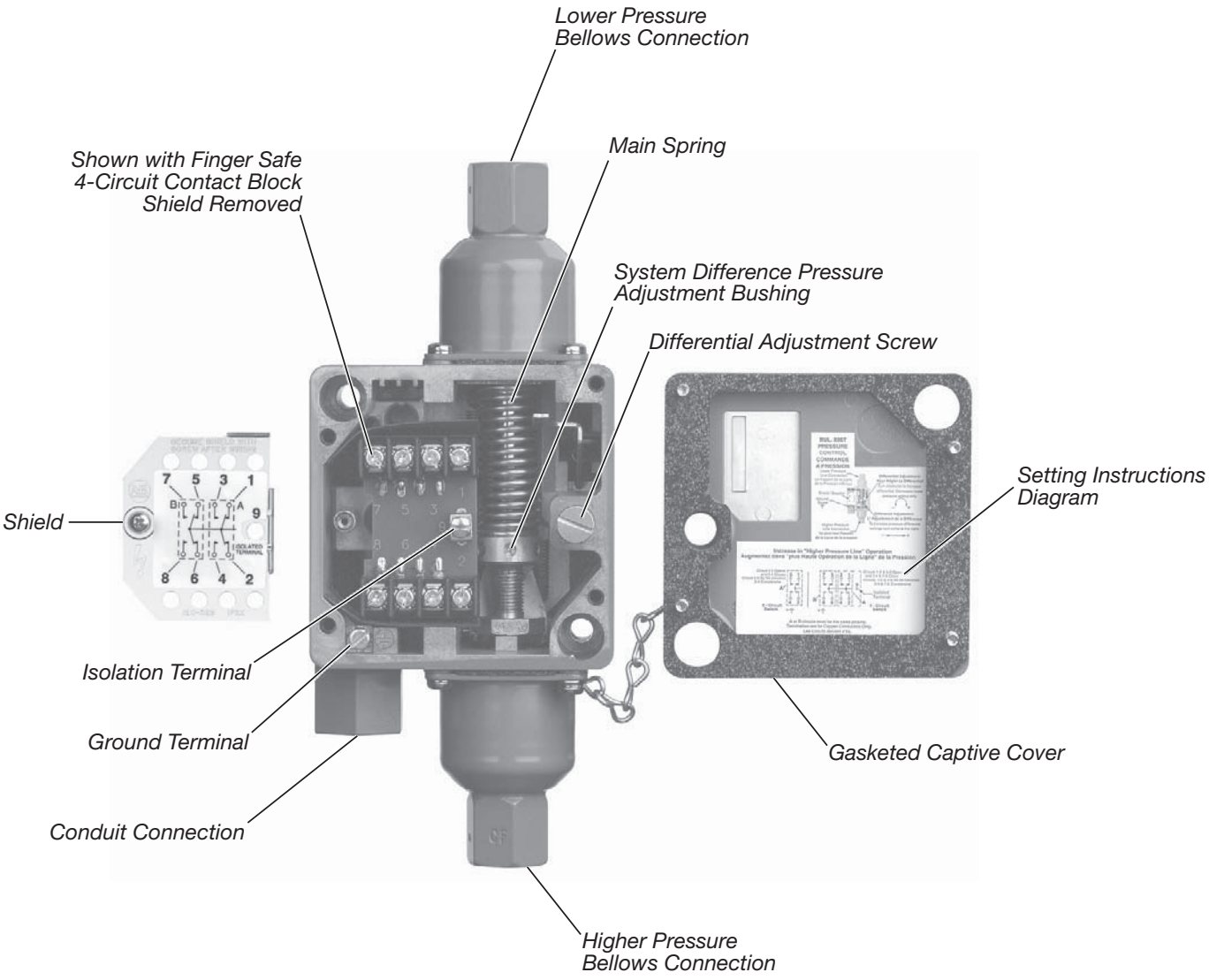

Repeat Accuracy and Mechanical Life

The design and construction of Bulletin 836T Pressure Controls provide a typical repeat accuracy equal to or better than the values shown in the repeat accuracy table below. Repeat accuracy is based on percent of maximum range, evaluated from test data and calculated using the formula per ICS 2-225 standards. Repeat accuracy and mechanical life of bellows type controls is graphically illustrated in Figure 7. The life curve does not apply to piston type controls.

For general applications, controls selected where the contacts operate between 30% and 80% of the operating range and where the maximum line and surge pressures do not exceed the specified values will provide excellent life and repeat accuracy. For more specific applications, it is important to note that the controls are designed to operate below or above these values. However, there may be a small trade-off between the factors of repeat accuracy and mechanical life.

Figure 7
Repeat accuracy versus mechanical life graph

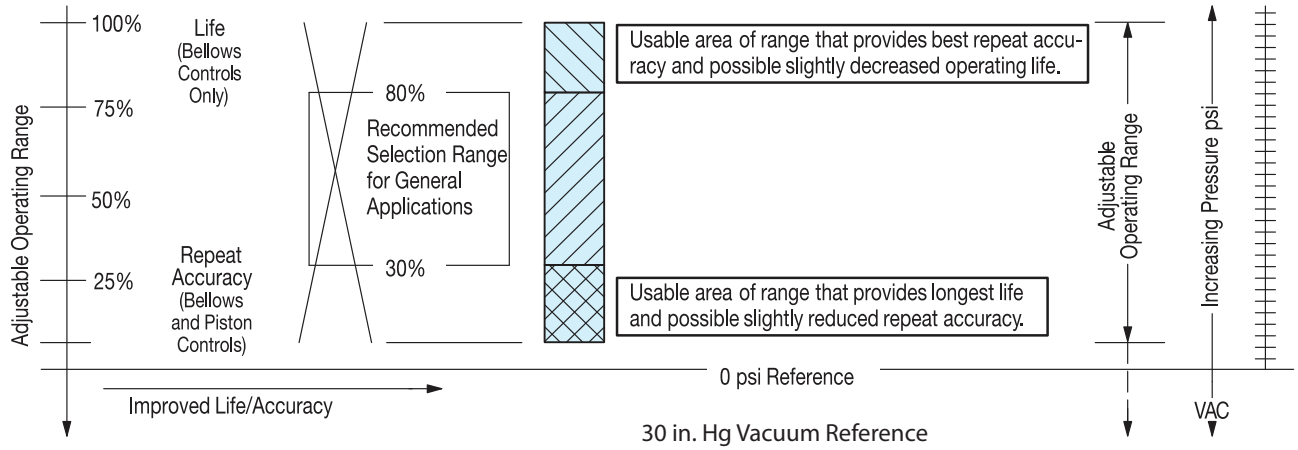

Repeat Accuracy

Type	Typical Characteristics (% of Maximum Range) ✶
Bellows	± 1%
Piston with seal	± 5% ❄
Piston without seal	± 3%

✶ Evaluation made from test data and calculated using formula per ICS 2-225 standards.

❄ Seal adds additional friction and value shown takes into consideration initial breakaway frictional force incurred during start-up or infrequent cycle operation. On continual cycle operation the repeat accuracy approaches ±3%.

Conversion Factors (Rounded)

psi x 703.1 = mmH_2O
psi x 27.68 = in. H_2O
psi x 51.71 = mm/Hg
psi x 2.036 = in. Hg
psi x 0.0703 = kg/cm^2
psi x 0.0689 = bar
psi x 68.95 = mbar
psi x 6895 = Pa
psi x 6.895 = kPa

Note: psi - pounds per square inch (gauge).
H_2O at 39.2 °F
Hg at 32 °F

Mounting without Removing Cover

Bulletin 836T controls can be mounted without removing the front cover. This helps prevent foreign materials from entering the opened enclosure during the interval between mounting and wiring of the control.

Factory Set Pressure Controls

Rockwell Automation will factory set pressure controls to customer specified values. Unspecified pressure controls shipped from the factory are set at the maximum operating range and minimum differential. See Factory-Set Pressure Controls, page 13-44.

Temperature Range

The temperature range at +32 °F (0 °C) or below is based on the absence of freezing moisture, water, or other fluids that may solidify and impede the operation of the control. Temperature ratings:

Operating: –22… +150 °F (–30…+66 °C)
Storage: –22…+200 °F (–30…+93 °C)

Contacts

Bulletin 836T controls feature 2- and 4-circuit contact blocks for added control circuit flexibility. Two-circuit contact blocks have one normally open contact and one normally closed contact and may be arranged for single-pole double-throw operation or separate circuit operation having the same polarity. Four-circuit contact blocks may be arranged for double-pole double-throw operation or separate circuit operation having the same polarity.

2-Circuit Contact Ratings — NEMA A600 (ICS 2-125)

AC						DC	
Maximum AC Voltage	A		Continuous Carrying Current	VA		Maximum Voltage	[A]
	Make	Break		Make	Break		
120	60	6.00	10	7200	720	115…125	0.4
240	30	3.00	10	7200	720	230…250	0.2
480	15	1.50	10	7200	720	550…600	0.1
600	12	1.20	10	7200	720	—	—

IEC 337-1					
Maximum Operational Voltage U_e	Utilization Category	Maximum Continuous Current I_{th}	Volts U_e	Rated Operational Current Make	Rated Operational Current Break
AC600	AC-11	10	120…600 AC	7200 VA	720 VA
		10	72…120 AC	60 A	720 VA
DC600	DC-11	10	24…72 AC	60 A	10 A
		—	115…600 DC	50 VA	50 VA

4-Circuit Contact Ratings — NEMA B150 (ICS 2-125)

AC						DC	
Maximum AC Voltage	A		Continuous Carrying Current	VA		Maximum Voltage	[A]
	Make	Break		Make	Break		
120	30	3.00	5	3600	360	115…120	0.33
240	27.5	2.80	5	6600	660	230…240	0.17

IEC 337-1					
Maximum Operational Voltage U_e	Utilization Category	Maximum Continuous Current I_{th}	Volts U_e	Rated Operational Current Make	Rated Operational Current Break
AC150	AC-11	5	72…120 AC	30 A	360 VA
		5	24…72 AC	30 A	3 A
DC150	DC-11	—	115…240 DC	40 VA	40 VA

Note: NEMA does not rate contacts to switch low voltage and current. Bulletin 836T Styles T and D Pressure Controls are supplied with silver contacts. The devices are designed to deliver high force snap action to the contacts. This provides exceptional contact fidelity at 24V DC I/O card current level entry when the integrity of the enclosure is maintained.

Contact Wiring Configurations

2-Circuit Contact Blocks

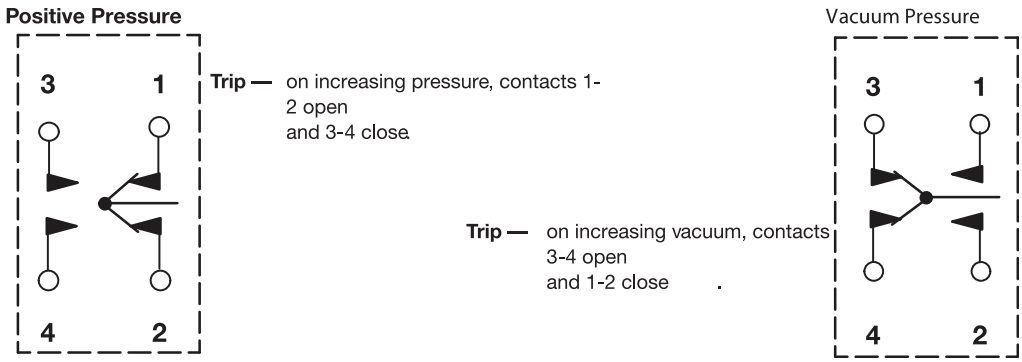

4-Circuit Contact Blocks

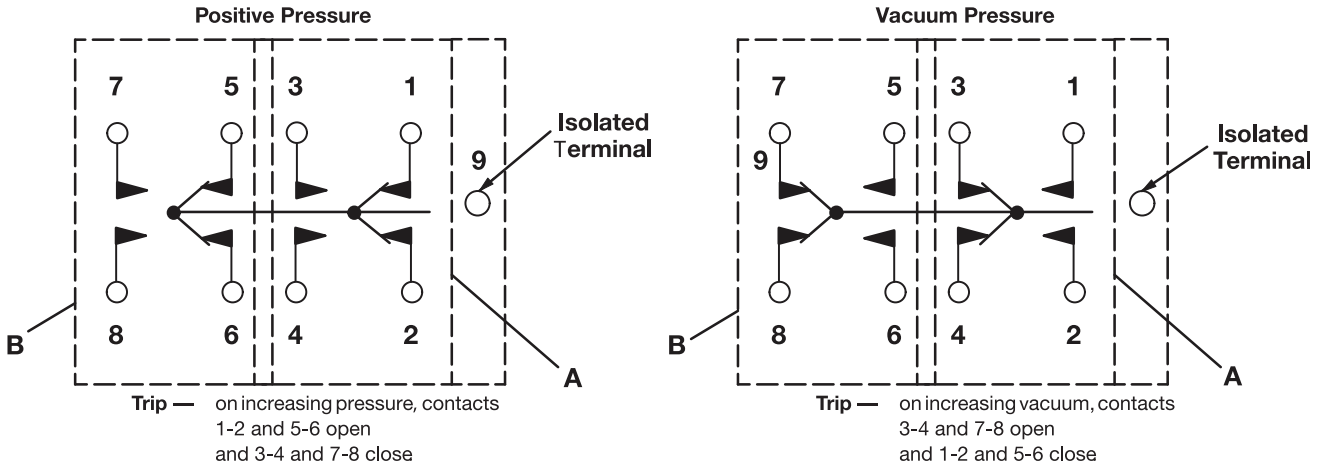

Note: Circuits A and B are electrically isolated from one another.
A or B circuits must be the same polarity.

Nameplate with Removable Paint Mask

The masks are convenient for the many users who repaint controls to match the machine or color code equipment. Saves costly time-consuming hand masking necessary so as not to conceal product functional specifications and approval listings. This feature is standard on most controls at no additional cost. The paint mask feature cannot be supplied on controls with pilot lights. They are also not available on those devices where it is necessary to remove the mask and add suffix modifications to the catalog number or specific customer identification in the space provided.

Figure 8
Removable paint mask



Cover with Transparent Mask and Instruction Label in Place



Cover with Mask Partially Removed

Pressure Control Selection

The selection table below is an overview of the five types of Bulletin 836T Pressure Controls Rockwell Automation offers. Each type of control is suitable for use on many types of applications. Pressure ranges, pressure connections, enclosure types, and the compatibility of the actulator with different types of pressure media are given to assist in the selection of which type of control to use.

836T				
Actuator Type	Copper Alloy Bellows	Type 316 Stainless Steel Bellows	Piston Type Without Seal	Piston Type With Seal
Adjustable operating ranges	30 in. Hg vacuum…650 psi	30 in. Hg vacuum…375 psi	40…5000 psi	80…5000 psi
Adjustable differentials	2…125 psi	2…90 psi	20…650 psi	40…650 psi
Maximum line pressures	up to 1300 psi	up to 600 psi	—	—
Occasional surge pressures	up to 1600 psi	up to 600 psi	up to 15,000 psi	up to 15,000 psi
Pressure Media				
Air	•	•		
Water	•	•	•	•
Hydraulic fluids	•	•	•	•
Corrosive liquids ∗		•		
Non-corrosive liquids	•	•	•	•
Corrosive gases ∗		•		
Non-corrosive gases	•	•		
Enclosures				
Type 1, 4 & 13	•	•	•	•
Type 7 & 9 and 4 & 13, IP66	•	•	•	•
Pipe Connections				
Standard pressure connection	1/4 in. N.P.T. female pipe thread	1/4 in. N.P.T. female pipe thread	3/8 in. N.P.T. female pipe thread SAE 7/16-20 UNF-2B thread O-ring boss seal SAE 9/16-18 UNF-2B thread O-ring boss seal	3/8 in. N.P.T. female pipe thread SAE 7/16-20 UNF-2B thread O-ring boss seal SAE 9/16-18 UNF-2B thread O-ring boss seal

∗ Corrosive liquids and gases must be compatible with Type 316 Stainless Steel Bellows.

Note: Pressure difference controls are supplied with either copper alloy or stainless steel bellows. See Product Selection on page 13-39 and page 13-40 for details.

Ordering Bulletin 836T Pressure Controls

When ordering Bulletin 836T Pressure Controls, consider the following:

- Device style
- Adjustable operating range
- Adjustable differential
- Maximum line pressure
- Occasional surge pressure
- Pressure media
- Enclosure type
- Pressure connection

How to Order

Step 1: Basic Device
Select a catalog number for the basic device.....**See pages 13-35…13-40.**

Step 2: Modifications
If required, add the appropriate modification suffix code(s) to the catalog number of the basic device.....**See page 13-41.**

Step 3: Accessories
If required, order accessories.....**See page 13-42.**

Step 4: Factory Options
Factory-set pressure controls.....**See page 13-44 .**

Catalog Number Explanation

Note: Catalog number must not include blank spaces.

836T –	T	25	1	J	X40	X15
	a	*b*	*c*	*d*	*e*	*f*

a

Style of Device	
Code	Description
T	Pressure control
D	Pressure difference control

b

Operator Type		
Code	Style	Description
25	T	Copper alloy bellows
26	T	Type 316 stainless steel bellows
30	T	Piston without seal
35	T	Piston with seal
40	T	Piston with seal (independent trip and reset adjustment)
45	D	Copper alloy bellows
46	D	Type 316 stainless steel bellows

c

Pressure Specifications
See “Pressure Specifications” on pages 13-35…13-40

d

Enclosure Type	
Code	Description
J	1, 4 & 13 Industrial use
E	7 & 9 and 4 & 13 Combined hazardous locations

e

Contact Block Type	
Code	Description
None	2-circuit contact block - standard
X40	4-circuit contact block

f

Modification 1
Add suffix codes in descending order whenever possible. (Optional. See page 13-41.)

Product Selection



Style T — Type 1, 4 & 13 with Pilot Light Option



Style T — Type 1, 4 & 13 with Pilot Light, Range Locking Cap, and 5-Pin Mini-Receptacle

Style T Pressure Controls with Copper Alloy Bellows∗ — S.P.D.T. 2-Circuit Contact Block

Standard Pressure Controls shipped from the factory are set at the maximum operating range and minimum differential.

Pressure Specifications				Enclosure Type	
	Adjustable Differential [psi] (Approximate Mid-Range Values)	Maximum psi		Type 1, 4 & 13	Type 7 & 9 and 4 & 13 ‡
Adjustable Operating Range [psi]		Line Pressure	Occasional Surge Pressure❄	Cat. No.	Cat. No.
30 in. Hg vacuum…35	2…7	80	90	**836T-T251J**	836T-T251E
6…75	3…15	200	220	**836T-T252J**	836T-T252E
12…150	6…30	350	450	**836T-T253J**	836T-T253E
20…300	10…55	600	750	**836T-T254J**	836T-T254E
40…450	20…90	900	1200	**836T-T255J**	836T-T255E
60…650	30…125	1300	1600	**836T-T256J**	836T-T256E

Style T Pressure Controls with Copper Alloy Bellows∗ — D.P.D.T. 4-Circuit Contact Block

Standard Pressure Controls shipped from the factory are set at the maximum operating range and minimum differential.

Pressure Specifications				Enclosure Type	
	Adjustable Differential [psi] (Approximate Mid-Range Values)	Maximum psi		Type 1, 4 & 13	Type 7 & 9 and 4 & 13 ‡
Adjustable Operating Range [psi]		Line Pressure	Occasional Surge Pressure❄	Cat. No.	Cat. No.
30 in. Hg vacuum…35	2.2…7	80	90	836T-T251JX40	836T-T251EX40
6…75	4.5…15	200	220	**836T-T252JX40**	836T-T252EX40
12…150	9…30	350	450	**836T-T253JX40**	836T-T253EX40
20…300	15…55	600	750	836T-T254JX40	836T-T254EX40
40…450	30…90	900	1200	836T-T255JX40	836T-T255EX40
60…650	45…125	1300	1600	836T-T256JX40	836T-T256EX40

∗ Copper alloy bellows may be used on water or air, and other liquids or gases not corrosive to this alloy.

❄ Transients (pulses) can occur in a system prior to reaching a steady-state condition. Surge pressures within published values generated during startup or shutdown of a machine or system, not exceeding eight times in a 24-hour period, are negligible.

‡ The combined Type 7 & 9 and 4 & 13 hazardous gas and dust service enclosure is supplied with special gasket and O-ring seal to diminish/exclude moisture, fluids, and dust from entering the enclosure. Enclosure is rated for the following environments:
CLASS I Groups C,D
CLASS II Groups E,F,G
CLASS III

Ordering Modifications

Modifications are ordered by adding the appropriate modification suffix code to the catalog number of the basic device. Add suffix codes to the catalog number in descending order.

Item	Description	Suffix Code
Oxygen/nitrous oxide service	Bellows and fittings specially prepared for oxygen and nitrous oxide service. Devices tested with pure oxygen, bellows plugged for protection from contamination and a tag warning against contamination is applied.	X2
External adjustment sealed	The 836T external adjustment is sealed, requiring cover removal to adjust differential (includes contact block shield)	X3
Tamper resistant setting	Range and differential adjustments are factory sealed. Price includes factory setting charge.✶	X4
SAE 7/16-20 UNF thread O-ring boss seal (piston type pressure control)	Female SAE straight thread O-ring seal designed to prevent leaks and minimize loss of hydraulic fluids.	X6
SAE 9/16-18 UNF thread O-ring boss seal (piston type pressure control)		X7
Neon pilot light 120V AC	A high-intensity neon pilot light for 120V AC, 60 Hz applications is available and can be wired for ON or OFF operation. The current rating is 1.0 mA.❄	X9
Red LED pilot light 24V DC	A high-intensity LED 24V DC pilot light is available to meet the requirements of the automotive, machine tool builders, and other industries. The current rating is 22 mA and can be wired for ON or OFF operation.❄	X15
Green LED pilot light 24V DC		X18
Special diaphragm assembly (piston type pressure control)	Diaphragm is made of Viton® and Nomex® fabric. Required when phosphate ester base and other adverse hydraulic fluids are present. Use on Catalog Numbers **836T-T300J** through **836T-T303J** series controls.	X25
Special diaphragm and O-ring assembly (piston type pressure control)	Diaphragm is made of Viton® and Nomex® fabric, O-ring is made of Viton® . Required when phosphate esterbase and other adverse hydraulic fluids are present. Use on Catalog Numbers **836T-T350J, -T351J, -T352J, -T353J** and **-T400J** series controls.	X26
Viton® enclosure gaskets	Special enclosure gaskets made of Viton® are available for applications where the standard gasket materials are not fluid compatible. Viton® is generally specified by the user for use with existing and newly developed coolants and hydraulic fluids to maintain enclosure integrity. These include cover, backplate, cover, and bellows or piston gaskets. **Note**: Viton® enclosure gaskets are often used with special diaphragm assemblies **(X25 or X26)**. See description above.	X29
5-Pin mini-type receptacle without pilot light❄	Select the desired pin wiring configuration from the diagrams on pages 13-45…13-47. Rated at 8 A, 600V.	See pages 13-45…13-47.
5-Pin mini-type receptacle with prewired pilot light❄	Select the desired pin wiring, pilot light wiring, and voltage from the diagrams on pages 13-45…13-47. Includes receptacle and pilot light. Rated at 8 A, 600V.	See pages 13-45…13-47.
5-Pin micro-connect receptacle without pilot light❄	Select the desired pin wiring configuration from the diagrams on pages 13-45…13-47. Add number "1" to the suffix number immediately following the letter "X." **Example: "X19" becomes "X119."** Rated at 3 A, 300V. Pin/Wiring Code: 1 – Red with white tracer, 2 – Red, 3 – Green (Gnd), 4 – Red with yellow tracer, 5 – Red with Black Tracer	See pages 13-45…13-47.
5-Pin micro-connect receptacle with prewired pilot light❄	Select the desired pin wiring configuration and pilot light (X9 or X15, see above for specifications) from the diagrams on pages 13-45…13-47. Add number "1" to the Suffix Number immediately following the letter "X." **Example: "X12X9" becomes "X121X9."** Rated at 3 A, 300V. Pin/Wiring Code: 1 – Red with white tracer, 2 – Red, 3 – Green (Gnd), 4 – Red with yellow tracer, 5 – Red with black tracer	See pages 13-45…13-47.
Additional optional receptacles and wiring❄	For assistance, please consult your local Rockwell Automation sales office or Allen-Bradley distributor.	

✶ See paragraph entitled "Factory-Set Pressure Controls" on page 13-44.
❄ Not available on the Type 7 & 9 and 4 & 13 combined enclosed devices.

Ordering Accessories

Accessories are ordered as separate catalog numbers. Select the required accessories from the accessories table below.

Item	Description	Type	Cat. No.
External fixed pulsation snubbers	Controls are supplied as standard with an internal pulsation snubber. However, a control properly selected and used within the adjustable range values, yet having a short bellows life, is a good indication of the presence of extreme surge pressures. External fixed pulsation snubbers are available to provide **additional** dampening when extreme pulsations or surges are present. Recommended if more than eight line surges occur in a 24-hour time period.	Snubber for bellows control 1/4-18 N.P.T. thread	**836-N7**
		Snubber for piston control 3/8-18 N.P.T. thread	**836T-N8**
Selectable element pulsation snubbers	Controls are supplied as standard with an internal pulsation snubber. However, a control properly selected and used within the adjustable range values, yet having a short bellows life, is a good indication of the presence of extreme surge pressures. Selectable element pulsation snubbers are supplied with five different elements to provide a selectable balance between maximizing pressure control life and minimizing control response time. Pulsation snubbers are supplied with the mid-range element already mounted and four other color-coded porosity elements included in the package. See "Selectable Pulsation Snubber Porosity Elements" table on this page for porosity specifications.	Snubber for bellows control 1/4-18 N.P.T. thread	**836-N40**
		Snubber for piston control 3/8-18 N.P.T. thread	**836T-N41**
	Female SAE straight thread O-ring seal designed to prevent leaks and minimize loss of hydraulic fluids. Use on applications with a pressure range of 550…5000 psi.	SAE 7/16-20 UNF-2B thread O-ring boss seal for piston controls	836T-N49
		SAE 9/16-18 UNF-2B thread O-ring boss seal for piston controls	**836T-N50**
Selectable pulsation snubber porosity elements	Package consists of five porosity elements and complete instructions. Elements are color-coded for easy identification. Elements are available in five different porosities for a wide range of applications. See selectable pulsation snubber porosity elements table.		See Table on this page
Locking cap	Deters unauthorized tampering of range setting. Once installed, the locking cap can be removed with a screwdriver to re-adjust the control.	—	**836T-N13**
Isolation trap with two 1/4 in. male pipe fittings	An isolation trap is available for high-temperature media applications from 150…600 °F or corrosive applications compatible with Type 316 stainless steel tubing and fittings. The isolation coil is inserted between the bellows of the pressure control and the elevated temperature line of the system. The isolation trap will fill with condensed water or can be filled with water or suitable fluid when installed. A silicone buffer fluid is available in a convenient dispenser. Copper alloy lower and higher pressure range bellows can be applied to many applications using the isolation trap. The silicone buffer fluid is used to isolate many corrosive substances from coming in contact with the bellows. The isolation trap is rated at 3000 psi working pressure. Not available for piston-type controls. See photo on this page.		836-N25
Isolation trap with one 1/4 in. male and one 1/4 in. female pipe fittings			836-N26
2 oz. of buffer fluid to fill bellows and tubing			836-N27
Metric electrical entry conduit adapters	BS 20 mm thread adapter		**836T-N36**
	Pg 13.5 thread adapter		836T-N37

Selectable Pulsation Snubber Porosity Elements

Recommended Type of Service	Color Code	Porosity	Cat. No.
Viscous fluids (over 500 SSU)∗	None	Coarser	836-N43
Medium type oils (225…500 SSU)∗	Black		**836-N44**
Water and light oils (30… 225 SSU)∗	Brown		**836-N45**
Low viscosity fluids (under 30 SSU)∗	Green		**836-N46**
Air and other gases	Red	Finer	**836-N47**
One of each of the above	—	Assorted	836-N48

∗ Saybolt Seconds Universal (SSU) — units of viscosity measurement.

Note: Color code is located on end of element.



Isolation Trap and Silicone Buffer Fluid

Fixed Pulsation Snubbers



Male/Female Pipe Threads

Selectable Element Pulsation Snubbers



Male/Female Pipe Threads

Pulsation Snubbers

Visit our website: www.ab.com/catalogs

Preferred availability cat. nos. are printed in **bold**

Conversion Kits

Ordering Conversion Kits

Conversion Kits are ordered by adding the appropriate suffix code to the catalog number of the basic device. Select the required conversion kits from the table below.

Conversion Kits

Item	Description	Suffix Code
Neon pilot light conversion kit	Converts standard control to control with 120V AC neon pilot light. Not available on Type 7 & 9 devices. Kit includes pilot light and cover assembly.	N9
Red LED pilot light conversion kit	Converts standard control to control with 24V DC LED pilot light; has a 22 mA current rating. Not available on Type 7 & 9 devices. Kit includes pilot light and cover assembly.	N15
Green LED pilot light conversion kit	Converts standard control to control with 24V DC LED pilot light; has a 22 mA current rating. Not available on Type 7 & 9 devices. Kit includes pilot light and cover assembly.	N18

Example:
To convert a **Cat. No. 836T-T301J** to a **Cat. No. 836T-T301JX15**, order **Cat. No. 836T-T301JN15**.

Renewal Parts

Ordering Renewal Parts

Renewal Parts are ordered as separate catalog numbers. Select the required renewal parts from the table below.

Renewal Parts

Item	Description	Cat. No.
2-Circuit contact block renewal kit	Allows renewal of worn contacts for Bulletin 836T controls.	**836T-N1**
4-Circuit contact block renewal kit	Allows renewal of worn contacts for Bulletin 836T controls.	836T-N2
Renewal seals for piston-type controls	For use on Cat. No. 836T-T350J.	836T-N20
	For use on Cat. No. 836T-T351J.	836T-N21
	For use on Cat. No. 836T-T352J and 836T-T400J.	836T-N22
	For use on Cat. No. 836T-T353J.	836T-N23

Factory-Set Pressure Controls

Ordering factory-set pressure controls

- When a specific factory setting is requested, the specific terminal connections must be specified — e.g., N.O. or N.C. It must also be specified whether the contact operation is occurring on either increasing or decreasing pressure. For example:

Normally Closed (N.C.) contacts to open at∗ psi increasing pressure and close at∗ psi decreasing pressure.

—OR—

Normally Open (N.O.) contacts to close at∗ psi increasing pressure and open at∗ psi decreasing pressure.

- If minimum differential is not critical and the inherent minimum differential satisfies the application, specify the factory setting as follows:

Normally Closed (N.C.) contacts to open at∗ psi increasing pressure minimum differential.

—OR—

Normally Open (N.O.) contacts to close at∗ psi increasing pressure minimum differential.

Quality analog test gauges§ are used when applying requested factory settings to these rugged industrial grade pressure controls. (Gauges are calibrated and accuracy is traceable to the The National Institute of Standards and Technology.)

The actual requested setting is applied to the control by reading the set point directly from the test gauge being used. However, traceable gauge tolerance variance between source and user, and possible severe shock during shipping and installation, may contribute to the factory settings deviating slightly from the specified values. Slight recalibration can easily be accomplished upon final installation to meet specific requirements for the more demanding applications.

When installed, the controls will perform with a repeat accuracy as established in the paragraph entitled “Repeat Accuracy" (see page 13-54). Special service is available to factory-set controls on digital laboratory instruments, up to 600 psi, when required for more critical applications. An additional charge may be added for this service contingent upon setting tolerance and quantity. Please contact your local Rockwell Automation sales office or Allen-Bradley distributor.

∗ Specify psi (pounds per square inch) or, in. Hg vac (inches of mercury vacuum).

❄ Per ANSI B40.1 Grade 2A (0.5% accuracy full scale), Grade 3A (0.25% accuracy full scale).

If not specified, setting tolerances will be as shown in the table below.

Pressure Range	Tolerance
30 in. Hg Vac....0	+/- 1 in. Hg vac.
> 0...100 psi	+/- 1 psi
> 100...300 psi	+/- 2 psi
> 300...500 psi	+/- 5 psi
> 500...1000 psi	+/- 10 psi
> 1000...5000 psi	+/- 50 psi

Standards Compliance

- UL508
- CSA 22,2 No. 14
- UL698, 1604 (Haz. Loc.)
- NEMA ICS-2

Certifications

File and Guide Numbers

	UL		CSA	
	File Number	Guide Number	File Number	Class
Bulletin 836T	E14842	NKPZ	LR1234	3211-03
	E53048 (Haz. Loc.)	NOWT	LR11924 (Haz. Loc.)	3218-05
	Hazardous Location enclosure devices are not CE compliant. All other enclosed devices are CE compliant.			

Approximate Dimensions and Shipping Weights

Dimensions in inches (millimeters). Dimensions are not intended to be used for manufacturing purposes.

Type 4 & 13 (Bellows)

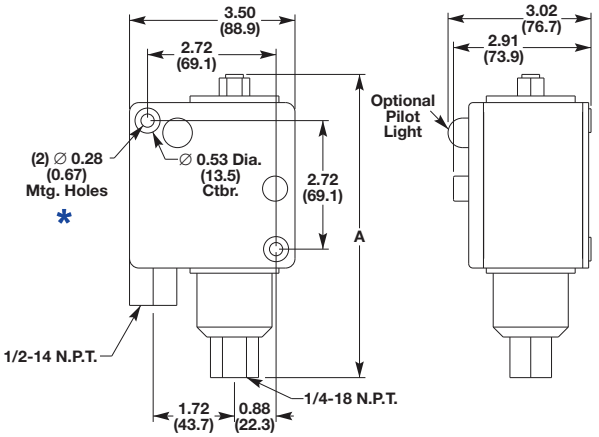

Approximate Shipping Weight 3-1/2 lbs. (1.6 kg)

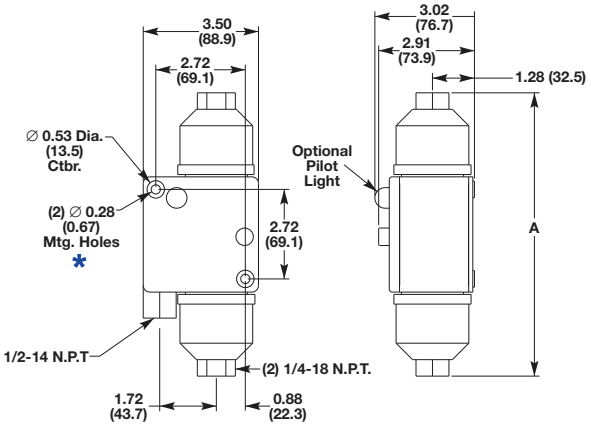

Approximate Shipping Weight 4 lbs. (1.8 kg)

Cat. No.	A Dimensions	Cat. No.	A Dimensions	Cat. No.	A Dimensions	Cat. No.	A Dimensions
836T-T251J	6.65 (169)	**836T-T254J**	6.95 (176)	**836T-D450J**	8.60 (218)	836T-D460J	8.60 (218)
836T-T260J		**836T-T255J**					
—	—	**836T-T256J**	7.09 (180)	**836T-D451J**	8.14 (207)		
836T-T252J	6.41(163)	**836T-T262J**	7.33 (186)	**836T-D452J**		**836T-T252J**	8.5 (216)
836T-T253J		**836T-T263J**	7.25 (184)			836T-D463J	10.06 (256)
836T-T261J				**836T-D453J**	9.5 (241)		

Type 4 & 13 (Piston)

(Does not include Dual Bellows Devices)

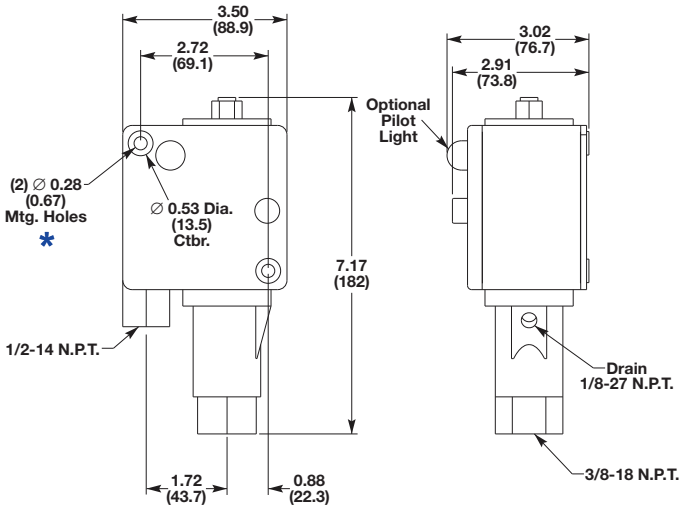

Approximate Shipping Weight 4.5 lbs. (2.0 kg)

Type 4 & 13 and 7 & 9 Bellows and Piston Type

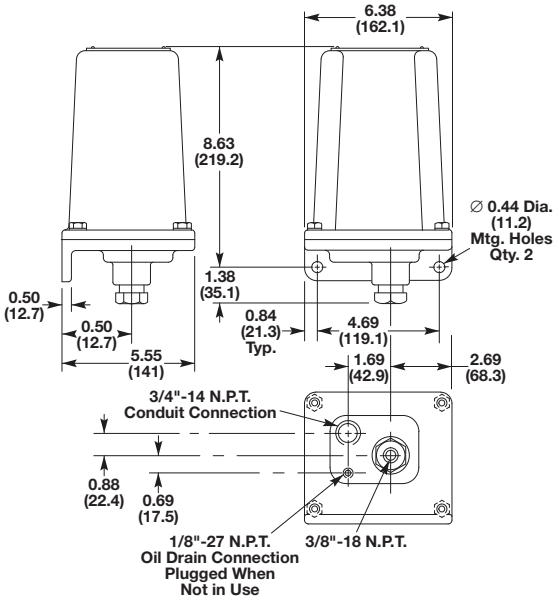

Approximate Shipping Weight 10 lbs. (4.5 kg)

∗ (2) mounting screws are required: 3/16 x 20 x 2 in. Counterbore depth is 1-1/8 in. Overall depth of mtg hole (front to back) is 2-1/4 in.

Cat. No.	
836T-T300J	836T-T350J
	836T-T351J
836T-T301J	836T-T352J
836T-T302J	836T-T353J
836T-T303J	836T-T400J

This page is intentionally left blank

CS-451-200 : Identification sheet

VWTC PROJECT NUMBER:	Iqaluit WWTP	REV:	01
PROJECT NAME:	5000218036	SUBMITTED TO (COMPANY):	
ENGINEER:	G. HÉBERT	SUBMITTED TO (RESPONSIBLE)	
PROJECT MANAGER:	C. BEKAERT	PROJECT NUM REFERENCE.:	
PHONE NUMBER:		LOT NUMBER:	

SUPPLIER	EQPT CODE	EQPT TAG NO	DIA	DESCRIPTION	INFO 1	INFO 2	INFO 3	APPLIC.	NOTE	REV
ENDRESS & HAUSER	IESWLE5204819	LSL-04-710		HP-250 INSTRUMENT	LEVEL SWITCH // MANUF: E&H// MODEL :FTE31-C6DB11 Soliswitch FTE31, thread NPT Level limit switch, Paddel. Solid >= 100 g/dm3. 1x relay double pole change over switch.	Housing: Plastics PBT, IP65 NEMA4 Rod: steel 1.4305 (303). 1x Cable entry NPT 1/2. Appval:C CSA DIP Cl. II,III, Div.1, Gr.EFG Power : 24VDC, relay	Paddel; Additional Option:1 316Ti; basic version Version:1 Basic version B Marking: 71072711: TAG on device	HP-250		1

This page is intentionally left blank

Level Pressure Flow Temperature Liquid Analysis Registration Systems Components Services Solutions

Technical Information

Soliswitch FTE31

Level Limit Switch
Economical paddle limit switch
For application in dust hazardous explosive areas



Application areas

The universal paddle level limit switch FTE 31 is used as a full, empty and demand alarm on silos containing solids. Its construction and materials make the unit suitable for use in the food industry.
The unit is suitable as a level limit switch in dust explosion hazardous areas.
Typical applications are level detection in:

- Cereals
- Sugar
- Cacao
- Animal feeds
- Washing powders
- Chalk
- Dry plaster
- Cement
- Granulates
- Wood chips

Features and benefits

- Simple operation
- Proven principle
- Slip clutch
- Ingress protection to IP 65 / NEMA 4x / Type 4x

TI068R/09/en
51002384

Endress+Hauser
People for Process Automation

Function and system construction

Measurement principle

The shaft and paddle are driven using a reduction gear and synchronous motor. If the paddle is stopped by material covering it, the hinged motor in the housing moves from the rest to the switch position. This movement operates two switch contacts, the first is for external level indication and the second switches the power off to the motor.
The paddle starts to rotate once the medium level falls below the paddle, the hinged motor returns to its rest position and the two contacts switch to normal operation. Intermittent loads that operate against or even in the same direction of rotation are evened out by using a slip clutch.

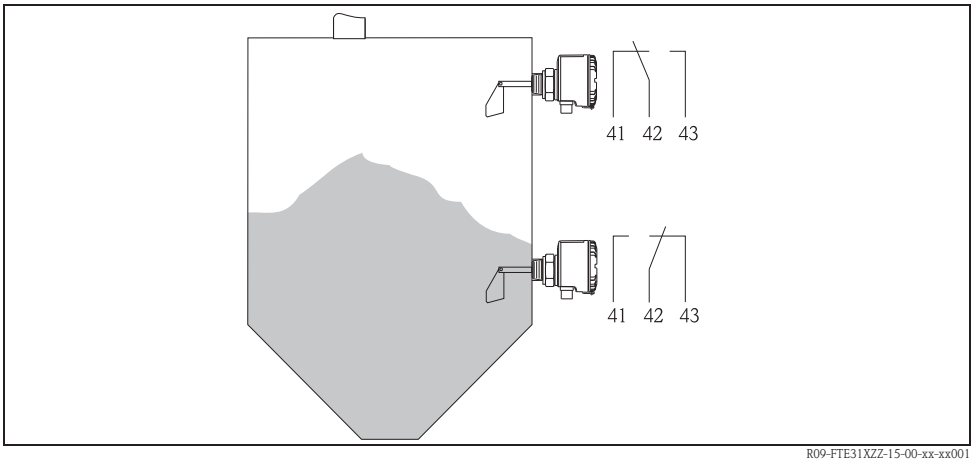

Level measurement changeover contact

System

Complete level measurement limit switch, paddle, shaft with synchronous motor and slip clutch, single pole double throw switch.

Input values

Measurement value

Level of solids

Range

Variable types dependent on:
- Installation point
- Length of shaft or rope

Output values

Output signal

Binary, once the set level is reached the micro switch contact changes.

Output circuit

Connectable load:
≤ 250 VAC, 10 A nominal current, 3 A on motor

Switch output

Potential free changeover contact (SPDT)

Switch delay

Approx. 2 seconds

Mechanical life time

min. 500 000 switch cycles

Power supply

Electrical connection

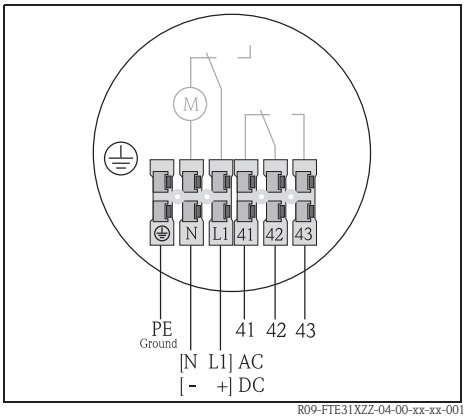

Terminal layout FTE31

AC	DC	
PE		Earth (ground) connection
N	-	Power connection
L	+	Power connection
41		Normally closed contact
42		Common contact
43		Normally open contact

Cable entry

Power supply and signal cable (in-/output):
- Thread for cable gland [½" NPT]

Power supply

Standard:
- 230 V AC, 50/60 Hz (±10%)

Option:
- 115 V AC, 50/60 Hz (±10%)
- 20...28 V DC

Power consumption

AC: P < 4,5 VA; DC: P < 3,5 W

Current requirement

DC: $I_{max} \leq 66$ mA

Installation conditions

Installation hints

Installation position:
- horizontal up to shaft length > 300 mm (11.8") or vertical (see diagram)
- side load on the shaft max. 60 N
- Load on the rope max. 1500 N

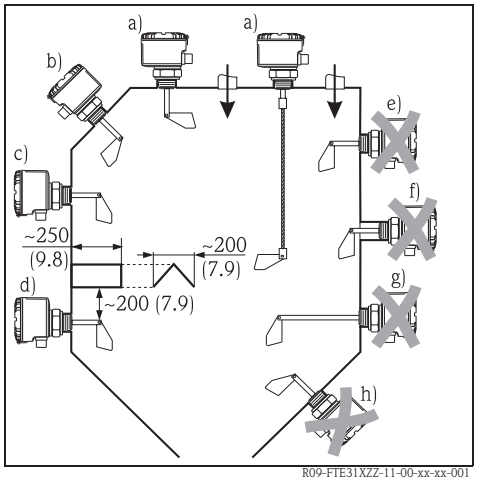

Installation of the FTE31 paddle level limit switch, dimensions in mm (inch).

Correct installation	Incorrect installation
a) Vertical from top of silo	e) In dierction of solids flow
b) Angled from the top	f) Installation coupling too long
c) From the side	g) Horizontal with shaft length > 300 mm
d) With protective cover against falling solids	h) Angled from below

The FTE31 paddle limit switch can be installed in solids silos as shown under points a, b, c and d.

Environment conditions

Ambient temperature	- 20 °C ... + 60 °C (-4 °F ... + 140 °F)
Storage temperature	- 20 °C ... + 60 °C (-4 °F ... + 140 °F)
Ingress protection	■ IP 65 / NEMA 4x / Type 4x with closed cover ■ IP 20 / NEMA 1 with open cover
Vibration protection	IEC 654-3, dimension V.S.1 (v<3 mm/s, 1<f<150 Hz)
EMC	To EN 61 326, Class B
Protection class	I
Over voltage protection category	II
Altitude	Up to 2000 m (6560 ft) above sea level.

Process conditions

Material temperature range	- 20 °C ... + 80 °C (-4 °F ... 176 °F)
Operating pressure range	0.5 bar ... 1.8 bar (7.25 PSI ... 26.1 PSI)
Material conditions	Solids - grain size ≤ 50 mm (1.97")
Product density (solids weight)	100 g/l

Mechanical construction

Model/dimensions

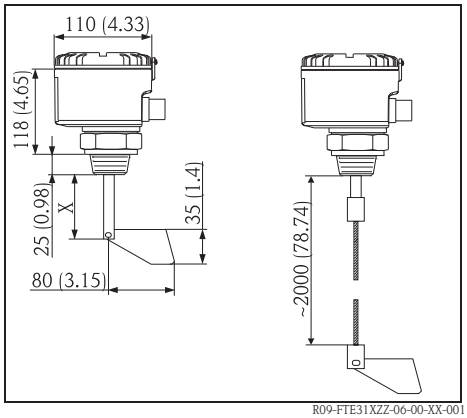

Construction of the compact unit - dimensions in mm (inch).

Shaft variations:

Standard shaft X = 75 mm (2.95")
Special length X:
100 mm (3.94"), 200 mm (7.87"), 300 mm (11.8"), 400 mm (15.75"), 500 mm (19.7"), 600 mm (23.6")

Rope version:

Rope length approx. 2000 mm (78.7"), can be shortened.

Caution!
If the shaft length is > 300 mm (11.8") the FTE31 can only be installed vertically downwards.

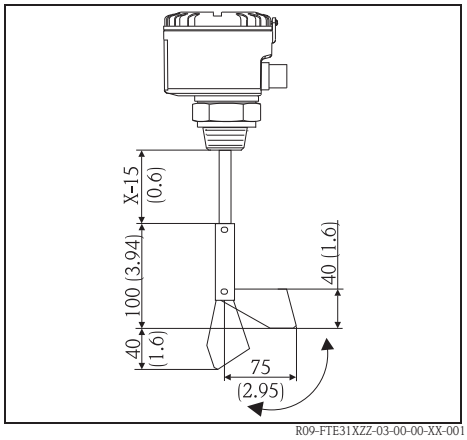

Hinged paddle - dimensions in mm (inch)

Option hinged paddle:

The paddle is hinged so that it can be easily mounted through a threaded mounting boss. Because it is spring loaded the paddle retuns to its normal operation once inside the vessel. Removal of the unit is always possible.

The hinged paddle can be mounted to both the solid shaft as well as the rope extension versions.

Weight	approx. 1 kg (2.2 lb)
Materials	Housing, cover and process connection: – VALOX 553 plastic with 30% fibre glass. Shaft: – Corrosion resistant steel 1.4435 Paddle: – Corrosion reseitant steel 1.4435 Option: – Process connection - corrosion resistant steel 1.4435 – Rope extension- corrosion resistant1.4571 with corrosion resistant steel 1.4305 weight – Hinged paddle - corrosion resistant steel 1.4435 O-ring seal: – NBR Shaft sealing ring: – NBR Perbunan Cable entries NPT ½": – Nickel plated brass
Shaft bearing	High performance friction bearing - maintenance free
Shaft revolution	approx. 1 revolution per minute
Process connection	Threaded boss - thread NPT 1¼" or NPT 1½"
Electrical connection	Plug-in terminals 2.5 mm^2 (14 AWG) solid core, 1.5 mm^2 (16 AWG) stranded with ferrule

Certification

CE approval	The measurement system fulfils the requirements demanded by the EU regulations. Endress+Hauser acknowledges successful unit testing by adding the CE mark.
FM	DIP Class II, Div. 1+2, Groups E, F, G and Class III
CSA	DIP Class II, Div. 1+2, Groups E, F, G and Class III

Ordering information

Soliswitch FTE31, Thread NPT

Approval:							
A	Non-hazardous area						
B	FM DIP Cl. II, III, Div. 1, Gr. EFG						
C	CSA DIP Cl. II, III, Div. 1, Gr. EFG						
	Power supply:						
	1	230 V AC, relay 250 V AC, 100 mA-10 A					
	2	115 V AC, relay 250 V AC, 100 mA-10 A					
	3	20...28 V DC, relay 250 V AC, 100 mA-10 A					
	4	230 V AC, relay PLC 48 V DC, 10 mA-100 mA					
	5	115 V AC, relay PLC 48 V DC, 10 mA-100 mA					
	6	20...28 V DC, relay PLC 48 V DC, 10 mA-100 mA					
		Process connection:					
		A	Thread NPT 1¼", Valox553 (PBT)				
		B	Thread NPT 1¼", 316L				
		C	Thread NPT 1½", Valox553 (PBT)				
		D	Thread NPT 1½", 316L				
			Version:				
			A	Shaft 100 mm			
			B	Shaft 200 mm			
			C	Shaft 300 mm			
			D	Shaft 400 mm, vertical installation			
			E	Shaft 500 mm, vertical installation			
			F	Shaft 600 mm, vertical installation			
			Y	Other			
			1	Shaft 75 mm, compact			
			2	Rope 2 m, 316, shortable			
				Paddle; Additionla option:			
				1	316Ti; basic version		
				2	316L; fold-away, w/o signal lamp		
FTE31-							⇐ **Ordercode**

This ordering information can give an overview about the available order options. The Endress+Hauser sales organization can provide detailed ordering information and information on the order code.

Accessories

Hinged paddle for retro-fitting
Order no. 50089768

Further documentation

Short form operating manual KA094R/09/a3

Instruments International

Endress+Hauser
Instruments International AG
Kaegenstrasse 2
4153 Reinach
Switzerland

Tel. +41 61 715 81 00
Fax +41 61 715 25 00
www.endress.com
info@ii.endress.com

Endress+Hauser
People for Process Automation

CS-504-100 : Identification sheet

VWTC PROJECT NUMBER:	Iqaluit WWTP	REV:	01
PROJECT NAME:	5000218036	SUBMITTED TO (COMPANY):	
ENGINEER:	G. HÉBERT	SUBMITTED TO (RESPONSIBLE)	
PROJECT MANAGER:	C. BEKAERT	PROJECT NUM REFERENCE.:	
PHONE NUMBER:		LOT NUMBER:	

SUPPLIER	EQPT CODE	EQPT TAG NO	DIA	DESCRIPTION	INFO 1	INFO 2	INFO 3	APPLIC.	NOTE	REV
SCHUTTE&KOERTING	EJGUEJ200371	IJ-04-715	N/A	HP-250 EDUCTOR	MANUFACTURER: SHUTTE&KOERTING / MODEL: 1,5"- Fig264 PVC Eductor	N/A	N/A	HP-250		1

This page is intentionally left blank

Schutte & Koerting

Water Jet Eductors

Introduction

The Water Jet Eductor is a type of ejector which utilizes the kinetic energy of a pressurized liquid to entrain another liquid, mix the two, and discharge the mixture against a counter pressure. Ejectors of this type are used throughout industry for pumping and mixing operations.

Application

Water jet eductors have numerous uses in the plant such as lifting, pumping, mixing and agitation of liquids, granular solids and slurries. Some specific applications are: draining flooded areas, emptying tanks and sumps, pumping and mixing operations in oil treating systems, dewatering sand and coal barges, introducing anti-knock agents and coloring additives into gasoline, continuous blending, acidifying, causticizing of oils, producing emulsions, pumping food products, pumping sand and filter clay, tank mixing, and various proportioning operations. As an example of eductor performance in a typical use, a jet eductor measuring 8½" in length will empty a 500 gallon water tank in less than half an hour, using water at 60 psig, as the sole source of motive power.

Features

Self Priming Eductors require no priming and can be used for either continuous or intermittent operation.
Simple and Reliable Since the basic eductor has no moving parts to wear or break, only periodic inspection is required.
Corrosion and Erosion Resistant Because they can be made from most materials, or coated with corrosion resistant materials, eductors can be made resistant to the corrosive effects of the liquids handled and the environment.
Automatic Control Units can be adapted for automatic operation by means of a regulating spindle or a snap valve and float arrangement.
Non-Electrical Eductors can be used in hazardous locations where electrically operated alternatives would require expensive explosion-proofing.
Easy to Install Either threaded or flanged connections are available. Units are compact, relatively light and can be adapted to a variety of piping configurations.
Low Cost Water eductors are inexpensive in relation to the work they do.

Construction

Water Jet Eductors consist of only three basic components: a converging nozzle, a diffuser (or venturi) and a body to hold these parts in their proper relative positions and provide a suction chamber.



Converging Nozzle | Diffuser (or Venturi) | Body - holds diffuser and nozzle in position

Jet ejectors can be made from most workable materials, such as: cast iron, bronze, stainless steel, aluminum, polyvinyl chloride, polyester fiberglass, Phenolic Fiberglass Reinforced Plastic (FRP), Teflon[2] and Hastelloy[3].

A variety of types and sizes are available as noted on the following pages. Certain variables such as pressure, temperature, viscosity, density, operating conditions of suction and discharge fluids, and desired results must be considered in determining the type of eductor best suited to your needs. S&K engineers will work with you to select the proper eductor for your application.

Request Performance Data Supplement 2M for operating characteristics of water jet eductors.

Index

Description	Page
Fig. 264 Water Jet Eductor	2
Fig. 266 Water Jet Eductor	2
Fig. 264 PVC and Kynar Water Jet Eductor	3
Fig. 2645 Automatic Eductor	4
Fig. 265 Liquid Jet Eductor	5
Fig. 242 Condensate and Mixing Eductor	6
Fig. 258 Tank Mixing Eductor	7
Fig. 268 Tank Mixing Eductor	7
Fig. 254 Hopper-Equipped Eductor	9
Fig. 267 Hopper-Equipped Eductor	9
Fig. 227 Hopper-Equipped Eductor	9
Fig. 224 Water Jet Sand and Mud Eductor	10
Fig. 235 Annular Multi-Nozzle Water Jet Eductor	11
Fig. 222 Portable Eductor	12
Fig. 212 Corrosion Resistant Eductor	12
Typical Applications of S&K Water Jet Eductors	12

Fig. 264 and Fig. 266 Water Jet Eductors

S&K Fig. 264 and Fig. 266 Water Jet Eductors are designed for liquid pumping and mixing operations and for the handling of some solids where requirements do not necessitate capacities greater than those obtained with sizes up to and including 6". They are considered the standard eductors within this size range. Typical applications begin on page 12.

In operation, pressure liquid enters the eductor through the pressure nozzle and produces a high velocity jet. This jet action creates a vacuum in the line which causes the suction liquid to flow up into the body of the eductor where it is entrained by the pressure liquid. Both liquids are thoroughly mixed in the throat of the eductor and are discharged against back pressure. The streamlined body with no pockets permits the pressure liquid to move straight through the eductor and reduces the possibility of solids in the suction material collecting and clogging. In addition, pressure drop in the suction chamber is held to a minimum.

Accompanying Bulletin 2M Supplement Performance Data provides performance information.

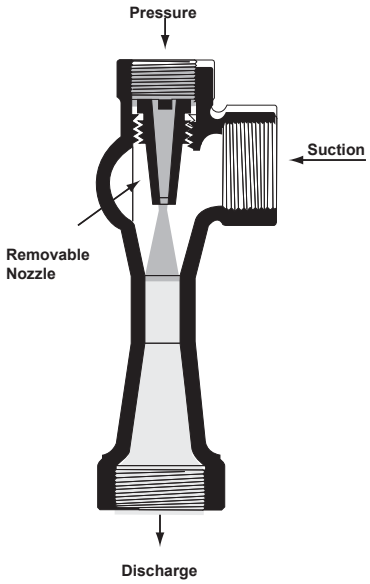

Fig 1. FIG. 264 EDUCTOR
Eductors of this type have streamlined bodies with threaded pipe connections. They are made in sizes ranging from 1/2" to 3" and are stocked in these sizes in ductile iron and bronze and Fig. 316 stainless steel. They are stocked in sizes from 1/2", 2", and 3" in PVC. Other materials are available on order.



Fig. 2. FIG. 264 EDUCTOR

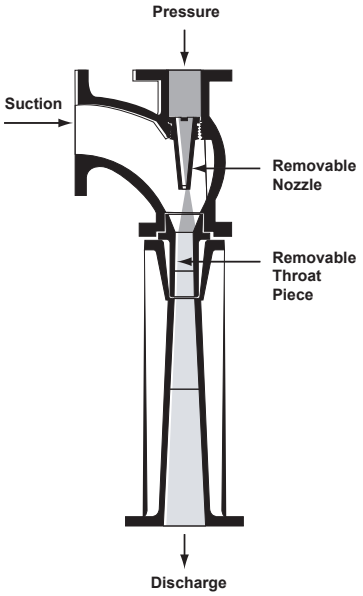

Fig. 3. FIG. 266 EDUCTOR.
These eductors are similar to Fig. 264 Eductors except that they have flanged connections and removable throat bushings along with removable nozzles. They are supplied in cast iron, bronze-mounted in 4" and 6" sizes. Other materials can be supplied on special order.

Table 1. Sizes and Dimensions, Fig. 264 and Fig. 266 Water Jet Eductors

Size In Inches	Connections In Inches		Wgt. In Lbs.	Working Pressures						Dimensions in Inches			Max. Round Particle Size In Inches
	Suction Disch.	Pressure		Cast Iron		Bronze		Stainless Steel		A	B	C	
				Motive psi	Body psi	Motive psi	Body psi	Motive psi	Body psi				
Fig. 264 Eductor													
1/2	1/2	3/8	3/4	150	125	125	100	600	500	1 1/16	2 9/16	1 1/8	1/16
3/4	3/4	1/2	1 1/4	125	125	100	100	500	500	1 3/8	3 3/8	1 1/4	1/8
1	1	3/4	2	150	150	150	125	600	600	1 1/2	4 3/16	1 5/8	5/32
1 1/2	1 1/2	1	4	150	100	125	90	600	400	2	6 1/2	2	5/16
2	2	1 1/4	6	150	100	125	85	600	400	2 1/4	7 5/8	2 1/4	3/8
2 1/2	2 1/2	1 1/2	11	200	150	200	125	600	300	2 11/16	9 1/4	3 1/8	3/8
3	3	2	20	250	150	225	125	600	400	3 1/8	11 1/4	3 1/2	13/16
Fig. 266 Eductor													
4	4	2 1/2	100	125	125	-	-	-	-	4 3/8	19 1/4	7 13/16	1
6	6	4	180	125	125	-	-	-	-	6 1/16	28 3/8	9 1/8	1 1/8

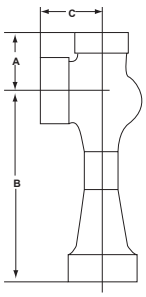

Fig. 264

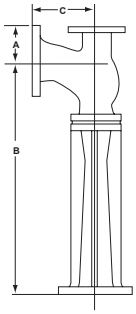

Fig. 266

Fig. 264 PVC and Kynar Water Jet Eductors

Fig. 264 PVC and Kynar Eductors offer resistance to many corrosive media. PVC Eductors are not recommended, however, for acetone, ketones, ether, esters, aromatic hydrocarbons or chlorinated hydrocarbons. A table of recommended uses is available on request. Maximum temperature rating is 150°F. Kynar Eductors will handle PVC applications including those mentioned above. Kynar's temperature limitation is 250°F. Pressure ratings are given in Table 2.

Fig. 264 PVC and Kynar Eductors operate on the same principle as do all other S&K Eductors. Performance characteristics with water are shown in Bulletin 2M Supplement Technical Data. For performance with other liquids, contact S&K.

Nozzles and diffusers are not removable on these eductors. Sizes 1" and smaller are of molded construction.

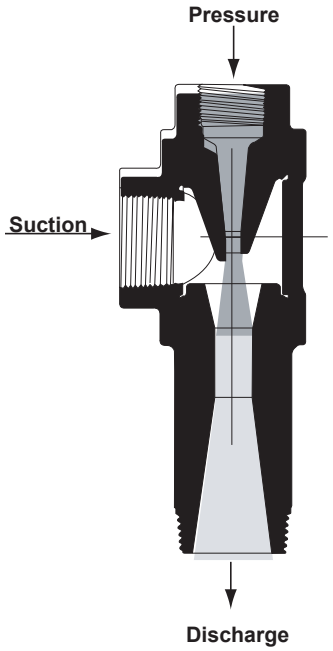

Fig. 4. FIG. 264 PVC EDUCTOR. Sizes from 1 1/2" up are designed as shown here and in Fig. 5. On these sizes, the pressure and suction connections are female and the discharge connection is male. All connections are threaded.



Fig. 5. FIG. 264 PVC EDUCTOR.

Table 2. Sizes, Dimensions, and Particle Size Data, Fig. 264 Water Jet Eductor

Size in Inches	Connections in Inches		Wgt. In Lbs.	Dimensions in Inches			Working Pressure (psig) at 75°F	Max. Round Particle Sizes (in inches) Eductors will Handle
	Suction Disch.	Pressure		A	B	C		
1/2s	1/2s	3/8s	1/2	1 7/16	3 1/4	1 7/16	325	1/16
1/2	1/2	3/8	1/2	1 7/16	3 1/4	1 7/16	325	1/16
3/4	3/4	1/2	1/2	1 11/16	3 1/2	1 11/16	275	1/8
1	1	3/4	1/2	1 7/8	3 11/16	1 7/8	250	5/32
1 1/2	1 1/2	1	1 1/2	2 9/16	5 11/32	2 1/16	200	5/16
2	2	1 1/4	2 1/2	3 1/32	6 21/32	2 5/32	185	3/8
3	3	2	6 3/4	4 1/8	9 1/2	3 7/8	165	13/16

s = denotes smaller internals.

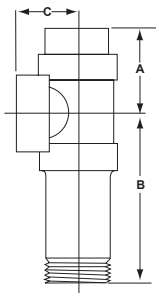



Fig. 6. FIG. 264 KYNAR EDUCTOR. 1/2" to 1" Design. Sizes 1/2", 3/4", and 1" look like this. All connections are female and are threaded.

Fig. 2645 Automatic Eductor

Fig. 2645 Automatic Water Jet Eductors are used to pump out sumps (pits, tanks, etc.) where liquid accumulates slowly but must be evacuated when it reaches a predetermined level.

As the liquid in the sump (basin, tank, cellar, bilge, etc.) accumulates, it raises the ball float until the upward action of the float opens the snap-acting valve, admitting motive fluid into the pressure connection of the eductor.

The jet action of the motive fluid creates a vacuum in the eductor and entrains the suction fluid, discharging both fluids under pressure. As the suction fluid is thus pumped out, the sump level drops to a point where the snap-acting valve shuts off. No further pumping action takes place until the sump again fills to the operating level.

Operation of the Fig. 2645 Eductor is completely automatic. It is self-operated, requires no electrical connections or any external power other than the motive fluid. The snap-acting valve and ball float are the only moving parts. The full assembly is so compact it can be installed in tanks as small as 13 1/2" diameter.

For performance information, see accompanying Bulletin 2M Supplement Performance Data.

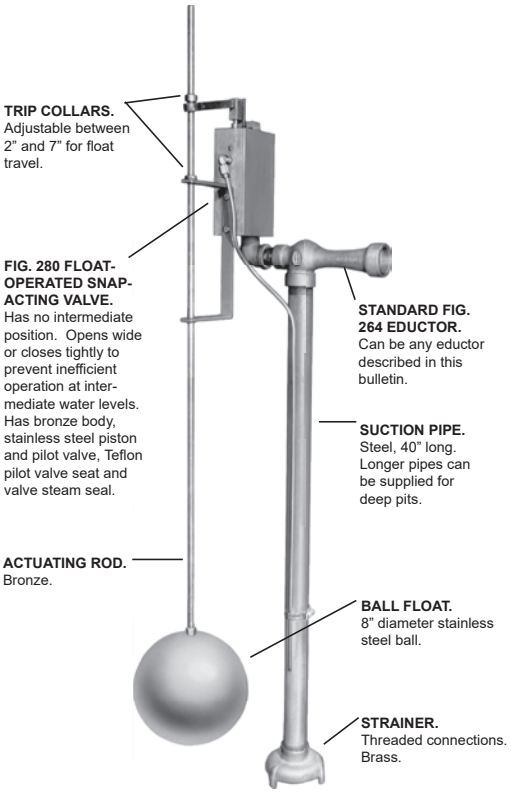

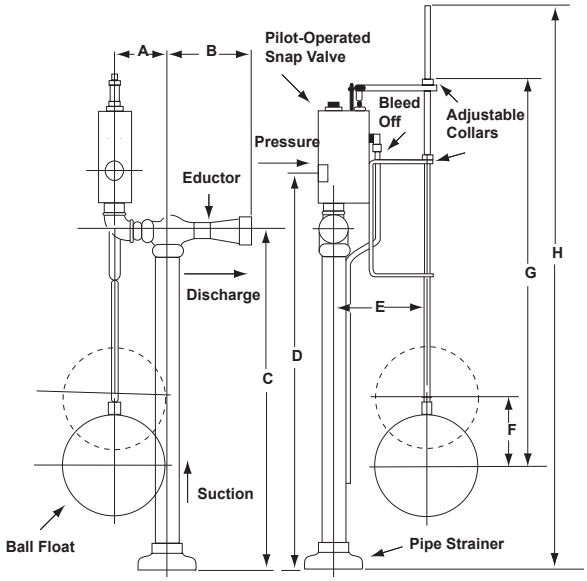

Table 3. Sizes and Dimensions, Fig. 2645 Automatic Eductor

Eductor Size In Inches	Connections In Inches N.P.T.		Wgt. In Lbs.	Working Pressure (Bronze)		Dimensions in Inches							
	Suc.-Disch.	Pressure (Snap-Valve)		Motive* (psig)	Body (psig)	A	B	C	D	E	F	G	H
3/4	3/4	1	24	100	100	3 11/16	3 3/8	41	44 7/8	7 5/6	5 3/8	47 1/8	60
1	1	1	26	150	125	4 5/16	4 3/16	41	44 7/8	7 5/6	5 3/8	47 1/8	60
1 1/2	1 1/2	1	32	125	90	4 1/8	6 1/2	41	44 7/8	7 5/6	5 3/8	47 1/8	60
2	2	2	43	125	85	6 1/4	7 5/8	38 3/8	43 15/16	7 7/16	5 3/8	47 1/8	60
2 1/2	2 1/2	2	65	200	125	6 11/16	9 1/4	38 3/8	43 15/16	7 7/16	5 3/8	47 1/8	60
3	3	2	81	200	125	6 3/8	11 1/4	38 3/8	43 15/16	7 7/16	5 3/8	47 1/8	60

*Minimum motive pressure for all Fig. 2645 Eductors: 40 psig

Fig. 265 Liquid Jet Eductor

Fig. 265 Liquid Jet Eductor is similar in design to the Fig. 264 Water Jet Eductor and is made for liquid pumping and mixing operations and for handling some solids where requirements do not necessitate capacities greater than those obtained with sizes up to and including 3". Typical applications begin on page 12.

The Fig. 265 Liquid Jet Eductor provides higher discharge pressures and higher suction flow capacities than other standard eductors.

In operation, pressure liquid enters the eductor through the pressure nozzle and produces a high velocity jet. This jet action creates a vacuum in the line which causes the suction liquid to flow up into the body of the eductor where it is entrained by the pressure liquid. Both liquids are thoroughly mixed in the throat of the eductor and are discharged against back pressure. The streamlined body with no pockets permits the pressure liquid to move straight through the eductor and reduces the possibility of solids in the suction material collecting and clogging. In addition, pressure drop in the suction chamber is held to a minimum.

Accompanying Bulletin 2M Supplement Performance Data provides performance information.

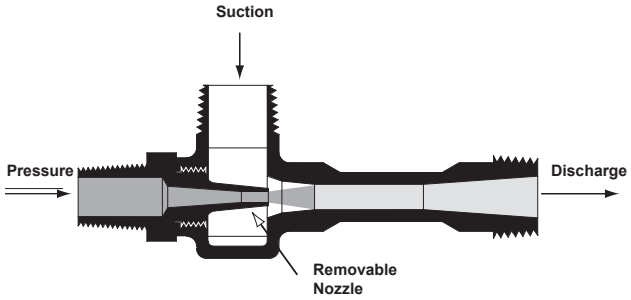

Fig 8. FIG. 265 LIQUID JET EDUCTOR
Eductors of this type have streamlined investment cast bodies with threaded NPT male pipe connections. They are made in sizes ranging from 3/4" to 3" and are stocked in these sizes in Fig. 316 stainless steel. Other materials are available on order.



Fig. 9. FIG. 265 EDUCTOR.

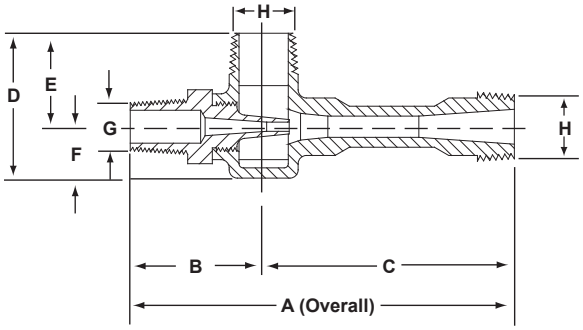

Table 265. Sizes and Dimensions, Fig. 265 Liquid Jet Eductor

Size (In Inches)	Wgt.	Dimensions						Connections	
		A	B	C	D	E	F	G	H
3/4	1	5 7/8	2	3 7/8	2 1/4	1 1/2	3/4	3/8	3/4
1	2	7 1/8	2 1/4	4 7/8	2 3/4	1 3/4	1	1/2	1
1 1/2	4	11	2 3/4	8 1/4	3 21/32	2 1/2	1 5/16	1	1 1/2
2	8	14 3/8	3 1/8	11 1/4	5	2 7/8	2 1/8	1 1/4	2
3	30	23 7/8	4	19 7/8	8	5	3	2	3

Fig. 242 Condensate and Mixing Eductor

Fig. 242 Water Jet Eductors are designed to mix two liquids intimately in various proportions in operations where the pressure liquid is the greater proportion of the mixture. Typical applications include: removal of condensate; mixing gasoline with acid; blending and proportioning chemical solutions; and diluting acids and alkali.

In operation, the pressure liquid issues from the nozzle at high velocity and entrains the suction liquid. The extreme turbulence in the throat of the eductor mixes the two liquids, blending and emulsifying thoroughly and completely. Colloidal suspensions can also be produced.

Entrainment ratio is dependent upon the eductor design. Close regulation within the design limits is usually obtained by a valve in the suction liquid line.

The pressure drop between the pressure liquid and the discharge should be at least 10 psi to give adequate mixing, and the difference between the discharge pressure and the suction pressure should not exceed 75% of the difference between the operating pressure and the suction pressure.

When used for removal of condensate, the eductor should be installed three feet below the condensate level at the drain of the condenser. For performance information, see Technical Data Supplement to Bulletin 2M.



Fig. 10. FIG. 242 EDUCTOR.

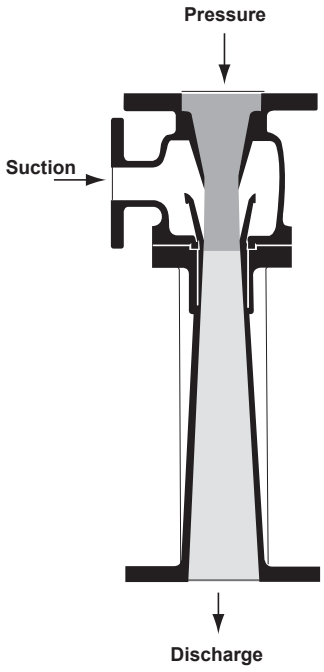

Fig. 11. FIG. 242 EDUCTOR.
The 242 is the flanged type Condensate and Mixing Eductor. This style, too, is made in bronze or cast iron, bronze mounted, but can be supplied in other materials. Nozzles and throat bushings are removable.

Table 4. Sizes and Dimensions, Fig. 242 Condensate and Mixing Eductor

Size No.	Connection in Inches			Dimensions in Inches			Weight in Lbs.
	Pressure	Suction*	Discharge	A	B	C	
2	2	1 - 2	2	4 3/4	11 3/4	3 3/4	50
2 1/2	2 1/2	1 1/4 - 2 1/2	2 1/2	3 1/2	15 1/4	4	60
3	3	2 - 3	3	4	17 15/16	4 5/8	70
4	4	2 - 4	4	5 9/16	20 3/8	5 1/2	80
6	6	3 - 6	6	6 1/4	29	6	270
8	8	4 - 8	8	14 1/16	35 1/2	7 13/16	450

*Note: Suction connection may vary to suit conditions.

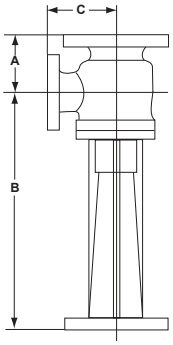

Fig. 258 and Fig. 268 Tank Mixing Eductors

Fig. 258 and Fig. 268 Tank Mixing Eductors are used to agitate liquid, dissolve powdered solids in liquid, and to mix two or more liquids intimately within a tank or other vessel without the use of baffles or moving parts inside the tank. These units take the place of mechanical agitators.

The 268 is used in preference to the 258 in operations where it is desirable to start mixing from a shallow level or where uniform local agitation is required over large, shallow tank area. Typical applications of each are shown in the application section beginning on page 12.

Fig. 258 and 268 Eductors are operated by a flow of pressure liquid through the nozzle. As shown in the sectional drawings, the motive liquid entrains suction liquid, the two are mixed intimately in the venturi, and the mixture is discharged into the tank. Pressure liquid can be taken from the tank by means of a pump or it can be a new liquid. Standard, stock units are designed to entrain 3 gallons of suction fluid for each gallon of motive fluid. (Special designs of the 258 Eductor can be made to give 1 to 1 ratio.)

Normally, the tank is filled by means of the eductors. Mixing occurs as soon as the level of liquid in the tank covers the suction of the eductor. In addition to the mixing obtained between suction and motive fluids in the eductor, the jet action of the discharge from the eductor serves to agitate the tank and prevents stratification.

If a drawing or sketch of the mixing tank is furnished, S&K will recommend and quote on the proper type of distribution system.

Performance information is given in accompanying Performance Data, Bulletin 2M Supplement. Similar units using steam as motive fluid for heating, circulating and mixing are described in Bulletin 3A as “Fig. 314” units.

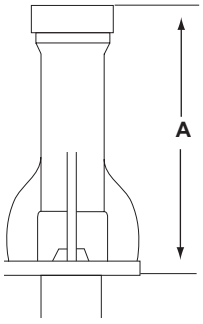

Table 5. Sizes and Dimensions, Fig. 258 Tank Mixing Eductor

Size in Inches	Connections in Inches		Wgt. in Lbs.	Dimensions in Inches
	Disch.	Pressure		A
1/2	1	1/2	2	5 1/2
3/4	1 1/2	3/4	6	8 1/2
1	2	1	22 1/2	12 5/16
1 1/4	2 1/2	1 1/4	29	11 1/8
1 1/2	3	1 1/2	36 1/2	15 7/8
2	4*	2	78	19 5/8
3	6*	3	ON APPL.	28 13/16
4	†	4*		†
5	†	5*		†
6	†	6*		†

*Flanged Connection
† Varies with performance and application
Note: A discharge flange is not supplied on large fabricated units unless required by the application.
(See Fig. 16 for dimensions of Fig. 268 Eductor).

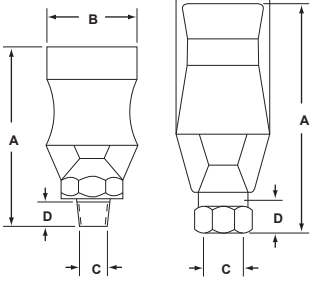

Sizes 3/8, 3/4 Sizes 1 1/2, 2, 3

Table 5-A. Sizes and Dimensions, Fig. 268 Tank Mixing Eductor

Size in Inches	A	B	C	D	Wgt. in Lbs.
3/8	3 3/4	1 3/4	3/8	7/16	3/4
3/4	5 1/4	2 3/8	3/4	9/16	2 1/2
1 1/2	8 13/16	4 1/16	1 1/2	13/16	6 1/4
2	12 1/4	5 13/16	2	45/64	22
3	17	8 1/8	3	15/16	48

Fig. 258 and Fig. 268 Tank Mixing Eductors



Fig. 12. FIG. 258 TANK MIXING EDUCTOR.

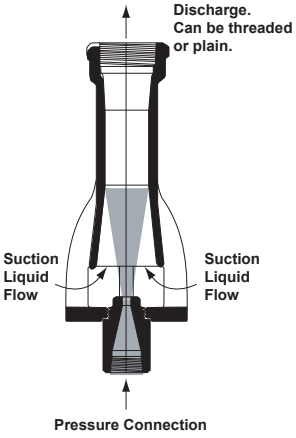

Fig. 13. FIG. 258 TANK MIXING EDUCTOR.
Standard units are made in cast iron and bronze but can be made in many other materials on special order. Large sizes can be fabricated instead of cast.



Fig. 14. FIG. 268 TANK MIXING EDUCTOR. 3/8" and 3/4" sizes.

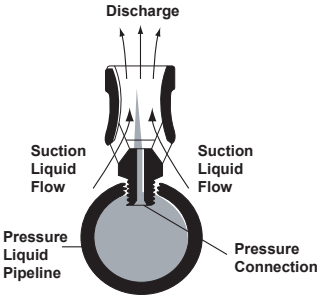

Fig. 15. FIG. 268 TANK MIXING EDUCTOR.
This design is used for 3/8" (3 3/4" overall length and 1 3/4" overall width), and 3/4" (5 1/4" overall length and 2 3/8" overall width) pressure connection sizes. It is threaded directly into threads tapped into the 1 1/2" diameter or larger pressure liquid pipeline. It is cast in one piece and is stocked in cast iron, bronze and 316 stainless steel. Other materials can be supplied on special order.



Fig. 17. FIG. 268 TANK MIXING EDUCTOR. 1 1/2" size and over.

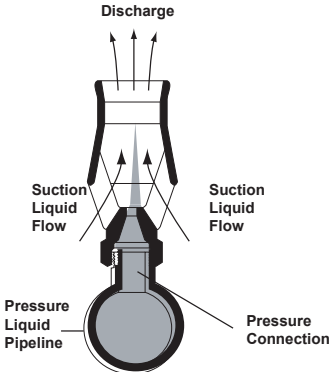

Fig. 16. FIG. 268 TANK MIXING EDUCTOR.
This design is used for 1 1/2" (8 7/8" overall length x 4 1/8" overall width), 2" (12 1/4" overall length x 5 7/8" overall width) and 3" (17" overall length x 8 1/8" overall width) pressure connection sizes. All are cast in one piece and have female thread connections for installation on nipples welded into the pressure liquid piping. The 1 1/2" and 2" sizes are stocked in cast iron, bronze, and 316 stainless steel. The 3" size is stocked in cast iron and stainless steel only. Other materials can be supplied on special order.

Fig. 254 and Fig. 267 and Fig. 227 Hopper-Equipped Eductors

Fig. 254 and Fig. 267 Hopper-Type Eductors are made for handling slurries or dry solids in granular form and are used extensively for ejecting sludges from tank bottoms, for pumping sand from filter beds and for washing and conveying granular materials. Typical materials handled include: borax, charcoal, diatomaceous earth, lime, mash, fly ash, rosin, rock and granulated salt, sand, dry sawdust, light soda ash, dry sodium nitrate, powdered sulphur, wheat and many others.

A typical application of Fig. 254 Eductor is shown in the application section of this bulletin, beginning on page 12. the material from adhering to the sides of the hopper and keep it moving down into the eductor. Pressure water, passing through the eductor nozzle, entrains the sand, sludge or other materials and discharges into the piping system.

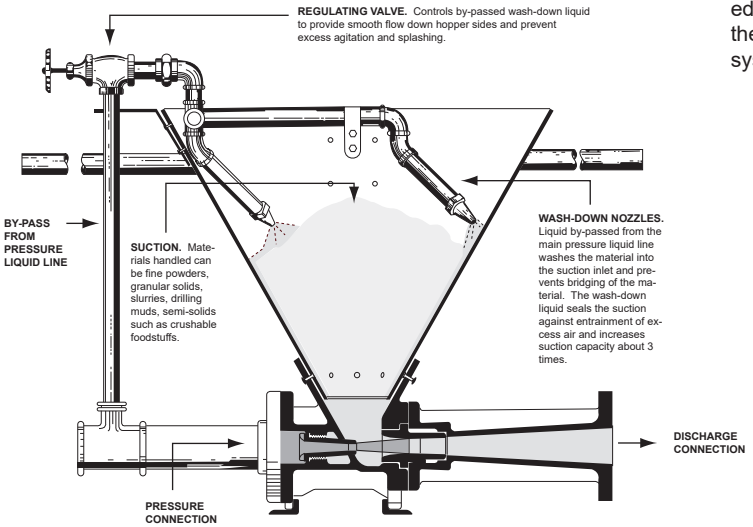

Fig. 18. FIG. 254 HOPPER-EQUIPPED EDUCTOR.
Standard units are made in cast iron and have hardened steel nozzles and throat bushings. Special materials are also available on special order. Both nozzles and throat pieces are removable and pressure and discharge connections can be fitted for hose where maximum portability is desired. Handles and supporting feet are optional.

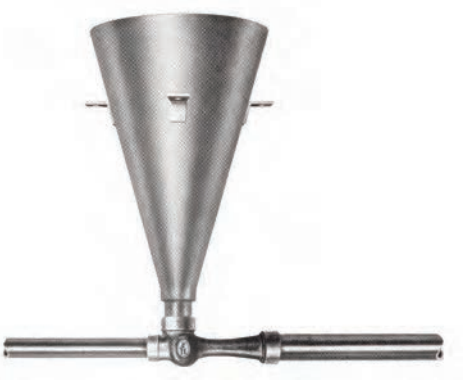

Fig. 19. FIG. 267 HOPPER-EQUIPPED EDUCTOR.
This economical unit is available from stock with body and nozzle in cast iron, bronze, 316 stainless steel, Kynar and PVC. Hoppers are stocked in Type 304 stainless steel (1, 1 1/2 & 2" sizes) and are also available in galvanized steel, brass, aluminum and PVC.

Table 6. Sizes and Dimensions, Fig. 254(1) and Fig. 267(2) Hopper-Equipped Eductors

Size in Inches	Connection (Inches)		Dimension (Inches)			
	Disch.	Press.	A	B	C	D
FIG. 254(1)						
1 1/2	1 1/2	1 1/2	13 1/4	11 1/2	18	15 1/4
2	2	2	14 1/2	13 3/4	21	17 3/4
3	3	2 1/2	17 3/4	17 1/2	23 3/8	19 3/4
4	4	4	19 5/8	24 3/16	27	22 1/2
6	6	6	28 1/16	36 7/16	38	28 5/16
FIG. 267(2)						
1	1	3/4	1 1/2	4 3/16	24	42
1 1/2	1 1/2	1	2	6 1/2	24	41 1/2
2	2	1 1/4	2 1/4	7 5/8	24	41
2 1/2	2 1/2	1 1/2	2 11/16	9 1/4	24	41 1/4
3	3	2	3 1/8	11 1/4	24	40 3/4

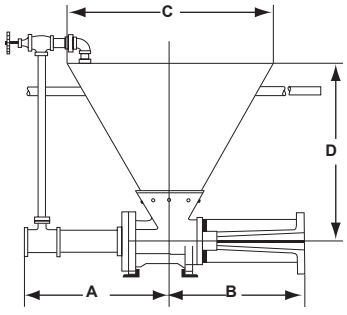

Fig. 254(1)

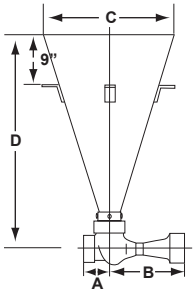

Fig. 267(2)

Fig. 227 Hopper-Equipped Eductor

Furnished with a stainless steel funnel, the eductor can be made of any machinable material. Bronze units up to and including 3" and cast iron units up to and including 4" sizes are available from stock. Prices, delivery or a sectional outline drawing 67-XS-081-J will be furnished on request. Stainless steel funnels are stocked in 1-1/4", 1-1/2" and 2" sizes.

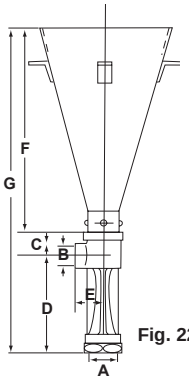

Fig. 227

Table 227. Sizes and Dimensions of Fig. 227 Hopper-Equipped Eductor

Dimensions in Inches							Wgt. (Lbs)
A	B	C	D	E	F	G	
1 1/4	3/4	1 9/16	6 7/16	1 13/16	39 5/8	47 5/8	31
1 1/2	3/4	2	8 13/16	2	39 1/4	50	36
2	1	2 1/2	9 1/8	2 1/4	38 1/2	49 7/8	45
2 1/2	1 1/4	2 3/4	11 1/4	2 3/8	37 7/8	51 7/8	51
3	1 1/2	3 1/16	13 5/16	2 3/4	37	53 3/8	58
4	2	3 5/8	17 1/16	3 3/16	35 1/2	56 3/16	70

Fig. 224 Water Jet Sand and Mud Eductor

Fig. 224 Water Jet Sand and Mud Eductors are used in pumping out wells, pits, tanks, or sumps where there is an accumulation of sand, mud, or other material not easily handled by the standard eductor. They are ideal for handling the heavy sludge residue from refining operations. A typical application of a Fig. 224 Eductor is shown in the application section beginning on page 12.

These eductors have an open suction and are designed to be submerged in the material being handled. The pressure liquid, passing through the nozzle, produces a high velocity jet which entrains the sludge or mud. This mixture is then discharged through a vertical pipe or hose. For performance information, see Bulletin 2M Supplement.

Similar units which use steam as the motive power are described in Bulletin 2A under “Fig. 225 Syphons”.

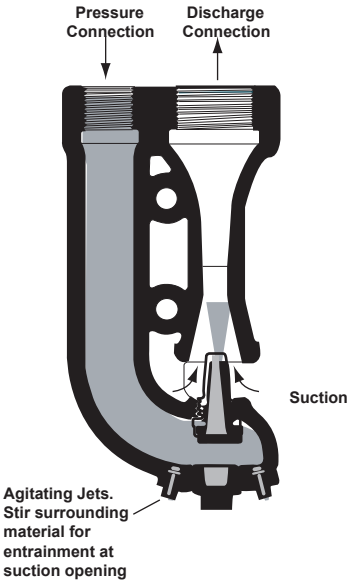

Fig. 20. FIG. 224 WATER JET SAND AND MUD EDUCTOR.
Standard units are made of cast iron with bronze pressure nozzles. Other corrosion-resistant materials are available on special order.



Fig. 21. FIG. 224 EDUCTOR.

Table 7. Sizes and Dimensions, Fig. 224 Sand and Mud Eductor

Size in Inches	Connections in Inches		Wgt in Lbs.	Dimensions in Inches	
	Disch.	Pressure		A	B
1 1/2	1 1/2	1	8	9 3/8	4 5/8
2 1/2	2 1/2	2	42	16 3/4	7 7/8
3	3	2 1/2	87	21 7/8	10 1/4
4	4	3	130	25 1/2	11
5*	5	4	-	30 1/4	17 3/8
6*	6	4	-	35 5/16	18

*Flanged Connections.

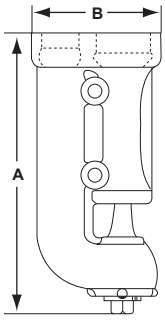

Fig. 235 Annular Multi-Nozzle Water Jet Eductor

Fig. 235 Annular Multi-Nozzle Water Jet Eductors are designed to handle solids and semi-solids. They operate at highest efficiency in large sizes and at low discharge heads. Because these eductors have high air handling capacities, they are particularly well suited for priming large pumps such as dredging pumps which frequently encounter air pockets.

Nozzles on the periphery of the throat introduce the pressure water. The pressure water creates a vacuum which draws in and entrains the material being handled and all flow discharges through the discharge connection. All suction flow is in a straight line through the eductor. For performance information, see Bulletin 2M Supplement.

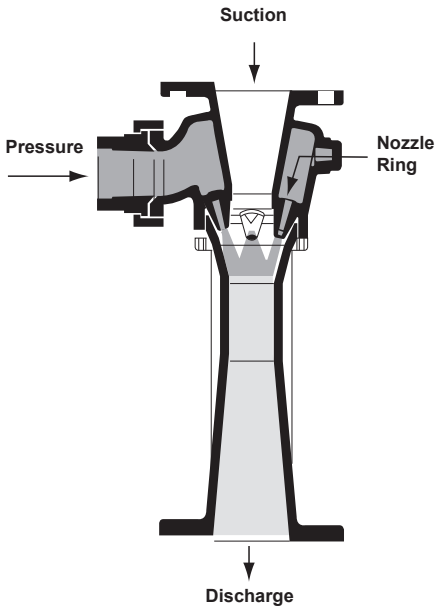

Fig. 22. FIG. 235 ANNULAR MULTI-NOZZLE WATER JET EDUCTOR.
These eductors are made to order from any workable material. Sizes from 1 1/2" to 6" are cast with flanged suction, discharge and pressure connections, except 2" size which has sil-brazed pressure connection. Sizes above 6" (to 28" and up) are generally fabricated.

Table 8. Sizes and Dimensions, Fig. 235 Annular Multi-Nozzle Water Jet Eductor

Size in Inches	Connections in Inches		Wgt. In Lbs.	Dimensions in Inches		
	Suction Disch.	Pressure		A	B	C
1 1/2	1 1/2	1	16	2 7/8	8 7/16	3 3/8
2	2	1 1/4	22	3 1/8	11 7/8	3 3/4
2 1/2	2 1/2	1 1/2	27	3 1/4	12 5/16	4
4	4	2 1/2	65	4 1/8	18 11/16	5 1/8
5	5	3	100	4 5/8	24 7/16	6
6	6	4	150	5 1/4	30	7 1/4

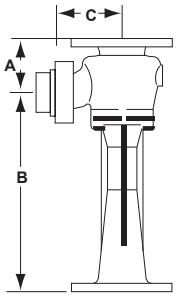



Fig. 23. FIG. 235 EDUCTOR.
(2" size with sil-brazed connection).

Special Purpose Eductors

The special-purpose eductors illustrated here are similar in operation to the basic Fig. 264 Eductor described on page 3.



Fig. 24. FIG. 222 PORTABLE EDUCTOR.
Is designed for use as an auxiliary with a pump where the suction lift is too great for the pump alone. Made of anodized aluminum, bronze or other materials as required.



Fig. 25. FIG. 212 CORROSION RESISTANT EDUCTOR.
Is made of Phenolic Fiberglass Reinforced Plastic (FRP). Body is of one-piece construction.

TYPICAL APPLICATIONS OF S&K WATER JET EDUCTORS

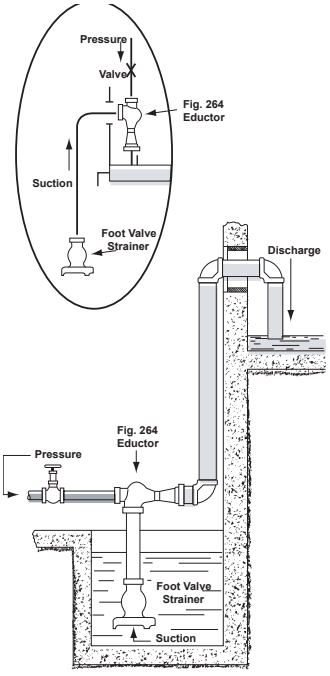

Fig. 26. FIG. 264 EDUCTOR USED TO EMPTY TANKS.
Water jet eductors are often used to empty tanks or to pump out sumps, penstocks, cellars, and the like. The pressure line should be fitted with a regulating stop valve and a pressure gauge while the suction line should be provided with an S&K Strainer. Discharge lines should be sealed for a positive pick-up of the liquid by turning the discharge line up or by submerging the end of the discharge line. It is recommended that the eductor be installed a short distance above the liquid to be handled and that short suction lines be used. Eductors will operate with long suction lines, as shown in the line drawing, however, with suction lifts greater than 15', capacities are reduced considerably. When handling hot liquid the eductor must be arranged with a short suction line or must be submerged.

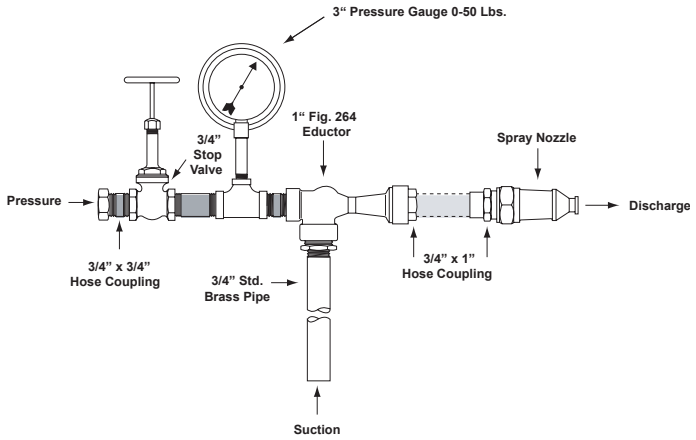

Fig. 27. FIG. 264 EDUCTOR USED IN MIXING LIQUIDS.
This illustration shows a typical arrangement used in mixing liquids such as chemicals or fertilizers in proportion for spraying. The solution to be applied is mixed in a container in approximately twice the strength at which it is to be used. The water jet proportioning apparatus is operated by a jet of high pressure water and is controlled by a 3/4" stop valve. A 3" pressure gauge indicates pressure. The jet action of the pressure water draws the solution from the container and the water and solution are mixed in the throat of the eductor and are discharged through a standard 3/4" hose to a spray nozzle. Solids can be handled and sprayed through a non-clogging type spray nozzle.

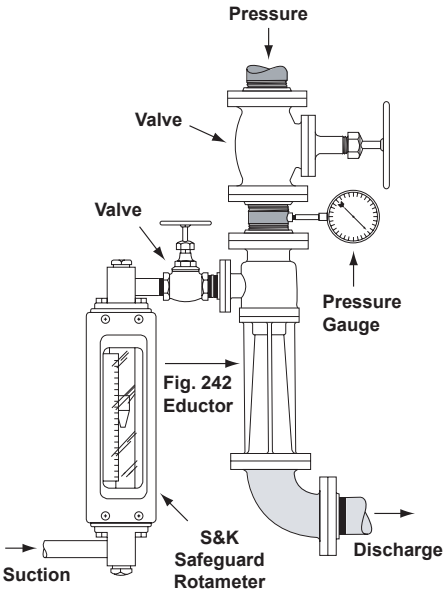

Fig. 28. FIG. 242 EDUCTOR USED IN TYPICAL PROPORTIONING SYSTEM.
This shows a typical proportioning system using a Fig. 242 Eductor. Rate of flow is measured by a Rotameter and is controlled by a valve in the line. A valve in the pressure line and orifice of the eductor nozzle control the flow of the pressure liquid. Fluids are thoroughly mixed in the desired proportions and are then discharged.

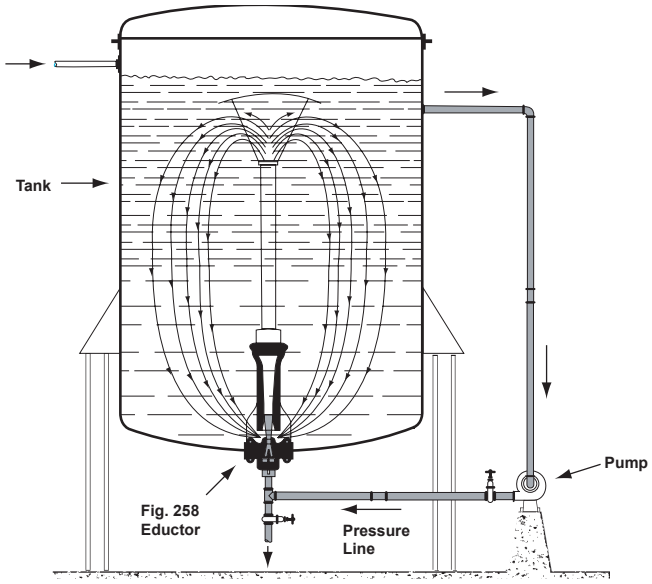

Fig. 30. FIG. 258 EDUCTOR IN BATCH MIXING APPLICATION.
This illustrates the batch mixing of two or more liquids with an S&K Fig. 258 Eductor. The pressure liquid, taken from the top of the tank is passed through a pump to the eductor. The jet action of this fluid entrains the liquid at the bottom of the tank and proper mixing results.

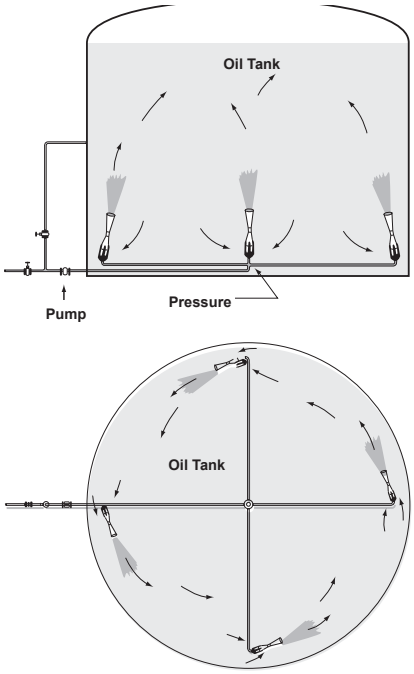

Fig. 29. FIG. 258 EDUCTORS FOR TANK BLENDING OF OILS.
For the tank blending of oils, the arrangement shown has proved highly satisfactory. In this particular installation five 8" Fig. 258 Eductors are used in a 100' tank. Initially, the eductors are used to fill the tank during which time they provide continuous agitation. After the tank is filled, the oil is drawn off and recirculated by means of the same pumps. Oil from the top of the tank issues through the eductor nozzle and entrains oil from the bottom of the tank. The two are mixed in the throat of the eductor and are discharged with sufficient force to maintain constant agitation and further blending in the tank.

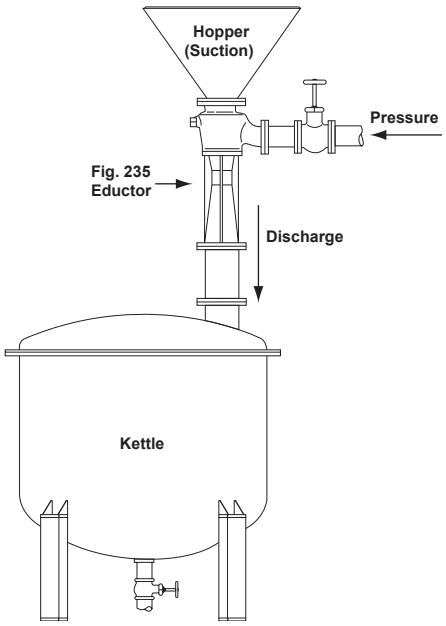

Fig. 31. FIG. 235 EDUCTOR USED IN MIXING DRY POWDER.
Mixing dry powder and a liquid prior to discharge into a tank is accomplished through the use of a Fig. 235 Eductor as shown here.
Pressure liquid enters the eductor, entrains the powder, mixes the two in the venturi of the eductor and discharges the mixture into a receptacle. The streamline eductor design provides maximum efficiency in this operation.

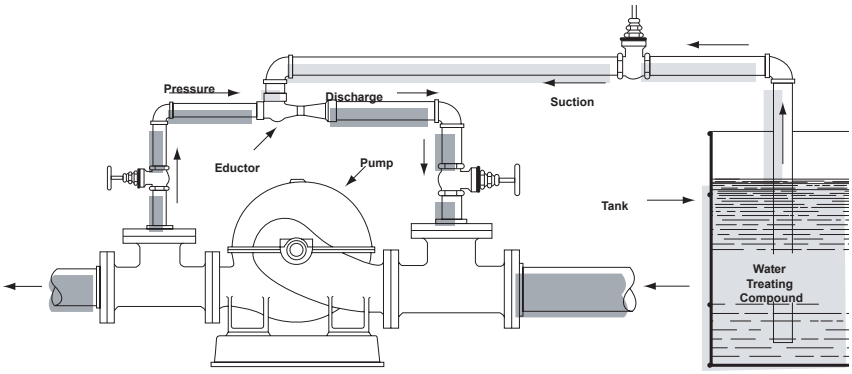

Fig. 32. FIG. 264 OR FIG. 265 WATER JET EDUCTORS USED TO ENTRAIN ANOTHER LIQUID.
This illustration shows a Fig. 264 or Fig. 265 Eductor being used to introduce a water treating compound into boiler feed water. A portion of the water issuing from the pump is bypassed into the eductor where it acts as the pressure medium to draw in and entrain the water treating compound.

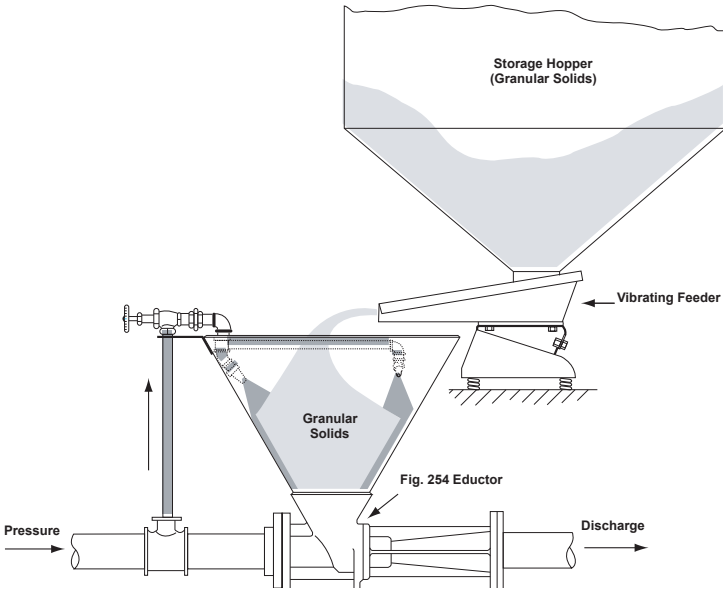

Fig. 33. APPLICATION OF FIG. 254 SOLIDS/LIQUID HOPPER EDUCTOR.
One arrangement for handling granular solids with the Fig. 254 Eductor is illustrated here. In this installation, granular solids drop from a storage hopper into a vibrating feeder which feeds the solids into the eductor hopper at a controlled rate. Water, bypassed from the pressure line, flows through nozzles located in the hopper and washes the solids into the eductor. There they are entrained by the jet action of the pressure water and are discharged. Although the material can be placed in the hopper manually, this system reduces handling and controls the flow of solids.

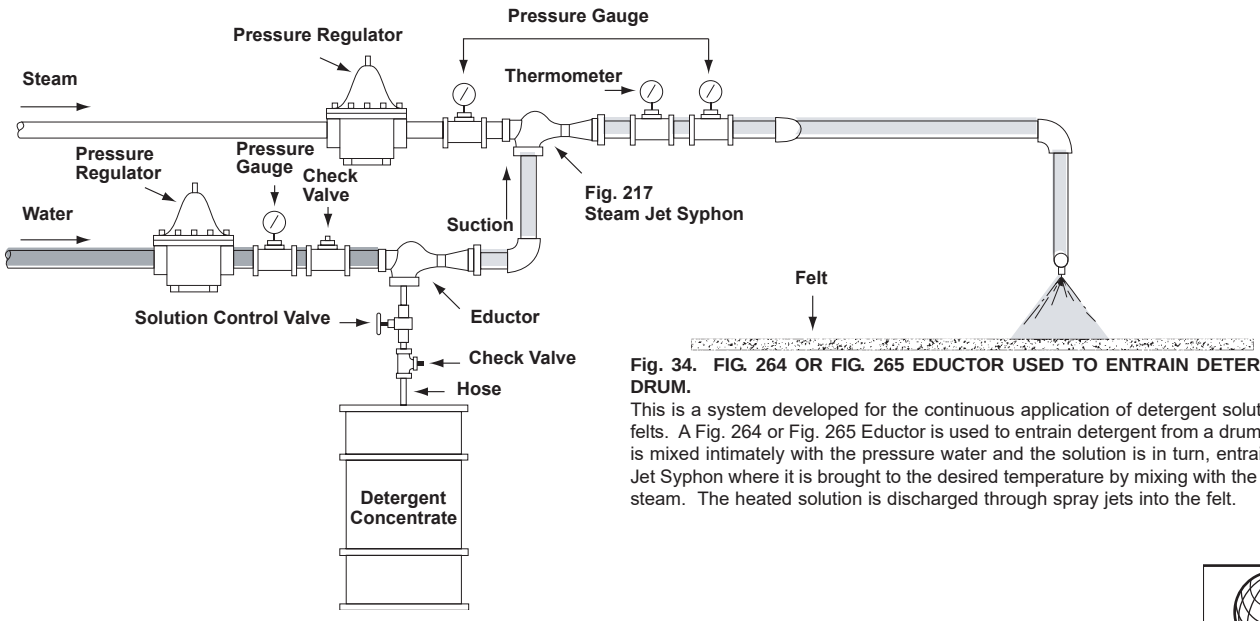

Fig. 34. FIG. 264 OR FIG. 265 EDUCTOR USED TO ENTRAIN DETERGENT FROM A DRUM.
This is a system developed for the continuous application of detergent solution to paper mill felts. A Fig. 264 or Fig. 265 Eductor is used to entrain detergent from a drum. This detergent is mixed intimately with the pressure water and the solution is in turn, entrained by a Steam Jet Syphon where it is brought to the desired temperature by mixing with the syphon's motive steam. The heated solution is discharged through spray jets into the felt.

ISO 9001 Certified

CS-650-600 : Identification sheet

VWTC PROJECT NUMBER:	Iqaluit WWTP	REV:	01
PROJECT NAME:	5000218036	SUBMITTED TO (COMPANY):	
ENGINEER:	G. HÉBERT	SUBMITTED TO (RESPONSIBLE)	
PROJECT MANAGER:	C. BEKAERT	PROJECT NUM REFERENCE.:	
PHONE NUMBER:		LOT NUMBER:	

SUPPLIER	EQPT CODE	EQPT TAG NO	DIA	DESCRIPTION	INFO 1	INFO 2	INFO 3	APPLIC.	NOTE	REV
KOFLO	FPMIPV202516	SM-04-719	Dia.= 1-1/2	HP-250 MIXER	STATIC MIXER / MANUFACTURER : KOFLO / MODEL : / 1.5-40C-4-6-21-1/2"	N/A	N/A	HP-250		1

This page is intentionally left blank

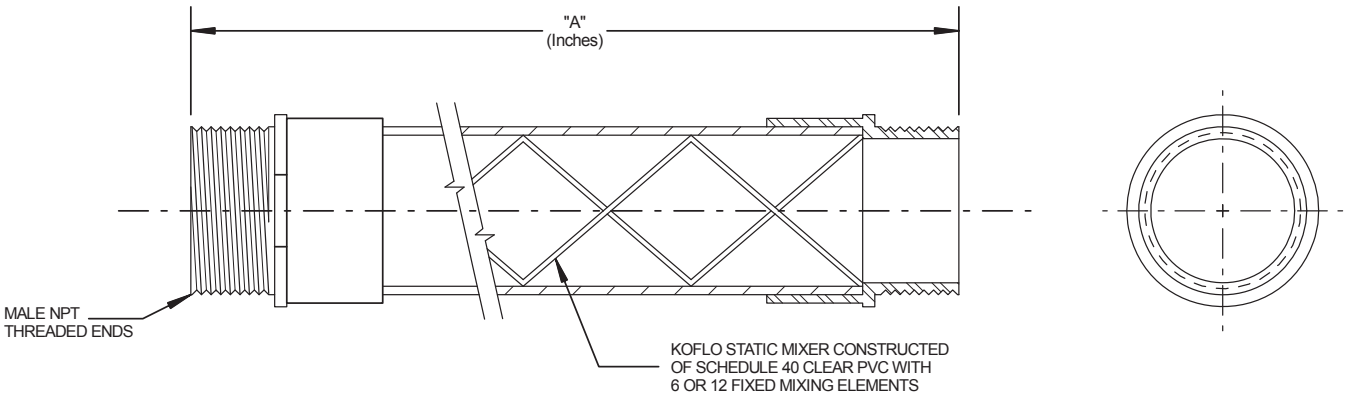

Size	6 Element Model Number	"A" 6 Element	12 Element Model Number	"A" 12 Element
3/8"	3/8-40C-4-6-2	6-1/2	3/8-40C-4-12-2	11
1/2"	1/2-40C-4-6-2	7	1/2-40C-4-12-2	12
3/4"	3/4-40C-4-6-2	9	3/4-40C-4-12-2	15
1"	1-40C-4-6-2	11	1-40C-4-12-2	18
1-1/4"	1.25-40C-4-6-2	14	1.25-40C-4-12-2	25
1-1/2"	1.5-40C-4-6-2	15	1.5-40C-4-12-2	28
2"	2-40C-4-6-2	19	2-40C-4-12-2	35

Koflo Corporation
309 CARY POINT DR.
CARY, IL 60013

SCALE: NONE	APPROVED BY JJ7	DRAWN BY NJF
DATE: 1/18/94		REVISED 10/15/01
CUSTOMER:		REVISED 5/22/08
		REVISED 6/12/09
MODEL NO: CLEAR PVC SCHEDULE 40 MIXER		DRAWING NUMBER: KD-993

This page is intentionally left blank

CS-910-501 : Identification sheet

VWTC PROJECT NUMBER:	Iqaluit WWTP	REV:	01
PROJECT NAME:	5000218036	SUBMITTED TO (COMPANY):	
ENGINEER:	G. HÉBERT	SUBMITTED TO (RESPONSIBLE)	
PROJECT MANAGER:	C. BEKAERT	PROJECT NUM REFERENCE.:	
PHONE NUMBER:		LOT NUMBER:	

SUPPLIER	EQPT CODE	EQPT TAG NO	DIA	DESCRIPTION	INFO 1	INFO 2	INFO 3	APPLIC.	NOTE	REV
ENVIREQUIP	CMSPMI319897	MXR-04-760	N/A	HP-250 MIXER	HP250 (2016) MIXER // Manuf : Envirequip // Model : EVG01-0.3 // Mtl : 304L SS	Impeller Dia : 11.75" // 180,19 RPM // Shaft lg : 23.125"	Nord Motor 0.33 HP / 575/3/60	HP-250		1

This page is intentionally left blank

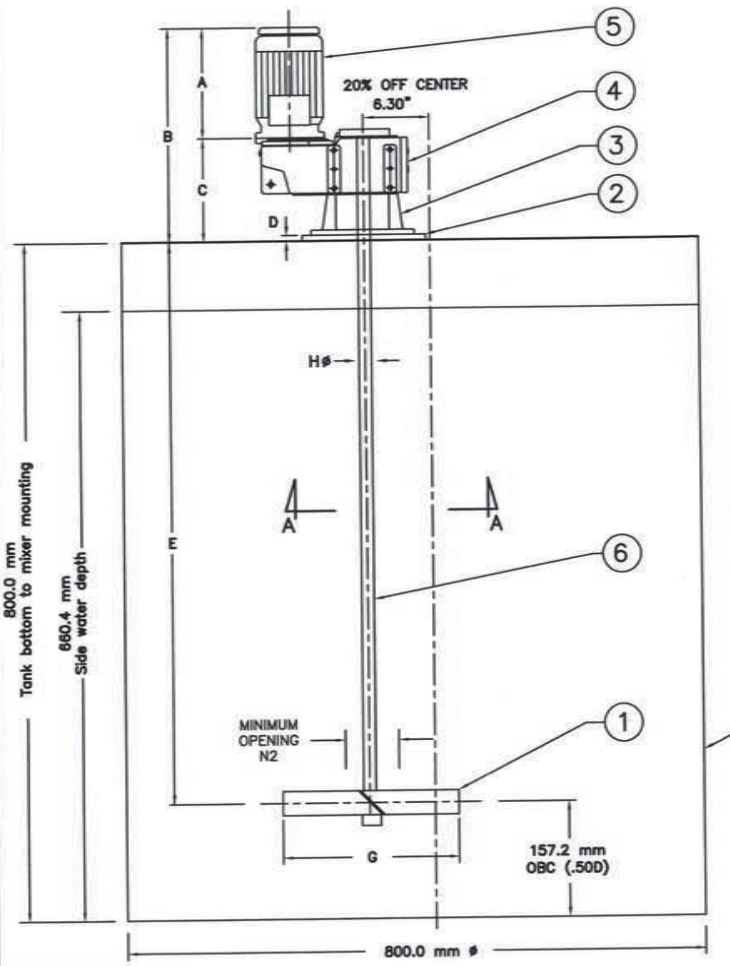

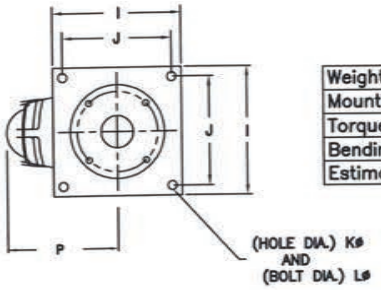

"A–A"

ITEM	DESCRIPTION	MATERIAL
1	Axial impeller (P–4) 314.3 mm (12.375") ø ● 45.0°	304L
2	Base 304.8 mm x 304.8 mm (12.0" X 12.0")	Steel
3	Pedestal <B5 Flange>	
4	NORD Reducer 181.19 RPM	
5	NORD motor 0.33 Hp, 575/3/60, TEFC	
6	Shaft: (1) section 642.9 mm (25.312") ● 1.25"ø	304L

APPL'N: POLYMER (QTY 1)
MIX–TECH MIXERS
MODEL: EVG01–0.33
0.25 kW ● 181.19 RPM
S/N:
Rotation: Clockwise
Thrust: Down
Tag #:

Weight: 65 Lbs
Mounting loads
Torque reaction = 289 in lb
Bending moment = 309 in lb
Estimated beam: 7C ● 9.8 # up to 4 ft.

ST #: 910–501
LATIS #: CMSPMI319897

HP 250

NO	DATE	REVISION	P/B

PROJET/PROJECT
EVG01–0.33/304/575 (CIRT)

ENVIREQUIP WTEM INC.

TITRE/TITLE
"MIX–TECH" Mixers
Veolia Water Technologies
EVG SERIES

DESSINÉ PAR/ DRAWN BY: PJ	DATE: August 2015
DESS. NO/ DWG NO.: EVG	ECH./SCALE: N.T.S
VÉRIFIÉ PAR/ CHECKED BY: PJ	PROJ.NO:
APPROUVÉ PAR/ APPROVED BY: RJ	REV.: 00

Ce dessin et l'information qu'il contient est la propriété de ENVIREQUIP WTEM inc. Il est interdit de le copier, le photographier, l'imprimer, le prêter ou de l'utiliser sans la permission de ENVIREQUIP WTEM inc.

This drawing and the information contained thereon is the property of ENVIREQUIP WTEM inc. It is not to be printed, photographed, copied, loaned or used without the permission of ENVIREQUIP WTEM inc.

Dimensions: Inches

MOD.:	A	B	C	D	E	E2	F	Gø	Hø SHAFT	I	J	Kø	Lø	M	N2	P
EVG01	8.12	13.98	5.36	.50	25.312	–	–	12.37	1.25	12.0	10.5	.562	.50	–	6.25	6.0

Dimensions: mm

MOD.:	A	B	C	D	E	E2	F	Gø	Hø SHAFT	I	J	Kø	Lø	M	N2	P
EVG01	206.2	355.1	136.1	12.7	642.9	–	–	314.3	31.8	304.8	266.7	14.3	12.7	–	158.8	152.4

This page is intentionally left blank

CS-910-400 : Identification sheet

VWTC PROJECT NUMBER:	Iqaluit WWTP	REV:	01
PROJECT NAME:	5000218036	SUBMITTED TO (COMPANY):	
ENGINEER:	G. HÉBERT	SUBMITTED TO (RESPONSIBLE)	
PROJECT MANAGER:	C. BEKAERT	PROJECT NUM REFERENCE.:	
PHONE NUMBER:		LOT NUMBER:	

SUPPLIER	EQPT CODE	EQPT TAG NO	DIA	DESCRIPTION	INFO 1	INFO 2	INFO 3	APPLIC.	NOTE	REV
WAM	CMSPGU320680	PAG-04-720, PSF-04-730	N/A	HP-250 FEEDER	SCREW FEEDER // Manuf : WAM // Model : MBF/073.A/TT/UD4.SST.UO2/F.0.Q.+.++++.++++ Feeding rate: 2,3 Liter/min at 25 rpm For material: dry polymer powder, approx.. 0.8 Kg/Ltr Blending tool: nbr. 1, plowshare shape	Feeding screw: nbr. 4, full flighting on pipe, SS304 Drive blending tool: varvel gear box ratio 1:40 Drive feeding screw: varvel gear box ratio 1:70 Shaft sealing: SS with	Baldor 0.75 HP blending tool motor 1750rpm Baldor 0.5 HP feeding screw motor 1750rpm Nema 056, 575V-60Hz, Inverter duty Discharge tube :MDXSC24	HP-250		1

This page is intentionally left blank

WAM®

WAMGROUP

1

TECHNICAL CATALOGUE

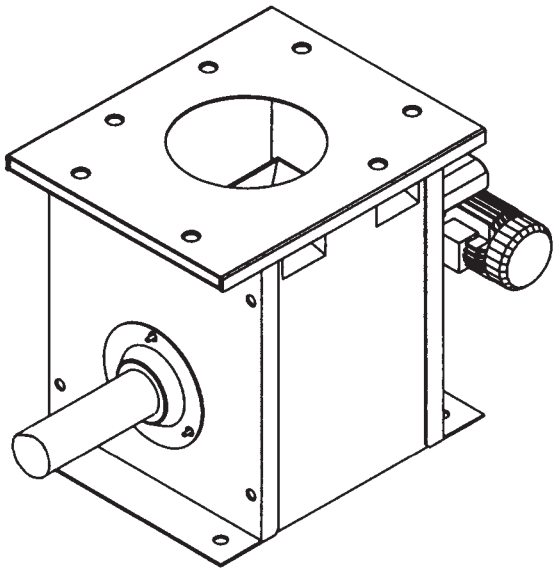

MBF

- **MICRO - BATCH FEEDERS**
  TECHNICAL CATALOGUE
- ***MIKRODOSIERER***
  TECHNISCHER KATALOG
- **MICRODOSEURS**
  CATALOGUE TECHNIQUE
- ***MICRODOSATORI***
  CATALOGO TECNICO

All rights reserved © WAMGROUP S.p.A.

CATALOGUE No.		VAL.062.-.T.4L	CREATION DATE
ISSUE **A17**	CIRCULATION **100**	DATE OF LATEST UPDATE **02.11**	**03.00**

All the products described in this catalogue are manufactured according to **WAMGROUP S.p.A. Quality System procedures**. The Company's Quality System, certified in July 1994 according to International Standards **UNI EN ISO 9002** and extended to the latest release of **UNI EN ISO 9001**, ensures that the entire production process, starting from the processing of the order to the technical service after delivery, is carried out in a controlled manner that guarantees the quality standard of the product.

*Alle in diesem Katalog beschriebenen Produkte werden gemäß dem **Qualitätssystem der WAMGROUP S.p.A.** hergestellt. Das im Juli 1994 gemäß der internationalen Norm **UNI EN ISO 9002** und auf die neueste Version der **UNI EN ISO 9001** erweiterte, zertifizierte Qualitätssystem der Firma gewährleistet, dass der gesamte Produktionsprozess von der Auftragsbearbeitung bis zum technischen Kundendienst nach Lieferung in kontrollierter Art und Weise erfolgt, so dass der Qualitätsstandard des Produkts gewährleistet ist.*

Tous les produits décrits dans ce catalogue sont fabriqués selon les procédures du **Système de Qualité de WAMGROUP S.p.A.**, certifié en Juillet 1994 selon les normes internationales **UNI EN ISO 9002** et étendu à la dernière version de la norme **UNI EN ISO 9001**. Cela garantit que le processus de production, à partir de la gestion de la commande au service technique après-vente, est effectué de manière contrôlée garantissant la norme de qualité du produit.

*Tutti i prodotti descritti nel catalogo sono stati realizzati secondo le **procedure del Sistema Qualità di WAMGROUP S.p.A.** Il Sistema Qualità aziendale, certificato dal luglio 1994 in conformità alle normative internazionali **UNI EN ISO 9002** e successivamente esteso all' ultima versione delle normative **UNI EN ISO 9001**, garantisce che l'intero processo produttivo, dalla formulazione dell'ordine fino all'assistenza tecnica dopo la consegna, si svolga secondo modalità controllate che garantiscono lo standard qualitativo del prodotto.*

This publication cancels and replaces any previous edition and revision.
We reserve the right to implement modifications without notice.
This catalogue cannot be reproduced, even partially, without prior written consent by the Manufacturer.

Diese Veröffentlichung storniert und ersetzt alle früheren Ausgaben und überarbeiteten Fassungen.
Wir behalten uns das Recht vor, Änderungen ohne vorherige Information durchzuführen.
Dieser Katalog darf selbst auszugsweise nicht ohne das schriftliche Einverständnis der Herstellers vervielfältigt werden.

Cette publication annule et remplace toute édition et révision antérieure.
Nous nous réservons le droit de mettre en place des modifications sans préavis.
Aucune reproduction, partielle ou intégrale du catalogue, ne pourra être faite sans l'accord préalable et écrit du Fabricant.

Questa pubblicazione annulla e sostituisce le edizioni e revisioni precedenti.
Ci riserviamo la facoltà di apportare modifiche senza preavviso.
Il presente catalogo non può essere riprodotto, nemmeno parzialmente, senza previo consenso scritto del Costruttore.

1 TECHNICAL CATALOGUE — **TECHNISCHER KATALOG**

DESCRIPTION AND TECHNICAL CHARACTERISTICS ... BESCHREIBUNG UND TECHNISCE MERKMALE ... **T. 6 → .23**
ORDER CODES ... BESTELLCODES ... **24 → .27**
ACCESSORIES ... ZUBEHÖR ... **28 → .42**
OPERATION AND MAINTENANCE ... BETRIEBS- UND WARTUNGSANLEITUNG ... **43**
INQUIRY AND ORDER FORM ... ANFRAGE- UND BESTELLBLATT ... **44**

1 CATALOGUE TECNIQUE — **CATALOGO TECNICO**

DESCRIPTION ET CARACTERISTIQUES TECHNIQUES ... DESCRIZIONE E CARATTERISTICHE TECNICHE ... **T. 6 → .23**
CODES DE COMMANDE ... CODICI DI ORDINAZIONE ... **24 → .27**
ACCESSOIRES ... ACCESSORI ... **28 → .42**
UTILISATION ET ENTRETIEN ... USO E MANUTENZIONE ... **43**
QUESTIONNAIRE ... MODULO DI RICHIESTA ... **44**

2 MAINTENANCE CATALOGUE — **WARTUNGSKATALOG**

OPERATION AND MAINTENANCE ... BETRIEBS- UND WARTUNGSANLEITUNG ... **M. 4 → .24**

2 CATALOGUE D'ENTRETIEN — **CATALOGO DI MANUTENZIONE**

UTILISATION ET ENTRETIEN ... USO E MANUTENZIONE ... **M. 4 → .24**

3 SPARE PARTS CATALOGUE — **ERSAITZTEILKATALOG**

SPARE PARTS ... ERSATZTEIL ... **R. 4 → .12**

3 CATALOGUE PIECES DE RECHANGE — **CATALOGO RICAMBI**

PIECES DE RECHANGE ... PEZZI DI RICAMBIO ... **R. 4 → .12**

CODES - *CODEBEZEICHNUNGEN* - SIGLES - *SIGLE*

MBF	Micro batch feeder	Mikrodosierer	Microdoseur modulaire	Microdosatore per polveri
MDXCR	Round cover	Runde Abdeckung	Couvercle rond	Coperchio tondo
MDXGS	Cutter grille for square hopper	Quadratischer Aufreißgrill	Grille carré	Griglia quadrata
MDXSV	Vertical spout	Ablaufrohr	Sortie verticale	Scarico verticale
MDXTR	Round hopper	Runder Aufgabetrichter	Trémie ronde	Tramoggia verticale
MDXTS	Square hopper	Quadratischer Aufgabetricher	Trémie carrée	Tramoggia quadrata
UTD	Metering screw	Dosierwerkzeug	Outil dosage	Utensile dosaggio
UTO	Blending tool	Homogenisierwerkzeug	Homogénéisateur	Utensile omogenizzazione
MBT	Seal	Wellenabdichtung	Etanchéité	Tenuta
MBTP	Extendend pipe	Verlängert Innenrohr	Tube rallongé	Tubo prolungato
MBPR	Linerfeeder pipe	Dosierrohr mit innernaiskleidung	Tube de dosage avec revetement interieeur	Scarico rivestito internamente
MBPI	STD inspection hatch	STD inspektionstür	Trappe de visite	Portello di ispezione
MBPIP	Inspection hatch with extended tube	Inspektionstür mit länglichrohr	Trappe de visite avec tube prolonge	Portello di ispezione con tubo prolungato

MBF micro-batch feeders are used in gravimetric and volumetric dosing plants for powders and granular materials of various kinds. The body is made of WAM®'s engineering polymers SINT®ER ,SINT®AL or AISI 304L/316L, while all other feeder parts including nuts and bolts are made of staimless steel 304.

On request micro-batch feeders are supplied in a food-grade version.

Unless otherwise specified, all the dimensions are given in millimetres.

MBF Mikrodosierer werden in gravimetrischen und volumetrischen Dosieranlagen von Pulvern und Granulaten aller Art eingesetzt. Das Gehäuse besteht aus den Polymeren SINT®ER, SINT®AL oder edelstahl 1.4301/1.4401. Alle anderen Komponenten einschließlich Schraubenmaterial sind aus Edelstahl 1.4301.

Auf Wunsch ist eine nahrungsmitteltaugliche Version lieferbar.

Wenn nicht anders angegeben, alle Maßangaben in Millimetern.

Les microdoseurs MBF sont utilisés dans toutes les installations de dosage à poids ou volumétriques pour les plus divers matériaux en poudre ou granulés. Le corps est construit en SINT®ER, SINT®AL ou AISI 304L/316L. Les autres composants sont en acier inox 304L, boulonnerie comprise.

Sur demande le microdoseur est fourni en version indiquée pour des produits alimentaires.

Sauf indication contraire, toutes les dimensions sont exprimées en millimètres.

I microdosatori MBF sono utilizzati in tutti gli impianti di dosaggio a peso o volumetrici per polveri e materiali granulari di vario tipo. Il corpo è costruito in SINT®ER, SINT®AL o AISI 304L/316L, mentre le altre parti sono in AISI 304L, bulloneria compresa.

Su richiesta, queste macchine possono essere fornite idonee per prodotti alimentari.

Se non specificato altrimenti, tutte le dimensioni sono in millimetri.

FINISHING - *FINISH* - FINITION - *FINITURE*

End plate	Endschild	Bride d'extremité	Frontale	**AISI 304L EDELSTAHL 1.4301**
Drive support	Antriebshaltung	Plaque de fixation	Piastra d'attacco	**ALUMINIUM ALLUMINIO**
Reducer	Getriebe	Reducteur	Riduttore	**ALUMINIUM ALLUMINIO**
Speed variator	Regelgetriebe	Variateur	Variatore	**RAL 5010**
Motor	Elektromotor	Moteur	Motore	**RAL7001**

SELECTION CRITERIA - *AUSWAHLKRITEREN* - CRITERES DE CHOIX - *CRITERI DI SCELTA*

CF = [dm³/ J] = theoretical capacity per hour at 1 RPM.
CE = [dm³/ h] = real capacity of MBF
CR = [dm³/ h] requested capacity.
CT = [dm³/ h] theoretical capacity
N = [RPM] = metering screw speed.
mvs = material efficiency

Given:
- the characteristics of the material to be handled, the application and the feeding system into the microbatch feeder;
- CR (=capacity requested by customer), in order to choose correct MBF type proceed as follows:
- Check from material table mvs and all other important characteristics (e.g. metering screw type, accessories, others)
- Calculate real capacity CE of standard MBF (with fixed or variable speed as required by customer)

CE = CT x mvs

where for CT refer to page T.10. If difference between CE and CT is too big (that is, if customer does not accept standard MBF) it is necessary to find correct MBF speed in order to obtain the requested capacity, using the following formula:

$$N = \frac{CR}{CF \times mvs}$$

Subsequently, select ratio nearest to specific requirements (see page T.11). In carrying out these calculations it has to be born in mind that mvs given in materials table is empirical. The real value depends on a number of factors which may be difficult to control, such as the condition of the material, atmospheric conditions, height of material column inside the hopper, speed of rotation etc. For material efficiency mvs see pag. T10.

CF = [dm³/J] = theoretische Stundenleistung bei 1 U/min
CE = [dm³/ h] =effektive Dosierleistung MBF
CR = [dm³/ h] = kundenseits geforderte Dosierleistung
CT = [dm³/ h] = theoretische Dosierleistung
N = [Upm] = Drehzahl des Dosierwerkzeugs
mvs = Material-Wirkungsgrad

Gegeben:
- Bezeichnung und Beschreibung des Dosierguts, zu erwartende Betriebs- und Beschickungsart
- CR (= kundenseits geforderte Dosierleistung). Um den MBF-Dosierer korrekt auszulegen, muß nun wie folgt vorgegangen werden:
- Eigenschaften des Dosierguts der Materialtabelle entnehmen z.B. mvs, Dosierwerkzeug, Zubehör etc.)
- Effektive Dosierleistung CE des Standard-Dosierers errechnen (mit fester oder variabler Drehzahl, je nach Kundenwunsch)

CE = CT x mvs

wobei CT wie auf Seite T.10 angegeben. Wenn Differenz zwischen GE und CT zu groß, bzw. Kunde MBF Standard-Dosierer nicht akzeptiert, muß jene Drehzahl gefunden werden, bei welcher der Dosierer die kundenseits geforderte Stundenleistung erbringt. Hierzu ist folgende Formel zu verwenden :

$$N = \frac{CR}{CF \times mvs}$$

Demzufolge wählt man eine Getriebeuntersetzung (siehe Seite T.11), die den Wünschen des Kunden am nächsten kommt. Bei der Ermittlung der vorgenannten Werte ist zu berücksichtigen, daß der in der Materialtabelle aufgeführte Parameter mvs ein rein empirischer Durchschnittswert aus der Summe der bisher gemachten Erfahrungen mit dem jeweiligen Medium ist, welcher im Einzelfall teilweise stark schwankt. In der Tat hängt mvs von mehreren, zum Teil schwer kontrollierbaren Variablen ab (z.B. Zustand des Dosierguts, Witterungseinflüsse, Materialsäule im Aufgabetrichter, Dosierer-Drehzahl etc.). Für Material-Wirkungsgrad siehe Seite T.10.

CF = [dm³/J] = débit horaire théorique pour 1 RPM
CE = [dm³/h] = débit effectif MBF
CR = [dm³/h] débit souhaité par le client
CT = [dm³/h] débit théorique MBF
N = [TPM] = vitesse de rotation de la spire doseuse.
mvs = coefficient du matériau

Donné:
- la description du matériau à doser, le fonctionnement prévu et le système d'alimentation du microdoseur,
- CR (= débit souhaité par le client), là succession correcte des opérations pour la choix d'un microdoseur est la suivante:
- Contrôler dans le tableau des matériaux mvs et toutes les autres caractéristiques impor-tantes (ex.; type de spire doseuse, accessoires, autres)
- Calculer le débit effectif CE du MBF standard (vitesse fixe ou variable suivant la demande du client)

CE = CT x mvs

où CT est à la page T.10. Si la différence entre CE et CT est trop grande (c'est à dire, le client n'accepte pas le MBF standard), il est nécessaire de trouver à quelle vitesse de rotation devra tourner le MBF pour obtenir le débit souhaité par le client. On utilisera la formule:

$$N = \frac{CR}{CF \times mvs}$$

Ensuite il faut choisir (voir page T.11) le rapport qui se rapproche le plus de celui souhaité par le client. A ce point du calcul quoi qu'il en soit, il est nécessaire de tenir compte que mvs figurant dans le tableau matériaux est en realité une donnée empirique obtenue comme une moyenne des résultas de l'expérience passée. Cette donnée peut dépendre en fait de multiple facteurs difficiles à contrôler (ex. état du matériau, conditions atmosphériques, hauteur de la colonne du matériau dans la trémie, vitesse de rotation etc.).
Le coefficient du matériau mvs est indiqué a page T.10.

CF = [dm³/J] = portata teorica oraria per 1 RPM
CE = [dm³/h] = portata effettiva MBF
CR = [dm³/h] = portata richiesta dal cliente
CT = [dm³/h] = portata teorica MBF
N = [RPM] = velocità di rotazione dell'utensile di dosaggio
mvs= efficienza del materiale

Dati:
- la descrizione dei materiale da dosare, il funzionamento previsto e il sistema di alimentazione dei microdosatore,
- CR (= portata richiesta dal cliente), la successione corretta delle operazioni per la scelta dei MBF è la seguente:
- controllare mvs e tutte le altre caratteristiche importanti nella tabella materiali (es.: tipo di utensile di dosaggio, accessori, vari, etc.)
- calcolare la portata effettiva CE del MBF standard (a velocità fissa o variabile in base alla richiesta dei cliente)

CE = CT x mvs

dove CT è a pag. T.10. Se la differenza tra CE e CT è troppo grande (cioè il cliente non accetta il ns. MBF standard) è necessario trovare a quale velocità di rotazione deve ruotare l' MBF per ottenere la portata richiesta dal cliente. Si usa la formula:

$$N = \frac{CR}{CF \times mvs}$$

Poi si sceglie (vedi pag. T.11) il rapporto che più si avvicina ai desideri del cliente. In questi calcoli è comunque necessario tenere presente che mvs riportato nella tabella materiali, è in realtà un dato empirico ottenuto come media dei risultati delle esperienze fatte, risultati talvolta anche distanti tra di loro. Esso può dipendere infatti da molteplici variabili, alcuni delle quali di difficile controllo (es. stato del materiale, condizioni atmosferiche, altezza colonna materiale nella tramoggia, velocità di rotazione, etc.).
Il coefficiente mvs è indicato a pagina T.10.

DIMENSIONS - *EINBAUMASSE* - ENCOMBREMENT - *INGOMBRO*

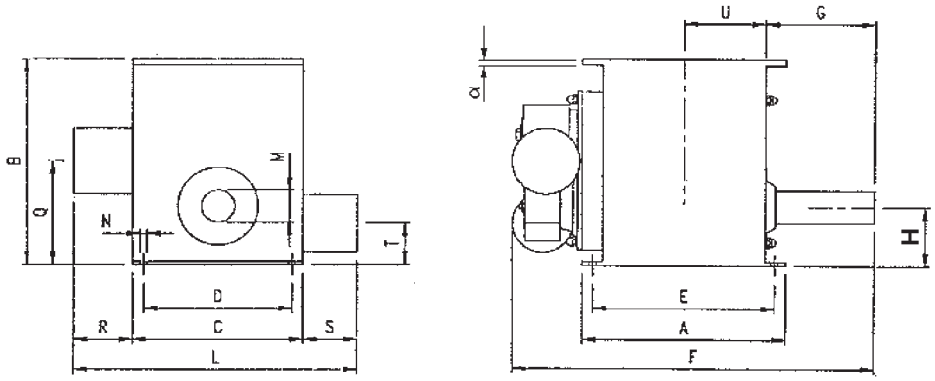

MBF	A	B	C	D	E	F	G	H	L*	M	N	Q	R*	S**	T	U	α	dm³	kg
042	310	295	250	200	253	595	200	100	535	42	12.5	235	160	125	100	105	12	5	20
073	464	486	390	305	410	855	250	135	600	76	12.5	240	135	75	95	185	15	28	60
114	464	486	390	305	410	855	250	135	600	114	12.5	259	135	75	95	185	15	35	65

* Without variable speed reducer
* *Ohne Regelgetriebe*
* Sans variateur
* *Senza variatore*

** According to IEC - Standards
** *Gemäß IEC - Norm*
** Selon normes IEC
** *Secondo norme IEC*

MBF 042

TOP FLANGE
FLANSCH OBEN
BRIDE SUPERIEURE
FLANGIATURA SUPERIORE

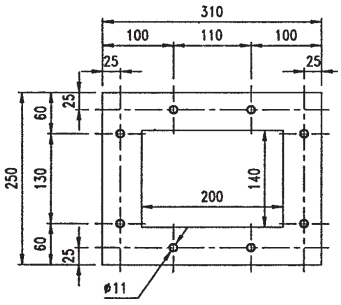

BOTTOM FLANGE
FLANSCH UNTEN
BRIDE INFERIEURE
FLANGIATURA INFERIORE

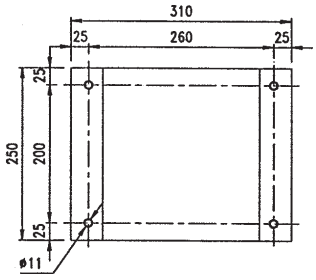

MBF 073

MBF 114

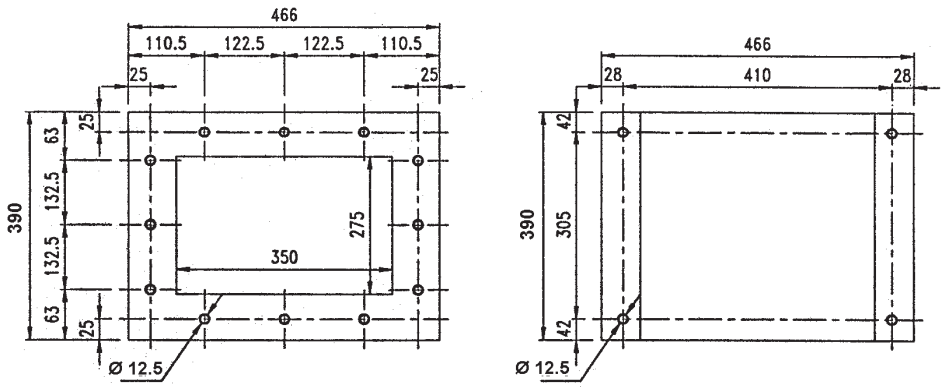

STANDARD SUPPLY - *STANDARD-LIEFERUMFANG* - FORNITURE STANDARD - *FORNITURE STANDARD*

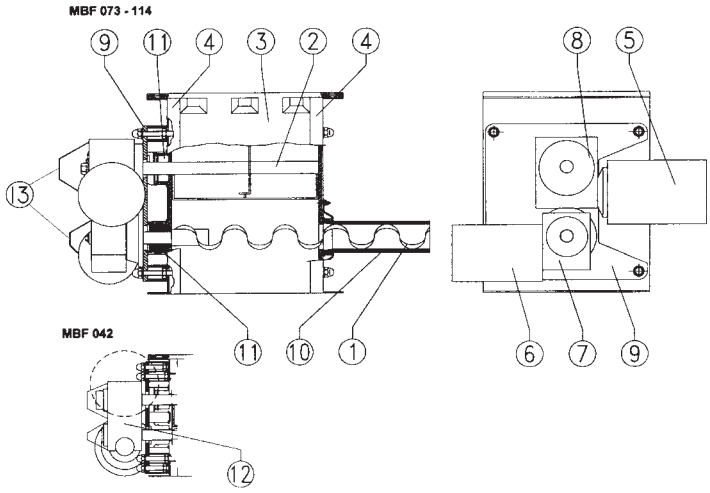

1	Metering screw	Dosierwerkzeug	Vis de dosage	Utensile dosaggio
2	Blending tool	Homogenisierwerkzeug	Homogénéisateur	Utensile omogeneiz.
3	Elastomer trough	Dosiertrog	Corps	Corpo
4	End plate	Endschild	Bride d'extremité	Frontale
5	Agitator motor	E- Motor Homogenisierer	Moteur electr. outil de homogé	Motore elect. omogen.
6	Metering screw motor	E- Motor Dosierer	Moteur elect. outil de dosage	Motore elect. dosaggio
7	Metering screw reducer	Getriebe Dosierer	Réducteur outil de dosage	Riduttore dosaggio
8	Blending tool reducer	Getriebe Homogenisierer	Réducteur outil de homogén.	Riduttore omogeneiz.
9	Drive support	Antriebshalterung	Plaque de fixation	Piastra d'attacco
10	Feeder pipe	Dosierrohr	Sortie	Uscita
11	Seals	Wellenabdichtungen	Etancheitées	Tenute
12	Reducer	Getriebe	Réducteur	Riduttore
13	Cover	Abdeckung	Couvercle	Coperchio

N.B. Item 4 in the stainless steel version, front panel can be opened for inspection.
N.B. Pos.4 in der Edelstahlversion mit abnehmbarer Frontplatte zu Inspektionszwecken.
N.B. Pos.4 dans la version en acier inox, plaque frontale peut être ouverte pour inspection.
N.B. Pos.4 nella versione in AISI, frontale apribile per ispezione.

The batch feeder must not be starded before the screw conveyor itself, as well as the plant it is going to be installed in, have been declared in conformity with the European Directive 14/06/1982 (89/392/EEC).

It is the plant designer's / plant fitter's responsability to design and install all necessary protection in order to avoid that breaking and / or yielding of the equipment or of parts of it might damage people and / or parts of the plant (e.g. adequate protection against falling down of the motor etc.).
For dangerous materials, i.e. those that must not get in contact with the human body or be inhaled, for flammable, explosive and bacteriologically dangerous materials the plant manufacturer or fitter must provide for the required safety devices and measures.

Der Dosier darf nicht in Betrieb genommen werden, bevor sowohl sie selbst, als auch die Anlage, in die sie eingebaut wird, mit den Vorschriften der Direktive 14/06/1982 (89/392/ ECC) für konform erklärt wurde.
Es liegt in der Verantwortung des Anlagenplaners bzw. -aufstellers, alle notwendigen Schutzvorrichtungen vorzusehen, welche es verhindern, daß durch einen Geräte- oder Teiledefekt Personen- und/oder Sachschäden verursacht werden (z.B. geeigneter Schutz gegen das Herunterfallen des Motors etc.).
Für Gefahrenprodukte, bzw. solche, die nicht mit dem menschlichen Körper in Kontakt geraten oder eingeatmet werden dürfen, für leicht entzündbare, explosive sowie bakteriologisch gefährliche Medien muß der Anlagenbauer bzw. –errichter die für die Sicherheit erforderlichen Vorrichtungen vorsehen und Maßnahmen treffen.

Il est interdit de mettre le doseur en fonction avant que la machine / l'installation dans laquelle elles doivent être montées a été déclarée conforme aux dispositions de la Directive 14/06/1982 (89/392/ECC).

Dans ce cadre il est la responsabilité du constructeur de l'installation ou de l'installateur de projeter et d'installer tout équipement de protection nécessaire afin d'eviter que des ruptures et / ou des parties d'elle puissent causer de dégâts à des personnes et / ou des choses (par ex.: des protections appropriées contre la chaute du moteur etc.).
Pour des produits dangereux, nuisibles au contact et/ou à l'inhalation, inflammables, explosifs et dangereux du point de vue bactériologique et/ou viral, le constructeur de l'installation ou l'installateur devront prévoir des dispositifs appropriés au besoin.

E' vietato mettere il dosatore in funzione prima che la macchina/ impianto, nel quale devono essere installate, sia dichiarato conforme alle disposizioni della direttiva 14/06/1982 (89/392/EEC).

In quest'ambito è cura dell'impiantista / installatore predisporre ed installare tutti gli accorgimenti / protezioni al fine di evitare danni a cose o persone in caso di rotture e conseguente caduta di pezzi della macchina (ad es.: rottura del motore).
Per prodotti pericolosi, nocivi al contatto e/o all'inalzione, infiammabili, esplosivi e pericolosi dal punto di vista batteriologico e/o virale, l'impiantista e/o l'installatore, dovranno prevedere idonei dispositivi all'uopo.

THEORETICAL STANDARD FEED RATES - *THEORETISCHE STANDARD - DOSIERLEISTUNGEN*
DEBITS THEORIQUES STANDARD - *PORTATE TEORICHE STANDARD*

TAB. 1

MBF		THEORETICAL STANDARD FEED RATES *THEORETISCHE STANDARD-DOSIERLEISTUNGEN* DEBITS THEORIQUES STANDARD *PORTATE TEORICHE STANDARD*		CT
	Metering screws *Dosierwerkzeuge* Outils dosage *Utensili dosatori*	Hourly feed rate at *Dosierleistung pro Stunde bei* Débit horaïre à *Portata oraria a* 1 rpm	Fixed speed feed rate *Leistung bei Konstanter Drehzahl* Débit à vitesse fixe *Portata a velocità fissa* 93 rpm	Feed rate with variable speed *Leistung bei variabler Drehzahl* Débit à vitesse variable *Portata a velocità variabile* 13 - 67 rpm	Capacity whit diff. variator *Leist. bei var. Drehz. + Diff.* Débit à vites. var. avec différ. *Port.a vel. variab. con differ.* 4 - 60 rpm
	Type	**dm³ / h**	**dm³ / h**	**dm³ / h**	**dm³ / h**
042	1 - 4 - D - 2 - B	0.7	65	9 - 48	
	3	0.6	56	8 - 40	
	5	0.64	60	8 - 45	
	7	0.95	88	12 - 64	
073	1 - 2 - B	5.7	530	74 - 382	23 - 342
	3	4.4	410	57 - 295	18 - 264
	4 - 5 - D - E	7.4	688	96 - 496	31 - 421
114	1 - 2 - B	26	2418	338 - 1742	104 - 1560
	3	13.6	1265	177 - 911	55 - 816
	4 - 5 - D- E	29.7	2762	386 - 1990	130 - 1930

N.B. The theoretical feed rate has to be multiplied by the efficient factor which depends on the type of feeder screw and on the material fed.
N.B. Die theoretische Dosierleistung ist dem Wirkungsfactor zu multiplizieren, der wierderum abhängig ist vom Dosierwendeltyp und vom dosierten Medium.
N.B. La débit théorique doit être multiplié pae le facteurs d'efficience qui est en fonction de la spire et du produit dosé.
N.B. La portata teorica deve essere moltiplicata per il fattore di efficenza che è in funzione dell'elica e del prodotto trasportato.

General efficiency coefficient mvs depeneding on feeder screw used
Allgemeiner Wirkungsgrad mvs in Abhängigkeit von der eingesetzten Dosierwendel
Coefficient d'efficacité général en fonction du type de spire utilisée
Coefficienti di efficienza generico mvs, in funzione del tipo di elica utilizzata

TAB. 3

UTD. 12 UTD. 32	UTD. 22 UTD. B2	UTD. 42 UTD. D2	UTD. 5 UTD. G UTD. E
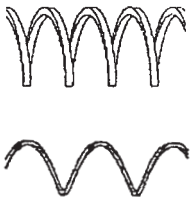	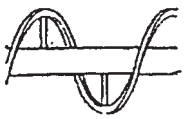	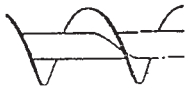	
Efficiency: 1.1	**Wirkungsgrad: 0.6**	**Coefficient: 0.75**	**Efficienza: 0.7**

The theoretical feeds rate (pag.T.11)has to be multiplied by the efficient factor which depends on the type of feeder screw fed.

Note:
The efficiency factor can vary due to grain size, bulk density, degree of humidity and all the other material properties that have an influence on handling the material.

Die theoretischen Dosierleistungen gem. Seite T.11 müssen mit diesem Faktor je nach eingestzter Dosierwendeltype multipliziert werden.

Anm.:
Der Wirkungsgrad kann sich aufgrund der Körnung, des Schüttgewichts, des Feuchtegrads sowie aller übrigen, sich auf das Handling auswirkenden Produkte.

Les débits théoriques comme à page T.11 doivent être multipliés par ce facteur en fonction des spires choisies.

Note:
Le facteur d'efficacité peut subir des variations à cause de la granulométrie, du poids spécifique, de l'humidité et de tous les composants imputables au matériau transporté.

Le portate teoriche come a pag. T.11 debbono essere moltiplicate per questo fattore in funzione delle eliche scelte.

Nota:
Il fattore di efficienza può subire delle variazioni dovute a granulometria, al peso specifico, umidità e a tutte quelle componenti imputabili al prodotto trasportato.

THEORETICAL CAPACITIES SPC - *THEORETISCHE DOSIERLEIST.SPEZ.*
DEBITS THEORIQUES SPC. - *PORTATE TEORICHE SPECIALI*

TAB. 2

MBF				THEORETICAL FEED RATES *THEORETISCHE DOSIERLEISTUNGEN* DEBITS THEORIQUES *PORTATE TEORICHE*			CT
	Metering screws *Dosierwerkzeuge* Outils dosage *Utensili dosatori*	Hourly feed rate at *Dosierleistung pro Stunde bei* Débit horaïre à *Portata oraria a* 1 rpm	Gear ratios *Getriebeuntersetzungen* Rapports réducteurs *Rapporti riduttori*	Fixed speed feed rate *Leistung bei Konstanter Drehzahl* Débit à vitesse fixe *Portata a velocità fissa*	Feed rate with variable speed *Leistung bei variabler Drehzahl* Débit à vitesse variable *Portata a velocità variabile*		Capacity with diff. variator *Leist. bei var. Drehz. + Diff.* Débit à vites. var. avec différ. *Port.a vel. variab. con differ.*
	Type	dm^3 / h	1 / ..	dm^3 / h	dm^3 / h MIN	dm^3 / h MAX	dm^3 / h
42	1-2-4-B-D	0.70	10 15 28 40(std)	98 65 35 24	14 9 5 3	70 47 25 17	
	3	0.6	10 15 28 40 (std)	82 55 29 20	11 8 4 3	59 39 21 15	
	5-E	0.64	10 15 28 40(std)	90 60 32 22	12 8 4 3	64 43 23 16	
	7-G	0.95	10 15 28 40 (std)	133 89 48 33	19 12 7 5	95 63 34 24	
73	1-2-B	5.7	10 15 20 28 40 (std) 70	798 532 399 285 199 114	111 74 56 40 28 16	570 380 285 203 142 81	33-513 22-342 17-256 12-183 8-128 5-73
	3	4.4	10 15 20 28 40 (std) 70	616 411 308 220 154 88	86 57 43 31 21 12	440 293 220 157 110 63	26-396 17-264 13-198 9-141 6-99 4-57
	4-5-D-E	7.4	10 15 20 28 40(std) 70	1,036 691 518 370 259 148	144 96 72 52 36 21	740 493 370 264 185 106	43-66 29-444 21-333 15-238 11-167 6-95
114	1-2-B	26	10 15 20 28 40 (std) 70	3,640 2,427 1,820 1,300 910 520	507 338 254 181 127 72	2,600 1,733 1,300 929 650 371	151-2,340 101-1,560 75-1,170 54-836 38-585 22-334
	3	13.6	10 15 20 28 40 (std) 70	1,904 1,269 952 680 476 272	265 177 133 95 66 38	1,360 907 680 486 340 194	79-1,224 53-816 39-612 28-437 20-306 11-175
	4-5-D-E	29.7	10 15 20 28 40 (std) 70	4,158 2,772 2,079 1,485 1,040 594	579 386 290 207 145 83	2,970 1,980 1,485 1,061 743 424	172-2,673 115-1,782 86-1,337 62-955 43-668 25-382

N.B. The theoretical feed rate has to be multiplied by the efficient factor which depends on the type of feeder screw and on the material fed.
(See tab. 3 pag. T.10)

N.B. Die theoretische Dosierleistung ist dem Wirkungsfactor zu multiplizieren, der wierderum abhängig ist vom Dosierwendeltyp und vom dosierten Medium.(Siehe Tabelle 3 Seite T.10)

N.B. La débit théorique doit être multiplié pae le facteurs d'efficience qui est en fonction de la spire et du produit dosé.(Voir tab. 3 pag. T.10)

N.B. La portata teorica deve essere miltiplicata per il fattore di efficenza che è in funzione dell'elica e del prodotto trasportato.(vedi tab.3 pag. T.10)

FIXED SPEED DRIVES - *ANTRIEBE MIT KONSTANTER DREHZAHL*
MOTORISATIONS A VITESSE FIXE - *MOTORIZZAZIONI A VELOCITA' FISSA*

MBF 042	**METERING SCREW - *DOSIERWERKZEUG* - OUTIL DOSAGE - *UTENSILE DOSAGGIO***				
	RPM	**STANDARD**	**SPECIAL**		
		93	140	50	35
	Ratio - *Untersetzung* Rapport - *Rapporto*	1:15	1:10	1:28	1:40
	Gear red. - *Getriebe* Réduct. - *Riduttore*	RW BB ØØ	RW AA ØØ	RW DA ØØ	RW EA ØØ
	Motors - *E-Motoren* Moteurs - *Motori*	**0.12 kW 4P 50 Hz 63A B5 (std)** (0.18 kW/0.25 kW 4P 50 Hz 63b/63c B5)			
	BLENDING TOOL - *HOMOGENISIERWERKZEUG* - OUTIL DE HOMOGENEISATION - *OMOGENEIZZATORE*				
	RPM	35			
	Ratio - *Untersetzung* Rapport - *Rapporto*	1:40			
	Motors - *E-Motoren* Moteurs - *Motori*	**0.25 kW 4P 50 Hz 71A B5 (std)** (0.37 kW 4P 50 Hz 71B B5)			

MBF 073 114	**METERING SCREW - *DOSIERWERKZEUG* - OUTIL DOSAGE - *UTENSILE DOSAGGIO***						
	RPM	**STANDARD**	**SPECIAL**				
		93	140	70	50	35	20
	Ratio - *Untersetzung* Rapport - *Rapporto*	1:15	1:10	1:20	1:28	1:40	1:70
	Gear red. - *Getriebe* Réduct. - *Riduttore*	B5 PAM 71 Ø Flange = 160 mm Ø M* = 14 mm Ø U* = 24 mm					
	Motors - *E-Motoren* Moteurs - *Motori*	**0.25 kW 4P 50 Hz 71A B5 (std)** (0.37 kW 4P 50 Hz 71B B5)					
	BLENDING TOOL - *HOMOGENISIERWERKZEUG* - OUTIL DE HOMOGENEISATION - *OMOGENEIZZATORE*						
	RPM	**STANDARD**	**SPECIAL**				
		35	14				
	Ratio - *Untersetzung* Rapport - *Rapporto*	1:40	1:100				
	Gearbox - *Getriebe* Réduct. - *Riduttore*	B5bi PAM 80 Ø Flange = 200 mm Ø M* = 19 mm Ø U* = 25 mm					
	Motors - *E-Motoren* Moteurs - *Motori*	**0.55 kW 4P 50 Hz 80A B5 (std)** (0.75 kW 4P 50 Hz 80B B5)					

*** ØM** = Ø Electric motor shaft - *Welle elektromotore* - Arbre moteur electrique - *Albero motore elettrico*

*** ØU** = Ø Screw shaft - *Werkzeugwelle* - Arbre outil - *Albero utensile*

VARIABLE SPEED DRIVES - *ANTRIEBE MIT VARIABLER DREHZAHL*
MOTORISATIONS A VITESSE VARIABLE - *MOTORIZZAZIONI A VELOCITA' VARIABILE*

MBF 042	**METERING SCREW - *DOSIERWERKZEUG* - OUTIL DOSAGE - *UTENSILE DOSAGGIO***				
	RPM	**STANDARD**	**SPECIAL**		
		93	140	50	35
	Ratio - *Untersetzung* Rapport - *Rapporto*	1:15	1:10	1:28	1:40
	Gear red. - *Getriebe* Réduct. - *Riduttore*	RW NB ØØ	RW MA ØØ	RW QA ØØ	RW RA ØØ
	Variator - *Regelgetr.* Variateur - *Variatore*	B5/B5 PAM 63/63 n° 190-910 rpm Ø Flange 140/140 mm Ø M* = 11 mm Ø U* = 11 mm			
	Motors - *E-Motoren* Moteurs - *Motori*	**0.12 kW 4P 50 Hz 63C B5 (std)** **(0.18 kW/0.25 kW 4P 50 Hz 63b/63c B5)**			
	BLENDING TOOL - *HOMOGENISIERWERKZEUG* - OUTIL DE HOMOGENEISATION - *OMOGENEIZZATORE*				
	RPM	35			
	Ratio - *Untersetzung* Rapport - *Rapporto*	1:40			
	Motors - *E-Motoren* Moteurs - *Motori*	**0.25 kW 4P 50 Hz 71A B5 (std)** (0.37 kW 4P 50 Hz 71B B5)			

N.B.: the motors provided on the speed variator are special and can therefore be 0.22-0.25 kW, depending on the supplier
Anm.: Die auf dem Drehzahlregler vorhandenen Motoren sind Spezialausführungen und können je nach Hersteller 0,22 -0,25 kW haben
N.B.: Etant donnée que les moteurs prévus sur variateur sont spéciaux, ils peuvent être de 0.22-0.25 kW, en fonction du fournisseur
N.B.: i motori previsti su variatore, essendo speciali, potranno essere, 0.22-0.25 kW in funzione del fornitore

MBF 073 114	**METERING SCREW - *DOSIERWERKZEUG* - OUTIL DOSAGE - *UTENSILE DOSAGGIO***						
	RPM	**STANDARD**	**SPECIAL**				
		93	140	70	50	35	20
	Ratio - *Untersetzung* Rapport - *Rapporto*	1:15	1:10	1:20	1:28	1:40	1:70
	Gear red. - *Getriebe* Réduct. - *Riduttore*	B5/B5 PAM 71 Ø Flange = 160 mm Ø M* = 14 mm Ø U* = 24 mm					
	Variator - *Regelgetr.* Variateur - *Variatore*	B5/B5 PAM 71/71 n° 190-1000 rpm Ø Flange 160/160 mm Ø M* =14 mm Ø U* =14 mm					
	Differrent. - *Different.* Différént. - *Differenz.*	B5/B5 PAM 71/71 n° 0-1000 rpm Ø Flange 160/160 mm Ø M* =14 mm Ø U* =14 mm					
	Motors - *E-Motoren* Moteurs - *Motori*	**0.25 kW 4P 50 Hz 71A B5 (std)** (0.37 kW 4P 50 Hz 71B B5)					
	BLENDING TOOL - *HOMOGENISIERWERKZEUG* - OUTIL DE HOMOGENEISATION - *OMOGENEIZZATORE*						
	RPM	**STANDARD**	**SPECIAL**				
		35	14				
	Ratio - *Untersetzung* Rapport - *Rapporto*	1:40	1:100				
	Gear red. - *Getriebe* Réduct. - *Riduttore*	B5bi PAM 80 Ø Flange = 200 mm Ø M* = 19 mm Ø U* = 25 mm					
	Motors - *E-Motoren* Moteurs - *Motori*	**0.55 kW 4P 50 Hz 80A B5 (std)** (0.75 kW 4P 50 Hz 80B B5)					

*** ØM** = Ø Electric motor shaft - *Welle elektromotor* - Arbre moteur electrique - *Albero motore elettrico*
*** ØU** = Ø Screw shaft - *Werkzeugwelle* - Arbre outil - *Albero utensile*

FINISHING - *FINISH* - FINITION - *FINITURE*

End plate	Endschild	Bride d'extremité	Frontale	**St. St. 304 / EDELSTAHL 1.4301 / AISI 304**
Drive support	Antriebshalter.	Plaque de fixation	Piastra d'attacco	**ALUMINIUM / ALLUMINIO**
Reducer	Getriebe	Reducteur	Riduttore	**ALUMINIUM / ALLUMINIO**
Speed variator	Regelgetriebe	Variateur	Variatore	**RAL 5010**
Motor	Elektromotor	Moteur	Motore	**RAL 7001**

STANDARD METERING SCREWS - *STANDARD-DOSIERWERKZEUGE*
OUTILS DE DOSAGE STANDARD - *UTENSILI DOSAGGI STD*



UTD. 12 — **TYPE 1**

RECTANGULAR SECTION SPIRAL WITHOUT CENTRE PIPE	WENDEL MIT RECHTECKIGEM QUERSCHNITT OHNE INNENROHR	HELICE A SECTION RECTANGULAIRE SANS TUBE INTERIEUR	ELICHE A SEZIONE RETTANGOLARE PRIVE DI TUBO INTERNO
Light sticky materials: flour, sugar, cocoa, pellets, granular products, light and slightly sticky oxides.	Geeignet für Medien mit geringem Schüttgewicht und mit Tendenz zum Anbacken: Mehl, Zucker, Kakao, Pellets, Granulate, Oxyde mit geringem Schüttgewicht und gewisser Tendenz zum Anbacken.	Matériaux légers avec une tendance au tassement: farines, sucre, cacao, pellets, poduits granulaires, oxides légers.	Materiali leggeri con tendenza all'impaccamento: farine, zucchero, cacao, pellets, prodotti granulari, ossidi leggeri moderatamente impaccati.

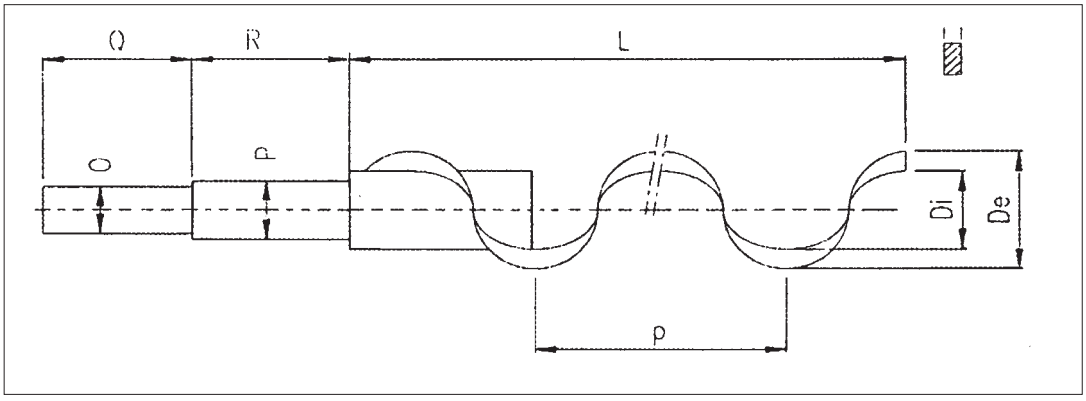

TYPE1 Rectangular section spiral withhout centre pipe
TYPE1 *Wendel mit rechteckigem Querschnitt ohne Innenrohr*
TYPE1 Hélice à section rectangulaire sans tube intérieur
TIPO 1 *Eliche a sezione rettangolare senza tubo interno*

MBF	Code	De	Di	p	S	L	Ø O	Ø P	Q	R	kg
042	**UTD 212**	26	16	30	5	403	14	25	58	81	0.5
073	**UTD 312**	60	40	60	5	607	24	29	96	119	3
114	**UTD 412**	100	67	100	5	607	24	29	96	119	5

STD BLENDING TOOLS - STD - *HOMOGENISIERWERKZEUGE*
HOMOGENEISATEURS STD - *UTENSILI OMOGENEIZZAZIONE STD*

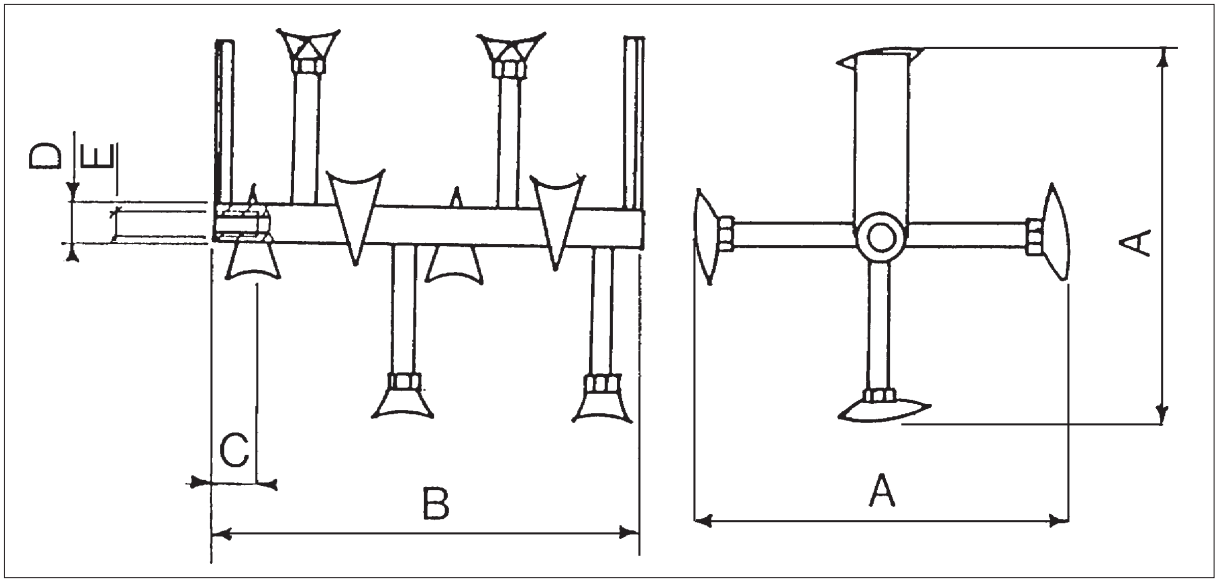

TYPE 2

MBF	Code	A	B	C	D	E	kg
042	**UTO 22**	130	199	25	25	M 12	1
073	**UTO 23**	269	349	35	35	M 16	3.5
114	**UTO 24**	269	349	35	35	M 16	3.5

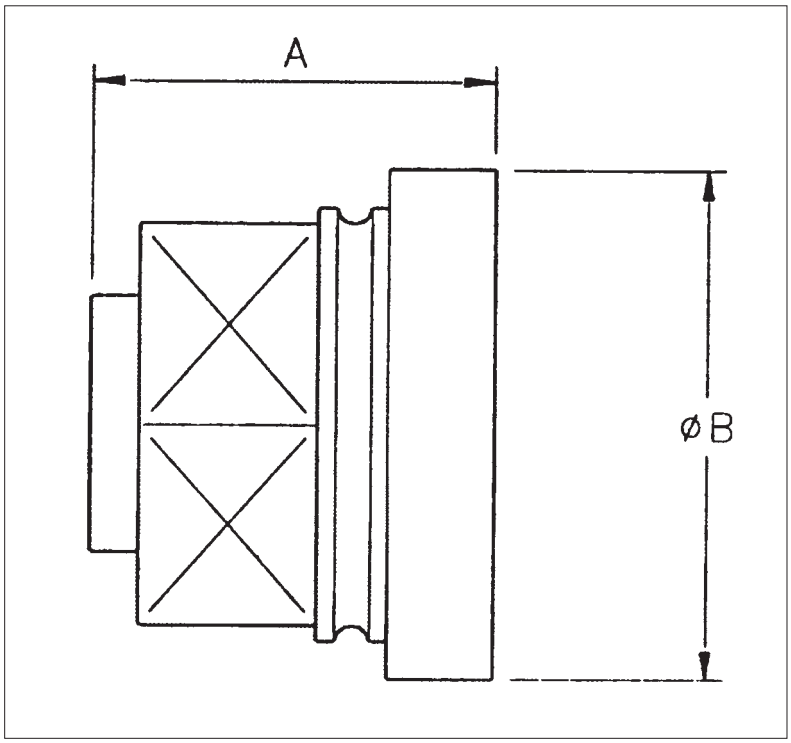

SINT®ER

MBF	Code	A	B
042	**MBT N2**	54	60
073	**MBT N3**	57	80
114	**MBT N4**	57	80

SINT®AL

MBF	Code	A	B
042	**MBT F2**	54	60
073	**MBT F3**	57	80
114	**MBT F4**	57	80

SPECIAL METERING SCREWS - *SPEZIALDOSIERWERKZEUGE* - OUTILS DOSAGE SPECIAUX - *UTENSILI DOSAGGIO SPECIALI*

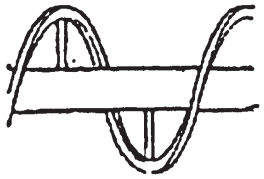

UTD. 22 — TYPE 2

RIBBON SPIRAL ON PIPE	BRANDWENDEL MIT INNENROHR	HELICE A RUBAN AVEC TUBE INTERIEUR	ELICHE A NASTRO CON TUBO INTERNO
Heavy sticky materials, heavy oxides, clay	Geeignet für Medien mit höherem Schüttgewicht und mit Tendenz zum Anbacken: Oxyde mit höherem Schüttgewicht, Ton	Matériaux lourds avec tendance au tassement, oxides lourdes, argiles	Materiali pesanti con tendenza all'impaccamento ossidi pesanti, argille



UTD. 32 — TYPE 3

ROUND SECTION SPIRAL WITHOUT CENTRE PIPE	WENDEL MIT RUNDEM QUERSCHNITT OHNE INNENROHR	HELICE A SECTION RONDE SANS TUBE INTERIEUR	ELICHE A SEZIONE TONDA PRIVE DI TUBO INTERNO
Light materials, granular products, pellets, PVC, polymers in pellets.	Geeignet für Medien mit geringem Schüttgewicht, ohne Tendenz zum Anbacken: Granulate, Pellets; PVC, Polymere in Pellets.	Matériaux légers, produits granulaires, pellets, PVC, polymers en pellets.	Materiali leggeri non impaccati, prodotti granulari, pellets, PVC, polimeri in pellets.

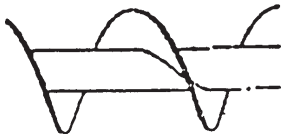

UTD.42 — TYPE 4

STANDARD SCREW	VOLLBLATTWENDEL MIT INNENROHR	HELICE AVEC TUBE INTERIEUR	ELICHE CONTINUE CON TUBO INTERNO
Heavy fluid materials metallic granules.	Geeignet für gut fließende Medien mit höherem Schüttgewicht: Schiefer gemahlen, Metallgranulate.	Matériaux lourds et fluides, grains de métal.	Materiali pesanti e scorrevoli, graniglia di metalli.



UTD. 5. — TYPE 5

HELICOID SCREW ON TAPERED PIPE MADE FROM SINT®ER OR SINT®AL	WENDEL MIT KONISCHER WELLE AUS SINT®ER ODER SINT®AL	HELICE AVEC TUBE CONIQUE EN SINT®ER OU SINT®AL	ELICA CON TUBO CONICO IN SINT®ER O SINT®AL
Whenever even metering on the entire surface along with mixing of materials with different particle size, bulk density and/or fluency is required.	Findet überall Verwendung, wo eine homogene Dosierung auf der gesamten Fläche in Verbindung mit einer Durchmischung von Medien mit unterschiedlicher Körnung, Fließfähigkeit und/ oder Schüttdichte erforderlich ist.	Où qu'une extraction homogéne sur toute la surface avec des mélanges de produits à granulométries différentes, à poids spécifiques différents et/ ou degrés différents de fluidité.	Dovunque sia necessaria una estrazione omogenea su tutta la superficie con miscele di prodotti a diversa granulometria, diverso peso specifico, diverso grado di scorrevolezza.

SPECIAL METERING SCREWS - *SPEZIAL-DOSIERWERKZEUGE* - OUTILS DOSAGE SPECIAUX - *UTENSILI DOSAGGIO SPECIAL*

	**UTD. 7.**	TYPE 7		
	SAME AS TYPE 5 BUT WITH DIFFERENT PITCH	WIE TYP 5, JEDOCH MIT UNTERSCHIEDLICHER STEIGUNG	SIMILAIRE AU TYPE 5, MAIS AVEC PAS DIFFERENT	SIMILE AL TIPO 5, MA CON PASSO DIVERSO
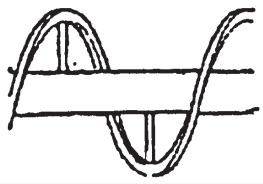	**UTD. B2**	TYPE B		
	SAME AS TYPE 2 BUT EXTENDED	WIE TYP 2, JEDOCH VERLÄNGERT	SIMILAIRE AU TYPE 2, MAIS PROLONGÉ	SIMILE AL TIPO 2, MA PROLUNGATO
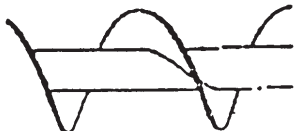	**UTD. D2**	TYPE D		
	SAME AS TYPE 4 BUT EXTENDED	WIE TYP 4, JEDOCH VERLÄNGERT	SIMILAIRE AU TYPE 4, MAIS PROLONGÉ	SIMILE AL TIPO 4, MA PROLUNGATO
	**UTD. E.**	TYPE E		
	SAME AS TYPE 5 BUT EXTENDED	WIE TYP 5, JEDOCH VERLÄNGERT	SIMILAIRE AU TYPE 5, MAIS PROLONGÉ	SIMILE AL TIPO 5, MA PROLUNGATO
	**UTD. G.**	TYPE G		
	SAME AS TYPE 7 BUT EXTENDED	WIE TYP 7, JEDOCH VERLÄNGERT	SIMILAIRE AU TYPE 7, MAIS PROLONGÉ	SIMILE AL TIPO 7, MA PROLUNGATO

SPECIAL METERING SCREWS - *SPEZIAL-DOSIERWERKZEUGE* - OUTILS DOSAGE SPECIAUX - *UTENSILI DOSAGGIO SPECIAL*

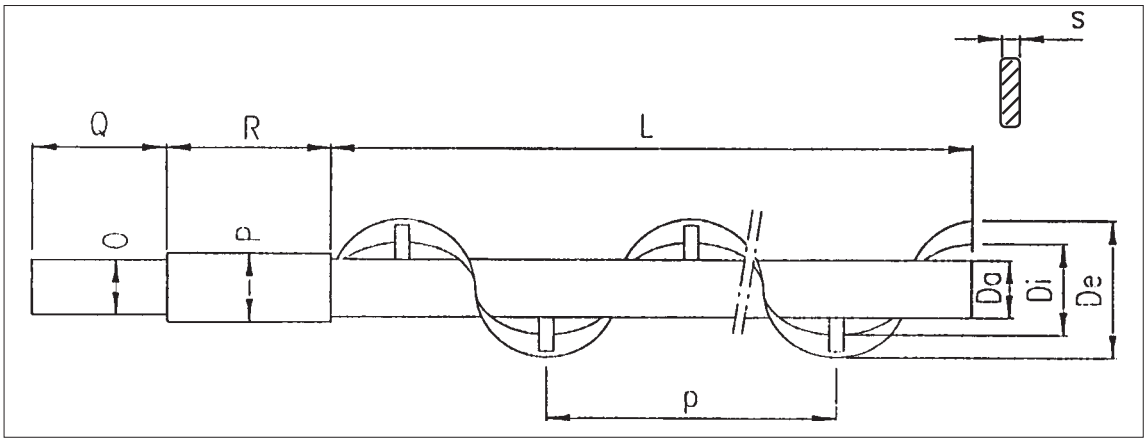

TYPE 2 and TYPE B Ribbon flight on pipe
TYPE 2 und TYPE B *Bandwendel mit Innenrohr*
TYPE 2 et TYPE B à ruban avec tube interieur
TIPO 2 e TIPO B *a nastro con tubo interno*

Type	MBF	Code	De	Di	Da	p	S	L	Ø O	Ø P	Q	R	kg
2	**042**	**UTD222**	30	20	10	30	5	403	14	25	58	81	2
	073	**UTD322**	60	40	25	60	5	607	24	29	96	119	3
	114	**UTD422**	100	67	25	100	5	607	24	29	96	119	4
B	**042**	**UTD2B2**	30	20	10	30	5	573	14	25	58	81	3
	073	**UTD3B2**	60	40	25	60	5	857	24	29	96	119	4
	114	**UTD4B2**	100	67	25	100	5	857	24	29	96	119	4,5

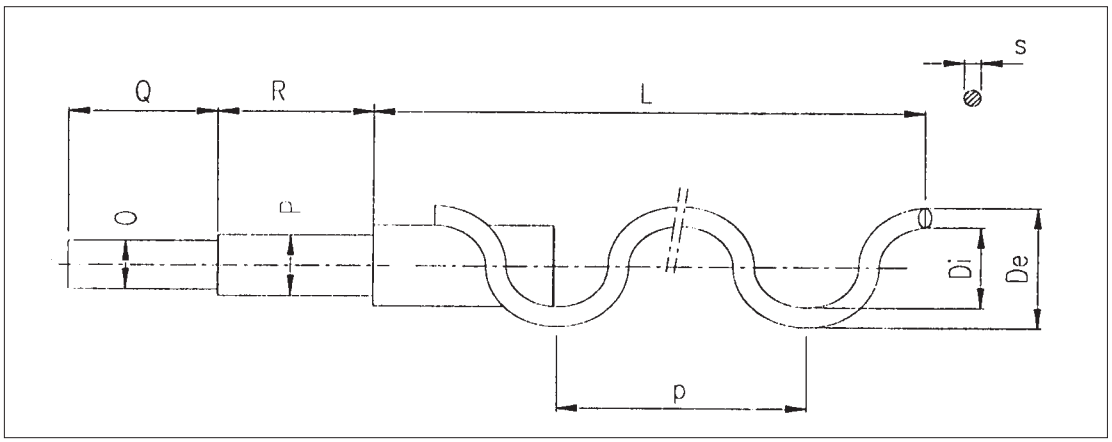

TYPE 3 Round section spiral without centre pipe
TYPE 3 *Wendel mit rundem Querschnitt ohne Innenrohr*
TYPE 3 Hélice à section rectangulaire sans tube intérieur
TIPO 3 *Eliche sezione tonda senza tubo interno*

Type	MBF	Code	De	Di	p	S	L	Ø O	Ø P	Q	R	kg
3	**042**	**UTD 232**	26	16	30	5	403	14	25	58	81	0.5
	073	**UTD 332**	57	40	60	8	607	24	29	96	119	3
	114	**UTD 432**	90	70	75	10	607	24	29	96	119	5

SPECIAL METERING SCREWS - *SPEZIAL-DOSIERWERKZEUGE* - OUTILS DOSAGE SPECIAUX - *UTENSILI DOSAGGIO SPECIAL*

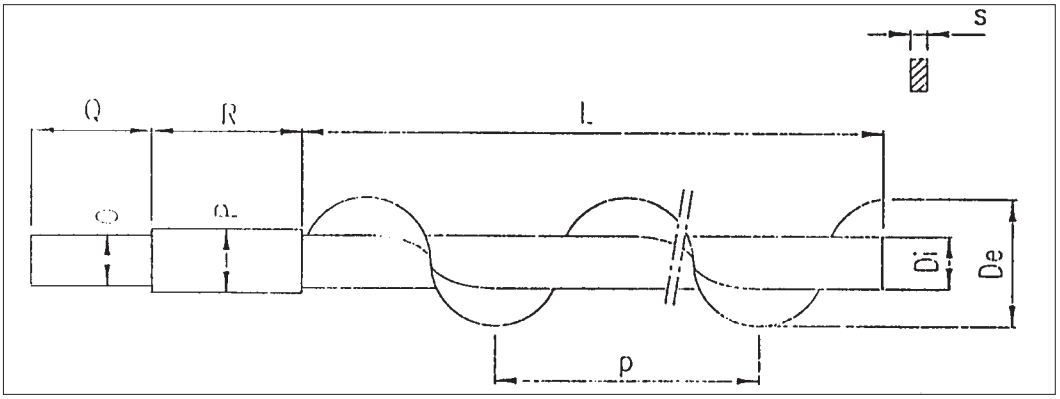

TYPE 4 **and** **TYPE D** standard screws
TYPE 4 ***und*** ***TYPE D*** *Vollblattwendeln mit Innenrohr*
TYPE 4 **et** **TYPE D** hélices continues avec tube interieur
TIPO 4 ***e*** ***TIPO D*** *eliche continue con tubo interno*

EXTENDED
VERLÄNGERT
RALLONGE
ALLUNGATO

Type	MBF	Code	De	Di	p	S	L	Ø O	Ø P	Q	R	kg
4	042	UTD 242	30	20	30	5	403	14	25	58	81	1.5
	073	UTD 342	57	25	60	5	607	24	29	96	119	3.5
	114	UTD 442	90	32	100	5	607	24	29	96	119	6
D	042	UTD 2D2	30	20	30	5	573	14	25	58	81	2
	073	UTD 3D2	57	25	60	5	857	24	29	96	118	5
	114	UTD 4D2	90	32	100	5	857	24	29	96	119	7.5

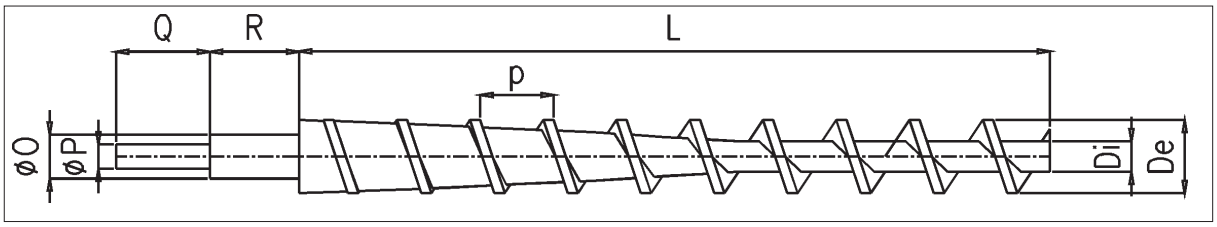

TYPE 5 **and** **TYPE E** screws made of SINT®ER or SINT®AL with tapered pipe
TYPE 5 ***und*** ***TYPE E*** *Wendeln aus SINT®ER oder SINT®AL mit konischem Innenrohr*
TYPE 5 **et** **TYPE E** Hélices en SINT®ER ou SINT®AL avec tube conique
TIPO 5 ***e*** ***TIPO E*** *Eliche in SINT®ER o SINT®AL con tubo conico*

EXTENDED
VERLÄNGERT
RALLONGE
ALLUNGATO

Type	MBF	Code	De	Di	p	L	Ø O	Ø P	Q	R	kg
5	042	UTD 25.	30	15	20	403	25	14	58	81	0.6
	073	UTD 35.	60	25	60	607	30	24	96	119	2
	114	UTD 45.	100	35	100	607	30	24	96	119	3
E	042	UTD 2E.	30	15	20	573	25	14	58	81	0.85
	073	UTD 3E.	60	25	60	857	30	24	96	119	2
	114	UTD 4E.	100	35	100	857	30	24	96	119	3.5

4	SINT®ER
5	SINT®AL

SPECIAL METERING SCREWS - *SPEZIAL-DOSIERWERKZEUGE* - OUTILS DOSAGE SPECIAUX - *UTENSILI DOSAGGIO SPECIAL*

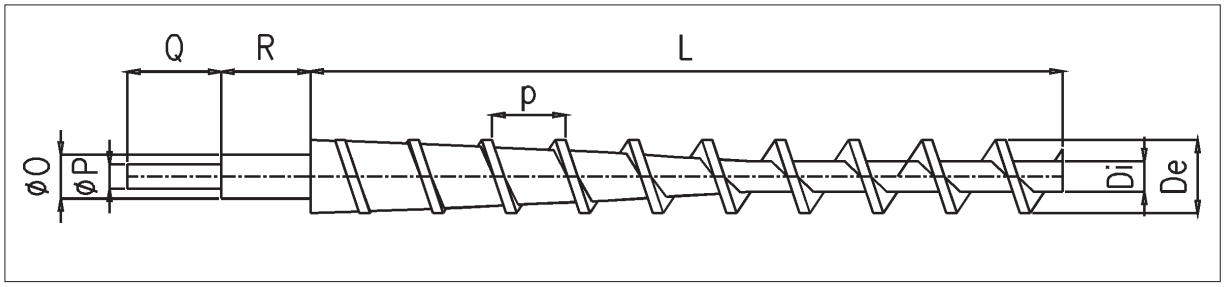

TYPE 7- G Screw with tapered centre pipe made of SINT®ER or SINT®AL
TYPE 7- G *Vollblattwendel mit konischem Innenrohr aus SINT®ER oder SINT®AL*
TYPE 7- G Hélice continue avec tube intérieur conique en SINT®ER ou SINT®AL
TIPO 7- G *Elica continua con yubo interno conico in SINT®ER o SINT®AL*

Type	MBF	Code	De	Di	p	L	Ø O	Ø P	Q	R	kg
7	042	UTD 27 .	30	20	30	403	25	14	58	81	0.6
G	042	UTD 2G .	30	20	30	573	25	14	58	81	0.7

4	SINT®ER
5	SINT®AL

SPECIAL SHAFT SEAL - *SONDER-WELLENABDICHTUNG* - ETANCHEITE SPECIALE - *TENUTA SPECIALE*

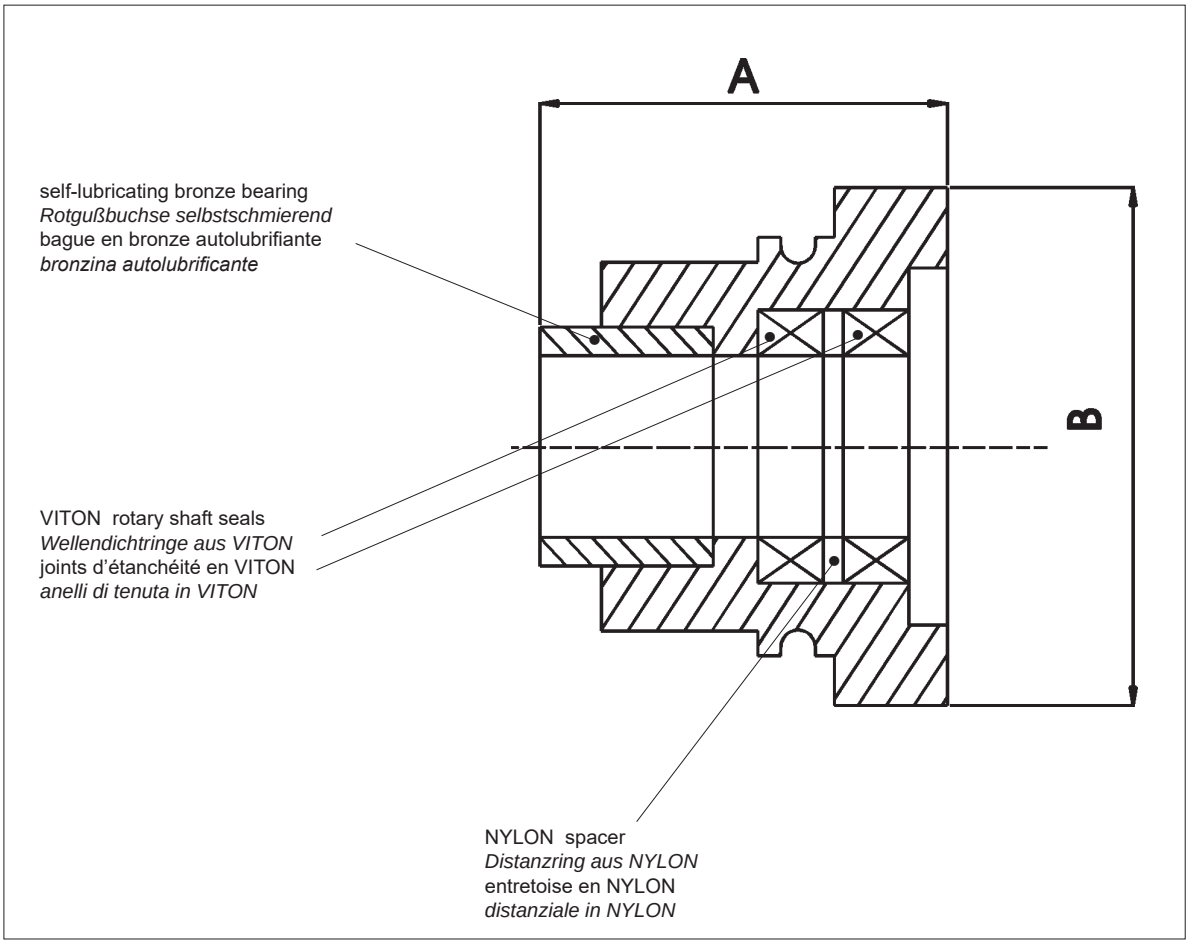

MBF	Code	A	B	kg
042	**MBTX2**	54	60	0.35
073	**MBTX3**	57	80	0.5
114	**MBTX4**	57	80	0.5

SPECIAL SHAFT SEAL WITH GREASING - *SONDER-WELLENABDICHTUNG MIT FETT*
ETANCHEITE SPECIALE AVEC GRAISSE - *TENUTA SPECIALE CON INGRASSAGGIO*

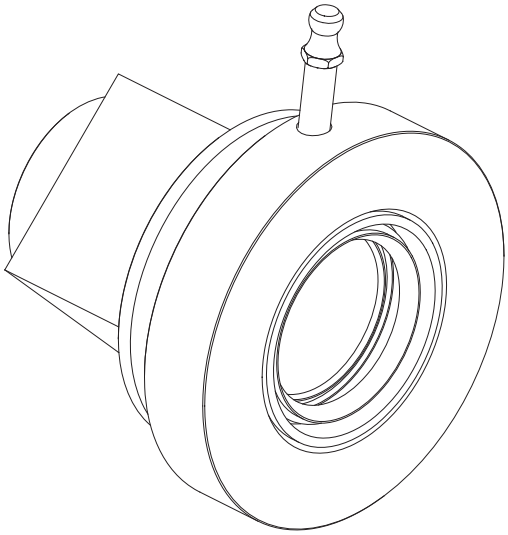

MBTT 2

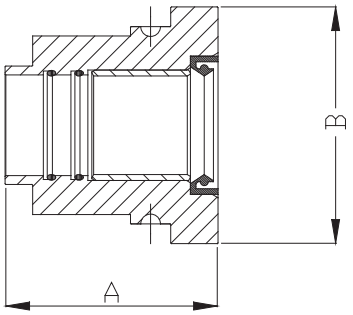

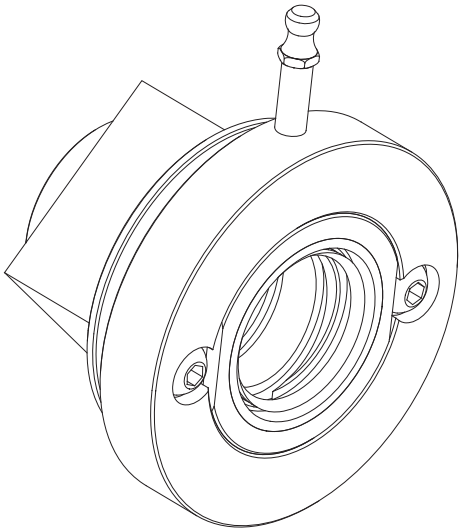

MBTT 3 - 4

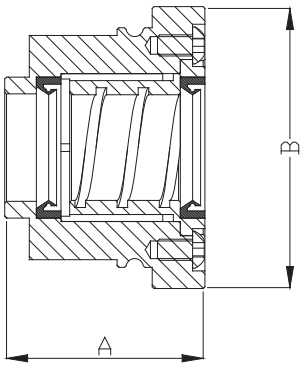

MBF	Code	A	B	kg
042	MBTT2	54	60	0.35
073	MBTT3	57	80	0.5
114	MBTT4	57	80	0.5

N.B. : The MBTT seal is standard with stainless steel version only
N.B. : MBTT-Wellenabdichtung ist nur für Edelstahlversion Standard
N.B. : L'étanchéité MBTT est standard seulement pour la version en acier inox
N.B. : La tenuta MBTT è STD solo sulla versione in AISI

①	②	③	④	⑤	⑥	⑦	⑧	⑨	⑩	⑪	⑫
MBF	073	N	TN	UD 1	SST	UO 2	B	0	Q	1	0025	0055

MICROBATCH FEEDER
TYPE “MBF”

DIAMETER
042 - 073 - 114

BODY MATERIAL
N =Standard SINT® polymer
F= Food SINT® polymer
A= St.Steel 304L
B= St.steel 316L

SEAL
TN= SINT®ER
TF= SINT®AL
TT= 304 ST.STEEL WITH GREASING
TA= 304 ST.STEEL WITH TEFLON
TX= 304 ST.STEEL WITH BRONZE

FEEDER SCREW
+++ - UD1 (©)- UD2- UD3- UD4- UD5- UD7(#)- UDB- UDD- UDE- UDG(#)

FEEDER PIPE
SST= STANDARD FEEDER PIPE
SPL= EXTENDED FEEDER PIPE
SSR= LINER FEEDER PIPE
SPR= EXTENDED LINER FEEDER PIPE

BLENDING TOOL
+++ = WITHOUT
UO1= SHAPED PADDLES
UO2= STANDARD PLOUGHSHARE

FEEDER DRIVE
+ = WITHOUT 0 rpm (§)
A = FIXED SPEED 1/10 -140 rpm
B = FIXED SPEED 1/15 -93 rpm (©)
C = FIXED SPEED 1/20 -70 rpm (§)
D = FIXED SPEED 1/28 -50 rpm
E = FIXED SPEED 1/40 -35 rpm
F = FIXED SPEED 1/70 -20 rpm (§)

VARIABLE SPEED
0 = WITHOUT (©)
1= VARIABLE SPEED 1000 rpm-190 rpm
2= VARIABLE SPEED WITH DIFFERENTIAL 900 rpm-10 rpm (§)

BLENDING DRIVE
+ = WITHOUT GEAR (§)
Q = STANDARD SPEED 35 rpm
S = SPECIAL SPEED 14 rpm (§)

VOLTAGE
+ = WITHOUT MOTOR
1 = 220-240 / 380-420 V 50 Hz; 440-480 V 60 Hz (©)
6 = 210-230 / 360-400 V 60 Hz

DRIVE POWER FEEDER SCREW
++++ = WITHOUT MOTOR
0012= 0,12 kW for D=042 (©)
0018 = 0,18 kW for D=042
0025= 0,25 kW for D= 042-073-114 (©)
0037= 0,37 kW for D= 042-073-114

DRIVE POWER FEEDER SCREW
++++ = WITHOUT MOTOR
0025= 0,25 kW for D=042 (©)
0037= 0,37 kW for D= 042
0055= 0,25 kW for D= 073-114 (©)
0075= 0,75 kW for D= 073-114

LEGENDA:
© STANDARD
§ NO MBF042
# ONLY MBF042

①	②	③	④	⑤	⑥	⑦	⑧	⑨	⑩	⑪	⑫
MBF	073	N	TN	UD 1	SST	UO 2	B	0	Q	1	0025	0055

MIKRODOSIERER
TYP “MBF”

DURCHMESSER
042 - 073 - 114

WERKSTOFF GEHÄUSE
N =Standard SINT®ER Technisches Polymer
F= SINT®AL Technisches Polymer
A= Edelstahl 1.4301
B= Edelstahl 1.4401

WELLENABDICHTUNG
TN= SINT®ER
TF= SINT®AL
TT= Edelstahl 1.4301 MIT FETT
TA= Edelstahl 1.4301 MIT TEFLON-BUCHSE
TX= Edelstahl 1.4301

DOSIERWERKZEUGE
+++ - UD1 (©)- UD2- UD3- UD4- UD5- UD7(#)- UDB-
UDD- UDE- UDG(#)

DOSIERROHR MIT INNENAUSKLEIDUNG
SST= STANDARD DOSIERROHR
SPL= VERLÄNGERTES DOSIERROHR
SSR= DOSIEROHR MIT INNENAUSKLEIDUG
SPR= VERLÄNGERTES DOSIERROHR MIT INNENAUSKLEIDUG

HOMOGENISIERWEKZEUG
+++ = OHNE HOMOGENISIERWEKZEUG
UO1= HOMOGENISIERWEKZEUG MIT PADDEL
UO2= STANDARD PFLUGSCHAR-HOMOGENISIERWEKZEUG

DREHZAHL DES DOSIERANTRIEBS
+ = OHNE GETRIEBE 0 rpm (§)
A = KOSTANTE DREHZAHL 1/10 -140 rpm
B = KOSTANTE DREHZAHL 1/15 -93 rpm (©)
C = KOSTANTE DREHZAHL 1/20 -70 rpm (§)
D = KOSTANTE DREHZAHL 1/28 -50 rpm
E = KOSTANTE DREHZAHL 1/40 -35 rpm
F = KOSTANTE DREHZAHL 1/70 -20 rpm (§)

REGELBARE DREHZAHL
0 = KOSTANTE DREHZAHL (©)
1 = REGELBARE DREHZAHL 1000 rpm-190 rpm
2 = REGELBARE DREHZAHL MIT DIFFERENTIAL 900 rpm-10 rpm (§)

ANTRIEB HOMOGENISIERWERKZEUG
+ = OHNE GETRIEBE (§)
Q = STANDARD-DREHZAHL 35 rpm
S = SONDER-DREHZAHL14 rpm (§)

SPANNUNG- FREQUENZ
+ = OHNE VERSORGUNG
1 = 220-240 / 380-420 V 50 Hz; 440-480 V 60 Hz (©)
6 = 210-230 / 360-400 V 60 Hz

ANTRIEBSLEISTUNG DOSIERWERKZEUG
++++ = OHNE ANTRIEB
0012= 0,12 kW mit D=042 (©)
0018 = 0,18 kW mit D=042
0025= 0,25 kW mit D= 042-073-114 (©)
0037= 0,37 kW mit D= 042-073-114

ANTRIEBSLEISTUNG HOMOGENISIERWERKZEUG
++++ = OHNE ANTRIEB
0025= 0,25 kW mit D=042 (©)
0037= 0,37 kW mit D= 042
0055= 0,25 kW mit D= 073-114 (©)
0075= 0,75 kW mit D= 073-114

LEGENDA:
© STANDARD
§ NO MBF042
# NUR MBF042

①	②	③	④	⑤	⑥	⑦	⑧	⑨	⑩	⑪	⑫
MBF	073	N	TN	UD 1	SST	UO 2	B	0	Q	1	0025	0055

MICRODOSEUR
TYPE “MBF”

DIAMETRE
042 - 073 - 114

MATERIAU CORPS
N =Standard SINT® Tecnopolmero
F= SINT® Tecnopolimero Alimentare
A= AISI 304L
B= AISI 316L

ETANCHEITES
TN= SINT®ER
TF= SINT®AL
TT= AISI 304 AVEC GRAISEE
TA= AISI 304 AVEC TEFLON
TX= AISI 304 SPECIALE

OUTIL DE DOSAGE
+++ - UD1 (©)- UD2- UD3- UD4- UD5- UD7(#)- UDB- UDD- UDE- UDG(#)

TUBE DE DOSAGE
SST= TUBE DE DOSAGE STANDAR
SPL= TUBE DE DOSAGE RALLONGEE
SSR= TUBE DE DOSAGE AVEC REVETEMENT INTERIEU
SPR= TUBE DE DOSAGE RALLONGE AVEC REVETEMENT INTERIEUR

OUTILS HOMOGENEISATEUR
+++ = AVEC HOMOGENEISATEUR
UO1= SPECIAL
UO2= STANDARD

MOTORISATION DE DOSAGE
+ = AVEC MOTORISATION 0 rpm (§)
A = VITESSE COSTANTE 1/10 -140 rpm
B = VITESSE COSTANTE 1/15 -93 rpm (©)
C = VITESSE COSTANTE 1/20 -70 rpm (§)
D = VITESSE COSTANTE 1/28 -50 rpm
E = VITESSE COSTANTE 1/40 -35 rpm
F = VITESSE COSTANTE 1/70 -20 rpm (§)

VITESSE VARIABLE
0 = VITESSE COSTANTE (©)
1= VITESSE VARIABLE 1000 rpm-190 rpm
2= VITESSE VARIABLE AVEC DIFFÉRENZIALE 900 rpm-10 rpm (§)

MOTORISATION DE HOMOGENEISATION
+ = AVEC MOTORISATION (§)
Q = STANDARD 35 rpm
S = SPECIAL 14 rpm (§)

VOLTAGE ET FREQUENCE D’ALIMENTATION
+ = SANS MOTEUR
1 = 220-240 / 380-420 V 50 Hz; 440-480 V 60 Hz (©)
6 = 210-230 / 360-400 V 60 Hz

PUISSANCE MOT. OUTIL DE DOSAGE
++++ = SANS MOTEUR
0012= 0,12 kW per D=042 (©)
0018 = 0,18 kW per D=042
0025= 0,25 kW per D= 042-073-114 (©)
0037= 0,37 kW per D= 042-073-114

PUISSANCE MOT. OUTIL DE HOMOGENEISATION
++++ = SANS MOTEUR
0025= 0,25 kW per D=042 (©)
0037= 0,37 kW per D= 042
0055= 0,25 kW per D= 073-114 (©)
0075= 0,75 kW per D= 073-114

LEGENDA:
© STANDARD
§ NO MBF042
# SEULEMENT POUR MBF042

WAM®

MBF

- **ORDER CODES**
- **BESTELLCODE**
- **CODES DE COMMANDE**
- **CODICI DI ORDINAZIONE**

ITALIANO

①	②	③	④	⑤	⑥	⑦	⑧	⑨	⑩	⑪	⑫
MBF	**073**	**N**	**TN**	**UD 1**	**SST**	**UO 2**	**B**	**0**	**Q**	**1**	**0025**	**0055**

MICRODOSATORE
TIPO “MBF”

DIAMETRO
042 - 073 - 114

MATERIALE CORPO
N =Standard SINT® Tecnopolimero
F= SINT® Tecnopolimero Alimentare
A= AISI 304L
B= AISI 316L

TENUTE
TN= SINT®ER
TF= SINT®AL
TT= AISI 304 INGRASSATE
TA= AISI 304 CON TEFLON
TX= AISI 304 CON BRONZO

UTENSILE DI DOSAGGIO
+++ - UD1 (©)- UD2- UD3- UD4- UD5 - UD7(#) - UDB- UDD- UDE- UDG(#)

TUBO DI SCARICO
SST= SCARICO STANDARD
SPL= SCARICO PROLUNGATO
SSR= SCARICO INTERNAMENTE RIVESTITO
SPR= SCARICO PROLUNGATO INTERNAMENTE RIVESTITO

UTENSILE DI OMOGENIZZAZIONE
+++ = SENZA
UO1= SPECIALE
UO2= STANDARD A VOMERI

MOTORIZZAZIONE DOSAGGIO
+ = ASSENTE 0 rpm (§)
A = VELOCITA’ FISSA 1/10 -140 rpm
B = VELOCITA’ FISSA 1/15 -93 rpm (©)
C = VELOCITA’ FISSA 1/20 -70 rpm (§)
D = VELOCITA’ FISSA 1/28 -50 rpm
E = VELOCITA’ FISSA 1/40 -35 rpm
F = VELOCITA’ FISSA 1/70 -20 rpm (§)

VELOCITA’ VARIABILE
0 = VELOCITA’ COSTANTE (©)
1= VELOCITA’ VARIABILE 1000 rpm-190 rpm
2= VELOCITA’ VARIABILE DIFFERENZIALE 900 rpm-10 rpm (§)

MOTORIZZAZIONE OMOGENIZZATORE
+ = ASSENTE (§)
Q = STANDARD 35 rpm
S = SPECIALE 14 rpm (§)

TENSIONE E FREQUENZA
+ = SENZA MOTORE
1 = 220-240 / 380-420 V 50 Hz; 440-480 V 60 Hz (©)
6 = 210-230 / 360-400 V 60 Hz

MOTORIZZAZIONE UTENSILE DOSAGGIO
++++ = SENZA MOTORE
0012= 0,12 kW per D=042 (©)
0018 = 0,18 kW per D=042
0025= 0,25 kW per D= 042-073-114 (©)
0037= 0,37 kW per D= 042-073-114

MOTORIZZAZIONE UTENSILE OMOGENIZZAZIONE
++++ = SENZA MOTORE
0025= 0,25 kW per D=042 (©)
0037= 0,37 kW per D= 042
0055= 0,25 kW per D= 073-114 (©)
0075= 0,75 kW per D= 073-114

LEGENDA:
© STANDARD
§ NO MBF042
# SOLO MBF042

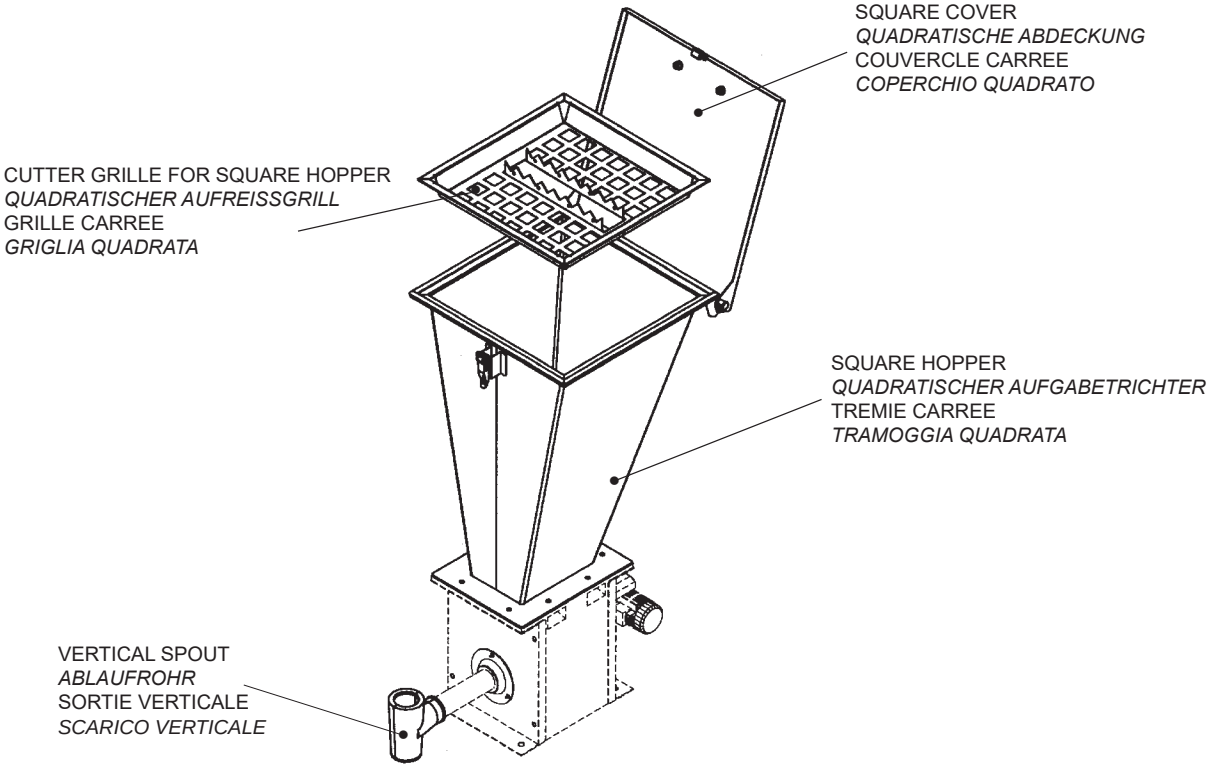
SQUARE COVER
QUADRATISCHE ABDECKUNG
COUVERCLE CARREE
COPERCHIO QUADRATO
CUTTER GRILLE FOR SQUARE HOPPER
QUADRATISCHER AUFREISSGRILL
GRILLE CARREE
GRIGLIA QUADRATA
SQUARE HOPPER
QUADRATISCHER AUFGABETRICHTER
TREMIE CARREE
TRAMOGGIA QUADRATA
VERTICAL SPOUT
ABLAUFROHR
SORTIE VERTICALE
SCARICO VERTICALE

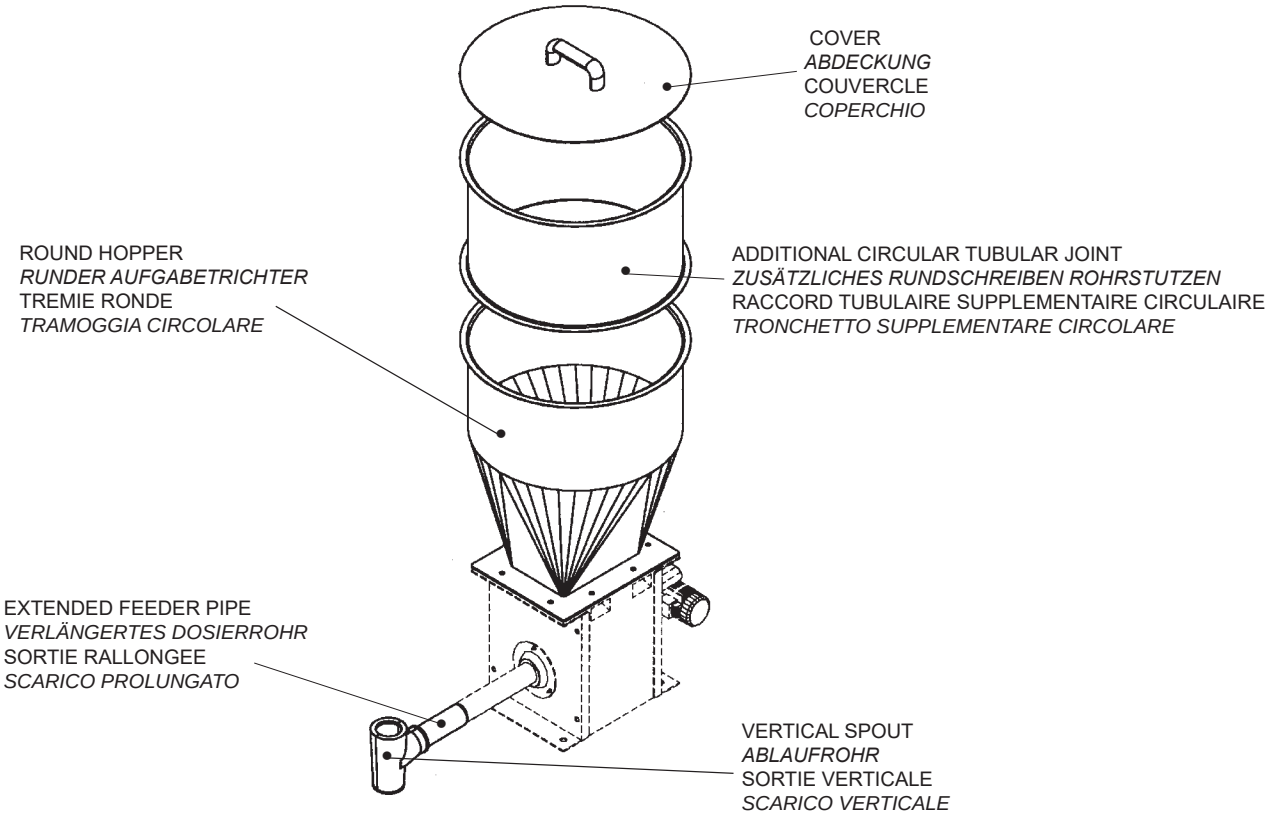
COVER
ABDECKUNG
COUVERCLE
COPERCHIO
ROUND HOPPER
RUNDER AUFGABETRICHTER
TREMIE RONDE
TRAMOGGIA CIRCOLARE
ADDITIONAL CIRCULAR TUBULAR JOINT
ZUSÄTZLICHES RUNDSCHREIBEN ROHRSTUTZEN
RACCORD TUBULAIRE SUPPLEMENTAIRE CIRCULAIRE
TRONCHETTO SUPPLEMENTARE CIRCOLARE
EXTENDED FEEDER PIPE
VERLÄNGERTES DOSIERROHR
SORTIE RALLONGEE
SCARICO PROLUNGATO
VERTICAL SPOUT
ABLAUFROHR
SORTIE VERTICALE
SCARICO VERTICALE

SQUARE HOPPER - *QUADRATISCER AUFGABETRICHTER* -TREMIE CARREE - *TRAMOGGIA QUADRATA*

M	D	X	T	S	1	2

2: Stainless steel - *Edelstahl 1.4301* - Inox 304 - *AISI 304*

Type hopper
Trichtergröße
Type de trémie
Grandezza tramoggia

1	MBF 042
2	MBF 073 -114

Square hopper
Quadratischer Aufgabetrichter
Trémie carrée
Tramoggia quadrata

Micro batch feeder accessories
Zubehör Mikrodosierer
Accessoires microdoseur
Accessori microdosatore

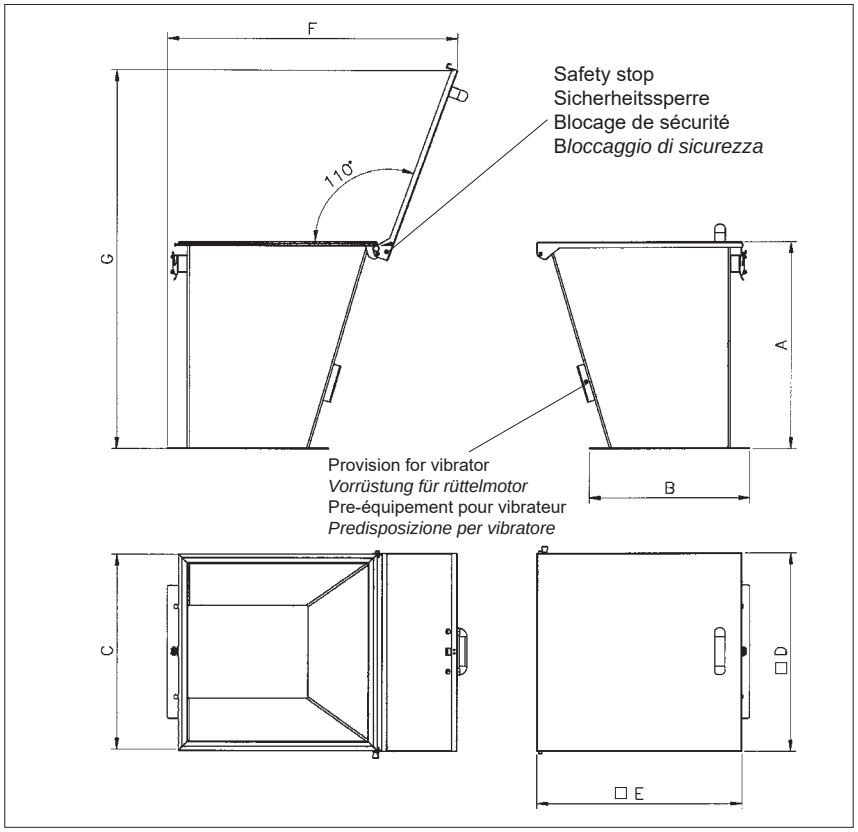

MDXTS	Suitable for - *Passend zu* Pour type - *Idoneo* MBF	A	B	C	□ D	□ E	F	G	dm³	kg
12	042	600	310	428	434	445	640	980	25	12
22	073 - 114	600	466	575	582	595	840	1120	75	19

ROUND HOPPER - *RUNDER AUFGABETRICHTER* - TREMIE RONDE - *TRAMOGGIA CIRCOLARE*

M	D	X	T	R	1	2

2: Stainless steel - *Edelstahl 1.4301* - Inox 304 - *AISI 304*

Type hopper
Trichtergröße
Type de trémie
Grandezza tramoggia

1	MBF 042
2	MBF 073 -114

Round hopper
Runder Aufgabetrichter
Trémie ronde
Tramoggia circolare

Micro batch feeder accessories
Zubehör zu Mikrodosierer
Accessoires microdoseur
Accessori microdosatore

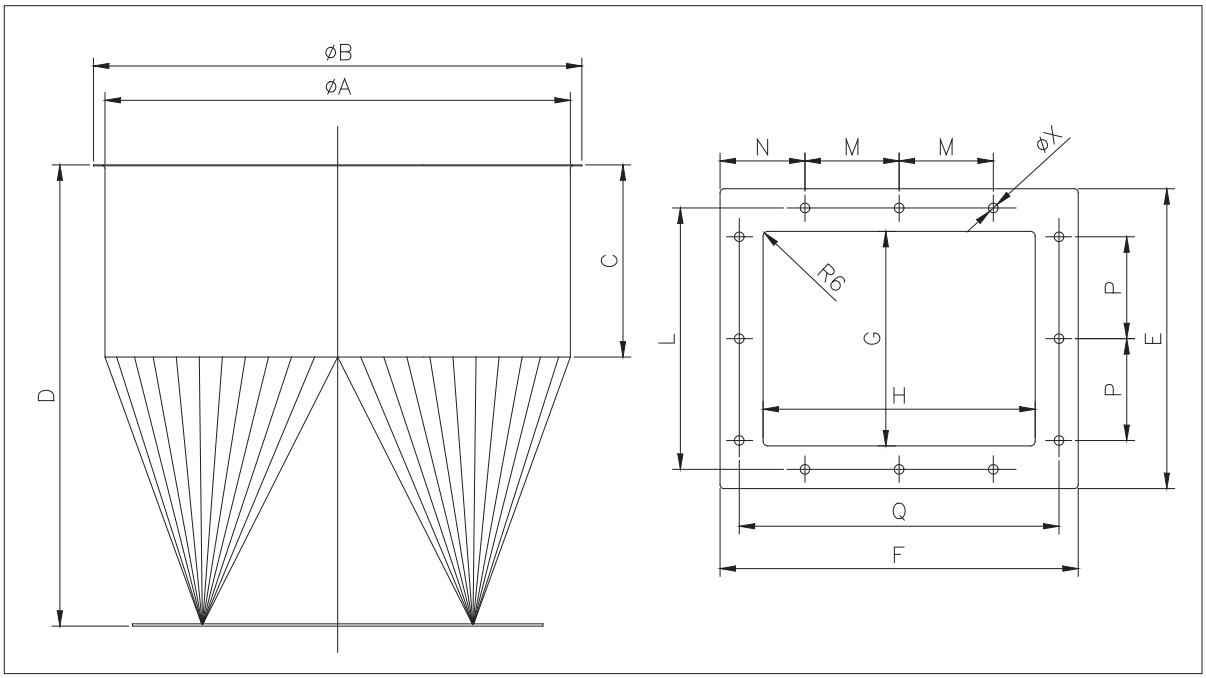

MDXTR	Suitable for - *Passend zu* Pour type - *Idoneo* MBF	Ø A	Ø B	C	D	E	F	G	H	L	M	N	P	Q	Holes - *Bohrungen* Trous - *Fori* X		dm³	kg
															Ø	n°		
12	042	408	436	200	500	250	310	140	200	200	110	100	130	260	9	8	52	12
22	073 - 114	630	636	250	600	390	466	279	354	340	122.5	110.5	132.5	416	12.5	12	120	20

ADDITIONAL CIRCULAR TUBULAR JOINT - *ZUSÄTZLICHES RUNDSCHREIBEN ROHRSTUTZEN*
RACCORD TUBULAIRE SUPPLEMENTAIRE CIRCULAIRE - *TRONCHETTO SUPPLEMENTARE CIRCOLARE*

M	D	X	A	R	1	2

2: Stainless steel - *Edelstahl 1.4301* - Inox 304 - *AISI 304*

Type hopper
Trichtergröße
Type de trémie
Grandezza tramoggia

1	MBF 042
2	MBF 073 -114

Additional circular tubular joint
Zusätzliches rundschreiben Rohrstutzen
Raccord tubulaire supplementaire circulaire
Tronchetto supplementare circolare

Micro batch feeder accessories
Zubehör zu Mikrodosierer
Accessoires microdoseur
Accessori microdosatore

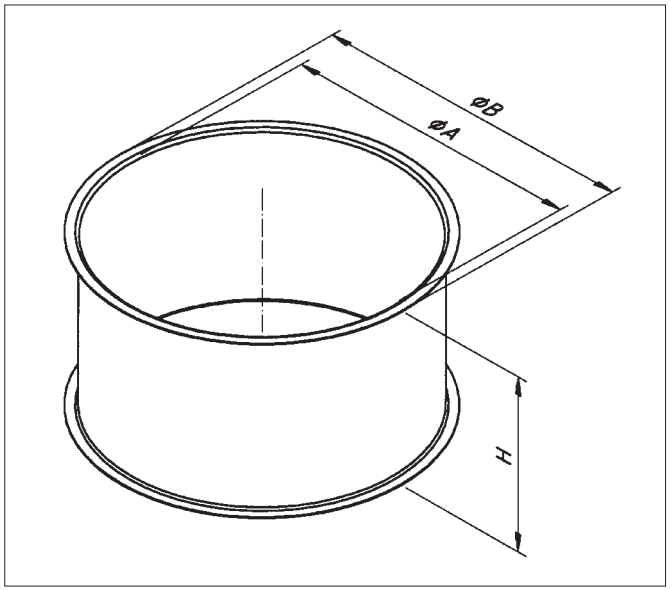

MDXAR	Suitable for - *Passend zu* Pour type - *Idoneo* MBF	Ø A	Ø B	H	dm^3
12	042	406	436	200	25
22	073-114	605	635	180	50

CUTTER GRILLE FOR SQUARE HOPPER - *QUADRATISCHER AUFREISSGRILL* - GRILLE CARREE - *GRIGLIA QUADRATA*

M	D	X	G	S	1	2

2: Stainless steel - *Edelstahl 1.4301* - Inox 304 - *AISI 304*

Type hopper
Trichtergröße
Type de trémie
Grandezza tramoggia

1	MBF 042
2	MBF 073 -114

Type hopper cutter grille
Grill
Type de grille
Griglia quadrata tagliasacchi

Micro batch feeder accessories
Zubehör Mikrodosierer
Accessoires microdoseur
Accessori per microdosatore

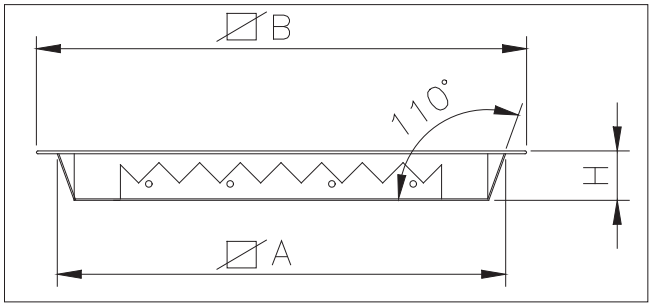

MDXGS	Suitable for - *Passend zu* Pour type - *Idoneo* MBF	□ A	□ B	H	kg
12	042	345	410	40	2
22	073 - 114	495	555	40	3

FLANGES - *FLANSCHE*
BRIDES - *FLANGIATURE*

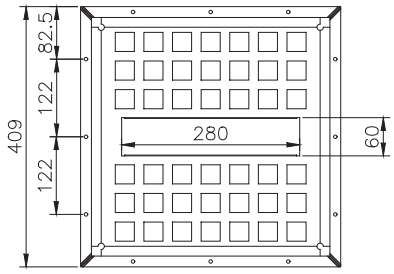

MDXGS12

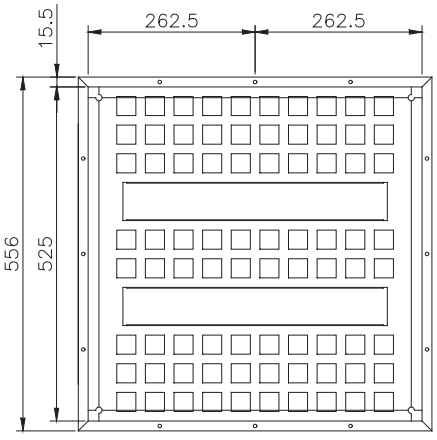

MDXGS22

ROUND COVER - *RUNDE ABDECKUNG* - COUVERCLE ROND - *COPERCHIO TONDO*

M	D	X	C	R	1	2

2: Stainless steel - *Edelstahl 1.4301* - Inox 304 - *AISI 304*

Type hopper
Trichtergröße
Type de trémie
Grandezza tramoggia

1	MBF 042
2	MBF 073 -114

Round cover
Runde Abdeckung
Couvercle rond
Coperchio tondo

Micro- batch fedeer accessories
Zubehör Mikrodosierer
Accessoires microdoseur
Accessori per microdosatore

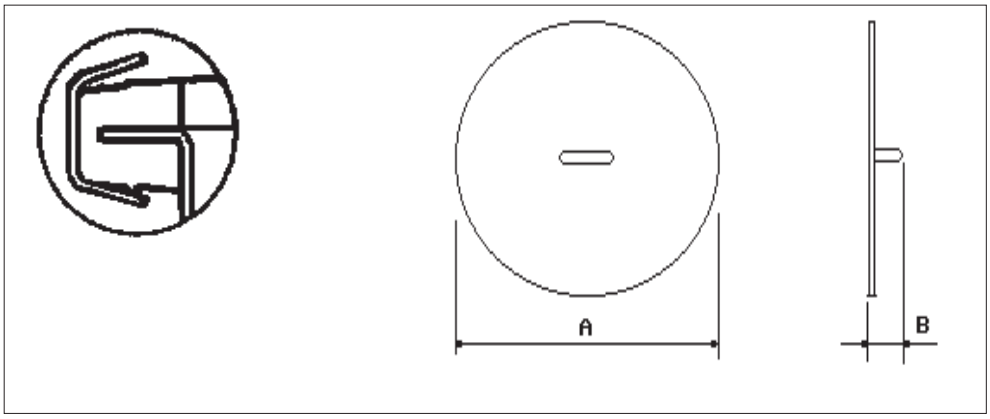

MDXCR	Suitable for - *Passend zu* Pour type - *Idoneo* MBF	A	B	kg
12	042	436	50	2
22	073 - 114	635	50	3

PNEUMATIC BALL VIBRATORS - *DRUCKLUFT-KUGELVIBRATOREN*
VIBRATEURS PNEUMATIQUES A BILLE - *VIBRATORI PNEUMATICI A SFERA*
"S"

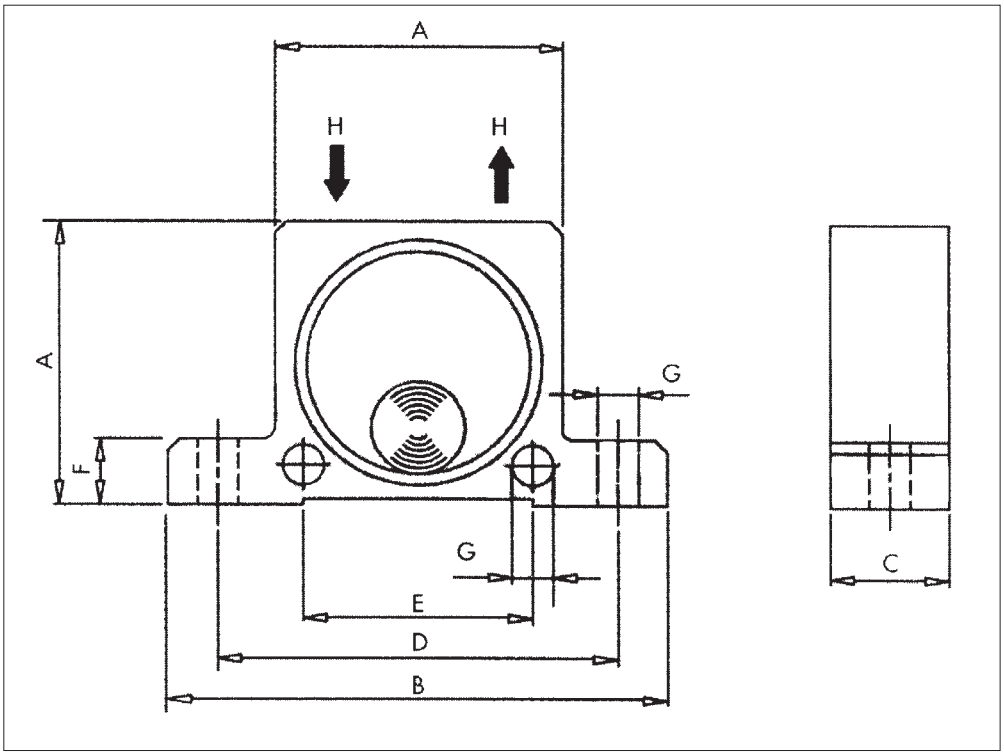

Dimensions - *Abmessungen* - Dimensions - *Dimensioni*

Type	A		B		C		D		E		F		G		H	kg	
	mm	in	mm	in	mm	in	mm	in	mm	in	mm	in	mm	in		kg	lbs
S 20	80	3.15	128	5.04	33	1.30	104	4.09	60	2.36	16	0.63	9	0.35	1/4"	0.53	1.17
S 25					38	1.50										0.63	1.39

Performance data - *Leistungsdaten* - Performances - *Prestazioni*

Type	Vibrations - *Schwingungwen* Vibrations - *Vibrazioni* min			Fc max. kg						Air consumption - *Luftverbrauch* Consommation d'air - *Consumo d'aria* l/min					
	2 bar 29 psi	4 bar 58 psi	6 bar 87 psi	2 bar = 29 psi		4 bar = 58 psi		6 bar = 87 psi		2 bar = 29 psi		4 bar = 58 psi		62 bar = 87psi	
				kg	lbs	kg	lbs	kg	lbs	dm^3	cf	dm^3	cf	dm^3	cf
S 20	10.500	14.500	16.500	72	162	122	275	172	387	130	4.6	230	81	340	12.0
S 25	9.200	12.200	14.000	93	209	157	353	205	461	160	5.6	290	10.2	425	15.0

ELECTRIC EXTERNAL MOTOVIBRATORS - *ELEKTRISCHE VIBRATIONSMOTOREN*
MOTOVIBRATEURS EXTERNES ELECTRIQUES - *MOTOVIBRATORI ELETTRICI*
MVE

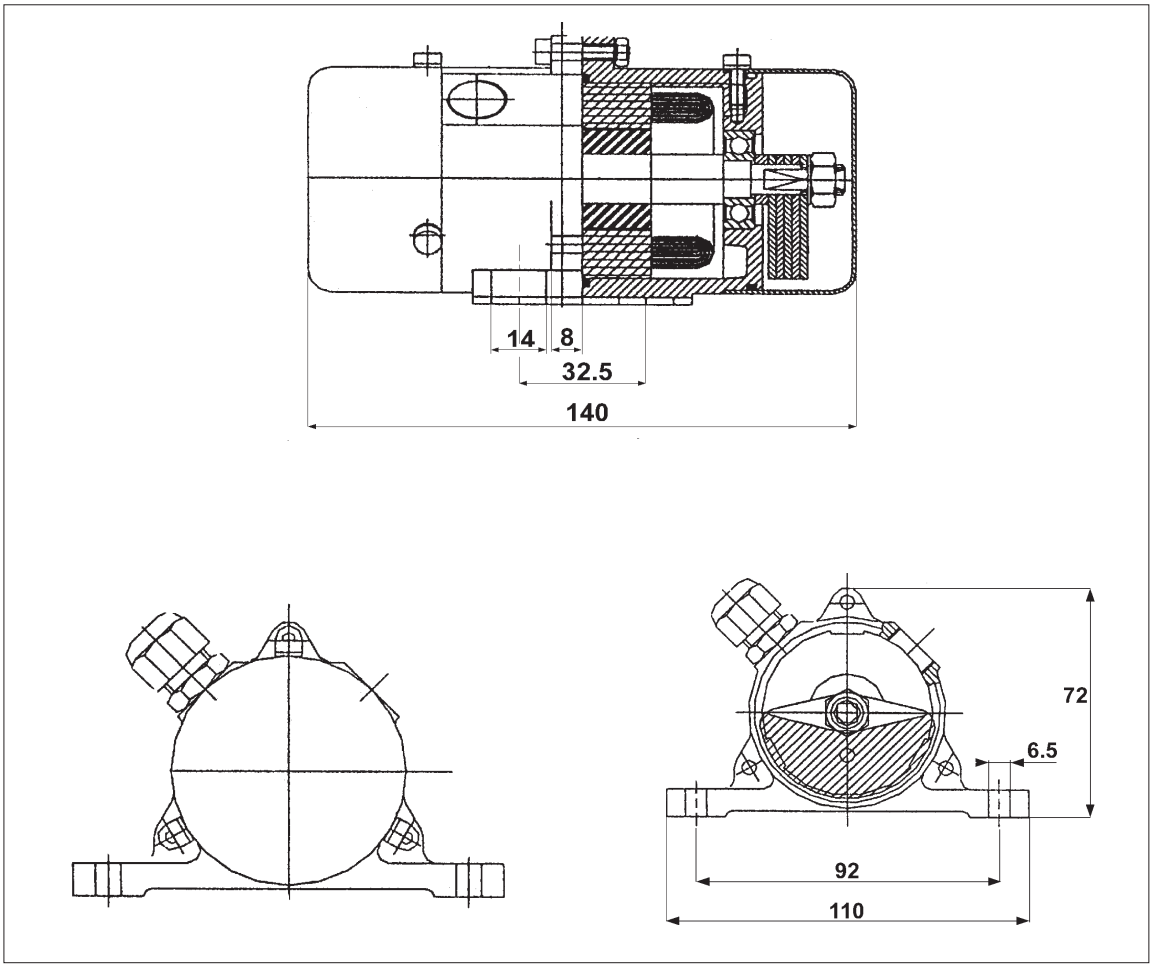

Type	Max. power *Max. Leistung* Puissance max. *Potenza max.* W		Max. current *Max. Stromaufnahme* Courant max. *Assorbimento max.* A		RPM *U/min* TPM *Giri/min*		Centrifugal force *Zentrifugalkraft* Force centrifuge *Forza centrifuga* kg		Weight *Gewicht* Poids *Peso*
	50 Hz	60 Hz	220 V 50 Hz	115 V 60 Hz	50 Hz	60 Hz	50 Hz	60 Hz	kg
MVE 20	32	36	0.10	0.23	2750	3300	0-22	0-32	1.5

TECNICAL FEATURES

- Adjustable Centrifugal Force
- Protection IP 65
- Insulation Class “F”
- Continuous Duty

TECHNISCHE MERKMALE

- Einstellbare Zentrifugalkraft
- Schutzart IP 65
- Iso-Klasse F
- 100% ED

CARACTERISTIQUES TECHNIQUES

- Force centrifuge réglable
- Protection IP 65
- Classe d’isolation F
- Service continu

CARATTERISTICHE TECNICHE

- Forza centrifuga regolabile
- Protezione IP 65
- Classe d’isolamento F
- Servizio continuo

SPECIAL BLENDING TOOLS - *SPEZIAL-HOMOGENISIERWERKZEUGE*
OUTILS DE HOMOGENEISATION SPECIAUX - *UTENSILI OMOGENEIZZAZIONE SPECIALI*

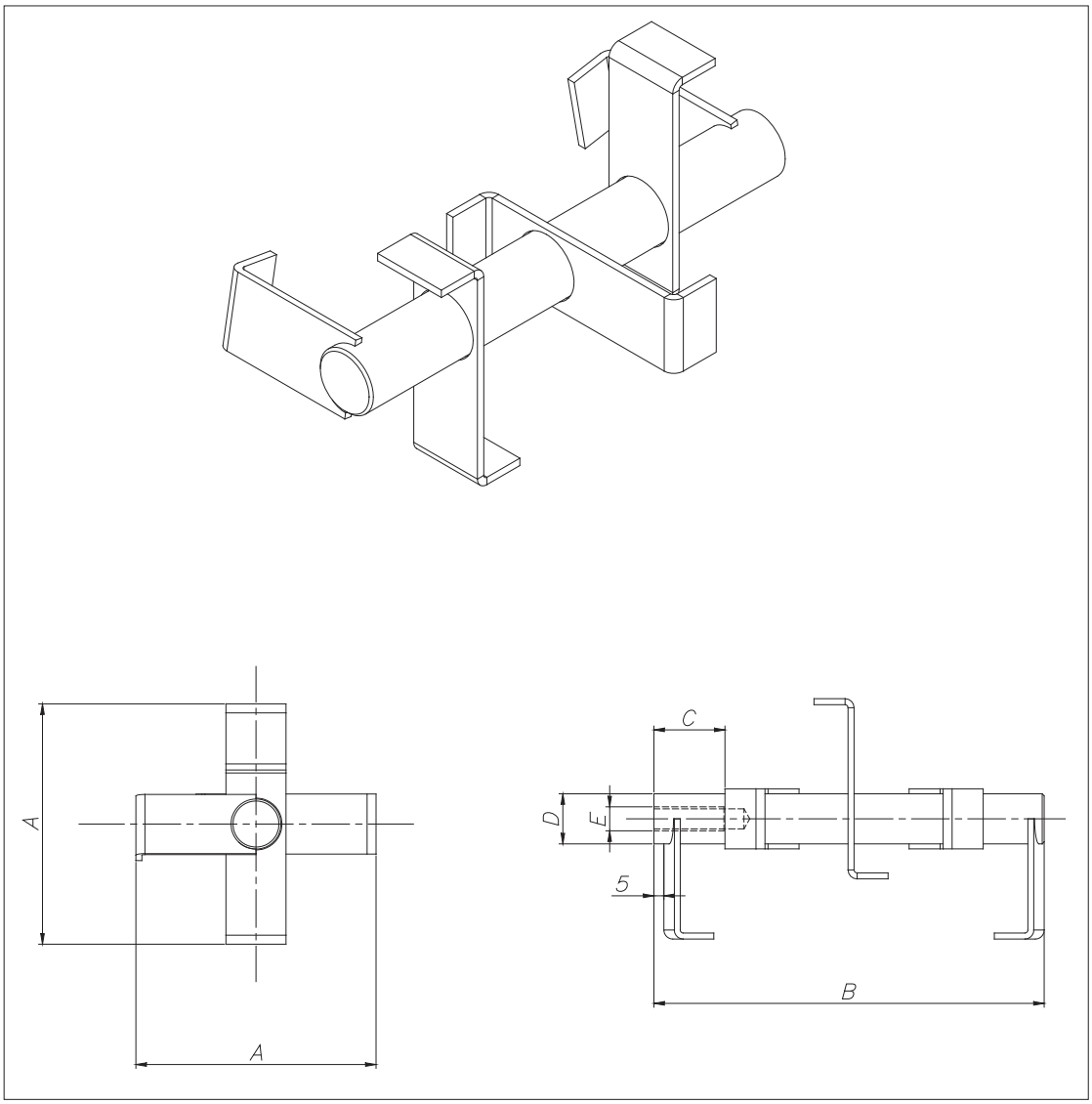

TYPE1

MBF	Code	A	B	D	E	kg
042	**UTO 12**	130	199	25	M 12	1
073	**UTO 13**	260	349	35	M 16	3.5
114	**UTO 13**	260	349	35	M 16	3.5

STD INSPECTION HATCH FOR AISI 304L MBF TYPE - *STD INSPEKTIONSTÜR FÜR MBF IN EDELSTAHL 1.4301*
TRAPPE DE VISITE STD POUR MBF DANS AISI 304L - *PORTELLO DI ISPEZIONE STD PER MBF IN AISI 304L*

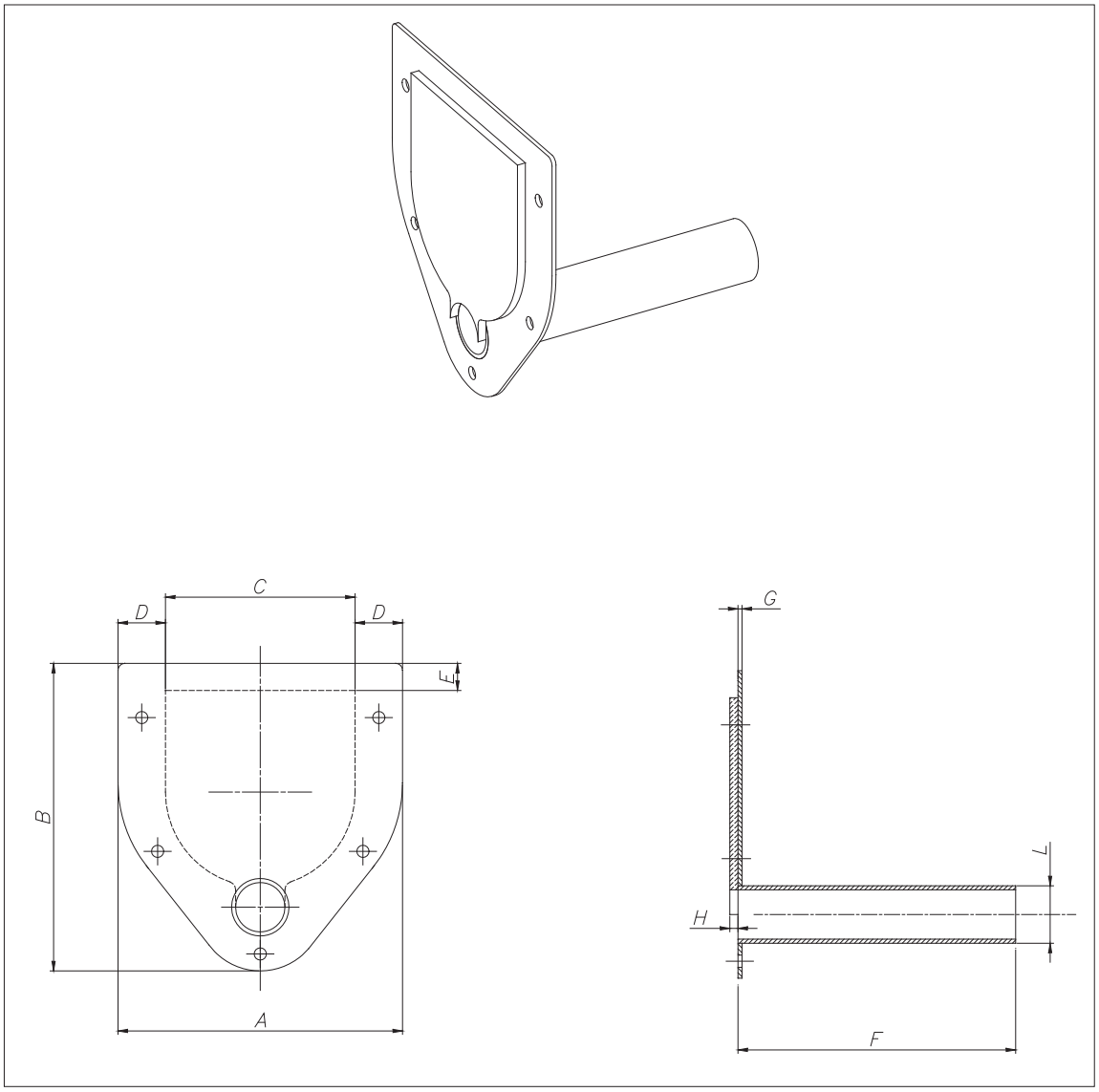

MBF	Code	A	B	C	D	E	F	G	H	Ø L	kg
042	**MBPI 2**	210	227	140	35	20	205	3	6	42	1.4
073	**MBPI 3**	345	395	275	35	20	255	3	6	76	5.6
114	**MBPI 4**	350	431	275	37	20	255	3	6	114	6.3

INSPECTION HATCH FOR AISI 304L MBF TYPE WITH EXTENDED TUBE
INSPEKTIONSTÜR FÜR MBF IN EDELSTAHL 1.4301 MIT* LÄNGLICH*ROHR
TRAPPE DE VISITE POUR MBF DANS AISI 304L AVEC TUBE PROLONGE
PORTELLO DI ISPEZIONE PER MBF IN AISI 304L CON TUBO PROLUNGATO

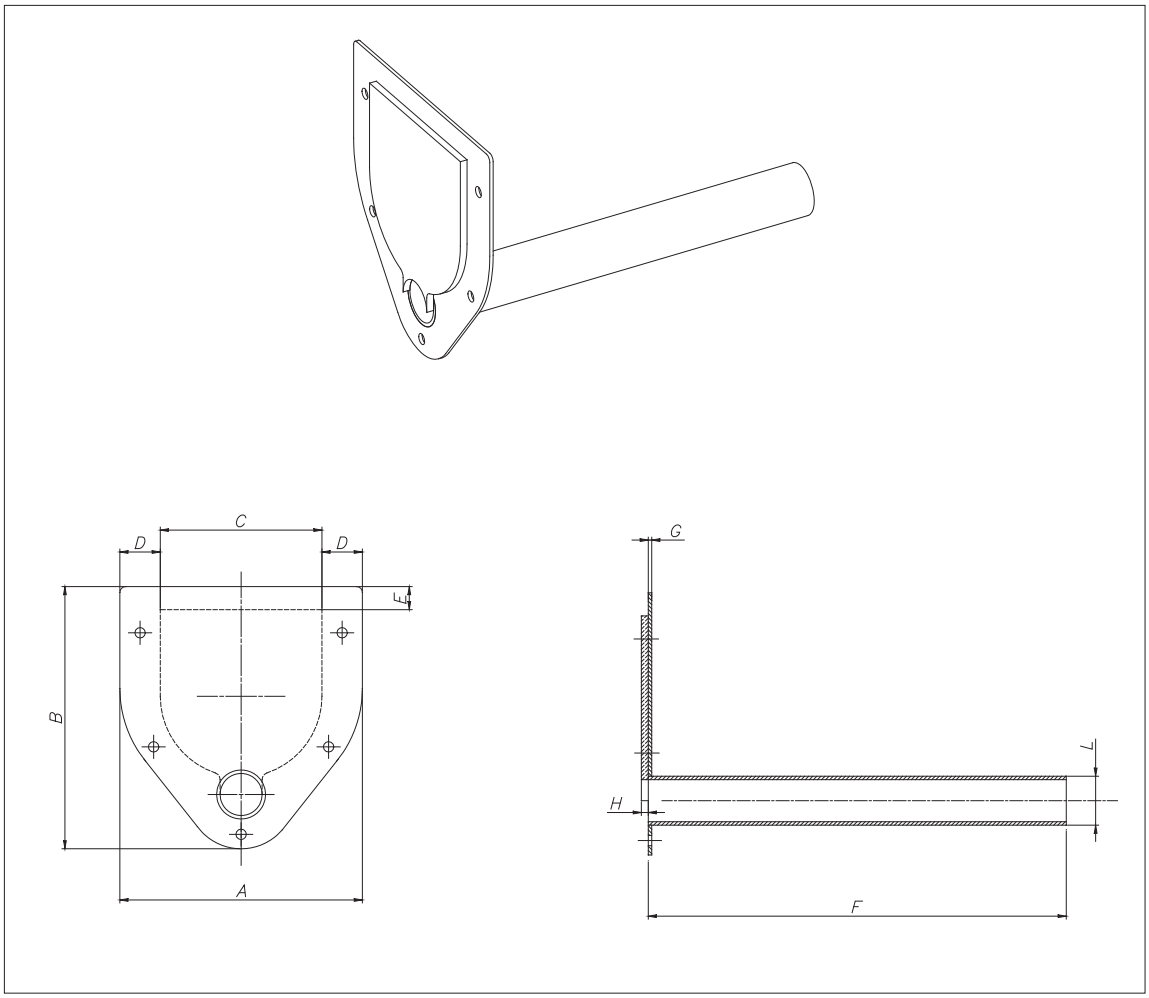

MBF	Code	A	B	C	D	E	F	G	H	Ø L	kg
042	**MBPIP 2**	210	227	140	35	20	362	3	6	42	1.8
073	**MBPIP 3**	345	395	275	35	20	505	3	6	76	6.8
114	**MBPIP 4**	350	431	275	37	20	505	3	6	114	7.4

FEEDER PIPE - *DOSIERROHR* - TUBE DE DOSAGE - *SCARICO*

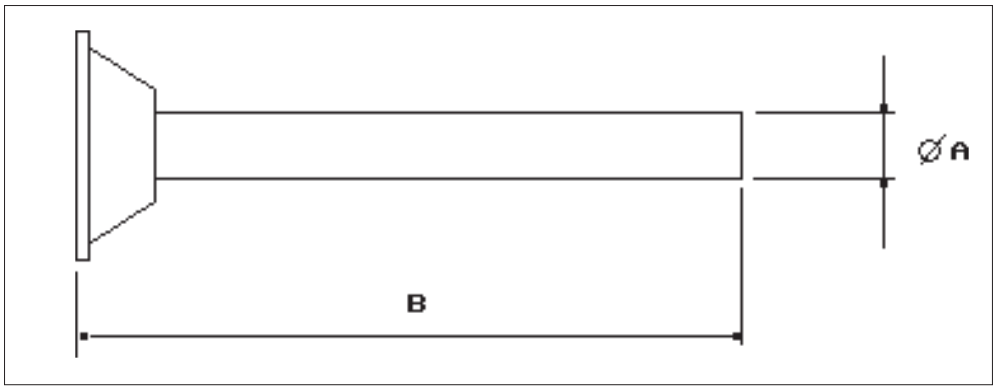

STANDARD FEEDER PIPE - *STANDARD DOSIERROHR* - TUBE DE DOSAGE STANDARD - *SCARICO STANDARD*				
Code	**Suitable for - *Passend zu* Pour type - *Idoneo per* MBF**	**Ø A**	**B**	**kg**
MBT 2	042	42	200	1.0
MBT 3	073	76	250	2.4
MBT 4	114	114	250	4.0

EXTENDED FEEDER PIPE - *VERLÄNGERTES DOSIERROHR* - SORTIE RALLONGEE - *SCARICO PROLUNGATO*				
Code	**Suitable for - *Passend zu* Pour type - *Idoneo per* MBF**	**Ø A**	**B**	**kg**
MBTP 2	042	42	370	1.2
MBTP 3	073	76	500	2.7
MBTP 4	114	114	500	4.4

LINERFEEDER PIPE - *DOSIERROHR MIT INNENAUSKLEIDUNG*
TUBE DE DOSAGE AVEC REVETEMENT INTERIEUR - *SCARICO INTERNAMENTE RIVESTITO*

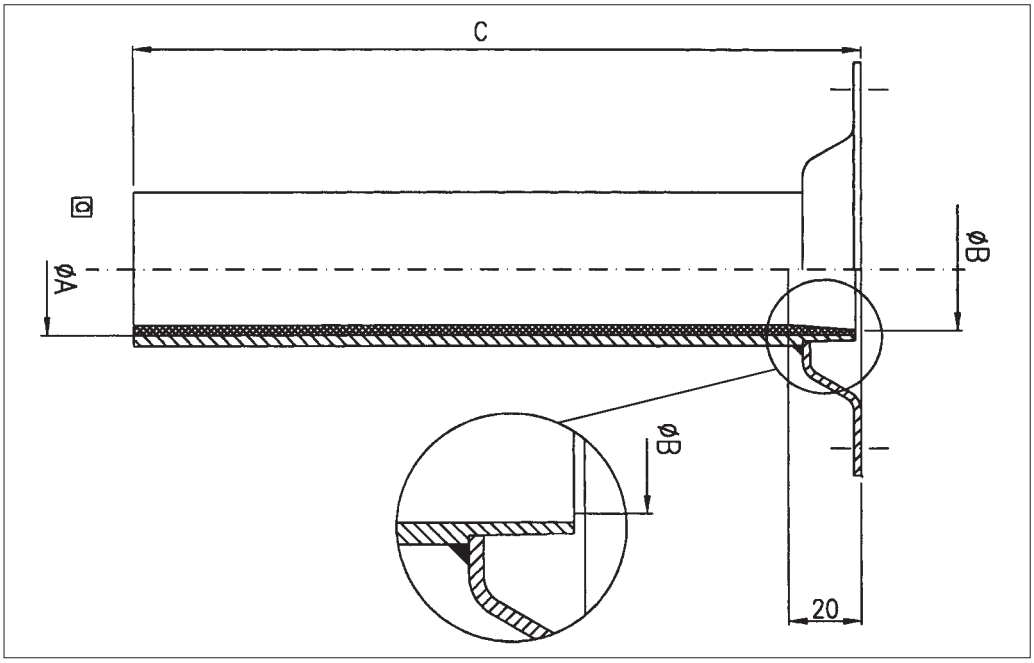

4 SINT®ER
5 SINT®AL

STANDARD LINED FEEDER PIPE - *STANDARD DOSIERROHR MIT INNENAUSKLEIDUNG* TUBE DE DOSAGE AVEC REVETEMENT INTERIEUR - *SCARICO STD INTERNAMENTE RIVESTITO*					
Code	**Suitable for - *Passend zu* Pour type - *Idoneo per* MBF**	**Ø A**	**Ø B**	**C**	**kg**
MBTR 2 .	042	31	34	200	1.2
MBTR 3 .	073	61	63	250	2.7
MBTR 4 .	114	101	104	250	4.4

4 SINT®ER
5 SINT®AL

EXTENDED LINED FEEDER PIPE - *VERLÄNGERTES DOSIERROHR MIT INNENAUSKLEIDUNG* TUBE DE DOSAGE RALLONGE AVEC REVETEMENT INTERIEUR - *SCARICO PROLUNGATO INTERNAMENTE RIVESTITO*					
Code	**Suitable for - *Passend zu* Pour type - *Idoneo per* MBF**	**Ø A**	**Ø B**	**C**	**kg**
MBTRP 2 .	042	31	34	370	1.6
MBTRP 3 .	073	61	63	500	3.2
MBTRP 4 .	114	101	104	500	5.2

VERTICAL SPOUT - *ABLAUFROHR* - SORTIE VERTICALE - *SCARICO VERTICALE*

M	D	X	S	V	2	4

4: SINT®ER
5: SINT®AL

2 = MBF 042
3 = MBF 073
4 = MBF 114

Vertical spout
Ablaufrohr
Sortie verticale
Scarico verticale

Micro-batch fedeer accessories
Zubehör Mikrodosierer
Accessoires microdoseur
Accessori microdosatore

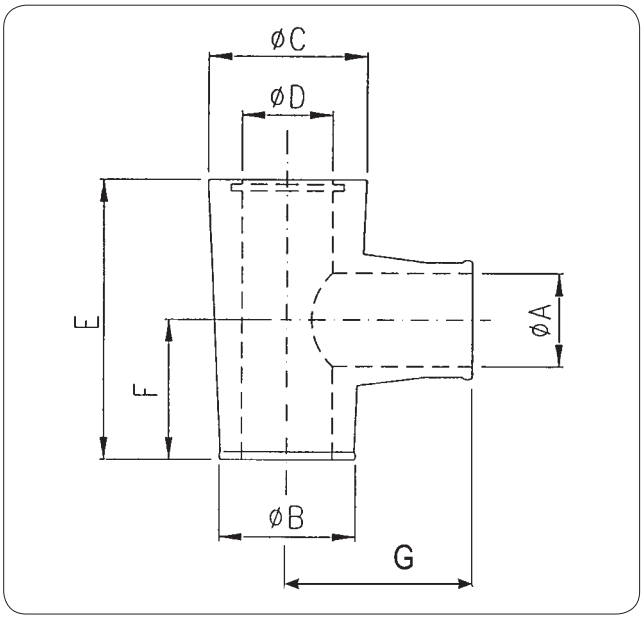

MDXSV	Suitable for - *Passend zu* Pour type - *Idoneo* MBF	Ø A	Ø B	Ø C	Ø D	E	F	G	kg
2.	042	42	60	70	50	126	63	81	0.27
3.	073	75	121	130	100	187.5	95	143.5	1.3
4.	114	114	175	190	150	230	115	191	3

4	SINT®ER
5	SINT®AL

VERTICAL SPOUT WITH PNEUMATIC CLOSURE - *ABLAUFROHR MIT PNEUMATISCHEM VERSCHLUSS*
SORTIE VERTICALE AVEC FERMETEURE PNEUMATIQUE - *SCARICO VERTICALE CON CHIUSURA PNEUMATICA*

M	D	X	S	C	2	4

4: SINT®ER
5: SINT®AL

2 = MBF 042
3 = MBF 073
4 = MBF 114

vertical spout with pneumatic cover
Ablaufrohr mit pneumatischem verschluss
Sortie verticale avec fermeteure pneumatique
Scarico verticale con chiusura pneumatica

Micro-batch fedeer accessories
Zubehör Mikrodosierer
Accessoires microdoseur
Accessori microdosatore

N.B.: Operation P_{max} 4 bar !
N.B.: Betrieb P_{max} 4 bar !
N.B.: P_{max} de travail 4 bar !
N.B.: P_{max} di lavoro 4 bar !

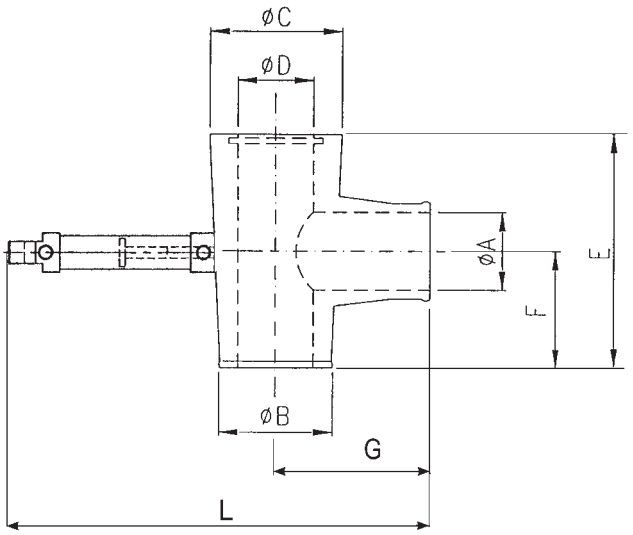

MDXSC	Suitable for - *Passend zu* Pour type - *Idoneo* MBF	Ø A	Ø B	Ø C	Ø D	E	F	G	L	kg
2.	042	42	60	70	50	126	63	81	214.5	0.5
3.	073	75	121	130	100	187.5	95	143.5	353.5	2.8
4.	114	114	175	190	150	230	115	191	472	4.5

4	SINT®ER
5	SINT®AL

Note: Microcylinder ISO 6432 - Anm.: Mikrozylinder ISO 6432
Remarque: Micro-cylindre ISO 6432 - *Nota: Microcilindro ISO 6432*

MAGENTIC SENSOR KIT FOR MICRO-CYLINDER - *MAGNETISCHES SENSORKIT FÜR MIKROZYLINDER*
KIT SENSEUR MEGNETIQUE POUR MICRO-CYLINDRE - *KIT SENSORE MAGNETICO RILEVAMENTO PER MICROCILINDRO*

KXM	Suitable for - *Passend zu* Pour type - *Idoneo* MBF
16	MDXSC2
20	MDXSC3
25	MDXSC4

AUTOMATIC LUBRICATOR | **AUTOMATISCHE SCHMIERVORRICHTUNG** | **GRAISSEUR AUTOMATIQUE** | **LUBRIFICATORE AUTOMATICO**

CARTRIDGE GREASE NIPPLE LIT - *SCHMIERPATRONENSATZ*
KIT GRAISSEUR CARTOUCHE - *KIT INGRASSATORE CARTUCCIA*

M	D	X	I	125

Capacity - *Kapazität* - Capacité - *Capacità*

Grease nipple - *Schmiernippel* - Graisseur - *Ingrassatore*

Micro-batch feeders accessories - *Mikrodosierer zubehör*
Accessoires microdoseurs - *Accessori microdosatore*

TECHNICAL SPECIFICATIONS	
Capacity	125 ml
Operating period	Adjustable at 1-12 months
Operating temperature	-20°C a + 55°C°
Max. operating pressure	5 bar**
Activation mechanism	Hydrogen gas release battery (H2)
Threading	G 1/4
Recommended storage temperature	+20°C
Storage period	2 years***
Weight	Approx. 190g (including grease)
Appellative	LAGD 125/WA (filled with SKF LGWA 2 grease) LAGD 125/"lubricant"

TECHNISCHE DATEN	
Kapazität	125 ml
Betriebsdauer	Von 1 bis 12 Monate einstellbar
Betriebstemperatur	-20°C bis + 55°C°
Max. Betriebsdruck	5 bar**
Einschaltmechanismus	Wasserstoff freisetzende Batterie (H2)
Gewinde	G 1/4
Empfohlene Lagerhaltungstemperatur	+20°C
Lagerzeit	2 Jahre ***
Gewicht	circa 190 g (Fett inbegriffen)
Bezeichnung	LAGD 125/WA (mit Fett SKF LGWA 2 gefüllt) LAGD 125/"Schmierstoff"

CARACTÉRISTIQUES TECHNIQUES	
Capacité	125 ml
Période de fonctionnement	Réglable de 1 à 12 mois
Température de fonctionnement	-20°C a + 55°C°
Pression max. de fonctionnement	5 bar**
Mécanisme d'activation	Batterie à dégagement de gaz hydrogène (H2)
Filetage	G 1/4
Température conseillée pour le stockage	+20°C
Période de stockage	2 ans***
Poids	Env. 190jj (graisse incluse)
Désignation	LAGD 125/WA (avec le plein de graisse SKF LGWA 2 grease) LAGD 125/"lubrifiant"

DATI TECNICI	
Capacità	125 ml
Periodo di funzionamento	Regolabile da 1 a 12 mesi
Temperatura di funzionamento	-20°C a + 55°C°
Pressione max. di funzionamento	5 bar**
Meccanismo di attivazione	Batteria a sviluppo di gas idrogeno (H_2)
Filettatura	G 1/4
Temperatura consigliata per lo stoccaggio	+20°C
Periodo di stoccaggio	2 anni***
Peso	Circa 190g (grasso incluso)
Appellativo	LAGD 125/WA (riempito con grasso SKF LGWA 2) LAGD 125/"lubrificante"

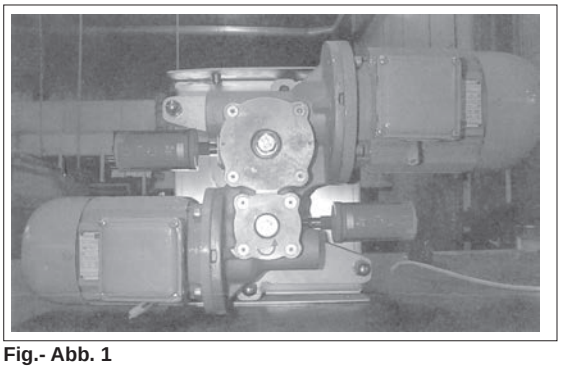

Fig.- Abb. 1
SKF assembly on Batch feeder - *Montage SKF auf Dosierer*
Montage SKF sur doseur - *Montaggio SKF su dosatore*

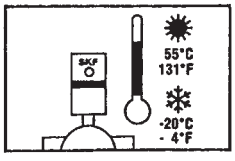

Operatin temperature - *Betriebstemperatur*
Température de fonctionnement
Temperatura di funzionamento

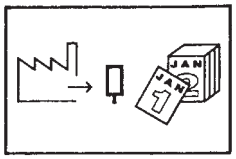

Production date - *Produktionsdatum*
Date de production - *Data di produzione*



WAM®

MBF

- **INQUIRY AND ORDER FORM**
- **ANFRAGE- UND BESTELLBLATT**
- **QUESTIONNAIRE**
- **MODULO DI RICHIESTA**

02.11

1

VAL.062.-.T.4L. 44

MATERIAL TO DOSE
PHYSICAL AND CHEMICAL CHARACTERISTICS

- ☐☐ ☐☐ DENSITY
- ☐☐☐☐ GRANULOMETRY
- ☐ FLUIDITY
- ☐ ABRASIVITY
- ☐ BUILDS UP AND HARDENS
- ☐ STATIC ELECTRICITY GENERATOR
- ☐ DECOMPOSITION - DAMAGING
- ☐ FLAMMABILITY
- ☐ PLASTICITY - TENDENCY TO SOFTEN
- ☐ DUSTINESS
- ☐ AIRATED - FLUIDITY
- ☐ EXPLOSIVITY
- ☐ VISCOSITY - ADHESIVENENESS
- ☐ CONTAMINABILITY
- ☐ DEGRADABILITY
- ☐ PRESENCE OF TOXIC GAS
- ☐ HIGH CORROSIVITY
- ☐ MEDIUM CORROSIVITY
- ☐ HYGROSCOPICITY
- ☐ FORMATION OF GRANULES
- ☐ INTERLOCKS, AGGLOMERATES
- ☐ PRESENCE OF OILS AND GREASE
- ☐ TENDENCY TO COMPACT UNDER PRESSURE
- ☐ LIGHT AND SOFT
- ☐ HIGH TEMPERATURE

REQUEST CAPACITY (dm^3/h) ☐☐☐☐ (kg/h) ☐☐☐☐

TOLERANCE ☐ ☐

LOADING AND HOPPER CAPACITY

MBW MODEL

FEED SCREW AND AGITATOR ☐ ☐ R ☐

ACCESSORIES

MOTORS V Hz

NOTES

DOSIERMEDIUM
PHYSIKALISCHE UND CHEMISCHE EIGENSCHAFTEN

- ☐☐ ☐☐ SCHÜTTGEWICHT
- ☐☐☐☐ KÖRNUNG
- ☐ FLIESSFÄHIGKEIT
- ☐ ABRASIVITÄT
- ☐ HÄRTET LEICHT AUS
- ☐ LÄDT SICH STATICH AUF
- ☐ VERROTTET LEICHT
- ☐ LEICHT ENTZÜNDBAR
- ☐ PLASTIFIZIERT
- ☐ HOHE STAUBENTWICKLUNG
- ☐ HOHER LUFTANTEIL
- ☐ EXPLOSIV
- ☐ VISKOS, STARK HAFTEND
- ☐ LEICHT ZU VERUNREINIGEN
- ☐ ZERFALLT LEICHT
- ☐ ENTWICKELT GIFTIGE GASE ODER RAUCH
- ☐ SEHR KORROSIV
- ☐ HYGROSKOPISCH
- ☐ NEIGT ZUR KORN-ODER KLUMPENBILDUNG
- ☐ ÖL-ODER FETTHALTIG
- ☐ NEIGT ZUM ANBACKEN
- ☐ SEHR LEICHT
- ☐ HOHE TEMPERATUR

GEFORDERTE DURCHSATZLEISTUNG (dm^3/h) ☐☐☐☐ (kg/h) ☐☐☐☐

TOLERANZ %____*☐ ☐

ART DER BESCHICKUNG:
TRICHTERKAPAZITÄT:
BETRIEBSDAUER :(h/Tag)
EINSCHALTUNGEN PRO STUNDE:
WOHIN WIRD DOSIERT ?
WENN VARIABLE DURCHSATZLEISTUNG GEFORDERT, WARUM ?
DOSIERER TYPE:

DOSIER-/HOMOGENISIERWERKZEUG ☐ ☐ R ☐
ZUBEHÖR:

ELEKTROMOTOR (E) V Hz

BEMERKUNGEN :

MATERIAU A DOSER
CARACTERISTIQUES PHYSICO - CHIMIQUES

- ☐☐ ☐☐ POIDS SPECIFIQUE
- ☐☐☐☐ GRANULOMETRIE
- ☐ CORROSION
- ☐ ABRASIVITE
- ☐ DELATATION ET DURCISEMENT
- ☐ ENGENDRE DE L' ELECTRICITE STATIQUE
- ☐ DECOMPOSITION - DETERIOSATION
- ☐ IMFLAMABLE
- ☐ PLASTIQUE
- ☐ SOUPLE
- ☐ AERE - FLUIDE
- ☐ EXPLOSIF
- ☐ VISCOSITE
- ☐ CONTAMINABLE
- ☐ DEGRADABLE
- ☐ CREATION DE GAZ TOXIDE ET DE FUME NUISIBLE
- ☐ HAUTE CORROSION
- ☐ MOYEN CORROSION
- ☐ HYGROSCOPIQUE
- ☐ FORMATION DE GRANULE
- ☐ PRESENTE HUILE ET GRAISSE
- ☐ TASSEMENT SOUS PRESSION
- ☐ TRES LEGER
- ☐ TEMPERATURE ELEVEE
- ☐

DEBIT DEMANDE (dm^3/h) ☐☐☐☐ (kg/h) ☐☐☐☐

TOLERANCE ☐ ☐

SYSTEME DE CHARGEMENT ET CAPACITE DE LA TREMIE

MICRODOSEUR TYPE

VIS DOSAGE ET HO-MOGENEISATION ☐ ☐ R ☐

ACCESSOIRES

MOTEURS V Hz

NOTES

MATERIALE DA DOSARE
CARATTERISTICHE FISICO CHIMICHE

- ☐☐ ☐☐ PESO SPECIFICO
- ☐☐☐☐ GRANULOMETRIA
- ☐ SCORREVOLEZZA
- ☐ ABRASIVITA'
- ☐ ACCRESCIMENTO E INDURIMENTO
- ☐ GENERA ELETTRICITA' STATICA
- ☐ DECOMPOSIZIONE - DETERIORAMENTO
- ☐ INFIAMMABILITA'
- ☐ PLASTICITA ' - TENDENZA ALL'AMMORBIDIMENTO
- ☐ POLVEROSITA'
- ☐ AERAZIONE - FLUIDITA'
- ☐ ESPLOSIVITA'
- ☐ VISCOSITA' E ADESIONE
- ☐ CONTABILITA'
- ☐ DEGRADABILITA'
- ☐ CREAZIONE DI GAS TOSSICO DI FUMO NOCIVO
- ☐ ALTA CORROSIVITA'
- ☐ MEDIA CORROSIVITA'
- ☐ IGROSCOPICITA'
- ☐ FORMAZIONE DI GRANULI,INTRECCIAMENTI, E
- ☐ AGGLOMERATI
- ☐ PRESENZA DI OLII E GRASSI
- ☐ IMPACCAMENTO SOTTO PRESSIONE
- ☐ MOLTO LEGGERO E SOFFICE
- ☐ TEMPERATURA ELEVATA

PORTATA RICHIESTA(dm^3/h) ☐☐☐☐ (kg/h) ☐☐☐☐

TOLLERANZA ☐ ☐

SISTEMA DI CARICO E CAPACITA' TRAMOGGIA

MICRODOSATORE TIPO

UTENSILE DOSAGGIO E OMOG. ☐ ☐ R ☐

ACCESSORI

MOTORI V Hz

NOTE

N.B. Rights reserved to modify technical specifications
N.B. Angaben ohne Gewähr. Änderungen können ohne Vorankündigung vorgenommen werden.
N.B. Toutes données portées dans le présent catalogue n'engagent pas le fabricant. Elles peuvent être modifiéés à tout moment.
N.B. Tutti i dati riportati nel presente catalogo non sono impegnativi e possono subire variazioni in qualsiasi momento.

WAM®

WAMGROUP S.p.A.
Via Cavour, 338
I - 41030 Ponte Motta
Cavezzo (MO) - ITALY

☎ +39 / 0535 / 618111
fax +39 / 0535 / 618226
e-mail info@wamgroup.it
internet www.wamgroup.com
videoconference + 39 / 0535 / 49032

CS-910-555 : Identification sheet

VWTC PROJECT NUMBER:	Iqaluit WWTP	REV:	02
PROJECT NAME:	5000218036	SUBMITTED TO (COMPANY):	
ENGINEER:	F.VINCI	SUBMITTED TO (RESPONSIBLE)	
PROJECT MANAGER:	C. BEKAERT	PROJECT NUM REFERENCE.:	
PHONE NUMBER:		LOT NUMBER:	

SUPPLIER	EQPT CODE	EQPT TAG NO	DIA	DESCRIPTION	INFO 1	INFO 2	INFO 3	APPLIC.	NOTE	REV
TIGER-VAC	TOIEGU317247	VAC-04-710		HP-250 HOISTING	POWERHEAD ASSEMBLY FOR EC-12 w/CLOTH FILTER // Manuf: Tiger-Vac // Model : EC-12 // Silencer 212440 // 240Vac / 60Hz			HP-250		2

This page is intentionally left blank

Model EC-12(G) HEPA electrically operated industrial vaccuum cleaner

With HEPA fi ltration for Wet & Dry recovery
Filtration effi ency of 99.99% on 0.3 microns

1



- Made of heavy-duty epoxy coated metal and mounted on a 4-wheel base
- Exhaust silencer for a quieter operation

Technical data	Performance	Recovery Capacity	Dimensions
220-240V/60Hz Watts: 1250 Amps: 5.5	Airflow: 110CFM Vacuum Pressure: 110" H_2O	12 gallons (46 litres)	Height: 32" (81 cm) Width: 22" (56 cm) Weight: 45 lbs (20.5 kg)

1. **Model EC-12** 220-240V
2. **Exhaust Silencer** (#212440)
3. **Complete tool kit:**

- HEPA Filter (#213146)
- Polyester main filter (#211311B)
- Floater shut-off mechanism (#211277)
- 10' crush-proof suction hose (#381137A)
- 2-piece wand (#381163)
- Floor tool for dry recovery (#381380)
- Floor tool for wet recovery (# 381381)
- Crevice tool (#381197)

2



Optional Exhaust Silencer

3



Optional

LEFT BLANK

4 – DETAILED TECHNICAL DOCUMENTATION

4.3 – SHOP DRAWINGS SUBMITTAL PACKAGES

4.3.6 – DUPLEX POLYMER DOSING SKID FOR BELT FILTER PRESS

LEFT BLANK

TECHNICAL DOCUMENTATION

This page is intentionally left blank

Project name:	IQALUIT
Project#:	5000218036
Document #:	5000218036_DS_0006_PM_VWT Rev2
by:	BB
chkd:	GH
appvd:	CB

SUBMITTAL PACKAGE

SKID DUPLEX - Rev 2

This page is intentionally left blank

Project name:	IQALUIT
Project#:	5000218036
Document #:	5000218036_DS_0006_PM_VWT Rev2
by:	BB
chkd:	GH
appvd:	CB

SKID DUPLEX

PROCESS DATASHEET

OIM manual section: 4.3.6.1

This page is intentionally left blank

	VEOLIA					VWT CANADA #		PSDS_0006_PCH		
						Project #		5000218036		
						Date		2018-09-18		
						Polymer				
	CLIENT	REV	DESCRIPTION			DATE	By	Chkd	App.	
		1	FOR APPROVAL			2018-09-18	G.H.	GP	C.B.	
	CITY OF IQALUIT	2	FOR APPROVAL 2			2018-09-18	G.H.	GP	C.B.	
		3	FOR APPROVAL 3			2019-01-29	F.V.	GP	C.B.	
	PROJECT	4								
		5								
	IQALUIT	6								
		7								
		TAG:								REV
	GENERAL	Dosed Chemical					Polymer			
		Number of skids					1			
		Pumps type					Cavity Progressive Pump			
		Model Serie					Netszch			
		Total number of pumps					2			
		Number of pumps in duty					1			
		Number of pumps in standby					1			
		Number of dosing points					1			
	PROCESS REQUIREMENT	Min Flowrate				lph	50			
		Avg Flowrate				lph	554			3
		Max Flowrate				lph	600			
	ENVIRONMENT	Equipment Location					Indoor			
		Min. Temperature				°C	5			
		Max . Temperature				°C	25			
		Max. Humidity				%	95			
		Corrosive Atmosphere					Non Corrossive			
		Freeze					N/A			
		Comments								
	SAFETY	Electrical Classification					Non Hazardous			
		Province/State					Nunavut			
	PUMP(S) CAPACITY	Max Flowrate				lph	600			
		Min Flowrate				lph	50			
	TECHNICAL DESCRIPTION	Skid Frame			Material		Stainless Steel			3
					Type		Stand Alone			
					Option #1		N/A			
					Option #2					
		Pump		x	Dosing Pumps		Netszch NM021BY01L06B			
				x	Variable Frequency Drive	N/A	See Electrical Submital Package			
		Components	Valves		Foot valve c/w flexible hose					
					Isolation Valves (Common Suction)	N/A	N/A		0	
				x	Isolation Valves (Suction)	Chemline	21A010EC		2	
				x	Isolation Valve Calibration Cylinder (Suction)	Chemline	21A010EC		2	
				x	Isolation Valves (Discharge)	Chemline	21A010EC		5	
					Isolation Valves Calibration Cylinder (Discharge)	N/A	N/A		0	
					Check Valves (Discharge)	N/A	N/A		0	
				x	Backpressure Valves	Chemline	SB12A010EU (BPVG)		2	
					C/w Isolator & Press. Gauge	Chemline	SGA-005-002-P-G + P025-160-BM	Config. L-U	0	
				x	Relief Valves	Chemline	SB12A010EU (RV)		2	
					W/o Press. Gauge	N/A	N/A	N/A		
				x	Metering Valve - Carrier Water	Chemline SM	SMA015ES		1	
				x	Isolation Valves - Carrier Water	Chemline	21A015EC		1	
				x	Check Valves - Carrier Water	Chemline	BTA015ES		1	
				x	On/Off Valves - Carrier Water	ASCO	8210G056-120VAC	Brass	1	
				x	Cleaning Valves	Chemline	21A005EC		2	
			Misc.	x	Calibration Cylinder	PFS	PV#2-10000	10000 ml	1	
				x	Variable Area Flowmeter	Chemline	FSA02000		0	
					Flow Switch	N/A			0	
					Isolation Valves Flow Meter (Discharge)	N/A	N/A		0	
					Flowmeter	N/A			0	
					Pulsation Dampener	N/A			0	
		Piping			VWS Piping spec code		A050C			
					Pipe Material		PVC Sh 80 ASTM D1784			
					Common Suction Nominal Pipe Size	in	1 1/2"			
					Suction Pipe Nominal Pipe Size	in	1"			
					Discharge Pipe Nominal Pipe Size	in	1"			
	UTILITIES	Service Water for Chemical Transport			Flowrate (per injection line)	lph	1500			
					Pressure	psig				
					Transport Water Nominal Pipe Size	in	1 1/2"			

1	VEOLIA					VWT CANADA #		PSDS_0006_PCH		
2						Project #		5000218036		
3						Date		2018-09-18		
4						Polymer				
5	CLIENT	REV	DESCRIPTION			DATE	By	Chkd	App.	
6		1	FOR APPROVAL			2018-09-18	G.H.	GP	C.B.	
7	CITY OF IQALUIT	2	FOR APPROVAL 2			2018-09-18	G.H.	GP	C.B.	
8		3	FOR APPROVAL 3			2019-01-29	F.V.	GP	C.B.	
9	PROJECT	4								
10		5								
11	IQALUIT	6								
12		7								
13		TAG:								REV
72		Design Pressure				psig	60			3
73		Design Temperature				°C	35			
74	DESIGN CRITERIA	Operating Pressure				psig	45			3
75		Test Pressure				psig	90			3
76		Test duration				min	15			
77		Test Fluid				-	Water			
78		Inlet			Diameter (NPS)	in	1 1/2"			
79					Type		Socket union			
80	CONNECTIONS	Outlet			Diameter (NPS)	in	1 1/2"			
81					Type		Socket union			
82		Transport Water			Diameter (NPS)	in	1 1/2"			
83					Type		Socket union			
84		Main Power					575V/3Ph/60 Hz			
85		Controls					VFD c/w 4-20 mA			
86	ELECTRICITY	Frame Grounding								
87		Wiring			Pre wired (Y or N | details)		w/o wiring and JB			
88					Cable Type					
89		Anchors			Qty		6			
90					Supply		No			
91		Design Code					ASME B31.3 Non Certified			
92	CODE, APPROVAL & CERTIFICATIONS	Glueing					Glueing B31.3 non certified / Non Certified Shop			
93		Mandatory Registration								
94										
95		Weight (dry)			Final	kg	Refer to GA drawing			
96	OVERALL DIMENSIONS	Overall Length				mm				
97	AND WEIGHT	Overall Width			Final	mm				
98		Overall Height				mm				

Project name:	IQALUIT
Project#:	5000218036
Document #:	5000218036_DS_0006_PM_VWT
by:	BB
chkd:	GH
appvd:	CB

SKID DUPLEX

PUMP(S)

OIM manual section: 4.3.6.2

This page is intentionally left blank

CS-999-002 : Identification sheet

VWTC PROJECT NUMBER:	Iqaluit WWTP	REV:	02
PROJECT NAME:	5000218036	SUBMITTED TO (COMPANY):	
ENGINEER:	F.VINCI	SUBMITTED TO (RESPONSIBLE)	
PROJECT MANAGER:	C. BEKAERT	PROJECT NUM REFERENCE.:	
PHONE NUMBER:		LOT NUMBER:	

SUPPLIER	EQPT CODE	EQPT TAG NO	DIA	DESCRIPTION	INFO 1	INFO 2	INFO 3	APPLIC.	NOTE	REV
NETSZCH	ST-999-002	P04-970		PROGRESSIVE CAVITY PUMP	DOSING PUMP // Manuf : NETZSCH // Model: NM021BY01L06B // AVERAGE FLOW RATE: 554LPH@45 psig //APPROX. MAX FLOWRATE: 600 LPH@85PSIG // APPROX. MIN FLOW RATE: 45 LPH@85PSIG // MOTOR MARATHON BLACK MAX 575/3/60, 1 HP // NORD GEAR INLINE REDUCER	WITH GEAR RATIO 5.77:1 // WETTED PARTS 316 SS // BUNA NITRILE STATOR // MECHANICAL SEAL BURGMANN SINGLE MG1-G60 // 1" SUCTION & DISCHARGE ANSI CLASS 150 B16.5 FLANGE // MOUNTED				2
NETSZCH	ST-999-002	P04-980		PROGRESSIVE CAVITY PUMP	DOSING PUMP // Manuf : NETZSCH // Model: NM021BY01L06B // AVERAGE FLOW RATE: 554LPH@45 psig //APPROX. MAX FLOWRATE: 677 LPH@85PSIG // APPROX. MIN FLOW RATE: 45 LPH@85PSIG // MOTOR MARATHON BLACK MAX 575/3/60, 1 HP // NORD GEAR INLINE REDUCER	WITH GEAR RATIO 5.77:1 // WETTED PARTS 316 SS // BUNA NITRILE STATOR // MECHANICAL SEAL BURGMANN SINGLE MG1-G60 // 1" SUCTION & DISCHARGE ANSI CLASS 150 B16.5 FLANGE // MOUNTED				2

This page is intentionally left blank

NETZSCH Canada, Inc. 500 Welham Road, Barrie, On., L4N 8Z7
Ph: 705-797-8426 Fax: 705-797-8427 Toll Free: 1-866-683-7867

Pump Quotation - Technical

Offer: N180717ST-01 (Item #50)

NEMO® pump with base plate and drive: NM021BY01L06B

The physical characteristics of the pumped product, the application details, as well as the General Operating Conditions detailed in our offer have been taken from your inquiry or where not specified have been assumed by us. In the event of an order we would ask you to check any assumptions and all details as they will become contractually binding along with the selection of pump model, Drive, all specifications, and materials of construction, based on these details.

Product:			Polymer
Composition			not advised
Specific gravity	assumed	kg/dm³	1.0
Particle size/solid ball size	allowed	mm	maximum 3 / 12
pH value	Approx.		not advised
Solids content (w/w)		% TS	not advised
Dynamic viscosity	approx.	cP	100
Vapour pressure		mm Hg	Not advised

Application details:		*DW #*	*171841*	*171841*	*171841*	*171841*	*171841*	*171841*
Flow rate (Q)	approx.	LPH	300	350	400	450	500	600
	approx.	GPM	1.32	1.54	1.76	1.98	2.2	2.64
Differential pressure	approx.	psi	85	85	85	85	85	85
Suction pressure	assumed	psig	Flooded	flooded	flooded	flooded	flooded	flooded
Discharge pressure	approx.	psig	85	85	85	85	85	85
Pump operating speed	approx.	RPM	160	200	210	220	240	275
Sliding velocity	approx.	ft/s	0.8	1.0	1.1	1.2	1.3	1.4
Frequency	approx.	Hz	32	40	42	44	48	55
Power required at drive shaft	approx.	HP	0.3	0.32	0.34	0.36	0.38	0.40
Running torque	approx.	lb-ft	8.8	8.8	8.8	8.8	8.8	8.8
Starting torque	approx.	lb-ft	7.4	7.4	7.4	7.4	7.4	7.4
Operating temperature	assumed	°C	20	20	20	20	20	20

Assembly specification

installation	vertical

General operating conditions

Installation area	inside
ambient Temperature	approx. 20°C / 70 F
humidity	up to 75%
application type	Continuous operation
operating hours	8 hours/day
service voltage	3/60/575

Painting	coating system	Netzsch standard

Operating and Maintenance Instructions

Standard documentation in accordance with the 98/37/EG Machinery Directive.
Special documentation is available on request and would be charged for.

number	1
medium	Paper
language for O&M's and spare parts list	English
dispatch method	shipped with pump

NETZSCH Canada, Inc. 500 Welham Road, Barrie, On., L4N 8Z7
Ph: 705-797-8426 Fax: 705-797-8427 Toll Free: 1-866-683-7867

Offer: N180717ST-01 (Item #50)
Date: July 13, 2018

Customer No.:

NEMO® NM021BY01L06B Pump

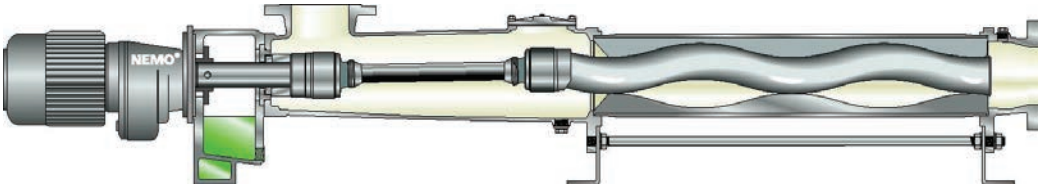

Characteristics and benefits of the NEMO® BY Block pump:

- Reliable and sophisticated construction
- Space-saving construction
- Modular construction system
- 4 different stator – rotor geometries available for most sizes
- Low investment and operating costs
- Low maintenance expenses

General characteristics	
name plate on the pump	in English (Stainless steel)
direction of rotation	to the right, clockwise (as viewed from drive end)

Pump Pedastal	
material	Cast iron 0.6025

Pump housing / End connection	
housing material	316 Stainless Steel
flange position	horizontal sidewards
function of housing connection	pressure connection
flange design	N.A.
nom. dia. & pressure for pump housing	1.25" NPT
suction flange design	N.A.
nom. dia. & pressure of suction flange	1.25" NPT
Function of end connection	suction connection
housing seals	FPM

Shaft seal	
type	Single mechanical Seal
shaft seal materials	Silicon Carbide Faces – Viton Elastomers
shaft seal type	Burgmann Single MG1-G60 – Q1Q1VGG

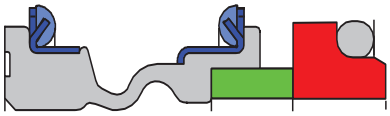

Rotating parts	
rotating parts materials	316 Stainless Steel

Joints		
	joint type	pin joint
	sealing type	SM Pin joint
	joint sealing material	Viton/316 Stainless Steel
	joint lubrication	Mineral oil

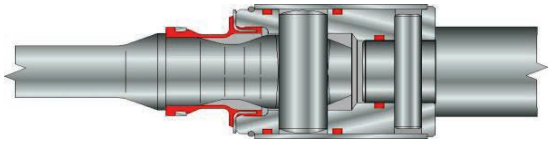

Rotor		
	rotor material	316 Stainless Steel
	temperature range for Stator expansion	UM20

Stator		
	stator material	NEMOLAST® S61L – Buna Nitrile

Drive

Helical gear reducer		
	manufacturer	Nord
	type	SK172.1F-56C
	gear ratio	5.77
	speed @ 60 Hz	300
	mounting position	M4
Motor		
	Manufacturer	Marathon Black Max
	motor HP	1.0
	winding voltage	575
	voltage range	+/- 10%
	frequency / range	60 Hz / 1000:1 @ CT
	number of poles	4
	number of phases	3
	Motor speed	1730 rpm
	protection type	TENV
	insulation class	F

Baseplate

	assembly specification - material	Structural steel base plate

Approximate weight of pump assembly	135 lbs.

NETZSCH Canada, Inc. 500 Welham Road, Barrie, On., L4N 8Z7
Ph: 705-797-8426 Fax: 705-797-8427 Toll Free: 1-866-683-7867

Offer: N180717ST-01 (Item #50)
Date: July 13, 2018

Customer No.:

Performance curve:

NM021--01L Performance Curve
elastomer quality: standard

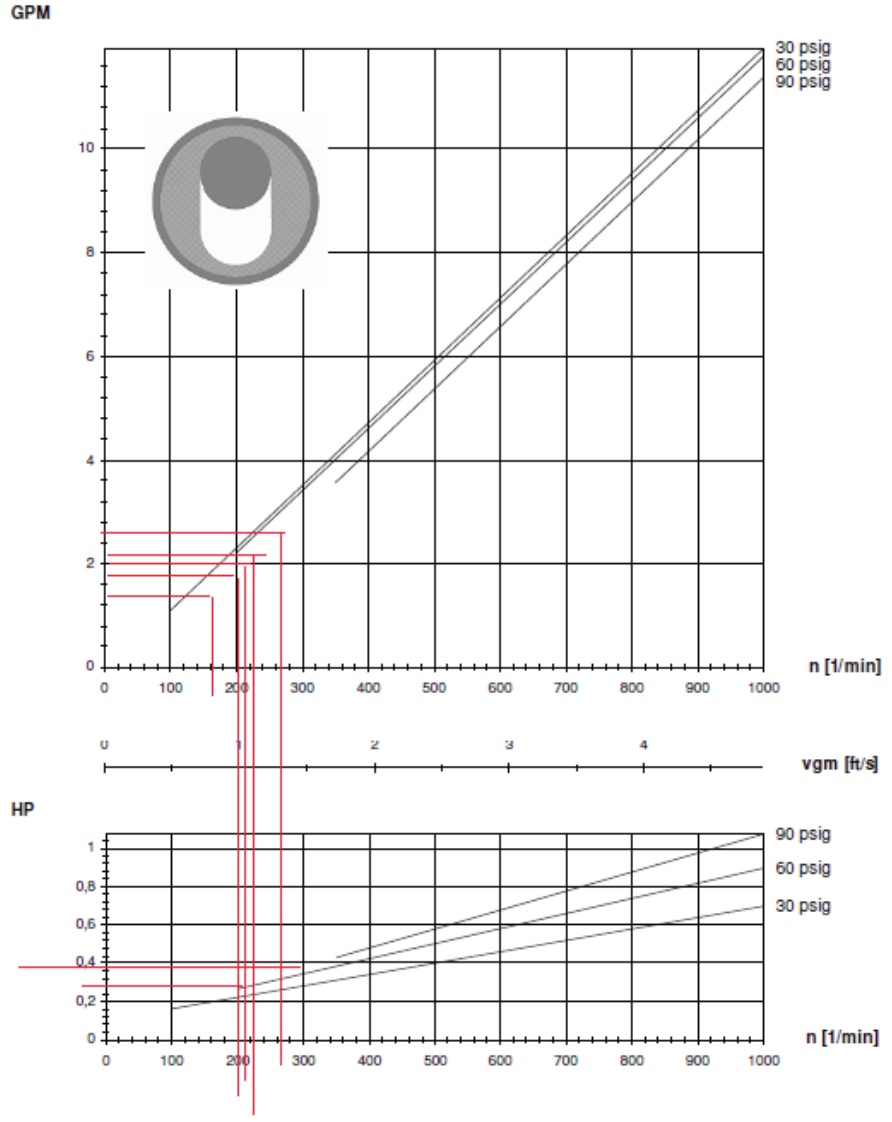

starting torque T(L) = 7,4 lbft

pressure	T
30 psig	7,4 lbft
60 psig	8,14 lbft
90 psig	8,88 lbft

Valid for water (1 cP) at 20 °C (70 °F). Tolerances are in accordance with VDMA 24284 (+10%/-5%).

VEOLIA's clarification: as shown on the pump's curve below, the pump speed for an averate flow rate of 554 LPH @ 45 psig is approximately 215 rpm.

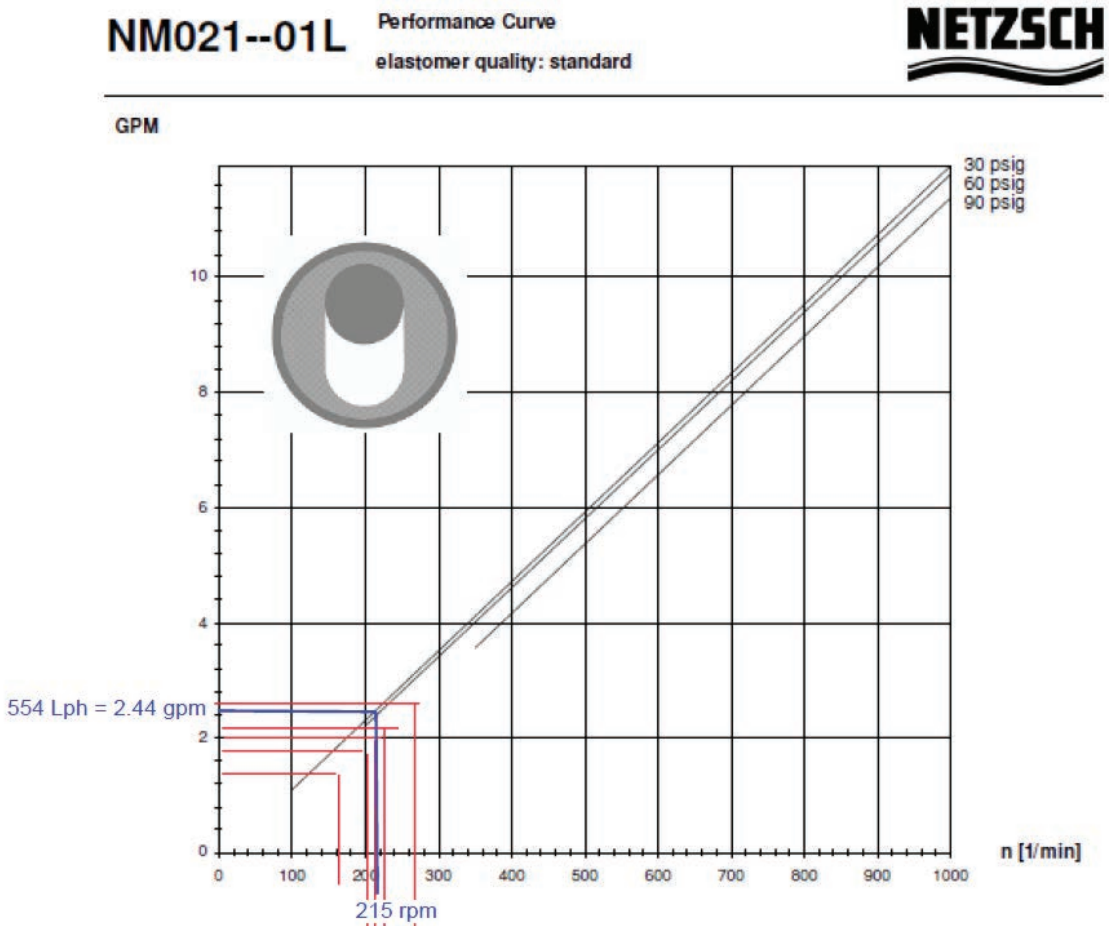

Temperature sensor for run-dry protection

VEOLIA confirms that all progressive cavity pumps supplied are equipped with a temperature sensor in the stator sleeve for run-dry protection and associated relay.

NETZSCH Canada, Inc. 500 Welham Road, Barrie, On., L4N 8Z7
Ph: 705-797-8426 Fax: 705-797-8427 Toll Free: 1-866-683-7867

Offer: N180717ST-01 (Item #50)
Date: July 13, 2018

Customer No.:

Pump drawing:

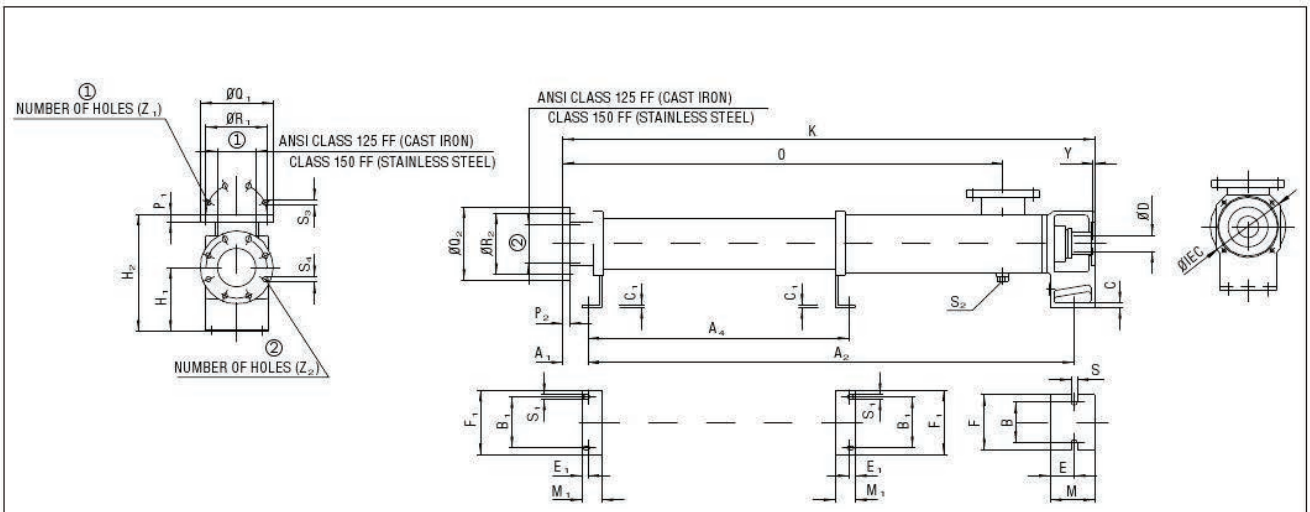

TYPE		BASIC DIMENSIONS																				ANSI PIPE CONNECTION						SHAFT END	
		A_1	A_2	A_4	B	B_1	C	C_1	E	E_1	F	F_1	H_1	H_2	K	M	M_1	O	S	S_1	S_2	Y	① / ②	P_1 / P_2	Q_1 / Q_2	R_1 / R_2	S_3 / S_4	Z_1 / Z_2	D_{MIN} / D_{MAX}	IEC
NM015BY	02S12	41	411	–	95	50	8	5	28	15	125	80	100	160	481	55	40	328	12	9	NPT 1/2"	5	INTERNAL THREAD NPT 1 1/4"					12	140
	01L06																						INTERNAL THREAD NPT 1 1/4"					20	160
NM021BY	02S12	41	487	–	95	50	8	5	28	15	125	80	100	160	557	55	40	404	12	9	NPT 1/2"	5	INTERNAL THREAD NPT 1 1/4"					12	140
	01L06																						INTERNAL THREAD NPT 1 1/4"					20	160
NM031BY	02S12	77	637	–	115	69	10	5	27	20	150	100	112	222	759	70	50	540	12	11	NPT 3/4"	5	2"	15.7	152.4	120.6	19	4	20	160
	01L06																						2"	15.7	152.4	120.6	19	4	28	200 250
NM038BY	02S12	85	950	–	115	95	10	6	35	20	150	130	132	262	1082	80	55	838	14	11	NPT 3/4"	5	3"	19.1	190.5	152.4	19	4	20	200
	01L06																						2.5"	17.5	177.8	139.7	19	4	32	250

All dimensions are in mm. All dimensions are subject to change without notice.
Flanges are ANSI to inch standards. All flanges are flat faced.
All pumps are Thru-bolt Construction. Thru-bolts not shown for clarity.
For weights, use equivalent weights for SY pumps.

NETZSCH

NEMO PUMP (WP)
RANGE NM --- B 02S12/01L06

DRAWING NUMBER
NDB4908995

GENERAL ARRANGEMENT DRAWING(GAD)

Tolerâncias Dimensionais/Dimensional Tolerances				Tolerâncias para Flanges cfe./Tolerances for Flanges according ASME B16.1 e B16.5	
Medida/Dimension	Tolerância/Tolerance	Medida/Dimension	Tolerância/Tolerance		Tolerância/Tolerance
>3 até/to 6	±0,5	>400 até/to 1000	±4,0		
>6 até/to 30	±1,0	>1000 até/to 2000	±6,0	Diâmetro da Furação/Drilling Diameter	±1,5
>30 até/to 120	±1,5	>2000 até/to 4000	±8,0	Diâmetro Furos/Holes Diameter	+1,0
>120 até/to 400	±2,5	>4000	±20	Espessura/Thickness	+3,0

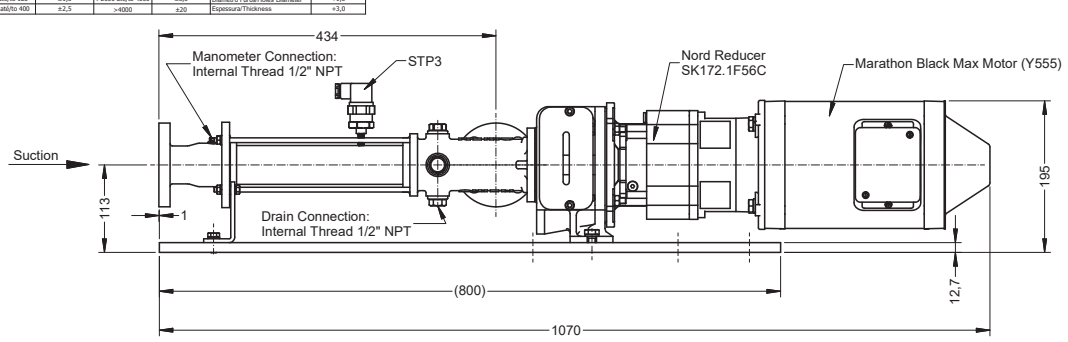

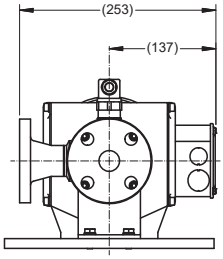

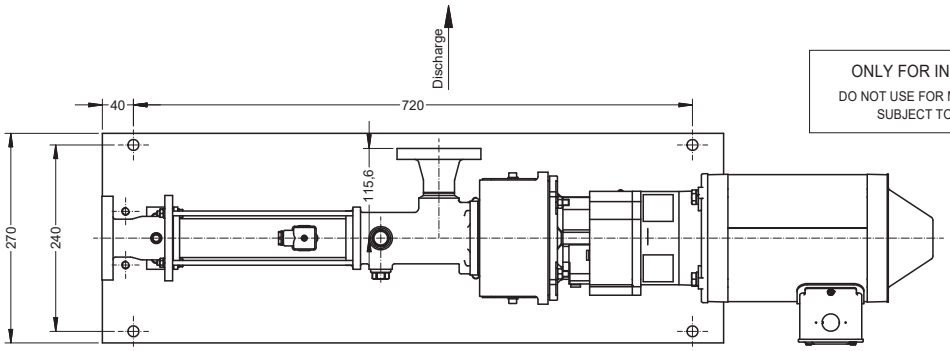

ONLY FOR INFORMATION

DO NOT USE FOR MANUFACTURING
SUBJECT TO CHANGES

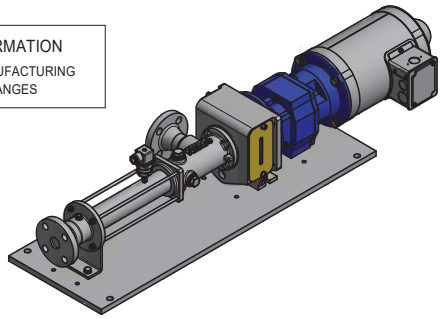

Flanges
Borings acc. Norma:

ASME B16.5 / Class 150 / FF / NPS 1

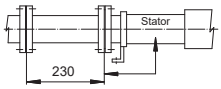

Lenght required for
stator disassembly

Revisão/Revision	Descrição/Description	Nome/Name	Data/Date
01	Alterado Bocal de Sucção e Descarga	Douglas	17/08/18

Cliente/Costumer:

Pedido/Order: Referência/Reference:

NETZSCH

Título/Tittle:

Pump NM021BY01L06B

HD-252848

	Data/Date	Nome/Name
Desenhado/Designer	17/08/2018	douglas.lourenco
Verificado/Checked Aprovado/Approved	17/08/2018	douglas.lourenco

TAG: Peso/Weight kgf

Nr. Desenho/Drawing Nr.: NDB4735479 | Folha/Sheet: 1/1 | Escala/Scale: 1:5

Reservado todos os direitos sobre este documento técnico. All rights reserved.

A3

NETZSCH CANADA INC. 2016

OPERATING AND MAINTENANCE INSTRUCTIONS:

STP3 DRY RUN PROTECTION

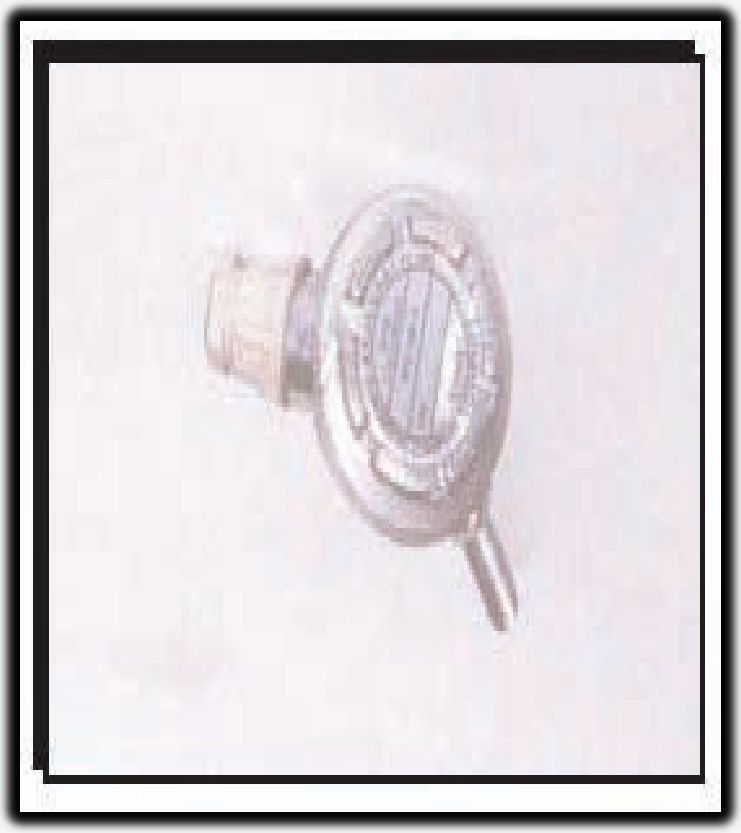



NETZSCH Canada, Incorporated
500 Welham Road
Barrie, Ontario L4N 8Z7
Tel: (705) 797-8426
Fax: (705) 797-8427
Toll: 866 683-7867

www.pumps.netzsch.com

1 DISMANTLING AND ASSEMBLY OF SPECIAL UNITS

WARNING Make sure that the power has been disconnected from the Temperature Controller prior to servicing.

The Stator Protector, which is a device to protect the stator from dry running mainly consists of three parts; the Temperature Controller (processor) with LED display, the Temperature Sensor (PT-100 RTD), and the Thermal Well.

1. The Device functions as follows

In the stator of the pump there is a Temperature Sensor. This sensor continuously measures the stator temperature which ranges from 0°C to 255°C. If the stator temperature rises above the programmed or specified cut-off temperature (about normal pumping temperature), which is set on the controller, there will be an optical or acoustic signal indication on the controller display. The controller can also be set to switch the pump off immediately. If the pump is not constantly monitored, it is recommended that the controller be set to shut the pump off automatically.

2. Technical Data

- Microprocessor based
- Measuring input for PT-100 RTD Temperature Sensor. Material of Construction: Platinum
- LED display, three digits, 13mm height, red indicator
- Switching position indication for internal K1 relay
- Resistance-Temperature Curve:
  European Alpha Curve = 0.00385
  American Alpha Curve = 0.003916
- Supply voltage 110 or 220 VAC or according to specification 24VAC.
- Storage temperature (-20°C to 70°C)
- Operating temperature (0°C to 60°C)
- Relative humidity maximum 75% no dew
- Suitable for panel mounting. Device is rated IP-54
- Output: 1relay 250 VAC 7^{A}, 1 changeover contact
- Installation Dimensions: front panel 72mm x 72mm; 90mm deep including terminals
- Terminals for threads max. 2,5 mm^2.

*Controller should be no more than 75 feet from the temperature sensor.

3. Setting the Cut-Off Temperature

The cut-off temperature value of the controller in normal conditions is easy to adjust. When no key is pressed, the display shows the actual stator temperature.

- When the PGM button is pressed, the cut-off temperature is shown on the display.
- By keeping the PGM button pressed, the cut-off temperature can be raised or lowered to the desired setting by using the UP or DOWN key.
- Releasing the arrow UP or DOWN key loads the adjusted new value into the memory.
- Be careful. Always release the UP or DOWN key before releasing the PGM key to retain this value in memory even if there is a power failure.

1 DISMANTLING AND ASSEMBLY OF SPECIAL UNITS

4. Selecting the Cut-Off Temperature

- Adjust the cut-off temperature up to 150°C at the controller.
- Start the pump.
- When steady pumping is being obtained, a read out of the stator temperature will be displayed on the controller.
- If this temperature is accurate, taking into consideration the product and ambient temperatures, then the cut-off temperature can be set 5°C higher.

5. Switching Functions

With the temperature sensor connected and the operating voltage applied to the controller, the internal relay K1 is energized.

If the cut-off temperature is being exceeded or a short-circuit is occurring, the internal relay K1 drops out.

For terminals, see illustration on the following page.

In the event of sensor failure or short-circuit, the maximum temperature of 255°C flashes on the display.

6. Safety Precautions

For the installation of the Stator Protector, as well as for the separate mini transformer, the latest regulations which apply for electrical installations must be adhered to.
If a temperature sensor is operated within a hazardous area there must be a special enclosure installed between the Temperature Controller and the Temperature Sensor (RTD).

The switching of inductive loads (contacts) may result a false reading from the Controller, or in complete malfunction of the Unit. Here, we recommended the wiring of a Surge Suppressor.

7. Installation of Temperature Sensor and Controller

The stator (3005), as displayed in tables 1,2 and 3, is equipped with a Reducing Fitting (4580) and a Temperature Sensor (RTD), (4180).

The stator is delivered with a built-in Thermal Well (4570). When installed on a NEMO Pump, this Thermal Well should be mounted on its inlet side.

***Controller should be no more than 75 feet from the temperature sensor (RTD).**

NETZSCH

Stator Protector Model STP3
NEMO NM Pump Series

Table 1
S-Geometry

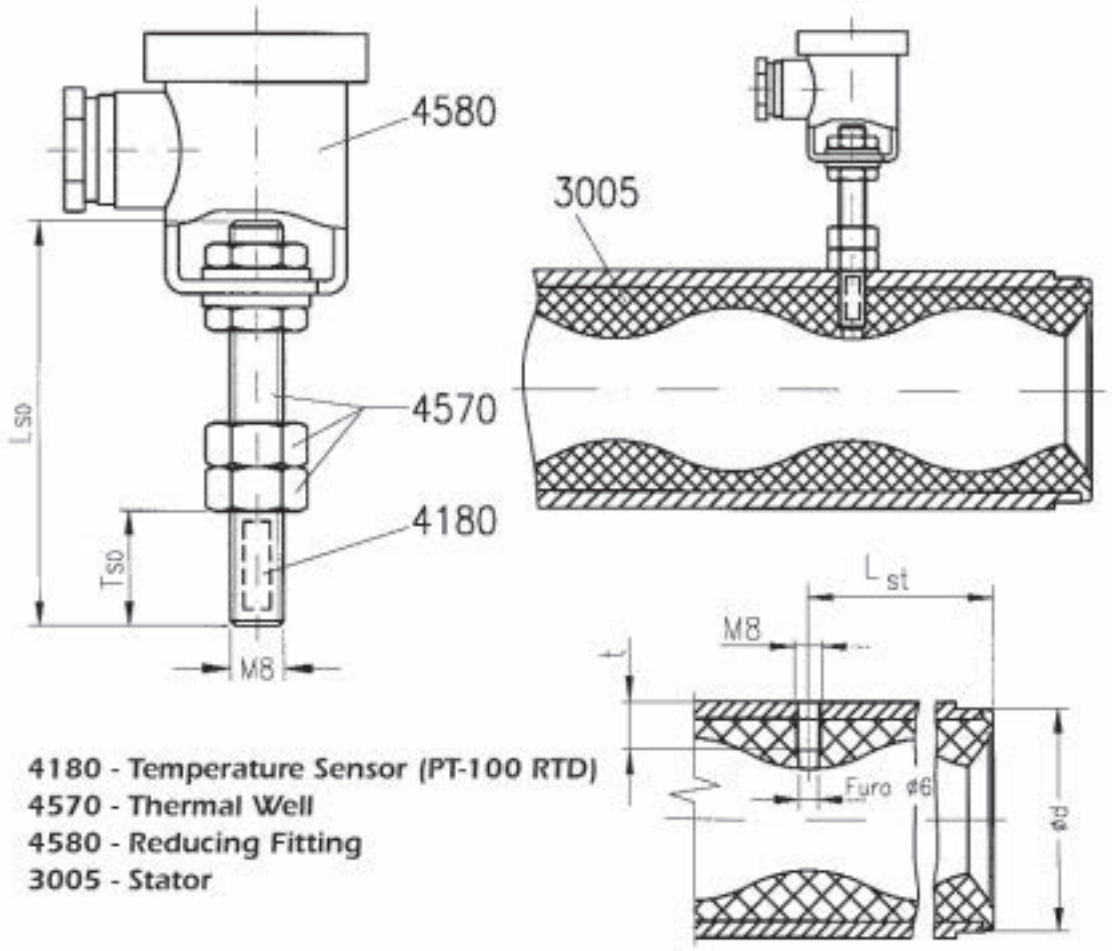

4180 - Temperature Sensor (PT-100 RTD)
4570 - Thermal Well
4580 - Reducing Fitting
3005 - Stator

Pump Model	SENSOR			STATOR		
	L_{S0}	T_{S0}	Distance of the Sensor from the Rotor	d	L_{st}	t
NM015–S	45	9	~6	37	24	9
NM021–S		12	~5.5	47	36	12
NM031–S		15	~7.5	66	47	15
NM038–S	65	23	~7.5	86	66	23
NM045–S		25	~7.5	101	77	25
NM053–S		30		118	92	30
NM063–S		36		141	107	36
NM076–S	85	40	~10	166	124	40
NM090–S		47		195	148	47
NM105–S		54	~11	225	181	54
NM125–S	105	66		265	215	66
NM148–S		80		315	257	80
						–

All dimensions in millimeters.

NETZSCH

Stator Protector Model STP3
NEMO NM Pump Series

Table 2
L-Geometry

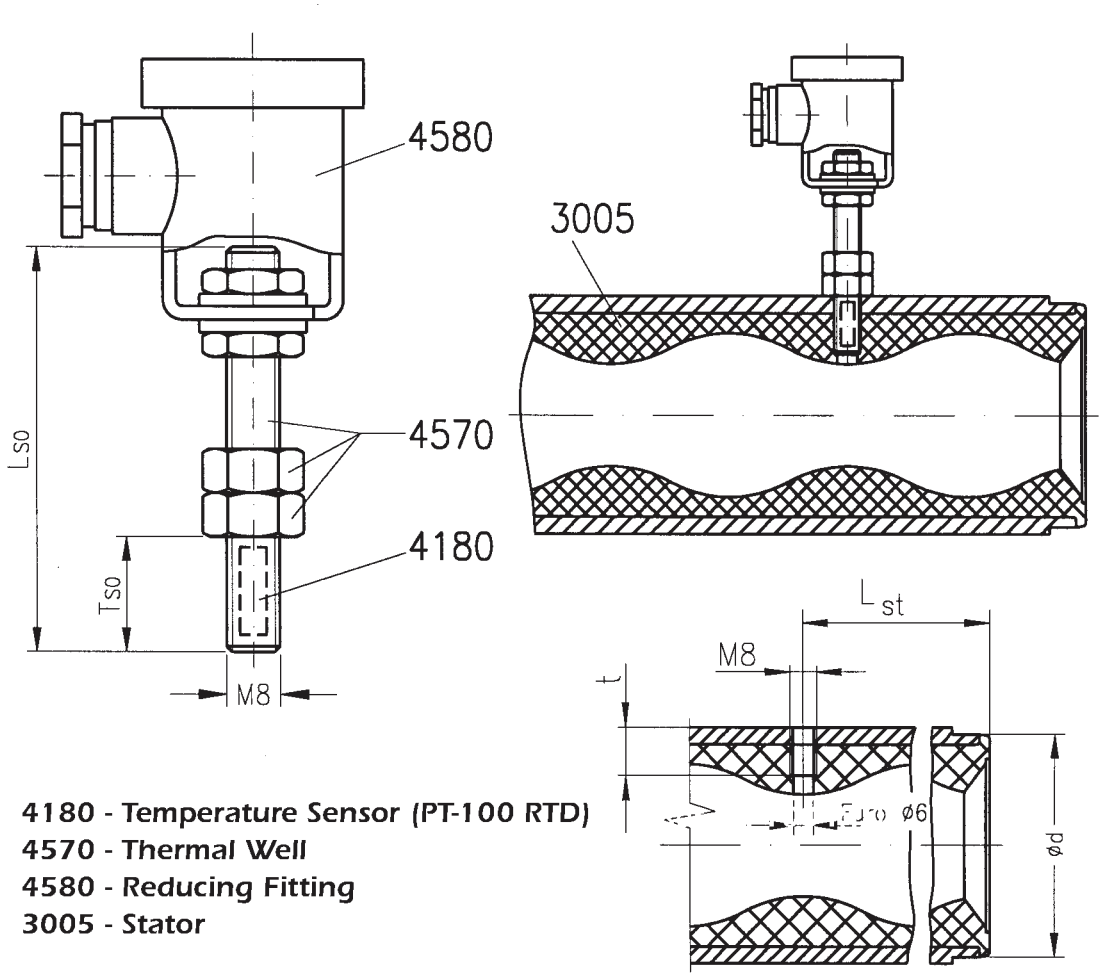

4180 - Temperature Sensor (PT-100 RTD)
4570 - Thermal Well
4580 - Reducing Fitting
3005 - Stator

Pump Model	SENSOR			STATOR		
	L_{so}	T_{so}	Distance of the Sensor from the Rotor	d	L_{st}	t
NM015–L	45	9	≈ 6	37	35	9
NM021–L		12	≈ 5.5	47	53	12
NM031–L		15	≈ 7.5	66	68	15
NM038–L	65	23	≈ 7.5	86	108	23
NM045–L		25	≈ 7.5	101	133	25
NM053–L		30		118	161	30
NM063–L		36		141	185	36
NM076–L	85	40	≈ 10	166	214	40
NM090–L		47		195	256	47
NM105–L		54	≈ 11	225	316	54
NM125–L	105	66		265	375	66
NM148–L		80		315	450	80

All dimensions in millimeters.

NETZSCH

Stator Protector Model STP3
NEMO NE Pump Series

Table 3

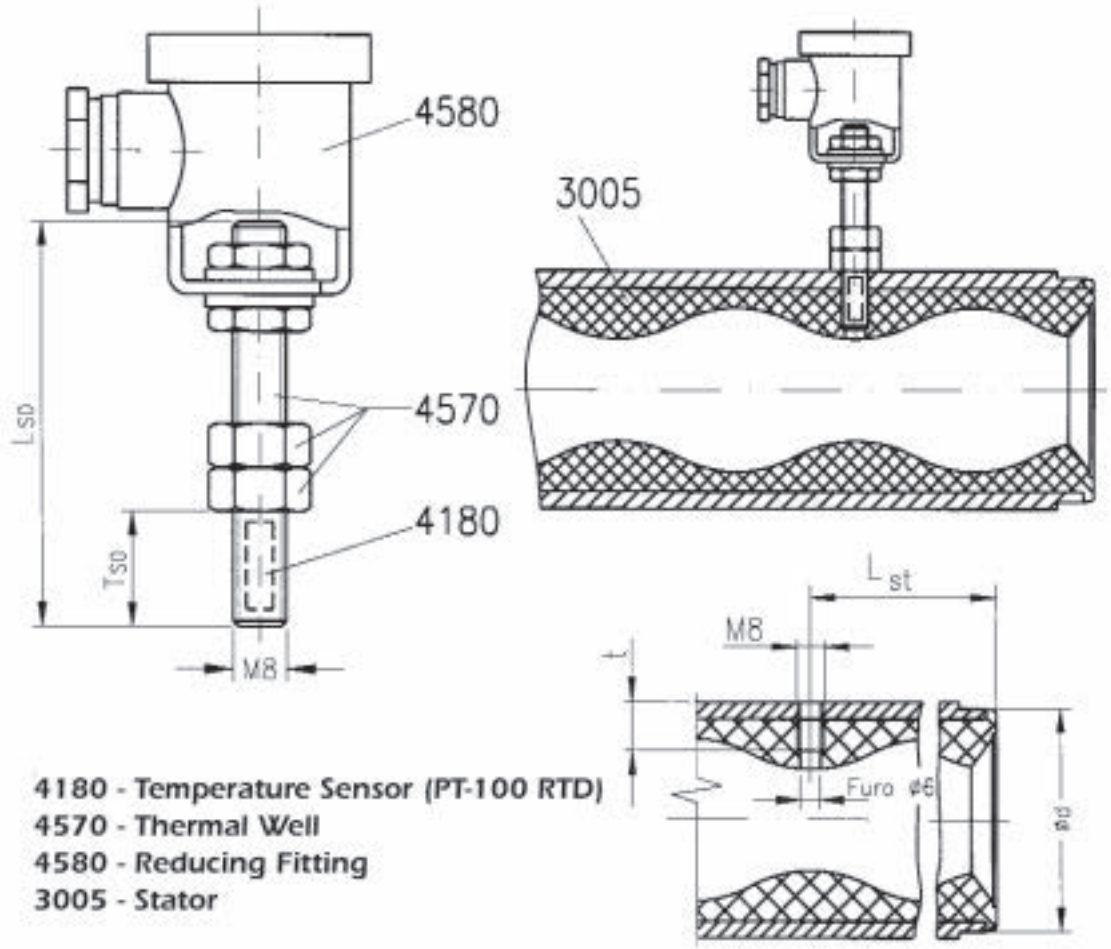

4180 - Temperature Sensor (PT-100 RTD)
4570 - Thermal Well
4580 - Reducing Fitting
3005 - Stator

Pump Model	SENSOR			STATOR			
	L_{SO}	T_{SO}	Distance of the Sensor from the Rotor	d	d_1	L_{st}	t
N_15	55	9	~6	39	27	40	9
N_20		12	~5.5	49	36	50	12
N_29						100	12
N_30	60	16	~7.5	71	54	75	16
N_40	65	22	~8	94	72	100	22
N_50	75	30		118	90	120	30
N_60	80	35		138	108	150	35
N_69				138	108	250	35
N_80	85	40	~10	174	144	200	40
N_89				174	144	250	40
N_100	95	52	~11	218	180	250	52
N_120	110	68		260	216	300	68
N_150	120	80	~10	315	270	375	80
N_200	150	117.5				475	

All dimensions in millimeters.

OMRON

Temperature Controllers
E5CSV

Simple to Set and Operate 1/16 DIN Size Controllers

- Easy setting using internal DIP and rotary switches
- ON/OFF or PID control (with on-demand auto-tuning) selectable
- Clearly visible digital display with character height of 13.5 mm
- Deviation indicator makes monitoring more effective
- Multiple temperature sensor input (thermocouple/platinum resistance thermometer) models stocked; thermocouple input only and platinum RTD input only models available
- Models with two alarms are ideal for temperature alarm applications
- Setting change protection prohibits tampering
- Sampling rate (500 ms) and selectable control period (2 and 20 s) improves response
- 8-mode alarm output and sensor error detection
- "Input shift" function adjusts display to reflect known sensor offsets



CE cULus LISTED NEW

- °C or °F field selectable
- Black or white cases available to match panel aesthetics
- RoHS compliant
- Water-resistant front panel rated NEMA 4X/IP66
- Compact: measures 48 H x 48 W x 78 D mm
- Accuracy ±0.5% of value

Model Number Structure

■ Model Number Legend

Models with Terminal Blocks

E5CSV-□□□□-□□
1 2 3 4 5 6

1. Output type
- R: Relay
- Q: Voltage for driving SSR

2. Number of alarms
- Blank: No alarm
- 1: 1 alarm
- 2: 2 alarms

3. Input type
- T: Thermocouple/platinum resistance thermometer (multi-input)
- KJ: Thermocouple
- P: Platinum resistance thermometer

4. Power supply voltage
- Blank: 100 to 240 VAC
- D: 24 VAC/VDC

5. Case color / Display scale
- Blank: Black
- W: Light gray
- F: Scale marked in °F (Black case only)

6. Power supply voltage
- AC100-240: 100 to 240 VAC
- AC/DC24: 24 VAC/VDC

Note: A functional explanation is provided here for illustration, but models are not necessarily available for all possible combinations. Please refer to *Ordering Information* when ordering.

Examples
- Voltage control output, without alarm, multi-input, light gray case: 115 VAC: E5CSV-QT-W AC100-240
- Relay control output, one alarm output, multi-input, black case: 24 VDC: E5CSV-R1TD AC/DC24

Ordering Information

■ List of Models

Size	Power supply voltage	Number of alarm points	Control output	TC/Pt multi-input Case color: Black Scale marked in °C	TC input Case color: Light gray Scale marked in °C	Pt input Case color: Light gray Scale marked in °C	TC/Pt multi-input Case color: Black Scale marked in °F
1/16 DIN 48 × 48 × 78 mm (W × H × D)	100 to 240 VAC	0	Relay	E5CSV-RT AC100-240			E5CSV-RT-F AC100-240
			Voltage (for driving SSR)	E5CSV-QT AC100-240			E5CSV-QT-F AC100-240
		1	Relay	E5CSV-R1T AC100-240	E5CSV-R1KJ-W	E5CSV-R1P-W	E5CSV-R1T-F AC100-240
			Voltage (for driving SSR)	E5CSV-Q1T AC100-240	E5CSV-Q1KJ-W	E5CSV-Q1P-W	E5CSV-Q1T-F AC100-240
		2 (See note)	Relay	E5CSV-R2T AC100-240			E5CSV-R2T-F AC100-240
			Voltage (for driving SSR)	E5CSV-Q2T AC100-240			E5CSV-Q2T-F AC100-240
	24 VAC/ VDC	0	Relay	E5CSV-RTD AC/DC24			
			Voltage (for driving SSR)	E5CSV-QTD AC/DC24			
		1	Relay	E5CSV-R1TD AC/DC24			E5CSV-R1TD-F AC/DC24
			Voltage (for driving SSR)	E5CSV-Q1TD AC/DC24			E5CSV-Q1TD-F AC/DC24
		2 (See note)	Relay	E5CSV-R2TD AC/DC24			
			Voltage (for driving SSR)	E5CSV-Q2TD AC/DC24			

Note: Models with two alarm outputs always use the upper limit alarm mode for the alarm 2 output.

■ Accessories (Order Separately)

Protective Cover

Type	Model
Hard Protective Cover	Y92A-48B

Terminal Cover

Model
E53-COV10

Specifications

■ Ratings

Supply voltage		100 to 240 VAC, 50/60 Hz	24 VAC/VDC, 50/60 Hz
Operating voltage range		85% to 110% of rated supply voltage	
Power consumption		5 VA	3 VA/2 W
Sensor input		Thermocouple input type: K, J, L Platinum resistance thermometer input type: Pt100, JPt100 Multi-input (thermocouple/platinum resistance thermometer) type: K, J, L, T, U, N, R, Pt100, JPt100	
Control output	Relay output	SPST-NO, 250 VAC, 3A (resistive load)	
	Voltage output (for driving the SSR)	12 VDC, 21 mA (with short-circuit protection circuit)3	
Control method		ON/OFF or 2-PID (with auto-tuning)	
Alarm output		SPST-NO, 250 VAC, 1A (resistive load)	
Setting method		Digital setting using front panel keys	
Indication method		3.5 digit, 7-segment digital display (character height: 13.5 mm) and deviation indicators	
Other functions		• Setting change prohibit (key protection) • Input shift • Temperature unit change (°C/°F) • Direct/reverse operation • Temperature range, Sensor switching (K/J/L, Pt100/JPt100) • Switching is performed between a thermocouple and platinum resistance thermometer for multi-input models. • Control period switching • 8-mode alarm output • Sensor error detection	
Ambient temperature		–10 to 55°C (with no condensation or icing)	
Ambient humidity		25% to 85%	
Storage temperature		–25 to 65°C (with no condensation or icing)	

■ Characteristics

Setting accuracy	Thermocouple (See note 1.):	(±0.5% of indication value or ±1°C, whichever is greater) ±1 digit max.
Indication accuracy (ambient temperature of 23°C)	Platinum resistance thermometer (See note 2.):	(±0.5% of indication value or ±1°C, whichever is greater) ±1 digit max.
Influence of temperature	R thermocouple inputs:	(±1% of PV or ±10°C, whichever is greater) ±1 digit max.
Influence of voltage	Other thermocouple inputs:	(±1% of PV or ±4°C, whichever is greater) ±1 digit max.
	Platinum resistance thermometer inputs:	(±1% of PV or ±2°C, whichever is greater) ±1 digit max.
Hysteresis (for ON/OFF control)	0.2% FS (0.1% FS for multi-input (thermocouple/platinum resistance thermometer) models)	
Proportional band (P)	1 to 999°C (automatic adjustment using auto-tuning/self-tuning)	
Integral time (I)	1 to 1,999 s (automatic adjustment using auto-tuning/self-tuning	
Derivative time (D)	1 to 1,999 s (automatic adjustment using auto-tuning/self-tuning)	
Alarm output range	Absolute-value alarm: Same as the control range Other: 0% to 100% FS Alarm hysteresis: 0.2°C or °F (fixed)	
Control period	2/20 s	
Sampling period	500 ms	
Insulation resistance	20 MΩ min. (at 500 VDC)	
Dielectric strength	2,000 VAC, 50/60 Hz for 1 min between current-carrying terminals of different polarity	
Vibration resistance — **Malfunction**	10 to 55 Hz, 20 m/s² for 10 min each in X, Y, and Z directions	
Vibration resistance — **Destruction**	10 to 55 Hz, 0.75-mm single amplitude for 2 hr each in X, Y, and Z directions	
Shock resistance — **Malfunction**	100 m/s² min., 3 times each in 6 directions	
Shock resistance — **Destruction**	300 m/s² min., 3 times each in 6 directions	
Life expectancy — **Electrical**	100,000 operations min. (relay output models)	
Weight	Approx. 120 g (Controller only)	
Degree of protection	Front panel: Equivalent to IP66; Rear case: IP20; Terminals: IP00	
Memory protection	EEPROM (non-volatile memory) (number of writes: 1,000,000)	
EMC	EMI Radiated: EN 55011 Group 1 Class A EMI Conducted: EN 55011 Group 1 Class A ESD Immunity: EN 61000-4-2: 4 kV contact discharge (level 2), 8 kV air discharge (level 3) Radiated Electromagnetic Field Immunity: EN 61000-4-3: 10 V/m (80-1000 MHz, 1.4-2.0 GHz amplitude modulated) (level 3), 10 V/m (900 MHz pulse modulated) Conducted Disturbance Immunity: EN 61000-4-6: 3 V (0.15 to 80 MHz) (level 2) Noise Immunity (First Transient Burst Noise): EN 61000-4-4 Burst Immunity: 2 kV power-line (level 3), 1 kV I/O signal-line (level 3) Surge Immunity: EN 61000-4-5: Power line: Normal mode 1 kV; Common mode 2 kV Output line (relay output): Normal mode 1 kV; Common mode 2 kV Voltage Dip/Interrupting Immunity: EN 61000-4-11 0.5 cycle, 100% (rated voltage)	
Approved standards	UL 61010C-1 (listing) CSA C22.2 No.1010-1	
Conformed standards	EN 61326, EN 61010-1, IEC 61010-1 VDE 0106 Part 100 (finger protection), when the terminal cover is mounted.	

Note: 1. The following exceptions apply to thermocouples.
- U, L: ±2°C ±1 digit max.
- R: ±3°C ±1 digit max. at 200°C or less

2. The following exceptions apply to platinum resistance thermometers.
Input set values 0, 1, 2, 3 for E5CSV: 0.5% FS ±1 digit max.
Input set value 1 for E5CSV: 0.5% FS ±1 digit max.

■ Electrical Life Expectancy Curve for Relays (Reference Values)

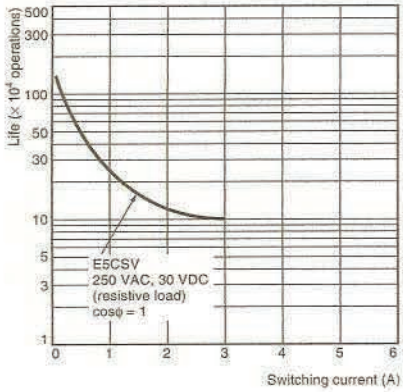

■ Temperature Range

Thermocouple Input Models

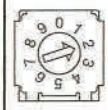

Temperature range (selected using switch)

(Default setting: 2)

Input	K						J/L			
Temperature range	200	300	400	500	600	999	200	300	400	500
Setting number	0	1	2	3	4	5	6	7	8	9
Minimum setting unit	1°C						1°C			

The shaded value indicates the default setting status.

Platinum Resistance Thermometer Input Models

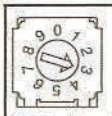

Temperature range (selected using switch)

(Default setting: 3)

Input	JPt100/Pt100									
Temperature range	50 / −50	50.0 / 0.0	80 / −20	99.9 / 0.0	200 / 0	300 / 0	400 / 0	300 / 0	400 / 0	199.9 / 0.0
Setting number	0	1	2	3	4	5	6	7	8	9
Minimum setting unit	1°C	0.1°C	1°C	0.1°C	1°C					0.1°C

The shaded value indicates the default setting status.

Multi-input (Thermocouple/Platinum Resistance Thermometer) Models

• Using Thermocouple Sensors, Control Mode Switch 5: OFF



Temperature range (selected using switch)

(Default setting: 0)

Input	K		J		L	T		U	N	R
Temperature range	1,300 / −99	199.9 / 0.0	850 / −99	199.9 / 0.0	850 / −99	400 / −99	199.9 / 0.0	400 / −99	1,300 / −99	1,700 / 0
Setting number	0	1	2	3	4	5	6	7	8	9
Minimum setting unit	1°C	0.1°C	1°C	0.1°C	1°C		0.1°C	1°C		

The shaded value indicates the default setting status.

• Using Platinum Resistance Thermometers, Control Mode Switch 5: ON



Temperature range (selected using switch)

(Default setting: 0)

Input	Pt100					JPt100				
Temperature range	850 / −99	199.9 / 0.0	99 / −99	200 / 0	400 / 0	500 / −99	199.9 / 0.0	99 / −99	200 / 0	400 / 0
Setting number	0	1	2	3	4	5	6	7	8	9
Minimum setting unit	1°C	0.1°C	1°C				0.1°C	1°C		

The shaded value indicates the default setting status.

External Connection Diagram

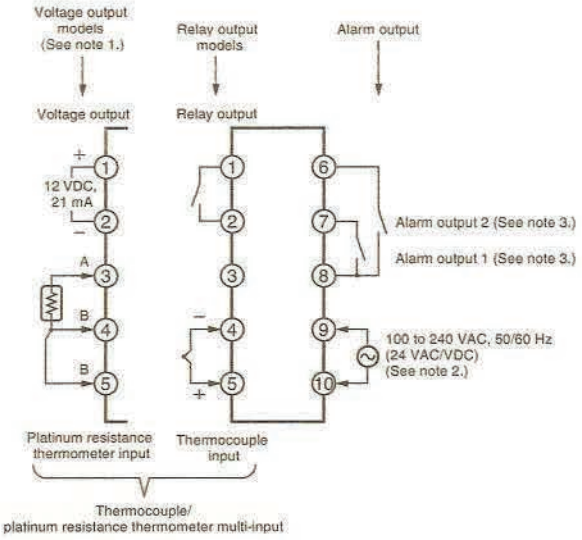

Note: 1. The voltage output (12 VDC, 21 mA) is not electrically isolated from the internal circuits. When using a grounding thermocouple, do not connect output terminals 1 or 2 to ground. Otherwise, unwanted current paths will cause measurement errors.

2. Models with 100 to 240 VAC and 24 VAC/VDC are separate. Models using 24 VDC have no polarity.

3. The number of alarm outputs depends on the model.

Nomenclature

E5CSV Models with Terminal Blocks



Operation

E5CSV

Deviation indicators

The △ indicator lights when the PV is greater than the SP and the ▽ indicator lights when the PV is less than the SP. The □ indicator (green) lights when the deviation is less than 1% FS (0.25% FS for multi-input models). These indicators flash during ST (self-tuning)/AT (auto-tuning).

Mode indicators

The SP indicator lights when the setting temperature is being displayed. The ALM indicator lights when the alarm value 1 is being displayed and flashes when the alarm value 2 is being displayed.

Mode Key

When the power is turned ON, normally the display will use the display items in the following order each time the Mode Key is pressed.

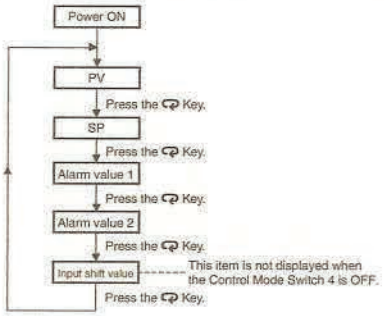



Lock Release Key

When the protect switch is ON, the set value can be changed by pressing the Up and Down Keys while holding down the Lock Release Key.

PV, SP, Alarm Value, Input Shift Display

The display switches each time the Key is pressed.

Output indicator

Lights when the control output is ON.

Alarm indicators

ALM1 (Alarm 1): Lights when the alarm 1 output is ON.
ALM2 (Alarm 2): Lights when the alarm 2 output is ON.

Up Key

Pressing the Up Key increases the SP/alarm value display. Keeping the Up Key pressed continues to increase the display value. When the internal protect switch is ON, press the Up Key while holding down the Lock Release Key.

Down Key

Pressing the Down Key decreases the SP/alarm value display. Keeping the Down Key pressed continues to decrease the display value. When the internal protect switch is ON, press the Down Key while holding down the Lock Release Key.

Settings before Turning ON the Power

E5CSV

Remove the E5CSV from the case to make the settings.

1. Insert the tool into the two tool insertion holes (one on the top and one on the bottom) and release the hooks.

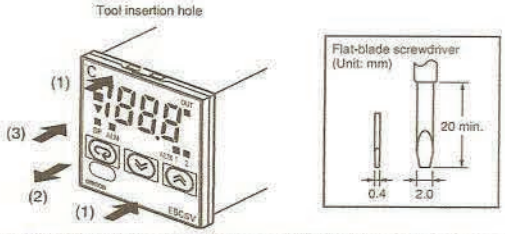

2. Insert the tool in the gap between the front panel and rear case, and pull out the front panel slightly. Grip the front panel and pull out fully. Be sure not to impose excessive force on the panel.

3. When inserting the E5CSV, check to make sure that the sealing rubber is in place and push the E5CSV toward the rear case until it snaps into position. While pushing the E5CSV into place, push down on the hooks on the top and bottom surfaces of the rear case so that the hooks are securely locked in place. Make sure that electronic components do not come into contact with the case.

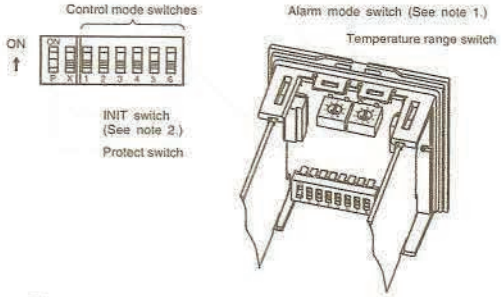

Note: 1. The alarm mode switch is not provided on models without alarms. Alarm 2 is always set to the upper limit in models with two alarms. A setting switch is not provided for alarm 2.
2. The INIT switch is always OFF during normal operation.

1. Sensor Type Specification

Select the number on the temperature range switch to change the temperature range.

Thermocouple (The default is 2.)

Input	K						J/L			
SP range	200	300	400	500	600	999	200	300	400	500
	0	0	0	0	0	0	0	0	0	0
Setting number	0	1	2	3	4	5	6	7	8	9

- The control range is -10% to +10% FS for each temperature range.

Note: The input indication range is the range that can be displayed for the control range (–99 to 1999). If the input is within the control range but exceeds the display range (–99 to 1999), values below –99 will be displayed as "ccc" and values above 1,999 will be displayed as "ddd."

Platinum Resistance Thermometer

(The default is 3.)

Input	JPt100/Pt100									
SP range	50	50.0	80	99.9	200	300	400	300	400	199.9
	–50	0.0	–20	0.0	0	0	0	0	0	0.0
Setting number	0	1	2	3	4	5	6	7	8	9

- The control range is -10% to +10% FS for each temperature range.

Note: 1. The input indication range is the range that can be displayed for the control range (–99 to 1999). If the input is within the control range but exceeds the display range (–99 to 1999), values below –99 will be displayed as "ccc" and values above 1,999 will be displayed as "ddd."
2. If the unit is changed to 1 degree when the SP and alarm value for the temperature range are displayed in 0.1-units from 0.0 to 199.9 or 0.0 to 99.9, the values will be multiplied by 10 (e.g., 0.5 becomes 5). If the unit is changed in the reverse direction, the values will be divided by 10. After changing the range, set the SP and alarm value again.
3. The temperature range for setting numbers 5 and 6 are the same as for 7 and 8, respectively.

Multi-input (Thermocouple/Platinum Resistance Thermometer) Models

- Using Thermocouple Sensors, Control Mode Switch 5: OFF

Input	K		J		L	T		U	N	R
SP range	1,300	199.9	850	199.9	850	400	199.9	400	1,300	1,700
	–99	0.0	–99	0.0	–99	–99	0.0	–99	–99	0
Setting number	0	1	2	3	4	5	6	7	8	9

- The control range is -20°C to +20°C of the input temperature range.

Note: 1. The input indication range is the range that can be displayed for the control range (–99 to 1999). If the input is within the control range but exceeds the display range (–99 to 1999), values below –99 will be displayed as "ccc" and values above 1,999 will be displayed as "ddd."
2. If unit is changed to 1 degree when the SP and alarm value for the temperature range are displayed in 0.1-units from 0.0 to 199.9 or 0.0 to 99.9, the values will be multiplied by 10 (e.g., 0.5 becomes 5). If the unit is changed in the reverse direction, the values will be divided by 10. After changing the range, set the SP and alarm value again.

- Using Platinum Resistance Thermometers, Control Mode Switch 5: ON

Input	Pt100					JPt100				
SP range	850	199.9	99	200	400	500	199.9	99	200	400
	–99	0.0	–99	0	0	–99	0.0	–99	0	0
Setting number	0	1	2	3	4	5	6	7	8	9

- The control range is -20°C to +20°C of the input temperature range.

Note: 1. The input indication range is the range that can be displayed for the control range (–99 to 1999). If the input is within the control range but exceeds the display range (–99 to 1999), values below –99 will be displayed as "ccc" and values above 1,999 will be displayed as "ddd."
2. If unit is changed to 1 degree when the SP and alarm value for the temperature range are displayed in 0.1-units from 0.0 to 199.9 or 0.0 to 99.9, the values will be multiplied by 10 (e.g., 0.5 becomes 5). If the unit is changed in the reverse direction, the values will be divided by 10. After changing the range, set the SP and alarm value again.

Mode Key Display Order

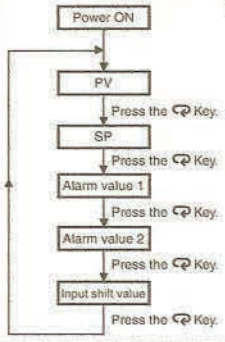

- If the SP falls outside the temperature range when the temperature range is changed, the SP will be displayed first. The SP will be changed automatically either to the minimum value or the maximum value, whichever is nearest.
- If the alarm value falls outside the temperature range when the temperature range is changed, the alarm value will be displayed first. The alarm value will be changed automatically to the maximum value in the new temperature range.

2. Operation Settings

Use the control mode switches () to change the control mode. (All switches are OFF for the default settings.)



Function selection			1	2	3	4	5	6
ON/OFF PID	PID control		ON					
	ON/OFF control		OFF					
Control period	2 s			ON				
	20 s			OFF				
Direct/ reverse operation	Direct operation (cooling)				ON			
	Reverse operation (heating)				OFF			
Input shift display	Enabled					ON		
	Disabled					OFF		
Temperature Sensor selection	Thermocouple	K, L					OFF	
		K, J					ON	
	Platinum resistance thermometer	Pt100					OFF	
		JPt100					ON	
	Multi-input (thermocouple/ platinum resistance thermometer)	Platinum resistance thermometer input					OFF	
		Thermocouple input					ON	
Temperature unit	°F							ON
	°C							OFF

Note: The previous name Pt100 has been changed to JPt100 in accordance with revisions to JIS. The previous name J-DIN has been changed to L in accordance with revisions to DIN standards.

3. Alarm Modes

Select the number of the alarm mode switch  when changing the alarm mode. (The default is 2).

Set value	Alarm type	Alarm output operation
0, 9	Alarm function OFF	OFF
1	Upper- and lower-limit	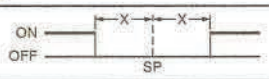
2	Upper-limit	
3	Lower-limit	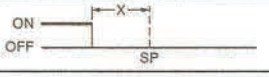
4	Upper- and lower-limit range	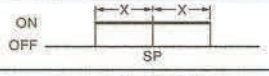
5	Upper- and lower-limit with standby sequence (See note 2.)	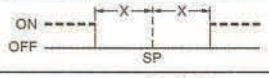
6	Upper-limit with standby sequence (See note 2.)	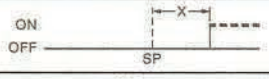
7	Lower-limit with standby sequence (See note 2.)	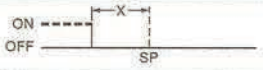
8	Absolute-value upper-limit	

Note: 1. No alarm. The alarm value (alarm operation display) will not be displayed when the setting is 0 or 9 even if the selection key is pressed.
Alarm Setting Range
X: 0 to FS (full scale); Y: Within temperature range
The value of X is the deviation setting for the SP (set point).

2. Standby Sequence Function (The standby sequence operates when the power is turned ON.)

Rising Temperature

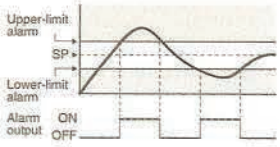

Dropping Temperature

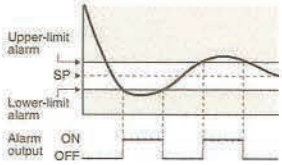

Note: Turn OFF the power before changing the DIP switch settings on the E5CSV. Each of the switch settings will be enabled after the power is turned ON.

For details on the position of the temperature range switch, control mode switches, and alarm mode switch, refer to page 6.

4. Using the Control Mode Switches

(1) Using ON/OFF Control and PID Control

ON/OFF Control

The control mode is set to ON/OFF control as the default setting.

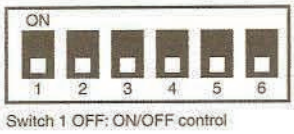

Switch 1 OFF: ON/OFF control

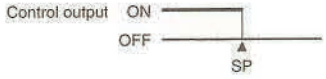

To perform cooling control of freezers, etc., turn ON switch 3.



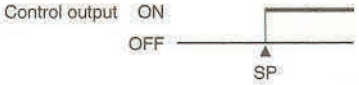

PID Control

Turn ON switch 1 to use PID control.

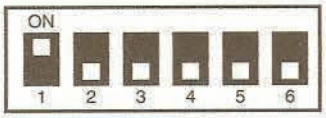

Switch 1 ON: PID control

1. Set the control period.

Performing Control via Relay Output, External Relay, or Conductor

Switch 2: OFF (control period: 20 s)



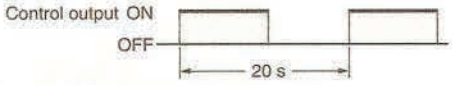

Quick Control Response Using an SSR

Switch 2: ON (control period: 2 s)



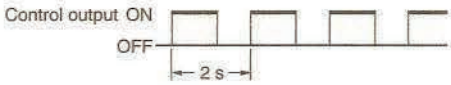

2. Set direct/reverse operation for the output.

Performing Heating Control for Heaters

Switch 3: OFF





Performing Cooling Control for Freezers

Switch 3: ON



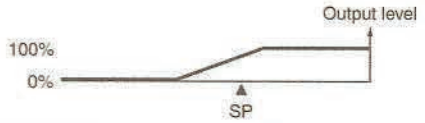

ST (Self-tuning) Features

ST (self-tuning) is a function that finds PID constants by using step response tuning (SRT) when Controller operation begins or when the set point is changed. Once the PID constants have been calculated, ST is not executed when the next control operation is started as long as the set point remains unchanged. When the ST function is in operation, be sure to turn ON the power supply of the load connected to the control output simultaneously with or before starting Controller operation.

Executing AT (Auto-tuning)

AT (auto-tuning) is executed by pressing the Up and Down Keys for at least 2 s while the PV is displayed. The deviation indicators flash during auto-tuning (AT) execution. AT will be cancelled by performing the same operation that AT is executing during AT operation. Flashing stops when AT is completed.

AT execution

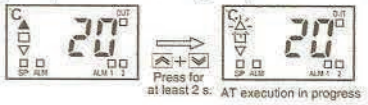

AT cancelled

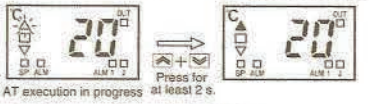

Note: One of the deviation indicators (▲■▼) will flash.

(2) Using the E5CSV in Devices for Fahrenheit-scale Users

(Displaying in °F)

Turn ON switch 6 to display temperatures in °F.

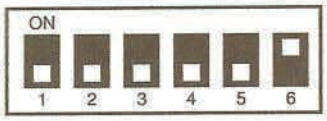

Temperature Range for °F

The temperature is set to °F using the same temperature range switch as °C.

Thermocouple

Setting	°F	
0	K	0 to 200
1		0 to 300
2		0 to 400
3		0 to 500
4		0 to 600
5		0 to 999
6	J/L	0 to 999
7		0 to 300
8		0 to 400
9		0 to 500

Platinum Resistance Thermometer

Setting	°F	
0	JPt100 or Pt100	-50 to 50
1		0.0 to 50.0
2		-20 to 80
3		0.0 to 99.9
4		0 to 200
5		0 to 300
6		0 to 400
7		0 to 600
8		0 to 800
9		0.0 to 199.9

Multi-input (Thermocouple/ Platinum Resistance Thermometer)

Control mode switch 5: OFF

Setting	°F	
0	K	-99 to 1999
1		0.0 to 199.9
2	J	-99 to 1500
3		0.0 to 199.9
4	L	-99 to 1500
5	T	-99 to 700
6		0.0 to 199.9
7	U	-99 to 700
8	N	-99 to 1999
9	R	0 to 1999

Multi-input (Thermocouple/ Platinum Resistance Thermometer)

Control mode switch 5: ON

Setting	°F	
0	Pt100	-99 to 1500
1		0.0 to 199.9
2		-99 to 99
3		0 to 200
4		0 to 400
5	JPt100	-99 to 900
6		0.0 to 199.9
7		-99 to 99
8		0 to 200
9		0 to 400

Note: The control range for a thermocouple input or platinum resistance thermometer input is -10% to +10% FS for each temperature range. The control range for multi-input (thermocouple/platinum resistance thermometer) models is -40 to +40° F of each temperature range.

Using K, L/Pt100 Thermometers

Turn ON switch 5 when using K, L/Pt100 Thermometers.

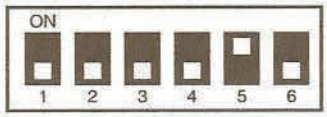

Note: The previous name J-DIN has been changed to L in accordance with revisions to DIN standards.

---

(3) Setting Input Shift

Turn ON switch 4, and after turning ON the power, press the Mode Key until *H0* (indicates input shift of 0) is displayed. Press the Up and Down Keys to set the shift value.

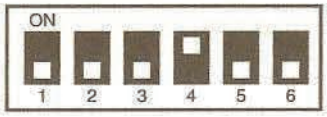

Shift Example

Input shift display	Measured temperature	Temperature display
H0 (no shift)	100°C	100°C
H9 (+9°C shift)	100°C	109°C
L9 (-9°C shift)	100°C	91°C

Note: When control mode switch 4 is turned OFF (no input shift display), the input shift is not displayed but the shift value is enabled. To disable input shift, set the input shift value to *H0*. The shift range depends on the setting unit.

Setting unit	1°C	0.1°C
Compensation range	-99 to +99°C	-9.9 to +9.9°C
Input shift display	L99 to H99	L9.9 to H9.9

5. Protect Switch

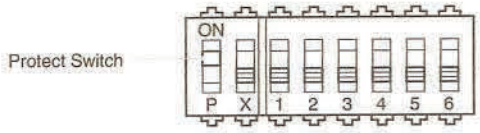

When the protect switch is ON, Up Key and Down Key operations are prohibited to prevent setting mistakes.

Installation

- All models in the E5CSV Series conform to DIN 43700 standards.
- The recommended panel thickness is 1 to 4 mm.
- Be sure to mount the E5CSV horizontally.

Mounting the E5CSV

1. For waterproof mounting, waterproof packing must be installed on the Controller. Waterproofing is not possible when group mounting several Controllers.
2. Insert the E5CSV into the mounting hole in the panel.
3. Push the adapter from the terminals up to the panel, and temporarily fasten the E5CSV.
4. Tighten the two fastening screws on the adapter. Alternately tighten the two screws little by little to maintain a balance. Tighten the screws to a torque of 0.29 to 0.39 N·m.

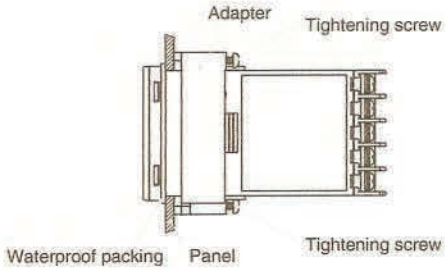

Error Displays and Causes

In addition to the alarm indicator, errors notification is provided on the display. Be sure to remove the cause of the error promptly.

Display status	Cause	Control output
PV displayed as FFF	The process value is higher than the control temperature range (overflow).	Heating control (reverse operation): OFF Cooling control (direct operation): ON
PV displayed as ---	The process value is lower than the control temperature range (underflow).	Heating control (reverse operation): ON Cooling control (direct operation): OFF
FFF flashing	(1)Thermocouple models and platinum resistance thermometer models: The process value is higher than the overflow temperature, or a Sensor error has occurred. (2)Multi-input (Thermocouple/platinum resistance thermometer) models: The process value is higher than the control temperature range or a Sensor error has occurred.	OFF
--- flashing	(1)Thermocouple and platinum resistance thermometer input: The process value is lower than the underflow temperature, or a Sensor error has occurred. (2)Thermocouples: The polarity is reversed. (3)Multi-input (Thermocouple/platinum resistance thermometer) models: The process value is lower than the control temperature range or a Sensor error has occurred.	OFF
E11 is displayed	A memory error (E11) has occurred. Turn the power ON again. If the display remains the same, the Controller must be repaired.	The control outputs and alarm outputs turn OFF.

Note: In models with an alarm, FFF appears or flashes on the display to indicate that the temperature has exceeded the maximum display temperature and the output is set according to the alarm mode. In the same way, --- appears or flashes on the display to indicate that the temperature has exceeded the minimum display temperature and the output is set according to the alarm mode.

Sensor Error Displays and Causes

■ Thermocouple

Status		Display	Control output
Burnout	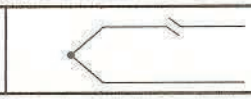	FFF flashing	OFF

Note: The room temperature is displayed if an input short-circuit occurs.

■ Platinum Resistance Thermometer

Status		Display	Control output
Burnout	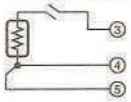	FFF flashing	OFF
	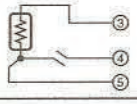	--- flashing	OFF
	2 or 3 wires disconnected	FFF flashing	OFF
Short-circuit	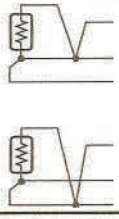	--- flashing	OFF

Note: The resistance value for platinum resistance thermometers is 100 Ω at 0°C and 140 Ω at 100°C.

Comparison with E5CS-X

■ Model Number Legend

Previous model

E5CS-□□□X
1 2 3

	Classification	Symbol	Meaning
1	Control output	R	Relay: SPDT (single-pole, double-throw)
		Q	Voltage
2	Alarm output	Blank	No alarms
		1	One alarm
3	Input type	KJ	Thermocouple (K, J)
		P	Platinum resistance thermometer (Pt100, JPt100)
	Terminal appearance	X	Model with terminal block

Main Differences

Terminal block models use the model number E5CSV.
The suffix "D" is added to models with a supply voltage of 24 VAC/VDC.
The suffix "W" is added to models with a light gray case color.

E5CSV

E5CSV-□□□□-□
1 2 3 4 5

	Classification	Symbol	Meaning
1	Control output	R	Relay: SPST-NO (single-pole, single-throw, normally open)
		Q	Voltage
2	Alarm output	Blank	No alarms
		1	One alarm
		2	Two alarms
3	Input type	T	Multi-input (thermocouple/platinum resistance thermometer) models
		KJ	Thermocouple (K, J)
		P	Platinum resistance thermometer (Pt100, JPt100)
4	Supply specifications	Blank	100 to 240 VAC
		D	24 VAC/VDC
5	Case color	Blank	Black
		W	Light gray
		F	Scale marked in F° (Black case only)

■ Display

Previous model

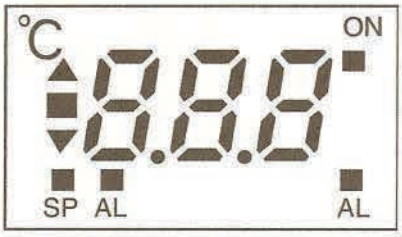

E5CSV

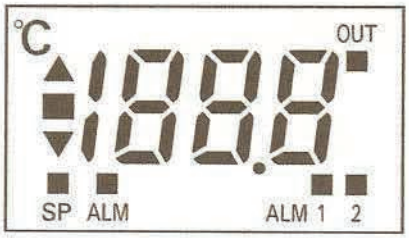

The display digits can be increased up to 1,999.
The ALM2 display has been added.
The display "ON" has changed to "OUT" and "AL" has changed to "ALM."

■ Functions

The control outputs for relay outputs have been changed from SPDT (single-pole, double-throw) to SPST-NO (single-pole, single-throw, normally open) contacts.
The control method has been changed to 2-PID control.
An auto-tuning (AT) function has been added.
The deviation display flashes during self-tuning (ST) and auto-tuning (AT).
The control calculation period has been improved from 2 s to 0.5 s.

■ External Dimensions

The depth has been shortened from 100 mm to 76 mm.

Comparison with E5CS-X

■ Model Number Legend

Previous model

E5CS-□□□X
1 2 3

	Classification	Symbol	Meaning
1	Control output	R Q	Relay: SPDT (single-pole, double-throw) Voltage
2	Alarm output	Blank 1	No alarms One alarm
3	Input type	KJ P	Thermocouple (K, J) Platinum resistance thermometer (Pt100, JPt100)
	Terminal appearance	X	Model with terminal block

Main Differences

Terminal block models use the model number E5CSV.
The suffix "D" is added to models with a supply voltage of 24 VAC/VDC.
The suffix "W" is added to models with a light gray case color.

E5CSV

E5CSV-□□□□-□
1 2 3 4 5

	Classification	Symbol	Meaning
1	Control output	R Q	Relay: SPST-NO (single-pole, single-throw, normally open) Voltage
2	Alarm output	Blank 1 2	No alarms One alarm Two alarms
3	Input type	T KJ P	Multi-input (thermocouple/platinum resistance thermometer) models Thermocouple (K, J) Platinum resistance thermometer (Pt100, JPt100)
4	Supply specifications	Blank D	100 to 240 VAC 24 VAC/VDC
5	Case color	Blank W F	Black Light gray Scale marked in F° (Black case only)

■ Terminal Arrangement

• The terminal arrangement has changed from a horizontal to vertical configuration.

Previous model	E5CSV
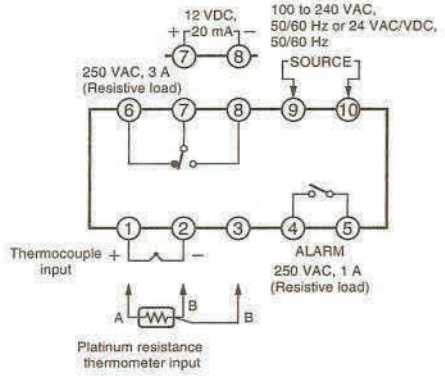	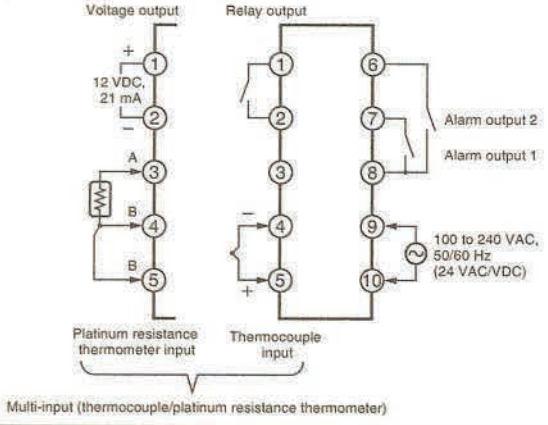

■ DIP Switch and Rotary Switch Setting Methods

No change from previous models.

Dimensions

Note: All units are in millimeters unless otherwise indicated.

■ Controller

E5CSV



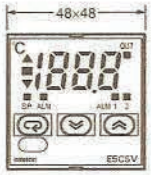

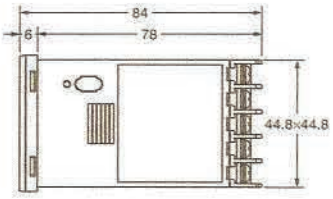

Note: Terminals cannot be removed.

Panel Cutout Dimensions

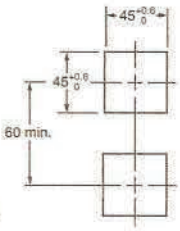

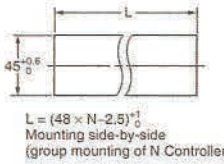

L = (48 × N−2.5) +1 0
Mounting side-by-side
(group mounting of N Controllers)

E5CSV + Adapter for Flush Mounting (Provided)

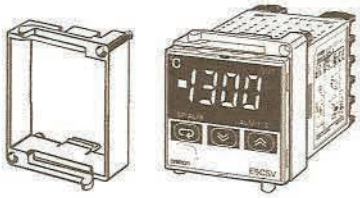

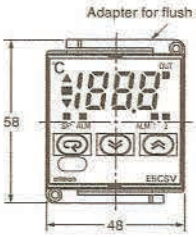

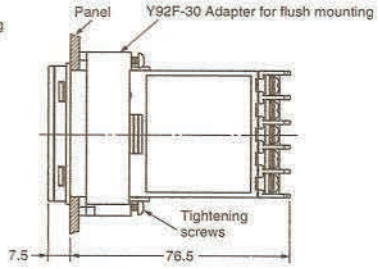

Note: 1. The recommended panel thickness is 1 to 4 mm.
2. Group mounting is possible in one direction only.

Hard Protective Cover

The Y92A-48B Protective Cover (hard type) is available for the following applications.

- To protect the set from dust and dirt.
- To prevent the panel from being accidentally touched causing displacement of set values.
- To provide effective protection against water droplets.



Terminal Cover

E53-COV10

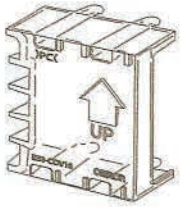

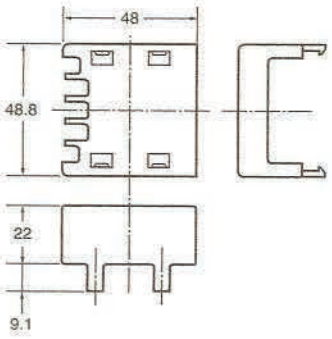

Precautions

⚠ Caution

Do not touch the terminals while power is being supplied. Doing so may occasionally result in minor injury due to electric shock.



Do not allow pieces of metal, wire clippings, or fine metallic shavings or filings from installation to enter the product. Doing so may occasionally result in electric shock, fire, or malfunction.



Do not use the product where subject to flammable or explosive gas. Otherwise, minor injury from explosion may occasionally occur.



Never disassemble, modify, or repair the product or touch any of the internal parts. Minor electric shock, fire, or malfunction may occasionally occur.



CAUTION - Risk of Fire and Electric Shock

a) This product is UL listed as Open Type Process Control Equipment. It must be mounted in an enclosure that does not allow fire to escape externally.

b) More than one disconnect switch may be required to de-energize the equipment before servicing the product.

c) Signal inputs are SELV, limited energy. (See note 1.)

d) Caution: To reduce the risk of fire or electric shock, do not interconnect the outputs of different Class 2 circuits. (See note 2.)



If the output relays are used past their life expectancy, contact fusing or burning may occasionally occur. Always consider the application conditions and use the output relays within their rated load and electrical life expectancy. The life expectancy of output relays varies considerably with the output load and switching conditions.



Loose screws may occasionally result in fire.
Tighten terminal screws to the specified torque of 0.74 to 0.90 N·m.



Unexpected operation may result in equipment damage or accidents if the settings are not appropriate for the controlled system. Set the Temperature Controller as follows:

- Set the parameters of the Temperature Controller so that they are appropriate for the controlled system.
- Turn the power supply to the Temperature Controller OFF before changing any switch setting. Switch settings are read only when the power supply is turned ON.
- Make sure that the INIT switch in the control mode switches is turned OFF before operating the Temperature Controller.



A malfunction in the Temperature Controller may occasionally make control operations impossible or prevent alarm outputs, resulting in property damage. To maintain safety in the event of malfunction of the Temperature Controller, take appropriate safety measures, such as installing a monitoring device on a separate line.



Faulty terminal contact or decreased waterproofing capability may result in a fire or equipment malfunction. When inserting the Temperature Controller into the rear case after setting the switches, check the watertight packing and make sure that the top and bottom hooks are locked securely in place.



Note: 1. A SELV circuit is one separated from the power supply with double insulation or reinforced insulation, that does not exceed 30 V r.m.s. and 42.4 V peak or 60 VDC.

2. A class 2 power supply is one tested and certified by UL as having the current and voltage of the secondary output restricted to specific levels.

■ Precautions for Safe Use

Be sure to observe the following precautions to prevent operation failure, malfunction, or adverse affects on the performance and functions of the product. Not doing so may occasionally result in unexpected events.

1. The product is designed for indoor use only. Do not use the product outdoors or in any of the following locations.
   - Places directly subject to heat radiated from heating equipment.
   - Places subject to splashing liquid or oil atmosphere.
   - Places subject to direct sunlight.
   - Places subject to dust or corrosive gas (in particular, sulfide gas and ammonia gas).
   - Places subject to intense temperature change.
   - Places subject to icing and condensation.
   - Places subject to vibration and large shocks.
2. Use and store the product within the rated temperature and humidity ranges.
   Group-mounting two or more Temperature Controllers, or mounting Temperature Controllers above each other may cause heat to build up inside the Temperature Controllers, which will shorten their service life. In such a case, use forced cooling by fans or other means of air ventilation to cool down the Temperature Controllers.
3. To allow heat to escape, do not block the area around the product. Do not block the ventilation holes on the product.
4. Use the specified size (M3.5, width of 7.2 mm or less) crimped terminals for wiring. To connect bare wires to the terminal block, use copper braided or solid wires with a gage of AWG24 to AWG18 (equal to a cross-sectional area of 0.205 to 0.832 mm^2). (The stripping length is 5 to 6 mm.) Up to two wires of the same size and type, or two crimp terminals can be inserted into a single terminal.
5. Be sure to wire properly with correct polarity of terminals. Do not wire any of the I/O terminals incorrectly.
6. Do not wire the terminals that are not used.
7. The voltage output (control output) is not electrically isolated from the internal circuits. When using a grounded temperature sensor, do not connect any of the control output terminals to ground. Otherwise unwanted current paths will cause measurement errors.
8. To avoid inductive noise, keep the wiring for the Temperature Controller's terminal block away from power cables carrying high voltages or large currents. Also, do not wire power lines together with or parallel to Temperature Controller wiring. Using shielded cables and using separate conduits or ducts is recommended.
   Attach a surge suppressor or noise filter to peripheral devices that generate noise (in particular, motors, transformers, solenoids, magnetic coils or other equipment that have an inductance component).
   When a noise filter is used at the power supply, first check the voltage or current, and attach the noise filter as close as possible to the temperature controller.
   Allow as much space as possible between the Temperature Controller and devices that generate powerful high frequencies (high-frequency welders, high-frequency sewing machines, etc.) or surge.

9. Use the product within the rated load and power supply.
10. Use a switch, relay, or other contact so that the power supply voltage reaches the rated voltage within 2 seconds. If the applied voltage is increased gradually, the power supply may not be reset or malfunctions may occur.
11. When using PID operation (self-tuning), turn ON the power supply to the load (e.g., heater) at the same time or before turning the power supply to the Temperature Controller ON. If power is turned ON for the Temperature Controller before turning ON power supply to the load, self-tuning will not be performed properly and optimum control will not be achieved.
12. Design the system (e.g., control panel) to allow for the 2 seconds of delay required for the Temperature Controller's output to stabilize after the power is turned ON.
13. A switch or circuit breaker should be provided close to this unit. The switch or circuit breaker should be within easy reach of the operator, and must be marked as a disconnecting means for this unit.
14. Approximately 30 minutes is required for the correct temperature to be displayed after turning the power supply to the Temperature Controller ON. Turn the power supply ON at least 30 minutes prior to starting control operations.
15. Be sure that the platinum resistance thermometer type and the input type set on the Temperature Controller are the same.
16. When extending the thermocouple lead wires, always use compensating conductors suitable for the type of thermocouple. Do not extend the lead wires on a platinum resistance thermometer. Use only low-resistance wire (5 Ω max. per line) for lead wires and make sure that the resistance is the same for all three wires.
17. When drawing out the Temperature Controller from the case, do not apply force that would deform or alter the Temperature Controller.
18. When drawing out the Temperature Controller from the case to replace the Temperature Controller, check the status of the terminals. If corroded terminals are used, contact faults with the terminals may cause the temperature inside the Temperature Controller to increase, possibly resulting in fire. If the terminals are corroded, replace the rear case as well.
19. When drawing out the Temperature Controller from the case, turn the power supply OFF first, and absolutely do not touch the terminals or electronic components or apply shock to them. When inserting the Temperature Controller, do not allow the electronic components to come into contact with the case.
20. Static electricity may damage internal components. Always touch grounded metal to discharge any static electricity before handling the Temperature Controller. When drawing out the Temperature Controller from the case, do not touch the electronic components or patterns on the board with your hand. Hold the Temperature Controller by the edge of the front panel when handling it.
21. Do not use paint thinner or similar chemical to clean with. Use standard grade alcohol.
22. Use tools when separating parts for disposal. Contact with the sharp internal parts may cause injury.

■ Precautions for Correct Use

Service Life

Use the Temperature Controller within the following temperature and humidity ranges:

Temperature: -10 to 55°C (with no icing or condensation)
Humidity: 25% to 85%

If the Controller is installed inside a control board, the ambient temperature must be kept to under 55°C, including the temperature around the Controller.

The service life of electronic devices like Temperature Controllers is determined not only by the number of times the relay is switched but also by the service life of internal electronic components. Component service life is affected by the ambient temperature: the higher the temperature, the shorter the service life and, the lower the temperature, the longer the service life. Therefore, the service life can be extended by lowering the temperature of the Temperature Controller.

When two or more Temperature Controllers are mounted horizontally close to each other or vertically next to one another, the internal temperature will increase due to heat radiated by the Temperature Controllers and the service life will decrease. In such a case, use forced cooling by fans or other means of air ventilation to cool down the Temperature Controllers. When providing forced cooling, however, be careful not to cool down the terminals sections alone to avoid measurement errors.

Measurement Accuracy

When extending or connecting the thermocouple lead wire, be sure to use compensating wires that match the thermocouple type. Do not extend the lead wire of the platinum resistance thermometer. If the lead wire of the platinum resistance thermometer must be extended, be sure to use wires that have low resistance and keep the resistance of the three lead wires the same.

Mount the Temperature Controller so that it is horizontally level.

If the measurement accuracy is low, check whether the input shift has been set correctly.

Waterproofing

The degree of protection is as shown below. Sections without any specification on their degree of protection or those with IP□0 are not waterproof.

Front panel: IP66, rear case: IP20, terminals: IP00

of use. Buyer shall be solely responsible for determining appropriateness of the particular Product with respect to Buyer's application, product or system. Buyer shall take application responsibility in all cases but the following is a non-exhaustive list of applications for which particular attention must be given:
(i) Outdoor use, uses involving potential chemical contamination or electrical interference, or conditions or uses not described in this document.
(ii) Use in consumer products or any use in significant quantities.
(iii) Energy control systems, combustion systems, railroad systems, aviation systems, medical equipment, amusement machines, vehicles, safety equipment, and installations subject to separate industry or government regulations.
(iv) Systems, machines and equipment that could present a risk to life or property. Please know and observe all prohibitions of use applicable to this Product.
NEVER USE THE PRODUCT FOR AN APPLICATION INVOLVING SERIOUS RISK TO LIFE OR PROPERTY OR IN LARGE QUANTITIES WITHOUT ENSURING THAT THE SYSTEM AS A WHOLE HAS BEEN DESIGNED TO

ity and does not constitute a warranty. It may represent the result of Omron's test conditions, and the user must correlate it to actual application requirements. Actual performance is subject to the Omron's Warranty and Limitations of Liability.

4. Change in Specifications. Product specifications and accessories may be changed at any time based on improvements and other reasons. It is our practice to change part numbers when published ratings or features are changed, or when significant construction changes are made. However, some specifications of the Product may be changed without any notice. When in doubt, special part numbers may be assigned to fix or establish key specifications for your application. Please consult with your Omron's representative at any time to confirm actual specifications of purchased Product.
5. Errors and Omissions. Information presented by Omron Companies has been checked and is believed to be accurate; however, no responsibility is assumed for clerical, typographical or proofreading errors or omissions.

NORDBLOC®.1 Helical Gearboxes
Installation and Maintenance Instructions

BIM 1013

USA

CDN

Retain These Safety Instructions For Future Use

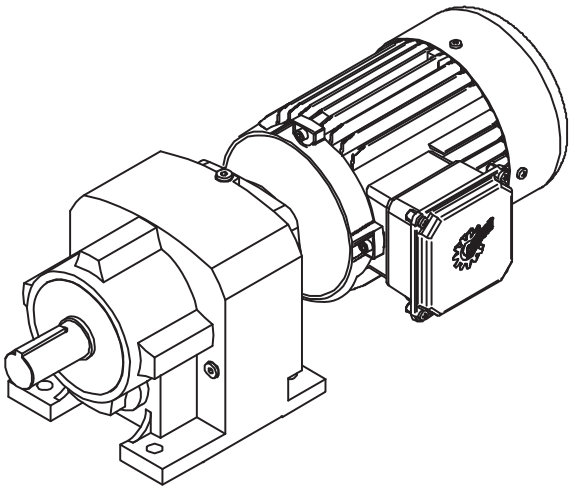

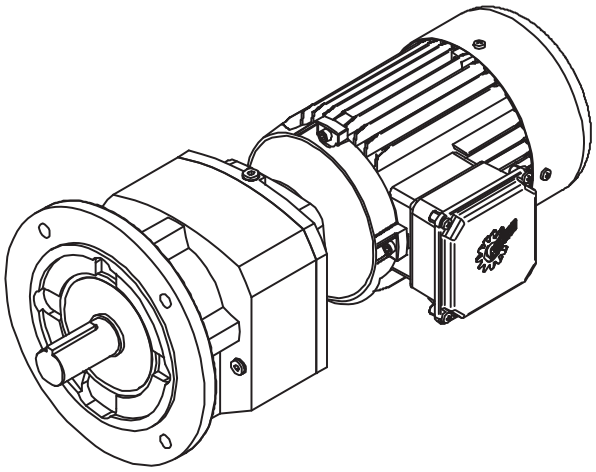

INSPECTION OF UNIT

Thoroughly inspect the equipment for any shipping and handling damage before accepting shipment from the freight company. If any of the goods called for in the bill of lading or express receipt are damaged or the quantity is short, do not accept until the freight or express agent makes an appropriate notation on your freight bill or express receipt. If any concealed loss or damage is discovered later, notify your freight carrier or express agent at once and request him to make an inspection. We will be very happy to assist you in collecting claims for loss or damage during shipment; however, this willingness on our part does not remove the transportation company's responsibility in reimbursing you for collection of claims or replacement of material. Claims for loss or damage in shipment must not be deducted from the NORD Gear invoice, nor should payment of the NORD Gear invoice be withheld awaiting adjustment of such claims, as the carrier guarantees safe delivery.

If considerable damage has been incurred and the situation is urgent, contact the nearest NORD Gear Sales Office for assistance. Please keep a written record of all communications.

RECORD NAMEPLATE DATA

Locate the gear reducer nameplate and record all nameplate data for future reference.

SK _____ S/N _____

RATIO _____ MAX TORQUE _____ RPM _____ MTG. POS _____

STORAGE

PROPER STORAGE UNTIL INSTALLED

Keep unit in a dry, temperature controlled area. If stored other than said, long term storage methods must be applied to the unit including complete fill with lubricant. Protect machined surfaces and rotate shafts periodically. Prior to putting unit into service, drain lubricant and refill to proper level as determined by the mounting position.

PROPER HANDLING OF THE UNIT

Exercise care to prevent damage to the unit when moving. Lift only at designed lifting points. Do not attach other machinery and lift by the unit lifting points. The lifting points are to be used to lift the unit only. Insure that adequate safety measures are taken to protect personnel during transportation. Protect the mounting surface from damage.

INSTALLATION OF UNIT

To ensure reliable service and dependable performance, an enclosed gear drive must be rigidly supported and the shafts accurately aligned. Folioing are some precautions required to accomplish this end.

FOUNDATION
The responsibility for the design and construction of the foundation is with the user. The foundation must be adequate to withstand normal operating loads and possible overloads while maintaining alignment to attached system components under such loads.

MOUNTING POSITION
Unless a unit is specifically ordered for inclined mounting, the foundation must be level and flat. The lubrication system may not operate properly if the unit is not mounted in the position for which it is designed. It may be desirable to elevate the foundation to facilitate oil drainage.

CONCRETE FOUNDATION
If a concrete foundation is used, steel mounting pads and bolts of sufficient size to distribute the stress into the concrete should be grouted into the foundation.

STEEL FOUNDATION
If a structural steel foundation is used (i.e. wide flange beams or channels), a base plate or sole plate of suitable thickness should be used and should extend under the entire unit.

FOOT MOUNTED UNITS
Use shims under the feet of the unit to align the output shaft to the driven equipment. Make sure that all feet are supported so that the housing will not distort when it is bolted down. Improper shimming will reduce the life of the unit and may cause failure. Dowel pins may be installed to prevent misalignment and ensure proper realignment if removed for service.

FLANGE MOUNTED UNITS
If a structural steel foundation is used (i.e. wide flange beams or channels), a base plate or sole plate of suitable thickness should be used and should extend under the entire unit. If a bulk head plate is used it should be of proper strength to minimize buckling distortions.

Flange Pilot 'AK' or 'AK1' tolerance
Metric (mm)

> ∅ 50 ≤ ∅ 80 = +0.012/-0.007
> ∅ 80 ≤ ∅ 120 = +0.013/-0.009
> ∅ 120 ≤ ∅ 180 = +0.014/-0.011
> ∅ 180 ≤ ∅ 230 = +0.016/-0.013
> ∅ 230 ≤ ∅ 315 = +0.000-0.032
> ∅ 315 ≤ ∅ 400 = +0.000/-0.036
> ∅ 400 ≤ ∅ 500 = +0.000/-0.040

Inch

> ∅ 1.969 ≤ ∅ 3.150 = +0.005/-0.0003
> ∅ 3.150 ≤ ∅ 4.724 = +0.005/-0.0004
> ∅ 4.724 ≤ ∅ 7.087 = +0.006/-0.0004
> ∅ 7.087 ≤ ∅ 9.055 = +0.006/-0.0005
> ∅ 9.055 ≤ ∅ 12.402 = +0.000/-0.0013
> ∅ 12.402 ≤ ∅ 15.748 = +0.000/-0.0014
> ∅ 15.748 ≤ ∅ 19.685 = +0.000/-0.0016

BOLT STRENGTH
Bolt size, strength and quantity should be verified to insure proper torque reaction capacity whatever the mounting arrangement.

PRIME MOVER MOUNTING
Align the prime mover to the reducer-input shaft using shims under the feet. Make sure that the feet are supported. Dowel pin the prime mover to its foundation.

SHAFT CONNECTIONS
When connecting shafts to either the input or output of the reducer, consider the following:

- Coupling hubs should be installed in accordance with ANSI/AGMA 9002-A86
- Consult with the manufacture to determine proper assembly and fit, prior to installing outboard sprockets or gears. Interference fits may require heating the sprocket or gear per the manufacturer's recommendations, generally up to 250°F to 300°F, (120°C to 150° C), before assembling to the shaft.

NORD SHAFT TOLERANCES

Solid shaft diameter tolerance
Metric (mm)

≤ ∅ 18 = +0.012/+0.001
> ∅ 18 ≤ ∅ 30 = +0.015/+0.002
> ∅ 30 ≤ ∅ 50 = +0.018/+0.002
> ∅ 50 ≤ ∅ 80 = +0.030/+0.011
> ∅ 80 ≤ ∅ 120 = +0.035/+0.013
> ∅ 120 ≤ ∅ 180 = +0.040/+0.015

Inch

≤ ∅ 1.750 = +0.0000/-0.0005
> ∅ 1.750 = +0.0000/-0.0010

Solid shaft drill and tap at shaft end
Metric (mm)

≤ ∅ 16 = M5
> ∅ 16 ≤ ∅ 21 = M6
> ∅ 21 ≤ ∅ 24 = M8
> ∅ 24 ≤ ∅ 30 = M10
> ∅ 30 ≤ ∅ 38 = M12
> ∅ 38 ≤ ∅ 50 = M16
> ∅ 50 ≤ ∅ 85 = M20
> ∅ 85 ≤ ∅ 130 = M24

Inch

≤ ∅ 0.500 = 10-24 x 0.43 deep
> ∅ 0.500 ≤ ∅ 0.875 = 1/4-20 x 0.59 deep
> ∅ 0.875 ≤ ∅ 0.938 = 5/16-18 x 0.71 deep
> ∅ 0.938 ≤ ∅ 1.100 = 3/8-16 x 0.87 deep
> ∅ 1.100 ≤ ∅ 1.300 = 1/2-13 x 1.10 deep
> ∅ 1.300 ≤ ∅ 1.875 = 5/8-11 x 1.4 deep
> ∅ 1.875 ≤ ∅ 3.500 = 3/4-10 x 1.7 deep
> ∅ 3.500 = 1-8 x 2.2 deep

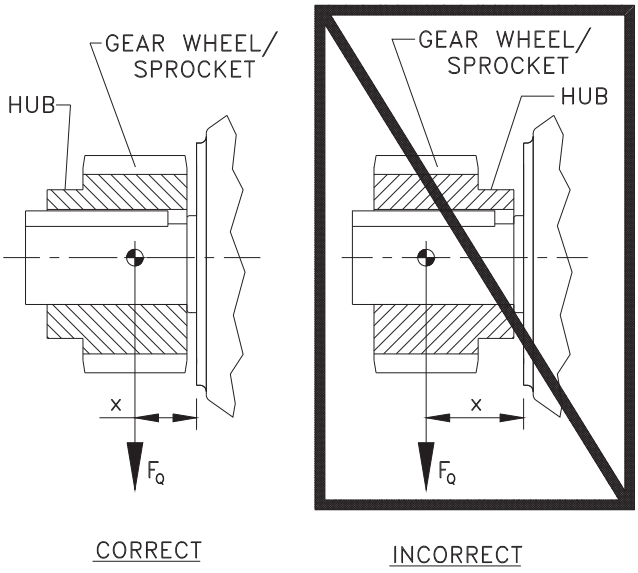

LOCATION
Coupling hubs should be mounted flush with the shaft ends, unless specifically ordered for overhung mounting. Pinions, sprockets and sheaves should be mounted as close as possible to the unit housing to minimize bearing loads and shaft deflections.

COUPLING ALIGNMENT
Shaft couplings should be installed according to the coupling manufacturer's recommendations for gap, angular and parallel alignment. In many installations, it is necessary to allow for thermal and mechanical shaft movement when determining shaft alignment. The coupling manufacturer's recommendations should be followed.

AXIAL DISPLACEMENT
The gap between shaft ends should be the same as the specified coupling gap unless overhung mounting of the coupling hub is specified. The coupling gap and shaft gap must be sufficient to accommodate any anticipated thermal or mechanical axial movement.

ANGULAR ALIGNMENT
Insert a spacer or shim stock equal to the required coupling gap between the coupling hub faces and measure the clearance using feeler gauges. Repeat this at the same depth at 90-degree intervals to determine the amount of angular misalignment.

PARALLEL ALIGNMENT
Mount a dial indicator to one coupling hub, and rotate this hub, sweeping the outside diameter of the other hub. The parallel misalignment is equal to one-half of the total indicator reading. Another method is to rest a straight edge squarely on the outside diameter of the hubs at 90-degree intervals and measure any gaps with feeler gauges. The maximum gap measurement is the parallel misalignment.

CHECKING ALIGNMENT
After both angular and parallel alignments are within specified limits, tighten all foundation bolts securely and repeat the above procedure to check alignment. If any of the specified limits for alignment are exceeded, realign the coupling.

SPROCKET OR SHEAVE ALIGNMENT
Align the sheaves or sprockets square and parallel by placing a straight edge across their faces. Alignment of bushed sheaves and sprockets should be checked after bushings have been tightened. Check horizontal shaft alignment by placing a level vertically against the face of the sheave or sprocket. Adjust belt or chain tension per the manufacturer's specified procedure.

OUTBOARD PINION ALIGNMENT
Align the pinion by adjusting the gear tooth clearance according to the manufacturer's recommendations and checking for acceptable outboard pinion tooth contact. The foundation bolts may have to be loosened and the unit moved slightly to obtain this contact. When the unit is moved to correct tooth contact, the prime mover should be realigned.

RECHECK ALIGNMENT
After a period of operation, recheck alignment and adjust as required.

1. Properly install unit on a rigid foundation
   - adequately supported
   - securely bolted into place
   - leveled so as not to distort the gear case
2. Properly install couplings suitable for the application and connected equipment.
3. Ensure accurate alignment with other equipment.
4. Furnish and install adequate machinery guards as needed to protect operating personnel and as required by the applicable standards of the Occupational Safety and Health Administration (OSHA), and by other applicable safety regulations;
5. Ensure that driving equipment is running in the correct direction before coupling to reducers with backstops (designed to operate only in a specific direction) or machinery designed to operate only in one direction.

CHANGES IN PERFORMANCE SPECIFICATIONS
The owner has the responsibility to consult with NORD GEAR if such items such as applied loads, operating speeds or other operating conditions have changed.

WARNING:
LOCK OUT POWER before any maintenance is performed. Make absolutely sure that no voltage is applied while work is

START-UP
1. Ensure that switches, alarms, heaters, coolers and other safety and protection devices are installed and operational for their intended purpose.
2. Verify that the installed mounting position is the same as the nametag mounting position. If not, relocate the vent plug, fill plug and drain plug according to the tables on pages 5-7 and make the necessary adjustments to the oil level.

OPERATION AND MAINTENANCE CHECKLIST
1. Operate the equipment as it was intended to be operated
2. Do not overload.
3. Run at correct speed.
4. Maintain lubricant in good condition and at proper level.
5. Dispose of used lubricant in accordance with applicable laws and regulations.
6. Apply proper maintenance to attached equipment at prescribed intervals recommended by the manufacturer.
7. Perform periodic maintenance of the gear drive as recommended by NORD.

LUBRICATION

Proper gearbox lubrication is essential in order to reduce friction, heat, and component wear. Lubricants reduce heat and wear by inserting a protective “fluid boundary” between mating parts and preventing direct metal to metal contact. Lubricants also help prevent corrosion and oxidation, minimize foam, improve heat transfer, optimize reducer efficiency, absorb shock loads and reduce noise.

- All reducers are shipped from the factory with a pre-determined oil fill level in accordance to the specified reducer size and mounting position (See pages 5-7).
- Actual oil volume can vary slightly depending upon the gear case size, mounting and ratio. Prior to commissioning the reducer, check the oil-fill level using the reducer’s oil-level plug and drain or add additional oil as needed.

Standard Oil Type

The standard NORDBLOC.1 gear units are supplied with mineral-base oil, ISO viscosity grade VG220.

Gear units may also be supplied with specific lubricants designed to operate in certain environments, extend service life, or extend the service temperature range. *Consult the lubrication decal adjacent to the fill plug to determine the type of lubricant installed at the factory.*

Oil Viscosity

Viscosity or the oil’s resistance to shear under load is often considered the single most important property of any gear oil. There are three primary reasons to consider a lubrication viscosity change as follows:

1. *Low temperature* gear oils should be selected so that the pour point is at least 9°F (5°C) lower than the expected minimum ambient temperature. In extreme cases, consider a lower ISO Viscosity rating and test the critical performance of the gear box under cold start-up.
2. *High temperature* applications may require an increase in the lubricants viscosity to assure proper lubrication conditions in the critical load zones of the gear unit. NORD also recommends switching to synthetic oil if oil sump temperatures exceed 176-185 °F (80-85 °C).
3. *In cases of extreme load conditions*, gear pairs and antifriction bearings may be more susceptible to scuffing wear. In these operating conditions, it may be beneficial to consider an increased lubrication viscosity and/or lubrication with improved antiwear additive packages.

NORD recommends that the user consult with their primary lubrication supplier when considering changes in oil viscosity.

Maximum Oil Sump Temperature Limit

To prevent reducer overheating, the reducer’s maximum oil sump temperature limit must not be exceeded for prolonged periods of operation (up to 3 hours continuous operation depending upon reducer size).

Oil Type	Maximum Oil Temperature Limit	
	NORD	***AGMA 9005-D94***
Mineral	80-85 °C (176-185 °F)	95 °C (203 °F)
Synthetic	105 °C (220 ° F)	107 ° C (225 ° F)

The Importance of Routine Oil Analysis

Routine oil analysis, sound lubrication practices, and good tracking of oil performance trends as related to specific equipment, will help establish proper lubrication maintenance and change-out intervals. To maximize equipment reliability, NORD Gear generally recommends a condition-based lubrication maintenance program.

One may take exceptions to this general recommendation on sealed-for-life or maintenance-free gear units or smaller and less costly gear units. In these instances, the replacement cost of the gear unit is often small compared to the costs associated with this type of oil analysis program.

NORD suggests replacing the gear oil if oil analysis indicates any of the following:
• Viscosity has changed by approximately 10% or more.
• Debris particles (silicon, dust, dirt or sand) exceed 25 ppm.
• Iron content exceeds 150-200 ppm.
• Water content is greater than 0.05% (500 ppm).
• Acid number tests indicate a significant level of oxidative break-down of the oil and a critical reduction in Performance.

OIL PLUG OPTIONS

All gear units are assembled with the oil fill-level, oil-drain and vent plugs installed in their proper locations, according to the specified mounting position that is shown on the reducer nametag (See Pages 5-7). All standard plugs are metric and utilize sealing gaskets between the head of the plug and the reducer housing.

Drain Plug
All reducer drain plugs are metric socket head cap screws. For ease of draining the spent oil from the gear reducer use the socket head screw located at the lowest part of the gearbox.

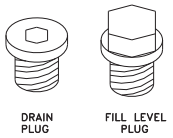

Fill Level Plug
For ease of identification, it is NORD’s standard practice to provide a hex-head screw for the fill-level plug

Vent Plug Options
Proper reducer venting allows for air pressure differences that occur during operation, between the inner space of the reducer and the atmosphere, while ensuring leak-free operation. The Autovent™ is standard on all NORDBLOC.1 gear units.

Autovent™
The AUTOVENT™ helps prevent bearing and gear damage by blocking entry of foreign material (water, dust, corrosives, etc.) through a breather that acts like a check valve. The typical design utilizes a spring pressing a ball or a sealing plunger, which presses against a machined orifice. The check valve opens at approximately 2 psi during operation and closes tightly when the gearbox cools, producing a slightly negative pressure to ensure a tight seal. This keeps contaminants out of the oil, helps maintain proper oil cleanliness, reduces contamination, oil foaming and oxidation. The AUTOVENT™ is perfect for humid conditions, washdown applications, and dusty environments.

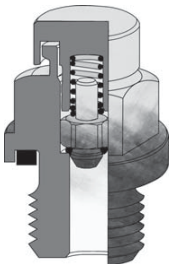

Open Vent
An optional open vent can be supplied on NORD reducers. The open vent will be closed upon delivery to prevent oil leakage. Before the reducer is put in service the open vent should be activated by removing the sealing plug.

Filtered Vent
NORD may offer an optional filtered vent, which allows gases to permeate, but does not allow dust and debris to pass through the vent.

MOUNTING POSITIONS

The mounting position charts that follow detail the standard mounting positions for horizontal and vertical mounting. The gearbox nametag will indicate the mounting position that was provided. For mounting orientations other than shown consult NORD Gear.

FOOT-MOUNTED

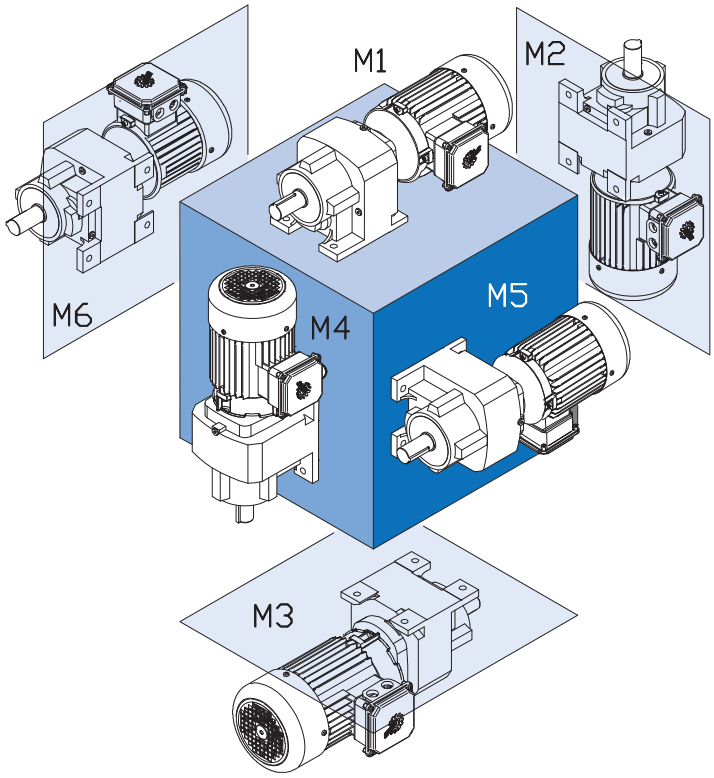

FLANGE-MOUNTED

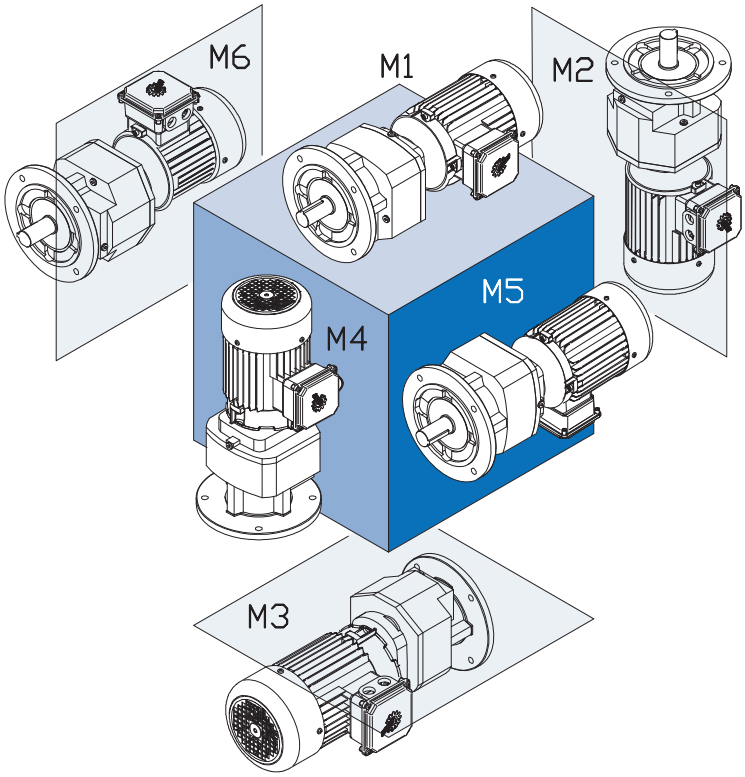

OIL PLUG LOCATIONS

All gear units are assembled with the oil fill-level, oil-drain and vent plugs installed in their proper locations, according to the specified mounting position that is shown on the reducer nametag. All standard plugs are metric and utilize sealing gaskets between the head of the plug and the reducer housing.

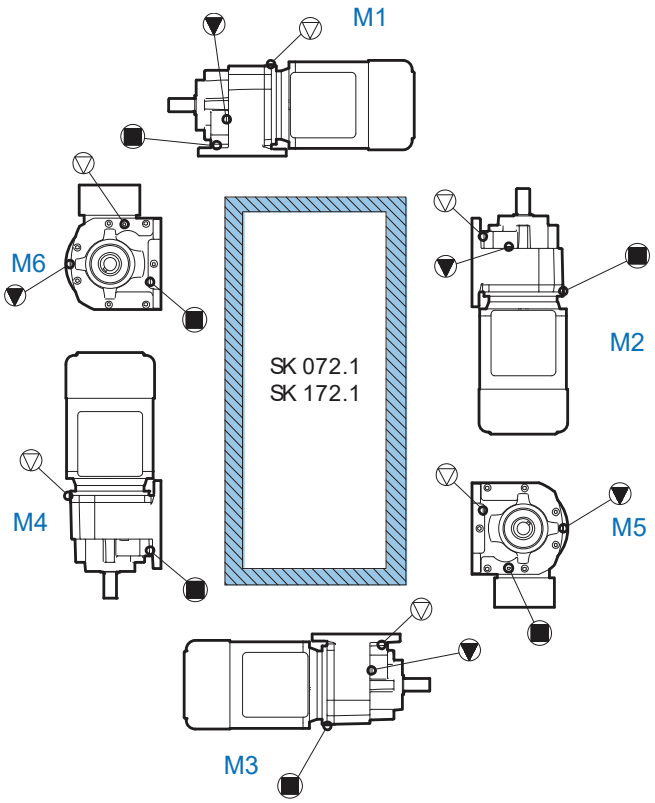

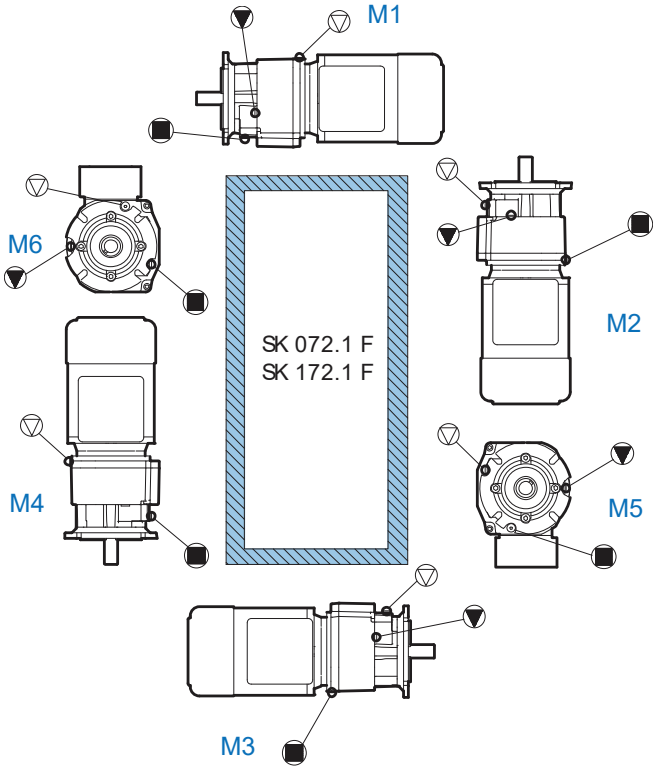

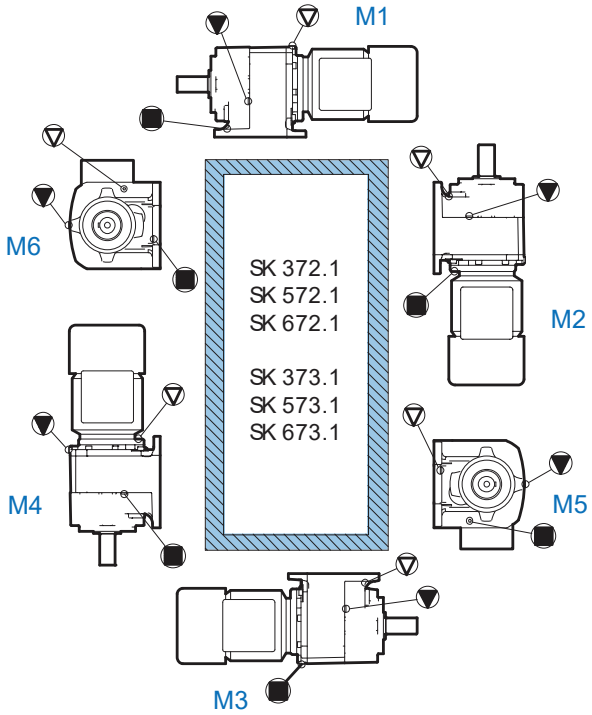

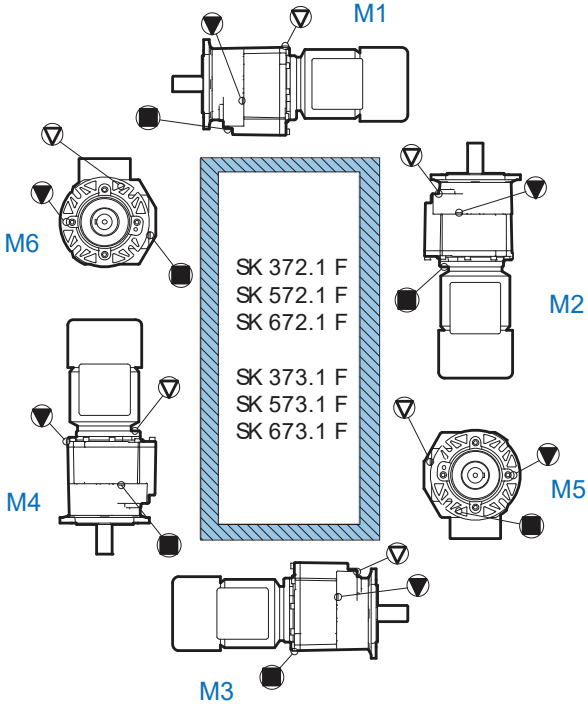

LUBRICANT CAPACITY

All reducers are shipped from the factory with a pre-determined oil fill level in accordance to the specified reducer size and mounting position. Actual oil volume can vary slightly depending upon the gear case size, mounting and ratio. Prior to commissioning the reducer, check the oil-fill level using the reducer's oil-level plug and drain or add additional oil as needed.

Foot-mounted

Mounting Position	M1		M2		M3		M4		M5		M6	
	Quarts	Liters	Quarts	Liters	Quarts	Liters	Quarts	Liters	Quarts	Liters	Quarts	Liters
SK 072.1	0.17	0.16	0.34	0.32	0.22	0.21	0.24	0.23	0.19	0.18	0.21	0.20
SK 172.1	0.29	0.27	0.62	0.59	0.44	0.42	0.48	0.45	0.34	0.32	0.41	0.39
SK 372.1	0.43	0.41	0.96	0.91	0.82	0.78	1.16	1.10	0.58	0.55	0.68	0.64
SK 373.1	0.43	0.41	0.90	0.85	0.79	0.75	1.10	1.04	0.58	0.55	0.63	0.60
SK 572.1	0.95	0.90	2.11	2.00	1.80	1.70	2.54	2.40	1.27	1.20	1.48	1.40
SK 573.1	0.95	0.90	2.01	1.90	1.74	1.65	2.43	2.30	1.27	1.20	1.43	1.35
SK 672.1	1.37	1.30	3.07	2.90	2.59	2.45	3.70	3.50	1.85	1.75	2.11	2.00
SK 673.1	1.37	1.30	2.96	2.80	2.54	2.40	3.59	3.40	1.85	1.75	2.06	1.95

Flange-Mounted

Mounting Position	M1		M2		M3		M4		M5		M6	
	Quarts	Liters	Quarts	Liters	Quarts	Liters	Quarts	Liters	Quarts	Liters	Quarts	Liters
SK 072.1	0.17	0.16	0.34	0.32	0.22	0.21	0.24	0.23	0.19	0.18	0.21	0.20
SK 172.1	0.29	0.27	0.62	0.59	0.44	0.42	0.48	0.45	0.34	0.32	0.41	0.39
SK 372.1	0.43	0.41	0.96	0.91	0.82	0.78	1.16	1.10	0.58	0.55	0.68	0.64
SK 373.1	0.43	0.41	0.90	0.85	0.79	0.75	1.10	1.04	0.58	0.55	0.63	0.60
SK 572.1	0.95	0.90	2.11	2.00	1.80	1.70	2.54	2.40	1.27	1.20	1.48	1.40
SK 573.1	0.95	0.90	2.01	1.90	1.74	1.65	2.43	2.30	1.27	1.20	1.43	1.35
SK 672.1	1.37	1.30	3.07	2.90	2.59	2.45	3.70	3.50	1.85	1.75	2.11	2.00
SK 673.1	1.37	1.30	2.96	2.80	2.54	2.40	3.59	3.40	1.85	1.75	2.06	1.95

MAINTENANCE

LUBRICATION REPLACEMENT

If the gear unit is filled with mineral oil, the lubricant should be replaced at least after every 10,000 operating hours or after every two years. If the gear unit is filled with synthetic oil, the lubricant should be replaced at least after every 20,000 operating hours or after every four years Often gear reducers are exposed to extreme ambient conditions, hostile environments, wet conditions, or dirty and dusty operating areas. Especially in these situations, it is important to establish a condition-based oil service interval.

OIL SPECIFICATIONS

NORD supplies all reducers' filled with oil from the factory. Standard lubricant is ISO VG220 mineral-based oil. Consult the sticker adjacent to the fill plug to determine the type of lubricant installed at the factory. However, some units have special lubricants designed to operate in certain environments or to extend the service life or service temperature range of the lubricant. If in doubt about which lubricant is needed, contact NORD Gear.

Standard Oil Lubricant

Gear Unit Type	Ambient Temperature	Oil Type	ISO Viscosity	Manufacturer Brand / Type
NORDBLOC®.1	-4 to 104 °F (-20 to 40 °C)	MIN-EP	VG 220	Shell / Omala 220 ♦

Optional Oil Lubricants

Gear Unit Type	Ambient Temperature	Oil Type	ISO Viscosity	Manufacturer Brand / Type
NORDBLOC®.1	-31 to 176 °F (-35 to 80 °C)	PAO	VG 460	Mobil / SHC 634
	-40 to 140 °F (-40 to 60 °C)	PAO	VG 220	Mobil / SHC 630 ♦
	-22 to 77 °F (-30 to 25 °C)	PAO	VG 150	Mobil / SHC 629
	23 to 104 °F (-5 to 40 °C)	FG	VG 220	Shell / FM 220 ♦
	-40 to 140 °F (-40 to 60 °C)	FG-PAO	VG 220	Shell / Cassida GL 220

Bearing Grease Lubricants

Grease Type (Thickener)	Ambient Temperature	NLGI Grade	Manufacturer Brand / Type
Standard (Li-Complex)	-22 to 140 °F (-30 to 60 °C)	NLGI 2	Shell Albida EP 2 ♦
High-Temperature (Polyurea)	-13 to 176 °F (-25 to 80 °C)	NLGI 2	Mobil Polyrex EP 2 ♦
Food-Grade (Al-Complex)	-13 to 104 °F (-25 to 40 °C)	NLGI 2	Mobil Grease FM 222 ♦

♦ Stocked Lubricants

OIL CROSS-REFERENCE CHART

ISO Viscosity	Oil Type	Service Temperature Range	Mobil	Shell	Castrol	Klüber Lubrication	bp	Tribol
VG 460	MIN-EP	68 to 122°F (20 to 50°C)	Mobilgear 634	Omala 460	7EP	Klüberoil GEM 1-460	Energol GR-XP 460	Tribol 1100/460
	PAO	-22 to 176°F (-30 to 80°C)	Mobil SHC 634	Omala 460 HD	Isolube EP 460	Klübersynth EG 4-460	N/A	Tribol 1510/460
VG 220	MIN-EP	20 to 104°F (-5 to 40°C)	Mobilgear 630	Omala 220	5EP	Klüberoil GEM 1-220	Energol GR-XP 220	Tribol 1100/220
	PAO	-30 to 176°F (-34 to +80°C)	Mobil SHC 630	Omala 220 HD	Isolube EP 220	Klübersynth EG 4-220	N/A	Tribol 1510/220
VG 150	MIN-EP	5 to 77°F (-15 to 25°C)	Mobilgear 629	Omala 150	4EP	Klüberoil GEM 1-150	Energol GR-XP 100	Tribol 1100/100
	PAO	-35 to 50°F (-37 to 10°C)	Mobil SHC 629	Omala 150 HD	Isolube EP 150	Klübersynth EG 4-150	N/A	N/A

Oil Formulation Codes

MIN-EP	Mineral Oil with EP Additive
PAO	Synthetic Polyalphaolefin Oil
PG	Synthetic Polyglycol Oil
FG	Food-Grade Oil
FG-PAO	Food-Grade, Synthetic Poyalphaolefin Oil

Important Notes

- Food grade lubricants must be in compliance with FDA 212 CFR 178.3570 and qualify as a NSF-H1 lubricant. Please consult with lubrication manufacture for more information.
- When making a lubrication change, check with the lubrication supplier to assure compatibility and to obtain recommended cleaning or flushing procedures.
- Do not to mix different oils with different additive packages or different base oil formulation types. Polyglycol (PG) oils are not miscible with other oil types and should never be mixed with mineral oil.
- Please Consult NORD if considering oils of ISO Viscosity VG100 or lower.

TROUBLE SHOOTING

PROBLEM WITH THE REDUCER		POSSIBLE CAUSES	SUGGESTED REMEDY
Runs Hot	Overloading	Load exceeds the capacity of the reducer	Check rated capacity of reducer, replace with unit of sufficient capacity or reduce load
	Improper lubrication	Insufficient lubrication	Check lubricant level and adjust up to recommended levels
		Excessive lubrication	Check lubricant level and adjust down to recommended levels
		Wrong lubrication	Flush out and refill with correct lubricant as recommended
Runs Noisy	Loose foundation bolts	Weak mounting structure	Inspect mounting of reducer. Tighten loose bolts and/ or reinforce mounting and structure
		Loose hold down bolts	Tighten bolts
	Failure of Bearings	May be due to lack of lubricant	Replace bearing. Clean and flush reducer and fill with recommended lubricant.
		Overload	Check rated capacity of reducer.
	Insufficient Lubricant	Level of lubricant in the reducer not properly maintained.	Check lubricant level and adjust to factory recommended level.
Output Shaft Does Not Turn	Internal parts are broken	Overloading of reducer can cause damage.	Replace broken parts. Check rated capacity of reducer.
		Key missing or sheared off on input shaft.	Replace key.
	Improper coupling connection	Coupling loose or disconnected.	Properly align reducer and coupling. Tighten coupling.
Oil Leakage	Worn Seals	Caused by dirt or grit entering seal.	Replace seals. Autovent may be clogged. Replace or clean.
		Overfilled reducer.	Check lubricant level and adjust to recommended level.
		Autovent™ clogged.	Clean or replace, being sure to prevent any dirt from falling into the reducer.
		Improper mounting position, such as wall or ceiling mount of horizontal reducer.	Check mounting position. Name tag & verify with mounting chart in manual.

www.nord.com

NORD Gear Corp
Toll Free 888-314-6673 info.us@nord.com

NORD Gear Ltd
888-668-4378 info.ca@nord.com

WEST
Corona, CA (Los Angeles)
Phone 608-849-0190

MIDWEST
Waunakee, WI (Madison)
Phone 608-849-7300

ATLANTIC
Charlotte, NC
Phone 608-849-0140

CANADA
Brampton, ON
Phone 905-796-3606

AC Motor Selection – Three-phase Motors

(Single-phase motors are shown on page 15-13)

3-Phase Characteristic	IronHorse™ 56C Frame 3-Phase	IronHorse™ T & TC Frames	Marathon microMAX™	Marathon Black Max®	Marathon Blue Max®	Marathon NEMA Premium® XRI®	Marathon Blue Chip XRI®
Electrical Characteristics							
Horsepower range	1/3 - 2	1 - 300 (T); 1 - 100 (TC)	1/4 - 10	1/4 - 30	40 - 100	1 - 10	15 - 100
Base speed (# Poles)	1800 (4), 3600 (2)	1200(6), 1800 (4), 3600(2)	1800 (4)	1800 (4) and 1200 (6)	1800 (4)	1200(6),1800(4),3600(2)	1800 (4)
Standard Voltage	208-230/460	208-230/460 (250 & 300 hp 460V only)	230/460 (1/4 hp is 230V only)	230/460 and 575	230/460	208-230/460	230/460 and 575
Insulation Class	F	F	H	F	H	F	F
Insulation System	dip & bake	double dip & bake	CR^{200} magnet wire	MAX GUARD®		CR^{200} magnet wire	
Service Factor	1.15 (line) 1.0 (drive)	1.15 (line) 1.0 (drive)	1.0	1.0	1.0	1.15 (line) 1.0 (drive)	1.15
Phase/Base Frequency	3/60						
Design Code (NEMA)	B	A: 10-50 hp 4&6 pole B: all other sizes	A and B for 1/4 - 2 hp	A	A	B	B
Duty Cycle	Continuous						
Thermal protection	None			Class F thermostats		None	
Mechanical Characteristics							
Frame size (mounting)	56C	143T/TC - 405TC/449T	56C - 215TC	56C - 286TC	324T(C)–405T(C)	56C - 215TC	254T - 405T
Enclosure	TEFC	TEFC	TENV and TEFC	TENV	TEFC and TEBC	TEFC	TEFC
Frame material	Rolled Steel frame; Aluminum end bell	Cast Iron	Rolled Steel	Rolled Steel w Al face; Cast Iron	Cast Iron	Rolled Steel	Cast Iron
End bracket material	Aluminum	Cast Iron	Aluminum	Aluminum, Cast Iron	Cast Iron	Aluminum	Cast Iron
Conduit box material	Steel	Cast Iron	Steel	Steel	Cast Iron	Steel	Steel (<326T) Cast Iron (>364T)
Fan guard material	Steel	Steel	Polypropylene	None (all ratings TENV)	Cast Iron	Plastic	Polyprop. (<286T) Cast Iron (>324T)
Fan material	Plastic	Plastic (143T/TC - 445/7T) Aluminum (449T)	Polypropylene	None (all ratings TENV)	Polypropylene	Plastic	Polypropylene
Lead termination	Conduit box	Conduit box	Conduit box except Terminal block - 1/4 hp	Conduit box	Conduit box	Conduit box	Conduit box
Standard mounting	C-Face with Removable Rigid Base	Rigid Base (C-Flange kit available) C-Face with Rigid Base (1-100 hp)	C-Face with Rigid Base & C-Face Round Body	C-Face with Rigid Base	C-Face with Rigid Base	C-Face with Rigid Base	Rigid Base
Drive end shaft slinger	Yes	Yes	No	No	Yes	Yes	Yes
Paint	Black	Epoxy primer / Synthetic alkyd enamel	Black powder-coat	Black enamel	Blue enamel	Blue enamel	epoxy paint
Bearings	Ball	1-75 hp: Ball 100-300 hp: Roller	Ball (C3 fit)	Ball (C3 fit)	Ball (C3 fit)	Ball	Ball (C3 fit)
Grease	Exxon Polyrex EM						
Standard conduit box assembly position	F1	F1 some sizes reversible to F2	F3	F1, reversible to F2	F1, reversible to F2	F3	F1
Performance Characteristics							
Constant Torque speed range	2:1	2:1	20:1 (TEFC) 1000:1 (TENV)	1000:1 (TENV)	2000:1 (all enclosures)	10:1	20:1
Variable Torque speed range	5:1	5:1	-	-	-	10:1	-
Constant Horsepower speed range	1.5:1	1.5:1	2:1	2:1 (90-120Hz intermittent @50% duty cycle)	2:1	2:1	2:1
Temperature rise	B	B	B	F	F (TEFC) and B (TEBC)	F	B
Encoder provisions	No	No	No	Yes	Yes	No	No
Other Characteristics							
Agency listings	$_cCSA_{us}$	CE, $_cCSA_{us}$, EPACT	UL Recognized and CSA Certified				
Warranty*	2 years		3 years (through Marathon Electric)				

See Terms and Conditions for motor warranty explanation.

1) For warranty on IronHorse motors below 50 hp, warranty service can be arranged through AutomationDirect.

2) For warranty on IronHorse motors 50 hp and above, motors must be inspected by a local EASA motor repair or service center; see AutomationDirect Terms & Conditions.

3) Marathon warranty service can be arranged through Marathon Electric service centers. See list of service centers on our web site at www.automationdirect.com.

Black Max® Vector Duty Motors

****** 230/460V and 575V Motors Available ******



MARATHON® ELECTRIC

Motor Shipping Schedule		
Same or one day *	Up to 7 days	Up to 10 days

Color indicates shipping lead time in business days. Check stock status online.

** For same-day shipping of stock motors requiring LTL shipment, order before 5 p.m. EST.*

Features

- Class F MAX GUARD® insulation system
- Constant torque operation from 0 to base speed on vector drive
- Constant horsepower operation to twice base RPM
- Continuous duty at 40° C ambient
- Optimized for operation with IGBT inverter (NEMA Design A)
- Class F N/C thermostats (one per phase)
- Utilizes double shielded ball bearings
- Exxon Polyrex® EM bearing grease
- Dual Mounting (C-Face with rigid base and C-Face with removable rigid base, as noted)
- F1 standard conduit box location, field reversible to F2 (except as noted)
- Available with optional encoder installed on opposite drive end
- Electrically reversible
- UL recognized and CSA certified
- Three year warranty

Applications

- Designed for inverter or vector applications where up to a 1000:1 constant torque speed range is required.
- Typical uses include: material handling, machine tools, conveyors, crane and hoist, metal processing, test stands, pumps, compressors, textile processing, and other industrial machinery installed in dusty or dirty environments.

230/460V Motor Specifications

Part Number	Price	HP	Base RPM	Volts	Enclosure	NEMA Frame	Model No.	F.L. Amps	Weight (lb)	Footnotes
Y592	<--->	1/4	1800	230/460	TENV	56C	56H17T2001	1.2 / 0.6	19	T, S, 13
Y534	<--->	1/2	1800	230/460	TENV	56C	56H17T5301	1.6 / 0.8	28	T, S, 6, 13
Y535	<--->	1	1800	230/460	TENV	56C	56H17T5302	3.0 / 1.5	41	T, S, 6, 13
Y536	<--->	1	1800	230/460	TENV	143TC	143THTR5326	3.0 / 1.5	43	T, S, 6, 13
Y537	<--->	1	1200	230/460	TENV	145TC	145THTR5376	3.8 / 1.9	49	T, S, 6, 13
Y538	<--->	1-1/2	1800	230/460	TENV	145TC	145THTR5326	4.8 / 2.4	50	T, S, 6, 13
Y551	<--->	2	1800	230/460	TENV	145TC	145THTN6046	6.0 / 3.0	72	T
Y540	<--->	2	1200	230/460	TENV	184TC	184THTL7776	6.6 / 3.3	88	T, AL
Y541	<--->	3	1800	230/460	TENV	182TC	182THTL7726	8.4 / 4.2	96	T, AL
Y542	<--->	3	1200	230/460	TENV	213TC	213THTL7776	9.4 / 4.7	118	T, AL
Y543	<--->	5	1800	230/460	TENV	184TC	184THTL7726	14.0 / 7.0	98	T, AL
Y544	<--->	5	1200	230/460	TENV	215TC	215THTL7776	15.4 / 7.7	138	T, AL
Y545	<--->	7-1/2	1800	230/460	TENV	213TC	213THTL7726	21.0 / 10.5	146	T, AL
Y546	<--->	7-1/2	1200	230/460	TENV	254TC	254THTL5776	22.0 / 11.0	209	T, AL
Y547*	<--->	10	1800	230/460	TENV	215TC	215THTL7726	27.0 / 13.5	159	T, AL
Y548*	<--->	10	1200	230/460	TENV	256TC	256THTL5776	28 / 14	203	T, AL
Y549*	<--->	15	1800	230/460	TENV	254TC	254THTL5726	40 / 20	250	T, AL, I
Y552*	<--->	20	1800	230/460	TENV	256TC	256THTNA7026	52 / 26	300	T, I
Y553*	<--->	25	1800	230/460	TENV	284TC	284THTNA7026	62 / 31	495	T, I
Y393*	<--->	30	1800	230/460	TENV	286TC	286THTNA7026	74 / 37	575	T, I

Footnotes:
T Thermostat overload
S Steel Frame Construction
6 Bolt-on, removable base for footless mounting option

Footnotes (continued):
13 F1 Mounting Only, cannot modify to F2
AL Aluminum Frame Construction
I Intermittent duty from 90-120 Hz operation

Note: Please review the AutomationDirect Terms & Conditions for twarranty and service on his product. Warranty service can be arranged through numerous Marathon Electric service centers. See list of service centers on our Web site at www.automationdirect.com.

Black Max® Vector Duty Motors

Motor Shipping Schedule		
Same or one day	Up to 7 days	Up to 10 days

Color indicates shipping lead time in business days. Check stock status online.

575V Motor Specifications

Part Number	Price	HP	Base RPM	Volts	Enclosure	NEMA Frame	Model No.	F.L. Amps	Weight (lb)	Footnotes
Y555	<--->	1/2	1800	575	TENV	56C	56H17T5311	0.64	28	T, S, 6, 13
Y556	<--->	1	1800	575	TENV	56C	56H17T5312	1.2	41	T, S, 6, 13
Y557	<--->	2	1800	575	TENV	145TC	145THTN6060	2.4	72	T
Y558	<--->	3	1800	575	TENV	182TC	182THTL7736	3.4	96	T, AL
Y559	<--->	5	1800	575	TENV	184TC	184THTL7736	5.6	98	T, AL
Y560	<--->	7-1/2	1800	575	TENV	213TC	213THTL7736	8.4	146	T, AL
Y561	<--->	10	1800	575	TENV	215TC	215THTL7736	10.8	159	T, AL
Y562	<--->	15	1800	575	TENV	254TC	254THTL5736	16.0	250	T, AL, I
Y563	<--->	20	1800	575	TENV	256TC	256THTNA7036	20.8	300	T, I
Y567	<--->	25	1800	575	TENV	284TC	284THTNA7036	24.8	495	T, I
Y394	<--->	30	1800	575	TENV	286TC	286THTNA7036	29.6	575	T, I

Footnotes:
T Thermostat overload
S Steel Frame Construction
6 Bolt-on, removable base for footless mounting option

Footnotes (continued):
13 F1 Mounting Only, cannot modify to F2
AL Aluminum Frame Construction
I Intermittent duty from 90-120 Hz operation

Note: Please review the AutomationDirect Terms & Conditions for warranty and service on this product. Warranty service can be arranged through numerous Marathon Electric service centers. See list of service centers on our Web site at www.automationdirect.com.

Motor with Shaft Mounted Encoder*:

A Dynapar Model HS35 shaft mounted encoder can be supplied with the motor as shown in the price table below. The encoder requires a 5-26 VDC power source, provides a count of 1024 pulses per revolution (PPR), differential line driver output and includes a 10-pin mating connector.

* If connecting the motor to a *DURAPULSE* AC drive, a GS3-FB Feedback Card is required for the drive.

Motor with Shaft Mounted Encoder								
230/460V Motors						575V Motors		
Part Number	Price	HP	Part Number	Price	HP	Part Number	Price	HP
Y592-A772	<--->	1/4	Y543-A772	<--->	5	Y555-A772	<--->	1/2
Y534-A772	<--->	1/2	Y544-A772	<--->	5	Y556-A772	<--->	1
Y535-A772	<--->	1	Y545-A772	<--->	7-1/2	Y557-A772	<--->	2
Y536-A772	<--->	1	Y546-A772	<--->	7-1/2	Y558-A772	<--->	3
Y537-A772	<--->	1	Y547-A772	<--->	10	Y559-A772	<--->	5
Y538-A772	<--->	1-1/2	Y548-A772	<--->	10	Y560-A772	<--->	7-1/2
Y551-A772	<--->	2	Y549-A772	<--->	15	Y561-A772	<--->	10
Y540-A772	<--->	2	Y552-A772	<--->	20	Y562-A772	<--->	15
Y541-A772	<--->	3	Y553-A772	<--->	25	Y563-A772	<--->	20
Y542-A772	<--->	3	Y393-A772	<--->	30	Y567-A772	<--->	25
						Y394-A772	<--->	30

Note: Please review the AutomationDirect Terms & Conditions for warranty and service on this product. Warranty service can be arranged through numerous Marathon Electric service centers. See list of service centers on our Web site at www.automationdirect.com.

Encoder connector pinout:

Note: A mating connector is supplied with the encoder.

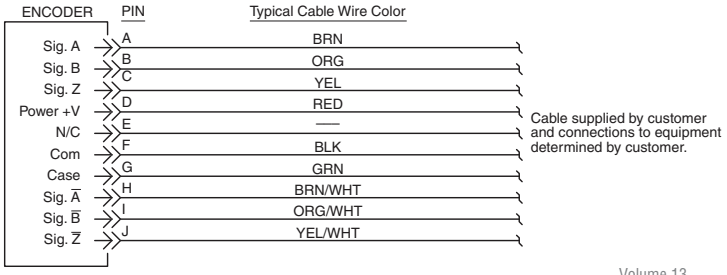

Black Max® Vector Duty Motors

Motor Performance Data (460 Volt) *																
Part Number	HP	F.L. rpm	F.L. Amps @460V	N.L. Amps @460V	F.L. Torque (lb-ft)	B.D. Torque (lb-ft)	Max. C hp rpm *	Max. Safe rpm	F.L. Effic. (%)	F.L. Power Factor	Rotor Inertia ($lb\text{-}ft^2$)	Ohms/Ph - Equiv. Wye Circuit (460 VAC) (at rated operating temp. in 40° C ambient)				
												R1	R2	X1	X2	XM
Y592	1/4	1755	0.6	0.45	0.75	4.5	3540	5400	70.0	58.0	0.045	26.300	23.000	30.240	14.700	572.000
Y534	1/2	1735	0.8	0.52	1.5	5.8	3510	5400	80.0	72.0	0.056	22.307	17.028	24.123	18.163	532.976
Y535	1	1750	1.5	1.0	3.0	15.0	3505	5400	84.0	75.0	0.110	8.378	5.623	10.707	9.912	278.036
Y536	1	1750	1.5	1.0	3.0	15.0	3505	5400	84.0	75.0	0.110	8.378	5.623	10.707	9.912	278.036
Y537	1	1145	1.9	1.3	4.5	16.0	2260	5400	80.0	62.5	0.140	10.302	8.372	13.793	15.325	193.835
Y538	1-1/2	1755	2.4	1.6	4.5	29.0	3518	5400	85.5	69.0	0.140	4.257	3.538	5.998	5.884	161.009
Y551	2	1750	3.0	1.7	6.0	28.5	3525	5400	85.5	78.0	0.130	3.834	2.897	5.950	5.637	154.800
Y540	2	1160	3.3	2.1	9.0	34.0	2315	5400	82.5	67.5	0.380	3.948	3.436	7.725	12.113	116.900
Y541	3	1755	4.2	2.2	9.0	48.0	3515	4200	85.5	80.0	0.420	2.356	1.731	4.266	4.304	123.930
Y542	3	1158	4.7	3.0	13.6	49.0	2300	4200	82.5	72.5	0.600	2.469	2.318	6.508	4.125	83.910
Y543	5	1765	7.0	4.2	14.8	70.0	3555	4200	89.5	74.5	0.550	1.242	0.947	2.534	4.236	64.128
Y544	5	1165	7.7	4.8	22.5	87.0	2320	4200	84.0	71.0	0.900	1.130	1.250	3.709	2.573	51.972
Y545	7-1/2	1765	10.5	5.5	22.3	95.5	3525	4200	90.2	76.0	0.850	0.699	0.567	1.765	2.260	38.178
Y546	7-1/2	1170	11.0	6.0	34.0	118.0	2325	4200	87.5	73.0	1.200	0.510	0.680	2.846	3.247	42.714
Y547	10	1774	13.5	7.4	29.5	125.0	3540	4200	90.2	76.0	1.300	0.369	0.334	1.423	2.281	34.932
Y548	10	1160	14	7.0	45.5	135.0	2320	4200	89.5	75.5	1.500	0.534	0.693	2.258	2.323	30.530
Y549	15	1765	20	11.0	45.0	170.0	3550	3600	92.4	76.0	1.600	0.134	0.316	1.047	1.569	22.151
Y552	20	1768	26	13.5	59.5	290.0	3560	3600	93.6	80.0	3.100	0.234	0.213	0.746	0.689	18.204
Y553	25	1770	31	14.0	74.2	330.0	3530	3600	93.6	75.0	4.400	0.143	0.160	0.724	0.678	13.965
Y393	30	1772	37	23.5	89.0	375.0	3560	3600	94.5	74.0	5.500	0.113	0.123	0.543	0.557	11.200

* Maximum Constant hp rpm is for direct coupled loads.

Motor Performance Data (575 Volt) *																
Part Number	HP	F.L. rpm	F.L. Amps @575V	N.L. Amps @575V	F.L. Torque (lb-ft)	B.D. Torque (lb-ft)	Max. C hp rpm*	Max. Safe rpm	F.L. Effic. (%)	F.L. Power Factor	Rotor Inertia ($lb\text{-}ft^2$)	Ohms/Ph - Equiv. Wye Circuit (575 VAC) (at rated operating temp. in 40° C ambient)				
												R1	R2	X1	X2	XM
Y555	1/2	1735	0.8	0.8	1.52	5.8	3510	5400	80.0	72	0.056	22.307	17.028	24.123	18.163	532.976
Y556	1	1750	1.6	0.8	3.0	15.0	3505	5400	84.0	75	0.11	8.378	5.623	10.707	9.912	278.036
Y557	2	1750	2.4	1.6	6.0	28.5	3525	5400	85.5	78	0.13	3.834	2.897	5.950	5.637	154.780
Y558	3	1755	3.2	1.6	9.0	48.0	3515	4200	85.5	80	0.42	2.356	1.731	4.266	4.304	123.926
Y559	5	1765	5.6	3.2	14.9	70.0	3555	4200	89.5	74.5	0.52	1.242	1.134	2.268	3.969	64.071
Y560	7-1/2	1765	8.0	4.8	22.3	95.5	3525	4200	90.2	76	0.9	0.699	0.567	1.765	2.260	38.178
Y561	10	1774	11.2	5.6	29.6	125.0	3540	4200	90.2	76	1.3	0.284	0.284	1.420	2.272	34.932
Y562	15	1765	16.0	8.8	44.6	170.0	3550	3600	92.4	76	1.6	0.314	0.316	1.047	1.569	22.151
Y563	20	1770	20.8	11.2	59.5	290.0	3560	3600	93.6	77	3.5	0.220	0.192	0.675	0.684	18.204
Y567	25	1770	24.8	11.2	74.2	330.0	3530	3600	93.6	80	4.4	0.143	0.160	0.724	0.678	13.965
Y394	30	1772	29.6	14.4	88.9	375.0	3560	3600	94.5	80	5.3	0.113	0.123	0.543	0.557	11.186

* Maximum Constant hp rpm is for direct coupled loads.

Black Max® Vector Duty Motors

Motor Dimensions

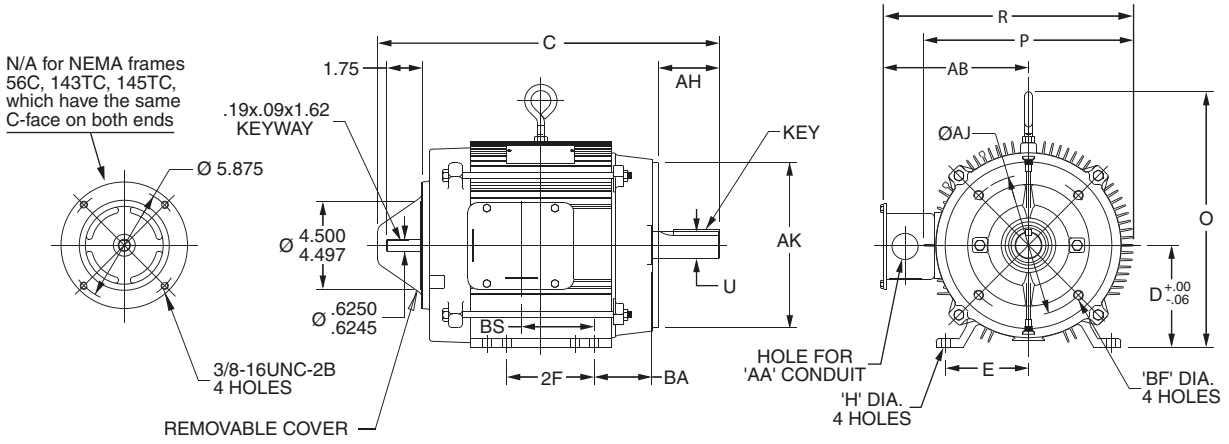

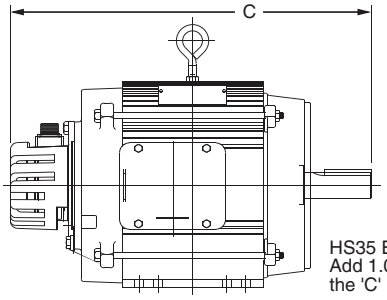

Note: Thermostat protector leads are brought out in the motor conduit box and marked as P1/P2.

Motor Dimensions [Inches]

Part # 230/460V	Part # 575V	HP	NEMA Frame	Frame Construct	C	D	E	2F	H	O	P	R	U	AA	AB	AH	AJ	AK Max	BA	BF	BS	Key
Y592	-	1/4	56C	Rolled Steel	11.88	3.50	2.44	3.00	.34	6.35	5.69	7.21	.625	None	4.37	2.06	5.875	4.500	2.75	3/8-16	2.84	.19x.19x1.38
Y534	Y555	1/2			13.48				.35	6.71	6.42	8.77			5.56						3.75	
Y535	Y556	1			14.98																5.25	
Y536	-	1	143TC		15.04		2.75	4.00				8.46	.875		5.25	2.12					4.93	
Y537	-	1	145TC		16.04			5.00													5.93	
Y538	-	1-1/2																				
Y551	Y557	2		Cast Iron	14.68			5.00	.37	7.45	7.98	11.03			7.04			4.50	2.62		3.81	
Y540	-	2	184TC	Aluminum	16.94	4.50	3.75	5.50	.44	11.22	9.74	12.07	1.125	1.09	7.19	2.62	7.25	8.500	3.50	1/2-13	2.75	.25x.25x1.75
Y541	Y558	3	182TC		17.39			4.50													2.98	
Y542	-	3	213TC		19.04	5.22	4.25	5.50	.47	12.47	10.75	12.78	1.375	1.34	7.39	3.12			4.25		4.05	.31x.31x2.38
Y543	Y559	5	184TC		18.94	4.50	3.75		.44	11.22	9.74	12.07	1.125	1.09	7.19	2.62			3.50		3.75	.25x.25x1.75
Y544	-	5	215TC		20.54	5.22	4.25	7.00	.47	12.47	10.75	12.78	1.375	1.34	7.39	3.12			4.25		5.55	.31x.31x2.38
Y545	Y560	7-1/2	213TC		20.54			5.50														
Y546	-	7-1/2	254TC		25.37	6.22	5.00	8.25	.56	13.46		13.75	1.625	1.75 &2.0	8.38	3.75					8.85	.38x.38x2.88
Y547	Y561	10	215TC		23.04	5.22	4.25	7.00	.47	12.47		12.78	1.375	1.34	7.39	3.12					8.05	.31x.31x2.38
Y548	-	10	256TC		26.87	6.22	5.00	10.00	.56	13.46	N/A	13.54	1.625	1.75 & 2.00	8.17	3.75			4.75		10.40	.38x.38x2.88
Y549	Y562	15	254TC		26.87			8.25														
Y552	Y563	20	256TC	Cast Iron	27.13	7.00	5.50	10.00		16.49	14.32	17.84		1.25	10.68		9.0	10.500		3/8-16	4.75	.50x.50x3.25
Y553	Y567	25	284TC		27.08			9.50		15.57	15.89	21.26	1.875	2.00	13.31	4.38						
Y393	Y394	30	286TC		28.58			11.00													5.50	

Note: Dimensions are for reference only. For complete dimensional information, refer to Marathon Electric at www.marathonelectric.com.

STABLE™ Motor Slide Bases

Mounting Slide Bases for 56 to 449T NEMA Motors

Features

- Allows adjustment of motor mounting position
- Double adjusting screws for frames 182T - 449T
- Manufactured to precise dimensional standards
- Dimensionally interchangeable with existing major makes
- Heavy-duty steel construction
- Painted with oven-baked primer for better adhesion of customer's paint
- All "D" bolts (motor mounting bolts) are fixed to the exact motor foot pattern
- All "D" bolts are welded into position to prevent spinning and dropping from slots
- Bases are provided with washers

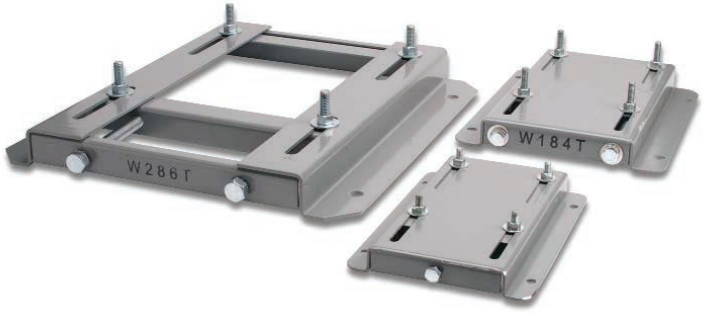

Motor Slide Bases

Part Number	Price	Fits Frame Type	Shipping Weight (lb)	Fits Motor							
				IronHorse	Marathon micro -MAX	Marathon Black Max 230/460V	Marathon Black Max 575V	Marathon Blue Max	Marathon NEMA Premium XRI	Marathon Blue Chip XRI 230/460V	Marathon Blue Chip XRI 575V
MTA-BASE-W56	<--->	56	3.5	MTR-xxx-xxxx MTPM-xxx-xxxx	Y500 Y360 Y364	Y592(-A772) Y534(-A772) Y535(-A772)	Y555(-A772) Y556(-A772)	–	E2000	–	–
MTA-BASE-W143T	<--->	143T/TC	5.0	MTC-001-3BD18(CK) MTC-1P5-3BD36	–	Y536(-A772)	–	–	E2001 E2003	–	–
MTA-BASE-W145T	<--->	145T/TC	5.6	MTC-001-3BD12 MTC-1P5-3BD18(CK) MTC-002-3BD18(CK) MTC-002-3BD36	Y368	Y537(-A772) Y538(-A772) Y551(-A772)	Y557(-A772)	–	E2002 E2004 E2006 E2007	–	–
MTA-BASE-W182T	<--->	182T/TC	10	MTC-1P5-3BD12 MTC-003-3BD18(CK) MTC-003-3BD36	Y999	Y541(-A772)	Y558(-A772)	–	E2005 E2009 E2010	–	–
MTA-BASE-W184T	<--->	184T/TC	10	MTC-002-3BD12 MTC-005-3BD18(CK) MTC-005-3BD36	Y372	Y540(-A772) Y543(-A772)	Y559(-A772)	–	E2008 E2012 E2013	–	–
MTA-BASE-W213T	<--->	213T/TC	15	MTC-003-3BD12 MTC-7P5-3BD18(CK) MTC-7P5-3BD36	Y994	Y542(-A772) Y545(-A772)	Y560(-A772)	–	E2011 E2015 E2016	–	–
MTA-BASE-W215T	<--->	215T/TC	16	MTC-005-3BD12 MTC-010-3BD18(CK) MTC-010-3BD36	Y996	Y544(-A772) Y547(-A772)	Y561(-A772)	–	E2014 E2018 E2019	–	–
MTA-BASE-W254T	<--->	254T/TC	20	MTC-7P5-3BD12 MTC-015-3BD18(CK)	–	Y546(-A772) Y549(-A772)	Y562(-A772)	–	–	E205	E307
MTA-BASE-W256T	<--->	256T/TC	21	MTC-010-3BD12 MTC-020-3BD18(CK)	–	Y548(-A772) Y552(-A772)	Y563(-A772)	–	–	E206	E308
MTA-BASE-W284T	<--->	284T/TC	23	MTC-025-3BD18(CK)	–	Y553(-A772)	Y567(-A772)	–	–	E207	E309
MTA-BASE-W286T	<--->	286T/TC	24	MTC-030-3BD18(CK)	–	Y393(-A772)	Y394(-A772)	–	–	E208	E310
MTA-BASE-W324T	<--->	324T/TC	33	MTC-040-3BD18(CK)	–	–	–	Y571(-A774) Y513(-A775)	–	E209	E311
MTA-BASE-W326T	<--->	326T/TC	35	MTC-050-3BD18(CK)	–	–	–	Y572(-A774) Y514(-A775)	–	E210	E312
MTA-BASE-W364T	<--->	364T/TC	46	MTC-060-3BD18(CK)	–	–	–	Y573(-A774) Y515(-A775)	–	E211	E313
MTA-BASE-W365T	<--->	365T/TC	47	MTC-075-3BD18(CK)	–	–	–	Y574(-A774) Y516(-A775)	–	E212	E315
MTA-BASE-W404T	<--->	404T/TC	64	–	–	–	–	–	–	–	–
MTA-BASE-W405T	<--->	405T/TC	65	MTC-100-3BD18(CK)	–	–	–	Y575(-A774) Y517(-A775)	–	E213	E314
MTA-BASE-W444T	<--->	444T	69	MTC-125-3BD18	–	–	–	–	–	–	–
MTA-BASE-W445T	<--->	445T	70	MTC-150-3BD18	–	–	–	–	–	–	–
MTA-BASE-W447T	<--->	445/7T 447T	92	MTC-200-3BD18	–	–	–	–	–	–	–
MTA-BASE-W449T	<--->	449T	98	MTC-250-3D18 MTC-300-3D18	–	–	–	–	–	–	–

STABLE Motor Slide Bases

Dimensions – Mounting Slide Bases for NEMA Motors

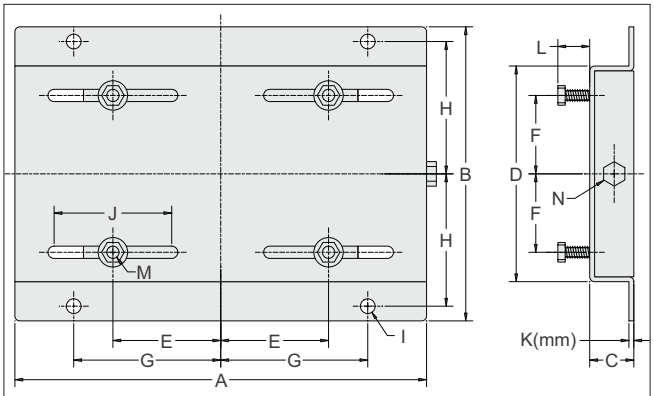

W56 - W145T Motor Slide Base Dimensions

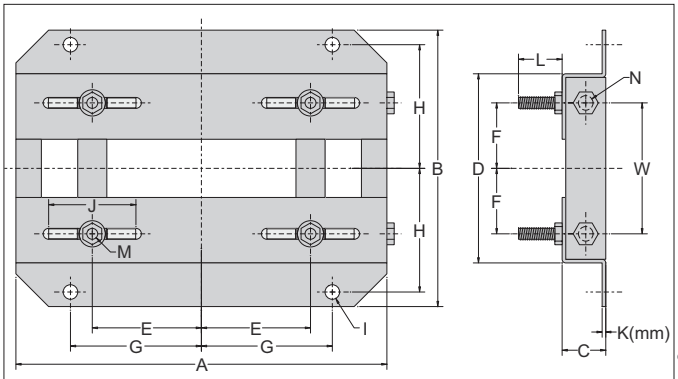

W182T - W449T Motor Slide Base Dimensions
(W182T-W215T bases have one-piece top plates, similar to W56-W145T)

Dimensions [inches, except as noted] - STABLE Motor Slide Bases															
MTA-BASE-Wxxxx	A	B	C	D	E	F	G	H	I	J	K(mm)	L	M	N	W
56	10-5/8	6-1/2	1-1/8	4-1/2	2-7/16	1-1/2	3-13/16	2-7/8	3/8	3	2 mm	7/8	5/16 x 1	3/8 x 4	n/a
143T	10-1/2	7-1/2	1-1/8	5-1/2	2-3/4	2	3-3/4	3-3/8	3/8	3	3 mm	13/16	5/16 x 1	3/8 x 4	n/a
145T	10-1/2	8-1/2	1-1/8	6-1/2	2-3/4	2-1/2	3-3/4	3-7/8	3/8	3	3 mm	13/16	5/16 x 1	3/8 x 4	n/a
182T	12-3/4	9-1/2	1-1/2	6-1/2	3-3/4	2-1/4	4-1/2	4-1/4	1/2	3	3.5 mm	1-1/2	3/8 x 1-3/4	1/2 x 6	4-1/2
184T	12-3/4	10-1/2	1-1/2	7-1/2	3-3/4	2-3/4	4-1/2	4-3/4	1/2	3	3.5 mm	1-1/2	3/8 x 1-3/4	1/2 x 6	5-1/2
213T	15	11	1-3/4	7-1/2	4-1/4	2-3/4	5-1/4	4-3/4	1/2	3-1/2	3.8 mm	1-1/2	3/8 x 1-3/4	1/2 x 6	5-1/2
215T	15	12-1/2	1-3/4	9	4-1/4	3-1/2	5-1/4	5-1/2	1/2	3-1/2	3.8 mm	1-1/2	3/8 x 1-3/4	1/2 x 6	7
254T	17-3/4	15-1/8	2	10-3/4	5	4-1/8	6-1/4	6-5/8	5/8	4	4.6 mm	1-7/16	1/2 x 1-3/4	5/8 x 6	5-5/16
256T	17-3/4	16-7/8	2	12-1/2	5	5	6-1/4	7-1/2	5/8	4	4.6 mm	1-7/16	1/2 x 1-3/4	5/8 x 6	7
284T	19-3/4	16-7/8	2	12-1/2	5-1/2	4-3/4	7	7-1/2	5/8	4-1/2	4.6 mm	1-11/16	1/2 x 2	5/8 x 6	7
286T	19-3/4	18-3/8	2	14	5-1/2	5-1/2	7	8-1/4	5/8	4-1/2	4.6 mm	1-11/16	1/2 x 2	5/8 x 6	8
324T	22-3/4	19-1/4	2-1/2	14	6-1/4	5-1/4	8	8-1/2	3/4	5-1/4	4.6 mm	2-3/16	5/8 x 2-1/2	3/4 x 9	7
326T	22-3/4	20-3/4	2-1/2	15-1/2	6-1/4	6	8	9-1/4	3/4	5-1/4	4.6 mm	2-3/16	5/8 x 2-1/2	3/4 x 9	8-1/2
364T	25-1/2	20-1/2	2-1/2	15-1/2	7	5-5/8	9	9-1/8	3/4	6	5.8 mm	2-1/16	5/8 x 2-1/2	3/4 x 9	7-3/4
365T	25-1/2	21-1/2	2-1/2	16-1/2	7	6-1/8	9	9-5/8	3/4	6	5.8 mm	2-1/16	5/8 x 2-1/2	3/4 x 9	8-3/4
404T	28-3/4	22-3/8	3	16-1/2	8	6-1/8	10	9-7/8	7/8	7	5.8 mm	2-1/2	3/4 x 3	3/4 x 11	8-3/4
405T	28-3/4	23-7/8	3	18	8	6-7/8	10	10-5/8	7/8	7	5.8 mm	2-1/2	3/4 x 3	3/4 x 11	10-1/4
444T	31-1/4	24-5/8	3	19-1/4	9	7-1/4	11	11	7/8	7-1/2	5.8 mm	2-1/2	3/4 x 3	3/4 x 11	11
445T	31-1/4	26-5/8	3	21-1/4	9	8-1/4	11	12	7/8	7-1/2	5.8 mm	2-1/2	3/4 x 3	3/4 x 11	13
447T	31-1/4	30-1/8	3	24-3/4	9	10	11	13-3/4	7/8	7-1/2	8 mm	3	3/4 x 3-1/2	3/4 x 11	16-1/2
449T	31-1/4	35-1/8	3	29-3/4	9	12-1/2	11	16-1/4	7/8	7-1/2	8 mm	3	3/4 x 3-1/2	3/4 x 11	21-1/2

This page is intentionally left blank

Project name: IQALUIT

Project#: 5000218036

Document #: 5000218036_DS_0006_PM_VWT

by: BB

chkd: GH

appvd: CB

SKID DUPLEX

VALVES

OIM manual section: 4.3.6.3

This page is intentionally left blank

CS-301-100 : Identification sheet

VWTC PROJECT NUMBER:	Iqaluit WWTP	REV:	01
PROJECT NAME:	5000218036	SUBMITTED TO (COMPANY):	
ENGINEER:	G. HÉBERT	SUBMITTED TO (RESPONSIBLE)	
PROJECT MANAGER:	C. BEKAERT	PROJECT NUM REFERENCE.:	
PHONE NUMBER:		LOT NUMBER:	

SUPPLIER	EQPT CODE	EQPT TAG NO	DIA	DESCRIPTION	INFO 1	INFO 2	INFO 3	APPLIC.	NOTE	REV
CHEMLINE	VABLPV200249	BV-04-964	DIA: 13 mm (1/2")	CLEANING VALVES	TYPE: BALL VALVE//MANUFACTURER : CHEMLINE//MODEL : Type21-A-005-E-C//CONNECTION TYPE : COMBO | 13 mm (1/2")//BODY : PVC (ASTM D1784)// SEAL | SEAT :PTFE | EPDM// STEM : PVC					1
CHEMLINE	VABLPV200249	BV-04-965	DIA: 13 mm (1/2")	CLEANING VALVES	TYPE: BALL VALVE//MANUFACTURER : CHEMLINE//MODEL : Type21-A-005-E-C//CONNECTION TYPE : COMBO | 13 mm (1/2")//BODY : PVC (ASTM D1784)// SEAL | SEAT :PTFE | EPDM// STEM : PVC					1
CHEMLINE	VABLPV200251	BV-04-970	DIA: 25 mm (1")	ISOLATION VALVES (DISCHARGE)	TYPE: BALL VALVE//MANUFACTURER : CHEMLINE//MODEL : Type21-A-010-E-C//CONNECTION TYPE : COMBO | 25 mm (1")//BODY : PVC (ASTM D1784)// SEAL | SEAT :PTFE | EPDM// STEM : PVC					1

SUPPLIER	EQPT CODE	EQPT TAG NO	DIA	DESCRIPTION	INFO 1	INFO 2	INFO 3	APPLIC.	NOTE	REV
CHEMLINE	VABLPV200251	BV-04-971	DIA: 25 mm (1")	ISOLATION VALVES (DISCHARGE)	TYPE: BALL VALVE//MANUFACTURER : CHEMLINE//MODEL : Type21-A-010-E-C//CONNECTION TYPE : COMBO | 25 mm (1")//BODY : PVC (ASTM D1784)// SEAL | SEAT :PTFE | EPDM// STEM : PVC					1
CHEMLINE	VABLPV200251	BV-04-972	DIA: 25 mm (1")	ISOLATION VALVES (DISCHARGE)	TYPE: BALL VALVE//MANUFACTURER : CHEMLINE//MODEL : Type21-A-010-E-C//CONNECTION TYPE : COMBO | 25 mm (1")//BODY : PVC (ASTM D1784)// SEAL | SEAT :PTFE | EPDM// STEM : PVC					1
CHEMLINE	VABLPV200251	BV-04-973	DIA: 25 mm (1")	ISOLATION VALVES (DISCHARGE)	TYPE: BALL VALVE//MANUFACTURER : CHEMLINE//MODEL : Type21-A-010-E-C//CONNECTION TYPE : COMBO | 25 mm (1")//BODY : PVC (ASTM D1784)// SEAL | SEAT :PTFE | EPDM// STEM : PVC					1
CHEMLINE	VABLPV200251	BV-04-974	DIA: 25 mm (1")	ISOLATION VALVES (DISCHARGE)	TYPE: BALL VALVE//MANUFACTURER : CHEMLINE//MODEL : Type21-A-010-E-C//CONNECTION TYPE : COMBO | 25 mm (1")//BODY : PVC (ASTM D1784)// SEAL | SEAT :PTFE | EPDM// STEM : PVC					1
CHEMLINE	VABLPV200253	BV-04-960	DIA: 38 mm (1-1/2")	ISOLATION VALVES (SUCTION)	TYPE: BALL VALVE//MANUFACTURER : CHEMLINE//MODEL : Type21-A-015-E-C//CONNECTION TYPE : COMBO | 38 mm (1-1/2")//BODY : PVC (ASTM D1784)// SEAL | SEAT :PTFE | EPDM// STEM : PVC					1

SUPPLIER	EQPT CODE	EQPT TAG NO	DIA	DESCRIPTION	INFO 1	INFO 2	INFO 3	APPLIC.	NOTE	REV
CHEMLINE	VABLPV200253	BV-04-961	DIA: 38 mm (1-1/2")	ISOLATION VALVES (SUCTION)	TYPE: BALL VALVE//MANUFACTURER : CHEMLINE//MODEL : Type21-A-015-E-C//CONNECTION TYPE : COMBO | 38 mm (1-1/2")//BODY : PVC (ASTM D1784)// SEAL | SEAT :PTFE | EPDM// STEM : PVC					1
CHEMLINE	VABLPV200253	BV-04-962	DIA: 38 mm (1-1/2")	ISOLATION VALVE CALIBRATION CYLINDER (SUCTION)	TYPE: BALL VALVE//MANUFACTURER : CHEMLINE//MODEL : Type21-A-015-E-C//CONNECTION TYPE : COMBO | 38 mm (1-1/2")//BODY : PVC (ASTM D1784)// SEAL | SEAT :PTFE | EPDM// STEM : PVC					1
CHEMLINE	VABLPV200253	BV-04-963	DIA: 38 mm (1-1/2")	ISOLATION VALVE CALIBRATION CYLINDER (SUCTION)	TYPE: BALL VALVE//MANUFACTURER : CHEMLINE//MODEL : Type21-A-015-E-C//CONNECTION TYPE : COMBO | 38 mm (1-1/2")//BODY : PVC (ASTM D1784)// SEAL | SEAT :PTFE | EPDM// STEM : PVC					1
CHEMLINE	VABLPV200253	BV-04-981	DIA: 38 mm (1-1/2")	ISOLATION VALVES - CARRIER WATER	TYPE: BALL VALVE//MANUFACTURER : CHEMLINE//MODEL : Type21-A-015-E-C//CONNECTION TYPE : COMBO | 38 mm (1-1/2")//BODY : PVC (ASTM D1784)// SEAL | SEAT :PTFE | EPDM// STEM : PVC					1

This page is intentionally left blank

PDF Published March 1, 2013

Type 21 Ball Valves

CHEMLINE PLASTICS
SUPERIOR FLOW SOLUTIONS

The Chemline Type 21 True Union Ball valve incorporates state of the art features for long term performance. This is a full port, full blocking True Union valve pressure rated at 16 bar (230 psi)[4]. Double stem o-rings and Safety Shear stem design provide for a high degree of safety on hazardous fluid applications. All sizes have an ISO standard actuator mounting platform integral to the valve body. This provides for sturdy and secure mounting of pneumatic or electric actuators.

PVC | CPVC | PP | PVDF

CRN Registered Consult Chemline

NSF[5] Certified to NSF/ANSI 61

SERIES: Type 21

SIZES: 3/8" – 4"

ENDS: Socket, Threaded, Flanged, Butt[1] or ChemFlare™

SEATS: PTFE

SEALS[2]: EPDM, FKM (Viton®), CPE[3]



features

Pressure rated to 230 psi[4]
- Provides a high factor of safety

Integral Actuator Mounting Platform
- Actuation is easy. Electric or pneumatic actuators may be mounted in the field.

Full Port
- High capacity and low pressure drops

Fully Blocking
- Downstream union nut may be safely disassembled for piping maintenance while valve is closed off under full system pressure

Built-In Spanner Wrench
- Top of the handle is designed to be used as a tool for accessing internal parts

Safety Shear Stem Design
- Stem has double o-rings
- Designed to hold full pressure even if stem breaks due to excessive torque

High Chemical Resistant Material
- PVC and CPVC compounds have an "A" chemical resistance rating as per ASTM D-1784. They have outperformed other PVC and CPVC compounds on aggressive chemicals.

[1] Butt ends for fusion to Chemline metric PP, PVDF or ECTFE (Halar®) piping.
[2] Other materials are available.
[3] CPE=Chlorinated Polyethylene.
[4] PVC, CPVC and PVDF 1/2" to 2" are rated at 230 psi; 2-1/2" to 4" and all size PP valves are rated at 150 psi at 20°C.
[5] PVC valves with EPDM or FKM (Viton®) seals are certified under NSF/ANSI Standard 61 for contact with drinking water.

03/13 ©Chemline Plastics Limited 2013
Chemline is a registered trade mark of Chemline Plastics Limited

Type 21 Ball Valves

features

Double Stem O-Rings – Safety Shear Design

- Upper o-ring groove is deeper than lower. In case of excessive stem torque, stem will shear at the upper groove, leaving the inner o-ring intact to seal against full line pressure.

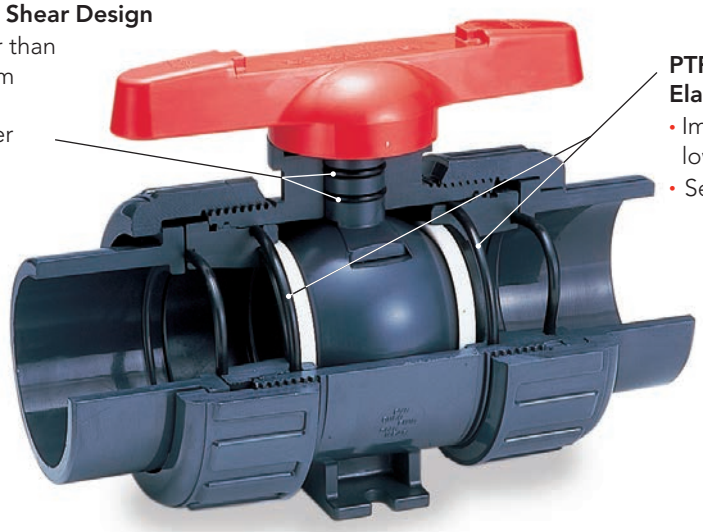

PTFE Seats have Elastomer Cushions

- Improved sealing while lowering stem torques
- Self adjusts for seat wear

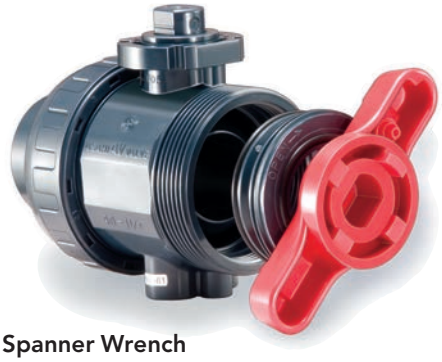

Built in Spanner Wrench

- For removing or tightening the seat carrier
- All parts are replaceable



Integral Actuator Mounting Platform

- Actuation is easy. Electric or pneumatic actuators may be mounted in the field. Simply pull off the handle to reveal a standard ISO 5211 mounting platform which accepts bolt-on hardware.



Fully Blocking

- Downstream pipe may be removed while upstream side is still pressurized. This may be done with valve installed in either direction.



Base Mounting Pad

- Optional threaded inserts allow valves to be securely anchored
- Supplied standard with actuated valves

options + accessories



ChemFlare™ Ends

- For connection to PFA tube. Leak-free connections for difficult services such as sodium hypochlorite

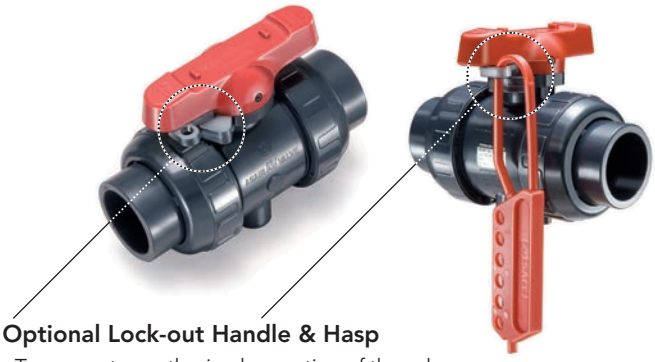

Optional Lock-out Handle & Hasp

- To prevent unauthorized operation of the valve
- Used during maintenance shut-downs



One-piece moulded PVC and CPVC 6" socket ends

- Allows installation of 4" valve in 6" line
- Factory moulded, not fabricated with couplings and reducers cemented together
- Fixed to valve mechanically just like the one-piece moulded factory flanges



Different Colour Handles

- Choose a handle colour other than standard red for colour coding different services

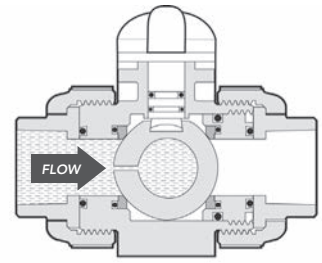

Vented Ball

- For sodium hypochlorite services at any concentration
- Valve shown in closed position

electric + pneumatic actuation

Pneumatic and Electric Actuators

- A complete range of actuators and control accessories are available, mounted to valves using PPG plastic brackets and stainless steel couplings. Refer to separate data sheets.



Electromni® Electric



Q Series Electric



A Series Electric



V Series Electric
with Local Control Station



PA Series Pneumatic

Type 21 Ball Valves

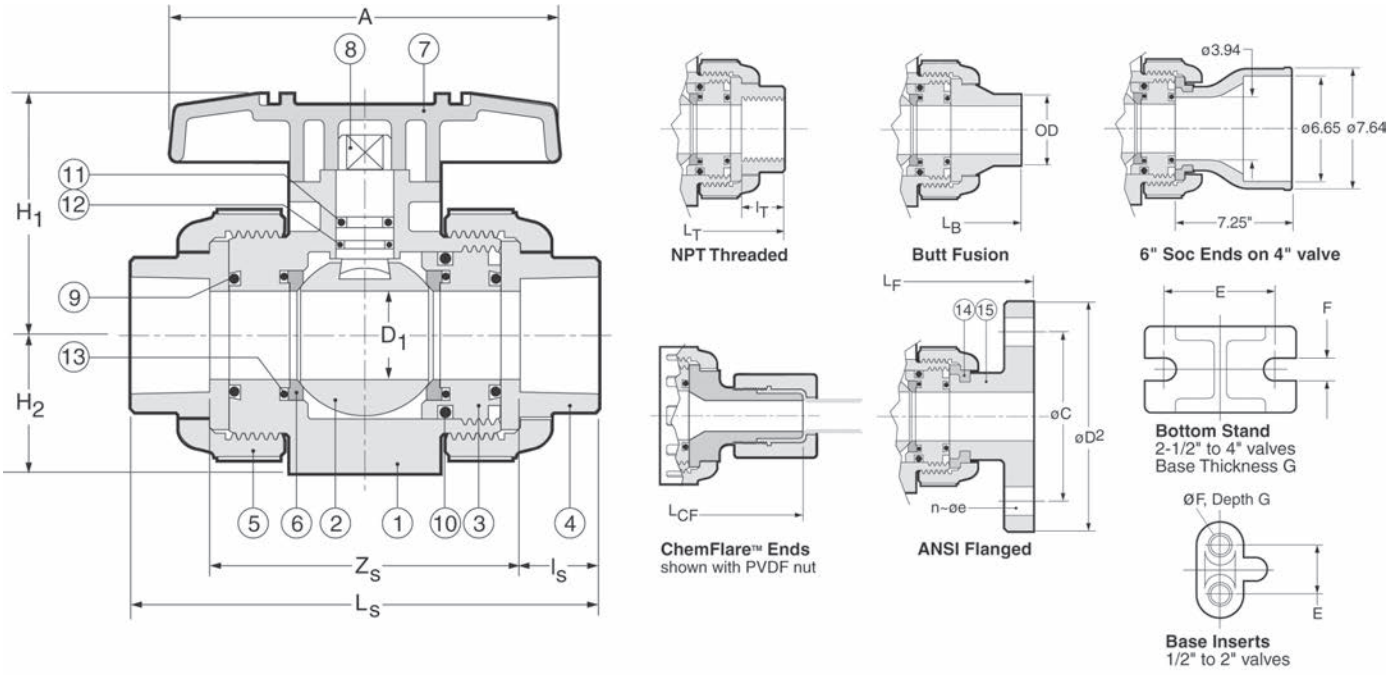

PARTS

▲ Recommended Spare Parts

No.	Part	Pcs.	Materials
1	Body	1	PVC, CPVC, PP, PVDF
2	Ball	1	PVC, CPVC, PP, PVDF
3	Carrier[1]	1/2	PVC, CPVC, PP, PVDF
4	End Connector	2	PVC, CPVC, PP, PVDF
5	Union Nut	2	PVC, CPVC, PP, PVDF
6▲	Ball Seat	2	PTFE
7	Handle	1	ABS

[1] 1 carrier for sizes 1/2" to 2", 2 carriers for sizes 2-1/2" to 4"
[2] EPDM seals standard with PVC, CPVC, PP; FKM (Viton®) with PVDF valves
[3] 2 pcs 1/2" to 2", 6 pcs 2-1/2" to 4"

PARTS

▲ Recommended Spare Parts

No.	Part	Pcs.	Materials
8	Stem	1	PVC, CPVC, PP, PVDF
9▲	Face O-Ring[2]	2	EPDM, FKM (Viton®)
10▲	Carrier O-Ring[2]	2	EPDM, FKM (Viton®)
11▲	Upper Thicker Stem O-Ring[2]	1	EPDM, FKM (Viton®)
12▲	Lower Thinner Stem O-Ring[2]	1	EPDM, FKM (Viton®)
13	Seat Cushion[2]	2	EPDM, FKM (Viton®)
14	Flange Retainer[3]	2/6	PVDF
15	Flange	2	PVC, CPVC, PP, PVDF

DIMENSIONS INCHES

					End Connections														Valve Base		
					Socket			Threaded		Factory Flanged					Butt		ChemFlare™				
Size	D Bore	A	H_1	H_2	L_S	Z_S	l_S	l_T	L_T	L_F	D_2	C	n	e	L_B	OD	L_{CF}	Tube[4]	E	F[5]	G
1/2"	.59	3.6	2.03	1.14	4.45	2.70	.875	.64	4.02	5.63	3.50	2.38	4	.62	4.88	.79	6.12	1/2"	.75	.29	.43
3/4"	.79	3.9	2.34	1.38	5.08	3.08	1.00	.65	4.72	6.77	3.88	2.75	4	.62	5.67	.98	6.52	3/4"	.75	.29	.43
1"	.98	4.3	2.68	1.54	5.75	3.50	1.13	.81	5.16	7.36	4.25	3.12	4	.62	6.06	1.26	7.26	1"	.75	.29	.43
1-1/4"	1.22	4.8	3.17	1.85	6.46	5.21	1.25	.85	5.91	7.48	4.62	3.50	4	.62	6.85	1.57	9.58	1-1/4"	1.18	.35	.59
1-1/2"	1.57	5.2	3.50	2.17	7.24	4.49	1.38	.85	6.42	8.35	5.00	3.88	4	.62	7.64	1.97	–	–	1.18	.35	.59
2"	2.01	6.3	4.02	2.60	8.23	5.23	1.50	1.90	7.76	9.21	6.00	4.75	4	.75	8.82	2.48	–	–	1.18	.35	.59
2-1/2"	2.28	7.87	4.96	2.83	9.45	5.95	1.75	1.21	8.46	10.20	7.00	5.49	4	.75	9.72	2.95	–	–	1.89	.35	.23
3"	2.70	9.45	5.51	3.35	11.10	7.35	1.88	1.30	10.39	11.97	7.50	6.00	4	.75	11.61	3.54	–	–	2.17	.43	.28
4"	3.54	11.81	7.01	4.33	13.88	9.87	2.00	1.38	14.17	14.65	9.00	7.50	8	.75	14.76	4.33	–	–	2.56	.43	.32

[4] ChemFlare™ ends are available for reduced tube sizes down to 1/4".
[5] Optional threaded inserts: 1/2" to 1" valves – UNC 1/4"-20; 1-1/4" to 2" valves – UNC 5/16"-18. 'Recoil' brand inserts require drilling before insertion.

Type 21 Ball Valves

WORKING PRESSURES PSI, Water, Non-Shock

VACUUM RATING • 29.9 inches mercury

Size	PVC			CPVC						PP			PVDF				
	20°C 68°F	40°C 104°F	50°C 122°F	20°C 68°F	40°C 104°F	50°C 122°F	60°C 140°F	80°C 176°F	90°C 194°F	20°C 68°F	60°C 140°F	80°C 176°F	20°C 68°F	40°C 104°F	60°C 140°F	80°C 176°F	100°C 212°F
1/2"– 2"	230	165	150	230	165	150	120	75	55	150	85	55	230	185	150	110	85
2-1/2"– 4"	150	150	150	150	150	150	120	75	55	150	70	40	150	150	150	110	85

Temperature Ranges: PVC 0 to 60°C (32 to 140°F), **CPVC** 0 to 95°C (32 to 203°F), **PP** –20 to 80°C (–4 to 176°F), **PVDF** –40 to 100°C (–40 to 212°F)

WEIGHTS LB. THREADED or SOCKET

WEIGHTS LB. FLANGED

Size	PVC	CPVC	PP	PVDF	PVC	CPVC	PP	PVDF
1/2"	0.4	0.4	0.4	0.4	0.9	0.9	0.7	1.1
3/4"	0.7	0.7	0.7	0.9	1.3	1.5	1.1	1.5
1"	0.9	1.1	0.9	1.1	1.8	2.0	1.5	2.2
1-1/4"	1.5	1.5	1.3	1.8	2.6	2.9	2.0	3.3
1-1/2"	2.4	2.6	1.5	2.9	3.7	4.0	2.6	4.4
2"	4.0	4.4	2.6	4.9	5.5	6.0	4.0	8.2
2-1/2"	5.1	5.5	3.7	6.2	7.3	7.7	5.3	8.8
3"	8.2	8.8	5.5	9.9	10.1	11.0	7.5	12.6
4"	19.4	21.8	13.2	24.9	21.6	23.4	15.4	26.7

Cv VALUES VS. BALL ANGLE

Size	0%	25%	50%	75%	100%
1/2"	0	0.35	1.3	5.5	14.
3/4"	0	0.73	2.8	11.5	29.
1"	0	1.2	4.5	18.6	47.
1-1/4"	0	1.8	6.8	28.4	72.
1-1/2"	0	3.9	14.7	61.2	155.
2"	0	4.8	18.0	75.0	190.
2-1/2"	0	9.1	34.7	144.0	365.
3"	0	10.2	39.0	162.0	410.
4"	0	17.0	64.6	269.0	680.

SAMPLE SPECIFICATION

1. All True Union Ball Valves in PVC, CPVC, PP or PVDF shall be Chemline Type 21 or equal sizes 1/2" to 2" in PVC, CPVC, and PVDF rated at 230 psi and in PP 150 psi maximum working pressure. Sizes 2-1/2", 3" and 4" rated at 150 psi maximum working pressure with EPDM, FKM (Viton®) or CPE seals. Ball seats shall be PTFE with elastomer cushions for closure with minimum stem torques.
2. All valves will have Safety Shear stem design, blowout-proof with double o-rings for safety. The top o-ring groove shall be deeper so that if the stem breaks off under excessive torque the lower o-ring will remain intact and the valve will hold pressure.
3. All valves shall be full port and two-way blocking design.
4. All valves will be CRN (Canadian Registration Number) registered with TSSA.
5. PVC valves with EPDM or FKM (Viton®) seals shall be certified under NSF/ANSI Standard 61 for contact with drinking water.
6. All valves shall have chemical resistant labels permanently marked with manufacturing number to provide production level traceability.
7. PVC compound shall have an ASTM cell classification 12454-A with a minimum suffix "A" designation for chemical resistance as per ASTM D-1784 (CSA report LO 4000-172).
8. CPVC compound shall have an ASTM cell classification 23567-A with a minimum suffix "A" designation for chemical resistance as per ASTM D-1784.
9. PP material will conform to ASTM D-4101 PP 021 B 67272 material requirements.
10. PVDF material shall be unpigmented conforming to ASTM D-3222 material requirements and to be USDA Title 21 Chapter 1 Part 177. 2510 requirements for contact with food.
11. Socket ends in PVC and CPVC shall be Schedule 80 and conform to ASTM D-2467.
12. Threaded ends shall be Schedule 80 and conform to ASTM D-2464.
13. Butt fusion ends in PP or PVDF will be compatible with Chemline PP or PVDF metric piping systems.
14. Flanged ends shall be ANSI Class 150 one-piece factory moulded (not fabricated) to ensure maximum strength and close tolerance end to end dimensions.

ORDERING EXAMPLE

Chemline True Union Ball Valves	21	A	020	E	S
Body Material	**A** – PVC **B** – PP	**C** – CPVC **K** – PVDF			
Size[1]	**002** – 1/4" **010** – 1" **025** – 2-1/2"	**003** – 3/8" **012** – 1-1/4" **030** – 3"	**005** – 1/2" **015** – 1-1/2" **040** – 4"	**007** – 3/4" **020** – 2" **060** – 6"	
Seals	**E** – EPDM	**V** – FKM (Viton®)	**C** – CPE	**B** – Nitrile	**A** – Aflas®
Ends	**S** – Socket	**T** – Threaded	**F** – Flanged	**B** – Butt[2]	**CF** – ChemFlare™

Example: Chemline Type 21 True Union Ball Valve, PVC, 2", with EPDM seals, socket ends.

[1] 1/4" is normally the 3/8" valve reduced. 6" is 4" valve with 6" end connections.

[2] PP, PVDF and ECTFE (Halar®) metric butt fusion ends (1/2" to 4") connect to Chemline PP, PVDF and ECTFE (Halar®) piping systems.

OTHER OPTIONS & ACCESSORIES

- **Alternate O-Ring Seals**
- **Stem Extensions** made to any length
- **Limit Switches** – For open and/or closed position indication
- **Municipal Operating Nut**
- **Lubrication-free Valves** – Factory clean room assembled
- **Vented Ball** – For sodium hypochlorite applications

CHEMLINE PLASTICS
SUPERIOR FLOW SOLUTIONS

55 Guardsman Road, Thornhill, ON, L3T 6L2, Canada | ISO 9001:2008 Certified
tel.905.889.7890 | fax.905.889.8553 | request@chemline.com | chemline.com

This page is intentionally left blank

CS-301-500 : Identification sheet

VWTC PROJECT NUMBER:	Iqaluit WWTP	REV:	01
PROJECT NAME:	5000218036	SUBMITTED TO (COMPANY):	
ENGINEER:	G. HÉBERT	SUBMITTED TO (RESPONSIBLE)	
PROJECT MANAGER:	C. BEKAERT	PROJECT NUM REFERENCE.:	
PHONE NUMBER:		LOT NUMBER:	

SUPPLIER	EQPT CODE	EQPT TAG NO	DIA	DESCRIPTION	INFO 1	INFO 2	INFO 3	APPLIC.	NOTE	REV
CHEMLINE	VABLPV207251	NV-04-984	DIA: 38 mm (1-1/2")	METERING VALVE - CARRIER WATER	TYPE: BALL VALVE//MANUFACTURER : CHEMLINE//MODEL : SM-A-015-E-S//CONNECTION TYPE : SOCKET | 38 mm (1-1/2")//BODY : PVC (ASTM D1784)// SEAL | SEAT : | EPDM// STEM : N/A					1

This page is intentionally left blank

PDF Published March 1, 2013

Metering Ball Valves

CHEMLINE PLASTICS
SUPERIOR FLOW SOLUTIONS

Chemline SM Series Metering Ball Valve is designed for fine linear flow control of chemicals or clean fluids. The ball is solid with graduated V-groove cut on the outside surface. Precise linear flow control is accomplished through 180° rotation of the handle. With a positioning electric actuator, this becomes an inexpensive control valve. If higher C_V values are required, refer to SP Series Proportional ball valves.

PVC PP

SERIES:	SM
SIZES:	1/2" – 2"
ENDS:	Threaded, Socket, Butt[1] or ChemFlare™ [2]
SEATS:	PTFE
O-RINGS:	EPDM, FPM (Viton®)



features

Precise Linear Flow Control
- Provided by a special V-groove ball and wide handle travel (0° to 180°)

Full Size Range
- 6 valves sizes 1/2" to 2" offers a large selection of C_V values

High End Ball Valve Features
- Full Blocking design
- Double Stem O-Rings for safety
- PTFE seats with elastomer cushion
  - Automatically compensates for seat wear or expansion
- 230 psi pressure rated (PVC)

Low Stem Torques
- Due to floating ball design and cushioned PTFE seats

Bidirectional
- Works with flow in either direction



Integral 180° Scale with 5° Increments
- Fine linear flow control and settable flow rates

[1]Butt ends for fusion to Chemline metric PP or PVDF piping.
[2]For ChemFlare™ end connectors, consult Chemline.

03/13 ©Chemline Plastics Limited 2013
Chemline is a registered trade mark of Chemline Plastics Limited

Metering Ball Valves

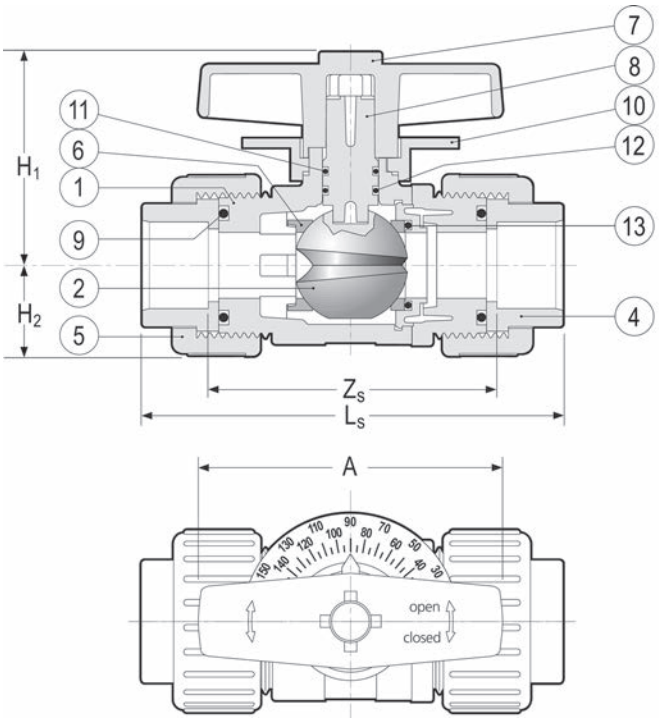

PARTS

No.	Part[1]	Pcs.	Materials
1	Body	1	PVC, PP
2	Ball	1	PVC, PP
4	End Connector	1	PVC, PP
5	Union Nut	1	PVC, PP
6	Ball Seat	1	PTFE
7	Handle	2	PVC
8	Stem	1	PVC, PP
9	Face O-Ring	2	EPDM, FPM(Viton®)
10	Position Indicator Scale	2	PVC, PP
11	Upper Stem O-Ring	2	EPDM, FPM(Viton®)
12	Lower Stem O-Ring	2	EPDM, FPM(Viton®)
13	Seat Cushion	2	EPDM, FPM(Viton®)

[1]Parts are for identification only and cannot be replaced.

DIMENSIONS INCHES

	PVC						PP					
Size	A	Z_S	L_S	H	H_1	H_2	A	Z_S	L_S	H	H_1	H_2
1/2″	2.60	2.76	4.02	1.97	2.05	0.81	2.60	2.71	3.86	1.97	2.05	0.90
3/4″	3.07	3.23	4.72	2.36	2.44	1.00	3.07	3.19	4.45	2.36	2.44	1.10
1″	3.46	3.43	5.16	2.60	2.80	1.14	3.46	3.35	4.76	2.60	2.80	1.30
1-1/4″	3.86	3.86	5.91	2.91	3.23	1.42	3.86	3.82	5.43	2.91	3.23	1.55
1-1/2″	4.25	3.98	6.42	3.76	3.54	1.57	4.25	3.98	5.83	3.76	3.54	1.71
2″	4.64	4.76	7.75	4.90	4.33	1.97	4.64	4.76	6.93	4.90	4.33	2.11

E Series Electric Actuator on a SM Series Ball Valve

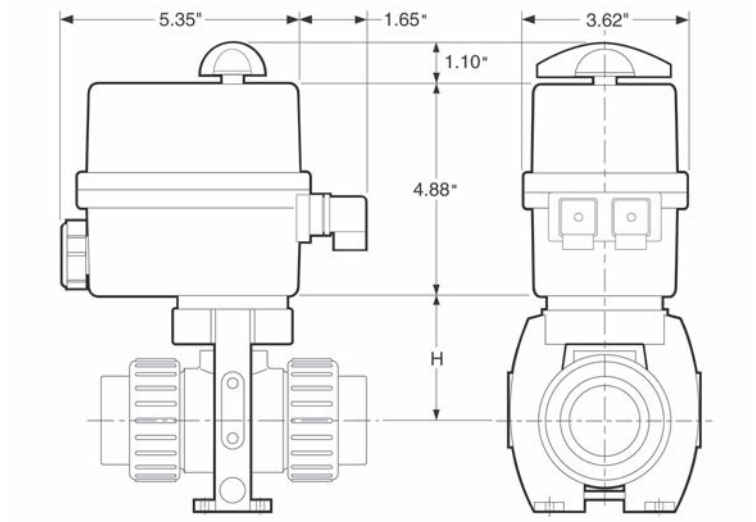

Side View **End View**



ELECTRICALLY ACTUATED

The metering ball valve becomes a proportional control valve with the addition of an E Series electric actuator with on-board positioner

- Thermoplastic housing and mounting bracket
- Manual override
- Position indication
- Mechanical travel stops
- Two external DIN plugs (one for power and one for signal) are **pre-wired to the terminal strip. The actuator may be wired up without opening the lid.**
- Different voltages are available

Metering Ball Valves

WORKING PRESSURES PSI

NET WEIGHTS LB. Cv VALUES

Size	PVC 20°C 68°F	PVC 40°C 104°F	PVC 60°C 140°F	PP 20°C 68°F	PP 40°C 104°F	PP 60°C 140°F	PP 80°C 176°F	PVC	PP	USGPM Flow at 1 psi △P
1/2″	230	130	30	150	100	65	20	0.35	0.29	1.4
3/4″	230	130	30	150	100	65	20	0.60	0.44	1.9
1″	230	130	30	150	100	65	20	0.84	0.64	2.3
1-1/4″	230	130	30	150	100	65	20	1.50	1.04	3.4
1-1/2″	230	130	30	150	100	65	20	2.10	1.63	4.5
2″	230	130	30	150	100	65	20	3.70	2.60	7.4

Temperature Ranges: PVC 0 to 60°C (32 to 140°F), PP 0 to 95°C (32 to 203°F)

Cv VALUE vs. VALVE OPENING

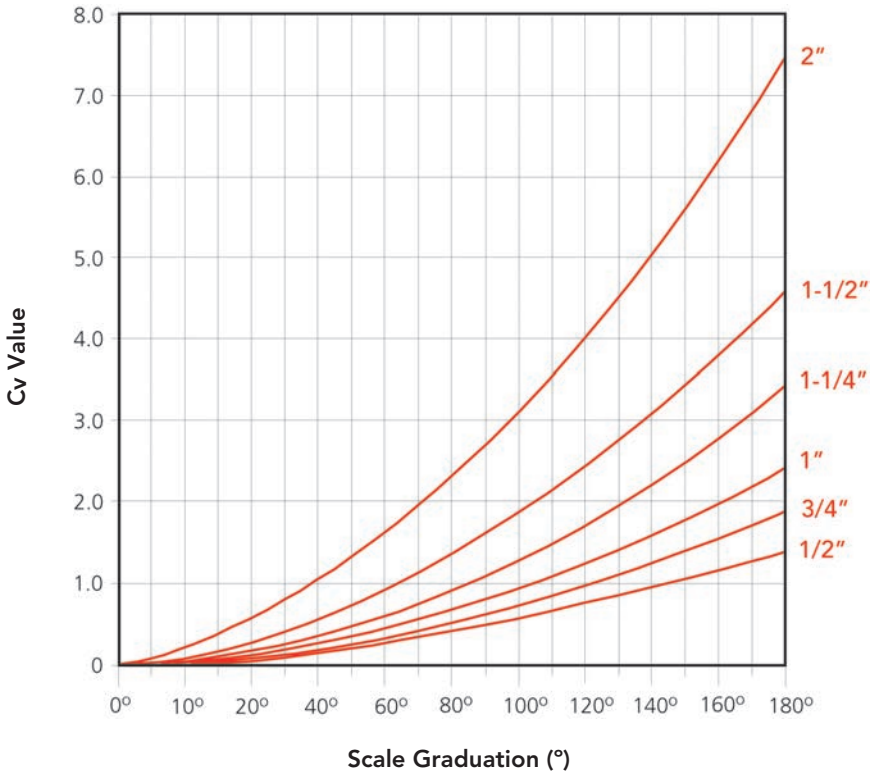

SAMPLE SPECIFICATION

1. All low flow control valves, 1/2″ to 2″, will be Chemline SM Series metering ball valves.
2. Body material will be PVC or PP, and o-rings will be EPDM or FPM (Viton®).
3. Body will be full blocking design with double stem o-rings for safety, rated at 230 psi maximum working pressure for PVC and 150 psi for PP material.
4. Ball will be floating design, molded solid with a V-groove for linear flow control over a 180° range of handle rotation.
5. Seats will be PTFE with elastomer cushions for positive closure with minimum stem torques and automatic compensation for seat wear and expansion.
6. Position indicating scale will be 0° to 180° with 5° increments for fine flow control and settable flow rates.
7. End connections will be 1/2″ to 2″ ANSI socket or FNPT threaded or 150 lb flanged or butt fusion for Chemline metric PP, PVDF or ECTFE (Halar®) pipe or ChemFlare™ for PFA tubing.

ORDERING EXAMPLE

Chemline Metering Ball Valves	SM	A	010	E	S
Valve Material	**A** – PVC	**B** – PP			
Size	**005** – 1/2″	**007** – 3/4″	**010** – 1″		
	012 – 1-1/4″	**015** – 1-1/2″	**020** – 2″		
Seals	**E** – EPDM	**V** – FPM (Viton®)			
Ends	**S** – Socket	**T** – Threaded	**B** – Butt[1]	**CF** – ChemFlare™	

Example: SM Series Ball Valve, PVC, 1″, EPDM seals, socket ends.

[1] PP and PVDF metric butt fusion ends (1/2″ to 2″) connect to Chemline PP and PVDF piping systems.

VACUUM RATING

- 29.9 inches mercury

OPTIONS & ACCESSORIES

- **Reduced Ends**
- **Electric Actuator with Positioner**
  – Operates as a linear control valve

CHEMLINE PLASTICS
SUPERIOR FLOW SOLUTIONS

55 Guardsman Road, Thornhill, ON, L3T 6L2, Canada | ISO 9001:2008 Certified
tel.905.889.7890 | fax.905.889.8553 | request@chemline.com | chemline.com

This page is intentionally left blank

CS-302-100 : Identification sheet

VWTC PROJECT NUMBER:	Iqaluit WWTP	REV:	01
PROJECT NAME:	5000218036	SUBMITTED TO (COMPANY):	
ENGINEER:	G. HÉBERT	SUBMITTED TO (RESPONSIBLE)	
PROJECT MANAGER:	C. BEKAERT	PROJECT NUM REFERENCE.:	
PHONE NUMBER:		LOT NUMBER:	

SUPPLIER	EQPT CODE	EQPT TAG NO	DIA	DESCRIPTION	INFO 1	INFO 2	INFO 3	APPLIC.	NOTE	REV
CHEMLINE	VANRPV200667	CV-04-900	DIA: 38 mm (1-1/2")	CHECK VALVE	TYPE: CHECK | 150 PSI//MANUFACTURER : CHEMLINE//MODEL : BTA015EC//CONNECTION TYPE : COMBO | 1-1/2"//BODY : PVC// SEAL | SEAT :EPDM | // STEM : N/A					1

This page is intentionally left blank

PDF Published March 1, 2013

Ball Check & Foot Valves

CHEMLINE PLASTICS
SUPERIOR FLOW SOLUTIONS

The economical and versatile Chemline Ball Check Valve is the most popular type of non-return valves for pipe sizes under 6". A wide selection of body and seat materials, and end connections are available for many different applications. It has good flow capacity and will handle many slurry and suspended solid services. This valve works in both horizontal and vertical lines. The Foot Valve is for end of line services such as sumps.

PVC | CPVC | PP | PVDF

CRN Registered Consult Chemline

NSF[3] Certified to NSF/ANSI 61

SERIES: BT: True Union Check
BC: Single Union Check
FT: True Union Check
FV: Single Union Check

SIZES: 1/2" – 4"

ENDS: Threaded, Socket, Flanged, Butt[1] or ChemFlare™[2]

SEAT/SEALS: EPDM, FKM (Viton®), PTFE coated FKM (Viton®)

features

- **True Union to 2"**
- **Full Port to 4"**
- **NSF Certified[3]**
- **Built-in Union Design** – For easy installation and maintenance
- **Free Floating Ball** – The only moving part
- **Uniseat/Seal** – Easily removable
- **May be used either horizontally or vertically**
- **Excellent flow characteristics**
- **Low seating and opening pressures**



True Union Check
1/2" to 2" in all materials



Single Union Check
1/2" to 4" in PVC
2-1/2" to 4" in CPVC, PP and PVDF



Foot Valve is light weight and has a low profile basket

[1] PP and PVDF Butt fusion ends (available 1/2" to 2") connect to Chemline PP and PVDF piping systems.
[2] For ChemFlare™ end connectors, consult Chemline.
[3] PVC valves with EPDM or FKM (Viton®) seals are certified under NSF/ANSI Standard 61 for contact with drinking water.

03/13 ©Chemline Plastics Limited 2013
Chemline is a registered trade mark of Chemline Plastics Limited

Ball Check Valves

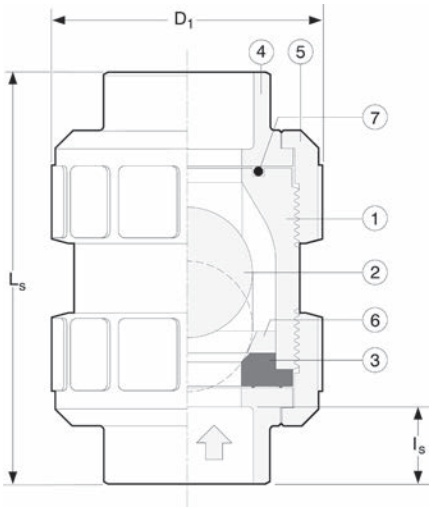

True Union Valve

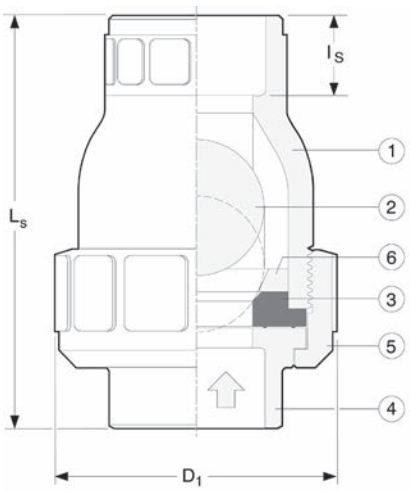

Single Union Valve

PARTS

▲ Recommended Spare Parts

No.	Part	Pcs. T/U	Pcs. S/U	Materials
1	Body	1	1	PVC, CPVC, PP, PVDF
2	Ball	1	1	PVC, CPVC, PP, PVDF
3▲	Uniseat/Seal[1]	1	1	EPDM, FKM(Viton®), PTFE coated FKM (Viton®)
4	End Connector	2	1	PVC, CPVC, PP, PVDF
5	Union Nut	2	1	PVC, CPVC, PP, PVDF
6	Stop Ring	1	1	PVC, CPVC, PP, PVDF
7	Face O-Ring	1	1	EPDM, FKM(Viton®)
9	Flange Retainer[2]	2	1	PVDF
10	Factory Flange[3]	2	1	PVC, CPVC, PP, PVDF

[1] Standard seals are EPDM in PVC, CPVC and PP valves, PTFE coated FKM (Viton®) in PVDF valves. Coating is .002" thick.

[2] True Union: 2 pcs 1/2" to 2", 6 pcs 1-1/2" to 4" Single Union: 1 pcs 1/2" to 2", 3 pcs 2-1/2" to 4".

[3] True Union flanged valves have two factory flanges. Single Union valves have one factory flange and one fabricated flange. Consult Chemline for details on fabricated type.

UNION END CONNECTIONS

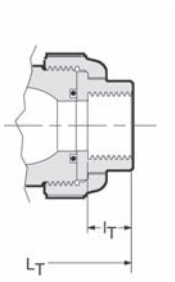

NPT Threaded

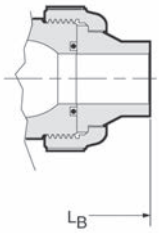

Butt Fusion PP and PVDF

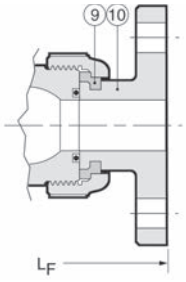

Factory Flanged

DIMENSIONS INCHES

WEIGHTS LB.

Size	D_1	I_s	I_T	True Union PVC & CPVC L_T	True Union PVC & CPVC L_S	True Union PVC & CPVC L_F	True Union PP & PVDF L_T	True Union PP & PVDF L_B	True Union PP & PVDF L_F	Single Union PVC L_T	Single Union PVC L_S	Single Union PVC L_F	True Union Socket or Butt PVC	True Union Socket or Butt CPVC	True Union Socket or Butt PP	True Union Socket or Butt PVDF	Single Union PVC
1/2"	1.9	0.69	0.59	3.4	3.4	5.1	3.4	4.0	5.1	3.2	3.4	5.6	0.3	0.3	0.2	0.3	0.2
3/4"	2.4	0.72	0.67	4.1	3.9	6.1	4.1	4.4	6.1	3.8	3.7	6.6	0.5	0.5	0.3	0.6	0.4
1"	2.8	0.88	0.79	4.5	4.4	6.5	4.5	4.8	6.5	4.2	4.3	7.3	0.7	0.8	0.4	0.9	0.6
1-1/4"	3.1	0.94	0.87	5.0	4.9	6.6	5.0	5.9	6.6	6.2	6.3	12.3	1.1	1.2	0.7	1.5	1.5
1-1/2"	3.7	1.09	0.98	5.9	5.9	7.6	5.9	5.8	7.6	5.6	5.7	9.1	1.6	1.7	1.0	2.0	1.3
2"	4.2	1.16	1.10	7.0	6.8	8.4	7.0	6.5	8.4	6.5	6.5	10.5	2.2	2.4	1.4	2.7	1.8

DIMENSIONS INCHES

WEIGHTS LB.

Size	D_1	I_s[4]	I_T	Single Union PVC & CPVC L_T	Single Union PVC & CPVC L_S	Single Union PVC & CPVC L_F	Single Union PP & PVDF L_T	Single Union PP & PVDF L_B	Single Union PP & PVDF L_F	Single Union PVC	Single Union CPVC	Single Union PP	Single Union PVDF
2-1/2"	6.0	2.10	2.17	10.0	10.4	14.3	8.7	*	*	5.7	6.2	*	*
3"	6.0	1.88	1.38	8.7	9.6	12.2	8.7	*	*	5.1	5.5	3.3	6.3
4"	8.3	2.00	1.77	12.1	12.2	15.0	12.1	*	*	12.7	13.9	8.1	15.7

[4] Consult Chemline.

Foot Valves

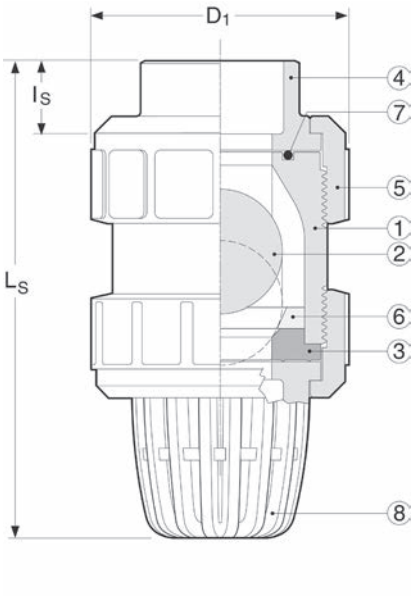

True Union Valve

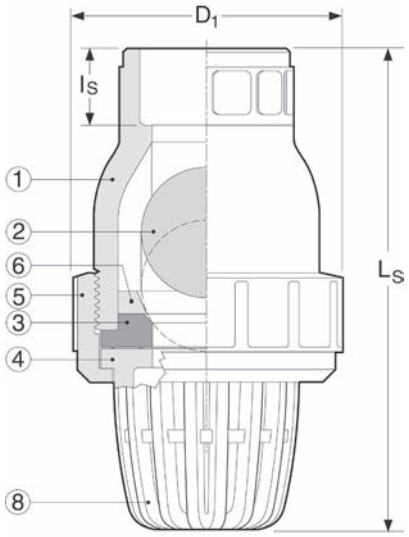

Single Union Valve

PARTS

▲ Recommended Spare Parts

No.	Part	Pcs. T/U	Pcs. S/U	Materials
1	Body	1	1	PVC, CPVC, PP, PVDF
2	Ball	1	1	PVC, CPVC, PP, PVDF
3▲	Uniseat/Seal[1]	1	1	EPDM, FKM(Viton®), PTFE coated FKM (Viton®)
4	End Connector	2	1	PVC, CPVC, PP, PVDF
5	Union Nut	2	1	PVC, CPVC, PP, PVDF
6	Stop Ring	1	1	PVC, CPVC, PP, PVDF
7	Face O-Ring	1	1	EPDM, FKM(Viton®)
8	Foot Valve Basket	1	1	PVC, CPVC, PP, PVDF
9	Flange Retainer[2]	3	0	PVDF
10	Factory Flange[3]	1	0	PVC, CPVC, PP, PVDF

[1] Standard seals are EPDM in PVC, CPVC and PP valves, PTFE coated FKM (Viton®) in PVDF valves. Coating is .002" thick.

[2] True Union: 1 pc 1/2" to 2", 3 pcs 2-1/2" to 4".

[3] True Union valves have factory flanges. Single Union have fabricated flanges. Consult Chemline for details on fabricated type.

END CONNECTIONS FOR TRUE UNION VALVE

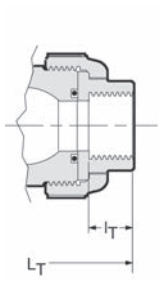

NPT Threaded

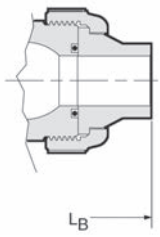

Butt Fusion
PP and PVDF

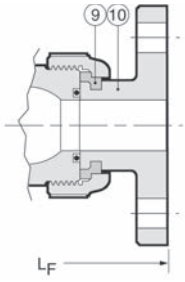

Factory Flanged

DIMENSIONS INCHES

WEIGHTS LB.

Size	D_1	I_s Soc	I_T Thd	True Union PVC & CPVC L_T	True Union PVC & CPVC L_S	True Union PVC & CPVC L_F	Single Union PVC L_T	Single Union PVC L_S	Single Union PVC L_F	Single Union PVC Socket
1/2"	1.9	0.69	0.59	2.8	2.9	3.7	3.5	3.7	4.7	0.3
3/4"	2.4	0.72	0.67	3.3	3.3	4.4	4.1	4.2	5.4	0.4
1"	2.8	0.88	0.79	3.7	3.7	4.8	4.5	4.8	6.1	0.8
1-1/4"	3.7	0.94	0.87	*	*	*	*	*	*	1.8
1-1/2"	3.7	1.09	0.98	5.4	5.4	6.3	6.8	7.0	8.5	1.7
2"	4.2	1.16	1.10	6.4	6.4	7.2	7.4	7.6	9.3	2.1
2-1/2"	6.0	2.10	2.17	–	–	–	*	*	*	7.4
3"	6.0	1.88	1.38	–	–	–	11.6	12.1	14.2	7.1
4"	8.3	2.00	1.77	–	–	–	14.7	15.0	17.4	15.7

* Consult Chemline for dimensions.

For CPVC (2-1/2" to 4"), PP and PVDF Foot Valve lengths, consult Chemline.

Ball Check & Foot Valves

WORKING PRESSURES PSI

Size	PVC	CPVC				Polypropylene			PVDF			
	0-50°C 32-122°F	0-50°C 32-122°F	60°C 140°F	80°C 176°F	90°C 194°F	–20-30°C –4-90°F	60°C 140°F	80°C 176°F	–20-60°C –4-140°F	80°C 176°F	90°C 194°F	100°C 212°F
1/2″	150	150	115	85	60	150	90	60	150	120	110	85
3/4″	150	150	115	85	60	150	90	60	150	120	110	85
1″	150	150	115	85	60	150	90	60	150	120	110	85
1-1/4″	150	150	115	85	60	150	90	60	150	120	110	85
1-1/2″	150	150	115	85	60	150	90	60	150	120	110	85
2″	150	150	115	85	60	150	90	60	150	120	110	85
2-1/2″	100	100	90	60	45	100	60	45	100	90	60	45
3″	100	100	90	60	45	100	60	45	100	90	60	45
4″	100	100	90	60	45	100	60	45	100	90	60	45

Maximum Temperatures: PVC 0 to 60°C (32 to 140°F), **CPVC** 0 to 95°C (32 to 203°F), **PP** –20 to 90°C (–4 to194°F), **PVDF** –40 to 100°C (–40 to 212°F)

MINIMUM SEATING AND OPENING PRESSURE PSI

Cv VALVES

Size	Vertical Piping		Horizontal Piping		Check Valves
	Open	Seating	Open	Seating	
1/2″	0.7	2.8	0.1	2.8	6.5
3/4″	0.7	4.3	0.1	4.3	17.
1″	0.7	4.3	0.1	4.3	25.
1-1/4″	1.4	4.3	0.3	4.3	86.
1-1/2″	1.4	4.3	0.3	4.3	86.
2″	1.4	4.3	0.3	4.3	130.
2-1/2″	1.4	2.8	0.3	2.8	280.
3″	1.4	2.8	0.3	2.8	280.
4″	1.4	2.8	0.3	2.8	500.

VACUUM RATING

- 29.9 inches mercury
- Maximum recommended velocity 5 m/s

SAMPLE SPECIFICATION

All Ball Check valves in PVC, CPVC, PP or PVDF shall be Chemline BT or BC Series or equal with EPDM [FKM (Viton®) or PTFE coated FKM (Viton®)] seats and union ends. Sizes 1/2″ to 2″ shall be slip-out True Union style, sizes 2-1/2″ to 4″ shall be single union. The elastomer uniseat/seal shall function as both the ball seat and the union seal. Ball Check valves shall be rated 150 psi up to 2″ and 100 psi for sizes 2-1/2″ to 4″.

ORDERING EXAMPLE

Chemline Ball Check/Foot Valves	BT	A	020	E	S
Valve Type	**BT** – True Union Ball Check **BC** – Single Union Ball Check **FV** – Single Union Foot Valve **FT** – True Union Foot Valve				
Body Material	**A** – PVC **C** – CPVC **B** – PP **K** – PVDF				
Size	**005** – 1/2″ **007** – 3/4″ **010** – 1″ **012** – 1-1/4″ **015** – 1-1/2″ **020** – 2″ **025** – 2-1/2″ **030** – 3″ **040** – 4″				
Seals	**E** – EPDM **V** – FKM (Viton®) **T** – PTFE coated FKM (Viton®)				
Ends	**S** – Socket **T** – Threaded **F** – Flanged **B** – Butt[1] **CF** – ChemFlare™				

Example: Ball Check Valve, PVC, 2″, with EPDM seat, socket ends.

[1] PP and PVDF metric butt fusion ends (1/2″ to 2″) connect to Chemline PP and PVDF piping systems.

OPTIONS & ACCESSORIES

- **PTFE coated Uniseat/Seal**
- **Spring Loaded Ball** – Assists ball to seat faster

CHEMLINE PLASTICS
SUPERIOR FLOW SOLUTIONS

55 Guardsman Road, Thornhill, ON, L3T 6L2, Canada | ISO 9001:2008 Certified
tel.905.889.7890 | fax.905.889.8553 | request@chemline.com | chemline.com

CS-303-100 : Identification sheet

VWTC PROJECT NUMBER:	Iqaluit WWTP	REV:	01
PROJECT NAME:	5000218036	SUBMITTED TO (COMPANY):	
ENGINEER:	G. HÉBERT	SUBMITTED TO (RESPONSIBLE)	
PROJECT MANAGER:	C. BEKAERT	PROJECT NUM REFERENCE.:	
PHONE NUMBER:		LOT NUMBER:	

SUPPLIER	EQPT CODE	EQPT TAG NO	DIA	DESCRIPTION	INFO 1	INFO 2	INFO 3	APPLIC.	NOTE	REV
CHEMLINE	VARFPV207282	PSV-968	DIA: 25 mm (1")	RELIEF VALVES	TYPE: RELIEF VALVE | 150#//MANUFACTURER : CHEMLINE//MODEL : SB12A010EU//CONNECTION TYPE : UNION SOCKET | 25 mm (1")//BODY : PVC// SEAL | SEAT :EPDM | EPDM// STEM : N/A					1
CHEMLINE	VARFPV207282	PSV-969	DIA: 25 mm (1")	RELIEF VALVES	TYPE: RELIEF VALVE | 150#//MANUFACTURER : CHEMLINE//MODEL : SB12A010EU//CONNECTION TYPE : UNION SOCKET | 25 mm (1")//BODY : PVC// SEAL | SEAT :EPDM | EPDM// STEM : N/A					1

This page is intentionally left blank

PDF Published September 17, 2014

SB12 Series Back Pressure/Relief Valves

CHEMLINE PLASTICS
SUPERIOR FLOW SOLUTIONS

PVC PP PVDF

CRN Registered as Category C Fittings Consult Chemline

NSF[3] Certified to NSF/ANSI 61

SERIES: SB12

SIZES: 3/8" – 4"

ENDS: True Union Socket, Threaded or ChemFlare™[1] Spigot[2] Bodies with Plain, Socket, Threaded or Flanged ends

DIAPHRAGM: PTFE Bonded EPDM

SEALS: EPDM, FKM (Viton®)



The Chemline SB Series Back Pressure/ Relief Valve has two functions. As a ***back pressure valve***, installed in-line downstream of a pump, the back pressure below the metering pump is maintained. When installed in the branch of a tee it is a ***pressure relief valve***. The valve stays closed until inlet pressure reaches the set pressure which is adjusted by turning the spring tensioning bolt. Inlet pressure acts upward against the piston allowing excess pressure to flow upwards through the orifice.

The SB12 Series has a built-in check valve function, desirable for dosing applications. It is not so sensitive as to open with every pulsation from a metering pump.

features

True Union Ends

- Easy installation and maintenance
- Eliminate chemical leakage problems common with old fashioned threaded connections

Long Cycling Life

- Dynamic seal is PTFE bonded EPDM for high chemical resistance
- This moulded diaphragm is designed for superior sealing and flex life

Superior Performance in Dosing Systems

- Valves are hydraulically designed for very low hysteresis ("backlash") and to eliminate chatter
- Built-in check (non-return) function
- Valve opening depends on inlet pressure only and is uneffected by changes in downstream (back) pressure

CRN Registration numbers by province

- Ontario: OC10134.5
- Newfoundland: OC10134.50
- Alberta: OC10134.52
- Saskatchewan/Manitoba/Quebec: OC10134.56
- New Brunswick: OC10134.57
- Nova Scotia: OC10134.58
- P.E.I.: OC10134.59
- British Columbia: not required

technical

Set Pressure Ranges

- 1/2" to 2" – 5 to 150 psi
- 2-1/2" and 3" – 7.5 to 150 psi
- 2-1/2" to 4" – 4 to 60 psi (optional)
- 4" – 7.5 to 90 psi

Maximum Viscosity

- 120cP is maximum recommended service viscosity

[1] For ChemFlare™ end connectors, consult Chemline.
[2] PP and PVDF spigot ends have DIN dimensions and will butt fuse directly to Chemline PP and PVDF piping systems.
[3] PVC valves with EPDM or FKM (Viton®) seals are certified under NSF/ANSI Standard 61 for contact with drinking water.

09/14 ©Chemline Plastics Limited 2014
Chemline is a registered trade mark of Chemline Plastics Limited

SB12 Series Back Pressure/Relief Valves 1/2" to 2"

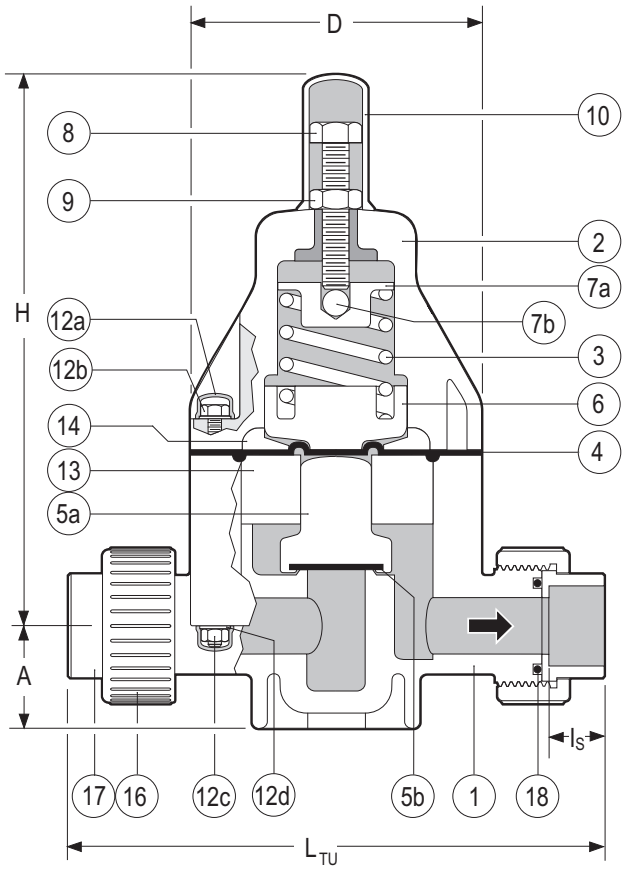

True Union Body

PARTS

▲ Recommended Spare Parts

No.	Part	Pcs.	Materials
1	Body	1	PVC, PP, PVDF
2	Bonnet	1	PPG
3	Spring	1	Galvanized Steel
4▲	Control Diaphragm	1	PTFE bonded EPDM
5a▲	Piston	1	PVC, PP, PVDF
5b▲	Seat	1	EPDM, FPM(Viton®)
6	Lower Spring Retainer	1	PPG
7a	Upper Spring Retainer	1	Cad. Plated Steel
7b	Ball	1	304 SS
8	Spring Tensioning Bolt	1	304 SS
9	Lock Nut	1	304 SS
10	Spring Bolt Cap	1	PE
12a	Bolt/Nut Cap	8/12[1]	PE
12b	Hex Bolt	4/6[1]	304 SS
12c	Hex Nut	4/6[1]	304 SS
12d	Washer	8/12[1]	304 SS
13	Spacer Disc	1	PVC, PP, PVDF
14	Pressure Plate	1	PP
16	Union Nut	2	PVC, PP, PVDF
17	End Connector	2	PVC, PP, PVDF
18▲	Face O-Ring	2	EPDM, FPM(Viton®)

[1] 1/2" size / 3/4" to 2" sizes

OTHER ENDS

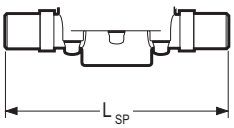

Spigot Body

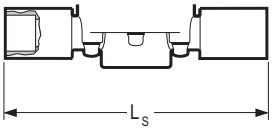

Socket

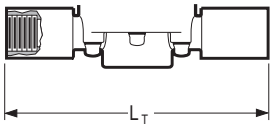

Threaded

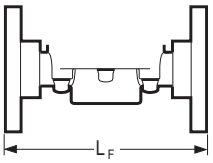

Flanged

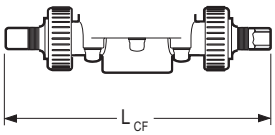

ChemFlare™

DIMENSIONS INCHES

WEIGHTS LB.

Cv VALUES

Size	D	H	PVC A	PVC I_S	PVC L_{TU}[2]	PVC L_{SP}[3]	PVC L_S	PVC L_T	PVC L_F	PVC L_{CF}	PP and PVDF A	PP and PVDF L_{SP}[3]	PP and PVDF L_{TU}[2]	PVC	PP	PVDF	USGPM Flow at 1 psi △P
3/8"	3.2	6.9	1.0	0.6	6.5	5.7	7.4	7.2	4.5	8.2	0.9	5.7	**	1.8	1.5	2.2	2.1
1/2"	3.2	6.9	1.0	0.6	6.8	5.7	8.0	7.8	6.3	8.3[4]	0.9	5.7	7.1	1.9	1.6	2.4	3.0
3/4"	4.2	8.0	1.5	0.7	8.3	6.9	9.3	8.9	7.4	9.7	1.4	6.9	8.4	4.1	3.5	4.6	6.6
1"	4.2	8.0	1.5	0.9	8.5	6.9	9.6	9.3	7.4	10.2	1.4	6.9	8.7	4.2	3.5	4.7	8.7
1-1/4"	5.8	10.3	2.2	1.0	10.9	8.8	11.6	11.2	9.2	13.5	2.1	8.8	10.9	11.0	9.0	12.0	18.0
1-1/2"	5.8	10.3	2.2	1.2	11.1	8.8	12.2	11.5	9.5	–	2.1	8.8	11.2	11.2	9.2	12.2	20.0
2"	5.8	10.3	2.2	1.5	11.3	9.6	12.9	12.0	10.0	–	2.1	8.8	13.2	11.4	9.4	12.4	21.4

[2] True Union bodies come standard with socket ends. Threaded union ends are available. ** Consult Chemline.
[3] Spigot bodies are used for non union socket, threaded or flanged ends. All spigot ends have metric dimensions and the PP and PVDF spigots butt fuse directly to Chemline PP and PVDF piping. [4] Tube size can be reduced to 1/4" tube, LCF = 7.74" for 1/4", 8.26" for 3/8".

MAXIMUM PRESSURES PSI

Size	PVC 20°C 68°F	PVC 30°C 86°F	PVC 40°C 104°F	PVC 50°C 122°F	PP 30°C 86°F	PP 40°C 104°F	PP 50°C 122°F	PP 60°C 140°F	PP 70°C 158°F	PVDF 30°C 86°F	PVDF 50°C 122°F	PVDF 70°C 158°F	PVDF 80°C 176°F	PVDF 90°C 194°F	PVDF 100°C 212°F
1/2"– 2"	150	105	60	15	150	90	60	37.5	15	150	100	60	45	30	15

Temperature Ranges: PVC 0 to 50°C (32 to 122°F), **PP** 10 to 70°C (50 to 158°F), **PVDF** –30 to 100°C (–22 to 212°F).

SB12 Series Back Pressure/Relief Valves 1/2” to 2”

pressure loss nomogram for SB12 valves 3/8” to 2”

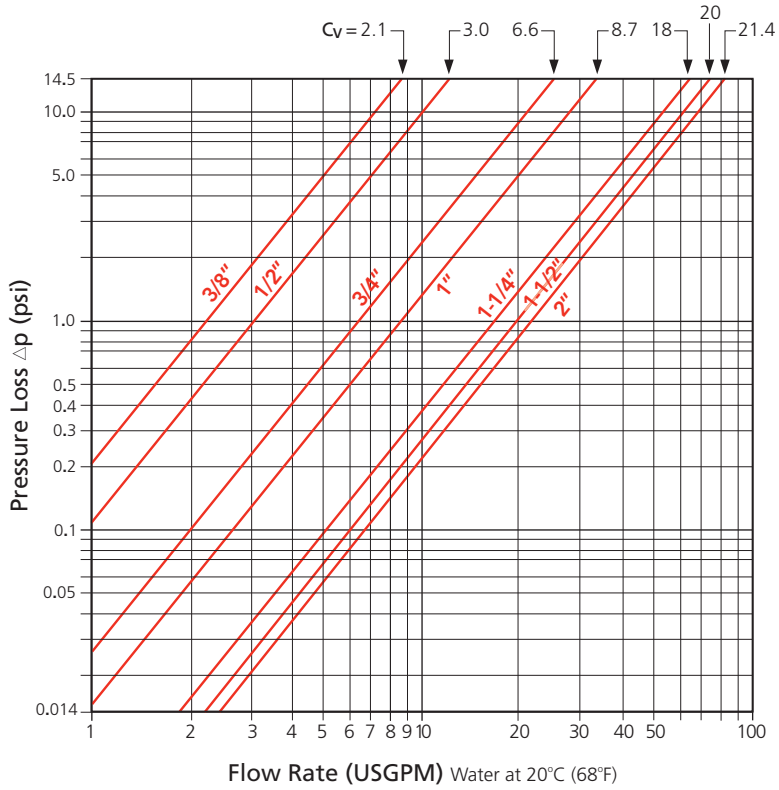

typical dosing system schematic

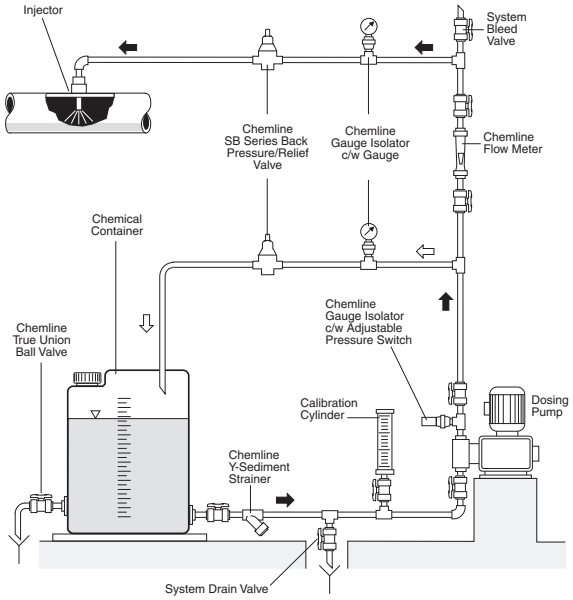

application of pressure relief valves

Constant System Pressure

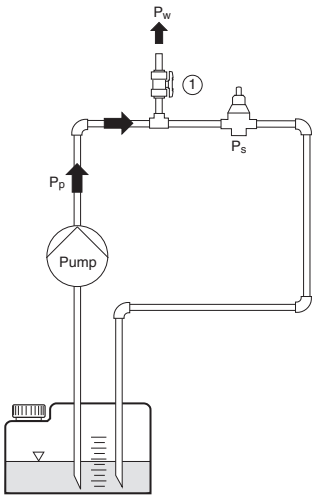

$P_p \geq P_w$
$P_p \geq P_s$ → valve opens
$P_p \leq P_s$ → valve closed

Consumer 1 and/or 2 Open, Valve Closes

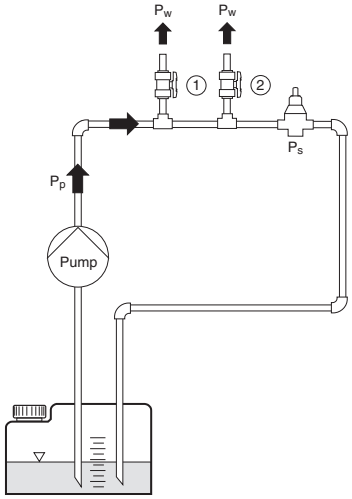

$P_p \geq P_s$ → valve opens
$P_p \leq P_s$ → valve closed

Non-Return Valve

Container 1 is located above the pump

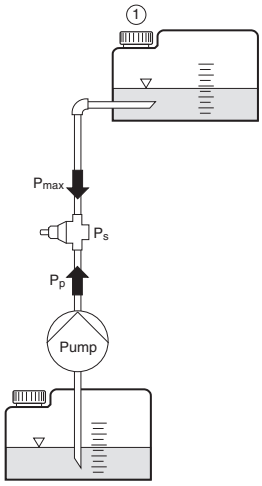

$P_s \geq P_{max}$
$P_p \geq P_s$ → valve opens
$P_p \leq P_s$ → valve closed

Overflow Valve

Pressure of container or application system should not exceed the maximum pressure value

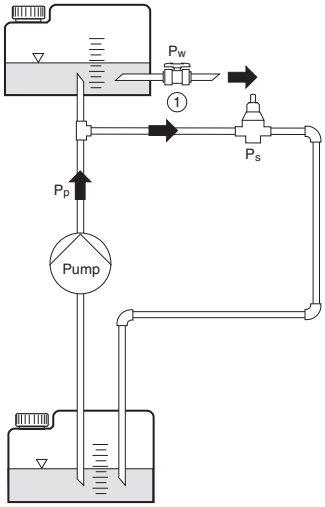

$P_s \leq P_w$
$P_p \geq P_s$ → valve opens
$P_p \leq P_s$ → valve closed

P_w = Working Pressure
P_p = Pump Pressure
P_s = Set Pressure

SB12 Series Back Pressure/Relief Valves 1/2" to 2"

working pressure vs. flow rate

The curves show the relationship between the working pressure and the approximate flow rate through the valve for water at 20°C (68°F) . These values will vary depending on:

- The configuration of the piping and the pressure losses associated with it
- The fluid if not water at 20°C (68°F)
- Whether the pressure is rising or falling, hysteresis is approximately 4 psi for 1/2" to 2" valves. For valves 2-1/2" to 4", hysteresis is approximately 14.5 psi.

operation examples

1. The valve is set closed at 100 psi. At a pressure increase of 10 psi, a flow of approximately 1.0 USGPM will be reached.
   - set pressure = 100 psi
   - working pressure = 110 psi
   - opening pressure = approximately 104 psi
2. The valve is set closed at 50 psi. At a pressure increase of 10 psi, a flow of approximately 1.0 USGPM will be reached.
   - set pressure = 50 psi
   - working pressure = 60 psi
   - opening pressure = approximately 54 psi

3/8" Valves

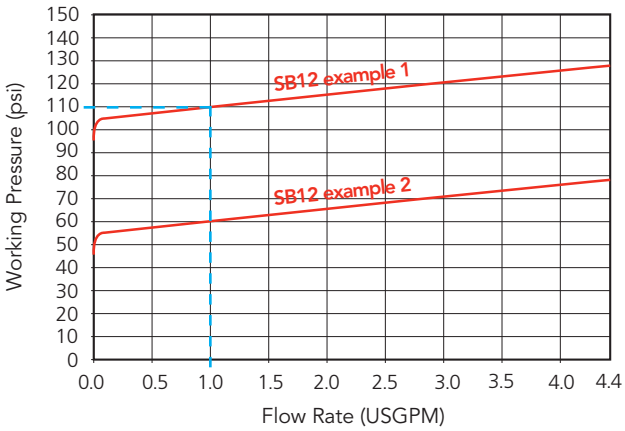

1/2" Valves

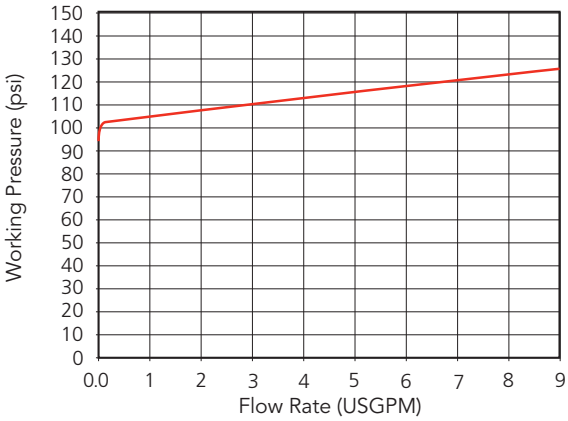

3/4" Valves

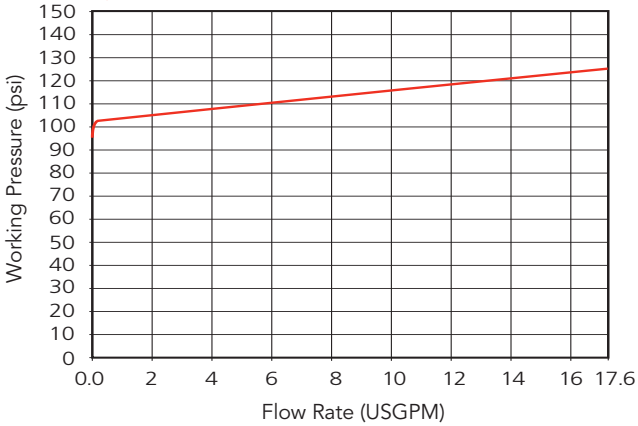

1" Valves

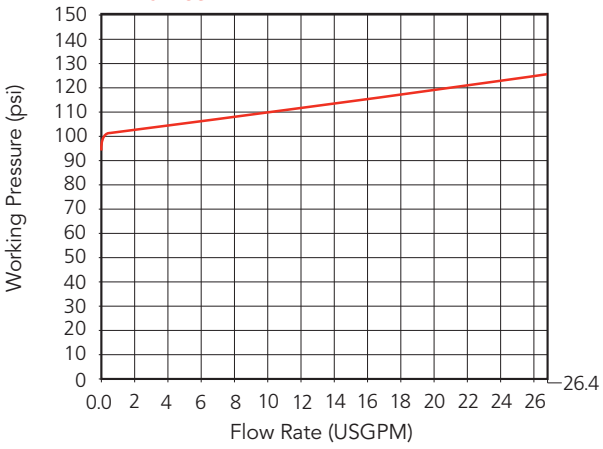

1-1/4" Valves

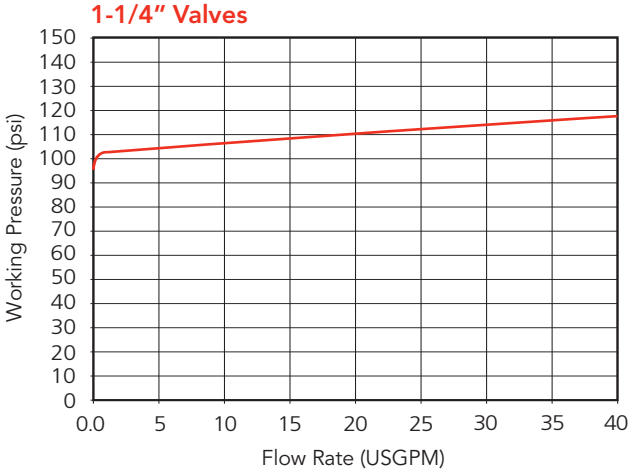

1-1/2" Valves

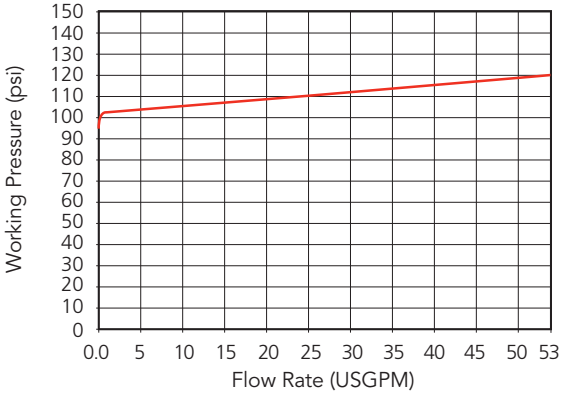

2" Valves

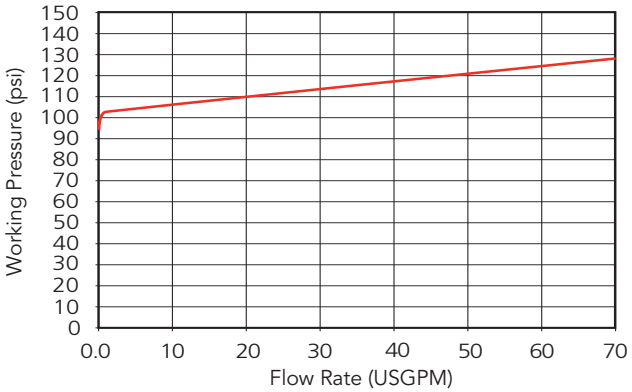

SB12 Series Back Pressure/Relief Valves 2-1/2" to 4"

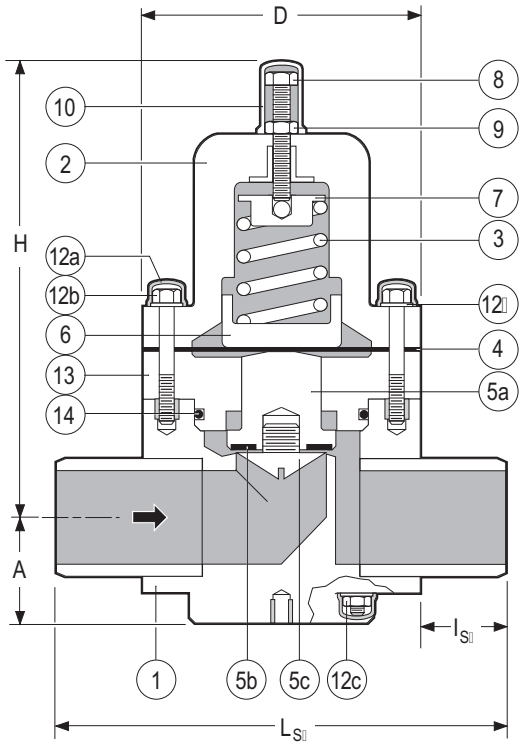

Spigot Body

PARTS

▲ Recommended Spare Parts

No.	Part	Pcs.	Materials
1	Body	1	PVC, PP, PVDF
2	Bonnet	1	PPG
3	Spring	1	Galvanized Steel
4▲	Control Diaphragm	1	PTFE bonded EPDM
5a▲	Piston	2	PVC, PP, PVDF
5b▲	Seat	1	EPDM, FPM(Viton®)
5c▲	Seat Retainer	1	PVC, PP, PVDF
6	Lower Spring Retainer	1	PPG
7	Upper Spring Retauner	1	304 SS
8	Spring Tensioning Bolt	1	304 SS
9	Lock Nut	1	304 SS
10	Spring Bolt Cap	1	PE
12a	Hex Bolt/Nut Cap	20	PE
12b	Hex Bolt/Stud	12[1]	304 SS
12c	Hex Nut	20	304 SS
12d	Washer	20	304 SS
13	Spacer Disc	1	PVC, PP, PVDF
14	Spacer O ring	1	EPDM, FPM(Viton®)

[1] 2 large upper bolts, 2 shorter lower bolts, 8 studs

OTHER ENDS

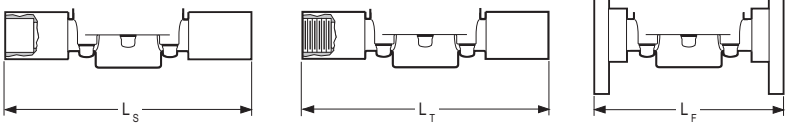

Socket | Threaded | Flanged



ChemFlare™ Ends
- For connection to PFA tube. Leak-free connections for difficult services such as sodium hypochlorite

DIMENSIONS INCHES

WEIGHTS LB.

Cv VALUES

Size	PVC, PP & PVDF A	D	H	L_{SP}[2]	l_{SP}	PVC L_F	WEIGHTS PVC	PP	PVDF	Cv VALUES USGPM Flow at 1 psi △P
2-1/2"	2.7	6.9	11.1	11.2	2.1	12.2	20.9	15.4	24.6	41
3"	3.0	7.9	12.2	14.2	3.1	15.0	26.4	23.8	30.8	63
4"	3.7	9.8	14.2	16.5	3.3	16.9	33.0	26.4	37.4	98

[2] Plain spigot ends in PP & PVDF may be butt fused directly to Chemline PP & PVDF piping systems.

Weights based on spigot bodies.

MAXIMUM PRESSURES PSI

Size	PVC 20°C 68°F	30°C 86°F	40°C 104°F	50°C 122°F	PP 20°C 68°F	30°C 86°F	40°C 104°F	50°C 122°F	60°C 140°F	70°C 158°F	PVDF 30°C 86°F	50°C 122°F	70°C 158°F	80°C 176°F	90°C 194°F	100°C 212°F
2-1/2"– 4"	150	90	44	15	150	116	90	60	37.5	15	150	90	55	40	30	15

Temperature Ranges: PVC 0 to 50°C (32 to 122°F), **PP** 10 to 70°C (50 to 158°F), **PVDF** –30 to 100°C (–22 to 212°F).

ORDERING EXAMPLE

Chemline Back Pressure/ Relief Valves	SB12	A	005	V	U
Body Material	**A** – PVC	**B** – PP	**K** – PVDF		
Size	**003** – 3/8" **010** – 1" **020** – 2"	**005** – 1/2" **012** – 1-1/4" **025** – 2-1/2"	**007** – 3/4" **015** – 1-1/2" **030** – 3"	**040** – 4"		
Elastomers	**E** – EPDM	**V** – FPM (Viton®)				
Ends	**S** – Socket **CFx** – ChemFlare™	**T** – Threaded	**F** – Flanged	**Blank** – Spigot (Butt)	**U** – Union Socket	

Example: Chemline SB 12 Series, PVC, 1/2" diameter, FPM (Viton®) seals, Union socket ends.
x = 4 for 1/4", **6** for 3/8", **8** for 1/2", **12** for 1" ID tube connections.

OPTIONS

- 4 to 60 psi Pressure Range springs for 2-1/2" to 4" valves
- **Integral Pressure Gauge** – for inlet and/or outlet
- Bodies in 316 Stainless Steel and PTFE



Optional Pressure Gauge
- For inlet and/or outlet

SB12 Series Back Pressure/Relief Valves 2-1/2" to 4"

working pressure vs. flow rate

• Whether the pressure is rising or falling, hysteresis is approximately 14.5 psi for 2-1/2" to 4" valves

2-1/2" Valves / 4 to 60 psi set pressure range

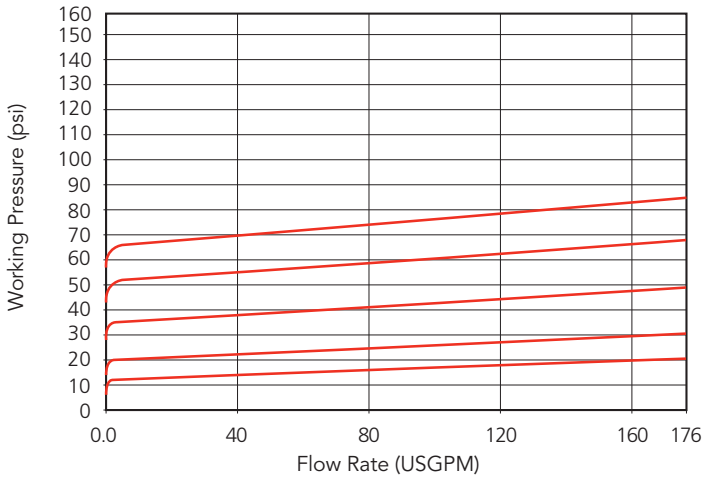

2-1/2" Valves / 7.5 to 150 psi set pressure range

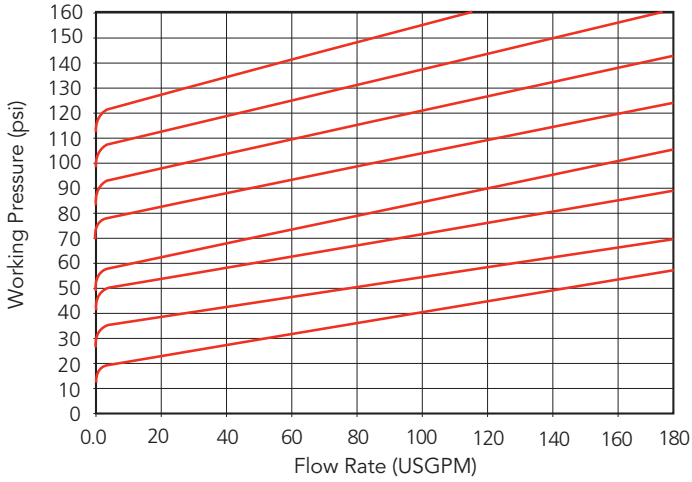

3" Valves / 4 to 60 psi set pressure range

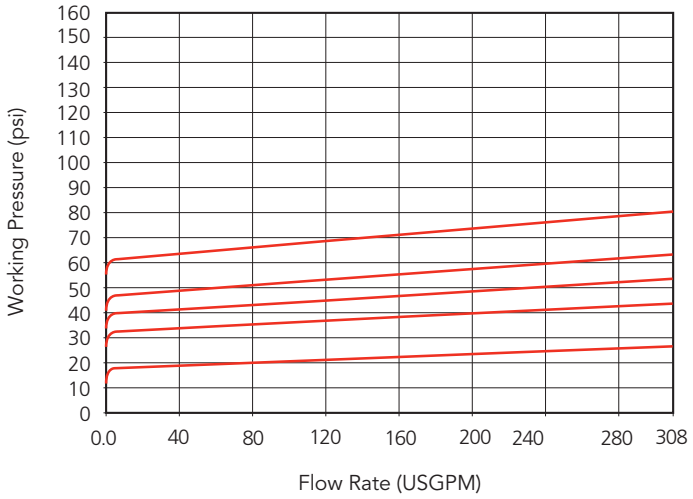

3" Valves / 7.5 to 150 psi set pressure range

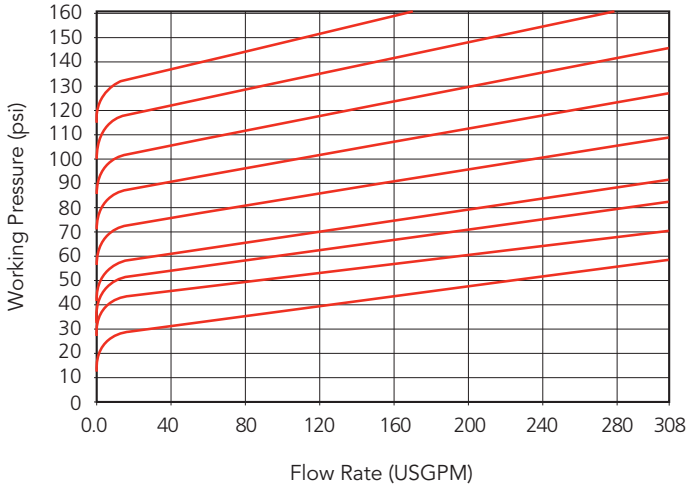

4" Valves / 4 to 60 psi set pressure range

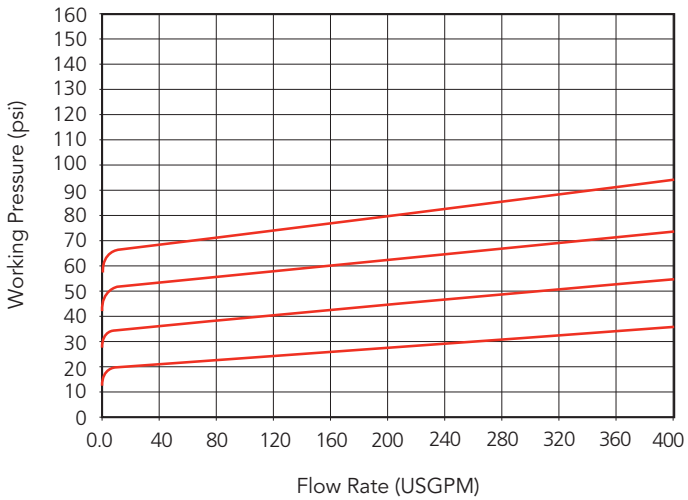

4" Valves / 7.5 to 90 psi set pressure range

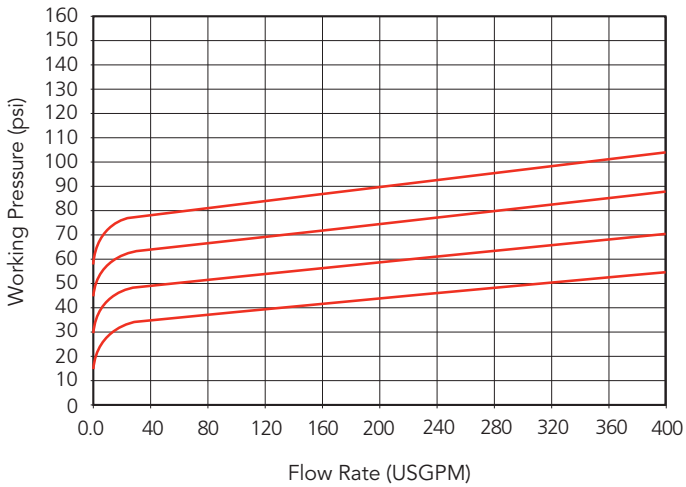

55 Guardsman Road, Thornhill, ON, L3T 6L2, Canada | ISO 9001:2008 Certified
tel.905.889.7890 | fax.905.889.8553 | request@chemline.com | chemline.com

CS-304-100 : Identification sheet

VWTC PROJECT NUMBER:	Iqaluit WWTP	REV:	01
PROJECT NAME:	5000218036	SUBMITTED TO (COMPANY):	
ENGINEER:	G. HÉBERT	SUBMITTED TO (RESPONSIBLE)	
PROJECT MANAGER:	C. BEKAERT	PROJECT NUM REFERENCE.:	
PHONE NUMBER:		LOT NUMBER:	

SUPPLIER	EQPT CODE	EQPT TAG NO	DIA	DESCRIPTION	INFO 1	INFO 2	INFO 3	APPLIC.	NOTE	REV
TEKNO VALVE	VASDBR308795	SV-04-982	N/A	ON/OFF VALVES - CARRIER WATER	TYPE: SOLENOID VALVE//MANUFACTURER : ASCO//MODEL : 8210G056//CONNECTION TYPE : THREADED | 38 mm (1 1/2") | 38 mm (1 1/2")//BODY : BRASS// SEAL | SEAT : | // STEM : N/A	ACTING : PILOT	NORMALLY : FERMÉ/CLOSED			1

This page is intentionally left blank

Features

- Wide range of pressure ratings, sizes, and resilient materials provide long service life and low internal leakage
- High flow valves for liquid, corrosive, and air/inert gas service
- Industrial applications include:
  - Car wash
  - Laundry equipment
  - Air compressors
  - Industrial water control
  - Pumps

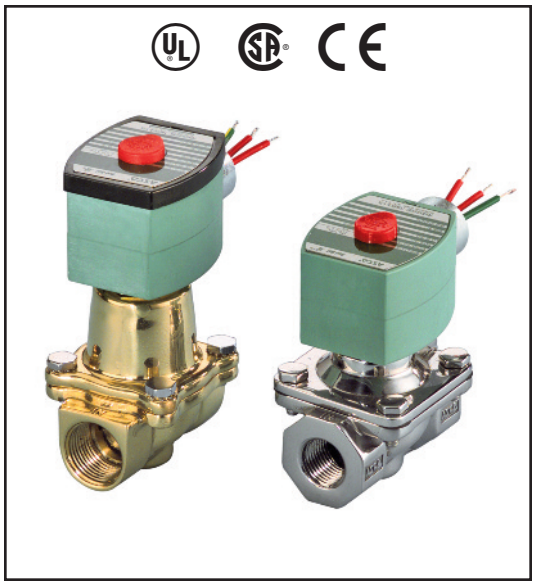

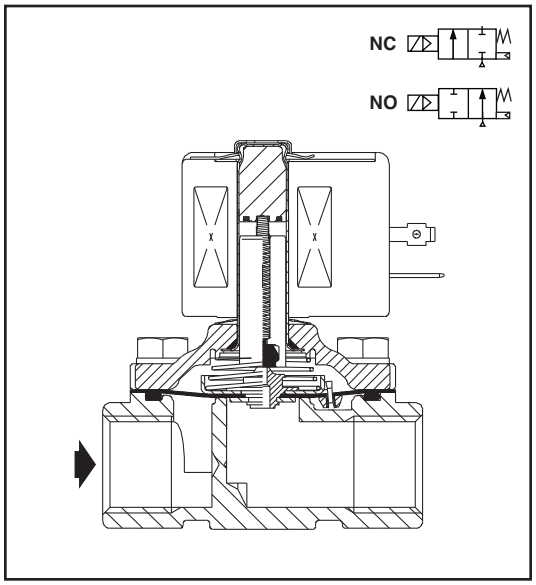

Construction

Valve Parts in Contact with Fluids		
Body	Brass	304 Stainless Steel*
Seals and Discs	NBR or PTFE	
Disc-Holder	PA	
Core Tube	305 Stainless Steel	
Core and Plugnut	430F Stainless Steel	
Springs	302 Stainless Steel	
Shading Coil	Copper	Silver

*Catalog Numbers 8210G127, 8210G129, 8210G132, 8210G133 have 316L Stainless Steel bodies.

Electrical

Standard Coil and Class of Insulation	Watt Rating and Power Consumption				Spare Coil Part Number			
		AC			General Purpose		Explosionproof	
	DC Watts	Watts	VA Holding	VA Inrush	AC	DC	AC	DC
F	-	6.1	16	40	238210	-	238214	-
F	11.6	10.1	25	70	238610	238710	238614	238714
F	16.8	16.1	35	180	272610	97617	272614	97617
F	-	17.1	40	93	238610	-	238614	-
F	-	20	43	240	99257	-	99257	-
F	-	20.1	48	240	272610	-	272614	-
F	30.8	-	-	-	-	501695	-	501696
H	40.6	-	-	-	-	238910	-	238914

Standard Voltages: 24, 120, 240, 480 volts AC, 60 Hz (or 110, 220 volts AC, 50 Hz). 6, 12, 24, 120, 240 volts DC. Must be specified when ordering.
Other voltages available when required.

Solenoid Enclosures

Standard: RedHat II - Watertight, Types 1, 2, 3, 3S, 4, and 4X; RedHat - Type I.

Optional: RedHat II - Explosionproof and Watertight, Types 3, 3S, 4, 4X, 6, 6P, 7, and 9; Red-Hat - Explosionproof and Watertight, Types 3, 4, 4X, 7, and 9.

(To order, add prefix "EF" to catalog number, except Catalog Numbers 8210B057, 8210B058, and 8210B059, which are not available with Explosionproof enclosures.)
See Optional Features Section for other available options.

Nominal Ambient Temp. Ranges

RedHat II/RedHat AC: 32˚F to 125˚F (0˚C to 52˚C)
RedHat II DC: 32˚F to 104˚F (0˚C to 40˚C)
RedHat DC: 32˚F to 77˚F (0˚C to 25˚C)
(104˚F/40˚C occasionally)
8210G227 AC: 32˚F to 130˚F (0˚C to 54˚C)
DC: 32˚F to 90˚F (0˚C to 32˚C)
Refer to Engineering Section for details.

Approvals

UL listed as indicated. CSA certified.
RedHat II meets applicable CE directives.
Refer to Engineering Section for details.

ATEX/IECEx certified with prefix "EV" as listed. *Refer to Optional Features Electrical Section for details.*

Specifications (English units)

Pipe Size (in)	Orifice Size (in)	Cv Flow Factor	Operating Pressure Differential (psi)							Max. Fluid Temp. ˚F		Brass Body			Stainless Steel Body			Watt Rating/ Class of Coil Insulation ⑦	
				Max. AC			Max. DC												
			Min.	Air-Inert Gas	Water	Light Oil @ 300 SSU	Air-Inert Gas	Water	Light Oil @ 300 SSU	AC	DC	Catalog Number	Const. Ref. ④	UL ⑤ Listing	Catalog Number	Const. Ref. ④	UL ⑤ Listing	AC	DC
NORMALLY CLOSED (Closed when de-energized), NBR or PTFE ② Seating																			
3/8	3/8	1.5	①	150	125	-	40	40	-	180	150	8210G073 ③	1P	●	8210G036 ③	1P	●	6.1/F	11.6/F
3/8	5/8	3	0	150	150	-	40	40	-	180	150	8210G093	5D	❍	-	-	-	10.1/F	11.6/F
3/8	5/8	3	5	200	150	135	125	100	100	180	150	8210G001 ▼	6D	❍	-	-	-	6.1/F	11.6/F
3/8	5/8	3	5	300	300	300	-	-	-	175	-	8210G006 ✓	5D	❍	-	-	-	17.1/F	-
1/2	7/16	2.2	①	150	125	-	40	40	-	180	150	8210G015 ③	2P	●	8210G037 ③	2P	●	6.1/F	11.6/F
1/2	5/8	4	0	150	150	-	40	40	-	180	150	8210G094 ✓	5D	❍	-	-	-	10.1/F	11.6/F
1/2	5/8	4	0	150	150	125	40	40	-	175	150	-	-	-	8210G087 ✓	7D	●	17.1/F	11.6/F
1/2	5/8	4	5	200	150	135	125	100	100	180	150	8210G002 ▼	6D	❍	-	-	-	6.1/F	11.6/F
1/2	5/8	4	5	300	300	300	-	-	-	175	-	8210G007	5D	❍	-	-	-	17.1/F	-
1/2	3/4	4	5	-	300	-	-	300	-	130	90	8210G227	5D	❍ †	-	-	-	17.1/F	40.6/H
3/4	5/8	4.5	0	150	150	125	40	40	-	175	150	-	-	-	8210G088 ✓	7D	●	17.1/F	11.6/F
3/4	3/4	5	5	125	125	125	100	90	75	180	150	8210G009 ▼	9D	❍	-	-	-	6.1/F	11.6/F
3/4	3/4	5	0	150	150	-	40	40	-	180	150	8210G095 ✓	8D	❍	-	-	-	10.1/F	11.6/F
3/4	3/4	6.5	5	250	150	100	125	125	125	180	150	8210G003 ▼	11D	❍	-	-	-	6.1/F	11.6/F
3/4	3/4	6	0	350	300	200	200	200	200	200	180	8210G026 ② ‡ ◆	40P/10D	●	-	-	-	16.1F	30.8/F
1	1	13	0	150	125	125	135	120	120	180	180	8210G054 ‡ ◆	41D/31D	●	8210G089 ‡ ◆	45D/15D	●	16.1/F	30.8/F
1	1	13	5	150	150	100	125	125	125	180	150	8210G004 ▼	12D	❍	-	-	-	6.1/F	11.6/F
1	1	13.5	0	300	225	115	-	-	-	200	-	8210G027 ‡	42P	●	-	-	-	20.1/F	-
1	1	13.5	10	300	300	300	-	-	-	175	-	8210G078 ②	13P	-	-	-	-	17.1/F	-
1 1/4	1 1/8	15	0	150	125	125	135	120	120	180	180	8210G055 ‡ ◆	43D/32D	●	-	-	-	16.1/F	30.8/F
1 1/4	1 1/8	15	5	150	150	100	125	125	125	180	150	8210G008 ▼	16D	❍	-	-	-	6.1/F	11.6/F
1 1/2	1 1/4	22.5	0	150	125	125	135	120	120	180	180	8210G056 ‡ ◆	44D/33D	●	-	-	-	16.1/F	30.8/F
1 1/2	1 1/4	22.5	5	150	150	100	125	125	125	180	150	8210G022 ▼	18D	●	8210G127	-	-	6.1/F	11.6/F
2	1 3/4	43	5	150	125	90	50	50	50	180	150	8210G100	20P	●	8210G129	-	-	6.1/F	11.6/F
2 1/2	1 3/4	45	5	150	125	90	50	50	50	180	150	8210G101	21P	●	-	-	-	6.1/F	11.6/F
NORMALLY OPEN (Open when de-energized), NBR Seating (PA Disc-Holder, except as noted)																			
3/8	5/8	3	0	150	150	125	125	125	80	180	150	8210G033	23D	●	-	-	-	10.1/F	11.6/F
3/8	5/8	3	5	250	200	200	250	200	200	180	180	8210G011 ⑧ ⑨	39D	●	-	-	-	10.1/F	11.6/F
1/2	5/8	4	0	150	150	125	125	125	80	180	150	8210G034 ✓	23D	●	-	-	-	10.1/F	11.6/F
1/2	5/8	3	0	150	150	100	125	125	80	180	150	-	-	-	8210G030 ✓	37D	●	10.1/F	11.6/F
1/2	5/8	4	5	250	200	200	250	200	200	180	180	8210G012 ⑧ ⑨	39D	●	-	-	-	10.1/F	11.6/F
3/4	3/4	5.5	0	150	150	125	125	125	80	180	150	8210G035 ✓	25D	●	-	-	-	10.1/F	11.6/F
3/4	5/8	3	0	150	150	100	125	125	80	180	150	-	-	-	8210G038 ✓	38D	●	10.1/F	11.6/F
3/4	3/4	6.5	5	-	-	-	250	200	200	-	180	8210C013	24D	●	-	-	-	-	16.8/F
3/4	3/4	6.5	5	250	200	200	-	-	-	180	-	8210G013	46D	●	-	-	-	16.1/F	-
1	1	13	0	125	125	125	-	-	-	180	-	8210B057 ⑥ ⑩	34D	●	-	-	-	20/F	-
1	1	13	5	-	-	-	125	125	125	-	180	8210D014	26D	●	-	-	-	-	16.8/F
1	1	13	5	150	150	125	-	-	-	180	-	8210G014	47D	●	-	-	-	16.1/F	-
1 1/4	1 1/8	15	0	125	125	125	-	-	-	180	-	8210B058 ⑥ ⑩	35D	●	-	-	-	20/F	-
1 1/4	1 1/8	15	5	-	-	-	125	125	125	-	180	8210D018	28D	●	-	-	-	-	16.8/F
1 1/4	1 1/8	15	5	150	150	125	-	-	-	180	-	8210G018	48D	●	-	-	-	16.1/F	-
1 1/2	1 1/4	22.5	0	125	125	125	-	-	-	180	-	8210B059 ⑥ ⑩	36D	●	-	-	-	20/F	-
1 1/2	1 1/4	22.5	5	-	-	-	125	125	125	-	180	8210D032	29D	●	-	-	-	-	16.8/F
1 1/2	1 1/4	22.5	5	150	150	125	-	-	-	180	-	8210G032	49D	●	8210G132	-	-	16.1/F	-
2	1 3/4	43	5	-	-	-	125	125	125	-	150	8210 103	30P	●	-	-	-	-	16.8/F
2	1 3/4	43	5	125	125	125	-	-	-	180	-	8210G103	50P	●	8210G133	-	-	16.1/F	-
2 1/2	1 3/4	45	5	-	-	-	125	125	125	-	150	8210 104	27P	●	-	-	-	-	16.8/F
2 1/2	1 3/4	45	5	125	125	125	-	-	-	180	-	8210G104	51P	●	-			16.1/F	-

① 5 psi on Air; 1 psi on Water.
② Valve provided with PTFE main disc.
③ Valve includes Ultem (G.E. trademark) piston.
④ Letter "D" denotes diaphragm construction; "P" denotes piston construction.
⑤ ❍ Safety Shutoff Valve; ● General Purpose Valve.
Refer to Engineering Section (Approvals) for details.

⑥ Valves not available with Explosionproof enclosures.
⑦ On 50 hertz service, the watt rating for the 6.1/F solenoid is 8.1 watts.
⑧ AC construction also has PA seating.
⑨ No disc-holder.
⑩ Stainless steel disc-holder.
† UL listed for fire protection systems per UL429A.

‡ DC constructions must have solenoid mounted vertical and upright.
✓ ATEX/IECEx certified with prefix "EV".
▼ ATEX/IECEx certified for DC only with prefix "EV".
◆ Not available in 6 Volt DC. EF and HB prefix only.

Specifications (Metric units)

Pipe Size (in)	Orifice Size (mm)	Kv Flow Factor (m^3/hr)	Operating Pressure Differential (bar)							Max. Fluid Temp. ˚C		Brass Body			Stainless Steel Body			Watt Rating/ Class of Coil Insulation ⑦	
				Max. AC			Max. DC												
			Min.	Air-Inert Gas	Water	Light Oil @ 300 SSU	Air-Inert Gas	Water	Light Oil @ 300 SSU	AC	DC	Catalog Number	Const. Ref. ④	UL ⑤ Listing	Catalog Number	Const. Ref. ④	UL ⑤ Listing	AC	DC
NORMALLY CLOSED (Closed when de-energized), NBR or PTFE ② Seating																			
3/8	10	1.3	①	10	9	-	3	3	-	82	65	8210G073 ③	1P	●	8210G036 ③	1P	●	6.1/F	11.6/F
3/8	16	2.6	0	10	10	-	3	3	-	82	65	8210G093	5D	❍	-	-	-	10.1/F	11.6/F
3/8	16	2.6	0.3	14	10	9	9	7	7	82	65	8210G001 ▼	6D	❍	-	-	-	6.1/F	11.6/F
3/8	16	2.6	0.3	21	21	21	-	-	-	79	-	8210G006 ✓	5D	❍	-	-	-	17.1/F	-
1/2	11	1.9	①	10	9	-	3	3	-	82	65	8210G015 ③	2P	●	8210G037 ③	2P	●	6.1/F	11.6/F
1/2	16	3.4	0	10	10	-	3	3	-	82	65	8210G094 ✓	5D	❍	-	-	-	10.1/F	11.6/F
1/2	16	3.4	0	10	10	9	3	3	-	79	65	-	-	-	8210G087 ✓	7D	●	17.1/F	11.6/F
1/2	16	3.4	0.3	14	10	9	9	7	7	82	65	8210G002 ▼	6D	❍	-	-	-	6.1/F	11.6/F
1/2	16	3.4	0.3	21	21	21	-	-	-	79	-	8210G007	5D	❍	-	-	-	17.1/F	-
1/2	19	3.4	0.3	-	21	-	-	21	-	54	32	8210G227	5D	❍ †	-	-	-	17.1/F	40.6H
3/4	16	3.9	0	10	10	9	3	3	-	79	65	-	-	-	8210G088 ✓	7D	●	17.1/F	11.6/F
3/4	19	4.3	0.3	9	9	9	7	6	5	82	65	8210G009 ▼	9D	❍	-	-	-	6.1/F	11.6/F
3/4	19	4.3	0	10	10	-	3	3	-	82	65	8210G095 ✓	8D	❍	-	-	-	10.1/F	11.6/F
3/4	19	5.6	0.3	17	10	7	9	9	9	82	65	8210G003 ▼	11D	❍	-	-	-	6.1/F	11.6/F
3/4	19	5.1	0	24	21	14	14	14	14	93	82	8210G026 ② ‡ ◆	40P/10D	●	-	-	-	16.1F	30.8/F
1	25	11	0	10	9	9	9	8	8	82	82	8210G054 ‡ ◆	41D/31D	●	8210G089 ‡ ◆	45D/15D	●	16.1/F	30.8/F
1	25	11	0.3	10	10	7	9	9	9	82	65	8210G004 ▼	12D	❍	-	-	-	6.1/F	11.6/F
1	25	11.5	0	21	16	8	-	-	-	93	-	8210G027 ‡	42P	●	-	-	-	20.1/F	-
1	25	11.5	0.7	21	21	21	-	-	-	79	-	8210G078 ②	13P	-	-	-	-	17.1/F	-
1 1/4	29	13	0	10	9	9	9	8	8	82	82	8210G055 ‡ ◆	43D/32D	●	-	-	-	16.1/F	30.8/F
1 1/4	29	13	0.3	10	10	7	9	9	9	82	65	8210G008 ▼	16D	❍	-	-	-	6.1/F	11.6/F
1 1/2	32	19.5	0	10	9	9	9	8	8	82	82	8210G056 ‡ ◆	44D/33D	●	-	-	-	16.1/F	30.8/F
1 1/2	32	19.5	0.3	10	10	7	9	9	9	82	65	8210G022 ▼	18D	●	8210G127	-	-	6.1/F	11.6/F
2	44	37	0.3	10	9	6	3	3	3	82	65	8210G100	20P	●	8210G129	-	-	6.1/F	11.6/F
2 1/2	44	39	0.3	10	9	6	3	3	3	82	65	8210G101	21P	●	-	-	-	6.1/F	11.6/F
NORMALLY OPEN (Open when de-energized), NBR Seating (PA Disc-Holder, except as noted)																			
3/8	16	2.6	0.0	10	10	9	9	9	6	82	65	8210G033	23D	●	-	-	-	10.1/F	11.6/F
3/8	16	2.6	0.3	17	14	14	17	14	14	82	82	8210G011 ⑧ ⑨	39D	●	-	-	-	10.1/F	11.6/F
1/2	16	3.4	0	10	10	9	9	9	6	82	65	8210G087 ✓	7D	●	-	-	-	10.1/F	11.6/F
1/2	16	2.6	0	10	10	7	9	9	6	82	65	-	-	-	8210G087 ✓	7D	●	10.1/F	11.6/F
1/2	16	3.4	0.3	17	14	14	17	14	14	82	82	8210G012 ⑧ ⑨	39D	●	-	-	-	10.1/F	11.6/F
3/4	19	4.7	0	10	10	9	9	9	6	82	65	8210G087 ✓	7D	●	-	-	-	10.1/F	11.6/F
3/4	16	2.6	0	10	10	7	9	9	6	82	65	-	-	-	8210G087 ✓	7D	●	10.1/F	11.6/F
3/4	19	5.6	0.3	-	-	-	17	14	14	-	82	8210C013	24D	●	-	-	-	-	16.8/F
3/4	19	5.6	0.3	17	14	14	-	-	-	82	-	8210G013	46D	●	-	-	-	16.1/F	-
1	25	11	0	9	9	9	-	-	-	82	-	8210B057 ⑥ ⑩	34D	●	-	-	-	20/F	-
1	25	11	0.3	-	-	-	9	9	9	-	82	8210D014	26D	●	-	-	-	-	16.8/F
1	25	11	0.3	10	10	9	-	-	-	82	-	8210G014	47D	●	-	-	-	16.1/F	-
1 1/4	29	13	0	9	9	9	-	-	-	82	-	8210B058 ⑥ ⑩	35D	●	-	-	-	20/F	-
1 1/4	29	13	0.3	-	-	-	9	9	9	-	82	8210D018	28D	●	-	-	-	-	16.8/F
1 1/4	29	13	0.3	10	10	9	-	-	-	82	-	8210G018	48D	●	-	-	-	16.1/F	-
1 1/2	32	19.5	0	9	9	9	-	-	-	82	-	8210B059 ⑥ ⑩	36D	●	-	-	-	20/F	-
1 1/2	32	19.5	0.3	-	-	-	9	9	9	-	82	8210D032	29D	●	-	-	-	-	16.8/F
1 1/2	32	19.5	0.3	10	10	9	-	-	-	82	-	8210G032	49D	●	8210G132	-	-	16.1/F	-
2	44	37	0.3	-	-	-	9	9	9	-	65	8210 103	30P	●	-	-	-	-	16.8/F
2	44	37	0.3	9	9	9	-	-	-	82	-	8210G103	50P	●	8210G133	-	-	16.1/F	-
2 1/2	44	39	0.3	-	-	-	9	9	9	-	65	8210 104	27P	●	-	-	-	-	16.8/F
2 1/2	44	39	0.3	9	9	9	-	-	-	82	-	8210G104	51P	●	-	-	-	16.1/F	-

① 0.3 bar on Air; 0.0 bar on Water.
② Valve provided with PTFE main disc.
③ Valve includes UItem (G.E. trademark) piston.
④ Letter "D" denotes diaphragm construction; "P" denotes piston construction.
⑤ ❍ Safety Shutoff Valve; ● General Purpose Valve.
Refer to Engineering Section (Approvals) for details.

⑥ Valves not available with Explosionproof enclosures.
⑦ On 50 hertz service, the watt rating for the 6.1/F solenoid is 8.1 watts.
⑧ AC construction also has PA seating.
⑨ No disc-holder.
⑩ Stainless steel disc-holder.
† UL listed for fire protection systems per UL429A.

‡ DC constructions must have solenoid mounted vertical and upright.
✓ ATEX/IECEx certified with prefix "EV".
▼ ATEX/IECEx certified for DC only with prefix "EV".
◆ Not available in 6 Volt DC. EF and HB prefix only.

Dimensions: inches (mm)

Const. Ref.		H	K	L	P	W
1*	in	3.85	3.00	1.91	3.41	1.69
	mm	98	76	49	87	43
2*	in	4.17	3.25	2.28	3.63	1.69
	mm	106	83	58	92	43
5	in	3.84	2.31	2.75	3.28	2.28
	mm	98	59	70	83	58
6*	in	3.38	1.94	2.75	2.80	2.28
	mm	86	49	70	71	58
7	in	4.19	2.50	2.81	3.47	2.39
	mm	106	64	71	88	61
8	in	4.13	2.47	2.81	3.44	2.29
	mm	105	63	71	87	58
9*	in	3.66	2.10	2.81	2.96	2.28
	mm	93	53	71	75	58
10*	in	5.20	3.40	2.80	4.50	2.50
	mm	131	86	71	114	62
11*	in	4.16	2.66	3.84	3.52	2.75
	mm	106	68	98	89	70
12	in	5.64	3.15	3.75	4.01	3.36
	mm	143	80	95	102	85
13	in	4.44	3.22	3.75	4.19	5.81
	mm	113	82	95	106	147
15*	in	5.20	3.30	3.80	4.40	3.80
	mm	133	83	98	111	98
16	in	5.64	3.15	3.66	4.01	3.56
	mm	143	80	93	102	90
18*	in	6.11	3.30	4.38	4.16	3.92
	mm	155	84	111	106	100
20*	in	7.33	3.71	5.06	4.57	4.87
	mm	186	94	129	116	124
21*	in	7.33	3.71	5.50	4.57	4.87
	mm	186	94	140	116	124
23	in	4.35	2.65	2.75	3.79	2.28
	mm	110	67	70	96	58
24	in	5.06	X	3.78	4.44	2.75
	mm	129	X	96	113	70
25	in	4.64	2.81	2.81	3.94	2.28
	mm	118	71	71	100	58
26	in	6.53	X	3.75	4.91	3.19
	mm	166	X	95	125	81
27	in	8.22	X	5.50	5.47	4.87
	mm	209	X	140	139	124
28	in	6.53	X	3.66	4.91	3.19
	mm	166	X	93	125	81
29	in	7.03	X	4.38	5.06	4.40
	mm	179	X	111	129	112

* DC dimensions slightly larger.
IMPORTANT: Valves may be mounted in any position, except as noted in specifications table.

Const. Ref. 1, 2

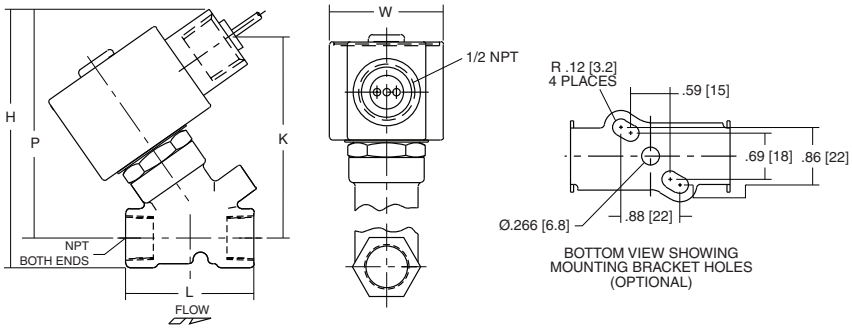

Const. Ref. 13

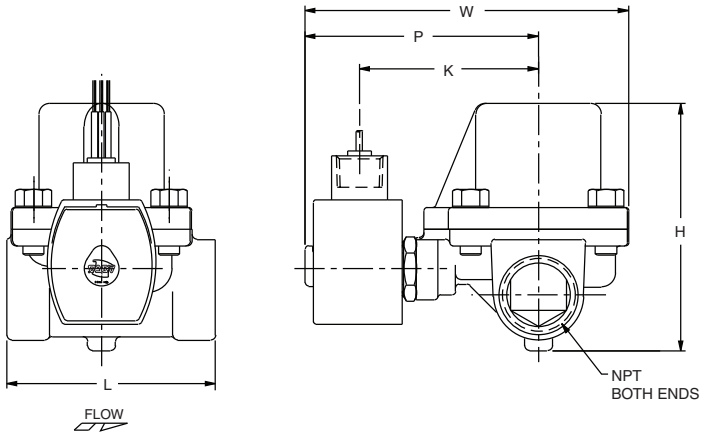

Const. Ref. 5-9, 11, 23 , 25, 37,38, 40-46

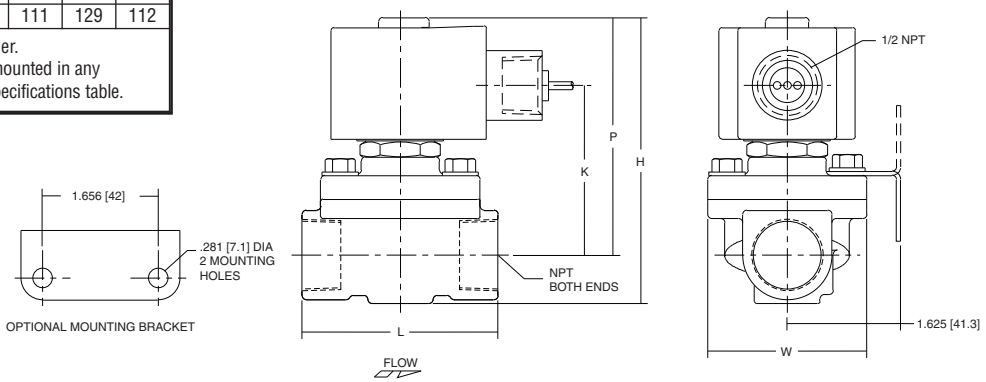

Dimensions: inches (mm)

Const. Ref.		H	K	L	P	W
30	in	8.22	X	5.06	5.47	4.87
	mm	209	X	129	139	124
31	in	5.13	3.19	3.76	4.32	3.27
	mm	130	81	95	110	83
32	in	5.60	3.44	3.66	4.57	3.27
	mm	142	87	93	116	83
33	in	5.92	3.66	4.51	4.80	3.89
	mm	150	93	115	122	99
34	in	6.91	X	3.75	6.09	3.25
	mm	176	X	95	155	83
35	in	7.34	X	3.66	6.34	3.25
	mm	186	X	93	161	83
36	in	7.66	X	4.38	6.56	3.91
	mm	1.95	X	111	167	99
37	in	4.61	2.75	2.81	3.89	2.39
	mm	117	70	71	99	61
38	in	4.61	2.75	2.81	3.89	2.39
	mm	117	70	71	99	61
39	in	5.42	2.31	2.75	4.86	3.80
	mm	138	59	70	123	97
40	in	5.20	3.29	2.81	4.50	2.28
	mm	132	83	71	114	58
41	in	5.13	3.10	3.75	4.32	3.25
	mm	130	79	95	110	83
42	in	6.43	4.40	3.93	5.62	3.25
	mm	163	112	100	143	83
43	in	5.57	3.35	3.66	4.57	3.25
	mm	142	85	93	116	83
44	in	5.90	3.57	4.38	4.79	3.91
	mm	150	91	111	122	99
45	in	5.26	3.17	3.75	4.38	3.84
	mm	134	81	95	111	98
46	in	4.95	3.10	3.84	4.31	2.75
	mm	126	79	98	110	70
47	in	6.43	3.59	3.75	4.81	3.52
	mm	163	91	95	122	90
48	in	6.43	3.59	3.66	4.81	3.73
	mm	163	91	93	122	95
49	in	6.91	3.75	4.38	4.96	4.40
	mm	176	95	111	126	112
50	in	8.13	4.15	5.06	5.37	4.87
	mm	207	105	129	136	124
51	in	8.13	4.15	5.50	5.37	5.18
	mm	207	105	140	136	132

IMPORTANT: Valves may be mounted in any position, except as noted in specifications table.

Const. Ref. 10, 15, 31, 32, 33

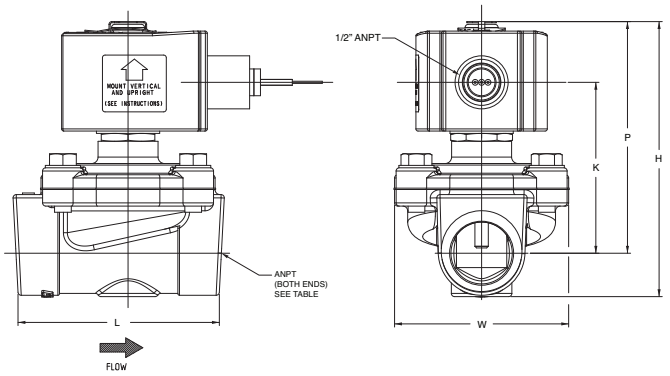

Const. Ref. 24, 34, 35, 36

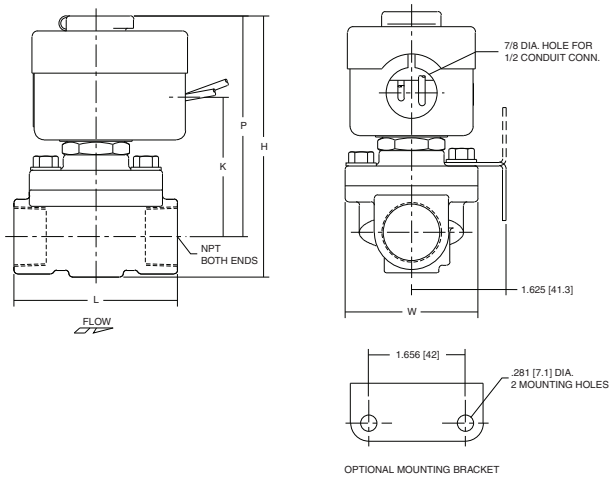

Const. Ref. 12, 16, 26, 28, 47, 48

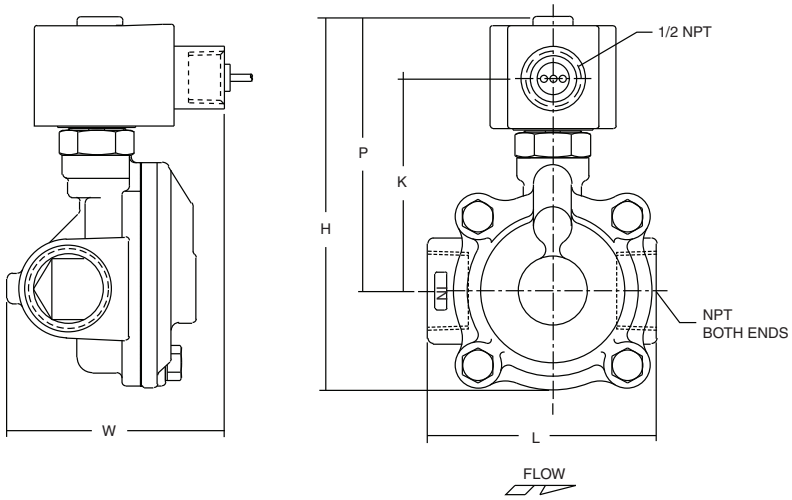

Dimensions: inches (mm)

Const. Ref. 39

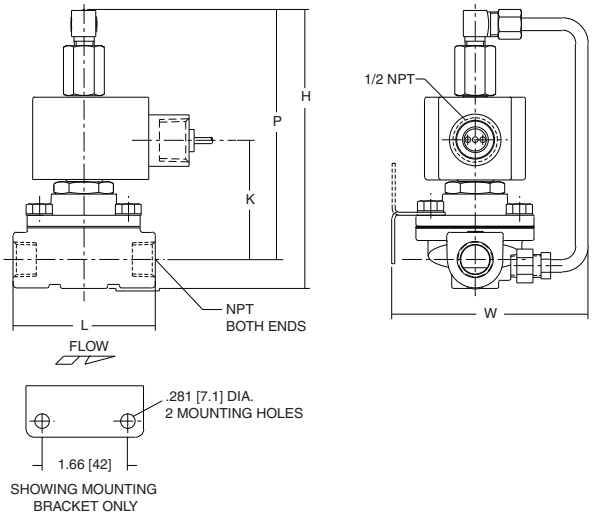

Const. Ref. 18, 29, 49

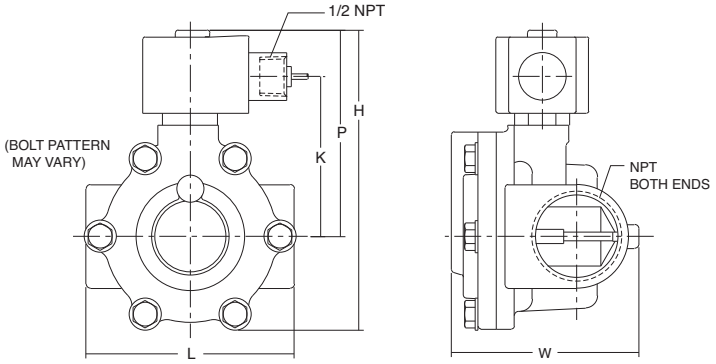

Const. Ref. 20, 21, 27, 30, 50, 51

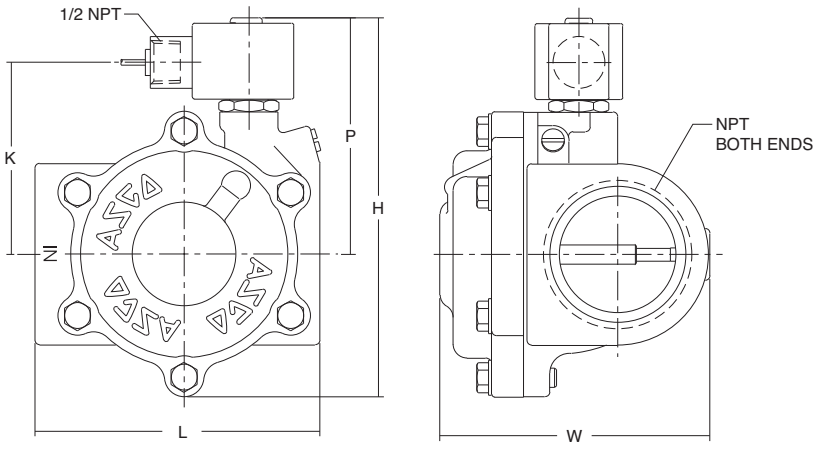

CS-305-170 : Identification sheet

VWTC PROJECT NUMBER:	Iqaluit WWTP	REV:	01
PROJECT NAME:	5000218036	SUBMITTED TO (COMPANY):	
ENGINEER:	G. HÉBERT	SUBMITTED TO (RESPONSIBLE)	
PROJECT MANAGER:	C. BEKAERT	PROJECT NUM REFERENCE.:	
PHONE NUMBER:		LOT NUMBER:	

SUPPLIER	EQPT CODE	EQPT TAG NO	DIA	DESCRIPTION	INFO 1	INFO 2	INFO 3	APPLIC.	NOTE	REV
CHEMLINE	VARFPV348512	PRV-968	DIA: 25 mm (1")	BACKPRESSURE VALVES	TYPE: BACK PRESSURE VALVE | 150#//MANUFACTURER : CHEMLINE//MODEL : SB12A010EU + SGA-005-002-P-G + P025-160-BM//CONNECTION TYPE : UNION SOCKET | 25 mm (1")//BODY : PVC// SEAL | SEAT :EPDM | EPDM// STEM : N/A	(CONFIG. L_U)				1
CHEMLINE	VARFPV348512	PRV-969	DIA: 25 mm (1")	BACKPRESSURE VALVES	TYPE: BACK PRESSURE VALVE | 150#//MANUFACTURER : CHEMLINE//MODEL : SB12A010EU + SGA-005-002-P-G + P025-160-BM//CONNECTION TYPE : UNION SOCKET | 25 mm (1")//BODY : PVC// SEAL | SEAT :EPDM | EPDM// STEM : N/A	(CONFIG. L_U)				1

This page is intentionally left blank

PDF Published September 17, 2014

SB12 Series Back Pressure/Relief Valves

CHEMLINE PLASTICS
SUPERIOR FLOW SOLUTIONS

PVC PP PVDF

CRN Registered as Category C Fittings Consult Chemline

NSF[3] Certified to NSF/ANSI 61

SERIES: SB12

SIZES: 3/8" – 4"

ENDS: True Union Socket, Threaded or ChemFlare™[1] Spigot[2] Bodies with Plain, Socket, Threaded or Flanged ends

DIAPHRAGM: PTFE Bonded EPDM

SEALS: EPDM, FKM (Viton®)



The Chemline SB Series Back Pressure/ Relief Valve has two functions. As a ***back pressure valve***, installed in-line downstream of a pump, the back pressure below the metering pump is maintained. When installed in the branch of a tee it is a ***pressure relief valve***. The valve stays closed until inlet pressure reaches the set pressure which is adjusted by turning the spring tensioning bolt. Inlet pressure acts upward against the piston allowing excess pressure to flow upwards through the orifice.

The SB12 Series has a built-in check valve function, desirable for dosing applications. It is not so sensitive as to open with every pulsation from a metering pump.

features

True Union Ends

- Easy installation and maintenance
- Eliminate chemical leakage problems common with old fashioned threaded connections

Long Cycling Life

- Dynamic seal is PTFE bonded EPDM for high chemical resistance
- This moulded diaphragm is designed for superior sealing and flex life

Superior Performance in Dosing Systems

- Valves are hydraulically designed for very low hysteresis ("backlash") and to eliminate chatter
- Built-in check (non-return) function
- Valve opening depends on inlet pressure only and is uneffected by changes in downstream (back) pressure

CRN Registration numbers by province

- Ontario: OC10134.5
- Newfoundland: OC10134.50
- Alberta: OC10134.52
- Saskatchewan/Manitoba/Quebec: OC10134.56
- New Brunswick: OC10134.57
- Nova Scotia: OC10134.58
- P.E.I.: OC10134.59
- British Columbia: not required

technical

Set Pressure Ranges

- 1/2" to 2" – 5 to 150 psi
- 2-1/2" and 3" – 7.5 to 150 psi
- 2-1/2" to 4" – 4 to 60 psi (optional)
- 4" – 7.5 to 90 psi

Maximum Viscosity

- 120cP is maximum recommended service viscosity

[1] For ChemFlare™ end connectors, consult Chemline.
[2] PP and PVDF spigot ends have DIN dimensions and will butt fuse directly to Chemline PP and PVDF piping systems.
[3] PVC valves with EPDM or FKM (Viton®) seals are certified under NSF/ANSI Standard 61 for contact with drinking water.

09/14 ©Chemline Plastics Limited 2014
Chemline is a registered trade mark of Chemline Plastics Limited

SB12 Series Back Pressure/Relief Valves 1/2" to 2"

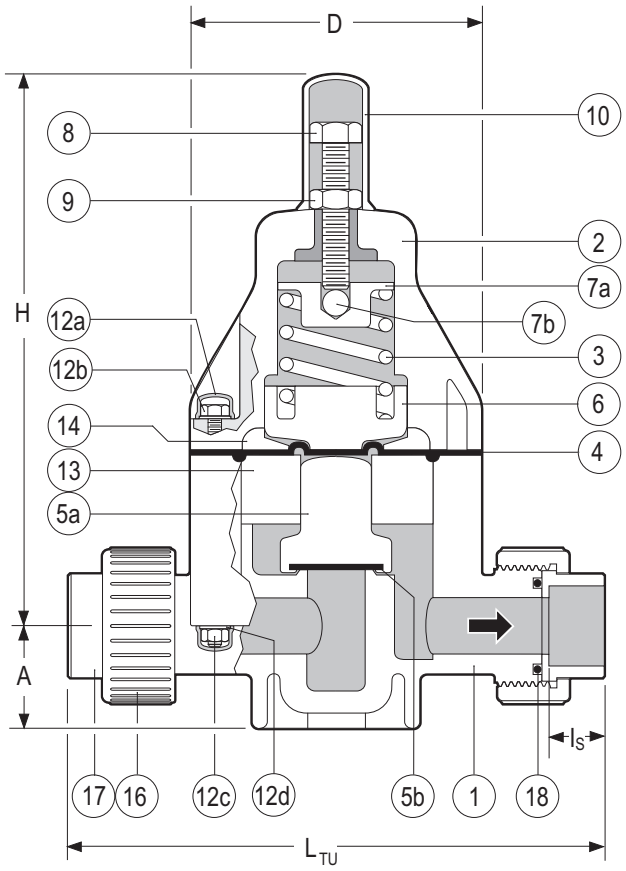

True Union Body

PARTS

▲ Recommended Spare Parts

No.	Part	Pcs.	Materials
1	Body	1	PVC, PP, PVDF
2	Bonnet	1	PPG
3	Spring	1	Galvanized Steel
4▲	Control Diaphragm	1	PTFE bonded EPDM
5a▲	Piston	1	PVC, PP, PVDF
5b▲	Seat	1	EPDM, FPM(Viton®)
6	Lower Spring Retainer	1	PPG
7a	Upper Spring Retainer	1	Cad. Plated Steel
7b	Ball	1	304 SS
8	Spring Tensioning Bolt	1	304 SS
9	Lock Nut	1	304 SS
10	Spring Bolt Cap	1	PE
12a	Bolt/Nut Cap	8/12[1]	PE
12b	Hex Bolt	4/6[1]	304 SS
12c	Hex Nut	4/6[1]	304 SS
12d	Washer	8/12[1]	304 SS
13	Spacer Disc	1	PVC, PP, PVDF
14	Pressure Plate	1	PP
16	Union Nut	2	PVC, PP, PVDF
17	End Connector	2	PVC, PP, PVDF
18▲	Face O-Ring	2	EPDM, FPM(Viton®)

[1] 1/2" size / 3/4" to 2" sizes

OTHER ENDS

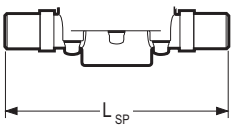

Spigot Body

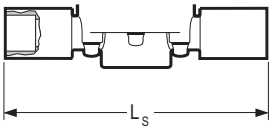

Socket

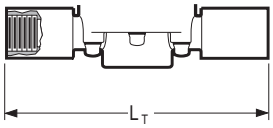

Threaded

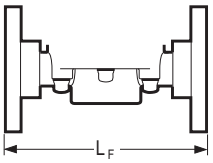

Flanged

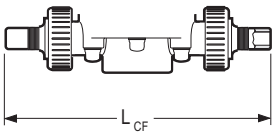

ChemFlare™

DIMENSIONS INCHES

WEIGHTS LB.

Cv VALUES

Size	D	H	PVC A	PVC I_S	PVC L_{TU}[2]	PVC L_{SP}[3]	PVC L_S	PVC L_T	PVC L_F	PVC L_{CF}	PP and PVDF A	PP and PVDF L_{SP}[3]	PP and PVDF L_{TU}[2]	PVC	PP	PVDF	USGPM Flow at 1 psi △P
3/8"	3.2	6.9	1.0	0.6	6.5	5.7	7.4	7.2	4.5	8.2	0.9	5.7	**	1.8	1.5	2.2	2.1
1/2"	3.2	6.9	1.0	0.6	6.8	5.7	8.0	7.8	6.3	8.3[4]	0.9	5.7	7.1	1.9	1.6	2.4	3.0
3/4"	4.2	8.0	1.5	0.7	8.3	6.9	9.3	8.9	7.4	9.7	1.4	6.9	8.4	4.1	3.5	4.6	6.6
1"	4.2	8.0	1.5	0.9	8.5	6.9	9.6	9.3	7.4	10.2	1.4	6.9	8.7	4.2	3.5	4.7	8.7
1-1/4"	5.8	10.3	2.2	1.0	10.9	8.8	11.6	11.2	9.2	13.5	2.1	8.8	10.9	11.0	9.0	12.0	18.0
1-1/2"	5.8	10.3	2.2	1.2	11.1	8.8	12.2	11.5	9.5	–	2.1	8.8	11.2	11.2	9.2	12.2	20.0
2"	5.8	10.3	2.2	1.5	11.3	9.6	12.9	12.0	10.0	–	2.1	8.8	13.2	11.4	9.4	12.4	21.4

[2] True Union bodies come standard with socket ends. Threaded union ends are available. ** Consult Chemline.
[3] Spigot bodies are used for non union socket, threaded or flanged ends. All spigot ends have metric dimensions and the PP and PVDF spigots butt fuse directly to Chemline PP and PVDF piping. [4] Tube size can be reduced to 1/4" tube, LCF = 7.74" for 1/4", 8.26" for 3/8".

MAXIMUM PRESSURES PSI

Size	PVC 20°C 68°F	PVC 30°C 86°F	PVC 40°C 104°F	PVC 50°C 122°F	PP 30°C 86°F	PP 40°C 104°F	PP 50°C 122°F	PP 60°C 140°F	PP 70°C 158°F	PVDF 30°C 86°F	PVDF 50°C 122°F	PVDF 70°C 158°F	PVDF 80°C 176°F	PVDF 90°C 194°F	PVDF 100°C 212°F
1/2"– 2"	150	105	60	15	150	90	60	37.5	15	150	100	60	45	30	15

Temperature Ranges: PVC 0 to 50°C (32 to 122°F), **PP** 10 to 70°C (50 to 158°F), **PVDF** –30 to 100°C (–22 to 212°F).

SB12 Series Back Pressure/Relief Valves 1/2” to 2”

pressure loss nomogram for SB12 valves 3/8” to 2”

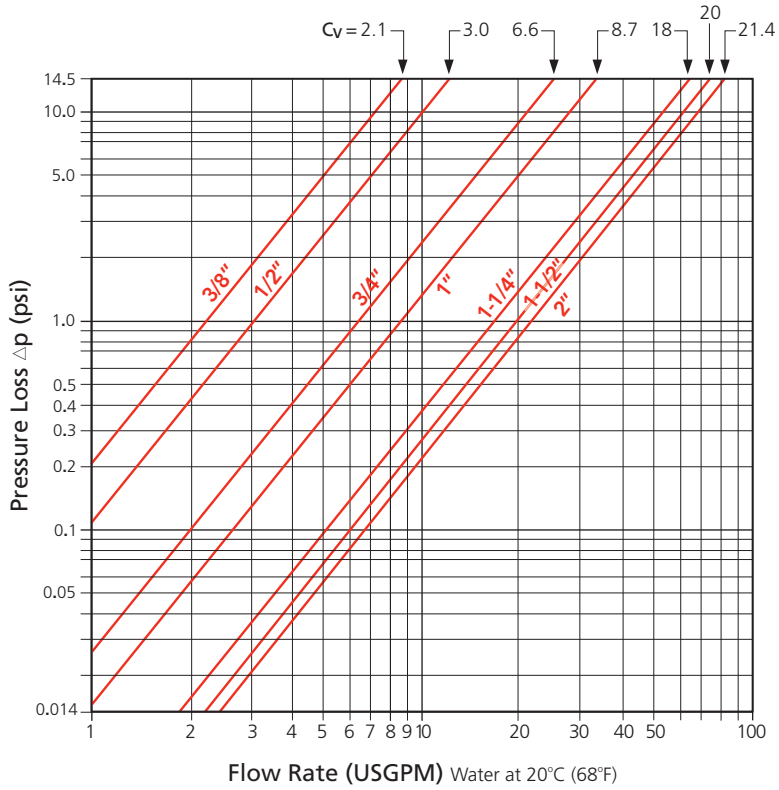

typical dosing system schematic

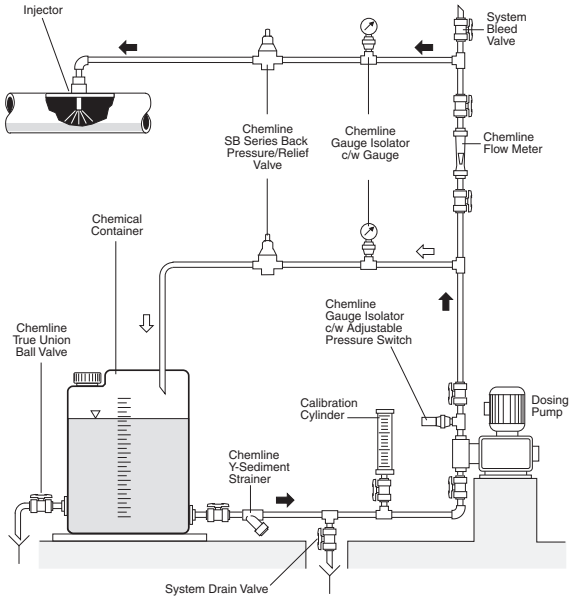

application of pressure relief valves

Constant System Pressure

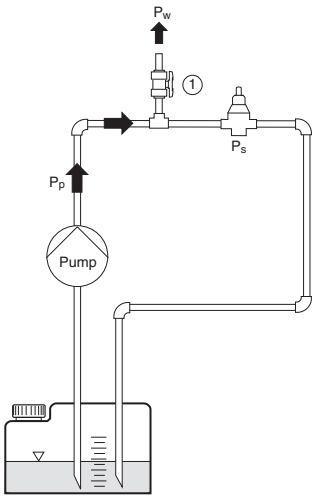

$P_p \geq P_w$
$P_p \geq P_s$ → valve opens
$P_p \leq P_s$ → valve closed

Consumer 1 and/or 2 Open, Valve Closes

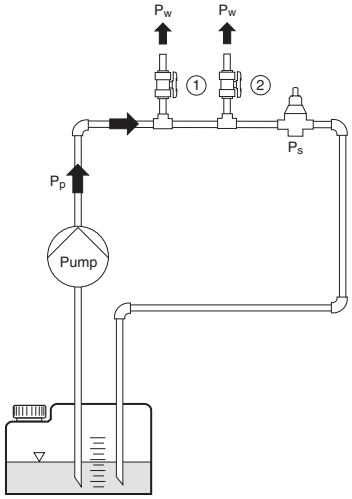

$P_p \geq P_s$ → valve opens
$P_p \leq P_s$ → valve closed

Non-Return Valve

Container 1 is located above the pump

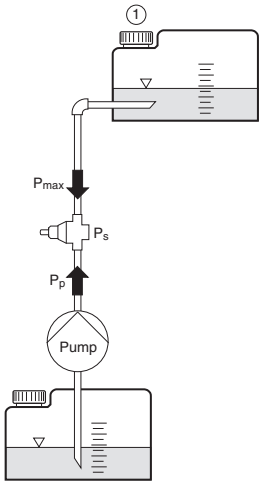

$P_s \geq P_{max}$
$P_p \geq P_s$ → valve opens
$P_p \leq P_s$ → valve closed

Overflow Valve

Pressure of container or application system should not exceed the maximum pressure value

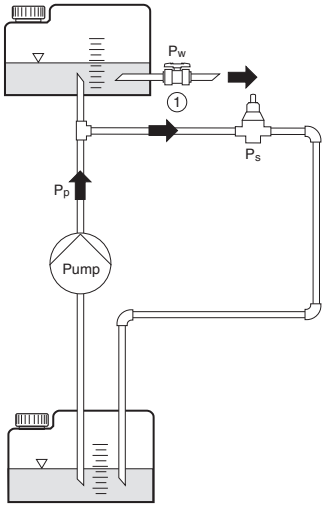

$P_s \leq P_w$
$P_p \geq P_s$ → valve opens
$P_p \leq P_s$ → valve closed

P_w = Working Pressure
P_p = Pump Pressure
P_s = Set Pressure

SB12 Series Back Pressure/Relief Valves 1/2" to 2"

working pressure vs. flow rate

The curves show the relationship between the working pressure and the approximate flow rate through the valve for water at 20°C (68°F) . These values will vary depending on:

- The configuration of the piping and the pressure losses associated with it
- The fluid if not water at 20°C (68°F)
- Whether the pressure is rising or falling, hysteresis is approximately 4 psi for 1/2" to 2" valves. For valves 2-1/2" to 4", hysteresis is approximately 14.5 psi.

operation examples

1. The valve is set closed at 100 psi. At a pressure increase of 10 psi, a flow of approximately 1.0 USGPM will be reached.
   - set pressure = 100 psi
   - working pressure = 110 psi
   - opening pressure = approximately 104 psi
2. The valve is set closed at 50 psi. At a pressure increase of 10 psi, a flow of approximately 1.0 USGPM will be reached.
   - set pressure = 50 psi
   - working pressure = 60 psi
   - opening pressure = approximately 54 psi

3/8" Valves

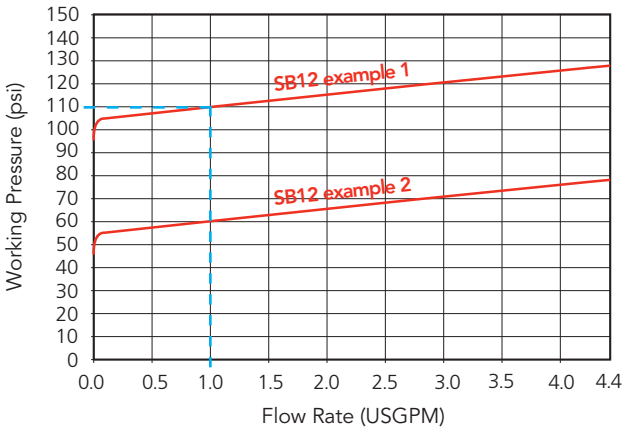

1/2" Valves

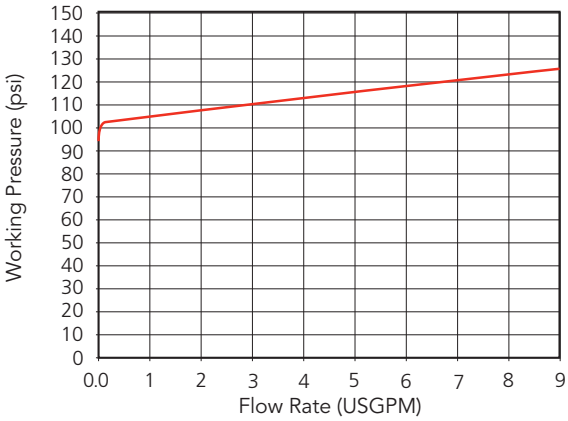

3/4" Valves

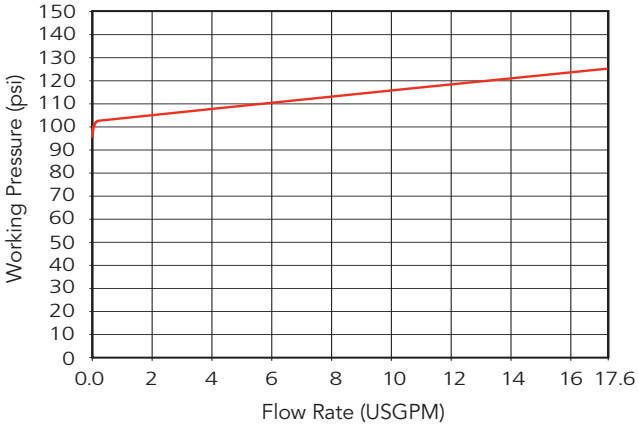

1" Valves

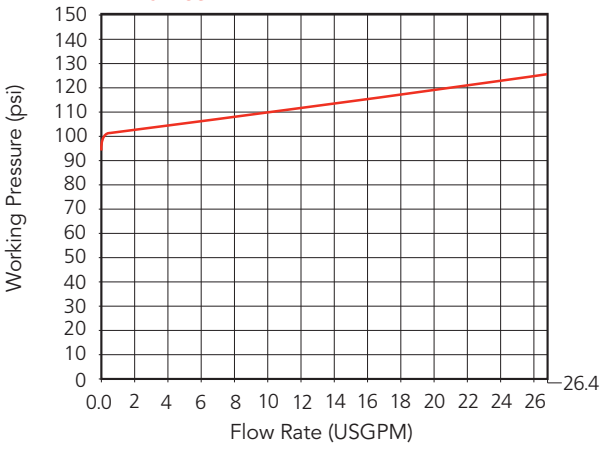

1-1/4" Valves

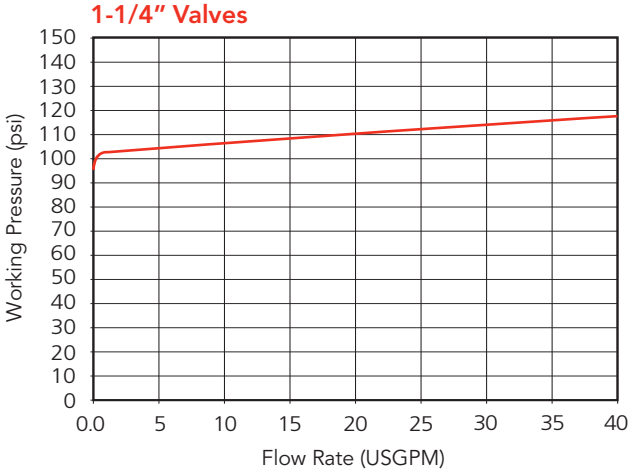

1-1/2" Valves

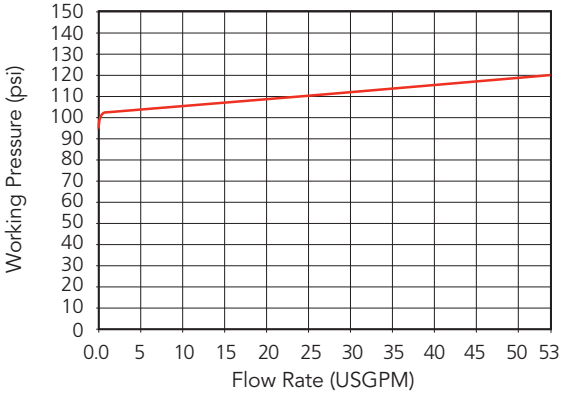

2" Valves

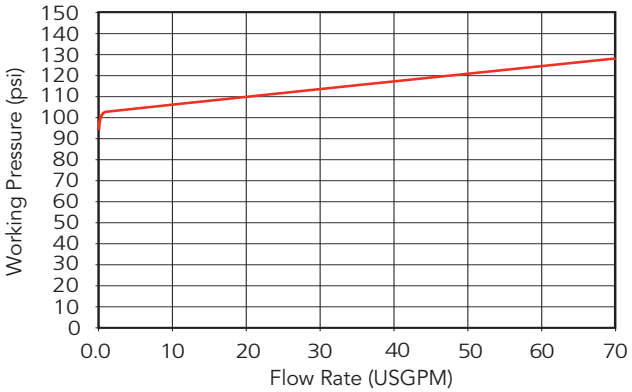

SB12 Series Back Pressure/Relief Valves 2-1/2" to 4"

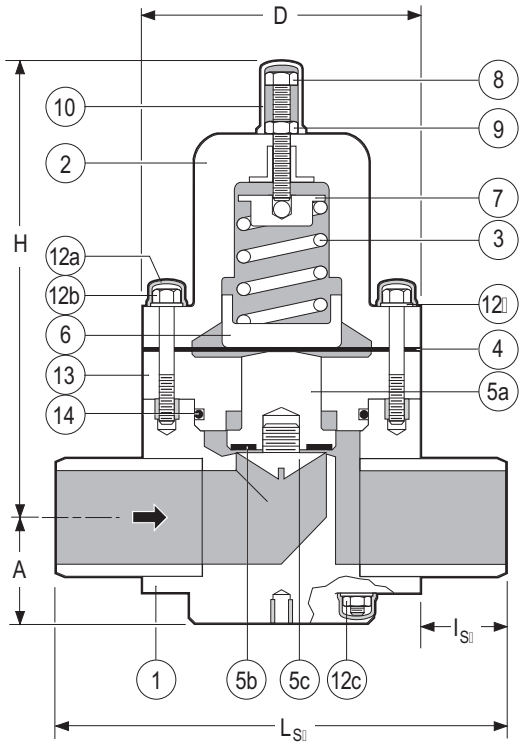

Spigot Body

PARTS

▲ Recommended Spare Parts

No.	Part	Pcs.	Materials
1	Body	1	PVC, PP, PVDF
2	Bonnet	1	PPG
3	Spring	1	Galvanized Steel
4▲	Control Diaphragm	1	PTFE bonded EPDM
5a▲	Piston	2	PVC, PP, PVDF
5b▲	Seat	1	EPDM, FPM(Viton®)
5c▲	Seat Retainer	1	PVC, PP, PVDF
6	Lower Spring Retainer	1	PPG
7	Upper Spring Retauner	1	304 SS
8	Spring Tensioning Bolt	1	304 SS
9	Lock Nut	1	304 SS
10	Spring Bolt Cap	1	PE
12a	Hex Bolt/Nut Cap	20	PE
12b	Hex Bolt/Stud	12[1]	304 SS
12c	Hex Nut	20	304 SS
12d	Washer	20	304 SS
13	Spacer Disc	1	PVC, PP, PVDF
14	Spacer O ring	1	EPDM, FPM(Viton®)

[1] 2 large upper bolts, 2 shorter lower bolts, 8 studs

OTHER ENDS

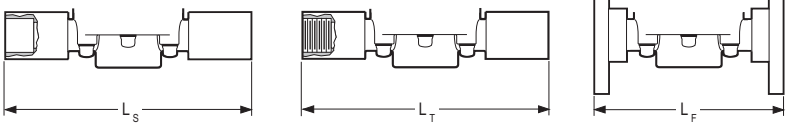

Socket Threaded Flanged



ChemFlare™ Ends
- For connection to PFA tube. Leak-free connections for difficult services such as sodium hypochlorite

DIMENSIONS INCHES

WEIGHTS LB.

Cv VALUES

Size	PVC, PP & PVDF A	D	H	L_{SP}[2]	I_{SP}	PVC L_F	PVC	PP	PVDF	USGPM Flow at 1 psi △P
2-1/2"	2.7	6.9	11.1	11.2	2.1	12.2	20.9	15.4	24.6	41
3"	3.0	7.9	12.2	14.2	3.1	15.0	26.4	23.8	30.8	63
4"	3.7	9.8	14.2	16.5	3.3	16.9	33.0	26.4	37.4	98

[2] Plain spigot ends in PP & PVDF may be butt fused directly to Chemline PP & PVDF piping systems. Weights based on spigot bodies.

MAXIMUM PRESSURES PSI

Size	PVC 20°C 68°F	30°C 86°F	40°C 104°F	50°C 122°F	PP 20°C 68°F	30°C 86°F	40°C 104°F	50°C 122°F	60°C 140°F	70°C 158°F	PVDF 30°C 86°F	50°C 122°F	70°C 158°F	80°C 176°F	90°C 194°F	100°C 212°F
2-1/2"– 4"	150	90	44	15	150	116	90	60	37.5	15	150	90	55	40	30	15

Temperature Ranges: PVC 0 to 50°C (32 to 122°F), **PP** 10 to 70°C (50 to 158°F), **PVDF** –30 to 100°C (–22 to 212°F).

ORDERING EXAMPLE

Chemline Back Pressure/ Relief Valves	SB12	A	005	V	U
Body Material	**A** – PVC	**B** – PP	**K** – PVDF		
Size	**003** – 3/8" **010** – 1" **020** – 2"	**005** – 1/2" **012** – 1-1/4" **025** – 2-1/2"	**007** – 3/4" **015** – 1-1/2" **030** – 3"	**040** – 4"		
Elastomers	**E** – EPDM	**V** – FPM (Viton®)				
Ends	**S** – Socket **CFx** – ChemFlare™	**T** – Threaded	**F** – Flanged **Blank** – Spigot (Butt)	**U** – Union Socket		

Example: Chemline SB 12 Series, PVC, 1/2" diameter, FPM (Viton®) seals, Union socket ends.
x = 4 for 1/4", **6** for 3/8", **8** for 1/2", **12** for 1" ID tube connections.

OPTIONS

- 4 to 60 psi Pressure Range springs for 2-1/2" to 4" valves
- **Integral Pressure Gauge** – for inlet and/or outlet
- Bodies in 316 Stainless Steel and PTFE



Optional Pressure Gauge
- For inlet and/or outlet

SB12 Series Back Pressure/Relief Valves 2-1/2" to 4"

working pressure vs. flow rate

• Whether the pressure is rising or falling, hysteresis is approximately 14.5 psi for 2-1/2" to 4" valves

2-1/2" Valves / 4 to 60 psi set pressure range

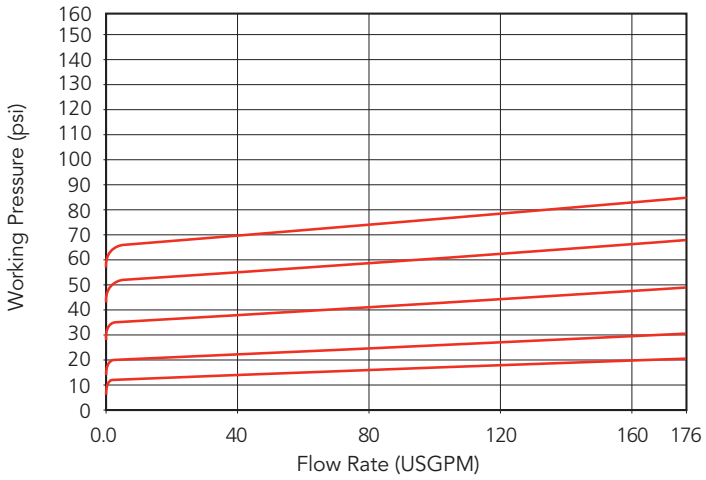

2-1/2" Valves / 7.5 to 150 psi set pressure range

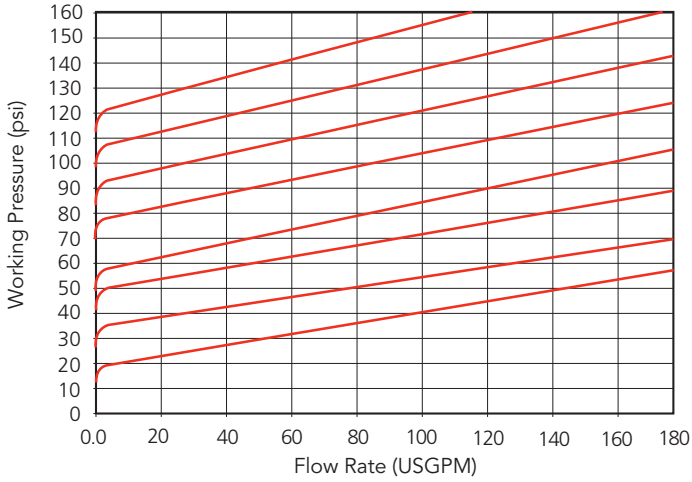

3" Valves / 4 to 60 psi set pressure range

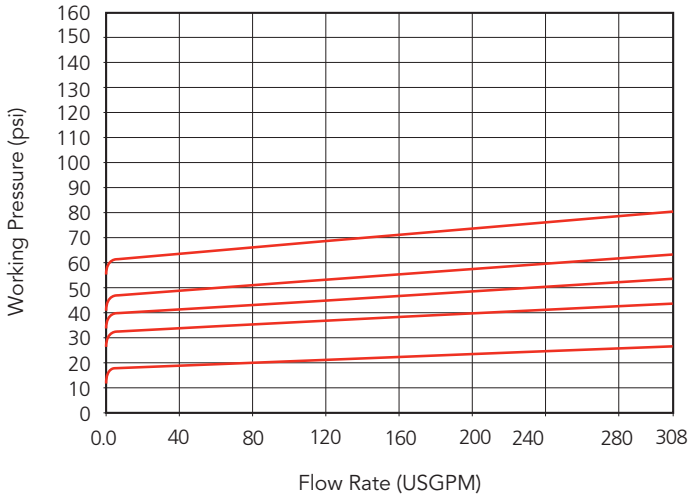

3" Valves / 7.5 to 150 psi set pressure range

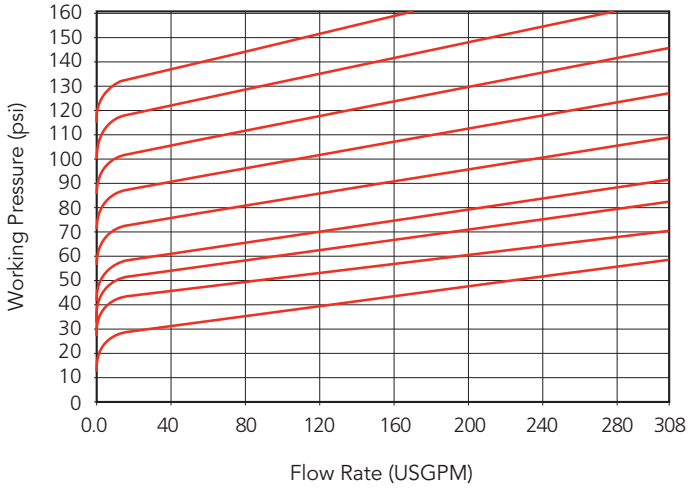

4" Valves / 4 to 60 psi set pressure range

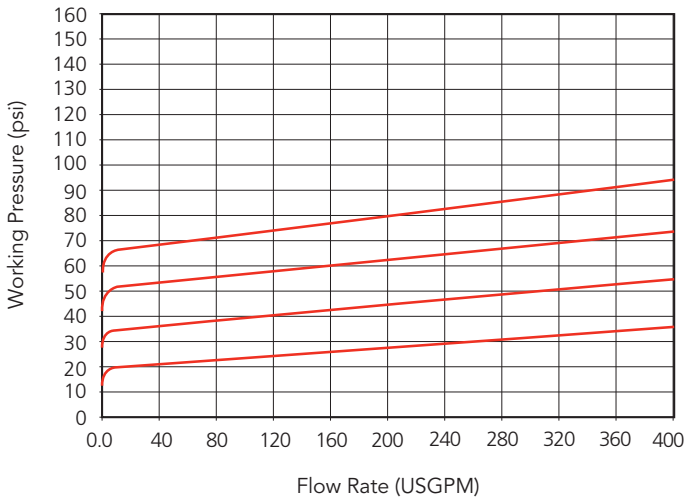

4" Valves / 7.5 to 90 psi set pressure range

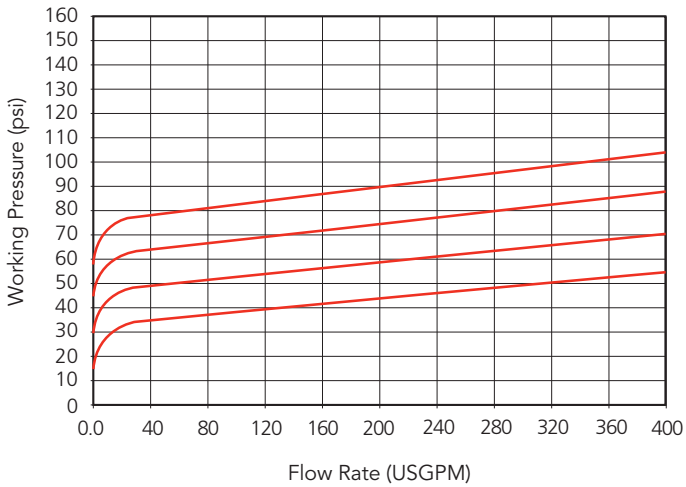

55 Guardsman Road, Thornhill, ON, L3T 6L2, Canada | ISO 9001:2008 Certified
tel.905.889.7890 | fax.905.889.8553 | request@chemline.com | chemline.com

PDF Published June 23, 2014

Gauge Isolators

CHEMLINE PLASTICS
SUPERIOR FLOW SOLUTIONS

PVC PP PVDF

CRN Registered Consult Chemline

NSF[4] Certified to NSF/ANSI 61

SERIES: SG

INLET CONNECTION: 1/4" or 1/2" Threaded[1]

INSTRUMENT CONNECTION: 1/4" or 1/2" Threaded

DIAPHRAGM: PTFE



[1] Other available inlet connections are 1/2" socket or 1/2" to 1" flanged.
[2] Other fluids are available for special applications such as chlorine service.
[3] Glass reinforced polypropylene.
[4] PVC isolators are certified under NSF/ANSI Standard 61 for contact with drinking water.

Chemline SG Series Gauge Isolators allow inexpensive pressure gauges, or any other pressure instrument to be used in corrosive services. The upper chamber (gauge side) is filled with a stable fluid such as glycol or glycerine[2]. A diaphragm separates it from the lower chamber which receives the media under pressure.

The 1/2" gauge connection allows use of the popular 4" and 4-1/2" diameter gauges. Pressure switches or transmitters may also be installed. Customers can easily fill isolators and install their own gauges.

features

Easy to Mount Gauges

- It is easy to fill an isolator and field mount a gauge. No special equipment is required.
- Will accept popular 4" and 4-1/2" diameter gauges

Provision for Fill Port

- Housing may be drilled and tapped by Chemline or customer for a threaded fill port. This is used for filling isolator using a vacuum filling station

High Chemical Resistance

- Choice of body materials for a wide range of applications
- PTFE bonded EPDM dished diaphragm for high chemical resistance and sensitivity

Heavy Duty Design for Safety

- PPG[3] top chamber
- Heavy wall connection ports

CRN Registration number by province

- Ontario: OH16085.5

Optional Gauges

- Isolators are available alone or with gauge mounted and prefilled with glycol[2]

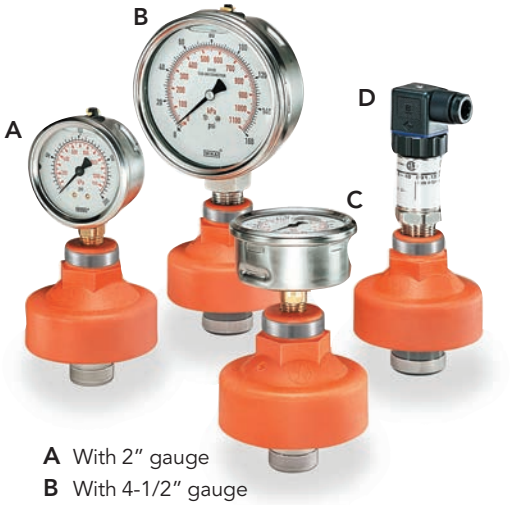

A With 2" gauge
B With 4-1/2" gauge
C With 2" back mount gauge
D With pressure transmitter

06/14 ©Chemline Plastics Limited 2014
Chemline is a registered trade mark of Chemline Plastics Limited

Gauge Isolators

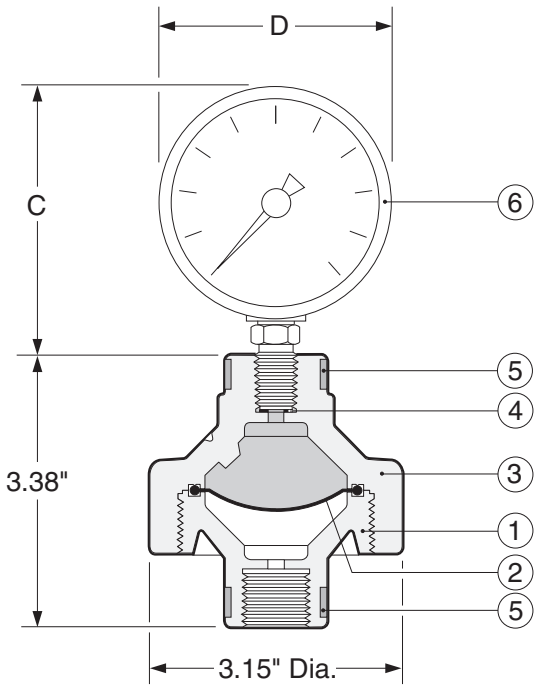

PARTS

No.	Part	Pcs.	Materials
1	Body	1	PVC, PP, PVDF
2	Diaphragm	1	PTFE
3	Bonnet	1	PPG[1]
4	Gasket	1	EPDM
5	Stainless Steel Bands	2	304 SS
6	Optional Gauge	1	See below

[1]PPG = Glass reinforced polypropylene

OPTIONAL GAUGES

- Chemline offers the gauges listed below mounted to isolator and prefilled with glycol, glycerine or special fluid for chlorine applications. These gauges have dials and cases filled with either glycol (standard), glycerine or silicon for corrosion resistance and dampening.
- Chemline SG gauge isolators are not recommended for vacuum applications. They will not affect the gauge accuracy as low as approximately 3 psi. The accuracy depends on the process conditions and the gauge installed on it.

OTHER OPTIONS

- **Flanged** inlet connections
- **Threaded Fill Port** – drilled, tapped and plugged
- Chemline will mount any pressure instrument supplied free issue by customer

DIMENSIONS (Gauge Isolator with optional gauge installed) INCHES

Optional Gauge Ordering No.	Gauge Diameter	Gauge Connection	Housing	Bourdon Tube	Window	Accuracy	Dimensions C	Dimensions D(max.)
P025-xx	2-1/2"	1/4"	316 SS	Brass	Polycarbonate	±1.5% of span	3.1	2.5
P025-xx-SS	2-1/2"	1/4"	316 SS	316 SS	Polycarbonate	±1.5% of span	3.1	2.5
P025-xx-SS/BM	2-1/2" Back Mount	1/4"	316 SS	316 SS	Polycarbonate	±1.5% of span	1.6	2.5
P025-xx-BM	2-1/2" Back Mount	1/4"	316 SS	Brass	Polycarbonate	±1.5% of span	1.6	2.5
P040-xx-SS	4"	1/2"	316 SS	316 SS	Safety Glass	±1% of span	4.5	4.0
P045-xx-SS	4-1/2"	1/2"	PBTP Plastic[2]	316 SS	Acrylic	±0.5% of span	6.3	5.8

xx denotes the maximum gauge pressure i.e., 30, 60, 100, 160 or 200 psi. See data page for recommended working pressures.
[2] PBTP = glass filled polyester.

WORKING PRESSURES PSI

WEIGHTS

Material	10 – 20°C 50 – 68°F	30°C 86°F	40°C 104°F	50°C 122°F	60°C 140°F	70°C 158°F	80°C 176°F	90°C 194°F	100°C 212°F	120°C 248°F	Net Weights Pounds[3]
PVC	150	100	80	45	15	–	–	–	–	–	1.0
PP	150	125	100	80	65	45	–	–	–	–	0.7
PVDF	150	150	150	125	105	85	70	60	45	30	1.3

Temperature Ranges: PVC 0 to 60°C (32 to 140°F), **PP** 10 to 80°C (50 to 176°F), **PVDF** –30 to 120°C (–22 to 248°F).
NR = Not Recommended. [3] Weights are for unfilled 1/2" x 1/2" isolators without gauges. 1/2" x 1/4" isolators are 20% lighter.

ORDERING EXAMPLE

Chemline Gauge Isolators	SG	A	005-	002	P	G
Body Material	**A** – PVC	**B** – PP	**K** – PVDF			
Inlet Size	**002** – 1/4"	**005** – 1/2"(Standard)				
Instrument Connection	**002** – 1/4"	**005** – 1/2"				
Diaphragm	**P** – PTFE bonded EPDM					
Filling & Mounting	**G** –Add only if isolator is supplied filled with glycol and gauge or pressure instrument is mounted by Chemline. Separate gauge item numbers are listed above.					

Example: Chemline SG Series Gauge Isolator, PVC, 1/2" x 1/4" FNPT inlet x instrument connections, PTFE diaphragm.

CHEMLINE PLASTICS
SUPERIOR FLOW SOLUTIONS
55 Guardsman Road, Thornhill, ON, L3T 6L2, Canada | ISO 9001:2008 Certified
tel.905.889.7890 | fax.905.889.8553 | request@chemline.com | chemline.com

Project name:	IQALUIT
Project#:	5000218036
Document #:	5000218036_DS_0006_PM_VWT
by:	BB
chkd:	GH
appvd:	CB

SKID DUPLEX

CALIBRATION CYLINDER

OIM manual section: 4.3.6.4

This page is intentionally left blank

CS-500-100 : Identification sheet

VWTC PROJECT NUMBER:	Iqaluit WWTP	REV:	01
PROJECT NAME:	5000218036	SUBMITTED TO (COMPANY):	
ENGINEER:	G. HÉBERT	SUBMITTED TO (RESPONSIBLE)	
PROJECT MANAGER:	C. BEKAERT	PROJECT NUM REFERENCE.:	
PHONE NUMBER:		LOT NUMBER:	

SUPPLIER	EQPT CODE	EQPT TAG NO	DIA	DESCRIPTION	INFO 1	INFO 2	INFO 3	APPLIC.	NOTE	REV
PRIMARY FLUID	PUSPPV200284	CC-04-990	L: 23,16 " X W: 6,906 "	CALIBRATION CYLINDER	CALIBRATION CYLINDER/MANUFACTURER: PRIMARY FLUID/MODEL: PV2-10000	N/A	N/A			1

This page is intentionally left blank

ACCUDRAW® Calibration Cylinders



Polypropylene


PVC


Glass



- PVC with removable "O" ring sealed top for easy cleaning

- yellow polypropylene level indicator float for high visibility

ACCUDRAW® has been developed for the accurate calibration of metering pumps. Standard features include:

- translucent
- chemical resistant
- break resistant
- threaded, socket or flanged
- colored graduations and lettering
- PVC has dual scale USGPH & ml
- PVC sizes 100 - 20000 ml
- POLY sizes 100 - 4000 ml
- POLY meets ISO standards
- Glass sizes 100 - 20000 ml
- custom designs available

For detailed product information visit our website: primaryfluid.com

PRIMARY FLUID SYSTEMS INC.
Call Toll Free 1-800-776-6580
Tel (905) 333-8743 Fax (905) 333-8746
E-Mail: primary@primaryfluid.com
www.primaryfluid.com

ACCUDRAW® Calibration Cylinders

"For Accuracy That Counts"

For complete product information visit our website: primaryfluid.com



Flanged: Glass, PVC



Flanged: PVC

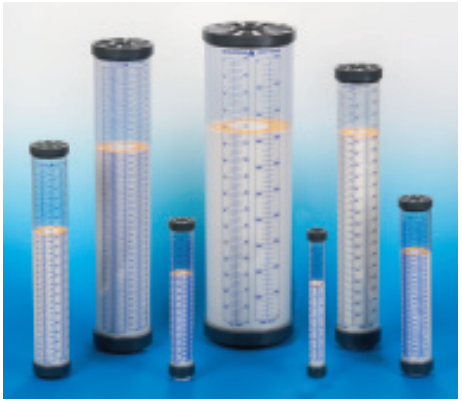

PV#4

Sizing and Ordering Information:

ACCUDRAW Standard Materials of Construction

AC = All polypropylene construction (see below for options)
PV = All polyvinylchloride construction (see below for options)
ACS = Glass*

Note: Cylinders are NOT pressure vessels

Example: AC#1-1000B
AC = PP (polypropylene)
#1 = Bottom threaded connection only
1000 = 1000 ml
B = BSP Thread

e.g. Part # AC #1 - 1000 B

Type:
AC = Polypropylene
PV = PVC
ACS = Glass

Style:
1 = Bottom threaded conn. only
2 = Top and Bottom threaded conn.
3 = Bottom threaded conn. c/w removable vented dust cap
4 = Top/Bottom threaded conn. c/w removable "O" ring sealed top and float ring level indicator
**** Glass calibration cylinders available in Style 2 only***

Graduation Scale:
PP - ml only
PVC - ml and GPH
Glass - ml only

Std. connection is NPT thread
Optional: add suffix as follows
S = Socket weld connection (PVC only)
GTV = Glass/TFE construction
GKV = Glass/PVDF construction
GCV = Glass/CPVC construction
GSV = Glass/SS construction
B = BSP Thread
F = Flanged

Substitute **E** for **V** for **EPDM** wetted "O" ring seal

Sizes:		**Material**
100 = 100 ml	(1.6 GPH)	PP, PVC, Glass
250 = 250 ml	(4 GPH)	PP, PVC, Glass
500 = 500 ml	(8 GPH)	PP, PVC, Glass
1000 = 1000 ml	(16 GPH)	PP, PVC, Glass
2000 = 2000 ml	(32 GPH)	PP, PVC, Glass
4000 = 4000 ml	(64 GPH)	PP, PVC, Glass
6000 = 6000 ml		Glass only
8000 = 8000 ml		Glass only
10000 = 10000 ml	(160 GPH)	PVC, Glass
20000 = 20000 ml	(320 GPH)	PVC, Glass

Custom sizes and materials available.

ACCUDRAW® Calibration Cylinders

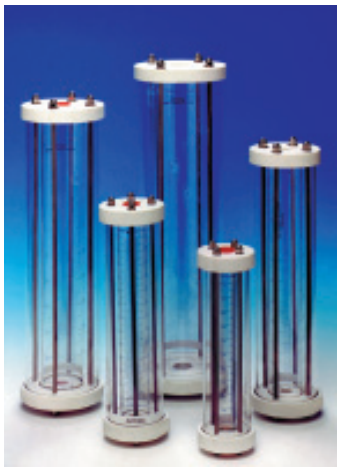

ACCUDRAW® Glass Calibration Cylinders ***are ideal for the calibration of metering pumps, batch systems and for handling hazardous chemicals.***

- **volumes calibrated in ml**
- **construction materials available include TFE, PVDF, CPVC and 316 stainless steel**
- **sealing "O" rings are Viton and Buna N**
- **outer shield of acrylic construction**
- **port connections in NPT, metric or flanged**
- **standard sizes 100 - 20,000 ml**
- **custom designs available to your specifications**

Sizing and Ordering Information: Glass Construction

Size	Conn.	Model # For TFE End Flgs	Model # For 316 S/S End Flgs	Model # For PVDF End Flgs	Model # For CPVC End Flgs
100 ml	1/2" NPT	ACS#2-100-GTV	ACS#2-100-GSV	ACS#2-100-GKV	ACS#2-100-GCV
250 ml	1/2" NPT	ACS#2-250-GTV	ACS#2-250-GSV	ACS#2-250-GKV	ACS#2-250-GCV
500 ml	1/2" NPT	ACS#2-500-GTV	ACS#2-500-GSV	ACS#2-500-GKV	ACS#2-500-GCV
1000 ml	1/2" NPT	ACS#2-1000-GTV	ACS#2-1000-GSV	ACS#2-1000-GKV	ACS#2-1000-GCV
2000 ml	1 " NPT	ACS#2-2000-GTV	ACS#2-2000-GSV	ACS#2-2000-GKV	ACS#2-2000-GCV
4000 ml	1" NPT	ACS#2-4000-GTV	ACS#2-4000-GSV	ACS#2-4000-GKV	ACS#2-4000-GCV
6000 ml	1" NPT	ACS#2-6000-GTV	ACS#2-6000-GSV	ACS#2-6000-GKV	ACS#2-6000-GCV
8000 ml	2" NPT	ACS#2-8000-GTV	ACS#2-8000-GSV	ACS#2-8000-GKV	ACS#2-8000-GCV
10000 ml	2" NPT	ACS#2-10000-GTV	ACS#2-10000-GSV	ACS#2-10000-GKV	ACS#2-10000-GCV
20000 ml	2" NPT	ACS#2-20000-GTV	ACS#2-20000-GSV	ACS#2-20000-GKV	ACS#2-20000-GCV

Cylinders are bolted together using stainless steel rods with Viton "O" rings for the glass seal and Buna N "O" rings for the acrylic seal. For EPDM "O" rings, subsititute "E" for "V".

Options available: (may affect price and delivery)

- **different type or size of thread connection, different "O" ring material, different flange material**

Descriptions:

TFE, PVDF and CPVC End Flanges:
Glass cylinder with acrylic outer shield and 3/4" thick (TFE, PVDF or CPVC) end flanges

316 S/S End Flanges:
Glass cylinder with acrylic outer shield and 1/2" thick 316 Stainless Steel end flanges

Glass Dimensional Information

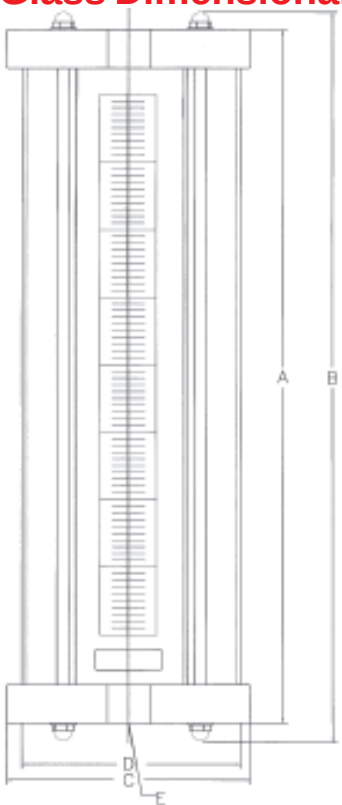

Note: Cylinders are <u>not</u> pressure vessels.

Dimensions subject to change without notice.

Glass cylinders with TFE, PVDF or CPVC End Flanges

Size ml	DIV ml	A inches	B inches	C inches	D inches	E thread
100	1.00	10.00	11.00	3.00	2.50	1/2" FNPT
250	2.00	12.75	13.50	3.50	3.00	1/2" FNPT
500	5.00	14.50	15.50	4.00	3.50	1/2" FNPT
1000	10.00	16.75	17.75	4.75	4.25	1/2" FNPT
2000	20.00	18.75	19.75	5.50	5.00	1" FNPT
4000	25.00	22.50	23.50	6.50	6.00	1" FNPT
6000	50.00	20.13	21.16	8.00	7.50	1" FNPT
8000	50.00	24.63	25.66	8.00	7.50	2" FNPT
10000	50.00	30.13	31.16	8.00	7.50	2" FNPT
20000	200.00	43.25	44.25	9.00	8.50	2" FNPT

Glass cylinders with 316 Stainless Steel End Flanges

Size ml	DIV ml	A inches	B inches	C inches	D inches	E thread
100	1.00	9.50	10.50	3.00	2.50	1/2" FNPT
250	2.00	12.25	13.00	3.50	3.00	1/2" FNPT
500	5.00	14.00	15.00	4.00	3.50	1/2" FNPT
1000	10.00	16.25	17.25	4.75	4.25	1/2" FNPT
2000	20.00	18.25	19.25	5.50	5.00	1" FNPT
4000	25.00	22.00	23.00	6.50	6.00	1" FNPT
6000	50.00	19.63	20.66	8.00	7.50	1" FNPT
8000	50.00	24.13	25.16	8.00	7.50	2" FNPT
10000	50.00	29.63	30.66	8.00	7.50	2" FNPT
20000	200.00	42.75	43.75	9.00	8.50	2" FNPT

ACCUDRAW® Calibration Cylinders

Installations

Conversion Factors
1 ml = 1 cc
1000 ml = 1 liter
ml/sec X 60 = ml/min
1 US gal/min X 0.063 = liters/sec
1 US gal = 3.786 liters

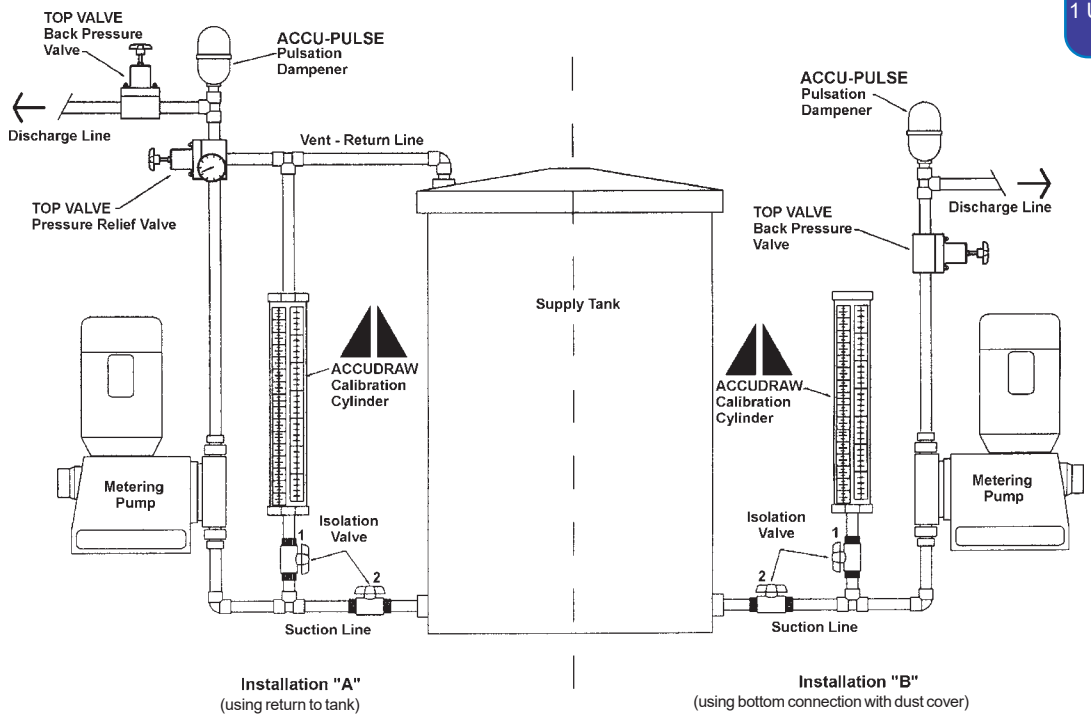

Other available products at www.primaryfluid.com

TOP VALVE Back Pressure/Pressure Relief



- *long life diaphragm*
- *range of 15 - 350 PSIG*
- *air release, optional gauge port*
- *PVC, CPVC, PVDF, Teflon, polypropylene, stainless, Alloy 20 and Hastelloy C*
- *7 sizes 1/4" - 2" NPT*
- *color coded handles indicate size*
- *higher pressure & temperature available*

PFS Corporation Stops



Designed to inject chemical into the center stream of process.

- *isolation valve allows for ease of maintenance*
- *available in 6 materials of construction*
- *wetted components have comparable or greater chemical resistance than quill construction material*
- *standard and custom lengths available*
- *connection in NPT, metric or flanged*

Custom built in other sizes & materials.

ACCUPULSE Pulsation Dampeners



Designed to remove pulsatingflows from positive displacement pumps.

- *increase system efficiency and pump life; decrease maintenance and costs*
- *protect pipes, meters, valves and instrumentation from pulsation and vibration*
- *ensure meter accuracy, longevity and repeatability*
- *prevent foaming and splashing*
- *extensive range of materials and sizes with lightweight, compact design*

Distributed By:

PRIMARY FLUID SYSTEMS INC.

Call Toll Free 1-800-776-6580
Tel: (905) 333-8743
Fax: (905) 333-8746

Distribution Territories Available

E:Mail: primary@primaryfluid.com
www.primaryfluid.com

® Registered Trade Mark of Primary Fluid Systems

ACCUDRAW®

PV#1

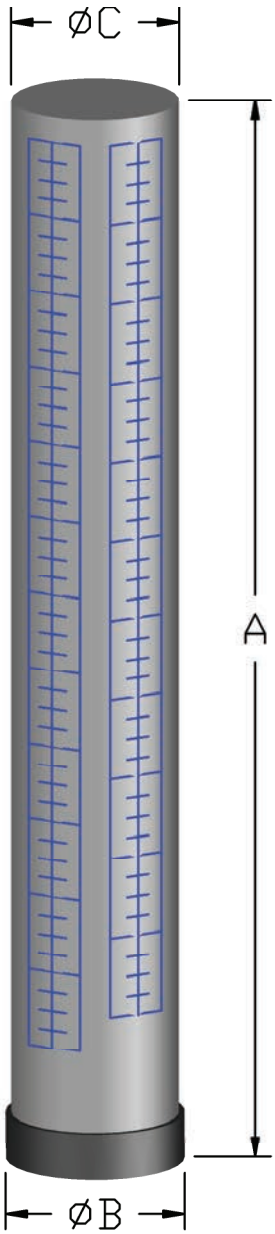

PV#2
PV#4

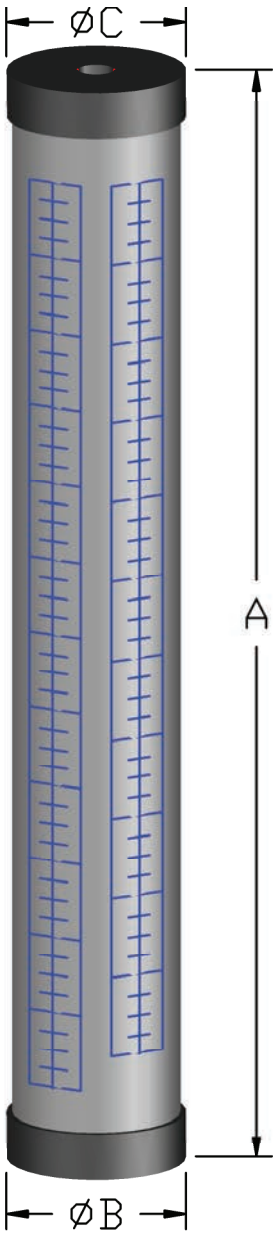

PV#3

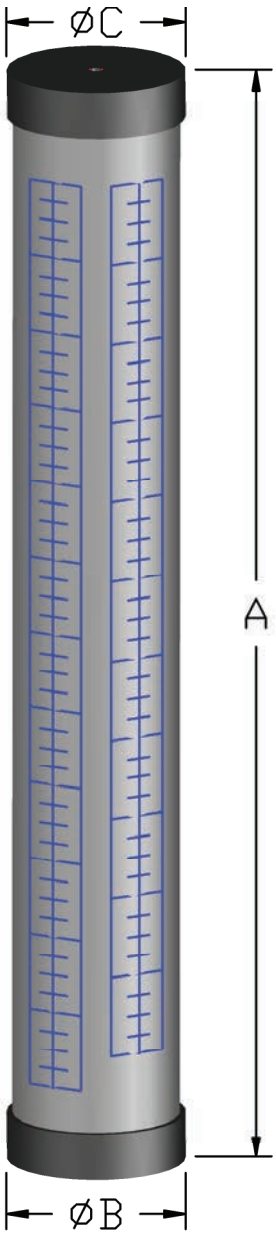

MODEL	SIZE ml(GPH)	DIV ml(GPH)	A (in.)	ØB (in.)	ØC (in.)	Connection	Top Conn.
PV#1	100 (1.60)	1.0 (0.02)	10.13	1.4	1.1	1/2" (DN 15)	OPEN
	250 (4.00)	2.0 (0.05)	10.88	1.9	1.6		
	500 (8.00)	5.0 (0.05)	12.13	2.4	2.1		
	1000 (16.0)	10.0 (0.125)	16.13	2.8	2.5		
	2000 (32.0)	20.0 (0.25)	20.00	3.5	3.1	1" (DN 25)	
	4000 (64.0)	25.0 (0.25)	22.00	4.5	4.1		
	10000 (160)	200.0 (2.00)	22.50	6.9	6.5	2" (DN 50)	
	15000 (240)	200.0 (2.00)	32.50	6.9	6.5		
	20000 (320)	200.0 (2.00)	42.50	6.9	6.5		
PV#2 & PV#4	100 (1.60)	1.0 (0.02)	10.50	1.4	1.4	1/2" (DN 15)	1/2" (DN 15)
	250 (4.00)	2.0 (0.05)	11.25	1.9	1.9		
	500 (8.00)	5.0 (0.05)	12.50	2.4	2.4		
	1000 (16.0)	10.0 (0.125)	16.50	2.8	2.8		
	2000 (32.0)	20.0 (0.25)	20.50	3.5	3.5	1" (DN 25)	1" (DN 25)
	4000 (64.0)	25.0 (0.25)	22.50	4.5	4.5		
	10000 (160)	200.0 (2.00)	23.00	6.9	6.9	2" (DN 50)	2" (DN 50)
	15000 (240)	200.0 (2.00)	33.00	6.9	6.9		
	20000 (320)	200.0 (2.00)	43.00	6.9	6.9		
PV#3	100 (1.60)	1.0 (0.02)	10.50	1.4	1.4	1/2" (DN 15)	DUST CAP
	250 (4.00)	2.0 (0.05)	11.25	1.9	1.9		
	500 (8.00)	5.0 (0.05)	12.50	2.4	2.4		
	1000 (16.0)	10.0 (0.125)	16.50	2.8	2.8		
	2000 (32.0)	20.0 (0.25)	20.50	3.5	3.5	1" (DN 25)	
	4000 (64.0)	25.0 (0.25)	22.50	4.5	4.5		
	10000 (160)	200.0 (2.00)	23.00	6.9	6.9	2" (DN 50)	
	15000 (240)	200.0 (2.00)	33.00	6.9	6.9		
	20000 (320)	200.0 (2.00)	43.00	6.9	6.9		

NOTE:
PV#4 CALIBRATION CYLINDERS HAVE REMOVABLE TOP CAPS.

DO NOT COPY WITHOUT PRIOR WRITTEN APPROVAL FROM PRIMARY FLUID SYSTEMS INC.

PRIMARY FLUID SYSTEMS INC.
1050 Cooke Blvd., Burlington, Ontario L7T 4A8

ACCUDRAW PV-SERIES
CALIBRATION CYLINDERS (PVC)

DATE ISSUED: JULY-29-2014	SCALE: NTS	SHEET: 1 OF 1
TOLERANCE: +/- 0.25"	DRAWN BY: NEAL YOON	
APPROVED BY:	DWG NO.: ADV_PV_CALCYL1	REV.#: 4

This page is intentionally left blank

Project name: IQALUIT

Project#: 5000218036

Document #: 5000218036_DS_0006_PM_VWT

by: BB

chkd: GH

appvd: CB

SKID DUPLEX

INSTRUMENT

OIM manual section: 4.3.6.5

This page is intentionally left blank

CS-449-100 : Identification sheet

VWTC PROJECT NUMBER:	Iqaluit WWTP	REV:	01
PROJECT NAME:	5000218036	SUBMITTED TO (COMPANY):	
ENGINEER:	G. HÉBERT	SUBMITTED TO (RESPONSIBLE)	
PROJECT MANAGER:	C. BEKAERT	PROJECT NUM REFERENCE.:	
PHONE NUMBER:		LOT NUMBER:	

SUPPLIER	EQPT CODE	EQPT TAG NO	DIA	DESCRIPTION	INFO 1	INFO 2	INFO 3	APPLIC.	NOTE	REV
CHEMLINE	IMFWGG300580	FI-983	1	VARIABLE AREA FLOWMETER	VARIABLE AREA FLOWMETER/MANUFACTURER: CHEMLINE/ MODEL: FSA02000	N/A	N/A			1

This page is intentionally left blank

PDF Published March 1, 2013

Variable Area Flow Meters

CHEMLINE PLASTICS
SUPERIOR FLOW SOLUTIONS

Chemline F Series Variable Area Flow Meters are ideal for plastic piping. They provide a combination of accurate visual flow rate measurement and clear flow indication from a distance. Optional limit switches allow the units to signal a low or high flow alarm. An optional flow transmitter provides a 4 to 20 mA signal output. These flow meters must be installed vertically with flow upward.

PVC PA PSU PVDF Tube

PVC CPVC PP PVDF Ends

CRN Registered Consult Chemline

SERIES: FC – Compact – 5" Single Scale
FS – Full Size – 7" Dual Scale[1]

MATERIALS: Tube: Clear PVC, Polyamide (PA), Polysulfone (PSU) or PVDF[2]
Float: PVDF
Ends: PVC, CPVC, PP, PVDF, Socket, Threaded, Flanged, Butt or ChemFlare™[3]

O-RINGS: EPDM, FPM (Viton®)

CAPACITIES: Up to 220 USGPM (50,000 litres per hour)



features

Clear Visual Indication

- Large orange float is visible from a distance
- Range indicators slide along dovetail track

Easy Installation and Maintenance

- Just unscrew union nuts and tube slides out of line

Choice of Four Tube Materials for Many Applications:

- ***Clear PVC*** – For Water or Chemicals up to 60°C (140°F) – High Chemical resistance at low cost
- ***Polyamide (PA)*** – For Water or Air up to 75°C (167°F) – High impact strength and optical clarity
- ***Polysulfone (PSU)*** – For Chemicals and Gases up to 100°C (212°F) – High impact strength and good chemical resistance
- ***PVDF[2]*** – For Chemicals and Ultrapure fluids up to 110°C (230°F) – High impact strength and excellent chemical resistance.

Ideal for All Types of Plastic Piping

- All types of end connections in PVC, CPVC, PP & PVDF

• Low Pressure Drop

Good Measuring Accuracy – Class IV

- ± 3% of indicated value, plus ± 1% of full scale. – Read scale at top (largest diameter) of float

Non Fouling

- Float is self supporting in the flow. No guide rod (which can cause the float to jam) is necessary.

[1] USGPM and litres per hour (water) scale is supplied as standard on full size meters.
[2] Because PVDF is translucent, a magnetic float and limit switches are usually used.
[3] For ChemFlare™ end connectors, consult Chemline.

03/13 ©Chemline Plastics Limited 2013
Chemline is a registered trade mark of Chemline Plastics Limited

Variable Area Flow Meters

NOTES:

PVDF flow meters are available in all sizes. Change third letter in item number to **K**.

[1] △P = Pressure loss through flow meter with water at 20°C (68°F).

[2] Dimension **L** is for PVC Socket ends.

FC SERIES – COMPACT SIZE – 5″ SCALE

Single USGPM (water) scale is supplied standard

End Conn. Size	Item Number			Flow Range (water)		Dimensions (inches)			Pressure Drop (psi)[1]	
	PVC Tube	Polyamide Tube	Polysulfone Tube	USGPM	Litres per hour	A	L[2]	D	Water	Air
3/8″	FCA00020	FCT00020	FCP00020	0.0132 – 0.106	3 – 24	6.50	8.2	1.38	0.05	0.07
	FCA00060	FCT00060	FCP00060	0.022 – 0.264	5 – 60	6.50	8.2	1.38	0.05	0.07
	FCA00100	FCT00100	FCP00100	0.04 – 0.44	10 – 100	6.50	8.2	1.38	0.05	0.07
	FCA00250	FCT00250	FCP00250	0.11 – 1.10	25 – 250	6.50	8.2	1.38	0.05	0.07
1/2″	FCA00051	FCT00051	FCP00051	0.02 – 0.22	5 – 50	6.69	8.7	1.69	0.04	0.06
	FCA00151	FCT00151	FCP00151	0.07 – 0.66	15 – 150	6.69	8.7	1.69	0.04	0.06
	FCA00251	FCT00251	FCP00251	0.11 – 1.10	25 – 250	6.69	8.7	1.69	0.04	0.06
	FCA00401	FCT00401	FCP00401	0.18 – 1.76	40 – 400	6.69	8.7	1.69	0.04	0.06
3/4″	FCA00152	FCT00152	FCP00152	0.07 – 0.66	15 – 150	7.28	9.6	2.09	0.09	0.12
	FCA00402	FCT00402	FCP00402	0.22 – 1.76	40 – 400	7.28	9.6	2.09	0.09	0.12
	FCA00602	FCT00602	FCP00602	0.26 – 2.64	60 – 600	7.28	9.6	2.09	0.09	0.12
	FCA01002	FCT01002	FCP01002	0.44 – 4.40	100 – 1,000	7.28	9.6	2.09	0.09	0.12
1″	FCA00253	FCT00253	FCP00253	0.11 – 1.10	25 – 250	7.87	10.5	2.36	0.09	0.12
	FCA00403	FCT00403	FCP00403	0.18 – 1.76	40 – 400	7.87	10.5	2.36	0.09	0.12
	FCA01003	FCT01003	FCP01003	0.44 – 4.40	100 – 1,000	7.87	10.5	2.36	0.09	0.12
	FCA01503	FCT01503	FCP01503	0.66 – 6.60	150 – 1,500	7.87	10.5	2.36	0.09	0.12

FS SERIES – STANDARD FULL SIZE – 7″ SCALE

Dual USGPM (water) and litres per hour scales are supplied standard

End Conn. Size	Item Number			Flow Range (water)		Dimensions (inches)			Pressure Drop (psi)[1]	
	PVC Tube	Polyamide Tube	Polysulfone Tube	USGPM	Litres per hour	A	L[2]	D	Water	Air
1″	FSA00600	FST00600	FSP00600	0.26 – 2.64	60 – 600	13.78	16.3	2.36	0.18	0.23
	FSA01000	FST01000	FSP01000	0.44 – 4.40	100 – 1,000	13.78	16.3	2.36	0.18	0.23
1-1/4″	FSA01500	FST01500	FSP01500	0.66 – 6.60	150 – 1,500	13.78	16.6	2.83	0.18	0.23
	FSA02500	FST02500	FSP02500	1.10 – 11.00	250 – 2,500	13.78	16.6	2.83	0.18	0.23
1-1/2″	FSA02000	FST02000	FSP02000	0.88 – 8.80	200 – 2,000	13.78	16.8	3.27	0.18	0.23
	FSA03000	FST03000	FSP03000	1.32 – 13.20	300 – 3,000	13.78	16.8	3.27	0.18	0.23
2″	FSA04000	FST04000	FSP04000	1.76 – 17.60	400 – 4,000	13.78	17.2	4.06	0.32	0.39
	FSA06000	FST06000	FSP06000	2.64 – 26.40	600 – 6,000	13.78	17.2	4.06	0.32	0.39
	FSA10000	FST10000	FSP10000	4.40 – 44.00	1,000 – 10,000	13.78	17.2	4.06	0.32	0.39
2-1/2″	FSA15000	FST15000	FSP15000	6.60 – 66.00	1,500 – 15,000	13.78	17.7	4.80	0.49	0.58
	FSA25000	FST25000	FSP25000	11.00 – 110.00	2,500 – 25,000	13.78	17.7	4.80	0.49	0.58
	FSA50000	FST50000	FSP50000	44.00 – 220.00	10,000 – 50,000	13.78	17.7	4.80	0.49	0.58

CONVERSION CHART – FLOW UNITS

From To	m^3/hr	litres/hr	USGPM	ImpGPM	ft^3/min
m^3/hr	1	1000	4.4029	3.6662	0.5886
litres/hr	0.001	1	.004403	.003666	.000589
USGPM	0.2271	227.12	1	0.8327	0.1337
ImpGPM	0.2728	272.77	1.2009	1	0.1605
ft^3/min	1.6990	1699	7.4806	6.2289	1

Values based on water at 20°C (68°F).

Variable Area Flow Meters

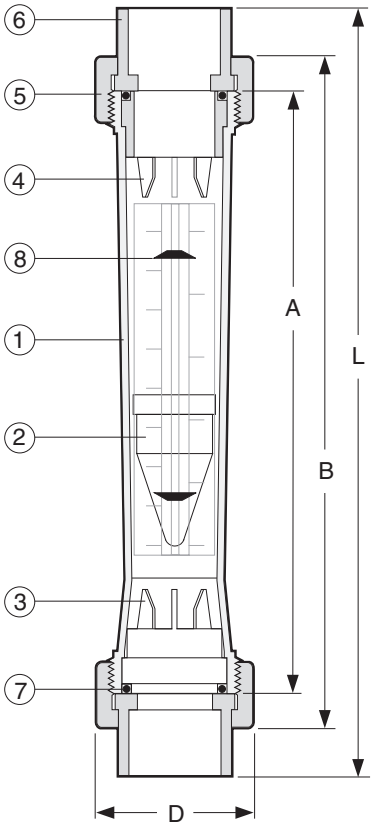

PARTS

▲ Recommended Spare Parts

No.	Part	Pcs.	Materials
1	Tube	1	Polyamide (PA), Polysulfone (PSU), Clear PVC, PVDF
2	Float	1	PVDF (standard or magnetic)
3	Lower Float Stop	1	PVDF
4	Upper Float Stop	1	PVDF
5	Union Nut	2	PVC, PPG, PVDF
6	End Connector	2	PVC, CPVC, PP or PVDF
7▲	O-Rings	2	EPDM, FPM(Viton®)
8▲	Range Indicator	2	ABS

ACCESSORIES

- **Limit Switches** – One switch for both maximum or minimum. A magnetic float is required.
- **Switch Ratings** – P (max) = 10 VA, E (max) = 470VAC, I (max) = 0.5A
- **Throttling Valve** for flow control
- **4–20 mA Output Signal Unit** must be factory calibrated for specific service

OPTIONS

- **Custom Direct Reading Scale** for services other than water
- **Alternate O-Rings** – ie. FPM (Viton®)
- **End Size Reduction** – Accuracy is not significantly affected by end reduction
- **Other Ends** – Threaded, socket or flanged end connections in PVC, CPVC, PP or PVDF. Butt ends in PP or PVDF.

MAXIMUM WORKING PRESSURES AND TEMPERATURE RANGES

Construction (‡ = Optional Materials)				Maximum	
Tube	O-Rings	Union Nuts	Ends	Pressure[2]	Temperature Range
PVC	EPDM	PVC	PVC	150 psi	0 to 60°C (32 to 140°F)
Polyamide (PA)	EPDM	PVC	PVC	150 psi	0 to 60°C (32 to 140°F)
Polyamide (PA)	EPDM	PPG‡	PP or CPVC‡	150 psi	0 to 75°C (32 to 167°F)
Polysulfone (PSU)	EPDM	PVC	PVC	150 psi	0 to 60°C (32 to 140°F)
Polysulfone (PSU)	EPDM	PPG‡	PP or CPVC‡	150 psi	0 to 90°C (32 to 194°F)
PVDF	FPM(Viton®)	PVDF	PVDF	150 psi	–40 to 110°C (–40 to 230°F)

[2] 150 psi is not recommended at maximum temperatures. Consult Chemline.

flow meter sizing – liquid flow

Standard Scale values are for clean water flow at 20°C (68°F). For liquids with densities and viscosities similar to water (ie. specific gravity of 1.0 and viscosities between 0.5 cP and 1.3 cP) the standard water scale will be accurate enough.

The table below shows correction factors to be applied for liquids with specific gravities other then 1.0. Multiply the correction factor by the water scale value to obtain actual flow rate. Example: For a liquid of specific gravity of 1.66, the correction factor is 0.740. For water flow range of 100 to 1000 litres/hr, corrected range becomes 74 to 740 litres/hr. Viscosity should be between 0.5 cP and 1.3 cP for standard scales to be accurate.

For "sizing" liquid flows ie. determining actual flow range of a tube, please advise the **chemical name, concentration, temperature, specific gravity** and **viscosity.** Custom direct reading scales in any units are available special order.

SCALE CORRECTION FACTORS – FOR LIQUIDS WITH SPECIFIC GRAVITIES OTHER THAN 1.00

Specific Gravity	.00	.01	.02	.03	.04	.05	.06	.07	.08	.09
	Scale Correction Factor									
0.4	1.647	1.626	1.605	1.585	1.565	1.548	1.529	1.513	1.495	1.479
0.5	1.462	1.447	1.433	1.418	1.404	1.391	1.377	1.364	1.351	1.339
0.6	1.326	1.316	1.304	1.292	1.282	1.271	1.259	1.250	1.239	1.229
0.7	1.220	1.211	1.202	1.192	1.183	1.175	1.167	1.157	1.149	1.142
0.8	1.134	1.125	1.117	1.111	1.104	1.096	1.089	1.082	1.075	1.068
0.9	1.062	1.055	1.048	1.042	1.035	1.030	1.024	1.017	1.011	1.005
1.0	1.000	0.994	0.988	0.982	0.978	0.972	0.967	0.962	0.956	0.951
1.1	0.947	0.943	0.936	0.932	0.927	0.923	0.917	0.913	0.909	0.904
1.2	0.900	0.895	0.891	0.887	0.883	0.878	0.874	0.870	0.866	0.862
1.3	0.858	0.854	0.850	0.846	0.842	0.838	0.835	0.831	0.827	0.824
1.4	0.820	0.818	0.814	0.810	0.806	0.803	0.800	0.797	0.794	0.791
1.5	0.787	0.784	0.781	0.778	0.776	0.773	0.770	0.767	0.764	0.759
1.6	0.756	0.754	0.751	0.748	0.745	0.742	0.740	0.737	0.734	0.730
1.7	0.728	0.726	0.723	0.720	0.717	0.714	0.712	0.709	0.706	0.704
1.8	0.701	0.699	0.696	0.694	0.691	0.689	0.686	0.684	0.682	0.679
1.9	0.677	0.674	0.672	0.669	0.667	0.665	0.663	0.661	0.658	0.657
2.0	0.654	0.652	0.650	0.648	0.646	0.644	0.641	0.604	0.637	0.636

flow meter sizing – gas flow

FLOW RANGES FOR AIR – AT STANDARD CONDITIONS (atmospheric pressure 14.7 psia/20°C).

FC SERIES – COMPACT SIZE – 5" SCALE

Flow Meter Item No.	Normal m_3/hr	Standard CFM
FCT00020	0.2 – 1.0	0.1 – 0.6
FCT00060	0.2 – 2.5	0.1 – 1.5
FCT00100	0.6 – 3.6	0.4 – 2.1
FCT00250	0.5 – 9.0	0.3 – 5.3
FCT00051	0.4 – 2.8	0.2 – 1.6
FCT00151	0.8 – 6.2	0.5 – 3.6
FCT00251	0.9 – 9.5	0.5 – 5.6
FCT00401	2.0 – 15.0	1.2 – 8.8
FCT00152	0.5 – 5.5	0.3 – 3.2
FCT00402	2.0 – 14.0	1.2 – 8.2
FCT00602	2.5 – 22.0	1.5 – 12.9
FCT01002	4.0 – 34.0	2.4 – 20.0
FCT00253	1.0 – 8.0	0.6 – 4.7
FCT00403	2.0 – 14.0	1.2 – 8.2
FCT01003	4.0 – 34.0	2.4 – 20.0
FCT01503	5.0 – 50.0	2.9 – 29.4

FS SERIES – STANDARD FULL SIZE – 7" SCALE

Flow Meter Item No.	Normal m_3/hr	Standard CFM
FST00600	2.5 – 20	1.5 – 12
FST01000	4 – 34	2.4 – 20
FST01500	5 – 50	2.9 – 29
FST02000	8.5 – 76	5.0 – 45
FST02500	8 – 70	4.7 – 41
FST03000	10 – 90	5.9 – 53
FST04000	14 – 125	8.2 – 74
FST06000	22 – 190	13 – 112
FST10000	35 – 300	21 – 177
FST15000	50 – 500	29 – 294
FST25000	80 – 720	47 – 424
FST50000	400 – 1,500	234 – 883

SCALE CORRECTION FACTORS – FOR AIR AT NON-STANDARD TEMPERATURES AND PRESSURES

Air density is dependent on the actual pressure and temperature.
Calculate the Scale Correction Factor using either Method 1 or 2. Multiply the standard air flow ranges above by the Factor to obtain actual flow rates.

Method 1

Calculate the Factor with the following formula.

$$\text{Factor} = \frac{1}{3.7005}\sqrt{\frac{\text{psia}}{(1+0.00367t)}}$$

psia = pressure of the air absolute
= psig + 14.7 (atmospheric pressure = 14.7 psia)
t = temperature of the air °C

Method 2

Calculate the density of the air at conditions and find factor from the chart below.

$$\text{Air Density (g/ml)} = \frac{\text{psia}}{11{,}360\,(1+0.00367t)}$$

psia = pressure of the air absolute
= psig + 14.7 (atmospheric pressure = 14.7 psia)
t = temperature of the air °C

Air Density vs. Flow Factor



Temperature vs. Pressure

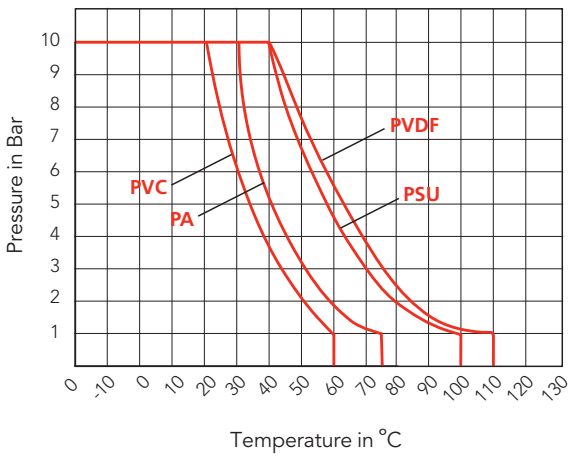

55 Guardsman Road, Thornhill, ON, L3T 6L2, Canada | ISO 9001:2008 Certified
tel.905.889.7890 | fax.905.889.8553 | request@chemline.com | chemline.com

LSFLO Reed Limit Switch

for FC & FS flow meters

The **LSFLO** limit switches serve as switches for minimum or maximum flow values. The normally open latching reed switch closes when the float in the measuring tube reaches and exceedes the switching position. The switch condition is maintained as long as the float is above the limit switch and will open when the float in the tube drops below the switch.

Normally closed switches are available on request.



technical

- **Operating voltage:** maximum 230 VAC
- **Operating current:** maximum 0.5 A
- **Constant current when switched:** maximum 1 A
- **Rupturing capacity:** maximum 10 W/10 VA
- **Closed resistance:** < 150 mΩ
- **Open resistance:** > 10^{10} Ω
- **Operating temperature:** 0°C(32°F) to 55°C(131°F)
- **Protection:** IP 65 (DIN EN 60528)
- **Hysteresis (switch on and off point):** 3 mm
- **Protection:** IP 65 (DIN EN 60528)
- **Dimensions:** 34 x 17 x 41 mm
- **Weight (with plug):** 40 g
- **Connections:** the polarity of the connections has no influence on the function

INSTALLATION

Screw clamps are used to fit the LSFLO on the dovetail guide of the flow meter.

CONNECTIONS

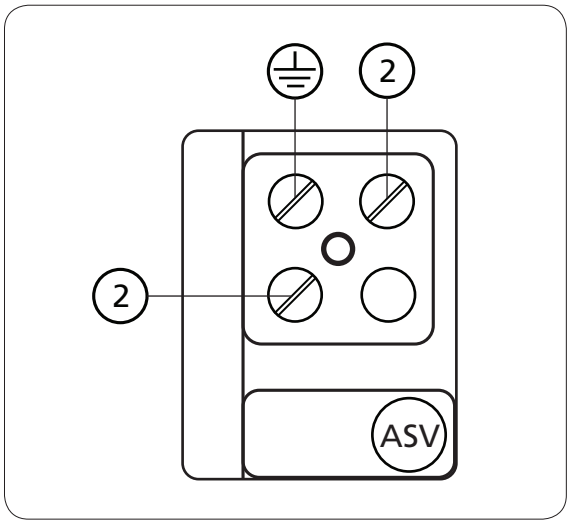

START-UP

Prior to the first start up it is important that the float passes the LSFLO switch three times to ensure the electronics inside recognize the magnetic field from the floats properly.

CHEMLINE PLASTICS
SUPERIOR FLOW SOLUTIONS

55 Guardsman Road, Thornhill, ON, L3T 6L2, Canada | ISO 9001:2008 Certified
tel.905.889.7890 | fax.905.889.8553 | request@chemline.com | chemline.com

ZE3000 Flow Transmitters

for FS flow meters

The **ZE300**0 flow transmitter provides a 4–20 mA output signal, generated by detection of the position of the magnetic float.

IMPORTANT: This micro-processor controlled unit is factory calibrated and unique to each flowmeter model. Flowmeter model must be advised when ordering.



technical

- **2-Wire technology**
- **4–20 mA analog output** (4-20.1 for 8 VDC supply; 4-22.0 for 28 VDC supply
- **8–28 VDC input**
- **Factory calibrated (flow meter to be specified when ordering)**
- **11 point calibration**
- **Non-volatile value storage**
- **0 Button to compensate for the surrounding magnetic influences**
- **Factory setting of the lower limit value (low-cut-off) 0-99% according to customer's specificaitons**
- **Factory time lag (low-pass filter) 0.1-2.5 sec. according to customer's specifications**
- **Measuring accuracy:** < 0.5%
- **Temperature range:** –30°C(–20°F) to 65°C(150°F)

INSTALLATION

Screw clamps are used to fit the ZE3000 on the dovetail guide of the flow meter.

During installation, ensure that the notch of the ZE3000 coincides with the 50% mark on the flow meter scale.

Following this, proceed with the wiring according to the diagram.

WIRING

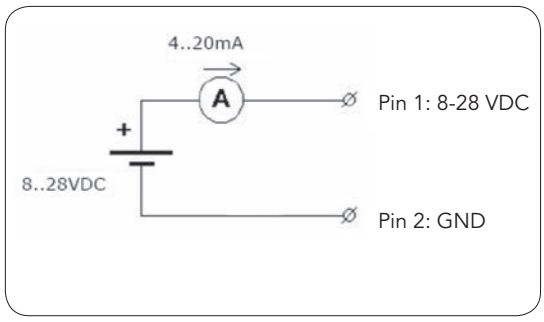

DIMENSIONS

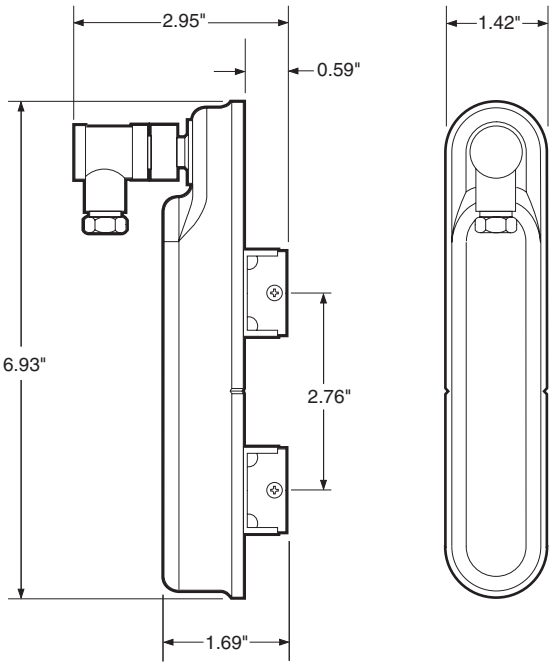

START-UP

After installation and wiring, press the 0 button for at least 2 sec. to compensate for possible electro-magnetic interference. During this time make sure the float is at the bottom of the flowmeter (ie. no flow condition).

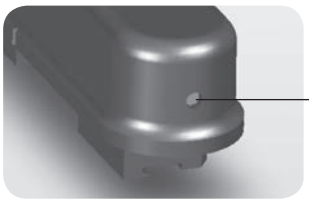

Note:
Do not press button during normal operation.

CHEMLINE PLASTICS
SUPERIOR FLOW SOLUTIONS

55 Guardsman Road, Thornhill, ON, L3T 6L2, Canada | ISO 9001:2008 Certified
tel.905.889.7890 | fax.905.889.8553 | request@chemline.com | chemline.com

ZE3075 Flow Transmitters

for FC flow meters

The **ZE3075** flow transmitter provides a 2- wire 4–20 mA output signal omit generated by precise detection of the position of the magnetic float.

The magnetic float travels along the reed chain of switches activating them.

This micro-processor controlled unit is field calibrated.

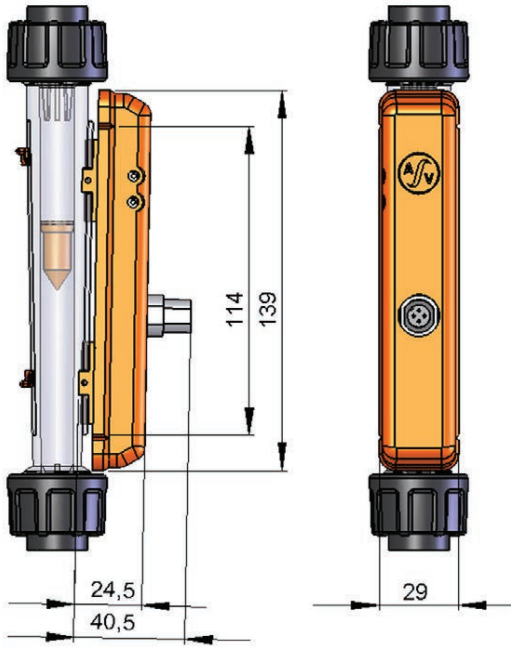

technical

- **2-Wire technology**
- **4–20 mA analog output** (4-20.1 for 8 VDC supply; 4-22.0 for 28 VDC supply
- **18–30 VDC input**
- **Field calibration**
- **Non-volatile value storage**
- **Measuring length:** 114 mm (4.5")
- **Measuring resolution:** 3.5 mm (0.138")
- **Measuring accuracy:** 3%
- **Temperature range:** –20°C(–4°F) to 70°C(158°F)

INSTALLATION

Screw clamps are used to fit the ZE3075 on the dovetail guide of the flow meter.

During installation, ensure that the top and bottom notches of the ZE3075 coincide with the 10% and 100% marks on the flow meter scale.

Following this, proceed with the wiring according to the diagram.

COMPONENTS

1. Alignment notches for the proper location of the transmitter
2. Potentiometer for the upper limit value of the output signal
3. Potentiometer for the lower limit value of the output signal
4. Plug connector

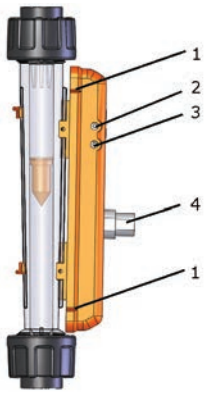

WIRING

The unit is connected with a commercially available unshielded cable.

Where electro-magnetic interference is to be expected, we recommend the use of a shielded cable.

Cable cross section: max. 0.75 mm² cable outer diameter: 6 to 8 mm.

Flange Connector

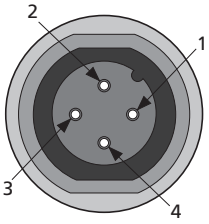

1. Signal (+)
2. Signal (+)
3. n.c.
4. n.c.

Circuit Diagram

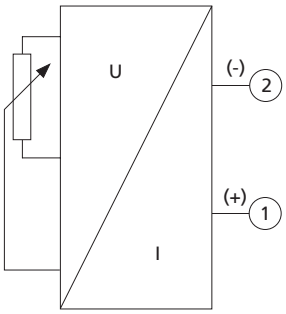

CALIBRATION

Compensation between the non-linear scaling of the flowmeter and the linear output signal of the flow data sensor must be performed by adjusting, preferably between 20% and 80% of the flow rate.

20% corresponds to 7.2mA and 80% to 16.8mA.

- Connect the ampermeter and the respective voltage supply to the flow data sensor
- Allow 20% of the flow to pass through the FC flow meter
- Set the min. trimmer potentiometer (3) such that the corresponding current (7.2mA) is shown in the ampermeter
- Allow 80% of the flow to pass through the FC flow meter
- Set the max. trimmer potentiometer (3) such that the corresponding current (16.8mA) is shown in the ampermeter
- Check the values at 20% and 80% several times and repeat the adjustment, if required

CHEMLINE PLASTICS
SUPERIOR FLOW SOLUTIONS

55 Guardsman Road, Thornhill, ON, L3T 6L2, Canada | ISO 9001:2008 Certified
tel.905.889.7890 | fax.905.889.8553 | request@chemline.com | chemline.com

This page is intentionally left blank

CS-434-700 : Identification sheet

VWTC PROJECT NUMBER:	Iqaluit WWTP	REV:	01
PROJECT NAME:	5000218036	SUBMITTED TO (COMPANY):	
ENGINEER:	F.VINCI	SUBMITTED TO (RESPONSIBLE)	
PROJECT MANAGER:	C. BEKAERT	PROJECT NUM REFERENCE.:	
PHONE NUMBER:		LOT NUMBER:	

SUPPLIER	EQPT CODE	EQPT TAG NO	DIA	DESCRIPTION	INFO 1	INFO 2	INFO 3	APPLIC.	NOTE	REV
IFM	IESWSP342303	PSH-02-987 PSH-02-990		High pressure switch	PRESSURE SWITCH/ MANUFACTURER: IFM// MODEL:PN7294// EFECTOR SOO // Approval: cULUS CRN //Output: IOLink 1.1 or (OUT1 = switching output, OUT2 = switching output) // 4-digit alphanumeric display // measuring range -14.5…145 psi					1

This page is intentionally left blank

efectorsoo

PN7294

PN-010-REN14-QFRKG/US/ /V

Pressure sensors

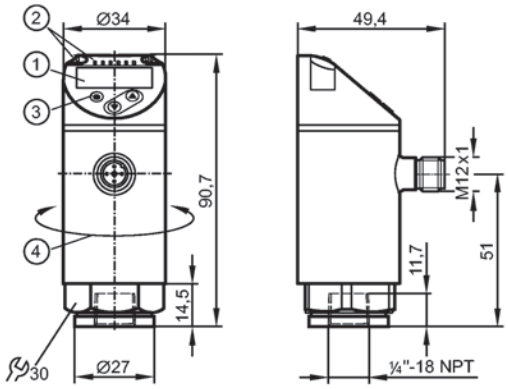

1: 4-digit alphanumeric display / alternating indication of red and green
2: LEDs (display unit / switching status)
3: Programming button
4: Upper part of the housing can be rotated by 345°

CE CRN cULus LISTED EAC IO-Link

Product characteristics
Electronic pressure monitor
M12 connector
Function programmable
Measuring element: ceramic-capacitive pressure measuring cell
Process connection: ¼" NPT I
2 outputs OUT1 = switching output OUT2 = switching output
4-digit alphanumeric display / alternating indication of red and green
Measuring range: -14.5...145 psi / -1...10 bar / -0.1...1.0 MPa

Application				
Application		Type of pressure: relative pressure liquids and gases of the fluid group 2 according to Article 9 of the Pressure Equipment Directive (PED)		
Pressure rating		1087 psi	75 bar	7.5 MPa
Bursting pressure min.		2175 psi	150 bar	15 MPa
Medium temperature	[°C]	-25...80		

Electrical data		
Electrical design		DC PNP/NPN
Operating voltage	[V]	18...30 DC [1])
Current consumption	[mA]	< 35
Insulation resistance	[MΩ]	> 100 (500 V DC)
Protection class		III
Reverse polarity protection		yes

Outputs		
Output		2 outputs OUT1 = switching output OUT2 = switching output
Output function		2 x normally open / closed programmable
Current rating	[mA]	150; 200 (...60 °C); 250 (...40 °C)

Voltage drop [V]	< 2.5		
Short-circuit protection	yes (non-latching)		
Overload protection	yes		
Switching frequency [Hz]	≤ 170		
Measuring / setting range			
Measuring range	-14.5...145 psi	-1...10 bar	-0.1...1.0 MPa
Setting range			
Set point, SP	-13.5...145 psi	-0.90...10 bar	-0.09...1 MPa
Reset point, rP	-14...144.5 psi	-0.95...9.95 bar	-0.095...0.995 MPa
in steps of	0.5 psi	0.05 bar	0.005 MPa
Accuracy / deviations			
Accuracy / deviations (in % of the span)			
Switch point accuracy	< ± 0.5		
Characteristics deviation *)	< ± 0.25 (BFSL) / < ± 0.5 (LS)		
Hysteresis	< ± 0.25		
Repeatability **)	< ± 0.1		
Long-term stability ***)	< ± 0.05		
Temperature coefficients (TEMPCO) in the temperature range -25...80° C (in % of the span per 10 K)			
Greatest TEMPCO of the zero point	0.2		
Greatest TEMPCO of the span	0.2		
Response times			
Power-on delay time [s]	< 0.3		
Min. response time switching output [ms]	< 3		
Delay time programmable dS, dr [s]	0...50		
Integrated watchdog	yes		
Software / programming			
Programming options	hysteresis / window function; N.O. / N.C; output polarity; on delay, off delay; damping; display unit		
Interfaces			
IO-Link Device			
Transfer type	COM2 (38.4 kBaud)		
IO-Link revision	1.1		
SDCI standard	IEC 61131-9		
IO-Link Device ID	403 d / 00 01 93 h		
Profiles	Smart Sensor: Process Data Variable; Device Identification; Device Diagnosis		
SIO mode	yes		
Required master port class	A		
Process data analogue	1		
Process data binary	2		
Min. process cycle time [ms]	2.3		
Environment			
Ambient temperature [°C]	-25...80		
Storage temperature [°C]	-40...100		
Protection	IP 65 / IP 67		

efectorsoo

PN7294

PN-010-REN14-QFRKG/US/ /V

Pressure sensors

Tests / approvals		
Pressure equipment directive		article 3, section 3 - sound engineering practice
EMC		DIN EN 61000-6-2 DIN EN 61000-6-3
Shock resistance		DIN EN 60068-2-27 50 g (11 ms)
Vibration resistance		DIN EN 60068-2-6 20 g (10...2000 Hz)
MTTF	[Years]	224.01
UL approval number		J001
Mechanical data		
Process connection		¼" NPT I
Materials (wetted parts)		316L stainless steel / 1.4404; ceramics; FKM
Housing materials		316L stainless steel / 1.4404; PBT+PC-GF 30; PBT-GF 20; PC
Switching cycles min.		100 million
Tightening torque	[Nm]	(2...3 turns after finger tightened (recommended tightening torque²))
Weight	[kg]	0.221
Displays / operating elements		
Display		Display unit 3 x LED green (bar, psi, MPa) Switching status 2 x LED yellow 4-digit alphanumeric display / alternating indication Measured values of red and green
Electrical connection		
Connection		M12 connector; gold-plated contacts

Wiring

Core colors

BK black
BN brown
BU blue
WH white



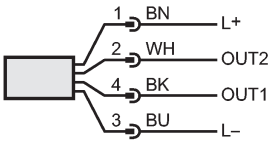

OUT1: switching output or IO-Link
OUT2: switching output
Colours to DIN EN 60947-5-2

Remarks

Remarks

¹) to EN50178, SELV, PELV
²) Depends on lubrication, seal and pressure rating
*) BFSL = Best Fit Straight Line / LS = Limit Value Setting
**) with temperature fluctuations < 10 K
***) in% of the span / 6 months

Pack quantity	[piece]	1

LEFT BLANK

4 – DETAILED TECHNICAL DOCUMENTATION

4.3 – SHOP DRAWINGS SUBMITTAL PACKAGES

4.3.7 – TRIPLEX POLYMER DOSING SKID FOR DAF

LEFT BLANK

Project name:	IQALUIT
Project#:	5000218036
Document #:	5000218036_DS_0007_PM_VWT_REV02
by:	BB
chkd:	GH
appvd:	CB

SUBMITTAL PACKAGE

SKID TRIPLEX- REV02

This page is intentionally left blank

Project name:	IQALUIT
Project#:	5000218036
Document #:	5000218036_DS_0007_PM_VWT_REV02
by:	BB
chkd:	GH
appvd:	CB

SKID TRIPLEX

PROCESS DATASHEET

OIM manual section: 4.3.7.1

This page is intentionally left blank

1	VEOLIA						VWT CANADA #		PSDS_0007_PCH		
2							Project #		5000218036		
3							Date		2018-09-18		
4							Polymer				
5	CLIENT	REV	DESCRIPTION				DATE	By	Chkd	App.	
6		0									
7	CITY OF IQALUIT	1	FOR APPROVAL				2018-09-18	G.H.	GP	C.B.	
8		2	FOR APPROVAL 2				2018-10-11	G.H.	GP	C.B.	
9	PROJECT	3	FOR APPROVAL 3				2019-01-29	F.V.	GP	C.B.	
10		4									
11	IQALUIT	5									
12		6									
13		TAG:									REV
14	GENERAL	Dosed Chemical						Polymer			
15		Number of skids						1			
16		Pumps type						Cavity Progressive Pump			
17		Model Serie						Netszch			
18		Total number of pumps						3			
19		Number of pumps in duty						2			
20		Number of pumps in standby						1			
21		Number of dosing points						2			
22	PROCESS REQUIREMENT	Min Flowrate					lph	10			
23		Avg Flowrate					lph	102			3
24		Max Flowrate					lph	150			3
25	ENVIRONMENT	Equipment Location						Indoor			
26		Min. Temperature					°C	5			
27		Max . Temperature					°C	25			
28		Max. Humidity					%	95			
29		Corrosive Atmosphere						Non Corrossive			
30		Freeze						N/A			
31		Comments									
32	SAFETY	Electrical Classification						Non Hazardous			
33		Province/State						Nunavut			
34	PUMP(S) CAPACITY	Max Flowrate					lph	250			3
35		Min Flowrate					lph	10			
36	TECHNICAL DESCRIPTION	Skid Frame				Material		Stainless Steel			3
37						Type		Stand Alone			
38						Option #1		N/A			
39						Option #2					
40		Pump			X	Dosing Pumps		Netszch NM015BY01L06B			
41					x	Variable Frequency Drive	N/A	See Electrical Submital Package			
42		Components	Valves			Foot valve c/w flexible hose					
43						Isolation Valves (Common Suction)	N/A	N/A		0	
44					x	Isolation Valves (Suction)	Chemline	#N/A		3	
45					x	Isolation Valve Calibration Cylinder (Suction)	Chemline	#N/A		3	
46					x	Isolation Valves (Discharge)	Chemline	21A005EC		7	
47						Isolation Valves Calibration Cylinder (Discharge)	N/A	N/A		0	
48						Check Valves (Discharge)	N/A	N/A		0	
49					x	Backpressure Valves	Chemline	SB12A005EU (BPVG)		3	
50						C/w Isolator & Press. Gauge	Chemline	SGA-005-002-P-G + P025-160-BM	Config. L-U	0	
51					x	Relief Valves	Chemline	SB12A005EU (RV)		3	
52						W/o Press. Gauge	N/A	N/A	N/A		
53					x	Metering Valve - Carrier Water	Chemline SM	SM2A005ES		2	
54					x	Isolation Valves - Carrier Water	Chemline	21A005EC		2	
55					x	Check Valves - Carrier Water	Chemline	BTA005EC		2	
56					x	On/Off Valves - Carrier Water	ASCO	8210G094-120VAC	Brass	2	
57					x	Cleaning Valves	Chemline	21A005EC		3	
58			Misc.		x	Calibration Cylinder	PFS	PV#2-1000	1000 ml	1	
59					x	Variable Area Flowmeter	Chemline	FCA00401		2	
60						Flow Switch	N/A			0	
61						Isolation Valves Flow Meter (Discharge)	N/A	N/A		0	
62						Flowmeter	N/A			0	
63						Pulsation Dampener	N/A			0	
64		Piping				VWS Piping spec code		A050C			
65						Pipe Material		PVC Sh 80 ASTM D1784			
66						Common Suction Nominal Pipe Size	in	1"			
67						Suction Pipe Nominal Pipe Size	in	1''			
68						Discharge Pipe Nominal Pipe Size	in	1/2"			
69	UTILITIES	Service Water for Chemical Transport				Flowrate (per injection line)	lph	315			
70						Pressure	psig				
71						Transport Water Nominal Pipe Size	in	1/2"			

1	VEOLIA						VWT CANADA #		PSDS_0007_PCH				
2							Project #		5000218036				
3							Date		2018-09-18				
4							Polymer						
5	CLIENT	REV	DESCRIPTION				DATE	By	Chkd		App.		
6		0											
7	CITY OF IQALUIT	1	FOR APPROVAL				2018-09-18	G.H.	GP		C.B.		
8		2	FOR APPROVAL 2				2018-10-11	G.H.	GP		C.B.		
9	PROJECT	3	FOR APPROVAL 3				2019-01-29	F.V.	GP		C.B.		
10		4											
11	IQALUIT	5											
12		6											
13		TAG:											REV
72		Design Pressure					psig	60					3
73		Design Temperature					°C	35					
74	DESIGN CRITERIA	Operating Pressure					psig	45					3
75		Test Pressure					psig	90					3
76		Test duration					min	15					
77		Test Fluid					-	Water					
78		Inlet			Diameter (NPS)		in	1"					
79					Type			Socket union					
80	CONNECTIONS	Outlet			Diameter (NPS)		in	1/2"					
81					Type			Socket union					
82		Transport Water			Diameter (NPS)		in	1/2"					
83					Type			Socket union					
84		Main Power						575V/3Ph/60 Hz					
85		Controls						VFD c/w 4-20 mA					
86	ELECTRICITY	Frame Grounding											
87		Wiring			Pre wired (Y or N | details)			w/o wiring and JB					
88					Cable Type								
89		Anchors			Qty			6					
90					Supply			No					
91		Design Code						ASME B31.3 Non Certified					
92	CODE, APPROVAL & CERTIFICATIONS	Glueing						Glueing B31.3 non certified / Non Certified Shop					
93		Mandatory Registration											
94													
95		Weight (dry)			Final		kg	Refer to GA drawing					
96	OVERALL DIMENSIONS	Overall Length					mm						
97	AND WEIGHT	Overall Width			Final		mm						
98		Overall Height					mm						

Project name:	IQALUIT
Project#:	5000218036
Document #:	5000218036_DS_0007_PM_VWT
by:	BB
chkd:	GH
appvd:	CB

SKID TRIPLEX

PUMP(S)

OIM manual section: 4.3.7.2

This page is intentionally left blank

CS-999-001 : Identification sheet

VWTC PROJECT NUMBER:	Iqaluit WWTP			REV:	02
PROJECT NAME:	5000218036	SUBMITTED TO (COMPANY):			
ENGINEER:	F.VINCI	SUBMITTED TO (RESPONSIBLE)			
PROJECT MANAGER:	C. BEKAERT	PROJECT NUM REFERENCE.:			
PHONE NUMBER:		LOT NUMBER:			

SUPPLIER	EQPT CODE	EQPT TAG NO	DIA	DESCRIPTION	INFO 1	INFO 2	INFO 3	APPLIC.	NOTE	REV
NETSZCH	ST-999-001	P04-770		PROGRESSIVE CAVITY PUMP	DOSING PUMP // Manuf : NETZSCH // Model: NM015BY01L06B // AVERAGE FLOW RATE: 102LPH@45PSIG // APPROX. MAX FLOWRATE: 260 LPH@85PSIG // APPROX. MIN FLOW RATE: 18 LPH@85PSIG // MOTOR MARATHON BLACK MAX 575/3/60, 0.5 HP // NORD GEAR INLINE REDUCER	WITH GEAR RATIO 5.5:1 // WETTED PARTS 316 SS // BUNA NITRILE STATOR // MECHANICAL SEAL BURGMANN SINGLE MG1-G60 // 1" SUCTION & DISCHARGE ANSI CLASS 150 B16.5 FLANGE // MOUNTED ON CUSTOM LOW PROFILE CARBON STEEL BASEPLATE //		C/W STP-3 DRY RUN PROTECTION SENSOR WITH OMRON CONTROLLER (NO CABLES) 120 VAC CSA APPROVED		2
NETSZCH	ST-999-001	P04-780		PROGRESSIVE CAVITY PUMP	DOSING PUMP // Manuf : NETZSCH // Model: NM015BY01L06B // AVERAGE FLOW RATE: 102LPH@45PSIG // APPROX. MAX FLOWRATE: 260 LPH@85PSIG // APPROX. MIN FLOW RATE: 18 LPH@85PSIG // MOTOR MARATHON BLACK MAX 575/3/60, 0.5 HP // NORD GEAR INLINE REDUCER	WITH GEAR RATIO 5.5:1 // WETTED PARTS 316 SS // BUNA NITRILE STATOR // MECHANICAL SEAL BURGMANN SINGLE MG1-G60 // 1" SUCTION & DISCHARGE ANSI CLASS 150 B16.5 FLANGE // MOUNTED ON CUSTOM LOW PROFILE CARBON STEEL BASEPLATE //		C/W STP-3 DRY RUN PROTECTION SENSOR WITH OMRON CONTROLLER (NO CABLES) 120 VAC CSA APPROVED		2

SUPPLIER	EQPT CODE	EQPT TAG NO	DIA	DESCRIPTION	INFO 1	INFO 2	INFO 3	APPLIC.	NOTE	REV
NETSZCH	ST-999-001	P04-790		PROGRESSIVE CAVITY PUMP	DOSING PUMP // Manuf : NETZSCH // Model: NM015BY01L06B // AVERAGE FLOW RATE: 102LPH@45PSIG // APPROX. MAX FLOWRATE: 260 LPH@85PSIG // APPROX. MIN FLOW RATE: 18 LPH@85PSIG // MOTOR MARATHON BLACK MAX 575/3/60, 0.5 HP // NORD GEAR INLINE REDUCER	WITH GEAR RATIO 5.5:1 // WETTED PARTS 316 SS // BUNA NITRILE STATOR // MECHANICAL SEAL BURGMANN SINGLE MG1-G60 // 1" SUCTION & DISCHARGE ANSI CLASS 150 B16.5 FLANGE // MOUNTED ON CUSTOM LOW PROFILE CARBON STEEL BASEPLATE //		CONDENSED INFORMATION 3 (FR) C/W STP-3 DRY RUN PROTECTION SENSOR WITH OMRON CONTROLLER (NO CABLES) 120 VAC CSA APPROVED	2

NETZSCH Canada, Inc. 500 Welham Road, Barrie, On., L4N 8Z7
Ph: 705-797-8426 Fax: 705-797-8427 Toll Free: 1-866-683-7867

Pump Quotation - Technical

Offer: N180717ST-01 (Item #30)

NEMO® pump with base plate and drive: NM015BY01L06B

The physical characteristics of the pumped product, the application details, as well as the General Operating Conditions detailed in our offer have been taken from your inquiry or where not specified have been assumed by us. In the event of an order we would ask you to check any assumptions and all details as they will become contractually binding along with the selection of pump model, Drive, all specifications, and materials of construction, based on these details.

Product:			Polymer
Composition			not advised
Specific gravity	assumed	kg/dm³	1.0
Particle size/solid ball size	allowed	mm	maximum 2 / 9
pH value	Approx.		not advised
Solids content (w/w)		% TS	not advised
Dynamic viscosity	approx.	cP	100
Vapour pressure		mm Hg	Not advised

Application details:		*DW #*	*172020*	*172020*	*172020*	*172020*
Flow rate (Q)	approx.	LPH	150	175	200	250
	approx.	GPM	0.66	0.77	0.88	1.1
Differential pressure	approx.	psi	85	85	85	85
Suction pressure	assumed	psig	Flooded	flooded	flooded	flooded
Discharge pressure	approx.	psig	85	85	85	85
Pump operating speed	approx.	RPM	200	230	260	310
Sliding velocity	approx.	ft/s	0.65	0.85	0.95	1.15
Frequency	approx.	Hz	38	44	50	60
Power required at drive shaft	approx.	HP	0.12	0.13	0.14	0.15
Running torque	approx.	lb-ft	2.6	2.6	2.6	2.6
Starting torque	approx.	lb-ft	1.6	1.6	1.6	1.6
Operating temperature	assumed	°C	20	20	20	20

Assembly specification

installation	vertical

General operating conditions

Installation area	inside
ambient Temperature	approx. 20°C / 70 F
humidity	up to 75%
application type	Continuous operation
operating hours	8 hours/day
service voltage	3/60/575

Painting	coating system	Netzsch standard

Operating and Maintenance Instructions

Standard documentation in accordance with the 98/37/EG Machinery Directive.
Special documentation is available on request and would be charged for.

number	1
medium	Paper
language for O&M's and spare parts list	English
dispatch method	shipped with pump

NETZSCH Canada, Inc. 500 Welham Road, Barrie, On., L4N 8Z7
Ph: 705-797-8426 Fax: 705-797-8427 Toll Free: 1-866-683-7867

Offer: N180717ST-01 (Item #30)
Date: July 13, 2018

Customer No.:

NEMO® NM015BY01L06B Pump

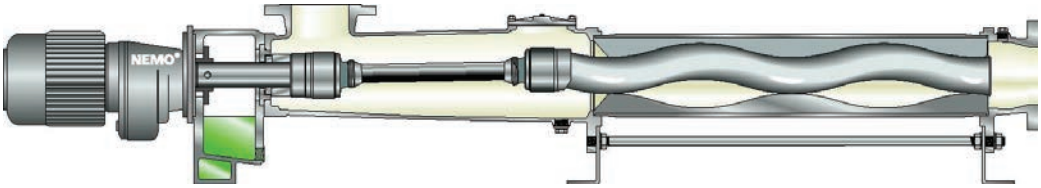

Characteristics and benefits of the NEMO® BY Block pump:

- Reliable and sophisticated construction
- Space-saving construction
- Modular construction system
- 4 different stator – rotor geometries available for most sizes
- Low investment and operating costs
- Low maintenance expenses

General characteristics	
name plate on the pump	in English (Stainless steel)
direction of rotation	to the right, clockwise (as viewed from drive end)

Pump Pedastal	
material	Cast iron 0.6025

Pump housing / End connection	
housing material	316 Stainless Steel
flange position	horizontal sidewards
function of housing connection	pressure connection
flange design	N.A.
nom. dia. & pressure for pump housing	1.25" NPT
suction flange design	N.A.
nom. dia. & pressure of suction flange	1.25" NPT
Function of end connection	suction connection
housing seals	FPM

Shaft seal	
type	Single mechanical Seal
shaft seal materials	Silicon Carbide Faces – Viton Elastomers
shaft seal type	Burgmann Single MG1-G60 – Q1Q1VGG

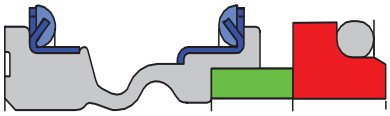

Rotating parts	
rotating parts materials	316 Stainless Steel

Joints		
	joint type	pin joint
	sealing type	SM Pin joint
	joint sealing material	Viton/316 Stainless Steel
	joint lubrication	Mineral oil

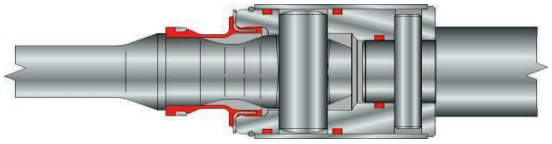

Rotor		
	rotor material	316 Stainless Steel
	temperature range for Stator expansion	UM20

Stator		
	stator material	NEMOLAST® S61L – Buna Nitrile

Drive

Helical gear reducer		
	manufacturer	Nord
	type	SK072.1F-56C
	gear ratio	5.5
	speed @ 60 Hz	312
	mounting position	M4
Motor		
	Manufacturer	Marathon Black Max
	motor HP	0.5
	winding voltage	575
	voltage range	+/- 10%
	frequency / range	60 Hz / 1000:1 @ CT
	number of poles	4
	number of phases	3
	Motor speed	1720 rpm
	protection type	TENV
	insulation class	F

Baseplate

	assembly specification - material	Structural steel base plate

Approximate weight of pump assembly	95 lbs.

NETZSCH Canada, Inc. 500 Welham Road, Barrie, On., L4N 8Z7
Ph: 705-797-8426 Fax: 705-797-8427 Toll Free: 1-866-683-7867

Offer: N180717ST-01 (Item #30)
Date: July 13, 2018

Customer No.:

Performance curve:

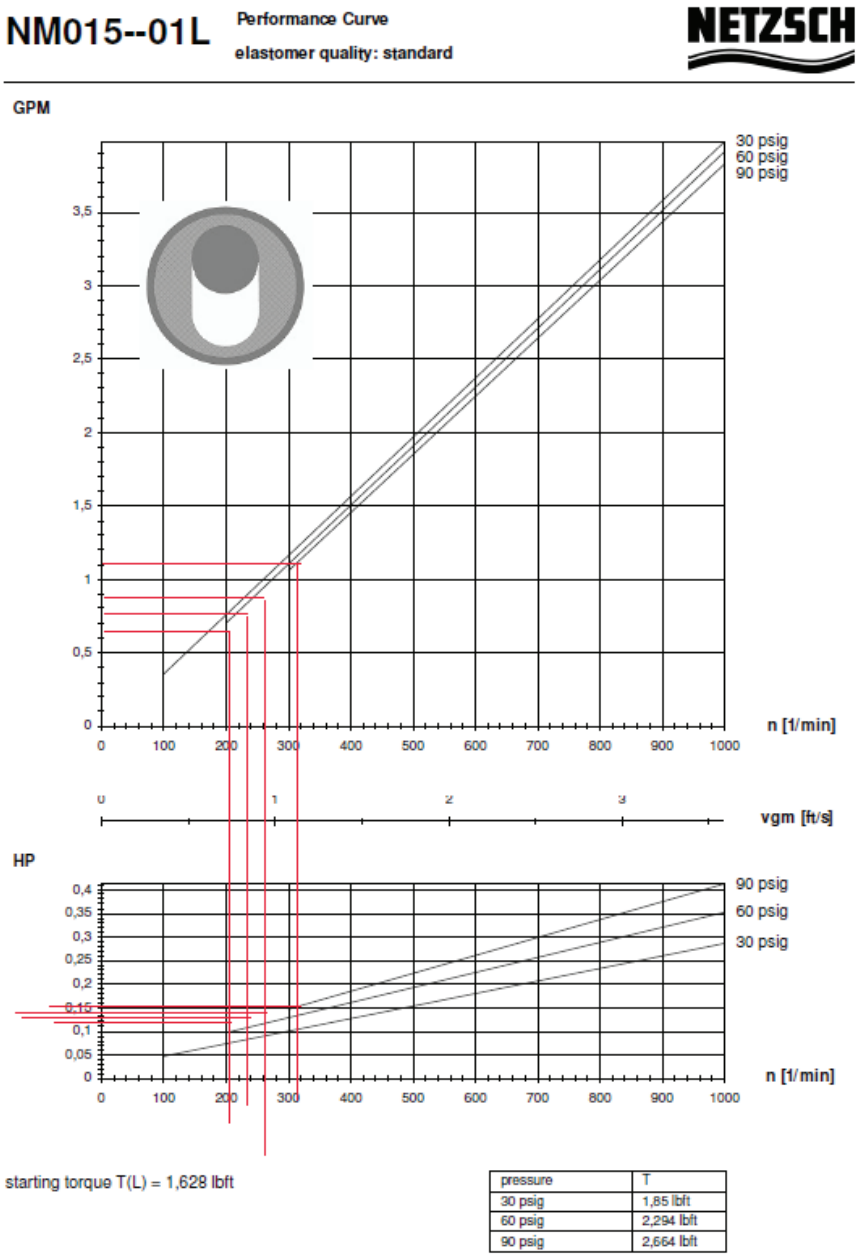

starting torque T(L) = 1,628 lbft

pressure	T
30 psig	1,85 lbft
60 psig	2,294 lbft
90 psig	2,664 lbft

Valid for water (1 cP) at 20 °C (70 °F). Tolerances are in accordance with VDMA 24284 (+10%/-5%).

NETZSCH Canada, Inc. 500 Welham Road, Barrie, On., L4N 8Z7
Ph: 705-797-8426 Fax: 705-797-8427 Toll Free: 1-866-683-7867

Offer: N180717ST-01 (Item #30)
Date: July 13, 2018

Customer No.:

Pump drawing:

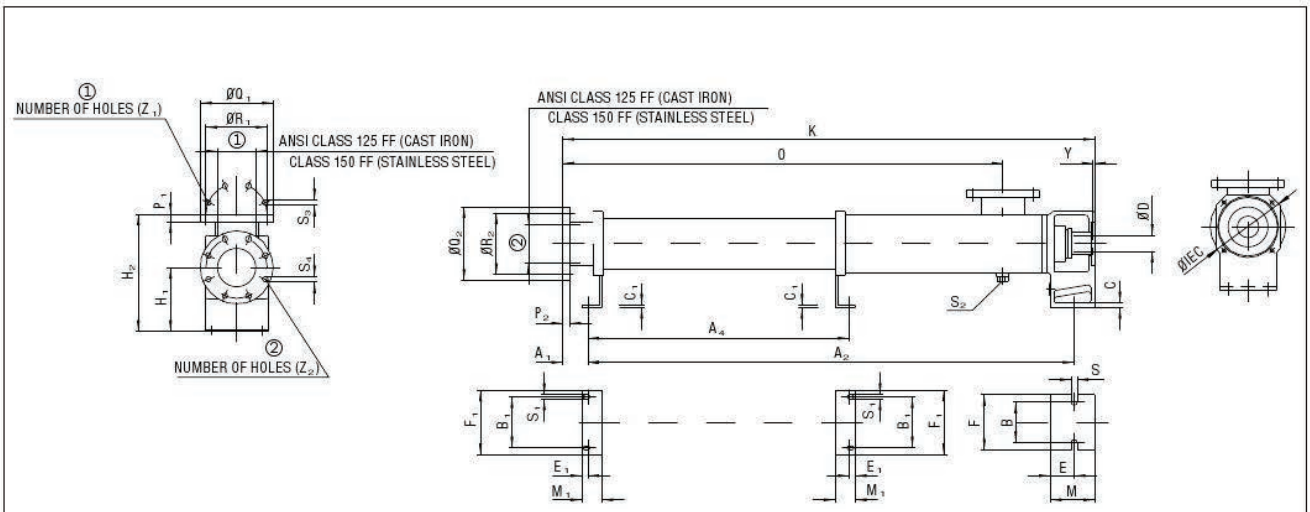

TYPE		BASIC DIMENSIONS																				ANSI PIPE CONNECTION						SHAFT END	
		A_1	A_2	A_4	B	B_1	C	C_1	E	E_1	F	F_1	H_1	H_2	K	M	M_1	O	S	S_1	S_2	Y	① / ②	P_1 / P_2	Q_1 / Q_2	R_1 / R_2	S_3 / S_4	Z_1 / Z_2	D_{MIN} / D_{MAX}	IEC
NM015BY	02S12	41	411	–	95	50	8	5	28	15	125	80	100	160	481	55	40	328	12	9	NPT 1/2"	5	① INTERNAL THREAD NPT 1 1/4"					12	140
	01L06																						② INTERNAL THREAD NPT 1 1/4"					20	160
NM021BY	02S12	41	487	–	95	50	8	5	28	15	125	80	100	160	557	55	40	404	12	9	NPT 1/2"	5	① INTERNAL THREAD NPT 1 1/4"					12	140
	01L06																						② INTERNAL THREAD NPT 1 1/4"					20	160
NM031BY	02S12	77	637	–	115	69	10	5	27	20	150	100	112	222	759	70	50	540	12	11	NPT 3/4"	5	① 2"	15.7	152.4	120.6	19	4	20	160
	01L06																						② 2"	15.7	152.4	120.6	19	4	28	200 250
NM038BY	02S12	85	950	–	115	95	10	6	35	20	150	130	132	262	1082	80	55	838	14	11	NPT 3/4"	5	① 3"	19.1	190.5	152.4	19	4	20	200
	01L06																						② 2.5"	17.5	177.8	139.7	19	4	32	250

All dimensions are in mm. All dimensions are subject to change without notice.
Flanges are ANSI to inch standards. All flanges are flat faced.
All pumps are Thru-bolt Construction. Thru-bolts not shown for clarity.
For weights, use equivalent weights for SY pumps.

NETZSCH

NEMO PUMP (WP)
RANGE NM --- B 02S12/01L06

DRAWING NUMBER
NDB4908995

This page is intentionally left blank

GENERAL ARRANGEMENT DRAWING(GAD)

This page is intentionally left blank

Tolerâncias Dimensionais/Dimensional Tolerances				Tolerâncias para Flanges cfs./Tolerances for Flanges according ASME B16.1 e B16.5	
Medida/Dimension	Tolerância/Tolerance	Medida/Dimension	Tolerância/Tolerance		Tolerância/Tolerance
>3 até/to 6	±0,5	>400 até/to 1000	±4,0		
>6 até/to 30	±1,0	>1000 até/to 2000	±6,0	Diâmetro da Furação/Drilling Diameter	±1,5
>30 até/to 120	±1,5	>2000 até/to 4000	±8,0	Diâmetro Furos/Holes Diameter	+1,0
>120 até/to 400	±2,5	>4000	±20	Espessura/Thickness	+3,0

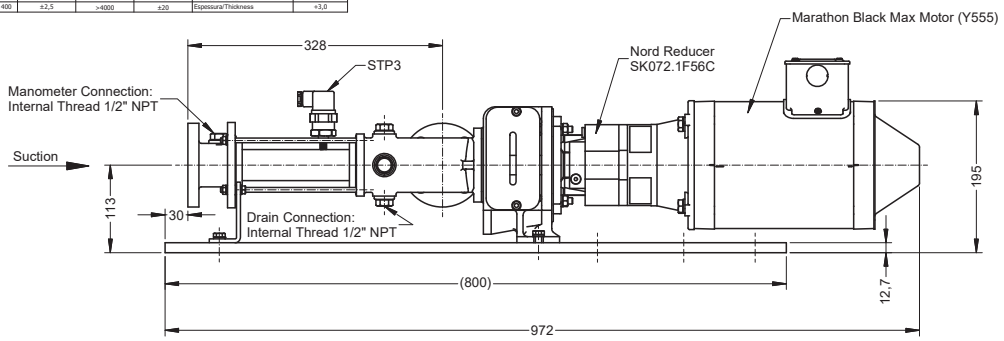

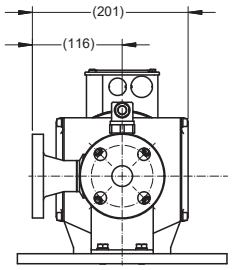

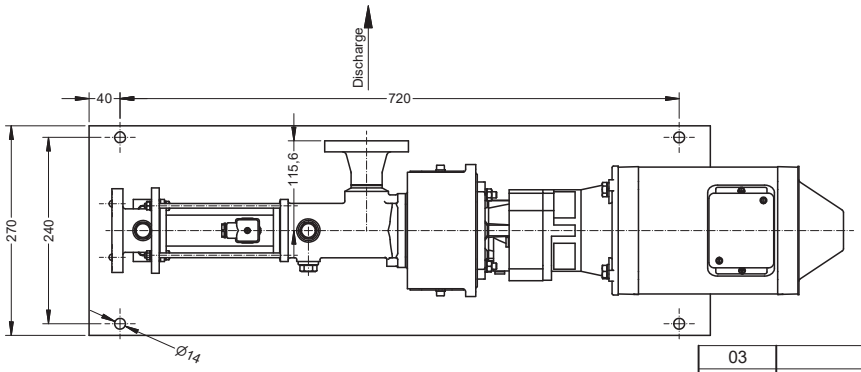

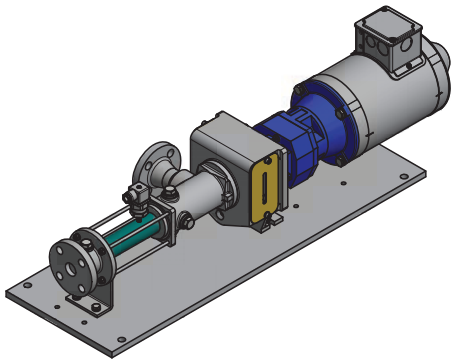

Revisão/Revision	Descrição/Description	Nome/Name	Data/Date
03	Rotacionado bocal de sucção 180°	Douglas	22/02/19
02	Rotacionado bocal de sucção 180°	Douglas	11/09/18
01	Alterado Bocal de Sucção e Descarga	Douglas	17/08/18

Cliente/Costumer:

Pedido/Order: | Referência/Reference:

Flanges
Borings acc. Norm:

ASME B16.5 / Classe 150 / FF / NPS 1

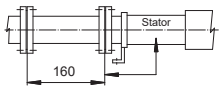

Lenght required for
stator disassembly

NETZSCH

Título/Tittle:

Pump NM015BY01L06B

HD-252848

	Data/Date	Nome/Name
Desenhado/Designer	17/08/2018	douglas.lourenco
Verificado/Checked Aprovado/Approved	17/08/2018	douglas.lourenco
TAG:	Peso/Weight kgf	

Nr. Desenho/Drawing Nr.: NDB4735478 | Folha/Sheet: 1/1 | Escala/Scale: 1:5

Reservado todos os direitos sobre este documento técnico. All rights reserved.

0

This page is intentionally left blank

NETZSCH CANADA INC. 2016

OPERATING AND MAINTENANCE INSTRUCTIONS:

STP3 DRY RUN PROTECTION

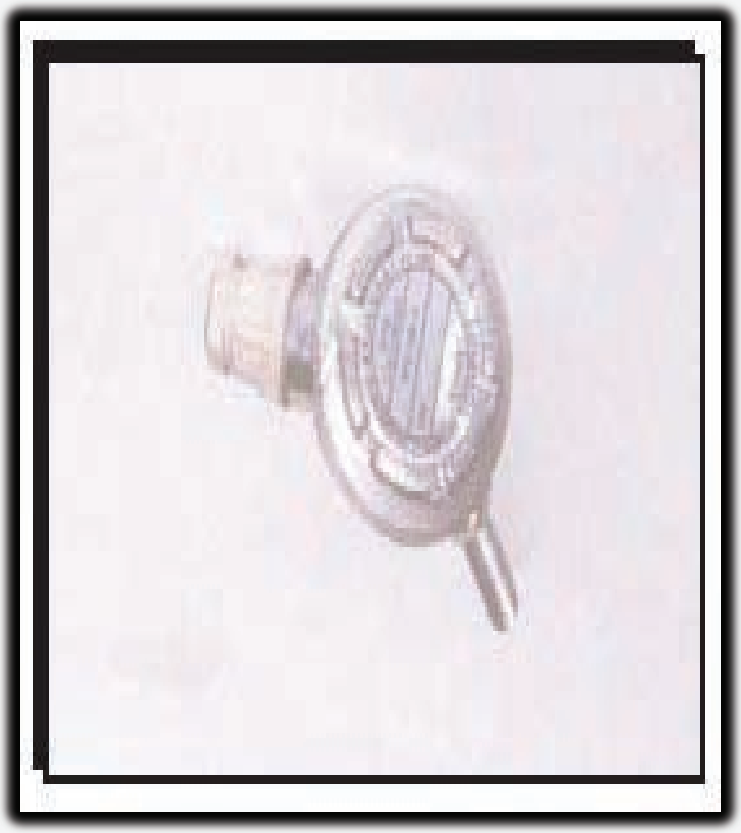



NETZSCH Canada, Incorporated
500 Welham Road
Barrie, Ontario L4N 8Z7
Tel: (705) 797-8426
Fax: (705) 797-8427
Toll: 866 683-7867

www.pumps.netzsch.com

1 DISMANTLING AND ASSEMBLY OF SPECIAL UNITS

WARNING Make sure that the power has been disconnected from the Temperature Controller prior to servicing.

The Stator Protector, which is a device to protect the stator from dry running mainly consists of three parts; the Temperature Controller (processor) with LED display, the Temperature Sensor (PT-100 RTD), and the Thermal Well.

1. The Device functions as follows

In the stator of the pump there is a Temperature Sensor. This sensor continuously measures the stator temperature which ranges from 0°C to 255°C. If the stator temperature rises above the programmed or specified cut-off temperature (about normal pumping temperature), which is set on the controller, there will be an optical or acoustic signal indication on the controller display. The controller can also be set to switch the pump off immediately. If the pump is not constantly monitored, it is recommended that the controller be set to shut the pump off automatically.

2. Technical Data

- Microprocessor based
- Measuring input for PT-100 RTD Temperature Sensor. Material of Construction: Platinum
- LED display, three digits, 13mm height, red indicator
- Switching position indication for internal K1 relay
- Resistance-Temperature Curve:
  European Alpha Curve = 0.00385
  American Alpha Curve = 0.003916
- Supply voltage 110 or 220 VAC or according to specification 24VAC.
- Storage temperature (-20°C to 70°C)
- Operating temperature (0°C to 60°C)
- Relative humidity maximum 75% no dew
- Suitable for panel mounting. Device is rated IP-54
- Output: 1relay 250 VAC 7^{A}, 1 changeover contact
- Installation Dimensions: front panel 72mm x 72mm; 90mm deep including terminals
- Terminals for threads max. 2,5 mm^2.

*Controller should be no more than 75 feet from the temperature sensor.

3. Setting the Cut-Off Temperature

The cut-off temperature value of the controller in normal conditions is easy to adjust. When no key is pressed, the display shows the actual stator temperature.

- When the PGM button is pressed, the cut-off temperature is shown on the display.
- By keeping the PGM button pressed, the cut-off temperature can be raised or lowered to the desired setting by using the UP or DOWN key.
- Releasing the arrow UP or DOWN key loads the adjusted new value into the memory.
- Be careful. Always release the UP or DOWN key before releasing the PGM key to retain this value in memory even if there is a power failure.

1 DISMANTLING AND ASSEMBLY OF SPECIAL UNITS

4. Selecting the Cut-Off Temperature

- Adjust the cut-off temperature up to 150°C at the controller.
- Start the pump.
- When steady pumping is being obtained, a read out of the stator temperature will be displayed on the controller.
- If this temperature is accurate, taking into consideration the product and ambient temperatures, then the cut-off temperature can be set 5°C higher.

5. Switching Functions

With the temperature sensor connected and the operating voltage applied to the controller, the internal relay K1 is energized.

If the cut-off temperature is being exceeded or a short-circuit is occurring, the internal relay K1 drops out.

For terminals, see illustration on the following page.

In the event of sensor failure or short-circuit, the maximum temperature of 255°C flashes on the display.

6. Safety Precautions

For the installation of the Stator Protector, as well as for the separate mini transformer, the latest regulations which apply for electrical installations must be adhered to.
If a temperature sensor is operated within a hazardous area there must be a special enclosure installed between the Temperature Controller and the Temperature Sensor (RTD).

The switching of inductive loads (contacts) may result a false reading from the Controller, or in complete malfunction of the Unit. Here, we recommended the wiring of a Surge Suppressor.

7. Installation of Temperature Sensor and Controller

The stator (3005), as displayed in tables 1,2 and 3, is equipped with a Reducing Fitting (4580) and a Temperature Sensor (RTD), (4180).

The stator is delivered with a built-in Thermal Well (4570). When installed on a NEMO Pump, this Thermal Well should be mounted on its inlet side.

***Controller should be no more than 75 feet from the temperature sensor (RTD).**

NETZSCH

Stator Protector Model STP3
NEMO NM Pump Series

Table 1
S-Geometry

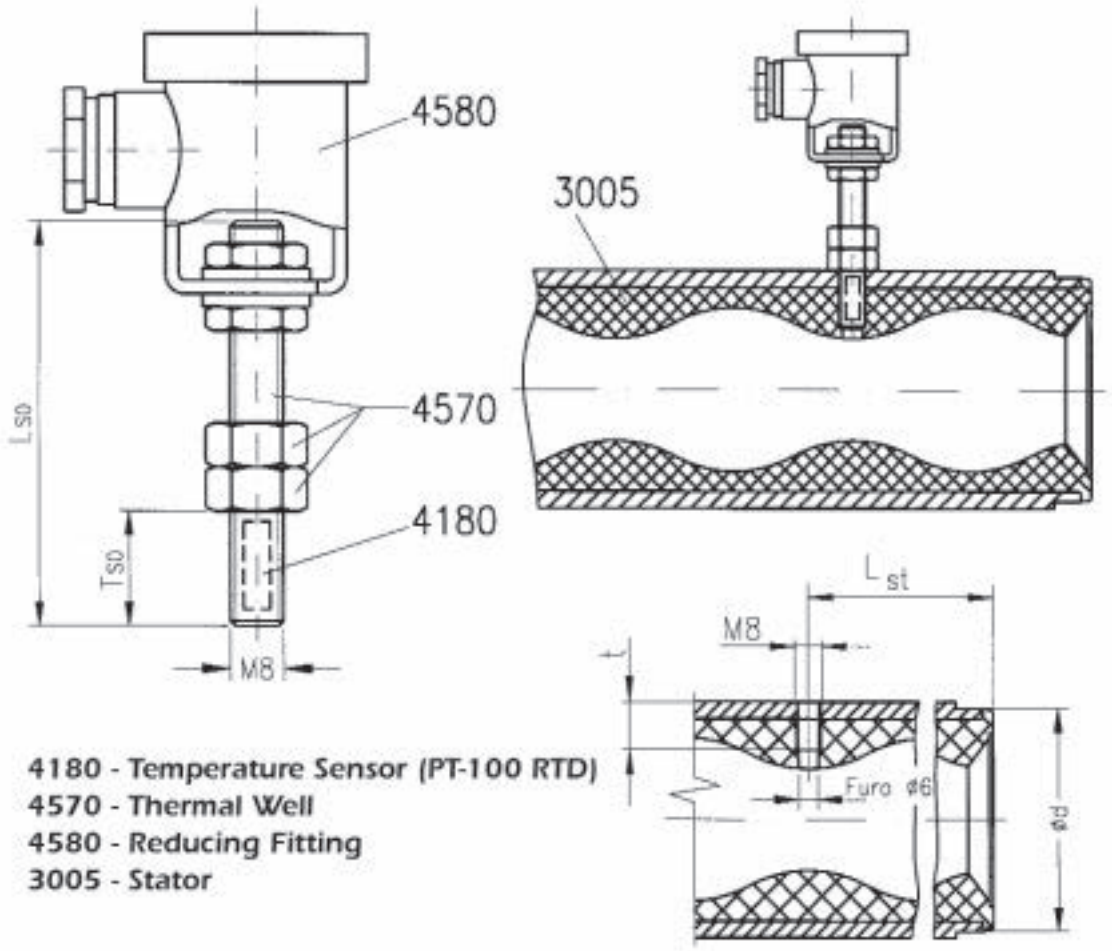

4180 - Temperature Sensor (PT-100 RTD)
4570 - Thermal Well
4580 - Reducing Fitting
3005 - Stator

Pump Model	SENSOR			STATOR		
	L_{S0}	T_{S0}	Distance of the Sensor from the Rotor	d	L_{st}	t
NM015–S	45	9	~6	37	24	9
NM021–S		12	~5.5	47	36	12
NM031–S		15	~7.5	66	47	15
NM038–S	65	23	~7.5	86	66	23
NM045–S		25	~7.5	101	77	25
NM053–S		30		118	92	30
NM063–S		36		141	107	36
NM076–S	85	40	~10	166	124	40
NM090–S		47		195	148	47
NM105–S		54	~11	225	181	54
NM125–S	105	66		265	215	66
NM148–S		80		315	257	80
						–

All dimensions in millimeters.

NETZSCH

Stator Protector Model STP3
NEMO NM Pump Series

Table 2
L-Geometry

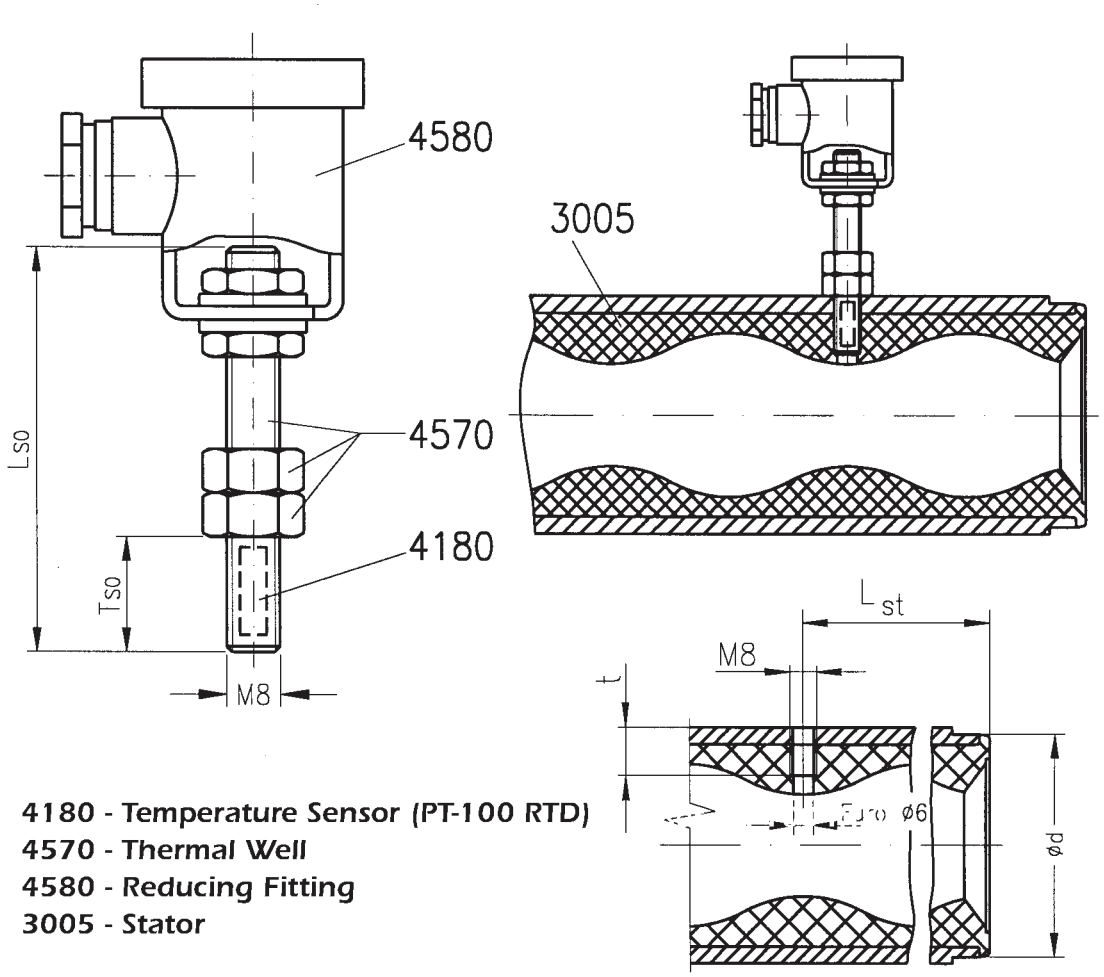

4180 - Temperature Sensor (PT-100 RTD)
4570 - Thermal Well
4580 - Reducing Fitting
3005 - Stator

Pump Model	SENSOR			STATOR		
	L_{so}	T_{so}	Distance of the Sensor from the Rotor	d	L_{st}	t
NM015–L	45	9	≈ 6	37	35	9
NM021–L		12	≈ 5.5	47	53	12
NM031–L		15	≈ 7.5	66	68	15
NM038–L	65	23	≈ 7.5	86	108	23
NM045–L		25	≈ 7.5	101	133	25
NM053–L		30		118	161	30
NM063–L		36		141	185	36
NM076–L	85	40	≈ 10	166	214	40
NM090–L		47		195	256	47
NM105–L		54	≈ 11	225	316	54
NM125–L	105	66		265	375	66
NM148–L		80		315	450	80

All dimensions in millimeters.

NETZSCH

Stator Protector Model STP3
NEMO NE Pump Series

Table 3

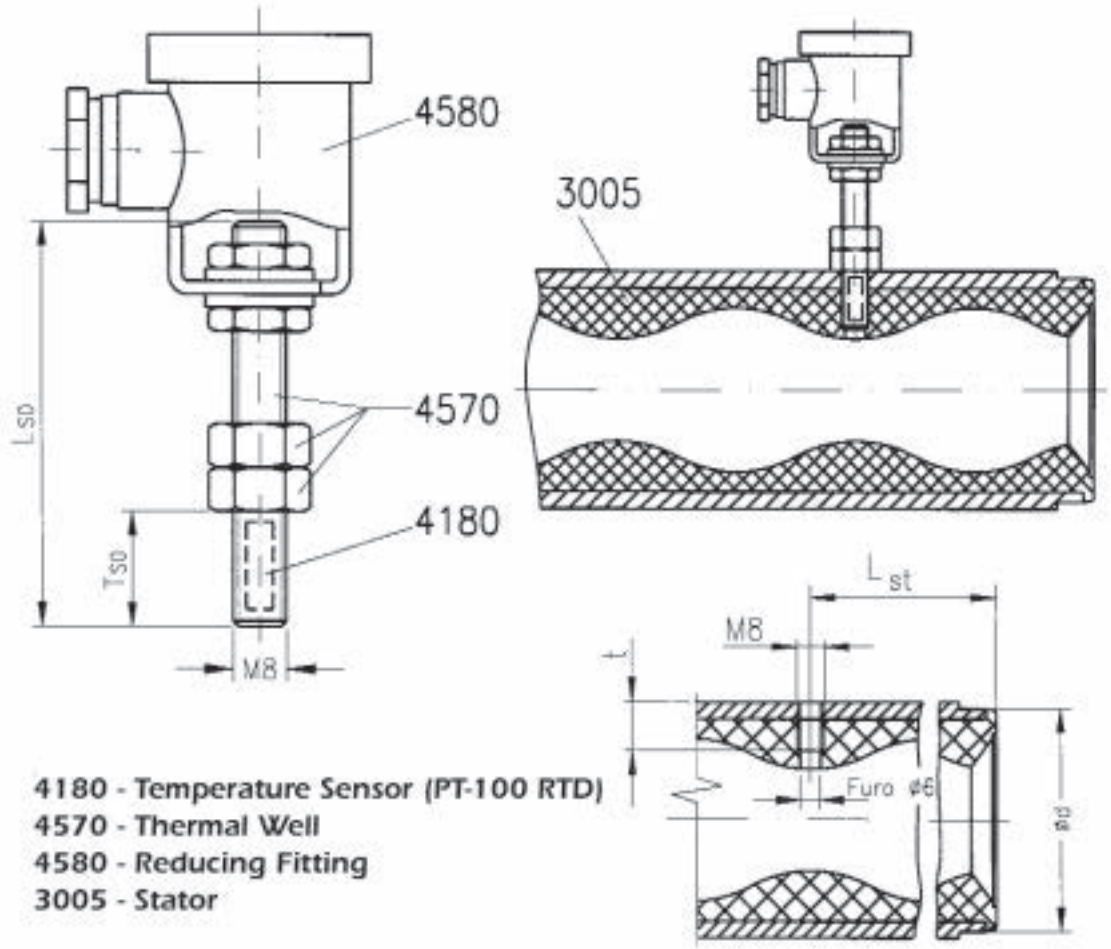

4180 - Temperature Sensor (PT-100 RTD)
4570 - Thermal Well
4580 - Reducing Fitting
3005 - Stator

Pump Model	SENSOR			STATOR			
	L_{SO}	T_{SO}	Distance of the Sensor from the Rotor	d	d_1	L_{st}	t
N_15	55	9	~6	39	27	40	9
N_20		12	~5.5	49	36	50	12
N_29						100	12
N_30	60	16	~7.5	71	54	75	16
N_40	65	22	~8	94	72	100	22
N_50	75	30		118	90	120	30
N_60	80	35		138	108	150	35
N_69				138	108	250	35
N_80	85	40	~10	174	144	200	40
N_89				174	144	250	40
N_100	95	52	~11	218	180	250	52
N_120	110	68		260	216	300	68
N_150	120	80	~10	315	270	375	80
N_200	150	117.5				475	

All dimensions in millimeters.

OMRON

Temperature Controllers
E5CSV

Simple to Set and Operate 1/16 DIN Size Controllers

- Easy setting using internal DIP and rotary switches
- ON/OFF or PID control (with on-demand auto-tuning) selectable
- Clearly visible digital display with character height of 13.5 mm
- Deviation indicator makes monitoring more effective
- Multiple temperature sensor input (thermocouple/platinum resistance thermometer) models stocked; thermocouple input only and platinum RTD input only models available
- Models with two alarms are ideal for temperature alarm applications
- Setting change protection prohibits tampering
- Sampling rate (500 ms) and selectable control period (2 and 20 s) improves response
- 8-mode alarm output and sensor error detection
- "Input shift" function adjusts display to reflect known sensor offsets



CE cULus LISTED NEW

- °C or °F field selectable
- Black or white cases available to match panel aesthetics
- RoHS compliant
- Water-resistant front panel rated NEMA 4X/IP66
- Compact: measures 48 H x 48 W x 78 D mm
- Accuracy ±0.5% of value

Model Number Structure

■ Model Number Legend

Models with Terminal Blocks

E5CSV-□□□□-□□
1 2 3 4 5 6

1. Output type
- R: Relay
- Q: Voltage for driving SSR

2. Number of alarms
- Blank: No alarm
- 1: 1 alarm
- 2: 2 alarms

3. Input type
- T: Thermocouple/platinum resistance thermometer (multi-input)
- KJ: Thermocouple
- P: Platinum resistance thermometer

4. Power supply voltage
- Blank: 100 to 240 VAC
- D: 24 VAC/VDC

5. Case color / Display scale
- Blank: Black
- W: Light gray
- F: Scale marked in °F (Black case only)

6. Power supply voltage
- AC100-240: 100 to 240 VAC
- AC/DC24: 24 VAC/VDC

Note: A functional explanation is provided here for illustration, but models are not necessarily available for all possible combinations. Please refer to *Ordering Information* when ordering.

Examples
- Voltage control output, without alarm, multi-input, light gray case: 115 VAC: E5CSV-QT-W AC100-240
- Relay control output, one alarm output, multi-input, black case: 24 VDC: E5CSV-R1TD AC/DC24

Ordering Information

■ List of Models

Size	Power supply voltage	Number of alarm points	Control output	TC/Pt multi-input Case color: Black Scale marked in °C	TC input Case color: Light gray Scale marked in °C	Pt input Case color: Light gray Scale marked in °C	TC/Pt multi-input Case color: Black Scale marked in °F
1/16 DIN 48 × 48 × 78 mm (W × H × D)	100 to 240 VAC	0	Relay	E5CSV-RT AC100-240			E5CSV-RT-F AC100-240
			Voltage (for driving SSR)	E5CSV-QT AC100-240			E5CSV-QT-F AC100-240
		1	Relay	E5CSV-R1T AC100-240	E5CSV-R1KJ-W	E5CSV-R1P-W	E5CSV-R1T-F AC100-240
			Voltage (for driving SSR)	E5CSV-Q1T AC100-240	E5CSV-Q1KJ-W	E5CSV-Q1P-W	E5CSV-Q1T-F AC100-240
		2 (See note)	Relay	E5CSV-R2T AC100-240			E5CSV-R2T-F AC100-240
			Voltage (for driving SSR)	E5CSV-Q2T AC100-240			E5CSV-Q2T-F AC100-240
	24 VAC/ VDC	0	Relay	E5CSV-RTD AC/DC24			
			Voltage (for driving SSR)	E5CSV-QTD AC/DC24			
		1	Relay	E5CSV-R1TD AC/DC24			E5CSV-R1TD-F AC/DC24
			Voltage (for driving SSR)	E5CSV-Q1TD AC/DC24			E5CSV-Q1TD-F AC/DC24
		2 (See note)	Relay	E5CSV-R2TD AC/DC24			
			Voltage (for driving SSR)	E5CSV-Q2TD AC/DC24			

Note: Models with two alarm outputs always use the upper limit alarm mode for the alarm 2 output.

■ Accessories (Order Separately)

Protective Cover

Type	Model
Hard Protective Cover	Y92A-48B

Terminal Cover

Model
E53-COV10

Specifications

■ Ratings

Supply voltage		100 to 240 VAC, 50/60 Hz	24 VAC/VDC, 50/60 Hz
Operating voltage range		85% to 110% of rated supply voltage	
Power consumption		5 VA	3 VA/2 W
Sensor input		Thermocouple input type: K, J, L Platinum resistance thermometer input type: Pt100, JPt100 Multi-input (thermocouple/platinum resistance thermometer) type: K, J, L, T, U, N, R, Pt100, JPt100	
Control output	Relay output	SPST-NO, 250 VAC, 3A (resistive load)	
	Voltage output (for driving the SSR)	12 VDC, 21 mA (with short-circuit protection circuit)3	
Control method		ON/OFF or 2-PID (with auto-tuning)	
Alarm output		SPST-NO, 250 VAC, 1A (resistive load)	
Setting method		Digital setting using front panel keys	
Indication method		3.5 digit, 7-segment digital display (character height: 13.5 mm) and deviation indicators	
Other functions		• Setting change prohibit (key protection) • Input shift • Temperature unit change (°C/°F) • Direct/reverse operation • Temperature range, Sensor switching (K/J/L, Pt100/JPt100) • Switching is performed between a thermocouple and platinum resistance thermometer for multi-input models. • Control period switching • 8-mode alarm output • Sensor error detection	
Ambient temperature		–10 to 55°C (with no condensation or icing)	
Ambient humidity		25% to 85%	
Storage temperature		–25 to 65°C (with no condensation or icing)	

■ Characteristics

Setting accuracy	Thermocouple (See note 1.):	(±0.5% of indication value or ±1°C, whichever is greater) ±1 digit max.
Indication accuracy (ambient temperature of 23°C)	Platinum resistance thermometer (See note 2.):	(±0.5% of indication value or ±1°C, whichever is greater) ±1 digit max.
Influence of temperature	R thermocouple inputs:	(±1% of PV or ±10°C, whichever is greater) ±1 digit max.
Influence of voltage	Other thermocouple inputs:	(±1% of PV or ±4°C, whichever is greater) ±1 digit max.
	Platinum resistance thermometer inputs:	(±1% of PV or ±2°C, whichever is greater) ±1 digit max.
Hysteresis (for ON/OFF control)	0.2% FS (0.1% FS for multi-input (thermocouple/platinum resistance thermometer) models)	
Proportional band (P)	1 to 999°C (automatic adjustment using auto-tuning/self-tuning)	
Integral time (I)	1 to 1,999 s (automatic adjustment using auto-tuning/self-tuning	
Derivative time (D)	1 to 1,999 s (automatic adjustment using auto-tuning/self-tuning)	
Alarm output range	Absolute-value alarm: Same as the control range Other: 0% to 100% FS Alarm hysteresis: 0.2°C or °F (fixed)	
Control period	2/20 s	
Sampling period	500 ms	
Insulation resistance	20 MΩ min. (at 500 VDC)	
Dielectric strength	2,000 VAC, 50/60 Hz for 1 min between current-carrying terminals of different polarity	
Vibration resistance — **Malfunction**	10 to 55 Hz, 20 m/s² for 10 min each in X, Y, and Z directions	
Vibration resistance — **Destruction**	10 to 55 Hz, 0.75-mm single amplitude for 2 hr each in X, Y, and Z directions	
Shock resistance — **Malfunction**	100 m/s² min., 3 times each in 6 directions	
Shock resistance — **Destruction**	300 m/s² min., 3 times each in 6 directions	
Life expectancy — **Electrical**	100,000 operations min. (relay output models)	
Weight	Approx. 120 g (Controller only)	
Degree of protection	Front panel: Equivalent to IP66; Rear case: IP20; Terminals: IP00	
Memory protection	EEPROM (non-volatile memory) (number of writes: 1,000,000)	
EMC	EMI Radiated: EN 55011 Group 1 Class A EMI Conducted: EN 55011 Group 1 Class A ESD Immunity: EN 61000-4-2: 4 kV contact discharge (level 2), 8 kV air discharge (level 3) Radiated Electromagnetic Field Immunity: EN 61000-4-3: 10 V/m (80-1000 MHz, 1.4-2.0 GHz amplitude modulated) (level 3), 10 V/m (900 MHz pulse modulated) Conducted Disturbance Immunity: EN 61000-4-6: 3 V (0.15 to 80 MHz) (level 2) Noise Immunity (First Transient Burst Noise): EN 61000-4-4 Burst Immunity: 2 kV power-line (level 3), 1 kV I/O signal-line (level 3) Surge Immunity: EN 61000-4-5: Power line: Normal mode 1 kV; Common mode 2 kV Output line (relay output): Normal mode 1 kV; Common mode 2 kV Voltage Dip/Interrupting Immunity: EN 61000-4-11 0.5 cycle, 100% (rated voltage)	
Approved standards	UL 61010C-1 (listing) CSA C22.2 No.1010-1	
Conformed standards	EN 61326, EN 61010-1, IEC 61010-1 VDE 0106 Part 100 (finger protection), when the terminal cover is mounted.	

Note: 1. The following exceptions apply to thermocouples.
- U, L: ±2°C ±1 digit max.
- R: ±3°C ±1 digit max. at 200°C or less

2. The following exceptions apply to platinum resistance thermometers.
Input set values 0, 1, 2, 3 for E5CSV: 0.5% FS ±1 digit max.
Input set value 1 for E5CSV: 0.5% FS ±1 digit max.

■ Electrical Life Expectancy Curve for Relays (Reference Values)

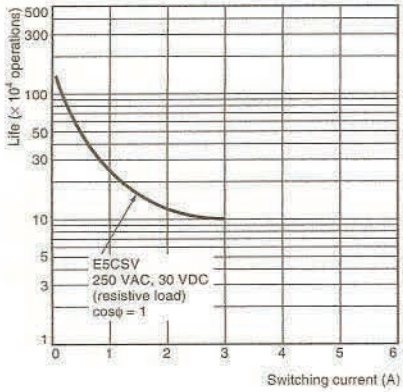

■ Temperature Range

Thermocouple Input Models

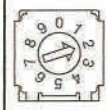

Temperature range (selected using switch)

(Default setting: 2)

Input	K						J/L			
Temperature range	200	300	400	500	600	999	200	300	400	500
Setting number	0	1	2	3	4	5	6	7	8	9
Minimum setting unit	1°C						1°C			

The shaded value indicates the default setting status.

Platinum Resistance Thermometer Input Models

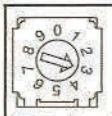

Temperature range (selected using switch)

(Default setting: 3)

Input	JPt100/Pt100									
Temperature range	50 / −50	50.0 / 0.0	80 / −20	99.9 / 0.0	200 / 0	300 / 0	400 / 0	300 / 0	400 / 0	199.9 / 0.0
Setting number	0	1	2	3	4	5	6	7	8	9
Minimum setting unit	1°C	0.1°C	1°C	0.1°C	1°C					0.1°C

The shaded value indicates the default setting status.

Multi-input (Thermocouple/Platinum Resistance Thermometer) Models

• Using Thermocouple Sensors, Control Mode Switch 5: OFF



Temperature range (selected using switch)

(Default setting: 0)

Input	K		J		L	T		U	N	R
Temperature range	1,300 / −99	199.9 / 0.0	850 / −99	199.9 / 0.0	850 / −99	400 / −99	199.9 / 0.0	400 / −99	1,300 / −99	1,700 / 0
Setting number	0	1	2	3	4	5	6	7	8	9
Minimum setting unit	1°C	0.1°C	1°C	0.1°C	1°C		0.1°C	1°C		

The shaded value indicates the default setting status.

• Using Platinum Resistance Thermometers, Control Mode Switch 5: ON



Temperature range (selected using switch)

(Default setting: 0)

Input	Pt100					JPt100				
Temperature range	850 / −99	199.9 / 0.0	99 / −99	200 / 0	400 / 0	500 / −99	199.9 / 0.0	99 / −99	200 / 0	400 / 0
Setting number	0	1	2	3	4	5	6	7	8	9
Minimum setting unit	1°C	0.1°C	1°C				0.1°C	1°C		

The shaded value indicates the default setting status.

External Connection Diagram

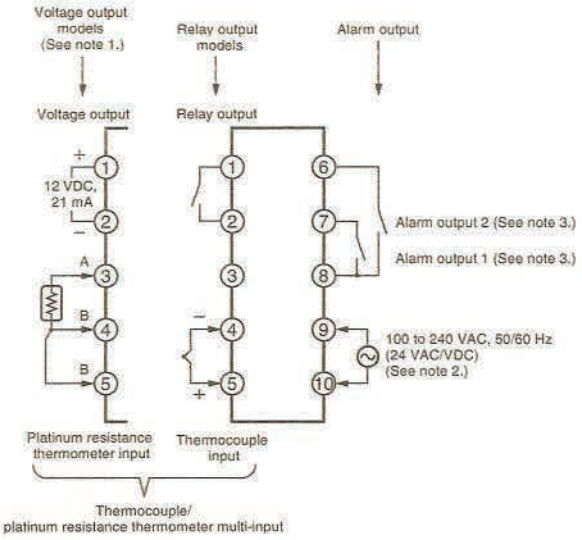

Note: 1. The voltage output (12 VDC, 21 mA) is not electrically isolated from the internal circuits. When using a grounding thermocouple, do not connect output terminals 1 or 2 to ground. Otherwise, unwanted current paths will cause measurement errors.

2. Models with 100 to 240 VAC and 24 VAC/VDC are separate. Models using 24 VDC have no polarity.

3. The number of alarm outputs depends on the model.

Nomenclature

E5CSV Models with Terminal Blocks



Operation

E5CSV

Deviation indicators

The △ indicator lights when the PV is greater than the SP and the ▽ indicator lights when the PV is less than the SP. The □ indicator (green) lights when the deviation is less than 1% FS (0.25% FS for multi-input models). These indicators flash during ST (self-tuning)/AT (auto-tuning).

Mode indicators

The SP indicator lights when the setting temperature is being displayed. The ALM indicator lights when the alarm value 1 is being displayed and flashes when the alarm value 2 is being displayed.

Mode Key

When the power is turned ON, normally the display will use the display items in the following order each time the Mode Key is pressed.

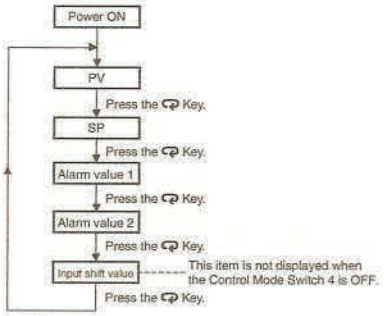



Lock Release Key

When the protect switch is ON, the set value can be changed by pressing the Up and Down Keys while holding down the Lock Release Key.

PV, SP, Alarm Value, Input Shift Display

The display switches each time the Key is pressed.

Output indicator

Lights when the control output is ON.

Alarm indicators

ALM1 (Alarm 1): Lights when the alarm 1 output is ON.
ALM2 (Alarm 2): Lights when the alarm 2 output is ON.

Up Key

Pressing the Up Key increases the SP/alarm value display. Keeping the Up Key pressed continues to increase the display value. When the internal protect switch is ON, press the Up Key while holding down the Lock Release Key.

Down Key

Pressing the Down Key decreases the SP/alarm value display. Keeping the Down Key pressed continues to decrease the display value. When the internal protect switch is ON, press the Down Key while holding down the Lock Release Key.

Settings before Turning ON the Power

E5CSV

Remove the E5CSV from the case to make the settings.

1. Insert the tool into the two tool insertion holes (one on the top and one on the bottom) and release the hooks.

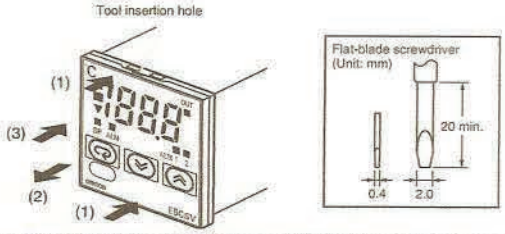

2. Insert the tool in the gap between the front panel and rear case, and pull out the front panel slightly. Grip the front panel and pull out fully. Be sure not to impose excessive force on the panel.

3. When inserting the E5CSV, check to make sure that the sealing rubber is in place and push the E5CSV toward the rear case until it snaps into position. While pushing the E5CSV into place, push down on the hooks on the top and bottom surfaces of the rear case so that the hooks are securely locked in place. Make sure that electronic components do not come into contact with the case.

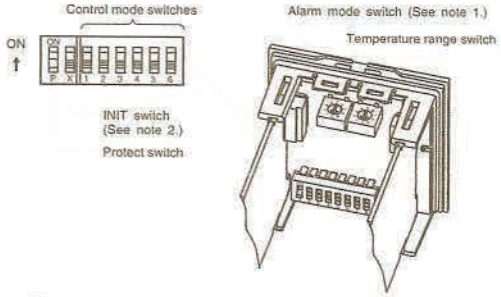

Note: 1. The alarm mode switch is not provided on models without alarms. Alarm 2 is always set to the upper limit in models with two alarms. A setting switch is not provided for alarm 2.
2. The INIT switch is always OFF during normal operation.

1. Sensor Type Specification

Select the number on the temperature range switch to change the temperature range.

Thermocouple (The default is 2.)

Input	K						J/L			
SP range	200	300	400	500	600	999	200	300	400	500
	0	0	0	0	0	0	0	0	0	0
Setting number	0	1	2	3	4	5	6	7	8	9

- The control range is -10% to +10% FS for each temperature range.

Note: The input indication range is the range that can be displayed for the control range (–99 to 1999). If the input is within the control range but exceeds the display range (–99 to 1999), values below –99 will be displayed as "ccc" and values above 1,999 will be displayed as "ddd."

Platinum Resistance Thermometer

(The default is 3.)

Input	JPt100/Pt100									
SP range	50	50.0	80	99.9	200	300	400	300	400	199.9
	–50	0.0	–20	0.0	0	0	0	0	0	0.0
Setting number	0	1	2	3	4	5	6	7	8	9

- The control range is -10% to +10% FS for each temperature range.

Note: 1. The input indication range is the range that can be displayed for the control range (–99 to 1999). If the input is within the control range but exceeds the display range (–99 to 1999), values below –99 will be displayed as "ccc" and values above 1,999 will be displayed as "ddd."
2. If the unit is changed to 1 degree when the SP and alarm value for the temperature range are displayed in 0.1-units from 0.0 to 199.9 or 0.0 to 99.9, the values will be multiplied by 10 (e.g., 0.5 becomes 5). If the unit is changed in the reverse direction, the values will be divided by 10. After changing the range, set the SP and alarm value again.
3. The temperature range for setting numbers 5 and 6 are the same as for 7 and 8, respectively.

Multi-input (Thermocouple/Platinum Resistance Thermometer) Models

- Using Thermocouple Sensors, Control Mode Switch 5: OFF

Input	K		J		L	T		U	N	R
SP range	1,300	199.9	850	199.9	850	400	199.9	400	1,300	1,700
	–99	0.0	–99	0.0	–99	–99	0.0	–99	–99	0
Setting number	0	1	2	3	4	5	6	7	8	9

- The control range is -20°C to +20°C of the input temperature range.

Note: 1. The input indication range is the range that can be displayed for the control range (–99 to 1999). If the input is within the control range but exceeds the display range (–99 to 1999), values below –99 will be displayed as "ccc" and values above 1,999 will be displayed as "ddd."
2. If unit is changed to 1 degree when the SP and alarm value for the temperature range are displayed in 0.1-units from 0.0 to 199.9 or 0.0 to 99.9, the values will be multiplied by 10 (e.g., 0.5 becomes 5). If the unit is changed in the reverse direction, the values will be divided by 10. After changing the range, set the SP and alarm value again.

- Using Platinum Resistance Thermometers, Control Mode Switch 5: ON

Input	Pt100					JPt100				
SP range	850	199.9	99	200	400	500	199.9	99	200	400
	–99	0.0	–99	0	0	–99	0.0	–99	0	0
Setting number	0	1	2	3	4	5	6	7	8	9

- The control range is -20°C to +20°C of the input temperature range.

Note: 1. The input indication range is the range that can be displayed for the control range (–99 to 1999). If the input is within the control range but exceeds the display range (–99 to 1999), values below –99 will be displayed as "ccc" and values above 1,999 will be displayed as "ddd."
2. If unit is changed to 1 degree when the SP and alarm value for the temperature range are displayed in 0.1-units from 0.0 to 199.9 or 0.0 to 99.9, the values will be multiplied by 10 (e.g., 0.5 becomes 5). If the unit is changed in the reverse direction, the values will be divided by 10. After changing the range, set the SP and alarm value again.

Mode Key Display Order

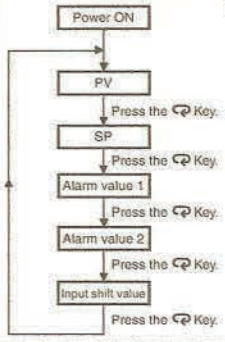

- If the SP falls outside the temperature range when the temperature range is changed, the SP will be displayed first. The SP will be changed automatically either to the minimum value or the maximum value, whichever is nearest.
- If the alarm value falls outside the temperature range when the temperature range is changed, the alarm value will be displayed first. The alarm value will be changed automatically to the maximum value in the new temperature range.

2. Operation Settings

Use the control mode switches () to change the control mode. (All switches are OFF for the default settings.)



Function selection			1	2	3	4	5	6
ON/OFF PID	PID control		ON					
	ON/OFF control		OFF					
Control period	2 s			ON				
	20 s			OFF				
Direct/ reverse operation	Direct operation (cooling)				ON			
	Reverse operation (heating)				OFF			
Input shift display	Enabled					ON		
	Disabled					OFF		
Temperature Sensor selection	Thermocouple	K, L					OFF	
		K, J					ON	
	Platinum resistance thermometer	Pt100					OFF	
		JPt100					ON	
	Multi-input (thermocouple/ platinum resistance thermometer)	Platinum resistance thermometer input					OFF	
		Thermocouple input					ON	
Temperature unit	°F							ON
	°C							OFF

Note: The previous name Pt100 has been changed to JPt100 in accordance with revisions to JIS. The previous name J-DIN has been changed to L in accordance with revisions to DIN standards.

3. Alarm Modes

Select the number of the alarm mode switch  when changing the alarm mode. (The default is 2).

Set value	Alarm type	Alarm output operation
0, 9	Alarm function OFF	OFF
1	Upper- and lower-limit	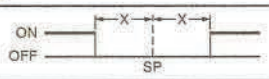
2	Upper-limit	
3	Lower-limit	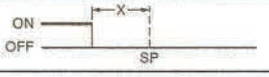
4	Upper- and lower-limit range	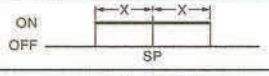
5	Upper- and lower-limit with standby sequence (See note 2.)	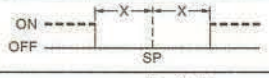
6	Upper-limit with standby sequence (See note 2.)	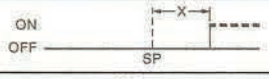
7	Lower-limit with standby sequence (See note 2.)	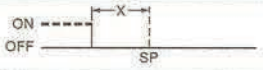
8	Absolute-value upper-limit	

Note: 1. No alarm. The alarm value (alarm operation display) will not be displayed when the setting is 0 or 9 even if the selection key is pressed.
Alarm Setting Range
X: 0 to FS (full scale); Y: Within temperature range
The value of X is the deviation setting for the SP (set point).

2. Standby Sequence Function (The standby sequence operates when the power is turned ON.)

Rising Temperature

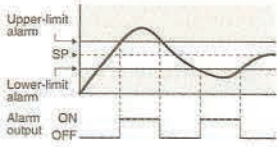

Dropping Temperature

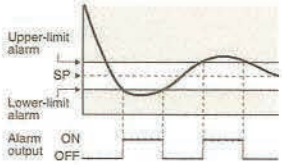

Note: Turn OFF the power before changing the DIP switch settings on the E5CSV. Each of the switch settings will be enabled after the power is turned ON.

For details on the position of the temperature range switch, control mode switches, and alarm mode switch, refer to page 6.

4. Using the Control Mode Switches

(1) Using ON/OFF Control and PID Control

ON/OFF Control

The control mode is set to ON/OFF control as the default setting.

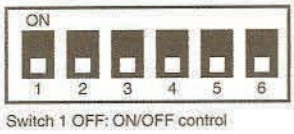

Switch 1 OFF: ON/OFF control

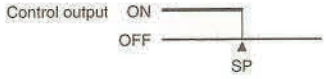

To perform cooling control of freezers, etc., turn ON switch 3.



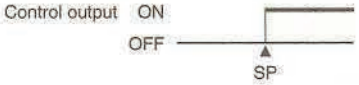

PID Control

Turn ON switch 1 to use PID control.

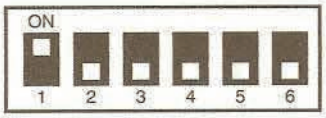

Switch 1 ON: PID control

1. Set the control period.

Performing Control via Relay Output, External Relay, or Conductor

Switch 2: OFF (control period: 20 s)



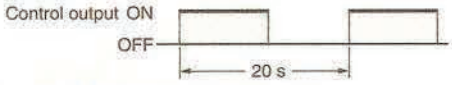

Quick Control Response Using an SSR

Switch 2: ON (control period: 2 s)



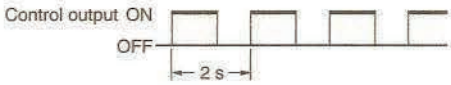

2. Set direct/reverse operation for the output.

Performing Heating Control for Heaters

Switch 3: OFF





Performing Cooling Control for Freezers

Switch 3: ON



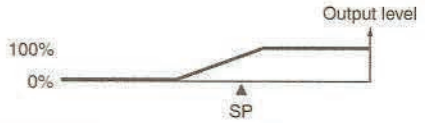

ST (Self-tuning) Features

ST (self-tuning) is a function that finds PID constants by using step response tuning (SRT) when Controller operation begins or when the set point is changed. Once the PID constants have been calculated, ST is not executed when the next control operation is started as long as the set point remains unchanged. When the ST function is in operation, be sure to turn ON the power supply of the load connected to the control output simultaneously with or before starting Controller operation.

Executing AT (Auto-tuning)

AT (auto-tuning) is executed by pressing the Up and Down Keys for at least 2 s while the PV is displayed. The deviation indicators flash during auto-tuning (AT) execution. AT will be cancelled by performing the same operation that AT is executing during AT operation. Flashing stops when AT is completed.

AT execution

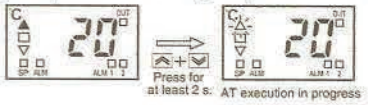

AT cancelled

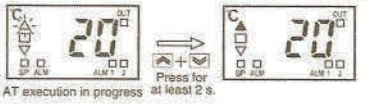

Note: One of the deviation indicators (▲■▼) will flash.

(2) Using the E5CSV in Devices for Fahrenheit-scale Users

(Displaying in °F)

Turn ON switch 6 to display temperatures in °F.

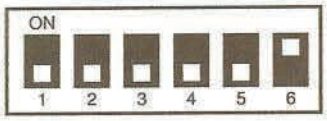

Temperature Range for °F

The temperature is set to °F using the same temperature range switch as °C.

Thermocouple

Setting	°F	
0	K	0 to 200
1		0 to 300
2		0 to 400
3		0 to 500
4		0 to 600
5		0 to 999
6	J/L	0 to 999
7		0 to 300
8		0 to 400
9		0 to 500

Platinum Resistance Thermometer

Setting	°F	
0	JPt100 or Pt100	-50 to 50
1		0.0 to 50.0
2		-20 to 80
3		0.0 to 99.9
4		0 to 200
5		0 to 300
6		0 to 400
7		0 to 600
8		0 to 800
9		0.0 to 199.9

Multi-input (Thermocouple/ Platinum Resistance Thermometer)

Control mode switch 5: OFF

Setting	°F	
0	K	-99 to 1999
1		0.0 to 199.9
2	J	-99 to 1500
3		0.0 to 199.9
4	L	-99 to 1500
5	T	-99 to 700
6		0.0 to 199.9
7	U	-99 to 700
8	N	-99 to 1999
9	R	0 to 1999

Multi-input (Thermocouple/ Platinum Resistance Thermometer)

Control mode switch 5: ON

Setting	°F	
0	Pt100	-99 to 1500
1		0.0 to 199.9
2		-99 to 99
3		0 to 200
4		0 to 400
5	JPt100	-99 to 900
6		0.0 to 199.9
7		-99 to 99
8		0 to 200
9		0 to 400

Note: The control range for a thermocouple input or platinum resistance thermometer input is -10% to +10% FS for each temperature range. The control range for multi-input (thermocouple/platinum resistance thermometer) models is -40 to +40° F of each temperature range.

Using K, L/Pt100 Thermometers

Turn ON switch 5 when using K, L/Pt100 Thermometers.

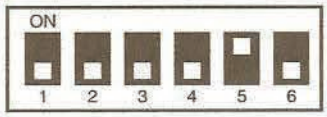

Note: The previous name J-DIN has been changed to L in accordance with revisions to DIN standards.

---

(3) Setting Input Shift

Turn ON switch 4, and after turning ON the power, press the Mode Key until *H0* (indicates input shift of 0) is displayed. Press the Up and Down Keys to set the shift value.

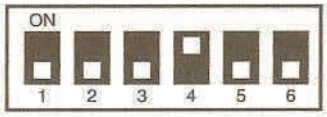

Shift Example

Input shift display	Measured temperature	Temperature display
H0 (no shift)	100°C	100°C
H9 (+9°C shift)	100°C	109°C
L9 (-9°C shift)	100°C	91°C

Note: When control mode switch 4 is turned OFF (no input shift display), the input shift is not displayed but the shift value is enabled. To disable input shift, set the input shift value to *H0*. The shift range depends on the setting unit.

Setting unit	1°C	0.1°C
Compensation range	-99 to +99°C	-9.9 to +9.9°C
Input shift display	L99 to H99	L9.9 to H9.9

5. Protect Switch

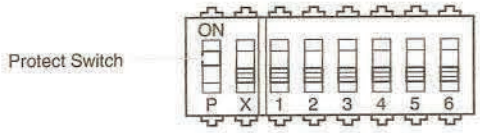

When the protect switch is ON, Up Key and Down Key operations are prohibited to prevent setting mistakes.

Installation

- All models in the E5CSV Series conform to DIN 43700 standards.
- The recommended panel thickness is 1 to 4 mm.
- Be sure to mount the E5CSV horizontally.

Mounting the E5CSV

1. For waterproof mounting, waterproof packing must be installed on the Controller. Waterproofing is not possible when group mounting several Controllers.
2. Insert the E5CSV into the mounting hole in the panel.
3. Push the adapter from the terminals up to the panel, and temporarily fasten the E5CSV.
4. Tighten the two fastening screws on the adapter. Alternately tighten the two screws little by little to maintain a balance. Tighten the screws to a torque of 0.29 to 0.39 N·m.

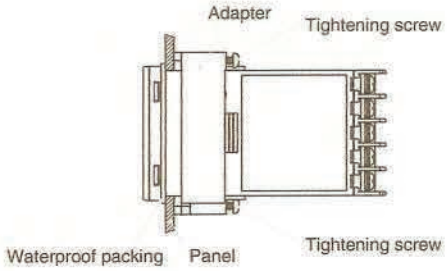

Error Displays and Causes

In addition to the alarm indicator, errors notification is provided on the display. Be sure to remove the cause of the error promptly.

Display status	Cause	Control output
PV displayed as FFF	The process value is higher than the control temperature range (overflow).	Heating control (reverse operation): OFF Cooling control (direct operation): ON
PV displayed as ---	The process value is lower than the control temperature range (underflow).	Heating control (reverse operation): ON Cooling control (direct operation): OFF
FFF flashing	(1)Thermocouple models and platinum resistance thermometer models: The process value is higher than the overflow temperature, or a Sensor error has occurred. (2)Multi-input (Thermocouple/platinum resistance thermometer) models: The process value is higher than the control temperature range or a Sensor error has occurred.	OFF
--- flashing	(1)Thermocouple and platinum resistance thermometer input: The process value is lower than the underflow temperature, or a Sensor error has occurred. (2)Thermocouples: The polarity is reversed. (3)Multi-input (Thermocouple/platinum resistance thermometer) models: The process value is lower than the control temperature range or a Sensor error has occurred.	OFF
E11 is displayed	A memory error (E11) has occurred. Turn the power ON again. If the display remains the same, the Controller must be repaired.	The control outputs and alarm outputs turn OFF.

Note: In models with an alarm, FFF appears or flashes on the display to indicate that the temperature has exceeded the maximum display temperature and the output is set according to the alarm mode. In the same way, --- appears or flashes on the display to indicate that the temperature has exceeded the minimum display temperature and the output is set according to the alarm mode.

Sensor Error Displays and Causes

■ Thermocouple

Status		Display	Control output
Burnout	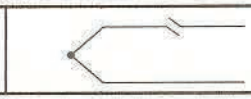	FFF flashing	OFF

Note: The room temperature is displayed if an input short-circuit occurs.

■ Platinum Resistance Thermometer

Status		Display	Control output
Burnout	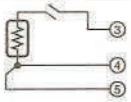	FFF flashing	OFF
	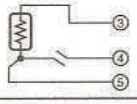	--- flashing	OFF
	2 or 3 wires disconnected	FFF flashing	OFF
Short-circuit	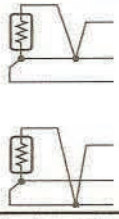	--- flashing	OFF

Note: The resistance value for platinum resistance thermometers is 100 Ω at 0°C and 140 Ω at 100°C.

Comparison with E5CS-X

■ Model Number Legend

Previous model

E5CS-□□□X
1 2 3

	Classification	Symbol	Meaning
1	Control output	R	Relay: SPDT (single-pole, double-throw)
		Q	Voltage
2	Alarm output	Blank	No alarms
		1	One alarm
3	Input type	KJ	Thermocouple (K, J)
		P	Platinum resistance thermometer (Pt100, JPt100)
	Terminal appearance	X	Model with terminal block

Main Differences

Terminal block models use the model number E5CSV.
The suffix "D" is added to models with a supply voltage of 24 VAC/VDC.
The suffix "W" is added to models with a light gray case color.

E5CSV

E5CSV-□□□□-□
1 2 3 4 5

	Classification	Symbol	Meaning
1	Control output	R	Relay: SPST-NO (single-pole, single-throw, normally open)
		Q	Voltage
2	Alarm output	Blank	No alarms
		1	One alarm
		2	Two alarms
3	Input type	T	Multi-input (thermocouple/platinum resistance thermometer) models
		KJ	Thermocouple (K, J)
		P	Platinum resistance thermometer (Pt100, JPt100)
4	Supply specifications	Blank	100 to 240 VAC
		D	24 VAC/VDC
5	Case color	Blank	Black
		W	Light gray
		F	Scale marked in F° (Black case only)

■ Display

Previous model

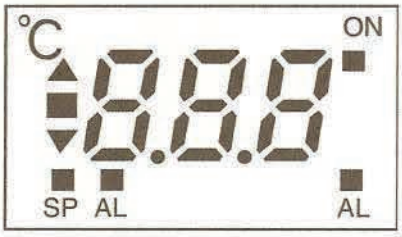

E5CSV

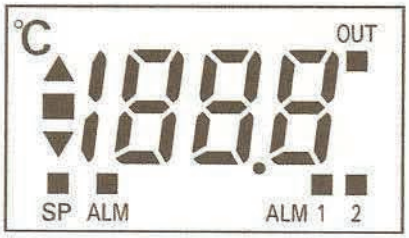

The display digits can be increased up to 1,999.
The ALM2 display has been added.
The display "ON" has changed to "OUT" and "AL" has changed to "ALM."

■ Functions

The control outputs for relay outputs have been changed from SPDT (single-pole, double-throw) to SPST-NO (single-pole, single-throw, normally open) contacts.
The control method has been changed to 2-PID control.
An auto-tuning (AT) function has been added.
The deviation display flashes during self-tuning (ST) and auto-tuning (AT).
The control calculation period has been improved from 2 s to 0.5 s.

■ External Dimensions

The depth has been shortened from 100 mm to 76 mm.

Comparison with E5CS-X

■ Model Number Legend

Previous model

E5CS-□□□X
1 2 3

	Classification	Symbol	Meaning
1	Control output	R Q	Relay: SPDT (single-pole, double-throw) Voltage
2	Alarm output	Blank 1	No alarms One alarm
3	Input type	KJ P	Thermocouple (K, J) Platinum resistance thermometer (Pt100, JPt100)
	Terminal appearance	X	Model with terminal block

Main Differences

Terminal block models use the model number E5CSV.
The suffix "D" is added to models with a supply voltage of 24 VAC/VDC.
The suffix "W" is added to models with a light gray case color.

E5CSV

E5CSV-□□□□-□
1 2 3 4 5

	Classification	Symbol	Meaning
1	Control output	R Q	Relay: SPST-NO (single-pole, single-throw, normally open) Voltage
2	Alarm output	Blank 1 2	No alarms One alarm Two alarms
3	Input type	T KJ P	Multi-input (thermocouple/platinum resistance thermometer) models Thermocouple (K, J) Platinum resistance thermometer (Pt100, JPt100)
4	Supply specifications	Blank D	100 to 240 VAC 24 VAC/VDC
5	Case color	Blank W F	Black Light gray Scale marked in F° (Black case only)

■ Terminal Arrangement

• The terminal arrangement has changed from a horizontal to vertical configuration.

Previous model	E5CSV
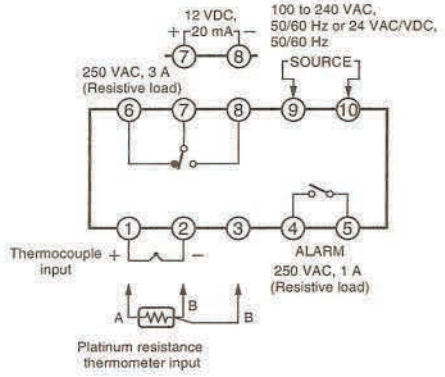	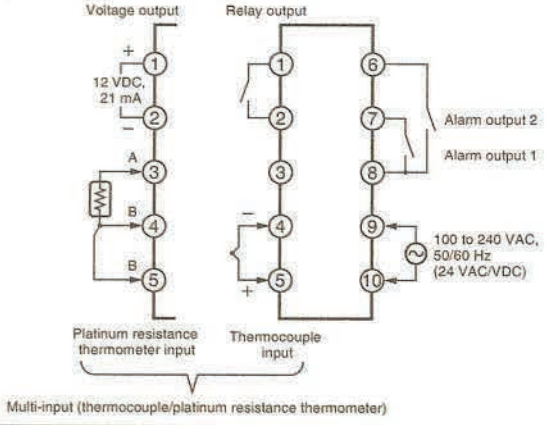

■ DIP Switch and Rotary Switch Setting Methods

No change from previous models.

Dimensions

Note: All units are in millimeters unless otherwise indicated.

■ Controller

E5CSV



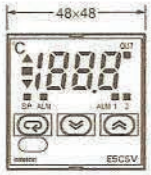

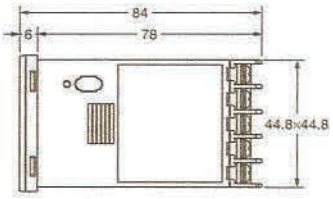

Note: Terminals cannot be removed.

Panel Cutout Dimensions

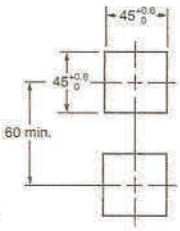

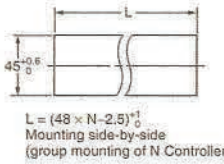

L = (48 × N−2.5) +1 0
Mounting side-by-side
(group mounting of N Controllers)

E5CSV + Adapter for Flush Mounting (Provided)

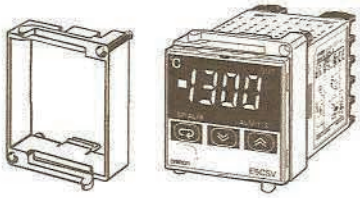

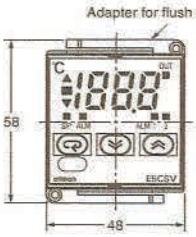

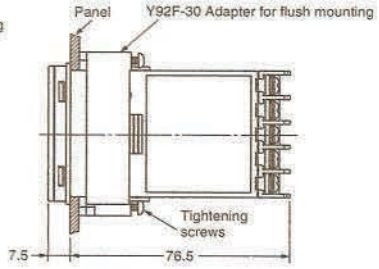

Note: 1. The recommended panel thickness is 1 to 4 mm.
2. Group mounting is possible in one direction only.

Hard Protective Cover

The Y92A-48B Protective Cover (hard type) is available for the following applications.

- To protect the set from dust and dirt.
- To prevent the panel from being accidentally touched causing displacement of set values.
- To provide effective protection against water droplets.



Terminal Cover

E53-COV10

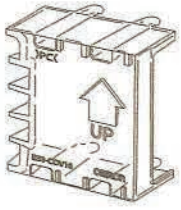

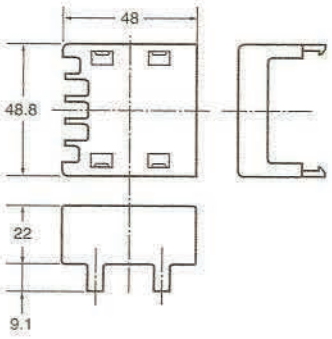

Precautions

⚠ Caution

Do not touch the terminals while power is being supplied. Doing so may occasionally result in minor injury due to electric shock.



Do not allow pieces of metal, wire clippings, or fine metallic shavings or filings from installation to enter the product. Doing so may occasionally result in electric shock, fire, or malfunction.



Do not use the product where subject to flammable or explosive gas. Otherwise, minor injury from explosion may occasionally occur.



Never disassemble, modify, or repair the product or touch any of the internal parts. Minor electric shock, fire, or malfunction may occasionally occur.



CAUTION - Risk of Fire and Electric Shock

a) This product is UL listed as Open Type Process Control Equipment. It must be mounted in an enclosure that does not allow fire to escape externally.

b) More than one disconnect switch may be required to de-energize the equipment before servicing the product.

c) Signal inputs are SELV, limited energy. (See note 1.)

d) Caution: To reduce the risk of fire or electric shock, do not interconnect the outputs of different Class 2 circuits. (See note 2.)



If the output relays are used past their life expectancy, contact fusing or burning may occasionally occur. Always consider the application conditions and use the output relays within their rated load and electrical life expectancy. The life expectancy of output relays varies considerably with the output load and switching conditions.



Loose screws may occasionally result in fire.
Tighten terminal screws to the specified torque of 0.74 to 0.90 N·m.



Unexpected operation may result in equipment damage or accidents if the settings are not appropriate for the controlled system. Set the Temperature Controller as follows:

- Set the parameters of the Temperature Controller so that they are appropriate for the controlled system.
- Turn the power supply to the Temperature Controller OFF before changing any switch setting. Switch settings are read only when the power supply is turned ON.
- Make sure that the INIT switch in the control mode switches is turned OFF before operating the Temperature Controller.



A malfunction in the Temperature Controller may occasionally make control operations impossible or prevent alarm outputs, resulting in property damage. To maintain safety in the event of malfunction of the Temperature Controller, take appropriate safety measures, such as installing a monitoring device on a separate line.



Faulty terminal contact or decreased waterproofing capability may result in a fire or equipment malfunction. When inserting the Temperature Controller into the rear case after setting the switches, check the watertight packing and make sure that the top and bottom hooks are locked securely in place.



Note: 1. A SELV circuit is one separated from the power supply with double insulation or reinforced insulation, that does not exceed 30 V r.m.s. and 42.4 V peak or 60 VDC.

2. A class 2 power supply is one tested and certified by UL as having the current and voltage of the secondary output restricted to specific levels.

■ Precautions for Safe Use

Be sure to observe the following precautions to prevent operation failure, malfunction, or adverse affects on the performance and functions of the product. Not doing so may occasionally result in unexpected events.

1. The product is designed for indoor use only. Do not use the product outdoors or in any of the following locations.
   - Places directly subject to heat radiated from heating equipment.
   - Places subject to splashing liquid or oil atmosphere.
   - Places subject to direct sunlight.
   - Places subject to dust or corrosive gas (in particular, sulfide gas and ammonia gas).
   - Places subject to intense temperature change.
   - Places subject to icing and condensation.
   - Places subject to vibration and large shocks.
2. Use and store the product within the rated temperature and humidity ranges.
   Group-mounting two or more Temperature Controllers, or mounting Temperature Controllers above each other may cause heat to build up inside the Temperature Controllers, which will shorten their service life. In such a case, use forced cooling by fans or other means of air ventilation to cool down the Temperature Controllers.
3. To allow heat to escape, do not block the area around the product. Do not block the ventilation holes on the product.
4. Use the specified size (M3.5, width of 7.2 mm or less) crimped terminals for wiring. To connect bare wires to the terminal block, use copper braided or solid wires with a gage of AWG24 to AWG18 (equal to a cross-sectional area of 0.205 to 0.832 mm^2). (The stripping length is 5 to 6 mm.) Up to two wires of the same size and type, or two crimp terminals can be inserted into a single terminal.
5. Be sure to wire properly with correct polarity of terminals. Do not wire any of the I/O terminals incorrectly.
6. Do not wire the terminals that are not used.
7. The voltage output (control output) is not electrically isolated from the internal circuits. When using a grounded temperature sensor, do not connect any of the control output terminals to ground. Otherwise unwanted current paths will cause measurement errors.
8. To avoid inductive noise, keep the wiring for the Temperature Controller's terminal block away from power cables carrying high voltages or large currents. Also, do not wire power lines together with or parallel to Temperature Controller wiring. Using shielded cables and using separate conduits or ducts is recommended.
   Attach a surge suppressor or noise filter to peripheral devices that generate noise (in particular, motors, transformers, solenoids, magnetic coils or other equipment that have an inductance component).
   When a noise filter is used at the power supply, first check the voltage or current, and attach the noise filter as close as possible to the temperature controller.
   Allow as much space as possible between the Temperature Controller and devices that generate powerful high frequencies (high-frequency welders, high-frequency sewing machines, etc.) or surge.

9. Use the product within the rated load and power supply.
10. Use a switch, relay, or other contact so that the power supply voltage reaches the rated voltage within 2 seconds. If the applied voltage is increased gradually, the power supply may not be reset or malfunctions may occur.
11. When using PID operation (self-tuning), turn ON the power supply to the load (e.g., heater) at the same time or before turning the power supply to the Temperature Controller ON. If power is turned ON for the Temperature Controller before turning ON power supply to the load, self-tuning will not be performed properly and optimum control will not be achieved.
12. Design the system (e.g., control panel) to allow for the 2 seconds of delay required for the Temperature Controller's output to stabilize after the power is turned ON.
13. A switch or circuit breaker should be provided close to this unit. The switch or circuit breaker should be within easy reach of the operator, and must be marked as a disconnecting means for this unit.
14. Approximately 30 minutes is required for the correct temperature to be displayed after turning the power supply to the Temperature Controller ON. Turn the power supply ON at least 30 minutes prior to starting control operations.
15. Be sure that the platinum resistance thermometer type and the input type set on the Temperature Controller are the same.
16. When extending the thermocouple lead wires, always use compensating conductors suitable for the type of thermocouple. Do not extend the lead wires on a platinum resistance thermometer. Use only low-resistance wire (5 Ω max. per line) for lead wires and make sure that the resistance is the same for all three wires.
17. When drawing out the Temperature Controller from the case, do not apply force that would deform or alter the Temperature Controller.
18. When drawing out the Temperature Controller from the case to replace the Temperature Controller, check the status of the terminals. If corroded terminals are used, contact faults with the terminals may cause the temperature inside the Temperature Controller to increase, possibly resulting in fire. If the terminals are corroded, replace the rear case as well.
19. When drawing out the Temperature Controller from the case, turn the power supply OFF first, and absolutely do not touch the terminals or electronic components or apply shock to them. When inserting the Temperature Controller, do not allow the electronic components to come into contact with the case.
20. Static electricity may damage internal components. Always touch grounded metal to discharge any static electricity before handling the Temperature Controller. When drawing out the Temperature Controller from the case, do not touch the electronic components or patterns on the board with your hand. Hold the Temperature Controller by the edge of the front panel when handling it.
21. Do not use paint thinner or similar chemical to clean with. Use standard grade alcohol.
22. Use tools when separating parts for disposal. Contact with the sharp internal parts may cause injury.

■ Precautions for Correct Use

Service Life

Use the Temperature Controller within the following temperature and humidity ranges:

Temperature: -10 to 55°C (with no icing or condensation)
Humidity: 25% to 85%

If the Controller is installed inside a control board, the ambient temperature must be kept to under 55°C, including the temperature around the Controller.

The service life of electronic devices like Temperature Controllers is determined not only by the number of times the relay is switched but also by the service life of internal electronic components. Component service life is affected by the ambient temperature: the higher the temperature, the shorter the service life and, the lower the temperature, the longer the service life. Therefore, the service life can be extended by lowering the temperature of the Temperature Controller.

When two or more Temperature Controllers are mounted horizontally close to each other or vertically next to one another, the internal temperature will increase due to heat radiated by the Temperature Controllers and the service life will decrease. In such a case, use forced cooling by fans or other means of air ventilation to cool down the Temperature Controllers. When providing forced cooling, however, be careful not to cool down the terminals sections alone to avoid measurement errors.

Measurement Accuracy

When extending or connecting the thermocouple lead wire, be sure to use compensating wires that match the thermocouple type. Do not extend the lead wire of the platinum resistance thermometer. If the lead wire of the platinum resistance thermometer must be extended, be sure to use wires that have low resistance and keep the resistance of the three lead wires the same.

Mount the Temperature Controller so that it is horizontally level.

If the measurement accuracy is low, check whether the input shift has been set correctly.

Waterproofing

The degree of protection is as shown below. Sections without any specification on their degree of protection or those with IP□0 are not waterproof.

Front panel: IP66, rear case: IP20, terminals: IP00

of use. Buyer shall be solely responsible for determining appropriateness of the particular Product with respect to Buyer's application, product or system. Buyer shall take application responsibility in all cases but the following is a non-exhaustive list of applications for which particular attention must be given:
(i) Outdoor use, uses involving potential chemical contamination or electrical interference, or conditions or uses not described in this document.
(ii) Use in consumer products or any use in significant quantities.
(iii) Energy control systems, combustion systems, railroad systems, aviation systems, medical equipment, amusement machines, vehicles, safety equipment, and installations subject to separate industry or government regulations.
(iv) Systems, machines and equipment that could present a risk to life or property. Please know and observe all prohibitions of use applicable to this Product.
NEVER USE THE PRODUCT FOR AN APPLICATION INVOLVING SERIOUS RISK TO LIFE OR PROPERTY OR IN LARGE QUANTITIES WITHOUT ENSURING THAT THE SYSTEM AS A WHOLE HAS BEEN DESIGNED TO

ity and does not constitute a warranty. It may represent the result of Omron's test conditions, and the user must correlate it to actual application requirements. Actual performance is subject to the Omron's Warranty and Limitations of Liability.

4. Change in Specifications. Product specifications and accessories may be changed at any time based on improvements and other reasons. It is our practice to change part numbers when published ratings or features are changed, or when significant construction changes are made. However, some specifications of the Product may be changed without any notice. When in doubt, special part numbers may be assigned to fix or establish key specifications for your application. Please consult with your Omron's representative at any time to confirm actual specifications of purchased Product.
5. Errors and Omissions. Information presented by Omron Companies has been checked and is believed to be accurate; however, no responsibility is assumed for clerical, typographical or proofreading errors or omissions.

CALL NOW 800-985-6929 http://www.automatedpt.com Email: charles@automatedpt.com

Intelligent Drivesystems



NORDBLOC®.1 SERIES

Innovative Design

F1012

NORD DRIVESYSTEMS

CALL NOW 800-985-6929 http://www.automatedpt.com Email: charles@automatedpt.com

Nordbloc® .1 Innovative Design

Bearing Design

The design of the bearing systems is a key innovation in the new NORDBLOC® .1 units. The output bearing is greatly oversized which provides a number of important advantages. This design results in a much larger bearing capacity than what is needed if the bearings were selected based on load forces. It also results in an output bearing that is much physically larger than competitive gear units. In order to accommodate the larger bearings, an innovative design called staggered bearing topology was developed.

It is common to have the support bearings for different shafts in the same plane; this greatly restricts the physical size of the bearings. As you can see in the scale drawing, the output bearing in the NORD unit is much larger than the competitors unit. A key part of the bearing system design is to have large bearing spans. This also increases the overall bearing system capacity. As a byproduct of the larger bearings, the internal shaft diameters increase – thus increasing the shaft strength. The gear housing also has larger output bearing bores which increases the housing strength.

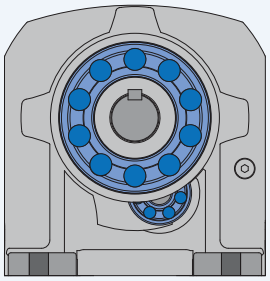

Nordbloc.1® Unit

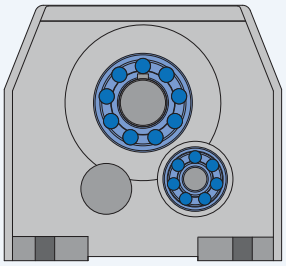

Competitor Unit

NORD Bearing Advantages & Benefits

- ☑ Oversized bearings
- ☑ Staggered bearing topology
- ☑ Longer bearing life
- ☑ Higher overhung load capacity
- ☑ Increased thrust capacity
- ☑ No assembly covers needed

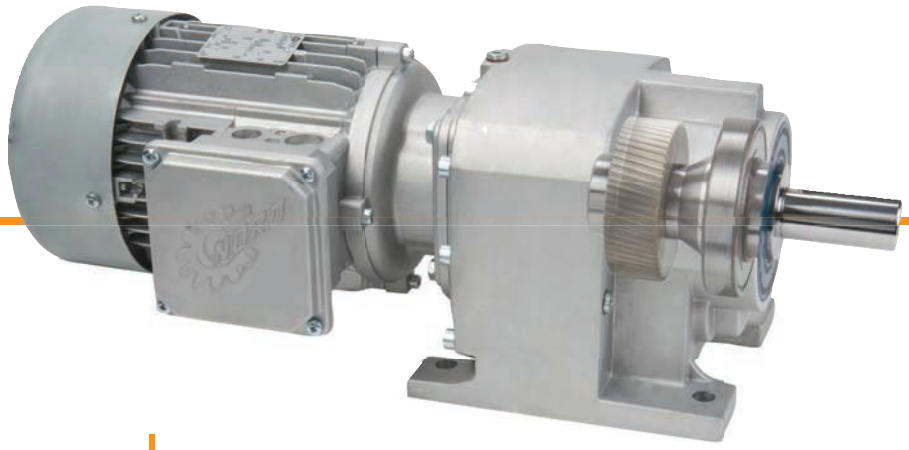

NORD DRIVESYSTEMS

Nordbloc® .1
Innovative Design

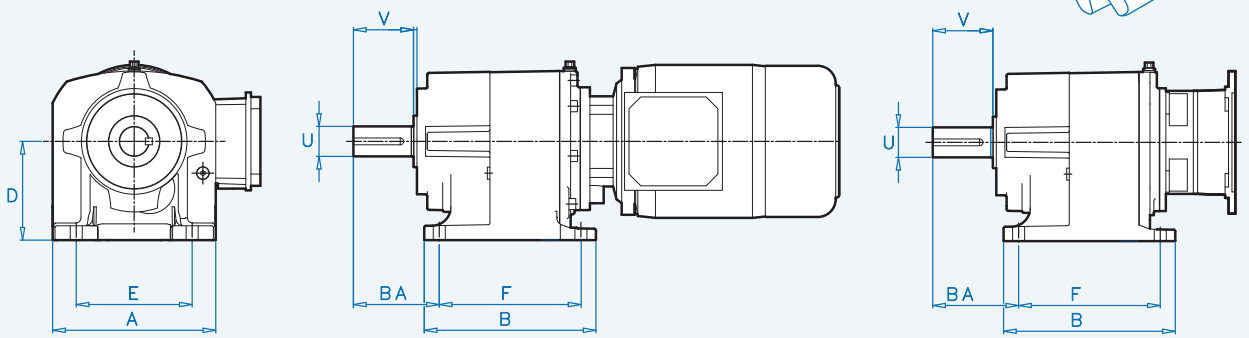

Dimensions [inch]

Size	A	B	BA	D	E	F	U	V
SK 072.1	4.09	4.29	1.89	2.56	3.35	3.74	0.750	1.57
SK 172.1	5.51	5.31	2.28	2.95	4.33	4.33	0.750	1.57
SK 372.1 SK 373.1	5.91	6.30	2.95	3.54	4.33	5.12	1.000	1.97
SK 572.1 SK 573.1	7.48	7.87	3.54	4.53	5.31	6.50	1.250 & 1.375	2.36
SK 672.1 SK 673.1	8.27	9.25	3.93	5.12	5.91	7.68	1.375	2.75
SK 772.1 SK 773.1	9.33	9.65	4.57	5.51	6.69	8.07	1.625	3.15
SK 872.1 SK 873.1	11.81	12.20	5.55	7.09	8.46	10.24	2.125	3.94
SK 972.1 SK 973.1	13.70	14.37	6.33	8.86	9.84	12.20	2.375	4.72

Unicase®

NORD heavy-duty, one-piece housings are precisely machined to meticulous standards. Internal reinforcements further increase strength and rigidity. All bearings and seal seats are contained within the casting, eliminating splits or bolt-on carriers that can weaken the housing and allow oil leakage. Bores and mounting faces are machined in one step, producing extremely precise tolerances — thus ensuring accurate positioning of gear teeth, bearings and seals, and longer life for all components.

Rigid Housing Design (FEM)

NORD's new NORDBLOC® design used state-of-the-art Finite Element Modeling as a key design tool. This allowed optimal structural design to maximize the strength & rigidity of the gear box components.

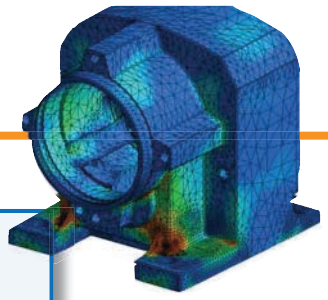

Rigid Unicase® Housing Advantages & Benefits

- ☑ Leak-free design
- ☑ Quiet operation
- ☑ High output torque capabilities

NORD DRIVESYSTEMS

Nordbloc® .1 Innovative Design

Corrosion Resistant Aluminum Alloy Housing

The point one NORDBLOC® .1 makes use of the many advantageous material properties of an optimized aluminum alloy for the gear housing. The aluminum alloy housing provides a higher strength to weight ratio than cast iron. The housing material is also inherently corrosion resistant and does not need a paint coating. Finally the aluminum alloy housing is a much better heat conductor than cast iron which will decrease the gear units operating temperature this benefits the internal components and will yield longer service life.

Alloy Housing Advantages & Benefits

- ☑ Paint free
- ☑ Light weight
- ☑ Corrosion resistant
- ☑ Better thermal conductivity (lower temperature)
- ☑ Longer service life

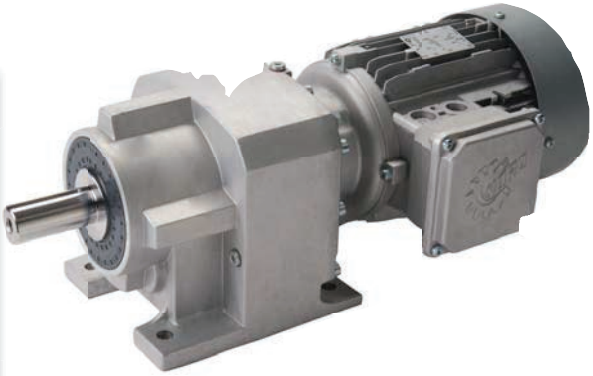

Smooth Solid Gear Housing Surface

One goal of the new NORDBLOC® .1 units was to provide a smooth surface to prevent liquids from pooling or, solid material build-up on the units. This is an advantage in applications where cleanliness is important. Also, the gear units are designed to not have any assembly covers. This increases the product strength and also provides a smother surface. No rubberized bore plugs are used which provides a smoother, more uniform surface, greater strength and increased sealing integrity.

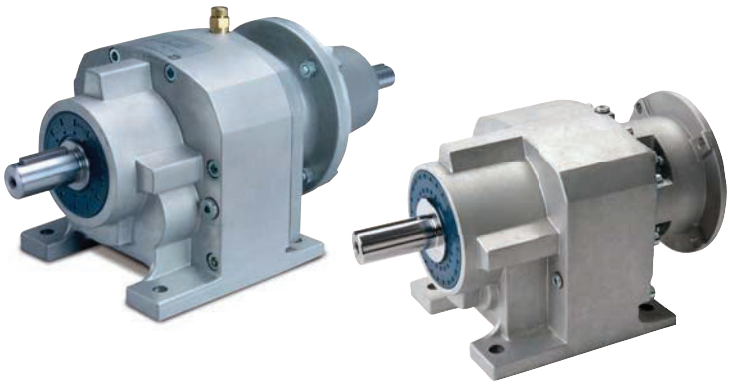

Smooth Gear Housing Advantages & Benefits

- ☑ Easy cleaning
- ☑ Smooth surface
- ☑ No assembly covers
- ☑ No bore plug caps

Nordbloc® .1 Innovative Design

Large Ratio per Gear Stage

NORD gear cutting technology allows for the production of gear sets with a higher maximum ratio per stage than many other speed reducer manufacturers. NORD commonly produces gear sets with a maximum ratio of between 8:1 and 10:1 per stage. This allows for double reduction gear units with a maximum ratio between 60:1 and 100:1. Most speed reducer manufactures' can only produce single-stage reduction of between 5:1 and 6:1. This means a two-stage reducer with a maximum reduction of about 25:1 to 35:1. NORD can often provide two-stage reducers when most companies must provide three-stage units. The same situation aplies to three, four and larger gear stages. This allows NORD to provide superior value and performance in many conditions.

Modular Design

All NORD products including the new NORDBLOC®.1 units are modular in design and provide extraordinary flexibility. The NORDBLOC® units provide great mounting versatility including:

- ☑ Foot mount
- ☑ Flange mount B5
- ☑ Face flange mount B14
- ☑ Foot mount with a B5 or B14 flange

The NORBLOC® unit can also be provided with a number of different input components including:

- ☑ Integral motor (Gearmotor)
- ☑ NEMA C-face motor adapter
- ☑ IEC B5 motor adapter
- ☑ Solid input shaft
- ☑ Custom motor adapter (servo, hydraulic motors, and more)

Large Ratio Advantages & Benefits

- ☑ Better value
- ☑ Higher efficiency
- ☑ Quieter operation
- ☑ Lower weight
- ☑ Longer life



NORD DRIVESYSTEMS

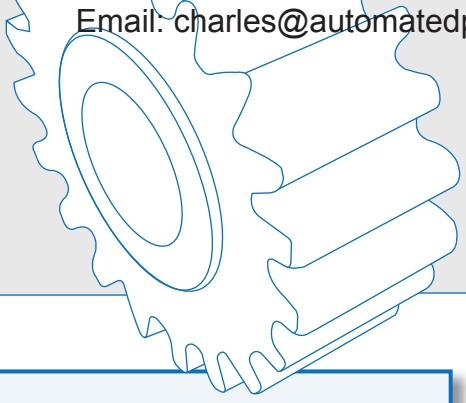

Nordbloc® .1 Standard Features

Autovent™

The AUTOVENT™ prevents bearing damage by blocking entry of foreign material (water, dust, corrosives, etc.) through breather. A ball and spring check valve opens at 2-3 psi during operation and closes tightly when the gearbox cools, producing a slightly negative pressure that ensures the valve seals tight. This keeps contaminants out of the oil to maintain proper oil cleanliness reducing contamination, foaming & oxidation. The AUTOVENT™ is perfect for humid conditions, washdown applications, and dusty environments.

Autovent Advantages & Benefits

- ☑ Cleaner gearbox oil
- ☑ Extended lubrication life
- ☑ Longer-lasting seals, gears, and bearings

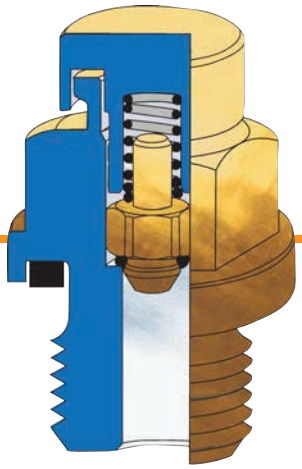

High-Quality Gearing (Infinite Life Design)

NORD continually invests in state-of the-art gear production equipment and in gear research. This allows us to produce exceptional high quality gears.

High-Quality Gearing Advantages & Benefits

- ☑ Designed and manufactured up to AGMA CLASS 13
- ☑ Infinite design life
- ☑ Case-hardened steel
- ☑ Exceptional hardness: 58 Rc minimum
- ☑ High-speed gears are ground; low speed gears skive hobbed
- ☑ 275% momentary overload capacity
- ☑ Low noise
- ☑ Low maintenance

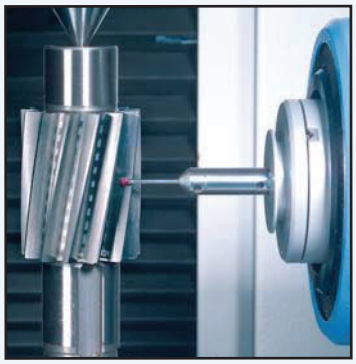

Energy Efficiency

Lowering your operating costs is one of our greatest goals. NORD research and development focuses on energy efficiency inverters designed for lower energy consumption. Our highly diverse line of in-line or right angle units and motors has been developed to suit your needs.

NORD DRIVESYSTEMS

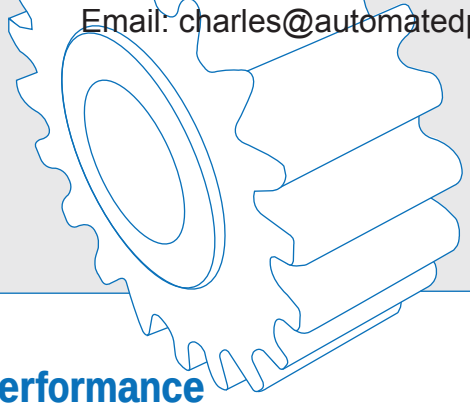

Nordbloc® .1 Standard Features

Compact Coupled NEMA C-face Motor Adapter

NORD's unique NEMA C-face motor adapter provides the user with a high performance motor attachment system in a compact space. Historically, to have a compact C-face motor mounting the only choice was a low performance quill design with its distinct disadvantages including excessive bearing loading, rapid seal wear and metal-to-metal fretting corrosion. The fretting corrosion inherent with a quill design made the removal of a motor almost impossible. Also in the past, the use of a superior coupling system meant increased cost and a much longer motor bell. NORD's compact NEMA C-face adapter uses a high strength motor coupling and provides the space advantages of a quill but without the quills severe drawbacks.

Compact coupled Nema C-Face Advantanges & Benefits

- ☑ Compact space saving design
- ☑ Easy mounting
- ☑ Easy motor removal
- ☑ Motor coupling (not quill)
- ☑ Low bearing loading (long bearing life)
- ☑ Lower weight



NORD High-Performance Motors and Options

NORD motors are designed to run cool for producing longer service life. Low rotor inertia and high starting torque allow peak performance in the most difficult applications for inverter and vector duty per NEMA MG 1-2006 Section 31.4.4.2 voltage spikes. Our motors are internationally accepted, conforming to North American NEMA MG 1 and international IEC electrical specifications. High performance options include brakes, encoders, and forced cooling fans.





Factory Oil Filled

All NORDBLOC® units are filled at the factory with the proper quantity and type of lubrication. Oil fill before shipping prevents damage from dry start-ups.

Factory Oil Filled Advantanges & Benefits

- ☑ No need for filling onsite
- ☑ Ensures proper oil grade and fill level
- ☑ Prevents dry gearbox starts

CALL NOW 800-985-6929 http://www.automatedpt.com Email: charles@automatedpt.com

Product Overview

UNICASE™ SPEED REDUCERS



HELICAL IN-LINE
- Foot or Flange Mount
- Torque up to 205,000 lb-in
- Gear ratios – 1.82:1 to over 300,000:1



NORDBLOC®.1 HELICAL IN-LINE
- Foot or Flange Mount
- Torque up to 26,550 lb-in
- Gear ratios – 1.88:1 to over 370:1



PARALLEL HELICAL CLINCHER™
- Shaft, Flange or Foot Mount
- Torque up to 797,000 lb-in
- Gear ratios – 4.26:1 to over 300,000:1

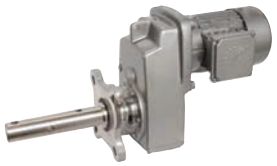

SCP SCREW CONVEYOR PACKAGE
- Shaft, or Flange Mount
- Torque up to 53,100 lb-in
- Gear ratios – 4.32:1 to over 1500:1



RIGHT ANGLE HELICAL-BEVEL 2-STAGE
- Foot, Flange or Shaft Mount
- Torque up to 5,840 lb-in
- Gear ratios – 4.1:1 to 72:1



RIGHT ANGLE HELICAL-BEVEL
- Foot, Flange or Shaft Mount
- Torque up to 283,000 lb-in
- Gear ratios – 8.04:1 to over 300,000:1

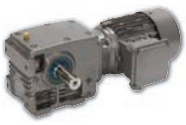

RIGHT ANGLE HELICAL-WORM
- Foot, Flange or Shaft Mount
- Torque up to 27,585 lb-in
- Gear ratios – 4.40:1 to over 300,000:1

HIGH PERFORMANCE MOTORS & BRAKEMOTORS



INVERTER/VECTOR DUTY
- Standard or Energy Efficient
- Integral, NEMA or Metric IEC
- 1/6 to 250 hp

UNICASE™ SPEED REDUCERS



MINICASE™ RIGHT ANGLE WORM
- Foot, Flange or Shaft Mount
- Torque up to 3,540 lb-in
- Gear ratios – 5:1 to 500:1



FLEXBLOC™ WORM
- Modular bolt-on options
- Torque up to 4,683 lb-in
- Gear ratios – 5:1 to 3,000:1

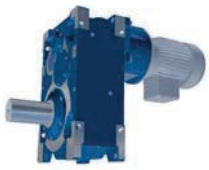

MAXXDRIVE™ LARGE INDUSTRIAL GEAR UNITS PARALLEL HELICAL
- Modular bolt-on options
- Torque up to 2,027,000 lb-in
- Gear ratios – 5:1 to 1,600:1

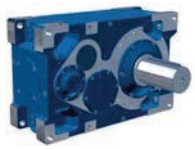

MAXXDRIVE™ LARGE INDUSTRIAL GEAR UNITS HELICAL-BEVEL
- Modular bolt-on options
- Torque up to 2,027,000 lb-in
- Gear ratios – 5:1 to 1,600:1

NORDAC AC VECTOR DRIVES



SK200E FAMILY
- Decentralized, high performance
- 380-480V, 3-phase to 10 hp
- 200-240V, 3-phase to 5 hp
- 200-240V, 1-phase to 1.5 hp
- 100-120V, 1-phase to 1 hp



SK500E FAMILY
- Compact, high performance
- 380-480V, 3-phase, to 50hp
- 200-240V, 3-phase, to 15hp
- 200-240V, 1-phase, to 3hp
- 110-120V, 1-phase, to 1.5hp



SK700E FAMILY
- Flexible high performance
- 380-460V, 3-phase, to 200hp

NORD DRIVESYSTEMS
www.nord.com

NORD Gear Corporation
National Customer Service Toll-Free: 888.314.6673
info.us@nord.com

NORD Gear Limited
Toll-Free in Canada: 800.668.4378
info.ca@nord.com

WEST
Corona, CA (Los Angeles)
Phone: 608.849.0190

MIDWEST
Waunakee, WI (Madison)
Phone: 608.849.7300

EAST
Charlotte, NC
Phone: 608.849.0140

CANADA
Brampton, ON (Toronto)
Phone: 905.796.3606

100200088/1011

CALL NOW 800-985-6929 http://www.automatedpt.com Email: charles@automatedpt.com

AC Motor Selection – Three-phase Motors

(Single-phase motors are shown on page 15-13)

3-Phase Characteristic	IronHorse™ 56C Frame 3-Phase	IronHorse™ T & TC Frames	Marathon microMAX™	Marathon Black Max®	Marathon Blue Max®	Marathon NEMA Premium® XRI®	Marathon Blue Chip XRI®
Electrical Characteristics							
Horsepower range	1/3 - 2	1 - 300 (T); 1 - 100 (TC)	1/4 - 10	1/4 - 30	40 - 100	1 - 10	15 - 100
Base speed (# Poles)	1800 (4), 3600 (2)	1200(6), 1800 (4), 3600(2)	1800 (4)	1800 (4) and 1200 (6)	1800 (4)	1200(6),1800(4),3600(2)	1800 (4)
Standard Voltage	208-230/460	208-230/460 (250 & 300 hp 460V only)	230/460 (1/4 hp is 230V only)	230/460 and 575	230/460	208-230/460	230/460 and 575
Insulation Class	F	F	H	F	H	F	F
Insulation System	dip & bake	double dip & bake	CR^{200} magnet wire	MAX GUARD®		CR^{200} magnet wire	
Service Factor	1.15 (line) 1.0 (drive)	1.15 (line) 1.0 (drive)	1.0	1.0	1.0	1.15 (line) 1.0 (drive)	1.15
Phase/Base Frequency	3/60						
Design Code (NEMA)	B	A: 10-50 hp 4&6 pole B: all other sizes	A and B for 1/4 - 2 hp	A	A	B	B
Duty Cycle	Continuous						
Thermal protection	None			Class F thermostats		None	
Mechanical Characteristics							
Frame size (mounting)	56C	143T/TC - 405TC/449T	56C - 215TC	56C - 286TC	324T(C)–405T(C)	56C - 215TC	254T - 405T
Enclosure	TEFC	TEFC	TENV and TEFC	TENV	TEFC and TEBC	TEFC	TEFC
Frame material	Rolled Steel frame; Aluminum end bell	Cast Iron	Rolled Steel	Rolled Steel w Al face; Cast Iron	Cast Iron	Rolled Steel	Cast Iron
End bracket material	Aluminum	Cast Iron	Aluminum	Aluminum, Cast Iron	Cast Iron	Aluminum	Cast Iron
Conduit box material	Steel	Cast Iron	Steel	Steel	Cast Iron	Steel	Steel (<326T) Cast Iron (>364T)
Fan guard material	Steel	Steel	Polypropylene	None (all ratings TENV)	Cast Iron	Plastic	Polyprop. (<286T) Cast Iron (>324T)
Fan material	Plastic	Plastic (143T/TC - 445/7T) Aluminum (449T)	Polypropylene	None (all ratings TENV)	Polypropylene	Plastic	Polypropylene
Lead termination	Conduit box	Conduit box	Conduit box except Terminal block - 1/4 hp	Conduit box	Conduit box	Conduit box	Conduit box
Standard mounting	C-Face with Removable Rigid Base	Rigid Base (C-Flange kit available) C-Face with Rigid Base (1-100 hp)	C-Face with Rigid Base & C-Face Round Body	C-Face with Rigid Base	C-Face with Rigid Base	C-Face with Rigid Base	Rigid Base
Drive end shaft slinger	Yes	Yes	No	No	Yes	Yes	Yes
Paint	Black	Epoxy primer / Synthetic alkyd enamel	Black powder-coat	Black enamel	Blue enamel	Blue enamel	epoxy paint
Bearings	Ball	1-75 hp: Ball 100-300 hp: Roller	Ball (C3 fit)	Ball (C3 fit)	Ball (C3 fit)	Ball	Ball (C3 fit)
Grease	Exxon Polyrex EM						
Standard conduit box assembly position	F1	F1 some sizes reversible to F2	F3	F1, reversible to F2	F1, reversible to F2	F3	F1
Performance Characteristics							
Constant Torque speed range	2:1	2:1	20:1 (TEFC) 1000:1 (TENV)	1000:1 (TENV)	2000:1 (all enclosures)	10:1	20:1
Variable Torque speed range	5:1	5:1	-	-	-	10:1	-
Constant Horsepower speed range	1.5:1	1.5:1	2:1	2:1 (90-120Hz intermittent @50% duty cycle)	2:1	2:1	2:1
Temperature rise	B	B	B	F	F (TEFC) and B (TEBC)	F	B
Encoder provisions	No	No	No	Yes	Yes	No	No
Other Characteristics							
Agency listings	$_cCSA_{us}$	CE, $_cCSA_{us}$, EPACT	UL Recognized and CSA Certified				
Warranty*	2 years		3 years (through Marathon Electric)				

See Terms and Conditions for motor warranty explanation.

1) For warranty on IronHorse motors below 50 hp, warranty service can be arranged through AutomationDirect.

2) For warranty on IronHorse motors 50 hp and above, motors must be inspected by a local EASA motor repair or service center; see AutomationDirect Terms & Conditions.

3) Marathon warranty service can be arranged through Marathon Electric service centers. See list of service centers on our web site at www.automationdirect.com.

Black Max® Vector Duty Motors

****** 230/460V and 575V Motors Available ******



MARATHON® ELECTRIC

Motor Shipping Schedule		
Same or one day *	Up to 7 days	Up to 10 days

Color indicates shipping lead time in business days. Check stock status online.

** For same-day shipping of stock motors requiring LTL shipment, order before 5 p.m. EST.*

Features

- Class F MAX GUARD® insulation system
- Constant torque operation from 0 to base speed on vector drive
- Constant horsepower operation to twice base RPM
- Continuous duty at 40° C ambient
- Optimized for operation with IGBT inverter (NEMA Design A)
- Class F N/C thermostats (one per phase)
- Utilizes double shielded ball bearings
- Exxon Polyrex® EM bearing grease
- Dual Mounting (C-Face with rigid base and C-Face with removable rigid base, as noted)
- F1 standard conduit box location, field reversible to F2 (except as noted)
- Available with optional encoder installed on opposite drive end
- Electrically reversible
- UL recognized and CSA certified
- Three year warranty

Applications

- Designed for inverter or vector applications where up to a 1000:1 constant torque speed range is required.
- Typical uses include: material handling, machine tools, conveyors, crane and hoist, metal processing, test stands, pumps, compressors, textile processing, and other industrial machinery installed in dusty or dirty environments.

230/460V Motor Specifications

Part Number	Price	HP	Base RPM	Volts	Enclosure	NEMA Frame	Model No.	F.L. Amps	Weight (lb)	Footnotes
Y592	<--->	1/4	1800	230/460	TENV	56C	56H17T2001	1.2 / 0.6	19	T, S, 13
Y534	<--->	1/2	1800	230/460	TENV	56C	56H17T5301	1.6 / 0.8	28	T, S, 6, 13
Y535	<--->	1	1800	230/460	TENV	56C	56H17T5302	3.0 / 1.5	41	T, S, 6, 13
Y536	<--->	1	1800	230/460	TENV	143TC	143THTR5326	3.0 / 1.5	43	T, S, 6, 13
Y537	<--->	1	1200	230/460	TENV	145TC	145THTR5376	3.8 / 1.9	49	T, S, 6, 13
Y538	<--->	1-1/2	1800	230/460	TENV	145TC	145THTR5326	4.8 / 2.4	50	T, S, 6, 13
Y551	<--->	2	1800	230/460	TENV	145TC	145THTN6046	6.0 / 3.0	72	T
Y540	<--->	2	1200	230/460	TENV	184TC	184THTL7776	6.6 / 3.3	88	T, AL
Y541	<--->	3	1800	230/460	TENV	182TC	182THTL7726	8.4 / 4.2	96	T, AL
Y542	<--->	3	1200	230/460	TENV	213TC	213THTL7776	9.4 / 4.7	118	T, AL
Y543	<--->	5	1800	230/460	TENV	184TC	184THTL7726	14.0 / 7.0	98	T, AL
Y544	<--->	5	1200	230/460	TENV	215TC	215THTL7776	15.4 / 7.7	138	T, AL
Y545	<--->	7-1/2	1800	230/460	TENV	213TC	213THTL7726	21.0 / 10.5	146	T, AL
Y546	<--->	7-1/2	1200	230/460	TENV	254TC	254THTL5776	22.0 / 11.0	209	T, AL
Y547*	<--->	10	1800	230/460	TENV	215TC	215THTL7726	27.0 / 13.5	159	T, AL
Y548*	<--->	10	1200	230/460	TENV	256TC	256THTL5776	28 / 14	203	T, AL
Y549*	<--->	15	1800	230/460	TENV	254TC	254THTL5726	40 / 20	250	T, AL, I
Y552*	<--->	20	1800	230/460	TENV	256TC	256THTNA7026	52 / 26	300	T, I
Y553*	<--->	25	1800	230/460	TENV	284TC	284THTNA7026	62 / 31	495	T, I
Y393*	<--->	30	1800	230/460	TENV	286TC	286THTNA7026	74 / 37	575	T, I

Footnotes:
T Thermostat overload
S Steel Frame Construction
6 Bolt-on, removable base for footless mounting option

Footnotes (continued):
13 F1 Mounting Only, cannot modify to F2
AL Aluminum Frame Construction
I Intermittent duty from 90-120 Hz operation

Note: Please review the AutomationDirect Terms & Conditions for twarranty and service on his product. Warranty service can be arranged through numerous Marathon Electric service centers. See list of service centers on our Web site at www.automationdirect.com.

Black Max® Vector Duty Motors

Motor Shipping Schedule		
Same or one day	Up to 7 days	Up to 10 days

Color indicates shipping lead time in business days. Check stock status online.

575V Motor Specifications

Part Number	Price	HP	Base RPM	Volts	Enclosure	NEMA Frame	Model No.	F.L. Amps	Weight (lb)	Footnotes
Y555	<--->	1/2	1800	575	TENV	56C	56H17T5311	0.64	28	T, S, 6, 13
Y556	<--->	1	1800	575	TENV	56C	56H17T5312	1.2	41	T, S, 6, 13
Y557	<--->	2	1800	575	TENV	145TC	145THTN6060	2.4	72	T
Y558	<--->	3	1800	575	TENV	182TC	182THTL7736	3.4	96	T, AL
Y559	<--->	5	1800	575	TENV	184TC	184THTL7736	5.6	98	T, AL
Y560	<--->	7-1/2	1800	575	TENV	213TC	213THTL7736	8.4	146	T, AL
Y561	<--->	10	1800	575	TENV	215TC	215THTL7736	10.8	159	T, AL
Y562	<--->	15	1800	575	TENV	254TC	254THTL5736	16.0	250	T, AL, I
Y563	<--->	20	1800	575	TENV	256TC	256THTNA7036	20.8	300	T, I
Y567	<--->	25	1800	575	TENV	284TC	284THTNA7036	24.8	495	T, I
Y394	<--->	30	1800	575	TENV	286TC	286THTNA7036	29.6	575	T, I

Footnotes:
T Thermostat overload
S Steel Frame Construction
6 Bolt-on, removable base for footless mounting option

Footnotes (continued):
13 F1 Mounting Only, cannot modify to F2
AL Aluminum Frame Construction
I Intermittent duty from 90-120 Hz operation

Note: Please review the AutomationDirect Terms & Conditions for warranty and service on this product. Warranty service can be arranged through numerous Marathon Electric service centers. See list of service centers on our Web site at www.automationdirect.com.

Motor with Shaft Mounted Encoder*:

A Dynapar Model HS35 shaft mounted encoder can be supplied with the motor as shown in the price table below. The encoder requires a 5-26 VDC power source, provides a count of 1024 pulses per revolution (PPR), differential line driver output and includes a 10-pin mating connector.

* If connecting the motor to a *DURAPULSE* AC drive, a GS3-FB Feedback Card is required for the drive.

Motor with Shaft Mounted Encoder								
230/460V Motors						575V Motors		
Part Number	Price	HP	Part Number	Price	HP	Part Number	Price	HP
Y592-A772	<--->	1/4	Y543-A772	<--->	5	Y555-A772	<--->	1/2
Y534-A772	<--->	1/2	Y544-A772	<--->	5	Y556-A772	<--->	1
Y535-A772	<--->	1	Y545-A772	<--->	7-1/2	Y557-A772	<--->	2
Y536-A772	<--->	1	Y546-A772	<--->	7-1/2	Y558-A772	<--->	3
Y537-A772	<--->	1	Y547-A772	<--->	10	Y559-A772	<--->	5
Y538-A772	<--->	1-1/2	Y548-A772	<--->	10	Y560-A772	<--->	7-1/2
Y551-A772	<--->	2	Y549-A772	<--->	15	Y561-A772	<--->	10
Y540-A772	<--->	2	Y552-A772	<--->	20	Y562-A772	<--->	15
Y541-A772	<--->	3	Y553-A772	<--->	25	Y563-A772	<--->	20
Y542-A772	<--->	3	Y393-A772	<--->	30	Y567-A772	<--->	25
						Y394-A772	<--->	30

Note: Please review the AutomationDirect Terms & Conditions for warranty and service on this product. Warranty service can be arranged through numerous Marathon Electric service centers. See list of service centers on our Web site at www.automationdirect.com.

Encoder connector pinout:

Note: A mating connector is supplied with the encoder.

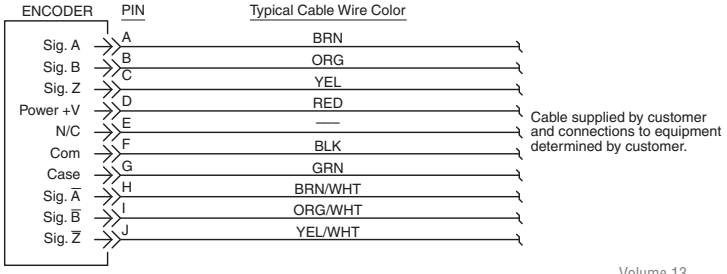

Black Max® Vector Duty Motors

Motor Performance Data (460 Volt) *																
Part Number	HP	F.L. rpm	F.L. Amps @460V	N.L. Amps @460V	F.L. Torque (lb-ft)	B.D. Torque (lb-ft)	Max. C hp rpm *	Max. Safe rpm	F.L. Effic. (%)	F.L. Power Factor	Rotor Inertia ($lb\text{-}ft^2$)	Ohms/Ph - Equiv. Wye Circuit (460 VAC) (at rated operating temp. in 40° C ambient)				
												R1	R2	X1	X2	XM
Y592	1/4	1755	0.6	0.45	0.75	4.5	3540	5400	70.0	58.0	0.045	26.300	23.000	30.240	14.700	572.000
Y534	1/2	1735	0.8	0.52	1.5	5.8	3510	5400	80.0	72.0	0.056	22.307	17.028	24.123	18.163	532.976
Y535	1	1750	1.5	1.0	3.0	15.0	3505	5400	84.0	75.0	0.110	8.378	5.623	10.707	9.912	278.036
Y536	1	1750	1.5	1.0	3.0	15.0	3505	5400	84.0	75.0	0.110	8.378	5.623	10.707	9.912	278.036
Y537	1	1145	1.9	1.3	4.5	16.0	2260	5400	80.0	62.5	0.140	10.302	8.372	13.793	15.325	193.835
Y538	1-1/2	1755	2.4	1.6	4.5	29.0	3518	5400	85.5	69.0	0.140	4.257	3.538	5.998	5.884	161.009
Y551	2	1750	3.0	1.7	6.0	28.5	3525	5400	85.5	78.0	0.130	3.834	2.897	5.950	5.637	154.800
Y540	2	1160	3.3	2.1	9.0	34.0	2315	5400	82.5	67.5	0.380	3.948	3.436	7.725	12.113	116.900
Y541	3	1755	4.2	2.2	9.0	48.0	3515	4200	85.5	80.0	0.420	2.356	1.731	4.266	4.304	123.930
Y542	3	1158	4.7	3.0	13.6	49.0	2300	4200	82.5	72.5	0.600	2.469	2.318	6.508	4.125	83.910
Y543	5	1765	7.0	4.2	14.8	70.0	3555	4200	89.5	74.5	0.550	1.242	0.947	2.534	4.236	64.128
Y544	5	1165	7.7	4.8	22.5	87.0	2320	4200	84.0	71.0	0.900	1.130	1.250	3.709	2.573	51.972
Y545	7-1/2	1765	10.5	5.5	22.3	95.5	3525	4200	90.2	76.0	0.850	0.699	0.567	1.765	2.260	38.178
Y546	7-1/2	1170	11.0	6.0	34.0	118.0	2325	4200	87.5	73.0	1.200	0.510	0.680	2.846	3.247	42.714
Y547	10	1774	13.5	7.4	29.5	125.0	3540	4200	90.2	76.0	1.300	0.369	0.334	1.423	2.281	34.932
Y548	10	1160	14	7.0	45.5	135.0	2320	4200	89.5	75.5	1.500	0.534	0.693	2.258	2.323	30.530
Y549	15	1765	20	11.0	45.0	170.0	3550	3600	92.4	76.0	1.600	0.134	0.316	1.047	1.569	22.151
Y552	20	1768	26	13.5	59.5	290.0	3560	3600	93.6	80.0	3.100	0.234	0.213	0.746	0.689	18.204
Y553	25	1770	31	14.0	74.2	330.0	3530	3600	93.6	75.0	4.400	0.143	0.160	0.724	0.678	13.965
Y393	30	1772	37	23.5	89.0	375.0	3560	3600	94.5	74.0	5.500	0.113	0.123	0.543	0.557	11.200

* Maximum Constant hp rpm is for direct coupled loads.

Motor Performance Data (575 Volt) *																
Part Number	HP	F.L. rpm	F.L. Amps @575V	N.L. Amps @575V	F.L. Torque (lb-ft)	B.D. Torque (lb-ft)	Max. C hp rpm*	Max. Safe rpm	F.L. Effic. (%)	F.L. Power Factor	Rotor Inertia ($lb\text{-}ft^2$)	Ohms/Ph - Equiv. Wye Circuit (575 VAC) (at rated operating temp. in 40° C ambient)				
												R1	R2	X1	X2	XM
Y555	1/2	1735	0.8	0.8	1.52	5.8	3510	5400	80.0	72	0.056	22.307	17.028	24.123	18.163	532.976
Y556	1	1750	1.6	0.8	3.0	15.0	3505	5400	84.0	75	0.11	8.378	5.623	10.707	9.912	278.036
Y557	2	1750	2.4	1.6	6.0	28.5	3525	5400	85.5	78	0.13	3.834	2.897	5.950	5.637	154.780
Y558	3	1755	3.2	1.6	9.0	48.0	3515	4200	85.5	80	0.42	2.356	1.731	4.266	4.304	123.926
Y559	5	1765	5.6	3.2	14.9	70.0	3555	4200	89.5	74.5	0.52	1.242	1.134	2.268	3.969	64.071
Y560	7-1/2	1765	8.0	4.8	22.3	95.5	3525	4200	90.2	76	0.9	0.699	0.567	1.765	2.260	38.178
Y561	10	1774	11.2	5.6	29.6	125.0	3540	4200	90.2	76	1.3	0.284	0.284	1.420	2.272	34.932
Y562	15	1765	16.0	8.8	44.6	170.0	3550	3600	92.4	76	1.6	0.314	0.316	1.047	1.569	22.151
Y563	20	1770	20.8	11.2	59.5	290.0	3560	3600	93.6	77	3.5	0.220	0.192	0.675	0.684	18.204
Y567	25	1770	24.8	11.2	74.2	330.0	3530	3600	93.6	80	4.4	0.143	0.160	0.724	0.678	13.965
Y394	30	1772	29.6	14.4	88.9	375.0	3560	3600	94.5	80	5.3	0.113	0.123	0.543	0.557	11.186

* Maximum Constant hp rpm is for direct coupled loads.

Black Max® Vector Duty Motors

Motor Dimensions

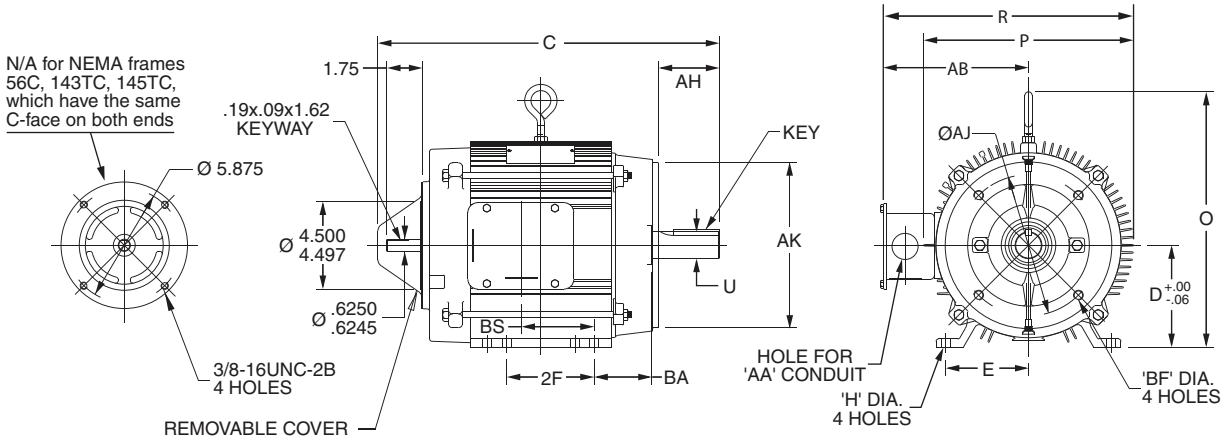

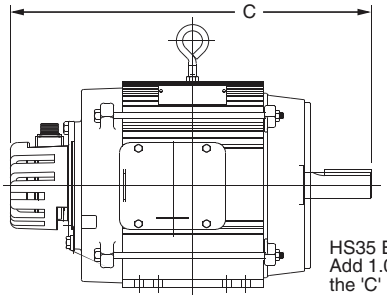

Note: Thermostat protector leads are brought out in the motor conduit box and marked as P1/P2.

Motor Dimensions [Inches]

Part # 230/460V	Part # 575V	HP	NEMA Frame	Frame Construct	C	D	E	2F	H	O	P	R	U	AA	AB	AH	AJ	AK Max	BA	BF	BS	Key
Y592	-	1/4	56C	Rolled Steel	11.88	3.50	2.44	3.00	.34	6.35	5.69	7.21	.625	None	4.37	2.06	5.875	4.500	2.75	3/8-16	2.84	.19x.19x1.38
Y534	Y555	1/2			13.48				.35	6.71	6.42	8.77			5.56						3.75	
Y535	Y556	1			14.98																5.25	
Y536	-	1	143TC		15.04		2.75	4.00				8.46	.875		5.25	2.12					4.93	
Y537	-	1	145TC		16.04			5.00													5.93	
Y538	-	1-1/2																				
Y551	Y557	2		Cast Iron	14.68			5.00	.37	7.45	7.98	11.03			7.04			4.50	2.62		3.81	
Y540	-	2	184TC	Aluminum	16.94	4.50	3.75	5.50	.44	11.22	9.74	12.07	1.125	1.09	7.19	2.62	7.25	8.500	3.50	1/2-13	2.75	.25x.25x1.75
Y541	Y558	3	182TC		17.39			4.50													2.98	
Y542	-	3	213TC		19.04	5.22	4.25	5.50	.47	12.47	10.75	12.78	1.375	1.34	7.39	3.12			4.25		4.05	.31x.31x2.38
Y543	Y559	5	184TC		18.94	4.50	3.75		.44	11.22	9.74	12.07	1.125	1.09	7.19	2.62			3.50		3.75	.25x.25x1.75
Y544	-	5	215TC		20.54	5.22	4.25	7.00	.47	12.47	10.75	12.78	1.375	1.34	7.39	3.12			4.25		5.55	.31x.31x2.38
Y545	Y560	7-1/2	213TC		20.54			5.50														
Y546	-	7-1/2	254TC		25.37	6.22	5.00	8.25	.56	13.46		13.75	1.625	1.75 &2.0	8.38	3.75					8.85	.38x.38x2.88
Y547	Y561	10	215TC		23.04	5.22	4.25	7.00	.47	12.47		12.78	1.375	1.34	7.39	3.12					8.05	.31x.31x2.38
Y548	-	10	256TC		26.87	6.22	5.00	10.00	.56	13.46	N/A	13.54	1.625	1.75 & 2.00	8.17	3.75			4.75		10.40	.38x.38x2.88
Y549	Y562	15	254TC		26.87			8.25														
Y552	Y563	20	256TC	Cast Iron	27.13	7.00	5.50	10.00		16.49	14.32	17.84		1.25	10.68		9.0	10.500		3/8-16	4.75	.50x.50x3.25
Y553	Y567	25	284TC		27.08			9.50		15.57	15.89	21.26	1.875	2.00	13.31	4.38						
Y393	Y394	30	286TC		28.58			11.00													5.50	

Note: Dimensions are for reference only. For complete dimensional information, refer to Marathon Electric at www.marathonelectric.com.

STABLE™ Motor Slide Bases

Mounting Slide Bases for 56 to 449T NEMA Motors

Features

- Allows adjustment of motor mounting position
- Double adjusting screws for frames 182T - 449T
- Manufactured to precise dimensional standards
- Dimensionally interchangeable with existing major makes
- Heavy-duty steel construction
- Painted with oven-baked primer for better adhesion of customer's paint
- All "D" bolts (motor mounting bolts) are fixed to the exact motor foot pattern
- All "D" bolts are welded into position to prevent spinning and dropping from slots
- Bases are provided with washers

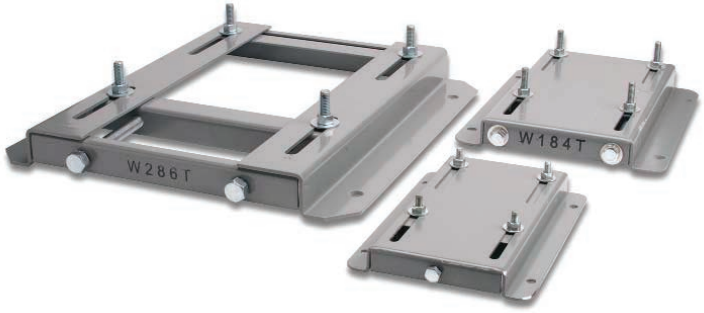

Motor Slide Bases

Part Number	Price	Fits Frame Type	Shipping Weight (lb)	Fits Motor							
				IronHorse	Marathon micro -MAX	Marathon Black Max 230/460V	Marathon Black Max 575V	Marathon Blue Max	Marathon NEMA Premium XRI	Marathon Blue Chip XRI 230/460V	Marathon Blue Chip XRI 575V
MTA-BASE-W56	<--->	56	3.5	MTR-xxx-xxxx MTPM-xxx-xxxx	Y500 Y360 Y364	Y592(-A772) Y534(-A772) Y535(-A772)	Y555(-A772) Y556(-A772)	–	E2000	–	–
MTA-BASE-W143T	<--->	143T/TC	5.0	MTC-001-3BD18(CK) MTC-1P5-3BD36	–	Y536(-A772)	–	–	E2001 E2003	–	–
MTA-BASE-W145T	<--->	145T/TC	5.6	MTC-001-3BD12 MTC-1P5-3BD18(CK) MTC-002-3BD18(CK) MTC-002-3BD36	Y368	Y537(-A772) Y538(-A772) Y551(-A772)	Y557(-A772)	–	E2002 E2004 E2006 E2007	–	–
MTA-BASE-W182T	<--->	182T/TC	10	MTC-1P5-3BD12 MTC-003-3BD18(CK) MTC-003-3BD36	Y999	Y541(-A772)	Y558(-A772)	–	E2005 E2009 E2010	–	–
MTA-BASE-W184T	<--->	184T/TC	10	MTC-002-3BD12 MTC-005-3BD18(CK) MTC-005-3BD36	Y372	Y540(-A772) Y543(-A772)	Y559(-A772)	–	E2008 E2012 E2013	–	–
MTA-BASE-W213T	<--->	213T/TC	15	MTC-003-3BD12 MTC-7P5-3BD18(CK) MTC-7P5-3BD36	Y994	Y542(-A772) Y545(-A772)	Y560(-A772)	–	E2011 E2015 E2016	–	–
MTA-BASE-W215T	<--->	215T/TC	16	MTC-005-3BD12 MTC-010-3BD18(CK) MTC-010-3BD36	Y996	Y544(-A772) Y547(-A772)	Y561(-A772)	–	E2014 E2018 E2019	–	–
MTA-BASE-W254T	<--->	254T/TC	20	MTC-7P5-3BD12 MTC-015-3BD18(CK)	–	Y546(-A772) Y549(-A772)	Y562(-A772)	–	–	E205	E307
MTA-BASE-W256T	<--->	256T/TC	21	MTC-010-3BD12 MTC-020-3BD18(CK)	–	Y548(-A772) Y552(-A772)	Y563(-A772)	–	–	E206	E308
MTA-BASE-W284T	<--->	284T/TC	23	MTC-025-3BD18(CK)	–	Y553(-A772)	Y567(-A772)	–	–	E207	E309
MTA-BASE-W286T	<--->	286T/TC	24	MTC-030-3BD18(CK)	–	Y393(-A772)	Y394(-A772)	–	–	E208	E310
MTA-BASE-W324T	<--->	324T/TC	33	MTC-040-3BD18(CK)	–	–	–	Y571(-A774) Y513(-A775)	–	E209	E311
MTA-BASE-W326T	<--->	326T/TC	35	MTC-050-3BD18(CK)	–	–	–	Y572(-A774) Y514(-A775)	–	E210	E312
MTA-BASE-W364T	<--->	364T/TC	46	MTC-060-3BD18(CK)	–	–	–	Y573(-A774) Y515(-A775)	–	E211	E313
MTA-BASE-W365T	<--->	365T/TC	47	MTC-075-3BD18(CK)	–	–	–	Y574(-A774) Y516(-A775)	–	E212	E315
MTA-BASE-W404T	<--->	404T/TC	64	–	–	–	–	–	–	–	–
MTA-BASE-W405T	<--->	405T/TC	65	MTC-100-3BD18(CK)	–	–	–	Y575(-A774) Y517(-A775)	–	E213	E314
MTA-BASE-W444T	<--->	444T	69	MTC-125-3BD18	–	–	–	–	–	–	–
MTA-BASE-W445T	<--->	445T	70	MTC-150-3BD18	–	–	–	–	–	–	–
MTA-BASE-W447T	<--->	445/7T 447T	92	MTC-200-3BD18	–	–	–	–	–	–	–
MTA-BASE-W449T	<--->	449T	98	MTC-250-3D18 MTC-300-3D18	–	–	–	–	–	–	–

STABLE Motor Slide Bases

Dimensions – Mounting Slide Bases for NEMA Motors

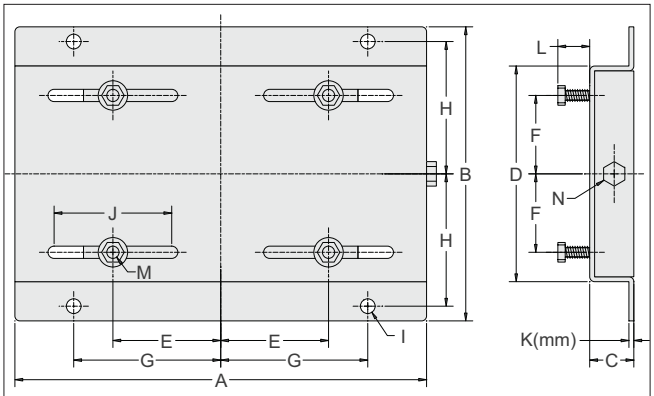

W56 - W145T Motor Slide Base Dimensions

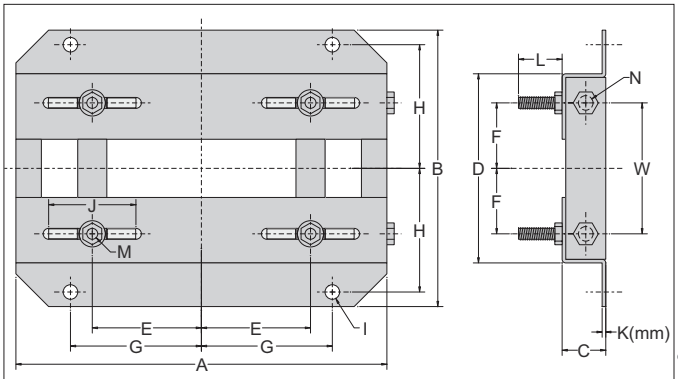

W182T - W449T Motor Slide Base Dimensions
(W182T-W215T bases have one-piece top plates, similar to W56-W145T)

Dimensions [inches, except as noted] - STABLE Motor Slide Bases															
MTA-BASE-Wxxxx	A	B	C	D	E	F	G	H	I	J	K(mm)	L	M	N	W
56	10-5/8	6-1/2	1-1/8	4-1/2	2-7/16	1-1/2	3-13/16	2-7/8	3/8	3	2 mm	7/8	5/16 x 1	3/8 x 4	n/a
143T	10-1/2	7-1/2	1-1/8	5-1/2	2-3/4	2	3-3/4	3-3/8	3/8	3	3 mm	13/16	5/16 x 1	3/8 x 4	n/a
145T	10-1/2	8-1/2	1-1/8	6-1/2	2-3/4	2-1/2	3-3/4	3-7/8	3/8	3	3 mm	13/16	5/16 x 1	3/8 x 4	n/a
182T	12-3/4	9-1/2	1-1/2	6-1/2	3-3/4	2-1/4	4-1/2	4-1/4	1/2	3	3.5 mm	1-1/2	3/8 x 1-3/4	1/2 x 6	4-1/2
184T	12-3/4	10-1/2	1-1/2	7-1/2	3-3/4	2-3/4	4-1/2	4-3/4	1/2	3	3.5 mm	1-1/2	3/8 x 1-3/4	1/2 x 6	5-1/2
213T	15	11	1-3/4	7-1/2	4-1/4	2-3/4	5-1/4	4-3/4	1/2	3-1/2	3.8 mm	1-1/2	3/8 x 1-3/4	1/2 x 6	5-1/2
215T	15	12-1/2	1-3/4	9	4-1/4	3-1/2	5-1/4	5-1/2	1/2	3-1/2	3.8 mm	1-1/2	3/8 x 1-3/4	1/2 x 6	7
254T	17-3/4	15-1/8	2	10-3/4	5	4-1/8	6-1/4	6-5/8	5/8	4	4.6 mm	1-7/16	1/2 x 1-3/4	5/8 x 6	5-5/16
256T	17-3/4	16-7/8	2	12-1/2	5	5	6-1/4	7-1/2	5/8	4	4.6 mm	1-7/16	1/2 x 1-3/4	5/8 x 6	7
284T	19-3/4	16-7/8	2	12-1/2	5-1/2	4-3/4	7	7-1/2	5/8	4-1/2	4.6 mm	1-11/16	1/2 x 2	5/8 x 6	7
286T	19-3/4	18-3/8	2	14	5-1/2	5-1/2	7	8-1/4	5/8	4-1/2	4.6 mm	1-11/16	1/2 x 2	5/8 x 6	8
324T	22-3/4	19-1/4	2-1/2	14	6-1/4	5-1/4	8	8-1/2	3/4	5-1/4	4.6 mm	2-3/16	5/8 x 2-1/2	3/4 x 9	7
326T	22-3/4	20-3/4	2-1/2	15-1/2	6-1/4	6	8	9-1/4	3/4	5-1/4	4.6 mm	2-3/16	5/8 x 2-1/2	3/4 x 9	8-1/2
364T	25-1/2	20-1/2	2-1/2	15-1/2	7	5-5/8	9	9-1/8	3/4	6	5.8 mm	2-1/16	5/8 x 2-1/2	3/4 x 9	7-3/4
365T	25-1/2	21-1/2	2-1/2	16-1/2	7	6-1/8	9	9-5/8	3/4	6	5.8 mm	2-1/16	5/8 x 2-1/2	3/4 x 9	8-3/4
404T	28-3/4	22-3/8	3	16-1/2	8	6-1/8	10	9-7/8	7/8	7	5.8 mm	2-1/2	3/4 x 3	3/4 x 11	8-3/4
405T	28-3/4	23-7/8	3	18	8	6-7/8	10	10-5/8	7/8	7	5.8 mm	2-1/2	3/4 x 3	3/4 x 11	10-1/4
444T	31-1/4	24-5/8	3	19-1/4	9	7-1/4	11	11	7/8	7-1/2	5.8 mm	2-1/2	3/4 x 3	3/4 x 11	11
445T	31-1/4	26-5/8	3	21-1/4	9	8-1/4	11	12	7/8	7-1/2	5.8 mm	2-1/2	3/4 x 3	3/4 x 11	13
447T	31-1/4	30-1/8	3	24-3/4	9	10	11	13-3/4	7/8	7-1/2	8 mm	3	3/4 x 3-1/2	3/4 x 11	16-1/2
449T	31-1/4	35-1/8	3	29-3/4	9	12-1/2	11	16-1/4	7/8	7-1/2	8 mm	3	3/4 x 3-1/2	3/4 x 11	21-1/2

This page is intentionally left blank

Project name: IQALUIT

Project#: 5000218036

Document #: 5000218036_DS_0007_PM_VWT

by: BB

chkd: GH

appvd: CB

SKID TRIPLEX

VALVES

OIM manual section: 4.3.7.3

This page is intentionally left blank

CS-301-100 : Identification sheet

VWTC PROJECT NUMBER:	Iqaluit WWTP	REV:	01
PROJECT NAME:	5000218036	SUBMITTED TO (COMPANY):	
ENGINEER:	G. HÉBERT	SUBMITTED TO (RESPONSIBLE)	
PROJECT MANAGER:	C. BEKAERT	PROJECT NUM REFERENCE.:	
PHONE NUMBER:		LOT NUMBER:	

SUPPLIER	EQPT CODE	EQPT TAG NO	DIA	DESCRIPTION	INFO 1	INFO 2	INFO 3	APPLIC.	NOTE	REV
CHEMLINE	VABLPV200249	BV-04-766	DIA: 13 mm (1/2")	CLEANING VALVES	TYPE: BALL VALVE//MANUFACTURER : CHEMLINE//MODEL : Type21-A-005-E-C//CONNECTION TYPE : COMBO | 13 mm (1/2")//BODY : PVC (ASTM D1784)// SEAL | SEAT :PTFE | EPDM// STEM : PVC					1
CHEMLINE	VABLPV200249	BV-04-767	DIA: 13 mm (1/2")	CLEANING VALVES	TYPE: BALL VALVE//MANUFACTURER : CHEMLINE//MODEL : Type21-A-005-E-C//CONNECTION TYPE : COMBO | 13 mm (1/2")//BODY : PVC (ASTM D1784)// SEAL | SEAT :PTFE | EPDM// STEM : PVC					1
CHEMLINE	VABLPV200249	BV-04-768	DIA: 13 mm (1/2")	CLEANING VALVES	TYPE: BALL VALVE//MANUFACTURER : CHEMLINE//MODEL : Type21-A-005-E-C//CONNECTION TYPE : COMBO | 13 mm (1/2")//BODY : PVC (ASTM D1784)// SEAL | SEAT :PTFE | EPDM// STEM : PVC					1

SUPPLIER	EQPT CODE	EQPT TAG NO	DIA	DESCRIPTION	INFO 1	INFO 2	INFO 3	APPLIC.	NOTE	REV
CHEMLINE	VABLPV200249	BV-04-775	DIA: 13 mm (1/2")	ISOLATION VALVES (DISCHARGE)	TYPE: BALL VALVE//MANUFACTURER : CHEMLINE//MODEL : Type21-A-005-E-C//CONNECTION TYPE : COMBO | 13 mm (1/2")//BODY : PVC (ASTM D1784)// SEAL | SEAT :PTFE | EPDM// STEM : PVC					1
CHEMLINE	VABLPV200249	BV-04-776	DIA: 13 mm (1/2")	ISOLATION VALVES (DISCHARGE)	TYPE: BALL VALVE//MANUFACTURER : CHEMLINE//MODEL : Type21-A-005-E-C//CONNECTION TYPE : COMBO | 13 mm (1/2")//BODY : PVC (ASTM D1784)// SEAL | SEAT :PTFE | EPDM// STEM : PVC					1
CHEMLINE	VABLPV200249	BV-04-777	DIA: 13 mm (1/2")	ISOLATION VALVES (DISCHARGE)	TYPE: BALL VALVE//MANUFACTURER : CHEMLINE//MODEL : Type21-A-005-E-C//CONNECTION TYPE : COMBO | 13 mm (1/2")//BODY : PVC (ASTM D1784)// SEAL | SEAT :PTFE | EPDM// STEM : PVC					1
CHEMLINE	VABLPV200249	BV-04-778	DIA: 13 mm (1/2")	ISOLATION VALVES (DISCHARGE)	TYPE: BALL VALVE//MANUFACTURER : CHEMLINE//MODEL : Type21-A-005-E-C//CONNECTION TYPE : COMBO | 13 mm (1/2")//BODY : PVC (ASTM D1784)// SEAL | SEAT :PTFE | EPDM// STEM : PVC					1
CHEMLINE	VABLPV200249	BV-04-779	DIA: 13 mm (1/2")	ISOLATION VALVES (DISCHARGE)	TYPE: BALL VALVE//MANUFACTURER : CHEMLINE//MODEL : Type21-A-005-E-C//CONNECTION TYPE : COMBO | 13 mm (1/2")//BODY : PVC (ASTM D1784)// SEAL | SEAT :PTFE | EPDM// STEM : PVC					1

SUPPLIER	EQPT CODE	EQPT TAG NO	DIA	DESCRIPTION	INFO 1	INFO 2	INFO 3	APPLIC.	NOTE	REV
CHEMLINE	VABLPV200249	BV-04-781	DIA: 13 mm (1/2")	ISOLATION VALVES - CARRIER WATER	TYPE: BALL VALVE//MANUFACTURER : CHEMLINE//MODEL : Type21-A-005-E-C//CONNECTION TYPE : COMBO | 13 mm (1/2")//BODY : PVC (ASTM D1784)// SEAL | SEAT :PTFE | EPDM// STEM : PVC					1
CHEMLINE	VABLPV200249	BV-04-782	DIA: 13 mm (1/2")	ISOLATION VALVES - CARRIER WATER	TYPE: BALL VALVE//MANUFACTURER : CHEMLINE//MODEL : Type21-A-005-E-C//CONNECTION TYPE : COMBO | 13 mm (1/2")//BODY : PVC (ASTM D1784)// SEAL | SEAT :PTFE | EPDM// STEM : PVC					1

This page is intentionally left blank

PDF Published March 1, 2013

Type 21 Ball Valves

CHEMLINE PLASTICS
SUPERIOR FLOW SOLUTIONS

The Chemline Type 21 True Union Ball valve incorporates state of the art features for long term performance. This is a full port, full blocking True Union valve pressure rated at 16 bar (230 psi)[4]. Double stem o-rings and Safety Shear stem design provide for a high degree of safety on hazardous fluid applications. All sizes have an ISO standard actuator mounting platform integral to the valve body. This provides for sturdy and secure mounting of pneumatic or electric actuators.

PVC | CPVC | PP | PVDF

CRN Registered Consult Chemline

NSF[5] Certified to NSF/ANSI 61

SERIES: Type 21

SIZES: 3/8" – 4"

ENDS: Socket, Threaded, Flanged, Butt[1] or ChemFlare™

SEATS: PTFE

SEALS[2]: EPDM, FKM (Viton®), CPE[3]



features

Pressure rated to 230 psi[4]
- Provides a high factor of safety

Integral Actuator Mounting Platform
- Actuation is easy. Electric or pneumatic actuators may be mounted in the field.

Full Port
- High capacity and low pressure drops

Fully Blocking
- Downstream union nut may be safely disassembled for piping maintenance while valve is closed off under full system pressure

Built-In Spanner Wrench
- Top of the handle is designed to be used as a tool for accessing internal parts

Safety Shear Stem Design
- Stem has double o-rings
- Designed to hold full pressure even if stem breaks due to excessive torque

High Chemical Resistant Material
- PVC and CPVC compounds have an "A" chemical resistance rating as per ASTM D-1784. They have outperformed other PVC and CPVC compounds on aggressive chemicals.

[1] Butt ends for fusion to Chemline metric PP, PVDF or ECTFE (Halar®) piping.
[2] Other materials are available.
[3] CPE=Chlorinated Polyethylene.
[4] PVC, CPVC and PVDF 1/2" to 2" are rated at 230 psi; 2-1/2" to 4" and all size PP valves are rated at 150 psi at 20°C.
[5] PVC valves with EPDM or FKM (Viton®) seals are certified under NSF/ANSI Standard 61 for contact with drinking water.

03/13 ©Chemline Plastics Limited 2013
Chemline is a registered trade mark of Chemline Plastics Limited

Type 21 Ball Valves

features

Double Stem O-Rings – Safety Shear Design

- Upper o-ring groove is deeper than lower. In case of excessive stem torque, stem will shear at the upper groove, leaving the inner o-ring intact to seal against full line pressure.

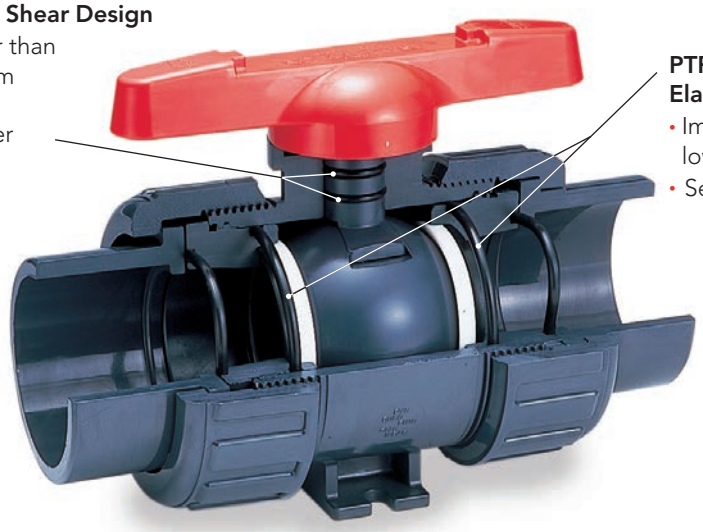

PTFE Seats have Elastomer Cushions

- Improved sealing while lowering stem torques
- Self adjusts for seat wear

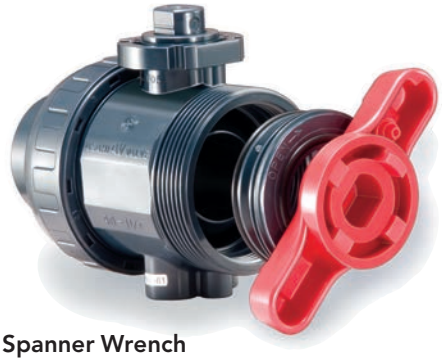

Built in Spanner Wrench

- For removing or tightening the seat carrier
- All parts are replaceable



Integral Actuator Mounting Platform

- Actuation is easy. Electric or pneumatic actuators may be mounted in the field. Simply pull off the handle to reveal a standard ISO 5211 mounting platform which accepts bolt-on hardware.



Fully Blocking

- Downstream pipe may be removed while upstream side is still pressurized. This may be done with valve installed in either direction.



Base Mounting Pad

- Optional threaded inserts allow valves to be securely anchored
- Supplied standard with actuated valves

options + accessories



ChemFlare™ Ends

- For connection to PFA tube. Leak-free connections for difficult services such as sodium hypochlorite

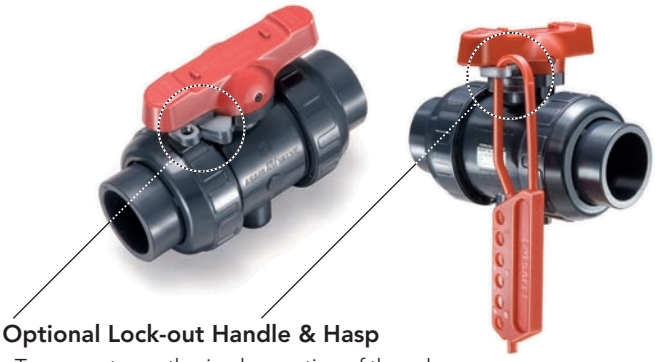

Optional Lock-out Handle & Hasp

- To prevent unauthorized operation of the valve
- Used during maintenance shut-downs



One-piece moulded PVC and CPVC 6" socket ends

- Allows installation of 4" valve in 6" line
- Factory moulded, not fabricated with couplings and reducers cemented together
- Fixed to valve mechanically just like the one-piece moulded factory flanges



Different Colour Handles

- Choose a handle colour other than standard red for colour coding different services

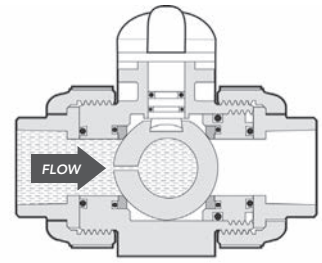

Vented Ball

- For sodium hypochlorite services at any concentration
- Valve shown in closed position

electric + pneumatic actuation

Pneumatic and Electric Actuators

- A complete range of actuators and control accessories are available, mounted to valves using PPG plastic brackets and stainless steel couplings. Refer to separate data sheets.



Electromni® Electric



Q Series Electric



A Series Electric



V Series Electric
with Local Control Station



PA Series Pneumatic

Type 21 Ball Valves

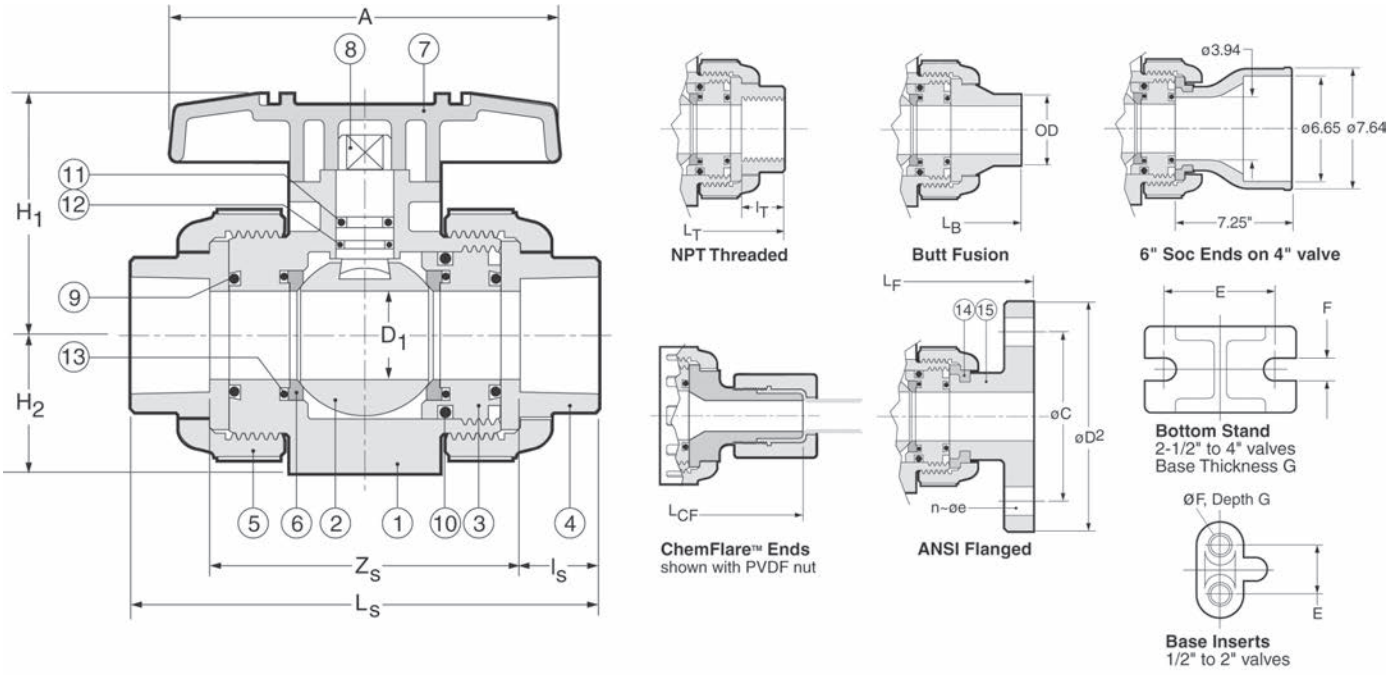

PARTS

▲ Recommended Spare Parts

No.	Part	Pcs.	Materials
1	Body	1	PVC, CPVC, PP, PVDF
2	Ball	1	PVC, CPVC, PP, PVDF
3	Carrier[1]	1/2	PVC, CPVC, PP, PVDF
4	End Connector	2	PVC, CPVC, PP, PVDF
5	Union Nut	2	PVC, CPVC, PP, PVDF
6▲	Ball Seat	2	PTFE
7	Handle	1	ABS

[1] 1 carrier for sizes 1/2" to 2", 2 carriers for sizes 2-1/2" to 4"
[2] EPDM seals standard with PVC, CPVC, PP; FKM (Viton®) with PVDF valves
[3] 2 pcs 1/2" to 2", 6 pcs 2-1/2" to 4"

PARTS

▲ Recommended Spare Parts

No.	Part	Pcs.	Materials
8	Stem	1	PVC, CPVC, PP, PVDF
9▲	Face O-Ring[2]	2	EPDM, FKM (Viton®)
10▲	Carrier O-Ring[2]	2	EPDM, FKM (Viton®)
11▲	Upper Thicker Stem O-Ring[2]	1	EPDM, FKM (Viton®)
12▲	Lower Thinner Stem O-Ring[2]	1	EPDM, FKM (Viton®)
13	Seat Cushion[2]	2	EPDM, FKM (Viton®)
14	Flange Retainer[3]	2/6	PVDF
15	Flange	2	PVC, CPVC, PP, PVDF

DIMENSIONS INCHES

					End Connections														Valve Base		
					Socket			Threaded		Factory Flanged					Butt		ChemFlare™				
Size	D Bore	A	H_1	H_2	L_S	Z_S	l_S	l_T	L_T	L_F	D_2	C	n	e	L_B	OD	L_{CF}	Tube[4]	E	F[5]	G
1/2"	.59	3.6	2.03	1.14	4.45	2.70	.875	.64	4.02	5.63	3.50	2.38	4	.62	4.88	.79	6.12	1/2"	.75	.29	.43
3/4"	.79	3.9	2.34	1.38	5.08	3.08	1.00	.65	4.72	6.77	3.88	2.75	4	.62	5.67	.98	6.52	3/4"	.75	.29	.43
1"	.98	4.3	2.68	1.54	5.75	3.50	1.13	.81	5.16	7.36	4.25	3.12	4	.62	6.06	1.26	7.26	1"	.75	.29	.43
1-1/4"	1.22	4.8	3.17	1.85	6.46	5.21	1.25	.85	5.91	7.48	4.62	3.50	4	.62	6.85	1.57	9.58	1-1/4"	1.18	.35	.59
1-1/2"	1.57	5.2	3.50	2.17	7.24	4.49	1.38	.85	6.42	8.35	5.00	3.88	4	.62	7.64	1.97	–	–	1.18	.35	.59
2"	2.01	6.3	4.02	2.60	8.23	5.23	1.50	1.90	7.76	9.21	6.00	4.75	4	.75	8.82	2.48	–	–	1.18	.35	.59
2-1/2"	2.28	7.87	4.96	2.83	9.45	5.95	1.75	1.21	8.46	10.20	7.00	5.49	4	.75	9.72	2.95	–	–	1.89	.35	.23
3"	2.70	9.45	5.51	3.35	11.10	7.35	1.88	1.30	10.39	11.97	7.50	6.00	4	.75	11.61	3.54	–	–	2.17	.43	.28
4"	3.54	11.81	7.01	4.33	13.88	9.87	2.00	1.38	14.17	14.65	9.00	7.50	8	.75	14.76	4.33	–	–	2.56	.43	.32

[4] ChemFlare™ ends are available for reduced tube sizes down to 1/4".
[5] Optional threaded inserts: 1/2" to 1" valves – UNC 1/4"-20; 1-1/4" to 2" valves – UNC 5/16"-18. 'Recoil' brand inserts require drilling before insertion.

Type 21 Ball Valves

WORKING PRESSURES PSI, Water, Non-Shock

VACUUM RATING • 29.9 inches mercury

Size	PVC			CPVC						PP			PVDF				
	20°C 68°F	40°C 104°F	50°C 122°F	20°C 68°F	40°C 104°F	50°C 122°F	60°C 140°F	80°C 176°F	90°C 194°F	20°C 68°F	60°C 140°F	80°C 176°F	20°C 68°F	40°C 104°F	60°C 140°F	80°C 176°F	100°C 212°F
1/2"– 2"	230	165	150	230	165	150	120	75	55	150	85	55	230	185	150	110	85
2-1/2"– 4"	150	150	150	150	150	150	120	75	55	150	70	40	150	150	150	110	85

Temperature Ranges: PVC 0 to 60°C (32 to 140°F), **CPVC** 0 to 95°C (32 to 203°F), **PP** –20 to 80°C (–4 to 176°F), **PVDF** –40 to 100°C (–40 to 212°F)

WEIGHTS LB. THREADED or SOCKET

WEIGHTS LB. FLANGED

Size	PVC	CPVC	PP	PVDF	PVC	CPVC	PP	PVDF
1/2"	0.4	0.4	0.4	0.4	0.9	0.9	0.7	1.1
3/4"	0.7	0.7	0.7	0.9	1.3	1.5	1.1	1.5
1"	0.9	1.1	0.9	1.1	1.8	2.0	1.5	2.2
1-1/4"	1.5	1.5	1.3	1.8	2.6	2.9	2.0	3.3
1-1/2"	2.4	2.6	1.5	2.9	3.7	4.0	2.6	4.4
2"	4.0	4.4	2.6	4.9	5.5	6.0	4.0	8.2
2-1/2"	5.1	5.5	3.7	6.2	7.3	7.7	5.3	8.8
3"	8.2	8.8	5.5	9.9	10.1	11.0	7.5	12.6
4"	19.4	21.8	13.2	24.9	21.6	23.4	15.4	26.7

Cv VALUES VS. BALL ANGLE

Size	0%	25%	50%	75%	100%
1/2"	0	0.35	1.3	5.5	14.
3/4"	0	0.73	2.8	11.5	29.
1"	0	1.2	4.5	18.6	47.
1-1/4"	0	1.8	6.8	28.4	72.
1-1/2"	0	3.9	14.7	61.2	155.
2"	0	4.8	18.0	75.0	190.
2-1/2"	0	9.1	34.7	144.0	365.
3"	0	10.2	39.0	162.0	410.
4"	0	17.0	64.6	269.0	680.

SAMPLE SPECIFICATION

1. All True Union Ball Valves in PVC, CPVC, PP or PVDF shall be Chemline Type 21 or equal sizes 1/2" to 2" in PVC, CPVC, and PVDF rated at 230 psi and in PP 150 psi maximum working pressure. Sizes 2-1/2", 3" and 4" rated at 150 psi maximum working pressure with EPDM, FKM (Viton®) or CPE seals. Ball seats shall be PTFE with elastomer cushions for closure with minimum stem torques.
2. All valves will have Safety Shear stem design, blowout-proof with double o-rings for safety. The top o-ring groove shall be deeper so that if the stem breaks off under excessive torque the lower o-ring will remain intact and the valve will hold pressure.
3. All valves shall be full port and two-way blocking design.
4. All valves will be CRN (Canadian Registration Number) registered with TSSA.
5. PVC valves with EPDM or FKM (Viton®) seals shall be certified under NSF/ANSI Standard 61 for contact with drinking water.
6. All valves shall have chemical resistant labels permanently marked with manufacturing number to provide production level traceability.
7. PVC compound shall have an ASTM cell classification 12454-A with a minimum suffix "A" designation for chemical resistance as per ASTM D-1784 (CSA report LO 4000-172).
8. CPVC compound shall have an ASTM cell classification 23567-A with a minimum suffix "A" designation for chemical resistance as per ASTM D-1784.
9. PP material will conform to ASTM D-4101 PP 021 B 67272 material requirements.
10. PVDF material shall be unpigmented conforming to ASTM D-3222 material requirements and to be USDA Title 21 Chapter 1 Part 177. 2510 requirements for contact with food.
11. Socket ends in PVC and CPVC shall be Schedule 80 and conform to ASTM D-2467.
12. Threaded ends shall be Schedule 80 and conform to ASTM D-2464.
13. Butt fusion ends in PP or PVDF will be compatible with Chemline PP or PVDF metric piping systems.
14. Flanged ends shall be ANSI Class 150 one-piece factory moulded (not fabricated) to ensure maximum strength and close tolerance end to end dimensions.

ORDERING EXAMPLE

Chemline True Union Ball Valves	21	A	020	E	S
Body Material	**A** – PVC **B** – PP	**C** – CPVC **K** – PVDF			
Size[1]	**002** – 1/4" **010** – 1" **025** – 2-1/2"	**003** – 3/8" **012** – 1-1/4" **030** – 3"	**005** – 1/2" **015** – 1-1/2" **040** – 4"	**007** – 3/4" **020** – 2" **060** – 6"	
Seals	**E** – EPDM	**V** – FKM (Viton®)	**C** – CPE	**B** – Nitrile	**A** – Aflas®
Ends	**S** – Socket	**T** – Threaded	**F** – Flanged	**B** – Butt[2]	**CF** – ChemFlare™

Example: Chemline Type 21 True Union Ball Valve, PVC, 2", with EPDM seals, socket ends.

[1] 1/4" is normally the 3/8" valve reduced. 6" is 4" valve with 6" end connections.

[2] PP, PVDF and ECTFE (Halar®) metric butt fusion ends (1/2" to 4") connect to Chemline PP, PVDF and ECTFE (Halar®) piping systems.

OTHER OPTIONS & ACCESSORIES

- **Alternate O-Ring Seals**
- **Stem Extensions** made to any length
- **Limit Switches** – For open and/or closed position indication
- **Municipal Operating Nut**
- **Lubrication-free Valves** – Factory clean room assembled
- **Vented Ball** – For sodium hypochlorite applications

CHEMLINE PLASTICS
SUPERIOR FLOW SOLUTIONS

55 Guardsman Road, Thornhill, ON, L3T 6L2, Canada | ISO 9001:2008 Certified
tel.905.889.7890 | fax.905.889.8553 | request@chemline.com | chemline.com

This page is intentionally left blank

CS-301-501 : Identification sheet

VWTC PROJECT NUMBER:	Iqaluit WWTP	REV:	01
PROJECT NAME:	5000218036	SUBMITTED TO (COMPANY):	
ENGINEER:	G. HÉBERT	SUBMITTED TO (RESPONSIBLE)	
PROJECT MANAGER:	C. BEKAERT	PROJECT NUM REFERENCE.:	
PHONE NUMBER:		LOT NUMBER:	

SUPPLIER	EQPT CODE	EQPT TAG NO	DIA	DESCRIPTION	INFO 1	INFO 2	INFO 3	APPLIC.	NOTE	REV
CHEMLINE	VABLPV346917	NV-04-787	DIA: 13 mm (1/2")	METERING VALVE - CARRIER WATER	TYPE: BALL VALVE//MANUFACTURER : CHEMLINE//MODEL : SM2-A-005-E-S//CONNECTION TYPE : SOCKET | 13 mm (1/2")//BODY : PVC (ASTM D1784)// SEAL | SEAT : | EPDM// STEM : N/A					1
CHEMLINE	VABLPV346917	NV-04-788	DIA: 13 mm (1/2")	METERING VALVE - CARRIER WATER	TYPE: BALL VALVE//MANUFACTURER : CHEMLINE//MODEL : SM2-A-005-E-S//CONNECTION TYPE : SOCKET | 13 mm (1/2")//BODY : PVC (ASTM D1784)// SEAL | SEAT : | EPDM// STEM : N/A					1

This page is intentionally left blank

PDF Published October 18, 2017

Metering Ball Valves

CHEMLINE PLASTICS
SUPERIOR FLOW SOLUTIONS

Chemline SM Series Metering Ball Valve is designed for fine linear flow control of chemicals or clean fluids. The ball is solid with graduated V-groove cut on the outside surface. Precise linear flow control is accomplished through 180° rotation of the handle. With a positioning electric actuator, this becomes an inexpensive control valve. If higher C_V values are required, refer to SP Series Proportional ball valves.

PVC PP

SERIES: SM2
SIZES: 1/2" – 1"
ENDS: Threaded, Socket, Butt[1] or ChemFlare™ [2]
SEATS: PTFE
O-RINGS: EPDM, FPM (Viton®)





Integral 180° Scale with 5° Increments
- Linear flow control and settable flow rates

features

Precise Linear Flow Control
- Provided by a special V-groove ball and wide handle travel (0° to 180°)

Full Size Range
- 6 valves sizes 1/2" to 2" offers a large selection of C_V values

High End Ball Valve Features
- Full Blocking design
- Double Stem O-Rings for safety
- PTFE seats with elastomer cushion
  - Automatically compensates for seat wear or expansion
- 230 psi pressure rated (PVC)

Low Stem Torques
- Due to floating ball design and cushioned PTFE seats

Bidirectional
- Works with flow in either direction

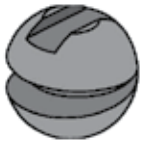

Ball Detail



[1]Butt ends for fusion to Chemline metric PP piping.
[2]For ChemFlare™ end connectors, consult Chemline.

10/17 ©Chemline Plastics Limited 2017
Chemline is a registered trade mark of Chemline Plastics Limited

Metering Ball Valves

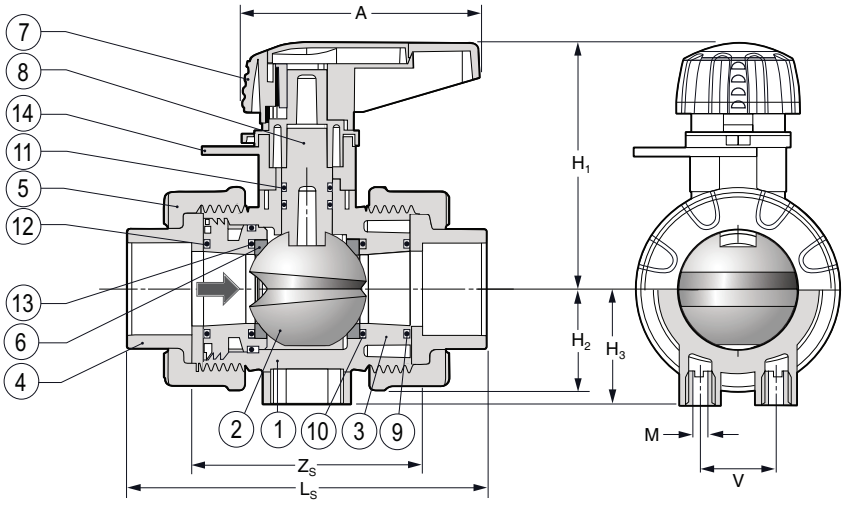

PARTS

No.	Part	Pcs.	Materials
1	Body	1	PVC, PP, PVDF
2	Ball	1	PVC, PP, PVDF
3	Carrier	1	PVC, PP, PVDF
4	End Connector	2	PVC, PP, PVDF
5	Union Nut	5	PVC, PP, PVDF
6	Ball Seat	2	PTFE
7	Handle	1	PVC
8	Stem	1	PVC, PP, PVDF
9	Carrier Face O-Ring	1	EPDM, FPM(Viton®)
10	Carrier O-Ring	1	EPDM, FPM(Viton®)
11	Stem O-Ring[1]	2	EPDM, FPM(Viton®)
12	Face O-Ring	1	EPDM, FPM(Viton®)
13	Seat Cushion[1]	2	EPDM, FPM(Viton®)
14	Position Indicator Scale	1	PVC

DIMENSIONS INCHES

							PVC			PP		
Size	A	H_1	H_3	H	M	V	Z_s	L_s	H_2	Z_s	L_s	H_2
1/2"	2.62	2.48	1.10	2.50	M5	0.98	2.48	3.74	0.99	2.64	3.74	1.06
3/4"	3.21	3.03	1.20	2.70	M5	0.98	2.83	4.33	1.16	3.03	4.29	1.18
1"	3.21	3.39	1.60	3.00	M6	1.02	3.11	4.84	1.39	3.27	4.69	1.57

ELECTRICALLY OR PNEUMATICALLY ACTUATED

The metering ball valve becomes a proportional control valve with the addition of a Q or E Series electric or P Series pneumatic actuator with 4-20 mA positioner

- Thermoplastic housing and mounting bracket
- Manual override
- Position indication
- Mechanical travel stops
- Different voltages are available



Q Series Electric



E Series Electric



P Series Pneumatic

E Series Electric Actuator on a SM2 Valve

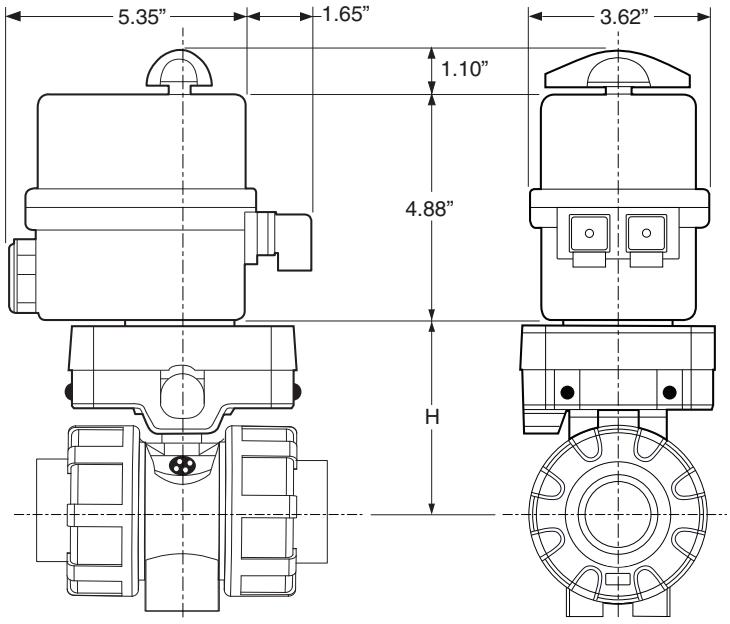

Side View

Port View

Metering Ball Valves

WORKING PRESSURES PSI

NET WEIGHTS LB. Cv VALUES

Size	PVC 20°C 68°F	PVC 40°C 104°F	PVC 60°C 140°F	PP 20°C 68°F	PP 40°C 104°F	PP 60°C 140°F	PP 80°C 176°F	PVC	PP	USGPM Flow at 1 psi △P
1/2"	230	130	30	150	100	65	20	0.35	0.29	1.4
3/4"	230	130	30	150	100	65	20	0.60	0.44	1.9
1"	230	130	30	150	100	65	20	0.84	0.64	2.3

Temperature Ranges: PVC 0 to 60°C (32 to 140°F), PP 0 to 95°C (32 to 203°F)

Cv VALUE vs. VALVE OPENING

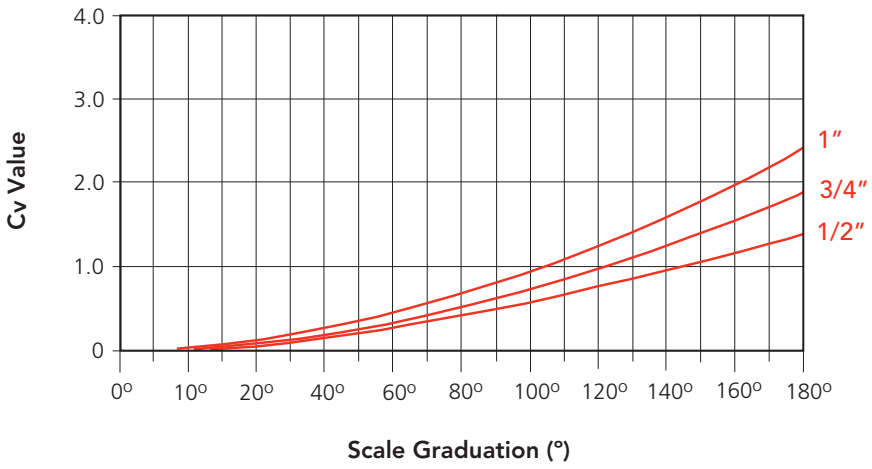

SAMPLE SPECIFICATION

1. All low flow control valves, 1/2" to 1", will be Chemline SM Series metering ball valves.
2. Body material will be PVC or PP, and o-rings will be EPDM or FPM (Viton®).
3. Body will be full blocking design with double stem o-rings for safety, rated at 230 psi maximum working pressure for PVC and 150 psi for PP material.
4. Ball will be floating design, molded solid with a V-groove for linear flow control over a 180° range of handle rotation.
5. Seats will be PTFE with elastomer cushions for positive closure with minimum stem torques and automatic compensation for seat wear and expansion.
6. Position indicating scale will be 0° to 180° with 5° increments for fine flow control and settable flow rates.
7. End connections will be 1/2" to 1" ANSI socket or FNPT threaded or 150 lb flanged or butt fusion for Chemline metric PP pipe or ChemFlare™ for PFA tubing.

ORDERING EXAMPLE

Chemline Metering Ball Valves	SM2	A	010	E	S
Valve Material	**A** – PVC	**B** – PP			
Size	**005** – 1/2"	**007** – 3/4"	**010** – 1"		
Seals	**E** – EPDM	**V** – FPM (Viton®)			
Ends	**S** – Socket	**T** – Threaded	**B** – Butt[1]	**CF** – ChemFlare™	

Example: SM2 Series Ball Valve, PVC, 1", EPDM seals, socket ends.

[1] PP metric butt fusion ends (1/2" to 2") connect to Chemline PP piping systems.

VACUUM RATING

- 29.9 inches mercury

OPTIONS & ACCESSORIES

- **Reduced Ends**
- **Electric or Pneumatic Actuator with Positioner**
  – Operates as a linear control valve

55 Guardsman Road, Thornhill, ON, L3T 6L2, Canada | ISO 9001:2008 Certified
1.800.930.2436 (CHEM) | fax.905.889.8553 | request@chemline.com | chemline.com

This page is intentionally left blank

CS-303-100 : Identification sheet

VWTC PROJECT NUMBER:	Iqaluit WWTP	REV:	01
PROJECT NAME:	5000218036	SUBMITTED TO (COMPANY):	
ENGINEER:	G. HÉBERT	SUBMITTED TO (RESPONSIBLE)	
PROJECT MANAGER:	C. BEKAERT	PROJECT NUM REFERENCE.:	
PHONE NUMBER:		LOT NUMBER:	

SUPPLIER	EQPT CODE	EQPT TAG NO	DIA	DESCRIPTION	INFO 1	INFO 2	INFO 3	APPLIC.	NOTE	REV
CHEMLINE	VAPSPV329498	PSV-772	DIA: 12 mm (1/2")	RELIEF VALVES	TYPE: RELIEF VALVE | 150#//MANUFACTURER : CHEMLINE//MODEL : SB12A005EU//CONNECTION TYPE : UNION SOCKET | 12 mm (1/2")//BODY : PVC// SEAL | SEAT :EPDM | EPDM// STEM : N/A					1
CHEMLINE	VAPSPV329498	PSV-773	DIA: 12 mm (1/2")	RELIEF VALVES	TYPE: RELIEF VALVE | 150#//MANUFACTURER : CHEMLINE//MODEL : SB12A005EU//CONNECTION TYPE : UNION SOCKET | 12 mm (1/2")//BODY : PVC// SEAL | SEAT :EPDM | EPDM// STEM : N/AA					1
CHEMLINE	VAPSPV329498	PSV-774	DIA: 12 mm (1/2")	RELIEF VALVES	TYPE: RELIEF VALVE | 150#//MANUFACTURER : CHEMLINE//MODEL : SB12A005EU//CONNECTION TYPE : UNION SOCKET | 12 mm (1/2")//BODY : PVC// SEAL | SEAT :EPDM | EPDM// STEM : N/A					1

This page is intentionally left blank

PDF Published September 17, 2014

SB12 Series Back Pressure/Relief Valves

CHEMLINE PLASTICS
SUPERIOR FLOW SOLUTIONS

PVC PP PVDF

CRN Registered as Category C Fittings Consult Chemline

NSF[3] Certified to NSF/ANSI 61

SERIES: SB12

SIZES: 3/8" – 4"

ENDS: True Union Socket, Threaded or ChemFlare™[1] Spigot[2] Bodies with Plain, Socket, Threaded or Flanged ends

DIAPHRAGM: PTFE Bonded EPDM

SEALS: EPDM, FKM (Viton®)



The Chemline SB Series Back Pressure/ Relief Valve has two functions. As a ***back pressure valve***, installed in-line downstream of a pump, the back pressure below the metering pump is maintained. When installed in the branch of a tee it is a ***pressure relief valve***. The valve stays closed until inlet pressure reaches the set pressure which is adjusted by turning the spring tensioning bolt. Inlet pressure acts upward against the piston allowing excess pressure to flow upwards through the orifice.

The SB12 Series has a built-in check valve function, desirable for dosing applications. It is not so sensitive as to open with every pulsation from a metering pump.

features

True Union Ends

- Easy installation and maintenance
- Eliminate chemical leakage problems common with old fashioned threaded connections

Long Cycling Life

- Dynamic seal is PTFE bonded EPDM for high chemical resistance
- This moulded diaphragm is designed for superior sealing and flex life

Superior Performance in Dosing Systems

- Valves are hydraulically designed for very low hysteresis ("backlash") and to eliminate chatter
- Built-in check (non-return) function
- Valve opening depends on inlet pressure only and is uneffected by changes in downstream (back) pressure

CRN Registration numbers by province

- Ontario: OC10134.5
- Newfoundland: OC10134.50
- Alberta: OC10134.52
- Saskatchewan/Manitoba/Quebec: OC10134.56
- New Brunswick: OC10134.57
- Nova Scotia: OC10134.58
- P.E.I.: OC10134.59
- British Columbia: not required

technical

Set Pressure Ranges

- 1/2" to 2" – 5 to 150 psi
- 2-1/2" and 3" – 7.5 to 150 psi
- 2-1/2" to 4" – 4 to 60 psi (optional)
- 4" – 7.5 to 90 psi

Maximum Viscosity

- 120cP is maximum recommended service viscosity

[1] For ChemFlare™ end connectors, consult Chemline.
[2] PP and PVDF spigot ends have DIN dimensions and will butt fuse directly to Chemline PP and PVDF piping systems.
[3] PVC valves with EPDM or FKM (Viton®) seals are certified under NSF/ANSI Standard 61 for contact with drinking water.

09/14 ©Chemline Plastics Limited 2014
Chemline is a registered trade mark of Chemline Plastics Limited

SB12 Series Back Pressure/Relief Valves 1/2" to 2"

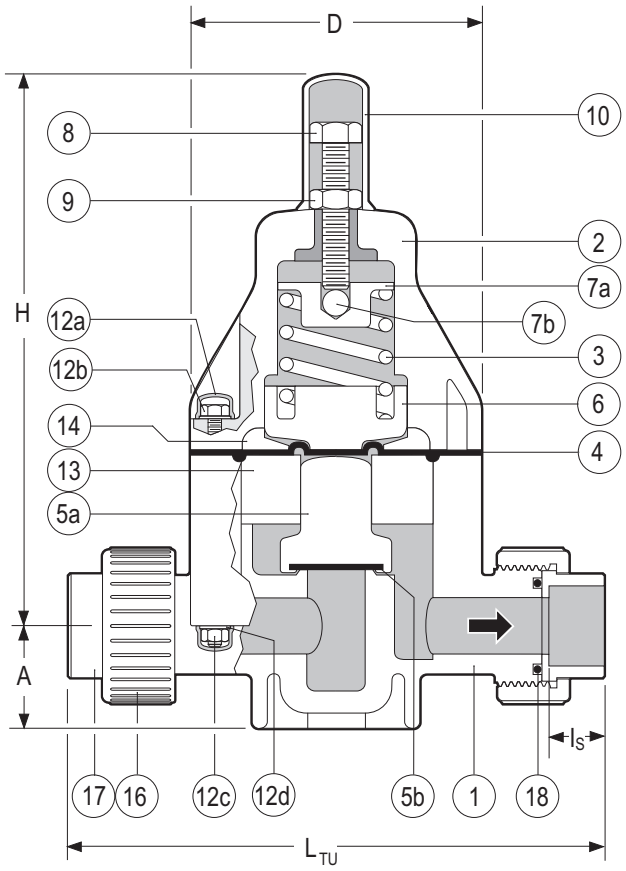

True Union Body

PARTS

▲ Recommended Spare Parts

No.	Part	Pcs.	Materials
1	Body	1	PVC, PP, PVDF
2	Bonnet	1	PPG
3	Spring	1	Galvanized Steel
4▲	Control Diaphragm	1	PTFE bonded EPDM
5a▲	Piston	1	PVC, PP, PVDF
5b▲	Seat	1	EPDM, FPM(Viton®)
6	Lower Spring Retainer	1	PPG
7a	Upper Spring Retainer	1	Cad. Plated Steel
7b	Ball	1	304 SS
8	Spring Tensioning Bolt	1	304 SS
9	Lock Nut	1	304 SS
10	Spring Bolt Cap	1	PE
12a	Bolt/Nut Cap	8/12[1]	PE
12b	Hex Bolt	4/6[1]	304 SS
12c	Hex Nut	4/6[1]	304 SS
12d	Washer	8/12[1]	304 SS
13	Spacer Disc	1	PVC, PP, PVDF
14	Pressure Plate	1	PP
16	Union Nut	2	PVC, PP, PVDF
17	End Connector	2	PVC, PP, PVDF
18▲	Face O-Ring	2	EPDM, FPM(Viton®)

[1] 1/2" size / 3/4" to 2" sizes

OTHER ENDS

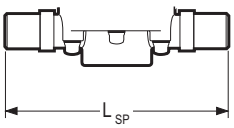

Spigot Body

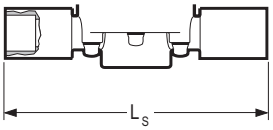

Socket

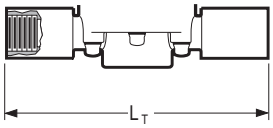

Threaded

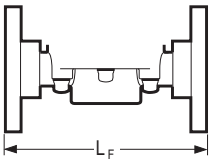

Flanged

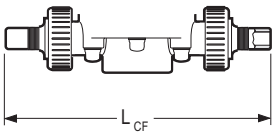

ChemFlare™

DIMENSIONS INCHES

WEIGHTS LB.

Cv VALUES

Size	D	H	PVC A	PVC I_S	PVC L_{TU}[2]	PVC L_{SP}[3]	PVC L_S	PVC L_T	PVC L_F	PVC L_{CF}	PP and PVDF A	PP and PVDF L_{SP}[3]	PP and PVDF L_{TU}[2]	PVC	PP	PVDF	USGPM Flow at 1 psi △P
3/8"	3.2	6.9	1.0	0.6	6.5	5.7	7.4	7.2	4.5	8.2	0.9	5.7	**	1.8	1.5	2.2	2.1
1/2"	3.2	6.9	1.0	0.6	6.8	5.7	8.0	7.8	6.3	8.3[4]	0.9	5.7	7.1	1.9	1.6	2.4	3.0
3/4"	4.2	8.0	1.5	0.7	8.3	6.9	9.3	8.9	7.4	9.7	1.4	6.9	8.4	4.1	3.5	4.6	6.6
1"	4.2	8.0	1.5	0.9	8.5	6.9	9.6	9.3	7.4	10.2	1.4	6.9	8.7	4.2	3.5	4.7	8.7
1-1/4"	5.8	10.3	2.2	1.0	10.9	8.8	11.6	11.2	9.2	13.5	2.1	8.8	10.9	11.0	9.0	12.0	18.0
1-1/2"	5.8	10.3	2.2	1.2	11.1	8.8	12.2	11.5	9.5	–	2.1	8.8	11.2	11.2	9.2	12.2	20.0
2"	5.8	10.3	2.2	1.5	11.3	9.6	12.9	12.0	10.0	–	2.1	8.8	13.2	11.4	9.4	12.4	21.4

[2] True Union bodies come standard with socket ends. Threaded union ends are available. ** Consult Chemline.
[3] Spigot bodies are used for non union socket, threaded or flanged ends. All spigot ends have metric dimensions and the PP and PVDF spigots butt fuse directly to Chemline PP and PVDF piping. [4] Tube size can be reduced to 1/4" tube, LCF = 7.74" for 1/4", 8.26" for 3/8".

MAXIMUM PRESSURES PSI

Size	PVC 20°C 68°F	PVC 30°C 86°F	PVC 40°C 104°F	PVC 50°C 122°F	PP 30°C 86°F	PP 40°C 104°F	PP 50°C 122°F	PP 60°C 140°F	PP 70°C 158°F	PVDF 30°C 86°F	PVDF 50°C 122°F	PVDF 70°C 158°F	PVDF 80°C 176°F	PVDF 90°C 194°F	PVDF 100°C 212°F
1/2"– 2"	150	105	60	15	150	90	60	37.5	15	150	100	60	45	30	15

Temperature Ranges: PVC 0 to 50°C (32 to 122°F), **PP** 10 to 70°C (50 to 158°F), **PVDF** –30 to 100°C (–22 to 212°F).

SB12 Series Back Pressure/Relief Valves 1/2” to 2”

pressure loss nomogram for SB12 valves 3/8” to 2”

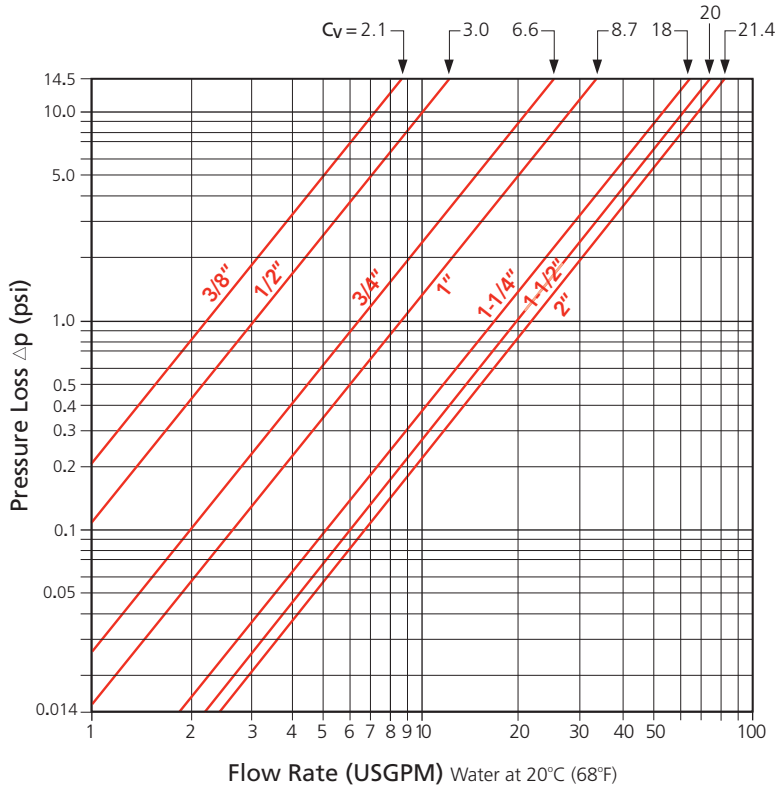

typical dosing system schematic

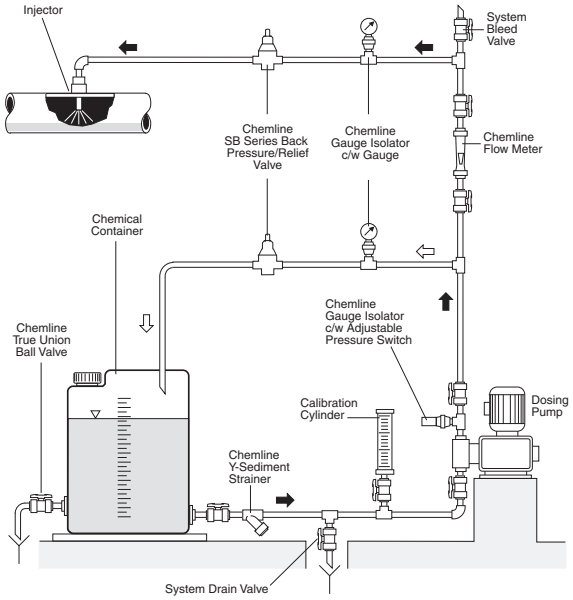

application of pressure relief valves

Constant System Pressure

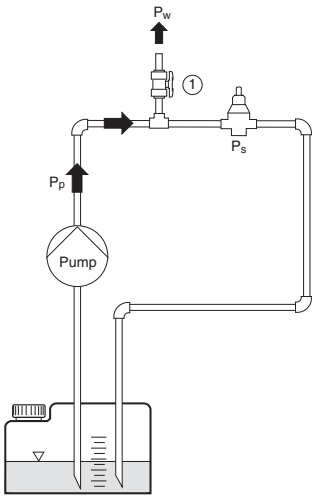

$P_p \geq P_w$
$P_p \geq P_s$ → valve opens
$P_p \leq P_s$ → valve closed

Consumer 1 and/or 2 Open, Valve Closes

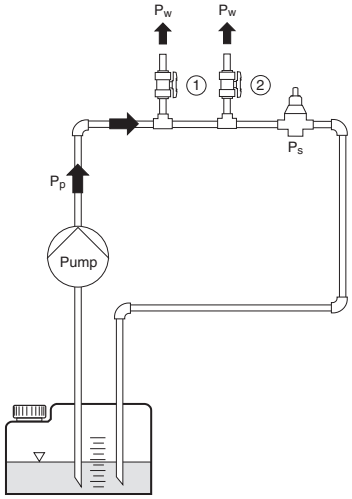

$P_p \geq P_s$ → valve opens
$P_p \leq P_s$ → valve closed

Non-Return Valve

Container 1 is located above the pump

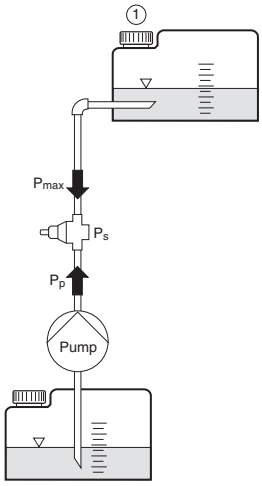

$P_s \geq P_{max}$
$P_p \geq P_s$ → valve opens
$P_p \leq P_s$ → valve closed

Overflow Valve

Pressure of container or application system should not exceed the maximum pressure value

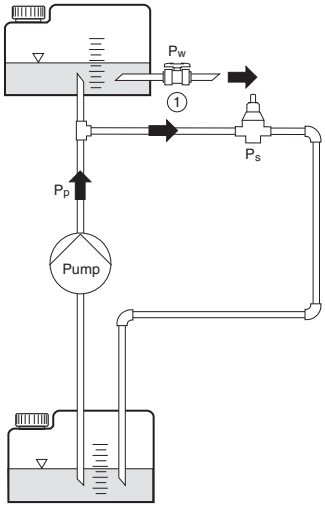

$P_s \leq P_w$
$P_p \geq P_s$ → valve opens
$P_p \leq P_s$ → valve closed

P_w = Working Pressure
P_p = Pump Pressure
P_s = Set Pressure

SB12 Series Back Pressure/Relief Valves 1/2" to 2"

working pressure vs. flow rate

The curves show the relationship between the working pressure and the approximate flow rate through the valve for water at 20°C (68°F) . These values will vary depending on:

- The configuration of the piping and the pressure losses associated with it
- The fluid if not water at 20°C (68°F)
- Whether the pressure is rising or falling, hysteresis is approximately 4 psi for 1/2" to 2" valves. For valves 2-1/2" to 4", hysteresis is approximately 14.5 psi.

operation examples

1. The valve is set closed at 100 psi. At a pressure increase of 10 psi, a flow of approximately 1.0 USGPM will be reached.
   - set pressure = 100 psi
   - working pressure = 110 psi
   - opening pressure = approximately 104 psi
2. The valve is set closed at 50 psi. At a pressure increase of 10 psi, a flow of approximately 1.0 USGPM will be reached.
   - set pressure = 50 psi
   - working pressure = 60 psi
   - opening pressure = approximately 54 psi

3/8" Valves

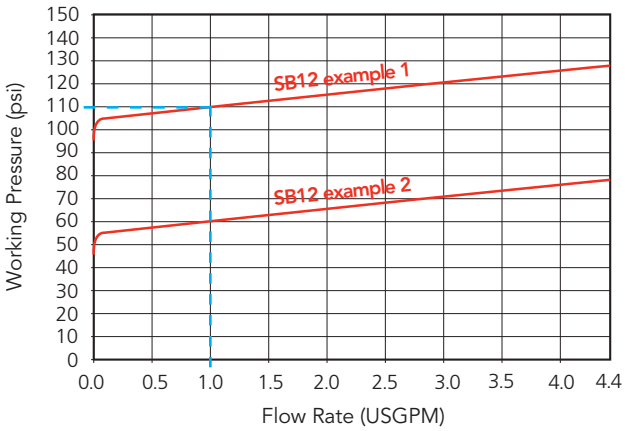

1/2" Valves

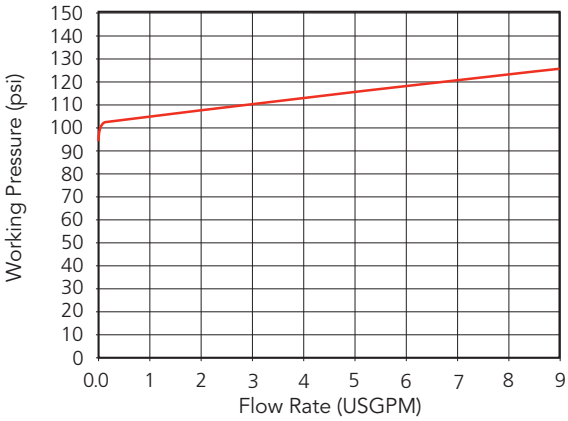

3/4" Valves

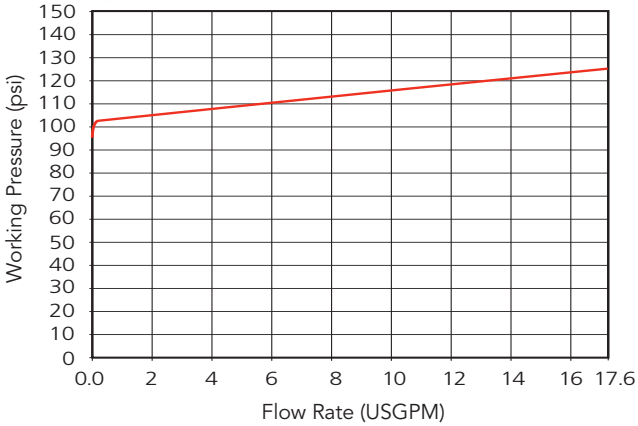

1" Valves

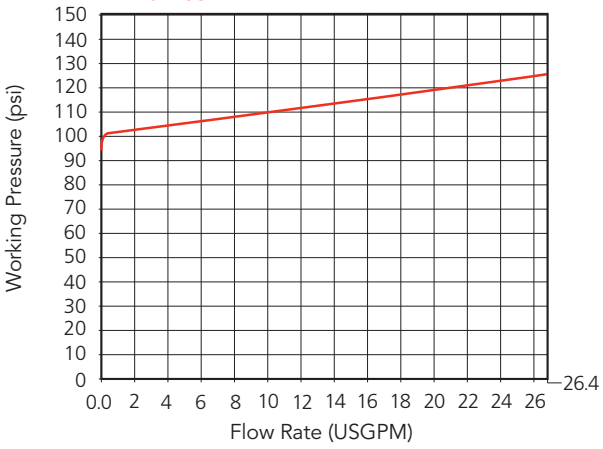

1-1/4" Valves

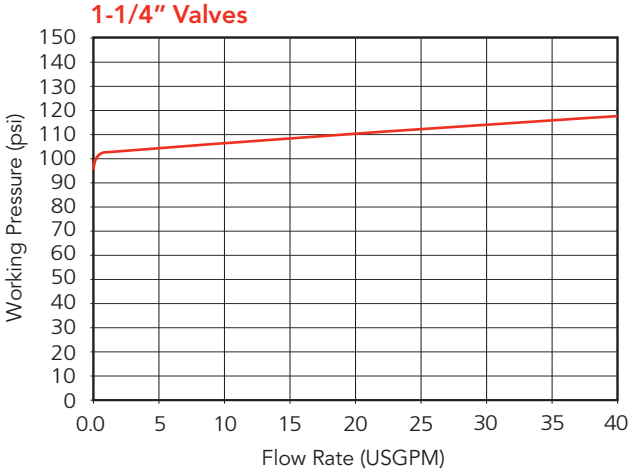

1-1/2" Valves

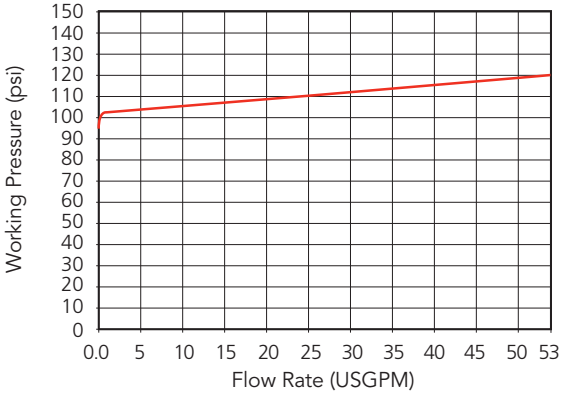

2" Valves

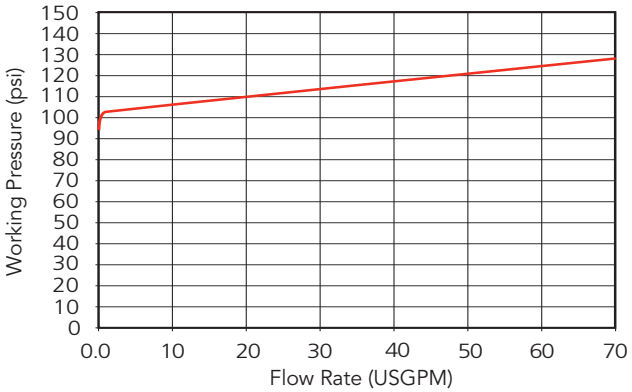

SB12 Series Back Pressure/Relief Valves 2-1/2" to 4"

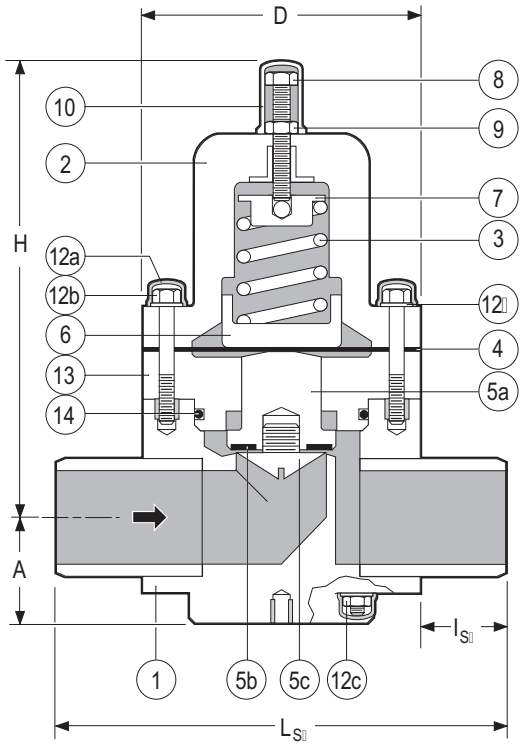

Spigot Body

PARTS

▲ Recommended Spare Parts

No.	Part	Pcs.	Materials
1	Body	1	PVC, PP, PVDF
2	Bonnet	1	PPG
3	Spring	1	Galvanized Steel
4▲	Control Diaphragm	1	PTFE bonded EPDM
5a▲	Piston	2	PVC, PP, PVDF
5b▲	Seat	1	EPDM, FPM(Viton®)
5c▲	Seat Retainer	1	PVC, PP, PVDF
6	Lower Spring Retainer	1	PPG
7	Upper Spring Retauner	1	304 SS
8	Spring Tensioning Bolt	1	304 SS
9	Lock Nut	1	304 SS
10	Spring Bolt Cap	1	PE
12a	Hex Bolt/Nut Cap	20	PE
12b	Hex Bolt/Stud	12[1]	304 SS
12c	Hex Nut	20	304 SS
12d	Washer	20	304 SS
13	Spacer Disc	1	PVC, PP, PVDF
14	Spacer O ring	1	EPDM, FPM(Viton®)

[1] 2 large upper bolts, 2 shorter lower bolts, 8 studs

OTHER ENDS

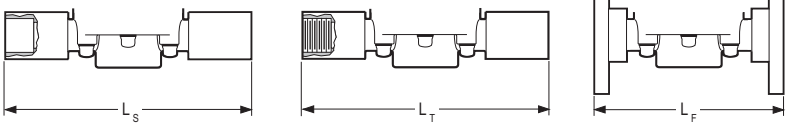

Socket | Threaded | Flanged



ChemFlare™ Ends
- For connection to PFA tube. Leak-free connections for difficult services such as sodium hypochlorite

DIMENSIONS INCHES

WEIGHTS LB.

Cv VALUES

Size	PVC, PP & PVDF A	D	H	L_{SP}[2]	l_{SP}	PVC L_F	WEIGHTS PVC	PP	PVDF	Cv VALUES USGPM Flow at 1 psi △P
2-1/2"	2.7	6.9	11.1	11.2	2.1	12.2	20.9	15.4	24.6	41
3"	3.0	7.9	12.2	14.2	3.1	15.0	26.4	23.8	30.8	63
4"	3.7	9.8	14.2	16.5	3.3	16.9	33.0	26.4	37.4	98

[2] Plain spigot ends in PP & PVDF may be butt fused directly to Chemline PP & PVDF piping systems. Weights based on spigot bodies.

MAXIMUM PRESSURES PSI

Size	PVC 20°C 68°F	30°C 86°F	40°C 104°F	50°C 122°F	PP 20°C 68°F	30°C 86°F	40°C 104°F	50°C 122°F	60°C 140°F	70°C 158°F	PVDF 30°C 86°F	50°C 122°F	70°C 158°F	80°C 176°F	90°C 194°F	100°C 212°F
2-1/2"– 4"	150	90	44	15	150	116	90	60	37.5	15	150	90	55	40	30	15

Temperature Ranges: PVC 0 to 50°C (32 to 122°F), **PP** 10 to 70°C (50 to 158°F), **PVDF** –30 to 100°C (–22 to 212°F).

ORDERING EXAMPLE

Chemline Back Pressure/ Relief Valves	SB12	A	005	V	U
Body Material	**A** – PVC	**B** – PP	**K** – PVDF		
Size	**003** – 3/8"	**005** – 1/2"	**007** – 3/4"		
	010 – 1"	**012** – 1-1/4"	**015** – 1-1/2"		
	020 – 2"	**025** – 2-1/2"	**030** – 3"	**040** – 4"	
Elastomers	**E** – EPDM	**V** – FPM (Viton®)			
Ends	**S** – Socket	**T** – Threaded	**F** – Flanged	**U** – Union Socket	
	CFx – ChemFlare™		**Blank** – Spigot (Butt)		

Example: Chemline SB 12 Series, PVC, 1/2" diameter, FPM (Viton®) seals, Union socket ends.
x = 4 for 1/4", **6** for 3/8", **8** for 1/2", **12** for 1" ID tube connections.

OPTIONS

- 4 to 60 psi Pressure Range springs for 2-1/2" to 4" valves
- **Integral Pressure Gauge** – for inlet and/or outlet
- Bodies in 316 Stainless Steel and PTFE



Optional Pressure Gauge
- For inlet and/or outlet

SB12 Series Back Pressure/Relief Valves 2-1/2" to 4"

working pressure vs. flow rate

• Whether the pressure is rising or falling, hysteresis is approximately 14.5 psi for 2-1/2" to 4" valves

2-1/2" Valves / 4 to 60 psi set pressure range

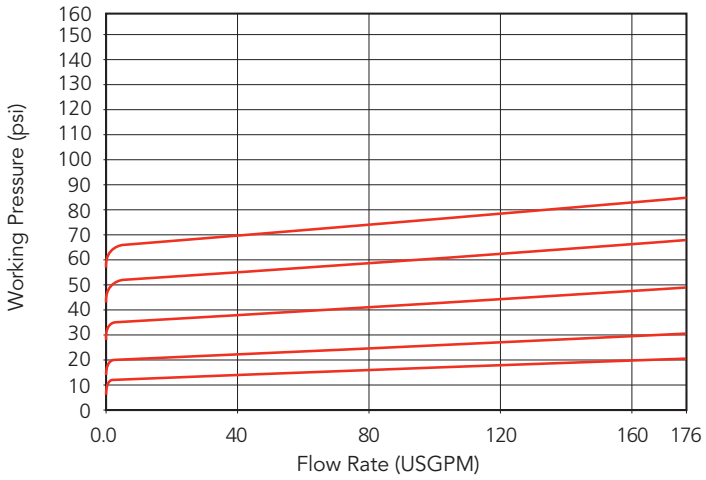

2-1/2" Valves / 7.5 to 150 psi set pressure range

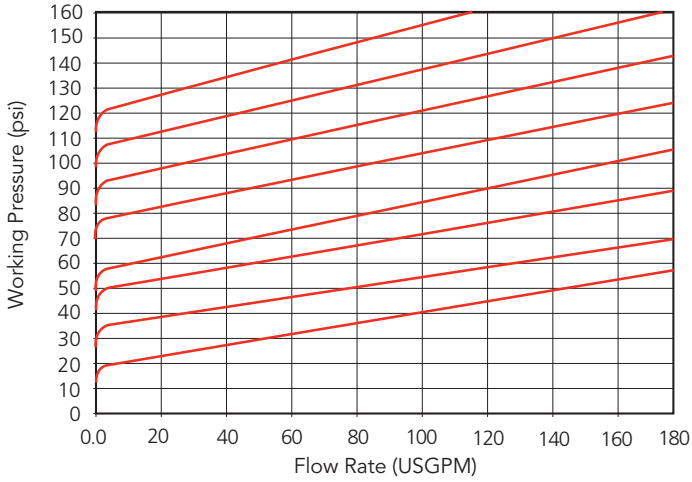

3" Valves / 4 to 60 psi set pressure range

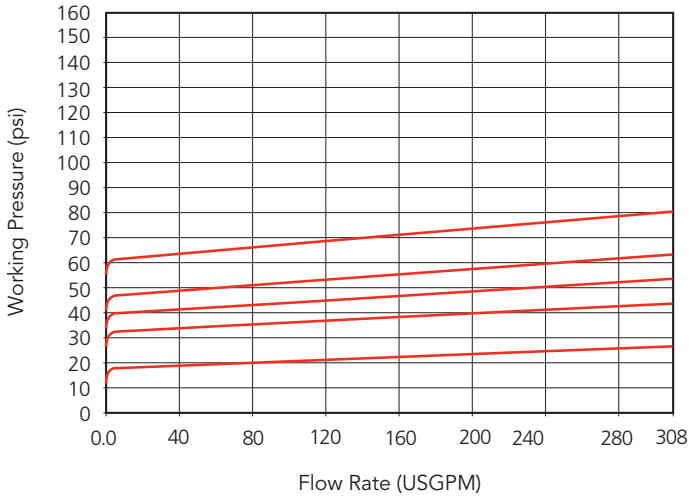

3" Valves / 7.5 to 150 psi set pressure range

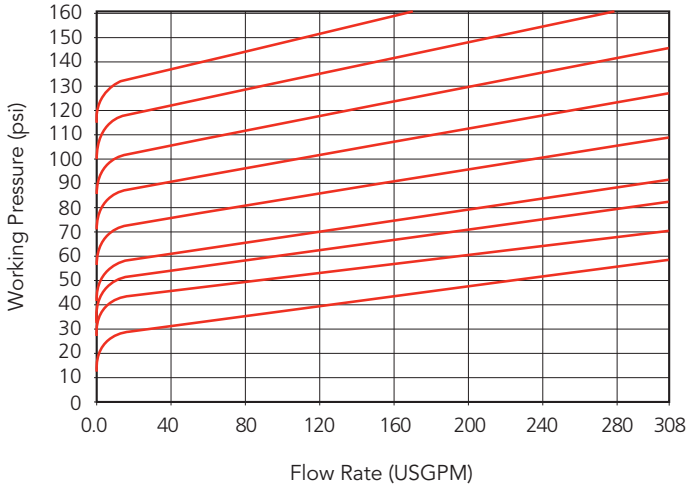

4" Valves / 4 to 60 psi set pressure range

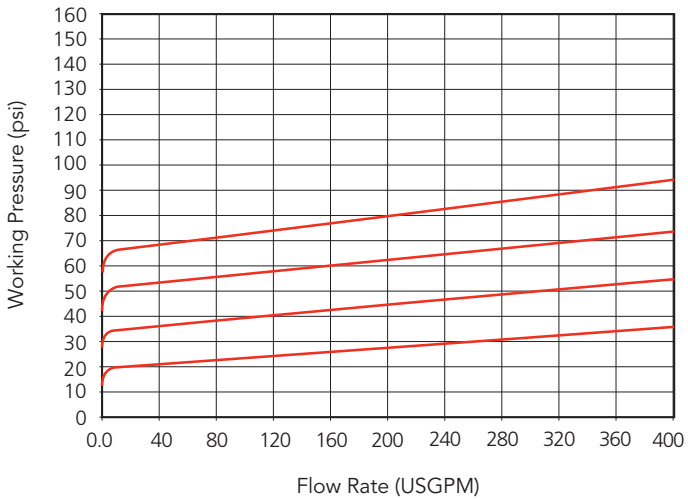

4" Valves / 7.5 to 90 psi set pressure range

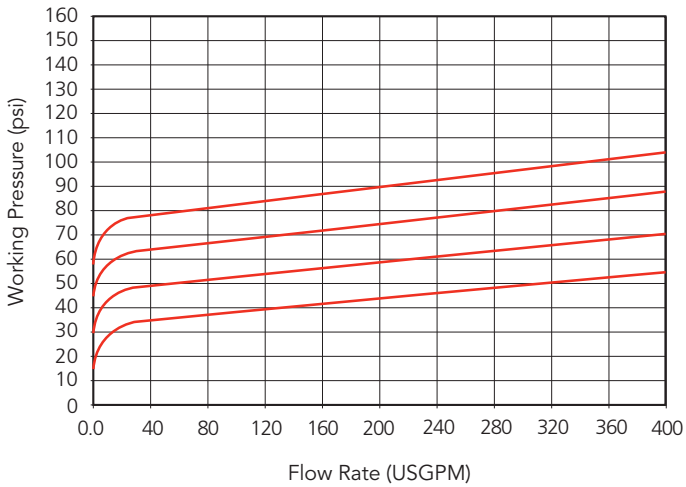

55 Guardsman Road, Thornhill, ON, L3T 6L2, Canada | ISO 9001:2008 Certified
tel.905.889.7890 | fax.905.889.8553 | request@chemline.com | chemline.com

CS-304-100 : Identification sheet

VWTC PROJECT NUMBER:	Iqaluit WWTP	REV:	01
PROJECT NAME:	5000218036	SUBMITTED TO (COMPANY):	
ENGINEER:	G. HÉBERT	SUBMITTED TO (RESPONSIBLE)	
PROJECT MANAGER:	C. BEKAERT	PROJECT NUM REFERENCE.:	
PHONE NUMBER:		LOT NUMBER:	

SUPPLIER	EQPT CODE	EQPT TAG NO	DIA	DESCRIPTION	INFO 1	INFO 2	INFO 3	APPLIC.	NOTE	REV
TEKNO VALVE	VASDBR303370	SV-04-783	N/A	ON/OFF VALVES - CARRIER WATER	TYPE: SOLENOID VALVE//MANUFACTURER : ASCO//MODEL : 8210G094//CONNECTION TYPE : THREADED | 13 mm (1/2") | 13 mm (1/2")//BODY : BRASS// SEAL | SEAT : | // STEM : N/A	ACTING : PILOT	NORMALLY : FERMÉ/CLOSED			1
TEKNO VALVE	VASDBR303370	SV-04-784	N/A	ON/OFF VALVES - CARRIER WATER	TYPE: SOLENOID VALVE//MANUFACTURER : ASCO//MODEL : 8210G094//CONNECTION TYPE : THREADED | 13 mm (1/2") | 13 mm (1/2")//BODY : BRASS// SEAL | SEAT : | // STEM : N/A	ACTING : PILOT	NORMALLY : FERMÉ/CLOSED			1

This page is intentionally left blank

Features

- Wide range of pressure ratings, sizes, and resilient materials provide long service life and low internal leakage
- High flow valves for liquid, corrosive, and air/inert gas service
- Industrial applications include:
  - Car wash
  - Laundry equipment
  - Air compressors
  - Industrial water control
  - Pumps

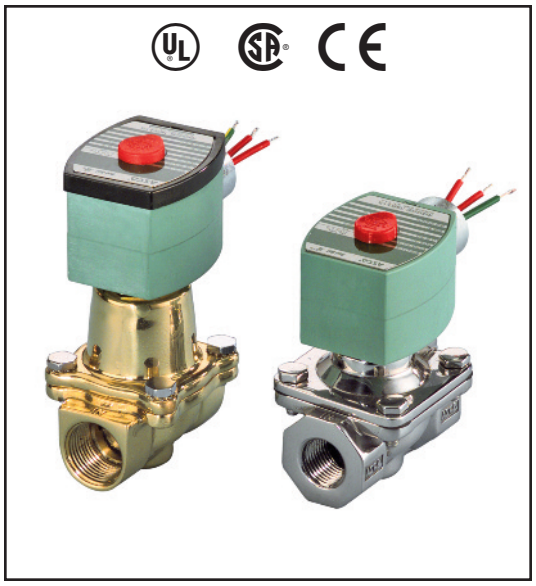

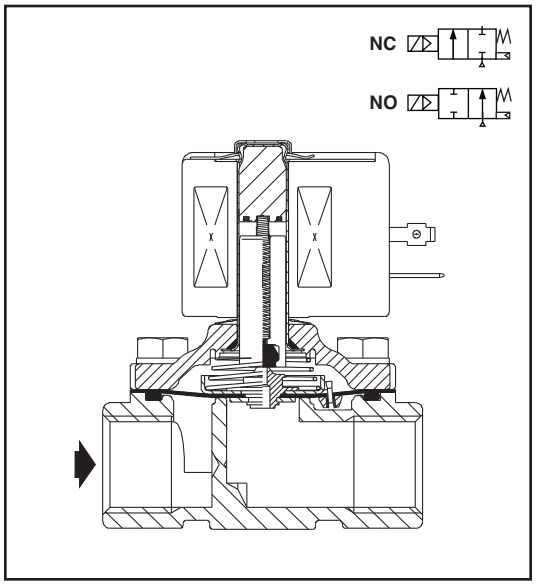

Construction

Valve Parts in Contact with Fluids		
Body	Brass	304 Stainless Steel*
Seals and Discs	NBR or PTFE	
Disc-Holder	PA	
Core Tube	305 Stainless Steel	
Core and Plugnut	430F Stainless Steel	
Springs	302 Stainless Steel	
Shading Coil	Copper	Silver

*Catalog Numbers 8210G127, 8210G129, 8210G132, 8210G133 have 316L Stainless Steel bodies.

Electrical

Standard Coil and Class of Insulation	Watt Rating and Power Consumption				Spare Coil Part Number			
		AC			General Purpose		Explosionproof	
	DC Watts	Watts	VA Holding	VA Inrush	AC	DC	AC	DC
F	-	6.1	16	40	238210	-	238214	-
F	11.6	10.1	25	70	238610	238710	238614	238714
F	16.8	16.1	35	180	272610	97617	272614	97617
F	-	17.1	40	93	238610	-	238614	-
F	-	20	43	240	99257	-	99257	-
F	-	20.1	48	240	272610	-	272614	-
F	30.8	-	-	-	-	501695	-	501696
H	40.6	-	-	-	-	238910	-	238914

Standard Voltages: 24, 120, 240, 480 volts AC, 60 Hz (or 110, 220 volts AC, 50 Hz). 6, 12, 24, 120, 240 volts DC. Must be specified when ordering.
Other voltages available when required.

Solenoid Enclosures

Standard: RedHat II - Watertight, Types 1, 2, 3, 3S, 4, and 4X; RedHat - Type I.

Optional: RedHat II - Explosionproof and Watertight, Types 3, 3S, 4, 4X, 6, 6P, 7, and 9; Red-Hat - Explosionproof and Watertight, Types 3, 4, 4X, 7, and 9.

(To order, add prefix "EF" to catalog number, except Catalog Numbers 8210B057, 8210B058, and 8210B059, which are not available with Explosionproof enclosures.)
See Optional Features Section for other available options.

Nominal Ambient Temp. Ranges

RedHat II/RedHat AC: 32˚F to 125˚F (0˚C to 52˚C)
RedHat II DC: 32˚F to 104˚F (0˚C to 40˚C)
RedHat DC: 32˚F to 77˚F (0˚C to 25˚C)
(104˚F/40˚C occasionally)
8210G227 AC: 32˚F to 130˚F (0˚C to 54˚C)
DC: 32˚F to 90˚F (0˚C to 32˚C)
Refer to Engineering Section for details.

Approvals

UL listed as indicated. CSA certified.
RedHat II meets applicable CE directives.
Refer to Engineering Section for details.

ATEX/IECEx certified with prefix "EV" as listed. *Refer to Optional Features Electrical Section for details.*

Specifications (English units)

Pipe Size (in)	Orifice Size (in)	Cv Flow Factor	Operating Pressure Differential (psi) Min.	Max. AC Air-Inert Gas	Max. AC Water	Max. AC Light Oil @ 300 SSU	Max. DC Air-Inert Gas	Max. DC Water	Max. DC Light Oil @ 300 SSU	Max. Fluid Temp. °F AC	Max. Fluid Temp. °F DC	Brass Body Catalog Number	Brass Body Const. Ref. ④	Brass Body UL ⑤ Listing	Stainless Steel Body Catalog Number	Stainless Steel Body Const. Ref. ④	Stainless Steel Body UL ⑤ Listing	Watt Rating/ Class of Coil Insulation ⑦ AC	Watt Rating/ Class of Coil Insulation ⑦ DC
NORMALLY CLOSED (Closed when de-energized), NBR or PTFE ② Seating																			
3/8	3/8	1.5	①	150	125	-	40	40	-	180	150	8210G073 ③	1P	●	8210G036 ③	1P	●	6.1/F	11.6/F
3/8	5/8	3	0	150	150	-	40	40	-	180	150	8210G093	5D	❍	-	-	-	10.1/F	11.6/F
3/8	5/8	3	5	200	150	135	125	100	100	180	150	8210G001 ▼	6D	❍	-	-	-	6.1/F	11.6/F
3/8	5/8	3	5	300	300	300	-	-	-	175	-	8210G006 ✓	5D	❍	-	-	-	17.1/F	-
1/2	7/16	2.2	①	150	125	-	40	40	-	180	150	8210G015 ③	2P	●	8210G037 ③	2P	●	6.1/F	11.6/F
1/2	5/8	4	0	150	150	-	40	40	-	180	150	8210G094 ✓	5D	❍	-	-	-	10.1/F	11.6/F
1/2	5/8	4	0	150	150	125	40	40	-	175	150	-	-	-	8210G087 ✓	7D	●	17.1/F	11.6/F
1/2	5/8	4	5	200	150	135	125	100	100	180	150	8210G002 ▼	6D	❍	-	-	-	6.1/F	11.6/F
1/2	5/8	4	5	300	300	300	-	-	-	175	-	8210G007	5D	❍	-	-	-	17.1/F	-
1/2	3/4	4	5	-	300	-	-	300	-	130	90	8210G227	5D	❍ †	-	-	-	17.1/F	40.6/H
3/4	5/8	4.5	0	150	150	125	40	40	-	175	150	-	-	-	8210G088 ✓	7D	●	17.1/F	11.6/F
3/4	3/4	5	5	125	125	125	100	90	75	180	150	8210G009 ▼	9D	❍	-	-	-	6.1/F	11.6/F
3/4	3/4	5	0	150	150	-	40	40	-	180	150	8210G095 ✓	8D	❍	-	-	-	10.1/F	11.6/F
3/4	3/4	6.5	5	250	150	100	125	125	125	180	150	8210G003 ▼	11D	❍	-	-	-	6.1/F	11.6/F
3/4	3/4	6	0	350	300	200	200	200	200	200	180	8210G026 ② ‡ ◆	40P/10D	●	-	-	-	16.1F	30.8/F
1	1	13	0	150	125	125	135	120	120	180	180	8210G054 ‡ ◆	41D/31D	●	8210G089 ‡ ◆	45D/15D	●	16.1/F	30.8/F
1	1	13	5	150	150	100	125	125	125	180	150	8210G004 ▼	12D	❍	-	-	-	6.1/F	11.6/F
1	1	13.5	0	300	225	115	-	-	-	200	-	8210G027 ‡	42P	●	-	-	-	20.1/F	-
1	1	13.5	10	300	300	300	-	-	-	175	-	8210G078 ②	13P	-	-	-	-	17.1/F	-
1 1/4	1 1/8	15	0	150	125	125	135	120	120	180	180	8210G055 ‡ ◆	43D/32D	●	-	-	-	16.1/F	30.8/F
1 1/4	1 1/8	15	5	150	150	100	125	125	125	180	150	8210G008 ▼	16D	❍	-	-	-	6.1/F	11.6/F
1 1/2	1 1/4	22.5	0	150	125	125	135	120	120	180	180	8210G056 ‡ ◆	44D/33D	●	-	-	-	16.1/F	30.8/F
1 1/2	1 1/4	22.5	5	150	150	100	125	125	125	180	150	8210G022 ▼	18D	●	8210G127	-	-	6.1/F	11.6/F
2	1 3/4	43	5	150	125	90	50	50	50	180	150	8210G100	20P	●	8210G129	-	-	6.1/F	11.6/F
2 1/2	1 3/4	45	5	150	125	90	50	50	50	180	150	8210G101	21P	●	-	-	-	6.1/F	11.6/F
NORMALLY OPEN (Open when de-energized), NBR Seating (PA Disc-Holder, except as noted)																			
3/8	5/8	3	0	150	150	125	125	125	80	180	150	8210G033	23D	●	-	-	-	10.1/F	11.6/F
3/8	5/8	3	5	250	200	200	250	200	200	180	180	8210G011 ⑧ ⑨	39D	●	-	-	-	10.1/F	11.6/F
1/2	5/8	4	0	150	150	125	125	125	80	180	150	8210G034 ✓	23D	●	-	-	-	10.1/F	11.6/F
1/2	5/8	3	0	150	150	100	125	125	80	180	150	-	-	-	8210G030 ✓	37D	●	10.1/F	11.6/F
1/2	5/8	4	5	250	200	200	250	200	200	180	180	8210G012 ⑧ ⑨	39D	●	-	-	-	10.1/F	11.6/F
3/4	3/4	5.5	0	150	150	125	125	125	80	180	150	8210G035 ✓	25D	●	-	-	-	10.1/F	11.6/F
3/4	5/8	3	0	150	150	100	125	125	80	180	150	-	-	-	8210G038 ✓	38D	●	10.1/F	11.6/F
3/4	3/4	6.5	5	-	-	-	250	200	200	-	180	8210C013	24D	●	-	-	-	-	16.8/F
3/4	3/4	6.5	5	250	200	200	-	-	-	180	-	8210G013	46D	●	-	-	-	16.1/F	-
1	1	13	0	125	125	125	-	-	-	180	-	8210B057 ⑥ ⑩	34D	●	-	-	-	20/F	-
1	1	13	5	-	-	-	125	125	125	-	180	8210D014	26D	●	-	-	-	-	16.8/F
1	1	13	5	150	150	125	-	-	-	180	-	8210G014	47D	●	-	-	-	16.1/F	-
1 1/4	1 1/8	15	0	125	125	125	-	-	-	180	-	8210B058 ⑥ ⑩	35D	●	-	-	-	20/F	-
1 1/4	1 1/8	15	5	-	-	-	125	125	125	-	180	8210D018	28D	●	-	-	-	-	16.8/F
1 1/4	1 1/8	15	5	150	150	125	-	-	-	180	-	8210G018	48D	●	-	-	-	16.1/F	-
1 1/2	1 1/4	22.5	0	125	125	125	-	-	-	180	-	8210B059 ⑥ ⑩	36D	●	-	-	-	20/F	-
1 1/2	1 1/4	22.5	5	-	-	-	125	125	125	-	180	8210D032	29D	●	-	-	-	-	16.8/F
1 1/2	1 1/4	22.5	5	150	150	125	-	-	-	180	-	8210G032	49D	●	8210G132	-	-	16.1/F	-
2	1 3/4	43	5	-	-	-	125	125	125	-	150	8210 103	30P	●	-	-	-	-	16.8/F
2	1 3/4	43	5	125	125	125	-	-	-	180	-	8210G103	50P	●	8210G133	-	-	16.1/F	-
2 1/2	1 3/4	45	5	-	-	-	125	125	125	-	150	8210 104	27P	●	-	-	-	-	16.8/F
2 1/2	1 3/4	45	5	125	125	125	-	-	-	180	-	8210G104	51P	●	-			16.1/F	-

① 5 psi on Air; 1 psi on Water.
② Valve provided with PTFE main disc.
③ Valve includes Ultem (G.E. trademark) piston.
④ Letter "D" denotes diaphragm construction; "P" denotes piston construction.
⑤ ❍ Safety Shutoff Valve; ● General Purpose Valve.
Refer to Engineering Section (Approvals) for details.

⑥ Valves not available with Explosionproof enclosures.
⑦ On 50 hertz service, the watt rating for the 6.1/F solenoid is 8.1 watts.
⑧ AC construction also has PA seating.
⑨ No disc-holder.
⑩ Stainless steel disc-holder.
† UL listed for fire protection systems per UL429A.

‡ DC constructions must have solenoid mounted vertical and upright.
✓ ATEX/IECEx certified with prefix "EV".
▼ ATEX/IECEx certified for DC only with prefix "EV".
◆ Not available in 6 Volt DC. EF and HB prefix only.

Specifications (Metric units)

Pipe Size (in)	Orifice Size (mm)	Kv Flow Factor (m^3/hr)	Operating Pressure Differential (bar)							Max. Fluid Temp. ˚C		Brass Body			Stainless Steel Body			Watt Rating/ Class of Coil Insulation ⑦	
				Max. AC			Max. DC												
			Min.	Air-Inert Gas	Water	Light Oil @ 300 SSU	Air-Inert Gas	Water	Light Oil @ 300 SSU	AC	DC	Catalog Number	Const. Ref. ④	UL ⑤ Listing	Catalog Number	Const. Ref. ④	UL ⑤ Listing	AC	DC
NORMALLY CLOSED (Closed when de-energized), NBR or PTFE ② Seating																			
3/8	10	1.3	①	10	9	-	3	3	-	82	65	8210G073 ③	1P	●	8210G036 ③	1P	●	6.1/F	11.6/F
3/8	16	2.6	0	10	10	-	3	3	-	82	65	8210G093	5D	❍	-	-	-	10.1/F	11.6/F
3/8	16	2.6	0.3	14	10	9	9	7	7	82	65	8210G001 ▼	6D	❍	-	-	-	6.1/F	11.6/F
3/8	16	2.6	0.3	21	21	21	-	-	-	79	-	8210G006 ✓	5D	❍	-	-	-	17.1/F	-
1/2	11	1.9	①	10	9	-	3	3	-	82	65	8210G015 ③	2P	●	8210G037 ③	2P	●	6.1/F	11.6/F
1/2	16	3.4	0	10	10	-	3	3	-	82	65	8210G094 ✓	5D	❍	-	-	-	10.1/F	11.6/F
1/2	16	3.4	0	10	10	9	3	3	-	79	65	-	-	-	8210G087 ✓	7D	●	17.1/F	11.6/F
1/2	16	3.4	0.3	14	10	9	9	7	7	82	65	8210G002 ▼	6D	❍	-	-	-	6.1/F	11.6/F
1/2	16	3.4	0.3	21	21	21	-	-	-	79	-	8210G007	5D	❍	-	-	-	17.1/F	-
1/2	19	3.4	0.3	-	21	-	-	21	-	54	32	8210G227	5D	❍ †	-	-	-	17.1/F	40.6H
3/4	16	3.9	0	10	10	9	3	3	-	79	65	-	-	-	8210G088 ✓	7D	●	17.1/F	11.6/F
3/4	19	4.3	0.3	9	9	9	7	6	5	82	65	8210G009 ▼	9D	❍	-	-	-	6.1/F	11.6/F
3/4	19	4.3	0	10	10	-	3	3	-	82	65	8210G095 ✓	8D	❍	-	-	-	10.1/F	11.6/F
3/4	19	5.6	0.3	17	10	7	9	9	9	82	65	8210G003 ▼	11D	❍	-	-	-	6.1/F	11.6/F
3/4	19	5.1	0	24	21	14	14	14	14	93	82	8210G026 ② ‡ ◆	40P/10D	●	-	-	-	16.1F	30.8/F
1	25	11	0	10	9	9	9	8	8	82	82	8210G054 ‡ ◆	41D/31D	●	8210G089 ‡ ◆	45D/15D	●	16.1/F	30.8/F
1	25	11	0.3	10	10	7	9	9	9	82	65	8210G004 ▼	12D	❍	-	-	-	6.1/F	11.6/F
1	25	11.5	0	21	16	8	-	-	-	93	-	8210G027 ‡	42P	●	-	-	-	20.1/F	-
1	25	11.5	0.7	21	21	21	-	-	-	79	-	8210G078 ②	13P	-	-	-	-	17.1/F	-
1 1/4	29	13	0	10	9	9	9	8	8	82	82	8210G055 ‡ ◆	43D/32D	●	-	-	-	16.1/F	30.8/F
1 1/4	29	13	0.3	10	10	7	9	9	9	82	65	8210G008 ▼	16D	❍	-	-	-	6.1/F	11.6/F
1 1/2	32	19.5	0	10	9	9	9	8	8	82	82	8210G056 ‡ ◆	44D/33D	●	-	-	-	16.1/F	30.8/F
1 1/2	32	19.5	0.3	10	10	7	9	9	9	82	65	8210G022 ▼	18D	●	8210G127	-	-	6.1/F	11.6/F
2	44	37	0.3	10	9	6	3	3	3	82	65	8210G100	20P	●	8210G129	-	-	6.1/F	11.6/F
2 1/2	44	39	0.3	10	9	6	3	3	3	82	65	8210G101	21P	●	-	-	-	6.1/F	11.6/F
NORMALLY OPEN (Open when de-energized), NBR Seating (PA Disc-Holder, except as noted)																			
3/8	16	2.6	0.0	10	10	9	9	9	6	82	65	8210G033	23D	●	-	-	-	10.1/F	11.6/F
3/8	16	2.6	0.3	17	14	14	17	14	14	82	82	8210G011 ⑧ ⑨	39D	●	-	-	-	10.1/F	11.6/F
1/2	16	3.4	0	10	10	9	9	9	6	82	65	8210G087 ✓	7D	●	-	-	-	10.1/F	11.6/F
1/2	16	2.6	0	10	10	7	9	9	6	82	65	-	-	-	8210G087 ✓	7D	●	10.1/F	11.6/F
1/2	16	3.4	0.3	17	14	14	17	14	14	82	82	8210G012 ⑧ ⑨	39D	●	-	-	-	10.1/F	11.6/F
3/4	19	4.7	0	10	10	9	9	9	6	82	65	8210G087 ✓	7D	●	-	-	-	10.1/F	11.6/F
3/4	16	2.6	0	10	10	7	9	9	6	82	65	-	-	-	8210G087 ✓	7D	●	10.1/F	11.6/F
3/4	19	5.6	0.3	-	-	-	17	14	14	-	82	8210C013	24D	●	-	-	-	-	16.8/F
3/4	19	5.6	0.3	17	14	14	-	-	-	82	-	8210G013	46D	●	-	-	-	16.1/F	-
1	25	11	0	9	9	9	-	-	-	82	-	8210B057 ⑥ ⑩	34D	●	-	-	-	20/F	-
1	25	11	0.3	-	-	-	9	9	9	-	82	8210D014	26D	●	-	-	-	-	16.8/F
1	25	11	0.3	10	10	9	-	-	-	82	-	8210G014	47D	●	-	-	-	16.1/F	-
1 1/4	29	13	0	9	9	9	-	-	-	82	-	8210B058 ⑥ ⑩	35D	●	-	-	-	20/F	-
1 1/4	29	13	0.3	-	-	-	9	9	9	-	82	8210D018	28D	●	-	-	-	-	16.8/F
1 1/4	29	13	0.3	10	10	9	-	-	-	82	-	8210G018	48D	●	-	-	-	16.1/F	-
1 1/2	32	19.5	0	9	9	9	-	-	-	82	-	8210B059 ⑥ ⑩	36D	●	-	-	-	20/F	-
1 1/2	32	19.5	0.3	-	-	-	9	9	9	-	82	8210D032	29D	●	-	-	-	-	16.8/F
1 1/2	32	19.5	0.3	10	10	9	-	-	-	82	-	8210G032	49D	●	8210G132	-	-	16.1/F	-
2	44	37	0.3	-	-	-	9	9	9	-	65	8210 103	30P	●	-	-	-	-	16.8/F
2	44	37	0.3	9	9	9	-	-	-	82	-	8210G103	50P	●	8210G133	-	-	16.1/F	-
2 1/2	44	39	0.3	-	-	-	9	9	9	-	65	8210 104	27P	●	-	-	-	-	16.8/F
2 1/2	44	39	0.3	9	9	9	-	-	-	82	-	8210G104	51P	●	-	-	-	16.1/F	-

① 0.3 bar on Air; 0.0 bar on Water.
② Valve provided with PTFE main disc.
③ Valve includes UItem (G.E. trademark) piston.
④ Letter "D" denotes diaphragm construction; "P" denotes piston construction.
⑤ ❍ Safety Shutoff Valve; ● General Purpose Valve.
Refer to Engineering Section (Approvals) for details.

⑥ Valves not available with Explosionproof enclosures.
⑦ On 50 hertz service, the watt rating for the 6.1/F solenoid is 8.1 watts.
⑧ AC construction also has PA seating.
⑨ No disc-holder.
⑩ Stainless steel disc-holder.
† UL listed for fire protection systems per UL429A.

‡ DC constructions must have solenoid mounted vertical and upright.
✓ ATEX/IECEx certified with prefix "EV".
▼ ATEX/IECEx certified for DC only with prefix "EV".
◆ Not available in 6 Volt DC. EF and HB prefix only.

Dimensions: inches (mm)

Const. Ref.		H	K	L	P	W
1*	in	3.85	3.00	1.91	3.41	1.69
	mm	98	76	49	87	43
2*	in	4.17	3.25	2.28	3.63	1.69
	mm	106	83	58	92	43
5	in	3.84	2.31	2.75	3.28	2.28
	mm	98	59	70	83	58
6*	in	3.38	1.94	2.75	2.80	2.28
	mm	86	49	70	71	58
7	in	4.19	2.50	2.81	3.47	2.39
	mm	106	64	71	88	61
8	in	4.13	2.47	2.81	3.44	2.29
	mm	105	63	71	87	58
9*	in	3.66	2.10	2.81	2.96	2.28
	mm	93	53	71	75	58
10*	in	5.20	3.40	2.80	4.50	2.50
	mm	131	86	71	114	62
11*	in	4.16	2.66	3.84	3.52	2.75
	mm	106	68	98	89	70
12	in	5.64	3.15	3.75	4.01	3.36
	mm	143	80	95	102	85
13	in	4.44	3.22	3.75	4.19	5.81
	mm	113	82	95	106	147
15*	in	5.20	3.30	3.80	4.40	3.80
	mm	133	83	98	111	98
16	in	5.64	3.15	3.66	4.01	3.56
	mm	143	80	93	102	90
18*	in	6.11	3.30	4.38	4.16	3.92
	mm	155	84	111	106	100
20*	in	7.33	3.71	5.06	4.57	4.87
	mm	186	94	129	116	124
21*	in	7.33	3.71	5.50	4.57	4.87
	mm	186	94	140	116	124
23	in	4.35	2.65	2.75	3.79	2.28
	mm	110	67	70	96	58
24	in	5.06	X	3.78	4.44	2.75
	mm	129	X	96	113	70
25	in	4.64	2.81	2.81	3.94	2.28
	mm	118	71	71	100	58
26	in	6.53	X	3.75	4.91	3.19
	mm	166	X	95	125	81
27	in	8.22	X	5.50	5.47	4.87
	mm	209	X	140	139	124
28	in	6.53	X	3.66	4.91	3.19
	mm	166	X	93	125	81
29	in	7.03	X	4.38	5.06	4.40
	mm	179	X	111	129	112

* DC dimensions slightly larger.
IMPORTANT: Valves may be mounted in any position, except as noted in specifications table.

Const. Ref. 1, 2

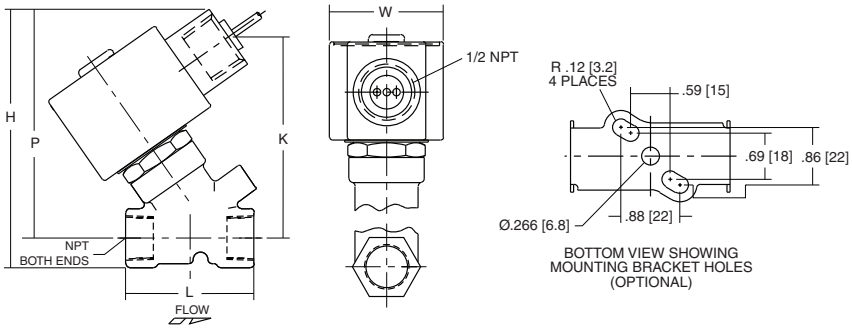

Const. Ref. 13

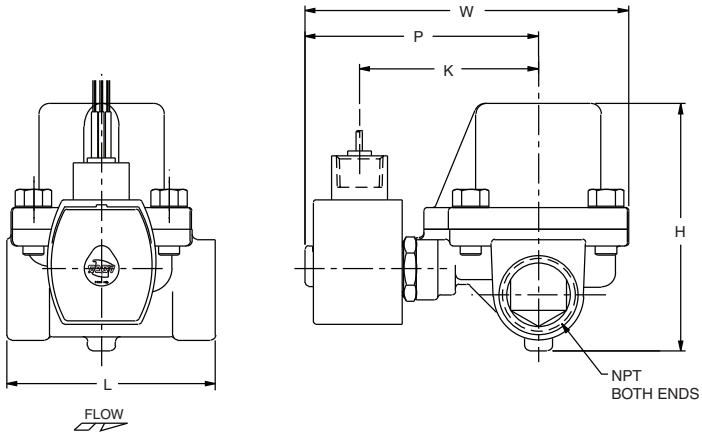

Const. Ref. 5-9, 11, 23 , 25, 37,38, 40-46

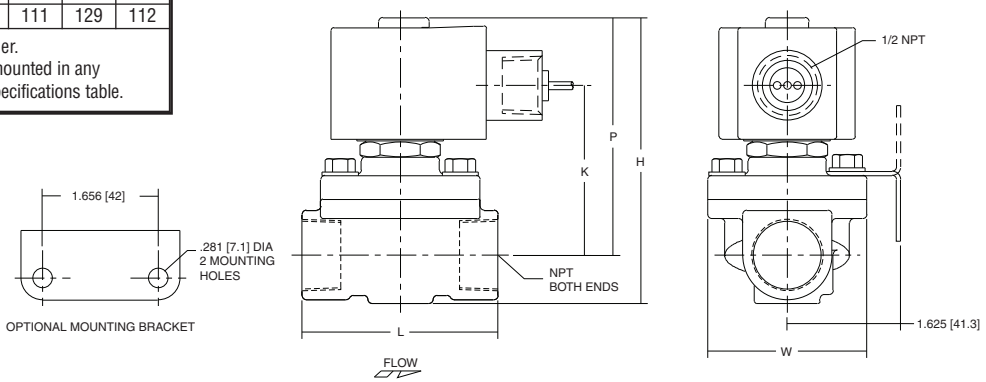

Dimensions: inches (mm)

Const. Ref.		H	K	L	P	W
30	in	8.22	X	5.06	5.47	4.87
	mm	209	X	129	139	124
31	in	5.13	3.19	3.76	4.32	3.27
	mm	130	81	95	110	83
32	in	5.60	3.44	3.66	4.57	3.27
	mm	142	87	93	116	83
33	in	5.92	3.66	4.51	4.80	3.89
	mm	150	93	115	122	99
34	in	6.91	X	3.75	6.09	3.25
	mm	176	X	95	155	83
35	in	7.34	X	3.66	6.34	3.25
	mm	186	X	93	161	83
36	in	7.66	X	4.38	6.56	3.91
	mm	1.95	X	111	167	99
37	in	4.61	2.75	2.81	3.89	2.39
	mm	117	70	71	99	61
38	in	4.61	2.75	2.81	3.89	2.39
	mm	117	70	71	99	61
39	in	5.42	2.31	2.75	4.86	3.80
	mm	138	59	70	123	97
40	in	5.20	3.29	2.81	4.50	2.28
	mm	132	83	71	114	58
41	in	5.13	3.10	3.75	4.32	3.25
	mm	130	79	95	110	83
42	in	6.43	4.40	3.93	5.62	3.25
	mm	163	112	100	143	83
43	in	5.57	3.35	3.66	4.57	3.25
	mm	142	85	93	116	83
44	in	5.90	3.57	4.38	4.79	3.91
	mm	150	91	111	122	99
45	in	5.26	3.17	3.75	4.38	3.84
	mm	134	81	95	111	98
46	in	4.95	3.10	3.84	4.31	2.75
	mm	126	79	98	110	70
47	in	6.43	3.59	3.75	4.81	3.52
	mm	163	91	95	122	90
48	in	6.43	3.59	3.66	4.81	3.73
	mm	163	91	93	122	95
49	in	6.91	3.75	4.38	4.96	4.40
	mm	176	95	111	126	112
50	in	8.13	4.15	5.06	5.37	4.87
	mm	207	105	129	136	124
51	in	8.13	4.15	5.50	5.37	5.18
	mm	207	105	140	136	132

IMPORTANT: Valves may be mounted in any position, except as noted in specifications table.

Const. Ref. 10, 15, 31, 32, 33

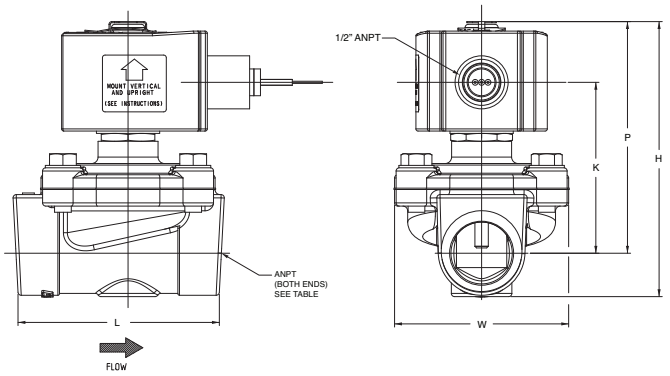

Const. Ref. 24, 34, 35, 36

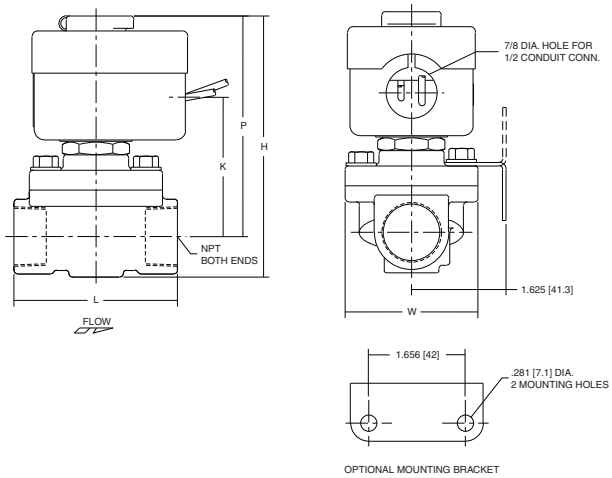

Const. Ref. 12, 16, 26, 28, 47, 48

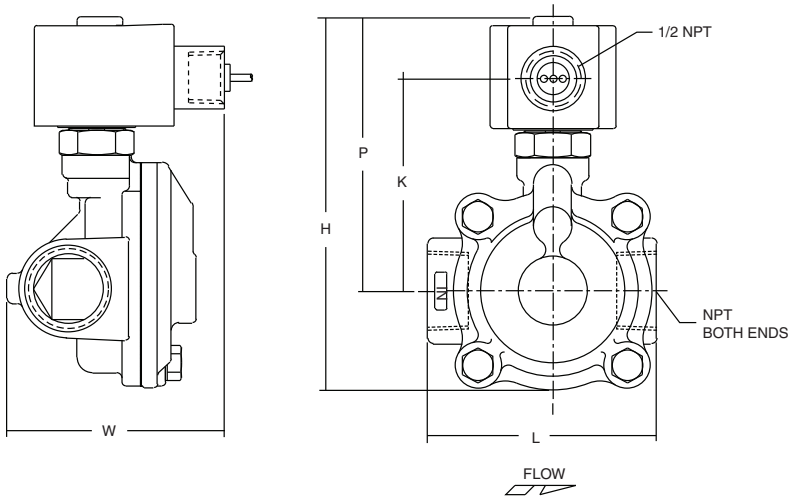

Dimensions: inches (mm)

Const. Ref. 39

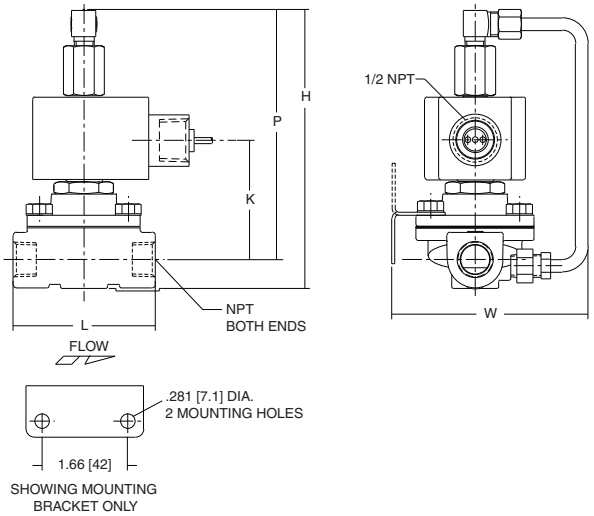

Const. Ref. 18, 29, 49

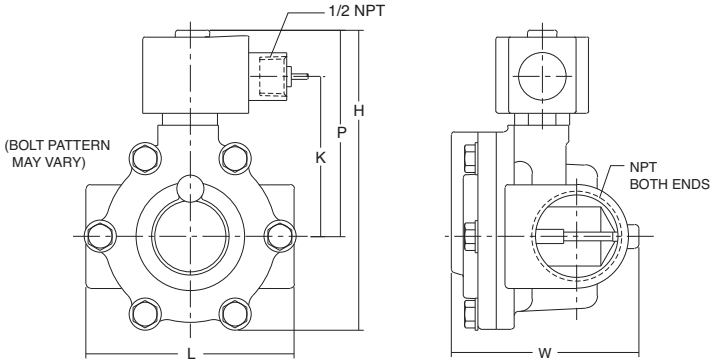

Const. Ref. 20, 21, 27, 30, 50, 51

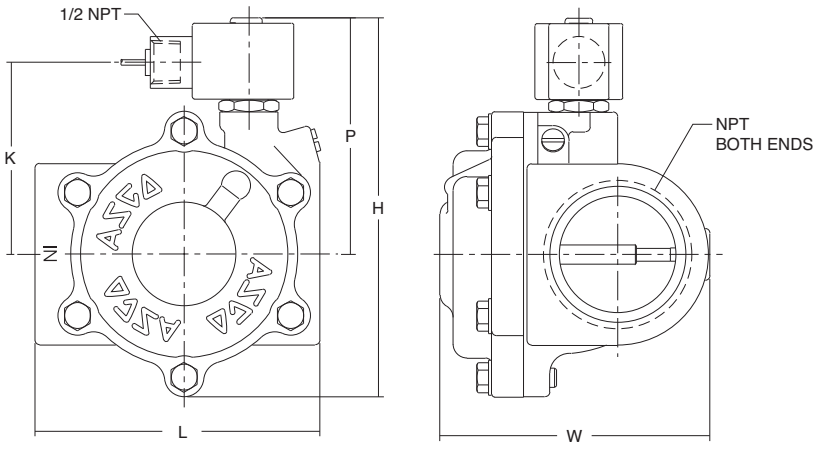

CS-305-170 : Identification sheet

VWTC PROJECT NUMBER:	Iqaluit WWTP	REV:	01
PROJECT NAME:	5000218036	SUBMITTED TO (COMPANY):	
ENGINEER:	G. HÉBERT	SUBMITTED TO (RESPONSIBLE)	
PROJECT MANAGER:	C. BEKAERT	PROJECT NUM REFERENCE.:	
PHONE NUMBER:		LOT NUMBER:	

SUPPLIER	EQPT CODE	EQPT TAG NO	DIA	DESCRIPTION	INFO 1	INFO 2	INFO 3	APPLIC.	NOTE	REV
CHEMLINE	VARFPV348512	PRV-772	DIA: 25 mm (1")	BACKPRESSURE VALVES	TYPE: BACK PRESSURE VALVE | 150#//MANUFACTURER : CHEMLINE//MODEL : SB12A010EU + SGA-005-002-P-G + P025-160-BM//CONNECTION TYPE : UNION SOCKET | 25 mm (1")//BODY : PVC// SEAL | SEAT :EPDM | EPDM// STEM : N/A	(CONFIG. L_U)				1
CHEMLINE	VARFPV348512	PRV-773	DIA: 25 mm (1")	BACKPRESSURE VALVES	TYPE: BACK PRESSURE VALVE | 150#//MANUFACTURER : CHEMLINE//MODEL : SB12A010EU + SGA-005-002-P-G + P025-160-BM//CONNECTION TYPE : UNION SOCKET | 25 mm (1")//BODY : PVC// SEAL | SEAT :EPDM | EPDM// STEM : N/A	(CONFIG. L_U)				1
CHEMLINE	VARFPV348512	PRV-774	DIA: 25 mm (1")	BACKPRESSURE VALVES	TYPE: BACK PRESSURE VALVE | 150#//MANUFACTURER : CHEMLINE//MODEL : SB12A010EU + SGA-005-002-P-G + P025-160-BM//CONNECTION TYPE : UNION SOCKET | 25 mm (1")//BODY : PVC// SEAL | SEAT :EPDM | EPDM// STEM : N/A	(CONFIG. L_U)				1

This page is intentionally left blank

PDF Published September 17, 2014

SB12 Series Back Pressure/Relief Valves

CHEMLINE PLASTICS
SUPERIOR FLOW SOLUTIONS

PVC PP PVDF

CRN Registered as Category C Fittings Consult Chemline

NSF[3] Certified to NSF/ANSI 61

SERIES: SB12

SIZES: 3/8" – 4"

ENDS: True Union Socket, Threaded or ChemFlare™[1] Spigot[2] Bodies with Plain, Socket, Threaded or Flanged ends

DIAPHRAGM: PTFE Bonded EPDM

SEALS: EPDM, FKM (Viton®)



The Chemline SB Series Back Pressure/ Relief Valve has two functions. As a ***back pressure valve***, installed in-line downstream of a pump, the back pressure below the metering pump is maintained. When installed in the branch of a tee it is a ***pressure relief valve***. The valve stays closed until inlet pressure reaches the set pressure which is adjusted by turning the spring tensioning bolt. Inlet pressure acts upward against the piston allowing excess pressure to flow upwards through the orifice.

The SB12 Series has a built-in check valve function, desirable for dosing applications. It is not so sensitive as to open with every pulsation from a metering pump.

features

True Union Ends

- Easy installation and maintenance
- Eliminate chemical leakage problems common with old fashioned threaded connections

Long Cycling Life

- Dynamic seal is PTFE bonded EPDM for high chemical resistance
- This moulded diaphragm is designed for superior sealing and flex life

Superior Performance in Dosing Systems

- Valves are hydraulically designed for very low hysteresis ("backlash") and to eliminate chatter
- Built-in check (non-return) function
- Valve opening depends on inlet pressure only and is uneffected by changes in downstream (back) pressure

CRN Registration numbers by province

- Ontario: OC10134.5
- Newfoundland: OC10134.50
- Alberta: OC10134.52
- Saskatchewan/Manitoba/Quebec: OC10134.56
- New Brunswick: OC10134.57
- Nova Scotia: OC10134.58
- P.E.I.: OC10134.59
- British Columbia: not required

technical

Set Pressure Ranges

- 1/2" to 2" – 5 to 150 psi
- 2-1/2" and 3" – 7.5 to 150 psi
- 2-1/2" to 4" – 4 to 60 psi (optional)
- 4" – 7.5 to 90 psi

Maximum Viscosity

- 120cP is maximum recommended service viscosity

[1] For ChemFlare™ end connectors, consult Chemline.
[2] PP and PVDF spigot ends have DIN dimensions and will butt fuse directly to Chemline PP and PVDF piping systems.
[3] PVC valves with EPDM or FKM (Viton®) seals are certified under NSF/ANSI Standard 61 for contact with drinking water.

09/14 ©Chemline Plastics Limited 2014
Chemline is a registered trade mark of Chemline Plastics Limited

SB12 Series Back Pressure/Relief Valves 1/2" to 2"

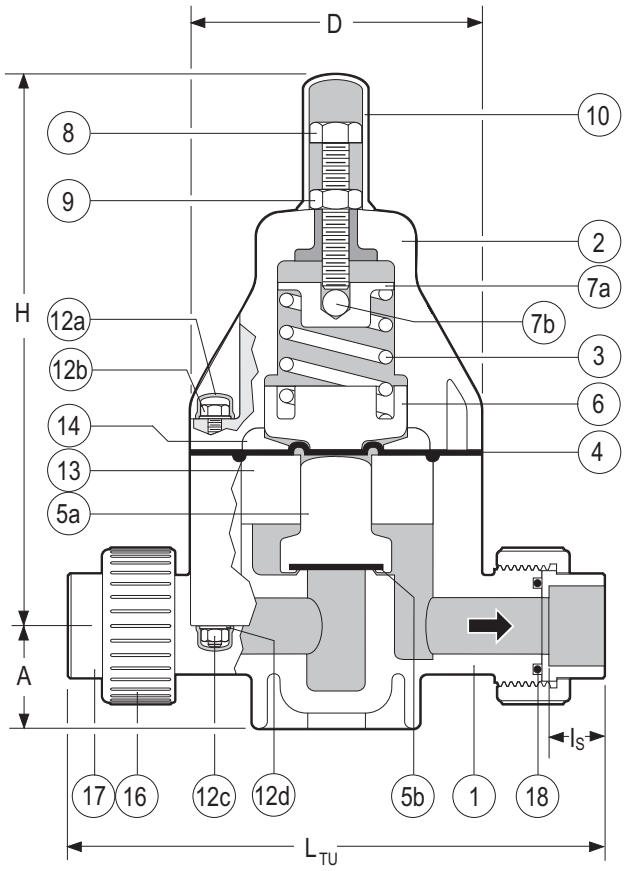

True Union Body

PARTS

▲ Recommended Spare Parts

No.	Part	Pcs.	Materials
1	Body	1	PVC, PP, PVDF
2	Bonnet	1	PPG
3	Spring	1	Galvanized Steel
4▲	Control Diaphragm	1	PTFE bonded EPDM
5a▲	Piston	1	PVC, PP, PVDF
5b▲	Seat	1	EPDM, FPM(Viton®)
6	Lower Spring Retainer	1	PPG
7a	Upper Spring Retainer	1	Cad. Plated Steel
7b	Ball	1	304 SS
8	Spring Tensioning Bolt	1	304 SS
9	Lock Nut	1	304 SS
10	Spring Bolt Cap	1	PE
12a	Bolt/Nut Cap	8/12[1]	PE
12b	Hex Bolt	4/6[1]	304 SS
12c	Hex Nut	4/6[1]	304 SS
12d	Washer	8/12[1]	304 SS
13	Spacer Disc	1	PVC, PP, PVDF
14	Pressure Plate	1	PP
16	Union Nut	2	PVC, PP, PVDF
17	End Connector	2	PVC, PP, PVDF
18▲	Face O-Ring	2	EPDM, FPM(Viton®)

[1] 1/2" size / 3/4" to 2" sizes

OTHER ENDS

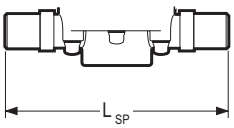

Spigot Body

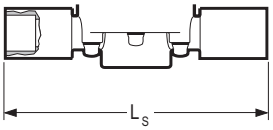

Socket

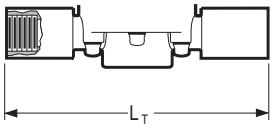

Threaded

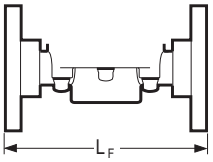

Flanged

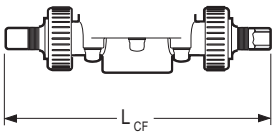

ChemFlare™

DIMENSIONS INCHES

WEIGHTS LB.

Cv VALUES

Size	D	H	PVC A	PVC I_S	PVC L_{TU}[2]	PVC L_{SP}[3]	PVC L_S	PVC L_T	PVC L_F	PVC L_{CF}	PP and PVDF A	PP and PVDF L_{SP}[3]	PP and PVDF L_{TU}[2]	PVC	PP	PVDF	USGPM Flow at 1 psi △P
3/8"	3.2	6.9	1.0	0.6	6.5	5.7	7.4	7.2	4.5	8.2	0.9	5.7	**	1.8	1.5	2.2	2.1
1/2"	3.2	6.9	1.0	0.6	6.8	5.7	8.0	7.8	6.3	8.3[4]	0.9	5.7	7.1	1.9	1.6	2.4	3.0
3/4"	4.2	8.0	1.5	0.7	8.3	6.9	9.3	8.9	7.4	9.7	1.4	6.9	8.4	4.1	3.5	4.6	6.6
1"	4.2	8.0	1.5	0.9	8.5	6.9	9.6	9.3	7.4	10.2	1.4	6.9	8.7	4.2	3.5	4.7	8.7
1-1/4"	5.8	10.3	2.2	1.0	10.9	8.8	11.6	11.2	9.2	13.5	2.1	8.8	10.9	11.0	9.0	12.0	18.0
1-1/2"	5.8	10.3	2.2	1.2	11.1	8.8	12.2	11.5	9.5	–	2.1	8.8	11.2	11.2	9.2	12.2	20.0
2"	5.8	10.3	2.2	1.5	11.3	9.6	12.9	12.0	10.0	–	2.1	8.8	13.2	11.4	9.4	12.4	21.4

[2] True Union bodies come standard with socket ends. Threaded union ends are available. ** Consult Chemline.
[3] Spigot bodies are used for non union socket, threaded or flanged ends. All spigot ends have metric dimensions and the PP and PVDF spigots butt fuse directly to Chemline PP and PVDF piping. [4] Tube size can be reduced to 1/4" tube, LCF = 7.74" for 1/4", 8.26" for 3/8".

MAXIMUM PRESSURES PSI

Size	PVC 20°C 68°F	PVC 30°C 86°F	PVC 40°C 104°F	PVC 50°C 122°F	PP 30°C 86°F	PP 40°C 104°F	PP 50°C 122°F	PP 60°C 140°F	PP 70°C 158°F	PVDF 30°C 86°F	PVDF 50°C 122°F	PVDF 70°C 158°F	PVDF 80°C 176°F	PVDF 90°C 194°F	PVDF 100°C 212°F
1/2"– 2"	150	105	60	15	150	90	60	37.5	15	150	100	60	45	30	15

Temperature Ranges: PVC 0 to 50°C (32 to 122°F), **PP** 10 to 70°C (50 to 158°F), **PVDF** –30 to 100°C (–22 to 212°F).

SB12 Series Back Pressure/Relief Valves 1/2” to 2”

pressure loss nomogram for SB12 valves 3/8” to 2”

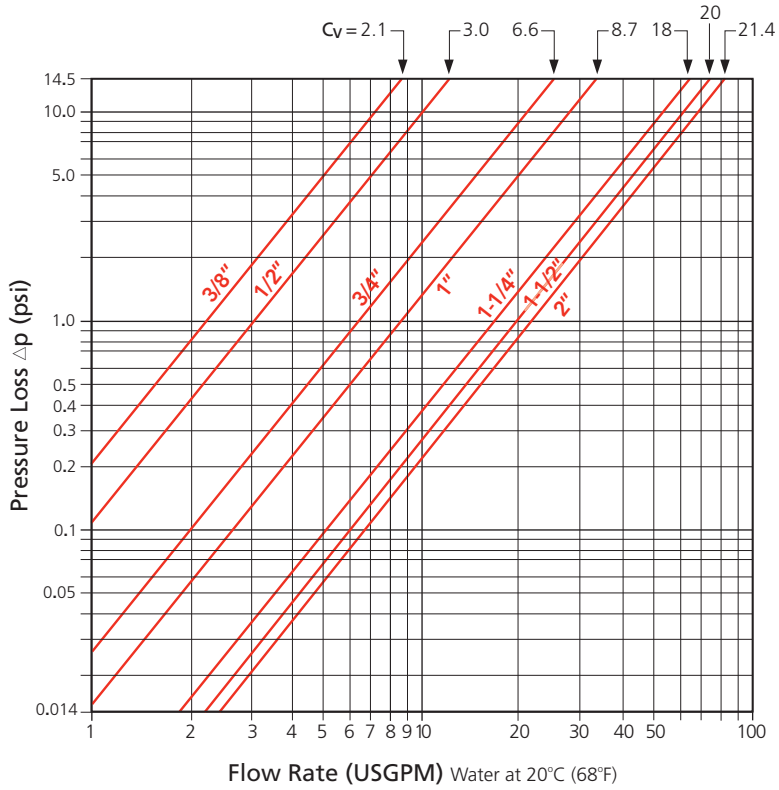

typical dosing system schematic

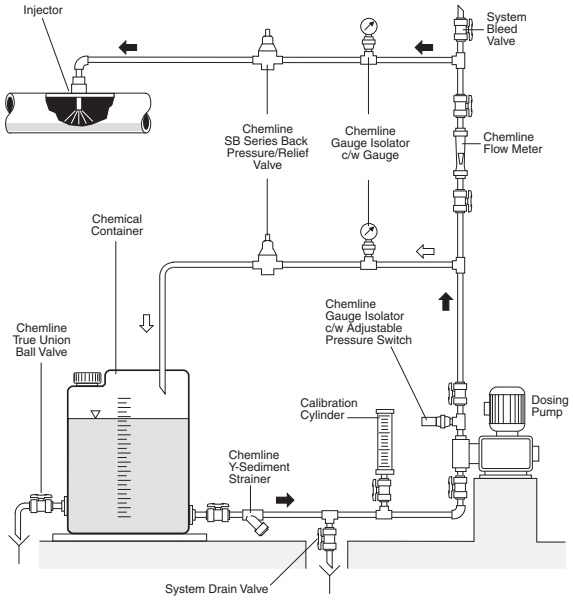

application of pressure relief valves

Constant System Pressure

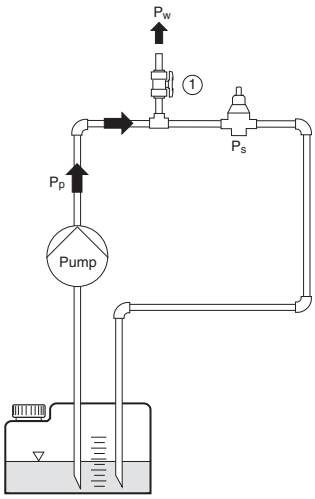

$P_p \geq P_w$
$P_p \geq P_s$ → valve opens
$P_p \leq P_s$ → valve closed

Consumer 1 and/or 2 Open, Valve Closes

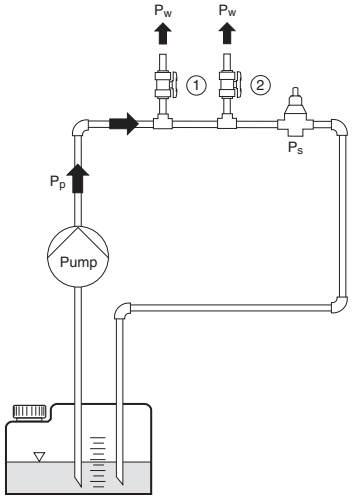

$P_p \geq P_s$ → valve opens
$P_p \leq P_s$ → valve closed

Non-Return Valve

Container 1 is located above the pump

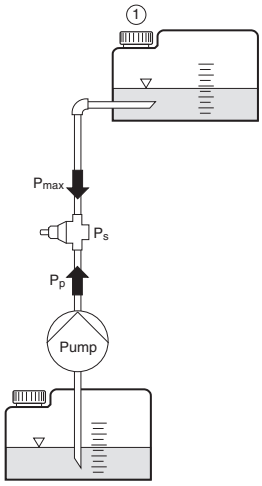

$P_s \geq P_{max}$
$P_p \geq P_s$ → valve opens
$P_p \leq P_s$ → valve closed

Overflow Valve

Pressure of container or application system should not exceed the maximum pressure value

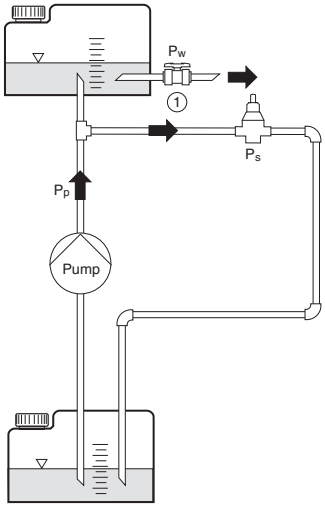

$P_s \leq P_w$
$P_p \geq P_s$ → valve opens
$P_p \leq P_s$ → valve closed

P_w = Working Pressure
P_p = Pump Pressure
P_s = Set Pressure

SB12 Series Back Pressure/Relief Valves 1/2" to 2"

working pressure vs. flow rate

The curves show the relationship between the working pressure and the approximate flow rate through the valve for water at 20°C (68°F) . These values will vary depending on:

- The configuration of the piping and the pressure losses associated with it
- The fluid if not water at 20°C (68°F)
- Whether the pressure is rising or falling, hysteresis is approximately 4 psi for 1/2" to 2" valves. For valves 2-1/2" to 4", hysteresis is approximately 14.5 psi.

operation examples

1. The valve is set closed at 100 psi. At a pressure increase of 10 psi, a flow of approximately 1.0 USGPM will be reached.
   - set pressure = 100 psi
   - working pressure = 110 psi
   - opening pressure = approximately 104 psi
2. The valve is set closed at 50 psi. At a pressure increase of 10 psi, a flow of approximately 1.0 USGPM will be reached.
   - set pressure = 50 psi
   - working pressure = 60 psi
   - opening pressure = approximately 54 psi

3/8" Valves

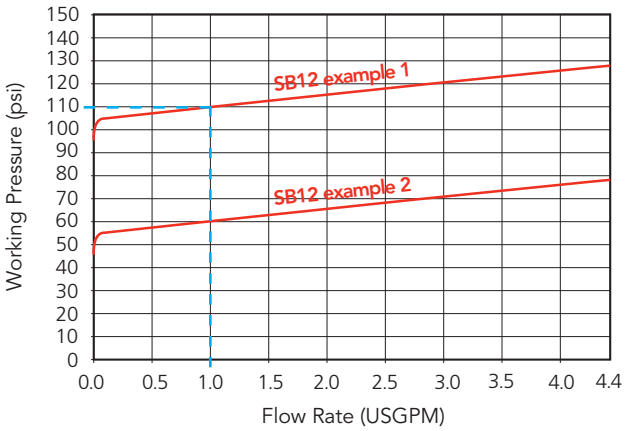

1/2" Valves

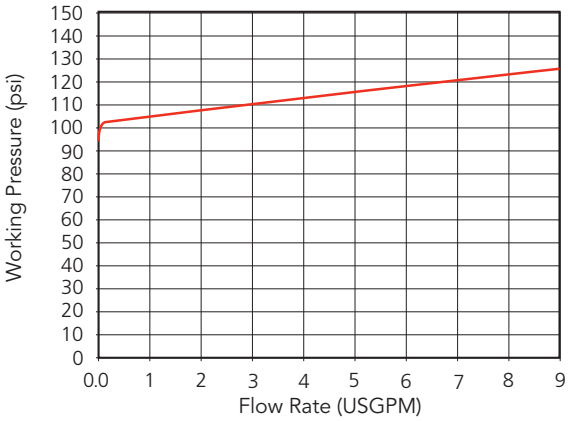

3/4" Valves

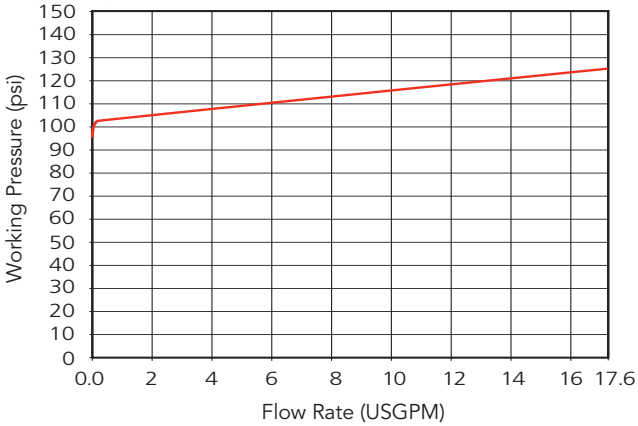

1" Valves

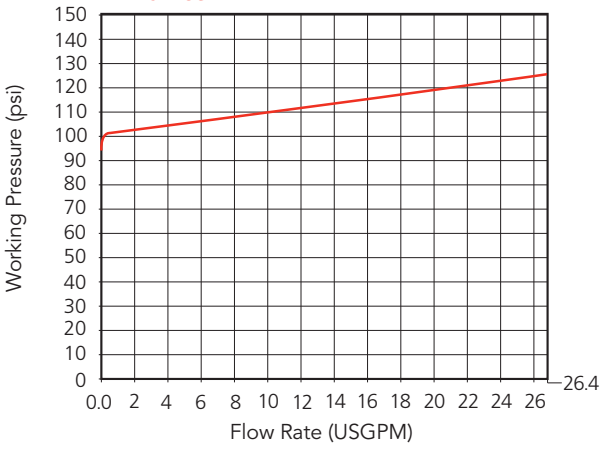

1-1/4" Valves

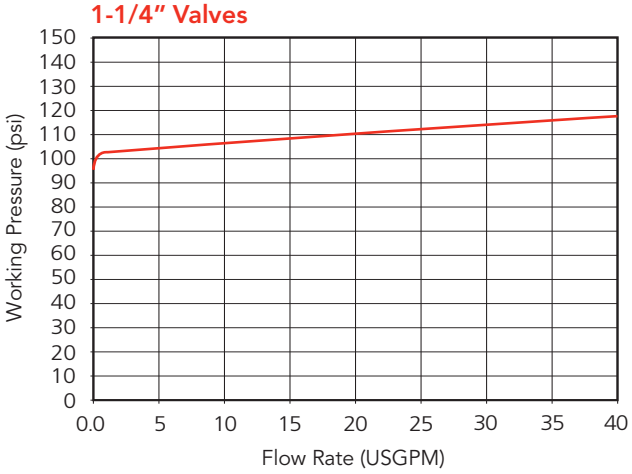

1-1/2" Valves

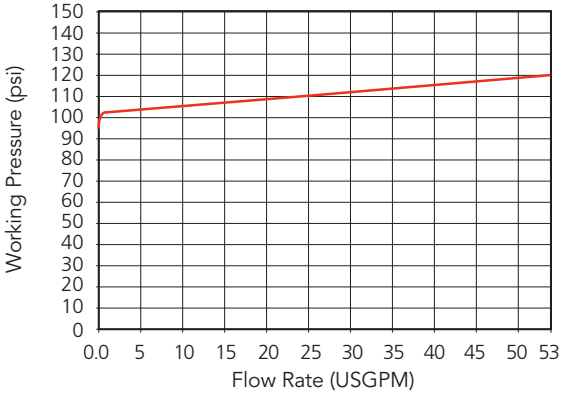

2" Valves

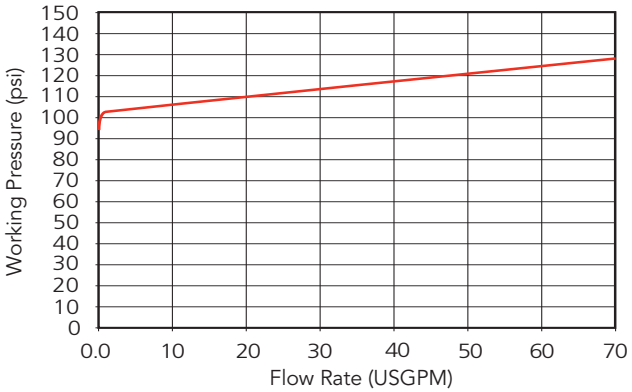

SB12 Series Back Pressure/Relief Valves 2-1/2" to 4"

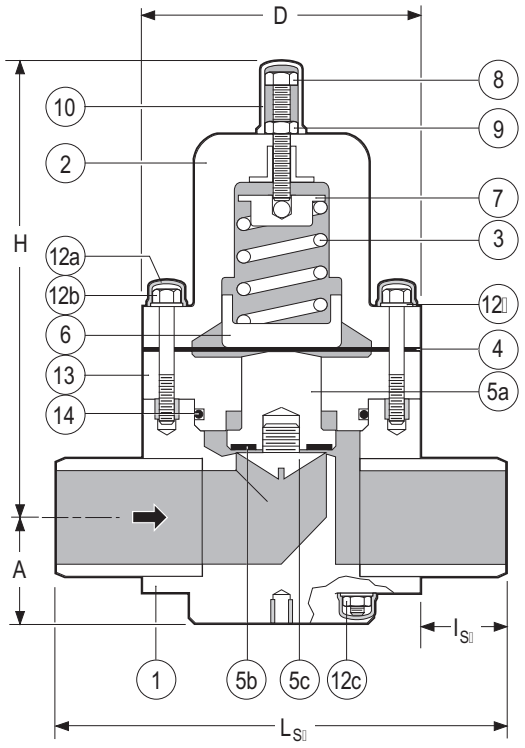

Spigot Body

PARTS

▲ Recommended Spare Parts

No.	Part	Pcs.	Materials
1	Body	1	PVC, PP, PVDF
2	Bonnet	1	PPG
3	Spring	1	Galvanized Steel
4▲	Control Diaphragm	1	PTFE bonded EPDM
5a▲	Piston	2	PVC, PP, PVDF
5b▲	Seat	1	EPDM, FPM(Viton®)
5c▲	Seat Retainer	1	PVC, PP, PVDF
6	Lower Spring Retainer	1	PPG
7	Upper Spring Retauner	1	304 SS
8	Spring Tensioning Bolt	1	304 SS
9	Lock Nut	1	304 SS
10	Spring Bolt Cap	1	PE
12a	Hex Bolt/Nut Cap	20	PE
12b	Hex Bolt/Stud	12[1]	304 SS
12c	Hex Nut	20	304 SS
12d	Washer	20	304 SS
13	Spacer Disc	1	PVC, PP, PVDF
14	Spacer O ring	1	EPDM, FPM(Viton®)

[1] 2 large upper bolts, 2 shorter lower bolts, 8 studs

OTHER ENDS

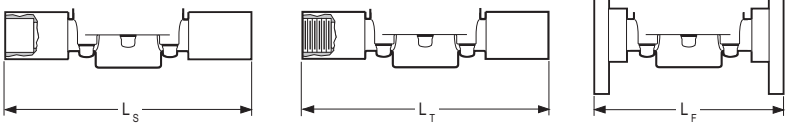

Socket Threaded Flanged



ChemFlare™ Ends
- For connection to PFA tube. Leak-free connections for difficult services such as sodium hypochlorite

DIMENSIONS INCHES

Size	PVC, PP & PVDF A	D	H	L_{SP}[2]	l_{SP}	PVC L_F
2-1/2"	2.7	6.9	11.1	11.2	2.1	12.2
3"	3.0	7.9	12.2	14.2	3.1	15.0
4"	3.7	9.8	14.2	16.5	3.3	16.9

WEIGHTS LB.

Size	PVC	PP	PVDF
2-1/2"	20.9	15.4	24.6
3"	26.4	23.8	30.8
4"	37.4	26.4	37.4

Cv VALUES

Size	USGPM Flow at 1 psi △P
2-1/2"	41
3"	63
4"	98

[2] Plain spigot ends in PP & PVDF may be butt fused directly to Chemline PP & PVDF piping systems.

Weights based on spigot bodies.

MAXIMUM PRESSURES PSI

Size	PVC 20°C 68°F	30°C 86°F	40°C 104°F	50°C 122°F	PP 20°C 68°F	30°C 86°F	40°C 104°F	50°C 122°F	60°C 140°F	70°C 158°F	PVDF 30°C 86°F	50°C 122°F	70°C 158°F	80°C 176°F	90°C 194°F	100°C 212°F
2-1/2"– 4"	150	90	44	15	150	116	90	60	37.5	15	150	90	55	40	30	15

Temperature Ranges: PVC 0 to 50°C (32 to 122°F), **PP** 10 to 70°C (50 to 158°F), **PVDF** –30 to 100°C (–22 to 212°F).

ORDERING EXAMPLE

Chemline Back Pressure/ Relief Valves	SB12	A	005	V	U
Body Material	**A** – PVC	**B** – PP	**K** – PVDF		
Size	**003** – 3/8" **005** – 1/2" **007** – 3/4" **010** – 1" **012** – 1-1/4" **015** – 1-1/2" **020** – 2" **025** – 2-1/2" **030** – 3" **040** – 4"				
Elastomers	**E** – EPDM **V** – FPM (Viton®)				
Ends	**S** – Socket **T** – Threaded **F** – Flanged **U** – Union Socket **CFx** – ChemFlare™ **Blank** – Spigot (Butt)				

Example: Chemline SB 12 Series, PVC, 1/2" diameter, FPM (Viton®) seals, Union socket ends.
x = 4 for 1/4", **6** for 3/8", **8** for 1/2", **12** for 1" ID tube connections.

OPTIONS

- 4 to 60 psi Pressure Range springs for 2-1/2" to 4" valves
- **Integral Pressure Gauge** – for inlet and/or outlet
- Bodies in 316 Stainless Steel and PTFE



Optional Pressure Gauge
- For inlet and/or outlet

SB12 Series Back Pressure/Relief Valves 2-1/2" to 4"

working pressure vs. flow rate

• Whether the pressure is rising or falling, hysteresis is approximately 14.5 psi for 2-1/2" to 4" valves

2-1/2" Valves / 4 to 60 psi set pressure range

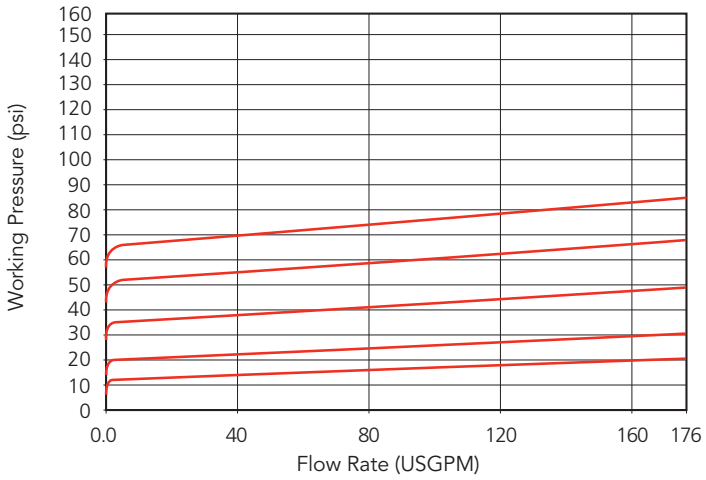

2-1/2" Valves / 7.5 to 150 psi set pressure range

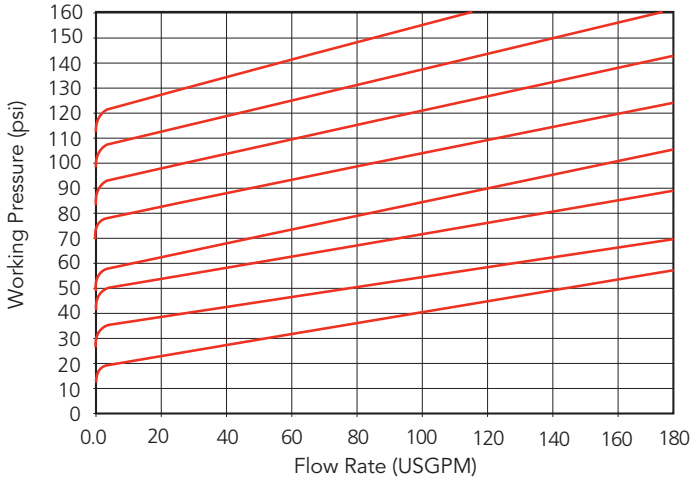

3" Valves / 4 to 60 psi set pressure range

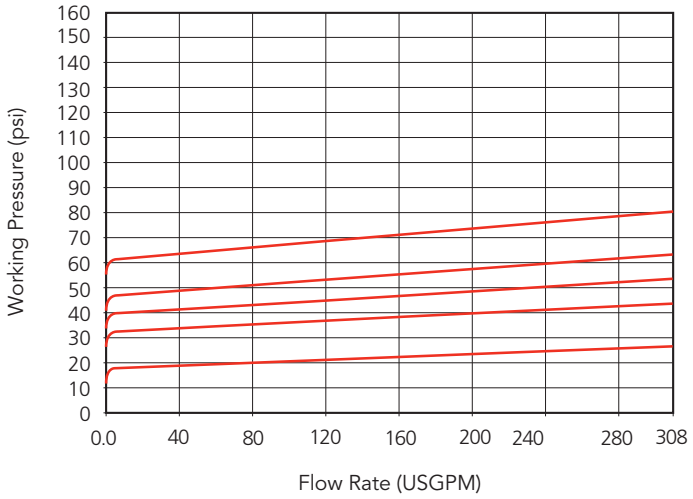

3" Valves / 7.5 to 150 psi set pressure range

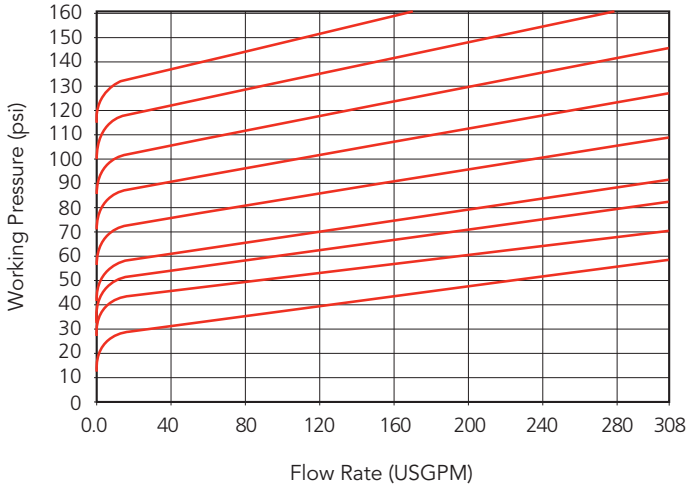

4" Valves / 4 to 60 psi set pressure range

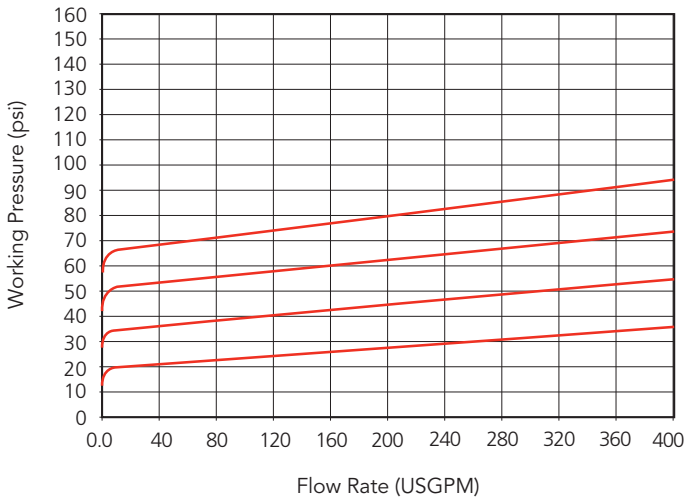

4" Valves / 7.5 to 90 psi set pressure range

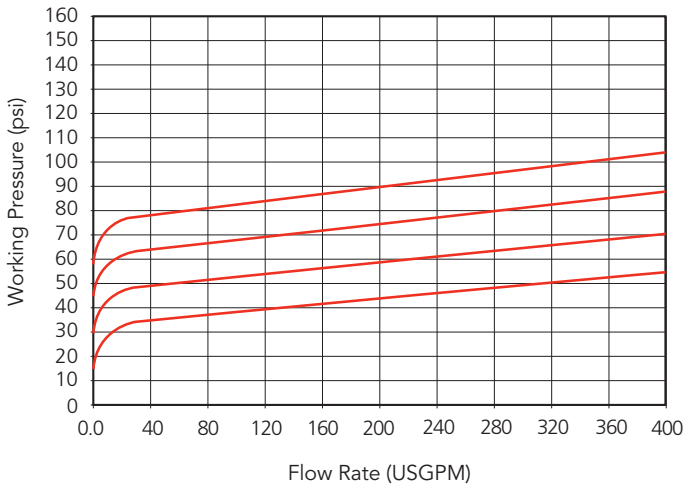

55 Guardsman Road, Thornhill, ON, L3T 6L2, Canada | ISO 9001:2008 Certified
tel.905.889.7890 | fax.905.889.8553 | request@chemline.com | chemline.com

PDF Published June 23, 2014

Gauge Isolators

CHEMLINE PLASTICS
SUPERIOR FLOW SOLUTIONS

PVC PP PVDF

CRN Registered Consult Chemline

NSF[4] Certified to NSF/ANSI 61

SERIES: SG

INLET CONNECTION: 1/4" or 1/2" Threaded[1]

INSTRUMENT CONNECTION: 1/4" or 1/2" Threaded

DIAPHRAGM: PTFE



[1] Other available inlet connections are 1/2" socket or 1/2" to 1" flanged.
[2] Other fluids are available for special applications such as chlorine service.
[3] Glass reinforced polypropylene.
[4] PVC isolators are certified under NSF/ANSI Standard 61 for contact with drinking water.

Chemline SG Series Gauge Isolators allow inexpensive pressure gauges, or any other pressure instrument to be used in corrosive services. The upper chamber (gauge side) is filled with a stable fluid such as glycol or glycerine[2]. A diaphragm separates it from the lower chamber which receives the media under pressure.

The 1/2" gauge connection allows use of the popular 4" and 4-1/2" diameter gauges. Pressure switches or transmitters may also be installed. Customers can easily fill isolators and install their own gauges.

features

Easy to Mount Gauges

- It is easy to fill an isolator and field mount a gauge. No special equipment is required.
- Will accept popular 4" and 4-1/2" diameter gauges

Provision for Fill Port

- Housing may be drilled and tapped by Chemline or customer for a threaded fill port. This is used for filling isolator using a vacuum filling station

High Chemical Resistance

- Choice of body materials for a wide range of applications
- PTFE bonded EPDM dished diaphragm for high chemical resistance and sensitivity

Heavy Duty Design for Safety

- PPG[3] top chamber
- Heavy wall connection ports

CRN Registration number by province

- Ontario: OH16085.5

Optional Gauges

- Isolators are available alone or with gauge mounted and prefilled with glycol[2]

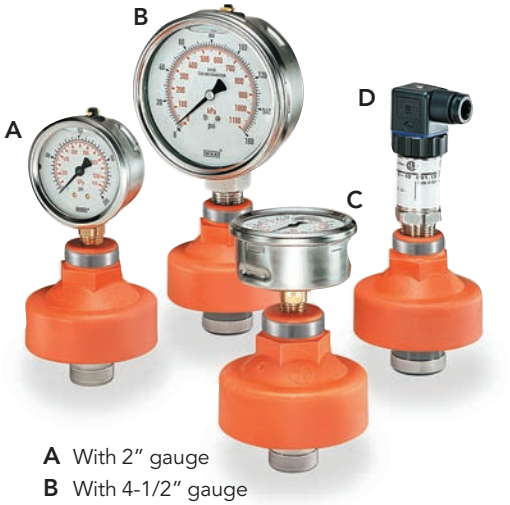

A With 2" gauge
B With 4-1/2" gauge
C With 2" back mount gauge
D With pressure transmitter

06/14 ©Chemline Plastics Limited 2014
Chemline is a registered trade mark of Chemline Plastics Limited

Gauge Isolators

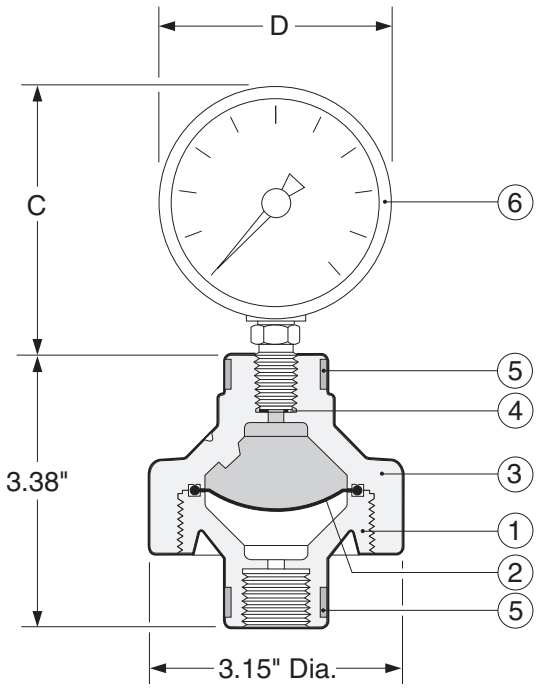

PARTS

No.	Part	Pcs.	Materials
1	Body	1	PVC, PP, PVDF
2	Diaphragm	1	PTFE
3	Bonnet	1	PPG[1]
4	Gasket	1	EPDM
5	Stainless Steel Bands	2	304 SS
6	Optional Gauge	1	See below

[1]PPG = Glass reinforced polypropylene

OPTIONAL GAUGES

- Chemline offers the gauges listed below mounted to isolator and prefilled with glycol, glycerine or special fluid for chlorine applications. These gauges have dials and cases filled with either glycol (standard), glycerine or silicon for corrosion resistance and dampening.
- Chemline SG gauge isolators are not recommended for vacuum applications. They will not affect the gauge accuracy as low as approximately 3 psi. The accuracy depends on the process conditions and the gauge installed on it.

OTHER OPTIONS

- **Flanged** inlet connections
- **Threaded Fill Port** – drilled, tapped and plugged
- Chemline will mount any pressure instrument supplied free issue by customer

DIMENSIONS (Gauge Isolator with optional gauge installed) INCHES

Optional Gauge Ordering No.	Gauge Diameter	Gauge Connection	Housing	Bourdon Tube	Window	Accuracy	Dimensions C	Dimensions D(max.)
P025-xx	2-1/2"	1/4"	316 SS	Brass	Polycarbonate	±1.5% of span	3.1	2.5
P025-xx-SS	2-1/2"	1/4"	316 SS	316 SS	Polycarbonate	±1.5% of span	3.1	2.5
P025-xx-SS/BM	2-1/2" Back Mount	1/4"	316 SS	316 SS	Polycarbonate	±1.5% of span	1.6	2.5
P025-xx-BM	2-1/2" Back Mount	1/4"	316 SS	Brass	Polycarbonate	±1.5% of span	1.6	2.5
P040-xx-SS	4"	1/2"	316 SS	316 SS	Safety Glass	±1% of span	4.5	4.0
P045-xx-SS	4-1/2"	1/2"	PBTP Plastic[2]	316 SS	Acrylic	±0.5% of span	6.3	5.8

xx denotes the maximum gauge pressure i.e., 30, 60, 100, 160 or 200 psi. See data page for recommended working pressures.
[2] PBTP = glass filled polyester.

WORKING PRESSURES PSI

WEIGHTS

Material	10 – 20°C 50 – 68°F	30°C 86°F	40°C 104°F	50°C 122°F	60°C 140°F	70°C 158°F	80°C 176°F	90°C 194°F	100°C 212°F	120°C 248°F	Net Weights Pounds[3]
PVC	150	100	80	45	15	–	–	–	–	–	1.0
PP	150	125	100	80	65	45	–	–	–	–	0.7
PVDF	150	150	150	125	105	85	70	60	45	30	1.3

Temperature Ranges: PVC 0 to 60°C (32 to 140°F), **PP** 10 to 80°C (50 to 176°F), **PVDF** –30 to 120°C (–22 to 248°F).
NR = Not Recommended. [3] Weights are for unfilled 1/2" x 1/2" isolators without gauges. 1/2" x 1/4" isolators are 20% lighter.

ORDERING EXAMPLE

Chemline Gauge Isolators SG	A	005-	002	P	G
Body Material	**A** – PVC	**B** – PP	**K** – PVDF		
Inlet Size	**002** – 1/4"	**005** – 1/2"(Standard)			
Instrument Connection	**002** – 1/4"	**005** – 1/2"			
Diaphragm	**P** – PTFE bonded EPDM				
Filling & Mounting	**G** –Add only if isolator is supplied filled with glycol and gauge or pressure instrument is mounted by Chemline. Separate gauge item numbers are listed above.				

Example: Chemline SG Series Gauge Isolator, PVC, 1/2" x 1/4" FNPT inlet x instrument connections, PTFE diaphragm.

CHEMLINE PLASTICS
SUPERIOR FLOW SOLUTIONS
55 Guardsman Road, Thornhill, ON, L3T 6L2, Canada | ISO 9001:2008 Certified
tel.905.889.7890 | fax.905.889.8553 | request@chemline.com | chemline.com

Project name: IQALUIT

Project#: 5000218036

Document #: 5000218036_DS_0007_PM_VWT

by: BB

chkd: GH

appvd: CB

SKID TRIPLEX

CALIBRATION CYLINDER

OIM manual section: 4.3.7.4

This page is intentionally left blank

CS-500-100 : Identification sheet

VWTC PROJECT NUMBER:	Iqaluit WWTP	REV:	01
PROJECT NAME:	5000218036	SUBMITTED TO (COMPANY):	
ENGINEER:	G. HÉBERT	SUBMITTED TO (RESPONSIBLE)	
PROJECT MANAGER:	C. BEKAERT	PROJECT NUM REFERENCE.:	
PHONE NUMBER:		LOT NUMBER:	

SUPPLIER	EQPT CODE	EQPT TAG NO	DIA	DESCRIPTION	INFO 1	INFO 2	INFO 3	APPLIC.	NOTE	REV
PRIMARY FLUID	PUSPPV200290	CC-04-790	N/A	CALIBRATION CYLINDER	CALIBRATION CYLINDER/MANUFACTURER: PRIMARY FLUID/MODEL: PV2-1000	N/A	N/A			1

This page is intentionally left blank

ACCUDRAW® Calibration Cylinders



Polypropylene


PVC


Glass



- PVC with removable "O" ring sealed top for easy cleaning

- yellow polypropylene level indicator float for high visibility

ACCUDRAW® has been developed for the accurate calibration of metering pumps. Standard features include:

- translucent
- chemical resistant
- break resistant
- threaded, socket or flanged
- colored graduations and lettering
- PVC has dual scale USGPH & ml
- PVC sizes 100 - 20000 ml
- POLY sizes 100 - 4000 ml
- POLY meets ISO standards
- Glass sizes 100 - 20000 ml
- custom designs available

For detailed product information visit our website: primaryfluid.com

PRIMARY FLUID SYSTEMS INC.
Call Toll Free 1-800-776-6580
Tel (905) 333-8743 Fax (905) 333-8746
E-Mail: primary@primaryfluid.com
www.primaryfluid.com

ACCUDRAW® Calibration Cylinders

"For Accuracy That Counts"

For complete product information visit our website: primaryfluid.com



Flanged: Glass, PVC



Flanged: PVC

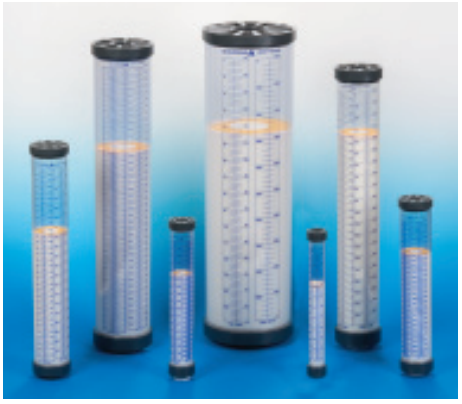

PV#4

Sizing and Ordering Information:

ACCUDRAW Standard Materials of Construction

AC = All polypropylene construction (see below for options)
PV = All polyvinylchloride construction (see below for options)
ACS = Glass*

Note: Cylinders are NOT pressure vessels

Example: AC#1-1000B
AC = PP (polypropylene)
#1 = Bottom threaded connection only
1000 = 1000 ml
B = BSP Thread

e.g. Part # AC #1 - 1000 B

Type:
AC = Polypropylene
PV = PVC
ACS = Glass

Style:
1 = Bottom threaded conn. only
2 = Top and Bottom threaded conn.
3 = Bottom threaded conn. c/w removable vented dust cap
4 = Top/Bottom threaded conn. c/w removable "O" ring sealed top and float ring level indicator
**** Glass calibration cylinders available in Style 2 only***

Graduation Scale:
PP - ml only
PVC - ml and GPH
Glass - ml only

Std. connection is NPT thread
Optional: add suffix as follows
S = Socket weld connection (PVC only)
GTV = Glass/TFE construction
GKV = Glass/PVDF construction
GCV = Glass/CPVC construction
GSV = Glass/SS construction
B = BSP Thread
F = Flanged

Substitute **E** for **V** for **EPDM** wetted "O" ring seal

Sizes:		**Material**
100 =	100 ml (1.6 GPH)	PP, PVC, Glass
250 =	250 ml (4 GPH)	PP, PVC, Glass
500 =	500 ml (8 GPH)	PP, PVC, Glass
1000 =	1000 ml (16 GPH)	PP, PVC, Glass
2000 =	2000 ml (32 GPH)	PP, PVC, Glass
4000 =	4000 ml (64 GPH)	PP, PVC, Glass
6000 =	6000 ml	Glass only
8000 =	8000 ml	Glass only
10000 =	10000 ml (160 GPH)	PVC, Glass
20000 =	20000 ml (320 GPH)	PVC, Glass

Custom sizes and materials available.

ACCUDRAW® Calibration Cylinders

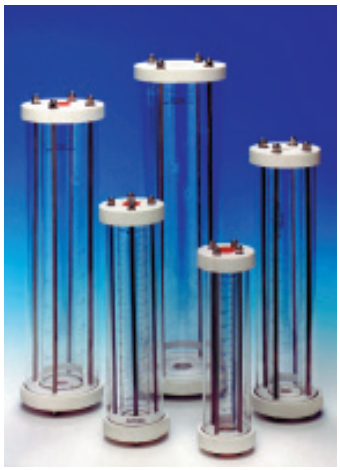

ACCUDRAW® Glass Calibration Cylinders ***are ideal for the calibration of metering pumps, batch systems and for handling hazardous chemicals.***

- **volumes calibrated in ml**
- **construction materials available include TFE, PVDF, CPVC and 316 stainless steel**
- **sealing "O" rings are Viton and Buna N**
- **outer shield of acrylic construction**
- **port connections in NPT, metric or flanged**
- **standard sizes 100 - 20,000 ml**
- **custom designs available to your specifications**

Sizing and Ordering Information: Glass Construction

Size	Conn.	Model # For TFE End Flgs	Model # For 316 S/S End Flgs	Model # For PVDF End Flgs	Model # For CPVC End Flgs
100 ml	1/2" NPT	ACS#2-100-GTV	ACS#2-100-GSV	ACS#2-100-GKV	ACS#2-100-GCV
250 ml	1/2" NPT	ACS#2-250-GTV	ACS#2-250-GSV	ACS#2-250-GKV	ACS#2-250-GCV
500 ml	1/2" NPT	ACS#2-500-GTV	ACS#2-500-GSV	ACS#2-500-GKV	ACS#2-500-GCV
1000 ml	1/2" NPT	ACS#2-1000-GTV	ACS#2-1000-GSV	ACS#2-1000-GKV	ACS#2-1000-GCV
2000 ml	1 " NPT	ACS#2-2000-GTV	ACS#2-2000-GSV	ACS#2-2000-GKV	ACS#2-2000-GCV
4000 ml	1" NPT	ACS#2-4000-GTV	ACS#2-4000-GSV	ACS#2-4000-GKV	ACS#2-4000-GCV
6000 ml	1" NPT	ACS#2-6000-GTV	ACS#2-6000-GSV	ACS#2-6000-GKV	ACS#2-6000-GCV
8000 ml	2" NPT	ACS#2-8000-GTV	ACS#2-8000-GSV	ACS#2-8000-GKV	ACS#2-8000-GCV
10000 ml	2" NPT	ACS#2-10000-GTV	ACS#2-10000-GSV	ACS#2-10000-GKV	ACS#2-10000-GCV
20000 ml	2" NPT	ACS#2-20000-GTV	ACS#2-20000-GSV	ACS#2-20000-GKV	ACS#2-20000-GCV

Cylinders are bolted together using stainless steel rods with Viton "O" rings for the glass seal and Buna N "O" rings for the acrylic seal. For EPDM "O" rings, subsititute "E" for "V".

Options available: (may affect price and delivery)

- **different type or size of thread connection, different "O" ring material, different flange material**

Descriptions:

TFE, PVDF and CPVC End Flanges:
Glass cylinder with acrylic outer shield and 3/4" thick (TFE, PVDF or CPVC) end flanges

316 S/S End Flanges:
Glass cylinder with acrylic outer shield and 1/2" thick 316 Stainless Steel end flanges

Glass Dimensional Information

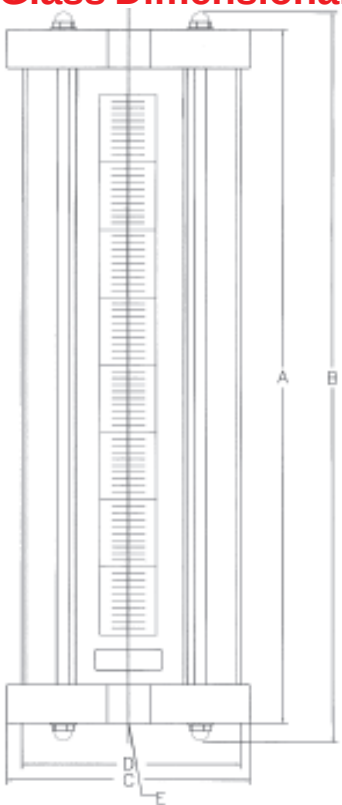

Note: Cylinders are <u>not</u> pressure vessels.

Dimensions subject to change without notice.

Glass cylinders with TFE, PVDF or CPVC End Flanges

Size ml	DIV ml	A inches	B inches	C inches	D inches	E thread
100	1.00	10.00	11.00	3.00	2.50	1/2" FNPT
250	2.00	12.75	13.50	3.50	3.00	1/2" FNPT
500	5.00	14.50	15.50	4.00	3.50	1/2" FNPT
1000	10.00	16.75	17.75	4.75	4.25	1/2" FNPT
2000	20.00	18.75	19.75	5.50	5.00	1" FNPT
4000	25.00	22.50	23.50	6.50	6.00	1" FNPT
6000	50.00	20.13	21.16	8.00	7.50	1" FNPT
8000	50.00	24.63	25.66	8.00	7.50	2" FNPT
10000	50.00	30.13	31.16	8.00	7.50	2" FNPT
20000	200.00	43.25	44.25	9.00	8.50	2" FNPT

Glass cylinders with 316 Stainless Steel End Flanges

Size ml	DIV ml	A inches	B inches	C inches	D inches	E thread
100	1.00	9.50	10.50	3.00	2.50	1/2" FNPT
250	2.00	12.25	13.00	3.50	3.00	1/2" FNPT
500	5.00	14.00	15.00	4.00	3.50	1/2" FNPT
1000	10.00	16.25	17.25	4.75	4.25	1/2" FNPT
2000	20.00	18.25	19.25	5.50	5.00	1" FNPT
4000	25.00	22.00	23.00	6.50	6.00	1" FNPT
6000	50.00	19.63	20.66	8.00	7.50	1" FNPT
8000	50.00	24.13	25.16	8.00	7.50	2" FNPT
10000	50.00	29.63	30.66	8.00	7.50	2" FNPT
20000	200.00	42.75	43.75	9.00	8.50	2" FNPT

ACCUDRAW® Calibration Cylinders

Installations

Conversion Factors
1 ml = 1 cc
1000 ml = 1 liter
ml/sec X 60 = ml/min
1 US gal/min X 0.063 = liters/sec
1 US gal = 3.786 liters

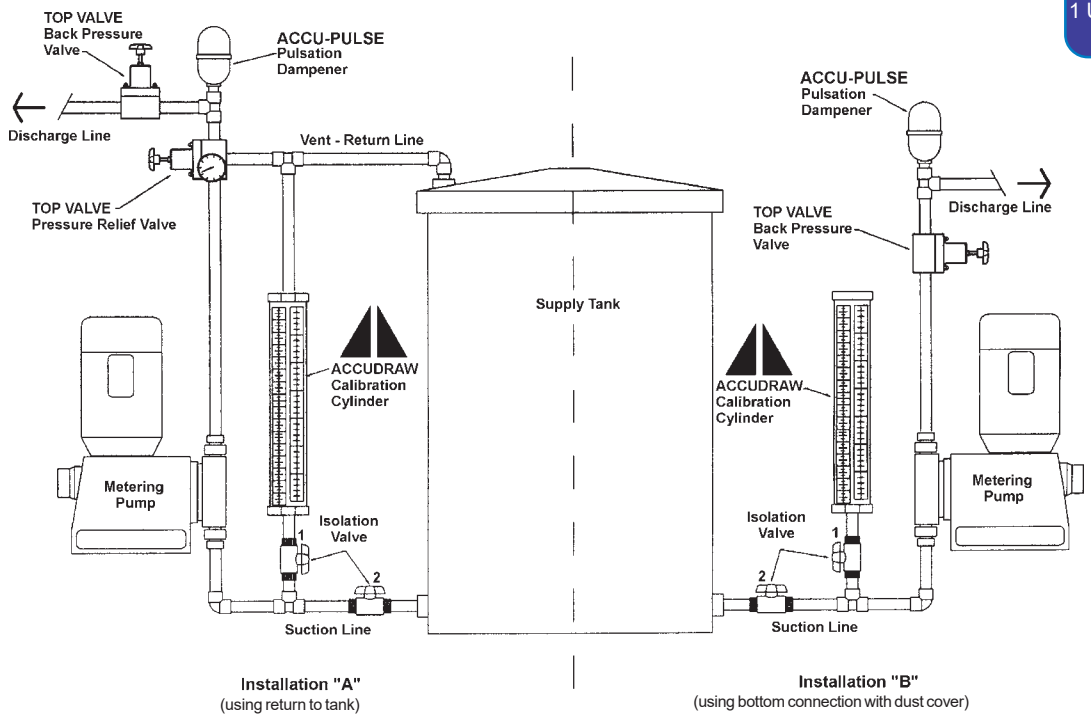

Other available products at www.primaryfluid.com

TOP VALVE Back Pressure/Pressure Relief



- *long life diaphragm*
- *range of 15 - 350 PSIG*
- *air release, optional gauge port*
- *PVC, CPVC, PVDF, Teflon, polypropylene, stainless, Alloy 20 and Hastelloy C*
- *7 sizes 1/4" - 2" NPT*
- *color coded handles indicate size*
- *higher pressure & temperature available*

PFS Corporation Stops



Designed to inject chemical into the center stream of process.

- *isolation valve allows for ease of maintenance*
- *available in 6 materials of construction*
- *wetted components have comparable or greater chemical resistance than quill construction material*
- *standard and custom lengths available*
- *connection in NPT, metric or flanged*

Custom built in other sizes & materials.

ACCUPULSE Pulsation Dampeners



Designed to remove pulsatingflows from positive displacement pumps.

- *increase system efficiency and pump life; decrease maintenance and costs*
- *protect pipes, meters, valves and instrumentation from pulsation and vibration*
- *ensure meter accuracy, longevity and repeatability*
- *prevent foaming and splashing*
- *extensive range of materials and sizes with lightweight, compact design*

Distributed By:

PRIMARY FLUID SYSTEMS INC.

Call Toll Free 1-800-776-6580
Tel: (905) 333-8743
Fax: (905) 333-8746

Distribution Territories Available

E:Mail: primary@primaryfluid.com
www.primaryfluid.com

® Registered Trade Mark of Primary Fluid Systems

ACCUDRAW®

PV#1

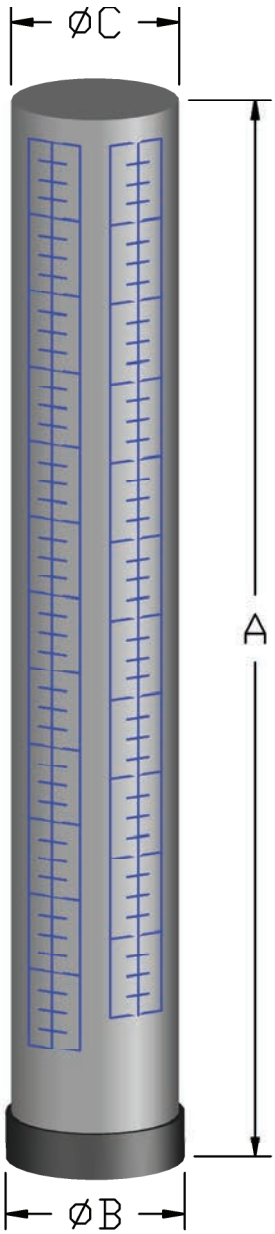

PV#2
PV#4

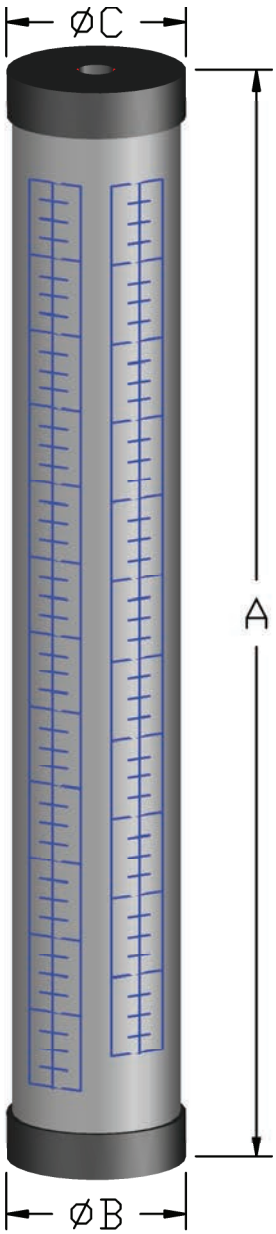

PV#3

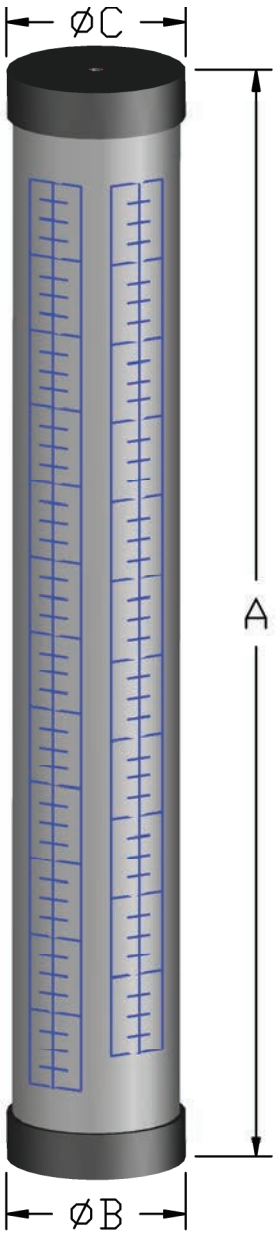

MODEL	SIZE ml(GPH)	DIV ml(GPH)	A (in.)	ØB (in.)	ØC (in.)	Connection	Top Conn.
PV#1	100 (1.60)	1.0 (0.02)	10.13	1.4	1.1	1/2" (DN 15)	OPEN
	250 (4.00)	2.0 (0.05)	10.88	1.9	1.6		
	500 (8.00)	5.0 (0.05)	12.13	2.4	2.1		
	1000 (16.0)	10.0 (0.125)	16.13	2.8	2.5		
	2000 (32.0)	20.0 (0.25)	20.00	3.5	3.1	1" (DN 25)	
	4000 (64.0)	25.0 (0.25)	22.00	4.5	4.1		
	10000 (160)	200.0 (2.00)	22.50	6.9	6.5	2" (DN 50)	
	15000 (240)	200.0 (2.00)	32.50	6.9	6.5		
	20000 (320)	200.0 (2.00)	42.50	6.9	6.5		
PV#2 & PV#4	100 (1.60)	1.0 (0.02)	10.50	1.4	1.4	1/2" (DN 15)	1/2" (DN 15)
	250 (4.00)	2.0 (0.05)	11.25	1.9	1.9		
	500 (8.00)	5.0 (0.05)	12.50	2.4	2.4		
	1000 (16.0)	10.0 (0.125)	16.50	2.8	2.8		
	2000 (32.0)	20.0 (0.25)	20.50	3.5	3.5	1" (DN 25)	1" (DN 25)
	4000 (64.0)	25.0 (0.25)	22.50	4.5	4.5		
	10000 (160)	200.0 (2.00)	23.00	6.9	6.9	2" (DN 50)	2" (DN 50)
	15000 (240)	200.0 (2.00)	33.00	6.9	6.9		
	20000 (320)	200.0 (2.00)	43.00	6.9	6.9		
PV#3	100 (1.60)	1.0 (0.02)	10.50	1.4	1.4	1/2" (DN 15)	DUST CAP
	250 (4.00)	2.0 (0.05)	11.25	1.9	1.9		
	500 (8.00)	5.0 (0.05)	12.50	2.4	2.4		
	1000 (16.0)	10.0 (0.125)	16.50	2.8	2.8		
	2000 (32.0)	20.0 (0.25)	20.50	3.5	3.5	1" (DN 25)	
	4000 (64.0)	25.0 (0.25)	22.50	4.5	4.5		
	10000 (160)	200.0 (2.00)	23.00	6.9	6.9	2" (DN 50)	
	15000 (240)	200.0 (2.00)	33.00	6.9	6.9		
	20000 (320)	200.0 (2.00)	43.00	6.9	6.9		

NOTE:
PV#4 CALIBRATION CYLINDERS HAVE REMOVABLE TOP CAPS.

DO NOT COPY WITHOUT PRIOR WRITTEN APPROVAL FROM PRIMARY FLUID SYSTEMS INC.

PRIMARY FLUID SYSTEMS INC.
1050 Cooke Blvd., Burlington, Ontario L7T 4A8

ACCUDRAW PV-SERIES
CALIBRATION CYLINDERS (PVC)

DATE ISSUED: JULY-29-2014	SCALE: NTS	SHEET: 1 OF 1
TOLERANCE: +/- 0.25"	DRAWN BY: NEAL YOON	
APPROVED BY:	DWG NO.: ADV_PV_CALCYL1	REV.#: 4

This page is intentionally left blank

Project name: IQALUIT

Project#: 5000218036

Document #: 5000218036_DS_0007_PM_VWT

by: BB

chkd: GH

appvd: CB

SKID TRIPLEX

INSTRUMENT

OIM manual section: 4.3.7.5

This page is intentionally left blank

CS-449-100 : Identification sheet

VWTC PROJECT NUMBER:	Iqaluit WWTP	REV:	01
PROJECT NAME:	5000218036	SUBMITTED TO (COMPANY):	
ENGINEER:	G. HÉBERT	SUBMITTED TO (RESPONSIBLE)	
PROJECT MANAGER:	C. BEKAERT	PROJECT NUM REFERENCE.:	
PHONE NUMBER:		LOT NUMBER:	

SUPPLIER	EQPT CODE	EQPT TAG NO	DIA	DESCRIPTION	INFO 1	INFO 2	INFO 3	APPLIC.	NOTE	REV
CHEMLINE	IMFWGG301909	FI-785	1/2"	VARIABLE AREA FLOWMETER	VARIABLE AREA FLOWMETER/MANUFACTURER: CHEMLINE/ MODEL: FCA00401	N/A	N/A			1
CHEMLINE	IMFWGG301909	FI-786	1/2"	VARIABLE AREA FLOWMETER	VARIABLE AREA FLOWMETER/MANUFACTURER: CHEMLINE/ MODEL: FCA00401	N/A	N/A			1

This page is intentionally left blank

PDF Published March 1, 2013

Variable Area Flow Meters

CHEMLINE PLASTICS
SUPERIOR FLOW SOLUTIONS

Chemline F Series Variable Area Flow Meters are ideal for plastic piping. They provide a combination of accurate visual flow rate measurement and clear flow indication from a distance. Optional limit switches allow the units to signal a low or high flow alarm. An optional flow transmitter provides a 4 to 20 mA signal output. These flow meters must be installed vertically with flow upward.

PVC PA PSU PVDF Tube

PVC CPVC PP PVDF Ends

CRN Registered Consult Chemline

SERIES: FC – Compact – 5" Single Scale
FS – Full Size – 7" Dual Scale[1]

MATERIALS: Tube: Clear PVC, Polyamide (PA), Polysulfone (PSU) or PVDF[2]
Float: PVDF
Ends: PVC, CPVC, PP, PVDF, Socket, Threaded, Flanged, Butt or ChemFlare™[3]

O-RINGS: EPDM, FPM (Viton®)

CAPACITIES: Up to 220 USGPM (50,000 litres per hour)



features

Clear Visual Indication

- Large orange float is visible from a distance
- Range indicators slide along dovetail track

Easy Installation and Maintenance

- Just unscrew union nuts and tube slides out of line

Choice of Four Tube Materials for Many Applications:

- ***Clear PVC*** – For Water or Chemicals up to 60°C (140°F) – High Chemical resistance at low cost
- ***Polyamide (PA)*** – For Water or Air up to 75°C (167°F) – High impact strength and optical clarity
- ***Polysulfone (PSU)*** – For Chemicals and Gases up to 100°C (212°F) – High impact strength and good chemical resistance
- ***PVDF[2]*** – For Chemicals and Ultrapure fluids up to 110°C (230°F) – High impact strength and excellent chemical resistance.

Ideal for All Types of Plastic Piping

- All types of end connections in PVC, CPVC, PP & PVDF

• Low Pressure Drop

Good Measuring Accuracy – Class IV

- ± 3% of indicated value, plus ± 1% of full scale. – Read scale at top (largest diameter) of float

Non Fouling

- Float is self supporting in the flow. No guide rod (which can cause the float to jam) is necessary.

[1] USGPM and litres per hour (water) scale is supplied as standard on full size meters.
[2] Because PVDF is translucent, a magnetic float and limit switches are usually used.
[3] For ChemFlare™ end connectors, consult Chemline.

03/13 ©Chemline Plastics Limited 2013
Chemline is a registered trade mark of Chemline Plastics Limited

Variable Area Flow Meters

NOTES:

PVDF flow meters are available in all sizes. Change third letter in item number to **K**.
[1] △P = Pressure loss through flow meter with water at 20°C (68°F).
[2] Dimension **L** is for PVC Socket ends.

FC SERIES – COMPACT SIZE – 5″ SCALE

Single USGPM (water) scale is supplied standard

End Conn. Size	Item Number PVC Tube	Polyamide Tube	Polysulfone Tube	Flow Range (water) USGPM	Litres per hour	Dimensions (inches) A	L[2]	D	Pressure Drop (psi)[1] Water	Air
3/8″	FCA00020	FCT00020	FCP00020	0.0132 – 0.106	3 – 24	6.50	8.2	1.38	0.05	0.07
	FCA00060	FCT00060	FCP00060	0.022 – 0.264	5 – 60	6.50	8.2	1.38	0.05	0.07
	FCA00100	FCT00100	FCP00100	0.04 – 0.44	10 – 100	6.50	8.2	1.38	0.05	0.07
	FCA00250	FCT00250	FCP00250	0.11 – 1.10	25 – 250	6.50	8.2	1.38	0.05	0.07
1/2″	FCA00051	FCT00051	FCP00051	0.02 – 0.22	5 – 50	6.69	8.7	1.69	0.04	0.06
	FCA00151	FCT00151	FCP00151	0.07 – 0.66	15 – 150	6.69	8.7	1.69	0.04	0.06
	FCA00251	FCT00251	FCP00251	0.11 – 1.10	25 – 250	6.69	8.7	1.69	0.04	0.06
	FCA00401	FCT00401	FCP00401	0.18 – 1.76	40 – 400	6.69	8.7	1.69	0.04	0.06
3/4″	FCA00152	FCT00152	FCP00152	0.07 – 0.66	15 – 150	7.28	9.6	2.09	0.09	0.12
	FCA00402	FCT00402	FCP00402	0.22 – 1.76	40 – 400	7.28	9.6	2.09	0.09	0.12
	FCA00602	FCT00602	FCP00602	0.26 – 2.64	60 – 600	7.28	9.6	2.09	0.09	0.12
	FCA01002	FCT01002	FCP01002	0.44 – 4.40	100 – 1,000	7.28	9.6	2.09	0.09	0.12
1″	FCA00253	FCT00253	FCP00253	0.11 – 1.10	25 – 250	7.87	10.5	2.36	0.09	0.12
	FCA00403	FCT00403	FCP00403	0.18 – 1.76	40 – 400	7.87	10.5	2.36	0.09	0.12
	FCA01003	FCT01003	FCP01003	0.44 – 4.40	100 – 1,000	7.87	10.5	2.36	0.09	0.12
	FCA01503	FCT01503	FCP01503	0.66 – 6.60	150 – 1,500	7.87	10.5	2.36	0.09	0.12

FS SERIES – STANDARD FULL SIZE – 7″ SCALE

Dual USGPM (water) and litres per hour scales are supplied standard

End Conn. Size	Item Number PVC Tube	Polyamide Tube	Polysulfone Tube	Flow Range (water) USGPM	Litres per hour	Dimensions (inches) A	L[2]	D	Pressure Drop (psi)[1] Water	Air
1″	FSA00600	FST00600	FSP00600	0.26 – 2.64	60 – 600	13.78	16.3	2.36	0.18	0.23
	FSA01000	FST01000	FSP01000	0.44 – 4.40	100 – 1,000	13.78	16.3	2.36	0.18	0.23
1-1/4″	FSA01500	FST01500	FSP01500	0.66 – 6.60	150 – 1,500	13.78	16.6	2.83	0.18	0.23
	FSA02500	FST02500	FSP02500	1.10 – 11.00	250 – 2,500	13.78	16.6	2.83	0.18	0.23
1-1/2″	FSA02000	FST02000	FSP02000	0.88 – 8.80	200 – 2,000	13.78	16.8	3.27	0.18	0.23
	FSA03000	FST03000	FSP03000	1.32 – 13.20	300 – 3,000	13.78	16.8	3.27	0.18	0.23
2″	FSA04000	FST04000	FSP04000	1.76 – 17.60	400 – 4,000	13.78	17.2	4.06	0.32	0.39
	FSA06000	FST06000	FSP06000	2.64 – 26.40	600 – 6,000	13.78	17.2	4.06	0.32	0.39
	FSA10000	FST10000	FSP10000	4.40 – 44.00	1,000 – 10,000	13.78	17.2	4.06	0.32	0.39
2-1/2″	FSA15000	FST15000	FSP15000	6.60 – 66.00	1,500 – 15,000	13.78	17.7	4.80	0.49	0.58
	FSA25000	FST25000	FSP25000	11.00 – 110.00	2,500 – 25,000	13.78	17.7	4.80	0.49	0.58
	FSA50000	FST50000	FSP50000	44.00 – 220.00	10,000 – 50,000	13.78	17.7	4.80	0.49	0.58

CONVERSION CHART – FLOW UNITS

From To	m^3/hr	litres/hr	USGPM	ImpGPM	ft^3/min
m^3/hr	1	1000	4.4029	3.6662	0.5886
litres/hr	0.001	1	.004403	.003666	.000589
USGPM	0.2271	227.12	1	0.8327	0.1337
ImpGPM	0.2728	272.77	1.2009	1	0.1605
ft^3/min	1.6990	1699	7.4806	6.2289	1

Values based on water at 20°C (68°F).

Variable Area Flow Meters

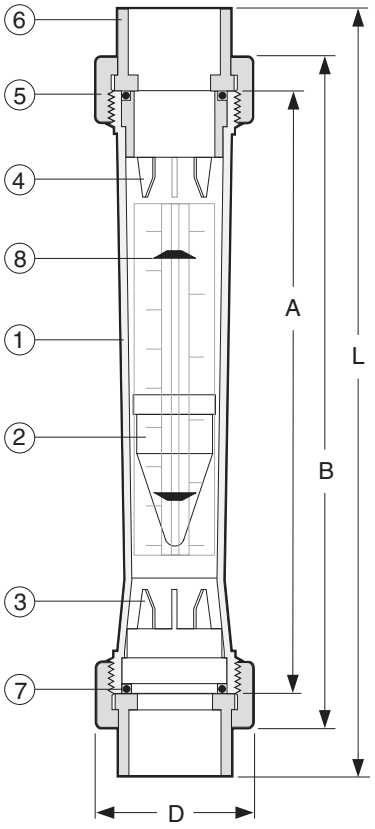

PARTS

▲ Recommended Spare Parts

No.	Part	Pcs.	Materials
1	Tube	1	Polyamide (PA), Polysulfone (PSU), Clear PVC, PVDF
2	Float	1	PVDF (standard or magnetic)
3	Lower Float Stop	1	PVDF
4	Upper Float Stop	1	PVDF
5	Union Nut	2	PVC, PPG, PVDF
6	End Connector	2	PVC, CPVC, PP or PVDF
7▲	O-Rings	2	EPDM, FPM(Viton®)
8▲	Range Indicator	2	ABS

ACCESSORIES

- **Limit Switches** – One switch for both maximum or minimum. A magnetic float is required.
- **Switch Ratings** – P (max) = 10 VA, E (max) = 470VAC, I (max) = 0.5A
- **Throttling Valve** for flow control
- **4–20 mA Output Signal Unit** must be factory calibrated for specific service

OPTIONS

- **Custom Direct Reading Scale** for services other than water
- **Alternate O-Rings** – ie. FPM (Viton®)
- **End Size Reduction** – Accuracy is not significantly affected by end reduction
- **Other Ends** – Threaded, socket or flanged end connections in PVC, CPVC, PP or PVDF. Butt ends in PP or PVDF.

MAXIMUM WORKING PRESSURES AND TEMPERATURE RANGES

Construction (‡ = Optional Materials)				Maximum	
Tube	O-Rings	Union Nuts	Ends	Pressure[2]	Temperature Range
PVC	EPDM	PVC	PVC	150 psi	0 to 60°C (32 to 140°F)
Polyamide (PA)	EPDM	PVC	PVC	150 psi	0 to 60°C (32 to 140°F)
Polyamide (PA)	EPDM	PPG‡	PP or CPVC‡	150 psi	0 to 75°C (32 to 167°F)
Polysulfone (PSU)	EPDM	PVC	PVC	150 psi	0 to 60°C (32 to 140°F)
Polysulfone (PSU)	EPDM	PPG‡	PP or CPVC‡	150 psi	0 to 90°C (32 to 194°F)
PVDF	FPM(Viton®)	PVDF	PVDF	150 psi	–40 to 110°C (–40 to 230°F)

[2] 150 psi is not recommended at maximum temperatures. Consult Chemline.

flow meter sizing – liquid flow

Standard Scale values are for clean water flow at 20°C (68°F). For liquids with densities and viscosities similar to water (ie. specific gravity of 1.0 and viscosities between 0.5 cP and 1.3 cP) the standard water scale will be accurate enough.

The table below shows correction factors to be applied for liquids with specific gravities other then 1.0. Multiply the correction factor by the water scale value to obtain actual flow rate. Example: For a liquid of specific gravity of 1.66, the correction factor is 0.740. For water flow range of 100 to 1000 litres/hr, corrected range becomes 74 to 740 litres/hr. Viscosity should be between 0.5 cP and 1.3 cP for standard scales to be accurate.

For "sizing" liquid flows ie. determining actual flow range of a tube, please advise the **chemical name, concentration, temperature, specific gravity** and **viscosity.** Custom direct reading scales in any units are available special order.

SCALE CORRECTION FACTORS – FOR LIQUIDS WITH SPECIFIC GRAVITIES OTHER THAN 1.00

Specific Gravity	.00	.01	.02	.03	.04	.05	.06	.07	.08	.09
	Scale Correction Factor									
0.4	1.647	1.626	1.605	1.585	1.565	1.548	1.529	1.513	1.495	1.479
0.5	1.462	1.447	1.433	1.418	1.404	1.391	1.377	1.364	1.351	1.339
0.6	1.326	1.316	1.304	1.292	1.282	1.271	1.259	1.250	1.239	1.229
0.7	1.220	1.211	1.202	1.192	1.183	1.175	1.167	1.157	1.149	1.142
0.8	1.134	1.125	1.117	1.111	1.104	1.096	1.089	1.082	1.075	1.068
0.9	1.062	1.055	1.048	1.042	1.035	1.030	1.024	1.017	1.011	1.005
1.0	1.000	0.994	0.988	0.982	0.978	0.972	0.967	0.962	0.956	0.951
1.1	0.947	0.943	0.936	0.932	0.927	0.923	0.917	0.913	0.909	0.904
1.2	0.900	0.895	0.891	0.887	0.883	0.878	0.874	0.870	0.866	0.862
1.3	0.858	0.854	0.850	0.846	0.842	0.838	0.835	0.831	0.827	0.824
1.4	0.820	0.818	0.814	0.810	0.806	0.803	0.800	0.797	0.794	0.791
1.5	0.787	0.784	0.781	0.778	0.776	0.773	0.770	0.767	0.764	0.759
1.6	0.756	0.754	0.751	0.748	0.745	0.742	0.740	0.737	0.734	0.730
1.7	0.728	0.726	0.723	0.720	0.717	0.714	0.712	0.709	0.706	0.704
1.8	0.701	0.699	0.696	0.694	0.691	0.689	0.686	0.684	0.682	0.679
1.9	0.677	0.674	0.672	0.669	0.667	0.665	0.663	0.661	0.658	0.657
2.0	0.654	0.652	0.650	0.648	0.646	0.644	0.641	0.604	0.637	0.636

flow meter sizing – gas flow

FLOW RANGES FOR AIR – AT STANDARD CONDITIONS (atmospheric pressure 14.7 psia/20°C).

FC SERIES – COMPACT SIZE – 5" SCALE

Flow Meter Item No.	Normal m_3/hr	Standard CFM
FCT00020	0.2 – 1.0	0.1 – 0.6
FCT00060	0.2 – 2.5	0.1 – 1.5
FCT00100	0.6 – 3.6	0.4 – 2.1
FCT00250	0.5 – 9.0	0.3 – 5.3
FCT00051	0.4 – 2.8	0.2 – 1.6
FCT00151	0.8 – 6.2	0.5 – 3.6
FCT00251	0.9 – 9.5	0.5 – 5.6
FCT00401	2.0 – 15.0	1.2 – 8.8
FCT00152	0.5 – 5.5	0.3 – 3.2
FCT00402	2.0 – 14.0	1.2 – 8.2
FCT00602	2.5 – 22.0	1.5 – 12.9
FCT01002	4.0 – 34.0	2.4 – 20.0
FCT00253	1.0 – 8.0	0.6 – 4.7
FCT00403	2.0 – 14.0	1.2 – 8.2
FCT01003	4.0 – 34.0	2.4 – 20.0
FCT01503	5.0 – 50.0	2.9 – 29.4

FS SERIES – STANDARD FULL SIZE – 7" SCALE

Flow Meter Item No.	Normal m_3/hr	Standard CFM
FST00600	2.5 – 20	1.5 – 12
FST01000	4 – 34	2.4 – 20
FST01500	5 – 50	2.9 – 29
FST02000	8.5 – 76	5.0 – 45
FST02500	8 – 70	4.7 – 41
FST03000	10 – 90	5.9 – 53
FST04000	14 – 125	8.2 – 74
FST06000	22 – 190	13 – 112
FST10000	35 – 300	21 – 177
FST15000	50 – 500	29 – 294
FST25000	80 – 720	47 – 424
FST50000	400 – 1,500	234 – 883

SCALE CORRECTION FACTORS – FOR AIR AT NON-STANDARD TEMPERATURES AND PRESSURES

Air density is dependent on the actual pressure and temperature.
Calculate the Scale Correction Factor using either Method 1 or 2. Multiply the standard air flow ranges above by the Factor to obtain actual flow rates.

Method 1

Calculate the Factor with the following formula.

$$\text{Factor} = \frac{1}{3.7005}\sqrt{\frac{\text{psia}}{(1+0.00367t)}}$$

psia = pressure of the air absolute
= psig + 14.7 (atmospheric pressure = 14.7 psia)
t = temperature of the air °C

Method 2

Calculate the density of the air at conditions and find factor from the chart below.

$$\text{Air Density (g/ml)} = \frac{\text{psia}}{11{,}360\,(1+0.00367t)}$$

psia = pressure of the air absolute
= psig + 14.7 (atmospheric pressure = 14.7 psia)
t = temperature of the air °C

Air Density vs. Flow Factor



Temperature vs. Pressure

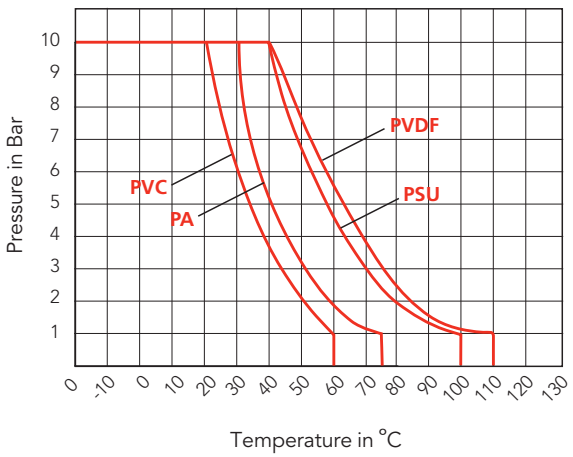

55 Guardsman Road, Thornhill, ON, L3T 6L2, Canada | ISO 9001:2008 Certified
tel.905.889.7890 | fax.905.889.8553 | request@chemline.com | chemline.com

LSFLO Reed Limit Switch

for FC & FS flow meters

The **LSFLO** limit switches serve as switches for minimum or maximum flow values. The normally open latching reed switch closes when the float in the measuring tube reaches and exceedes the switching position. The switch condition is maintained as long as the float is above the limit switch and will open when the float in the tube drops below the switch.

Normally closed switches are available on request.



technical

- **Operating voltage:** maximum 230 VAC
- **Operating current:** maximum 0.5 A
- **Constant current when switched:** maximum 1 A
- **Rupturing capacity:** maximum 10 W/10 VA
- **Closed resistance:** < 150 mΩ
- **Open resistance:** > 10^{10} Ω
- **Operating temperature:** 0°C(32°F) to 55°C(131°F)
- **Protection:** IP 65 (DIN EN 60528)
- **Hysteresis (switch on and off point):** 3 mm
- **Protection:** IP 65 (DIN EN 60528)
- **Dimensions:** 34 x 17 x 41 mm
- **Weight (with plug):** 40 g
- **Connections:** the polarity of the connections has no influence on the function

INSTALLATION

Screw clamps are used to fit the LSFLO on the dovetail guide of the flow meter.

CONNECTIONS

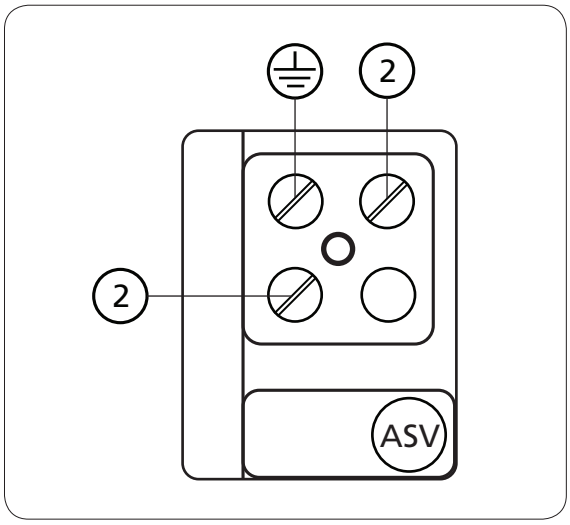

START-UP

Prior to the first start up it is important that the float passes the LSFLO switch three times to ensure the electronics inside recognize the magnetic field from the floats properly.

CHEMLINE PLASTICS
SUPERIOR FLOW SOLUTIONS

55 Guardsman Road, Thornhill, ON, L3T 6L2, Canada | ISO 9001:2008 Certified
tel.905.889.7890 | fax.905.889.8553 | request@chemline.com | chemline.com

ZE3000 Flow Transmitters

for FS flow meters

The **ZE300**0 flow transmitter provides a 4–20 mA output signal, generated by detection of the position of the magnetic float.

IMPORTANT: This micro-processor controlled unit is factory calibrated and unique to each flowmeter model. Flowmeter model must be advised when ordering.



technical

- **2-Wire technology**
- **4–20 mA analog output** (4-20.1 for 8 VDC supply; 4-22.0 for 28 VDC supply
- **8–28 VDC input**
- **Factory calibrated (flow meter to be specified when ordering)**
- **11 point calibration**
- **Non-volatile value storage**
- **0 Button to compensate for the surrounding magnetic influences**
- **Factory setting of the lower limit value (low-cut-off) 0-99% according to customer's specificaitons**
- **Factory time lag (low-pass filter) 0.1-2.5 sec. according to customer's specifications**
- **Measuring accuracy:** < 0.5%
- **Temperature range:** –30°C(–20°F) to 65°C(150°F)

INSTALLATION

Screw clamps are used to fit the ZE3000 on the dovetail guide of the flow meter.

During installation, ensure that the notch of the ZE3000 coincides with the 50% mark on the flow meter scale.

Following this, proceed with the wiring according to the diagram.

WIRING

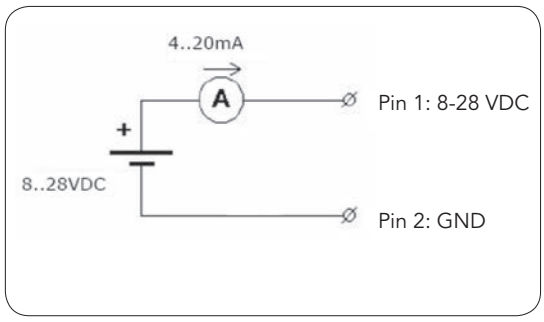

DIMENSIONS

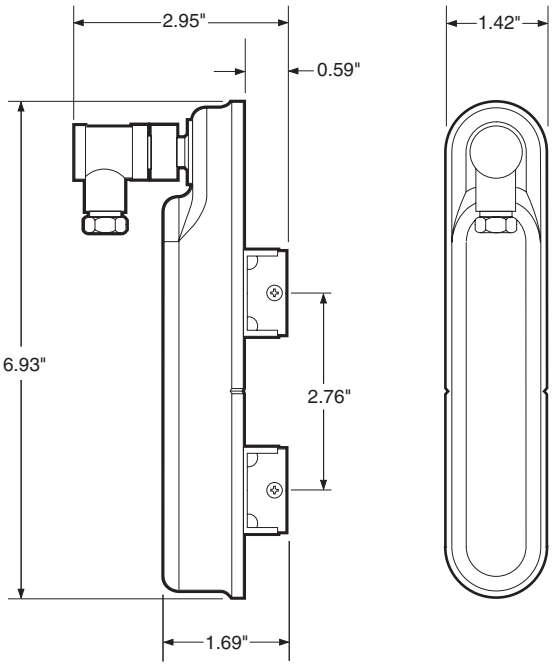

START-UP

After installation and wiring, press the 0 button for at least 2 sec. to compensate for possible electro-magnetic interference. During this time make sure the float is at the bottom of the flowmeter (ie. no flow condition).

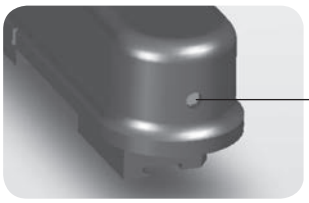

Note:
Do not press button during normal operation.

CHEMLINE PLASTICS
SUPERIOR FLOW SOLUTIONS

55 Guardsman Road, Thornhill, ON, L3T 6L2, Canada | ISO 9001:2008 Certified
tel.905.889.7890 | fax.905.889.8553 | request@chemline.com | chemline.com

ZE3075 Flow Transmitters

for FC flow meters

The **ZE3075** flow transmitter provides a 2- wire 4–20 mA output signal omit generated by precise detection of the position of the magnetic float.

The magnetic float travels along the reed chain of switches activating them.

This micro-processor controlled unit is field calibrated.

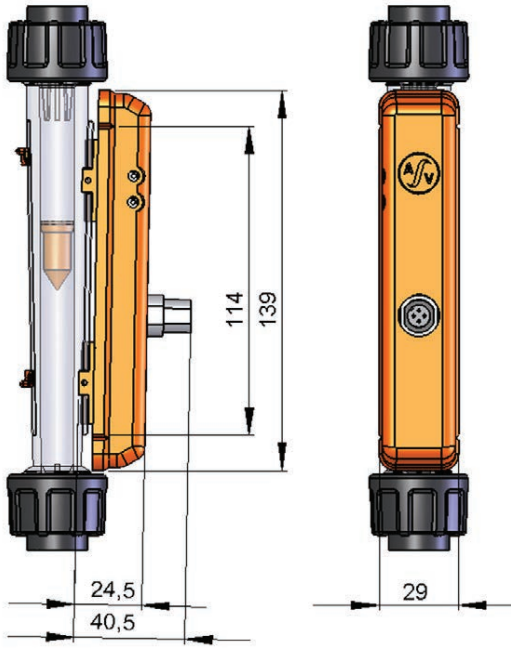

technical

- **2-Wire technology**
- **4–20 mA analog output** (4-20.1 for 8 VDC supply; 4-22.0 for 28 VDC supply
- **18–30 VDC input**
- **Field calibration**
- **Non-volatile value storage**
- **Measuring length:** 114 mm (4.5")
- **Measuring resolution:** 3.5 mm (0.138")
- **Measuring accuracy:** 3%
- **Temperature range:** –20°C(–4°F) to 70°C(158°F)

INSTALLATION

Screw clamps are used to fit the ZE3075 on the dovetail guide of the flow meter.

During installation, ensure that the top and bottom notches of the ZE3075 coincide with the 10% and 100% marks on the flow meter scale.

Following this, proceed with the wiring according to the diagram.

COMPONENTS

1. Alignment notches for the proper location of the transmitter
2. Potentiometer for the upper limit value of the output signal
3. Potentiometer for the lower limit value of the output signal
4. Plug connector

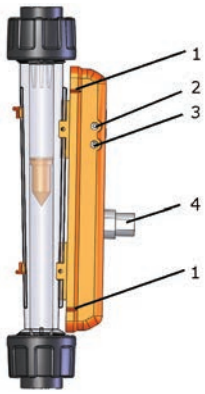

WIRING

The unit is connected with a commercially available unshielded cable.

Where electro-magnetic interference is to be expected, we recommend the use of a shielded cable.

Cable cross section: max. 0.75 mm² cable outer diameter: 6 to 8 mm.

Flange Connector

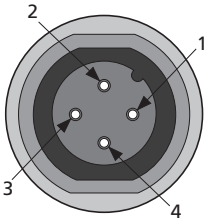

1. Signal (+)
2. Signal (+)
3. n.c.
4. n.c.

Circuit Diagram

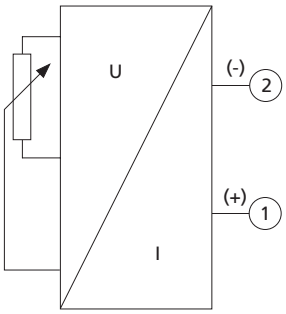

CALIBRATION

Compensation between the non-linear scaling of the flowmeter and the linear output signal of the flow data sensor must be performed by adjusting, preferably between 20% and 80% of the flow rate.

20% corresponds to 7.2mA and 80% to 16.8mA.

- Connect the ampermeter and the respective voltage supply to the flow data sensor
- Allow 20% of the flow to pass through the FC flow meter
- Set the min. trimmer potentiometer (3) such that the corresponding current (7.2mA) is shown in the ampermeter
- Allow 80% of the flow to pass through the FC flow meter
- Set the max. trimmer potentiometer (3) such that the corresponding current (16.8mA) is shown in the ampermeter
- Check the values at 20% and 80% several times and repeat the adjustment, if required

CHEMLINE PLASTICS
SUPERIOR FLOW SOLUTIONS

55 Guardsman Road, Thornhill, ON, L3T 6L2, Canada | ISO 9001:2008 Certified
tel.905.889.7890 | fax.905.889.8553 | request@chemline.com | chemline.com

This page is intentionally left blank

CS-434-700 : Identification sheet

VWTC PROJECT NUMBER:	Iqaluit WWTP	REV:	01
PROJECT NAME:	5000218036	SUBMITTED TO (COMPANY):	
ENGINEER:	F.VINCI	SUBMITTED TO (RESPONSIBLE)	
PROJECT MANAGER:	C. BEKAERT	PROJECT NUM REFERENCE.:	
PHONE NUMBER:		LOT NUMBER:	

SUPPLIER	EQPT CODE	EQPT TAG NO	DIA	DESCRIPTION	INFO 1	INFO 2	INFO 3	APPLIC.	NOTE	REV
IFM	IESWSP342303	PSH-02-787 PSH-02-790 PSH-02-793		High pressure switch	PRESSURE SWITCH/ MANUFACTURER: IFM// MODEL:PN7294// EFECTOR SOO // Approval: cULUS CRN //Output: IOLink 1.1 or (OUT1 = switching output, OUT2 = switching output) // 4-digit alphanumeric display // measuring range -14.5…145 psi					1

This page is intentionally left blank

efectorsoo

PN7294

PN-010-REN14-QFRKG/US/ /V

Pressure sensors

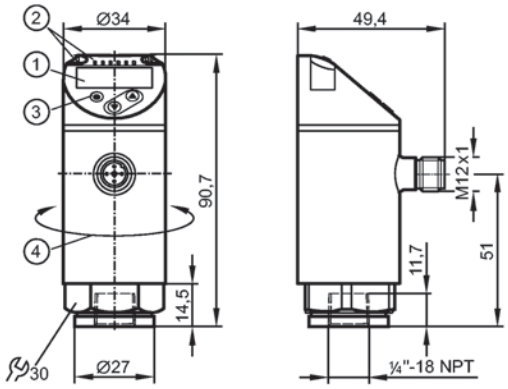

1: 4-digit alphanumeric display / alternating indication of red and green
2: LEDs (display unit / switching status)
3: Programming button
4: Upper part of the housing can be rotated by 345°

CE CRN cULus LISTED EAC IO-Link

Product characteristics
Electronic pressure monitor
M12 connector
Function programmable
Measuring element: ceramic-capacitive pressure measuring cell
Process connection: ¼" NPT I
2 outputs OUT1 = switching output OUT2 = switching output
4-digit alphanumeric display / alternating indication of red and green
Measuring range: -14.5...145 psi / -1...10 bar / -0.1...1.0 MPa

Application				
Application		Type of pressure: relative pressure liquids and gases of the fluid group 2 according to Article 9 of the Pressure Equipment Directive (PED)		
Pressure rating		1087 psi	75 bar	7.5 MPa
Bursting pressure min.		2175 psi	150 bar	15 MPa
Medium temperature	[°C]	-25...80		

Electrical data		
Electrical design		DC PNP/NPN
Operating voltage	[V]	18...30 DC [1])
Current consumption	[mA]	< 35
Insulation resistance	[MΩ]	> 100 (500 V DC)
Protection class		III
Reverse polarity protection		yes

Outputs		
Output		2 outputs OUT1 = switching output OUT2 = switching output
Output function		2 x normally open / closed programmable
Current rating	[mA]	150; 200 (...60 °C); 250 (...40 °C)

Voltage drop [V]	< 2.5		
Short-circuit protection	yes (non-latching)		
Overload protection	yes		
Switching frequency [Hz]	≤ 170		
Measuring / setting range			
Measuring range	-14.5...145 psi	-1...10 bar	-0.1...1.0 MPa
Setting range			
Set point, SP	-13.5...145 psi	-0.90...10 bar	-0.09...1 MPa
Reset point, rP	-14...144.5 psi	-0.95...9.95 bar	-0.095...0.995 MPa
in steps of	0.5 psi	0.05 bar	0.005 MPa
Accuracy / deviations			
Accuracy / deviations (in % of the span)			
Switch point accuracy	< ± 0.5		
Characteristics deviation *)	< ± 0.25 (BFSL) / < ± 0.5 (LS)		
Hysteresis	< ± 0.25		
Repeatability **)	< ± 0.1		
Long-term stability ***)	< ± 0.05		
Temperature coefficients (TEMPCO) in the temperature range -25...80° C (in % of the span per 10 K)			
Greatest TEMPCO of the zero point	0.2		
Greatest TEMPCO of the span	0.2		
Response times			
Power-on delay time [s]	< 0.3		
Min. response time switching output [ms]	< 3		
Delay time programmable dS, dr [s]	0...50		
Integrated watchdog	yes		
Software / programming			
Programming options	hysteresis / window function; N.O. / N.C; output polarity; on delay, off delay; damping; display unit		
Interfaces			
IO-Link Device			
Transfer type	COM2 (38.4 kBaud)		
IO-Link revision	1.1		
SDCI standard	IEC 61131-9		
IO-Link Device ID	403 d / 00 01 93 h		
Profiles	Smart Sensor: Process Data Variable; Device Identification; Device Diagnosis		
SIO mode	yes		
Required master port class	A		
Process data analogue	1		
Process data binary	2		
Min. process cycle time [ms]	2.3		
Environment			
Ambient temperature [°C]	-25...80		
Storage temperature [°C]	-40...100		
Protection	IP 65 / IP 67		

efectorsoo

PN7294

PN-010-REN14-QFRKG/US/ /V

Pressure sensors

Tests / approvals		
Pressure equipment directive		article 3, section 3 - sound engineering practice
EMC		DIN EN 61000-6-2 DIN EN 61000-6-3
Shock resistance		DIN EN 60068-2-27 50 g (11 ms)
Vibration resistance		DIN EN 60068-2-6 20 g (10...2000 Hz)
MTTF	[Years]	224.01
UL approval number		J001
Mechanical data		
Process connection		¼" NPT I
Materials (wetted parts)		316L stainless steel / 1.4404; ceramics; FKM
Housing materials		316L stainless steel / 1.4404; PBT+PC-GF 30; PBT-GF 20; PC
Switching cycles min.		100 million
Tightening torque	[Nm]	(2...3 turns after finger tightened (recommended tightening torque²))
Weight	[kg]	0.221
Displays / operating elements		
Display		Display unit 3 x LED green (bar, psi, MPa) Switching status 2 x LED yellow 4-digit alphanumeric display / alternating indication Measured values of red and green
Electrical connection		
Connection		M12 connector; gold-plated contacts

Wiring

Core colors

BK black
BN brown
BU blue
WH white



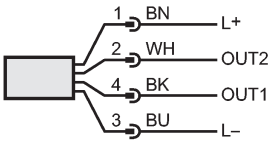

OUT1: switching output or IO-Link
OUT2: switching output
Colours to DIN EN 60947-5-2

Remarks

Remarks

¹) to EN50178, SELV, PELV
²) Depends on lubrication, seal and pressure rating
*) BFSL = Best Fit Straight Line / LS = Limit Value Setting
**) with temperature fluctuations < 10 K
***) in% of the span / 6 months

Pack quantity	[piece]	1

LEFT BLANK

4 – DETAILED TECHNICAL DOCUMENTATION

4.3 – SHOP DRAWINGS SUBMITTAL PACKAGES

4.3.8 – PROGRESSIVE CAVITY TRANSFER PUMPS

LEFT BLANK

TECHNICAL DOCUMENTATION

This page is intentionally left blank

Project name:	IQALUIT
Project#:	5000218036
Document #:	5000218036_DS_0008_GEN_VWT
by:	BB
chkd:	GH
appvd:	CB

SUBMITTAL PACKAGE

PROGRESSIVE CAVITY PUMPS

5000218036_DS_0008_GEN_VWT Rev 3

This page is intentionally left blank

Project name: IQALUIT

Project#: 5000218036

Document #: 5000218036_DS_0008_GEN_VWT

by: BB

chkd: GH

appvd: CB

SUPPLIER TECHNICAL DATASHEETS

OIM manual section: 4.3.8.1

This page is intentionally left blank

CS-999-110 : Identification sheet

VWTC PROJECT NUMBER:	Iqaluit WWTP	REV:	02
PROJECT NAME:	5000218036	SUBMITTED TO (COMPANY):	
ENGINEER:	F.VINCI	SUBMITTED TO (RESPONSIBLE)	
PROJECT MANAGER:	C. BEKAERT	PROJECT NUM REFERENCE.:	
PHONE NUMBER:		LOT NUMBER:	

SUPPLIER	EQPT CODE	EQPT TAG NO	DIA	DESCRIPTION	INFO 1	INFO 2	INFO 3	APPLIC.	NOTE	REV
NETZSCH	ST-999-110	P-03-630		TRANSFER PUMP BFP	NETZSCH PC PUMP MODEL NM045BY01L07V COMPLETE WITH GEAR REDUCER, MOTOR & BASEPLATE COMPLETE // MATERIALS OF CONSTRUCTION INCLUDE CAST IRON HOUSING, 316 STAINLESS STEEL INTERNALS	5 HP TECO MOTOR, MODEL PDH00545C ,1800 RPM, 575/60/3, INVERTER DUTY, PREMIUM EFFICIENCY // NORD RIGHT ANGLED GEAR REDUCER WITH A GEAR RATIO OF 7.44:1 // FLANGE MOUNTED TO PUMP, ALL MOUNTED ON A CARBON STEEL BASEPLATE FOR GROUT, DRIP PAN				2
NETZSCH	ST-999-110	P-03-640		TRANSFER PUMP BFP	NETZSCH PC PUMP MODEL NM045BY01L07V COMPLETE WITH GEAR REDUCER, MOTOR & BASEPLATE COMPLETE // MATERIALS OF CONSTRUCTION INCLUDE CAST IRON HOUSING, 316 STAINLESS STEEL INTERNALS	5 HP TECO MOTOR, MODEL PDH00545C ,1800 RPM, 575/60/3, INVERTER DUTY, PREMIUM EFFICIENCY // NORD RIGHT ANGLED GEAR REDUCER WITH A GEAR RATIO OF 7.44:1 // FLANGE MOUNTED TO PUMP, ALL MOUNTED ON A CARBON STEEL BASEPLATE FOR GROUT, DRIP PAN				2

This page is intentionally left blank

NETZSCH Canada, Inc. 500 Welham Road, Barrie, On., L4N 8Z7
Ph: 705-797-8426 Fax: 705-797-8427 Toll Free: 1-866-683-7867

Pump - Technical

NEMO® pump with drive & baseplate: NM045BY01L07V

The physical characteristics of the pumped product, application details, as well as the General Operating Conditions detailed in our offer have been taken from your inquiry or where not specified have been assumed by us. In the event of an order we would ask you to check any assumptions and all details as they will become contractually binding along with the selection of pump model, Drive, all specifications, and materials of construction, based on these details.

Product:			TWAS
Composition			Flowable
Specific gravity	Assumed	kg/dm³	1.05
Particle size/Solid size	Allowed	mm	15/61
pH value	Approx.		NA
Solids content (w/w)	Approx.	% TS	1-5
Dynamic viscosity	Assumed	CP	30000-63000
Vapour pressure		PSI	No advice

Application details:		***Content***	***normal***	***maximum***
Flow rate (Q)	approx.	M³/hr	7.2	10.8
Differential pressure		Bar	2	2.6
Suction pressure	assumed	Barg	Flooded	flooded
Discharge pressure	Assumed	barg	2	2.6
Pump operating speed	approx.	RPM	185	245
Sliding velocity	approx.	m/s	0.7	0.9
Frequency	approx.	Hz	30	60
Power required at drive shaft	approx.	kW	0.85	1.5
Running torque	approx.	NM	49	55
Starting torque	approx.	NM	84	84
Operating temperature	assumed	°C	10	20

Assembly specification	
installation	horizontal

General operating conditions	
Installation area	inside
ambient Temperature	approx. 20°C / 70 F
humidity	up to 75%
application type	Continuous operation
operating hours	24 hours/day
service voltage	3/60/575

Painting	coating system	Netzsch Standard

Operating and Maintenance Instructions	
Standard documentation in accordance with the 98/37/EG Machinery Directive.	
Special documentation is available on request and would be charged for.	
number	1
medium	Paper
language for O&M's and spare parts list	English
dispatch method	shipped with pump

NETZSCH Canada, Inc. 500 Welham Road, Barrie, On., L4N 8Z7
Ph: 705-797-8426 Fax: 705-797-8427 Toll Free: 1-866-683-7867

Offer: N180503ST-01
Date: May 3, 2018

Customer No.:

NEMO® NM045BY01L07V Pump

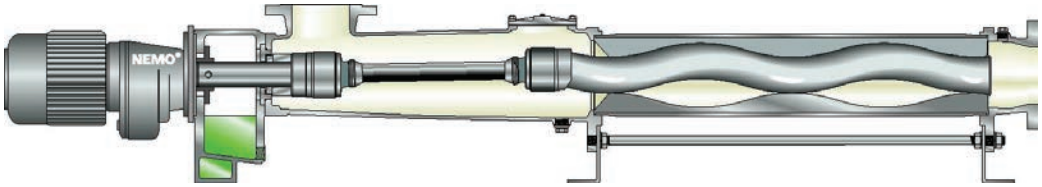

Characteristics and benefits of the NEMO® BY Block pump:

- Reliable and sophisticated construction
- Space-saving construction
- Modular construction system
- 4 different stator – rotor geometries available for most sizes
- Low investment and operating costs
- Low maintenance expenses

General characteristics	
name plate on the pump	in English (Stainless steel)
direction of rotation	to the left, counter clockwise (as viewed from drive end)

Pump Pedastal	
material	Cast iron 0.6025

Pump housing / End connection	
housing material	Cast Iron 0.6025
flange position	Pump#1::Left from DE, Pump#2: Right from DE
function of housing connection	suction connection
flange design	ANSI B16.1
nom. dia. & pressure for pump housing	3" -125#ANSI FLANGE
discharge flange design	ANSI B16.1
nom. dia. & pressure of discharge flange	3" -125#ANSI FLANGE
Function of end connection	pressure connection
housing seals	Buna

Shaft seal	
type	Single mechanical Seal
shaft seal materials	Silicon Carbide Faces – Viton Elastomers
shaft seal type	Burgmann Single MG1-G60 – Q1Q1VGG

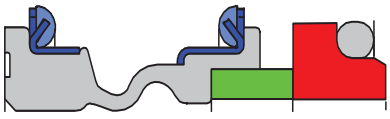

Rotating parts	
rotating parts materials	316 Stainless Steel Internals

NETZSCH Canada, Inc. 500 Welham Road, Barrie, On., L4N 8Z7
Ph: 705-797-8426 Fax: 705-797-8427 Toll Free: 1-866-683-7867

Offer: N180503ST-01
Date: May 3, 2018

Customer No.:

Joints		
	joint type	pin joint
	sealing type	SM Pin joint
	joint sealing material	Viton/316 Stainless Steel
	joint lubrication	Mineral oil

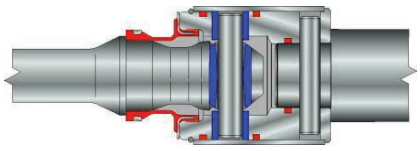

Rotor		
	rotor material	SAE 4140- Hard Chrome Plated
	temperature range	UM 20

Stator		
	stator material	NEMOLAST® S61M Buna
	accesory	STP-3 Dry Run protection Sensor

Drive

Helical gear reducer		
	manufacturer	Nord
	type	SK92672.1-180TC
	gear ratio	7.44
	speed @ 60 Hz	240
	mounting position	M1
Motor		
	Manufacturer	TECO Westinghouse
	motor HP	5
	winding voltage	575
	voltage range	+/-10 %
	frequency	60 Hz
	number of poles	4
	number of phases	3
	Motor speed	1750 rpm
	protection type	IP54 – TEFC, Class 1, Div.2, premium Efficiency
	insulation class	F

Baseplate **Structural Steel Baseplate with drip lip, grout holes & drains.**

Approximate weight of Pump and Gearmotor	845 lbs

NETZSCH Canada, Inc. 500 Welham Road, Barrie, On., L4N 8Z7
Ph: 705-797-8426 Fax: 705-797-8427 Toll Free: 1-866-683-7867

Offer: N180503ST-01
Date: May 3, 2018

Customer No.:

Performance curve:

NM045--01L Förderkennlinie / Performance Curve
Statorwerkstoff / elastomer quality: standard

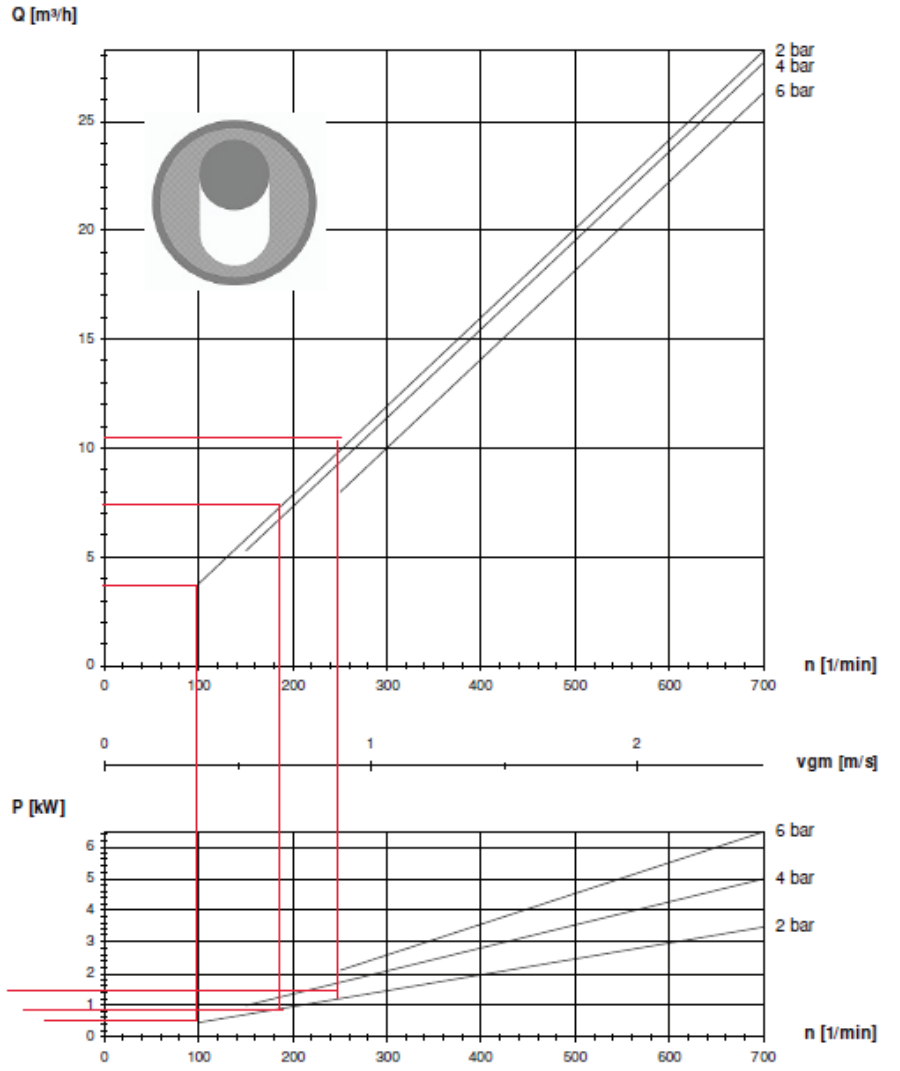

Losbrechmoment / starting torque T(L) = 84 Nm

Druck / pressure	T
2 bar	49 Nm
4 bar	71 Nm
6 bar	92 Nm

Gültigkeit für Wasser (1 cP) bei 20 °C. Toleranzen nach VDMA 24284 (+10%/-5%).
Valid for water (1 cP) at 20 °C (70 °F). Tolerances are in accordance with VDMA 24284 (+10%/-5%).

www.netzsch-pumpen.de

Dimension tolerances				Tolerances to flanges according ASME B16.1 E B16.5	
Measure	Tolerance	Measure	Tolerance		
>3 to 6	±0,5	>400 to 1000	±4,0		Tolerance
>6 to 30	±1,0	>1000 to 2000	±6,0	Diameter of bolt circle	+1,5
>30 to 120	±1,5	>2000 to 4000	±8,0	Diameter of bolt holes	+1,0
>120 to 400	±2,5	>4000	±20	Thickness	+3,0

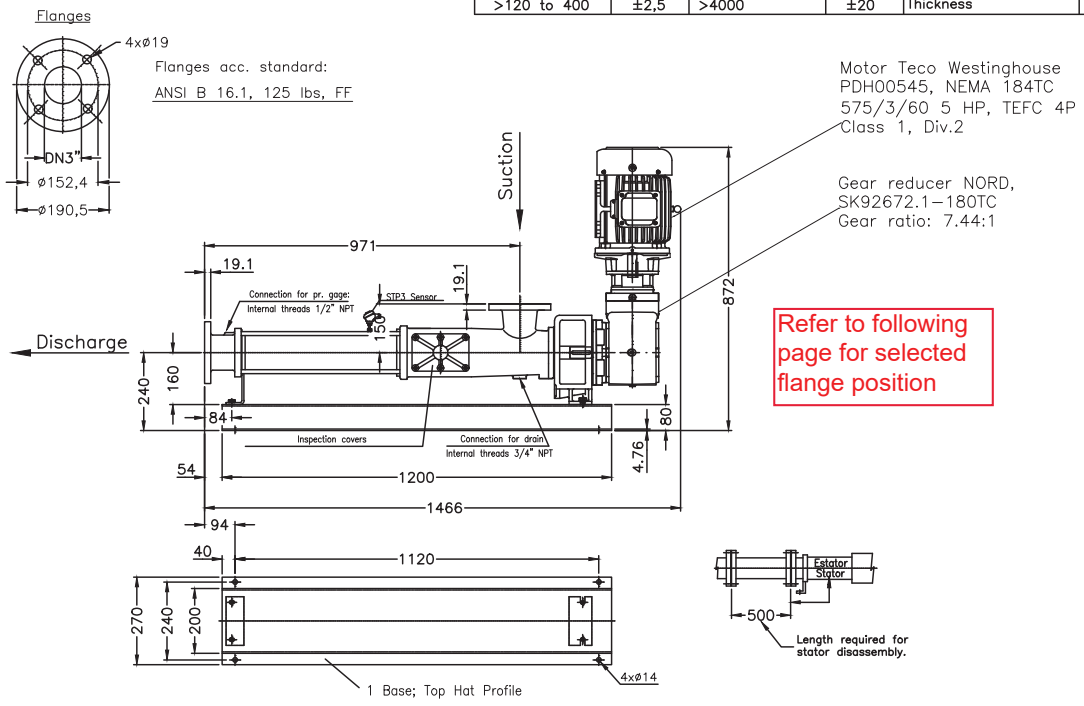

WEIGHT: 375 lbs. approx.

NETZSCH, CANADA INC.

UNLESS OTHERWISE SPECIFIED:
DIMENSIONS ARE IN mm [inches]
TOLERANCES: 2 PL DEC ± 0.01
3 PL DEC ± 0.005
ANGLE ± 0.5 °
REMOVE ALL BURRS
ALL CORNERS R 0.010 OR BBEAK
MIN RECEIVING INSPECTION PT

THIRD ANGLE PROJECTION

THIS DRAWING IS THE SOLE PROPERTY OF NETZSCH CANADA, INC. BARRIE, ONT, CANADA. ANY USE OR REPRODUCTION OF ANY PART THERE OF IS FORBIDDEN WITHOUT WRITTEN APPROVAL OF NETZSCH CANADA, INC.

NETZSCH

Tag #	Part #	P.O.#	REV.
DESCRIPTION: NEMO PUMP NM045BY01L07V		DRAWN BY: A.E.	DATE: Nov. 26, 2018
NTC DRAWING NO.: B045BY1-N180503ST-01	MATERIALS: CI/316/4140VCP/NBR/MG1/C.S.Baseplate		
COMMENTS: Baseplate to have drip rim, grout holes and drain		DO NOT SCALE	SHEET: 1 of 1

Tolerâncias Dimensionais/Dimensional Tolerances				Tolerâncias para Flanges cfe./Tolerances for Flanges according ASME B16.1 e B16.5	
Medida/Dimension	Tolerância/Tolerance	Medida/Dimension	Tolerância/Tolerance		Tolerância/Tolerance
>3 até/to 6	±0,6	>400 até/to 1000	±4,0		
>6 até/to 30	±1,0	>1000 até/to 2000	±6,0	Diâmetro da Furação/Drilling Diameter	±1,6
>30 até/to 120	±1,5	>2000 até/to 4000	±8,0	Diâmetro Furos/Holes Diameter	+1,0
>120 até/to 400	±2,5	>4000	±20	Espessura/Thickness	+3,0

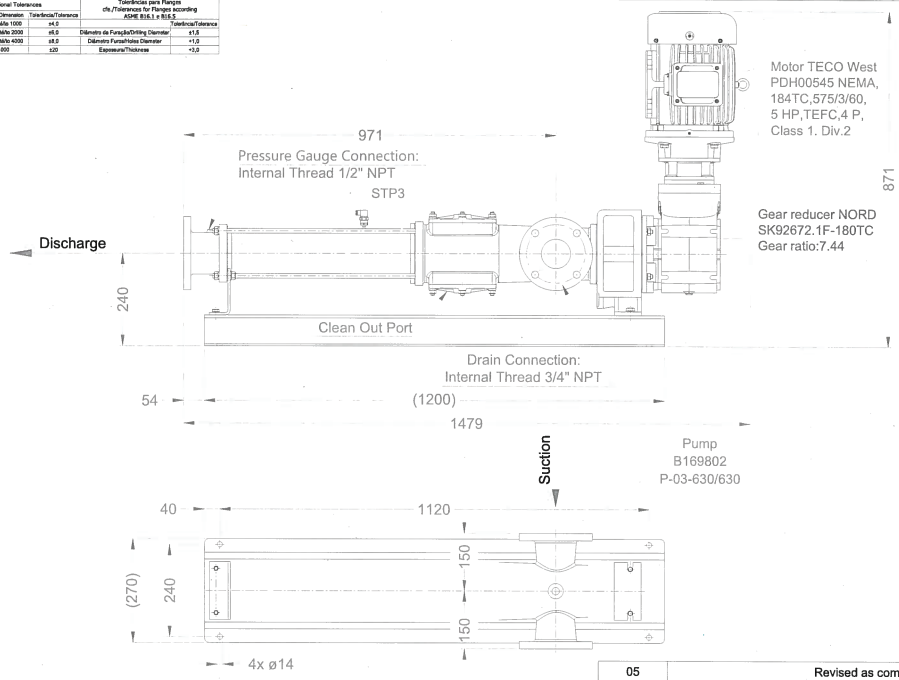

Suction Flange
Boring acc. Norm:
Asme B-16.1 / Class 125 / FF / NPS 3

Discharge Flange
Boring acc. Norm:
Asme B-16.1 / Class 125 / FF / NPS 3

VEOLIA

EXAMINÉ/EXAMINED

L'examen de ce dessin ne relève en aucune façon l'entrepreneur ou le fournisseur de sa responsabilité quant à l'exactitude de ce dessin ou à sa conformité avec les documents contractuels et les conditions de chantier. Examination of this drawing will not release in any way the Contractor or Supplier of his responsibilities as of the precision of this drawing or to its compliance with the contract documents and job site conditions.

☒ *Procéder tel quel / Proceed as is*
☐ *Procéder tel qu'amnoté / Proceed as noted*
☐ *Resoumettre / Re-submit*

Par / by: F. VINCI
Date: 2019/04/08

DRAWING FOR APPROVAL

IEC Flange: ø200
Shaft bore: ø30

Revisão/Revision	Descrição/Description	Nome/Name	Data/Date
05	Revised as comments	Knaesel	05/04/19
04	Included Baseplante	Knaesel	02/04/19
03	Revised as comments	Knaesel	27/03/19

Cliente/Customer: VEOLIA
Pedido/Order: 4210000241
Referência/Reference: L50009344

NETZSCH

Título/Title: Pump NM045BY01L07V

	Data/Date	Nome/Name
Desenhado/Designer	07/03/19	matheus.knaesel
Verificado/Checked Aprovado/Approved	07/03/19	gustavo.henrique

TAG:
Peso/Weight 170 kgf
Nr. Desenho/Drawing Nr.: 4737650
Folha/Sheet: 1/1
Escala/Scale: 1:9

Reservado todos os direitos sobre este documento técnico. All rights reserved.

A3

Intelligent Drivesystems, Worldwide Services

INSTALLATION & OPERATING INSTRUCTIONS



NORD.COM/DOCS
DOCUMENT COLLECTION

Order Number:
NORD Model: SK92172.1VF CUS

NORD DRIVESYSTEMS

Order and product data

Order Number	
Product Name	Right-Angle Helical Bvl Gearbo
NORD Model Type	SK92172.1VF-CUS
Mounting Position	
Lubricant	VG220-MIN-EP
Lubricant Qty	

Contents

Manuals

U10020-Safety Notes
U10020 Version: 0.03

U10040-Storage & Commissioning
U10040 Version: 0.03

U10060-Unit Installation
U10060 Version: 2.02

U10750-Helical & Bevel Reducer lubrication
U10750 Version: 0.05

U11000-Helical & Bevel Reducer Lubrication Types
U11000 Version: 0.08

U12205 Lubrication Capacity-92.1-93.1 Series Helical Bevel Foot Mounted
U12205 Version: 0.08

U14305 Oil Plug & Vent Locations-92.1-93.1 Series Helical Bevel
U14305 Version: 0.02

U15415 92.1/93.1 Parts List
U15415 Version: 0.02

U19000-Troubleshooting
U19000 Version: 2409

U30000-Motors- AC INDUCTION, SINGLE & POLYPHASE
U30000 Version: 0.07

1. Safety & information symbols

All work including transportation, storage, installation, electrical connection, commissioning, servicing, maintenance and repair must be performed **only by qualified specialists or personnel**. It is recommended that repairs to NORD Products are carried out by the NORD Service Department. Instructions related to operational safety will be emphasized as shown.

Symbol	Meaning
⚠	**Danger, Caution or Warning -** Severe risk or danger of personal injury or death by working around dangerously high electrical voltage or moving machinery. Proper safety precautions must be taken.
NOTICE	**Notice -** Care must be taken to avoid the possibility of damaging the drive unit, driven machine, or the environment.
ℹ	**Important Note -** Useful note or tip to help assure trouble-free operation.
♻	**Material Disposal Note -** Important note concerning suggested material disposal.

2. Safety warnings

⚠ DANGER

- All work involved in the transport, connection, commissioning and maintenance of any NORD product must be carried out by qualified and responsible technicians. All applicable national, regional, and local work regulations and safety requirements must also be complied with. **NORD assumes no liability for personal injury, accidental death, or equipment damage and malfunctions resulting from failure to comply with installation or operating instructions, safety notes, or any work regulations and laws!**
- Gear unit installation and maintenance work may only be performed when no power is available to the prime mover or motor. Electric motors, electrical brakes, and variable frequency drives, contain potentially dangerous high-voltage. Prior to installation or maintenance, shut down the power at the circuit breaker or power switch. **While working on the drive, make sure the power from the prime mover is isolated or secured on "lock-out" to prevent accidental start-up and to safeguard against injury!**
- Surfaces of motors and gear units may become hot during operation or shortly after start-up. In some instances additional protection against accidental contact may be necessary. **Use caution to avoid burns or serious injury!**

3. Observe published performance range & nameplate data

NOTICE

Observe the data on all reducer nameplates and verify published ratings for the NORD item/s in question. Do not operate any NORD equipment outside the published performance range. Failure to comply may result in damage to the drive unit, driven machine, or the environment.

U.S. Nameplate

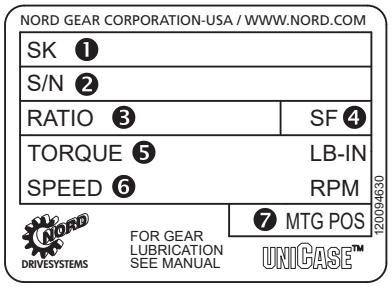

❶ Model/Type
❷ Serial Number
❸ Gear Ratio
❹ Service Factor
❺ Torque Rating
❻ Output Speed RPM
❼ Mounting Position

European Nameplate

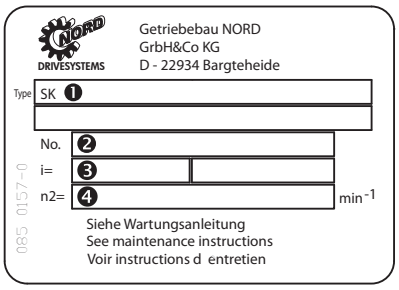

❶ Model/Type
❷ Serial Number
❸ Gear Ratio
❹ Speed

4. Transportation and handling

Make sure that all eyebolts and lifting lugs are tight and lift only at designed points. Protect the mounting surface from possible damage during transportation.

⚠ WARNING

Do not attach other machinery or loads to the NORD assembly, the supplied lifting bolts are not designed for this purpose and may result in drive damage or personal injury.

If the gearmotor or assembly is equipped with two suspension eye bolts, then both locations should be used for transportation and placement of the unit; in this case the tension force of the slings must not exceed a 45° angle.

In some instances it may be appropriate to use additional lifting straps or slings in order to assure safe transportation of the assembly. Always use sufficiently rated handling equipment and ensure that adequate safety measures are taken to protect personnel from injury during transportation. Once the NORD assembly is properly installed, remove the transportation fixtures.

7. DISPOSAL

MATERIAL DISPOSAL

Properly dispose of all used gear units and internal parts in accordance with all local regulations. In particular, all lubricants must be properly collected and disposed.

For confirmation of specific materials used in a specific reducer or gearmotor assembly, please consult NORD with the appropriate unit identification or serial number.

Components	Material
Gear wheels, shafts, rolling bearings, parallel keys, snap rings, spacers, shims, etc.	Steel
Gear housing and housing components	Cast iron or Aluminum (depending on type and size)
Worm gears	Bronze alloy
Radial seals, sealing caps, and rubber components	Elastomers with some steel
Coupling components	Plastic or Elastomer with Steel
Housing gaskets and flat oil seals	Asbestos-free sealing or gasket material (various types used)
Gear Oil	Mineral, SHC-Synthetic or PG-Synthetic (can vary)

1. Storage

IMPORTANT NOTE

For storage periods longer than 9 months, or for storage in less than desirable conditions, please consult NORD for recommendations.

Storage for up to 9 months is possible, so long as the following conditions are observed:

- Store the gear unit in its actual mounting position in accordance with the specified oil fill-level, in a clean and dry temperature controlled area. Avoid temperature fluctuations within the range of 0°C and 40°C (32°F to 104°F) and avoid relative humidity conditions in excess of 60%.
- Protect all exposed or unpainted shaft and flange surfaces with an anti-corrosion agent or grease.
- Store in a location free from shock and vibration, to avoid false brinelling of bearing elements and raceways.
- Whenever possible, rotate the shafts periodically, by hand if necessary, to help prevent brinelling (bearing damage) and to help keep the shaft seals pliable.
- Avoid direct exposure to the sun or UV light and aggressive or corrosive materials in the environment (ozone, gases, solvents, acids, caustic solutions, salts, radioactivity, etc.

2. Commissioning

Prior to gear unit start-up, complete the following:

- Please check your gear unit for a vent and if applicable to your product, remove the sealing plug to activate.

NOTICE

To prevent build-up of excessive pressure, sealed vents must be activated as shown prior to gear unit start up. Excessive pressure may cause damage to internal gearbox components and leakage.



Sealed vent

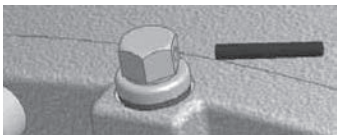

Activated vent

- Check the lubricant and be sure the gear unit is filled with the proper oil type, to the proper level, as determined by the mounting position.

IMPORTANT NOTE

Some smaller gear units are supplied as maintenance free/ lubricated for life gear units. Oil level may not be checked on some of these units.

- Check the condition of all shaft seals and all assembled flange gasket areas. If any change is detected in the shape, color, hardness or permeability, or if any leaks are detected, the corresponding shaft seals and/or gaskets must be replaced.
- Remove all anti-corrosive metal protectant from otherwise bare metal surfaces. Follow product manufacturers directions and warnings during surface protection removal.
- Check the resistance of all motor and brake windings to verify the integrity of the winding insulation and inspect all terminal box openings and wire connection areas to verify that all components are dry and free of corrosion.

3. Long-Term Storage

By taking special precautions, problems such as seal leakage and reducer failure due to the lack of lubrication, improper lubrication quantity, or contamination can be avoided. The following precautions will protect gear reducers during periods of extended storage:

- Store the gear unit in its actual mounting position in accordance with the specified oil fill-level, in a clean and dry temperature controlled area. Avoid temperature fluctuations within the range of 0°C and 40°C (32°F to 104°F) and avoid relative humidity conditions in excess of 60%.
- Fill the reducer full with oil that is compatible with the product normally used or recommended during service.
- Apply grease to all unpainted or unprotected shafts, bores, keyways, flange surfaces, tapped holes, and to the exterior of all oil seals.
- Store in a location free from shock and vibration, to avoid false brinelling of bearing elements and raceways.
- Once every few months rotate the input shaft approximately 10-20 revolutions to redistribute the weight of gears and shafts and to prevent brinnelling of the bearings and drying of the seal track.
- Avoid direct exposure to the sun or UV light and aggressive or corrosive materials in the environment (ozone, gases, solvents, acids, caustic solutions, salts, radioactivity, etc.)

4. Commissioning After Long-Term Storage

• Please check your gear unit for a vent and if applicable to your product, remove the sealing plug to activate.

NOTICE

To prevent build-up of excessive pressure, sealed vents must be activated as shown prior to gear unit start up. Excessive pressure may cause damage to internal gearbox components and leakage.



Sealed vent

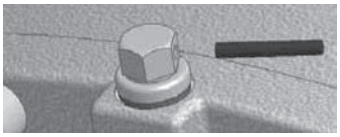

Activated vent

- Remove all anti-corrosive metal protectant from otherwise bare metal surfaces. Follow product manufacturers directions and warnings during surface protection removal.
- Drain the reducer and refill it with the proper type and amount of lubricant.
- Observe start-up and initial operation to make sure there are no seal or gasket leaks, or unusual sounds, vibration or heat rise during operation.
- Check the resistance of all motor and brake windings to verify the integrity of the winding insulation and inspect all terminal box openings and wire connection areas to verify that all components are dry and free of corrosion.

1. Installation site

Drives must be properly installed if they are to produce the rated torque. Improper installation may lead to oil leaks, reduced life, or even catastrophic failure. NORD gear drives and motors are intended to be installed at a suitable mounting site under the following conditions:

- Unimpeded airflow to and around the units.
- Accessibility to oil drain, level and breather plugs.
- On brakemotors, allow adequate space for removing the fan guard and replacing and adjusting the brake.
- Mounting surfaces must be flat, torsionally rigid, and dampened against vibration.
- Unless special measures are taken, the immediate vicinity around the gear drive or motor should not be exposed to any aggressive or corrosive substances, contaminated air, ozone, gases, solvents, acids, alkalis, salts, radioactivity, etc.

2. Mounting position

Reducer mounting position charts illustrate the standard mounting positions for horizontal and vertical mounting. All gear units are assembled with the oil fill-level, oil-drain and vent plugs installed in their proper locations, **according to the customer-specified mounting position**. For mounting orientations other than shown consult NORD Gear.

NOTICE

Improper oil levels may lead to premature component wear and diminished service life. The gear reducer may not receive proper lubrication if the unit is not mounted in the position for which it is designed. Observe the mounting position designated on the reducer nameplate, or specified in the order acknowledgement. Consult NORD prior to changing mounting position in the field. While it is often possible to simply relocate the oil fill-level and vent locations, and adjust the oil fill amount, in some cases, different mounting positions may lend themselves to different internal construction features.

3. Reducer mounting

- The support foundation must be straight, level and flat. Whether the gear unit is foot-mounted or flange-mounted, NORD recommends that the straightness and flatness of the customer-supplied support foundation follow **Table 1**.
- The gear unit must be properly aligned with the driven shaft of the machine in order to prevent additional stress or load forces from being imposed upon the gear unit.
- To facilitate oil drainage it may be desirable to elevate the gear box foundation above the surrounding support structure.
- All bolting surfaces must be clean and free from contamination and corrosion.

Table 1: Recommended Straightness and Flatness of Customer-Supplied Support Foundation

Above (in)	To & Including (in)	General Tolerance on Straigtness & Flatness ISO 2768-2, Tolerance Class K
0.00	0.39	+/- 0.002 in
0.39	1.18	+/- 0.004 in
1.18	3.9	+/- 0.008 in
3.9	11.8	+/- 0.016 in
11.8	39	+/- 0.024 in
39	118	+/- 0.031 in

Above (mm)	To & Including (mm)	General Tolerance on Straigtness & Flatness ISO 2768-2, Tolerance Class K
0	10	+/- 0.05 mm
10	30	+/- 0.1 mm
30	100	+/- 0.2 mm
100	300	+/- 0.4 mm
300	1000	+/- 0.6 mm
1000	3000	+/- 0.8 mm

Straightness: Based upon the length of the corresponding line.

Flatness: Based upon the longer lateral surface or the diameter of the circular surface.

IMPORTANT NOTE

The responsibility for the design and construction of the support foundation is with the user. The foundation must be adequate to withstand normal operating loads and possible overloads while maintaining alignment to attached system components under such loads. ***Motors and drive components mounted on prefabricated base plates can become misaligned during shipment. Always check alignment after installation.***

4. Steel foundation

An engineered structural steel foundation should be designed to provide adequate rigidity and prevent loads from distorting the housing or causing misalignment of internal gears and shafts. When foot-mounting the gear reducer, a base plate or sole plate with suitable thickness (generally equal or greater than the thickness of the drive feet) should be securely bolted to steel supports and extend under the entire gear drive assembly. When flange-mounting the gear unit, the bulk head plate must be engineered to minimize buckling distortions and support the cantilevered weight of the gear unit or gear motor.

NOTICE

Do not weld on the gear unit or use the gear unit as an earth or ground connection for any welding procedure as this may cause permanent damage to the bearings and gears.

5. Concrete foundation

If a concrete foundation is used, allow the concrete to set firmly before bolting down the gear drive. Grout structural steel mounting pads and bolts of sufficient size into the concrete, to adequately distribute the load stress onto the concrete foundation.

Figure 1: Concrete Foundation

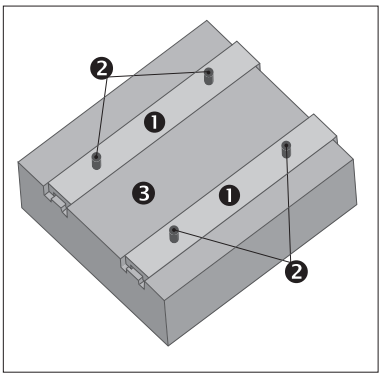

❶ Grouted Structural Steel Mounting Pads
❷ Mounting Bolts
❸ Concrete Foundation

6. Bolt connections for footed & flange mounted units

NORD footed reducers and flange-mount reducers (with B5 flange) have clearance designed into the mounting holes to allow for some minor adjustments in alignment. Bolt size, strength and quantity should be verified to insure proper torque reaction capacity whatever the mounting arrangement. Tightening torque for gear reducer mounting bolts, and recommended fastener grades, are provided in Table 2.

Table 2A: Tightening Torque for Inch Reducer Mounting Bolts

Thread Size	Grade SAE 5 / ASTM A449		Grade SAE 8	
(in)	(lb-ft)	(Nm)	(lb-ft)	(Nm)
1/4-20	7.1	9.6	10.0	13.6
5/16-18	16	21	22	30
3/8-16	28	37	39	53
1/2-13	69	93	98	132
5/8-11	138	188	195	264
3/4-10	247	334	348	472
7/8-9	396	537	558	757
1-8	592	802	833	1,130
1 1/8-7	-	-	1,233	1,672
1 1/4-7	-	-	1,717	2,327
1 3/8-6	-	-	2,267	3,073
1 1/2-6	-	-	2,983	4,045
1 3/4-5	-	-	4,458	6,045

- Calculated tightening torques are based a conventional 60°, clean and dry (un-lubricated) thread, with thread-friction and head-friction equal to 0.15.
- When using inch-fasteners, NORD recommends a minimum Grade SAE 5 (ASTM A-449) for sizes up to 1-8 UNC, and Grade SAE 8 for all larger sizes.

Table 2B: Tightening Torque for Metric Reducer Mounting Bolts

Above	ISO Grade 8.8		ISO Grade 10.9		ISO Grade 12.9	
(mm)	(lb-ft)	(Nm)	(lb-ft)	(Nm)	(lb-ft)	(Nm)
M4	2.4	3.2	3.5	4.7	4.1	5.5
M5	4.7	6.4	6.9	9.3	8.1	11
M6	8	11	12	16	14	19
M8	20	27	29	39	34	46
M10	39	53	58	78	67	91
M12	68	92	100	135	110	155
M14	107	145	159	215	180	250
M16	170	230	247	335	290	390
M18	240	325	343	465	400	540
M20	339	460	487	660	570	770
M22	465	630	664	900	770	1,050
M24	583	790	848	1,150	960	1,300
M27	848	1,150	1,217	1,650	1,440	1,950
M30	1,180	1,600	1,660	2,250	1,950	2,650
M36	2,050	2,780	2,884	3,910	3,470	4,710
M42	3,297	4,470	4,639	6,290	5,560	7,540
M48	4,940	6,700	7,010	9,500	8,260	11,200

- Calculated tightening torques are based on a conventional 60°, clean and dry (un-lubricated) thread, with thread-friction and head-friction equal to 0.15.
- When using metric-fasteners, NORD recommends a minimum ISO Grade 8.8 bolt.

7. Mounting the prime mover

When the motor is not flange mounted or integrally mounted to the gearbox, it is important to properly secure and align the gear drive with respect to the driven machine before attempting to align the prime mover or motor.

A. After the main gear drive is properly aligned and bolted in place, align the prime mover with respect to the reducer input shaft.

B. Use shims under the feet of the prime mover as needed, and secure in place with the proper mounting bolts. Dowel pins may be field-installed to help prevent misalignment and ensure proper realignment if removed for service.

IMPORTANT NOTE

When using a high speed coupling connection between the prime mover and the reducer, check alignment per the coupling manufacturers recommendations. If the coupling is misaligned, the reducer alignment or shimming is incorrect. Re-align the gear reducer and re-check the high-speed coupling alignment before re-aligning the motor.

HELICAL & BEVEL REDUCER LUBRICATION

1. Importance of proper lubrication

Proper gearbox lubrication is essential in order to reduce friction, heat, and component wear. Lubricants reduce heat and wear by inserting a protective "fluid boundary" between mating parts and preventing direct metal to metal contact. Lubricants also help prevent corrosion and oxidation, minimize foam, improve heat transfer, optimize reducer efficiency, absorb shock loads and reduce noise.

Most NORD reducers are shipped from the factory with a pre-determined oil fill level in accordance to the specified reducer size and mounting position.

2. Standard oil type

The following tables indicate the standard oil fill type used. Please see user manual U11000 for more specific information and for optional helical and bevel gear lubricants:

Serviceable Gear Units	
Helical In-line	Standard Oil Fill: ISO VG 220, Mineral Oil
Clincher Parallel-Shaft	
Right-Angle Bevel	
NORDBLOC® Series In-line	
NORDBLOC®.1 Series In-line	
Standard Series In-line	

IMPORTANT NOTE

For shipping purposes, the following large Clincher™ gear units are supplied without oil:
- Clincher™ Sizes SK11282, SK11382, SK11382.1 and SK12382

Maintenance-free / Lubricated For Life Gear Units	
Clincher™ sizes SK0182NB, SK0282NB & SK1382NB	Standard Oil Fill: ISO VG220 SHC/PAO Synthetic Oil
NORDBLOC® Sizes SK172, SK272, SK371F, SK372, SK373, SK320	

IMPORTANT NOTE

Maintenance-free units are supplied as sealed units with no vent-plug. Consult NORD prior to ordering if interested in ordering any of the above sizes as serviceable gear units.

IMPORTANT NOTE

Consult the sticker adjacent to the fill plug to determine the type of lubricant installed at the factory. Some units have special lubricants designed to operate in certain environments or intended to extend the service life or service temperature range of the lubricant. If in doubt about which lubricant is needed for a certain application, please contact NORD Gear.

3. Lubrication replacement

If the gear unit is filled with mineral oil, the lubricant should be replaced at least after every 10,000 operating hours or after every two years. If the gear unit is filled with synthetic oil, the lubricant should be replaced at least after every 20,000 operating hours or after every four years. Often gear reducers are exposed to extreme ambient conditions, hostile environments, wet conditions, or dirty and dusty operating areas. Especially in these situations, it is important to establish a condition-based oil service interval.

4. Oil viscosity

Viscosity, or the oil's resistance to shear under load, is often considered the single most important property of any gear oil.

- Often one will consider making a viscosity correction to the oil to improve the performance when operating the gear unit at low temperature or high temperature.
- In cases of extreme load conditions, gear pairs and antifriction bearings may be more susceptible to sliding or scuffing wear. In these operating conditions, it may also be beneficial to consider an increased lubrication viscosity and/or a lubrication with improved antiwear additive packages.

IMPORTANT NOTE

The user should consult with their primary lubrication supplier before considering changes in oil type or viscosity.

5. Maximum oil sump temperature limit

To prevent reducer overheating, the reducer's maximum oil sump temperature limit must not be exceeded for prolonged periods of operation (up to 3 hours continuous operation depending upon reducer size).

Oil Type	Maximum Oil Temperature Limit	
	NORD	AGMA 9005-D94
Mineral	80-85°C (176-185°F)	95°C (203°F)
Synthetic	105°C (220°F)	107°C (225°F)

IMPORTANT NOTE

Use caution when specifying gear reducers for high temperature service. If there is concern about exceeding the allowable safe operating temperatures, please consult NORD to discuss alternatives.

6. The importance of routine oil analysis

Routine oil analysis, sound lubrication practices, and good tracking of oil performance trends will help establish proper lubrication maintenance and change-out intervals. To maximize equipment reliability, NORD Gear generally recommends a condition-based lubrication maintenance program. One may take exceptions to this general recommendation on sealed-for-life or maintenance-free gear units or smaller and less costly gear units. In these instances, the replacement cost of the gear unit is often small compared to the costs associated with this type of oil analysis program.

NOTICE

NORD suggests replacing the gear oil if oil analysis indicates any of the following. Failure to replace the oil may cause internal damage to gearbox and diminished performance:

- Viscosity has changed by approximately 10% or more.
- Debris particles (silicon, dust, dirt or sand) exceed 25 ppm.
- Iron content exceeds 150-200 ppm.
- Water content is greater than 0.05% (500 ppm).
- The total acid number (TAN) tests indicate a significant level of oxidative break-down of the oil, and a critical reduction in performance; If the TAN number measured changes by more than 5% over the new oil, then an oil change would be recommended.

7. Mounting position and oil fill quantity

All NORD Gear reducers are shipped from the factory with a pre-determined oil fill level in accordance to the specified reducer size and mounting position. ***For additional information, please see the seperate mounting position diagrams and the corresponding oil fill quantity tables for the specified gear unit.***

The gearbox nametag will indicate the mounting position that was provided. ***For mounting orientations other than shown in the mounting position charts, please consult NORD Gear.***

IMPORTANT NOTE

Actual oil volume can vary slightly depending upon the gear case size, mounting and ratio. Prior to commissioning the reducer, check the oil-fill level using the reducer's oil-level plug and drain or add additional oil as needed. The minimum acceptable oil level is 0.15 in (4mm) below the oil level hole.

8. Oil plug locations

All gear units are assembled with the oil fill-level, oil-drain and vent plugs installed in their proper locations, according to the specified mounting position. All standard plugs are metric and utilize sealing gaskets between the head of the plug and the reducer housing.

9. Drain and fill-level plugs

All reducer drain plugs are metric socket head cap screws. For easier identification, it is NORD's standard practice to provide a hex-head screw for the fill-level plug. For ease of draining the used oil from the gear reducer, use the socket head screw located at the lowest part of the gearbox.


Drain Plug

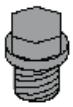
Fill Level Plug

10. Vent plug locations

Reducer venting allows for air pressure differences that occur during operation, between the inner space of the reducer and the atmosphere, while ensuring leak-free operation. The AUTOVENT™ is standard for all vented gear units, unless otherwise noted.

AUTOVENT™ - The AUTOVENT™ helps prevent bearing and gear damage by behaving like a check valve to block the entry of foreign material and prevent lubrication contamination from dust particles, moisture and air-borne process chemicals. The breather opens at approximately 0.3-0.9 psi during operation and closes tightly as the gearbox cools. This option is perfect for humid conditions and wash-down environments, helping to maintain proper oil cleanliness, while reducing foaming and oxidation.

Figure 1 AUTOVENT™ Types


Type 1

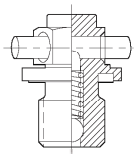

Type 2 with transportation plug

Open Vent - An optional open vent can be supplied by NORD. The open vent comes closed upon delivery with a transportation sealing plug (see Warning).

NOTICE

To prevent build-up of excessive pressure, sealed vents must be activated as shown prior to gear unit start up. Excessive pressure may cause damage to internal components and cause leakage.

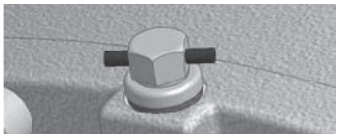
Sealed vent

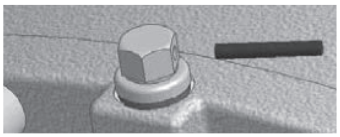
Activated vent

Filtered Vent - NORD may offer an optional filtered vent, which allows gases to permeate, but does not allow dust and debris to pass through the vent.

HELICAL & BEVEL REDUCER LUBRICATION TYPES

Lubrication Tables – Helical and Bevel Gear Units

Standard Oil Lubricants

ISO Viscosity	Oil Type	Ambient Temperature Range	Manufacturer Brand/Type	Notes
VG220	MIN-EP	0 to 40°C (32 to 104°)	Mobilgear 600XP220	♦❶
	PAO-EP	-35 to 60°C (-31 to 140°F)	Mobil SHC Gear 220	♦❷
	FG	-5 to 40°C (23 to 104°F)	Fuchs FM220	♦

Optional Oil Lubricants

ISO Viscosity	Oil Type	Ambient Temperature Range	Manufacturer Brand/Type	Notes
VG460	PAO-EP	-35 to 80°C (-31 to 176°F)	Mobil SHC Gear 460	-
	FG-PAO	-35 to 80°C (-31 to 176°F)	Mobil SHC Cibus 460	-
VG220	FG-PAO	-35 to 60°C (-31 to 140°F)	Mobil SHC Cibus 220	S
VG150	PAO-EP	-35 to 25°C (-31 to 77°F)	Mobil SHC Gear 150	-

Grease Options (applied to greased bearings and seal cavities)

NLGI Grade	Grease Thickener	Grease Base Oil	Ambient Temperature Range	Manufacturer Brand/Type	Notes
NLGI 2	Li-Complex	MIN	-30 to 60°C (-22 to 140°F)	Mobil Grease XHP222	♦❶
	Li-Complex	PAO	-40 to 80°C (-40 to 176°F)	Mobil / Mobilith SHC 220	♦❷
	Polyurea	FG-PAO	-30 to 80°C (-22 to 176°F)	Mobil SHC Polyrex 222	♦

♦ Stocked Lubricants

❶ Standard product on serviceable gear units

❷ Standard product on maintenance free gear units

IMPORTANT NOTE

- The "Ambient Temperature" is intended to be an operation guideline based upon the typical properties of all the lubricant. The viscosity and other properties of the lubricant change based upon load, speed, ambient conditions, and reducer operating temperatures. The user should consult with their lubrication supplier & NORD gear before considering changes in oil type or viscosity.
- To prevent reducer overheating, observe the maximum operating oil temperature limits:
  Mineral Oil: 80-85 °C (176 – 180 °F).
  Synthetic Oil: 105 °C (225 °F).
- In the following instances, please consult NORD for specific recommendations:
  - √ Gear units will operate in high ambient temperature conditions exceeding 40 °C (104 °F).
  - √ Gear units will operate in cold ambient temperature conditions approaching 0 °C (32 °F) or lower.
  - √ Lower than an ISO VG100 viscosity oil is being considered for a cold-temperature service.
  - √ Fluid grease is required for lubricating the gear unit.
- Observe the general lubrication guidelines outlined in user manual U10750.

Oil Formulation Codes

MIN-EP - Mineral Oil with EP Additive
PAO-EP - Synthetic Polyalphaolefin Oil with EP Additive
PAO - Synthetic Polyalphaolefin Oil
PG - Synthetic Polyglycol Oil
FG - Food-Grade Oil
FG-PAO - Food-Grade, Synthetic Poyalphaolefin Oil
FG-PG - Food-Grade, Synthetic Polyglycol Oil

Lubrication Notes

- Avoid using (EP) gear oils in worm gears that contain sulfur-phosphorous chemistries, as these additives can react adversely with bronze worm gears and accelerate wear.
- Food grade lubricants must be in compliance with FDA 212 CFR 178.3570 and qualify as a NSF-H1 lubricant. Please consult with lubrication manufacturer for more information.
- When making a lubrication change, check with the lubrication supplier to assure compatibility and to obtain recommended cleaning or flushing procedures.
- Do not to mix different oils with different additive packages or different base oil formulation types. Polyglycol (PG) oils are not miscible with other oil types and should never be mixed with mineral oil or polyalphaolefin (PAO) synthetic oil.

HELICAL & BEVEL REDUCER LUBRICATION TYPES

Oil Cross-reference Chart

ISO Viscosity	Oil Type	Ambient Temperature Range	Mobil	Shell	Castrol	FUCHS	KLÜBER LUBRICATION
VG150	MIN-EP	0 to 25°C (32 to 77°F)	Mobilgear 600XP150	Omala S2 G 150	Alpha SP150	Renolin EP150	Klüberoil GEM 1-150N
	PAO-EP	-30 to 25 °C (-22 to 77 °F)	Mobil SHC Gear 150	Omala S4 GX 150	Alphasyn EP150	Gearmaster SYN150/NA	Klübersynth EG 4-150
	PAO	-30 to 25°C (-22 to 77°F)	Mobil SHC629	Morlina S4 B 150	Alphasyn T150	N/A	Klübersynth GEM 4-150N
	PG	-25 to 25°C (-13 to 77°F)	Mobil Glygoyle 150	Omala S4 WE 150	Alphasyn PG150	Renolin PG150	Klübersynth GH 6-150
	FG	0 to 25°C (32 to 77°F)	Mobil DTE FM 150	N/A	N/A	N/A	N/A
	FG-PAO	-15 to 25°C (5 to 77°F)	Mobil SHC Cibus 150	N/A	N/A	Cassida GL150	Klüberoil 4 UH 1-150N
	FG-PG	-25 to 25°C (-13 to 77°F)	Mobil Glygoyle 150	N/A	N/A	N/A	Klübersynth UH1 6-150
VG220	MIN-EP	0 to 40°C (32 to 104°)	Mobilgear 600XP220	Omala S2 G 220	Alpha SP220	Renolin EP220	Klüberoil GEM 1-220N
	PAO-EP	-30 to 60 °C (-22 to 140 °F)	Mobil SHC Gear 220	Omala S4 GX 220	Alphasyn EP220	Gearmaster SYN220/NA	Klübersynth EG 4-220
	PAO	-30 to 60°C (-22 to 140°F)	Mobil SHC630	Morlina S4 B 220	Alphasyn T220	N/A	Klübersynth GEM 4-220N
	PG	-25 to 60°C (-13 to 140°F)	Mobil Glygoyle 220	Omala S4 WE 220	Alphasyn PG220	Renolin PG220	Klübersynth GH 6-220
	FG	0 to 40°C (32 to 104°F)	Mobil DTE FM 220	N/A	N/A	Fuchs FM220	N/A
	FG-PAO	-25 to 60°C (-13 to 140°F)	Mobil SHC Cibus 220	N/A	N/A	Cassida GL220	Klüberoil 4 UH 1-220N
	FG-PG	-25 to 60°C (-13 to 140°F)	Mobil Glygoyle 220	N/A	N/A	Cassida WG220	Klübersynth UH1 6-220
VG460	MIN-EP	0 to 40°C (32 to 104°F)	Mobilgear 600XP460	Omala S2 G 460	Alpha SP460	Renolin EP460	Klüberoil GEM 1-460N
	PAO-EP	-20 to 80°C (-4 to 176°F)	Mobil SHC Gear 460	Omala S4 GX 460	Alphasyn EP460	Gearmaster SYN460/NA	Klübersynth EG 4-460
	PAO	-20 to 80°C (-4 to 176°F)	Mobil SHC 634	Morlina S4 B 460	Alphasyn T460	N/A	Klübersynth GEM 4-460N
	PG	-20 to 80°C (-4 to 176°F)	Mobil Glygoyle 460	Omala S4 WE 60	Alphasyn PG460	N/A	Klübersynth GH 6-460
	FG	0 to 40°C (32 to 104°F)	Mobil DTE FM460	N/A	N/A	Fuchs FM460	N/A
	FG-PAO	-20 to 80°C (-4 to 176°F)	Mobil SHC Cibus 460	N/A	N/A	Cassida GL460	Klüberoil 4 UH 1-460N
	FG-PG	-20 to 80°C (-4 to 176°F)	Mobil Glygoyle 460	N/A	N/A	Cassida WG460	Klübersynth UH1 6-460

Low-end service temperature limit may vary for a specific lubricant; Please also see the important notes on Page 1.

92.1/93.1 SERIES HELICAL-BEVEL OIL FILL QUANTITIES

92.1/93.1 Helical-bevel mount lubrication

All NORD Gear reducers are shipped from the factory with a pre-determined oil fill level in accordance to the specified reducer size & mounting position. For additional information, please refer to the "Oil Plug & Vent Locations" documentation for your gear unit.

IMPORTANT NOTE

Actual oil volume can vary slightly depending upon the gear case size, mounting and ratio. Prior to commissioning the reducer, check the oil-fill level using the reducer's oil level plug and drain or add addition oil as needed.

For mounting orientations other than shown please consult NORD Gear. Reducer modifications may be required.

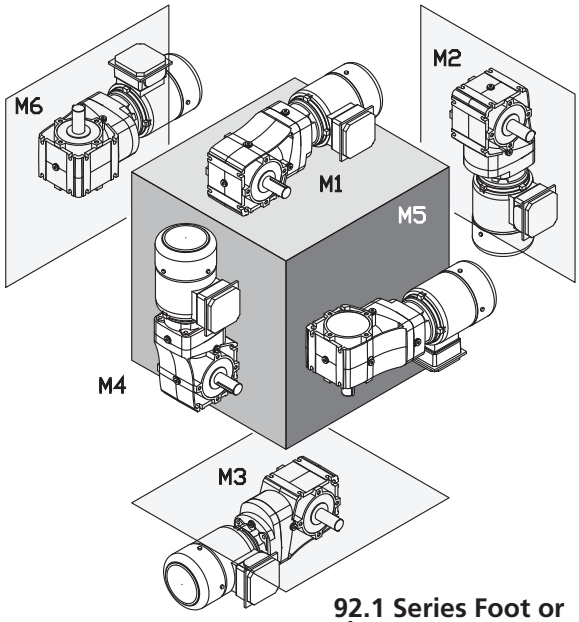

92.1 Series Foot or Flange Mount

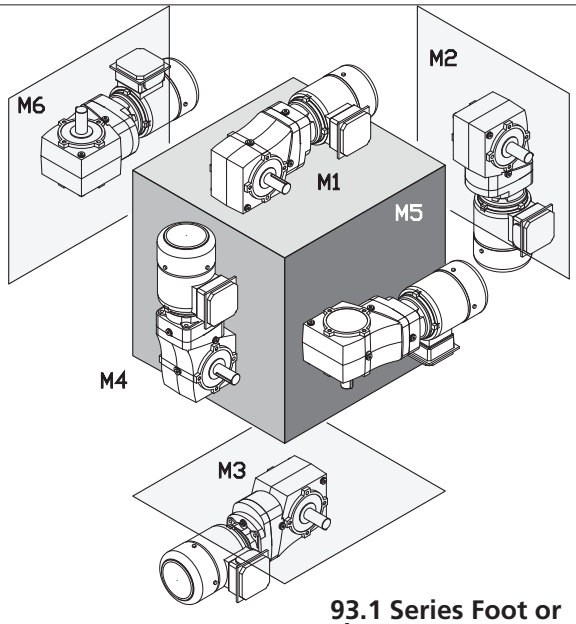

93.1 Series Foot or Flange Mount

92.1 Series Oil Fill

Type	M1		M2		M3		M4		M5		M6	
	Quarts	Liters	Quarts	Liters	Quarts	Liters	Quarts	Liters	Quarts	Liters	Quarts	Liters
SK 920072.1	0.22	0.21	0.50	0.47	0.22	0.36	0.22	0.34	0.22	0.28	0.22	0.28
SK 92072.1	0.28	0.26	0.52	0.49	0.44	0.42	0.57	0.54	0.31	0.29	0.33	0.31
SK 92172.1	0.36	0.34	0.65	0.61	0.55	0.52	0.71	0.67	0.44	0.42	0.51	0.48
SK 92372.1	0.45	0.43	0.97	0.92	0.77	0.73	0.88	0.83	0.58	0.55	0.65	0.61
SK 92672.1	0.90	0.85	1.69	1.60	1.27	1.20	1.59	1.50	1.08	1.02	1.08	1.02
SK 92772.1	1.37	1.30	2.80	2.65	1.97	1.86	2.85	2.70	1.69	1.60	1.69	1.60

Oil levels shown apply to all foot & flange mounted units.

93.1 Series Oil Fill

Type	M1		M2		M3		M4		M5		M6	
	Quarts	Liters	Quarts	Liters	Quarts	Liters	Quarts	Liters	Quarts	Liters	Quarts	Liters
SK 930072.1	0.30	0.28	0.69	0.65	0.22	0.56	0.22	0.54	0.22	0.39	0.22	0.39
SK 93072.1	0.41	0.39	0.98	0.93	0.83	0.79	1.08	1.02	0.52	0.49	0.66	0.62
SK 93172.1	0.63	0.60	1.24	1.17	0.99	0.94	1.29	1.22	0.69	0.65	0.90	0.85
SK 93372.1	1.06	1.00	2.08	1.97	1.74	1.65	2.26	2.14	1.18	1.12	1.42	1.34
SK 93672.1	1.90	1.80	3.41	3.23	2.86	2.71	4.02	3.80	2.13	2.02	2.59	2.45
SK 93772.1	2.87	2.72	4.89	4.63	3.91	3.70	6.13	5.80	3.10	2.93	3.43	3.25

Oil levels shown apply to all foot & flange mounted units.

92.1/93.1 SERIES HELICAL-BEVEL OIL PLUG & VENT LOCATIONS

Oil plug locations

Prior to commissioning the reducer, check the oil-fill level using the reducer's oil-level plug and drain or add additional oil as needed. ***For mounting orientations other than shown please consult NORD Gear. New plug locations may be required.***

92.1 Series

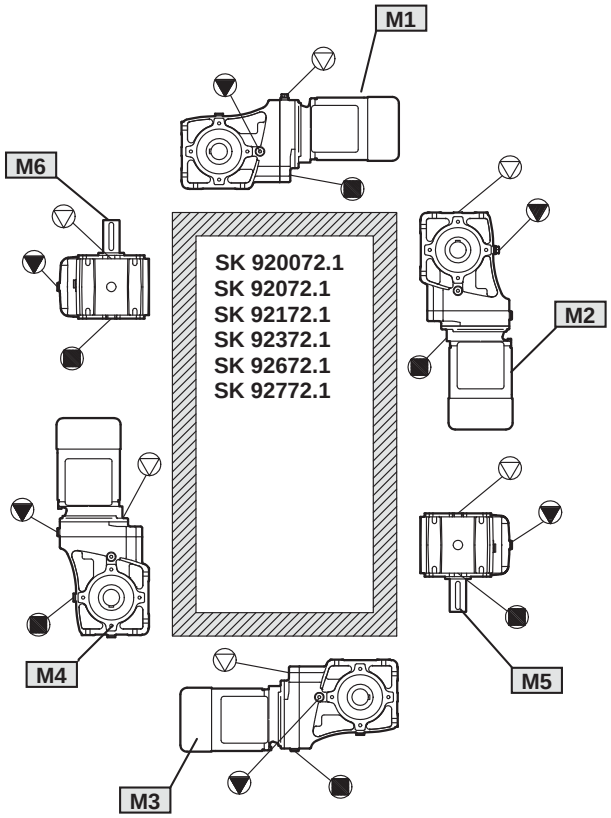

93.1 Series

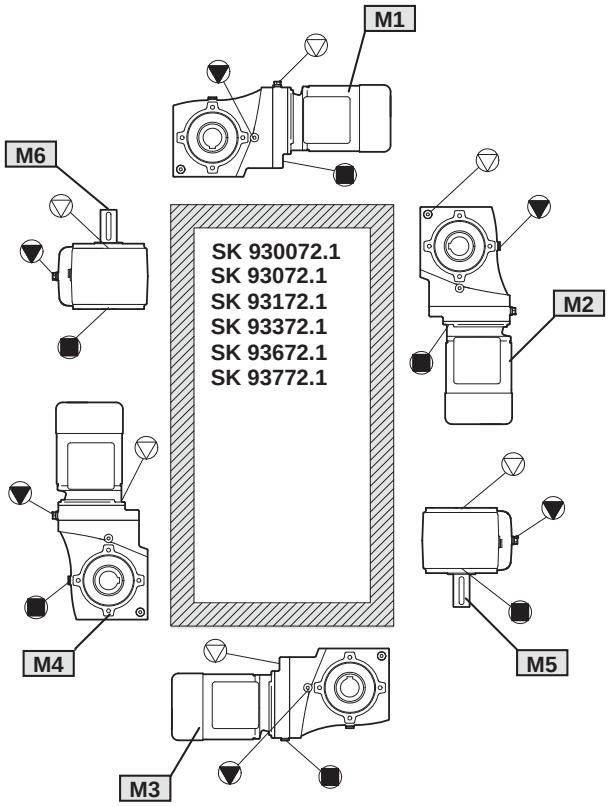

▽ = Vent

▼ = Oil Level

■ = Oil Plug

Intelligent Drivesystems, Worldwide Services

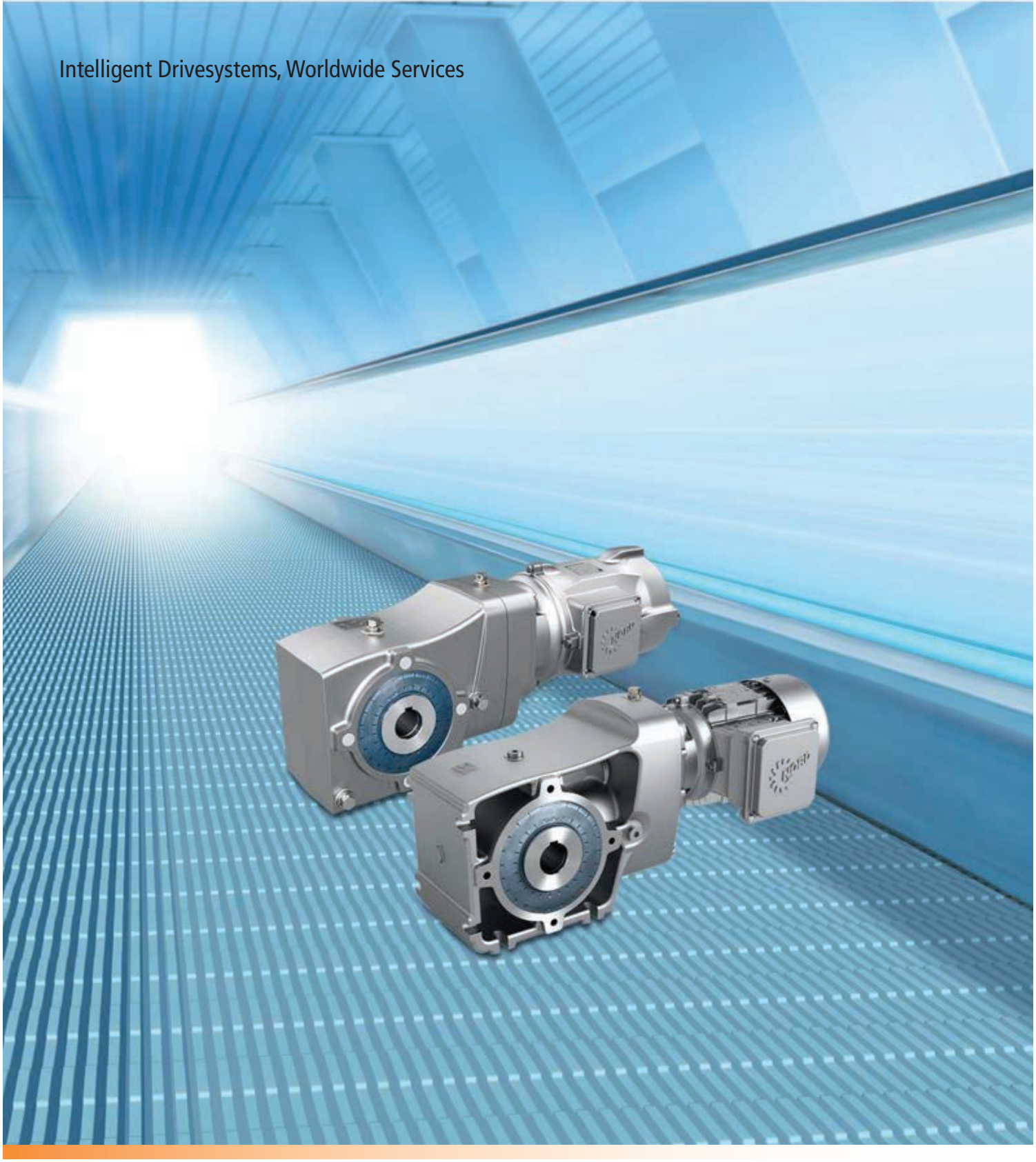

DE EN FR

PL1014

SK 920072.1 - SK 93772.1

Ersatzteilkatalog 2-stufige Kegelradgetriebe
Spare parts catalogue 2-stage helical bevel gear unit
Catalogue de pièces de rechange Couple coniques à 2 trains

NORD DRIVESYSTEMS

Allgemeine Ersatzteile
General parts list
Vues éclatées et nomenclature



2-stuf ge Kegelradgetriebe.....2 - 5
2-stage helical bevel gear unit
Couples coniques à 2 trains



Bestellangaben.....6 - 7
Order details
Informations de commande



2-stufige Kegelradgetriebe
2-stage Helical-Bevel Gear Unit
Couples coniques à 2 trains

EB 6239000-E1 #1

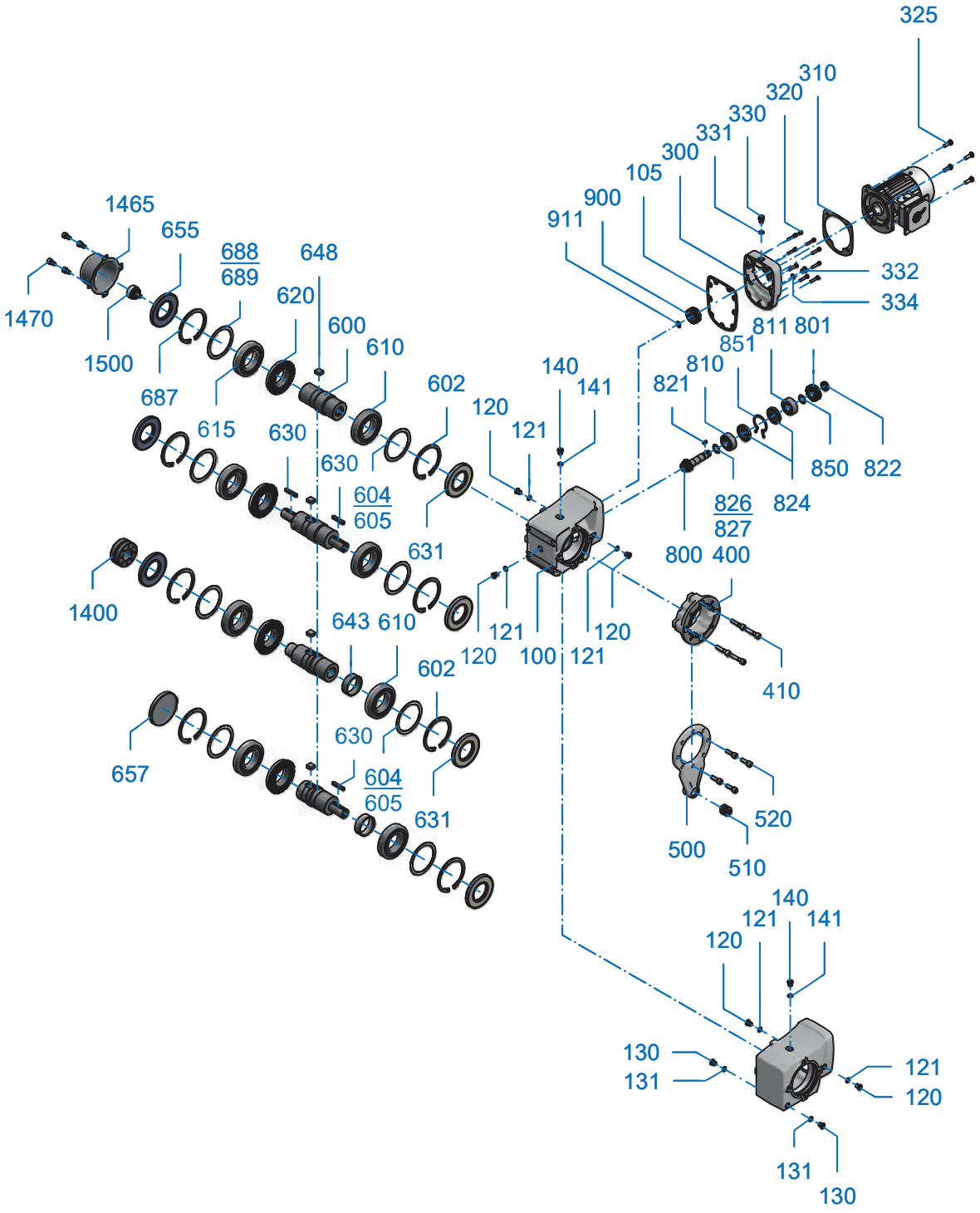



DE		EN		FR	
100	Gehäuse	100	Housing	100	Boîtier
105	Dichtung	105	Seal	105	Bague d’étanchéité
120	Schraube	120	Screw	120	Vis
121	Dichtung	121	Seal	121	Bague d’étanchéité
130	Schraube	130	Screw	130	Vis
131	Dichtung	131	Seal	131	Bague d’étanchéité
140	Schraube	140	Screw	140	Vis
141	Dichtung	141	Seal	141	Bague d’étanchéité
300	Getriebedeckel	300	Gear unit cover	300	Couvercle du réducteur
310	Dichtung	310	Seal	310	Bague d’étanchéité
320	Schraube	320	Screw	320	Vis
325	Schraube	325	Screw	325	Vis
330	Schraube	330	Screw	330	Vis
331	Dichtung	331	Seal	331	Bague d’étanchéité
332	Schraube	332	Screw	332	Vis
334	Dichtung	334	Seal	334	Bague d’étanchéité
400	Flansch	400	Flange	400	Brigde
410	Schraube	410	Screw	410	Vis
500	Drehmomentenstütze	500	Torque arm	500	Bras de réaction
510	Buchse	510	Socket	510	Douille
520	Schraube	520	Screw	520	Vis
600	Abtriebswelle	600	Output shaft	600	Arbre de sortie
610	Wälzlager	610	Roller bearing	610	Palier
615	Wälzlager	615	Roller bearing	615	Palier
620	Abtriebsrad	620	Output gear	620	Roue de sortie
630	Passfeder	630	Key	630	Clavette
631	Wellendichtring	631	Radial shaft seal	631	Bague d’étanchéité de l’arbre
634	Sicherungsring	650	Circlip	650	Circlip
635	Passscheibe	635	Shim	635	Rondelles d’ajustage
636	Passscheibe	636	Shim	636	Rondelles d’ajustage
643	Distanzbuchse	643	Socket	510	Douille
648	Passfeder	648	Key	648	Clavette
650	Sicherungsring	650	Circlip	650	Circlip
652	Passscheibe	652	Shim	652	Rondelle d’ajustage
653	Passscheibe	653	Shim	653	Rondelle d’ajustage
655	Wellendichtring	655	Radial shaft seal	655	Bague d’étanchéité de l’arbre
657	Verschlusskappe	657	Sealing cap	657	Bouchon
↓		↓		↓	



2-stufige Kegelradgetriebe
2-stage Helical-Bevel Gear Unit
Couples coniques à 2 trains

EB 6239000-E1 #1

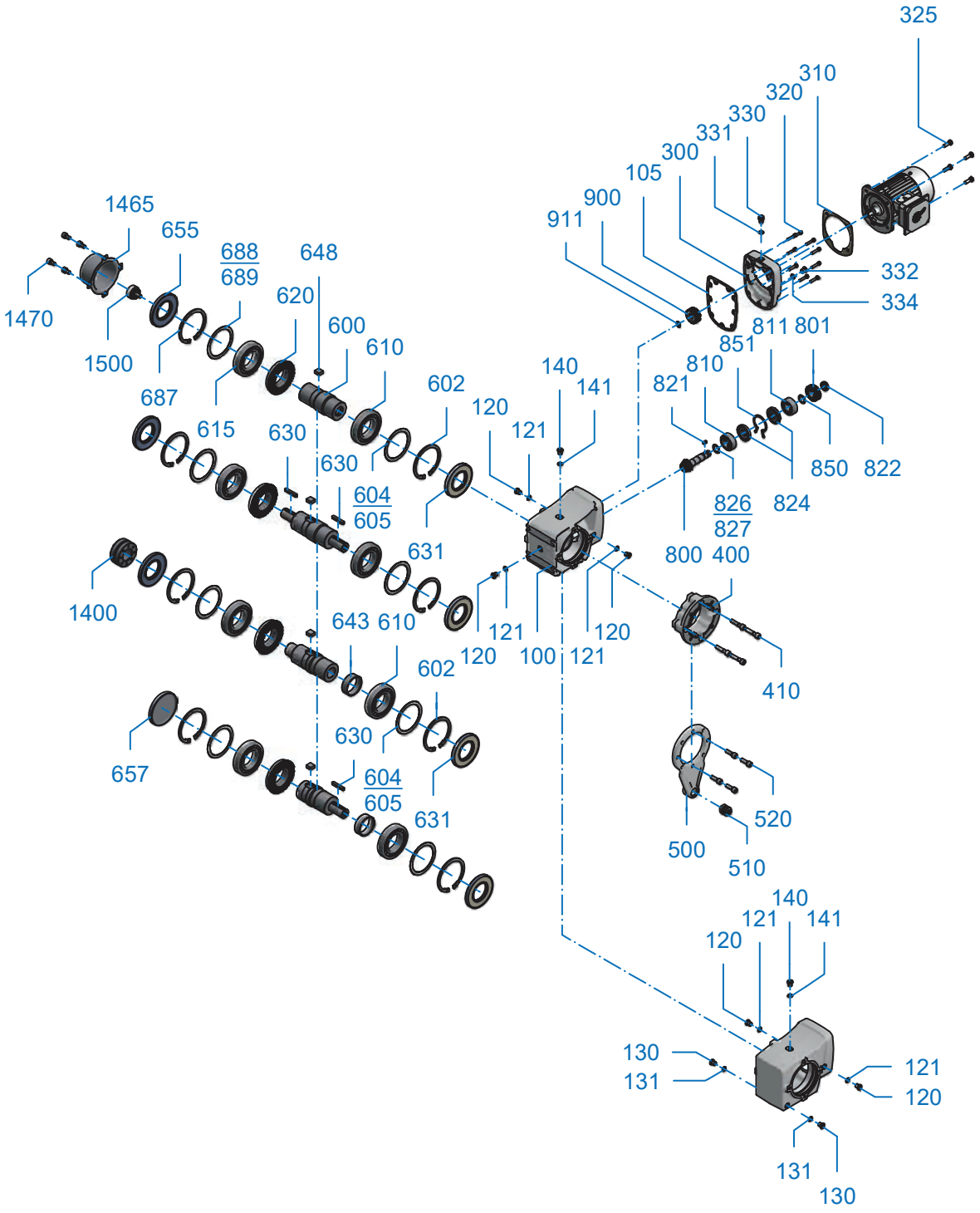



	DE		EN		FR
800	Ritzelwelle	800	Pinion shaft	800	Arbre de pignon
801	Antriebsrad	801	Drive gear	801	Roue d’entrée
810	Wälzlager	810	Roller bearing	810	Palier
811	Wälzlager	811	Roller bearing	811	Palier
820	Sicherungsring	820	Circlip	820	Circlip
821	Passfeder	630	Key	630	Clavette
822	Nutmutter	822	Locknut	822	Ecrou à encoches
823	Sicherungsblech	823	Tab washer	823	Rondelle d‘arrêt
824	Buchse	824	Socket	824	Douille
826	Passscheibe	826	Shim	826	Rondelle d’ajustage
827	Passscheibe	827	Shim	827	Rondelle d’ajustage
830	Stützscheibe	830	Supporting disc	830	Rondelle d‘appui
850	Buchse	850	Socket	850	Douille
851	Sicherungsring	851	Circlip	851	Circlip
900	Antriebsritzel	900	Driving pinion	900	Pignon d’entrée
910	Passfeder	910	Key	910	Clavette
911	Sicherungsring	911	Circlip	911	Circlip
1400	Baugruppe Schrumpfscheibe	1400	Shrink disc assembly	1400	Module de frette de serrage
1465	Haube	1465	Cover	1465	Capot
1470	Schraube	1470	Screw	1470	Vis
1500	Befestigungselement	1500	Fixing element	1500	Elément de f xation

Kontaktdaten / Contact details / Contacts:

Firma / Company / Entreprise:

Straße / Street / Rue:

Stadt / Town / Ville:

PLZ / Postcode/
Code postal:

Telefon / Telephone / Téléphone:

Fax:

E-mail:





Getriebebau NORD

Getriebebau-Nord-Straße 1
D-22941 Bargteheide

Telefon +49(0) 4532/289-0
Telefax +49(0) 4532/289-2253
E-Mail info@nord.com
www.nord.com

DE

Diese NORD Ersatzteilliste beinhaltet eine standardisierte Darstellung der NORD Getriebe. Um Ihnen das Finden und Nachbestellen von Ersatzteilen zu erleichtern, finden Sie am Ende der Ersatzteilliste ein Bestellformular mit wichtigen Hinweisen zur Bestimmung der richtigen Teile.

Für Rückfragen stehen wir Ihnen gerne zur Verfügung. Ihren lokalen Ansprechpartner finden Sie unter http://locator.nord.com.

EN

This NORD spare parts list contains a standardised depiction of NORD gear units. In order to enable you to find and re-order replacement parts more easily, you can find an order form and important information regarding the identification of the correct components at the end of this spare parts list.

We will be glad to help you if you have any queries: You can find your local contact partner under http://locator.nord.com.

FR

Cette liste de pièces de rechange NORD contient une représentation standard des réducteurs NORD. Pour faciliter la recherche et la commande de pièces de rechange, un formulaire de commande se trouve à la fin de la liste des pièces de rechange et vous donne toutes les informations essentielles pour déterminer les pièces dont vous avez besoin.

En cas de questions, n'hésitez pas à nous contacter. Pour connaître votre interlocuteur local, veuillez consulter le site http://locator.nord.com.

Erläuterung des Typenschildes
Explanation of the rating plate
Explication de la plaque signalétique

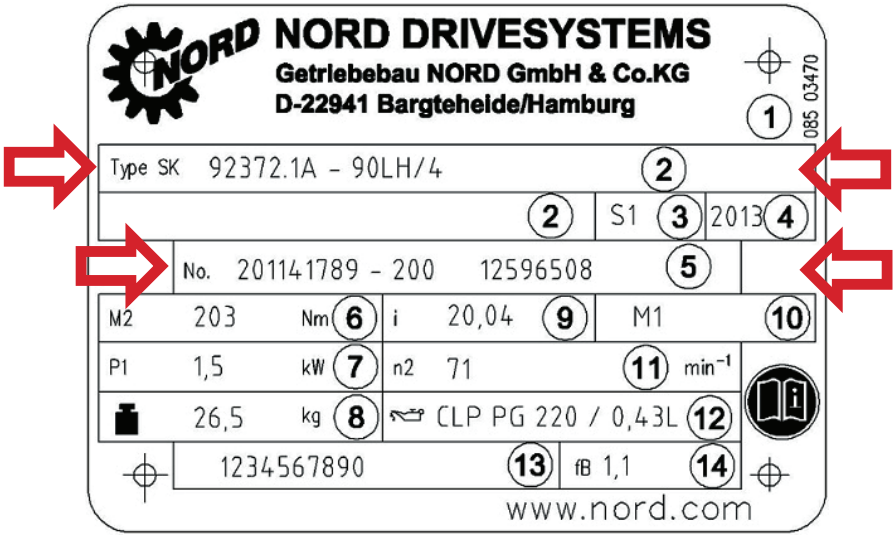

DE

1 Matrix – Barcode
2 NORD - Getriebetyp
3 Herstellungsjahr
4 Fabrikationsnummer
5 Nenndrehmoment der Getriebeabtriebswelle
6 Antriebsleistung
7 Gewicht entsprechend Auftragsausführung
8 Gesamte Getriebeübersetzung
9 Einbaulage
10 Nenndrehzahl der Getriebeabtriebswelle
11 Schmierstoffart, -viskosität und –menge
12 Kundenmaterialnummer
13 Betriebsfaktor

EN

1 Matrix – Barcode
2 NORD gear unit type
3 Year of manufacture
4 Serial number
5 Rated torque of gear unit output shaft
6 Drive power
7 Weight according to ordered version
8 Overall gear unit ratio
9 Installation orientation
10 Rated speed of gear unit output shaft
11 Lubricant type, viscosity and quantity
12 Customer's part number
13 Operating factor

FR

1 Code matriciel, à barres
2 Type de réducteur NORD
3 Année de fabrication
4 Numéro de série
5 Couple nominal de l'arbre de sortie du réducteur
6 Puissance d'entraînement
7 Poids selon l'exécution du contrat
8 Rapport de réduction total
9 Position de montage
10 Vitesse de rotation nominale de l'arbre de sortie du réducteur
12 Type de lubrif ant, viscosité et quantité
12 Numéro d'article client
13 Facteur de service

Ersatzteil-Bestellung / Replacement parts order / Commande de pièces de rechange:

Bezeichnung / Designation / Désignation:

Pos.-Nr. / Item No. / N° pos :

Stückzahl / Pieces / Quantité:

Getriebetyp / Gear unit type / Type de réducteur:

Fabrikationsnummer / Serial No. / Numéro de série:



NORD DRIVESYSTEMS Group

Headquarters and Technology Centre
in Bargteheide, close to Hamburg

Innovative drive solutions
for more than 100 branches of industry

Mechanical products
parallel shaft, helical gear, bevel gear and worm gear units

Electrical products
IE2/IE3/IE4 motors

Electronic products
centralised and decentralised frequency inverters,
motor starters and f eld distribution systems

7 state-of-the-art production plants
for all drive components

Subsidiaries in 36 countries on 5 continents
provide local stocks, assembly, production,
technical support and customer service

More than 3,500 employees throughout the world
create customer oriented solutions

www.nord.com/locator

Headquarters:

Getriebebau NORD GmbH & Co. KG
Getriebebau-Nord-Straße 1
22941 Bargteheide, Germany
Fon.: +49 (0) 4532 / 289 - 0
Fax: +49 (0) 4532 / 289 - 2253

Member of the NORD DRIVESYSTEMS Group

NORD DRIVESYSTEMS

Mat.Nr. 6002699/3117

TROUBLESHOOTING

Troubleshooting

This section identifies some of the most common issues involved with NORD Gear speed reducers , and provides recommendations to assist you in defining and answering your questions as you work with our products. You may also contact our Engineering/Application departments if your questions are not answered in the table below.

Problem With the Reducer		Possible Causes	Suggested Remedy
Runs Hot	Overloading	Load exceeds the capacity of the reducer	Check rated capacity of reducer, replace with unit of sufficient capacity or reduce the load.
	Improper lubrication	Insufficient lubrication	Check lubricant level and adjust up to recommended levels
		Excessive lubrication	Check lubricant level and adjust down to recommended levels.
		Wrong lubrication	Flush out and refill with correct lubricant as recommended
Runs Noisy	Loose foundation bolts	Weak mounting structure	Inspect mounting of reducer. Tighten loose bolts and/or reinforce mounting and structure.
		Loose hold down bolts	Tighten bolts
	Failure of bearings	May be due to lack of lubricant	Replace bearing. Clean and flush reducer and fill with recommended lubricant.
		Overload	Check rated capacity of reducer.
	Insufficient lubricant	Level of lubricant in reducer not properly maintained.	Check lubricant level and adjust to factory recommended level.
Output shaft does not turn	Internal parts are broken or missing	Overloading of reducer can cause damage	Replace broken parts. Check rated capacity of reducer.
		Key missing or sheared off on input shaft.	Replace key.
		Coupling loose or disconnected	Properly allign reducer and coupling. Tighten coupling.
Oil Leakage	Worn seals	Caused by dirt or grit entering seal.	Replace seals. Autovent may be clogged. Replace or clean.
	Unit runs hot or leaks	Overfilled reducer	Check lubricant level and adjust to recommended level.
		Vent clogged.	Clean or replace, being sure to prevent any dirt from falling into the reducer.
	Incorrect fill level	Improper mounting position, such as wall or ceiling mount of horizontal reducer.	Check mounting position on the name tag & verify with mounting chart in manual.

Technical Documentation

PDH00545C

Optim TEFC | AEHH8N

Date: September 27, 2018

TECO Westinghouse
MOTORS (CANADA) INC.

Date: September 27, 2018

Dimensional Drawing

Catalogue	Model	HP	Pole	kW	Rating	Voltage	Hz	RPM
PDH00545C	AEHH8N	5	4	3.7	Continuous	575 V	60	1800

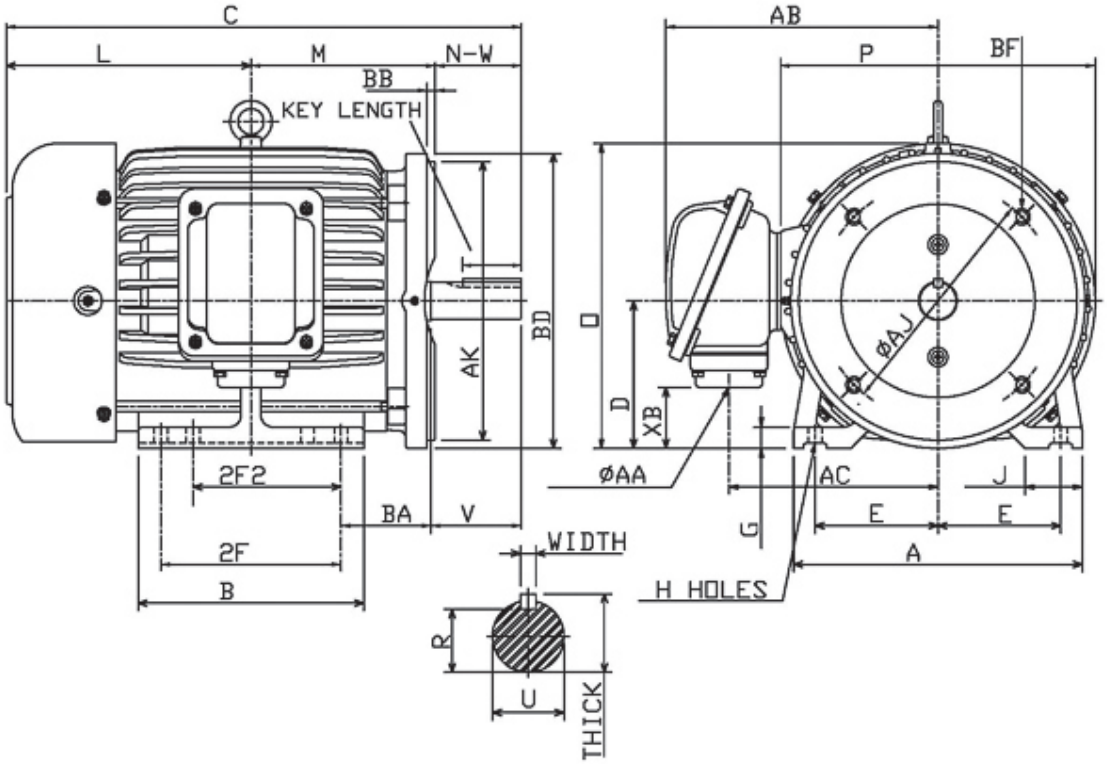

Frame Size	Mounting					A	B	C	CD	D
	E	2F	2F2	H	BA					
184TC	3.75	5.5	4.5	0.41	2.75	8.8	6.9	15.73		4.5

G	J	K	L	M	O	P	T	Key			Keyseat
								Width	Thick	Length	R
0.65	1.75		7.48	5.37	9.31	9.61	1.19	0.25	0.25	1.78	0.986

Terminal Housing				Aux Box		C/D Flange					
AA	AB	AC	XB	AE	AX	BB	AH	AK	BD	AJ	BF
3/4 NPT	8.31	6.38	1.86			0.25	2.62	8.5	9	7.25	1/2-13UNC

Shaft Extension			Bearings		Approx. Weight Lbs	SPL dBA/3ft	Ins. Class	S.F.	Drive Method	Dimensions
N-W	U	V	DE	NDE						
2.75	1.125	2.7	6306ZZ	6306ZZ	110	54	F	1.15	Direct Coupling / Belt Drive	Inches

TECO Westinghouse MOTORS (CANADA) INC.	
	Date: September 27, 2018

Technical Data Sheet

Motor Type: AEHH8N	Catalogue No: PDH00545C

Nameplate Information

HP	Pole	RPM	Frame	Voltage	Hz	Phase
5	4	1745	184TC	575	60	3
Enclosure	Ins. Class	Service Factor	Time Rating	NEMA Design	Rated Amb.	Rated Altitude
TEFC	F	1.15	Continuous	B	-40 to 40 °C	<3300 ft

Typical Performance

Efficiency (%)				Power Factor (%)		
Full Load		3/4 Load	1/2 Load	Full Load	3/4 Load	1/2 Load
Nom.	Min.					
89.5	87.5	88.5	88.5	85.5	81.5	71.5

Torque				Current (A)		
Full Load (lb-ft)	Locked Rotor (% FLT)	Pull Up (% FLT)	Break Down (% FLT)	No Load	Full Load	Locked Rotor
15.04	185	140	285	1.8	4.9	37

NEMA KVA Code	Inertia (WR^2)			Safe Stall Time (s)		Noise Level Sound Press. dB(A)
	Rotor ($lb\text{-}ft^2$)	NEMA Load ($lb\text{-}ft^2$)	Max. Allowable ($lb\text{-}ft^2$)	Cold	Hot	
J	0.422	27.0	88.0	35	25	54

VFD Duty Information

Speed Range			VFD		S.F.
Constant Torque	Variable Torque	Constant Power	Carrier	Type	
6-60Hz	3-60Hz	60-120Hz	≤ 5 kHz	VPWM or CPWM	1.0 Only

Additional Information

Bearings		Approx. Weight
DE	NDE	lbs
6306ZZ	6306ZZ	110

Hazardous Locations Information

CSA Certified	
Class I, Div 2, Groups B, C & D Class I, Zone 2, Groups IIB+H2, IIB & IIA	
Temp Code (Sinewave / VFD)	T3C / T3C

TECO Westinghouse MOTORS (CANADA) INC.	
	Date: September 27, 2018

Nameplate Drawing

Optim TEFC

TYPE	AEHH8N	CAT. NO.	PDH00545C		
OUTPUT	5 HP 3.7 kW	FRAME	184TC	TEFC	
R.P.M.	1745	POLE	4	INS.	F
VOLTS	575	PHASE	3	Hz	60
AMPS	4.9	CODE	J	S.F.	1.15
AMBIENT	40 °C	NOM. EFF. 89.5		MIN. EFF. 87.5	
BEARINGS	6306ZZ / 6306ZZ			RATING Cont.	

SER. NO.	TBD	DESIGN	B	WT. 110 LBS

PWM VFD DUTY	VT	CT	CP	S.F.
	3-60Hz	6-60Hz	60-120Hz	1.0 Only

Connection Diagram

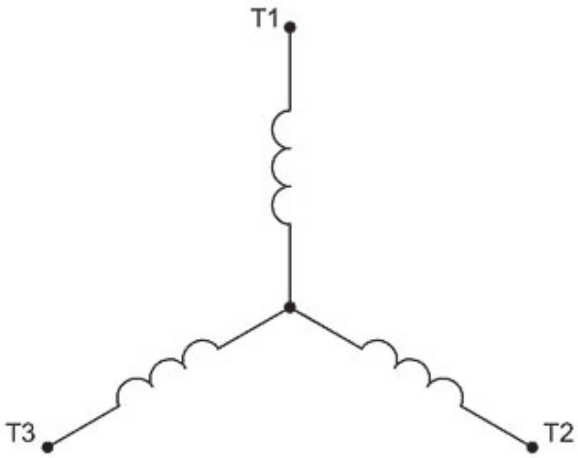

3 LEAD SINGLE VOLTAGE WYE					
VOLTAGE	CONN.	L1	L2	L3	
-	WYE	1	2	3	

WD_3Y

TECO Westinghouse MOTORS (CANADA) INC.	
	Date: September 27, 2018

Thermal Limit Curves

Motor Type: AEHH8N	Catalogue No: PDH00545C	Family: Optim TEFC

HP	5	Safe Stall Time		Full Load A	0.0 / 4.9 A
Voltage	0 / 575V 60Hz	Hot	25 s	Locked Rotor A	757 %
RPM	1800	Cold	35 s	Locked Rotor A	0.0 / 37 A

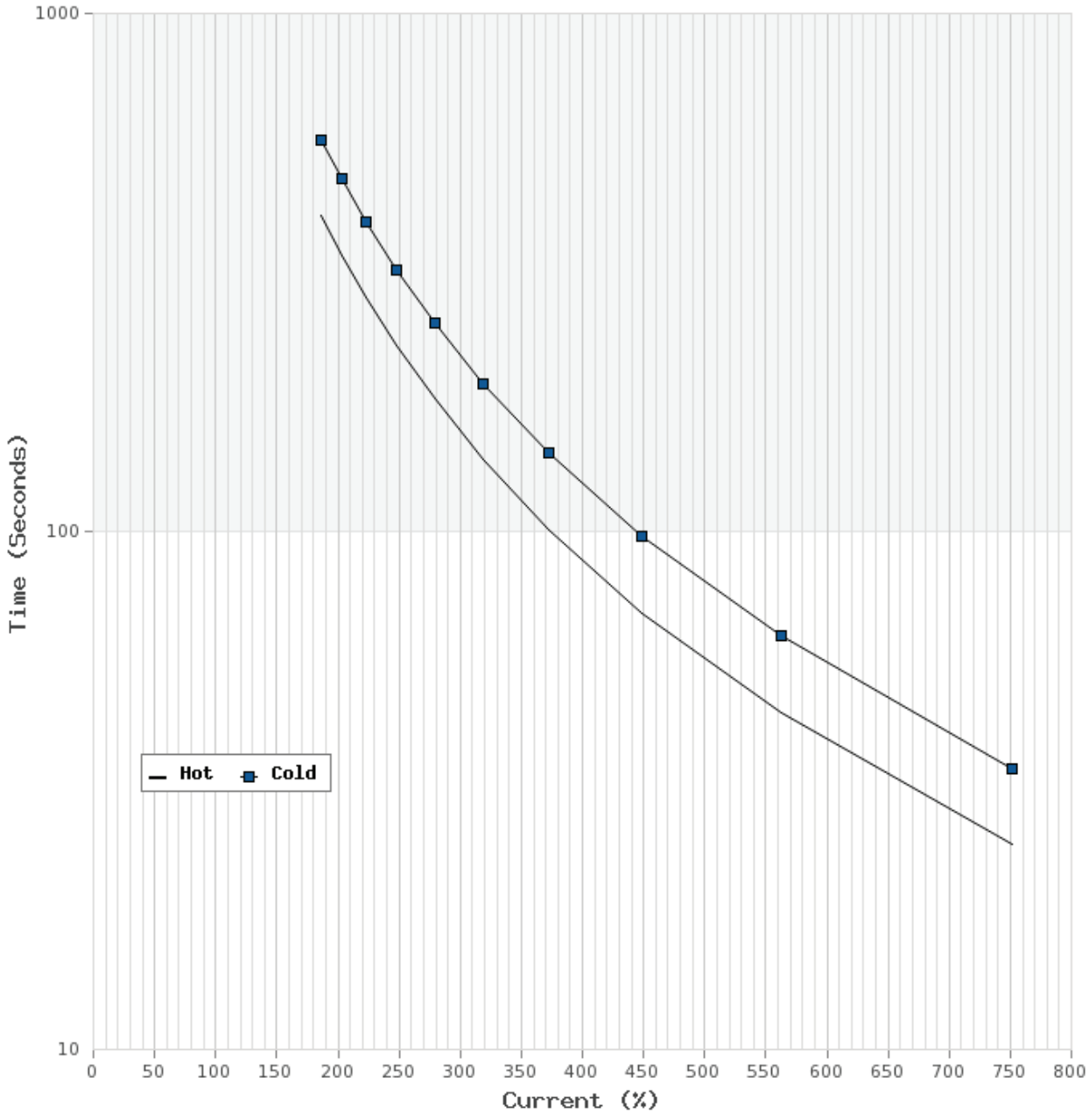

TECO Westinghouse MOTORS (CANADA) INC.	
	Date: September 27, 2018

T-N and I-N Curves

Motor Type: AEHH8N	Catalogue No: PDH00545C	Family: Optim TEFC

HP	5	Full Load T	15.04 lb-ft	Full Load A	4.9 A
Voltage	575V 60Hz	Locked Rotor T	185 %	Locked Rotor A	37.0 A
RPM	1800	Pull Up T	140 %	Break Down T	285 %

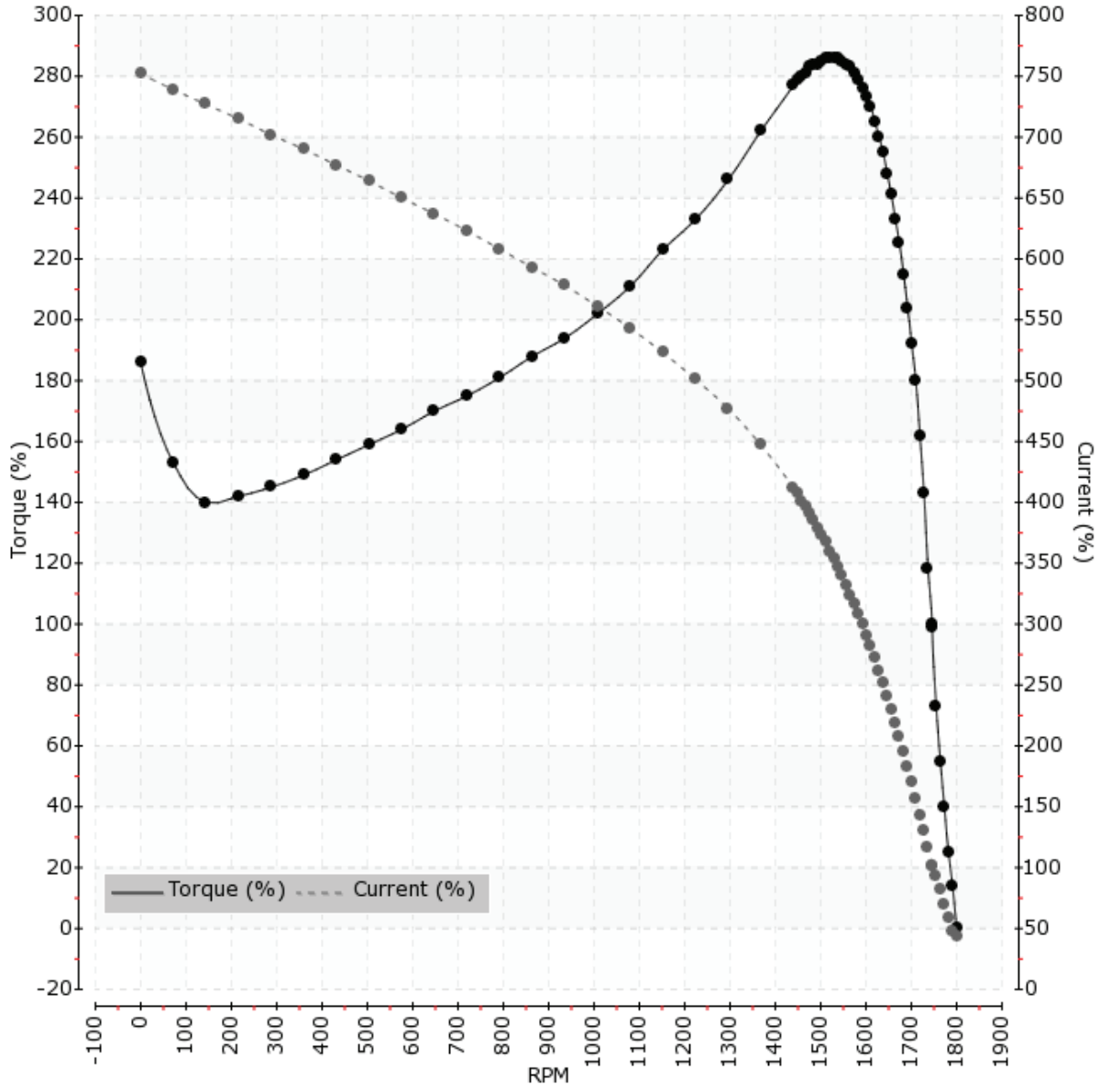

This page is intentionally left blank

CS-999-120 : Identification sheet

VWTC PROJECT NUMBER:	Iqaluit WWTP	REV:	01
PROJECT NAME:	5000218036	SUBMITTED TO (COMPANY):	
ENGINEER:	G. HÉBERT	SUBMITTED TO (RESPONSIBLE)	
PROJECT MANAGER:	C. BEKAERT	PROJECT NUM REFERENCE.:	
PHONE NUMBER:		LOT NUMBER:	

SUPPLIER	EQPT CODE	EQPT TAG NO	DIA	DESCRIPTION	INFO 1	INFO 2	INFO 3	APPLIC.	NOTE	REV
NETZSCH	ST-999-120	P-02-610		TRANSFER PUMP TWAS	NETZSCH PC PUMP MODEL NM031BY01L06B COMPLETE WITH GEAR REDUCER, MOTOR & BASEPLATE COMPLETE // MATERIALS OF CONSTRUCTION INCLUDE CAST IRON HOUSING, 316 STAINLESS STEEL INTERNALS	1 HP TECO MOTOR, MODEL PDH00145C , 1800 RPM, 575/60/3, INVERTER DUTY, PREMIUM EFFICIENCY WITH A NORD RIGHT ANGLED GEAR REDUCER WITH A GEAR RATIO OF 7.58:1, FLANGE MOUNTED TO PUMP, ALL MOUNTED ON A CARBON STEEL BASEPLATE FOR GROUT, DRIP PAN				1
NETZSCH	ST-999-120	P-02-620		TRANSFER PUMP TWAS	NETZSCH PC PUMP MODEL NM031BY01L06B COMPLETE WITH GEAR REDUCER, MOTOR & BASEPLATE COMPLETE // MATERIALS OF CONSTRUCTION INCLUDE CAST IRON HOUSING, 316 STAINLESS STEEL INTERNALS	1 HP TECO MOTOR, MODEL PDH00145C , 1800 RPM, 575/60/3, INVERTER DUTY, PREMIUM EFFICIENCY WITH A NORD RIGHT ANGLED GEAR REDUCER WITH A GEAR RATIO OF 7.58:1, FLANGE MOUNTED TO PUMP, ALL MOUNTED ON A CARBON STEEL BASEPLATE FOR GROUT, DRIP PAN				1

This page is intentionally left blank

NETZSCH Canada, Inc. 500 Welham Rd., Barrie, On., L4N 8Z7
Ph: 705-797-8426 Fax: 705-797-8427 Toll Free: 1-866-683-7867

Pump Quotation – Technical

Offer: N180503ST-01

NEMO® pump with base plate and drive: NM031BY01L06B

The physical characteristics of the pumped product, the application details, as well as the General Operating Conditions detailed in our offer have been taken from your inquiry or where not specified have been assumed by us. In the event of an order we would ask you to check any assumptions and all details as they will become contractually binding along with the selection of pump model, Drive, all specifications, and materials of construction, based on these details.

Product:		***Content***	***TWAS***
Composition			
Specific Gravity	Assumed	kg/dm³	1.05
Particle size/solid ball size	Allowed	mm	7/28
pH value	Approx.		NA
Solids content (w/w)	approx.	% TS	1-5
Dynamic viscosity	Approx.	cP	30000-63000
Vapour pressure	Approx.	kPaa	NA

Application details:		***Content***	***normal***	***maximum***
Flow rate (Q)	approx.	m³/hr	0.936	1.656
Differential pressure		bar	0.6	1
Suction pressure	Assumed	barg	flooded	Flooded
Discharge pressure	approx.	barg	0.6	1
Pump operating speed	approx.	RPM	120	205
Sliding velocity	approx.	m/s	0.25	0.45
Frequency	approx.	Hz	20	60
Power required at drive shaft	approx.	Kw	0.18	0.3
Running torque	approx.	Nm	11	11
Starting torque	approx.	Nm	23	23
Operating temperature	Assumed	°C	10	20

Assembly specification

installation	horizontal

General operating conditions

Installation area	Inside
ambient Temperature	approx. 20°C
humidity	up to 75%
application type	Continuous operation
operating hours	24 hours/day
service voltage	3/60/575

Painting	coating system	Netzsch Standard

Operating and Maintenance Instructions

Standard documentation in accordance with the 98/37/EG Machinery Directive.
Special documentation is available on request and would be charged for.

number	1
medium	Paper
language for O&M's and spare parts list	English
dispatch method	shipped with pump

NETZSCH Canada, Inc. 500 Welham Rd., Barrie, On., L4N 8Z7
Ph: 705-797-8426 Fax: 705-797-8427 Toll Free: 1-866-683-7867

Offer: N180503ST-01
Date: May 3, 2018
Customer No.:

NEMO® NM031BY01L06B Pump

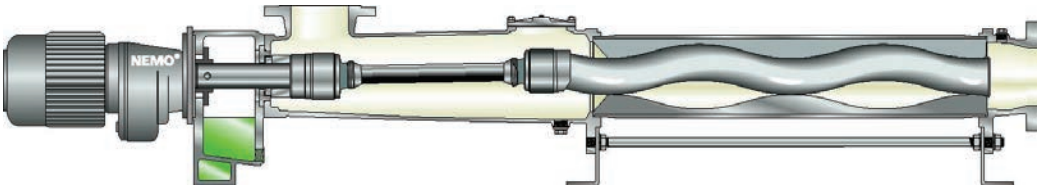

Characteristics and benefits of the NEMO® BY Block pump:

- Reliable and sophisticated construction
- Space-saving construction
- Modular construction system
- 4 different stator – rotor geometries available for most sizes
- Low investment and operating costs
- Low maintenance expenses

General characteristics	
name plate on the pump	in English (Stainless steel)
direction of rotation	to the left, counterclockwise (as viewed from drive end)

Pump Pedastal	
material	Cast iron 0.6025

Pump housing / End connection	
housing material	Cast Iron 0.6025
flange position	Pump#1::Left from DE, Pump#2: Right from DE
function of housing connection	suction connection
nom. dia. & pressure for pump housing	2" – 125# ANSI FF
nom. dia. & pressure of discharge flange	2" – 125# ANSI FF
Function of end connection	discharge connection
housing seals	FPM

Shaft seal	
type	Single mechanical Seal
shaft seal materials	Silicon Carbide Faces – Viton Elastomers
shaft seal type	John Crane Single

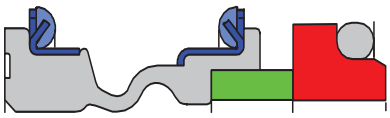

Rotating parts	
rotating parts materials	316 Stainless Steel Internals

NETZSCH Canada, Inc. 500 Welham Rd., Barrie, On., L4N 8Z7
Ph: 705-797-8426 Fax: 705-797-8427 Toll Free: 1-866-683-7867

Offer: N180503ST-01
Date: May 3, 2018
Customer No.:

Joints		
	joint type	pin joint (B)
	sealing type	SM Pin joint
	joint sealing material	Buna/316 Stainless Steel
	joint lubrication	Mineral oil

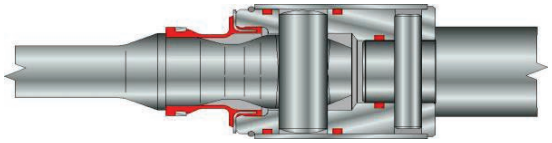

Rotor		
	rotor material	SAE 4140- Hard Chrome Plated Tool steel
	temperature range for Stator expansion	UM20

Stator		
	stator material	NEMOLAST® S61M - Buna Nitrile
	accesory	STP-3 Dry Run Protection Sensor with Omron Controller

Drive

Gear reducer		
	manufacturer	Nord
	type	SK92072.1VF-140TC
	gear ratio	8.67
	speed @ 60 Hz	202
	mounting position	M1
Motor		
	Manufacturer	TECO Westinghouse
	motor HP	1
	winding voltage	575
	voltage range	+/- 10%
	Frequency	60 Hz
	number of poles	4
	number of phases	3
	Motor speed	1765 rpm
	Protection Type	IP54- TEFC, Class I, Div. II, Premium Efficiency
	insulation class	F

Baseplate

	assembly specification - material	Structural steel baseplate with drip lip, grout holes, drains

Approximate weight of pump, gear reducer and baseplate	175 lb.

NETZSCH Canada, Inc. 500 Welham Rd., Barrie, On., L4N 8Z7
Ph: 705-797-8426 Fax: 705-797-8427 Toll Free: 1-866-683-7867

Offer: N180503ST-01
Date: May 3, 2018
Customer No.:

Performance curve:

NM031--01L

Förderkennlinie / Performance Curve
Statorwerkstoff / elastomer quality: standard

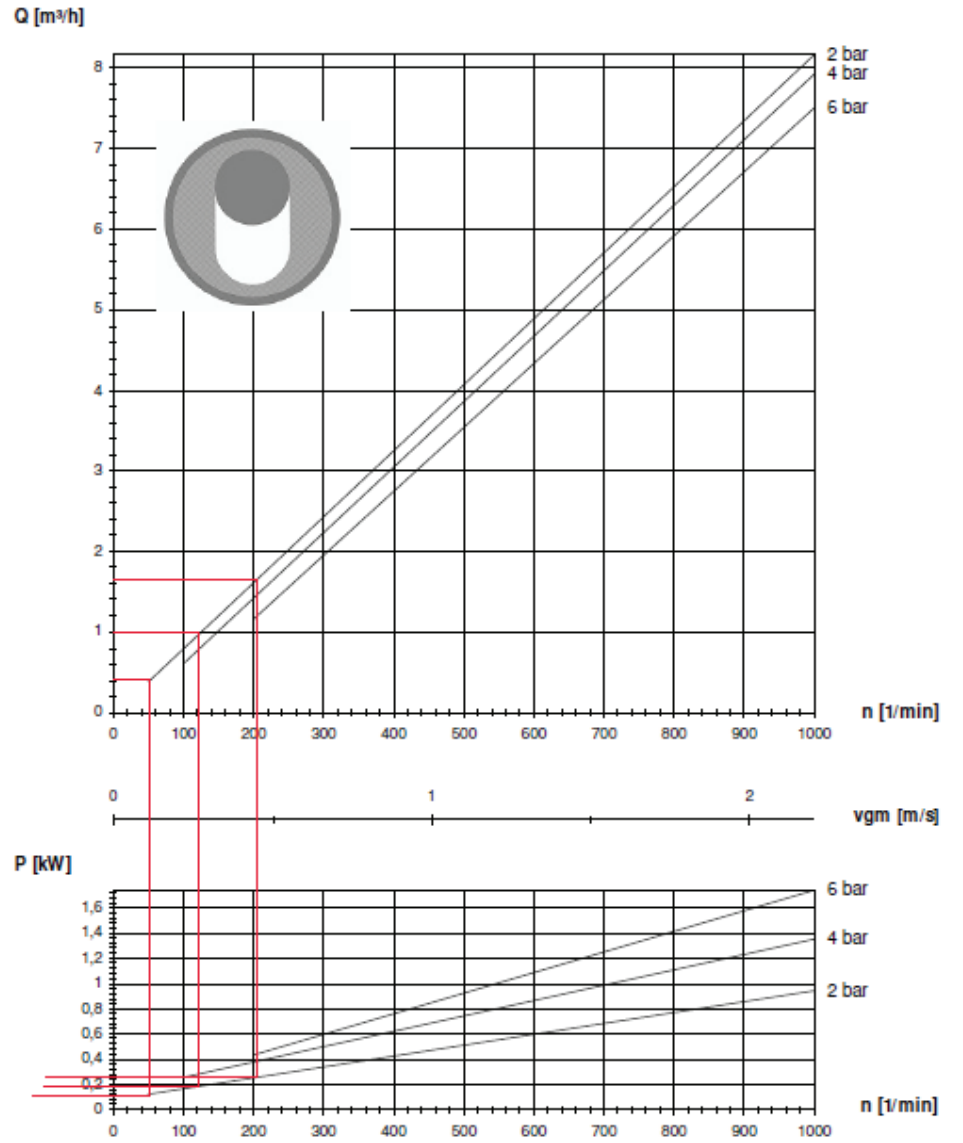

Losbrechmoment / starting torque T(L) = 23 Nm

Druck / pressure	T
2 bar	11 Nm
4 bar	15 Nm
6 bar	19 Nm

Gültigkeit für Wasser (1 cP) bei 20 °C. Toleranzen nach VDMA 24284 (+10%/-5%).
Valid for water (1 cP) at 20 °C (70 °F). Tolerances are in accordance with VDMA 24284 (+10%/-5%).

www.netzsch-pumpen.de

Dimension tolerances				Tolerances to flanges according ASME B16.1 E B16.5	
Measure	Tolerance	Measure	Tolerance		
>3 to 6	±0,5	>400 to 1000	±4,0		Tolerance
>6 to 30	±1,0	>1000 to 2000	±6,0	Diameter of bolt circle	+1,5
>30 to 120	±1,5	>2000 to 4000	±8,0	Diameter of bolt holes	+1,0
>120 to 400	±2,5	>4000	±20	Thickness	+3,0

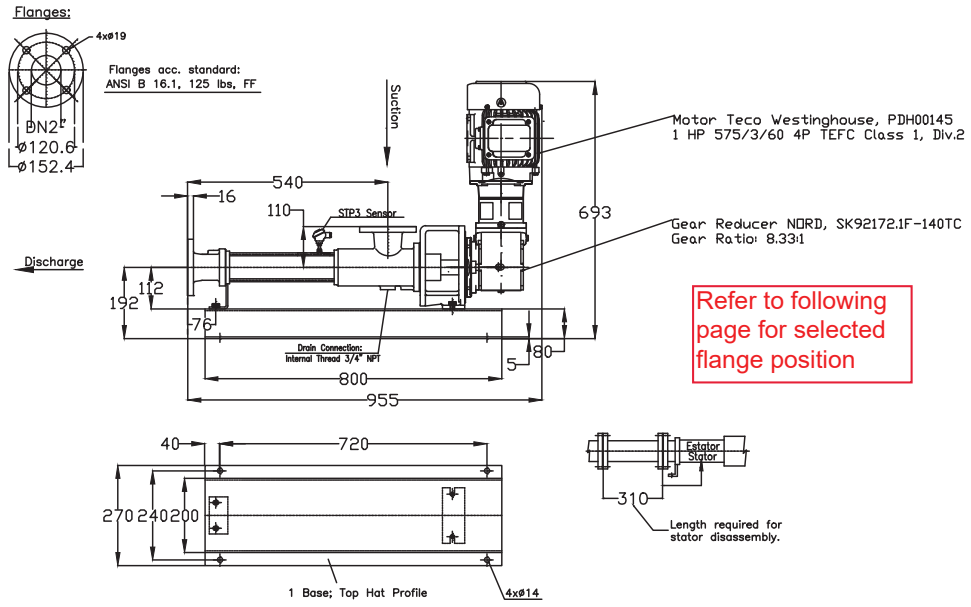

Refer to following page for selected flange position

WEIGHT: 170 lbs approx.

NETZSCH, CANADA INC.

THIRD ANGLE PROJECTION

THIS DRAWING IS THE SOLE PROPERTY OF NETZSCH CANADA, INC. BARRIE, ONT, CANADA. ANY USE OR REPRODUCTION OF ANY PART THERE OF IS FORBIDDEN WITHOUT WRITTEN APPROVAL OF NETZSCH CANADA, INC.

NETZSCH

UNLESS OTHERWISE SPECIFIED:
DIMENSIONS ARE IN mm [inches]
TOLERANCES: 2 PL DEC ± 0.01
3 PL DEC ± 0.005
ANGLE ± 0.5 °
REMOVE ALL BURRS
ALL CORNERS R 0.010 OR BBEAK
MIN RECEIVING INSPECTION PT

Project #	Part #	P.O.#	REV.
DESCRIPTION: NEMO PUMP MODEL NM031BY01L06B		DRAWN BY: A.E.	DATE: Nov. 26, 2018
NTC DRAWING NO.: B031BY1-N180503ST-01	Materials: 0.6025/316/4140vcp/NBR/MG1/C.S.Baseplate		
COMMENTS: Baseplate to have drip lip,grout holes & drain		DO NOT SCALE	SHEET: 1 of 1

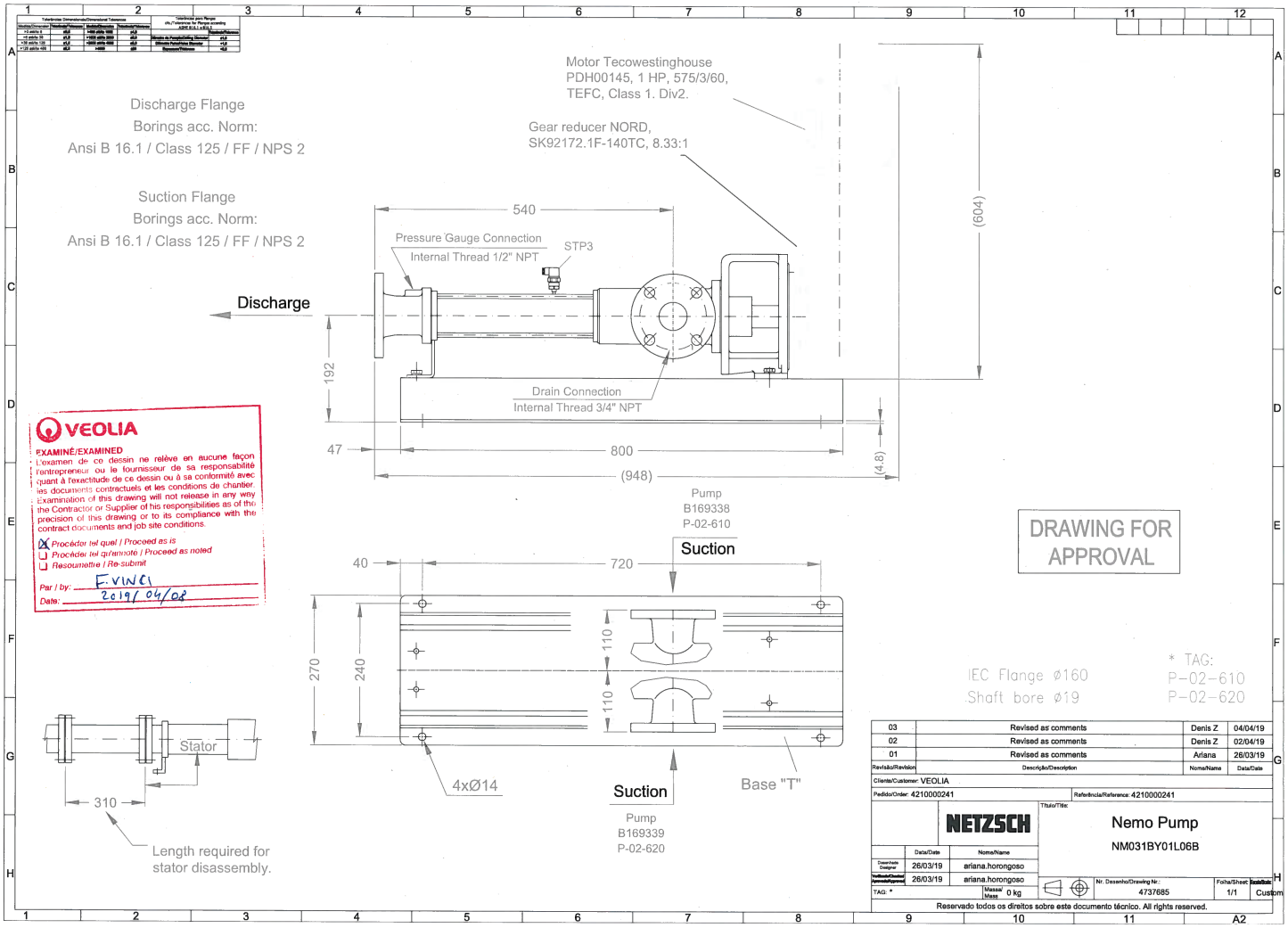
Discharge Flange
Borings acc. Norm:
Ansi B 16.1 / Class 125 / FF / NPS 2
Suction Flange
Borings acc. Norm:
Ansi B 16.1 / Class 125 / FF / NPS 2
Motor Tecowestinghouse
PDH00145, 1 HP, 575/3/60,
TEFC, Class 1. Div2.
Gear reducer NORD,
SK92172.1F-140TC, 8.33:1
Pressure Gauge Connection
Internal Thread 1/2" NPT
STP3
Discharge
Drain Connection
Internal Thread 3/4" NPT
540
(604)
192
47
800
(948)
(4.8)
Pump
B169338
P-02-610
Suction
40
720
270
240
110
110
4xØ14
Suction
Base "T"
Pump
B169339
P-02-620
Stator
310
Length required for
stator disassembly.
IEC Flange Ø160
Shaft bore Ø19
* TAG:
P-02-610
P-02-620
DRAWING FOR
APPROVAL
VEOLIA
EXAMINÉ/EXAMINED
L'examen de ce dessin ne relève en aucune façon l'entrepreneur ou le fournisseur de sa responsabilité quant à l'exactitude de ce dessin ou à sa conformité avec les documents contractuels et les conditions de chantier.
Examination of this drawing will not release in any way the Contractor or Supplier of his responsibilities as of the precision of this drawing or to its compliance with the contract documents and job site conditions.
Procéder tel quel / Proceed as is
Procéder tel qu'annoté / Proceed as noted
Resoumettre / Re-submit
Par / by: F.VINCI
Date: 2019/04/08
03 Revised as comments Denis Z 04/04/19
02 Revised as comments Denis Z 02/04/19
01 Revised as comments Ariana 26/03/19
Revisão/Revision | Descrição/Description | Nome/Name | Data/Date
Cliente/Customer: VEOLIA
Pedido/Order: 4210000241
Referência/Reference: 4210000241
NETZSCH
Título/Title:
Nemo Pump
NM031BY01L06B
Desenhado/Designed 26/03/19 ariana.horongoso
Verificado/Checked
Aprovado/Approved 26/03/19 ariana.horongoso
TAG: *
Massa/Mass 0 kg
Nr. Desenho/Drawing Nr.: 4737685
Folha/Sheet 1/1
Custom
Reservado todos os direitos sobre este documento técnico. All rights reserved.
A2

Intelligent Drivesystems, Worldwide Services

INSTALLATION & OPERATING INSTRUCTIONS



NORD.COM/DOCS
DOCUMENT COLLECTION

Order Number:
NORD Model: SK92172.1VF CUS

NORD DRIVESYSTEMS

Order and product data

Order Number	
Product Name	Right-Angle Helical Bvl Gearbo
NORD Model Type	SK92172.1VF-CUS
Mounting Position	
Lubricant	VG220-MIN-EP
Lubricant Qty	

Contents

Manuals

U10020-Safety Notes
U10020 Version: 0.03

U10040-Storage & Commissioning
U10040 Version: 0.03

U10060-Unit Installation
U10060 Version: 2.02

U10750-Helical & Bevel Reducer lubrication
U10750 Version: 0.05

U11000-Helical & Bevel Reducer Lubrication Types
U11000 Version: 0.08

U12205 Lubrication Capacity-92.1-93.1 Series Helical Bevel Foot Mounted
U12205 Version: 0.08

U14305 Oil Plug & Vent Locations-92.1-93.1 Series Helical Bevel
U14305 Version: 0.02

U15415 92.1/93.1 Parts List
U15415 Version: 0.02

U19000-Troubleshooting
U19000 Version: 2409

U30000-Motors- AC INDUCTION, SINGLE & POLYPHASE
U30000 Version: 0.07

1. Safety & information symbols

All work including transportation, storage, installation, electrical connection, commissioning, servicing, maintenance and repair must be performed **only by qualified specialists or personnel**. It is recommended that repairs to NORD Products are carried out by the NORD Service Department. Instructions related to operational safety will be emphasized as shown.

Symbol	Meaning
⚠	**Danger, Caution or Warning -** Severe risk or danger of personal injury or death by working around dangerously high electrical voltage or moving machinery. Proper safety precautions must be taken.
NOTICE	**Notice -** Care must be taken to avoid the possibility of damaging the drive unit, driven machine, or the environment.
ℹ	**Important Note -** Useful note or tip to help assure trouble-free operation.
♻	**Material Disposal Note -** Important note concerning suggested material disposal.

2. Safety warnings

⚠ DANGER

- All work involved in the transport, connection, commissioning and maintenance of any NORD product must be carried out by qualified and responsible technicians. All applicable national, regional, and local work regulations and safety requirements must also be complied with. **NORD assumes no liability for personal injury, accidental death, or equipment damage and malfunctions resulting from failure to comply with installation or operating instructions, safety notes, or any work regulations and laws!**
- Gear unit installation and maintenance work may only be performed when no power is available to the prime mover or motor. Electric motors, electrical brakes, and variable frequency drives, contain potentially dangerous high-voltage. Prior to installation or maintenance, shut down the power at the circuit breaker or power switch. **While working on the drive, make sure the power from the prime mover is isolated or secured on "lock-out" to prevent accidental start-up and to safeguard against injury!**
- Surfaces of motors and gear units may become hot during operation or shortly after start-up. In some instances additional protection against accidental contact may be necessary. **Use caution to avoid burns or serious injury!**

3. Observe published performance range & nameplate data

NOTICE

Observe the data on all reducer nameplates and verify published ratings for the NORD item/s in question. Do not operate any NORD equipment outside the published performance range. Failure to comply may result in damage to the drive unit, driven machine, or the environment.

U.S. Nameplate

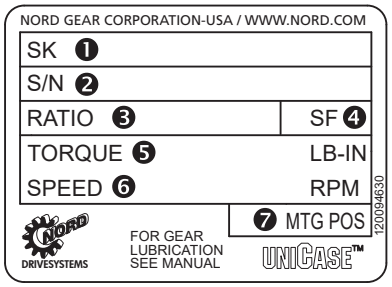

❶ Model/Type
❷ Serial Number
❸ Gear Ratio
❹ Service Factor
❺ Torque Rating
❻ Output Speed RPM
❼ Mounting Position

European Nameplate

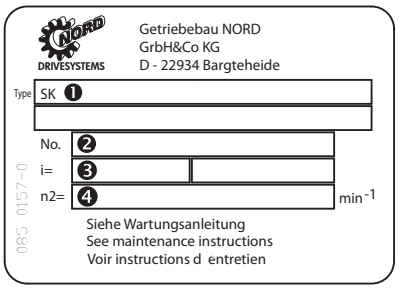

❶ Model/Type
❷ Serial Number
❸ Gear Ratio
❹ Speed

4. Transportation and handling

Make sure that all eyebolts and lifting lugs are tight and lift only at designed points. Protect the mounting surface from possible damage during transportation.

⚠ WARNING

Do not attach other machinery or loads to the NORD assembly, the supplied lifting bolts are not designed for this purpose and may result in drive damage or personal injury.

If the gearmotor or assembly is equipped with two suspension eye bolts, then both locations should be used for transportation and placement of the unit; in this case the tension force of the slings must not exceed a 45° angle.

In some instances it may be appropriate to use additional lifting straps or slings in order to assure safe transportation of the assembly. Always use sufficiently rated handling equipment and ensure that adequate safety measures are taken to protect personnel from injury during transportation. Once the NORD assembly is properly installed, remove the transportation fixtures.

7. DISPOSAL

MATERIAL DISPOSAL

Properly dispose of all used gear units and internal parts in accordance with all local regulations. In particular, all lubricants must be properly collected and disposed.

For confirmation of specific materials used in a specific reducer or gearmotor assembly, please consult NORD with the appropriate unit identification or serial number.

Components	Material
Gear wheels, shafts, rolling bearings, parallel keys, snap rings, spacers, shims, etc.	Steel
Gear housing and housing components	Cast iron or Aluminum (depending on type and size)
Worm gears	Bronze alloy
Radial seals, sealing caps, and rubber components	Elastomers with some steel
Coupling components	Plastic or Elastomer with Steel
Housing gaskets and flat oil seals	Asbestos-free sealing or gasket material (various types used)
Gear Oil	Mineral, SHC-Synthetic or PG-Synthetic (can vary)

1. Storage

IMPORTANT NOTE

For storage periods longer than 9 months, or for storage in less than desirable conditions, please consult NORD for recommendations.

Storage for up to 9 months is possible, so long as the following conditions are observed:

- Store the gear unit in its actual mounting position in accordance with the specified oil fill-level, in a clean and dry temperature controlled area. Avoid temperature fluctuations within the range of 0°C and 40°C (32°F to 104°F) and avoid relative humidity conditions in excess of 60%.
- Protect all exposed or unpainted shaft and flange surfaces with an anti-corrosion agent or grease.
- Store in a location free from shock and vibration, to avoid false brinelling of bearing elements and raceways.
- Whenever possible, rotate the shafts periodically, by hand if necessary, to help prevent brinelling (bearing damage) and to help keep the shaft seals pliable.
- Avoid direct exposure to the sun or UV light and aggressive or corrosive materials in the environment (ozone, gases, solvents, acids, caustic solutions, salts, radioactivity, etc.

2. Commissioning

Prior to gear unit start-up, complete the following:

- Please check your gear unit for a vent and if applicable to your product, remove the sealing plug to activate.

NOTICE

To prevent build-up of excessive pressure, sealed vents must be activated as shown prior to gear unit start up. Excessive pressure may cause damage to internal gearbox components and leakage.



Sealed vent

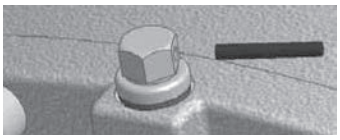

Activated vent

- Check the lubricant and be sure the gear unit is filled with the proper oil type, to the proper level, as determined by the mounting position.

IMPORTANT NOTE

Some smaller gear units are supplied as maintenance free/ lubricated for life gear units. Oil level may not be checked on some of these units.

- Check the condition of all shaft seals and all assembled flange gasket areas. If any change is detected in the shape, color, hardness or permeability, or if any leaks are detected, the corresponding shaft seals and/or gaskets must be replaced.
- Remove all anti-corrosive metal protectant from otherwise bare metal surfaces. Follow product manufacturers directions and warnings during surface protection removal.
- Check the resistance of all motor and brake windings to verify the integrity of the winding insulation and inspect all terminal box openings and wire connection areas to verify that all components are dry and free of corrosion.

3. Long-Term Storage

By taking special precautions, problems such as seal leakage and reducer failure due to the lack of lubrication, improper lubrication quantity, or contamination can be avoided. The following precautions will protect gear reducers during periods of extended storage:

- Store the gear unit in its actual mounting position in accordance with the specified oil fill-level, in a clean and dry temperature controlled area. Avoid temperature fluctuations within the range of 0°C and 40°C (32°F to 104°F) and avoid relative humidity conditions in excess of 60%.
- Fill the reducer full with oil that is compatible with the product normally used or recommended during service.
- Apply grease to all unpainted or unprotected shafts, bores, keyways, flange surfaces, tapped holes, and to the exterior of all oil seals.
- Store in a location free from shock and vibration, to avoid false brinelling of bearing elements and raceways.
- Once every few months rotate the input shaft approximately 10-20 revolutions to redistribute the weight of gears and shafts and to prevent brinnelling of the bearings and drying of the seal track.
- Avoid direct exposure to the sun or UV light and aggressive or corrosive materials in the environment (ozone, gases, solvents, acids, caustic solutions, salts, radioactivity, etc.)

4. Commissioning After Long-Term Storage

• Please check your gear unit for a vent and if applicable to your product, remove the sealing plug to activate.

NOTICE

To prevent build-up of excessive pressure, sealed vents must be activated as shown prior to gear unit start up. Excessive pressure may cause damage to internal gearbox components and leakage.



Sealed vent

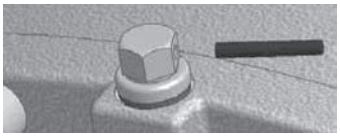

Activated vent

- Remove all anti-corrosive metal protectant from otherwise bare metal surfaces. Follow product manufacturers directions and warnings during surface protection removal.
- Drain the reducer and refill it with the proper type and amount of lubricant.
- Observe start-up and initial operation to make sure there are no seal or gasket leaks, or unusual sounds, vibration or heat rise during operation.
- Check the resistance of all motor and brake windings to verify the integrity of the winding insulation and inspect all terminal box openings and wire connection areas to verify that all components are dry and free of corrosion.

1. Installation site

Drives must be properly installed if they are to produce the rated torque. Improper installation may lead to oil leaks, reduced life, or even catastrophic failure. NORD gear drives and motors are intended to be installed at a suitable mounting site under the following conditions:

- Unimpeded airflow to and around the units.
- Accessibility to oil drain, level and breather plugs.
- On brakemotors, allow adequate space for removing the fan guard and replacing and adjusting the brake.
- Mounting surfaces must be flat, torsionally rigid, and dampened against vibration.
- Unless special measures are taken, the immediate vicinity around the gear drive or motor should not be exposed to any aggressive or corrosive substances, contaminated air, ozone, gases, solvents, acids, alkalis, salts, radioactivity, etc.

2. Mounting position

Reducer mounting position charts illustrate the standard mounting positions for horizontal and vertical mounting. All gear units are assembled with the oil fill-level, oil-drain and vent plugs installed in their proper locations, **according to the customer-specified mounting position**. For mounting orientations other than shown consult NORD Gear.

NOTICE

Improper oil levels may lead to premature component wear and diminished service life. The gear reducer may not receive proper lubrication if the unit is not mounted in the position for which it is designed. Observe the mounting position designated on the reducer nameplate, or specified in the order acknowledgement. Consult NORD prior to changing mounting position in the field. While it is often possible to simply relocate the oil fill-level and vent locations, and adjust the oil fill amount, in some cases, different mounting positions may lend themselves to different internal construction features.

3. Reducer mounting

- The support foundation must be straight, level and flat. Whether the gear unit is foot-mounted or flange-mounted, NORD recommends that the straightness and flatness of the customer-supplied support foundation follow **Table 1**.
- The gear unit must be properly aligned with the driven shaft of the machine in order to prevent additional stress or load forces from being imposed upon the gear unit.
- To facilitate oil drainage it may be desirable to elevate the gear box foundation above the surrounding support structure.
- All bolting surfaces must be clean and free from contamination and corrosion.

Table 1: Recommended Straightness and Flatness of Customer-Supplied Support Foundation

Above (in)	To & Including (in)	General Tolerance on Straigtness & Flatness ISO 2768-2, Tolerance Class K
0.00	0.39	+/- 0.002 in
0.39	1.18	+/- 0.004 in
1.18	3.9	+/- 0.008 in
3.9	11.8	+/- 0.016 in
11.8	39	+/- 0.024 in
39	118	+/- 0.031 in

Above (mm)	To & Including (mm)	General Tolerance on Straigtness & Flatness ISO 2768-2, Tolerance Class K
0	10	+/- 0.05 mm
10	30	+/- 0.1 mm
30	100	+/- 0.2 mm
100	300	+/- 0.4 mm
300	1000	+/- 0.6 mm
1000	3000	+/- 0.8 mm

Straightness: Based upon the length of the corresponding line.

Flatness: Based upon the longer lateral surface or the diameter of the circular surface.

IMPORTANT NOTE

The responsibility for the design and construction of the support foundation is with the user. The foundation must be adequate to withstand normal operating loads and possible overloads while maintaining alignment to attached system components under such loads. ***Motors and drive components mounted on prefabricated base plates can become misaligned during shipment. Always check alignment after installation.***

4. Steel foundation

An engineered structural steel foundation should be designed to provide adequate rigidity and prevent loads from distorting the housing or causing misalignment of internal gears and shafts. When foot-mounting the gear reducer, a base plate or sole plate with suitable thickness (generally equal or greater than the thickness of the drive feet) should be securely bolted to steel supports and extend under the entire gear drive assembly. When flange-mounting the gear unit, the bulk head plate must be engineered to minimize buckling distortions and support the cantilevered weight of the gear unit or gear motor.

NOTICE

Do not weld on the gear unit or use the gear unit as an earth or ground connection for any welding procedure as this may cause permanent damage to the bearings and gears.

5. Concrete foundation

If a concrete foundation is used, allow the concrete to set firmly before bolting down the gear drive. Grout structural steel mounting pads and bolts of sufficient size into the concrete, to adequately distribute the load stress onto the concrete foundation.

Figure 1: Concrete Foundation

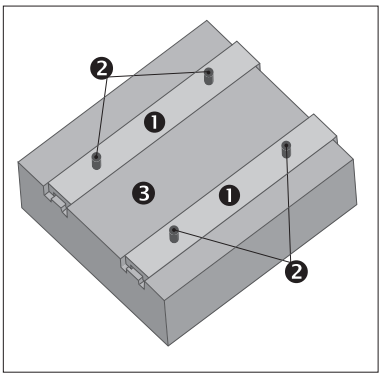

❶ Grouted Structural Steel Mounting Pads
❷ Mounting Bolts
❸ Concrete Foundation

6. Bolt connections for footed & flange mounted units

NORD footed reducers and flange-mount reducers (with B5 flange) have clearance designed into the mounting holes to allow for some minor adjustments in alignment. Bolt size, strength and quantity should be verified to insure proper torque reaction capacity whatever the mounting arrangement. Tightening torque for gear reducer mounting bolts, and recommended fastener grades, are provided in Table 2.

Table 2A: Tightening Torque for Inch Reducer Mounting Bolts

Thread Size	Grade SAE 5 / ASTM A449		Grade SAE 8	
(in)	(lb-ft)	(Nm)	(lb-ft)	(Nm)
1/4-20	7.1	9.6	10.0	13.6
5/16-18	16	21	22	30
3/8-16	28	37	39	53
1/2-13	69	93	98	132
5/8-11	138	188	195	264
3/4-10	247	334	348	472
7/8-9	396	537	558	757
1-8	592	802	833	1,130
1 1/8-7	-	-	1,233	1,672
1 1/4-7	-	-	1,717	2,327
1 3/8-6	-	-	2,267	3,073
1 1/2-6	-	-	2,983	4,045
1 3/4-5	-	-	4,458	6,045

- Calculated tightening torques are based a conventional 60°, clean and dry (un-lubricated) thread, with thread-friction and head-friction equal to 0.15.
- When using inch-fasteners, NORD recommends a minimum Grade SAE 5 (ASTM A-449) for sizes up to 1-8 UNC, and Grade SAE 8 for all larger sizes.

Table 2B: Tightening Torque for Metric Reducer Mounting Bolts

Above	ISO Grade 8.8		ISO Grade 10.9		ISO Grade 12.9	
(mm)	(lb-ft)	(Nm)	(lb-ft)	(Nm)	(lb-ft)	(Nm)
M4	2.4	3.2	3.5	4.7	4.1	5.5
M5	4.7	6.4	6.9	9.3	8.1	11
M6	8	11	12	16	14	19
M8	20	27	29	39	34	46
M10	39	53	58	78	67	91
M12	68	92	100	135	110	155
M14	107	145	159	215	180	250
M16	170	230	247	335	290	390
M18	240	325	343	465	400	540
M20	339	460	487	660	570	770
M22	465	630	664	900	770	1,050
M24	583	790	848	1,150	960	1,300
M27	848	1,150	1,217	1,650	1,440	1,950
M30	1,180	1,600	1,660	2,250	1,950	2,650
M36	2,050	2,780	2,884	3,910	3,470	4,710
M42	3,297	4,470	4,639	6,290	5,560	7,540
M48	4,940	6,700	7,010	9,500	8,260	11,200

- Calculated tightening torques are based on a conventional 60°, clean and dry (un-lubricated) thread, with thread-friction and head-friction equal to 0.15.
- When using metric-fasteners, NORD recommends a minimum ISO Grade 8.8 bolt.

7. Mounting the prime mover

When the motor is not flange mounted or integrally mounted to the gearbox, it is important to properly secure and align the gear drive with respect to the driven machine before attempting to align the prime mover or motor.

A. After the main gear drive is properly aligned and bolted in place, align the prime mover with respect to the reducer input shaft.

B. Use shims under the feet of the prime mover as needed, and secure in place with the proper mounting bolts. Dowel pins may be field-installed to help prevent misalignment and ensure proper realignment if removed for service.

IMPORTANT NOTE

When using a high speed coupling connection between the prime mover and the reducer, check alignment per the coupling manufacturers recommendations. If the coupling is misaligned, the reducer alignment or shimming is incorrect. Re-align the gear reducer and re-check the high-speed coupling alignment before re-aligning the motor.

HELICAL & BEVEL REDUCER LUBRICATION

1. Importance of proper lubrication

Proper gearbox lubrication is essential in order to reduce friction, heat, and component wear. Lubricants reduce heat and wear by inserting a protective "fluid boundary" between mating parts and preventing direct metal to metal contact. Lubricants also help prevent corrosion and oxidation, minimize foam, improve heat transfer, optimize reducer efficiency, absorb shock loads and reduce noise.

Most NORD reducers are shipped from the factory with a pre-determined oil fill level in accordance to the specified reducer size and mounting position.

2. Standard oil type

The following tables indicate the standard oil fill type used. Please see user manual U11000 for more specific information and for optional helical and bevel gear lubricants:

Serviceable Gear Units	
Helical In-line	Standard Oil Fill: ISO VG 220, Mineral Oil
Clincher Parallel-Shaft	
Right-Angle Bevel	
NORDBLOC® Series In-line	
NORDBLOC®.1 Series In-line	
Standard Series In-line	

IMPORTANT NOTE

For shipping purposes, the following large Clincher™ gear units are supplied without oil:
- Clincher™ Sizes SK11282, SK11382, SK11382.1 and SK12382

Maintenance-free / Lubricated For Life Gear Units	
Clincher™ sizes SK0182NB, SK0282NB & SK1382NB	Standard Oil Fill: ISO VG220 SHC/PAO Synthetic Oil
NORDBLOC® Sizes SK172, SK272, SK371F, SK372, SK373, SK320	

IMPORTANT NOTE

Maintenance-free units are supplied as sealed units with no vent-plug. Consult NORD prior to ordering if interested in ordering any of the above sizes as serviceable gear units.

IMPORTANT NOTE

Consult the sticker adjacent to the fill plug to determine the type of lubricant installed at the factory. Some units have special lubricants designed to operate in certain environments or intended to extend the service life or service temperature range of the lubricant. If in doubt about which lubricant is needed for a certain application, please contact NORD Gear.

3. Lubrication replacement

If the gear unit is filled with mineral oil, the lubricant should be replaced at least after every 10,000 operating hours or after every two years. If the gear unit is filled with synthetic oil, the lubricant should be replaced at least after every 20,000 operating hours or after every four years. Often gear reducers are exposed to extreme ambient conditions, hostile environments, wet conditions, or dirty and dusty operating areas. Especially in these situations, it is important to establish a condition-based oil service interval.

4. Oil viscosity

Viscosity, or the oil's resistance to shear under load, is often considered the single most important property of any gear oil.

- Often one will consider making a viscosity correction to the oil to improve the performance when operating the gear unit at low temperature or high temperature.
- In cases of extreme load conditions, gear pairs and antifriction bearings may be more susceptible to sliding or scuffing wear. In these operating conditions, it may also be beneficial to consider an increased lubrication viscosity and/or a lubrication with improved antiwear additive packages.

IMPORTANT NOTE

The user should consult with their primary lubrication supplier before considering changes in oil type or viscosity.

5. Maximum oil sump temperature limit

To prevent reducer overheating, the reducer's maximum oil sump temperature limit must not be exceeded for prolonged periods of operation (up to 3 hours continuous operation depending upon reducer size).

Oil Type	Maximum Oil Temperature Limit	
	NORD	AGMA 9005-D94
Mineral	80-85°C (176-185°F)	95°C (203°F)
Synthetic	105°C (220°F)	107°C (225°F)

IMPORTANT NOTE

Use caution when specifying gear reducers for high temperature service. If there is concern about exceeding the allowable safe operating temperatures, please consult NORD to discuss alternatives.

6. The importance of routine oil analysis

Routine oil analysis, sound lubrication practices, and good tracking of oil performance trends will help establish proper lubrication maintenance and change-out intervals. To maximize equipment reliability, NORD Gear generally recommends a condition-based lubrication maintenance program. One may take exceptions to this general recommendation on sealed-for-life or maintenance-free gear units or smaller and less costly gear units. In these instances, the replacement cost of the gear unit is often small compared to the costs associated with this type of oil analysis program.

NOTICE

NORD suggests replacing the gear oil if oil analysis indicates any of the following. Failure to replace the oil may cause internal damage to gearbox and diminished performance:

- Viscosity has changed by approximately 10% or more.
- Debris particles (silicon, dust, dirt or sand) exceed 25 ppm.
- Iron content exceeds 150-200 ppm.
- Water content is greater than 0.05% (500 ppm).
- The total acid number (TAN) tests indicate a significant level of oxidative break-down of the oil, and a critical reduction in performance; If the TAN number measured changes by more than 5% over the new oil, then an oil change would be recommended.

7. Mounting position and oil fill quantity

All NORD Gear reducers are shipped from the factory with a pre-determined oil fill level in accordance to the specified reducer size and mounting position. ***For additional information, please see the seperate mounting position diagrams and the corresponding oil fill quantity tables for the specified gear unit.***

The gearbox nametag will indicate the mounting position that was provided. ***For mounting orientations other than shown in the mounting position charts, please consult NORD Gear.***

IMPORTANT NOTE

Actual oil volume can vary slightly depending upon the gear case size, mounting and ratio. Prior to commissioning the reducer, check the oil-fill level using the reducer's oil-level plug and drain or add additional oil as needed. The minimum acceptable oil level is 0.15 in (4mm) below the oil level hole.

8. Oil plug locations

All gear units are assembled with the oil fill-level, oil-drain and vent plugs installed in their proper locations, according to the specified mounting position. All standard plugs are metric and utilize sealing gaskets between the head of the plug and the reducer housing.

9. Drain and fill-level plugs

All reducer drain plugs are metric socket head cap screws. For easier identification, it is NORD's standard practice to provide a hex-head screw for the fill-level plug. For ease of draining the used oil from the gear reducer, use the socket head screw located at the lowest part of the gearbox.


Drain Plug

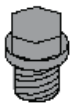
Fill Level Plug

10. Vent plug locations

Reducer venting allows for air pressure differences that occur during operation, between the inner space of the reducer and the atmosphere, while ensuring leak-free operation. The AUTOVENT™ is standard for all vented gear units, unless otherwise noted.

AUTOVENT™ - The AUTOVENT™ helps prevent bearing and gear damage by behaving like a check valve to block the entry of foreign material and prevent lubrication contamination from dust particles, moisture and air-borne process chemicals. The breather opens at approximately 0.3-0.9 psi during operation and closes tightly as the gearbox cools. This option is perfect for humid conditions and wash-down environments, helping to maintain proper oil cleanliness, while reducing foaming and oxidation.

Figure 1 AUTOVENT™ Types


Type 1

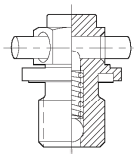

Type 2 with transportation plug

Open Vent - An optional open vent can be supplied by NORD. The open vent comes closed upon delivery with a transportation sealing plug (see Warning).

NOTICE

To prevent build-up of excessive pressure, sealed vents must be activated as shown prior to gear unit start up. Excessive pressure may cause damage to internal components and cause leakage.

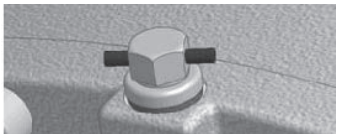
Sealed vent

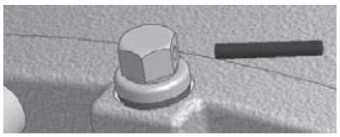
Activated vent

Filtered Vent - NORD may offer an optional filtered vent, which allows gases to permeate, but does not allow dust and debris to pass through the vent.

HELICAL & BEVEL REDUCER LUBRICATION TYPES

Lubrication Tables – Helical and Bevel Gear Units

Standard Oil Lubricants

ISO Viscosity	Oil Type	Ambient Temperature Range	Manufacturer Brand/Type	Notes
VG220	MIN-EP	0 to 40°C (32 to 104°)	Mobilgear 600XP220	♦❶
	PAO-EP	-35 to 60°C (-31 to 140°F)	Mobil SHC Gear 220	♦❷
	FG	-5 to 40°C (23 to 104°F)	Fuchs FM220	♦

Optional Oil Lubricants

ISO Viscosity	Oil Type	Ambient Temperature Range	Manufacturer Brand/Type	Notes
VG460	PAO-EP	-35 to 80°C (-31 to 176°F)	Mobil SHC Gear 460	-
	FG-PAO	-35 to 80°C (-31 to 176°F)	Mobil SHC Cibus 460	-
VG220	FG-PAO	-35 to 60°C (-31 to 140°F)	Mobil SHC Cibus 220	S
VG150	PAO-EP	-35 to 25°C (-31 to 77°F)	Mobil SHC Gear 150	-

Grease Options (applied to greased bearings and seal cavities)

NLGI Grade	Grease Thickener	Grease Base Oil	Ambient Temperature Range	Manufacturer Brand/Type	Notes
NLGI 2	Li-Complex	MIN	-30 to 60°C (-22 to 140°F)	Mobil Grease XHP222	♦❶
	Li-Complex	PAO	-40 to 80°C (-40 to 176°F)	Mobil / Mobilith SHC 220	♦❷
	Polyurea	FG-PAO	-30 to 80°C (-22 to 176°F)	Mobil SHC Polyrex 222	♦

♦ Stocked Lubricants

❶ Standard product on serviceable gear units

❷ Standard product on maintenance free gear units

IMPORTANT NOTE

- The "Ambient Temperature" is intended to be an operation guideline based upon the typical properties of all the lubricant. The viscosity and other properties of the lubricant change based upon load, speed, ambient conditions, and reducer operating temperatures. The user should consult with their lubrication supplier & NORD gear before considering changes in oil type or viscosity.
- To prevent reducer overheating, observe the maximum operating oil temperature limits:
  Mineral Oil: 80-85 °C (176 – 180 °F).
  Synthetic Oil: 105 °C (225 °F).
- In the following instances, please consult NORD for specific recommendations:
  - √ Gear units will operate in high ambient temperature conditions exceeding 40 °C (104 °F).
  - √ Gear units will operate in cold ambient temperature conditions approaching 0 °C (32 °F) or lower.
  - √ Lower than an ISO VG100 viscosity oil is being considered for a cold-temperature service.
  - √ Fluid grease is required for lubricating the gear unit.
- Observe the general lubrication guidelines outlined in user manual U10750.

Oil Formulation Codes

MIN-EP - Mineral Oil with EP Additive
PAO-EP - Synthetic Polyalphaolefin Oil with EP Additive
PAO - Synthetic Polyalphaolefin Oil
PG - Synthetic Polyglycol Oil
FG - Food-Grade Oil
FG-PAO - Food-Grade, Synthetic Poyalphaolefin Oil
FG-PG - Food-Grade, Synthetic Polyglycol Oil

Lubrication Notes

- Avoid using (EP) gear oils in worm gears that contain sulfur-phosphorous chemistries, as these additives can react adversely with bronze worm gears and accelerate wear.
- Food grade lubricants must be in compliance with FDA 212 CFR 178.3570 and qualify as a NSF-H1 lubricant. Please consult with lubrication manufacturer for more information.
- When making a lubrication change, check with the lubrication supplier to assure compatibility and to obtain recommended cleaning or flushing procedures.
- Do not to mix different oils with different additive packages or different base oil formulation types. Polyglycol (PG) oils are not miscible with other oil types and should never be mixed with mineral oil or polyalphaolefin (PAO) synthetic oil.

HELICAL & BEVEL REDUCER LUBRICATION TYPES

Oil Cross-reference Chart

ISO Viscosity	Oil Type	Ambient Temperature Range	Mobil	Shell	Castrol	FUCHS	KLÜBER LUBRICATION
VG150	MIN-EP	0 to 25°C (32 to 77°F)	Mobilgear 600XP150	Omala S2 G 150	Alpha SP150	Renolin EP150	Klüberoil GEM 1-150N
	PAO-EP	-30 to 25 °C (-22 to 77 °F)	Mobil SHC Gear 150	Omala S4 GX 150	Alphasyn EP150	Gearmaster SYN150/NA	Klübersynth EG 4-150
	PAO	-30 to 25°C (-22 to 77°F)	Mobil SHC629	Morlina S4 B 150	Alphasyn T150	N/A	Klübersynth GEM 4-150N
	PG	-25 to 25°C (-13 to 77°F)	Mobil Glygoyle 150	Omala S4 WE 150	Alphasyn PG150	Renolin PG150	Klübersynth GH 6-150
	FG	0 to 25°C (32 to 77°F)	Mobil DTE FM 150	N/A	N/A	N/A	N/A
	FG-PAO	-15 to 25°C (5 to 77°F)	Mobil SHC Cibus 150	N/A	N/A	Cassida GL150	Klüberoil 4 UH 1-150N
	FG-PG	-25 to 25°C (-13 to 77°F)	Mobil Glygoyle 150	N/A	N/A	N/A	Klübersynth UH1 6-150
VG220	MIN-EP	0 to 40°C (32 to 104°)	Mobilgear 600XP220	Omala S2 G 220	Alpha SP220	Renolin EP220	Klüberoil GEM 1-220N
	PAO-EP	-30 to 60 °C (-22 to 140 °F)	Mobil SHC Gear 220	Omala S4 GX 220	Alphasyn EP220	Gearmaster SYN220/NA	Klübersynth EG 4-220
	PAO	-30 to 60°C (-22 to 140°F)	Mobil SHC630	Morlina S4 B 220	Alphasyn T220	N/A	Klübersynth GEM 4-220N
	PG	-25 to 60°C (-13 to 140°F)	Mobil Glygoyle 220	Omala S4 WE 220	Alphasyn PG220	Renolin PG220	Klübersynth GH 6-220
	FG	0 to 40°C (32 to 104°F)	Mobil DTE FM 220	N/A	N/A	Fuchs FM220	N/A
	FG-PAO	-25 to 60°C (-13 to 140°F)	Mobil SHC Cibus 220	N/A	N/A	Cassida GL220	Klüberoil 4 UH 1-220N
	FG-PG	-25 to 60°C (-13 to 140°F)	Mobil Glygoyle 220	N/A	N/A	Cassida WG220	Klübersynth UH1 6-220
VG460	MIN-EP	0 to 40°C (32 to 104°F)	Mobilgear 600XP460	Omala S2 G 460	Alpha SP460	Renolin EP460	Klüberoil GEM 1-460N
	PAO-EP	-20 to 80°C (-4 to 176°F)	Mobil SHC Gear 460	Omala S4 GX 460	Alphasyn EP460	Gearmaster SYN460/NA	Klübersynth EG 4-460
	PAO	-20 to 80°C (-4 to 176°F)	Mobil SHC 634	Morlina S4 B 460	Alphasyn T460	N/A	Klübersynth GEM 4-460N
	PG	-20 to 80°C (-4 to 176°F)	Mobil Glygoyle 460	Omala S4 WE 60	Alphasyn PG460	N/A	Klübersynth GH 6-460
	FG	0 to 40°C (32 to 104°F)	Mobil DTE FM460	N/A	N/A	Fuchs FM460	N/A
	FG-PAO	-20 to 80°C (-4 to 176°F)	Mobil SHC Cibus 460	N/A	N/A	Cassida GL460	Klüberoil 4 UH 1-460N
	FG-PG	-20 to 80°C (-4 to 176°F)	Mobil Glygoyle 460	N/A	N/A	Cassida WG460	Klübersynth UH1 6-460

Low-end service temperature limit may vary for a specific lubricant; Please also see the important notes on Page 1.

92.1/93.1 SERIES HELICAL-BEVEL OIL FILL QUANTITIES

92.1/93.1 Helical-bevel mount lubrication

All NORD Gear reducers are shipped from the factory with a pre-determined oil fill level in accordance to the specified reducer size & mounting position. For additional information, please refer to the "Oil Plug & Vent Locations" documentation for your gear unit.

IMPORTANT NOTE

Actual oil volume can vary slightly depending upon the gear case size, mounting and ratio. Prior to commissioning the reducer, check the oil-fill level using the reducer's oil level plug and drain or add addition oil as needed.

For mounting orientations other than shown please consult NORD Gear. Reducer modifications may be required.

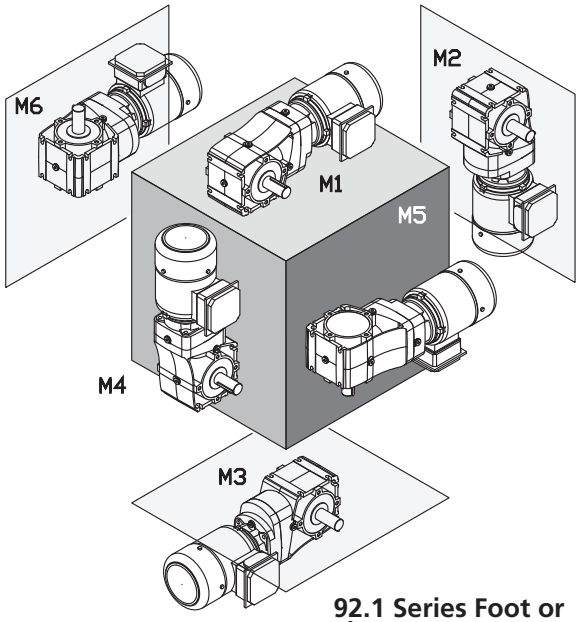

92.1 Series Foot or Flange Mount

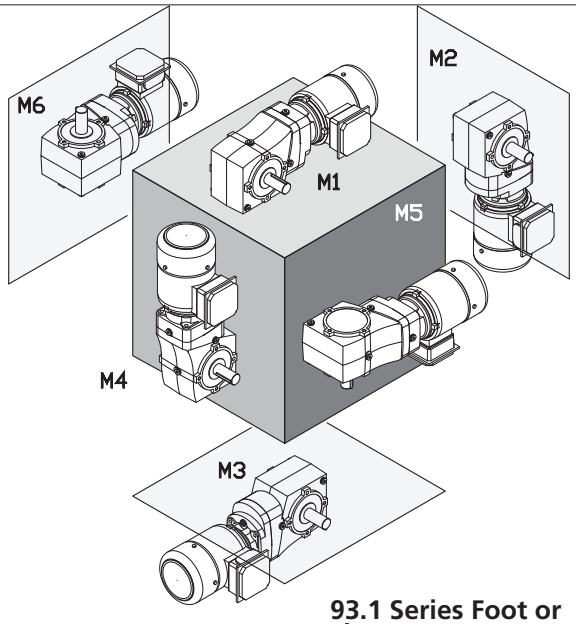

93.1 Series Foot or Flange Mount

92.1 Series Oil Fill

Type	M1		M2		M3		M4		M5		M6	
	Quarts	Liters	Quarts	Liters	Quarts	Liters	Quarts	Liters	Quarts	Liters	Quarts	Liters
SK 920072.1	0.22	0.21	0.50	0.47	0.22	0.36	0.22	0.34	0.22	0.28	0.22	0.28
SK 92072.1	0.28	0.26	0.52	0.49	0.44	0.42	0.57	0.54	0.31	0.29	0.33	0.31
SK 92172.1	0.36	0.34	0.65	0.61	0.55	0.52	0.71	0.67	0.44	0.42	0.51	0.48
SK 92372.1	0.45	0.43	0.97	0.92	0.77	0.73	0.88	0.83	0.58	0.55	0.65	0.61
SK 92672.1	0.90	0.85	1.69	1.60	1.27	1.20	1.59	1.50	1.08	1.02	1.08	1.02
SK 92772.1	1.37	1.30	2.80	2.65	1.97	1.86	2.85	2.70	1.69	1.60	1.69	1.60

Oil levels shown apply to all foot & flange mounted units.

93.1 Series Oil Fill

Type	M1		M2		M3		M4		M5		M6	
	Quarts	Liters	Quarts	Liters	Quarts	Liters	Quarts	Liters	Quarts	Liters	Quarts	Liters
SK 930072.1	0.30	0.28	0.69	0.65	0.22	0.56	0.22	0.54	0.22	0.39	0.22	0.39
SK 93072.1	0.41	0.39	0.98	0.93	0.83	0.79	1.08	1.02	0.52	0.49	0.66	0.62
SK 93172.1	0.63	0.60	1.24	1.17	0.99	0.94	1.29	1.22	0.69	0.65	0.90	0.85
SK 93372.1	1.06	1.00	2.08	1.97	1.74	1.65	2.26	2.14	1.18	1.12	1.42	1.34
SK 93672.1	1.90	1.80	3.41	3.23	2.86	2.71	4.02	3.80	2.13	2.02	2.59	2.45
SK 93772.1	2.87	2.72	4.89	4.63	3.91	3.70	6.13	5.80	3.10	2.93	3.43	3.25

Oil levels shown apply to all foot & flange mounted units.

92.1/93.1 SERIES HELICAL-BEVEL OIL PLUG & VENT LOCATIONS

Oil plug locations

Prior to commissioning the reducer, check the oil-fill level using the reducer's oil-level plug and drain or add additional oil as needed. ***For mounting orientations other than shown please consult NORD Gear. New plug locations may be required.***

92.1 Series

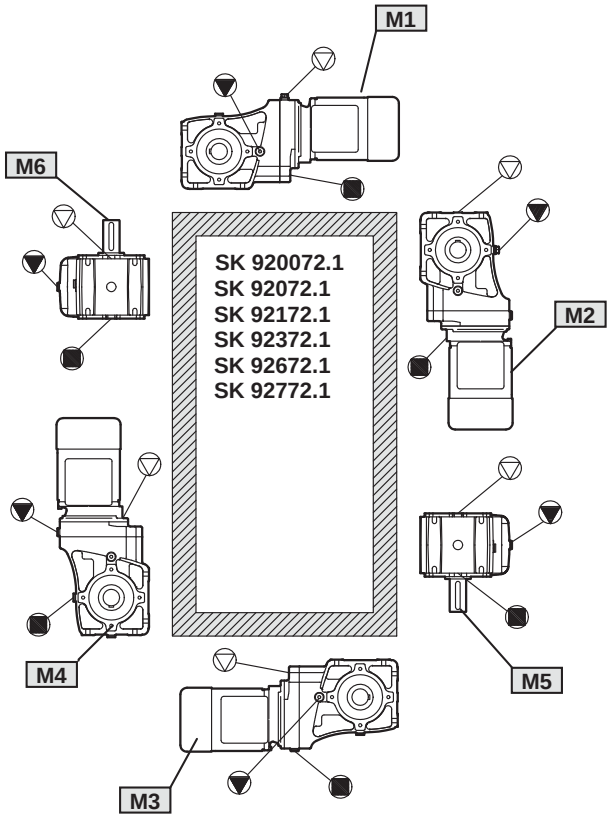

93.1 Series

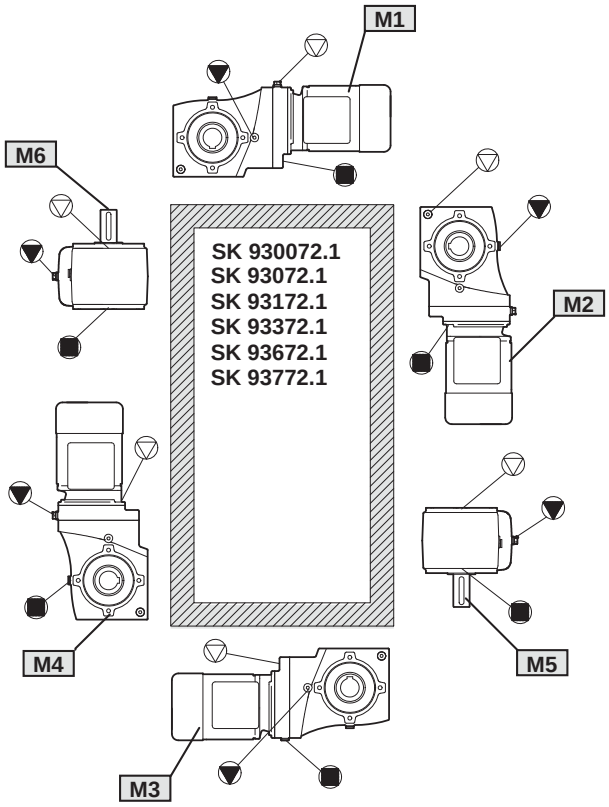

▽ = Vent

▼ = Oil Level

■ = Oil Plug

Intelligent Drivesystems, Worldwide Services

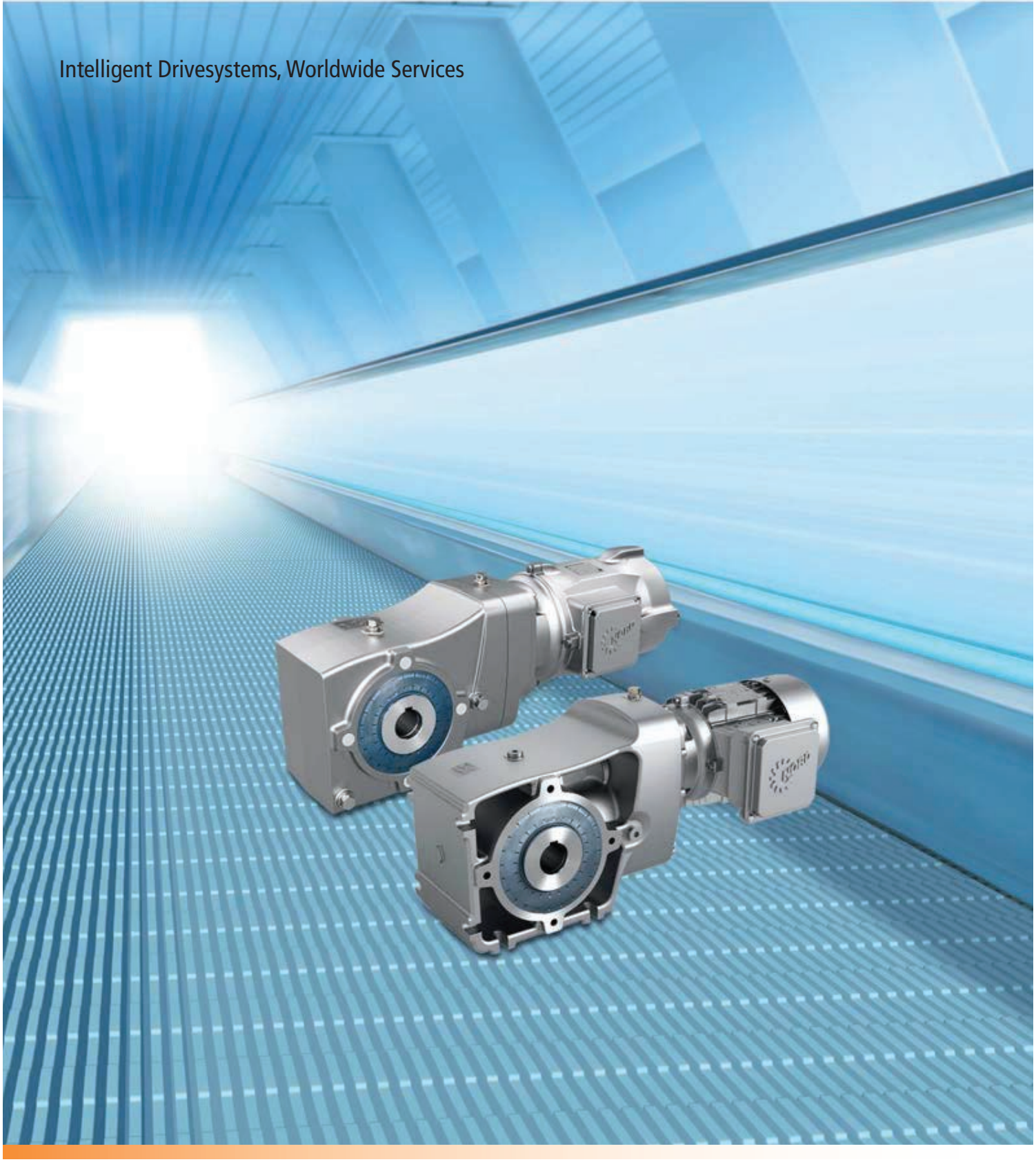

DE EN FR

PL1014

SK 920072.1 - SK 93772.1

Ersatzteilkatalog 2-stufige Kegelradgetriebe
Spare parts catalogue 2-stage helical bevel gear unit
Catalogue de pièces de rechange Couple coniques à 2 trains

NORD DRIVESYSTEMS

Allgemeine Ersatzteile
General parts list
Vues éclatées et nomenclature



2-stuf ge Kegelradgetriebe.....2 - 5
2-stage helical bevel gear unit
Couples coniques à 2 trains



Bestellangaben.....6 - 7
Order details
Informations de commande



2-stufige Kegelradgetriebe
2-stage Helical-Bevel Gear Unit
Couples coniques à 2 trains

EB 6239000-E1 #1

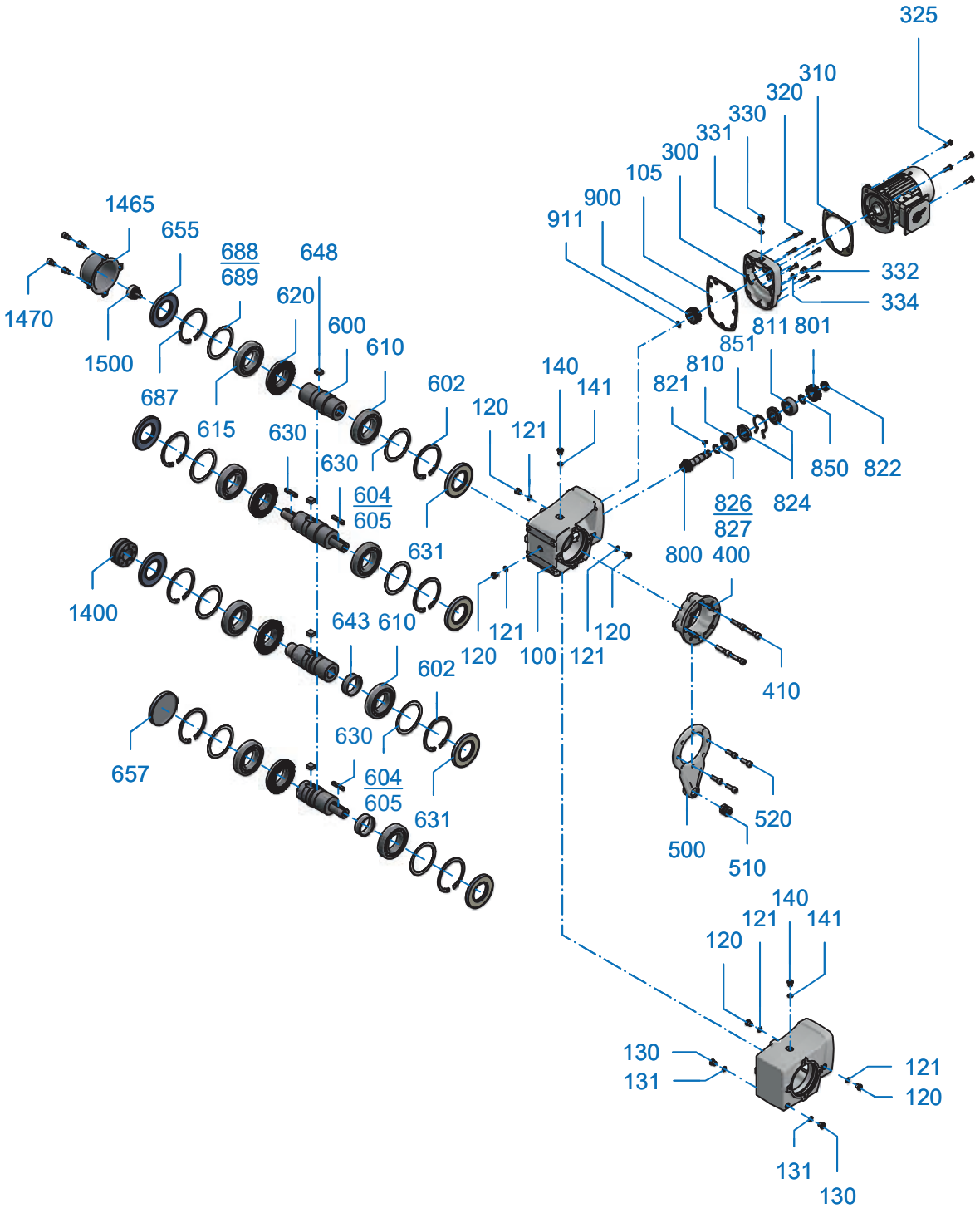



DE		EN		FR	
100	Gehäuse	100	Housing	100	Boîtier
105	Dichtung	105	Seal	105	Bague d’étanchéité
120	Schraube	120	Screw	120	Vis
121	Dichtung	121	Seal	121	Bague d’étanchéité
130	Schraube	130	Screw	130	Vis
131	Dichtung	131	Seal	131	Bague d’étanchéité
140	Schraube	140	Screw	140	Vis
141	Dichtung	141	Seal	141	Bague d’étanchéité
300	Getriebedeckel	300	Gear unit cover	300	Couvercle du réducteur
310	Dichtung	310	Seal	310	Bague d’étanchéité
320	Schraube	320	Screw	320	Vis
325	Schraube	325	Screw	325	Vis
330	Schraube	330	Screw	330	Vis
331	Dichtung	331	Seal	331	Bague d’étanchéité
332	Schraube	332	Screw	332	Vis
334	Dichtung	334	Seal	334	Bague d’étanchéité
400	Flansch	400	Flange	400	Brigde
410	Schraube	410	Screw	410	Vis
500	Drehmomentenstütze	500	Torque arm	500	Bras de réaction
510	Buchse	510	Socket	510	Douille
520	Schraube	520	Screw	520	Vis
600	Abtriebswelle	600	Output shaft	600	Arbre de sortie
610	Wälzlager	610	Roller bearing	610	Palier
615	Wälzlager	615	Roller bearing	615	Palier
620	Abtriebsrad	620	Output gear	620	Roue de sortie
630	Passfeder	630	Key	630	Clavette
631	Wellendichtring	631	Radial shaft seal	631	Bague d’étanchéité de l’arbre
634	Sicherungsring	650	Circlip	650	Circlip
635	Passscheibe	635	Shim	635	Rondelles d’ajustage
636	Passscheibe	636	Shim	636	Rondelles d’ajustage
643	Distanzbuchse	643	Socket	510	Douille
648	Passfeder	648	Key	648	Clavette
650	Sicherungsring	650	Circlip	650	Circlip
652	Passscheibe	652	Shim	652	Rondelle d’ajustage
653	Passscheibe	653	Shim	653	Rondelle d’ajustage
655	Wellendichtring	655	Radial shaft seal	655	Bague d’étanchéité de l’arbre
657	Verschlusskappe	657	Sealing cap	657	Bouchon
↓		↓		↓	



2-stufige Kegelradgetriebe
2-stage Helical-Bevel Gear Unit
Couples coniques à 2 trains

EB 6239000-E1 #1

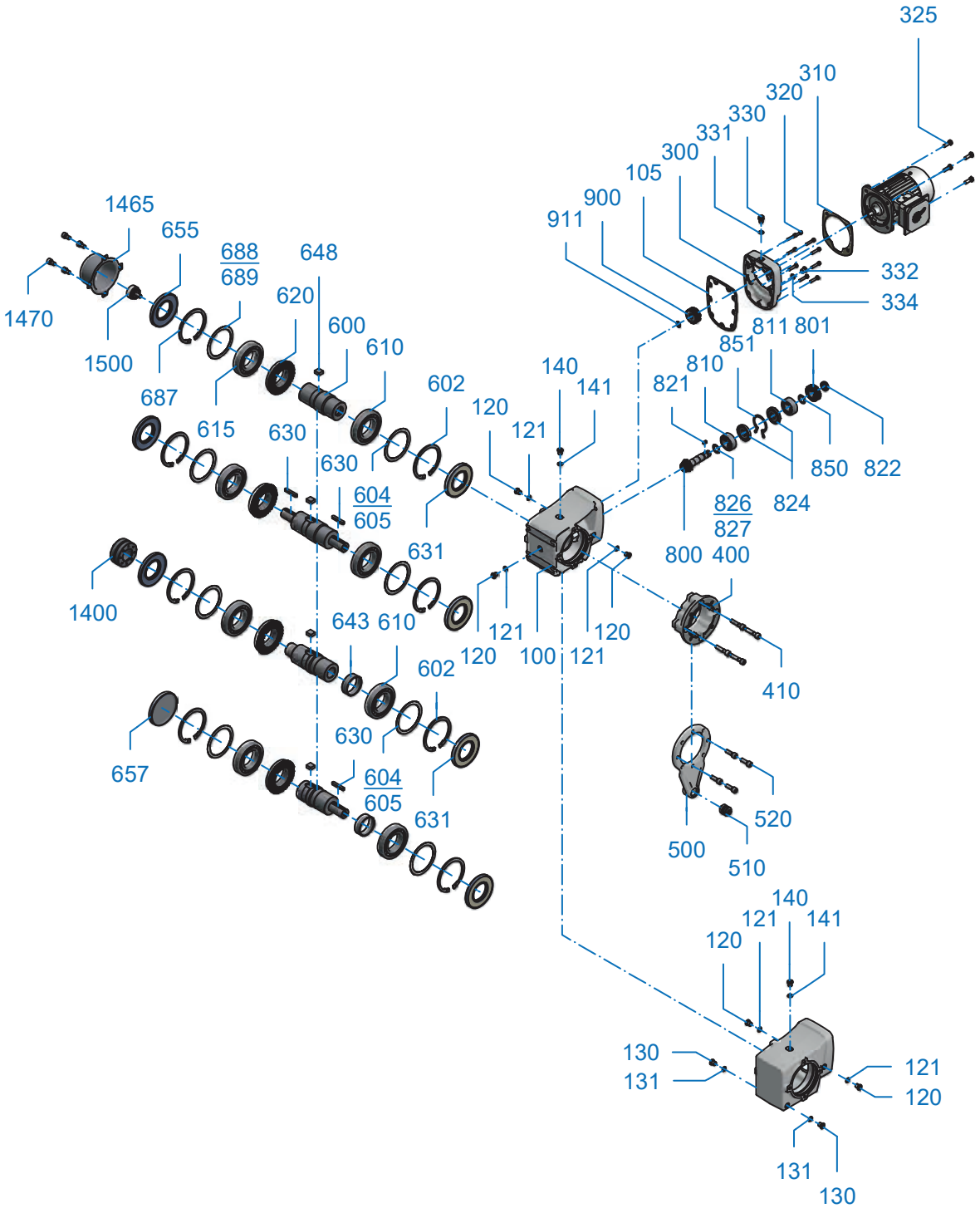



	DE		EN		FR
800	Ritzelwelle	800	Pinion shaft	800	Arbre de pignon
801	Antriebsrad	801	Drive gear	801	Roue d’entrée
810	Wälzlager	810	Roller bearing	810	Palier
811	Wälzlager	811	Roller bearing	811	Palier
820	Sicherungsring	820	Circlip	820	Circlip
821	Passfeder	630	Key	630	Clavette
822	Nutmutter	822	Locknut	822	Ecrou à encoches
823	Sicherungsblech	823	Tab washer	823	Rondelle d‘arrêt
824	Buchse	824	Socket	824	Douille
826	Passscheibe	826	Shim	826	Rondelle d’ajustage
827	Passscheibe	827	Shim	827	Rondelle d’ajustage
830	Stützscheibe	830	Supporting disc	830	Rondelle d‘appui
850	Buchse	850	Socket	850	Douille
851	Sicherungsring	851	Circlip	851	Circlip
900	Antriebsritzel	900	Driving pinion	900	Pignon d’entrée
910	Passfeder	910	Key	910	Clavette
911	Sicherungsring	911	Circlip	911	Circlip
1400	Baugruppe Schrumpfscheibe	1400	Shrink disc assembly	1400	Module de frette de serrage
1465	Haube	1465	Cover	1465	Capot
1470	Schraube	1470	Screw	1470	Vis
1500	Befestigungselement	1500	Fixing element	1500	Elément de f xation

Kontaktdaten / Contact details / Contacts:

Firma / Company / Entreprise:

Straße / Street / Rue:

Stadt / Town / Ville:

PLZ / Postcode/
Code postal:

Telefon / Telephone / Téléphone:

Fax:

E-mail:





Getriebebau NORD

Getriebebau-Nord-Straße 1
D-22941 Bargteheide

Telefon +49(0) 4532/289-0
Telefax +49(0) 4532/289-2253
E-Mail info@nord.com
www.nord.com

DE

Diese NORD Ersatzteilliste beinhaltet eine standardisierte Darstellung der NORD Getriebe. Um Ihnen das Finden und Nachbestellen von Ersatzteilen zu erleichtern, finden Sie am Ende der Ersatzteilliste ein Bestellformular mit wichtigen Hinweisen zur Bestimmung der richtigen Teile.

Für Rückfragen stehen wir Ihnen gerne zur Verfügung. Ihren lokalen Ansprechpartner finden Sie unter http://locator.nord.com.

EN

This NORD spare parts list contains a standardised depiction of NORD gear units. In order to enable you to find and re-order replacement parts more easily, you can find an order form and important information regarding the identification of the correct components at the end of this spare parts list.

We will be glad to help you if you have any queries: You can find your local contact partner under http://locator.nord.com.

FR

Cette liste de pièces de rechange NORD contient une représentation standard des réducteurs NORD. Pour faciliter la recherche et la commande de pièces de rechange, un formulaire de commande se trouve à la fin de la liste des pièces de rechange et vous donne toutes les informations essentielles pour déterminer les pièces dont vous avez besoin.

En cas de questions, n'hésitez pas à nous contacter. Pour connaître votre interlocuteur local, veuillez consulter le site http://locator.nord.com.

Erläuterung des Typenschildes
Explanation of the rating plate
Explication de la plaque signalétique

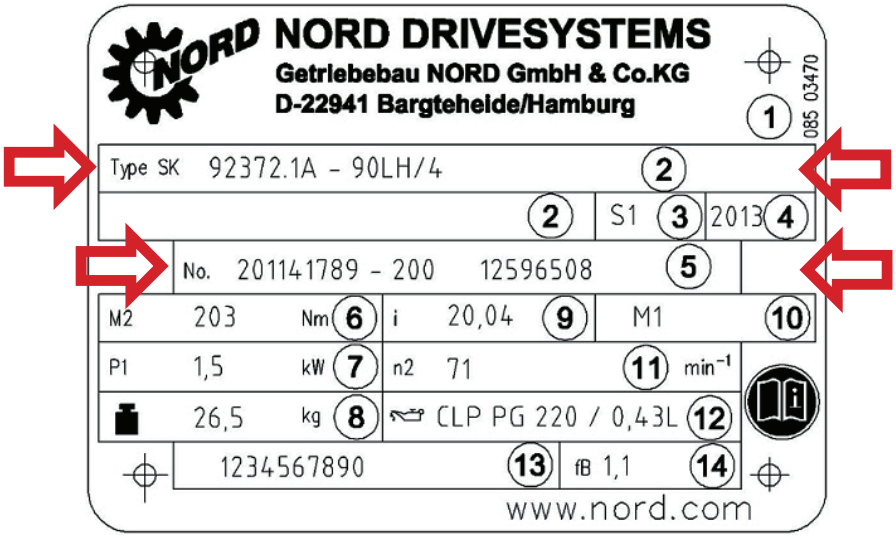

DE

1 Matrix – Barcode
2 NORD - Getriebetyp
3 Herstellungsjahr
4 Fabrikationsnummer
5 Nenndrehmoment der Getriebeabtriebswelle
6 Antriebsleistung
7 Gewicht entsprechend Auftragsausführung
8 Gesamte Getriebeübersetzung
9 Einbaulage
10 Nenndrehzahl der Getriebeabtriebswelle
11 Schmierstoffart, -viskosität und –menge
12 Kundenmaterialnummer
13 Betriebsfaktor

EN

1 Matrix – Barcode
2 NORD gear unit type
3 Year of manufacture
4 Serial number
5 Rated torque of gear unit output shaft
6 Drive power
7 Weight according to ordered version
8 Overall gear unit ratio
9 Installation orientation
10 Rated speed of gear unit output shaft
11 Lubricant type, viscosity and quantity
12 Customer's part number
13 Operating factor

FR

1 Code matriciel, à barres
2 Type de réducteur NORD
3 Année de fabrication
4 Numéro de série
5 Couple nominal de l'arbre de sortie du réducteur
6 Puissance d'entraînement
7 Poids selon l'exécution du contrat
8 Rapport de réduction total
9 Position de montage
10 Vitesse de rotation nominale de l'arbre de sortie du réducteur
12 Type de lubrif ant, viscosité et quantité
12 Numéro d'article client
13 Facteur de service

Ersatzteil-Bestellung / Replacement parts order / Commande de pièces de rechange:

Bezeichnung / Designation / Désignation:

Pos.-Nr. / Item No. / N° pos :

Stückzahl / Pieces / Quantité:

Getriebetyp / Gear unit type / Type de réducteur:

Fabrikationsnummer / Serial No. / Numéro de série:



NORD DRIVESYSTEMS Group

Headquarters and Technology Centre
in Bargteheide, close to Hamburg

Innovative drive solutions
for more than 100 branches of industry

Mechanical products
parallel shaft, helical gear, bevel gear and worm gear units

Electrical products
IE2/IE3/IE4 motors

Electronic products
centralised and decentralised frequency inverters,
motor starters and f eld distribution systems

7 state-of-the-art production plants
for all drive components

Subsidiaries in 36 countries on 5 continents
provide local stocks, assembly, production,
technical support and customer service

More than 3,500 employees throughout the world
create customer oriented solutions

www.nord.com/locator

Headquarters:

Getriebebau NORD GmbH & Co. KG
Getriebebau-Nord-Straße 1
22941 Bargteheide, Germany
Fon.: +49 (0) 4532 / 289 - 0
Fax: +49 (0) 4532 / 289 - 2253

Member of the NORD DRIVESYSTEMS Group

NORD DRIVESYSTEMS

Mat.Nr. 6002699/3117

TROUBLESHOOTING

Troubleshooting

This section identifies some of the most common issues involved with NORD Gear speed reducers , and provides recommendations to assist you in defining and answering your questions as you work with our products. You may also contact our Engineering/Application departments if your questions are not answered in the table below.

Problem With the Reducer		Possible Causes	Suggested Remedy
Runs Hot	Overloading	Load exceeds the capacity of the reducer	Check rated capacity of reducer, replace with unit of sufficient capacity or reduce the load.
	Improper lubrication	Insufficient lubrication	Check lubricant level and adjust up to recommended levels
		Excessive lubrication	Check lubricant level and adjust down to recommended levels.
		Wrong lubrication	Flush out and refill with correct lubricant as recommended
Runs Noisy	Loose foundation bolts	Weak mounting structure	Inspect mounting of reducer. Tighten loose bolts and/or reinforce mounting and structure.
		Loose hold down bolts	Tighten bolts
	Failure of bearings	May be due to lack of lubricant	Replace bearing. Clean and flush reducer and fill with recommended lubricant.
		Overload	Check rated capacity of reducer.
	Insufficient lubricant	Level of lubricant in reducer not properly maintained.	Check lubricant level and adjust to factory recommended level.
Output shaft does not turn	Internal parts are broken or missing	Overloading of reducer can cause damage	Replace broken parts. Check rated capacity of reducer.
		Key missing or sheared off on input shaft.	Replace key.
		Coupling loose or disconnected	Properly allign reducer and coupling. Tighten coupling.
Oil Leakage	Worn seals	Caused by dirt or grit entering seal.	Replace seals. Autovent may be clogged. Replace or clean.
	Unit runs hot or leaks	Overfilled reducer	Check lubricant level and adjust to recommended level.
		Vent clogged.	Clean or replace, being sure to prevent any dirt from falling into the reducer.
	Incorrect fill level	Improper mounting position, such as wall or ceiling mount of horizontal reducer.	Check mounting position on the name tag & verify with mounting chart in manual.

Technical Documentation

PDH00145C

Optim TEFC | AEHH8N

Date: September 27, 2018

TECO Westinghouse
MOTORS (CANADA) INC.

Date: September 27, 2018

Dimensional Drawing

Catalogue	Model	HP	Pole	kW	Rating	Voltage	Hz	RPM
PDH00145C	AEHH8N	1	4	0.75	Continuous	575 V	60	1800

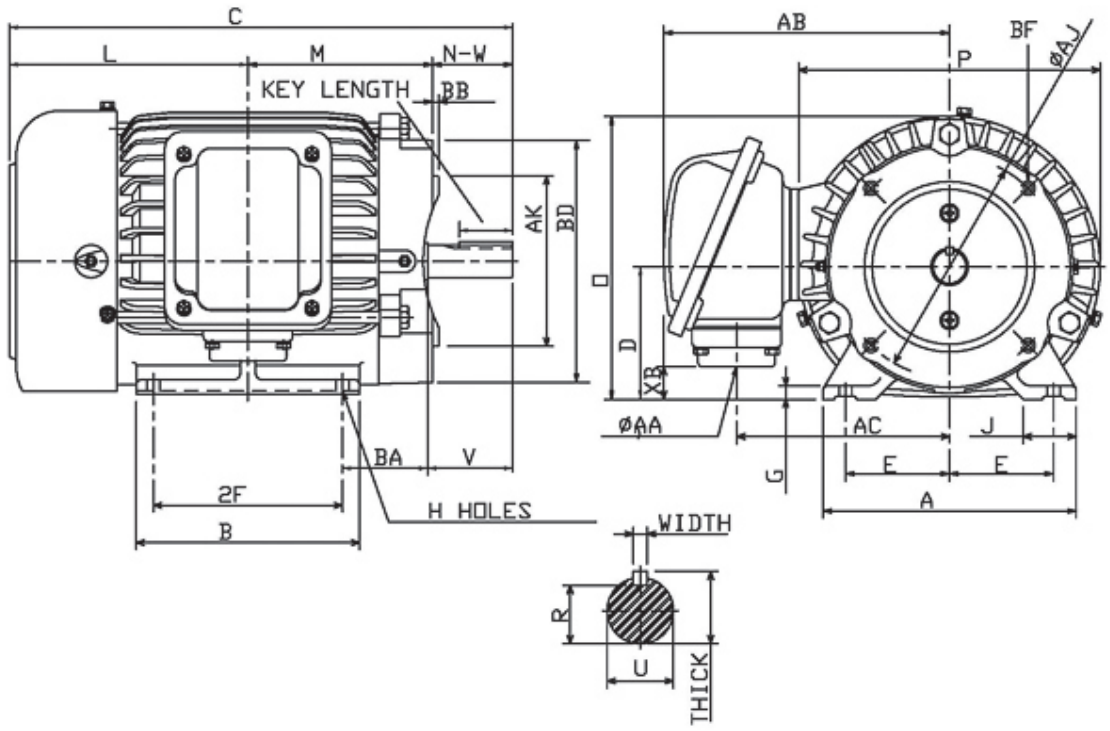

Frame Size	Mounting					A	B	C	CD	D
	E	2F	2F2	H	BA					
143TC	2.75	4		0.34	2.25	6.7	5.1	12.34		3.5

G	J	K	L	M	O	P	T	Key			Keyseat
								Width	Thick	Length	R
0.35	1.4		5.84	4.03	7.48	7.97		0.188	0.188	1.41	0.771

Terminal Housing				Aux Box		C/D Flange					
AA	AB	AC	XB	AE	AX	BB	AH	AK	BD	AJ	BF
3/4 NPT	7.56	5.63	0.86			0.16	2.12	4.5	6.4	5.875	3/8-16UNC

Shaft Extension			Bearings		Approx. Weight Lbs	SPL dBA/3ft	Ins. Class	S.F.	Drive Method	Dimensions
N-W	U	V	DE	NDE						
2.25	0.875	2.2	6205ZZ	6205ZZ	55	49	F	1.15	Direct Coupling / Belt Drive	Inches

TECO Westinghouse MOTORS (CANADA) INC.	
	Date: September 27, 2018

Technical Data Sheet

Motor Type: AEHH8N	Catalogue No: PDH00145C

Nameplate Information

HP	Pole	RPM	Frame	Voltage	Hz	Phase
1	4	1745	143TC	575	60	3
Enclosure	Ins. Class	Service Factor	Time Rating	NEMA Design	Rated Amb.	Rated Altitude
TEFC	F	1.15	Continuous	B	-40 to 40 °C	<3300 ft

Typical Performance

Efficiency (%)				Power Factor (%)		
Full Load		3/4 Load	1/2 Load	Full Load	3/4 Load	1/2 Load
Nom.	Min.					
85.5	82.5	84.0	81.5	73.0	64.5	51.5

Torque				Current (A)		
Full Load (lb-ft)	Locked Rotor (% FLT)	Pull Up (% FLT)	Break Down (% FLT)	No Load	Full Load	Locked Rotor
3.01	310	280	410	0.6	1.2	12

NEMA KVA Code	Inertia (WR^2)			Safe Stall Time (s)		Noise Level Sound Press. dB(A)
	Rotor ($lb\text{-}ft^2$)	NEMA Load ($lb\text{-}ft^2$)	Max. Allowable ($lb\text{-}ft^2$)	Cold	Hot	
N	0.086	5.8	46.0	71	50	49

VFD Duty Information

Speed Range			VFD		S.F.
Constant Torque	Variable Torque	Constant Power	Carrier	Type	
6-60Hz	3-60Hz	60-120Hz	≤ 5 kHz	VPWM or CPWM	1.0 Only

Additional Information

Bearings		Approx. Weight
DE	NDE	lbs
6205ZZ	6205ZZ	55

Hazardous Locations Information

CSA Certified	
Class I, Div 2, Groups B, C & D Class I, Zone 2, Groups IIB+H2, IIB & IIA	
Temp Code (Sinewave / VFD)	T3C / T3C

TECO Westinghouse MOTORS (CANADA) INC.	
	Date: September 27, 2018

Nameplate Drawing

Optim TEFC

TYPE	AEHH8N	CAT. NO.	PDH00145C		
OUTPUT	1 HP 0.75 kW	FRAME	143TC	TEFC	
R.P.M.	1745	POLE	4	INS.	F
VOLTS	575	PHASE	3	Hz	60
AMPS	1.2	CODE	N	S.F.	1.15
AMBIENT	40 °C	NOM. EFF. 85.5		MIN. EFF. 82.5	
BEARINGS	6205ZZ / 6205ZZ			RATING Cont.	

SER. NO.	TBD	DESIGN	B	WT. 55 LBS

PWM VFD DUTY	VT	CT	CP	S.F.
	3-60Hz	6-60Hz	60-120Hz	1.0 Only

Connection Diagram

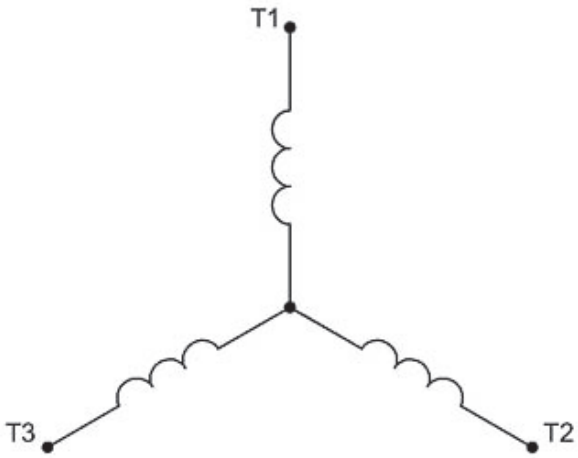

3 LEAD SINGLE VOLTAGE WYE					
VOLTAGE	CONN.	L1	L2	L3	
-	WYE	1	2	3	

WD_3Y

TECO Westinghouse
MOTORS (CANADA) INC.

Date: September 27, 2018

Thermal Limit Curves

Motor Type: AEHH8N	Catalogue No: PDH00145C	Family: Optim TEFC

HP	1	Safe Stall Time		Full Load A	0.0 / 1.2 A
Voltage	0 / 575V 60Hz	Hot	50 s	Locked Rotor A	1,000 %
RPM	1800	Cold	71 s	Locked Rotor A	0.0 / 12 A

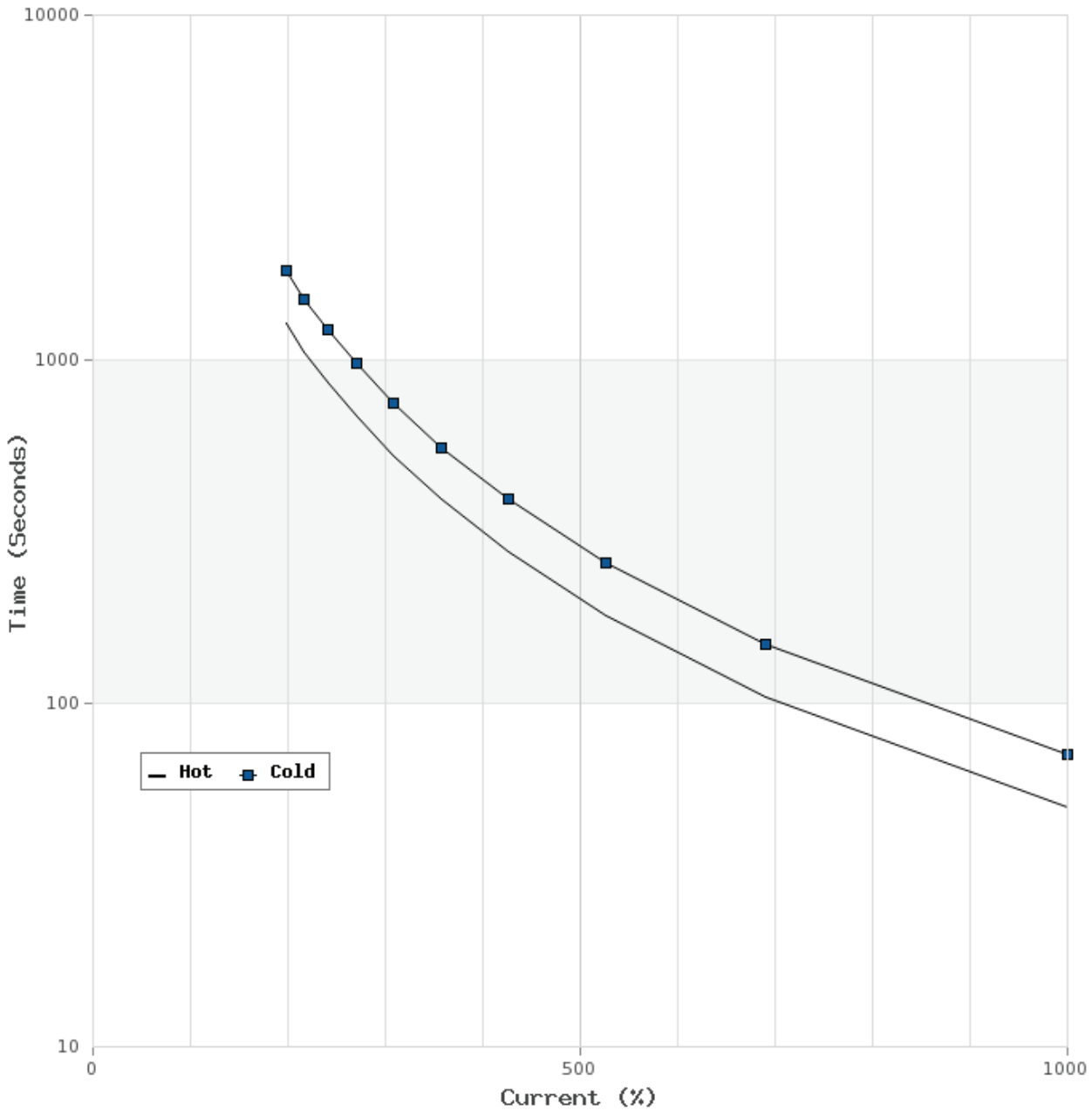

TECO Westinghouse MOTORS (CANADA) INC.	
	Date: September 27, 2018

T-N and I-N Curves

Motor Type: AEHH8N	Catalogue No: PDH00145C	Family: Optim TEFC

HP	1	Full Load T	3.01 lb-ft	Full Load A	1.2 A
Voltage	575V 60Hz	Locked Rotor T	310 %	Locked Rotor A	12.0 A
RPM	1800	Pull Up T	280 %	Break Down T	410 %

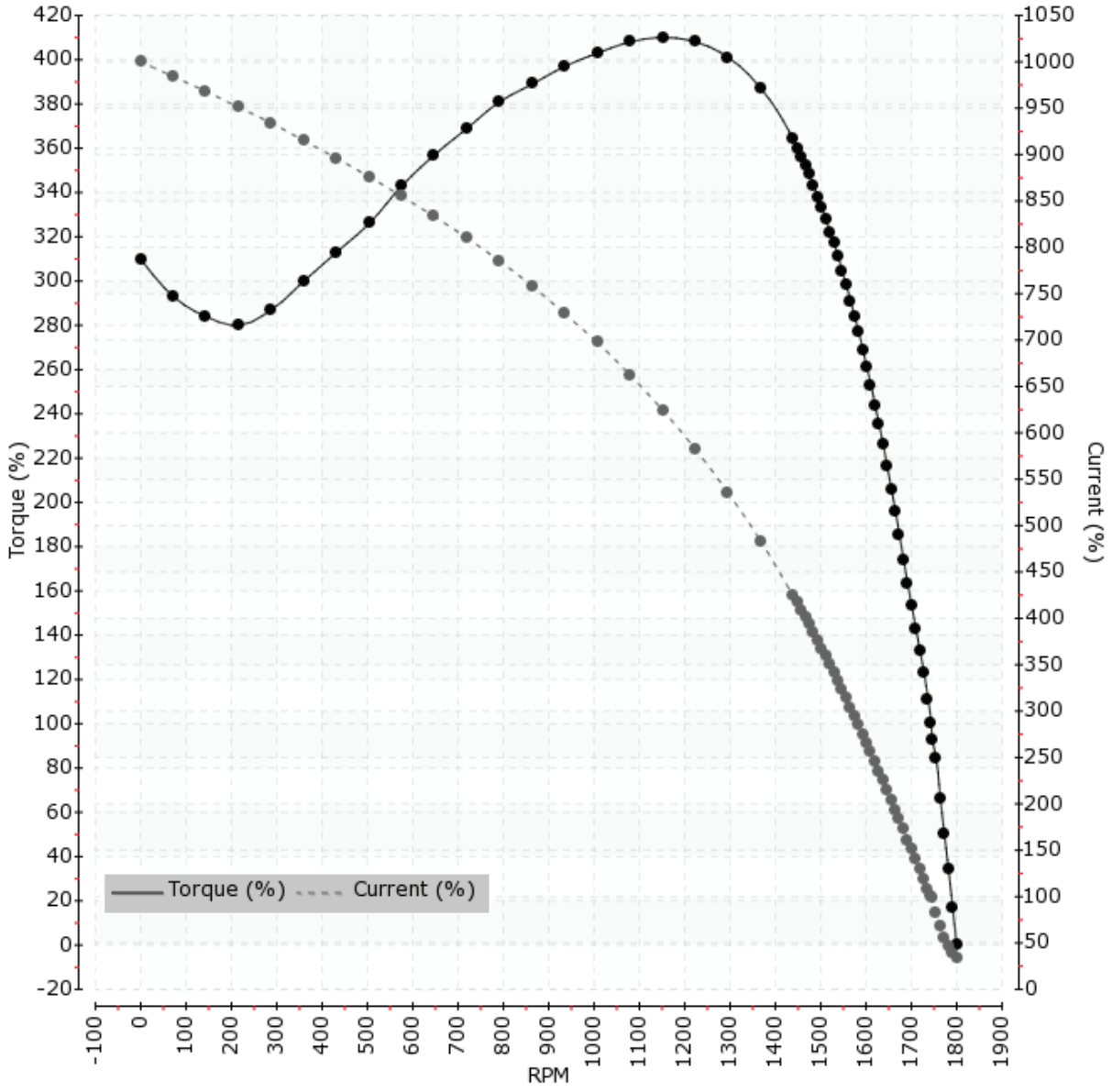

LEFT BLANK

4 – DETAILED TECHNICAL DOCUMENTATION

4.4 – LIST OF SUPPLIERS

LEFT BLANK

LIST OF SUPPLIERS

SUPPLIER	ADDRESS	LOCATION	TELEPHONE
AERZEN CANADA COMPRESSEURS INC	1995 MONTÉE LABOSSIÈRE	VAUDREUIL-DORION	450-424-3966
BRAY CONTROLES CANADA CORP.	377, MCCAFFREY	ST-LAURENT	514-344-2729
CHEMLINE PLASTICS LTD	55 GUARDSMAN ROAD	THORNILL	905-889-7890
CONTROLES DAVIS QUEBEC LTEE	6700, CHEMIN COTE DE LIESSE	ST-LAURENT	514-737-4817
CONVAL QUEBEC .	9485, TRANS CANADA HWY.	MONTREAL	1-905-828-9900
D.M. VALVE ET CONTROLES INC.	3540 BLVD. POIRIER	ST-LAURENT	514-332-4260
EBI ELECTRIC	2250 90E RUE	SAINT-GEORGES	819-82-4269
ENDRESS & HAUSER CANADA - ST-LAURENT	6800, COTE DE LIESSE	ST-LAURENT	514-733-0254
ENVIREQUIP	710 COTTON MILL ROAD	CORNWALL	613-703-7930
ENVITECH AUTOMATION (2009) INC.	5710 BLVD. THIMENS	ST-LAURENT	514-333-5700
FLOCOR INC.	470 SEAMAN STREET	STONEY CREEK	514-683-7282
HACH SALES & SERVICES CANADA	3020 GORE ROAD	LONDON	800-665-7635
IFM EFECTOR CANADA INC.	2476 ARGENTIA ROAD	MISSISSAUGA	905-363-0563
INDUSTRIE LEMIEUX INC	1401 RUE GRAHAM-BELL	BOUCHERVILLE	450-441-4490
ISLIP FLOW CONTROLS INC.	4335, MAINWAY DR.	BURLINGTON	866-872-0072
KOFLO CORPORATION	309, CARY POINT DRIVE	CARY	847-516-3700
NETZSCH CANADA, INC.	500 WELHAM ROAD	BARRIE	705-797-8426
NORD GEAR LIMITED, BRAMPTON	41 WEST DRIVE	BRAMPTON	905-796-3606
PRODUITS D'ACIER ROGER INC	1350 GRANDE ALLÉE	TERREBONNE	450-471-2000
ROTALEC CANADA INC	900 MC CAFFREY	ST-LAURENT	514-341-3685
SCHUTTE & KOERTING	2510, METROPOLITAN DRIVE	TREVOSE	215-639-0900
SHANLEY PUMP & EQUIPMENT INC	2525 S. CLEARBROOK DRIVE	ARLINGTON HEIGHTS	847-439-9200
TECKNO VALVE RS INC	2111-A, RUE DE LEONARD-DE-VINCI	SAINTE-JULIE	450-649-7333
TIGER-VAC INTERNATIONAL INC.	2020, DAGENAIS	LAVAL	450-622-0100
VEOLIA (SR043/001 - ANOXKALDNES)	KLOSTERANGSVAGEN 11A	LUND	
WAM USA, INC.	75 BOULDERBROOK CIRCLE	LAWRENCEVILLE	770-339-6767
XYLEM CANADA CO - AVANT ITT WATER	300 AVENUE LABROSSE	POINTE-CLAIRE	514-695-0133

LEFT BLANK

4 – DETAILED TECHNICAL DOCUMENTATION

4.5 – COMMISSIONING AND PERFORMANCE TEST REPORTS

LEFT BLANK

DOCUMENT PROVIDED AFTER PROCESS STARTUP

LEFT BLANK

5 – ELECTRICITY AND CONTROL

5.1 – CONTROL ARCHITECTURE

LEFT BLANK

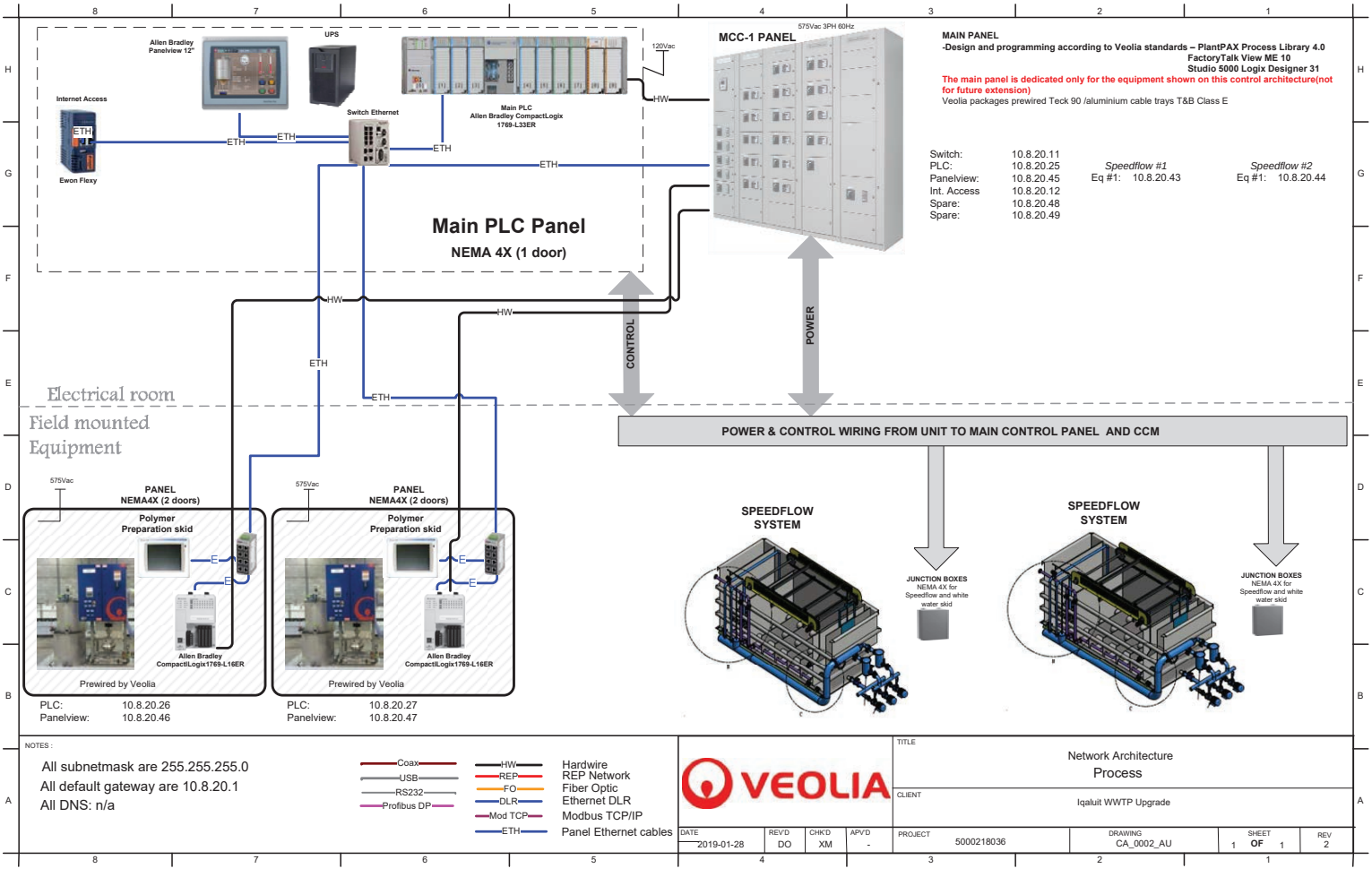

MAIN PANEL
-Design and programming according to Veolia standards – PlantPAX Process Library 4.0
FactoryTalk View ME 10
Studio 5000 Logix Designer 31
The main panel is dedicated only for the equipment shown on this control architecture(not for future extension)
Veolia packages prewired Teck 90 /aluminium cable trays T&B Class E

		Speedflow #1	*Speedflow #2*
Switch:	10.8.20.11		
PLC:	10.8.20.25		
Panelview:	10.8.20.45	Eq #1: 10.8.20.43	Eq #1: 10.8.20.44
Int. Access	10.8.20.12		
Spare:	10.8.20.48		
Spare:	10.8.20.49		

PLC: 10.8.20.26
Panelview: 10.8.20.46

PLC: 10.8.20.27
Panelview: 10.8.20.47

NOTES :

All subnetmask are 255.255.255.0
All default gateway are 10.8.20.1
All DNS: n/a

Coax	Hardwire
USB	REP Network
RS232	Fiber Optic
Profibus DP	Ethernet DLR
HW	Modbus TCP/IP
REP	Panel Ethernet cables
FO	
DLR	
Mod TCP	
ETH	

VEOLIA

TITLE: Network Architecture
Process

CLIENT: Iqaluit WWTP Upgrade

DATE	REV'D	CHK'D	APV'D	PROJECT	DRAWING	SHEET	REV
2019-01-28	DO	XM	-	5000218036	CA_0002_AU	1 OF 1	2

LEFT BLANK

5 – ELECTRICITY AND CONTROL

5.2 – ELECTRICAL LOAD LIST

LEFT BLANK

Iqaluit - Veolia supplied equipment Electrical Load List #5000218036_MOLS_0001_GEN_VWT Rev 1

575V POWERED EQUIPMENT	Tag number	Voltage	Frequency	Phase	Amperage	Qty installed	Qty in operation	Installed motor power	VFD	Comments
		Vac	Hz		A			HP		
Process aeration blower 1	B02-110	575	60	3		1	1	25	Yes	
Process aeration blower 2	B02-120	575	60	3		1	1	25	Yes	
Process aeration blower 3	B02-130	575	60	3		1	0	25	Yes	
DAF T-02-310 sludge scraper	DDR02-311	575	60	3		1	1	0.25	No	
DAF T-02-320 sludge scraper	DDR02-321	575	60	3		1	1	0.25	No	
DAF T-02-310 White water pump 1	P02-410	575	60	3		1	1	20	No	Soft start recommended
DAF T-02-310 White water pump 2	P02-420	575	60	3		1	1	20	No	Soft start recommended
DAF T-02-310 White water pump 3	P02-430	575	60	3		1	0	20	No	Soft start recommended
DAF T-02-320 White water pump 1	P02-440	575	60	3		1	1	20	No	Soft start recommended
DAF T-02-320 White water pump 2	P02-450	575	60	3		1	1	20	No	Soft start recommended
DAF T-02-320 White water pump 3	P02-460	575	60	3		1	0	20	No	Soft start recommended
Hydrapol 250 DAF polymer make-up control panel	LCP-04-700	575	60	3	15A	1	1	N/A	N/A	
Hydrapol 500 BFP polymer make-up control panel	LCP-04-900	575	60	3	15A	1	1	N/A	N/A	
DAF polymer dosing pump 1	P04-770	575	60	3		1	1	0.5	Yes	
DAF polymer dosing pump 2	P04-780	575	60	3		1	1	0.5	Yes	
DAF polymer dosing pump 3	P04-790	575	60	3		1	0	0.5	Yes	
BFP polymer dosing pump 1	P04-970	575	60	3		1	1	1	Yes	
BFP polymer dosing pump 2	P04-980	575	60	3		1	0	1	Yes	
TWAS pump 1	P02-610	575	60	3		1	1	1	Yes	
TWAS pump 2	P02-620	575	60	3		1	1	1	Yes	
BFP feed pump 1	P03-630	575	60	3		1	1	5	Yes	
BFP feed pump 2	P03-640	575	60	3		1	1	5	Yes	

120V POWERED EQUIPMENT	Tag	Voltage	Frequency	Phase	Amperage or Power Consumption	Qty installed	Qty in operation
		Vac	Hz		A		
DAF control panel	LCP-02-300	120	60	1	40A & 1500VA UPS	1	1
MBBR tank T02-210 DO controller 1	AIT02-211	120	60	1	100VA power	1	1
MBBR tank T02-210 DO controller 2	AIT02-212	120	60	1	100VA power	1	1
MBBR tank T02-220 DO controller 1	AIT02-221	120	60	1	100VA power	1	1
MBBR tank T02-220 DO controller 2	AIT02-222	120	60	1	100VA power	1	1
DAF T-02-310 white water flowmeter	FIT02-317	120	60	1	30VA power	1	1
DAF T-02-310 on/off white water valve	FV02-625	120	60	1	1A	1	1
DAF T-02-310 suspended solid transmitter	AIT02-334	120	60	1	100VA power	1	1
DAF T-02-310 strainer 1 inlet valve	FV02-511	120	60	1	1A	1	1
DAF T-02-310 strainer 1 drain valve	FV02-512	120	60	1	2.1A	1	1
DAF T-02-310 strainer 2 inlet valve	FV02-521	120	60	1	1A	1	1
DAF T-02-310 strainer 2 drain valve	FV02-522	120	60	1	2.1A	1	1
DAF T-02-320 white water flowmeter	FIT02-327	120	60	1	30VA power	1	1
DAF T-02-320 on/off white water valve	FV02-645	120	60	1	1A	1	1
DAF T-02-320 suspended solid transmitter	AIT02-344	120	60	1	100VA power	1	1
DAF T-02-320 strainer 1 inlet valve	FV02-531	120	60	1	1A	1	1
DAF T-02-320 strainer 1 drain valve	FV02-532	120	60	1	2.1A	1	1
DAF T-02-320 strainer 2 inlet valve	FV02-541	120	60	1	1A	1	1
DAF T-02-320 strainer 2 drain valve	FV02-542	120	60	1	2.1A	1	1
DAF polymer dosing transport valve 1	SV04-783	120	60	1	70VA power	1	1
DAF polymer dosing transport valve 2	SV04-784	120	60	1	70VA power	1	1
DAF polymer dosing pump 1 temperature controller	TE04-769	120	60	1	5VA power	1	1
DAF polymer dosing pump 2 temperature controller	TE04-770	120	60	1	5VA power	1	1
DAF polymer dosing pump 3 temperature controller	TE04-771	120	60	1	5VA power	1	0
BFP polymer dosing transport valve 1	SV04-982	120	60	1	180VA power	1	1
BFP polymer dosing pump 1 temperature controller	TE04-966	120	60	1	5VA power	1	1
BFP polymer dosing pump 2 temperature controller	TE04-967	120	60	1	5VA power	1	0
TWAS pump 1 temperature controller	TE02-610	120	60	1	5VA power	1	1
TWAS pump 2 temperature controller	TE02-620	120	60	1	5VA power	1	1
BFP feed pump 1 temperature controller	TE03-630	120	60	1	5VA power	1	1
BFP feed pump 2 temperature controller	TE03-640	120	60	1	5VA power	1	1

LEFT BLANK

5 – ELECTRICITY AND CONTROL

5.3 – PROCESS FUNCTIONAL DESCRIPTION

5.3.1 – MBBR

LEFT BLANK

IQALUIT

Moving Bed Biofilm Reactor (MBBR)

Functional Process Description

5000218036_FD_0002

Revision 1

VEOLIA

VEOLIA WATER TECHNOLOGIES CANADA

www.veoliawatertechnologies.com

REVISION HISTORY

Rev	Date	By:	Reviewed by:	Approved by:	Description
1	2019-07-18	FV	ED		For Information

Table des matières

1 INTRODUCTION 4
1.1 Reference documents 4
1.2 General process description 4
2 MBBR CONTROL PHILOSOPHY 5
2.1 Equipment and instruments 5
2.1 Process description 5
2.1.1 MBBR 5
2.1.2 Process air 6
2.2 Operating modes 6
2.3 Control loops 6
2.3.1 DO control 6
2.3.2 Minimum mixing flowrate 6
2.3.3 Level control 6
2.4 DO sensor cleaning 7
2.5 Fault responses and alarms 7

1 INTRODUCTION

1.1 Reference documents

The reference documents to be consulted while reading this document are:

- P&ID
- MBBR field installation drawing

1.2 General process description

MBBR is a fixed-film process, making it well suited for variable influent flows, since the biomass remains within the biological reactor whatever the flow and reacts to changing loads automatically. Biomass sloughs off MBBR media continuously and exits together with particulate organic matter in MBBR effluent. MBBR effluent is then clarified using floatation of the suspended solids in a separate downstream DAF.

The MBBR reactor ensures the removal of BOD5, while the secondary clarification step (DAF) ensures that the Total Suspended Solids (TSS) removal target is reached.

2 MBBR CONTROL PHILOSOPHY

2.1 Equipment and instruments

Tags of controlled equipment related to the MBBR process

Project tags MBBR T02-210	Project tags MBBR T02-220	Description	Comment
FV-02-211	FV-02-221	MBBR tank actuated inlet on/off valve	
AIT-02-211	AIT-02-221	Cell 1 dissolved oxygen (DO)	
SV-02-211	SV-02-221	Cell 1 DO sensor air cleaning solenoid valve	
LSH-02-213	LSH-02-223	Cell 1 high level switch	
AIT-02-212	AIT-02-222	Cell 2 dissolved oxygen (DO)	
SV-02-212	SV-02-222	Cell 2 DO sensor air cleaning solenoid valve	
LSH-02-214	LSH-02-224	Cell 2 high level switch	
BFV-02-155	FV-02-150	Modulating process air control valves	Not supplied by Veolia
FQIT-02-156	FQIT-02-152	MBBR tank process air flowmeter	Not supplied by Veolia

2.1 Process description

2.1.1 MBBR

The MBBR is a flow-through process; the process is load based meaning influent flow rate variations. Each MBBR train is online and primary influent is continuously fed to both trains that work in parallel. Each MBBR train can treat the 75% of the 2041 maximum month flow or 45.3 L/s. Both MBBR trains operating can pass hydraulically the 2041 peak hour flow (151 L/s) to the plant.

Primary effluent flows from the primary filters (PF-01-310/320) to the MBBR reactors by gravity. Flow is split into two MBBR trains (T-02-210/220).

Each MBBR reactor train is split into two cells. Sieves are used to retain the carrier media in the MBBR cells, while allowing the treated effluent to flow downstream to the DAF units

2.1.2 Process air

Aeration to the MBBR trains is provided by three positive displacement process aeration blowers (B-02-110/120/130) (two duty/one standby).

A coarse bubble aeration system within the MBBR cells covers the tanks bottom surface. The aeration system provides optimum oxygen transfer to the fixed biomass and maintains homogenous MBBR media mixing over the reactor cell volume.

2.2 Operating modes

The MBBR has been designed to treat 75% of the 2041 maximum month flow with two trains in parallel. This is the standard operation mode.

The system has the option to operate a single train during low loading conditions to save energy and avoid nitrification. The second MBBR train is put into idle mode with the aeration off most of the time and pulsed using an adjustable on/off timer to keep biomass alive. When this condition continues for longer durations, the MBBR train is alternated to keep biomass nourished. Alternation is accomplished through the actuated on/off valves (FV-02-211/221) installed at the inlet of each MBBR train

2.3 Control loops

2.3.1 DO control

Each MBBR cell is equipped with dissolved oxygen (DO) sensors/transmitters (AIT-02-211/212/221/222) to monitor the oxygen level in the system. The desired DO set point is fixed by the operator and a DO control loop is used to modulate the process air feed flow rate to the cells through the actuation of modulating process air control valves (BFV-02-150/155)

2.3.2 Minimum mixing flowrate

A minimum air feed flow [Qair,min] per MBBR tank is set, which corresponds to the minimum flow required to keep the MBBR media in suspension. This minimum air flow is referred to as the minimum mixing intensity.
If the measured process air inlet flowrate (FQIT-02-156/152), is lower than [Qair,min], the PLC forces the opening of the modulating process air control valve.

2.3.3 Level control

Water flows from the MBBR to the DAF Spidflow downstream by gravity. Therefore the level in the MBBR is set by the level control loop of the DAF Spidflow.

2.4 DO sensor cleaning

The DO probes are automatically cleaned using a blast of compressed air at fixed intervals set on a timer. This is done through the opening of the DO sensor air cleaning solenoid valve located on a compressed air network.

The opening of the DO sensor air cleaning solenoid valve is controlled by the Hach SC200 controller of each DO sensor. The opening frequency and duration is adjustable in the SC200 controller. Standard setting is a 4 second opening every 4 hours.

2.5 Fault responses and alarms

Each cell of each MBBR train is equipped with high water level switches (LSH-02-213/214/223/224). A high level detection leads to a high priority alarm requiring operator intervention. High level within the MBBR reactors could be caused for instance by closed DAF inlet isolation valves. A high level detection stops feed to the MBBR unit by closing the respective actuated on/off valves (FV-02-211/221) installed at the inlet of the MBBR train.

Section to be confirmed by STANTEC (out of Veolia's scope)

If actuated on/off valves (FV-02-211/221) need to be closed at the same time, (this could happen when both MBBR trains cannot receive additional influent flow) and the shaftless spiral screen (SCRN-01-210 or 220) and the primary filters (PF-01-310/320) must be kept operational due to high influent flows to the plant, the automated secondary emergency bypass valve (KV-01-001) opens during the high flow event allowing the primary effluent to flow to the outfall.

LEFT BLANK

5 – ELECTRICITY AND CONTROL

5.3 – PROCESS FUNCTIONAL DESCRIPTION

5.3.2 – SPIDFLOW DAF

LEFT BLANK

IQALUIT

SPIDFLOW® DAF

Functional Process Description

5000218036_FD_0001

Revision 2

Changes from previous revision of this document are highlighted in yellow

VEOLIA WATER TECHNOLOGIES CANADA

www.veoliawatertechnologies.com

REVISION HISTORY

Rev	Date	By:	Reviewed by:	Approved by:	Description
1	2019-06-05	FV	XM		For information
2	2019-07-19	FV	CB		Update following Stantec's review

Table des matières

1 INTRODUCTION 5
1.1 Reference documents 5
1.2 General process description 5
1.2.1 Feed zone 6
1.2.2 Injection zone 6
1.2.3 Flotation zone 6
1.2.4 Sludge zone 7
1.2.5 Clarified water output 7
1.2.6 White water circuit 7
2 SPIDFLOW® CONTROL PHILOSOPHY 8
2.1 Equipment and instruments 8
2.2 Operating modes 9
2.2.1 Local manual mode 9
2.2.2 HMI operator mode 9
2.2.3 Semi-automatic 9
2.3 Permissions 10
2.4 Interlocks 11
2.4.1 SPIDFLOW® 11
2.4.2 Scraper 11
2.5 Control loops 11
2.5.1 Flotation zone level control 11
2.5.2 Modulating valves position deviation alarm 11
2.6 Options 12
2.6.1 Latency option (IDLE) 12
2.7 Surface scraper operation modes 12
2.7.1 Continuous mode 12
2.7.2 Sequential mode 12

2.8 Emptying of the sludge hopper 12
2.8.1 Option 1: Emptying by gravity 12
2.8.2 Option 2: Extraction pump 13
2.9 Production of white water 13
2.9.1 White water pump operating logic 13
2.9.2 Interlocks 14
2.9.3 Injection rail opening logic 14
2.9.4 White water flowrate alarm 14
2.10 Screen in service 14
2.11 Back-flushing of screens 14
2.11.1 Flushing condition 15
2.12 Automatic sequences 15
2.12.1 Start sequences 15
2.12.2 Stop sequences 17
2.13 Remote start/stop of the two SPIDFLOW units 17
2.14 ALARM/FAILURE CONDITIONS AND PLC RESPONSE 18
2.14.1 Alarm priorities 18
2.14.2 Table of alarms and set points 18
2.15 SAFETY 18
2.15.1 Emergency stop 18
2.15.2 PLC response to a power outage 18
3 SYSTEM AND COMMUNICATION 20
3.1 WIRED SIGNALS 20
APPENDIX A – ALARMS, PARAMETERS AND SETTINGS 21

1 INTRODUCTION

1.1 Reference documents

The reference documents to be consulted while reading this document are:

- P&ID
- General arrangement drawing

1.2 General process description

SPIDFLOW® technology makes it possible to continuously separate solids in suspension for various water qualities through a dissolved air flotation process where air micro-bubbles get attached to suspended solids in order to make them float. The micro-bubbles are created by releasing a flow of pressurized water saturated with dissolved air.

Its unique hydraulic system, which uses baffles to create a laminar flow in the flotation zone, allows for a maximum flotation effect by forcing a vertical laminar flow. The flotation speed that can be achieved with a SPIDFLOW® is above 30 m/h at peak flowrate.

Particle and air agglomerations end up on the surface of the flotation unit, before being evacuated from the system by a surface scraper to a sludge hopper.

To facilitate attachment and get a better elimination yield, a coagulant and/or a flocculant may be dosed upstream from the flotation process. The sludge produced in this way typically has a 2 to 5% dryness.

In each one of the zones, heavier particles that precipitate out are drained after agitation by the air coming from the blowers.

The prefabricated SPIDFLOW® units are divided into five (5) zones, namely the feed, injection, flotation, sludge storage and clarified water output zones. The image below illustrates these five (5) zones.

Zone	Description
1	Feed
2	Injection
3	Flotation
4	Sludge storage
5	Clarified water

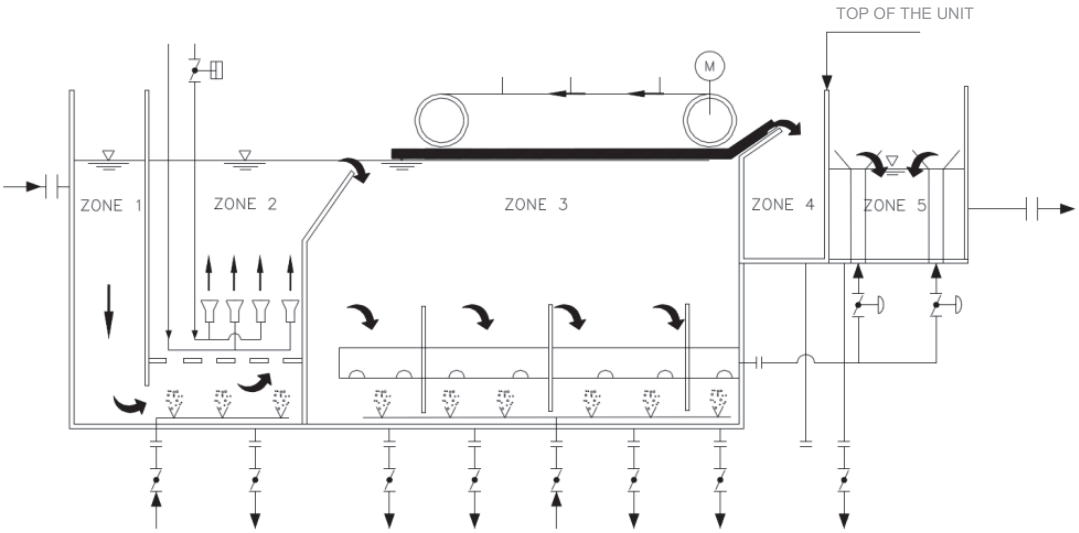

Figure 1 – Diagram of the dissolved air flotation unit

1.2.1 Feed zone

The feed zone guides the water to be treated toward the micro-bubble injection nozzles, reducing the speed in order to promote a uniform distribution of the flow over the width of the unit.

1.2.2 Injection zone

The water to be treated is mixed with a quantity of pressurized, air-saturated clarified water (called white water) in the injection zone. The micro-bubbles are created by the release of this white water into the injection nozzles. These nozzles, uniformly installed at the base of the injection zone, each create a dispersion cone that ensures proper mixing of the bubbles with the water to be treated.

The nozzles are installed on two headers where one can be isolated through an automatic valve in order to reduce the quantity of white water according to the outlet flowrate and/or the suspended solid load.

1.2.3 Flotation zone

The agglomerations of bubbles and particles float to the surface in the flotation zone to form a layer of sludge. A surface scraper removes this sludge to a sludge hopper. The thickness of the sludge in suspension can vary (between 25 and 100 mm), depending on the quantity of white water, the quality of the water to be treated, etc.

The clarified water is collected at the bottom of the flotation zone by collectors. Perpendicular baffles encourage hydraulics by standardizing the rate of descent over the surface of the basin uniformly.

1.2.4 Sludge zone

The sludge is scraped on the surface of the flotation zone, pushed over a threshold and discharged into a pyramid-shaped sludge hopper.

The sludge can be extracted by pumping or evacuated by gravity. The water level is maintained in the flotation zone for the layer of sludge to remain flush with the threshold of the sludge hoper.

1.2.5 Clarified water output

The fifth zone is the one for collection of clarified water. This zone is equipped with circular weirs that help to maintain the level of water in the flotation zone.

1.2.6 White water circuit

A fraction of the clarified water is pumped by one or more air-aspirating multiphase pumps. This pumped water, called white water, is 90% saturated with air. Its release to the atmosphere at the injection zone at a pressure of 4 to 6 bars spontaneously creates micro-bubbles.

2 SPIDFLOW® CONTROL PHILOSOPHY

2.1 Equipment and instruments

This section ties together the P & ID tags and the terminology used in all the equipment and instrument programs.

Project tags Spidflow T02-310	Project tags Spidflow T02-320	Standard tags	Description
Non Applicable	Non Applicable	AIT10-01	Turbidity of water to be treated
Non Applicable	Non Applicable	AIT10-02	pH of water to be treated
Non Applicable	Non Applicable	FIT10-01	Flowrate of water to be treated
FV02-312	FV02-332	VC10-01	Raw water valve
FV02-309	FV02-329	VC20-01	Clarified water valve #1
FV02-310	FV02-330	VC20-02	Clarified water valve #2
WS02-311	WS02-321	WIT20-01	SPIDFLOW high power level – scraper shaft
LSH02-330	LSH02-340	LSHH20-01	SPIDFLOW high level
LSH02-332	LSH02-342	LSH20-02	SPIDFLOW high sludge level
LSL02-333	LSL02-343	LSL20-03	SPIDFLOW low sludge level
AIT02-334	AIT02-344	AIT20-02	Turbidity of clarified water
LIT02-331	LIT02-341	LT20-01	SPIDFLOW level
FV02-625	FV02-645	VA20-01	SPIDFLOW actuated inlet white water valve
P02-410	P02-440	PV30-01	White water pump #1
P02-420	P02-450	PV30-02	White water pump #2
P02-430	P02-460	PV30-03	White water pump #3
FV02-511	FV02-531	VA30-01	Isolation valve screen #1
FV02-512	FV02-532	VA30-02	Drain valve screen #1
FV02-521	FV02-541	VA30-03	Isolation valve screen #2
FV02-522	FV02-542	VA30-04	Drain valve screen #2
PT02-520	PT02-540	PT30-01	Pressure upstream from screen
PT02-527	PT02-547	PT30-02	Pressure downstream from screen

FQIT02-328			Total treated water flowrate downstream from the two SPIDFLOWS
FIT2-317	FIT2-327		White water flowrate
FM-01-150			Raw water influent flowrate to the waste water treatment plant

2.2 Operating modes

There are two primary operating modes for the SPIDFLOW® unit: manual and semi-automatic. The manual mode is designed for individual use of equipment either locally, or through the HMI. The semi-automatic mode is designed for operation of the SPIDFLOW® system as a system.

2.2.1 Local manual mode

In local mode, the operator can make a piece of equipment operate individually. The equipment may be started manually on the panel using the H-O-A (Hand-Off-Auto) operating position.

2.2.2 HMI operator mode

The operator can individually control a piece of equipment using the HMI if the local switch for this piece of equipment is in the auto position. Manual operation from the HMI provides the same protection and the same alarms as the semi-automatic mode.

2.2.3 Semi-automatic

The semi-automatic mode allows the operator to launch start and stop sequences of the SPIDFLOW® system from the HMI or remotely.

NOTE: SPIDFLOW equipment cannot be controlled manually while it is operating in semi-automatic mode. A semi-automatic sequence cannot be started if one of the pieces of equipment is in local manual or HMI operator mode.

The table below presents a summary of the control modes.

Table 1: Summary of control modes

	Manual		Semi-Auto
	Local	**HMI Operator**	
Control system functions	N/A	N/A	Allowed (PLC)
Starting auto sequences	N/A	N/A	Initialization with HMI by operator or remote signal
Operation of equipment with HMI	N/A	Allowed (Virtual H-O-A on HMI)	Not allowed
Local operation of equipment	Allowed By the H-O-A on the panel	N/A	Not allowed

2.3 Permissions

The semi-automatic initiation sequence permissions are:

- The raw water valve, scraper, clarified water valves, the two valves for at least one screen and at least one white water pump have the H-O-A selector in the Auto position.
- The raw water valve, scraper, clarified water valves, the two valves for at least one screen and at least one white water pump are in program mode on the HMI.
- The raw water valve, scraper, clarified water valves, the two valves for at least one screen and at least one white water pump do not have existing equipment alarms.
- The level transmitter is not in an out-of-range fault.

2.4 Interlocks

2.4.1 SPIDFLOW®

The following elements initiate the automatic stop sequence for a SPIDFLOW® unit:

- SPIDFLOW® high level from high level switch LSH02-330/ LSH02-340 or from high high alarm of level transmitters LIT02-331/ LIT02-341
- Very high alarm for scraper shaft power

The following elements initiate the immediate stop sequence for a SPIDFLOW® unit:

- One of the emergency stops for the SPIDFLOW® unit
- Low level in the flotation zone of the SPIDFLOW® unit
- Very low pressure upstream of the screen in the white water circuit

2.4.2 Scraper

A high power alarm is activated when the power is above the adjustable set point. The triggering of this alarm may be activated after an adjustable delay time. These adjustable variables are defined through the micro-controller installed in the power panel.

2.5 Control loops

2.5.1 Flotation zone level control

The level in the flotation zone must remain constant in order for the surface scraper blades to properly scour the sludge. A level control loop maintains a level setting in the flotation zone by actuating the two clarified water modulating valves. The modulating valves are arranged in a primary/secondary configuration (lead/lag). ~~The priority of each valve is set by the operator.~~

The primary valve opens up to a certain opening (setting adjustable with the interface); beyond this opening the second valve opens. The two valves thus share the same opening setting. Below a certain opening (setting adjustable with the interface) the primary valve closes.

These two valves are configured to be “fail open” and will then open in the event of power failure.

2.5.2 Modulating valves position deviation alarm

These valves are provided with a position return signal; an adjustable deviation alarm will be activated if their position deviates excessively from their setting (standard deviation alarm is +/- 10% of the set point). During an alarm, the operator must validate the status of the valve actuator.

2.6 Options

2.6.1 Latency option (IDLE)

When the latency option (IDLE) is activated, SPIDFLOW® keeps the inlet and outlet valves open permanently.

This mode of operation may be used by the operator in case of upset conditions such as phase 2 peak hourly flowrate with a single unit in operation with an allowed short term degradation of the effluent quality. In this situation, treatment would be partial but the water would still be able pass through the SPIDFLOW®.

2.7 Surface scraper operation modes

The surface scraper can function according to two modes: continuous or sequential. The operator can select one of the two modes on the HMI.

Note that keeping too thick a layer of sludge on the surface may harm the quality of the clarified water.

2.7.1 Continuous mode

In this mode, the sludge scraper functions continuously when the SPIDFLOW® is in operation and the water level is above a required minimum.

2.7.2 Sequential mode

In this mode, the sludge scraper functions according to a timer (frequency and period in seconds adjustable with the HMI) if the level is above a required minimum.

Depending on the characteristics of the treated water and on the quantity of sludge produced, one mode or the other may be more efficient for the removal of the floating sludge. If the process produces a small quantity of sludge, the sequential mode may be preferred as it will allow for a sufficient build-up of floating sludge before it's scraped out.

2.8 Emptying of the sludge hopper

The sludge hopper is equipped with two switches, one at a low level and one at a high level.

2.8.1 Option 1: Emptying by gravity

When sludge is extracted by gravity, the low level switch is deactivated.

If the high level switch is activated, an over-full alarm for the sludge hopper is activated after 10 seconds, adjustable with the HMI. This activates the stop sequence for the unit.

2.8.2 Option 2: Extraction pump

The sludge is pumped from the sludge hopper, the pump starts through the activation of the high level switch. The pump stops when the low level switch is activated.

The start and stop signals of the sludge extraction pump (TWAS pump) will be sent from the SPIDFLOW® PLC to the main PLC of the water treatment plant that controls the operation of the pump.

If the high level switch is activated, an over-full alarm for the sludge hopper is activated after 10 seconds, adjustable with the HMI. This activates the stop sequence for the unit. In parallel, the sludge over-full alarm is sent to the plant main PLC that can trigger the remote start signal of the second SPIDFLOW® if not already started.

TWAS pumps are provided with VFDs for thickened sludge flow variation. If required due to changes in the concentration of the sludge, the speed of the pumps can be adjusted manually by the operator in the main PLC of the plant.

2.9 Production of white water

The white water production system functions according to the step of the SPIDFLOW® unit sequence. A portion of the clarified water is pumped by ambient air aspiration pumps then injected into the two headers situated in the injection zone.

The concentration of air in the white water is proportional to the flow of water to be treated and to the quality of the effluent. This air proportion must be verified periodically.

The white water pumps operate at a constant capacity. The quantity of the pumps' intake air is locally adjustable by the operator using a needle valve and a rotameter.

Upstream from the injection nozzles, there is a bypass, equipped with a manual control valve, through which the water flows directly into the supply tank. This valve makes it possible to:

- Purge excess air not dissolved in the white water line
- Adjust the pressure upstream from the white water nozzles and consequently the flow of injected white water

2.9.1 White water pump operating logic

The primary pump starts after the SPIDFLOW® start-up sequence is initiated.

When the water flowrate in the SPIDFLOW® is above a certain flow setting (Q EB1), a second pump is started. The flowrate is measured thanks to the common flowmeter downstream from the two SPIDFLOWS® divided by the number of SPIDFLOW® in operation.

The pumps are in primary, secondary and standby configuration. In the event of a failure, the next pump is put into operation. The alternation logic is the first started is the first stopped.

2.9.2 Interlocks

The white water pumps will not be able to start under the following conditions:

- The emergency button is activated.
- One of the two pressure transmitters has a very high alarm.
- The water level in the SPIDFLOW® has a very low alarm.
- The second white water pump cannot start as long as the automatic isolation valve of the second injection rail is not open.

2.9.3 Injection rail opening logic

The air injection nozzles are distributed over two rails. A rail is equipped with an automatic valve. This is opened after the water flow in the Spidflow is above the flow setting (Q EB1). It is closed following the same logic.

2.9.4 White water flowrate alarm

The white-water flowmeter located at the suction of the white-water pumps measures the white-water flowrate that should always be either 100% or 200% of the nominal flowrate of one white water pump depending on the number of pumps in operation. Lower flowrates indicate clogging of the white-water circuit or lower pumping capacity, which could be caused by too much air inlet flow and is detrimental for process efficiency. A low flow system alarm is triggered while the system remains in operation, requiring operator investigation of the cause of the reduced flow.

2.10 Screen in service

In the event of a problem on a screen, a button can be used by the operator to take the screen out of service. At this point, the screen is not accessible for alternation.

2.11 Back-flushing of screens

Two screens are installed downstream from the white water pumps, in order to keep particles from obstructing the injection nozzles. They are operated in an automatic mode according to an in service/standby configuration.

These screens are provided with an automatic isolation valve at the inlet and an automatic cleaning valve at the drain.

Under normal operation, the isolation and drain valves of a screen on standby are normally closed. The isolation valve of the in-service screen is opened and its drain valve is closed.

2.11.1 Flushing condition

Two conditions can start a flush:

- A pressure differential
- Runtime (min.)

The difference of pressure across the screens is measured by a subtraction of the PIT measurements upstream and downstream from the screen. Above a certain differential pressure setting (adjustable with the HMI), the in-service/standby screens are switched and a back-flush of the screen initially in service is done according to the following sequence:

1. Initial condition

   Screen 1 (in service)
   - Inlet valve open
   - Drain valve closed

   Screen 2 (on standby)
   - Inlet valve closed
   - Drain valve closed

2. Flush
   a. Opening of the inlet valve for screen 2
   b. Opening of the drain valve for screen 2 for 15 seconds (adjustable with the interface)
   c. Closing of the inlet and drain valves for screen 1
3. Switching of screen priorities

If no pressure differential has been detected for a certain amount of time (adjustable with the interface), a flush can also be initiated over an interval of time that is adjustable with the HMI.

2.12 Automatic sequences

2.12.1 Start sequences

If all the permission conditions are present and there are no alarms for the respective equipment, the HMI displays “System Ready”. The start sequence can now be launched using the HMI or remotely.

NOTE: In order to avoid damaging the equipment, the train must have water in the tanks up to the sludge beach plate (at a level of approximately 3250 mm from the bottom of the tank). A visual check by the operator is necessary.

In order to start the train when “System Ready” is displayed on the HMI, the operator presses the “Start” button. The start sequence automatically goes through the steps numbered below.

NOTE: Before pressing the “Start” button, the operator must make sure that they have followed the first steps from the start guide in the installation and operation manual.

1. System start initiated
    a. Start of the white water pumping system
    b. Opening of the valve for the primary screen

2. Delay (configurable) (x sec)
    a. Opening of the SPIDFLOW® raw water valve (opening signal sent to the plantmain PLC)
    Activation of the dosing loops for chemicals and opening of the carrier water valve on the DAF polymer dosing skid (by the the plant main PLC)
    b. Activation of the level control loop for the flotation zone
    2-min delay, adjustable with the operator interface
    c. Activation of the selected scraping control mode

If a chemical delivery pump is not available during operation, the operator must manually start the back-up pump. The service pump will not be locked, so that when the pump is set to semi-automatic, it will restart. Alternation of the chemical delivery pump is manual and available only on the HMI.

The operator may terminate the start-up at any point of the sequence by pressing the “Stop” button. If a primary piece of equipment fails during the start sequence, the automated system triggers the stopping of the train. The operator can correct the failure, then resume the start sequence from the sequence step where it stopped by pressing the “Start” button.

Polymer dosage

Polymer addition increases TSS removal performance in the DAF. It is not required continuously however, and can be dosed only when necessary to reduce operation costs. When DAF effluent TSS gets higher than an operator input set point (typically slightly lower than the limit of 20 mg/L), polymer dosage is activated, at an operator set point dosage. If effluent TSS remains higher than the limit of 20 mg/L, a high TSS alarm is activated for the operator to increase the polymer dosage concentration on the HMI.

Polymer dosage is also regulated based on flow, according to DAF effluent flowrate (refer to separate DAF polymer dosing skid process control description).

2.12.2 Stop sequences

In semi-automatic mode, the operator may implement the stop sequence at any time from the HMI or remotely. While stopping, the HMI displays “Stopping”.

The stop sequence automatically carries out the steps numbered below:

2. Stop of raw water feed
    a. Closing of the SPIDFLOW® raw water valve (closing signal sent to the plant main PLC)
    b. Stop of the dosing of chemicals and opening of the carrier water valve on the DAF polymer dosing skid (by the plant main PLC)
    c. Delay (operator configurable) (2–10 minutes)
3. Stop of pumps
    a. Stop of white water primary and secondary pumps
    b. Closing of valves for screens
    c. Closing of the second injection rail
    d. Delay (operator configurable) (0–30 minutes):
4. Stop of scraper
    a. Stopping of the scraper

The operator can launch the train start sequence from the sequence step where it stopped by pressing the “Start” button, without stopping the equipment already started.

2.13 Remote start/stop of the two SPIDFLOW units

The remote start/stop signals of the two SPIDFLOW units will be sent from the main PLC of the waste water treatment plant to the common PLC of the SPIDFLOW units through an Ethernet communication link.

There will be one permissive start/stop signal from the main PLC of the waste water treatment plant for each DAF. This will avoid both DAFs from stopping when there is a fault condition with one DAF.

The number of DAF units in operation (one or two) can be controlled according to DAF feed flow as measured by the raw water flowmeter (FM-01-150) installed on the raw water influent line to the water treatment plant. At flowrates lower than an operator setpoint, a single unit is in operation. This is undertaken by closing the on/off automated inlet valve (FV-02-312/332) to the second DAF unit. The control of the number of DAF units in operation is managed by the main PLC of the waste water treatment plant.

2.14 ALARM/FAILURE CONDITIONS AND PLC RESPONSE

2.14.1 Alarm priorities

Alarms are grouped into three levels of priority for different attention requirements:

Emergency alarms:
1. Need for operator's immediate attention.
2. The SPIDFLOW® unit triggers the emergency stop sequence (immediate stop of all equipment).

Major fault alarms:
1. Need for operator's immediate attention.
2. The SPIDFLOW® unit initiates the stop sequence.

Warning alarms:
1. There is no need for the operator's immediate attention.

If the SPIDFLOW® unit has been stopped by an emergency or major fault alarm, it does not restart automatically. The operator must remove the alarm condition and reinitialize the alarm. The operator will then press the start button on the operator interface to restart the unit. The unit will start if all the conditions for the automatic start sequence are satisfied. In the case of remote control, the system will wait for the rising edge of the remote start signal.

2.14.2 Table of alarms and set points

Refer to Appendix A.

2.15 SAFETY

2.15.1 Emergency stop

Emergency stop actions
When an emergency stop button is activated, an alarm is triggered. The alarm will remain active as long as the operator has not deactivated it.
All equipment will be stopped by a wired logic.

Recovery after an emergency stop
When all the emergency stop buttons are returned to a normal position, the fault associated with an alarm is kept until the operator pushes the reinitialization button.

2.15.2 PLC response to a power outage

In the event of a power outage at any time during the semi-automatic control of the SPIDFLOW® system, the PLC triggers an alarm and triggers a stop sequence as described in this document. The system being equipped with an uninterruptable power supply (UPS), it will see the alarm when this situation is produced. ~~Systems without a UPS will see the alarm when the power is restored~~.
There is a 10-second delay when power is restored, then the train will enter the stop sequence as

described in this document. If the restored power does not include motor controls, an operational state will not be received by the PLC and the equipment (pumps and scraper) will be stopped immediately. If the unit is configured to resume through the HMI, it will resume the start sequence. Otherwise the unit will remain stopped.

3 SYSTEM AND COMMUNICATION

The SPIDFLOW® control panel PLC is capable of providing the following global states to the main PLC of the plant: “SPIDFLOW® #x Ready” or “SPIDLFOW #x FAULT.”

A global “Ready” state indicates that the system is ready to accept a global “Run/Stop” command from the main PLC of the plant.

When the SPIDFLOW® system receives a global “Run” command, the start sequence is launched as described. This is applicable for both the start under normal conditions and for the start after a power loss.

When the SPIDFLOW® system receives a global “STOP” command under normal conditions, the stop sequence is launched.

3.1 WIRED SIGNALS

The following electrical signals are used to communicate certain information regarding the SPIDFLOW® train:

Name	Type	Description	If true:
START/STOP	DI	Start/Stop the unit remotely	Start a production sequence on a rising edge of the signal
Status – In service	DO	SPIDFLOW® in SERVICE	
Status – Alarm active	DO	Alarm or major fault alarm active	

APPENDIX A – ALARMS, PARAMETERS AND SETTINGS

Refer to Appendix A for a full list of alarms, parameters and set points.

Project : Iqaluit
Doc number: 5000218036_FD_0001_App_A Rev01
By : FV
Chkd : GP
Appvd :
Rev : 1

Process	From or is	Parameters or Set-Points		Units	Value	Range	Delay (s)	Action/Comment
		Name	Control Philosophy Tag					
GENERAL	DELAY	Maximum time for opening or closing automatic valves			N/A		60	FAULT, alarm. Investigate the reason why the valve doesn't open/close or check the limit switch.
RAW WATER	VC10-01	Raw water - SPIDFLOW -Inlet Valve - Fault	OR					ALARM Needs immediate operator attention
SPIDFLOW UNIT	LSHH-20-01	SPIDFLOW Level - High High	LAHH	mm / top	TBD ON SITE	300-400	5	ALARM, Needs immediate operator attention - Stop sequence Actiflo-shut down sequence
	LSH-20-01	SLUDGE HOPPER - SPIDFLOW - Level - High	LAH	mm / top	TBD ON SITE	400-600	5	EXTRACTION PUMP CONFIGURATION : Start the sludge extraction pump. SLUDGE EXTRACTION BY GRAVITY : Alarm, High level in the sluge extraction hopper.
	LSL-20-02	SLUDGE HOPPER - SPIDFLOW - Level - Low	LAL	mm / top	TBD ON SITE	2090-1890		Stop the sludge extraction pump
	AIT-20-02	Clarified water Turbidity - SPIDFLOW- Out of range	AAOR	NTU	-	0-5000		Alarm PRIORITY1 Use of calibration mode by operator
		Clarified water Turbidity - SPIDFLOW - High	AAH	NTU	1	0-5000	60	FAULT, Alarm Needs immediate operator attention
		Clarified water Turbidity - SPIDFLOW - High High	AAHH	NTU	9	0-5000	60	FAULT, Alarm Needs immediate operator attention . For drinking water application, this fault is a major fault that stops the unit.
	WIT-20-01	Scraper shaft power-High	AAH	%	90 (TBC ON SITE)	0-100	10	Alarm Does not need immediate operator attention
		Scraper shaft power-High High	AAHH	%	95 (TBC ON SITE)	0-100	5	Alarm Needs immediate operator attention shut down sequence
	LT-20-01	SPIDFLOW - Flotation zone Level transmitter - Level Set Point	SP	mm	3288 (TBC ON SITE)		5	Level Indication Setpoint used for Flottation zone level control
		SPIDFLOW - Flotation zone Level transmitter - High High	LAHH	mm	3350 (TBC ON SITE)			Major Fault. Stop raw water
		SPIDFLOW - Flotation zone Level transmitter - High	LAH	mm	3335 (TBC ON SITE)			Alarm Does not need immediate operator attention
		SPIDFLOW - Flotation zone Level transmitter - Low	LAL	mm	3200 (TBC ON SITE)			Major Fault. Stop the unit
		SPIDFLOW - Flotation zone Level transmitter - Low Low	LALL	mm	1000 (TBC ON SITE)			Major Fault. Stop the white water pumps
	ZIT-20-01/ZIT-20-02	Outlet modulating valve - Deviation - High high						
		Outlet modulating valve - Deviation - High						
		Outlet modulating valve - Deviation - Low						
		Outlet modulating valve - Deviation - Low Low						
	Delay	Motor Start Delay	ACT_MOT_START_DEL	s	10	0-30		adjustable by the operator
	Delay	Scraper Running Delay		min	15	0-60		adjustable by the operator
	Delay	Scraper Stop delay		min	5	0-60		adjustable by the operator
WHITE WATER SYSTEM	VA-30-01 - ZSO							Alarm if activated without an order
	VA-30-01 - ZSC							Alarm if activated without an order
	VA-30-03 - ZSO							Alarm if activated without an order
	VA-30-03 - ZSC							Alarm if activated without an order
	PT-30-01	Strainer Inlet Pressure -SPIDFLOW - Low Low		psi	60 (TBC ON SITE)	0-150		Major Fault. Stop the unit
		Strainer Inlet Pressure -SPIDFLOW - Low		psi	75 (TBC ON SITE)	0-150	10	ALARM Needs immediate operator attention
		Strainer Inlet Pressure -SPIDFLOW - High		psi	115 (TBC ON SITE)	0-150	10	ALARM Needs immediate operator attention
		Strainer Inlet Pressure -SPIDFLOW - High High		psi	130 (TBC ON SITE)	0-150		Major Fault. Stop the white water pumps
	PT-30-02	Strainer Outlet Pressure -SPIDFLOW - Low Low		psi	50 (TBC ON SITE)	0-150		Major Fault. Stop the unit
		Strainer Outlet Pressure -SPIDFLOW - Low		psi	65 (TBC ON SITE)	0-150	10	ALARM Needs immediate operator attention
		Strainer Outlet Pressure -SPIDFLOW - High		psi	115 (TBC ON SITE)	0-150	10	ALARM Needs immediate operator attention
		Strainer Outlet Pressure -SPIDFLOW - High High		psi	130 (TBC ON SITE)	0-150		Major Fault. Stop the white water pumps

5 – ELECTRICITY AND CONTROL

5.3 – PROCESS FUNCTIONAL DESCRIPTION

5.3.3 – HYDRA-POL 500 FOR BELT FILTER PRESS POLYMER

LEFT BLANK

IQALUIT

BELT FILTER PRESS POLYMER PREPARATION SYSTEM HYDRA-POL® 500

FUNCTIONAL DESCRIPTION

Document #5000218036-FD-0004-Rev1

VEOLIA WATER TECHNOLOGIES CANADA
www.veoliawatertechnologies.com

REVISION STATUS

Issue	Date	Created	Reviewed	Approved	Description
1	2019/07/19	FV	XM		For Information

TABLE OF CONTENTS

1 AUTOMATIC POLYMER PREPARATION SYSTEM 4

1.1 DESCRIPTION 4
1.2 CONTROLS 4
1.2.1 General 4
1.2.2 Calculations 5
1.2.3 Automatic Conditions 5
1.2.4 Conditions for automatic Start sequence 5
1.2.5 Automatic start sequence 6
1.2.6 Transfer from preparation/maturation tank to storage tank 7
1.3 FAULT RESPONSE 7

1 Automatic Polymer Preparation System

1.1 Description

The Hydra-Pol® 500 is an automatic machine for batch preparation of polymer solutions. A screw doses dry polymer powder into a cone, and then service water wets it in a water whirl. The mixture is discharged into a maturation tank where an agitator agitates the solution during a period of 40 -90 minutes. The project Hydra-Pol® 500 is equipped with the Hydra-Stat™ option: by monitoring the conductivity of the liquid polymer preparation in the maturation and storage tanks, the maturation period is optimized. After this period the solution is transferred into a storage tank.

The automatic polymer preparation system consists of the following control devices and instruments completely pre-piped:

Table 1.1-1: Polymer preparation system control devices

Project Tag No	Description
PAG-04-920	FEEDER MIXER
PSF-04-930	FEEDER SCREW
PSL-04-911	PRESSURE SWITCH - POLYMER PREPARATION
LSL-04-910	LOW LEVEL SWITCH – POLYMER PREPARATION
SV-04-913	4-WAY SOLENOID VALVE – POLYMER PREPARATION
SV-04-914	SERVICE WATER SOLENOID VALVE - POLYMER PREPARATION
BV-04-943	TRANSFER VALVE - POLYMER PREPARATION
VAC-04-910	POLYMER VACUUM CONVEYOR
LIT-04-942	LEVEL TRANSMITTER - POLYMER MATURATION TANK
MXR-04-960	MATURATION TANK AGITATOR
AE-04-941	CONDUCTIVITY OF THE MATURATION TANK POLYMER SOLUTION
LIT-04-946	LEVEL TRANSMITTER - POLYMER STORAGE TANK
AE-04-945	CONDUCTIVITY OF THE STORAGE TANK POLYMER SOLUTION

Abbreviations used in this document:

- DosT: Dosing Time

1.2 Controls

1.2.1 General

The polymer preparation is controlled by the preparation and transfer sequence outlined in the section 1.2.5. If equipment involved in the sequence faults during the sequence, an alarm is displayed on the operator interface and the operator must fix the problem and then manually start the sequence again. If this occurs the sequence will restart where it was interrupted unless otherwise indicated.

1.2.2 Calculations

Powder polymer is injected into a preparation/maturation tank using a dosing apparatus. The apparatus operating time is calculated based on its capacity and the desired concentration.

Dosage calculation

The operating dosing time is calculated with the following formula:

$$Ts = \frac{CONC \times ((LEVstop - LEV) \times Surf)}{Cap} \times 60$$

Ts:	Dosing apparatus operating time (sec.)
CONC:	Polymer concentration adjustable on operator interface (g/l)
LEV:	Preparation/maturation tank measured level (m)
LEVstop:	Preparation/maturation stop level set point (m)
Surf:	Preparation/maturation tank surface (m^2)
Cap:	Dosing apparatus capacity adjustable on operator interface (kg/min)

Note: This formula may also be used to perform a manual preparation in case of automatic system failure. To ensure dosing accuracy, the capacity must be validated by the operator

1.2.3 Automatic Conditions

1.2.4 Conditions for automatic Start sequence

The automatic start sequence will be activated when the automatic starting condition is true (Level set point for sequence start-up is reached in the preparation/maturation tank) and the following conditions are met:

1. If remote run request bit is activated;
2. Polymer preparation system components are in Auto start mode.

1.2.5 Automatic start sequence

The automatic preparation system shall follow a given sequence to ensure a consistent polymer solution. The preparation sequence is described in the following table:

Step #	Step name	Actions Transition conditions	Polymer mixer	Dosing screw	Service water valve	Powder supply valve	Transfer valve
0	Stand-by	Equipment shut off	S	S	C	C	C
		- Level set point for sequence start-up is reached in the preparation/maturation tank -Transfer valve is closed for 30 seconds					
1	Filling	-Remove completed preparation confirmation -Open preparation water valve	S	S	O	C	C
		Level above impeller					
2	Start mixing	Start preparation mixer	R	S	O	C	C
		- Mixer running confirmation - 10 second delay has elapsed					
3	Dosing	-Powder supply valve opened (if DosT not reached) -Start dosing apparatus (if DosT not reached)	R	R	O	O	C
		Dosing time elapsed (DosT) (retentive dosing timer) or High level in preparation/maturation tank					
4	Stop dosing	-Stop powder supply screw -Close powder supply valve	R	S	O	C	C
		Filling stop level					
5	Maturation	Close preparation water valve Start of maturation period	R	S	C	C	C
		Time elapsed 30–180 adjustable minutes (Retentive maturation delay)					
6	End	-Completed preparation confirmation	R	S	C	C	C
		Go to Step 0 at end of normal sequence and reset timers -Go to Step 7 at end of sequence by a fault					
7	**Sequence stopped on a fault**	- Wait for fault reset	S	S	C	C	C
		-Go to Step 1					

Legend

Motor
S: Stop
R: Running

Valve
C: Closed
O: Open

Table 1.2-1: Polymer Preparation Sequence

Note: if there is a power outage before the completed preparation confirmation is active, repeat at Step 1 when the power returns.

1.2.6 Transfer from preparation/maturation tank to storage tank

When the storage tank level reaches the transfer set point, and the completed preparation confirmation is active, the transfer valve opens until the preparation/maturation tank level set point for the start of the next sequence is reached.

Note: if there is a power outage when the transfer is underway, the operator will manually resume the transfer where it was interrupted when power comes back.

1.3 Fault response

The faults associated with the polymer makeup sequence are:

- Polymer feeder fault
- Low level of solid polymer
- Low pressure of service water
- Transfer and water valve open/close fault
- Level transmitter fault
- High and Low level in storage tank
- Agitator MXR-04-960 fault

Polymer feeder fault
PAG-04-920/ PSF-04-930
The feeder and blending tool stop, polymer preparation system fails and polymer sequence is stopped until the problem is fixed.

Transfer and water valve open/close fault
Tag: BV-04-943 SV-04-913/ SV-04-914
Polymer preparation system fails and polymer sequence is stopped until the problem is fixed.
Note: the valve fail positions are “Normally Closed”.

Low level of solid polymer
Tag: LSL-04-910
Polymer preparation system fails and polymer sequence is stopped until the problem is fixed.

Low pressure of service water
Tag: PSL-04-911
Polymer preparation system fails and polymer sequence is stopped until the problem is fixed.

LIT Fault
Tag: LIT-04-942/ LIT-04-946

Transfer from maturation tank is prohibited, polymer preparation system fails and polymer sequence is stopped until the problem is fixed.
An intervention from the operator is necessary to solve the problem and to complete the transfer manually.

Agitator fault
Tag: MXR-04-960
Agitator stops, polymer preparation system fails and polymer sequence is stopped until the problem is fixed.

Low level storage tank
Tag: LIT-04-946
The polymer dosing pumps are stopped, polymer preparation system fails and polymer sequence is stopped until the problem is fixed.

High level storage tank
Tag: LIT-04-946
Transfer from maturation tank is prohibited, polymer preparation system fails and polymer sequence is stopped until the problem is fixed.

If the fault occurs while the system is in the automatic start sequence, the operator needs to solve the problem and reset the fault. The system will then automatically resume at step 1.

If the fault occurs while the system is out of the automatic start sequence, the operator needs to solve the problem and reset the fault. The operator will manually set the system in the required step.

5 – ELECTRICITY AND CONTROL

5.3 – PROCESS FUNCTIONAL DESCRIPTION

5.3.4 – HYDRA-POL 250 FOR DAF POLYMER

LEFT BLANK

IQALUIT

DAF POLYMER PREPARATION SYSTEM
HYDRA-POL® 250

FUNCTIONAL DESCRIPTION

Document #5000218036-FD-0003-Rev1

VEOLIA WATER TECHNOLOGIES CANADA
www.veoliawatertechnologies.com

REVISION STATUS

Issue	Date	Created	Reviewed	Approved	Description
1	2019/07/19	FV	XM		For Information

TABLE OF CONTENTS

1 AUTOMATIC POLYMER PREPARATION SYSTEM 4

1.1 DESCRIPTION 4
1.2 CONTROLS 4
1.2.1 General 4
1.2.2 Calculations 5
1.2.3 Automatic Conditions 5
1.2.4 Conditions for automatic Start sequence 5
1.2.5 Automatic start sequence 6
1.2.6 Transfer from preparation/maturation tank to storage tank 7
1.3 FAULT RESPONSE 7

1 Automatic Polymer Preparation System

1.1 Description

The Hydra-Pol® 250 is an automatic machine for batch preparation of polymer solutions. A screw doses dry polymer powder into a cone, and then service water wets it in a water whirl. The mixture is discharged into a maturation tank where an agitator agitates the solution during a period of 40 -90 minutes. The project Hydra-Pol® 250 is equipped with the Hydra-Stat™ option: by monitoring the conductivity of the liquid polymer preparation in the maturation and storage tanks, the maturation period is optimized. After this period the solution is transferred into a storage tank.

The automatic polymer preparation system consists of the following control devices and instruments completely pre-piped:

Table 1.1-1: Polymer preparation system control devices

Project Tag No	Description
PAG-04-720	FEEDER MIXER
PSF-04-730	FEEDER SCREW
PSL-04-711	PRESSURE SWITCH - POLYMER PREPARATION
LSL-04-710	LOW LEVEL SWITCH – POLYMER PREPARATION
SV-04-713	4-WAY SOLENOID VALVE – POLYMER PREPARATION
SV-04-714	SERVICE WATER SOLENOID VALVE - POLYMER PREPARATION
BV-04-743	TRANSFER VALVE - POLYMER PREPARATION
VAC-04-710	POLYMER VACUUM CONVEYOR
LIT-04-742	LEVEL TRANSMITTER - POLYMER MATURATION TANK
MXR-04-760	MATURATION TANK AGITATOR
AE-04-741	CONDUCTIVITY OF THE MATURATION TANK POLYMER SOLUTION
LIT-04-746	LEVEL TRANSMITTER - POLYMER STORAGE TANK
AE-04-745	CONDUCTIVITY OF THE STORAGE TANK POLYMER SOLUTION

Abbreviations used in this document:

- DosT: Dosing Time

1.2 Controls

1.2.1 General

The polymer preparation is controlled by the preparation and transfer sequence outlined in the section 1.2.5. If equipment involved in the sequence faults during the sequence, an alarm is displayed on the operator interface and the operator must fix the problem and then manually start the sequence again. If this occurs the sequence will restart where it was interrupted unless otherwise indicated.

1.2.2 Calculations

Powder polymer is injected into a preparation/maturation tank using a dosing apparatus. The apparatus operating time is calculated based on its capacity and the desired concentration.

Dosage calculation

The operating dosing time is calculated with the following formula:

$$Ts = \frac{CONC \times ((LEVstop - LEV) \times Surf)}{Cap} \times 60$$

Ts:	Dosing apparatus operating time (sec.)
CONC:	Polymer concentration adjustable on operator interface (g/l)
LEV:	Preparation/maturation tank measured level (m)
LEVstop:	Preparation/maturation stop level set point (m)
Surf:	Preparation/maturation tank surface (m^2)
Cap:	Dosing apparatus capacity adjustable on operator interface (kg/min)

Note: This formula may also be used to perform a manual preparation in case of automatic system failure. To ensure dosing accuracy, the capacity must be validated by the operator

1.2.3 Automatic Conditions

1.2.4 Conditions for automatic Start sequence

The automatic start sequence will be activated when the automatic starting condition is true (Level set point for sequence start-up is reached in the preparation/maturation tank) and the following conditions are met:

1. If remote run request bit is activated;
2. Polymer preparation system components are in Auto start mode.

1.2.5 Automatic start sequence

The automatic preparation system shall follow a given sequence to ensure a consistent polymer solution. The preparation sequence is described in the following table:

Step #	Step name	Actions Transition conditions	Polymer mixer	Dosing screw	Service water valve	Powder supply valve	Transfer valve
0	Stand-by	Equipment shut off	S	S	C	C	C
		- Level set point for sequence start-up is reached in the preparation/maturation tank -Transfer valve is closed for 30 seconds					
1	Filling	-Remove completed preparation confirmation -Open preparation water valve	S	S	O	C	C
		Level above impeller					
2	Start mixing	Start preparation mixer	R	S	O	C	C
		- Mixer running confirmation - 10 second delay has elapsed					
3	Dosing	-Powder supply valve opened (if DosT not reached) -Start dosing apparatus (if DosT not reached)	R	R	O	O	C
		Dosing time elapsed (DosT) (retentive dosing timer) or High level in preparation/maturation tank					
4	Stop dosing	-Stop powder supply screw -Close powder supply valve	R	S	O	C	C
		Filling stop level					
5	Maturation	Close preparation water valve Start of maturation period	R	S	C	C	C
		Time elapsed 30–180 adjustable minutes (Retentive maturation delay)					
6	End	-Completed preparation confirmation	R	S	C	C	C
		Go to Step 0 at end of normal sequence and reset timers -Go to Step 7 at end of sequence by a fault					
7	**Sequence stopped on a fault**	- Wait for fault reset	S	S	C	C	C
		-Go to Step 1					

Legend

Motor
S: Stop
R: Running

Valve
C: Closed
O: Open

Table 1.2-1: Polymer Preparation Sequence

Note: if there is a power outage before the completed preparation confirmation is active, repeat at Step 1 when the power returns.

1.2.6 Transfer from preparation/maturation tank to storage tank

When the storage tank level reaches the transfer set point, and the completed preparation confirmation is active, the transfer valve opens until the preparation/maturation tank level set point for the start of the next sequence is reached.

Note: if there is a power outage when the transfer is underway, the operator will manually resume the transfer where it was interrupted when power comes back.

1.3 Fault response

The faults associated with the polymer makeup sequence are:

- Polymer feeder fault
- Low level of solid polymer
- Low pressure of service water
- Transfer and water valve open/close fault
- Level transmitter fault
- High and Low level in storage tank
- Agitator MXR-04-760 fault

Polymer feeder fault
PAG-04-720/ PSF-04-730
The feeder and blending tool stop, polymer preparation system fails and polymer sequence is stopped until the problem is fixed.

Transfer and water valve open/close fault
Tag: BV-04-743 SV-04-713/ SV-04-714
Polymer preparation system fails and polymer sequence is stopped until the problem is fixed.
Note: the valve fail positions are “Normally Closed”.

Low level of solid polymer
Tag: LSL-04-710
Polymer preparation system fails and polymer sequence is stopped until the problem is fixed.

Low pressure of service water
Tag: PSL-04-711
Polymer preparation system fails and polymer sequence is stopped until the problem is fixed.

LIT Fault
Tag: LIT-04-742/ LIT-04-746

Transfer from maturation tank is prohibited, polymer preparation system fails and polymer sequence is stopped until the problem is fixed.
An intervention from the operator is necessary to solve the problem and to complete the transfer manually.

Agitator fault
Tag: MXR-04-760
Agitator stops, polymer preparation system fails and polymer sequence is stopped until the problem is fixed.

Low level storage tank
Tag: LIT-04-746
The polymer dosing pumps are stopped, polymer preparation system fails and polymer sequence is stopped until the problem is fixed.

High level storage tank
Tag: LIT-04-746
Transfer from maturation tank is prohibited, polymer preparation system fails and polymer sequence is stopped until the problem is fixed.

If the fault occurs while the system is in the automatic start sequence, the operator needs to solve the problem and reset the fault. The system will then automatically resume at step 1.

If the fault occurs while the system is out of the automatic start sequence, the operator needs to solve the problem and reset the fault. The operator will manually set the system in the required step.

5 – ELECTRICITY AND CONTROL

5.3 – PROCESS FUNCTIONAL DESCRIPTION

5.3.5 – POLYMER DOSING SKID FOR BELT FILTER PRESS

LEFT BLANK

IQALUIT

BELT FILTER PRESS POLYMER DOSING SKID

PROCESS CONTROL DESCRIPTION

Document #5000218036-FD-0006-Rev1

VEOLIA WATER TECHNOLOGIES CANADA
www.veoliawatertechnologies.com

WATER TECHNOLOGIES

REVISION STATUS

Issue	Date	Created	Reviewed	Approved	Description
1	2019/07/18	FV	ED	CB	For Information

TABLE OF CONTENTS

1 POLYMER DOSING SYSTEM 4

1.1 Process Overview 4

1.2 Control Description 4

1.2.1 Duty/Standby rotation 4

1.2.2 Calculations 5

1.2.3 Valve 6

1.2.4 Availability Conditions 6

1.2.5 Fault Response 7

1.2.6 Interlocks 7

1 POLYMER DOSING SYSTEM

1.1 PROCESS OVERVIEW

The polymer is metered proportionally to the TWAS flowrate. Dosing points are located upstream of the belt filter press. The polymer dosing unit consists of the following control devices and instruments completely pre-piped and arranged on a skid as follows:

Table 1.1-1: Polymer dosing system control devices

Project Tag No	Description	Comment
SV-04-982	ON/OFF VALVE - CARRIER WATER	
P-04-970	BFP POLYMER DOSING PUMP #1	
P-04-980	BFP POLYMER DOSING PUMP #2	
TE-04-966	BFP POLYMER DOSING PUMP - #1 HIGH TEMPERATURE SWITCH	
TE-04-967	BFP POLYMER DOSING PUMP - #2 HIGH TEMPERATURE SWITCH	
FE-03-695	TWAS FLOWMETER UPSTREAM FROM THE BELT FILTER PRESS (BFP)	NOT SUPPLED BY VEOLIA.

1.2 CONTROL DESCRIPTION

There are two polymer dosing pumps (one duty/one standby). A speed signal is sent to the duty pump. The water transport solenoid valve is open when one pump is in operation. The metering is done by entering the required dosage on the operator interface. The PLC will calculate the speed of the pump using the entered dosage and the actual TWAS flow.

1.2.1 Duty/Standby rotation

The duty/Standby rotation of the pumps is manual. The operator selects on the interface the duty pump and operates the required isolation manual valves.

1.2.2 Calculations

The required dosing flow (QP) is a function of the TWAS flow (QI), required concentration (CF), chemical stock concentration (CP), chemical specific gravity (DS) and water transport flowrate (QE) (see figure below). In neglecting the chemical flow rate (QP) and the water transport flow rate (QE) in the (QF) equation, the final output flow rate (QF) will be equal to (QI).

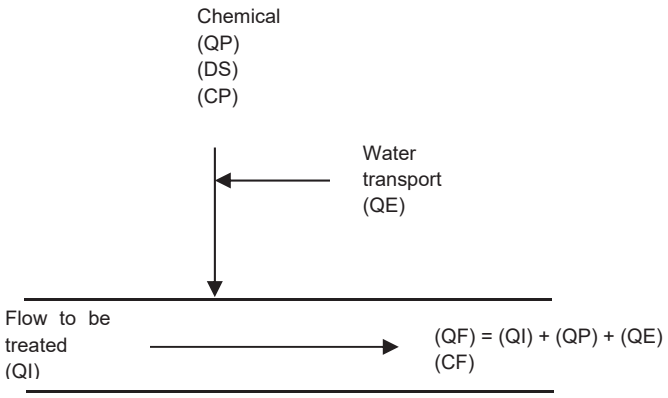

Figure 1.2-1 : Polymer Injection

The chemical flow rate (QP) is given by:

Equation 1 : Polymer flowrate calculation

$$(QP_{PPD}) = (CF_{PPD}) * (Q_{EF}) / ((SG_{PPD}) * (CP_{PPD}) * 10)$$

Where:
QP_{PPD} = Required Polymer Dosing Flowrate (L/h)
CF_{PPD} = Required Chemicals Concentration in the process (mg/L)
Q_{EF} = TWAS flowrate upstream from the BFP (m3/h), Process value given by the flowmeter FQIT-03-695
SG_{PPD} = Chemical Specific Gravity (kg/L)
CP_{PPD} = Chemical stock concentration (%)

The calculation of the polymer pump required dosing speed (in percentage of its maximum dosing speed) is done by integrating calibration values retrieved from the dosing pump. Two (2) verification points are required to scale the chemical flow rate in percentage for an adjusted pressure. The chemical flow rate verification is always done for two specific dosage percentage values, 20% and 80%.

The dosage percentage is given by:

Equation 2 : Polymer percentage calculation

$$(PO) = (60 \times ((QP_{PPD}) - (QP_{PPD20})) / ((QP_{PPD80}) - (QP_{PPD20}))) + 20$$

Where :

PO = Required Polymer Dosage Percentage (%)
QP_{PPD} = Required Polymer Dosing Flowrate (L/h)
QP_{PPD20} = Measured Polymer Dosing Flowrate at 20% of the calibration curve (L/h) (Entered by the operator on the interface).
QP_{PPD80} = Measured Polymer Dosing Flowrate at 80% of the calibration curve (L/h) (Entered by the operator on the interface).

The following parameters shall be available on the operator interface of the polymer dosing system :

1. (**CF_{PPD}**) Required Chemicals Concentration in the process in mg/l
2. (**SG_{PPD}**) Density of the dosed solution in kg/l
3. (**CP_{PPD}**) Chemical concentration in the dosed solution in %
4. (**QP_{PPD20}**) Chemical flow rate at 20% dosage in l/h
5. (**QP_{PPD80}**) Chemical flow rate at 80% dosage in l/h
6. **(PO_L)** Low dosing percentage threshold in %
7. **(PO_H)** High dosing percentage threshold in %

1.2.3 Valve

Carrier water is necessary to dilute quickly the polymer to be injected.
The carrier water solenoid valve is an on/off device, it's open when one polymer pump is in operation and closed otherwise.

1.2.4 Availability Conditions

1.2.4.1 Stop Conditions

Polymer dosage stop
The polymer dosage is stopped and the dosage percentage (PO) is forced to zero, if at least one of the following conditions is true:

1. The belt filter press is not running ;
2. The polymer dosage is in major fault;

1.2.5 Fault Response

The polymer dosage is in major fault, if at least one of these faults is active:

1. Polymer storage tank low low level ;
2. Both polymer dosing pumps fault.

Polymer pump Fault

When a polymer pump faults, an alarm is activated.

Sequence of event when the alarm is tripped:

1. Stop the polymer dosing pump;
2. Close the carrier water solenoid valve

The operator must start manually the back-up pump and switch it to automatic mode in lieu of the faulty pump.

Dosing pump out of capacity alarm

These alarms show that the required chemical flow is out of the dosing pump range.

Polymer pump low dosing capacity

If (PO) > (PO_H) and the pump is running in auto for a period of 60 sec, an alarm will be displayed on the operator interface to inform the operator that the dosing capacity of the pump is too low.

Note: The high dosing percentage threshold (PO_H) is higher than 95 %

Polymer pump high dosing capacity

If (PO) < (PO_L) and the pump is running in auto for a period of 60 sec, an alarm will be displayed on the operator interface to inform the operator that the dosing capacity of the pump is high.

Note: The low dosing percentage threshold (PO_L) is lower than 5 %.

1.2.6 Interlocks

Polymer Dosing Pump high temperature switch

Each polymer dosing pump is equipped with a high temperature switch

When this switch is activated then :

1. Pump stops
2. An alarm is activated

LEFT BLANK

5 – ELECTRICITY AND CONTROL

5.3 – PROCESS FUNCTIONAL DESCRIPTION

5.3.6 – POLYMER DOSING SKID FOR DAF

LEFT BLANK

IQALUIT

DAF POLYMER DOSING SKID

PROCESS CONTROL DESCRIPTION

Document #5000218036-FD-0005-Rev1

VEOLIA WATER TECHNOLOGIES CANADA
www.veoliawatertechnologies.com

REVISION STATUS

Issue	Date	Created	Reviewed	Approved	Description
1	2019/07/18	FV	ED	CB	For Information

TABLE OF CONTENTS

1 POLYMER DOSING SYSTEM 4

1.1 Process Overview 4

1.2 Control Description 4

1.2.1 Duty/Standby rotation 5

1.2.2 Calculations 5

1.2.3 Valves 6

1.2.4 Availability Conditions 7

1.2.5 Fault Response 7

1.2.6 Interlocks 8

1 POLYMER DOSING SYSTEM

1.1 PROCESS OVERVIEW

The polymer is metered proportionally to the DAF clarified water flowrate. A dosing point is located upstream of each DAF Spidflow® unit. The polymer dosing unit consists of the following control devices and instruments completely pre-piped and arranged on a skid as follows:

Table 1.1-1: Polymer dosing system control devices

Project Tag No	Description	Comment
SV-04-783/ SV-04-784	ON/OFF VALVES - CARRIER WATER	
P-04-770	DAF POLYMER DOSING PUMP #1	FOR POLYMER DOSAGE UPSTREAM OF T-02-310 DAF
P-04-780	DAF POLYMER DOSING PUMP #2	FOR POLYMER DOSAGE UPSTREAM OF T-02-320 DAF
P-04-790	DAF POLYMER DOSING PUMP #3 (BACK-UP)	
TE-04-769	DAF POLYMER DOSING PUMP - #1 HIGH TEMPERATURE SWITCH	
TE-04-770	DAF POLYMER DOSING PUMP - #2 HIGH TEMPERATURE SWITCH	
TE-04-771	DAF POLYMER DOSING PUMP - #3 HIGH TEMPERATURE SWITCH	
FQIT-02-328	EFFUENT FLOWMETER DOWNSTREAM OF THE TWO DAF	NOT SUPPLED BY VEOLIA.

1.2 CONTROL DESCRIPTION

There are three polymer dosing pumps (two duty/one standby). A speed signal is sent to each pump. The dedicated water transport solenoid valve is open if a command is received from the Spidflow operation sequence. The metering is done by entering the required dosage on the operator interface. The PLC will calculate the speed of the pump using the entered dosage and the actual water flow.

1.2.1 Duty/Standby rotation

The duty/Standby rotation of the pumps is manual. The operator selects on the interface the duty pump and operates the required isolation manual valves.

1.2.2 Calculations

The required dosing flow (QP) is a function of the raw water flow (QI), required concentration (CF), chemical stock concentration (CP), chemical specific gravity (DS) and water transport flowrate (QE) (see figure below). In neglecting the chemical flow rate (QP) and the water transport flow rate (QE) in the (QF) equation, the final output flow rate (QF) will be equal to (QI).

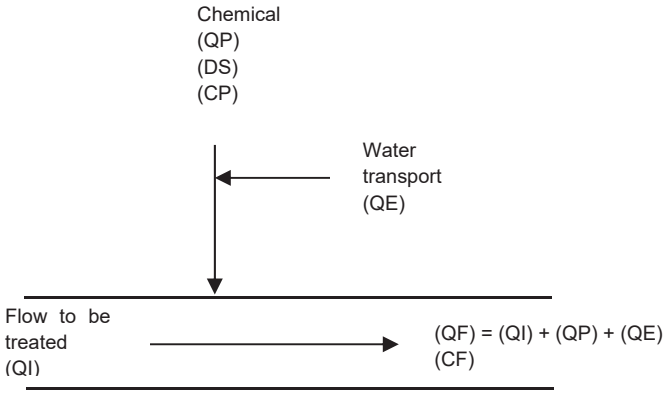

Figure 1.2-1 : Polymer Injection

The chemical flow rate (QP) is given by:

Equation 1 : Polymer flowrate calculation

$$(QP_{PPD}) = (CF_{PPD}) * (Q_{EF}) / ((SG_{PPD}) * (CP_{PPD}) * 10)$$

Where:
QP_{PPD} = Required Polymer Dosing Flowrate (L/h)
CF_{PPD} = Required Chemicals Concentration in the process (mg/L)
Q_{EF} = effluent flowrate downstream of each DAF Spidflow (m3/h)
with $Q_{EF} = Q_{EF,TOT} / N_{DAF}$
where:
$Q_{EF,TOT}$ = effluent flowrate downstream of the two DAF Spidflow units (m3/h).
Process value given by the flowmeter FQIT-02-328
N_{DAF} = number of DAF in operation

SG_{PPD} = Chemical Specific Gravity (kg/L)
CP_{PPD} = Chemical stock concentration (%)

The calculation of the polymer pump required dosing speed (in percentage of its maximum dosing speed) is done by integrating calibration values retrieved from the dosing pump. Two (2) verification points are required to scale the chemical flow rate in percentage for an adjusted pressure. The chemical flow rate verification is always done for two specific dosage percentage values, 20% and 80%.

The dosage percentage is given by:

Equation 2 : Polymer percentage calculation

$$(PO) = (60 \times ((QP_{PPD}) - (QP_{PPD20})) / ((QP_{PPD80}) - (QP_{PPD20}))) + 20$$

Where :

PO = Required Polymer Dosage Percentage (%)
QP_{PPD} = Required Polymer Dosing Flowrate (L/h)
QP_{PPD20} = Measured Polymer Dosing Flowrate at 20% of the calibration curve (L/h) (Entered by the operator on the interface).
QP_{PPD80} = Measured Polymer Dosing Flowrate at 80% of the calibration curve (L/h) (Entered by the operator on the interface).

The following parameters shall be available on the operator interface of the polymer dosing system :

1. (**CF_{PPD}**) Required Chemicals Concentration in the process in mg/l
2. (**SG_{PPD}**) Density of the dosed solution in kg/l
3. (**CP_{PPD}**) Chemical concentration in the dosed solution in %
4. (**QP_{PPD20}**) Chemical flow rate at 20% dosage in l/h
5. (**QP_{PPD80}**) Chemical flow rate at 80% dosage in l/h
6. **(PO_L)** Low dosing percentage threshold in %
7. **(PO_H)** High dosing percentage threshold in %

1.2.3 Valves

Carrier water is necessary to dilute quickly the polymer to be injected.
The carrier water solenoid valves are an on/off device, they are opened during the Spidflow Start sequence and they are stopped during the Spidflow stop sequence.

The valve SV-04-783 is open if the Polymer Pump P-04-770 is running.
The valve SV-04-784 is open if the Polymer Pump P-04-780 is running.

1.2.4 Availability Conditions

1.2.4.1 Stop Conditions

Polymer dosage stop
The polymer dosage is stopped and the dosage percentage (PO) is forced to zero, if at least one of the following conditions is true:

1. The Spiflow® is not running ;
2. The polymer dosage is in major fault;

1.2.5 Fault Response

The polymer dosage is in major fault, if at least one of these faults is active:

1. Polymer storage tank low low level ;
2. Both polymer dosing pumps fault.

Polymer pump Fault
When a polymer pump faults, an alarm is activated.
Sequence of event when the alarm is tripped:

1. Stop the polymer dosing pump;
2. Close the carrier water solenoid valve

The operator must start manually the back-up pump and switch it to automatic mode in lieu of the faulty pump.

Dosing pump out of capacity alarm
These alarms show that the required chemical flow is out of the dosing pump range.

Polymer pump low dosing capacity
If (PO) > (PO_H) and the pump is running in auto for a period of 60 sec, an alarm will be displayed on the operator interface to inform the operator that the dosing capacity of the pump is too low.
Note: The high dosing percentage threshold (PO_H) is higher than 95 %

Polymer pump high dosing capacity
If (PO) < (PO_L) and the pump is running in auto for a period of 60 sec, an alarm will be displayed on the operator interface to inform the operator that the dosing capacity of the pump is high.
Note: The low dosing percentage threshold (PO_L) is lower than 5 %.

1.2.6 Interlocks

Polymer Dosing Pump high temperature switch

Each polymer dosing pump is equipped with a high temperature switch

When this switch is activated then :

1. Pump stops
2. An alarm is activated

5 – ELECTRICITY AND CONTROL

5.4 – WIRING DIAGRAMS

LEFT BLANK

BAR = 1" AT PLOT SCALE

REF: A6798A

STD: "B" 11x17

WWTP UPGRADE
IQALUIT - WASTE WATER PROJECT
CONTROL PANEL LCP-02-300
PROJET #5000218036

REV	DESCRIPTION	DATE	REVD	CHKD	APVD	ECN
3	AS BUILT	2019-03-27	HZ	RA	–	–
2	FOR FABRICATION	2019-03-19	HZ	RA	–	–
1	FOR APPROVAL	2019-01-03	RA	HZ	–	–

CONFIDENTIALITY AND INTELLECTUAL PROPERTY NOTICE
ALL INFORMATION CONTAINED IN THIS DOCUMENT IS THE SOLE PROPERTY OF VEOLIA WATER TECHNOLOGIES CANADA INC. AND IS PROTECTED BY ALL APPLICABLE LAWS, INCLUDING BUT NOT LIMITED TO COPYRIGHT AND OTHER INTELLECTUAL PROPERTY LAWS. THE DESIGN CONCEPTS AND INFORMATION CONTAINED HEREIN ARE PROPRIETARY TO V.W.T. AND ARE SUBMITTED IN CONFIDENCE. THEY ARE NOT TRANSFERABLE. THEY SHALL NOT BE USED FOR ANY PURPOSE OTHER THAN THAT FOR WHICH IT IS EXPRESSLY SUBMITTED AND NO IMPLICIT LICENCE IS GRANTED OTHERWISE BY THE SUBMISSION OF THIS DOCUMENT. THEY ARE CONFIDENTIAL AND PRIVILEGED INFORMATION OF V.W.T. AND THEY MUST NOT BE DISCLOSED, REPRODUCED, LOANED, REMITTED OR USED IN ANY OTHER MANNER WITHOUT THE EXPRESS WRITTEN CONSENT OF V.W.T. V.W.T. ASSUMES NO RESPONSIBILITY OR LIABILITY FOR THE USE OF THIS DOCUMENT. ALL DESIGN CONCEPTS AND INFORMATION CONTAINED IN THIS DOCUMENT ARE SUBJECT TO CHANGE IN A MANNER THAT DOES NOT RELATE TO THE FITNESS OR PURPOSE OF THIS DOCUMENT. IN NO EVENT SHALL THIS DOCUMENT OR THE DESIGN CONCEPTS AND INFORMATION CONTAINED HEREIN BE USED IN A MANNER DETRIMENTAL TO THE INTEREST OF V.W.T. ALL COPYRIGHT, PATENT AND OTHER INTELLECTUAL PROPERTY RIGHTS ARE RESERVED. ACCEPTANCE OF THE DELIVERY OF THIS DOCUMENT CONSTITUTES AGREEMENT TO THESE TERMS AND CONDITIONS.

DESIGNER	DATE
–	–
CHECKER	DATE
–	–
ENGINEER	DATE
–	–
SCALE:	N/A

TITLE: CONTROL PANEL LCP-02-300
TITLE PAGE

CLIENT: WWTP UPGRADE
CITY OF IQALUIT

VEOLIA WATER TECHNOLOGIES CANADA INC. 4105 Sartelon, Saint-Laurent, Qc, Canada, Tel: (514) 334-7230

PROJECT DRAWING	INTERNAL	SHEET	REV
5000218036-EPL – 0001-AU-VWT	–	01 OF 06	3

Apr 15, 2019 11:20:18 - G:\Projets A67XX\A6798A @ A6798B - VEOLIA - 5000218036 Iqaluit WWTP Upgrade\DOC\DESSIN\000-DRAWINGS\LCP-02-300\REV 3 AS BUILT IN PROCESSING\5000218036-EPL-0001-AU-VWT-001.dwg - tasloti

DESCRIPTION	DRAWING NUMBER
MAIN CONTROL PANEL LCP-02-300	
TITLE PAGE	5000218036-EPL-0001-AU-VWT-001
LEGEND & DRAWING LIST	5000218036-EPL-0001-AU-VWT-002
EXTERNAL LAYOUT	5000218036-EPL-0001-AU-VWT-003
INTERNAL LAYOUT	5000218036-EPL-0001-AU-VWT-004
TERMINAL LAYOUT	5000218036-EPL-0001-AU-VWT-005
BILL OF MATERIAL	5000218036-EPL-0001-AU-VWT-006
ELECTRICAL SCHEMATICS	5000218036-ELD-0001-AU-VWT-001
ELECTRICAL SCHEMATICS	5000218036-ELD-0001-AU-VWT-002
ELECTRICAL SCHEMATICS	5000218036-ELD-0001-AU-VWT-003
ELECTRICAL SCHEMATICS	5000218036-ELD-0001-AU-VWT-004
ELECTRICAL SCHEMATICS	5000218036-ELD-0001-AU-VWT-005
ELECTRICAL SCHEMATICS	5000218036-ELD-0001-AU-VWT-006
ELECTRICAL SCHEMATICS	5000218036-ELD-0001-AU-VWT-007
ELECTRICAL SCHEMATICS	5000218036-ELD-0001-AU-VWT-008
ELECTRICAL SCHEMATICS	5000218036-ELD-0001-AU-VWT-009
ELECTRICAL SCHEMATICS	5000218036-ELD-0001-AU-VWT-010
ELECTRICAL SCHEMATICS	5000218036-ELD-0001-AU-VWT-011
ELECTRICAL SCHEMATICS	5000218036-ELD-0001-AU-VWT-012
ELECTRICAL SCHEMATICS	5000218036-ELD-0001-AU-VWT-013
ELECTRICAL SCHEMATICS	5000218036-ELD-0001-AU-VWT-014
ELECTRICAL SCHEMATICS	5000218036-ELD-0001-AU-VWT-015
ELECTRICAL SCHEMATICS	5000218036-ELD-0001-AU-VWT-016
ELECTRICAL SCHEMATICS	5000218036-ELD-0001-AU-VWT-017
ELECTRICAL SCHEMATICS	5000218036-ELD-0001-AU-VWT-018
ELECTRICAL SCHEMATICS	5000218036-ELD-0001-AU-VWT-019
ELECTRICAL SCHEMATICS	5000218036-ELD-0001-AU-VWT-020
ELECTRICAL SCHEMATICS	5000218036-ELD-0001-AU-VWT-021

LEGEND

- LOW PRESSURE
- HIGH PRESSURE
- LOW LEVEL
- HIGH LEVEL
- LIMIT SWITCH
- LIMIT SWITCH
- LOW FLOW
- HIGH FLOW
- RELAY CONTACT
- RELAY CONTACT
- RELAY CONTACT
- ON DELAY TIMER
- OFF DELAY TIMER
- GROUND
- ISOLATED GROUND
- FUSE (POWER)
- FUSE (CONTROL)
- DISTRIBUTION BLOCK
- MAINTAINED TWO SELECTOR SWITCH
- MAINTAINED 3 POSITIONS SELECTOR SWITCH
- SPRING RETURN FROM LEFT 3 POSITIONS SELECTOR SWITCH
- SPRING RETURN FROM RIGHT 3 POSITIONS SELECTOR SWITCH
- SPRING RETURN FROM BOTH 3 POSITIONS SELECTOR SWITCH
- PUSH BUTTON
- PUSH BUTTON
- PULL BUTTON
- PULL BUTTON
- EMERGENCY STOP BUTTON
- POTENTIOMETER
- CURRENT TRANSFORMER
- THERMOSTAT
- THERMOSTAT
- 1 POLE CIRCUIT BREAKER
- COOLING FAN
- RECEPTACLE 120VAC WITH RJ45
- RECEPTACLE 120VAC DUPLEX
- PILOT LIGHT
- PUSH TO TEST PILOT LIGHT
- RELAY COIL
- RELAY COIL WITH SURGE SUPPRESSOR
- CONTACTOR COIL
- CONTACTOR COIL WITH SURGE SUPPRESSOR
- ALARM
- RESISTOR
- SOLENOID
- PULL CORD
- ZERO SPEED DETECTOR
- POWER BLOCK FOR FIELD WIRING
- TERMINAL
- WIRING JUNCTION
- KNIFE TERMINAL
- 3 POLES THERMAL MAGNETIC CIRCUIT BREAKER
- 3 POLES MAGNETIC CIRCUIT BREAKER
- 3 POLES FUSIBLE DISCONNECT SWITCH
- 3 POLES DISCONNECT SWITCH
- 3 POLES CONTACTOR
- 3 POLES OVERLOAD RELAY
- 1 POLE TRANSFORMER (H3, H2, H1, X2, X4, X1, X3)

WIRE COLOR CODE	
MINIMAL 16AWG GAUGE, XLPE WIRE TYPE.	
POWER 120VAC	BLACK
CONTROL 120VAC	RED
NEUTRAL	WHITE
24VDC	BLUE
0VDC	BLUE/WHITE
DRY CONTRACT	YELLOW, 14AWG
NON-ISOLATED GROUND	GREEN
ISOLATED GROUND	GREEN/YELLOW
TWISTED PAIR	(+) BLACK & (-) WHITE

WIRE NUMBER

XX XX XX
- LINE NUMBER
- PAGE NUMBER
- PANEL NUMBER

REV	DESCRIPTION	DATE	REVD	CHKD	APVD	ECN
3	AS BUILT	2019-03-27	HZ	RA	–	–
2	FOR FABRICATION	2019-03-19	HZ	RA	–	–
1	FOR APPROVAL	2019-01-03	RA	HZ	–	–

CONFIDENTIALITY AND INTELLECTUAL PROPERTY NOTICE
ALL INFORMATION CONTAINED IN THIS DOCUMENT IS THE SOLE PROPERTY OF VEOLIA WATER TECHNOLOGIES CANADA INC. AND IS PROTECTED BY ALL APPLICABLE LAWS, INCLUDING BUT NOT LIMITED TO COPYRIGHT AND OTHER INTELLECTUAL PROPERTY LAWS. THE DESIGN CONCEPTS AND INFORMATION CONTAINED HEREIN ARE PROPRIETARY TO V.W.T. AND ARE SUBMITTED IN CONFIDENCE. THEY ARE NOT TRANSFERABLE. THEY SHALL NOT BE DISCLOSED, REPRODUCED, LOANED, REWITTED OR USED IN ANY OTHER MANNER WITHOUT THE EXPRESS WRITTEN CONSENT OF V.W.T. V.W.T. ASSUMES NO RESPONSIBILITY OR LIABILITY FOR THE USE OF THIS DOCUMENT FOR PURPOSES OTHER THAN THOSE SPECIFICALLY AUTHORIZED BY V.W.T. ANY UNAUTHORIZED PUBLICATION OR IN A MANNER THAT COULD BE PREJUDICIAL TO THE FITNESS OR PURPOSE OF THIS DOCUMENT, IN NO EVENT SHALL THIS DOCUMENT OR THE DESIGN CONCEPTS AND INFORMATION CONTAINED HEREIN BE USED IN A MANNER DETRIMENTAL TO THE INTEREST OF V.W.T. ALL COPYRIGHT, PATENT AND OTHER INTELLECTUAL PROPERTY RIGHTS ARE RESERVED. ACCEPTANCE OF THE DELIVERY OF THIS DOCUMENT CONSTITUTES AGREEMENT TO THESE TERMS AND CONDITIONS.

DESIGNER	DATE –
CHECKER	DATE –
ENGINEER	DATE –
SCALE:	N/A

TITLE: CONTROL PANEL LCP-02-300
LEGEND & DRAWING LIST

CLIENT: WWTP UPGRADE
CITY OF IQALUIT

VEOLIA WATER TECHNOLOGIES CANADA INC. 4105 Sartelon, Saint-Laurent, Qc, Canada, Tel: (514) 334-7230

PROJECT	DRAWING	INTERNAL	SHEET	REV
5000218036-EPL	0001-AU-VWT	–	02 OF 06	3

Apr 15, 2019 11:20:20 - G:\Projets A67XX\A6798A @ A6798B - VEOLIA - 5000218036 Iqaluit WWTP Upgrade\DOC\DESSIN\000-DRAWINGS\LCP-02-300\REV 3 AS BUILT IN PROCESSING\5000218036-EPL-0001-AU-VWT-002.dwg - tasloti
BAR = 1" AT PLOT SCALE
REF: A6798A
STD: "B" 11x17

ENCLOSURE NEMA 4X-SS304 / 72H'' X 36W'' X 16D''
CSA APPROVAL

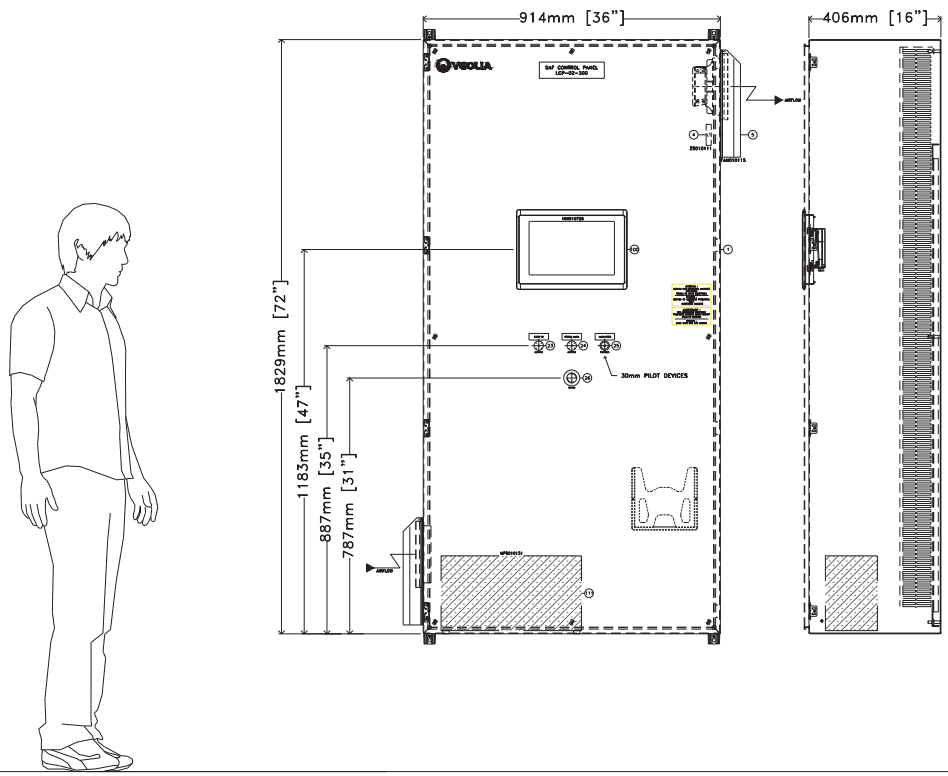

NAME-PLATES DETAILS :

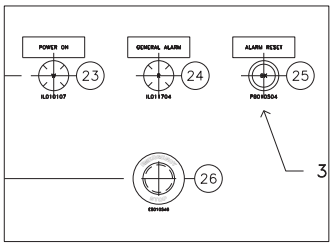

REV	DESCRIPTION	DATE	REVD	CHKD	APVD	ECN
3	AS BUILT	2019-03-27	HZ	RA	–	–
2	FOR FABRICATION	2019-03-19	HZ	RA	–	–
1	FOR APPROVAL	2019-01-03	RA	HZ	–	–

CONFIDENTIALITY AND INTELLECTUAL PROPERTY NOTICE
ALL INFORMATION CONTAINED IN THIS DOCUMENT IS THE SOLE PROPERTY OF VEOLIA WATER TECHNOLOGIES CANADA INC. AND IS PROTECTED BY ALL APPLICABLE LAWS, INCLUDING BUT NOT LIMITED TO COPYRIGHT AND OTHER INTELLECTUAL PROPERTY LAWS. THE DESIGN CONCEPTS AND INFORMATION CONTAINED HEREIN ARE PROPRIETARY TO V.W.T. AND ARE SUBMITTED IN CONFIDENCE. THEY ARE NOT TRANSFERABLE. THEY MUST BE USED ONLY FOR THE PURPOSE FOR WHICH THE DOCUMENT IS EXPRESSLY SUBMITTED AND NO IMPLICIT LICENCE IS GRANTED OTHERWISE BY THE SUBMISSION OF THIS DOCUMENT. THEY ARE CONFIDENTIAL AND PRIVILEGED INFORMATION OF V.W.T. AND THEY MUST NOT BE DISCLOSED, REPRODUCED, LOANED, REMITTED OR USED IN ANY OTHER MANNER WITHOUT THE EXPRESS WRITTEN CONSENT OF V.W.T. V.W.T. ASSUMES NO RESPONSIBILITY OR LIABILITY FOR THE USE OF THIS DOCUMENT OR THE DESIGN CONCEPTS AND INFORMATION CONTAINED HEREIN FOR ANOTHER PROJECT, OR IN A MANNER THAT DOES NOT RELATE TO THE FITNESS OR PURPOSE OF THIS DOCUMENT. IN NO EVENT SHALL THIS DOCUMENT OR THE DESIGN CONCEPTS AND INFORMATION CONTAINED HEREIN BE USED IN A MANNER DETRIMENTAL TO THE INTEREST OF V.W.T. ALL COPYRIGHT, PATENT AND OTHER INTELLECTUAL PROPERTY RIGHTS ARE RESERVED. ACCEPTANCE OF THE DELIVERY OF THIS DOCUMENT CONSTITUTES AGREEMENT TO THESE TERMS AND CONDITIONS.

DESIGNER	DATE
–	–
CHECKER	DATE
–	–
ENGINEER	DATE
–	–
SCALE: N/A	

TITLE
CONTROL PANEL LCP-02-300
INTERNAL LAYOUT

CLIENT
WWTP UPGRADE
CITY OF IQALUIT

VEOLIA
VEOLIA WATER TECHNOLOGIES CANADA INC. 4105 Sartelon, Saint-Laurent, Qc, Canada. Tel: (514) 334-7230

PROJECT	DRAWING	INTERNAL	SHEET	REV
5000218036-EPL	0001-AU-VWT	–	03 OF 06	3

BAR = 1" AT PLOT SCALE
REF: A6798A
STD: "B" 11x17

Apr 15, 2019 11:20:23 – G:\Projets A67XX\A6798A @ A6798B – VEOLIA – 5000218036 Iqaluit WWTP
Upgrade\DOC\DESSIN\000-DRAWINGS\LCP-02-300\REV 3 AS BUILT IN PROCESSING\5000218036-EPL-0001-AU-VWT-003.dwg – rasloni

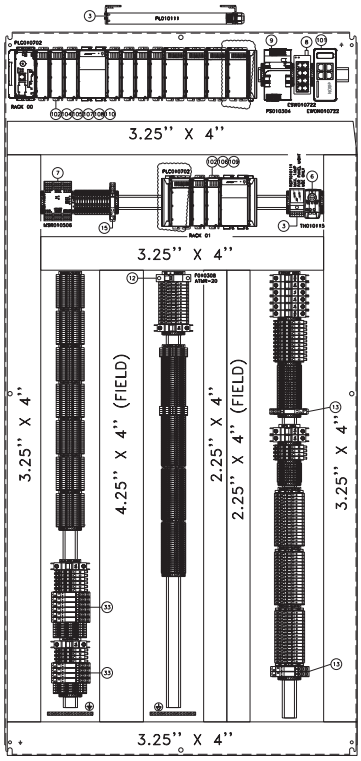

REV	DESCRIPTION	DATE	DWN	CHKD	APVD	ECN
3	AS BUILT	2019-03-27	HZ	RA	–	–
2	FOR FABRICATION	2019-03-19	HZ	RA	–	–
1	FOR APPROVAL	2019-01-03	RA	HZ	–	–

CONFIDENTIALITY AND INTELLECTUAL PROPERTY NOTICE
ALL INFORMATION CONTAINED IN THIS DOCUMENT IS THE SOLE PROPERTY OF VEOLIA WATER TECHNOLOGIES CANADA INC. AND IS PROTECTED BY ALL APPLICABLE LAWS, INCLUDING BUT NOT LIMITED TO COPYRIGHT AND OTHER INTELLECTUAL PROPERTY LAWS. THE DESIGN CONCEPTS AND INFORMATION CONTAINED HEREIN ARE PROPRIETARY TO V.B.T. AND ARE SUBMITTED IN CONFIDENCE. THEY ARE NOT TRANSFERABLE. THEY SHALL NOT BE USED FOR ANY PURPOSE OTHER THAN THAT FOR WHICH IT IS EXPRESSLY SUBMITTED AND NO IMPLICIT LICENCE IS GRANTED OTHERWISE BY THE SUBMISSION OF THIS DOCUMENT. THEY ARE CONFIDENTIAL AND PRIVILEGED INFORMATION OF V.B.T. AND THEY MUST NOT BE DISCLOSED, REPRODUCED, LOANED, REWRITTEN OR USED IN ANY OTHER MANNER WITHOUT THE EXPRESS WRITTEN CONSENT OF V.B.T. V.B.T. ASSUMES NO RESPONSIBILITY OR LIABILITY FOR THE USE OF THIS DOCUMENT, IN WHOLE OR IN PART, IN CONTEXTS OR FOR PURPOSES NOT FORESEEN IN WRITING BY V.B.T., OR IN A MANNER THAT DOES NOT RELATE TO THE FITNESS OR PURPOSE OF THIS DOCUMENT. IN NO EVENT SHALL THIS DOCUMENT OR THE DESIGN CONCEPTS AND INFORMATION CONTAINED HEREIN BE USED IN A MANNER DETRIMENTAL TO THE INTEREST OF V.B.T. ALL COPYRIGHT, PATENT AND OTHER INTELLECTUAL PROPERTY RIGHTS ARE RESERVED. ACCEPTANCE OF THE DELIVERY OF THIS DOCUMENT CONSTITUTES AGREEMENT TO THESE TERMS AND CONDITIONS.

		DATE
DESIGNER	–	–
CHECKER	–	–
ENGINEER	–	–
SCALE:	N/A	

TITLE: CONTROL PANEL LCP-02-300
INTERNAL LAYOUT

CLIENT: WWTP UPGRADE
CITY OF IQALUIT

VEOLIA WATER TECHNOLOGIES CANADA INC. 4105 Sartelon, Saint-Laurent, Qc, Canada, Tel: (514) 334-7230

PROJECT DRAWING	INTERNAL	SHEET	REV
5000218036-EPL – 0001-AU-VWT	–	04 OF 06	3

STD: "B" 11x17 | REF: A6798A | BAR = 1" AT PLOT SCALE

Apr 15, 2019 11:20:26 - G:\Projets A67XX\A6798A @ A6798B - VEOLIA - 5000218036 Iqaluit WWTP Upgrade\DESSIN\DWG\5000218036-EPL-0001-AU-VWT-004.dwg - iqaluit

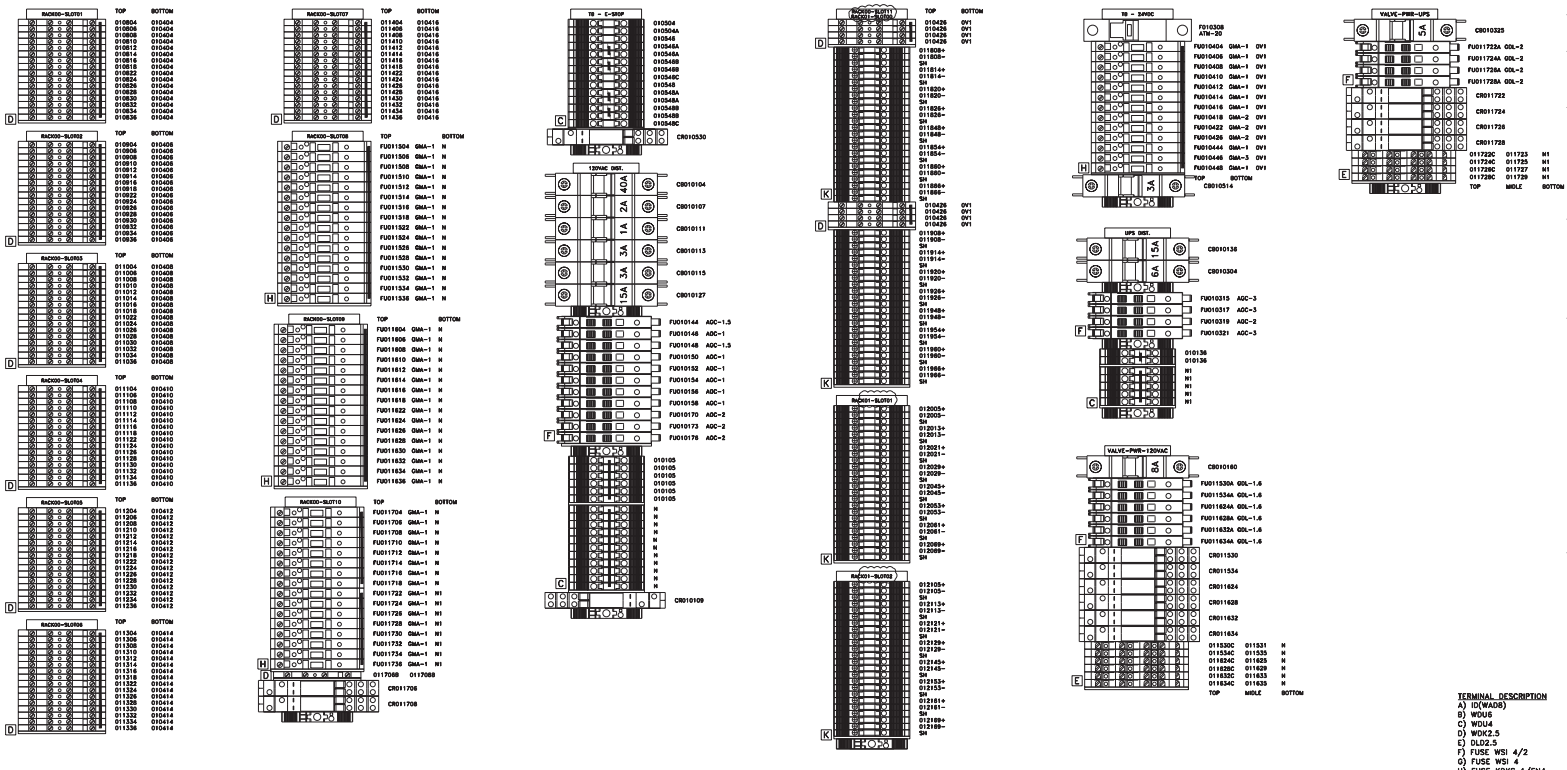

TERMINAL DESCRIPTION

A) ID(WAD8)
B) WDU6
C) WDU4
D) WDK2.5
E) DLD2.5
F) FUSE WSI 4/2
G) FUSE WSI 4
H) FUSE KDKS 1/EN4
J) WTR 2.5
K) WDU 2.5

REV	DESCRIPTION	DATE	REVD	CHKD	APVD	ECN
3	AS BUILT	2019-03-27	HZ	RA	–	–
2	FOR FABRICATION	2019-03-19	HZ	RA	–	–
1	FOR APPROVAL	2019-01-03	RA	HZ	–	–

CONFIDENTIALITY AND INTELLECTUAL PROPERTY NOTICE
ALL INFORMATION CONTAINED IN THIS DOCUMENT IS THE SOLE PROPERTY OF VEOLIA WATER TECHNOLOGIES CANADA INC. AND IS PROTECTED BY ALL APPLICABLE LAWS, INCLUDING BUT NOT LIMITED TO COPYRIGHT AND OTHER INTELLECTUAL PROPERTY LAWS. THE DESIGN CONCEPTS AND INFORMATION CONTAINED HEREIN ARE PROPRIETARY TO V.W.T. AND ARE SUBMITTED IN CONFIDENCE. THEY ARE NOT TRANSFERABLE. THEY MUST BE USED ONLY FOR THE PURPOSE FOR WHICH THE DOCUMENT IS EXPRESSLY SUBMITTED AND NO IMPLICIT LICENCE IS GRANTED OTHERWISE BY THE SUBMISSION OF THIS DOCUMENT. THEY ARE CONFIDENTIAL AND PRIVILEGED INFORMATION OF V.W.T. AND THEY MUST NOT BE DISCLOSED, REPRODUCED, LOANED, REMITTED OR USED IN ANY OTHER MANNER WITHOUT THE EXPRESS WRITTEN CONSENT OF V.W.T. V.W.T. ASSUMES NO RESPONSIBILITY OR LIABILITY FOR THE USE OF THIS DOCUMENT OR THE DESIGN CONCEPTS AND INFORMATION CONTAINED HEREIN FOR ANOTHER PROJECT, OR IN A MANNER THAT DOES NOT RELATE TO THE FITNESS OR PURPOSE OF THIS DOCUMENT. IN NO EVENT SHALL THIS DOCUMENT OR THE DESIGN CONCEPTS AND INFORMATION CONTAINED HEREIN BE USED IN A MANNER DETRIMENTAL TO THE INTEREST OF V.W.T. ALL COPYRIGHT, PATENT AND OTHER INTELLECTUAL PROPERTY RIGHTS ARE RESERVED. ACCEPTANCE OF THE DELIVERY OF THIS DOCUMENT CONSTITUTES AGREEMENT TO THESE TERMS AND CONDITIONS.

DESIGNER	DATE	TITLE: CONTROL PANEL LCP-02-300 TERMINAL LAYOUT
CHECKER	DATE	CLIENT: WWTP UPGRADE CITY OF IQALUIT
ENGINEER	DATE	VEOLIA
SCALE: N/A		VEOLIA WATER TECHNOLOGIES CANADA INC. 4105 Sartelon, Saint-Laurent, Qc, Canada. Tel: (514) 334-7230

PROJECT	DRAWING	INTERNAL	SHEET	REV
5000218036-EPL	0001-AU-VWT	-	05 OF 06	3

Apr 15, 2019 11:20:28 – G:\Projets A67XX\A6798A @ A6798B – VEOLIA – 5000218036 Iqaluit WWTP
Upgrade\DOC\DESSIN\000-DRAWINGS\LCP-02-300\REV 3 AS BUILT IN PROCESSING\5000218036-EPL-0001-AU-VWT-005.dwg – rosloni

BAR = 1" AT PLOT SCALE
REF: A6798A
STD: "B" 11x17

ITEM	DESCRIPTION	PART NUMBER	MANUF.	QTY	BY
1	NEMA 4X ENCLOSURE, SS304, DIM 72"H x 36"W x 16"D C/W CP7236, CMFKSS	CSD723616SSR	HOFFMAN	1	ENV
2	DATA POCKET 6"H x 8"W x 0.75"D	--	--	1	ENV
3	LED LIGHT 23 IN, 120V 10W C/W CABLE LS2-PC6 + SIMPLE OUTLET 120VAC 2963860 PHOENIX	LS2-239-4	PREMISE	1	ENV
4	DOOR SWITCH 1NO	FLK05	HAMMOND	1	ENV
5	COOLING FILTER FAN NEMA12 120VAC C/W OUTLET FILTER RITTAL 3239.200 + 3239.080 (2X)	3239.110	RITTAL	1	ENV
6	COOLING THERMOSTAT 0@60DEG C, 1NO CONTACT	FGT-200	DBK	1	ENV
7	SAFETY RELAY 24VDC	440R-G23216	ALLEN-BRADLEY	1	ENV
8	UNMAMAGED ETHERNET SWITCH, 8 PORT	IES-1808	WEIDMULLER	1	ENV
9	POWER SUPPLY 24VDC, 480W, 20AMP	1606XLS480EC	ALLEN-BRADLEY	1	ENV
10	GND LUG, COPPER	CB3536CY	PANDUIT	1	ENV
11	GND BAR, COPPER	4C-190	NSI	1	ENV
12	FUSE HOLDER 1 POLE TYPE CC C/W FUSE, ATMR-20(1X)	USCC1	MERSEN	1	ENV
13	2 POLES RELAY, 120VAC COIL C/W BASE 700-HN222	700-HK32A1	ALLEN-BRADLEY	A/R	ENV
14	BREAKER 1P, 277VCA, CURVE C, XA ACCORDING TO THE TERMINAL LAYOUT PAGE	M9FXXXX	SCHNEIDER	A/R	ENV
15	RELAY 2PDT COIL 24VDC C/W BASE 700-HN222	700-HK32Z24	ALLEN-BRADLEY	A/R	ENV
16	SIMPLE OUTLET, 120VAC	2963860	PHOENIX CONTACT	2	ENV
17	TERMINAL 2 LEVEL WDK 2.5 C/W END PLATE 1059100000	1021500000	WEIDMULLER	LOT	ENV
18	TERMINAL 3 LEVEL DLD 2.5 C/W END PLATE 1784210000	1784180000	WEIDMULLER	LOT	ENV
19	TERMINAL 600VAC/DC, 20A WDU 2.5 C/W END PLATE 1050000000	1020000000	WEIDMULLER	LOT	ENV
20	KNIFE TERMINAL 300VAC/DC, 10A, WTR 2.5 C/W END PLATE 1050000000	1855610000	WEIDMULLER	LOT	ENV
21	TERMINAL 1 LEVEL WDU 4 C/W END PLATE 1050000000	1020100000	WEIDMULLER	LOT	ENV
22	TERMINAL 1 LEVEL WDU 6 C/W SEPARATOR 1050100000	1020200000	WEIDMULLER	LOT	ENV
23	WHITE PILOT LIGHT, 30mm 120VAC	9001SKP38W31	SQUARE D	1	ENV
24	RED PILOT LIGHT, 30mm 24VDC	9001SKP35R31	SQUARE D	1	ENV
25	BLACK PUSH BUTTON, 30mm NEMA4X	9001SKR1U	SQUARE D	1	ENV
26	RED EMERGENCY STOP PUSH BUTTON, 30mm C/W CONTACT	9001SKR16H2	SQUARE D	1	ENV
27	END ANCHOR WEW 35/2	1061200000	WEIDMULLER	A/R	ENV
28	FUSE HOLDER ¼ X 1¼ WSI 4/2	1880430000	WEIDMULLER	A/R	ENV
29	FUSE TERMINAL C/W END PLATE WEIDMULLER 9532470000	9532440000	WEIDMULLER	A/R	ENV
30	FAST ACTING MINI FUSE 5X20MM 250VAC XA C/W SPARE	GMA-X	BUSSMANN	A/R	ENV
31	FUSE, FAST ACTING, 1/4 x 1-1/4, XA	AGC-X	BUSSMANN	A/R	ENV
32	FUSE, FAST ACTING, 1/4 x 1-1/4, XA	GDL-X	BUSSMANN	A/R	ENV
33	RELAY SPDT 10A 120VAC C/W BASE 700-HN221	700-HK36A1	ALLEN-BRADLEY	10	ENV

VEOLIA PARTS LIST

ITEM	DESCRIPTION	PART NUMBER	MANUF.	QTY	BY
100	PanelView Plus 7 Performance Terminal, Touch Screen, 12 WXGA 24VDC	2711P-T12W22D9P	ALLEN-BRADLEY	1	VEO
101	MODEM, 24VDC C/W ANTENNA EW40205, FLB3205-00/5 + SIM CARD	E-WON	FLEXY20500-00	1	VEO
102	PLC POWER SUPPLY 120VAC, 200VA	1769-PA4	ALLEN-BRADLEY	2	VEO
103					VEO
104	INPUT CARD, 16 PTS, 24VDC	1769-IQ16	ALLEN-BRADLEY	7	VEO
105	OUTPUT CARD, 16 PTS	1769-OW16	ALLEN-BRADLEY	3	VEO
106	ANALOG OUTPUT CARD, 8 PTS	1769-OF8C	ALLEN-BRADLEY	2	VEO
107	ANALOG INPUT CARD, 8PTS	1756-IF8	ALLEN-BRADLEY	2	VEO
108	PLC CPU	1769-L33ER	ALLEN-BRADLEY	1	VEO
109	LEFT END CAP	1769-ECL	ALLEN-BRADLEY	1	VEO
110	EXPANSION CABLE RIGHT TO LEFT CABLE	1769-CRR1	ALLEN-BRADLEY	1	VEO
111	UPS, 1500VA, 120VAC, 1PH	PW9130L1500T-XL	EATON	1	VEO

REV	DESCRIPTION	DATE	REVD	CHKD	APVD	ECN
3	AS BUILT	2019-03-27	HZ	RA	–	–
2	FOR FABRICATION	2019-03-19	HZ	RA	–	–
1	FOR APPROVAL	2019-01-03	RA	HZ	–	–

CONFIDENTIALITY AND INTELLECTUAL PROPERTY NOTICE
ALL INFORMATION CONTAINED IN THIS DOCUMENT IS THE SOLE PROPERTY OF VEOLIA WATER TECHNOLOGIES CANADA INC. AND IS PROTECTED BY ALL APPLICABLE LAWS, INCLUDING BUT NOT LIMITED TO COPYRIGHT AND OTHER INTELLECTUAL PROPERTY LAWS. THE DESIGN CONCEPTS AND INFORMATION CONTAINED HEREIN ARE PROPRIETARY TO V.W.T. AND ARE SUBMITTED IN CONFIDENCE. THEY ARE NOT TRANSFERABLE. THEY SHALL NOT BE USED, IN WHOLE OR IN PART, FOR ANY PURPOSE OTHER THAN THAT FOR WHICH IT IS EXPRESSLY SUBMITTED AND NO IMPLICIT LICENCE IS GRANTED OTHERWISE BY THE SUBMISSION OF THIS DOCUMENT. THEY ARE CONFIDENTIAL AND PRIVILEGED INFORMATION OF V.W.T. AND THEY MUST NOT BE DISCLOSED, REPRODUCED, LOANED, REWITTED OR USED IN ANY OTHER MANNER WITHOUT THE EXPRESS WRITTEN CONSENT OF V.W.T. V.W.T. ASSUMES NO RESPONSIBILITY OR LIABILITY FOR THE USE OF THIS DOCUMENT, OR OF ANY PORTION THEREOF, IN CONNECTION WITH ANY PROJECT NOT AWARDED TO V.W.T., OR IN A MANNER THAT GIVES RISE TO OR RELATE TO THE FITNESS OR PURPOSE OF THIS DOCUMENT. IN NO EVENT SHALL THIS DOCUMENT OR THE DESIGN CONCEPTS AND INFORMATION CONTAINED HEREIN BE USED IN A MANNER DETRIMENTAL TO THE INTEREST OF V.W.T. ALL COPYRIGHT, PATENT AND OTHER INTELLECTUAL PROPERTY RIGHTS ARE RESERVED. ACCEPTANCE OF THE DELIVERY OF THIS DOCUMENT CONSTITUTES AGREEMENT TO THESE TERMS AND CONDITIONS.

		DATE
DESIGNER	–	–
CHECKER	–	–
ENGINEER	–	–
SCALE:	N/A	

TITLE: CONTROL PANEL LCP-02-300
BILL OF MATERIAL

CLIENT: WWTP UPGRADE
CITY OF IQALUIT

VEOLIA WATER TECHNOLOGIES CANADA INC. 4105 Sartelon, Saint-Laurent, Qc, Canada, Tel: (514) 334-7230

PROJECT	DRAWING	INTERNAL	SHEET	REV
5000218036-EPL – 0001-AU-VWT		-	06 OF 06	3

Apr 15, 2019 11:20:30 - G:\Projets A67XX\A6798A @ A6798B - VEOLIA - 5000218036 Iqaluit WWTP Upgrade\DOC\DESSIN\000-DRAWINGS\LCP-02-300\REV 3 AS BUILT IN PROCESSING\5000218036-EPL-0001-AU-VWT-006.dwg - tasloti
BAR = 1" AT PLOT SCALE
REF: A6798A
STD: "B" 11x17

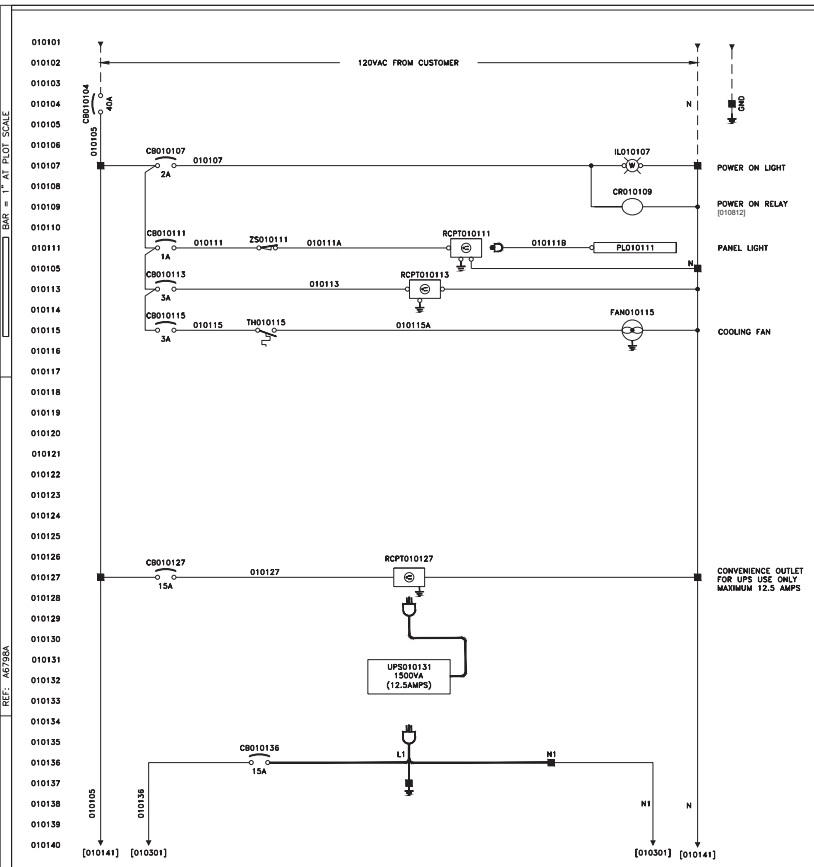

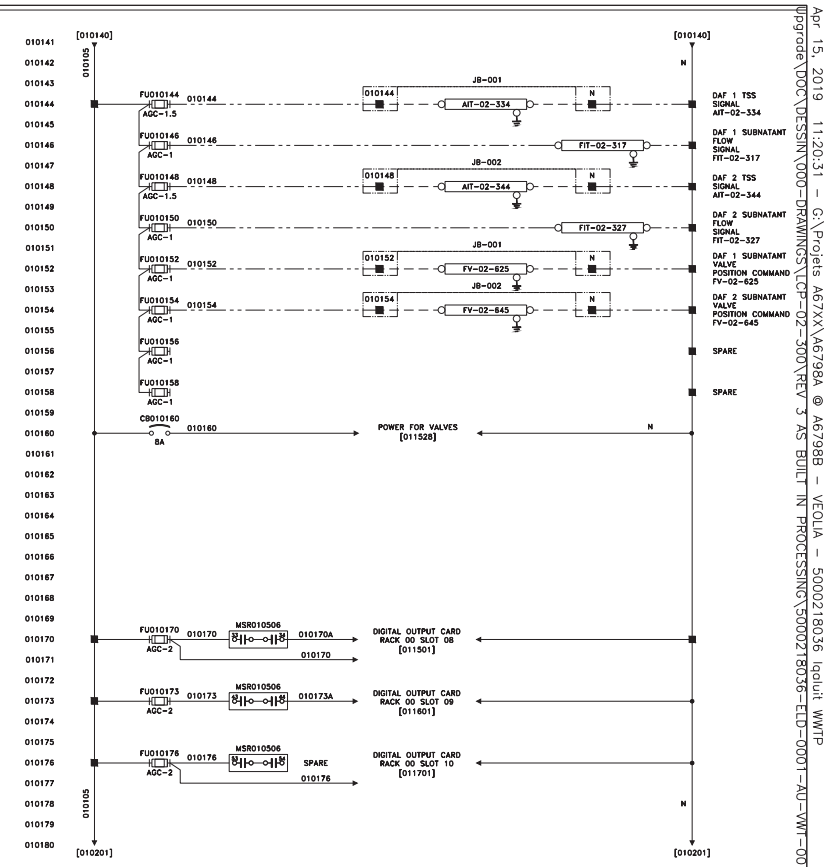

WIRING

- VEOLIA
- CUSTOMER
- INTERNAL WIRING

REV	DESCRIPTION	DATE	REVD	CHKD	APVD	ECN
3	AS BUILT	2019-03-27	HZ	RA	–	–
2	FOR FABRICATION	2019-03-19	HZ	RA	–	–
1	FOR APPROVAL	2019-01-03	HZ	RA	–	–

CONFIDENTIALITY AND INTELLECTUAL PROPERTY NOTICE
ALL INFORMATION CONTAINED IN THIS DOCUMENT IS THE SOLE PROPERTY OF VEOLIA WATER TECHNOLOGIES CANADA INC. AND IS PROTECTED BY ALL APPLICABLE LAWS, INCLUDING BUT NOT LIMITED TO COPYRIGHT AND OTHER INTELLECTUAL PROPERTY LAWS. THE DESIGN CONCEPTS AND INFORMATION CONTAINED HEREIN ARE PROPRIETARY TO V.W.T. AND ARE SUBMITTED IN CONFIDENCE. THEY ARE NOT TRANSFERABLE. THEY SHALL NOT BE USED FOR ANY PURPOSE OTHER THAN THAT FOR WHICH IT IS EXPRESSLY SUBMITTED AND NO IMPLICIT LICENCE IS GRANTED OTHERWISE BY THE SUBMISSION OF THIS DOCUMENT. THEY ARE CONFIDENTIAL AND PRIVILEGED INFORMATION OF V.W.T. AND THEY MUST NOT BE DISCLOSED, REPRODUCED, LOANED, REWRITTEN OR USED IN ANY OTHER MANNER WITHOUT THE EXPRESS WRITTEN CONSENT OF V.W.T. V.W.T. ASSUMES NO RESPONSIBILITY OR LIABILITY FOR THE USE OF THIS DOCUMENT IN ANY MANNER CONTRARY TO THE TERMS AND CONDITIONS HEREIN. ANY UNAUTHORIZED USE OR MODIFICATION OF THIS DOCUMENT IS TO BE MADE AT THE SOLE RISK OF THE USER AND WITHOUT LIABILITY TO V.W.T. IN A MANNER THAT COULD BE DETRIMENTAL TO THE FITNESS OR PURPOSE OF THIS DOCUMENT. IN NO EVENT SHALL THIS DOCUMENT OR THE DESIGN CONCEPTS AND INFORMATION CONTAINED HEREIN BE USED IN A MANNER DETRIMENTAL TO THE INTEREST OF V.W.T. ALL COPYRIGHT, PATENT AND OTHER INTELLECTUAL PROPERTY RIGHTS ARE RESERVED. ACCEPTANCE OF THE DELIVERY OF THIS DOCUMENT CONSTITUTES AGREEMENT TO THESE TERMS AND CONDITIONS.

DESIGNER	–	DATE –
CHECKER	–	DATE –
ENGINEER	–	DATE –
SCALE:	N/A	

TITLE: CONTROL PANEL LCP-02-300
ELECTRICAL SCHEMATIC

CLIENT: WWTP UPGRADE
CITY OF IQALUIT

VEOLIA WATER TECHNOLOGIES CANADA INC. 4105 Sartelon, Saint-Laurent, Qc, Canada, Tel: (514) 334-7230

PROJECT	DRAWING	INTERNAL	SHEET	REV
5000218036-ELD	0001-AU-VWT	–	01 OF 21	3

STD: "B" 11x17 | REF: A6798A | BAR = 1" AT PLOT SCALE

Apr 15, 2019 11:20:31 - G:\Projets A67XX\A6798A @ A6798B - VEOLIA - 5000218036 Iqaluit WWTP Upgrade\DOC\DESSIN\000-DRAWINGS\LCP-02-300\REV 3 AS BUILT IN PROCESSING\5000218036-ELD-0001-AU-VWT-001.dwg - Iqaluit

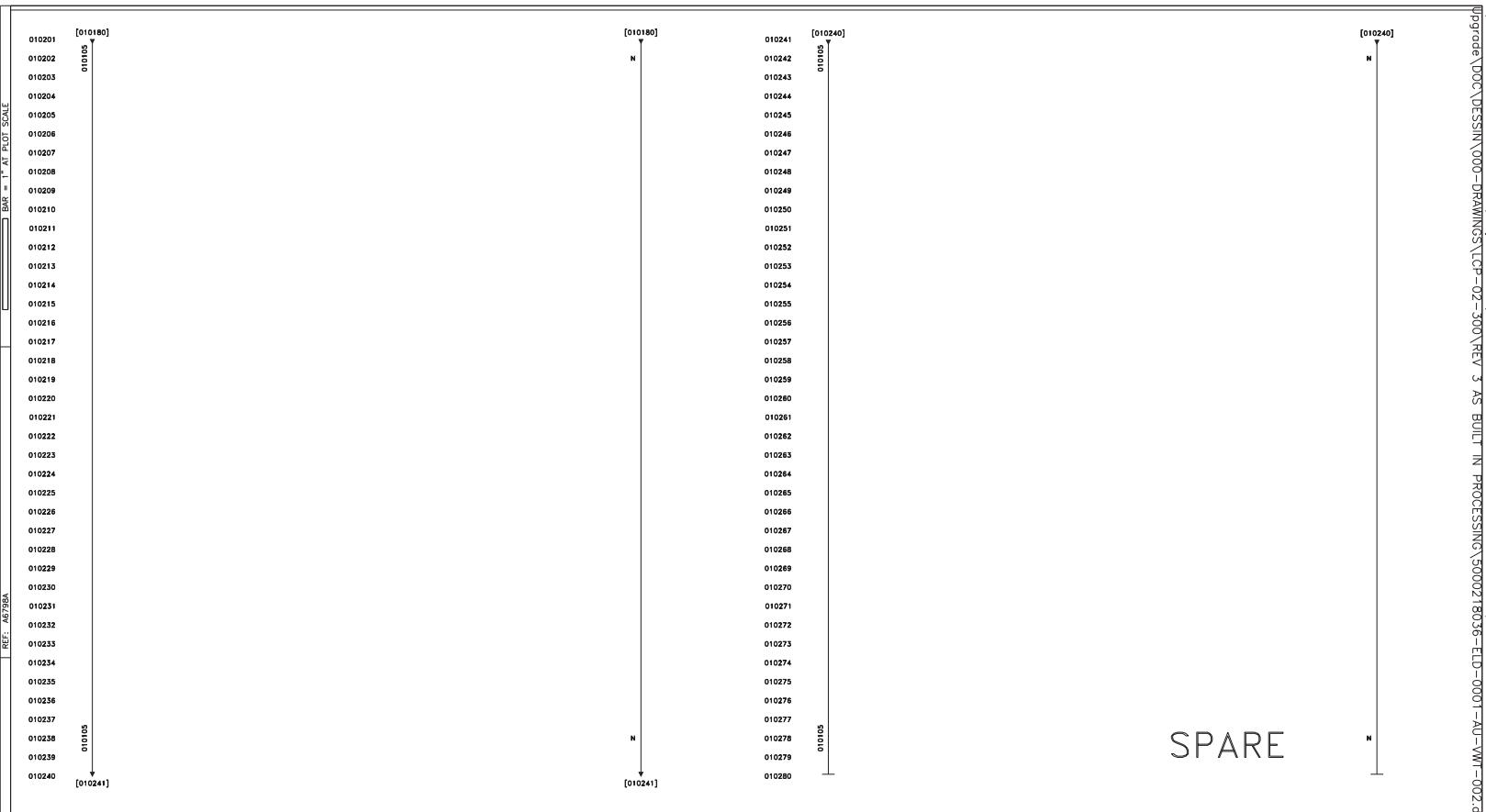

REV	DESCRIPTION	DATE	REVD	CHKD	APVD	ECN
3	AS BUILT	2019-03-27	HZ	RA	–	–
2	FOR FABRICATION	2019-03-19	HZ	RA	–	–
1	FOR APPROVAL	2019-01-03	HZ	RA	–	–

CONFIDENTIALITY AND INTELLECTUAL PROPERTY NOTICE
ALL INFORMATION CONTAINED IN THIS DOCUMENT IS THE SOLE PROPERTY OF VEOLIA WATER TECHNOLOGIES CANADA INC. AND IS PROTECTED BY ALL APPLICABLE LAWS, INCLUDING BUT NOT LIMITED TO COPYRIGHT AND OTHER INTELLECTUAL PROPERTY LAWS. THE DESIGN CONCEPTS AND INFORMATION CONTAINED HEREIN ARE PROPRIETARY TO V.W.T. AND ARE SUBMITTED IN CONFIDENCE. THEY ARE NOT TRANSFERABLE. THEY MUST BE USED ONLY FOR THE PURPOSE FOR WHICH THE DOCUMENT IS EXPRESSLY SUBMITTED AND NO IMPLICIT LICENCE IS GRANTED OTHERWISE BY THE SUBMISSION OF THIS DOCUMENT. THEY ARE CONFIDENTIAL AND PRIVILEGED INFORMATION OF V.W.T. AND THEY MUST NOT BE DISCLOSED, REPRODUCED, LOANED, REMITTED OR USED IN ANY OTHER MANNER WITHOUT THE EXPRESS WRITTEN CONSENT OF V.W.T. V.W.T. ASSUMES NO RESPONSIBILITY OR LIABILITY FOR THE USE OF THIS DOCUMENT OR THE DESIGN CONCEPTS AND INFORMATION CONTAINED HEREIN FOR ANOTHER PROJECT, OR IN A MANNER THAT DOES NOT RELATE TO THE FITNESS OR PURPOSE OF THIS DOCUMENT. IN NO EVENT SHALL THIS DOCUMENT OR THE DESIGN CONCEPTS AND INFORMATION CONTAINED HEREIN BE USED IN A MANNER DETRIMENTAL TO THE INTEREST OF V.W.T. ALL COPYRIGHT, PATENT AND OTHER INTELLECTUAL PROPERTY RIGHTS ARE RESERVED. ACCEPTANCE OF THE DELIVERY OF THIS DOCUMENT CONSTITUTES AGREEMENT TO THESE TERMS AND CONDITIONS.

DESIGNER	DATE
–	–
CHECKER	DATE
–	–
ENGINEER	DATE
–	–
SCALE: N/A	

TITLE
CONTROL PANEL LCP-02-300
ELECTRICAL SCHEMATIC

CLIENT
WWTP UPGRADE
CITY OF IQALUIT

VEOLIA
VEOLIA WATER TECHNOLOGIES CANADA INC. 4105 Sartelon, Saint-Laurent, Qc, Canada. Tel: (514) 334-7230

PROJECT	DRAWING	INTERNAL	SHEET	REV
5000218036-ELD	0001-AU-VWT	–	02 OF 21	3

STD: "B" 11x17 REF: A6798A BAR = 1" AT PLOT SCALE

Apr 15, 2019 11:20:31 – G:\Projets A67XX\A6798A @ A6798B – VEOLIA – 5000218036 Iqaluit WWTP
Upgrade\DOC\DESSIN\000-DRAWINGS\LCP-02-300\REV 3 AS BUILT IN PROCESSING\5000218036-ELD-0001-AU-VWT-002.dwg – rasloni

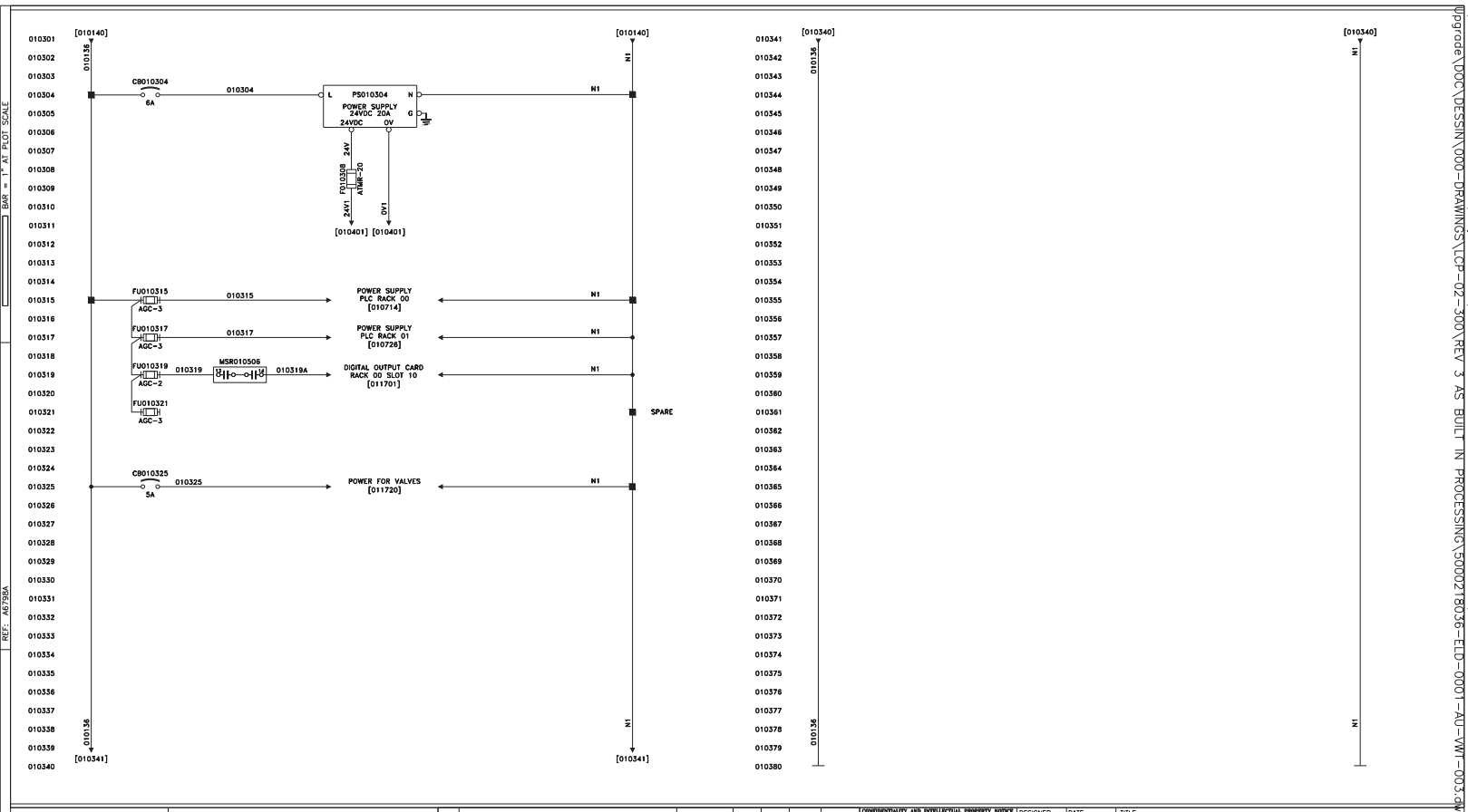

REV	DESCRIPTION	DATE	REVD	CHKD	APVD	ECN
3	AS BUILT	2019-03-27	HZ	RA	–	–
2	FOR FABRICATION	2019-03-19	HZ	RA	–	–
1	FOR APPROVAL	2019-01-03	HZ	RA	–	–

CONFIDENTIALITY AND INTELLECTUAL PROPERTY NOTICE
ALL INFORMATION CONTAINED IN THIS DOCUMENT IS THE SOLE PROPERTY OF VEOLIA WATER TECHNOLOGIES CANADA INC. AND IS PROTECTED BY ALL APPLICABLE LAWS, INCLUDING BUT NOT LIMITED TO COPYRIGHT AND OTHER INTELLECTUAL PROPERTY LAWS. THE DESIGN CONCEPTS AND INFORMATION CONTAINED HEREIN ARE PROPRIETARY TO V.W.T. AND ARE SUBMITTED IN CONFIDENCE. THEY ARE NOT TRANSFERABLE. THEY MUST BE USED ONLY FOR THE PURPOSE FOR WHICH THE DOCUMENT IS EXPRESSLY SUBMITTED AND NO IMPLICIT LICENCE IS GRANTED OTHERWISE BY THE SUBMISSION OF THIS DOCUMENT. THEY ARE CONFIDENTIAL AND PRIVILEGED INFORMATION OF V.W.T. AND THEY MUST NOT BE DISCLOSED, REPRODUCED, LOANED, REMITTED OR USED IN ANY OTHER MANNER WITHOUT THE EXPRESS WRITTEN CONSENT OF V.W.T. V.W.T. ASSUMES NO RESPONSIBILITY OR LIABILITY FOR THE USE OF THIS DOCUMENT OR THE DESIGN CONCEPTS AND INFORMATION CONTAINED HEREIN FOR ANOTHER PROJECT, OR IN A MANNER THAT DOES NOT RELATE TO THE FITNESS OR PURPOSE OF THIS DOCUMENT. IN NO EVENT SHALL THIS DOCUMENT OR THE DESIGN CONCEPTS AND INFORMATION CONTAINED HEREIN BE USED IN A MANNER DETRIMENTAL TO THE INTEREST OF V.W.T. ALL COPYRIGHT, PATENT AND OTHER INTELLECTUAL PROPERTY RIGHTS ARE RESERVED. ACCEPTANCE OF THE DELIVERY OF THIS DOCUMENT CONSTITUTES AGREEMENT TO THESE TERMS AND CONDITIONS.

DESIGNER	DATE
–	–
CHECKER	DATE
–	–
ENGINEER	DATE
–	–
SCALE: N/A	

TITLE
CONTROL PANEL LCP-02-300
ELECTRICAL SCHEMATIC

CLIENT
WWTP UPGRADE
CITY OF IQALUIT

VEOLIA
VEOLIA WATER TECHNOLOGIES CANADA INC. 4105 Sartelon, Saint-Laurent, Qc, Canada. Tel: (514) 334-7230

PROJECT	DRAWING	INTERNAL	SHEET	REV
5000218036-ELD	0001-AU-VWT	–	03 OF 3	3

BAR = 1" AT PLOT SCALE
REF: A6798A
STD: "B" 11x17

Apr 15, 2019 11:20:33 – G:\Projets A67XX\A6798A @ A6798B – VEOLIA – 5000218036 Iqaluit WWTP
Upgrade\DOC\DESSIN\000-DRAWINGS\LCP-02-300\REV 3 AS BUILT IN PROCESSING\5000218036-ELD-0001-AU-VWT-003.dwg – rasloni

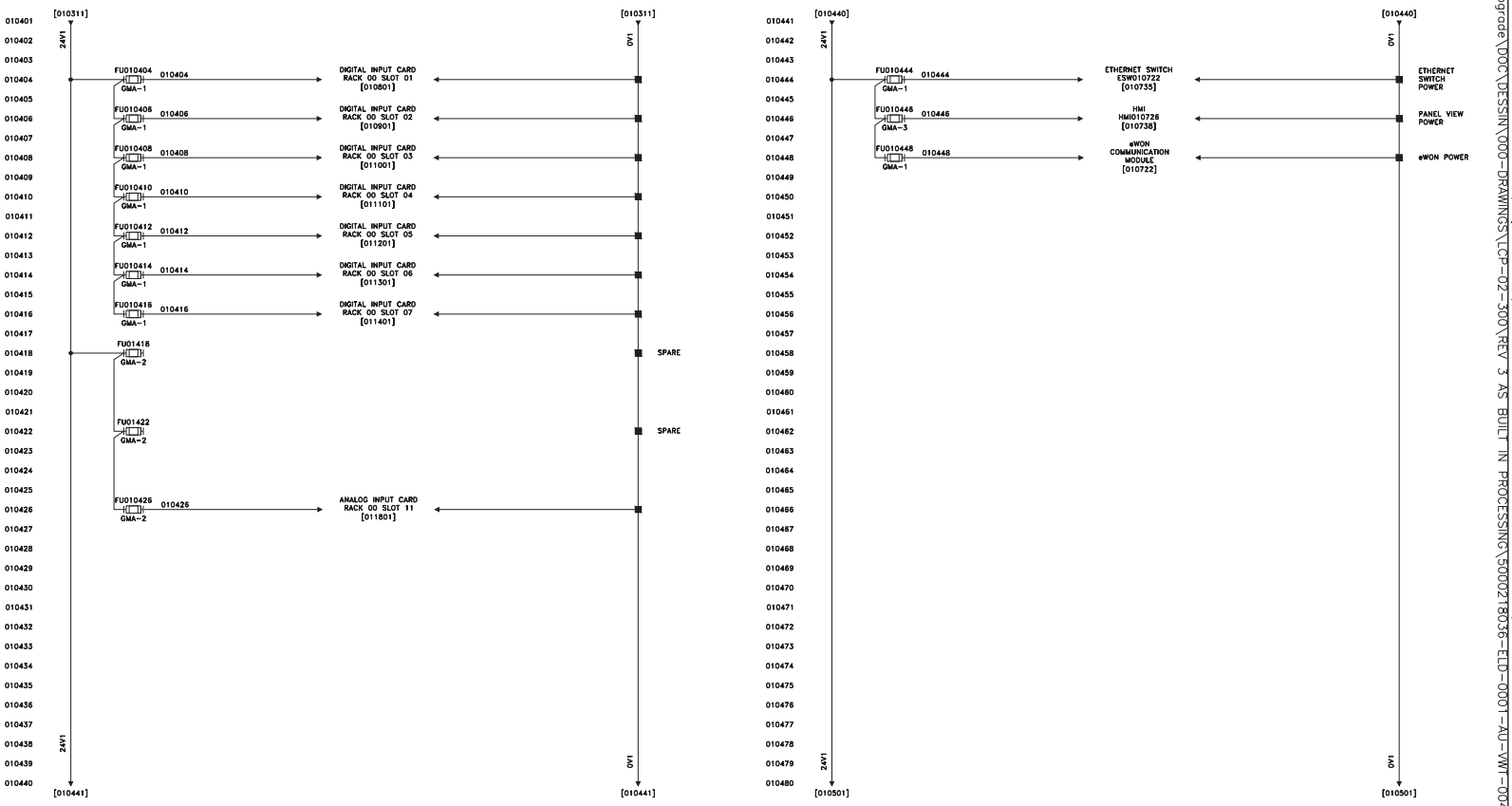

REV	DESCRIPTION	DATE	REVD	CHKD	APVD	ECN
3	AS BUILT	2019-03-27	HZ	RA	–	–
2	FOR FABRICATION	2019-03-19	HZ	RA	–	–
1	FOR APPROVAL	2019-01-03	HZ	RA	–	–

CONFIDENTIALITY AND INTELLECTUAL PROPERTY NOTICE
ALL INFORMATION CONTAINED IN THIS DOCUMENT IS THE SOLE PROPERTY OF VEOLIA WATER TECHNOLOGIES CANADA INC. AND IS PROTECTED BY ALL APPLICABLE LAWS, INCLUDING BUT NOT LIMITED TO COPYRIGHT AND OTHER INTELLECTUAL PROPERTY LAWS. THE DESIGN CONCEPTS AND INFORMATION CONTAINED HEREIN ARE PROPRIETARY TO V.W.T. AND ARE SUBMITTED IN CONFIDENCE. THEY ARE NOT TRANSFERABLE. THEY MUST BE USED ONLY FOR THE PURPOSE FOR WHICH THE DOCUMENT IS EXPRESSLY SUBMITTED AND NO IMPLICIT LICENCE IS GRANTED OTHERWISE BY THE SUBMISSION OF THIS DOCUMENT. THEY ARE CONFIDENTIAL AND PRIVILEGED INFORMATION OF V.W.T. AND THEY MUST NOT BE DISCLOSED, REPRODUCED, LOANED, REMITTED OR USED IN ANY OTHER MANNER WITHOUT THE EXPRESS WRITTEN CONSENT OF V.W.T. V.W.T. ASSUMES NO RESPONSIBILITY OR LIABILITY FOR THE USE OF THIS DOCUMENT OR THE DESIGN CONCEPTS AND INFORMATION CONTAINED HEREIN FOR ANOTHER PROJECT, OR IN A MANNER THAT DOES NOT RELATE TO THE FITNESS OR PURPOSE OF THIS DOCUMENT. IN NO EVENT SHALL THIS DOCUMENT OR THE DESIGN CONCEPTS AND INFORMATION CONTAINED HEREIN BE USED IN A MANNER DETRIMENTAL TO THE INTEREST OF V.W.T. ALL COPYRIGHT, PATENT AND OTHER INTELLECTUAL PROPERTY RIGHTS ARE RESERVED. ACCEPTANCE OF THE DELIVERY OF THIS DOCUMENT CONSTITUTES AGREEMENT TO THESE TERMS AND CONDITIONS.

DESIGNER –	DATE –	TITLE: CONTROL PANEL LCP-02-300 ELECTRICAL SCHEMATIC
CHECKER –	DATE –	CLIENT: WWTP UPGRADE CITY OF IQALUIT
ENGINEER –	DATE –	VEOLIA WATER TECHNOLOGIES CANADA INC. 4105 Sartelon, Saint-Laurent, Qc, Canada. Tel: (514) 334-7230
SCALE: N/A		PROJECT: 5000218036-ELD – DRAWING: 0001-AU-VWT – INTERNAL: – – SHEET: 04 OF 21 – REV: 3

BAR = 1" AT PLOT SCALE
REF: A6798A
STD: "B" 11x17

Apr 15, 2019 11:20:35 – G:\Projets A67XX\A6798A @ A6798B – VEOLIA – 5000218036 Iqaluit WWTP
Upgrade\DOC\DESSIN\000-DRAWINGS\LCP-02-300\REV 3 AS BUILT IN PROCESSING\5000218036-ELD-0001-AU-VWT-004.dwg – rasloni

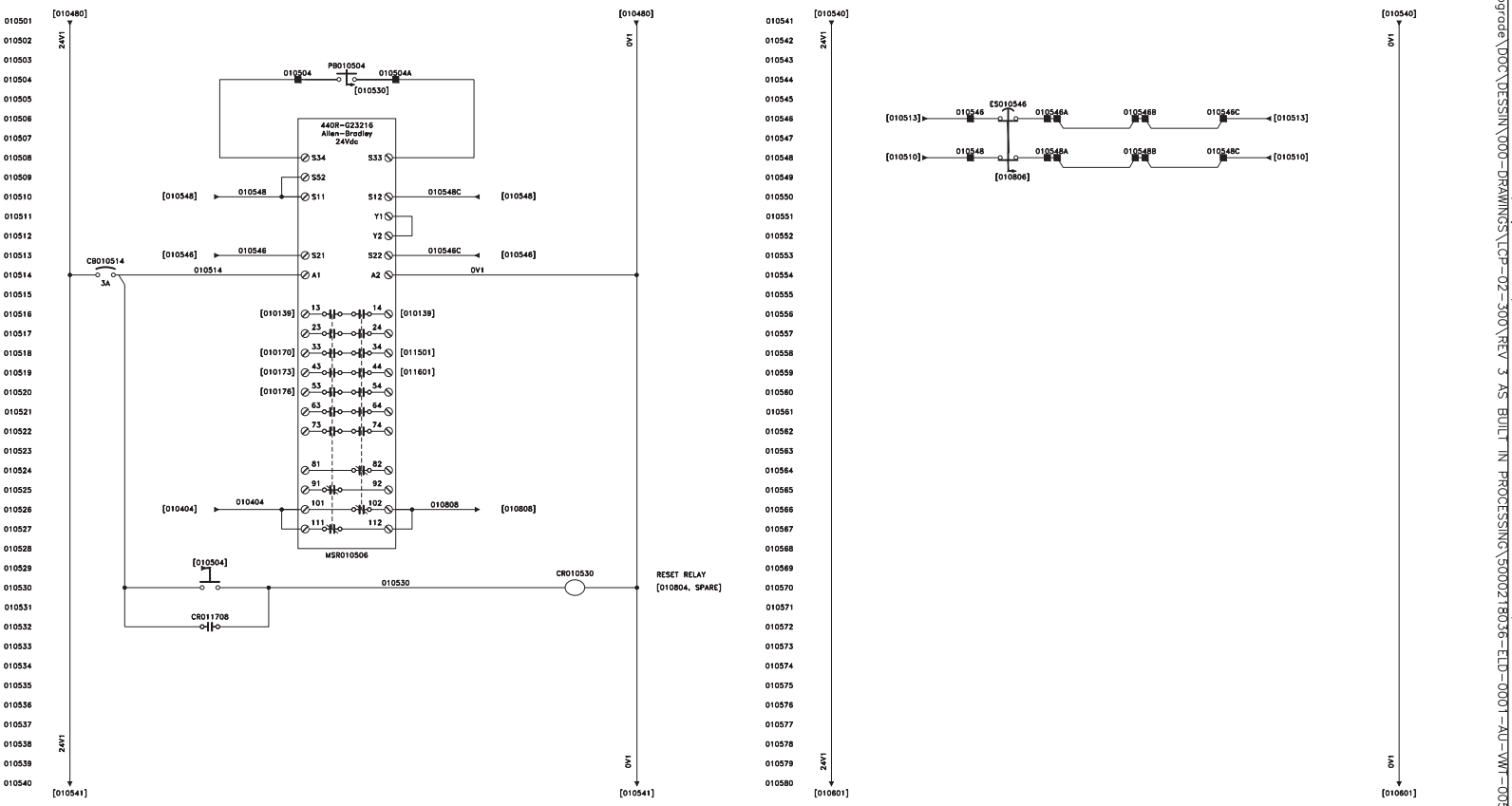

REV	DESCRIPTION	DATE	REVD	CHKD	APVD	ECN
3	AS BUILT	2019-03-27	HZ	RA	–	–
2	FOR FABRICATION	2019-03-19	HZ	RA	–	–
1	FOR APPROVAL	2019-01-03	HZ	RA	–	–

CONFIDENTIALITY AND INTELLECTUAL PROPERTY NOTICE
ALL INFORMATION CONTAINED IN THIS DOCUMENT IS THE SOLE PROPERTY OF VEOLIA WATER TECHNOLOGIES CANADA INC. AND IS PROTECTED BY ALL APPLICABLE LAWS, INCLUDING BUT NOT LIMITED TO COPYRIGHT AND OTHER INTELLECTUAL PROPERTY LAWS. THE DESIGN CONCEPTS AND INFORMATION CONTAINED HEREIN ARE PROPRIETARY TO V.W.T. AND ARE SUBMITTED IN CONFIDENCE. THEY ARE NOT TRANSFERABLE. THEY MUST BE USED ONLY FOR THE PURPOSE FOR WHICH THE DOCUMENT IS EXPRESSLY SUBMITTED AND NO IMPLICIT LICENCE IS GRANTED OTHERWISE BY THE SUBMISSION OF THIS DOCUMENT. THEY ARE CONFIDENTIAL AND PRIVILEGED INFORMATION OF V.W.T. AND THEY MUST NOT BE DISCLOSED, REPRODUCED, LOANED, REMITTED OR USED IN ANY OTHER MANNER WITHOUT THE EXPRESS WRITTEN CONSENT OF V.W.T. V.W.T. ASSUMES NO RESPONSIBILITY OR LIABILITY FOR THE USE OF THIS DOCUMENT OR THE DESIGN CONCEPTS AND INFORMATION CONTAINED HEREIN FOR ANOTHER PROJECT, OR IN A MANNER THAT DOES NOT RELATE TO THE FITNESS OR PURPOSE OF THIS DOCUMENT. IN NO EVENT SHALL THIS DOCUMENT OR THE DESIGN CONCEPTS AND INFORMATION CONTAINED HEREIN BE USED IN A MANNER DETRIMENTAL TO THE INTEREST OF V.W.T. ALL COPYRIGHT, PATENT AND OTHER INTELLECTUAL PROPERTY RIGHTS ARE RESERVED. ACCEPTANCE OF THE DELIVERY OF THIS DOCUMENT CONSTITUTES AGREEMENT TO THESE TERMS AND CONDITIONS.

DESIGNER	DATE
–	–
CHECKER	DATE
–	–
ENGINEER	DATE
–	–
SCALE: N/A	

TITLE
CONTROL PANEL LCP-02-300
ELECTRICAL SCHEMATIC

CLIENT
WWTP UPGRADE
CITY OF IQALUIT

VEOLIA
VEOLIA WATER TECHNOLOGIES CANADA INC. 4105 Sartelon, Saint-Laurent, Qc, Canada. Tel: (514) 334-7230

PROJECT	DRAWING	INTERNAL	SHEET	REV
5000218036-ELD	0001-AU-VWT	–	05 OF 21	3

BAR = 1" AT PLOT SCALE
REF: A6798A
STD: "B" 11x17

Apr 15, 2019 11:20:36 – G:\Projets A67XX\A6798A @ A6798B – VEOLIA – 5000218036 Iqaluit WWTP Upgrade\DOC\DESSIN\000-DRAWINGS\LCP-02-300\REV 3 AS BUILT IN PROCESSING\5000218036-ELD-0001-AU-VWT-005.dwg – rasloni

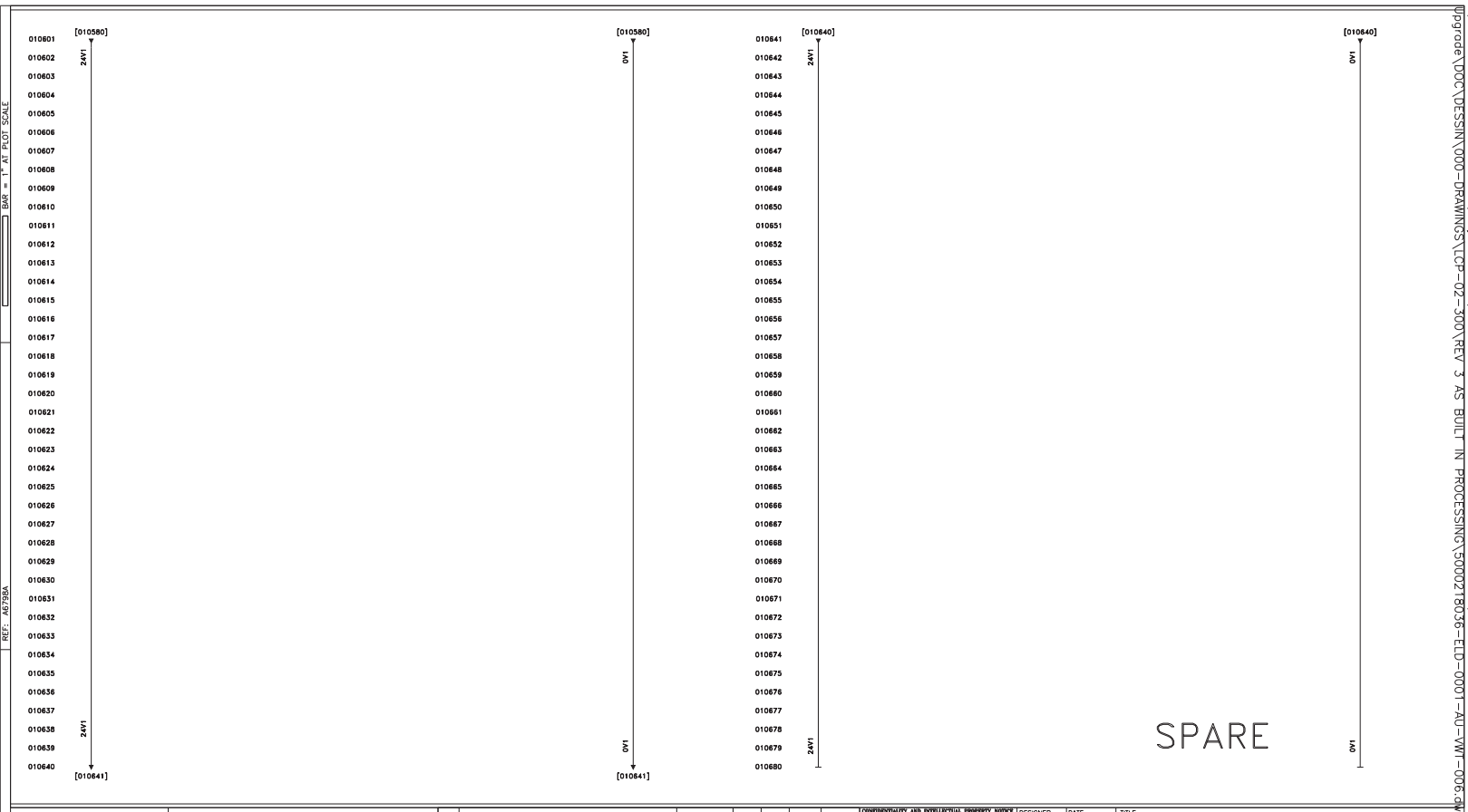

REV	DESCRIPTION	DATE	REVD	CHKD	APVD	ECN
3	AS BUILT	2019-03-27	HZ	RA	–	–
2	FOR FABRICATION	2019-03-19	HZ	RA	–	–
1	FOR APPROVAL	2019-01-03	HZ	RA	–	–

CONFIDENTIALITY AND INTELLECTUAL PROPERTY NOTICE
ALL INFORMATION CONTAINED IN THIS DOCUMENT IS THE SOLE PROPERTY OF VEOLIA WATER TECHNOLOGIES CANADA INC. AND IS PROTECTED BY ALL APPLICABLE LAWS, INCLUDING BUT NOT LIMITED TO COPYRIGHT AND OTHER INTELLECTUAL PROPERTY LAWS. THE DESIGN CONCEPTS AND INFORMATION CONTAINED HEREIN ARE PROPRIETARY TO V.W.T. AND ARE SUBMITTED IN CONFIDENCE. THEY ARE NOT TRANSFERABLE. THEY MUST BE USED ONLY FOR THE PURPOSE FOR WHICH THE DOCUMENT IS EXPRESSLY SUBMITTED AND NO IMPLICIT LICENCE IS GRANTED OTHERWISE BY THE SUBMISSION OF THIS DOCUMENT. THEY ARE CONFIDENTIAL AND PRIVILEGED INFORMATION OF V.W.T. AND THEY MUST NOT BE DISCLOSED, REPRODUCED, LOANED, REMITTED OR USED IN ANY OTHER MANNER WITHOUT THE EXPRESS WRITTEN CONSENT OF V.W.T. V.W.T. ASSUMES NO RESPONSIBILITY OR LIABILITY FOR THE USE OF THIS DOCUMENT OR THE DESIGN CONCEPTS AND INFORMATION CONTAINED HEREIN FOR ANOTHER PROJECT, OR IN A MANNER THAT DOES NOT RELATE TO THE FITNESS OR PURPOSE OF THIS DOCUMENT. IN NO EVENT SHALL THIS DOCUMENT OR THE DESIGN CONCEPTS AND INFORMATION CONTAINED HEREIN BE USED IN A MANNER DETRIMENTAL TO THE INTEREST OF V.W.T. ALL COPYRIGHT, PATENT AND OTHER INTELLECTUAL PROPERTY RIGHTS ARE RESERVED. ACCEPTANCE OF THE DELIVERY OF THIS DOCUMENT CONSTITUTES AGREEMENT TO THESE TERMS AND CONDITIONS.

DESIGNER	DATE
–	–
CHECKER	DATE
–	–
ENGINEER	DATE
–	–
SCALE: N/A	

TITLE
CONTROL PANEL LCP-02-300
ELECTRICAL SCHEMATIC

CLIENT
WWTP UPGRADE
CITY OF IQALUIT

VEOLIA
VEOLIA WATER TECHNOLOGIES CANADA INC. 4105 Sartelon, Saint-Laurent, Qc, Canada. Tel: (514) 334-7230

PROJECT	DRAWING	INTERNAL	SHEET	REV
5000218036-ELD	0001-AU-VWT	–	06 OF 21	3

BAR = 1" AT PLOT SCALE
REF: A6798A
STD: "B" 11x17

Apr 15, 2019 11:20:36 – G:\Projets A67XX\A6798A @ A6798B – VEOLIA – 5000218036 Iqaluit WWTP
Upgrade\DOC\DESSIN\000-DRAWINGS\LCP-02-300\REV 3 AS BUILT IN PROCESSING\5000218036-ELD-0001-AU-VWT-006.dwg – rasloni

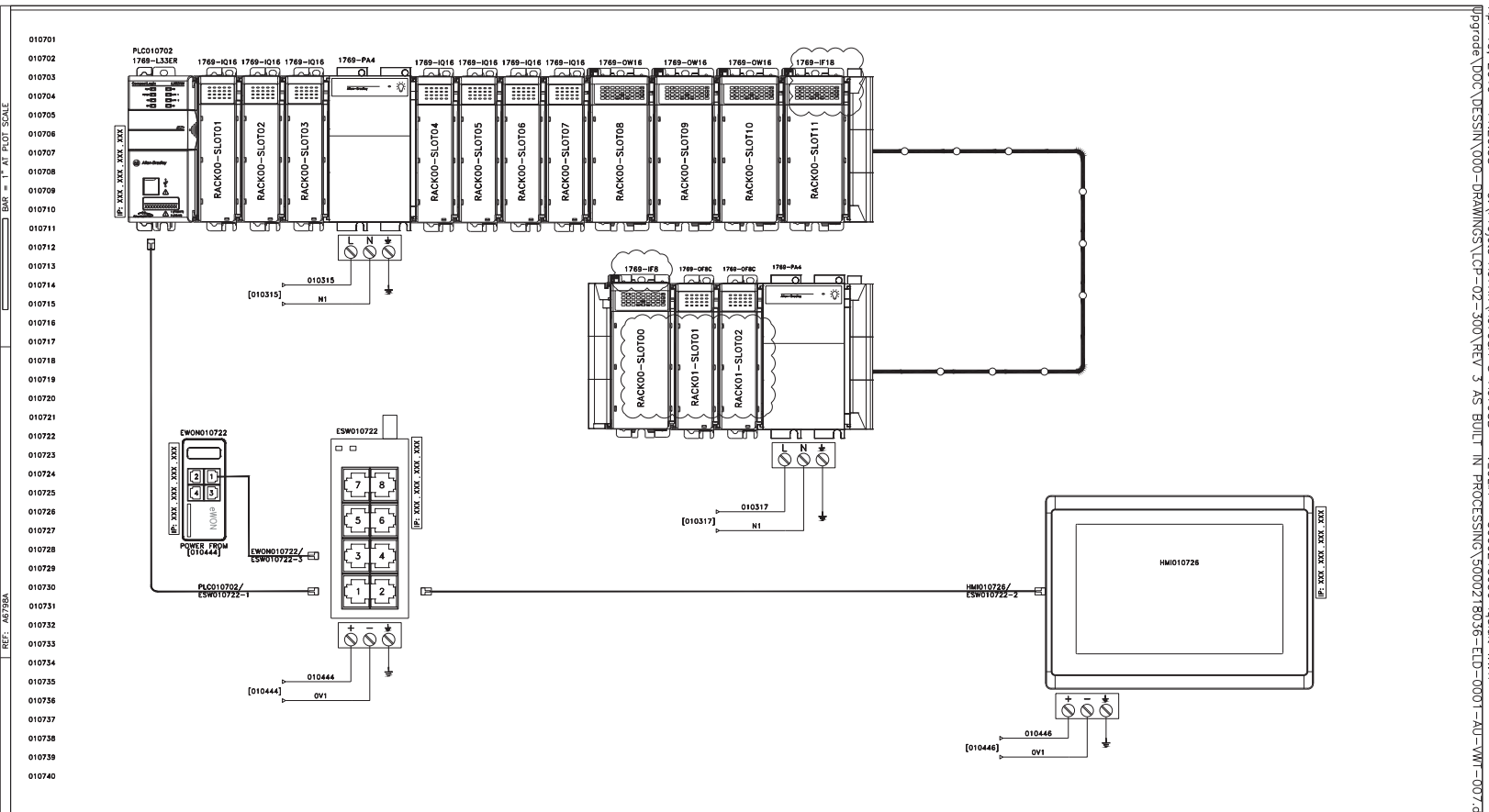

REV	DESCRIPTION	DATE	REVD	CHKD	APVD	ECN
3	AS BUILT	2019-03-27	HZ	RA	–	–
2	FOR FABRICATION	2019-03-19	HZ	RA	–	–
1	FOR APPROVAL	2019-01-03	HZ	RA	–	–

CONFIDENTIALITY AND INTELLECTUAL PROPERTY NOTICE
ALL INFORMATION CONTAINED IN THIS DOCUMENT IS THE SOLE PROPERTY OF VEOLIA WATER TECHNOLOGIES CANADA INC. AND IS PROTECTED BY ALL APPLICABLE LAWS, INCLUDING BUT NOT LIMITED TO COPYRIGHT AND OTHER INTELLECTUAL PROPERTY LAWS. THE DESIGN CONCEPTS AND INFORMATION CONTAINED HEREIN ARE PROPRIETARY TO V.W.T. AND ARE SUBMITTED IN CONFIDENCE. THEY ARE NOT TRANSFERABLE. THEY MUST BE USED ONLY FOR THE PURPOSE FOR WHICH THE DOCUMENT IS EXPRESSLY SUBMITTED AND NO IMPLICIT LICENCE IS GRANTED OTHERWISE BY THE SUBMISSION OF THIS DOCUMENT. THEY ARE CONFIDENTIAL AND PRIVILEGED INFORMATION OF V.W.T. AND THEY MUST NOT BE DISCLOSED, REPRODUCED, LOANED, REMITTED OR USED IN ANY OTHER MANNER WITHOUT THE EXPRESS WRITTEN CONSENT OF V.W.T. V.W.T. ASSUMES NO RESPONSIBILITY OR LIABILITY FOR THE USE OF THIS DOCUMENT OR THE DESIGN CONCEPTS AND INFORMATION CONTAINED HEREIN FOR ANOTHER PROJECT, OR IN A MANNER THAT DOES NOT RELATE TO THE FITNESS OR PURPOSE OF THIS DOCUMENT. IN NO EVENT SHALL THIS DOCUMENT OR THE DESIGN CONCEPTS AND INFORMATION CONTAINED HEREIN BE USED IN A MANNER DETRIMENTAL TO THE INTEREST OF V.W.T. ALL COPYRIGHT, PATENT AND OTHER INTELLECTUAL PROPERTY RIGHTS ARE RESERVED. ACCEPTANCE OF THE DELIVERY OF THIS DOCUMENT CONSTITUTES AGREEMENT TO THESE TERMS AND CONDITIONS.

DESIGNER	DATE
–	–
CHECKER	DATE
–	–
ENGINEER	DATE
–	–
SCALE: N/A	

TITLE
CONTROL PANEL LCP-02-300
ELECTRICAL SCHEMATIC

CLIENT
WWTP UPGRADE
CITY OF IQALUIT

VEOLIA
VEOLIA WATER TECHNOLOGIES CANADA INC. 4105 Sartelon, Saint-Laurent, Qc, Canada. Tel: (514) 334-7230

PROJECT	DRAWING	INTERNAL	SHEET	REV
5000218036-ELD	0001-AU-VWT	–	07 OF 21	3

BAR = 1" AT PLOT SCALE
REF: A6798A
STD: "B" 11x17

Apr 15, 2019 11:20:38 – G:\Projets A67XX\A6798A @ A6798B – VEOLIA – 5000218036 Iqaluit WWTP
Upgrade\DOC\DESSIN\000-DRAWINGS\LCP-02-300\REV 3 AS BUILT IN PROCESSING\5000218036-ELD-0001-AU-VWT-007.dwg – rasloni

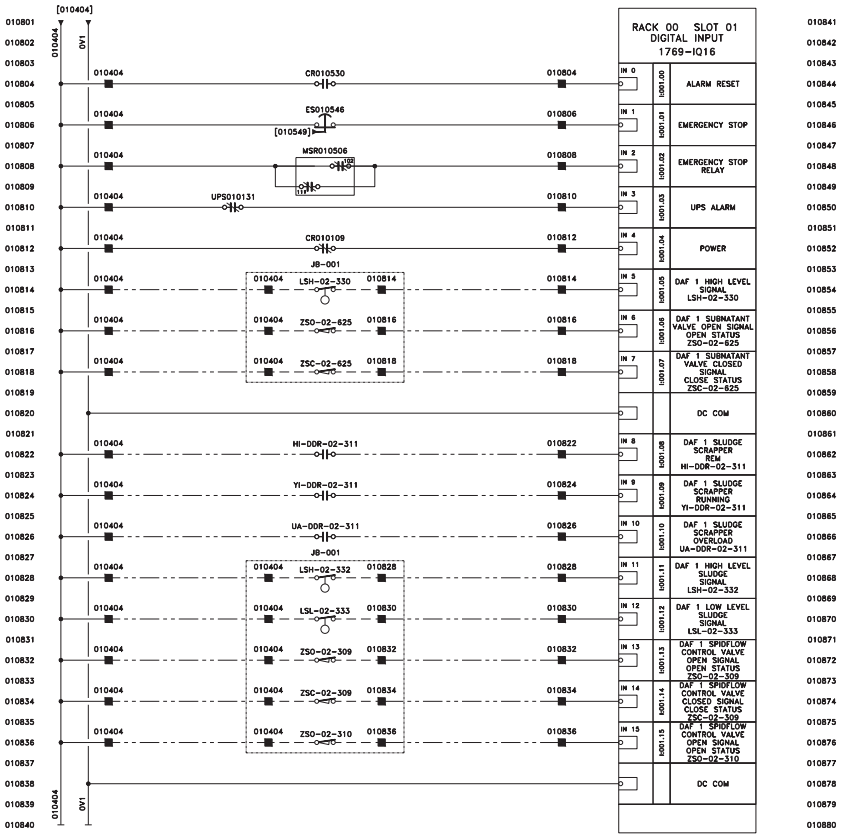

WIRING

- — — — VEOLIA
- — — — CUSTOMER
——— INTERNAL WIRING

REV	DESCRIPTION	DATE	REVD	CHKD	APVD	ECN
3	AS BUILT	2019-03-27	HZ	RA	–	–
2	FOR FABRICATION	2019-03-19	HZ	RA	–	–
1	FOR APPROVAL	2019-01-03	HZ	RA	–	–

CONFIDENTIALITY AND INTELLECTUAL PROPERTY NOTICE
ALL INFORMATION CONTAINED IN THIS DOCUMENT IS THE SOLE PROPERTY OF VEOLIA WATER TECHNOLOGIES CANADA INC. AND IS PROTECTED BY ALL APPLICABLE LAWS, INCLUDING BUT NOT LIMITED TO COPYRIGHT AND OTHER INTELLECTUAL PROPERTY LAWS. THE DESIGN CONCEPTS AND INFORMATION CONTAINED HEREIN ARE PROPRIETARY TO V.W.T. AND ARE SUBMITTED IN CONFIDENCE. THEY ARE NOT TRANSFERRABLE. THEY SHALL NOT BE USED FOR ANY PURPOSE OTHER THAN THAT FOR WHICH IT IS EXPRESSLY SUBMITTED AND NO IMPLICIT LICENCE IS GRANTED OTHERWISE BY THE SUBMISSION OF THIS DOCUMENT. THEY ARE CONFIDENTIAL AND PRIVILEGED INFORMATION OF V.W.T. AND THEY MUST NOT BE DISCLOSED, REPRODUCED, LOANED, REWRITTEN OR USED IN ANY OTHER MANNER WITHOUT THE EXPRESS WRITTEN CONSENT OF V.W.T. V.W.T. ASSUMES NO RESPONSIBILITY OR LIABILITY FOR THE USE OF THIS DOCUMENT OR THE DESIGN CONCEPTS AND INFORMATION CONTAINED HEREIN IN ANY MANNER, PUBLICATION OR IN A MANNER THAT GIVES RISE RELATE TO THE FITNESS OR PURPOSE OF THIS DOCUMENT. IN NO EVENT SHALL THIS DOCUMENT OR THE DESIGN CONCEPTS AND INFORMATION CONTAINED HEREIN BE USED IN A MANNER DETRIMENTAL TO THE INTEREST OF V.W.T. ALL COPYRIGHT, PATENT AND OTHER INTELLECTUAL PROPERTY RIGHTS ARE RESERVED. ACCEPTANCE OF THE DELIVERY OF THIS DOCUMENT CONSTITUTES AGREEMENT TO THESE TERMS AND CONDITIONS.

DESIGNER	DATE –
CHECKER	DATE –
ENGINEER	DATE –
SCALE:	N/A

TITLE: CONTROL PANEL LCP-02-300 ELECTRICAL SCHEMATIC

CLIENT: WWTP UPGRADE CITY OF IQALUIT

VEOLIA WATER TECHNOLOGIES CANADA INC. 4105 Sartelon, Saint-Laurent, Qc, Canada, Tel: (514) 334-7230

PROJECT DRAWING	INTERNAL	SHEET	REV
5000218036-ELD – 0001-AU-VWT	–	08 OF 21	3

Apr 15, 2019 11:20:40 - G:\Projets A67XX\A6798A @ A6798B - VEOLIA - 5000218036 Iqaluit WWTP Upgrade\DOC\DESSIN\000-DRAWINGS\LCP-02-300\REV 3 AS BUILT IN PROCESSING\5000218036-ELD-0001-AU-VWT-008.dwg - tasloti
BAR = 1" AT PLOT SCALE
REF: A6798A
STD: "B" 11x17

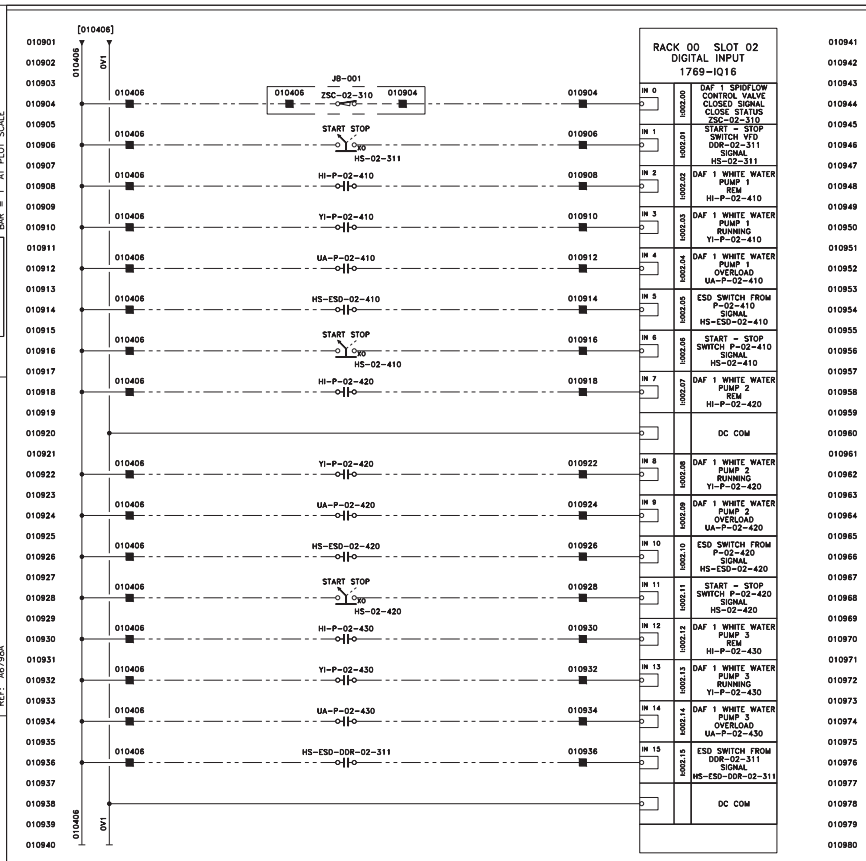

STD: "B" 11x17 | REF: A6798A | BAR = 1" AT PLOT SCALE

WIRING

- — — — VEOLIA
- — — — CUSTOMER
- ——— INTERNAL WIRING

REV	DESCRIPTION	DATE	REVD	CHKD	APVD	ECN
3	AS BUILT	2019-03-27	HZ	RA	–	–
2	FOR FABRICATION	2019-03-19	HZ	RA	–	–
1	FOR APPROVAL	2019-01-03	HZ	RA	–	–

CONFIDENTIALITY AND INTELLECTUAL PROPERTY NOTICE
ALL INFORMATION CONTAINED IN THIS DOCUMENT IS THE SOLE PROPERTY OF VEOLIA WATER TECHNOLOGIES CANADA INC. AND IS PROTECTED BY ALL APPLICABLE LAWS, INCLUDING BUT NOT LIMITED TO COPYRIGHT AND OTHER INTELLECTUAL PROPERTY LAWS. THE DESIGN CONCEPTS AND INFORMATION CONTAINED HEREIN ARE PROPRIETARY TO V.W.T. AND ARE SUBMITTED IN CONFIDENCE. THEY ARE NOT TRANSFERABLE. THEY SHALL NOT BE USED FOR ANY PURPOSE OTHER THAN THAT FOR WHICH IT IS EXPRESSLY SUBMITTED AND NO IMPLICIT LICENCE IS GRANTED OTHERWISE BY THE SUBMISSION OF THIS DOCUMENT. THEY ARE CONFIDENTIAL AND PRIVILEGED INFORMATION OF V.W.T. AND THEY MUST NOT BE DISCLOSED, REPRODUCED, LOANED, REWRITED OR USED IN ANY OTHER MANNER WITHOUT THE EXPRESS WRITTEN CONSENT OF V.W.T. V.W.T. ASSUMES NO RESPONSIBILITY OR LIABILITY FOR THE USE OF THIS DOCUMENT FOR ANY PURPOSE OTHER THAN THAT FOR WHICH IT IS EXPRESSLY PROVIDED BY OR ON BEHALF OF V.W.T. IN A MANNER THAT COULD BE RELIED TO THE FITNESS OR PURPOSE OF THIS DOCUMENT. IN NO EVENT SHALL THIS DOCUMENT OR THE DESIGN CONCEPTS AND INFORMATION CONTAINED HEREIN BE USED IN A MANNER DETRIMENTAL TO THE INTEREST OF V.W.T. ALL COPYRIGHT, PATENT AND OTHER INTELLECTUAL PROPERTY RIGHTS ARE RESERVED. ACCEPTANCE OF THE DELIVERY OF THIS DOCUMENT CONSTITUTES AGREEMENT TO THESE TERMS AND CONDITIONS.

DESIGNER	–	DATE –
CHECKER	–	DATE –
ENGINEER	–	DATE –
SCALE:	N/A	

TITLE: CONTROL PANEL LCP-02-300
ELECTRICAL SCHEMATIC

CLIENT: WWTP UPGRADE
CITY OF IQALUIT

VEOLIA WATER TECHNOLOGIES CANADA INC. 4105 Sartelon, Saint-Laurent, Qc, Canada, Tel: (514) 334-7230

PROJECT	DRAWING	INTERNAL	SHEET	REV
5000218036-ELD	0001-AU-VWT	–	09 OF 21	3

Apr 15, 2019 11:20:41 - G:\Projets A67XX\A6798A @ A6798B - VEOLIA - 5000218036 Iqaluit WWTP Upgrade\DOC\DESSIN\000-DRAWINGS\LCP-02-300\REV 3 AS BUILT IN PROCESSING\5000218036-ELD-0001-AU-VWT-009.dwg - rasloti

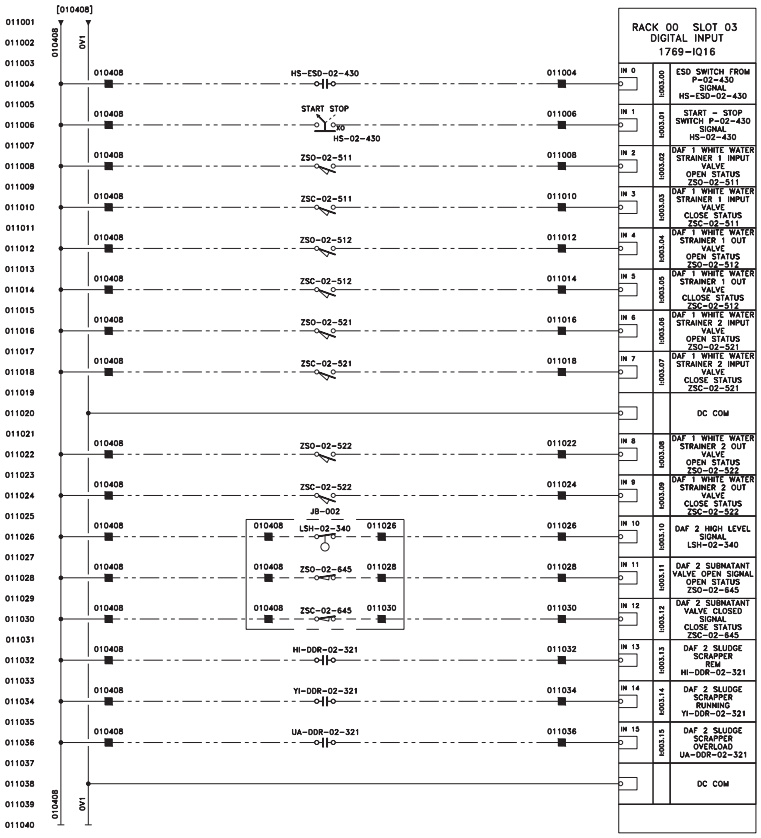

WIRING

- VEOLIA
- CUSTOMER
- INTERNAL WIRING

REV	DESCRIPTION	DATE	REVD	CHKD	APVD	ECN
3	AS BUILT	2019-03-27	HZ	RA	–	–
2	FOR FABRICATION	2019-03-19	HZ	RA	–	–
1	FOR APPROVAL	2019-01-03	HZ	RA	–	–

CONFIDENTIALITY AND INTELLECTUAL PROPERTY NOTICE
ALL INFORMATION CONTAINED IN THIS DOCUMENT IS THE SOLE PROPERTY OF VEOLIA WATER TECHNOLOGIES CANADA INC. AND IS PROTECTED BY ALL APPLICABLE LAWS, INCLUDING BUT NOT LIMITED TO COPYRIGHT AND OTHER INTELLECTUAL PROPERTY LAWS. THE DESIGN CONCEPTS AND INFORMATION CONTAINED HEREIN ARE PROPRIETARY TO V.W.T. AND ARE SUBMITTED IN CONFIDENCE. THEY ARE NOT TRANSFERRED, THEY MAY NOT BE USED BY OR DISCLOSED TO OTHERS FOR ANY PURPOSE UNLESS SPECIFICALLY AUTHORIZED IN WRITING. THEY ARE NOT TO BE REPRODUCED, TRANSMITTED, STORED IN A RETRIEVAL SYSTEM OR MADE USE OF IN ANY MANNER WHATSOEVER WITHOUT THE PRIOR WRITTEN CONSENT OF V.W.T. EXCEPT AS EXPRESSLY AUTHORIZED BY V.W.T. IN WRITING, THE RECIPIENT OF THIS DOCUMENT IS LIABLE FOR ANY DAMAGES INCURRED BY V.W.T. AS A RESULT OF UNAUTHORIZED USE OF THIS DOCUMENT. THIS DOCUMENT IS TO BE RETURNED TO V.W.T. UPON REQUEST AND IN ANY EVENT UPON COMPLETION OF THE USE FOR WHICH IT WAS LOANED. THIS DOCUMENT AND ANY COPIES THEREOF MUST NOT BE DISCLOSED, REPRODUCED, LOANED, TRANSMITTED OR USED IN ANY OTHER MANNER WITHOUT THE EXPRESS WRITTEN CONSENT OF V.W.T. V.W.T. ASSUMES NO RESPONSIBILITY OR LIABILITY FOR THE USE OF THIS DOCUMENT OTHER THAN FOR THE PURPOSE FOR WHICH IT HAS BEEN EXPRESSLY SUBMITTED. ANY LIABILITY THAT MAY OCCUR AS A RESULT OF MODIFICATION OR IN A MANNER THAT DOES NOT RELATE TO THE FITNESS OR PURPOSE OF THIS DOCUMENT, IS NO EVENT SHALL THIS DOCUMENT OR THE DESIGN CONCEPTS AND INFORMATION CONTAINED HEREIN BE USED IN A MANNER DETRIMENTAL TO THE INTEREST OF V.W.T. ALL COPYRIGHT, PATENT AND OTHER INTELLECTUAL PROPERTY RIGHTS ARE RESERVED. ACCEPTANCE OF THE DELIVERY OF THIS DOCUMENT CONSTITUTES AGREEMENT TO THESE TERMS AND CONDITIONS.

DESIGNER	DATE –
CHECKER	DATE –
ENGINEER	DATE –
SCALE:	N/A

TITLE: CONTROL PANEL LCP-02-300
ELECTRICAL SCHEMATIC

CLIENT: WWTP UPGRADE
CITY OF IQALUIT

VEOLIA WATER TECHNOLOGIES CANADA INC. 4105 Sartelon, Saint-Laurent, Qc, Canada, Tel: (514) 334-7230

PROJECT	DRAWING	INTERNAL	SHEET	REV
5000218036-ELD	0001-AU-VWT	–	10 OF 21	3

STD: "B" 11x17 REF: A6798A BAR = 1" AT PLOT SCALE

Apr 15, 2019 11:20:43 - G:\Projets A67XX\A6798A @ A6798B - VEOLIA - 5000218036 Iqaluit WWTP Upgrade\DOC\DESSIN\000-DRAWINGS\LCP-02-300\REV 3 AS BUILT IN PROCESSING\5000218036-ELD-0001-AU-VWT-010.dwg - tasloti

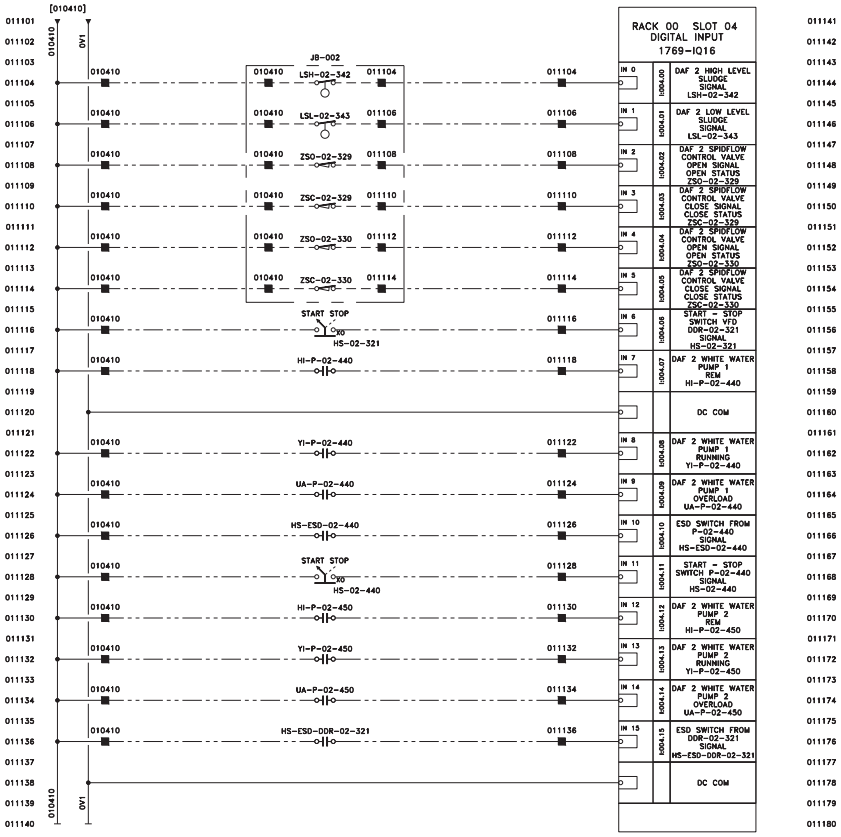

BAR = 1" AT PLOT SCALE

REF: A6798A

STD: "B" 11x17

WIRING

- — — — VEOLIA
- — — — CUSTOMER
- ——— INTERNAL WIRING

REV	DESCRIPTION	DATE	REVD	CHKD	APVD	ECN
3	AS BUILT	2019-03-27	HZ	RA	–	–
2	FOR FABRICATION	2019-03-19	HZ	RA	–	–
1	FOR APPROVAL	2019-01-03	HZ	RA	–	–

CONFIDENTIALITY AND INTELLECTUAL PROPERTY NOTICE
ALL INFORMATION CONTAINED IN THIS DOCUMENT IS THE SOLE PROPERTY OF VEOLIA WATER TECHNOLOGIES CANADA INC. AND IS PROTECTED BY ALL APPLICABLE LAWS, INCLUDING BUT NOT LIMITED TO COPYRIGHT AND OTHER INTELLECTUAL PROPERTY LAWS. THE DESIGN CONCEPTS AND INFORMATION CONTAINED HEREIN ARE PROPRIETARY TO V.W.T. AND ARE SUBMITTED IN CONFIDENCE. THEY ARE NOT TRANSFERABLE. THEY SHALL NOT BE USED FOR ANY PURPOSE OTHER THAN THAT FOR WHICH IT IS EXPRESSLY SUBMITTED AND NO IMPLICIT LICENCE IS GRANTED OTHERWISE BY THE SUBMISSION OF THIS DOCUMENT. THEY ARE CONFIDENTIAL AND PRIVILEGED INFORMATION OF V.W.T. AND THEY MUST NOT BE DISCLOSED, REPRODUCED, LOANED, REWRITED OR USED IN ANY OTHER MANNER WITHOUT THE EXPRESS WRITTEN CONSENT OF V.W.T. V.W.T. ASSUMES NO RESPONSIBILITY OR LIABILITY FOR THE USE OF THIS DOCUMENT FOR PURPOSES OTHER THAN THOSE EXPRESSLY AGREED TO BY V.W.T. ANY UNAUTHORIZED PUBLICATION OR IN A MANNER THAT DOES NOT RELATE TO THE FITNESS OR PURPOSE OF THIS DOCUMENT, IN NO EVENT SHALL THIS DOCUMENT OR THE DESIGN CONCEPTS AND INFORMATION CONTAINED HEREIN BE USED IN A MANNER DETRIMENTAL TO THE INTEREST OF V.W.T. ALL COPYRIGHT, PATENT AND OTHER INTELLECTUAL PROPERTY RIGHTS ARE RESERVED. ACCEPTANCE OF THE DELIVERY OF THIS DOCUMENT CONSTITUTES AGREEMENT TO THESE TERMS AND CONDITIONS.

		DATE
DESIGNER	–	–
CHECKER	–	–
ENGINEER	–	–
SCALE:	N/A	

TITLE: CONTROL PANEL LCP-02-300
ELECTRICAL SCHEMATIC

CLIENT: WWTP UPGRADE
CITY OF IQALUIT

VEOLIA WATER TECHNOLOGIES CANADA INC. 4105 Sartelon, Saint-Laurent, Qc, Canada, Tel: (514) 334-7230

PROJECT	DRAWING	INTERNAL	SHEET	REV
5000218036-ELD	0001-AU-VWT	–	11 OF 21	3

Apr 15, 2019 11:20:43 - G:\Projets A67XX\A6798A @ A6798B - VEOLIA - 5000218036 Iqaluit WWTP Upgrade\DOC\DESSIN\000-DRAWINGS\LCP-02-300\REV 3 AS BUILT IN PROCESSING\5000218036-ELD-0001-AU-VWT-011.dwg - tasloti

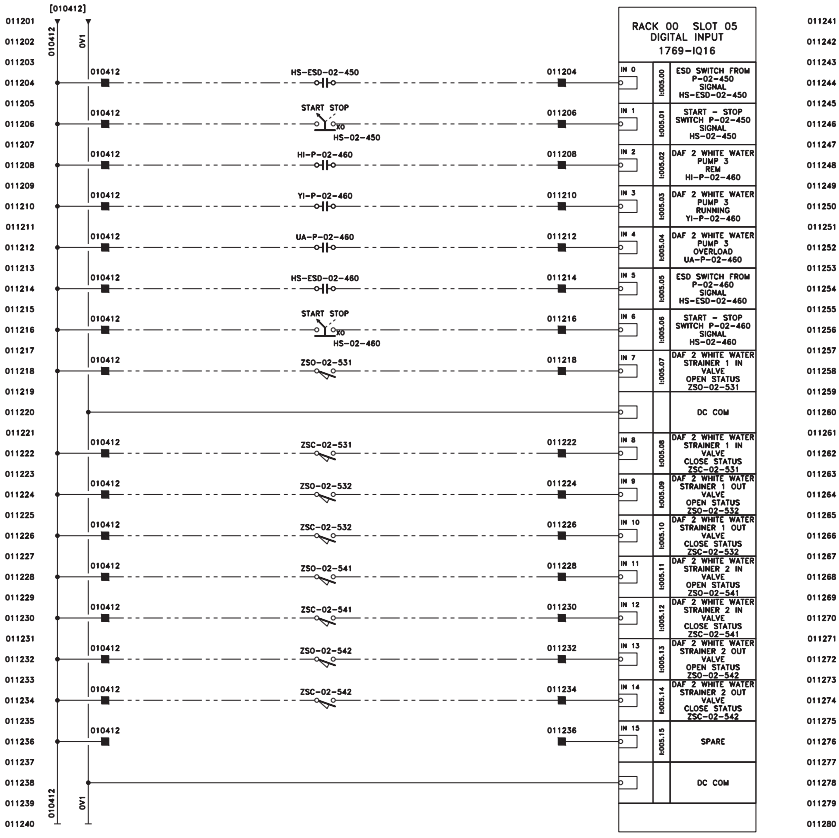

WIRING

- – – – VEOLIA
- – – – CUSTOMER
- ——— INTERNAL WIRING

REV	DESCRIPTION	DATE	REVD	CHKD	APVD	ECN
3	AS BUILT	2019-03-27	HZ	RA	–	–
2	FOR FABRICATION	2019-03-19	HZ	RA	–	–
1	FOR APPROVAL	2019-01-03	HZ	RA	–	–

CONFIDENTIALITY AND INTELLECTUAL PROPERTY NOTICE
ALL INFORMATION CONTAINED IN THIS DOCUMENT IS THE SOLE PROPERTY OF VEOLIA WATER TECHNOLOGIES CANADA INC. AND IS PROTECTED BY ALL APPLICABLE LAWS, INCLUDING BUT NOT LIMITED TO COPYRIGHT AND OTHER INTELLECTUAL PROPERTY LAWS. THE DESIGN CONCEPTS AND INFORMATION CONTAINED HEREIN ARE PROPRIETARY TO V.W.T. AND ARE SUBMITTED IN CONFIDENCE. THEY ARE NOT TRANSFERABLE. THEY SHALL NOT BE USED IN WHOLE OR IN PART FOR ANY PURPOSE OTHER THAN IS EXPRESSLY SUBMITTED AND NO IMPLICIT LICENCE IS GRANTED OTHERWISE BY THE SUBMISSION OF THIS DOCUMENT. THEY ARE CONFIDENTIAL AND PRIVILEGED INFORMATION OF V.W.T. AND THEY MUST NOT BE DISCLOSED, REPRODUCED, LOANED, REWRITTEN OR USED IN ANY OTHER MANNER WITHOUT THE EXPRESS WRITTEN CONSENT OF V.W.T. V.W.T. ASSUMES NO RESPONSIBILITY OR LIABILITY FOR THE USE OF THIS DOCUMENT OR THE DESIGN CONCEPTS AND INFORMATION CONTAINED HEREIN IN ANY MANNER, PUBLICATION OR IN A MANNER THAT COULD IN ANY REGARD TO THE FITNESS OR PURPOSE OF THIS DOCUMENT. IN NO EVENT SHALL THIS DOCUMENT OR THE DESIGN CONCEPTS AND INFORMATION CONTAINED HEREIN BE USED IN A MANNER DETRIMENTAL TO THE INTEREST OF V.W.T. ALL COPYRIGHT, PATENT AND OTHER INTELLECTUAL PROPERTY RIGHTS ARE RESERVED. ACCEPTANCE OF THE DELIVERY OF THIS DOCUMENT CONSTITUTES AGREEMENT TO THESE TERMS AND CONDITIONS.

		DATE
DESIGNER	–	–
CHECKER	–	–
ENGINEER	–	–
SCALE:	N/A	

TITLE: CONTROL PANEL LCP-02-300 ELECTRICAL SCHEMATIC

CLIENT: WWTP UPGRADE CITY OF IQALUIT

VEOLIA WATER TECHNOLOGIES CANADA INC. 4105 Sartelon, Saint-Laurent, Qc, Canada, Tel: (514) 334-7230

PROJECT DRAWING	INTERNAL	SHEET	REV
5000218036-ELD – 0001-AU-VWT	–	12 OF 21	3

Apr 15, 2019 11:20:45 – G:\Projets A67XX\A6798A @ A6798B – VEOLIA – 5000218036 Iqaluit WWTP Upgrade\DOC\DESSIN\000-DRAWINGS\LCP-02-300\REV 3 AS BUILT IN PROCESSING\5000218036-ELD-0001-AU-VWT-012.dwg – rasloni

BAR = 1" AT PLOT SCALE
REF: A6798A
STD: "B" 11x17

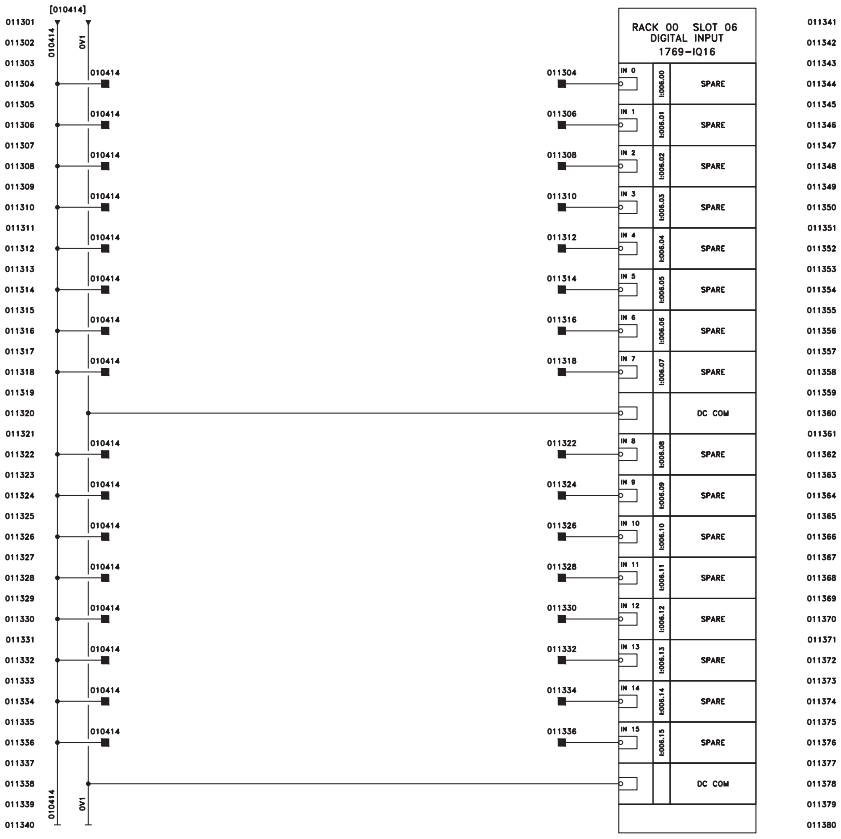

BAR = 1" AT PLOT SCALE

REF: A6798A

STD: "B" 11x17

WIRING

- - - - VEOLIA
- - - - CUSTOMER
——— INTERNAL WIRING

REV	DESCRIPTION	DATE	REVD	CHKD	APVD	ECN
3	AS BUILT	2019-03-27	HZ	RA	–	–
2	FOR FABRICATION	2019-03-19	HZ	RA	–	–
1	FOR APPROVAL	2019-01-03	HZ	RA	–	–

CONFIDENTIALITY AND INTELLECTUAL PROPERTY NOTICE
ALL INFORMATION CONTAINED IN THIS DOCUMENT IS THE SOLE PROPERTY OF VEOLIA WATER TECHNOLOGIES CANADA INC. AND IS PROTECTED BY ALL APPLICABLE LAWS, INCLUDING BUT NOT LIMITED TO COPYRIGHT AND OTHER INTELLECTUAL PROPERTY LAWS. THE DESIGN CONCEPTS AND INFORMATION CONTAINED HEREIN ARE PROPRIETARY TO V.W.T. AND ARE SUBMITTED IN CONFIDENCE. THEY ARE NOT TRANSFERABLE. THEY MUST BE USED ONLY FOR THE PURPOSE FOR WHICH THE DOCUMENT IS EXPRESSLY SUBMITTED AND NO IMPLICIT LICENCE IS GRANTED OTHERWISE BY THE SUBMISSION OF THIS DOCUMENT. THEY ARE CONFIDENTIAL AND PRIVILEGED INFORMATION OF V.W.T. AND THEY MUST NOT BE DISCLOSED, REPRODUCED, LOANED, REMITTED OR USED IN ANY OTHER MANNER WITHOUT THE EXPRESS WRITTEN CONSENT OF V.W.T. V.W.T. ASSUMES NO RESPONSIBILITY OR LIABILITY FOR THE USE OF THIS DOCUMENT OR THE DESIGN CONCEPTS AND INFORMATION CONTAINED HEREIN FOR ANOTHER PROJECT, OR IN A MANNER THAT DOES NOT RELATE TO THE FITNESS OR PURPOSE OF THIS DOCUMENT. IN NO EVENT SHALL THIS DOCUMENT OR THE DESIGN CONCEPTS AND INFORMATION CONTAINED HEREIN BE USED IN A MANNER DETRIMENTAL TO THE INTEREST OF V.W.T. ALL COPYRIGHT, PATENT AND OTHER INTELLECTUAL PROPERTY RIGHTS ARE RESERVED. ACCEPTANCE OF THE DELIVERY OF THIS DOCUMENT CONSTITUTES AGREEMENT TO THESE TERMS AND CONDITIONS.

DESIGNER	DATE
–	–
CHECKER	DATE
–	–
ENGINEER	DATE
–	–
SCALE: N/A	

TITLE
CONTROL PANEL LCP-02-300
ELECTRICAL SCHEMATIC

CLIENT
WWTP UPGRADE
CITY OF IQALUIT

VEOLIA
VEOLIA WATER TECHNOLOGIES CANADA INC. 4105 Sartelon, Saint-Laurent, Qc, Canada. Tel: (514) 334-7230

PROJECT	DRAWING	INTERNAL	SHEET	REV
5000218036-ELD	0001-AU-VWT	–	13 OF 21	3

Apr 15, 2019 11:20:47 – G:\Projets A67XX\A6798A @ A6798B – VEOLIA – 5000218036 Iqaluit WWTP
Upgrade\DOC\DESSIN\000-DRAWINGS\LCP-02-300\REV 3 AS BUILT IN PROCESSING\5000218036-ELD-0001-AU-VWT-013.dwg – rastani

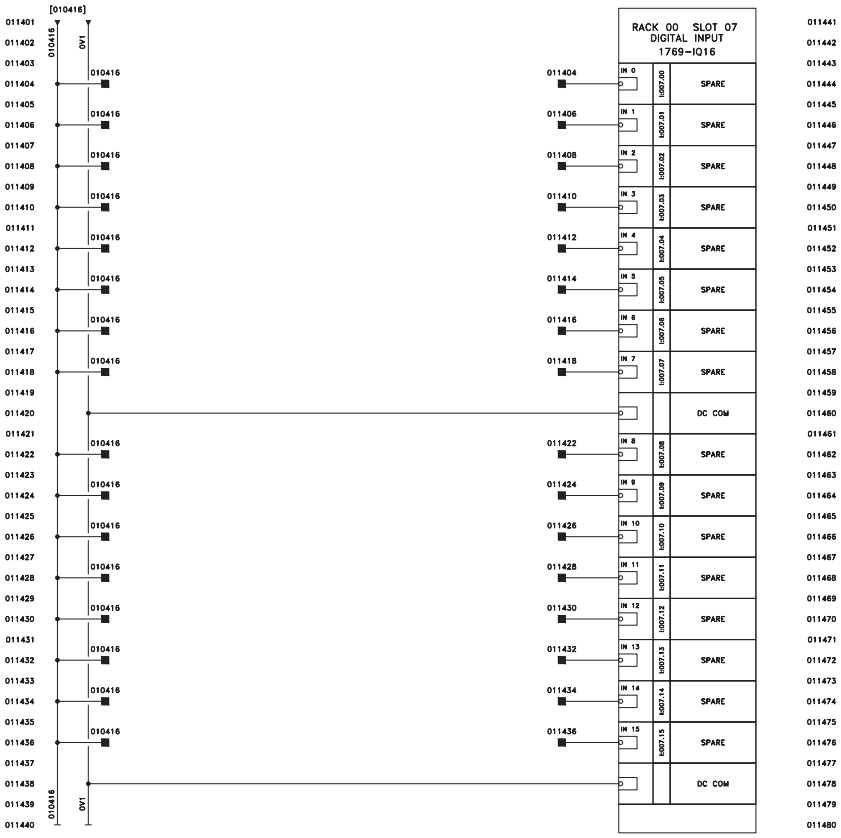

BAR = 1" AT PLOT SCALE

REF: A6798A

STD: "B" 11x17

WIRING

- - - - VEOLIA
- - - - CUSTOMER
——— INTERNAL WIRING

REV	DESCRIPTION	DATE	REVD	CHKD	APVD	ECN
3	AS BUILT	2019-03-27	HZ	RA	–	–
2	FOR FABRICATION	2019-03-19	HZ	RA	–	–
1	FOR APPROVAL	2019-01-03	SG	RA	–	–

CONFIDENTIALITY AND INTELLECTUAL PROPERTY NOTICE
ALL INFORMATION CONTAINED IN THIS DOCUMENT IS THE SOLE PROPERTY OF VEOLIA WATER TECHNOLOGIES CANADA INC. AND IS PROTECTED BY ALL APPLICABLE LAWS, INCLUDING BUT NOT LIMITED TO COPYRIGHT AND OTHER INTELLECTUAL PROPERTY LAWS. THE DESIGN CONCEPTS AND INFORMATION CONTAINED HEREIN ARE PROPRIETARY TO V.W.T. AND ARE SUBMITTED IN CONFIDENCE. THEY ARE NOT TRANSFERABLE. THEY MUST BE USED ONLY FOR THE PURPOSE FOR WHICH THE DOCUMENT IS EXPRESSLY SUBMITTED AND NO IMPLICIT LICENCE IS GRANTED OTHERWISE BY THE SUBMISSION OF THIS DOCUMENT. THEY ARE CONFIDENTIAL AND PRIVILEGED INFORMATION OF V.W.T. AND THEY MUST NOT BE DISCLOSED, REPRODUCED, LOANED, REMITTED OR USED IN ANY OTHER MANNER WITHOUT THE EXPRESS WRITTEN CONSENT OF V.W.T. V.W.T. ASSUMES NO RESPONSIBILITY OR LIABILITY FOR THE USE OF THIS DOCUMENT OR THE DESIGN CONCEPTS AND INFORMATION CONTAINED HEREIN FOR ANOTHER PROJECT, OR IN A MANNER THAT DOES NOT RELATE TO THE FITNESS OR PURPOSE OF THIS DOCUMENT. IN NO EVENT SHALL THIS DOCUMENT OR THE DESIGN CONCEPTS AND INFORMATION CONTAINED HEREIN BE USED IN A MANNER DETRIMENTAL TO THE INTEREST OF V.W.T. ALL COPYRIGHT, PATENT AND OTHER INTELLECTUAL PROPERTY RIGHTS ARE RESERVED. ACCEPTANCE OF THE DELIVERY OF THIS DOCUMENT CONSTITUTES AGREEMENT TO THESE TERMS AND CONDITIONS.

DESIGNER	DATE
–	–
CHECKER	DATE
–	–
ENGINEER	DATE
–	–
SCALE: N/A	

TITLE
CONTROL PANEL LCP-02-300
ELECTRICAL SCHEMATIC

CLIENT
WWTP UPGRADE
CITY OF IQALUIT

VEOLIA
VEOLIA WATER TECHNOLOGIES CANADA INC. 4105 Sartelon, Saint-Laurent, Qc, Canada. Tel: (514) 334-7230

PROJECT	DRAWING	INTERNAL	SHEET	REV
5000218036-ELD	0001-AU-VWT	–	14 OF 22	3

Apr 15, 2019 11:20:48 – G:\Projets A67XX\A6798A @ A6798B – VEOLIA – 5000218036 Iqaluit WWTP
Upgrade\DOC\DESSIN\000-DRAWINGS\LCP-02-300\REV 3 AS BUILT IN PROCESSING\5000218036-ELD-0001-AU-VWT-014.dwg – rastani

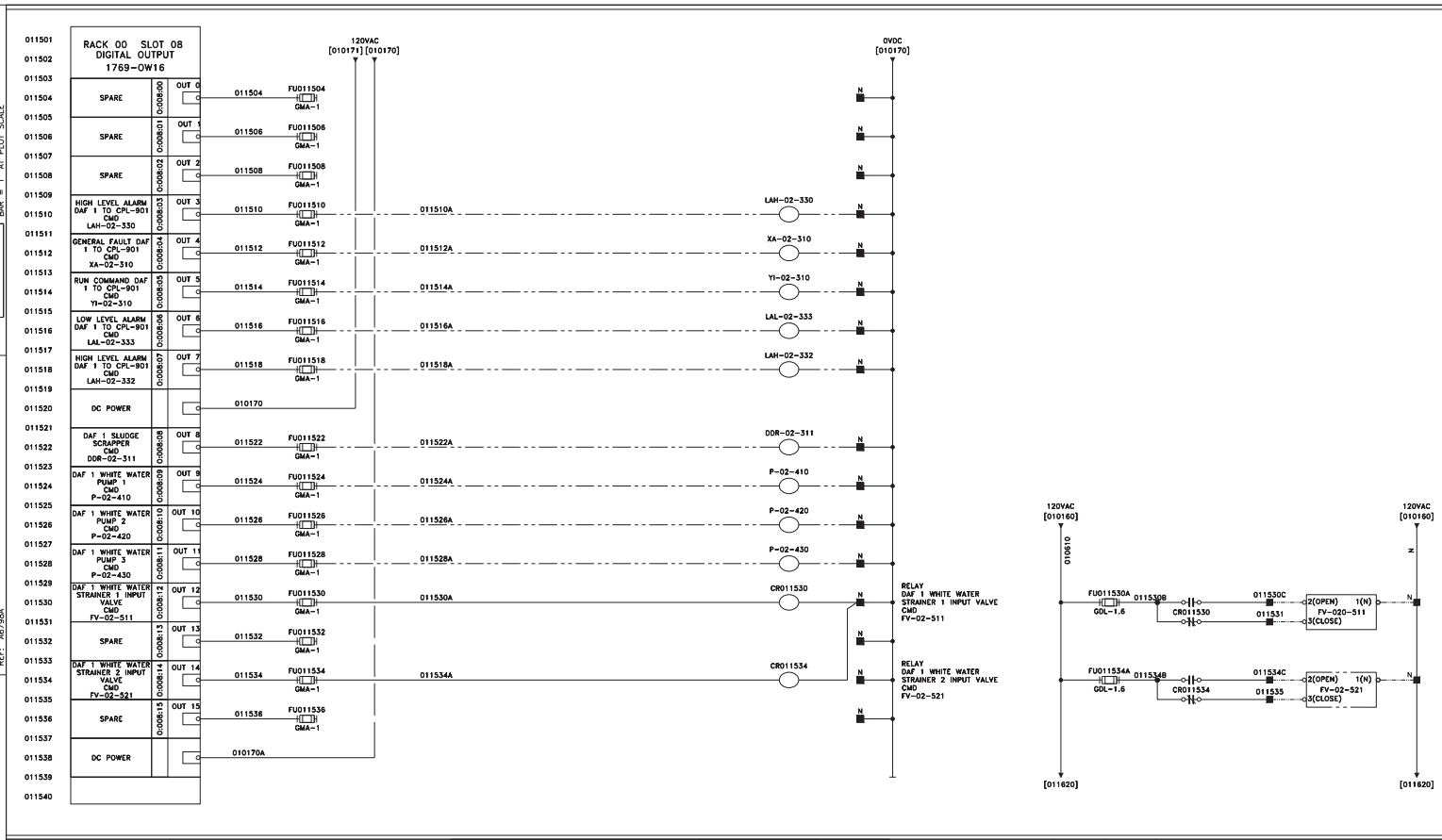

WIRING

- - - - VEOLIA
- - - - CUSTOMER
——— INTERNAL WIRING

REV	DESCRIPTION	DATE	REVD	CHKD	APVD	ECN
3	AS BUILT	2019-03-27	HZ	RA	–	–
2	FOR FABRICATION	2019-03-19	HZ	RA	–	–
1	FOR APPROVAL	2019-01-03	HZ	RA	–	–

CONFIDENTIALITY AND INTELLECTUAL PROPERTY NOTICE
ALL INFORMATION CONTAINED IN THIS DOCUMENT IS THE SOLE PROPERTY OF VEOLIA WATER TECHNOLOGIES CANADA INC. AND IS PROTECTED BY ALL APPLICABLE LAWS, INCLUDING BUT NOT LIMITED TO COPYRIGHT AND OTHER INTELLECTUAL PROPERTY LAWS. THE DESIGN CONCEPTS AND INFORMATION CONTAINED HEREIN ARE PROPRIETARY TO V.W.T. AND ARE SUBMITTED IN CONFIDENCE. THEY ARE NOT TRANSFERABLE. THEY MUST BE USED ONLY FOR THE PURPOSE FOR WHICH THE DOCUMENT IS EXPRESSLY SUBMITTED AND NO IMPLICIT LICENCE IS GRANTED OTHERWISE BY THE SUBMISSION OF THIS DOCUMENT. THEY ARE CONFIDENTIAL AND PRIVILEGED INFORMATION OF V.W.T. AND THEY MUST NOT BE DISCLOSED, REPRODUCED, LOANED, REMITTED OR USED IN ANY OTHER MANNER WITHOUT THE EXPRESS WRITTEN CONSENT OF V.W.T. V.W.T. ASSUMES NO RESPONSIBILITY OR LIABILITY FOR THE USE OF THIS DOCUMENT OR THE DESIGN CONCEPTS AND INFORMATION CONTAINED HEREIN FOR ANOTHER PROJECT, OR IN A MANNER THAT DOES NOT RELATE TO THE FITNESS OR PURPOSE OF THIS DOCUMENT. IN NO EVENT SHALL THIS DOCUMENT OR THE DESIGN CONCEPTS AND INFORMATION CONTAINED HEREIN BE USED IN A MANNER DETRIMENTAL TO THE INTEREST OF V.W.T. ALL COPYRIGHT, PATENT AND OTHER INTELLECTUAL PROPERTY RIGHTS ARE RESERVED. ACCEPTANCE OF THE DELIVERY OF THIS DOCUMENT CONSTITUTES AGREEMENT TO THESE TERMS AND CONDITIONS.

DESIGNER	DATE
–	–
CHECKER	DATE
–	–
ENGINEER	DATE
–	–
SCALE: N/A	

TITLE
CONTROL PANEL LCP-02-300
ELECTRICAL SCHEMATIC

CLIENT
WWTP UPGRADE
CITY OF IQALUIT

VEOLIA
VEOLIA WATER TECHNOLOGIES CANADA INC. 4105 Sartelon, Saint-Laurent, Qc, Canada. Tel: (514) 334-7230

PROJECT	DRAWING	INTERNAL	SHEET	REV
5000218036-ELD	0001-AU-VWT	–	15 OF 21	3

BAR = 1" AT PLOT SCALE
REF: A6798A
STD: "B" 11x17

Apr 15, 2019 11:20:48 – G:\Projets A67XX\A6798A @ A6798B – VEOLIA – 5000218036 Iqaluit WWTP
Upgrade\DOC\DESSIN\000-DRAWINGS\LCP-02-300\REV 3 AS BUILT IN PROCESSING\5000218036-ELD-0001-AU-VWT-015.dwg – rasloni

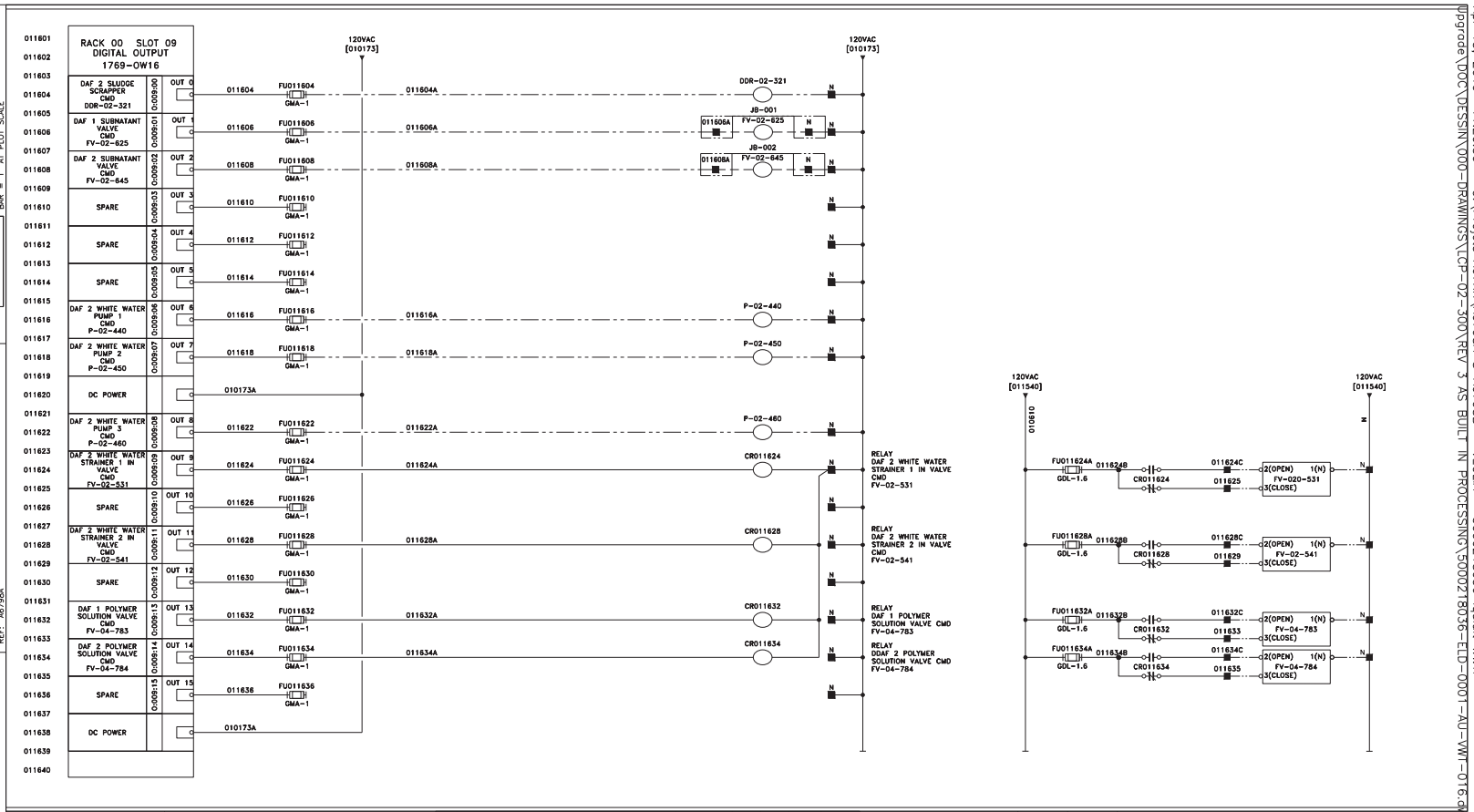

WIRING

- VEOLIA
- CUSTOMER
- INTERNAL WIRING

REV	DESCRIPTION	DATE	REVD	CHKD	APVD	ECN
3	AS BUILT	2019-03-27	HZ	RA	–	–
2	FOR FABRICATION	2019-03-19	HZ	RA	–	–
1	FOR APPROVAL	2019-01-03	HZ	RA	–	–

CONFIDENTIALITY AND INTELLECTUAL PROPERTY NOTICE
ALL INFORMATION CONTAINED IN THIS DOCUMENT IS THE SOLE PROPERTY OF VEOLIA WATER TECHNOLOGIES CANADA INC. AND IS PROTECTED BY ALL APPLICABLE LAWS, INCLUDING BUT NOT LIMITED TO COPYRIGHT AND OTHER INTELLECTUAL PROPERTY LAWS. THE DESIGN CONCEPTS AND INFORMATION CONTAINED HEREIN ARE PROPRIETARY TO V.W.T. AND ARE SUBMITTED IN CONFIDENCE. THEY ARE NOT TRANSFERABLE. THEY MUST BE USED ONLY FOR THE PURPOSE FOR WHICH THE DOCUMENT IS EXPRESSLY SUBMITTED AND NO IMPLICIT LICENCE IS GRANTED OTHERWISE BY THE SUBMISSION OF THIS DOCUMENT. THEY ARE CONFIDENTIAL AND PRIVILEGED INFORMATION OF V.W.T. AND THEY MUST NOT BE DISCLOSED, REPRODUCED, LOANED, REMITTED OR USED IN ANY OTHER MANNER WITHOUT THE EXPRESS WRITTEN CONSENT OF V.W.T. V.W.T. ASSUMES NO RESPONSIBILITY OR LIABILITY FOR THE USE OF THIS DOCUMENT OR THE DESIGN CONCEPTS AND INFORMATION CONTAINED HEREIN FOR ANOTHER PROJECT, OR IN A MANNER THAT DOES NOT RELATE TO THE FITNESS OR PURPOSE OF THIS DOCUMENT. IN NO EVENT SHALL THIS DOCUMENT OR THE DESIGN CONCEPTS AND INFORMATION CONTAINED HEREIN BE USED IN A MANNER DETRIMENTAL TO THE INTEREST OF V.W.T. ALL COPYRIGHT, PATENT AND OTHER INTELLECTUAL PROPERTY RIGHTS ARE RESERVED. ACCEPTANCE OF THE DELIVERY OF THIS DOCUMENT CONSTITUTES AGREEMENT TO THESE TERMS AND CONDITIONS.

DESIGNER	DATE
–	–
CHECKER	DATE
–	–
ENGINEER	DATE
–	–
SCALE: N/A	

TITLE: CONTROL PANEL LCP-02-300 ELECTRICAL SCHEMATIC

CLIENT: WWTP UPGRADE CITY OF IQALUIT

VEOLIA WATER TECHNOLOGIES CANADA INC. 4105 Sartelon, Saint-Laurent, Qc, Canada. Tel: (514) 334-7230

PROJECT	DRAWING	INTERNAL	SHEET	REV
5000218036-ELD	0001-AU-VWT	–	16 OF 21	3

BAR = 1" AT PLOT SCALE

REF: A6798A

STD: "B" 11x17

Apr 15, 2019 11:20:50 – G:\Projets A67XX\A6798A @ A6798B – VEOLIA – 5000218036 Iqaluit WWTP Upgrade\DOC\DESSIN\000-DRAWINGS\LCP-02-300\REV 3 AS BUILT IN PROCESSING\5000218036-ELD-0001-AU-VWT-016.dwg – rasloni

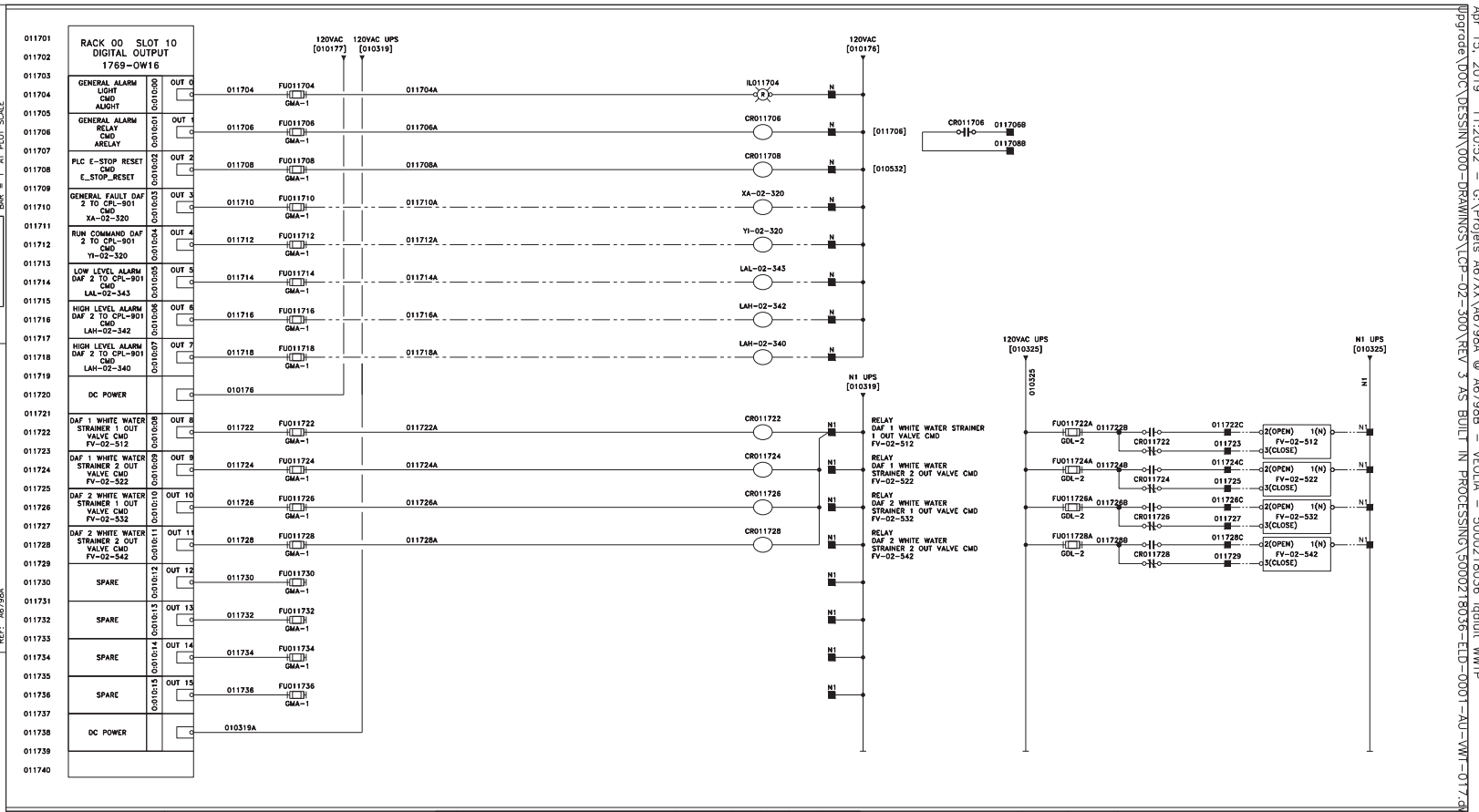

WIRING
VEOLIA
CUSTOMER
INTERNAL WIRING

REV	DESCRIPTION	DATE	REVD	CHKD	APVD	ECN
3	AS BUILT	2019-03-27	HZ	RA	–	–
2	FOR FABRICATION	2019-03-19	HZ	RA	–	–
1	FOR APPROVAL	2019-01-03	HZ	RA	–	–

CONFIDENTIALITY AND INTELLECTUAL PROPERTY NOTICE
ALL INFORMATION CONTAINED IN THIS DOCUMENT IS THE SOLE PROPERTY OF VEOLIA WATER TECHNOLOGIES CANADA INC. AND IS PROTECTED BY ALL APPLICABLE LAWS, INCLUDING BUT NOT LIMITED TO COPYRIGHT AND OTHER INTELLECTUAL PROPERTY LAWS. THE DESIGN CONCEPTS AND INFORMATION CONTAINED HEREIN ARE PROPRIETARY TO V.B.T. AND ARE SUBMITTED IN CONFIDENCE. THEY ARE NOT TRANSFERABLE. THEY SHALL NOT BE USED FOR ANY PURPOSE OTHER THAN THAT FOR WHICH IT IS EXPRESSLY SUBMITTED AND NO IMPLICIT LICENCE IS GRANTED OTHERWISE BY THE SUBMISSION OF THIS DOCUMENT. THEY ARE CONFIDENTIAL AND PRIVILEGED INFORMATION OF V.B.T. AND THEY MUST NOT BE DISCLOSED, REPRODUCED, LOANED, REMITTED OR USED IN ANY OTHER MANNER WITHOUT THE EXPRESS WRITTEN CONSENT OF V.B.T. V.B.T. ASSUMES NO RESPONSIBILITY OR LIABILITY FOR THE USE OF THIS DOCUMENT FOR ANY PURPOSE OTHER THAN THAT FOR WHICH IT IS EXPRESSLY PROVIDED BY V.B.T. ANY UNAUTHORIZED MODIFICATION OR IN A MANNER THAT GIVES RISE TO RELIANCE TO THE FITNESS OR PURPOSE OF THIS DOCUMENT, IN NO EVENT SHALL THIS DOCUMENT OR THE DESIGN CONCEPTS AND INFORMATION CONTAINED HEREIN BE USED IN A MANNER DETRIMENTAL TO THE INTEREST OF V.B.T. ALL COPYRIGHT, PATENT AND OTHER INTELLECTUAL PROPERTY RIGHTS ARE RESERVED. ACCEPTANCE OF THE DELIVERY OF THIS DOCUMENT CONSTITUTES AGREEMENT TO THESE TERMS AND CONDITIONS.

DESIGNER	DATE –
CHECKER	DATE –
ENGINEER	DATE –
SCALE:	N/A

TITLE: CONTROL PANEL LCP-02-300 ELECTRICAL SCHEMATIC
CLIENT: WWTP UPGRADE CITY OF IQALUIT

VEOLIA WATER TECHNOLOGIES CANADA INC. 4105 Sartelon, Saint-Laurent, Qc, Canada, Tel: (514) 334-7230

PROJECT	DRAWING	INTERNAL	SHEET	REV
5000218036-ELD	0001-AU-VWT	–	17 OF 21	3

STD: "B" 11x17 REF: A6798A BAR = 1" AT PLOT SCALE

Apr 15, 2019 11:20:52 - G:\Projets A67XX\A6798A @ A6798B - VEOLIA - 5000218036 Iqaluit WWTP Upgrade\DOC\DESSIN\000-DRAWINGS\LCP-02-300\REV 3 AS BUILT IN PROCESSING\5000218036-ELD-0001-AU-VWT-017.dwg - tasloti

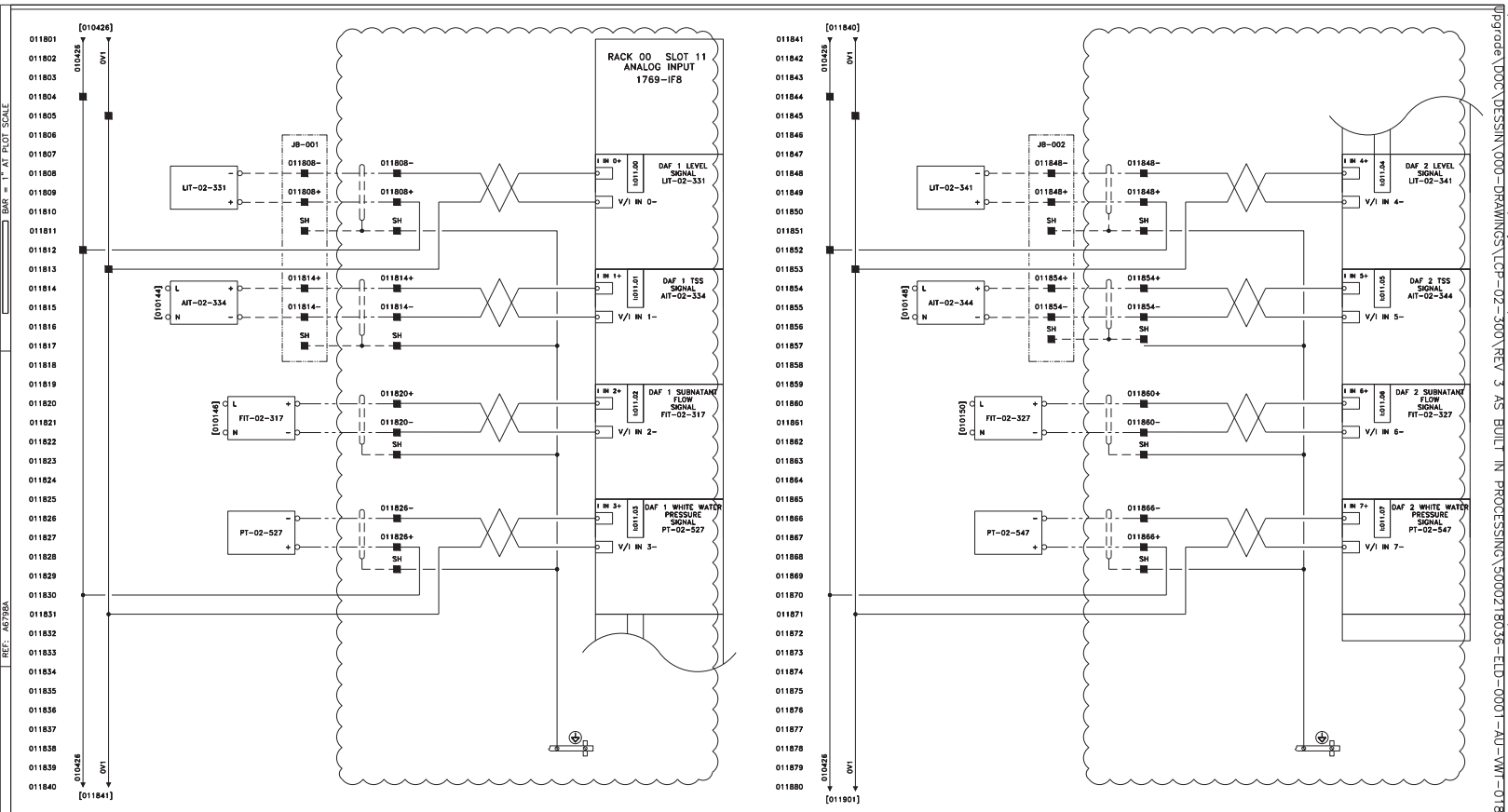

WIRING

- - - - VEOLIA
- - - - CUSTOMER
- - - - INTERNAL WIRING

REV	DESCRIPTION	DATE	REVD	CHKD	APVD	ECN
3	AS BUILT	2019-03-27	HZ	RA	–	–
2	FOR FABRICATION	2019-03-19	HZ	RA	–	–
1	FOR APPROVAL	2019-01-03	HZ	RA	–	–

CONFIDENTIALITY AND INTELLECTUAL PROPERTY NOTICE
ALL INFORMATION CONTAINED IN THIS DOCUMENT IS THE SOLE PROPERTY OF VEOLIA WATER TECHNOLOGIES CANADA INC. AND IS PROTECTED BY ALL APPLICABLE LAWS, INCLUDING BUT NOT LIMITED TO COPYRIGHT AND OTHER INTELLECTUAL PROPERTY LAWS. THE DESIGN CONCEPTS AND INFORMATION CONTAINED HEREIN ARE PROPRIETARY TO V.W.T. AND ARE SUBMITTED IN CONFIDENCE. THEY ARE NOT TRANSFERABLE. THEY MUST BE USED ONLY FOR THE PURPOSE FOR WHICH THE DOCUMENT IS EXPRESSLY SUBMITTED AND NO IMPLICIT LICENCE IS GRANTED OTHERWISE BY THE SUBMISSION OF THIS DOCUMENT. THEY ARE CONFIDENTIAL AND PRIVILEGED INFORMATION OF V.W.T. AND THEY MUST NOT BE DISCLOSED, REPRODUCED, LOANED, REMITTED OR USED IN ANY OTHER MANNER WITHOUT THE EXPRESS WRITTEN CONSENT OF V.W.T. V.W.T. ASSUMES NO RESPONSIBILITY OR LIABILITY FOR THE USE OF THIS DOCUMENT OR THE DESIGN CONCEPTS AND INFORMATION CONTAINED HEREIN FOR ANOTHER PROJECT, OR IN A MANNER THAT DOES NOT RELATE TO THE FITNESS OR PURPOSE OF THIS DOCUMENT. IN NO EVENT SHALL THIS DOCUMENT OR THE DESIGN CONCEPTS AND INFORMATION CONTAINED HEREIN BE USED IN A MANNER DETRIMENTAL TO THE INTEREST OF V.W.T. ALL COPYRIGHT, PATENT AND OTHER INTELLECTUAL PROPERTY RIGHTS ARE RESERVED. ACCEPTANCE OF THE DELIVERY OF THIS DOCUMENT CONSTITUTES AGREEMENT TO THESE TERMS AND CONDITIONS.

DESIGNER	DATE
–	–
CHECKER	DATE
–	–
ENGINEER	DATE
–	–
SCALE: N/A	

TITLE
CONTROL PANEL LCP-02-300
ELECTRICAL SCHEMATIC

CLIENT
WWTP UPGRADE
CITY OF IQALUIT

VEOLIA
VEOLIA WATER TECHNOLOGIES CANADA INC. 4105 Sartelon, Saint-Laurent, Qc, Canada. Tel: (514) 334-7230

PROJECT	DRAWING	INTERNAL	SHEET	REV
5000218036-ELD	0001-AU-VWT	–	18 OF 21	3

STD: "B" 11x17 REF: A6798A BAR = 1" AT PLOT SCALE

Apr 15, 2019 11:20:53 – G:\Projets A67XX\A6798A @ A6798B – VEOLIA – 5000218036 Iqaluit WWTP Upgrade\DOC\DESSIN\000-DRAWINGS\LCP-02-300\REV 3 AS BUILT IN PROCESSING\5000218036-ELD-0001-AU-VWT-018.dwg – rastani

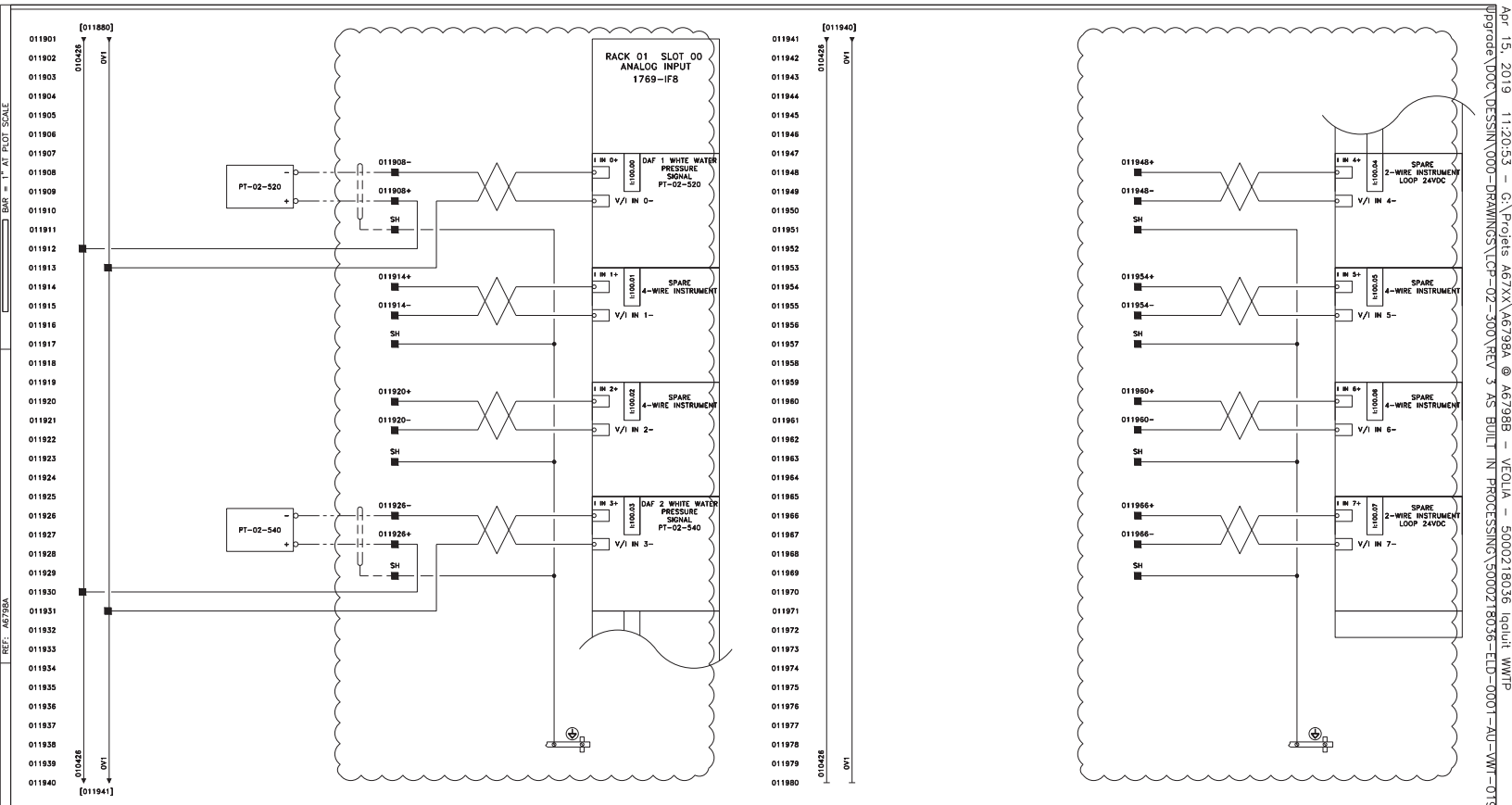

BAR = 1" AT PLOT SCALE

REF: A6798A

STD: "B" 11x17

WIRING

- VEOLIA
- CUSTOMER
- INTERNAL WIRING

REV	DESCRIPTION	DATE	REVD	CHKD	APVD	ECN
3	AS BUILT	2019-03-27	HZ	RA	–	–
2	FOR FABRICATION	2019-03-19	HZ	RA	–	–
1	FOR APPROVAL	2019-01-03	HZ	RA	–	–

CONFIDENTIALITY AND INTELLECTUAL PROPERTY NOTICE
ALL INFORMATION CONTAINED IN THIS DOCUMENT IS THE SOLE PROPERTY OF VEOLIA WATER TECHNOLOGIES CANADA INC. AND IS PROTECTED BY ALL APPLICABLE LAWS, INCLUDING BUT NOT LIMITED TO COPYRIGHT AND OTHER INTELLECTUAL PROPERTY LAWS. THE DESIGN CONCEPTS AND INFORMATION CONTAINED HEREIN ARE PROPRIETARY TO V.W.T. AND ARE SUBMITTED IN CONFIDENCE. THEY ARE NOT TRANSFERABLE. THEY MUST BE USED ONLY FOR THE PURPOSE FOR WHICH THE DOCUMENT IS EXPRESSLY SUBMITTED AND NO IMPLICIT LICENCE IS GRANTED OTHERWISE BY THE SUBMISSION OF THIS DOCUMENT. THEY ARE CONFIDENTIAL AND PRIVILEGED INFORMATION OF V.W.T. AND THEY MUST NOT BE DISCLOSED, REPRODUCED, LOANED, REMITTED OR USED IN ANY OTHER MANNER WITHOUT THE EXPRESS WRITTEN CONSENT OF V.W.T. V.W.T. ASSUMES NO RESPONSIBILITY OR LIABILITY FOR THE USE OF THIS DOCUMENT OR THE DESIGN CONCEPTS AND INFORMATION CONTAINED HEREIN FOR ANOTHER PROJECT, OR IN A MANNER THAT DOES NOT RELATE TO THE FITNESS OR PURPOSE OF THIS DOCUMENT. IN NO EVENT SHALL THIS DOCUMENT OR THE DESIGN CONCEPTS AND INFORMATION CONTAINED HEREIN BE USED IN A MANNER DETRIMENTAL TO THE INTEREST OF V.W.T. ALL COPYRIGHT, PATENT AND OTHER INTELLECTUAL PROPERTY RIGHTS ARE RESERVED. ACCEPTANCE OF THE DELIVERY OF THIS DOCUMENT CONSTITUTES AGREEMENT TO THESE TERMS AND CONDITIONS.

DESIGNER	DATE
–	–
CHECKER	DATE
–	–
ENGINEER	DATE
–	–
SCALE: N/A	

TITLE
CONTROL PANEL LCP-02-300
ELECTRICAL SCHEMATIC

CLIENT
WWTP UPGRADE
CITY OF IQALUIT

VEOLIA
VEOLIA WATER TECHNOLOGIES CANADA INC. 4105 Sartelon, Saint-Laurent, Qc, Canada. Tel: (514) 334-7230

PROJECT	DRAWING	INTERNAL	SHEET	REV
5000218036-ELD	0001-AU-VWT	–	19 OF 21	3

Apr 15, 2019 11:20:53 – G:\Projets A67XX\A6798A @ A6798B – VEOLIA – 5000218036 Iqaluit WWTP
Upgrade\DOC\DESSIN\000-DRAWINGS\LCP-02-300\REV 3 AS BUILT IN PROCESSING\5000218036-ELD-0001-AU-VWT-019.dwg – rasloni

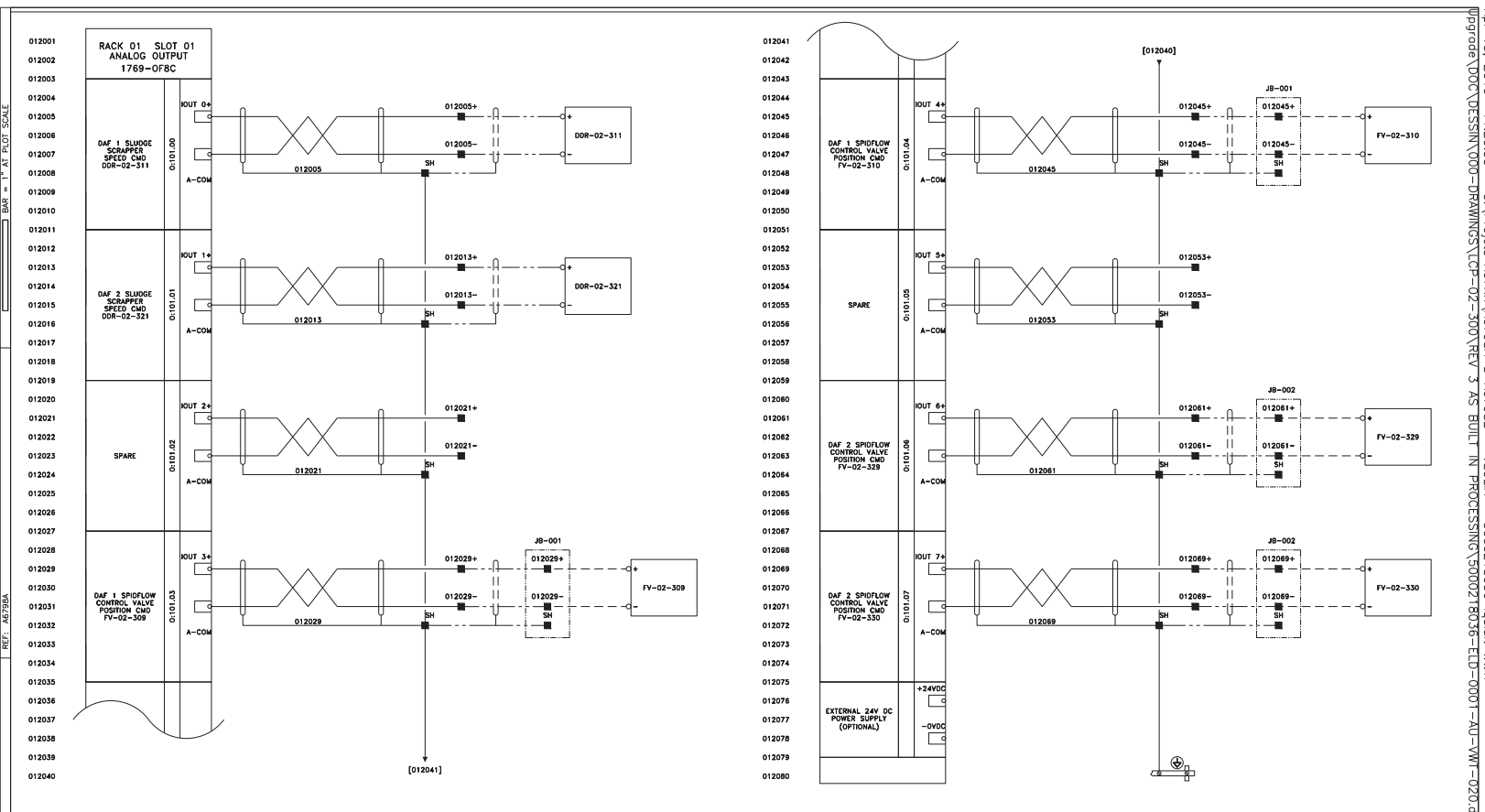

BAR = 1" AT PLOT SCALE

REF: A6798A

STD: "B" 11x17

WIRING

- - - - VEOLIA
- - - - CUSTOMER
——— INTERNAL WIRING

REV	DESCRIPTION	DATE	REVD	CHKD	APVD	ECN
3	AS BUILT	2019-03-27	HZ	RA	–	–
2	FOR FABRICATION	2019-03-19	HZ	RA	–	–
1	FOR APPROVAL	2019-01-03	HZ	RA	–	–

CONFIDENTIALITY AND INTELLECTUAL PROPERTY NOTICE
ALL INFORMATION CONTAINED IN THIS DOCUMENT IS THE SOLE PROPERTY OF VEOLIA WATER TECHNOLOGIES CANADA INC. AND IS PROTECTED BY ALL APPLICABLE LAWS, INCLUDING BUT NOT LIMITED TO COPYRIGHT AND OTHER INTELLECTUAL PROPERTY LAWS. THE DESIGN CONCEPTS AND INFORMATION CONTAINED HEREIN ARE PROPRIETARY TO V.W.T. AND ARE SUBMITTED IN CONFIDENCE. THEY ARE NOT TRANSFERABLE. THEY MUST BE USED ONLY FOR THE PURPOSE FOR WHICH THE DOCUMENT IS EXPRESSLY SUBMITTED AND NO IMPLICIT LICENCE IS GRANTED OTHERWISE BY THE SUBMISSION OF THIS DOCUMENT. THEY ARE CONFIDENTIAL AND PRIVILEGED INFORMATION OF V.W.T. AND THEY MUST NOT BE DISCLOSED, REPRODUCED, LOANED, REMITTED OR USED IN ANY OTHER MANNER WITHOUT THE EXPRESS WRITTEN CONSENT OF V.W.T. V.W.T. ASSUMES NO RESPONSIBILITY OR LIABILITY FOR THE USE OF THIS DOCUMENT OR THE DESIGN CONCEPTS AND INFORMATION CONTAINED HEREIN FOR ANOTHER PROJECT, OR IN A MANNER THAT DOES NOT RELATE TO THE FITNESS OR PURPOSE OF THIS DOCUMENT. IN NO EVENT SHALL THIS DOCUMENT OR THE DESIGN CONCEPTS AND INFORMATION CONTAINED HEREIN BE USED IN A MANNER DETRIMENTAL TO THE INTEREST OF V.W.T. ALL COPYRIGHT, PATENT AND OTHER INTELLECTUAL PROPERTY RIGHTS ARE RESERVED. ACCEPTANCE OF THE DELIVERY OF THIS DOCUMENT CONSTITUTES AGREEMENT TO THESE TERMS AND CONDITIONS.

DESIGNER	DATE
–	–
CHECKER	DATE
–	–
ENGINEER	DATE
–	–
SCALE: N/A	

TITLE
CONTROL PANEL LCP-02-300
ELECTRICAL SCHEMATIC

CLIENT
WWTP UPGRADE
CITY OF IQALUIT

VEOLIA
VEOLIA WATER TECHNOLOGIES CANADA INC. 4105 Sartelon, Saint-Laurent, Qc, Canada. Tel: (514) 334-7230

PROJECT	DRAWING	INTERNAL	SHEET	REV
5000218036-ELD	0001-AU-VWT	–	20 OF 21	3

Apr 15, 2019 11:20:55 – G:\Projets A67XX\A6798A @ A6798B – VEOLIA – 5000218036 Iqaluit WWTP
Upgrade\DOC\DESSIN\000-DRAWINGS\LCP-02-300\REV 3 AS BUILT IN PROCESSING\5000218036-ELD-0001-AU-VWT-020.dwg – rastani

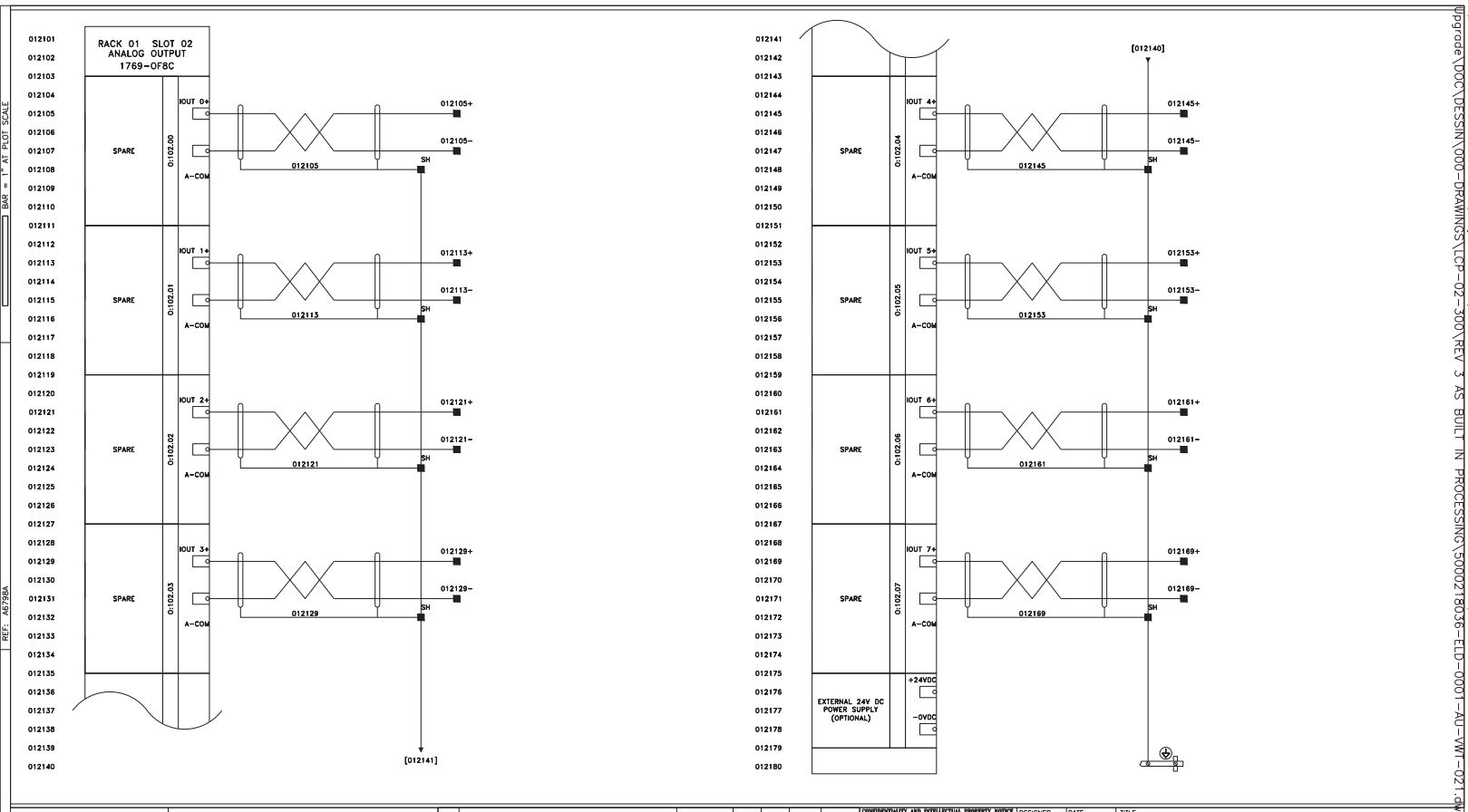

WIRING

- VEOLIA
- CUSTOMER
- INTERNAL WIRING

REV	DESCRIPTION	DATE	REVD	CHKD	APVD	ECN
3	AS BUILT	2019-03-27	HZ	RA	–	–
2	FOR FABRICATION	2019-03-19	HZ	RA	–	–
1	FOR APPROVAL	2019-01-03	HZ	RA	–	–

CONFIDENTIALITY AND INTELLECTUAL PROPERTY NOTICE
ALL INFORMATION CONTAINED IN THIS DOCUMENT IS THE SOLE PROPERTY OF VEOLIA WATER TECHNOLOGIES CANADA INC. AND IS PROTECTED BY ALL APPLICABLE LAWS, INCLUDING BUT NOT LIMITED TO COPYRIGHT AND OTHER INTELLECTUAL PROPERTY LAWS. THE DESIGN CONCEPTS AND INFORMATION CONTAINED HEREIN ARE PROPRIETARY TO V.W.T. AND ARE SUBMITTED IN CONFIDENCE. THEY ARE NOT TRANSFERABLE. THEY MUST BE USED ONLY FOR THE PURPOSE FOR WHICH THE DOCUMENT IS EXPRESSLY SUBMITTED AND NO IMPLICIT LICENCE IS GRANTED OTHERWISE BY THE SUBMISSION OF THIS DOCUMENT. THEY ARE CONFIDENTIAL AND PRIVILEGED INFORMATION OF V.W.T. AND THEY MUST NOT BE DISCLOSED, REPRODUCED, LOANED, REMITTED OR USED IN ANY OTHER MANNER WITHOUT THE EXPRESS WRITTEN CONSENT OF V.W.T. V.W.T. ASSUMES NO RESPONSIBILITY OR LIABILITY FOR THE USE OF THIS DOCUMENT OR THE DESIGN CONCEPTS AND INFORMATION CONTAINED HEREIN FOR ANOTHER PROJECT, OR IN A MANNER THAT DOES NOT RELATE TO THE FITNESS OR PURPOSE OF THIS DOCUMENT. IN NO EVENT SHALL THIS DOCUMENT OR THE DESIGN CONCEPTS AND INFORMATION CONTAINED HEREIN BE USED IN A MANNER DETRIMENTAL TO THE INTEREST OF V.W.T. ALL COPYRIGHT, PATENT AND OTHER INTELLECTUAL PROPERTY RIGHTS ARE RESERVED. ACCEPTANCE OF THE DELIVERY OF THIS DOCUMENT CONSTRUES AGREEMENT TO THESE TERMS AND CONDITIONS.

DESIGNER	DATE
–	–
CHECKER	DATE
–	–
ENGINEER	DATE
–	–
SCALE: N/A	

TITLE
CONTROL PANEL LCP-02-300
ELECTRICAL SCHEMATIC

CLIENT
WWTP UPGRADE
CITY OF IQALUIT

VEOLIA
VEOLIA WATER TECHNOLOGIES CANADA INC. 4105 Sartelon, Saint-Laurent, Qc, Canada. Tel: (514) 334-7230

PROJECT	DRAWING	INTERNAL	SHEET	REV
5000218036-ELD	0001-AU-VWT	–	21 OF 21	3

BAR = 1" AT PLOT SCALE
REF: A6798A
STD: "B" 11x17

Apr 15, 2019 11:20:57 – G:\Projets A67XX\A6798A @ A6798B – VEOLIA – 5000218036 Iqaluit WWTP
Upgrade\DOC\DESSIN\000-DRAWINGS\LCP-02-300\REV 3 AS BUILT IN PROCESSING\5000218036-ELD-0001-AU-VWT-021.dwg – rastani

LEFT BLANK

HYDRAPOL 250 CONTROL PANEL
PROJECT - 5000218036
LCP-04-700
DAF POLYMER DOSING SYSTEM

REV.	DESCRIPTION	DATE	REV.	VERIF/CHK	APPR.	ECN
4	AS COMMISSIONNING	2019-05-17	SD			
3	AS BUILT	2019-05-06	SD			
2	FOR FAB	2019-04-02	RM			
1	FOR APPROVAL	2019-03-18	RM			

CONFIDENTIALITY AND INTELLECTUAL PROPERTY NOTICE
ALL INFORMATION CONTAINED IN THIS DOCUMENT IS THE SOLE PROPERTY OF VEOLIA WATER TECHNOLOGIES CANADA INC. AND CONTAINS CONFIDENTIAL AND PROPRIETARY INFORMATION AND OTHER INTELLECTUAL PROPERTY LAWS. THE DESIGN CONCEPTS AND INFORMATION CONTAINED HEREIN ARE PROPRIETARY TO V.W.T. AND ARE SUBMITTED TO YOU IN CONFIDENCE. BY ACCEPTING THIS DOCUMENT, YOU MUST BE LEGALLY BOUND TO THE FOLLOWING: THIS DOCUMENT MUST BE USED ONLY FOR THE PURPOSE FOR WHICH THE DOCUMENT IS EXPRESSLY SUBMITTED AND NO IMPLICIT LICENCE IS GRANTED TO YOU HEREIN. THIS DOCUMENT AND ITS CONTENTS ARE TO REMAIN CONFIDENTIAL AND PRIVILEGED INFORMATION OF V.W.T. AND THEY MUST NOT BE DISCLOSED, REPRODUCED, LOANED, RIVETTED OR USED IN WHOLE OR IN PART FOR THE BENEFIT OF ANYONE OTHER THAN V.W.T. V.W.T. ASSUMES NO RESPONSIBILITY OR LIABILITY FOR THE USE OF THIS DOCUMENT OR THE DESIGN CONCEPTS AND INFORMATION CONTAINED HEREIN FOR PURPOSES OTHER THAN THE SPECIFIC PROJECT RELATED TO THE ATTACHED PURPOSE OF THIS DOCUMENT. IN NO EVENT SHALL THIS DOCUMENT OR THE DESIGN CONCEPTS AND INFORMATION CONTAINED HEREIN BE CONSTRUED AS GRANTING ANY LICENCE OR RIGHT OF V.W.T. ALL COPYRIGHT, PATENT AND OTHER INTELLECTUAL PROPERTY RIGHTS ARE RESERVED. ACCEPTANCE OF THE DELIVERY OF THIS DOCUMENT CONSTITUTES AGREEMENT TO THESE TERMS AND CONDITIONS.

AVIS DE CONFIDENTIALITÉ ET DE PROPRIÉTÉ INTELLECTUELLE
L'INFORMATION CONTENUE DANS CE DOCUMENT EST LA PROPRIÉTÉ EXCLUSIVE DE VEOLIA WATER TECHNOLOGIES CANADA INC. ET CONTIENT DES RENSEIGNEMENTS CONFIDENTIELS ET DE NATURE PROPRIÉTAIRE AINSI QUE D'AUTRES DROITS DE PROPRIÉTÉ INTELLECTUELLE. LES DESIGNS, CONCEPTS ET INFORMATIONS CONTENUS DANS CE DOCUMENT SONT CONFIDENTIELS ET APPARTIENNENT À V.W.T. ET VOUS SONT SOUMIS EN CONFIANCE. EN ACCEPTANT CE DOCUMENT, VOUS DEVEZ ÊTRE LÉGALEMENT LIÉ PAR LES OBLIGATIONS SUIVANTES : CE DOCUMENT DOIT ÊTRE UTILISÉ UNIQUEMENT AUX FINS POUR LESQUELLES CE DOCUMENT EST EXPRESSÉMENT SOUMIS ET AUCUNE LICENCE IMPLICITE N'EST ACCORDÉE DE VOTRE PART AUX PRÉSENTES. CE DOCUMENT ET SON CONTENU DOIVENT DEMEURER CONFIDENTIELS ET PRIVILÉGIÉS ET V.W.T. N'EST AUCUNEMENT PASSÉ DE DIVULGUER, REPRODUIRE, PRÊTER, RIVETER OU UTILISER EN TOUTE OU EN PARTIE AU PROFIT DE QUICONQUE AUTRE QUE V.W.T. V.W.T. DÉCLINE TOUTE RESPONSABILITÉ ET TOUTE LIABILITÉ À L'ÉGARD DE L'UTILISATION DE CE DOCUMENT OU DES DESIGNS ET CONCEPTS D'INGÉNIERIE ET INFORMATIONS CONTENUS DANS LES PRÉSENTES À DES FINS AUTRES QUE CELLES SPÉCIFIQUEMENT LIÉES À L'OBJET PRÉVU DE CE DOCUMENT. EN AUCUN CAS CE DOCUMENT NE DOIT ÊTRE INTERPRÉTÉ COMME ACCORDANT OU CRÉANT UNE LICENCE OU DROIT DE QUELQUE NATURE QUE CE SOIT. TOUS LES DROITS D'AUTEUR, BREVETS ET AUTRES DROITS DE PROPRIÉTÉ INTELLECTUELLE SONT RÉSERVÉS. L'ACCEPTATION DE LA LIVRAISON DE CE DOCUMENT NE CONSTITUE EN AUCUN CAS UNE RENONCIATION À CES DROITS OU À CES ACCORDS. CE DOCUMENT CONSTITUE LA TOTALITÉ DE L'ACCORD ENTRE LES PARTIES.

DESSINÉ DESIGNER	M.JACQUES	DATE	2019-02-12
VÉRIFIÉ CHECKER	S.DUQUET	DATE	2019-02-12
INGÉNIEUR ENGINEER		DATE	
ECHELLE/SCALE:			

TITRE TITLE: HYDRAPOL 250 CONTROL PANEL TITLE PAGE

CLIENT: IQALUIT WWTP

VEOLIA

VEOLIA WATER TECHNOLOGIES CANADA INC. 4105 Sartelon, Saint-Laurent, Qc, Canada Tel: (514) 334-7230

PROJET/PROJECT	DESSIN/DRAWING No	INTERNE/INTERNAL	FEUILLET/SHEET	REV.
5000218036-EPL-0006-AUT-VWT	JOME01	1	DE 5	4

LR 60892

STD: "D" 22x34 | EBI ELECTRIC - 58011-P01 | BAR = 1" À L'ÉCHELLE D'IMPRESSION/BAR = 1" AT PLOT SCALE

DRAWING INDEX

DESCRIPTION	DRAWING NUMBER
CONTROL PANEL	
TITLE PAGE	5000218036-EPL-0006-AUT-VWT-01
DRAWING LIST & LEGEND	5000218036-EPL-0006-AUT-VWT-02
OUTSIDE PANEL LAYOUT	5000218036-EPL-0006-AUT-VWT-03
INSIDE PANEL LAYOUT	5000218036-EPL-0006-AUT-VWT-04
PARTS LIST	5000218036-EPL-0006-AUT-VWT-05
SCHEMATIC DIAGRAM 600VAC	5000218036-ELD-0006-AUT-VWT-01
SCHEMATIC DIAGRAM 120VAC	5000218036-ELD-0006-AUT-VWT-02
SCHEMATIC DIAGRAM 120VAC	5000218036-ELD-0006-AUT-VWT-03
SCHEMATIC DIAGRAM 24VDC	5000218036-ELD-0006-AUT-VWT-04
SCHEMATIC DIAGRAM 24VDC	5000218036-ELD-0006-AUT-VWT-05
ETHERNET NETWORK AND PLC	5000218036-ELD-0006-AUT-VWT-06
RACK 00 SLOT 01 INPUTS, 1769-L16ER-BB1B	5000218036-ELD-0006-AUT-VWT-07
RACK 00 SLOT 01 OUTPUTS, 1769-L16ER-BB1B	5000218036-ELD-0006-AUT-VWT-08
RACK 0, SLOT 02, 1734-IEBC	5000218036-ELD-0006-AUT-VWT-09

COLORS AND WIRING GAGES		
120VAC POWER	BLACK	14AWG
120VAC CONTROL	RED	14AWG
NEUTRE	WHITE	14AWG
DRY CONTACT	YELLOW	14AWG
24VDC	BLUE(+), BLUE / WHITE(-)	16AWG (0 TO 9A) 14AWG (10A & +)
GROUND	GREEN	14AWG
ISOLATED GROUND	GREEN / YELLOW	14AWG
ANALOG I/O TWISTED PAIRS	BLACK(+), WHITE(-)	18AWG
DIGITAL I/O 120VA	RED	16AWG
DIGITAL I/O 24VDC	BLUE	16AWG
LOW VOLTAGE (12, 24, 48VDC)	BLUE	16AWG (0 À 9A) 14AWG (10A & +)
CONTROL CIRCUIT 5 TO 60VDC	BLUE(+), BLUE/WHITE(-), GREEN(GND)	16AWG (0 À 9A) 14AWG (10A & +)

SUPPLY WIRING IDENTIFICATION

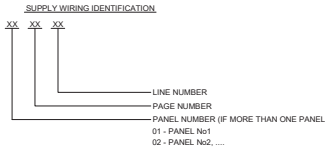

LEGEND LIST

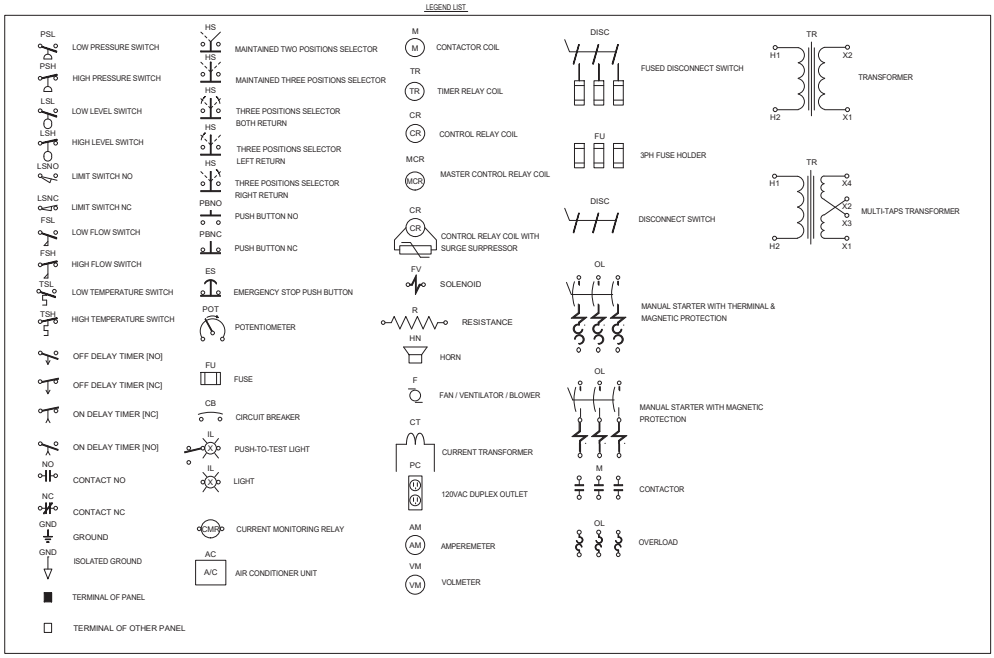

REV.	DESCRIPTION	DATE	BY	VERIFIÉ/CHK	APPR	ECN
4	AS COMMISSIONNING	2019-05-17	SD			
3	AS BUILT	2019-05-06	SD			
2	FOR FAB	2019-04-02	RM			
1	FOR APPROVAL	2019-03-18	RM			

CONFIDENTIALITY AND INTELLECTUAL PROPERTY NOTICE
ALL INFORMATION CONTAINED IN THIS DOCUMENT IS THE SOLE PROPERTY OF VEOLIA WATER TECHNOLOGIES CANADA INC. AND CONTAINS CONFIDENTIAL AND PROPRIETARY INFORMATION AND OTHER INTELLECTUAL PROPERTY LAWS. THE DESIGN CONCEPTS AND INFORMATION CONTAINED HEREIN ARE PROPRIETARY TO "I.D.C." AND ARE SUBMITTED IN CONFIDENCE. NEITHER THIS DOCUMENT NOR ANY PART MAY BE USED ONLY FOR THE PURPOSE FOR WHICH THE DOCUMENT IS EXPRESSLY SUBMITTED AND NO IMPLICIT LICENCE IS GRANTED HEREBY. THIS DOCUMENT AND ITS CONTENTS CONTAIN TRADE SECRET, CONFIDENTIAL AND PRIVILEGED INFORMATION OF "I.D.C." AND THEY MUST NOT BE DISCLOSED, REPRODUCED, LOANED, RIBBITED OR USED IN WHOLE OR IN PART FOR ANY PURPOSE WITHOUT THE PRIOR WRITTEN CONSENT OF "I.D.C." SUBJECT TO ANY RESPONSIBILITY OR LIABILITY FOR THE USE OF THIS DOCUMENT OR THE DESIGN CONCEPTS AND INFORMATION CONTAINED OR EXPRESSED HEREIN, WHICH ARE ENTIRELY THE RISK OF ANYONE WHO RELIES ON THE OTHER FOR PURPOSES OF THIS DOCUMENT. IN NO EVENT SHALL THIS DOCUMENT OR THE DESIGN CONCEPTS AND INFORMATION CONTAINED OR EXPRESSED HEREIN BE USED FOR ANY PURPOSES OTHER THAN OF "I.D.C." ALL COPYRIGHT, PATENT AND OTHER INTELLECTUAL PROPERTY RIGHTS ARE RESERVED. ACCEPTANCE OF THE DELIVERY OF THIS DOCUMENT CONSTITUTES AGREEMENT TO THESE TERMS AND CONDITIONS.

AVIS DE CONFIDENTIALITÉ ET DE PROPRIÉTÉ INTELLECTUELLE
L'INFORMATION CONTENUE DANS CE DOCUMENT EST LA PROPRIÉTÉ EXCLUSIVE DE VEOLIA WATER TECHNOLOGIES CANADA INC. ET CONTIENT DES LOIS DE PROPRIÉTÉ INTELLECTUELLE ET AUTRES. LES CONCEPTS DE CONCEPTION ET L'INFORMATION CONTENUE DANS CE DOCUMENT SONT CONFIDENTIELS ET SONT SOUMIS EN CONFIDENCE. AUCUNE PARTIE DE CE DOCUMENT NE PEUT ÊTRE UTILISÉE QUE DANS LE BUT POUR LEQUEL CE DOCUMENT EST EXPRESSÉMENT SOUMIS ET AUCUNE LICENCE IMPLICITE N'EST ACCORDÉE PAR LES PRÉSENTES. CE DOCUMENT ET SON CONTENU CONTIENNENT DES SECRETS COMMERCIAUX, DES RENSEIGNEMENTS CONFIDENTIELS ET PRIVILÉGIÉS ET LES RENSEIGNEMENTS DE "I.D.C." ET NE DOIVENT PAS ÊTRE DIVULGUÉS, REPRODUITS, PRÊTÉS, RIBBITED OU UTILISÉS EN TOUTE OU EN PARTIE À QUELQUE FIN QUE CE SOIT SANS LE CONSENTEMENT ÉCRIT PRÉALABLE DE "I.D.C." SOUS RÉSERVE D'AUCUNE RESPONSABILITÉ OU RESPONSABILITÉ POUR L'UTILISATION DE CE DOCUMENT OU DES CONCEPTS DE CONCEPTION ET DE L'INFORMATION CONTENUE OU EXPRIMÉE AUX PRÉSENTES, QUI SONT ENTIÈREMENT AUX RISQUES DE CELUI QUI S'EN REMET À L'AUTRE AUX FINS DE CE DOCUMENT. EN AUCUN CAS CE DOCUMENT NI LES CONCEPTS DE CONCEPTION ET L'INFORMATION QU'IL CONTIENT OU EXPRIMÉS AUX PRÉSENTES NE DOIVENT ÊTRE UTILISÉS À DES FINS AUTRES QUE CELLES DE "I.D.C." TOUS DROITS D'AUTEUR, BREVET ET AUTRES DROITS DE PROPRIÉTÉ INTELLECTUELLE SONT RÉSERVÉS. L'ACCEPTATION DE LA LIVRAISON DE CE DOCUMENT CONSTITUE UNE ENTENTE À CES CONDITIONS ET MODALITÉS.

DESSINÉ DESIGNER	M.JACQUES
DATE	2019-02-12
VÉRIFIÉ CHECKER	S.DUQUET
DATE	2019-02-12
INGÉNIEUR ENGINEER	
DATE	
ÉCHELLE/SCALE:	

TITRE/TITLE: HYDRAPOL 250 CONTROL PANEL
DRAWING LIST & LEGEND

CLIENT: IQALUIT WWTP

VEOLIA

VEOLIA WATER TECHNOLOGIES CANADA INC. 4105 Sartelon, Saint-Laurent, Qc, Canada Tel: (514) 334-7230

PROJET/PROJECT	DESSIN/DRAWING No	INTERNE/INTERNAL	FEUILLET/SHEET	REV.
5000218036-EPL-0006-AUT-VWT	JOME01	2 DE 5		4

LR 60892

STD: "D" 22x34 | EBI ELECTRIC - 58011-P01 | BAR = 1" À L'ÉCHELLE D'IMPRESSION/BAR = 1" AT PLOT SCALE

Mai/07 2019, 11:49:00 C:\Users\mjacques\Desktop\CAM\TAOHE\VWT\5000218036-EPL0006-AUT-VWT-02.dwg

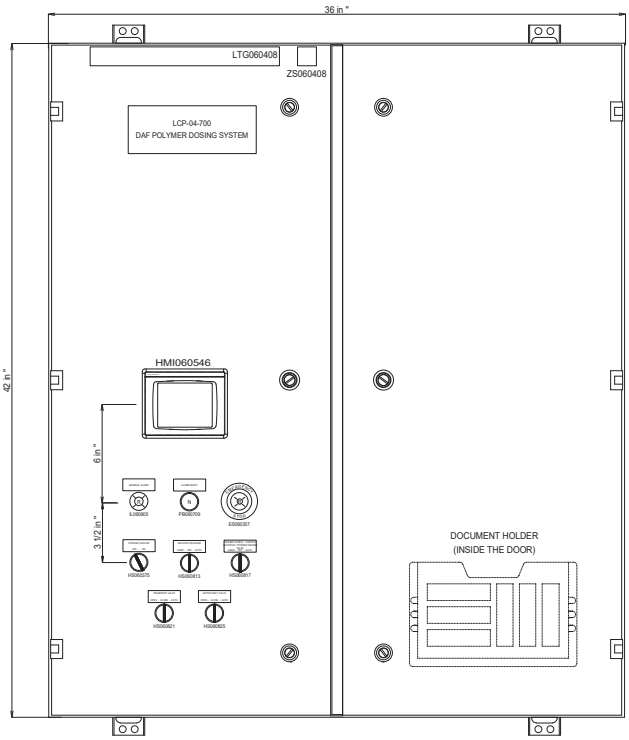

ENCLOSURE 42" x 36" x 12"

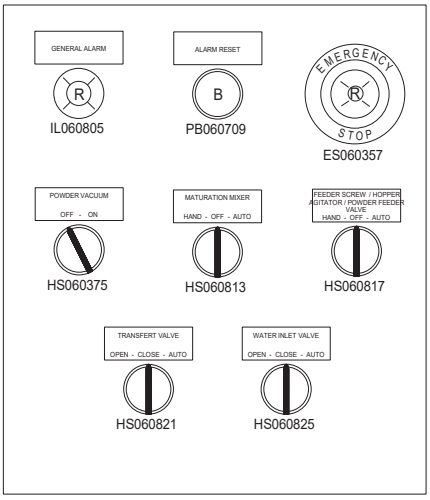

DOOR DETAILS

REV.	DESCRIPTION	DATE	REV.	VERIF/CHK	APPR	ECN
4	AS COMMISSIONNING	2019-05-17	SD			
3	AS BUILT	2019-05-06	SD			
2	FOR FAB	2019-04-02	RM			
1	FOR APPROVAL	2019-03-18	RM			

CONFIDENTIALITY AND INTELLECTUAL PROPERTY NOTICE
ALL INFORMATION CONTAINED IN THIS DOCUMENT IS THE SOLE PROPERTY OF VEOLIA WATER TECHNOLOGIES CANADA INC. AND CONTAINS CONFIDENTIAL AND PROPRIETARY INFORMATION AND OTHER INTELLECTUAL PROPERTY LAWS. THE DESIGN CONCEPTS AND INFORMATION CONTAINED HEREIN ARE PROPRIETARY TO "I.S.T." AND ARE SUBMITTED IN CONFIDENCE. BY ACCEPTING THIS DOCUMENT, YOU AGREE THAT YOU MUST BE USED ONLY FOR THE PURPOSE FOR WHICH THE DOCUMENT IS EXPRESSLY SUBMITTED AND NO DUPLICATE LICENCE IS GRANTED TO YOU BY THE DELIVERY OF THIS DOCUMENT. THIS DOCUMENT IS CONFIDENTIAL AND PRIVILEGED INFORMATION OF V.W.T. AND THEY MUST NOT BE DISCLOSED, REPRODUCED, LOANED, INSERTED OR USED IN WHOLE OR IN PART FOR ANY PURPOSE WHATSOEVER WITHOUT V.W.T.'S EXPRESS AND PRIOR WRITTEN CONSENT. V.W.T. ASSUMES NO RESPONSIBILITY OR LIABILITY FOR THE USE OF THIS DOCUMENT OR THE DESIGN CONCEPTS AND INFORMATION CONTAINED HEREIN FOR PURPOSES OTHER THAN THE PURPOSE WHICH RELATES TO THE OTHERWISE PURPOSE OF THIS DOCUMENT. IN NO EVENT SHALL THIS DOCUMENT OR THE DESIGN CONCEPTS AND INFORMATION CONTAINED HEREIN BE USED BY ANY PARTY FOR DELIVERY OF ANY KIND OF V.W.T. ALL COPYRIGHT, PATENT AND OTHER INTELLECTUAL PROPERTY RIGHTS ARE RESERVED. ACCEPTANCE OF THE DELIVERY OF THIS DOCUMENT CONSTITUTES AGREEMENT TO THESE TERMS AND CONDITIONS.

AVIS DE CONFIDENTIALITÉ ET DE PROPRIÉTÉ INTELLECTUELLE
L'INFORMATION CONTENUE DANS CE DOCUMENT EST LA PROPRIÉTÉ EXCLUSIVE DE VEOLIA WATER TECHNOLOGIES CANADA INC. ET COMPREND DES RENSEIGNEMENTS CONFIDENTIELS ET EXCLUSIFS AINSI QUE D'AUTRES DROITS DE PROPRIÉTÉ INTELLECTUELLE. LES IDÉES ET CONCEPTS ET RENSEIGNEMENTS CONTENUS DANS CE DOCUMENT SONT CONFIDENTIELS ET SONT SOUMIS EN CONFIDENCE. EN ACCEPTANT CE DOCUMENT, VOUS ACCEPTEZ QUE VOUS DEVEZ UTILISER CE DOCUMENT SEULEMENT DANS LE BUT POUR LEQUEL IL EST EXPRESSÉMENT SOUMIS ET AUCUNE LICENCE IMPLICITE N'EST ACCORDÉE EN VERTU DE LA LIVRAISON DE CE DOCUMENT. CE DOCUMENT CONTIENT DES RENSEIGNEMENTS CONFIDENTIELS ET PRIVILÉGIÉS DE V.E.T. ET NE DOIVENT PAS ÊTRE DIVULGUÉS, REPRODUITS, PRÊTÉS, INSÉRÉS OU UTILISÉS EN TOUTE OU EN PARTIE À QUELQUE FIN QUE CE SOIT. V.E.T. N'ASSUME AUCUNE RESPONSABILITÉ OU RESPONSABILITÉ POUR L'UTILISATION DE CE DOCUMENT OU DES CONCEPTS ET RENSEIGNEMENTS CONTENUS DANS LES PRÉSENTES À DES FINS AUTRES QUE CELLES QUI SE RAPPORTENT À L'OBJET DE CE DOCUMENT. EN AUCUN CAS CE DOCUMENT NE DOIT ÊTRE UTILISÉ PAR UNE PARTIE POUR LA LIVRAISON DE TOUT TYPE QUEL QU'IL SOIT. TOUS LES DROITS D'AUTEUR, BREVETS ET AUTRES DROITS DE PROPRIÉTÉ INTELLECTUELLE SONT RÉSERVÉS. L'ACCEPTATION DE LA LIVRAISON DE CE DOCUMENT CONSTITUE UNE ENTENTE À CES TERMES ET CONDITIONS.

DESSINÉ DESIGNER	M.JACQUES
DATE	2019-02-12
VÉRIFIÉ CHECKER	S.DUQUET
DATE	2019-02-12
INGÉNIEUR ENGINEER	
DATE	
ÉCHELLE/SCALE:	

TITRE/TITLE: HYDRAPOL 250 CONTROL PANEL OUTSIDE PANEL LAYOUT

CLIENT: IQALUIT WWTP

VEOLIA

VEOLIA WATER TECHNOLOGIES CANADA INC. 4105 Sartelon, Saint-Laurent, Qc, Canada Tel: (514) 334-7230

PROJET/PROJECT	DESSIN/DRAWING No	INTERNE/INTERNAL	FEUILLET/SHEET	REV.
5000218036-EPL-0006-AUT-VWT	JOME01	3 DE 5		4

LR 60892

STD: "D" 22x34 | EBI ELECTRIC - 58011-P01 | BAR = 1" À L'ÉCHELLE D'IMPRESSION/BAR = 1" AT PLOT SCALE

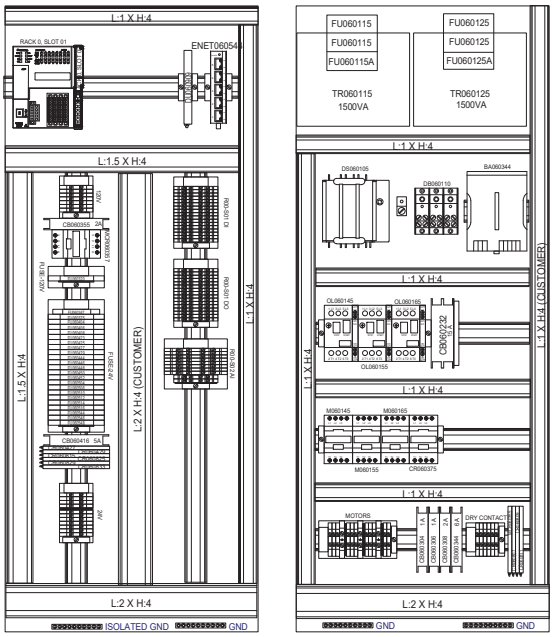

REV.	DESCRIPTION	DATE	REV.	VER/CHK	APPR.	ECN
4	AS COMMISSIONNING	2019-05-17	SD			
3	AS BUILT	2019-05-06	SD			
2	FOR FAB	2019-04-02	RM			
1	FOR APPROVAL	2019-03-18	RM			

CONFIDENTIALITY AND INTELLECTUAL PROPERTY NOTICE
ALL INFORMATION CONTAINED IN THIS DOCUMENT IS THE SOLE PROPERTY OF VEOLIA WATER TECHNOLOGIES CANADA INC. AND PROTECTED BY UNITED STATES AND CANADIAN AND OTHER INTELLECTUAL PROPERTY LAWS. THE DESIGN CONCEPTS AND INFORMATION CONTAINED HEREIN ARE PROPRIETARY TO V.E.T. AND ARE SUBMITTED IN CONFIDENCE. THIS DOCUMENT IS NOT TO BE USED, COPIED OR MADE AVAILABLE FOR ANY PURPOSE OTHER THAN THE DOCUMENT IS EXPRESSLY SUBMITTED AND NO IMPLICIT LICENCE IS GRANTED OTHER THAN BY THE SUBMISSION OF THIS DOCUMENT. THIS DOCUMENT, CONFIDENTIAL AND PRELIMINARY INFORMATION OF V.E.T. AND THEY MUST NOT BE DISCLOSED, REPRODUCED, LOANED, REMITTED OR USED IN ANY OTHER MANNER WITHOUT THE EXPRESS WRITTEN CONSENT OF V.E.T. V.E.T. ASSUMES NO RESPONSIBILITY OR LIABILITY FOR THE USE OF THIS DOCUMENT OR THE DESIGN CONCEPTS AND INFORMATION CONTAINED HEREIN FOR ANY PURPOSE OTHER THAN THE DOCUMENT RELATED TO THE OTHER PURPOSE OF THIS DOCUMENT. IN NO EVENT SHALL THIS DOCUMENT OR THE DESIGN CONCEPTS AND INFORMATION CONTAINED HEREIN BE USED IN ANY MANNER WITHOUT THE EXPRESS WRITTEN CONSENT OF V.E.T. ALL COPYRIGHT, PATENT AND OTHER INTELLECTUAL PROPERTY RIGHTS ARE RESERVED. ACCEPTANCE OF THE DELIVERY OF THIS DOCUMENT CONSTITUTES AGREEMENT TO THESE TERMS AND CONDITIONS.

AVIS DE CONFIDENTIALITÉ ET DE PROPRIÉTÉ INTELLECTUELLE
L'INFORMATION CONTENUE DANS CE DOCUMENT EST LA PROPRIÉTÉ EXCLUSIVE DE VEOLIA WATER TECHNOLOGIES CANADA INC. AND PROTECTED BY UNITED STATES AND CANADIAN AND OTHER INTELLECTUAL PROPERTY LAWS. THE DESIGN CONCEPTS AND INFORMATION CONTAINED HEREIN ARE PROPRIETARY TO V.E.T. AND ARE SUBMITTED IN CONFIDENCE. THIS DOCUMENT IS NOT TO BE USED, COPIED OR MADE AVAILABLE FOR ANY PURPOSE OTHER THAN THE DOCUMENT IS EXPRESSLY SUBMITTED AND NO IMPLICIT LICENCE IS GRANTED OTHER THAN BY THE SUBMISSION OF THIS DOCUMENT. THIS DOCUMENT, CONFIDENTIAL AND PRELIMINARY INFORMATION OF V.E.T. AND THEY MUST NOT BE DISCLOSED, REPRODUCED, LOANED, REMITTED OR USED IN ANY OTHER MANNER WITHOUT THE EXPRESS WRITTEN CONSENT OF V.E.T. V.E.T. ASSUME NO RESPONSIBILITY OR LIABILITY FOR THE USE OF THIS DOCUMENT OR THE DESIGN CONCEPTS AND INFORMATION CONTAINED HEREIN FOR ANY PURPOSE OTHER THAN THE DOCUMENT RELATED TO THE OTHER PURPOSE OF THIS DOCUMENT. IN NO EVENT SHALL THIS DOCUMENT OR THE DESIGN CONCEPTS AND INFORMATION CONTAINED HEREIN BE USED IN ANY MANNER WITHOUT THE EXPRESS WRITTEN CONSENT OF V.E.T. ALL COPYRIGHT, PATENT AND OTHER INTELLECTUAL PROPERTY RIGHTS ARE RESERVED. ACCEPTANCE OF THE DELIVERY OF THIS DOCUMENT CONSTITUTES AGREEMENT TO THESE TERMS AND CONDITIONS.

DESSINÉ DESIGNER	M.JACQUES	DATE 2019-02-12
VÉRIFIÉ CHECKER	S.DUQUET	DATE 2019-02-12
INGÉNIEUR ENGINEER		DATE
ÉCHELLE/SCALE:		

TITRE TITLE: HYDRAPOL 250 CONTROL PANEL INSIDE PANEL LAYOUT

CLIENT: IQALUIT WWTP

VEOLIA

VEOLIA WATER TECHNOLOGIES CANADA INC. 4105 Sartelon, Saint-Laurent, Qc, Canada Tel: (514) 334-7230

PROJET/PROJECT	DESSIN/DRAWING No	INTERNE/INTERNAL	FEUILLET/SHEET	REV.
5000218036-EPL-0006-AUT-VWT		JOME01	4 DE 5	4

STD: "D" 22x34 | EBI ELECTRIC - 58011-P01 | BAR = 1" À L'ÉCHELLE D'IMPRESSION/BAR = 1" AT PLOT SCALE

LR 60892

Mar07,2019 11:46:00 C:\Users\ mjacques\ Desktop\ CARTOUCHE WWTC BILINGUE 2019.dwg - mjacques

Items	Qty	Part Number	Description	Manufacturer
ENCLOSURE	1	!SP1404283	Special Enclosure 42" x 36" x 12"	Hammond
ENCLOSURE	1	BOIHAMPKT99	Document Holder	Hammond
LTG060408	1	!RABUC-LED300-NW	LED Bar 300mm, 3 watts, 24 vdc (88861)	RAB
ZS060408	1	BOIHAMFDS1	Door Switch for Light	Hammond
DS060105	1	!TELGS1DU3	Fused Disconnect Switch 30A/600V (Fus. Type	Schneider Electric
DS060105	1	!TELGS2AE8	Operating Shaft 30a 12.6"	Schneider Electric
DS060105	1	!TELGS2AH420	Operating Handle Red / Yellow NEMA 4-4X	Schneider
DS060105	3	FUSAJT15	Fuse 15 amp.Type J Time Delay	Mersen
DB060110	3	KCONMPDBC6263	Protective Cover for Distribution Block	Mersen
DB060110	1	KCONMPDB63133	Distribution Block	Mersen
OL060145	1	TELGV2ME05	Manual Starter 0,63-1A	Schneider Electric
OL060145	1	TELGVAN20	Aux Contact for GV2, GV3P, 2NO	Schneider Electric
M060145	1	TELLC1D09BD	Contactor 7,5HP/600V 1NO-1NC 24VDC	Schneider Electric
M060145	1	KTELLADN20	Aux Contact 2NO	Schneider Electric
OL060155	1	TELGV2ME05	Manual Starter 0,63-1A	Schneider Electric
OL060155	1	TELGVAN20	Aux Contact for GV2, GV3P, 2NO	Schneider Electric
M060155	1	TELLC1D09BD	Contactor 7,5HP/600V 1NO-1NF 24VDC	Schneider Electric
M060155	1	KTELLADN20	Aux Contact 2NO	Schneider Electric
OL060165	1	TELGV2ME06	Manual Starter 1-1,6A	Schneider Electric
OL060165	1	TELGVAN20	Aux Contact forGV2, GV3P, 2NO	Schneider Electric
M060165	1	TELLC1D09BD	Contactor 7,5HP/600V 1NO-1NF 24VDC	Schneider Electric
M060165	1	KTELLADN20	Aux Contact 2NO	Schneider Electric
CB060232	1	!SU202M-C15	Breaker 15A 2 poles	ABB
CR060375	1	TELLC1D09BD	Contactor 7,5HP/600V 1NO-1NF 24VDC	Schneider Electric
TR060115	1	!TRASQD9070FB3B	Fuse Holder for XFO (Primairy + Secondairy)	Schneider Electric
FU060115	2	FUSATQR5	Fuse 5 amp, CC, 600 v, Time Delay	Mersen
FU060115A	1	FUSATDR15	Fuse 15 amp, CC, 600 v, Time Delay	Mersen
TR060115	1	KSQD9070FSC2	Protective Cover for Transformer	Schneider Electric
TR060115	3	!SPL0001T	Protective Cover for Fuse Holder	Littelfuse
TR060115	1	TRASQD9070T1500D5	Transformer 1500 va 600/120 v.	Schneider Electric
TR060125	1	!TRASQD9070FB3B	Fuse Holder for XFO (Primairy + Secondairy)	Schneider Electric
FU060125	2	FUSATQR5	Fuse 5 amp, CC, 600 v, Time Delay	Mersen
TR060125	1	KSQD9070FSC2	Protective Cover for Transformer	Schneider Electric
TR060125	3	!SPL0001T	Protective Cover for Fuse Holder	Littelfuse
TR060125	1	!TRASQD9070T1500D37	Transformer 1500 va 600/120-240v v.	Schneider Electric
FU060125A	1	FUSATDR15	Fuse 15 amp, CC, 600 v, Time Delay	Mersen
BA060344	1	OMRS8VK-G48024	Power Supply 24 vcc 20 amp.	Omron
RELAYS	10	OMRG2RV-SL700 DC24	Control Relay 6 mm, 6 amp, 24 vdc	Omron
RELAYS	1	KOMRP2RVM-200B	Connecting Bar 20 poles for G2RV	Omron
CR060821	1	OMRG2R-1-SN-DC24 (S)	Relais 1 pôle 24 vca c/a témoin	Omron
CR060821	1	OMRP2RF-05-E	Base de relais type G2R-1	Omron
MCR060357	1	TELCAD50BD	Relay 10A 5NO 24VCC	Schneider Electric
HMI060546	1	2711P-T4W21D8S	PanelView Plus 7 4.3"	Allen-Bradley

PLC	1	1769-L16ER-BB1B	PLC	Allen-Bradley
PLC	1	1734-IE8C	Analog Input Card	Allen-Bradley
PLC	1	1734-TB	Point I/O terminal base	Allen-Bradley
DU060909	1	7920400000	Duplicateur signal 4-20mA	Weidmuller
ENET060544	1	TELTCSESU053FN0	Ethernet Switch 5 ports	Schneider Electric
HS060375	1	KTELZB4BD2	Selector 2 Position Maintained	Schneider Electric
HS060375	1	KTELZB4BZ101	Contact Block 1NO	Schneider Electric
HS060813	4	KTELZB4BD3	Selector 3 Position Maintained	Schneider Electric
HS060813	4	KTELZB4BZ103	Contact Block 2NO	Schneider Electric
HS060813	4	KTELZBE101	Contact Block 1NO	Schneider Electric
IL060805	1	KTELZB4BV043	Pilot Light Red (LED)	Schneider Electric
IL060805	1	TELZB4BVB4	Mounting Block with Light, LED 24V Red	Schneider Electric
ES060357	1	TELZB4BW643	Red Lit Mushroom Button	Schneider Electric
ES060357	1	TELZB4BVB4	Mounting Block with Light, LED 24V Red	Schneider Electric
ES060357	1	KTELZBE101	Contact Block 1NO	Schneider Electric
ES060357	1	KTELZBE102	Contact Block 1NC	Schneider Electric
ES060357	1	KTELZBY9320	Round EMERGENCY STOP Label	Schneider Electric
PB060709	1	KTELZB4BA2	Black Flush Button	Schneider Electric
PB060709	1	KTELZB4BZ101	Contact Block 1NO	Schneider Electric
GND	3	KN8020A108T	Grounding Bar 10 Holes	Ilsco
TERMINAL BLOCKS	37	ENT1SNK506010R0000	Terminal Block 30 amp. 6mm	ABB
TERMINAL BLOCKS	5	ENT1SNK505910R0000	End Cover	ABB
TERMINAL BLOCKS	32	ENT1SNK505210R0000	Terminal Block 2 Levels 5 mm	ABB
TERMINAL BLOCKS	2	ENT1SNK505960R0000	End Cover	ABB
TERMINAL BLOCKS	8	ENT1SNK505212R0000	Terminal Block 3 Levels	ABB
TERMINAL BLOCKS	1	ENT1SNK505961R0000	End Cover	ABB
FUSE	1	ENT1SNK508418R0000	Fuse Holder 1/4" x 1 1/4"	ABB
FUSE	23	ENT1SNK508425R0000	Fuse Terminal Block 2 Level	ABB
FUSE	1	ENT1SNK508911R0000	End Cover	ABB
FUSE	24	KFUSGMA2	Fuse 250 v. 2 amp. M5 x 20	Bussmann
FUSE	4	FUSGMA5	Fuse 125 v. 5 amp. M5 x 20	Bussmann
FUSE	5	KFUSGMA1	Fuse 250 v. 1 amp. M5 x 20	Bussmann
FUSE	4	FUSGMA3	Fuse 250 v. 3 amp. M5 x 20	Bussmann
FUSE	5	FUSABC20	Fuse 250 v. 20 amp. 1/4 x 1 1/4	Bussmann
TERMINAL BLOCKS	14	ENT1SNK900002R0000	End Stop	ABB
CB060304, CB060306	2	!SU201M-C1	Breaker 1A	ABB
CB060308, CB060355	2	!SU201M-C2	Breaker 2A	ABB
CB060416	1	!SU201M-C5	Breaker 5A	ABB
CB060344	1	!SU201M-C6	Breaker 6A	ABB
PATCH CORD	1	!CAT5ES-06GN	Ethernet Cable RJ45, 6 ft, Green	Infinite cables

LR 60892

REV.	DESCRIPTION	DATE	REV.	VERIÇHK	APPR	ECN
4	AS COMMISSIONNING	2019-05-17	SD			
3	AS BUILT	2019-05-06	SD			
2	FOR FAB	2019-04-02	RM			
1	FOR APPROVAL	2019-03-18	RM			

CONFIDENTIALITY AND INTELLECTUAL PROPERTY NOTICE
ALL INFORMATION CONTAINED IN THIS DOCUMENT IS THE SOLE PROPERTY OF VEOLIA WATER TECHNOLOGIES CANADA INC. AND CONTAINS CONFIDENTIAL AND PROPRIETARY INFORMATION AND OTHER INTELLECTUAL PROPERTY LAWS. THE DESIGN CONCEPTS AND INFORMATION CONTAINED HEREIN ARE PROPRIETARY TO V.W.T. AND ARE SUBMITTED IN CONFIDENCE FOR A LIMITED PURPOSE. THEY MUST BE USED ONLY FOR THE PURPOSE FOR WHICH THE DOCUMENT IS EXPRESSLY SUBMITTED AND NO IMPLICIT LICENCE IS GRANTED TO ANY OTHER INTELLECTUAL PROPERTY RIGHTS. THIS DOCUMENT IS CONFIDENTIAL AND PRIVILEGED INFORMATION OF V.W.T. AND THEY MUST NOT BE DISCLOSED, REPRODUCED, LOANED, WRITTEN OR USED IN WHOLE OR IN PART FOR ANY PURPOSE WITHOUT THE EXPRESS WRITTEN CONSENT OF V.W.T. V.W.T. ASSUMES NO RESPONSIBILITY OR LIABILITY FOR THE USE OF THIS DOCUMENT OR THE DESIGN CONCEPTS AND INFORMATION CONTAINED HEREIN FOR PURPOSES OTHER THAN THE SPECIFIC PROJECT TO WHICH IT RELATES TO THE OTHER EXPRESS PURPOSES OF THIS DOCUMENT. IN NO EVENT SHALL THIS DOCUMENT OR THE DESIGN CONCEPTS AND INFORMATION CONTAINED HEREIN BE USED FOR ANY PURPOSE OTHER THAN THE PURPOSE OF V.W.T. ALL COPYRIGHT, PATENT AND OTHER INTELLECTUAL PROPERTY RIGHTS ARE RESERVED. ACCEPTANCE OF THE DELIVERY OF THIS DOCUMENT CONSTITUTES AGREEMENT TO THESE TERMS AND CONDITIONS.

AVIS DE CONFIDENTIALITÉ ET DE PROPRIÉTÉ INTELLECTUELLE
L'INFORMATION CONTENUE DANS CE DOCUMENT EST LA PROPRIÉTÉ EXCLUSIVE DE VEOLIA WATER TECHNOLOGIES CANADA INC. ET CONTIENT DES RENSEIGNEMENTS CONFIDENTIELS ET EXCLUSIFS AINSI QUE D'AUTRES LOIS SUR LA PROPRIÉTÉ INTELLECTUELLE. LES IDÉES ET CONCEPTS ET RENSEIGNEMENTS CONTENUS DANS CE DOCUMENT SONT CONFIDENTIELS ET EXCLUSIFS À V.W.T. ET SONT SOUMIS EN VUE D'UNE UTILISATION LIMITÉE. CE DOCUMENT NE DOIT ÊTRE UTILISÉ QUE DANS LE BUT POUR LEQUEL IL EST SOUMIS EXPRESSÉMENT ET AUCUNE LICENCE IMPLICITE N'EST ACCORDÉE À L'ÉGARD DE TOUTE AUTRE PROPRIÉTÉ INTELLECTUELLE. V.W.T. N'ASSUME AUCUNE RESPONSABILITÉ OU OBLIGATION POUR L'UTILISATION DE CE DOCUMENT OU DES IDÉES ET RENSEIGNEMENTS QU'IL CONTIENT POUR DES BUTS AUTRES QUE LES BUTS EXPRESSÉMENT VISÉS PAR CE DOCUMENT. EN AUCUN CAS CE DOCUMENT NE DOIT ÊTRE UTILISÉ À DES FINS AUTRES QUE CELLES DE V.W.T. TOUS LES DROITS D'AUTEUR, BREVET ET AUTRES DROITS DE PROPRIÉTÉ INTELLECTUELLE SONT RÉSERVÉS. L'ACCEPTATION DE LA LIVRAISON DE CE DOCUMENT CONSTITUE UNE ENTENTE À CES CONDITIONS.

DESSINÉ DESIGNER	M.JACQUES	DATE 2019-02-12
VÉRIFIÉ CHECKER	S.DUQUET	DATE 2019-02-12
INGÉNIEUR ENGINEER		DATE
ÉCHELLE/SCALE:		

TITRE/TITLE: HYDRAPOL 250 CONTROL PANEL PARTS LIST

CLIENT: IQALUIT WWTP

VEOLIA

VEOLIA WATER TECHNOLOGIES CANADA INC. 4105 Sartelon, Saint-Laurent, Qc, Canada Tel: (514) 334-7230

PROJET/PROJECT	DESSIN/DRAWING No	INTERNE/INTERNAL	FEUILLET/SHEET	REV.
5000218036-EPL-0006-AUT-VWT	JOME01	5 DE 5		4

STD: "D" 22x34 | EBI ELECTRIC - 58011-P01 | BAR = 1" À L'ÉCHELLE D'IMPRESSION/BAR = 1" AT PLOT SCALE

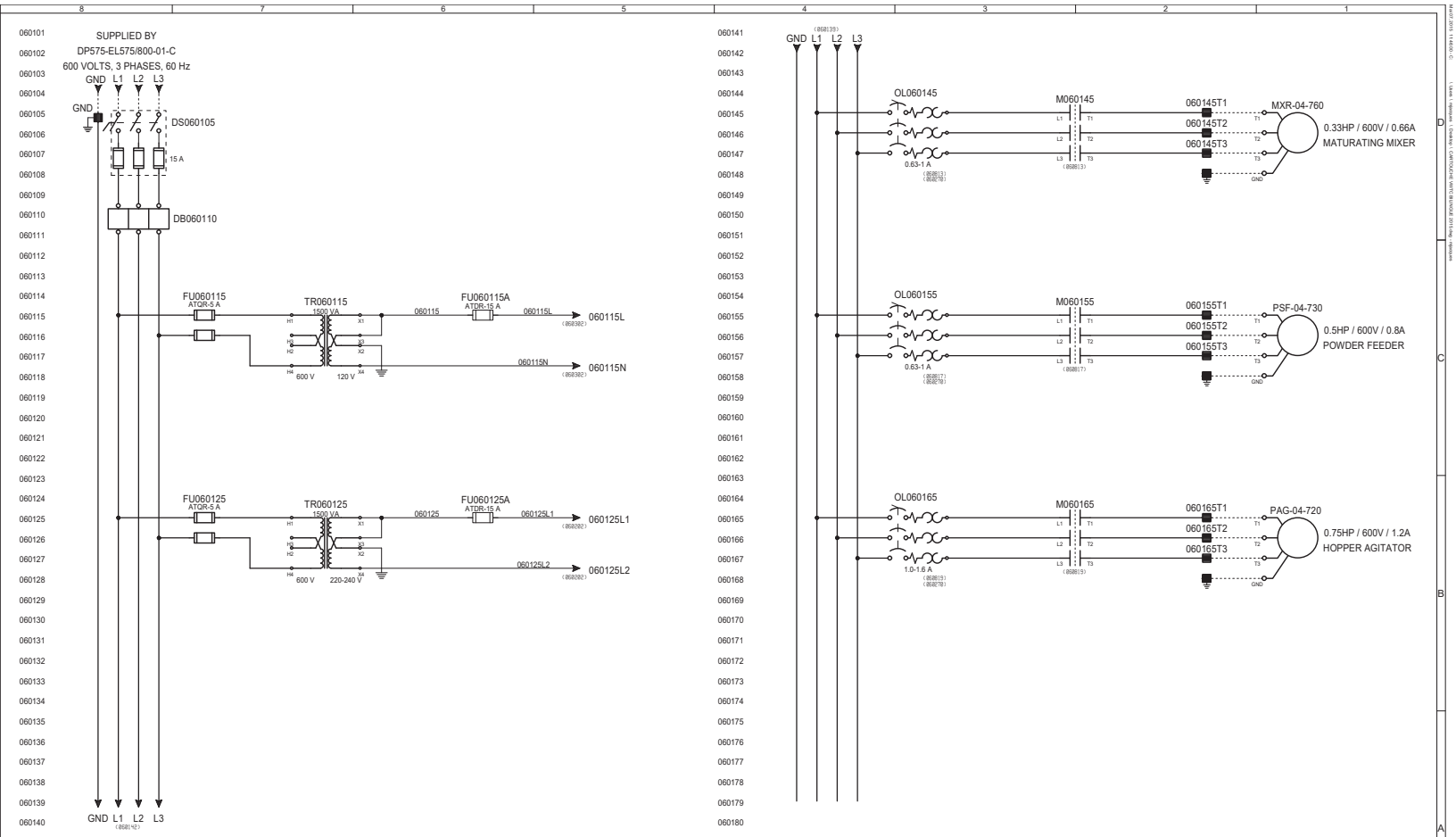

LR 60892

STD: "D" 22x34 | EBI ELECTRIC - 58011-P01 | BAR = 1" À L'ÉCHELLE D'IMPRESSION/BAR = 1" AT PLOT SCALE

REV.	DESCRIPTION	DATE	REV.	VERIF/CHK	APPR.	ECN
4	AS COMMISSIONNING	2019-05-17	SD			
3	AS BUILT	2019-05-06	SD			
2	FOR FAB	2019-04-02	RM			
1	FOR APPROVAL	2019-03-18	RM			

CONFIDENTIALITY AND INTELLECTUAL PROPERTY NOTICE
ALL INFORMATION CONTAINED IN THIS DOCUMENT IS THE SOLE PROPERTY OF VEOLIA WATER TECHNOLOGIES CANADA INC. AND IS CONFIDENTIAL AND MAY BE SUBJECT TO PATENT AND OTHER INTELLECTUAL PROPERTY LAWS. THE DESIGN CONCEPTS AND INFORMATION CONTAINED HEREIN ARE PROPRIETARY TO V.W.T. AND ARE SUBMITTED IN CONFIDENCE. THIS DOCUMENT AND ITS CONTENTS MUST BE USED ONLY FOR THE PURPOSE FOR WHICH THE DOCUMENT IS BEIN SUBMITTED. NEITHER THIS DOCUMENT NOR ANY LICENCE IS GRANTED TO RECEIVE THIS DOCUMENT. THIS DOCUMENT IS SUBMITTED AS CONFIDENTIAL AND PRIVILEGED INFORMATION OF V.W.T. AND THEY MUST NOT BE DISCLOSED, REPRODUCED, LOANED, TRANSFERRED OR USED IN ANY MANNER WITHOUT THE PRIOR WRITTEN CONSENT OF VEOLIA WATER T. V.W.T. DISCLAIMS ANY RESPONSIBILITY OR LIABILITY FOR THE USE OF THIS DOCUMENT OR THE DESIGN CONCEPTS AND INFORMATION CONTAINED HEREIN. THIS DOCUMENT IS SUBMITTED AS CONFIDENTIAL AND IS AT THE SOLE RISK OF THE RECEIVER OF THIS DOCUMENT. IN NO EVENT SHALL THIS DOCUMENT OR THE DESIGN CONCEPTS AND INFORMATION CONTAINED HEREIN BE USED FOR ANY PURPOSE OTHER THAN THE PURPOSE OF V.W.T. ALL COPYRIGHT, PATENT AND OTHER INTELLECTUAL PROPERTY RIGHTS ARE RESERVED. ACCEPTANCE OF THE DELIVERY OF THIS DOCUMENT CONSTITUTES AGREEMENT TO THESE TERMS AND CONDITIONS.

AVIS DE CONFIDENTIALITÉ ET DE PROPRIÉTÉ INTELLECTUELLE
L'INFORMATION CONTENUE DANS CE DOCUMENT EST LA PROPRIÉTÉ EXCLUSIVE DE VEOLIA WATER TECHNOLOGIES CANADA INC. ET EST CONFIDENTIELLE. CE DOCUMENT PEUT ÊTRE SOUMIS À DES BREVETS OU À D'AUTRES DROITS DE PROPRIÉTÉ INTELLECTUELLE. LES IDÉES CONCEPTUELLES CONTENUES DANS CE DOCUMENT SONT SOUMISES À V.W.T. ET SONT CONFIDENTIELLES. CE DOCUMENT ET SES CONTENUS NE DOIVENT ÊTRE UTILISÉS QUE POUR LE BUT POUR LEQUEL LE DOCUMENT EST SOUMIS. AUCUNE PARTIE DE CE DOCUMENT NI AUCUNE LICENCE NE SONT ACCORDÉS À LA PERSONNE À QUI CE DOCUMENT EST SOUMIS. CE DOCUMENT EST SOUMIS À LA PERSONNE À QUI IL EST ADRESSÉ COMME ÉTANT UN RENSEIGNEMENT CONFIDENTIEL ET PRIVILÉGIÉ DONT V.W.T. EST PROPRIÉTAIRE. VEOLIA WATER TECHNOLOGIES CANADA INC. NIE TOUTE RESPONSABILITÉ ET TOUTE RESPONSABILITÉ POUR L'UTILISATION DE CE DOCUMENT OU DES IDÉES CONCEPTUELLES CONTENUES DANS CE DOCUMENT. CE DOCUMENT EST SOUMIS À LA PERSONNE À QUI IL EST ADRESSÉ À SON SEUL RISQUE. EN AUCUN CAS, CE DOCUMENT OU DES IDÉES CONCEPTUELLES CONTENUES DANS CE DOCUMENT NE SERONT UTILISÉS À D'AUTRES FINS QUE LES FINS DE V.W.T. TOUS LES DROITS D'AUTEUR, BREVETS ET AUTRES DROITS DE PROPRIÉTÉ INTELLECTUELLE SONT RÉSERVÉS. L'ACCEPTATION DE LA LIVRAISON DE CE DOCUMENT CONSTITUE UNE ENTENTE À CES CONDITIONS.

DESSINÉ DESIGNER	M.JACQUES	DATE 2019-02-12
VÉRIFIÉ CHECKER	S.DUQUET	DATE 2019-02-12
INGÉNIEUR ENGINEER		DATE
ÉCHELLE/SCALE:		

TITRE TITLE: HYDRAPOL 250 CONTROL PANEL SCHEMATIC DIAGRAM 600VAC

CLIENT: IQALUIT WWTP

VEOLIA

VEOLIA WATER TECHNOLOGIES CANADA INC. 4105 Sartelon, Saint-Laurent, Qc, Canada Tel: (514) 334-7230

PROJET/PROJECT	DESSIN/DRAWING No	INTERNE/INTERNAL	FEUILLET/SHEET	REV.
5000218036-ELD-0006-AUT-VWT		JOME01	1 DE 9	4

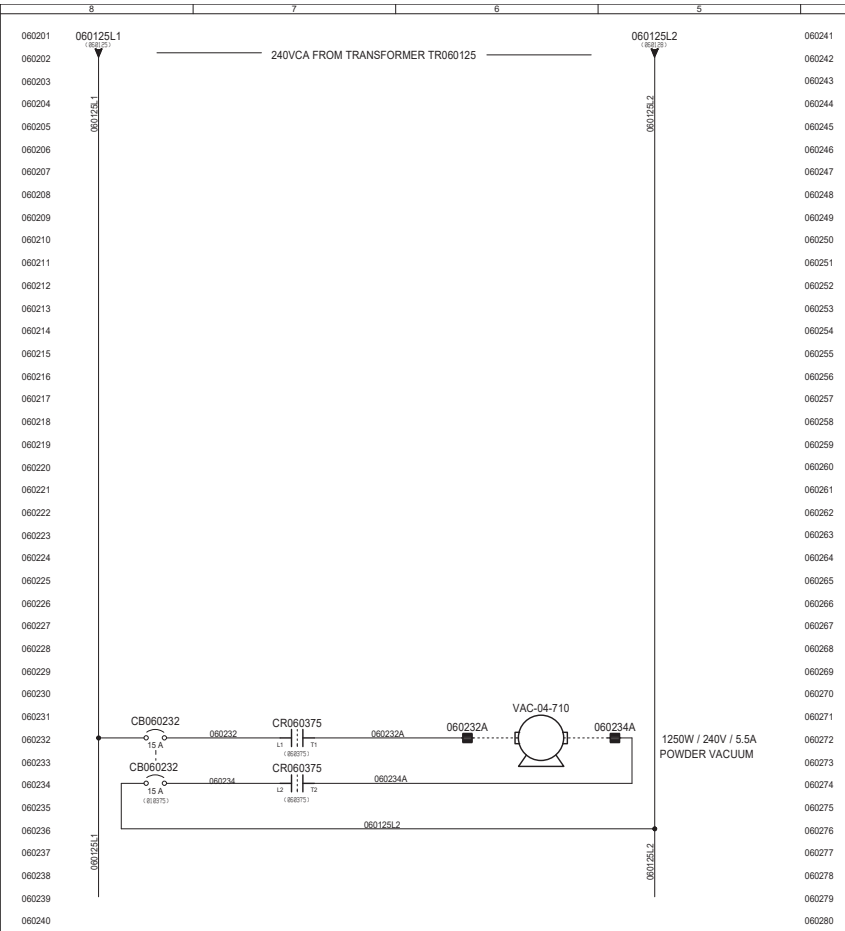

MOTORS STATUS

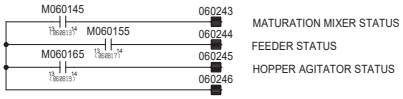

INTERLOCKS

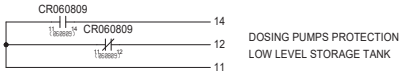

ALARM DRY CONTACT

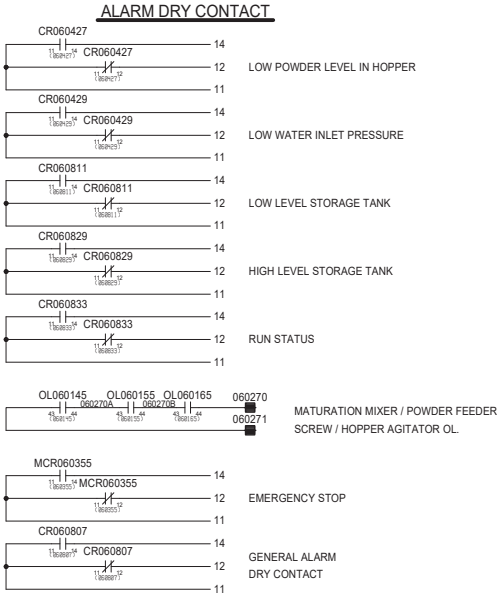

REV.	DESCRIPTION	DATE	REV.	VERIC/HK	APPR	ECN
4	AS COMMISSIONNING	2019-05-17	SD			
3	AS BUILT	2019-05-06	SD			
2	FOR FAB	2019-04-02	RM			
1	FOR APPROVAL	2019-03-18	RM			

CONFIDENTIALITY AND INTELLECTUAL PROPERTY NOTICE
ALL INFORMATION CONTAINED IN THIS DOCUMENT IS THE SOLE PROPERTY OF VEOLIA WATER TECHNOLOGIES CANADA INC. AND CONTAINS CONFIDENTIAL AND PROPRIETARY INFORMATION AND OTHER INTELLECTUAL PROPERTY LAWS. THE DESIGN CONCEPTS AND INFORMATION CONTAINED HEREIN ARE PROPRIETARY TO "I.D.C." AND ARE CONFIDENTIAL AND PROTECTED BY COPYRIGHT LAWS. THIS DOCUMENT MUST BE USED ONLY FOR THE PURPOSE FOR WHICH THE DOCUMENT IS EXPRESSLY SUBMITTED AND NO IMPLICIT LICENCE IS GRANTED TO ANY OTHER USE. THIS DOCUMENT MUST NOT BE COPIED AND THE CONFIDENTIAL AND PRIVILEGED INFORMATION OF "I.D.C." AND THEY MUST NOT BE DISCLOSED, REPRODUCED, LOANED, WHETTED OR USED IN WHOLE OR IN PART FOR ANY PURPOSE WITHOUT THE PERMISSION OF "I.D.C." "I.D.C." ASSUMES NO RESPONSIBILITY OR LIABILITY FOR THE USE OF THIS DOCUMENT OR THE DESIGN CONCEPTS AND INFORMATION CONTAINED HEREIN FOR PURPOSES OTHER THAN THE SPECIFIC PROJECT RELATED TO THE OTHER OUR PURPOSE OF THIS DOCUMENT. IN NO EVENT SHALL THIS DOCUMENT OR THE DESIGN CONCEPTS AND INFORMATION CONTAINED HEREIN BE INTERPRETED AS GRANTING, BY IMPLICATION OR OTHERWISE, ANY COPYRIGHT, PATENT AND OTHER INTELLECTUAL PROPERTY RIGHTS ARE RESERVED. ACCEPTANCE OF THE DELIVERY OF THIS DOCUMENT CONSTITUTES AGREEMENT TO THESE TERMS AND CONDITIONS.

AVIS DE CONFIDENTIALITÉ ET DE PROPRIÉTÉ INTELLECTUELLE
LES RENSEIGNEMENTS CONTENUS DANS CE DOCUMENT SONT LA PROPRIÉTÉ EXCLUSIVE DE VEOLIA WATER TECHNOLOGIES CANADA INC. ET CONTIENNENT DES RENSEIGNEMENTS CONFIDENTIELS ET PROPRIÉTAIRES AINSI QUE D'AUTRES LOIS SUR LA PROPRIÉTÉ INTELLECTUELLE. LES IDÉES ET CONCEPTS D'INFORMATION CONTENUS DANS CE DOCUMENT SONT CONFIDENTIELS ET SONT PROTÉGÉS PAR LES LOIS SUR LE DROIT D'AUTEUR. CE DOCUMENT NE DOIT ÊTRE UTILISÉ QUE DANS LE BUT POUR LEQUEL IL A ÉTÉ SOUMIS EXPRESSÉMENT ET AUCUNE LICENCE IMPLICITE N'EST ACCORDÉE POUR TOUTE AUTRE UTILISATION. CE DOCUMENT NE DOIT PAS ÊTRE COPIÉ ET LES RENSEIGNEMENTS CONFIDENTIELS ET PRIVILÉGIÉS DE "I.D.C." NE DOIVENT PAS ÊTRE DIVULGUÉS, REPRODUITS, LOUÉS, PRÊTÉS OU UTILISÉS EN TOUT OU EN PARTIE À QUELQUE FIN QUE CE SOIT SANS LA PERMISSION DE "I.D.C." "I.D.C." N'ASSUME AUCUNE RESPONSABILITÉ OU OBLIGATION POUR L'UTILISATION DE CE DOCUMENT OU DES CONCEPTS ET DE L'INFORMATION CONTENUS DANS CE DOCUMENT À DES FINS AUTRES QUE CELLES SE RAPPORTANT SPÉCIFIQUEMENT AU PROJET RELATIF À LA FIN DE CE DOCUMENT. AUCUN ÉLÉMENT DANS CE DOCUMENT OU LES IDÉES ET CONCEPTS QU'IL CONTIENT NE DOIT ÊTRE INTERPRÉTÉ COMME ACCORDANT, PAR IMPLICATION OU AUTREMENT, UNE LICENCE OU UN DROIT EN VERTU D'UN BREVET, D'UNE MARQUE DE COMMERCE OU DE TOUT AUTRE DROIT DE PROPRIÉTÉ INTELLECTUELLE. LES DROITS RÉSERVÉS. L'ACCEPTATION DE LA LIVRAISON DE CE DOCUMENT SIGNIFIE L'ACCEPTATION DES PRÉSENTES MODALITÉS ET CONDITIONS.

DESSINÉ DESIGNER	M.JACQUES
DATE	2019-02-12
VÉRIFIÉ CHECKER	S.DUQUET
DATE	2019-02-12
INGÉNIEUR ENGINEER	
DATE	
ÉCHELLE/SCALE:	

TITRE/TITLE: HYDRAPOL 250 CONTROL PANEL SCHEMATIC DIAGRAM 120VAC

CLIENT: IQALUIT WWTP

VEOLIA

VEOLIA WATER TECHNOLOGIES CANADA INC. 4105 Sartelon, Saint-Laurent, Qc, Canada Tel: (514) 334-7230

PROJET/PROJECT	DESSIN/DRAWING No	INTERNE/INTERNAL	FEUILLET/SHEET	REV.
5000218036	ELD-0006-AUT-VWT	JOME01	2 DE 9	4

LR 60092

STD: "D" 22x34 | EBI ELECTRIC - 58011-P01 | BAR = 1" À L'ÉCHELLE D'IMPRESSION/BAR = 1" AT PLOT SCALE

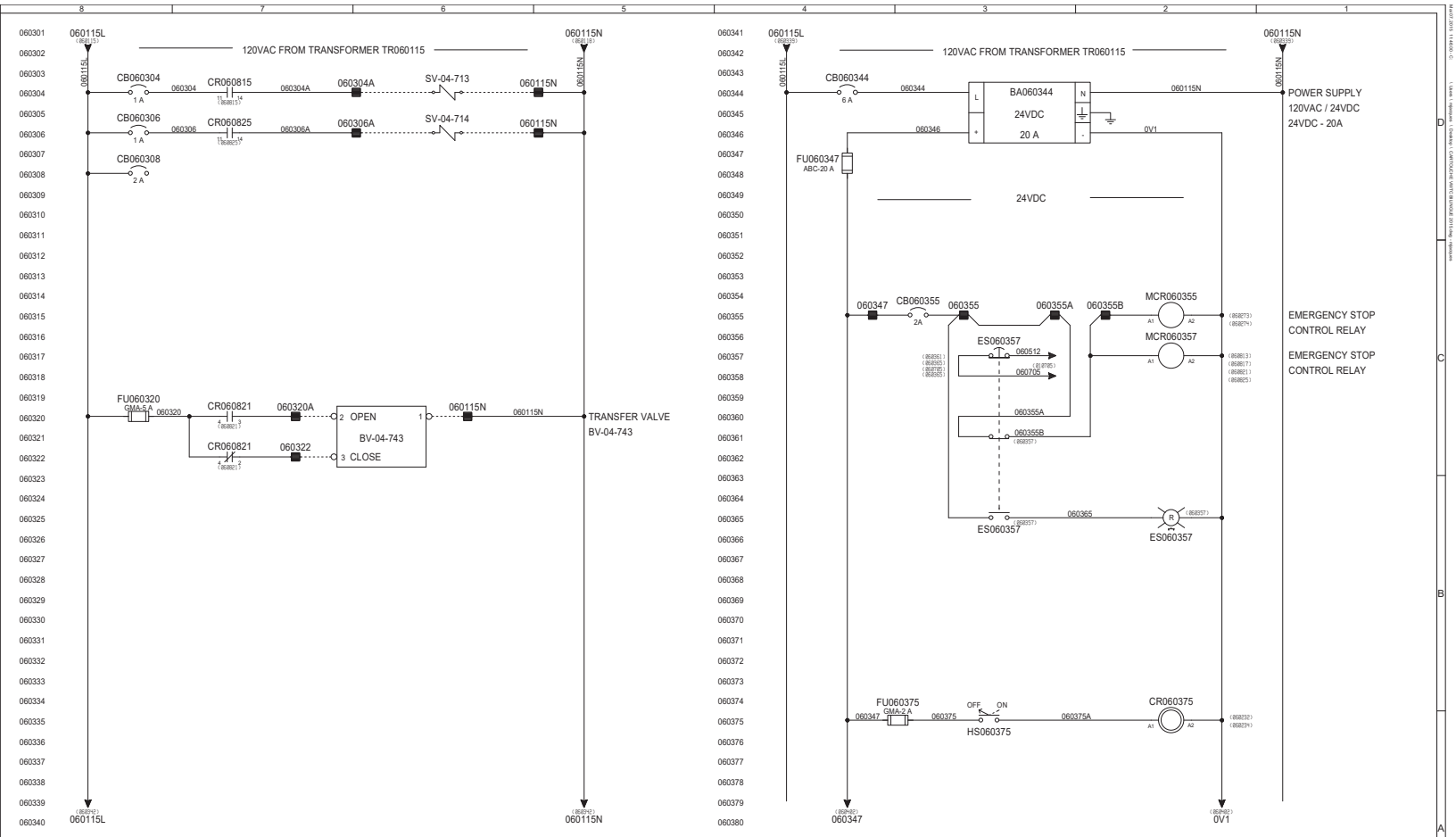

4	AS COMMISSIONNING	2019-05-17	SD				
3	AS BUILT	2019-05-06	SD				
2	FOR FAB	2019-04-02	RM				
1	FOR APPROVAL	2019-03-18	RM				
REV.	DESCRIPTION	DATE	REV.	VERIFIÉ/CHK	APPR.	ECN	

CONFIDENTIALITY AND INTELLECTUAL PROPERTY NOTICE: ALL INFORMATION CONTAINED IN THIS DOCUMENT IS THE SOLE PROPERTY OF VEOLIA WATER TECHNOLOGIES CANADA INC. AND CONTAINS CONFIDENTIAL AND PROPRIETARY INFORMATION AND OTHER INTELLECTUAL PROPERTY LAWS. THE DESIGN CONCEPTS AND INFORMATION CONTAINED HEREIN ARE PROPRIETARY TO VWT, AND ARE SUBMITTED IN CONFIDENCE. THIS DOCUMENT AND THE INFORMATION MUST BE USED ONLY FOR THE PURPOSE FOR WHICH THE DOCUMENT IS BY-PRESENTLY SUBMITTED AND NO IMPLICIT LICENCE IS GRANTED TO USE THE DESIGN CONCEPTS AND INFORMATION CONTAINED IN THE CONFIDENTIAL AND PRIVILEGED INFORMATION OF VWT, AND THEY MUST NOT BE DISCLOSED, REPRODUCED, LOANED, RIBBITED OR USED IN WHOLE OR IN PART FOR THE BENEFIT OF ANY THIRD PARTY WITHOUT VWT'S ASSUMED RESPONSIBILITY OR LIABILITY FOR THE USE OF THIS DOCUMENT OR THIS DESIGN CONCEPTS AND INFORMATION CONTAINED HEREIN. ACCEPTANCE OF THIS DOCUMENT OR ANY PART RELATES TO THE OTHER OUR PURPOSE OF THIS DOCUMENT. IN NO EVENT SHALL THIS DOCUMENT OR THE DESIGN CONCEPTS AND INFORMATION CONTAINED HEREIN BE CONSTRUED AS RESULTING IN ANY WAY IN WHOLE OR IN PART, ALL COPYRIGHT, PATENT AND OTHER INTELLECTUAL PROPERTY RIGHTS ARE RESERVED. ACCEPTANCE OF THE DELIVERY OF THIS DOCUMENT CONSTITUTES AGREEMENT TO THESE TERMS AND CONDITIONS.

AVIS DE CONFIDENTIALITÉ ET DE PROPRIÉTÉ INTELLECTUELLE: L'INFORMATION CONTENUE DANS CE DOCUMENT EST LA PROPRIÉTÉ EXCLUSIVE DE VEOLIA WATER TECHNOLOGIES CANADA INC. ET CONTIENT DES RENSEIGNEMENTS CONFIDENTIELS ET EXCLUSIFS AINSI QUE D'AUTRES LOIS SUR LA PROPRIÉTÉ INTELLECTUELLE. LES DESIGNS CONCEPTS ET INFORMATIONS CONTENUS DANS CE DOCUMENT SONT LA PROPRIÉTÉ DE VWT ET SONT SOUMIS EN CONFIDENCE. TOUTE UTILISATION DE CE DOCUMENT DOIT ÊTRE FAITE UNIQUEMENT AUX FINS POUR LESQUELLES CE DOCUMENT EST PRÉSENTEMENT SOUMIS ET AUCUNE LICENCE IMPLICITE N'EST ACCORDÉE POUR UTILISER LES DESIGNS CONCEPTS ET INFORMATIONS CONFIDENTIELS ET EXCLUSIFS CONTENUS DANS LES RENSEIGNEMENTS CONFIDENTIELS ET PRIVILÉGIÉS DE VWT, ET ILS NE DOIVENT PAS ÊTRE DIVULGUÉS, REPRODUITS, PRÊTÉS, RIBBÉS OU UTILISÉS EN TOUTE OU EN PARTIE AU PROFIT DE TOUT TIERS SANS L'ASSUMPTION PRÉALABLE PAR VWT DE LA RESPONSABILITÉ OU DE LA RESPONSABILITÉ À L'ÉGARD DE L'UTILISATION DE CE DOCUMENT OU DES DESIGNS CONCEPTS ET INFORMATIONS CONTENUS DANS LES PRÉSENTES. L'ACCEPTATION DE CE DOCUMENT OU DE TOUTE PARTIE DE CELUI-CI SE RAPPORTE UNIQUEMENT À L'OBJET POUR LEQUEL CE DOCUMENT EST PRÉSENTÉ. AUCUN DE CE DOCUMENT NE DOIT ÊTRE INTERPRÉTÉ DE QUELQUE MANIÈRE QUE CE SOIT, EN TOUT OU EN PARTIE, COMME RÉSULTANT EN UNE RENONCIATION À TOUS LES DROITS D'AUTEUR, BREVET ET AUTRES DROITS DE PROPRIÉTÉ INTELLECTUELLE QUI SONT RÉSERVÉS. L'ACCEPTATION DE LA LIVRAISON DE CE DOCUMENT CONSTITUE UNE ENTENTE À CES TERMES ET CONDITIONS.

DESSINÉ/DESIGNER	M.JACQUES
DATE	2019-02-12
VÉRIFIÉ/CHECKER	S.DUQUET
DATE	2019-02-12
INGÉNIEUR/ENGINEER	
DATE	
ÉCHELLE/SCALE:	

TITRE/TITLE: HYDRAPOL 250 CONTROL PANEL SCHEMATIC DIAGRAM 120VAC

CLIENT: IQALUIT WWTP

VEOLIA

VEOLIA WATER TECHNOLOGIES CANADA INC. 4105 Sartelon, Saint-Laurent, Qc, Canada Tel: (514) 334-7230

PROJET/PROJECT	DESSIN/DRAWING No	INTERNE/INTERNAL	FEUILLET/SHEET	REV.
5000218036-ELD-0006-AUT-VWT	JOME01	3 DE 9		4

STD: "D" 22x34 | EBI ELECTRIC - 58011-P01 | BAR = 1" À L'ÉCHELLE D'IMPRESSION/BAR = 1" AT PLOT SCALE

LR 60092

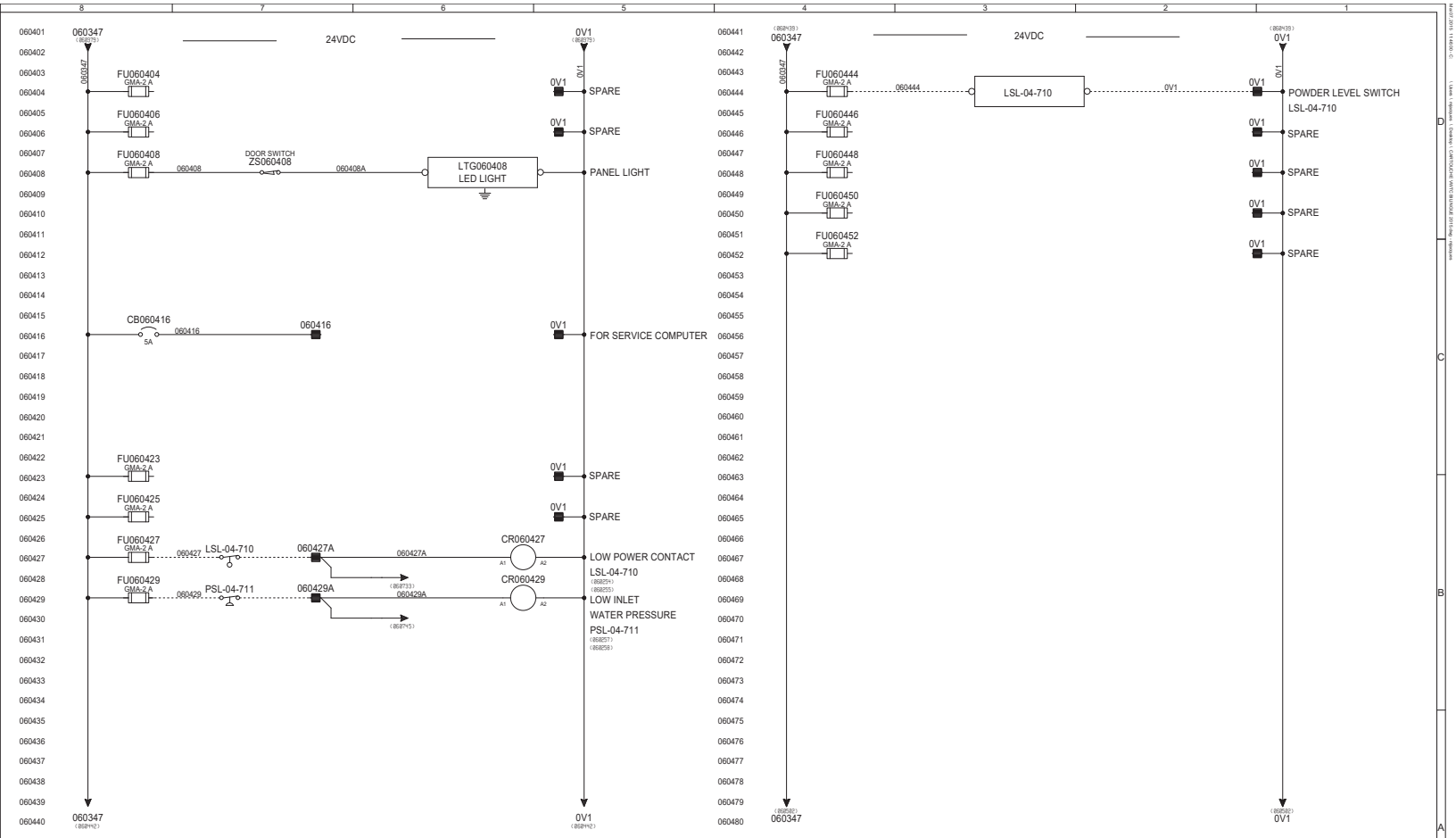

REV.	DESCRIPTION	DATE	REV.	VERIFIÉ/CHK	APPR.	ECN
4	AS COMMISSIONNING	2019-05-17	SD			
3	AS BUILT	2019-05-06	SD			
2	FOR FAB	2019-04-02	RM			
1	FOR APPROVAL	2019-03-18	RM			

CONFIDENTIALITY AND INTELLECTUAL PROPERTY NOTICE
ALL INFORMATION CONTAINED IN THIS DOCUMENT IS THE SOLE PROPERTY OF VEOLIA WATER TECHNOLOGIES CANADA INC. AND CONTAINS INTELLECTUAL PROPERTY OWNED BY VEOLIA OR OTHER INTELLECTUAL PROPERTY OWNERS. THE DESIGN CONCEPTS AND INFORMATION CONTAINED HEREIN ARE PROPRIETARY TO "I.D.C." AND ARE SUBMITTED IN CONFIDENCE. NEITHER THIS DOCUMENT NOR THE INFORMATION IT CONTAINS MAY BE USED ONLY FOR THE PURPOSE FOR WHICH THE DOCUMENT IS EXPRESSLY SUBMITTED AND NO IMPLICIT LICENCE IS GRANTED BY THE SUBMISSION OF THIS DOCUMENT. THIS DOCUMENT IS TO BE RETURNED CONFIDENTIAL AND PRIVILEGED INFORMATION OF V.W.T. AND THEY MUST NOT BE DISCLOSED, REPRODUCED, LOANED, WHETTED OR USED IN WHOLE OR IN PART FOR ANY PURPOSE EXCEPT WITH THE WRITTEN CONSENT OF V.W.T. SUBJECT TO ANY EXPRESS WRITTEN AGREEMENT TO THE CONTRARY, V.W.T. ASSUMES NO RESPONSIBILITY OR LIABILITY FOR THE USE OF THIS DOCUMENT OR THE DESIGN CONCEPTS AND INFORMATION CONTAINED HEREIN FOR PURPOSES OTHER THAN THE SPECIFIC PROJECT RELATED TO THE ATTACHED PURPOSE OF THIS DOCUMENT. IN NO EVENT SHALL THIS DOCUMENT OR THE DESIGN CONCEPTS AND INFORMATION CONTAINED HEREIN BE USED BY ANY PARTY FOR ANY PURPOSE IN CONFLICT OF V.W.T. ALL COPYRIGHT, PATENT AND OTHER INTELLECTUAL PROPERTY RIGHTS ARE RESERVED. ACCEPTANCE OF THE DELIVERY OF THIS DOCUMENT CONSTITUTES AGREEMENT TO THESE TERMS AND CONDITIONS.

AVIS DE CONFIDENTIALITÉ ET DE PROPRIÉTÉ INTELLECTUELLE
L'INFORMATION CONTENUE DANS CE DOCUMENT EST LA PROPRIÉTÉ EXCLUSIVE DE VEOLIA WATER TECHNOLOGIES CANADA INC. ET CONTIENT DES PROPRIÉTÉS INTELLECTUELLES APPARTENANT À VEOLIA OU À D'AUTRES PROPRIÉTAIRES. LES IDÉES ET INFORMATIONS CONTENUES DANS CE DOCUMENT SONT CONFIDENTIELLES ET SONT SOUMISES EN CONFIDENCE. LES RENSEIGNEMENTS CONTENUS DANS CE DOCUMENT OU LES RENSEIGNEMENTS QU'IL CONTIENT NE PEUVENT ÊTRE UTILISÉS UNIQUEMENT AUX FINS POUR LESQUELLES CE DOCUMENT EST EXPRESSÉMENT SOUMIS ET AUCUNE LICENCE IMPLICITE N'EST OCTROYÉE DE PAR LA SOUMISSION DE CE DOCUMENT. SAUF DISPOSITION CONTRAIRE DANS UNE CONVENTION ÉCRITE, V.W.T. N'ASSUME AUCUNE RESPONSABILITÉ OU OBLIGATION POUR L'UTILISATION DE CE DOCUMENT OU DES CONCEPTS ET INFORMATIONS QU'IL CONTIENT POUR DES FINS AUTRES QUE LES FINS SPÉCIFIQUES LIÉES À CE PROJET FAISANT L'OBJET DE CE DOCUMENT. EN AUCUN CAS CE DOCUMENT NE DOIT ÊTRE UTILISÉ PAR QUICONQUE EN CONFLIT AVEC V.W.T. LES CONCEPTS ET INFORMATIONS CONTENUS DANS CE DOCUMENT NE DOIVENT EN AUCUN CAS ÊTRE UTILISÉS À D'AUTRES FINS QUE CELLES POUR LESQUELLES CE DOCUMENT EST SOUMIS. TOUS DROITS D'AUTEUR, BREVET, MARQUE DE COMMERCE ET AUTRES DROITS DE PROPRIÉTÉ INTELLECTUELLE RÉSERVÉS. L'ACCEPTATION DE LA LIVRAISON DE CE DOCUMENT CONSTITUE UNE ENTENTE À L'ÉGARD DE CES MODALITÉS.

DESSINÉ/DESIGNER	M.JACQUES	2019-02-12
VÉRIFIÉ/CHECKER	S.DUQUET	2019-02-12
INGÉNIEUR/ENGINEER		
ÉCHELLE/SCALE:		

TITRE/TITLE: HYDRAPOL 250 CONTROL PANEL SCHEMATIC DIAGRAM 24VDC

CLIENT: IQALUIT WWTP

VEOLIA

VEOLIA WATER TECHNOLOGIES CANADA INC. 4105 Sartelon, Saint-Laurent, Qc, Canada Tel: (514) 334-7230

PROJET/PROJECT	DESSIN/DRAWING No	INTERNE/INTERNAL	FEUILLET/SHEET	REV.
5000218036-ELD-0006-AUT-VWT	JOME01	4 DE 9	4	

LR 60892

STD: "D" 22x34 | EBI ELECTRIC - S8011-P01 | BAR = 1" À L'ÉCHELLE D'IMPRESSION/BAR = 1" AT PLOT SCALE

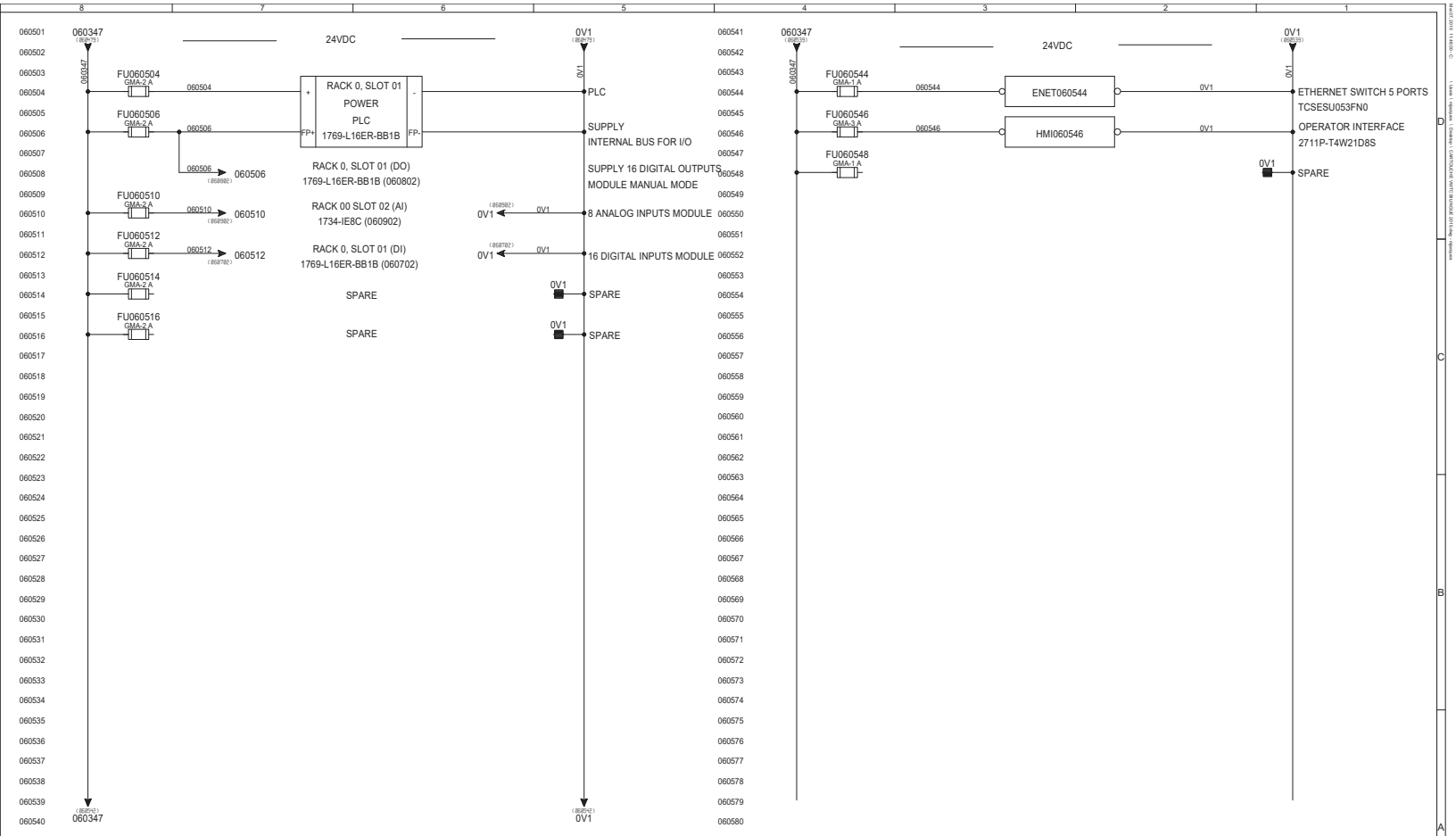

4	AS COMMISSIONNING	2019-05-17	SD				
3	AS BUILT	2019-05-06	SD				
2	FOR FAB	2019-04-02	RM				
1	FOR APPROVAL	2019-03-18	RM				
REV.	DESCRIPTION	DATE	REV.	VERIF/CHK	APPR.	ECN	

CONFIDENTIALITY AND INTELLECTUAL PROPERTY NOTICE
ALL INFORMATION CONTAINED IN THIS DOCUMENT IS THE SOLE PROPERTY OF VEOLIA WATER TECHNOLOGIES CANADA INC. AND IS SUBJECT TO COPYRIGHT, PATENT AND OTHER INTELLECTUAL PROPERTY LAWS. THE DESIGN CONCEPTS AND INFORMATION CONTAINED HEREIN ARE PROPRIETARY TO V.W.T. AND ARE SUBMITTED IN CONFIDENCE. THIS DOCUMENT MUST NOT BE USED ONLY FOR THE PURPOSE FOR WHICH THE DOCUMENT IS EXPRESSLY SUBMITTED AND NO IMPLICIT LICENCE IS GRANTED TO ANY PERSON OR ENTITY. THIS DOCUMENT MUST NOT BE DISCLOSED, CONVEYED, AND PRESUMED INFORMATION OF V.W.T. AND THEY MUST NOT BE DISCLOSED, REPRODUCED, LOANED, SUBMITTED OR USED IN WHOLE OR IN PART WITHOUT THE PRIOR WRITTEN CONSENT OF V.W.T. V.W.T. ASSUMES NO RESPONSIBILITY OR LIABILITY FOR THE USE OF THIS DOCUMENT OR THE DESIGN CONCEPTS AND INFORMATION CONTAINED HEREIN IN ANY MANNER OTHER THAN FOR THE PURPOSE FOR WHICH IT IS SUBMITTED. THE OWNERSHIP OF THIS DOCUMENT, THE DESIGN CONCEPTS AND INFORMATION CONTAINED HEREIN IS VESTED IN V.W.T. ALL COPYRIGHT, PATENT AND OTHER INTELLECTUAL PROPERTY RIGHTS ARE RESERVED. ACCEPTANCE OF THE DELIVERY OF THIS DOCUMENT CONSTITUTES AGREEMENT TO THESE TERMS AND CONDITIONS.

AVIS DE CONFIDENTIALITÉ ET DE PROPRIÉTÉ INTELLECTUELLE
L'INFORMATION CONTENUE DANS CE DOCUMENT EST LA PROPRIÉTÉ EXCLUSIVE DE VEOLIA WATER TECHNOLOGIES CANADA INC. ET EST SOUMISE À DES LOIS SUR LE DROIT D'AUTEUR, LES BREVETS ET AUTRES DROITS DE PROPRIÉTÉ INTELLECTUELLE. LES IDÉES CONCEPTUELLES CONTENUES DANS CE DOCUMENT SONT LA PROPRIÉTÉ EXCLUSIVE DE V.W.T. ET SONT SOUMISES EN CONFIDENCE. CE DOCUMENT DOIT ÊTRE UTILISÉ UNIQUEMENT AUX FINS POUR LESQUELLES CE DOCUMENT EST EXPRESSÉMENT SOUMIS ET AUCUNE LICENCE IMPLICITE N'EST ACCORDÉE À QUICONQUE. CE DOCUMENT DOIT ÊTRE DIVULGUÉ, CONVOYÉ, ET PRÉSUMÉ INFORMATION DE V.W.T. ET NE DOIVENT PAS ÊTRE DIVULGUÉS, REPRODUITS, PRÊTÉS, SOUMIS OU UTILISÉS EN TOUT OU EN PARTIE SANS LE CONSENTEMENT PRÉALABLE ÉCRIT DE V.W.T. V.W.T. DÉCLINE TOUTE RESPONSABILITÉ OU LIABILITÉ QUI RÉSULTE D'UNE UTILISATION DE CE DOCUMENT OU DES DESIGNS CONCEPTS ET INFORMATION CONTENUS DANS CE DOCUMENT À DES FINS AUTRES QUE CELLES POUR LESQUELLES CE DOCUMENT EST SOUMIS. LA PROPRIÉTÉ DE CE DOCUMENT, DES DESIGNS CONCEPTS ET INFORMATION CONTENUS DANS CE DOCUMENT SONT LA PROPRIÉTÉ EXCLUSIVE DE V.W.T. TOUTES LES LOIS SUR LE DROIT D'AUTEUR, LES BREVETS ET AUTRES DROITS DE PROPRIÉTÉ INTELLECTUELLE SONT RÉSERVÉS. L'ACCEPTATION DE LA LIVRAISON DE CE DOCUMENT CONSTITUE UNE ENTENTE À CES TERMES ET CONDITIONS.

DESSINÉ DESIGNER	M.JACQUES	DATE 2019-02-12
VÉRIFIÉ CHECKER	S.DUQUET	DATE 2019-02-12
INGÉNIEUR ENGINEER		DATE
ÉCHELLE/SCALE:		

TITRE TITLE: HYDRAPOL 250 CONTROL PANEL SCHEMATIC DIAGRAM 24VDC

CLIENT: IQALUIT WWTP

VEOLIA

VEOLIA WATER TECHNOLOGIES CANADA INC. 4105 Sartelon, Saint-Laurent, Qc, Canada Tel: (514) 334-7230

PROJET/PROJECT	DESSIN/DRAWING No	INTERNE/INTERNAL	FEUILLET/SHEET	REV.
5000218036	ELD-0006-AUT-VWT	JOME01	5 DE 9	4

LR 60892

STD: "D" 22x34 | EBI ELECTRIC - 58011-P01 | BAR = 1" À L'ÉCHELLE D'IMPRESSION/BAR = 1" AT PLOT SCALE

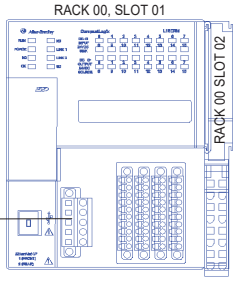

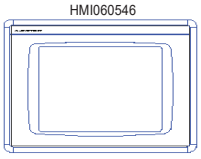

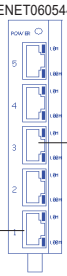

RACK 0

SLOT 01, INPUTS, 1769-L16ER-BB1B, SEE CONNECTING DETAIL DRAWING 5000218036-ELD-0006-AUT-VWT-07
SLOT 01, OUTPUTS, 1769-L16ER-BB1B, SEE CONNECTING DETAIL DRAWING 5000218036-ELD-0006-AUT-VWT-08
SLOT 02, 1734-IE8C, SEE CONNECTING DETAIL DRAWING 5000218036-ELD-0006-AUT-VWT-09

REV.	DESCRIPTION	DATE	REV.	VERIF/CHK	APPR.	ECN
4	AS COMMISSIONNING	2019-05-17	SD			
3	AS BUILT	2019-05-06	SD			
2	FOR FAB	2019-04-02	RM			
1	FOR APPROVAL	2019-03-18	RM			

CONFIDENTIALITY AND INTELLECTUAL PROPERTY NOTICE
ALL INFORMATION CONTAINED IN THIS DOCUMENT IS THE SOLE PROPERTY OF VEOLIA WATER TECHNOLOGIES CANADA INC. AND CONTAINS CONFIDENTIAL AND PROPRIETARY INFORMATION AND OTHER INTELLECTUAL PROPERTY LAWS. THE DESIGN CONCEPTS AND INFORMATION CONTAINED HEREIN ARE PROPRIETARY TO VWT AND ARE SUBMITTED IN CONFIDENCE. THIS DOCUMENT AND THE INFORMATION MUST BE USED ONLY FOR THE PURPOSE FOR WHICH THE DOCUMENT IS IS EXPRESSLY SUBMITTED AND NO IMPLICIT LICENCE IS GRANTED TO ANY PARTY TO USE ANY INFORMATION CONTAINED HEREIN WHICH IS CONFIDENTIAL AND PROPRIETARY INFORMATION OF VWT AND THEY MUST NOT BE DISCLOSED, REPRODUCED, LOANED, REBITTED OR USED IN WHOLE OR IN PART FOR ANY PURPOSE WITHOUT THE PRIOR WRITTEN CONSENT OF V.W.T. ASSUMING NO RESPONSIBILITY OR LIABILITY FOR THE USE OF THIS DOCUMENT OR THE DESIGN CONCEPTS AND INFORMATION CONTAINED OR EXPRESSED HEREIN. VWT DISCLAIMS ANY LIABILITY THAT MAY RELATE TO THE OTHER USE OR PURPOSE OF THIS DOCUMENT. IN NO EVENT SHALL THIS DOCUMENT OR THE DESIGN CONCEPTS AND INFORMATION CONTAINED OR EXPRESSED HEREIN BE USED FOR ANY PURPOSE OTHER THAN THE PURPOSE OF V.W.T. ALL COPYRIGHT, PATENT AND OTHER INTELLECTUAL PROPERTY RIGHTS ARE RESERVED. ACCEPTANCE OF THE DELIVERY OF THIS DOCUMENT CONSTITUTES AGREEMENT TO THESE TERMS AND CONDITIONS.

AVIS DE CONFIDENTIALITÉ ET DE PROPRIÉTÉ INTELLECTUELLE
L'INFORMATION CONTENUE DANS CE DOCUMENT EST LA PROPRIÉTÉ EXCLUSIVE DE VEOLIA WATER TECHNOLOGIES CANADA INC. ET CONTIENT DES INFORMATIONS CONFIDENTIELLES ET PROPRIÉTAIRES AINSI QUE D'AUTRES DROITS DE PROPRIÉTÉ INTELLECTUELLE. LES DESSINS, CONCEPTS ET INFORMATIONS CONTENUS DANS CE DOCUMENT SONT CONFIDENTIELS ET SONT SOUMIS EN CONFIDENCE. CE DOCUMENT ET LES INFORMATIONS QU'IL CONTIENT DOIVENT ÊTRE UTILISÉS EXCLUSIVEMENT AUX FINS POUR LESQUELLES CE DOCUMENT EST EXPRESSÉMENT SOUMIS ET AUCUNE LICENCE IMPLICITE N'EST OCTROYÉE DE QUELQUE MANIÈRE QUE CE SOIT À UNE PARTIE QUELCONQUE POUR UTILISER TOUTE INFORMATION CONTENUE OU EXPRIMÉE DANS LES PRÉSENTES QUI EST CONFIDENTIELLE ET PROPRIÉTAIRE DE V.T.E. ET NE DOIVENT PAS ÊTRE DIVULGUÉES, REPRODUITES, PRÊTÉES, PRÊTÉES OU UTILISÉES EN TOUTE OU EN PARTIE À QUELQUE FIN QUE CE SOIT SANS LE CONSENTEMENT PRÉALABLE ÉCRIT DE V.T.E. V.T.E. N'ASSUME AUCUNE RESPONSABILITÉ OU RESPONSABILITÉ POUR L'UTILISATION DE CE DOCUMENT OU DES CONCEPTS DE CONCEPTION ET DES INFORMATIONS CONTENUES OU EXPRIMÉES DANS LES PRÉSENTES. VWT DÉCLINE TOUTE RESPONSABILITÉ QUI PEUT SE RAPPORTER À L'UTILISATION OU À L'OBJET DE CE DOCUMENT. EN AUCUN CAS CE DOCUMENT OU LES CONCEPTS DE CONCEPTION ET LES INFORMATIONS CONTENUES OU EXPRIMÉES DANS LES PRÉSENTES NE DOIVENT ÊTRE UTILISÉS À DES FINS AUTRES QUE CELLES DE V.T.E. TOUS LES DROITS D'AUTEUR, BREVETS ET AUTRES DROITS DE PROPRIÉTÉ INTELLECTUELLE SONT RÉSERVÉS. L'ACCEPTATION DE LA LIVRAISON DE CE DOCUMENT IMPLIQUE L'ACCEPTATION DE CES TERMES ET CONDITIONS.

DESSINÉ DESIGNER	M.JACQUES	2019-02-12
VÉRIFIÉ CHECKER	S.DUQUET	2019-02-12
INGÉNIEUR ENGINEER		
ÉCHELLE/SCALE:		

TITRE/TITLE: HYDRAPOL 250 CONTROL PANEL ETHERNET NETWORK AND PLC

CLIENT: IQALUIT WWTP

VEOLIA

VEOLIA WATER TECHNOLOGIES CANADA INC. 4105 Sartelon, Saint-Laurent, Qc, Canada Tel: (514) 334-7230

PROJET/PROJECT	DESSIN/DRAWING No	INTERNE/INTERNAL	FEUILLET/SHEET	REV.
5000218036-ELD-0006-AUT-VWT	JOME01	6 DE 9		4

LR 60092

STD: "D" 22x34 | EBI ELECTRIC - 58011-P01 | BAR = 1" À L'ÉCHELLE D'IMPRESSION/BAR = 1" AT PLOT SCALE

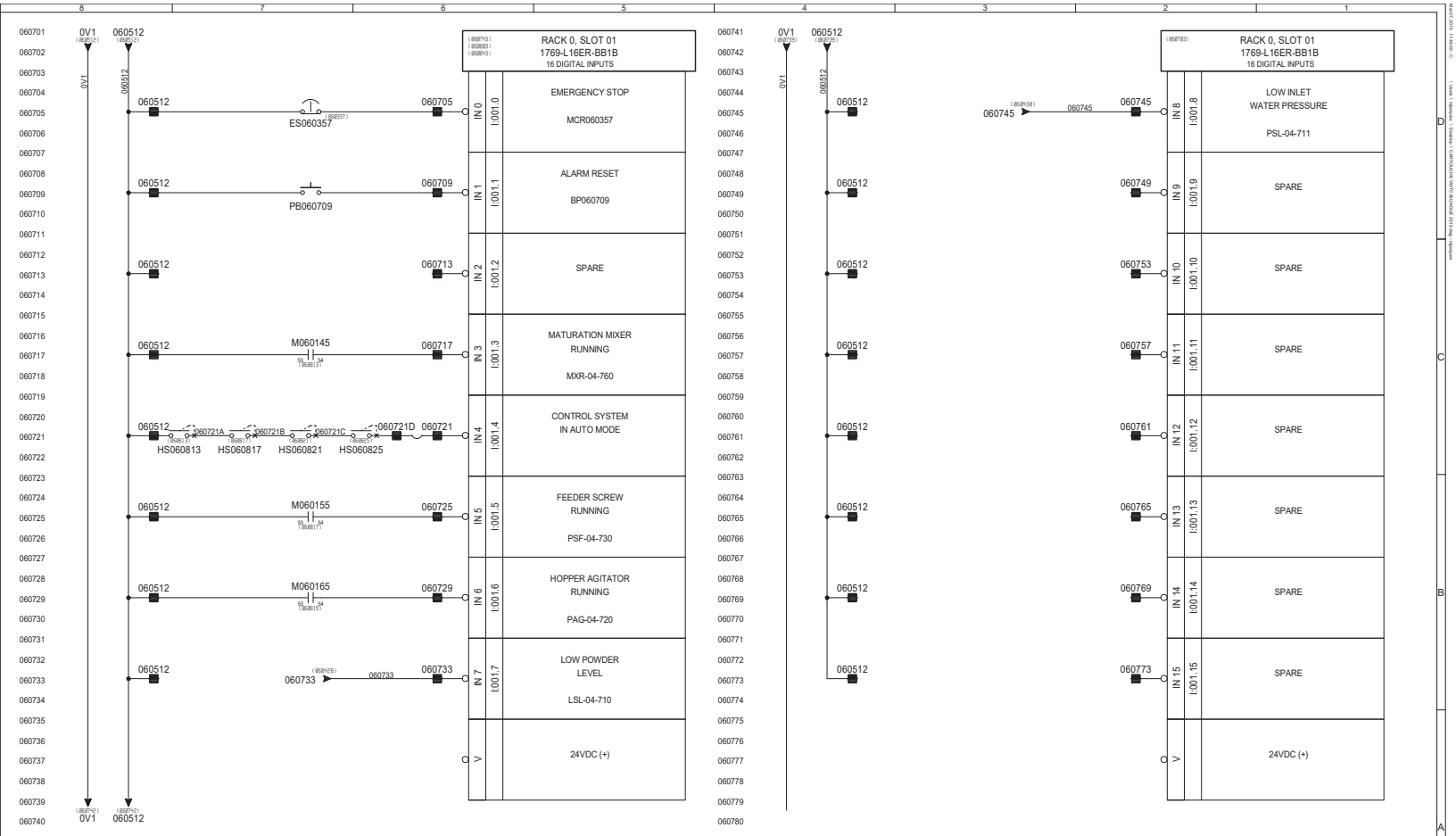

REV.	DESCRIPTION	DATE	REV.	VERIF/CHK	APPR	ECN
4	AS COMMISSIONNING	2019-05-17	SD			
3	AS BUILT	2019-05-06	SD			
2	FOR FAB	2019-04-02	RM			
1	FOR APPROVAL	2019-03-18	RM			

CONFIDENTIALITY AND INTELLECTUAL PROPERTY NOTICE
ALL INFORMATION CONTAINED IN THIS DOCUMENT IS THE SOLE PROPERTY OF VEOLIA WATER TECHNOLOGIES CANADA INC. AND CONTAINS CONFIDENTIAL AND PROPRIETARY INFORMATION AND OTHER INTELLECTUAL PROPERTY LAWS. THE DESIGN CONCEPTS AND INFORMATION CONTAINED HEREIN ARE PROPRIETARY TO "I.W.T." AND ARE SUBMITTED IN CONFIDENCE. THIS DOCUMENT AND THE INFORMATION MUST BE USED ONLY FOR THE PURPOSE FOR WHICH THE DOCUMENT IS IN POSSESSION IS SUBMITTED AND IN NO IMPLICIT LICENCE IS GRANTED TO USE THE DESIGN CONCEPTS AND INFORMATION CONTAINED IN THE CONFIDENTIAL AND PROPRIETARY INFORMATION OF V.W.T. AND THEY MUST NOT BE DISCLOSED, REPRODUCED, LOANED, RIBBITTED OR USED IN WHOLE OR IN PART FOR THE BENEFIT OF ANY THIRD PARTY WITHOUT THE V.W.T. ASSUMES NO RESPONSIBILITY OR LIABILITY FOR THE USE OF THIS DOCUMENT OR THE DESIGN CONCEPTS AND INFORMATION CONTAINED HEREIN FOR PURPOSES OTHER THAN THE SPECIFIC PURPOSE RELATE TO THE OTHER OUR PURPOSE OF THIS DOCUMENT. IN NO EVENT SHALL THIS DOCUMENT OR THE DESIGN CONCEPTS AND INFORMATION CONTAINED HEREIN BE USED BY ANY PARTY FOR ANY PURPOSE IN VIOLATION OF V.W.T. ALL COPYRIGHT, PATENT AND OTHER INTELLECTUAL PROPERTY RIGHTS ARE RESERVED. ACCEPTANCE OF THE DELIVERY OF THIS DOCUMENT CONSTITUTES AGREEMENT TO THESE TERMS AND CONDITIONS.

AVIS DE CONFIDENTIALITÉ ET DE PROPRIÉTÉ INTELLECTUELLE
L'INFORMATION CONTENUE DANS CE DOCUMENT EST LA PROPRIÉTÉ EXCLUSIVE DE VEOLIA WATER TECHNOLOGIES CANADA INC. ET CONTIENT DES RENSEIGNEMENTS CONFIDENTIELS ET DE PROPRIÉTÉ INTELLECTUELLE. LES IDÉES ET CONCEPTS D'INFORMATION CONTENUS DANS CE DOCUMENT SONT LA PROPRIÉTÉ DE V.W.T. ET SONT SOUMIS EN CONFIDENCE. CE DOCUMENT ET LES RENSEIGNEMENTS QU'IL CONTIENT DOIVENT ÊTRE UTILISÉS EXCLUSIVEMENT AUX FINS POUR LESQUELLES CE DOCUMENT EST EN POSSESSION ET SOUMIS ET AUCUNE LICENCE IMPLICITE N'EST OCTROYÉE DE UTILISER LES IDÉES ET CONCEPTS DE CONCEPTION ET D'INFORMATION CONFIDENTIELS ET DE PROPRIÉTÉ DE V.W.T. ET CES DERNIERS NE DOIVENT PAS ÊTRE DIVULGUÉS, REPRODUITS, PRÊTÉS, RIBBITÉS OU UTILISÉS EN TOUTE OU EN PARTIE AU PROFIT D'UNE TIERCE PARTIE. V.W.T. N'ASSUME AUCUNE RESPONSABILITÉ OU RESPONSABILITÉ POUR L'UTILISATION DE CE DOCUMENT OU DES IDÉES ET CONCEPTS D'INFORMATION CONTENUS DANS LES PRÉSENTES À DES FINS AUTRES QUE CELLES POUR LESQUELLES CE DOCUMENT A ÉTÉ SOUMIS. EN AUCUN CAS CE DOCUMENT OU LES IDÉES ET CONCEPTS D'INFORMATION CONTENUS DANS LES PRÉSENTES NE DOIVENT ÊTRE UTILISÉS PAR UNE PARTIE DE QUELQUE MANIÈRE QUE CE SOIT EN VIOLATION DE TOUT OBJECTIF DE V.W.T. TOUS DROITS D'AUTEUR, BREVET ET AUTRES DROITS DE PROPRIÉTÉ INTELLECTUELLE SONT RÉSERVÉS. L'ACCEPTATION DE LA LIVRAISON DE CE DOCUMENT IMPLIQUE L'ACCEPTATION DE CES MODALITÉS.

DESSINÉ DESIGNER	M.JACQUES	2019-02-12
VÉRIFIÉ CHECKER	S.DUQUET	2019-02-12
INGÉNIEUR ENGINEER		
ÉCHELLE/SCALE:		

TITRE/TITLE: HYDRAPOL 250 CONTROL PANEL
RACK 00 SLOT 01 INPUTS, 1769-L18ER-BB1B

CLIENT: IQALUIT WWTP

VEOLIA

VEOLIA WATER TECHNOLOGIES CANADA INC. 4105 Sartelon, Saint-Laurent, Qc, Canada Tel: (514) 334-7230

PROJET/PROJECT	DESSIN/DRAWING No	INTERNE/INTERNAL	FEUILLET/SHEET	REV.
5000218036-ELD-0006-AUT-VWT	JOME01	7 DE 9		4

LR 60892

STD: "D" 22x34 | EBI ELECTRIC - 58011-P01 | BAR = 1" À L'ÉCHELLE D'IMPRESSION/BAR = 1" AT PLOT SCALE

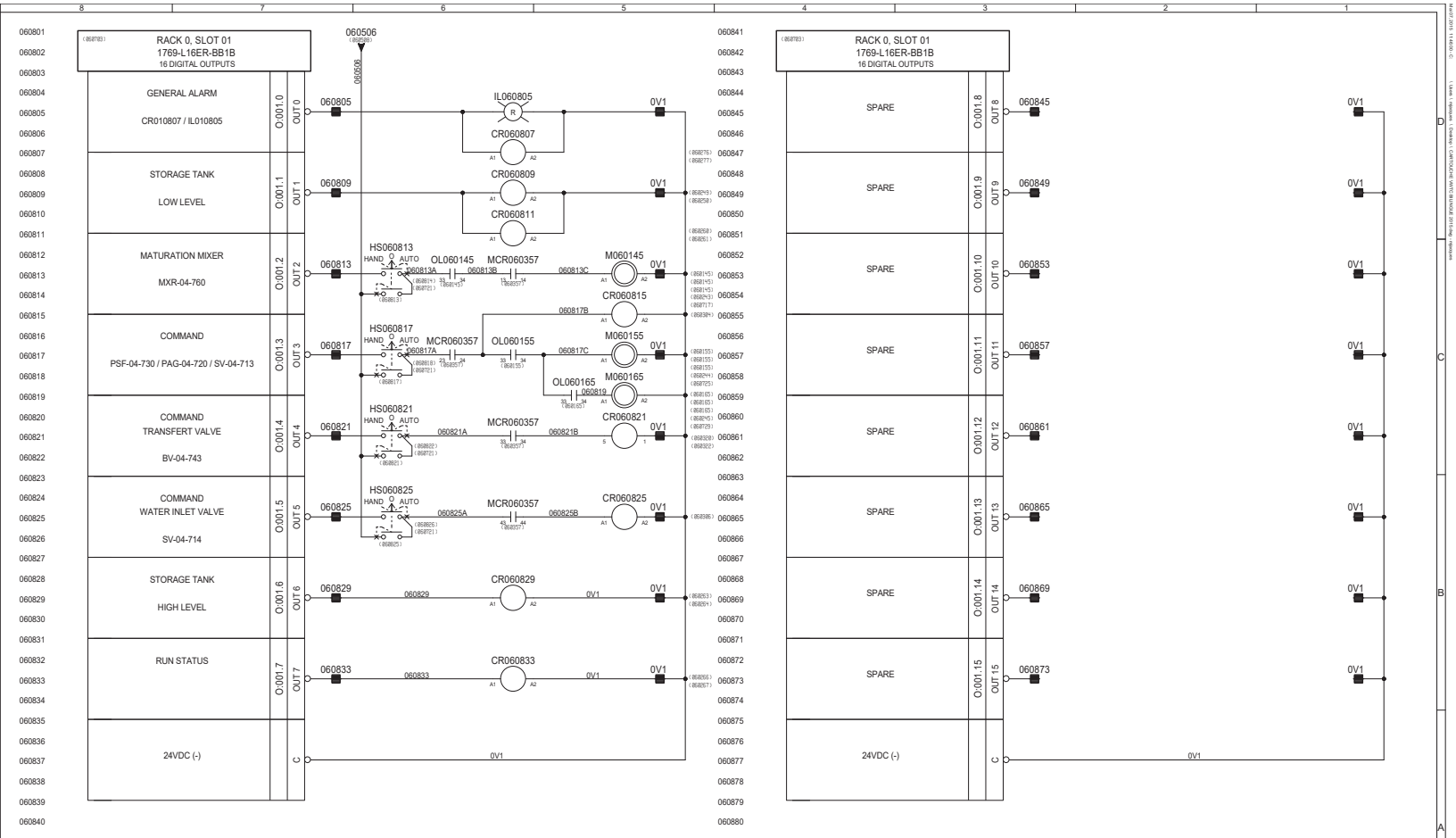

4	AS COMMISSIONNING	2019-05-17	SD				
3	AS BUILT	2019-05-06	SD				
2	FOR FAB	2019-04-02	RM				
1	FOR APPROVAL	2019-03-18	RM				
REV.	DESCRIPTION	DATE	REV.	VERIC/HK	APPR.	ECN	

CONFIDENTIALITY AND INTELLECTUAL PROPERTY NOTICE
ALL INFORMATION CONTAINED IN THIS DOCUMENT IS THE SOLE PROPERTY OF VEOLIA WATER TECHNOLOGIES CANADA INC. AND IS SUBJECT TO COPYRIGHT, TRADE SECRET AND OTHER INTELLECTUAL PROPERTY LAWS. THE DESIGN CONCEPTS AND INFORMATION CONTAINED HEREIN ARE PROPRIETARY TO V.W.T. AND ARE SUBMITTED IN CONFIDENCE. THIS DOCUMENT MAY NOT BE USED OR COPIED FOR THE PURPOSE FOR WHICH THE DOCUMENT IS BEIN SUBMITTED NOR MAY IT BE IMPLICIT LICENCE IS GRANTED TO USE THE INFORMATION CONTAINED HEREIN. THIS DOCUMENT IS CONFIDENTIAL AND PRELIMINARY INFORMATION OF V.W.T. AND THEY MUST NOT BE DISCLOSED, REPRODUCED, LOANED, TRANSFERRED OR USED IN ANY MANNER WITHOUT THE PRIOR WRITTEN CONSENT OF V.W.T. V.W.T. DISCLAIMS ITS RESPONSIBILITY OR LIABILITY FOR THE USE OF THIS DOCUMENT OR THIS DESIGN CONCEPTS AND INFORMATION CONTAINED HEREIN FOR ANY PURPOSE OTHER THAN THE PURPOSE FOR WHICH IT IS SUBMITTED. THE OWNERSHIP OF THIS DOCUMENT, THE DESIGN CONCEPTS AND INFORMATION CONTAINED HEREIN, INCLUDING ALL COPYRIGHT, PATENT AND OTHER INTELLECTUAL PROPERTY RIGHTS ARE RESERVED. ACCEPTANCE OF THE DELIVERY OF THIS DOCUMENT CONSTITUTES AGREEMENT TO THESE TERMS AND CONDITIONS.

AVIS DE CONFIDENTIALITÉ ET DE PROPRIÉTÉ INTELLECTUELLE
LE PRÉSENT DOCUMENT, LES DONNÉES ET LES RENSEIGNEMENTS QUI Y SONT CONTENUS SONT LA PROPRIÉTÉ EXCLUSIVE DE VEOLIA WATER TECHNOLOGIES CANADA INC. ET SONT SOUMIS AUX LOIS SUR LE DROIT D'AUTEUR ET SUR LA PROPRIÉTÉ INTELLECTUELLE. LES DONNÉES CONCEPTUELLES CONTENUES DANS CE DOCUMENT SONT SUPPRIMÉES DE LA V.T.W.T. ET SONT SOUMISES EN CONFIDENCE. CE DOCUMENT NE PEUT ÊTRE UTILISÉ OU COPIÉ À DES FINS AUTRES QUE CELLES POUR LESQUELLES IL A ÉTÉ SOUMIS NI DONNER LIEU À UNE LICENCE IMPLICITE À L'ÉGARD DES RENSEIGNEMENTS CONTENUS DANS CE DOCUMENT. CE DOCUMENT ET LES RENSEIGNEMENTS CONFIDENTIELS ET PRÉLIMINAIRES DE V.T.W.T. ET DOIVENT NE PAS ÊTRE DIVULGUÉS, REPRODUITS, PRÊTÉS, RÉMIS OU UTILISÉS À DES FINS AUTRES QUE CELLES POUR LESQUELLES IL A ÉTÉ SOUMIS SANS LE CONSENTEMENT PRÉALABLE ÉCRIT DE V.T.W.T. V.W.T. DÉCLINE TOUTE RESPONSABILITÉ OU RESPONSABILITÉ À L'ÉGARD DE L'USAGE DE CE DOCUMENT OU DES DONNÉES CONCEPTUELLES CONTENUES DANS CE DOCUMENT À DES FINS AUTRES QUE CELLES POUR LESQUELLES IL A ÉTÉ SOUMIS. LA PROPRIÉTÉ DE CE DOCUMENT, DES DONNÉES CONCEPTUELLES CONTENUES DANS CE DOCUMENT, DE TOUS LES DROITS D'AUTEUR, DE TOUTES LES MARQUES DE COMMERCE, DE TOUS LES BREVETS ET DE TOUTES LES AUTRES DROITS DE PROPRIÉTÉ INTELLECTUELLE EST RÉSERVÉE. ACCEPTER QUE LE DOCUMENT VOUS SOIT LIVRÉ CONSTITUE UN ACCORD À CES TERMES ET CONDITIONS.

DESSINÉ DESIGNER	M.JACQUES	2019-02-12
VÉRIFIÉ CHECKER	S.DUQUET	2019-02-12
INGÉNIEUR ENGINEER		
ÉCHELLE/SCALE:		

TITRE TITLE: HYDRAPOL 250 CONTROL PANEL
RACK 00 SLOT 01 OUTPUTS, 1769-L18ER-BB1B

CLIENT: IQALUIT WWTP

VEOLIA
VEOLIA WATER TECHNOLOGIES CANADA INC. 4105 Sartelon, Saint-Laurent, Qc, Canada Tel: (514) 334-7230

PROJET/PROJECT	DESSIN/DRAWING No	INTERNE/INTERNAL	FEUILLET/SHEET	REV.
5000218036-ELD-0006-AUT-VWT	JOME01	8 DE 9		4

LR 60892

STD: "D" 22x34 | EBI ELECTRIC - 58011-P01 | BAR = 1" À L'ÉCHELLE D'IMPRESSION/BAR = 1" AT PLOT SCALE

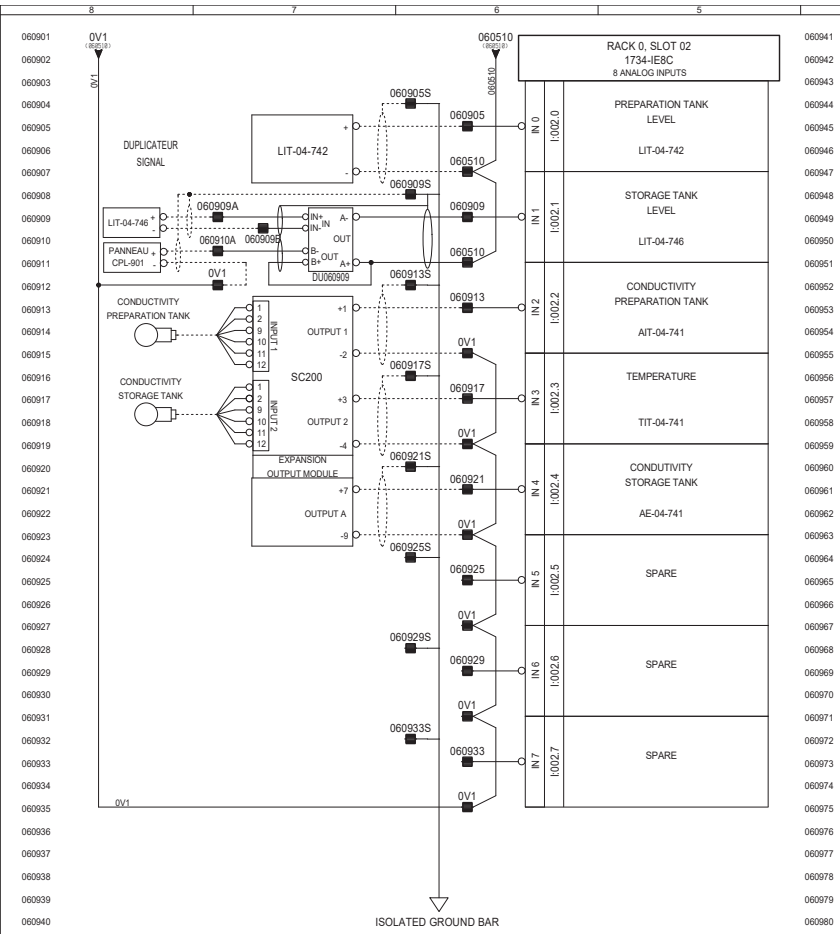

REV.	DESCRIPTION	DATE	REV.	VERIF/CHK	APPR.	ECN
4	AS COMMISSIONNING	2019-05-17	SD			
3	AS BUILT	2019-05-06	SD			
2	FOR FAB	2019-04-02	RM			
1	FOR APPROVAL	2019-03-18	RM			

CONFIDENTIALITY AND INTELLECTUAL PROPERTY NOTICE
ALL INFORMATION CONTAINED IN THIS DOCUMENT IS THE SOLE PROPERTY OF VEOLIA WATER TECHNOLOGIES CANADA INC. AND IS SUBJECT TO COPYRIGHT, TRADE SECRET AND OTHER INTELLECTUAL PROPERTY LAWS. THE DESIGN CONCEPTS AND INFORMATION CONTAINED HEREIN ARE PROPRIETARY TO V.W.T. AND ARE SUBMITTED IN CONFIDENCE. THIS DOCUMENT MUST NOT BE USED ONLY FOR THE PURPOSE FOR WHICH THE DOCUMENT IS BEIN SUBMITTED AND NO IMPLICIT LICENCE IS GRANTED TO THE RECIPIENT. THIS DOCUMENT MUST NOT BE DISCLOSED, CONFIDENTIAL AND PRELIMINARY INFORMATION OF V.W.T. AND THEY MUST NOT BE DISCLOSED, REPRODUCED, LOANED, TRANSFERRED OR USED IN WHOLE OR IN PART WITHOUT THE PRIOR WRITTEN CONSENT OF V.W.T. V.W.T. ASSUMES NO RESPONSIBILITY OR LIABILITY FOR THE USE OF THIS DOCUMENT OR THE DESIGN CONCEPTS AND INFORMATION CONTAINED HEREIN IN CONNECTION WITH ANY OTHER PROJECT OR FOR ANY PURPOSE RELATED TO THE OTHER PURPOSES OF THIS DOCUMENT. IN NO EVENT SHALL THIS DOCUMENT OR THE DESIGN CONCEPTS AND INFORMATION CONTAINED HEREIN INURE TO THE BENEFIT OF ANY THIRD PARTY. COPYRIGHT, PATENT AND OTHER INTELLECTUAL PROPERTY RIGHTS ARE RESERVED. ACCEPTANCE OF THE DELIVERY OF THIS DOCUMENT CONSTITUTES AGREEMENT TO THESE TERMS AND CONDITIONS.

AVIS DE CONFIDENTIALITÉ ET DE PROPRIÉTÉ INTELLECTUELLE
L'INFORMATION CONTENUE DANS CE DOCUMENT EST LA PROPRIÉTÉ EXCLUSIVE DE VEOLIA WATER TECHNOLOGIES CANADA INC. ET EST SOUMISE À DES DROITS D'AUTEUR, DE SECRET INDUSTRIEL ET AUTRES DROITS DE PROPRIÉTÉ INTELLECTUELLE. LES IDÉES CONCEPTUELLES CONTENUES DANS CE DOCUMENT SONT APPARENTÉES AU V.W.T. ET SONT SOUMISES EN CONFIDENCE. CE DOCUMENT DOIT ÊTRE UTILISÉ UNIQUEMENT AUX FINS POUR LESQUELLES CE DOCUMENT EST REPRÉSENTÉ. CE DOCUMENT NE DOIT PAS ÊTRE DIVULGUÉ OU DÉCLARÉ CONFIDENTIEL ET PRÉLIMINAIRE À L'INFORMATION DE V.W.T. ET NE DOIT PAS ÊTRE DIVULGUÉ, REPRODUIT, PRÊTÉ, RÉMIS OU UTILISÉ EN TOUTE OU EN PARTIE SANS LE CONSENTEMENT PRÉALABLE ÉCRIT DE V.W.T. V.W.T. DÉCLINE TOUTE RESPONSABILITÉ ET LIABILITÉ QUANT À L'USAGE DE CE DOCUMENT OU DES IDÉES ET CONCEPTS EN CONTENUS DANS CE DOCUMENT EN CONNEXION AVEC TOUT AUTRE PROJET OU À DES FINS AUTRES QUE LES FINS RELATIVES À L'OBJET DE CE DOCUMENT. EN AUCUN CAS CE DOCUMENT NI LES IDÉES ET CONCEPTS EN CONTENUS DANS CE DOCUMENT NE SERONT À L'AVANTAGE DE TOUT TIERS. LE DROIT D'AUTEUR, LE BREVET ET AUTRES DROITS DE PROPRIÉTÉ INTELLECTUELLE SONT RÉSERVÉS. L'ACCEPTATION DE LA LIVRAISON DE CE DOCUMENT CONSTITUE UNE ENTENTE À CES TERMES ET CONDITIONS.

DESSINÉ DESIGNER	M.JACQUES	2019-02-12
VÉRIFIÉ CHECKER	S.DUQUET	2019-02-12
INGÉNIEUR ENGINEER		
ÉCHELLE/SCALE:		

TITRE TITLE: HYDRAPOL 250 CONTROL PANEL
RACK 0, SLOT 02, 1734-IE8C

CLIENT: IQALUIT WWTP

VEOLIA
VEOLIA WATER TECHNOLOGIES CANADA INC. 4105 Sartelon, Saint-Laurent, Qc, Canada Tel: (514) 334-7230

PROJET/PROJECT	DESSIN/DRAWING No	INTERNE/INTERNAL	FEUILLET/SHEET	REV.
5000218036-ELD-0006-AUT-VWT	JOME01		9 DE 9	4

STD: "D" 22x34 | EBI ELECTRIC - 58011-P01 | BAR = 1" À L'ÉCHELLE D'IMPRESSION/BAR = 1" AT PLOT SCALE

LR 60892

HYDRAPOL 500 CONTROL PANEL
PROJECT - 5000218036
LCP-04-900
BFP POLYMER DOSING SYSTEM

REV.	DESCRIPTION	DATE	REV.	VERIC/HK	APPR.	ECN
4	AS COMMISSIONNING	2019-05-17	SD			
3	AS BUILT	2019-05-03	SD			
2	FOR FAB	2019-04-02	RM			
1	FOR APPROVAL	2019-03-18	RM			

CONFIDENTIALITY AND INTELLECTUAL PROPERTY NOTICE
ALL INFORMATION CONTAINED IN THIS DOCUMENT IS THE SOLE PROPERTY OF VEOLIA WATER TECHNOLOGIES CANADA INC. AND CONTAINS CONFIDENTIAL AND PROPRIETARY INFORMATION AND OTHER INTELLECTUAL PROPERTY LAWS. THE DESIGN CONCEPTS AND INFORMATION CONTAINED HEREIN ARE PROPRIETARY TO V.W.T. AND ARE SUBMITTED TO THE RECIPIENT IN CONFIDENCE. THIS DOCUMENT MUST BE USED ONLY FOR THE PURPOSE FOR WHICH THE DOCUMENT IS IS EXPRESSLY SUBMITTED AND NO IMPLICIT LICENCE IS GRANTED BY THE SUBMISSION OF THIS DOCUMENT. THIS DOCUMENT CONTAINS CONFIDENTIAL AND PRIVILEGED INFORMATION OF V.W.T. AND THEY MUST NOT BE DISCLOSED, REPRODUCED, LOANED, INSETTED OR USED IN WHOLE OR IN PART FOR ANY PURPOSE WITHOUT THE PRIOR WRITTEN CONSENT OF V.W.T. V.W.T. ASSUMES NO RESPONSIBILITY OR LIABILITY FOR THE USE OF THIS DOCUMENT OR THE DESIGN CONCEPTS AND INFORMATION CONTAINED OR REFERENCED IN IT FOR PURPOSES OTHER THAN THOSE FOR WHICH IT RELATES TO THE OTHER OUR PURPOSES OF THIS DOCUMENT. IN NO EVENT SHALL THIS DOCUMENT OR THE DESIGN CONCEPTS AND INFORMATION CONTAINED OR REFERENCED IN IT BE USED FOR ANY PURPOSE OTHER THAN THE PURPOSE OF V.W.T. ALL COPYRIGHT, PATENT AND OTHER INTELLECTUAL PROPERTY RIGHTS ARE RESERVED. ACCEPTANCE OF THE DELIVERY OF THIS DOCUMENT CONSTITUTES AGREEMENT TO THESE TERMS AND CONDITIONS.

AVIS DE CONFIDENTIALITÉ ET DE PROPRIÉTÉ INTELLECTUELLE
L'INFORMATION CONTENUE DANS CE DOCUMENT EST LA PROPRIÉTÉ EXCLUSIVE DE VEOLIA WATER TECHNOLOGIES CANADA INC. ET CONTIENT DES INFORMATIONS CONFIDENTIELLES ET PROPRIÉTAIRES AINSI QUE D'AUTRES LOIS SUR LA PROPRIÉTÉ INTELLECTUELLE. LES DESIGN CONCEPTS ET INFORMATION CONTENUS DANS CE DOCUMENT SONT LA PROPRIÉTÉ DE V.W.T. ET SONT SOUMIS AU DESTINATAIRE EN CONFIANCE. CE DOCUMENT NE DOIT ÊTRE UTILISÉ QUE DANS LE BUT POUR LEQUEL IL A ÉTÉ SOUMIS ET L'ENVOI DE CE DOCUMENT NE CONFÈRE AUCUNE LICENCE IMPLICITE. EN SOUMETTANT CE DOCUMENT, LES RENSEIGNEMENTS CONFIDENTIELS ET PRIVILÉGIÉS QU'IL CONTIENT DE V.W.T. NE DOIVENT PAS ÊTRE DIVULGUÉS, REPRODUITS, PRÊTÉS, RÉDIGÉS OU UTILISÉS EN TOUTE OU EN PARTIE À QUELQUE FIN QUE CE SOIT. V.W.T. N'ASSUME AUCUNE RESPONSABILITÉ OU RESPONSABILITÉ POUR L'UTILISATION DE CE DOCUMENT OU DES CONCEPTS DE CONCEPTION ET DES INFORMATIONS QU'IL CONTIENT OU AUXQUELS IL FAIT RÉFÉRENCE À DES FINS AUTRES QUE CELLES POUR LESQUELLES IL SE RAPPORTE DANS CE DOCUMENT. EN AUCUN CAS CE DOCUMENT NI LES CONCEPTS DE CONCEPTION OU D'INFORMATION QU'IL CONTIENT OU AUXQUELS IL FAIT RÉFÉRENCE NE DOIVENT ÊTRE UTILISÉS À DES FINS AUTRES QUE CELLES DE V.W.T. TOUS LES DROITS D'AUTEUR, BREVET ET AUTRES DROITS DE PROPRIÉTÉ INTELLECTUELLE SONT RÉSERVÉS. L'ACCEPTATION DE LA LIVRAISON DE CE DOCUMENT IMPLIQUE L'ACCEPTATION DE CES CONDITIONS.

DESSINÉ DESIGNER	M.JACQUES	2019-02-12
VÉRIFIÉ CHECKER	S.DUQUET	2019-02-12
INGÉNIEUR ENGINEER		

ÉCHELLE/SCALE:

TITRE TITLE: HYDRAPOL 500 CONTROL PANEL
TITLE PAGE

CLIENT: IQALUIT WWTP

VEOLIA

VEOLIA WATER TECHNOLOGIES CANADA INC. 4105 Sartelon, Saint-Laurent, Qc, Canada Tel: (514) 334-7230

PROJET/PROJECT	DESSIN/DRAWING No	INTERNE/INTERNAL	FEUILLET/SHEET	REV.
5000218036-EPL-0007-AUT-VWT	JOME01	1	DE 5	4

LR 60892

STD: "D" 22x34 | EBI ELECTRIC - 58011-P02 | BAR = 1" À L'ÉCHELLE D'IMPRESSION/BAR = 1" AT PLOT SCALE

M-AUT-2015-114-00 - C - \Users\mjacques\Desktop\CARTOUCHE\VWT\RENOVE 2015.dwg - Model

DRAWING INDEX

DESCRIPTION	DRAWING NUMBER
CONTROL PANEL	
TITLE PAGE	5000218036-EPL-0007-AUT-VWT-01
DRAWING LIST & LEGEND	5000218036-EPL-0007-AUT-VWT-02
OUTSIDE PANEL LAYOUT	5000218036-EPL-0007-AUT-VWT-03
INSIDE PANEL LAYOUT	5000218036-EPL-0007-AUT-VWT-04
PARTS LIST	5000218036-EPL-0007-AUT-VWT-05
SCHEMATIC DIAGRAM 600VAC	5000218036-ELD-0007-AUT-VWT-01
SCHEMATIC DIAGRAM 120VAC	5000218036-ELD-0007-AUT-VWT-02
SCHEMATIC DIAGRAM 120VAC	5000218036-ELD-0007-AUT-VWT-03
SCHEMATIC DIAGRAM 24VDC	5000218036-ELD-0007-AUT-VWT-04
SCHEMATIC DIAGRAM 24VDC	5000218036-ELD-0007-AUT-VWT-05
ETHERNET NETWORK AND PLC	5000218036-ELD-0007-AUT-VWT-06
RACK 00 SLOT 01 INPUTS, 1769-L16ER-BB1B	5000218036-ELD-0007-AUT-VWT-07
RACK 00 SLOT 01 OUTPUTS, 1769-L16ER-BB1B	5000218036-ELD-0007-AUT-VWT-08
RACK 0, SLOT 02, 1734-IEBC	5000218036-ELD-0007-AUT-VWT-09

COLORS AND WIRING GAGES		
120VAC POWER	BLACK	14AWG
120VAC CONTROL	RED	14AWG
NEUTRE	WHITE	14AWG
DRY CONTACT	YELLOW	14AWG
24VDC	BLUE(+), BLUE / WHITE(-)	16AWG (0 TO 9A) 14AWG (10A & +)
GROUND	GREEN	14AWG
ISOLATED GROUND	GREEN / YELLOW	14AWG
ANALOG I/O TWISTED PAIRS	BLACK(+), WHITE(-)	18AWG
DIGITAL I/O 120VA	RED	16AWG
DIGITAL I/O 24VDC	BLUE	16AWG
LOW VOLTAGE (12, 24, 48VDC)	BLUE	16AWG (0 À 9A) 14AWG (10A & +)
CONTROL CIRCUIT 5 TO 60VDC	BLUE(+), BLUE/WHITE(-), GREEN(GND)	16AWG (0 À 9A) 14AWG (10A & +)

SUPPLY WIRING IDENTIFICATION

XX XX XX

- LINE NUMBER
- PAGE NUMBER
- PANEL NUMBER (IF MORE THAN ONE PANEL
  01 - PANEL No1
  02 - PANEL No2, ...

LEGEND LIST

- PSL — LOW PRESSURE SWITCH
- PSH — HIGH PRESSURE SWITCH
- LSL — LOW LEVEL SWITCH
- LSH — HIGH LEVEL SWITCH
- LSNO — LIMIT SWITCH NO
- LSNC — LIMIT SWITCH NC
- FSL — LOW FLOW SWITCH
- FSH — HIGH FLOW SWITCH
- TSL — LOW TEMPERATURE SWITCH
- TSH — HIGH TEMPERATURE SWITCH
- OFF DELAY TIMER [NO]
- OFF DELAY TIMER [NC]
- ON DELAY TIMER [NC]
- ON DELAY TIMER [NO]
- NO — CONTACT NO
- NC — CONTACT NC
- GND — GROUND
- GND — ISOLATED GROUND
- TERMINAL OF PANEL
- TERMINAL OF OTHER PANEL

- HS — MAINTAINED TWO POSITIONS SELECTOR
- HS — MAINTAINED THREE POSITIONS SELECTOR
- HS — THREE POSITIONS SELECTOR BOTH RETURN
- HS — THREE POSITIONS SELECTOR LEFT RETURN
- HS — THREE POSITIONS SELECTOR RIGHT RETURN
- PBNO — PUSH BUTTON NO
- PBNC — PUSH BUTTON NC
- ES — EMERGENCY STOP PUSH BUTTON
- POT — POTENTIOMETER
- FU — FUSE
- CB — CIRCUIT BREAKER
- IL — PUSH-TO-TEST LIGHT
- IL — LIGHT
- CMR — CURRENT MONITORING RELAY
- AC / A/C — AIR CONDITIONER UNIT

- M — CONTACTOR COIL
- TR — TIMER RELAY COIL
- CR — CONTROL RELAY COIL
- MCR — MASTER CONTROL RELAY COIL
- CR — CONTROL RELAY COIL WITH SURGE SURPRESSOR
- FV — SOLENOID
- R — RESISTANCE
- HN — HORN
- F — FAN / VENTILATOR / BLOWER
- CT — CURRENT TRANSFORMER
- PC — 120VAC DUPLEX OUTLET
- AM — AMPEREMETER
- VM — VOLMETER

- DISC — FUSED DISCONNECT SWITCH
- FU — 3PH FUSE HOLDER
- DISC — DISCONNECT SWITCH
- OL — MANUAL STARTER WITH THERMINAL & MAGNETIC PROTECTION
- OL — MANUAL STARTER WITH MAGNETIC PROTECTION
- M — CONTACTOR
- OL — OVERLOAD

- TR (H1, H2, X1, X2) — TRANSFORMER
- TR (H1, H2, X1, X2, X3, X4) — MULTI-TAPS TRANSFORMER

LR 60892

REV.	DESCRIPTION	DATE	DES.	VERIF.	APPR.	ECN
4	AS COMMISSIONNING	2019-05-17	SD			
3	AS BUILT	2019-05-03	SD			
2	FOR FAB	2019-04-02	RM			
1	FOR APPROVAL	2019-03-18	RM			

CONFIDENTIALITY AND INTELLECTUAL PROPERTY NOTICE
ALL INFORMATION CONTAINED IN THIS DOCUMENT IS THE SOLE PROPERTY OF VEOLIA WATER TECHNOLOGIES CANADA INC. AND CONTAINS CONFIDENTIAL AND PROPRIETARY INFORMATION AND OTHER INTELLECTUAL PROPERTY LAWS. THE DESIGN CONCEPTS AND INFORMATION CONTAINED HEREIN ARE PROPRIETARY TO VWT, AND ARE SUBMITTED IN CONFIDENCE. THIS DOCUMENT AND ITS CONTENTS MUST BE USED ONLY FOR THE PURPOSE FOR WHICH THE DOCUMENT IS IN POSSESSION IT SUBMITTED AND IN NO IMPLICIT LICENCE IS GRANTED TO ANY OTHER USE. THIS DOCUMENT MAY CONTAIN TRADE SECRETS, CONFIDENTIAL AND PRIVILEGED INFORMATION OF VWT, AND THEY MUST NOT BE DISCLOSED, REPRODUCED, LOANED, RIBBITTED OR USED IN WHOLE OR IN PART FOR ANY PURPOSE WITHOUT THE PRIOR WRITTEN CONSENT OF V.W.T. V.W.T. ASSUMES NO RESPONSIBILITY OR LIABILITY FOR THE USE OF THIS DOCUMENT OR THE DESIGN CONCEPTS AND INFORMATION CONTAINED HEREIN FOR PURPOSES OTHER THAN THE SPECIFIC PROJECT RELATED TO THE OTHER OUR PURPOSE OF THIS DOCUMENT. IN NO EVENT SHALL THIS DOCUMENT OR THE DESIGN CONCEPTS AND INFORMATION CONTAINED HEREIN BE CONSTRUED AS RELATING TO ANY MANNER OR FORM WHATSOEVER OR GRANTING ANY LICENSE OR RIGHT OF V.W.T. ALL COPYRIGHT, PATENT AND OTHER INTELLECTUAL PROPERTY RIGHTS ARE RESERVED. ACCEPTANCE OF THE DELIVERY OF THIS DOCUMENT CONSTITUTES AGREEMENT TO THESE TERMS AND CONDITIONS.

AVIS DE CONFIDENTIALITÉ ET DE PROPRIÉTÉ INTELLECTUELLE
L'INFORMATION CONTENUE DANS CE DOCUMENT EST LA PROPRIÉTÉ EXCLUSIVE DE VEOLIA WATER TECHNOLOGIES CANADA INC. ET CONTIENT DES RENSEIGNEMENTS CONFIDENTIELS ET EXCLUSIFS AINSI QUE D'AUTRES DROITS DE PROPRIÉTÉ INTELLECTUELLE. LES IDÉES ET CONCEPTS D'INFORMATION CONTENUS DANS CE DOCUMENT SONT LA PROPRIÉTÉ DE VWT ET ONT ÉTÉ SOUMIS EN CONFIDENCE. CE DOCUMENT ET SON CONTENU DOIVENT ÊTRE UTILISÉS EXCLUSIVEMENT AUX FINS POUR LESQUELLES CE DOCUMENT EST EN POSSESSION ET NE DOIVENT FAIRE L'OBJET D'AUCUNE AUTRE UTILISATION. CE DOCUMENT PEUT CONTENIR DES SECRETS COMMERCIAUX, DES RENSEIGNEMENTS CONFIDENTIELS ET PRIVILÉGIÉS QUI SONT LA PROPRIÉTÉ DE VWT, ET CES RENSEIGNEMENTS NE DOIVENT PAS ÊTRE DIVULGUÉS, REPRODUITS, PRÊTÉS, RÉMIS OU UTILISÉS EN TOUTE OU EN PARTIE À QUELQUE FIN QUE CE SOIT SANS LE CONSENTEMENT ÉCRIT PRÉALABLE DE V.W.T. V.W.T. DÉCLINE TOUTE RESPONSABILITÉ ET TOUTE RESPONSABILITÉ QUANT À L'UTILISATION DE CE DOCUMENT OU DES IDÉES ET CONCEPTS QUI Y SONT CONTENUS À DES FINS AUTRES QUE CELLES QUI SONT PRÉCISÉMENT LIÉES À L'OBJET DE CE DOCUMENT. EN AUCUN CAS CE DOCUMENT NI LES IDÉES ET CONCEPTS QUI Y SONT CONTENUS NE DOIVENT ÊTRE INTERPRÉTÉS COMME SE RAPPORTANT À QUELQUE MANIÈRE OU SOUS QUELQUE FORME QUE CE SOIT À UNE AUTRE FIN QUE CELLE QUI EST PRÉCISÉMENT LIÉE À L'OBJET DE CE DOCUMENT OU CONFÉRANT UNE LICENCE OU UN DROIT DE V.W.T. TOUS DROITS D'AUTEUR, BREVET ET AUTRES DROITS DE PROPRIÉTÉ INTELLECTUELLE SONT RÉSERVÉS. L'ACCEPTATION DE LA LIVRAISON DE CE DOCUMENT SIGNIFIE QUE LE DESTINATAIRE ACCEPTE LES CONDITIONS SUSMENTIONNÉES.

DESSINÉ DESIGNER	M.JACQUES
DATE	2019-02-12
VÉRIFIÉ CHECKER	S.DUQUET
DATE	2019-02-12
INGÉNIEUR ENGINEER	
DATE	
ÉCHELLE/SCALE:	

TITRE/TITLE: HYDRAPOL 500 CONTROL PANEL
DRAWING LIST & LEGEND

CLIENT: IQALUIT WWTP

VEOLIA

VEOLIA WATER TECHNOLOGIES CANADA INC. 4105 Sartelon, Saint-Laurent, Qc, Canada Tel: (514) 334-7230

PROJET/PROJECT	DESSIN/DRAWING No	INTERNE/INTERNAL	FEUILLET/SHEET	REV.
5000218036-EPL-0007-AUT-VWT	JOME01	2 DE 5		4

STD: "D" 22x34 | EBI ELECTRIC - 58011-P02 | BAR = 1" À L'ÉCHELLE D'IMPRESSION/BAR = 1" AT PLOT SCALE

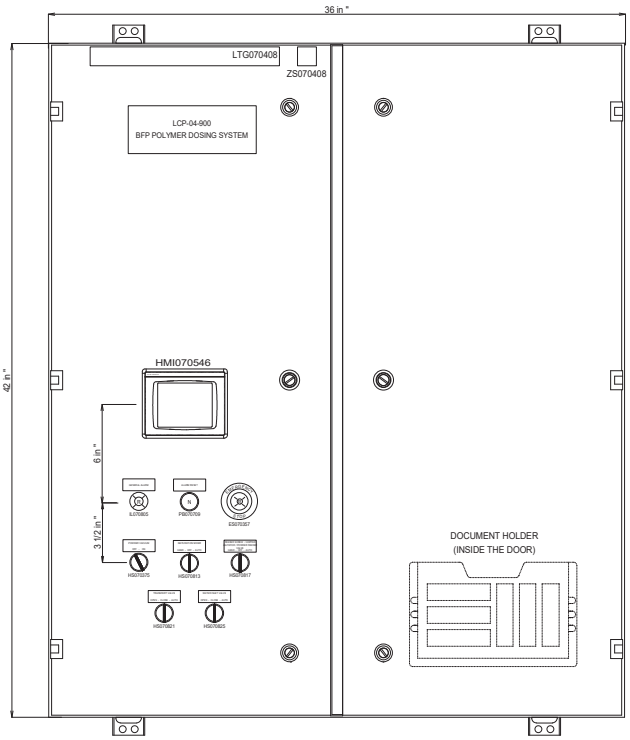

ENCLOSURE 42" x 36" x 12"

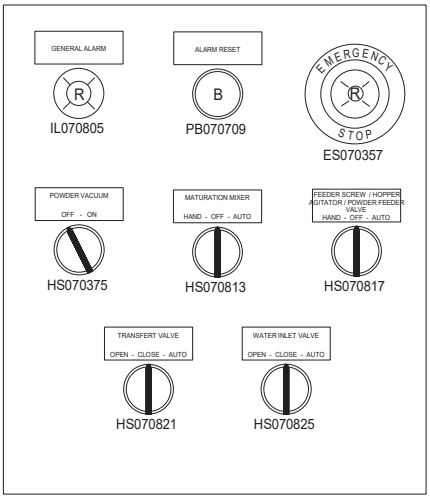

DOOR DETAILS

REV.	DESCRIPTION	DATE	REV.	VERIF/CHK	APPR	ECN
4	AS COMMISSIONNING	2019-05-17	SD			
3	AS BUILT	2019-05-03	SD			
2	FOR FAB	2019-04-02	RM			
1	FOR APPROVAL	2019-03-18	RM			

CONFIDENTIALITY AND INTELLECTUAL PROPERTY NOTICE
ALL INFORMATION CONTAINED IN THIS DOCUMENT IS THE SOLE PROPERTY OF VEOLIA WATER TECHNOLOGIES CANADA INC. AND CONTAINS CONFIDENTIAL AND PROPRIETARY INFORMATION AND OTHER INTELLECTUAL PROPERTY LAWS. THE DESIGN CONCEPTS AND INFORMATION CONTAINED HEREIN ARE PROPRIETARY TO VWT, AND ARE SUBMITTED IN CONFIDENCE FOR THE SOLE USE OF THE RECIPIENT. IT MUST BE USED ONLY FOR THE PURPOSE FOR WHICH THE DOCUMENT IS SUBMITTED. IT SUBMITTED AND IN SUPPLICITY LICENCE IS GRANTED TO THE RECIPIENT. THIS DOCUMENT MAY CONTAIN TRADE SECRETS, CONFIDENTIAL AND PRIVILEGED INFORMATION OF VWT, AND THEY MUST NOT BE DISCLOSED, REPRODUCED, LOANED, INSETTED OR USED IN WHOLE OR IN PART FOR ANY PURPOSE OTHER THAN THAT FOR WHICH IT IS SENT. VWT ASSUMES NO RESPONSIBILITY OR LIABILITY FOR THE USE OF THIS DOCUMENT OR THE DESIGN CONCEPTS AND INFORMATION CONTAINED HEREIN FOR PURPOSES OTHER THAN THE SPECIFIC PROJECT RELATED TO THE INTENDED PURPOSE OF THIS DOCUMENT. IN NO EVENT SHALL THIS DOCUMENT OR THE DESIGN CONCEPTS AND INFORMATION CONTAINED HEREIN BE USED BY ANY PARTY FOR ANY PURPOSE IN VIOLATION OF VWT'S ALL COPYRIGHT, PATENT AND OTHER INTELLECTUAL PROPERTY RIGHTS ARE RESERVED. ACCEPTANCE OF THE DELIVERY OF THIS DOCUMENT CONSTITUTES AGREEMENT TO THESE TERMS AND CONDITIONS.

AVIS DE CONFIDENTIALITÉ ET DE PROPRIÉTÉ INTELLECTUELLE
L'INFORMATION CONTENUE DANS CE DOCUMENT EST LA PROPRIÉTÉ EXCLUSIVE DE VEOLIA WATER TECHNOLOGIES CANADA INC. ET CONTIENT DES RENSEIGNEMENTS CONFIDENTIELS ET EXCLUSIFS AINSI QUE D'AUTRES LOIS SUR LA PROPRIÉTÉ INTELLECTUELLE. LES DESSINS, CONCEPTS ET INFORMATIONS CONTENUS DANS CE DOCUMENT SONT LA PROPRIÉTÉ EXCLUSIVE DE VWT, ET SONT SOUMIS À LA CONFIDENTIALITÉ. CE DOCUMENT NE PEUT ÊTRE UTILISÉ QUE DANS LE BUT POUR LEQUEL IL A ÉTÉ SOUMIS. LE DESTINATAIRE SE VOIT ACCORDER UNE LICENCE D'UTILISATION LIMITÉE À CET USAGE. CE DOCUMENT PEUT CONTENIR DES SECRETS COMMERCIAUX, DES RENSEIGNEMENTS CONFIDENTIELS ET PRIVILÉGIÉS QUI APPARTIENNENT À VWT, ET NE DOIVENT PAS ÊTRE DIVULGUÉS, REPRODUITS, PRÊTÉS, RÉDIGÉS OU UTILISÉS EN TOUTE OU EN PARTIE À QUELQUE FIN QUE CE SOIT AUTRE QUE CELLE POUR LAQUELLE IL A ÉTÉ ENVOYÉ. VWT N'ASSUME AUCUNE RESPONSABILITÉ OU OBLIGATION POUR L'UTILISATION DE CE DOCUMENT OU DES CONCEPTS ET RENSEIGNEMENTS QU'IL CONTIENT À DES FINS AUTRES QUE CELLES PRÉVUES DANS LE CADRE DU PROJET AUQUEL CE DOCUMENT SE RAPPORTE. EN AUCUN CAS CE DOCUMENT NE PEUT ÊTRE UTILISÉ PAR QUICONQUE À QUELQUE FIN QUE CE SOIT EN VIOLATION DES DROITS D'AUTEUR, DES BREVETS ET AUTRES DROITS DE PROPRIÉTÉ INTELLECTUELLE APPARTENANT À VWT. LA LIVRAISON DE CE DOCUMENT NE CONSTITUE EN AUCUN CAS UNE CESSION DE CES DROITS. LA LIVRAISON DE CE DOCUMENT EST RÉGIE PAR LES CONDITIONS ÉNONCÉES CI-DESSUS.

DESSINÉ DESIGNER	M.JACQUES	DATE 2019-02-12
VÉRIFIÉ CHECKER	S.DUQUET	DATE 2019-02-12
INGÉNIEUR ENGINEER		DATE
ÉCHELLE/SCALE:		

TITRE/TITLE: HYDRAPOL 500 CONTROL PANEL OUTSIDE PANEL LAYOUT

CLIENT: IQALUIT WWTP

VEOLIA

VEOLIA WATER TECHNOLOGIES CANADA INC. 4105 Sartelon, Saint-Laurent, Qc, Canada Tel: (514) 334-7230

PROJET/PROJECT	DESSIN/DRAWING No	INTERNE/INTERNAL	FEUILLET/SHEET	REV.
5000218036-EPL-0007-AUT-VWT	JOME01	3	DE 5	4

LR 60892

STD: "D" 22x34 | EBI ELECTRIC - 58011-P02 | BAR = 1" À L'ÉCHELLE D'IMPRESSION/BAR = 1" AT PLOT SCALE

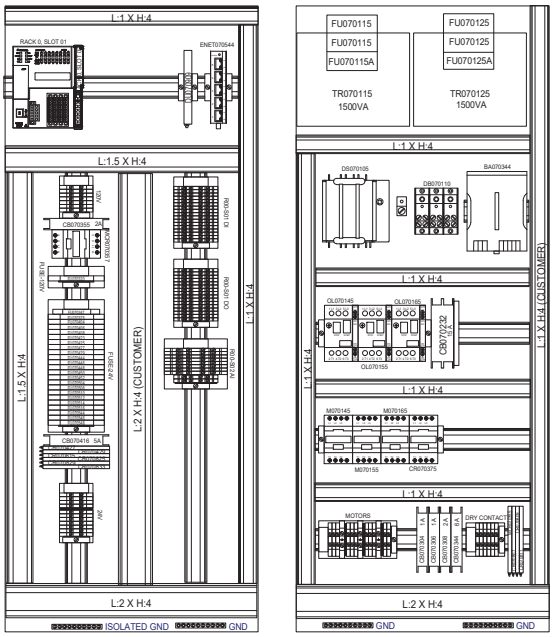

REV.	DESCRIPTION	DATE	REV.	VERIF/CHK	APPR	ECN
4	AS COMMISSIONNING	2019-05-17	SD			
3	AS BUILT	2019-05-03	SD			
2	FOR FAB	2019-04-02	RM			
1	FOR APPROVAL	2019-03-18	RM			

CONFIDENTIALITY AND INTELLECTUAL PROPERTY NOTICE
ALL INFORMATION CONTAINED IN THIS DOCUMENT IS THE SOLE PROPERTY OF VEOLIA WATER TECHNOLOGIES CANADA INC. AND CONTAINS CONFIDENTIAL AND PROPRIETARY INFORMATION AND OTHER INTELLECTUAL PROPERTY LAWS. THE DESIGN CONCEPTS AND INFORMATION CONTAINED HEREIN ARE PROPRIETARY TO V.W.T. AND ARE SUBMITTED IN CONFIDENCE. THIS DOCUMENT OR ANY PART THEREOF MUST BE USED ONLY FOR THE PURPOSE FOR WHICH THE DOCUMENT IS EXPRESSLY SUBMITTED AND NO DUPLICATE LICENCE IS GRANTED OR IMPLIED. THIS DOCUMENT AND ITS CONTENTS ARE TO BE KEPT CONFIDENTIAL AND PRIVILEGED INFORMATION OF V.W.T. AND THEY MUST NOT BE DISCLOSED, REPRODUCED, LOANED, INSERTED OR USED IN WHOLE OR IN PART FOR ANY PURPOSE WITHOUT THE PRIOR WRITTEN CONSENT OF V.W.T. V.W.T. ASSUMES NO RESPONSIBILITY OR LIABILITY FOR THE USE OF THIS DOCUMENT OR THE DESIGN CONCEPTS AND INFORMATION CONTAINED HEREIN FOR PURPOSES OTHER THAN THE SPECIFIC PROJECT RELATED TO THE OTHER OUR PURPOSE OF THIS DOCUMENT. IN NO EVENT SHALL THIS DOCUMENT OR THE DESIGN CONCEPTS AND INFORMATION CONTAINED HEREIN BE USED BY ANY PARTY FOR ANY PURPOSE OTHER THAN THE SPECIFIC PROJECT FOR WHICH IT WAS PROVIDED. UNDER THE COPYRIGHT LAWS OF CANADA AND OTHER COUNTRIES, THIS DOCUMENT IS AN UNPUBLISHED WORK OF V.W.T. ALL COPYRIGHT, PATENT AND OTHER INTELLECTUAL PROPERTY RIGHTS ARE RESERVED. ACCEPTANCE OF THE DELIVERY OF THIS DOCUMENT CONSTITUTES AGREEMENT TO THESE TERMS AND CONDITIONS.

AVIS DE CONFIDENTIALITÉ ET DE PROPRIÉTÉ INTELLECTUELLE
L'INFORMATION CONTENUE DANS CE DOCUMENT EST LA PROPRIÉTÉ EXCLUSIVE DE VEOLIA WATER TECHNOLOGIES CANADA INC. ET CONTIENT DES RENSEIGNEMENTS CONFIDENTIELS ET EXCLUSIFS AINSI QUE D'AUTRES DROITS DE PROPRIÉTÉ INTELLECTUELLE. LES IDÉES ET CONCEPTS ET RENSEIGNEMENTS CONTENUS DANS CE DOCUMENT SONT CONFIDENTIELS ET APPARTIENNENT À V.W.T. CE DOCUMENT EST SOUMIS EN CONFIDENCE. IL NE PEUT ÊTRE UTILISÉ QUE DANS LE BUT POUR LEQUEL IL A ÉTÉ SOUMIS ET AUCUNE LICENCE N'EST ACCORDÉE OU IMPLIQUÉE. IL NE DOIT PAS ÊTRE DIVULGUÉ, REPRODUIT, PRÊTÉ, INSÉRÉ OU UTILISÉ EN TOUT OU EN PARTIE À QUELQUE FIN QUE CE SOIT SANS LE CONSENTEMENT PRÉALABLE ÉCRIT DE V.W.T. V.W.T. DÉCLINE TOUTE RESPONSABILITÉ ET TOUTE OBLIGATION À L'ÉGARD DE L'UTILISATION DE CE DOCUMENT OU DES IDÉES ET CONCEPTS QUI Y SONT CONTENUS À DES FINS AUTRES QUE CELLES POUR LESQUELLES IL A ÉTÉ SOUMIS. EN AUCUN CAS CE DOCUMENT OU LES IDÉES ET CONCEPTS QUI Y SONT CONTENUS NE DOIVENT ÊTRE UTILISÉS PAR UNE PARTIE À DES FINS AUTRES QUE CELLES POUR LESQUELLES IL A ÉTÉ SOUMIS. EN VERTU DES LOIS SUR LE DROIT D'AUTEUR DU CANADA ET D'AUTRES PAYS, CE DOCUMENT EST UNE ŒUVRE INÉDITE DE V.W.T. TOUS LES DROITS D'AUTEUR, BREVETS ET AUTRES DROITS DE PROPRIÉTÉ INTELLECTUELLE SONT RÉSERVÉS. L'ACCEPTATION DE LA LIVRAISON DE CE DOCUMENT CONSTITUE UNE ENTENTE À CES CONDITIONS ET MODALITÉS.

DESSINÉ DESIGNER	M.JACQUES
DATE	2019-02-12
VÉRIFIÉ CHECKER	S.DUQUET
DATE	2019-02-12
INGÉNIEUR ENGINEER	
DATE	
ÉCHELLE/SCALE:	

TITRE/TITLE: HYDRAPOL 500 CONTROL PANEL INSIDE PANEL LAYOUT

CLIENT: IQALUIT WWTP

VEOLIA

VEOLIA WATER TECHNOLOGIES CANADA INC. 4105 Sartelon, Saint-Laurent, Qc, Canada Tel: (514) 334-7230

PROJET/PROJECT	DESSIN/DRAWING No	INTERNE/INTERNAL	FEUILLET/SHEET	REV.
5000218036-EPL-0007-AUT-VWT	JOME01	4 DE 5		4

LR 60892

STD: "D" 22x34 | EBI ELECTRIC - 58011-P02 | BAR = 1" À L'ÉCHELLE D'IMPRESSION/BAR = 1" AT PLOT SCALE

Mai/07 2015 - 11:49:00 - C:\Users\...\Desktop\...\CAD\AUT-EPL-0007-AUT-VWT-INSIDE PANEL LAYOUT.dwg - Model

Items	Qty	Part Number	Description	Manufacturer
ENCLOSURE	1	!SP1404283	Special Enclosure 42" x 36" x 12"	Hammond
ENCLOSURE	1	BOIHAMPKT99	Document Holder	Hammond
LTG070408	1	!RABUC-LED300-NW	LED Bar 300mm, 3 watts, 24 vdc (88861)	RAB
ZS070408	1	BOIHAMFDS1	Door Switch for Light	Hammond
DS070105	1	!TELGS1DU3	Fused Disconnect Switch 30A/600V (Fus. Type ,	Schneider Electric
DS070105	1	!TELGS2AE8	Operating Shaft 30a 12.6"	Schneider Electric
DS070105	1	!TELGS2AH420	Operating Handle Red / Yellow NEMA 4-4X	Schneider
DS070105	3	FUSAJT15	Fuse 15 amp.Type J Time Delay	Mersen
DB070110	3	KCONMPDBC6263	Protective Cover for Distribution Block	Mersen
DB070110	1	KCONMPDB63133	Distribution Block	Mersen
OL070145	1	TELGV2ME05	Manual Starter 0,63-1A	Schneider Electric
OL070145	1	TELGVAN20	Aux Contact for GV2, GV3P, 2NO	Schneider Electric
M070145	1	TELLC1D09BD	Contactor 7,5HP/600V 1NO-1NF 24VDC	Schneider Electric
M070145	1	KTELLADN20	Aux Contact 2NO	Schneider Electric
OL070155	1	TELGV2ME05	Manual Starter 0,63-1A	Schneider Electric
OL070155	1	TELGVAN20	Aux Contact for GV2, GV3P, 2NO	Schneider Electric
M070155	1	TELLC1D09BD	Contactor 7,5HP/600V 1NO-1NF 24VDC	Schneider Electric
M070155	1	KTELLADN20	Aux Contact 2NO	Schneider Electric
OL070165	1	TELGV2ME06	Manual Starter 1-1,6A	Schneider Electric
OL070165	1	TELGVAN20	Aux Contact forGV2, GV3P, 2NO	Schneider Electric
M070165	1	TELLC1D09BD	Contactor 7,5HP/600V 1NO-1NF 24VDC	Schneider Electric
M070165	1	KTELLADN20	Aux Contact 2NO	Schneider Electric
CB070232	1	!SU202M-C15	Breaker 15A 2 poles	ABB
CR070375	1	TELLC1D09BD	Contactor 7,5HP/600V 1NO-1NF 24VDC	Schneider Electric
TR070115	1	!TRASQD9070FB3B	Fuse Holder for XFO (Primairy + Secondairy)	Schneider Electric
FU070115	2	FUSATQR5	Fuse 5 amp, CC, 600 v, Time Delay	Mersen
FU070115A	1	FUSATDR15	Fuse 15 amp, CC, 600 v, Time Delay	Mersen
TR070115	1	KSQD9070FSC2	Protective Cover for Transformer	Schneider Electric
TR070115	3	!SPL0001T	Protective Cover for Fuse Holder	Littelfuse
TR070115	1	TRASQD9070T1500D5	Transformer 1500 va 600/120 v.	Schneider Electric
TR070125	1	!TRASQD9070FB3B	Fuse Holder for XFO (Primairy + Secondairy)	Schneider Electric
FU070125	2	FUSATQR5	Fuse 5 amp, CC, 600 v, Time Delay	Mersen
TR070125	1	KSQD9070FSC2	Protective Cover for Transformer	Schneider Electric
TR070125	3	!SPL0001T	Protective Cover for Fuse Holder	Littelfuse
TR070125	1	!TRASQD9070T1500D37	Transformer 1500 va 600/120-240v v.	Schneider Electric
FU070125A	1	ABBE9230CC	Fuse Holder 30 amp, IP20, 2 poles, type CC	ABB
FU070125A	2	FUSATDR15	Fuse 15 amp, CC, 600 v, Time Delay	Mersen
BA070344	1	OMRS8VK-G48024	Power Supply 24 vcc 20 amp.	Omron
RELAYS	8	OMRG2RV-SL700 DC24	Control Relay 6 mm, 6 amp, 24 vdc	Omron
RELAYS	1	KOMRP2RVM-200B	Connecting Bar 20 poles for G2RV	Omron
CR070821	1	OMRG2R-1-SN-DC24 (S)	Relais 1 pôle 24 vca c/a témoin	Omron
CR070821	1	OMRP2RF-05-E	Base de relais type G2R-1	Omron
MCR070357	1	TELCAD50BD	Relay 10A 5NO 24VCC	Schneider Electric
HMI070546	1	2711P-T4W21D8S	PanelView Plus 7 4.3"	Allen-Bradley

PLC	1	1769-L16ER-BB1B	PLC	Allen-Bradley
PLC	1	1734-IE8C	Analog Input Card	Allen-Bradley
PLC	1	1734-TB	Point I/O terminal base	Allen-Bradley
DU070909	1	7920400000	Duplicateur signal 4-20mA	Weidmuller
ENET070544	1	TELTCSESU053FN0	Ethernet Switch 5 ports	Schneider Electric
HS070375	1	KTELZB4BD2	Selector 2 Position Maintained	Schneider Electric
HS070375	1	KTELZB4BZ101	Contact Block 1NO	Schneider Electric
HS070813	4	KTELZB4BD3	Selector 3 Position Maintained	Schneider Electric
HS070813	4	KTELZB4BZ103	Contact Block 2NO	Schneider Electric
HS070813	4	KTELZBE101	Contact Block 1NO	Schneider Electric
IL070805	1	KTELZB4BV043	Pilot Light Red (LED)	Schneider Electric
IL070805	1	TELZB4BVB4	Mounting Block with Light, LED 24V Red	Schneider Electric
ES070357	1	TELZB4BW643	Red Lit Mushroom Button	Schneider Electric
ES070357	1	TELZB4BVB4	Mounting Block with Light, LED 24V Red	Schneider Electric
ES070357	1	KTELZBE101	Contact Block 1NO	Schneider Electric
ES070357	1	KTELZBE102	Contact Block 1NC	Schneider Electric
ES070357	1	KTELZBY9320	Round EMERGENCY STOP Label	Schneider Electric
PB070709	1	KTELZB4BA2	Black Flush Button	Schneider Electric
PB070709	1	KTELZB4BZ101	Contact Block 1NO	Schneider Electric
GND	3	KN8020A108T	Grounding Bar 10 Holes	Ilsco
TERMINAL BLOCKS	37	ENT1SNK506010R0000	Terminal Block 30 amp. 6mm	ABB
TERMINAL BLOCKS	5	ENT1SNK505910R0000	End Cover	ABB
TERMINAL BLOCKS	32	ENT1SNK505210R0000	Terminal Block 2 Levels 5 mm	ABB
TERMINAL BLOCKS	2	ENT1SNK505960R0000	End Cover	ABB
TERMINAL BLOCKS	8	ENT1SNK505212R0000	Terminal Block 3 Levels	ABB
TERMINAL BLOCKS	1	ENT1SNK505961R0000	End Cover	ABB
FUSE	1	ENT1SNK508418R0000	Fuse Holder 1/4" x 1 1/4"	ABB
FUSE	23	ENT1SNK508425R0000	Fuse Terminal Block 2 Level	ABB
FUSE	1	ENT1SNK508911R0000	End Cover	ABB
FUSE	24	KFUSGMA2	Fuse 250 v. 2 amp. M5 x 20	Bussmann
FUSE	4	FUSGMA5	Fuse 125 v. 5 amp. M5 x 20	Bussmann
FUSE	5	KFUSGMA1	Fuse 250 v. 1 amp. M5 x 20	Bussmann
FUSE	4	FUSGMA3	Fuse 250 v. 3 amp. M5 x 20	Bussmann
FUSE	5	FUSABC20	Fuse 250 v. 20 amp. 1/4 x 1 1/4	Bussmann
TERMINAL BLOCKS	14	ENT1SNK900002R0000	End Stop	ABB
CB070304, CB070306	2	!SU201M-C1	Breaker 1A	ABB
CB070308, CB070355	2	!SU201M-C2	Breaker 2A	ABB
CB070416	1	!SU201M-C5	Breaker 5A	ABB
CB070344	1	!SU201M-C6	Breaker 6A	ABB
PATCH CORD	1	!CAT5ES-06GN	Ethernet Cable RJ45, 6 ft, Green	Infinite cables

LR 60892

REV.	DESCRIPTION	DATE	REV.	VERICHK	APPR	ECN
4	AS COMMISSIONNING	2019-05-17	SD			
3	AS BUILT	2019-05-03	SD			
2	FOR FAB	2019-04-02	RM			
1	FOR APPROVAL	2019-03-18	RM			

CONFIDENTIALITY AND INTELLECTUAL PROPERTY NOTICE
ALL INFORMATION CONTAINED IN THIS DOCUMENT IS THE SOLE PROPERTY OF VEOLIA WATER TECHNOLOGIES CANADA INC. AND CONTAINS CONFIDENTIAL AND PROPRIETARY INFORMATION AND OTHER INTELLECTUAL PROPERTY LAWS. THE DESIGN CONCEPTS AND INFORMATION CONTAINED HEREIN ARE PROPRIETARY TO V.W.T. AND ARE SUBMITTED IN CONFIDENCE. THIS DOCUMENT AND THE INFORMATION MUST BE USED ONLY FOR THE PURPOSE FOR WHICH THE DOCUMENT IS IS EXPRESSLY SUBMITTED AND NO IMPLICIT LICENCE IS GRANTED BY THE SUBMISSION OF THIS DOCUMENT. THIS DOCUMENT IS STRICTLY CONFIDENTIAL AND PRIVILEGED INFORMATION OF V.W.T. AND THEY MUST NOT BE DISCLOSED, REPRODUCED, LOANED, WRITTEN OR USED IN WHOLE OR IN PART FOR THE BENEFIT OF ANY THIRD PARTY WITHOUT V.W.T.'S EXPRESS AND PRIOR WRITTEN CONSENT. V.W.T. ASSUMES NO RESPONSIBILITY OR LIABILITY FOR THE USE OF THIS DOCUMENT OR THE DESIGN CONCEPTS AND INFORMATION CONTAINED HEREIN FOR PURPOSES OTHER THAN THE SPECIFIC PROJECT RELATED TO THE OTHER OUR PURPOSES OF THIS DOCUMENT. IN NO EVENT SHALL THIS DOCUMENT OR THE DESIGN CONCEPTS AND INFORMATION CONTAINED HEREIN BE CONSTRUED AS GRANTING ANY LICENCE OR RIGHT OF V.W.T. ALL COPYRIGHT, PATENT AND OTHER INTELLECTUAL PROPERTY RIGHTS ARE RESERVED. ACCEPTANCE OF THE DELIVERY OF THIS DOCUMENT CONSTITUTES AGREEMENT TO THESE TERMS AND CONDITIONS.

AVIS DE CONFIDENTIALITÉ ET DE PROPRIÉTÉ INTELLECTUELLE
L'INFORMATION CONTENUE DANS CE DOCUMENT EST LA PROPRIÉTÉ EXCLUSIVE DE VEOLIA WATER TECHNOLOGIES CANADA INC. ET CONTIENT DES RENSEIGNEMENTS CONFIDENTIELS ET PROPRIÉTAIRES AINSI QUE D'AUTRES LOIS SUR LA PROPRIÉTÉ INTELLECTUELLE. LES IDÉES ET CONCEPTS ET RENSEIGNEMENTS CONTENUS DANS CE DOCUMENT SONT CONFIDENTIELS ET SONT SOUMIS EN CONFIDENCE. CE DOCUMENT ET LES RENSEIGNEMENTS QU'IL CONTIENT NE DOIVENT ÊTRE UTILISÉS QUE DANS LE BUT POUR LEQUEL CE DOCUMENT EST EXPRESSÉMENT SOUMIS ET AUCUNE LICENCE IMPLICITE N'EST ACCORDÉE DE PAR LA SOUMISSION DE CE DOCUMENT. CE DOCUMENT EST STRICTEMENT CONFIDENTIEL ET PRIVILÉGIÉ ET LES RENSEIGNEMENTS QU'IL CONTIENT NE DOIVENT PAS ÊTRE DIVULGUÉS, REPRODUITS, PRÊTÉS, ÉCRITS OU UTILISÉS EN TOUT OU EN PARTIE AU PROFIT DE TOUTE TIERCE PARTIE SANS LE CONSENTEMENT PRÉALABLE ET EXPRÈS DE V.W.T. V.W.T. DÉCLINE TOUTE RESPONSABILITÉ OU RESPONSABILITÉ QUANT À L'UTILISATION DE CE DOCUMENT AINSI QUE DES IDÉES ET CONCEPTS QUE CONTIENT LE PRÉSENT DOCUMENT POUR DES FINS AUTRES QUE CELLES QUI SE RAPPORTENT DIRECTEMENT AU PROJET VISÉ PAR LE PRÉSENT DOCUMENT. AUCUNE DISPOSITION DU PRÉSENT DOCUMENT NE DOIT ÊTRE INTERPRÉTÉE COMME ACCORDANT UNE LICENCE OU UN DROIT QUELCONQUE RELATIF À LA PROPRIÉTÉ INTELLECTUELLE DE V.W.T. TOUS LES DROITS D'AUTEUR, BREVETS ET AUTRES DROITS DE PROPRIÉTÉ INTELLECTUELLE SONT RÉSERVÉS. L'ACCEPTATION DE LA LIVRAISON DE CE DOCUMENT IMPLIQUE L'ACCEPTATION DE CES CONDITIONS.

DESSINÉ DESIGNER	M.JACQUES	DATE 2019-02-12
VÉRIFIÉ CHECKER	S.DUQUET	DATE 2019-02-12
INGÉNIEUR ENGINEER		DATE
ÉCHELLE/SCALE:		

TITRE/TITLE: HYDRAPOL 500 CONTROL PANEL PARTS LIST

CLIENT: IQALUIT WWTP

VEOLIA

VEOLIA WATER TECHNOLOGIES CANADA INC. 4105 Sartelon, Saint-Laurent, Qc, Canada Tel: (514) 334-7230

PROJET/PROJECT	DESSIN/DRAWING No	INTERNE/INTERNAL	FEUILLET/SHEET	REV.
5000218036-EPL-0007-AUT-VWT	JOME01	5 DE 5		4

STD: "D" 22x34 | EBI ELECTRIC - 58011-P02 | BAR = 1" À L'ÉCHELLE D'IMPRESSION/BAR = 1" AT PLOT SCALE

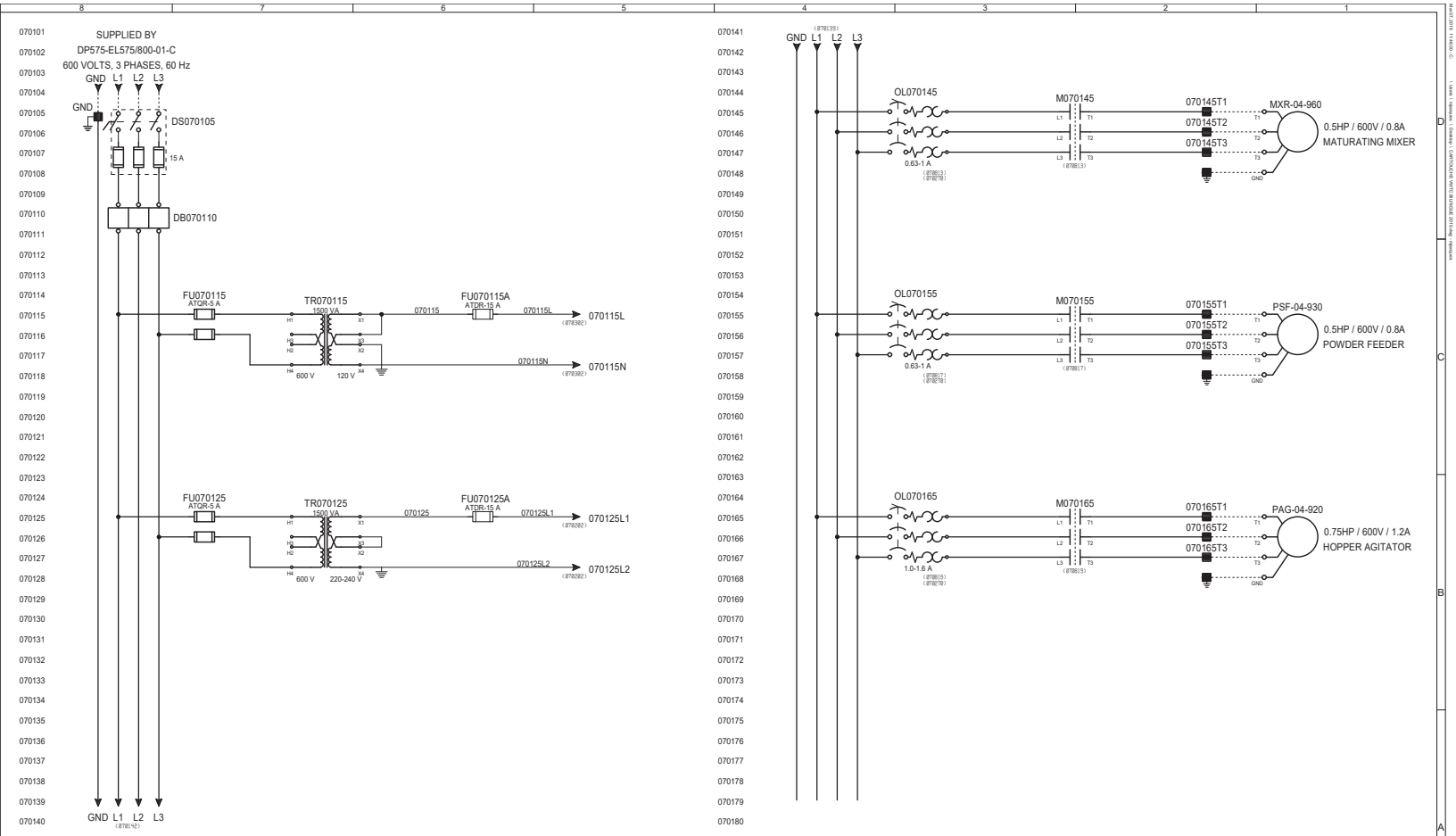

LR 60892

REV.	DESCRIPTION	DATE	REV.	VERIF/CHK	APPR.	ECN
4	AS COMMISSIONNING	2019-05-17	SD			
3	AS BUILT	2019-05-03	SD			
2	FOR FAB	2019-04-02	RM			
1	FOR APPROVAL	2019-03-18	RM			

CONFIDENTIALITY AND INTELLECTUAL PROPERTY NOTICE
ALL INFORMATION CONTAINED IN THIS DOCUMENT IS THE SOLE PROPERTY OF VEOLIA WATER TECHNOLOGIES CANADA INC. AND INCLUDES TRADE SECRETS AND OTHER PROPRIETARY AND OTHER INTELLECTUAL PROPERTY LAWS. THE DESIGN CONCEPTS AND INFORMATION CONTAINED HEREIN ARE PROPRIETARY TO VWTC AND ARE SUBJECT TO NON-DISCLOSURE AND NON-USE RESTRICTIONS. THIS MUST BE USED ONLY FOR THE PURPOSE FOR WHICH THE DOCUMENT IS BEIN RECEIVED. THIS MUST NOT BE COPIED OR USED IN ANY OTHER WAY. THIS DOCUMENT IS SUBMITTED HEREIN TO SUPPLIER LICENCE IS GRANTED TO RECEIVE AND USE THIS DOCUMENT. THIS DOCUMENT IS STRICTLY CONFIDENTIAL AND PRIVILEGED INFORMATION OF VWTC AND THEY MUST NOT BE DISCLOSED, REPRODUCED, LOANED, RESETTED OR USED IN ANY WAY WITHOUT THE EXPRESS WRITTEN CONSENT OF VEOLIA WATER TECH. VWTC ASSUMES NO RESPONSIBILITY OR LIABILITY FOR THE USE OF THIS DOCUMENT OR THE DESIGN CONCEPTS AND INFORMATION CONTAINED HEREIN FOR ANY PURPOSE OTHER THAN THE PURPOSE FOR WHICH IT IS INTENDED. THIS DOCUMENT OR THE DESIGN CONCEPTS AND INFORMATION CONTAINED HEREIN SHALL NOT BE DISCLOSED TO ANY THIRD PARTY. ALL COPYRIGHT, PATENT AND OTHER INTELLECTUAL PROPRITY RIGHTS ARE RESERVED. ACCEPTANCE OF THE DELIVERY OF THIS DOCUMENT CONSTITUTES AGREEMENT TO THESE TERMS AND CONDITIONS.

AVIS DE CONFIDENTIALITÉ ET DE PROPRIÉTÉ INTELLECTUELLE
L'INFORMATION CONTENUE DANS CE DOCUMENT EST LA PROPRIÉTÉ EXCLUSIVE DE VEOLIA WATER TECHNOLOGIES CANADA INC. ET INCLUT DES SECRETS COMMERCIAUX ET AUTRES DROITS DE PROPRIÉTÉ INTELLECTUELLE. LES DESIGNS CONCEPTS ET INFORMATIONS CONTENUS DANS CE DOCUMENT SONT SUPPRIMÉS DE LA LOI ET SONT SOUMIS AUX CONDITIONS DE NON-DIVULGATION ET DE NON-UTILISATION. CE DOCUMENT DOIT ÊTRE UTILISÉ SEULEMENT AUX FINS POUR LESQUELLES IL EST RECEVOIR. CE DOCUMENT NE DOIT PAS ÊTRE COPIÉ OU UTILISÉ DE QUELQUE AUTRE MANIÈRE. CE DOCUMENT EST SOUMIS AUX FINS DE LICENCE DE RECEVOIR ET UTILISER CE DOCUMENT. CE DOCUMENT EST UNE INFORMATION CONFIDENTIELLE ET PRIVILÉGIÉE DE VWTC ET VWTC NE DOIT PAS ÊTRE DIVULGUÉE, REPRODUITE, PRÊTÉE, RÉSERVÉE OU UTILISÉE DE TOUTE AUTRE MANIÈRE SANS LE CONSENTEMENT ÉCRIT DE VEOLIA WATER TECH. VWTC DÉCLINE TOUTE RESPONSABILITÉ OU LIABILITÉ POUR TOUTE UTILISATION DE CE DOCUMENT OU DES DESIGNS ET CONCEPTS ET INFORMATION CONTENUS DANS CE DOCUMENT À DES FINS AUTRES QUE CELLES POUR LESQUELLES IL EST PRÉVU. CE DOCUMENT OU LES DESIGNS ET CONCEPTS ET INFORMATION CONTENUS DANS CE DOCUMENT NE DOIVENT PAS ÊTRE DIVULGUÉS À UNE TIERCE PARTIE. TOUS LES DROITS D'AUTEUR, BREVETS ET AUTRES DROITS DE PROPRIÉTÉ INTELLECTUELLE ET D'AUTRE NATURE SONT RÉSERVÉS. L'ACCEPTATION DE LA LIVRAISON DE CE DOCUMENT CONSTITUE UN ACCORD À CES TERMES ET CONDITIONS.

DESSINÉ DESIGNER	M.JACQUES	DATE 2019-02-12
VÉRIFIÉ CHECKER	S.DUQUET	DATE 2019-02-12
INGÉNIEUR ENGINEER		DATE
ÉCHELLE/SCALE:		

TITRE TITLE: HYDRAPOL 500 CONTROL PANEL SCHEMATIC DIAGRAM 600VAC

CLIENT: IQALUIT WWTP

VEOLIA

VEOLIA WATER TECHNOLOGIES CANADA INC. 4105 Sartelon, Saint-Laurent, Qc, Canada Tel: (514) 334-7230

PROJET/PROJECT	DESSIN/DRAWING No	INTERNE/INTERNAL	FEUILLET/SHEET	REV.
5000218036-ELD-0007-AUT-VWT		JOME01	1 DE 9	4

STD: "D" 22x34 | EBI ELECTRIC - 58011-P02 | BAR = 1" À L'ÉCHELLE D'IMPRESSION/BAR = 1" AT PLOT SCALE

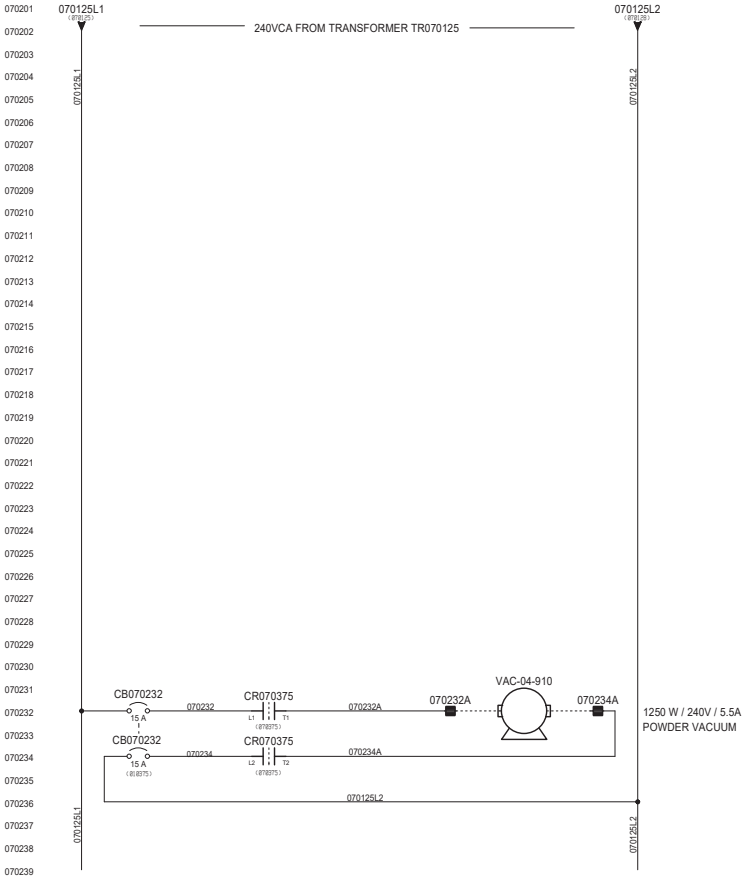

MOTORS STATUS

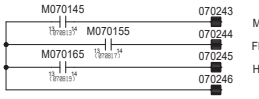

MATURATION MIXER STATUS
FEEDER STATUS
HOPPER AGITATOR STATUS

INTERLOCKS

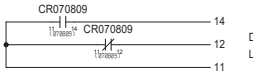

DOSING PUMPS PROTECTION
LOW LEVEL STORAGE TANK

ALARM DRY CONTACT

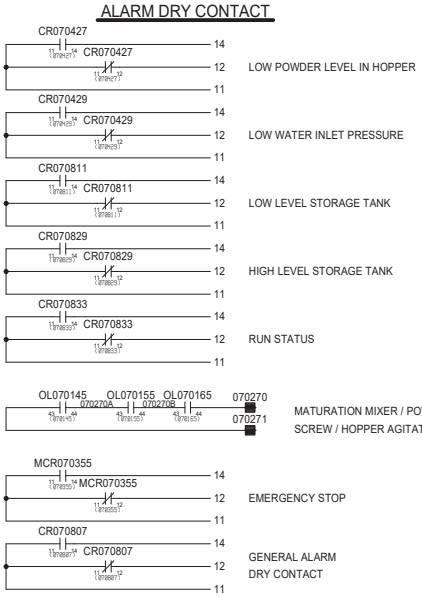

LOW POWDER LEVEL IN HOPPER
LOW WATER INLET PRESSURE
LOW LEVEL STORAGE TANK
HIGH LEVEL STORAGE TANK
RUN STATUS
MATURATION MIXER / POWDER FEEDER SCREW / HOPPER AGITATOR OL.
EMERGENCY STOP
GENERAL ALARM DRY CONTACT

REV.	DESCRIPTION	DATE	REV.	VERIF/CHK	APPR	ECN
4	AS COMMISSIONNING	2019-05-17	SD			
3	AS BUILT	2019-05-03	SD			
2	FOR FAB	2019-04-02	RM			
1	FOR APPROVAL	2019-03-18	RM			

CONFIDENTIALITY AND INTELLECTUAL PROPERTY NOTICE
ALL INFORMATION CONTAINED IN THIS DOCUMENT IS THE SOLE PROPERTY OF VEOLIA WATER TECHNOLOGIES CANADA INC. AND CONTAINS CONFIDENTIAL AND PROPRIETARY INFORMATION AND OTHER INTELLECTUAL PROPERTY LAWS. THE DESIGN CONCEPTS AND INFORMATION CONTAINED HEREIN ARE PROPRIETARY TO "I.D.C." AND ARE CONFIDENTIAL AND PROTECTED BY COPYRIGHT LAWS. THIS DOCUMENT MUST BE USED ONLY FOR THE PURPOSE FOR WHICH THE DOCUMENT IS EXPRESSLY SUBMITTED AND NO IMPLICIT LICENCE IS GRANTED TO THE USE OF THE DESIGN CONCEPTS AND INFORMATION OR OF ANY CONFIDENTIAL AND PRIVILEGED INFORMATION OF "I.D.C." AND THEY MUST NOT BE DISCLOSED, REPRODUCED, LOANED, INSERTED OR USED IN WHOLE OR IN PART FOR THE BENEFIT OF ANY PERSON OTHER THAN "I.D.C." "I.D.C." ASSUMES NO RESPONSIBILITY OR LIABILITY FOR THE USE OF THIS DOCUMENT OR THE DESIGN CONCEPTS AND INFORMATION CONTAINED HEREIN FOR PURPOSES OTHER THAN THE PURPOSE WHICH RELATES TO THE OTHERWISE PURPOSE OF THIS DOCUMENT. IN NO EVENT SHALL THIS DOCUMENT OR THE DESIGN CONCEPTS AND INFORMATION CONTAINED HEREIN BE USED FOR ANY PURPOSE WHICH MAY BE IN CONFLICT OF "I.D.C." ALL COPYRIGHT, PATENT AND OTHER INTELLECTUAL PROPERTY RIGHTS ARE RESERVED. ACCEPTANCE OF THE DELIVERY OF THIS DOCUMENT CONSTITUTES AGREEMENT TO THESE TERMS AND CONDITIONS.

AVIS DE CONFIDENTIALITÉ ET DE PROPRIÉTÉ INTELLECTUELLE
L'INFORMATION CONTENUE DANS CE DOCUMENT EST LA PROPRIÉTÉ EXCLUSIVE DE VEOLIA WATER TECHNOLOGIES CANADA INC. ET CONTIENT DES RENSEIGNEMENTS CONFIDENTIELS ET EXCLUSIFS AINSI QUE D'AUTRES LOIS SUR LA PROPRIÉTÉ INTELLECTUELLE. LES IDÉES ET CONCEPTS D'INFORMATION CONTENUS DANS CE DOCUMENT SONT EXCLUSIVES DE LA "I.D.C." ET SONT CONSIDÉRÉS DE NATURE CONFIDENTIELLE ET PROTÉGÉS PAR LES LOIS SUR LE DROIT D'AUTEUR. CE DOCUMENT NE DOIT ÊTRE UTILISÉ QUE DANS LE BUT POUR LEQUEL IL EST SOUMIS EXPRESSÉMENT ET AUCUNE LICENCE IMPLICITE N'EST ACCORDÉE QUANT À L'UTILISATION DE CES IDÉES ET CONCEPTS D'INFORMATION OU DE TOUTE INFORMATION CONFIDENTIELLE ET PRIVILÉGIÉE DE "I.D.C." ET ELLE NE DOIVENT PAS ÊTRE DIVULGUÉES, REPRODUITES, PRÊTÉES, INSÉRÉES OU UTILISÉES EN TOUTE OU EN PARTIE AU PROFIT DE TOUTE PERSONNE AUTRE QUE "I.D.C." "I.D.C." DÉCLINE TOUTE RESPONSABILITÉ QUANT À L'UTILISATION DE CE DOCUMENT OU DES IDÉES ET CONCEPTS D'INFORMATION CONTENUS DANS LES PRÉSENTES À DES FINS AUTRES QUE CELLES QUI SE RAPPORTENT À L'OBJET DE CE DOCUMENT. EN AUCUN CAS CE DOCUMENT NE DOIT ÊTRE UTILISÉ À DES FINS CONTRAIRES AUX INTÉRÊTS DE "I.D.C." TOUS DROITS D'AUTEUR, BREVETS ET AUTRES DROITS DE PROPRIÉTÉ INTELLECTUELLE SONT RÉSERVÉS. L'ACCEPTATION DE LA LIVRAISON DE CE DOCUMENT IMPLIQUE L'ENGAGEMENT AUX PRÉSENTES CONDITIONS ET MODALITÉS.

DESSINÉ DESIGNER	M.JACQUES
DATE	2019-02-12
VÉRIFIÉ CHECKER	S.DUQUET
DATE	2019-02-12
INGÉNIEUR ENGINEER	
DATE	
ÉCHELLE/SCALE:	

TITRE/TITLE: HYDRAPOL 500 CONTROL PANEL SCHEMATIC DIAGRAM 120VAC

CLIENT: IQALUIT WWTP

VEOLIA

VEOLIA WATER TECHNOLOGIES CANADA INC. 4105 Sartelon, Saint-Laurent, Qc, Canada Tel: (514) 334-7230

PROJET/PROJECT	DESSIN/DRAWING No	INTERNE/INTERNAL	FEUILLET/SHEET	REV.
5000218036	ELD-0007-AUT-VWT	JOME01	2 DE 9	4

LR 60892

STD: "D" 22x34 | EBI ELECTRIC - 58011-P02 | BAR = 1" À L'ÉCHELLE D'IMPRESSION/BAR = 1" AT PLOT SCALE

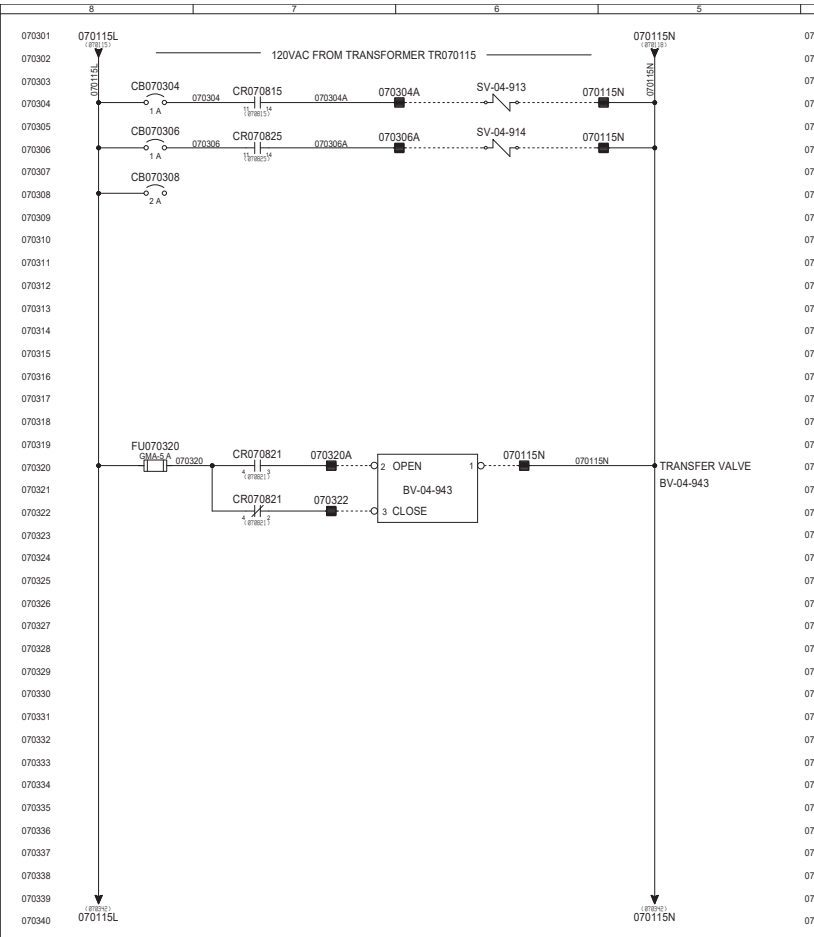

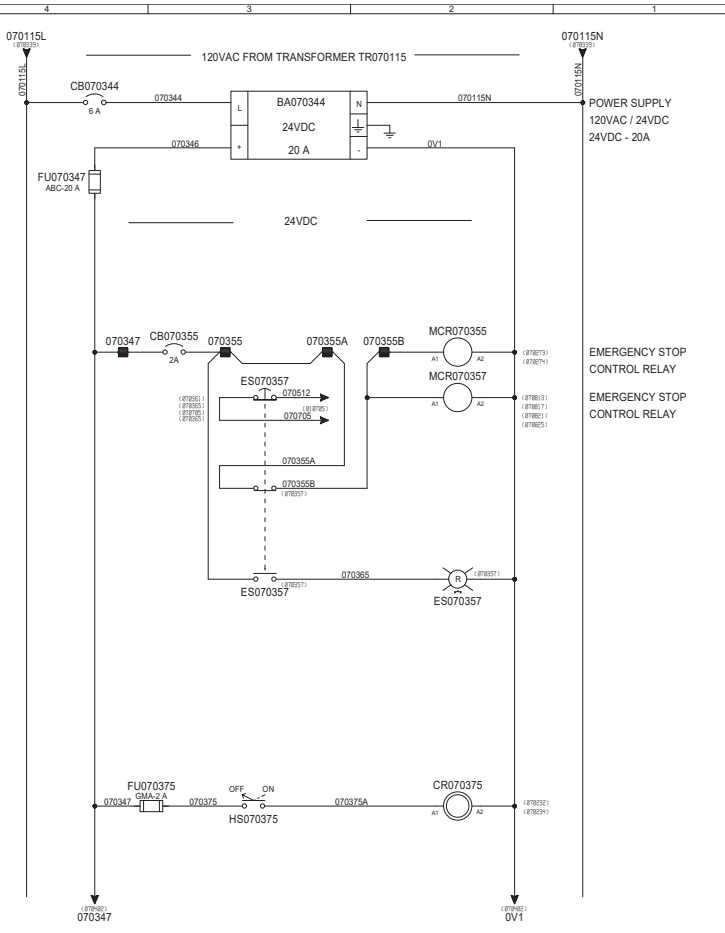

4	AS COMMISSIONNING	2019-05-17	SD				
3	AS BUILT	2019-05-03	SD				
2	FOR FAB	2019-04-02	RM				
1	FOR APPROVAL	2019-03-18	RM				
REV.	DESCRIPTION	DATE	REV.	VERIFIÉ/CHK	APPR.	ECN	

CONFIDENTIALITY AND INTELLECTUAL PROPERTY NOTICE: ALL INFORMATION CONTAINED IN THIS DOCUMENT IS THE SOLE PROPERTY OF VEOLIA WATER TECHNOLOGIES CANADA INC. AND MAY CONTAIN CONFIDENTIAL INFORMATION AND/OR OTHER INTELLECTUAL PROPERTY LAWS. THE DESIGN CONCEPTS AND INFORMATION CONTAINED HEREIN ARE PROPRIETARY TO V.W.T. AND ARE SUBMITTED IN CONFIDENCE. THIS DOCUMENT AND THE INFORMATION MUST BE USED ONLY FOR THE PURPOSE FOR WHICH THE DOCUMENT IS IN POSSESSION. IT SUBMITTED AND NO IMPLICIT LICENCE IS GRANTED TO USE THE DESIGN CONCEPTS AND INFORMATION CONTAINED IN THE CONFIDENTIAL AND PRIVILEGED INFORMATION OF V.W.T. AND THEY MUST NOT BE DISCLOSED, REPRODUCED, LOANED, RIVETTED OR USED IN WHOLE OR IN PART FOR THE BENEFIT OF ANY PERSON OTHER THAN V.W.T. V.W.T. ASSUMES NO RESPONSIBILITY OR LIABILITY FOR THE USE OF THIS DOCUMENT OR THE DESIGN CONCEPTS AND INFORMATION CONTAINED HEREIN FOR PURPOSES OTHER THAN THE SPECIFIC PROJECT RELATED TO THE OTHER OUR PURPOSE OF THIS DOCUMENT. IN NO EVENT SHALL THIS DOCUMENT OR THE DESIGN CONCEPTS AND INFORMATION CONTAINED HEREIN BE CONSTRUED AS RESULTING IN ANY LIABILITY OF V.W.T. ALL COPYRIGHT, PATENT AND OTHER INTELLECTUAL PROPERTY RIGHTS ARE RESERVED. ACCEPTANCE OF THE DELIVERY OF THIS DOCUMENT CONSTITUTES AGREEMENT TO THESE TERMS AND CONDITIONS.

AVIS DE CONFIDENTIALITÉ ET DE PROPRIÉTÉ INTELLECTUELLE: L'INFORMATION CONTENUE DANS CE DOCUMENT EST LA PROPRIÉTÉ EXCLUSIVE DE VEOLIA WATER TECHNOLOGIES CANADA INC. ET PEUT RENFERMER DES RENSEIGNEMENTS CONFIDENTIELS ET/OU D'AUTRES DROITS DE PROPRIÉTÉ INTELLECTUELLE. LES DESIGNS CONCEPTS ET INFORMATIONS CONTENUS DANS CE DOCUMENT SONT LA PROPRIÉTÉ DE V.W.T. ET SONT SOUMIS EN CONFIDENCE. CE DOCUMENT ET L'INFORMATION NE DOIVENT ÊTRE UTILISÉS EXCLUSIVEMENT QUE POUR L'OBJET POUR LEQUEL CE DOCUMENT EST PRÉSENTÉ. IL NE DOIT PAS ÊTRE REPRODUIT, PRÊTÉ, RIVETÉ OU UTILISÉ EN TOUT OU EN PARTIE AU PROFIT DE TOUTE AUTRE PERSONNE QUE CELLES AUXQUELLES IL EST DESTINÉ SANS L'AUTORISATION ÉCRITE DE V.W.T. LES CONCEPTS ET L'INFORMATION CONTENUS DANS CE DOCUMENT SONT DE NATURE CONFIDENTIELLE ET PRIVILÉGIÉE ET V.W.T. N'ASSUME AUCUNE RESPONSABILITÉ OU RESPONSABILITÉ POUR L'UTILISATION DE CE DOCUMENT OU DES CONCEPTS ET L'INFORMATION CONTENUS DANS LES PRÉSENTES À DES FINS AUTRES QUE LE PROJET SPÉCIFIQUE LIÉ À L'OBJET DE CE DOCUMENT. AUCUN DOCUMENT NE DOIT EN AUCUN CAS ÊTRE INTERPRÉTÉ COMME ENTRAÎNANT UNE RESPONSABILITÉ DE V.W.T. TOUS DROITS D'AUTEUR, BREVET ET AUTRES DROITS DE PROPRIÉTÉ INTELLECTUELLE SONT RÉSERVÉS. L'ACCEPTATION DE LA LIVRAISON DE CE DOCUMENT CONSTITUE UNE ENTENTE À CES TERMES ET CONDITIONS.

DESSINÉ DESIGNER	M.JACQUES
DATE	2019-02-12
VÉRIFIÉ CHECKER	S.DUQUET
DATE	2019-02-12
INGÉNIEUR ENGINEER	
DATE	
ÉCHELLE/SCALE:	

TITRE/TITLE: HYDRAPOL 500 CONTROL PANEL SCHEMATIC DIAGRAM 120VAC

CLIENT: IQALUIT WWTP

VEOLIA

VEOLIA WATER TECHNOLOGIES CANADA INC. 4105 Sartelon, Saint-Laurent, Qc, Canada Tel: (514) 334-7230

PROJET/PROJECT	DESSIN/DRAWING No	INTERNE/INTERNAL	FEUILLET/SHEET	REV.
5000218036	ELD-0007-AUT-VWT	JOME01	3 DE 9	4

STD: "D" 22x34 | EBI ELECTRIC - 58011-P02 | BAR = 1" À L'ÉCHELLE D'IMPRESSION/BAR = 1" AT PLOT SCALE

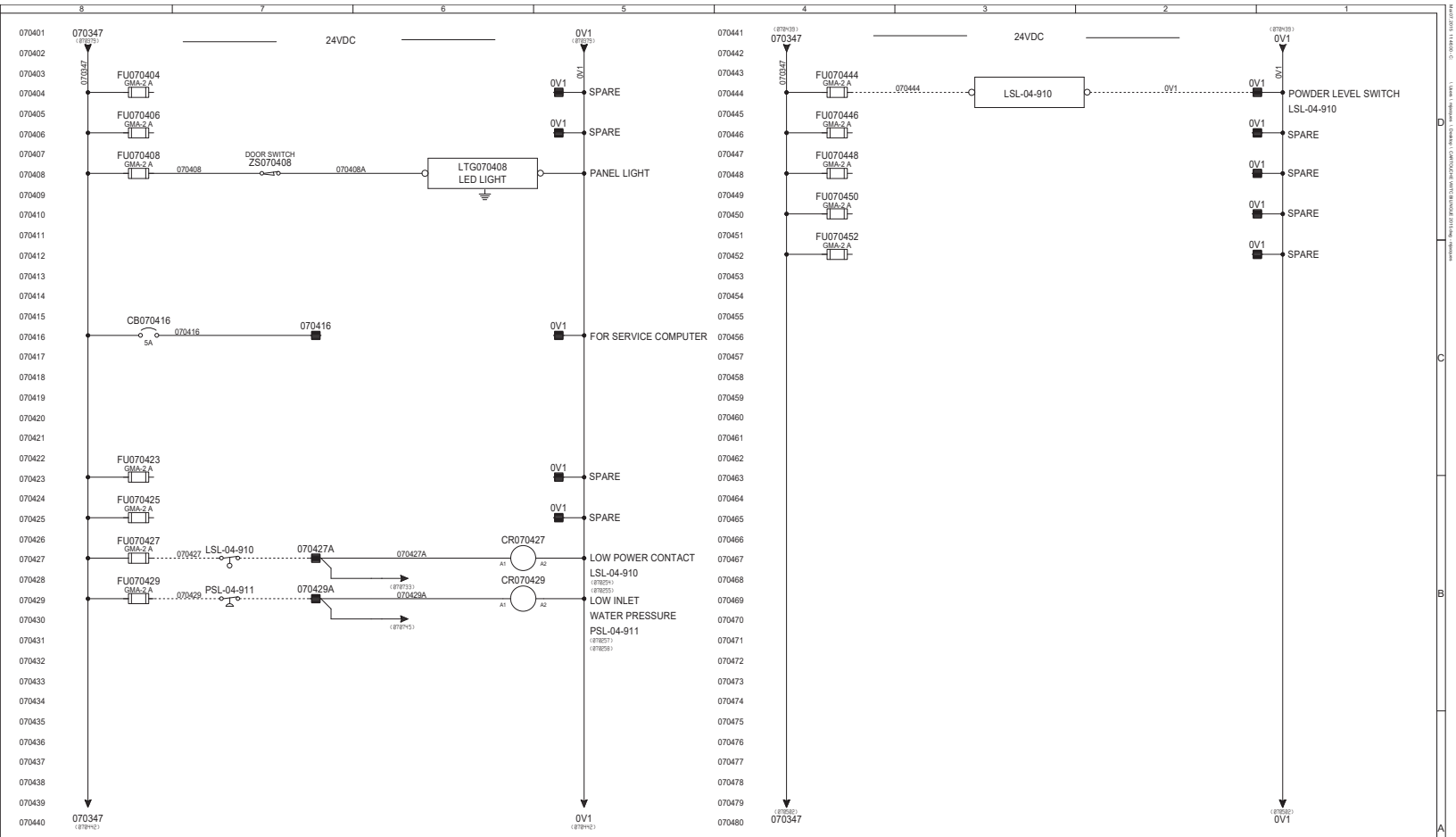

4	AS COMMISSIONNING	2019-05-17	SD				
3	AS BUILT	2019-05-03	SD				
2	FOR FAB	2019-04-02	RM				
1	FOR APPROVAL	2019-03-18	RM				
REV.	DESCRIPTION	DATE	REV.	VERIF/CHK	APPR	ECN	

CONFIDENTIALITY AND INTELLECTUAL PROPERTY NOTICE
ALL INFORMATION CONTAINED IN THIS DOCUMENT IS THE SOLE PROPERTY OF VEOLIA WATER TECHNOLOGIES CANADA INC. AND CONTAINS CONFIDENTIAL AND PROPRIETARY INFORMATION AND OTHER INTELLECTUAL PROPERTY LAWS. THE DESIGN CONCEPTS AND INFORMATION CONTAINED HEREIN ARE PROPRIETARY TO V.W.T. AND ARE SUBMITTED IN CONFIDENCE. THIS DOCUMENT AND THE INFORMATION MUST BE USED ONLY FOR THE PURPOSE FOR WHICH THE DOCUMENT IS BEING SUBMITTED AND NO IMPLICIT LICENCE IS GRANTED TO ANY OTHER USE OF THE INFORMATION. THIS DOCUMENT CONTAINS CONFIDENTIAL AND PRIVILEGED INFORMATION OF V.W.T. AND THEY MUST NOT BE DISCLOSED, REPRODUCED, LOANED, WHETTED OR USED IN WHOLE OR IN PART FOR ANY PURPOSE EXCEPT WITH THE WRITTEN CONSENT OF V.W.T. ASSUMING NO RESPONSIBILITY OR LIABILITY FOR THE USE OF THIS DOCUMENT OR THIS DESIGN CONCEPTS AND INFORMATION CONTAINED HEREIN FOR PURPOSES OTHER THAN THE SPECIFIC PURPOSE RELATE TO THE ATTEMPTED OR PURPOSE OF THIS DOCUMENT. IN NO EVENT SHALL THIS DOCUMENT OR THE DESIGN CONCEPTS AND INFORMATION CONTAINED HEREIN BE USED FOR ANY PURPOSE THAT MAY BE INJURIOUS TO THE INTERESTS OF V.W.T. ALL COPYRIGHT, PATENT AND OTHER INTELLECTUAL PROPERTY RIGHTS ARE RESERVED. ACCEPTANCE OF THE DELIVERY OF THIS DOCUMENT CONSTITUTES AGREEMENT TO THESE TERMS AND CONDITIONS.

AVIS DE CONFIDENTIALITÉ ET DE PROPRIÉTÉ INTELLECTUELLE
L'INFORMATION CONTENUE DANS CE DOCUMENT EST LA PROPRIÉTÉ EXCLUSIVE DE VEOLIA WATER TECHNOLOGIES CANADA INC. ET CONTIENT DES INFORMATIONS CONFIDENTIELLES ET PROPRIÉTAIRES AINSI QUE D'AUTRES DROITS DE PROPRIÉTÉ INTELLECTUELLE. LES IDÉES ET CONCEPTS ET INFORMATIONS CONTENUS DANS CE DOCUMENT SONT CONFIDENTIELS ET SOUMIS EN CONFIDENCE. CE DOCUMENT ET LES INFORMATIONS QU'IL CONTIENT NE DOIVENT ÊTRE UTILISÉS UNIQUEMENT AUX FINS POUR LESQUELLES CE DOCUMENT EST SOUMIS ET AUCUNE LICENCE IMPLICITE N'EST ACCORDÉE EN VERTU DE L'UTILISATION DE CES INFORMATIONS. L'INFORMATION CONTENUE DANS CE DOCUMENT EST CONFIDENTIELLE ET PRIVILÉGIÉE ET N'EST QU'AUCUNEMENT PASSÉ DIVULGUÉE, REPRODUITE, PRÊTÉE, RÉDIGÉE OU UTILISÉE EN TOUTE OU EN PARTIE À QUELQUE FIN QUE CE SOIT SANS LE CONSENTEMENT ÉCRIT DE V.V.T. V.V.T. DÉCLINE TOUTE RESPONSABILITÉ ET DÉGAGE LA VILLE DE TOUT RECOURS EN RELATION AVEC L'UTILISATION DE CE DOCUMENT OU DES CONCEPTS ET L'INFORMATION CONTENUE DANS CE DOCUMENT POUR DES FINS AUTRES QUE CELLES POUR LESQUELLES CE DOCUMENT EST SOUMIS. EN AUCUN CAS CE DOCUMENT NI LES CONCEPTS ET L'INFORMATION QUI Y SONT CONTENUS NE DOIVENT ÊTRE UTILISÉS À DES FINS QUI PEUVENT NUIRE AUX INTÉRÊTS DE V.V.T. TOUS DROITS D'AUTEUR, BREVET ET AUTRES DROITS DE PROPRIÉTÉ INTELLECTUELLE SONT RÉSERVÉS. L'ACCEPTATION DE LA LIVRAISON DE CE DOCUMENT NE CONSTITUE EN AUCUNE FAÇON UNE RENONCIATION À CES DROITS.

DESSINÉ DESIGNER	M.JACQUES
DATE	2019-02-12
VÉRIFIÉ CHECKER	S.DUQUET
DATE	2019-02-12
INGÉNIEUR ENGINEER	
DATE	
ÉCHELLE/SCALE:	

TITRE/TITLE: HYDRAPOL 500 CONTROL PANEL SCHEMATIC DIAGRAM 24VDC

CLIENT: IQALUIT WWTP

VEOLIA

VEOLIA WATER TECHNOLOGIES CANADA INC. 4105 Sartelon, Saint-Laurent, Qc, Canada Tel: (514) 334-7230

PROJET/PROJECT	DESSIN/DRAWING No	INTERNE/INTERNAL	FEUILLET/SHEET	REV.
5000218036-ELD-0007-AUT-VWT	JOME01	4 DE 9	4	

LR 60892

STD: "D" 22x34 | EBI ELECTRIC - 58011-P02 | BAR = 1" À L'ÉCHELLE D'IMPRESSION/BAR = 1" AT PLOT SCALE

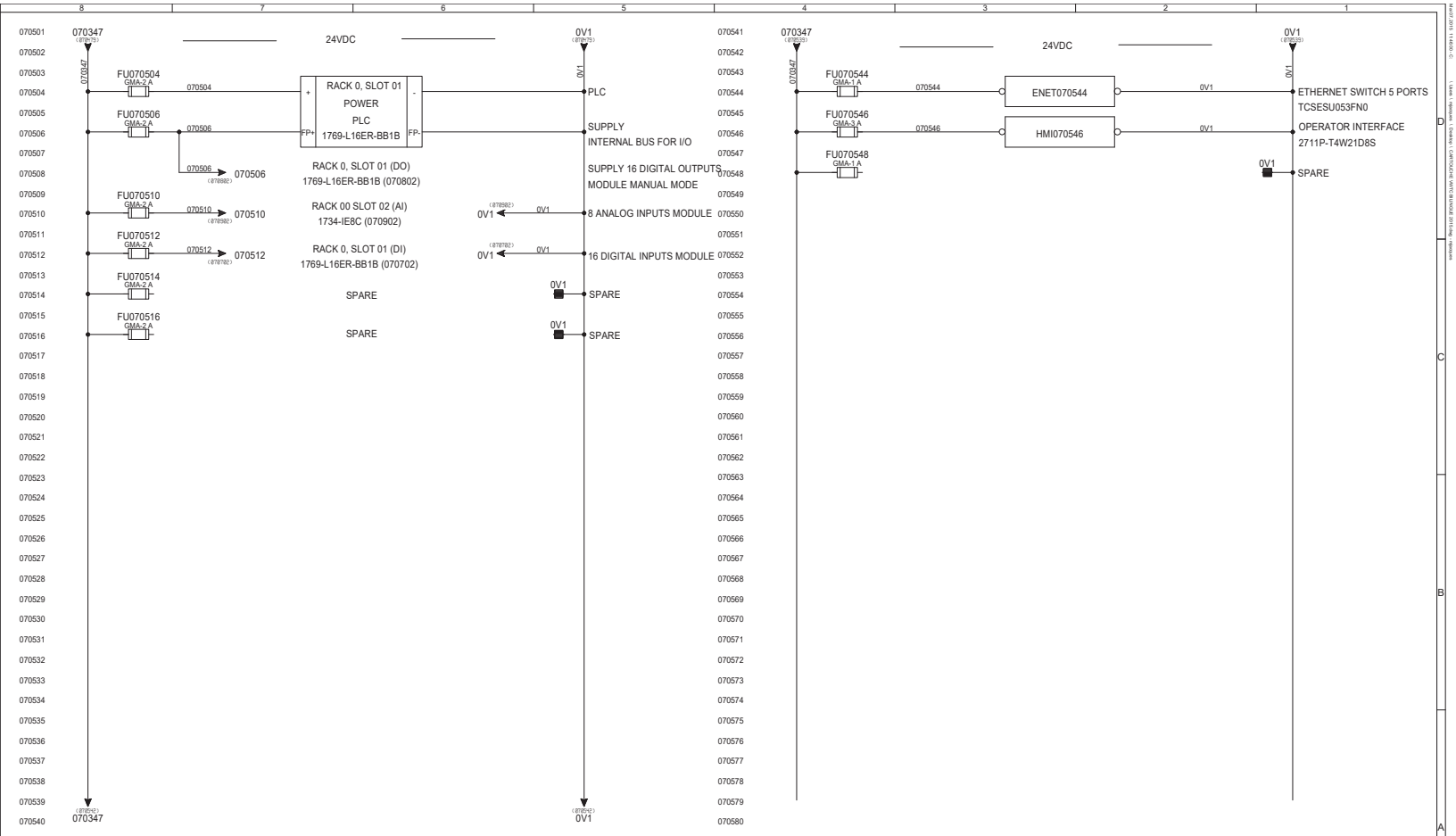

4	AS COMMISSIONNING	2019-05-17	SD			
3	AS BUILT	2019-05-03	SD			
2	FOR FAB	2019-04-02	RM			
1	FOR APPROVAL	2019-03-18	RM			
REV.	DESCRIPTION	DATE	REV.	VERIF/CHK	APPR.	ECN

CONFIDENTIALITY AND INTELLECTUAL PROPERTY NOTICE: ALL INFORMATION CONTAINED IN THIS DOCUMENT IS THE SOLE PROPERTY OF VEOLIA WATER TECHNOLOGIES CANADA INC. AND CONTAINS CONFIDENTIAL AND PROPRIETARY INFORMATION AND OTHER INTELLECTUAL PROPERTY LAWS. THE DESIGN CONCEPTS AND INFORMATION CONTAINED HEREIN ARE PROPRIETARY TO VWT, AND ARE SUBMITTED IN CONFIDENCE. THIS DOCUMENT AND THE INFORMATION MUST BE USED ONLY FOR THE PURPOSE FOR WHICH THE DOCUMENT IS IS EXPRESSLY SUBMITTED AND NO IMPLICIT LICENCE IS GRANTED BY THE SUBMISSION OF THIS DOCUMENT. THIS DOCUMENT IS STRICTLY CONFIDENTIAL AND PRE-ISSUED INFORMATION OF VWT, AND THEY MUST NOT BE DISCLOSED, REPRODUCED, LOANED, REBITTED OR USED IN WHOLE OR IN PART FOR ANY PURPOSE WITHOUT THE PRIOR WRITTEN CONSENT OF VWT. VWT ASSUMES NO RESPONSIBILITY OR LIABILITY FOR THE USE OF THIS DOCUMENT OR THE DESIGN CONCEPTS AND INFORMATION CONTAINED HEREIN FOR PURPOSES OTHER THAN THE SPECIFIC PROJECT RELATED TO THE INTENDED PURPOSE OF THIS DOCUMENT. IN NO EVENT SHALL THIS DOCUMENT OR THE DESIGN CONCEPTS AND INFORMATION CONTAINED HEREIN BE USED FOR ANY PURPOSE DETRIMENTAL TO THE INTEREST OF VWT. ALL COPYRIGHT, PATENT AND OTHER INTELLECTUAL PROPERTY RIGHTS ARE RESERVED. ACCEPTANCE OF THE DELIVERY OF THIS DOCUMENT CONSTITUTES AGREEMENT TO THESE TERMS AND CONDITIONS.

AVIS DE CONFIDENTIALITÉ ET DE PROPRIÉTÉ INTELLECTUELLE : L'INFORMATION CONTENUE DANS CE DOCUMENT EST LA PROPRIÉTÉ EXCLUSIVE DE VEOLIA WATER TECHNOLOGIES CANADA INC. ET CONTIENT DES RENSEIGNEMENTS CONFIDENTIELS ET DE PROPRIÉTÉ INTELLECTUELLE. LES IDÉES ET CONCEPTS D'INGÉNIERIE CONTENUS DANS CE DOCUMENT SONT LA PROPRIÉTÉ DE VWT ET SONT SOUMIS EN CONFIDENCE. CE DOCUMENT ET LES RENSEIGNEMENTS QU'IL CONTIENT DOIVENT ÊTRE UTILISÉS EXCLUSIVEMENT AUX FINS POUR LESQUELLES CE DOCUMENT EST EXPRESSÉMENT SOUMIS ET AUCUNE LICENCE IMPLICITE N'EST OCTROYÉE DE PAR LA SOUMISSION DE CE DOCUMENT. CE DOCUMENT EST STRICTEMENT CONFIDENTIEL ET CONTIENT DES RENSEIGNEMENTS PRÉALABLES À LA PUBLICATION QUI NE DOIVENT PAS FAIRE L'OBJET D'UNE DIVULGATION, D'UNE REPRODUCTION, D'UN PRÊT OU D'UNE UTILISATION, EN TOUT OU EN PARTIE, À QUELQUE FIN QUE CE SOIT, SANS L'AUTORISATION ÉCRITE PRÉALABLE DE VWT. VWT N'ASSUME AUCUNE RESPONSABILITÉ OU RESPONSABILITÉ QUANT À L'UTILISATION DE CE DOCUMENT OU DES CONCEPTS ET RENSEIGNEMENTS QU'IL CONTIENT À DES FINS AUTRES QUE LE PROJET PRÉCIS AUQUEL CE DOCUMENT SE RAPPORTE OU À DES FINS CONTRAIRES AUX INTÉRÊTS DE VWT. EN AUCUN CAS CE DOCUMENT OU LES CONCEPTS ET RENSEIGNEMENTS QU'IL CONTIENT NE DOIVENT ÊTRE UTILISÉS À DES FINS NUISIBLES À VWT. TOUS LES DROITS D'AUTEUR, BREVETS ET AUTRES DROITS DE PROPRIÉTÉ INTELLECTUELLE SONT RÉSERVÉS. L'ACCEPTATION DE LA LIVRAISON DE CE DOCUMENT N'EQUIVAUT PAS À UNE CESSION DE CES DROITS.

DESSINÉ DESIGNER	M.JACQUES 2019-02-12
VÉRIFIÉ CHECKER	S.DUQUET 2019-02-12
INGÉNIEUR ENGINEER	DATE
ÉCHELLE/SCALE:	

TITRE/TITLE: HYDRAPOL 500 CONTROL PANEL SCHEMATIC DIAGRAM 24VDC

CLIENT: IQALUIT WWTP

VEOLIA

VEOLIA WATER TECHNOLOGIES CANADA INC. 4105 Sartelon, Saint-Laurent, Qc, Canada Tel: (514) 334-7230

PROJET/PROJECT	DESSIN/DRAWING No	INTERNE/INTERNAL	FEUILLET/SHEET	REV.
5000218036	ELD-0007-AUT-VWT	JOME01	5 DE 9	4

LR 60892

STD: "D" 22x34 | EBI ELECTRIC - 58011-P02 | BAR = 1" À L'ÉCHELLE D'IMPRESSION/BAR = 1" AT PLOT SCALE

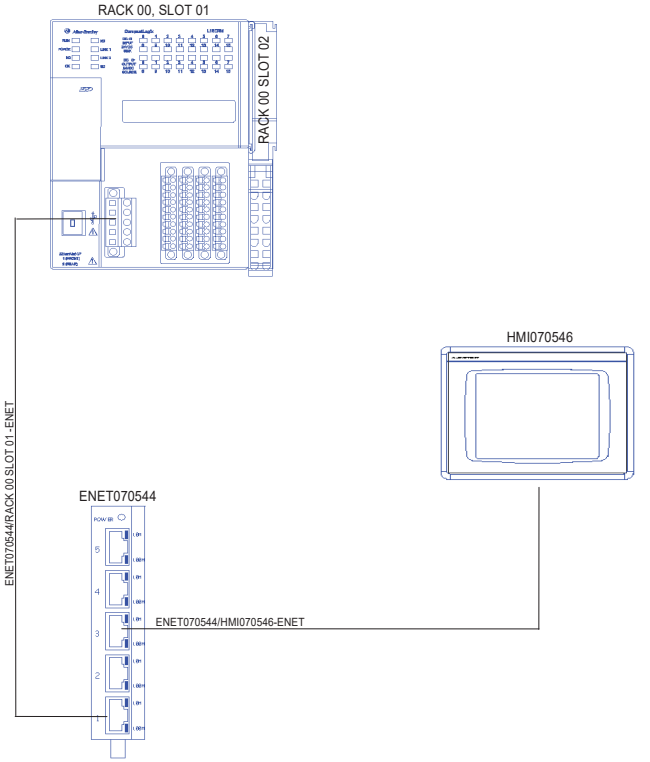

RACK 0

SLOT 01, INPUTS, 1769-L16ER-BB1B, SEE CONNECTING DETAIL DRAWING 5000218036-ELD-0007-AUT-VWT-07
SLOT 01, OUTPUTS, 1769-L16ER-BB1B, SEE CONNECTING DETAIL DRAWING 5000218036-ELD-0007-AUT-VWT-08
SLOT 02, 1734-IE8C, SEE CONNECTING DETAIL DRAWING 5000218036-ELD-0007-AUT-VWT-09

REV.	DESCRIPTION	DATE	REV.	VERIF/CHK	APPR.	ECN
4	AS COMMISSIONNING	2019-05-17	SD			
3	AS BUILT	2019-05-03	SD			
2	FOR FAB	2019-04-02	RM			
1	FOR APPROVAL	2019-03-18	RM			

CONFIDENTIALITY AND INTELLECTUAL PROPERTY NOTICE
ALL INFORMATION CONTAINED IN THIS DOCUMENT IS THE SOLE PROPERTY OF VEOLIA WATER TECHNOLOGIES CANADA INC. AND IS SUBJECT TO COPYRIGHT, TRADE SECRET AND OTHER INTELLECTUAL PROPERTY LAWS. THE DESIGN CONCEPTS AND INFORMATION CONTAINED HEREIN ARE PROPRIETARY TO V.W.T. AND ARE SUBMITTED IN CONFIDENCE. THIS DOCUMENT MUST NOT BE USED ONLY FOR THE PURPOSE FOR WHICH THE DOCUMENT IS BEIN SUBMITTED AND NO IMPLICIT LICENCE IS GRANTED TO USE THE DESIGN CONCEPTS OR INFORMATION. THIS IS A CONFIDENTIAL AND PRIVILEGED INFORMATION OF V.W.T. AND THEY MUST NOT BE DISCLOSED, REPRODUCED, LOANED, TRANSFERRED OR USED IN ANY WAY WITHOUT THE EXPRESS WRITTEN CONSENT OF V.W.T. V.W.T. DISCLAIMS RESPONSIBILITY OR LIABILITY FOR THE USE OF THIS DOCUMENT OR THE DESIGN CONCEPTS AND INFORMATION CONTAINED HEREIN FOR ANY PURPOSE OTHER THAN THE PURPOSE RELATED TO THE OTHER FOR PURPOSE OF THIS DOCUMENT. IN NO EVENT SHALL THIS DOCUMENT OR THE DESIGN CONCEPTS AND INFORMATION CONTAINED HEREIN BE DEEMED TO BE A WAIVER OF ANY RIGHTS OF V.W.T. ALL COPYRIGHT, PATENT AND OTHER INTELLECTUAL PROPERTY RIGHTS ARE RESERVED. ACCEPTANCE OF THE DELIVERY OF THIS DOCUMENT CONSTITUTES AGREEMENT TO THESE TERMS AND CONDITIONS.

AVIS DE CONFIDENTIALITÉ ET DE PROPRIÉTÉ INTELLECTUELLE
L'INFORMATION CONTENUE DANS CE DOCUMENT EST LA PROPRIÉTÉ EXCLUSIVE DE VEOLIA WATER TECHNOLOGIES CANADA INC. ET EST SOUMISE AU DROIT D'AUTEUR, AU SECRET DE DESIGN ET AUX AUTRES LOIS DE PROPRIÉTÉ INTELLECTUELLE. LES IDÉES CONCEPTUELLES CONTENUES DANS CE DOCUMENT SONT SOUMISES EN CONFIDENCE. CE DOCUMENT NE DOIT ÊTRE UTILISÉ QUE POUR LE BUT POUR LEQUEL IL EST SOUMIS ET AUCUNE LICENCE IMPLICITE N'EST ACCORDÉE AUX IDÉES CONCEPTUELLES OU À L'INFORMATION CONTENUE. CE DOCUMENT EST UNE INFORMATION CONFIDENTIELLE ET PRIVILÉGIÉE DE V.W.T. ET NE DOIVENT PAS ÊTRE DIVULGUÉS, REPRODUITS, PRÊTÉS, TRANSFÉRÉS OU UTILISÉS D'UNE AUTRE MANIÈRE SANS LE CONSENTEMENT ÉCRIT DE V.W.T. V.W.T. DÉCLINE TOUTE RESPONSABILITÉ OU LIABILITÉ POUR L'USAGE D'UNE OU L'AUTRE DES IDÉES CONCEPTUELLES CONTENUES DANS CE DOCUMENT POUR UNE AUTRE FIN QUE LA FIN PRÉVUE DE CE DOCUMENT. EN AUCUN CAS CE DOCUMENT OU LES IDÉES CONCEPTUELLES CONTENUES DANS CE DOCUMENT NE SERA DÉCLARÉ COMME UNE RENONCIATION À UN DROIT DE V.W.T. TOUS LES DROITS D'AUTEUR, DE BREVET ET AUTRES DROITS DE PROPRIÉTÉ INTELLECTUELLE SONT RÉSERVÉS. L'ACCEPTATION DE LA LIVRAISON DE CE DOCUMENT CONSTITUE UNE ENTENTE À CES TERMES ET CONDITIONS.

DESSINÉ / DESIGNER	M.JACQUES	DATE 2019-02-12
VÉRIFIÉ / CHECKER	S.DUQUET	DATE 2019-02-12
INGÉNIEUR / ENGINEER		DATE
ÉCHELLE/SCALE:		

TITRE / TITLE: HYDRAPOL 500 CONTROL PANEL ETHERNET NETWORK AND PLC

CLIENT: IQALUIT WWTP

VEOLIA

VEOLIA WATER TECHNOLOGIES CANADA INC. 4105 Sartelon, Saint-Laurent, Qc, Canada Tel: (514) 334-7230

PROJET/PROJECT	DESSIN/DRAWING No	INTERNE/INTERNAL	FEUILLET/SHEET	REV.
5000218036-ELD-0007-AUT-VWT	JOME01	6	DE 9	4

LR 60892

STD: "D" 22x34 | EBI ELECTRIC - 58011-P02 | BAR = 1" À L'ÉCHELLE D'IMPRESSION/BAR = 1" AT PLOT SCALE

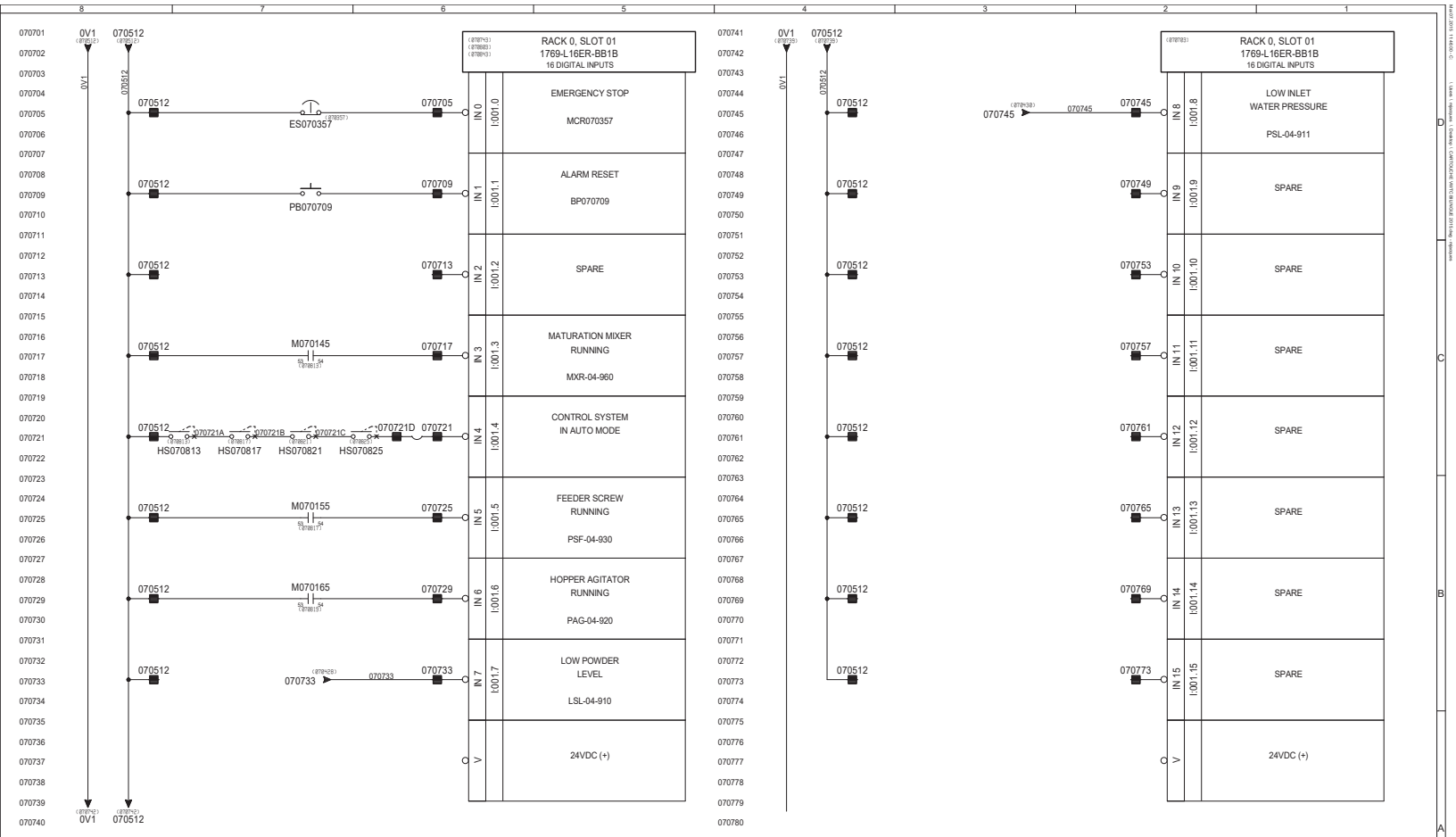

REV.	DESCRIPTION	DATE	REV.	VERIF/CHK	APPR	ECN
4	AS COMMISSIONNING	2019-05-17	SD			
3	AS BUILT	2019-05-03	SD			
2	FOR FAB	2019-04-02	RM			
1	FOR APPROVAL	2019-03-18	RM			

CONFIDENTIALITY AND INTELLECTUAL PROPERTY NOTICE
ALL INFORMATION CONTAINED IN THIS DOCUMENT IS THE SOLE PROPERTY OF VEOLIA WATER TECHNOLOGIES CANADA INC. AND CONTAINS CONFIDENTIAL AND PROPRIETARY INFORMATION AND OTHER INTELLECTUAL PROPERTY LAWS. THE DESIGN CONCEPTS AND INFORMATION CONTAINED HEREIN ARE PROPRIETARY TO V.W.T. AND ARE SUBMITTED IN CONFIDENCE. NEITHER THIS DOCUMENT NOR THE INFORMATION IT SUBMITTED HEREIN MUST BE USED ONLY FOR THE PURPOSE FOR WHICH THE DOCUMENT IS IN POSSESSION IT SUBMITTED AND IN NO EVENT LICENCE IS GRANTED OR IMPLIED TO USE THE DESIGN CONCEPTS AND INFORMATION OF THIS CONFIDENTIAL AND PROPRIETARY INFORMATION OF V.W.T. AND THEY MUST NOT BE DISCLOSED, REPRODUCED, LOANED, RIBBITTED OR USED IN WHOLE OR IN PART FOR ANY PURPOSE WITHOUT THE EXPRESS WRITTEN CONSENT OF V.W.T. V.W.T. ASSUMES NO RESPONSIBILITY OR LIABILITY FOR THE USE OF THIS DOCUMENT OR THE DESIGN CONCEPTS AND INFORMATION CONTAINED HEREIN FOR PURPOSES OTHER THAN THE SPECIFIC PURPOSE RELATED TO THE OTHERWISE PURPOSE OF THIS DOCUMENT. IN NO EVENT SHALL THIS DOCUMENT OR THE DESIGN CONCEPTS AND INFORMATION CONTAINED HEREIN BE USED BY ANY PARTY FOR ANY PURPOSE IN ANY WAY OR 1 OF 1 ALL COPYRIGHT, PATENT AND OTHER INTELLECTUAL PROPERTY RIGHTS ARE RESERVED. ACCEPTANCE OF THE DELIVERY OF THIS DOCUMENT CONSTITUTES AGREEMENT TO THESE TERMS AND CONDITIONS.

AVIS DE CONFIDENTIALITÉ ET DE PROPRIÉTÉ INTELLECTUELLE
L'INFORMATION CONTENUE DANS CE DOCUMENT EST LA PROPRIÉTÉ EXCLUSIVE DE VEOLIA WATER TECHNOLOGIES CANADA INC. ET CONTIENT DES RENSEIGNEMENTS CONFIDENTIELS ET EXCLUSIFS AINSI QUE D'AUTRES LOIS SUR LA PROPRIÉTÉ INTELLECTUELLE. LES DESSINS, CONCEPTS ET INFORMATIONS CONTENUS DANS CE DOCUMENT SONT LA PROPRIÉTÉ DE V.W.T. ET SONT SOUMIS EN CONFIDENCE. NI CE DOCUMENT NI LES RENSEIGNEMENTS QU'IL CONTIENT NE DOIVENT ÊTRE UTILISÉS UNIQUEMENT AUX FINS POUR LESQUELLES CE DOCUMENT EST EN POSSESSION ET SOUMIS ET AUCUNE LICENCE IMPLICITE N'EST ACCORDÉE OU IMPLIQUÉE POUR UTILISER LES CONCEPTS ET LES RENSEIGNEMENTS CONFIDENTIELS ET EXCLUSIFS DE V.W.T. CES RENSEIGNEMENTS NE DOIVENT PAS ÊTRE DIVULGUÉS, REPRODUITS, PRÊTÉS, RÉDIGÉS OU UTILISÉS EN TOUTE OU EN PARTIE À QUELQUE FIN QUE CE SOIT SANS LE CONSENTEMENT ÉCRIT DE V.W.T. V.W.T. DÉCLINE TOUTE RESPONSABILITÉ ET TOUTE RESPONSABILITÉ QUANT À L'UTILISATION DE CE DOCUMENT AINSI QUE DES DESSINS ET CONCEPTS QUI Y SONT CONTENUS À DES FINS AUTRES QUE CELLES LIÉES À L'OBJET DE CE DOCUMENT. EN AUCUN CAS CE DOCUMENT NE DOIT ÊTRE UTILISÉ PAR QUICONQUE À QUELQUE FIN QUE CE SOIT DE QUELQUE MANIÈRE QUE CE SOIT. LES DROITS D'AUTEUR, BREVET ET AUTRES DROITS DE PROPRIÉTÉ INTELLECTUELLE SONT RÉSERVÉS. L'ACCEPTATION DE LA LIVRAISON DE CE DOCUMENT IMPLIQUE L'ACCEPTATION DE CES CONDITIONS.

DESSINÉ DESIGNER	M.JACQUES
DATE	2019-02-12
VÉRIFIÉ CHECKER	S.DUQUET
DATE	2019-02-12
INGÉNIEUR ENGINEER	
DATE	
ÉCHELLE/SCALE:	

TITRE/TITLE: HYDRAPOL 500 CONTROL PANEL
RACK 00 SLOT 01 INPUTS, 1769-L18ER-BB1B

CLIENT: IQALUIT WWTP

VEOLIA

VEOLIA WATER TECHNOLOGIES CANADA INC. 4105 Sartelon, Saint-Laurent, Qc, Canada Tel: (514) 334-7230

PROJET/PROJECT	DESSIN/DRAWING No	INTERNE/INTERNAL	FEUILLET/SHEET	REV.
5000218036-ELD-0007-AUT-VWT	JOME01	7 DE 9		4

LR 60892

STD: "D" 22x34 | EBI ELECTRIC - 58011-P02 | BAR = 1" À L'ÉCHELLE D'IMPRESSION/BAR = 1" AT PLOT SCALE

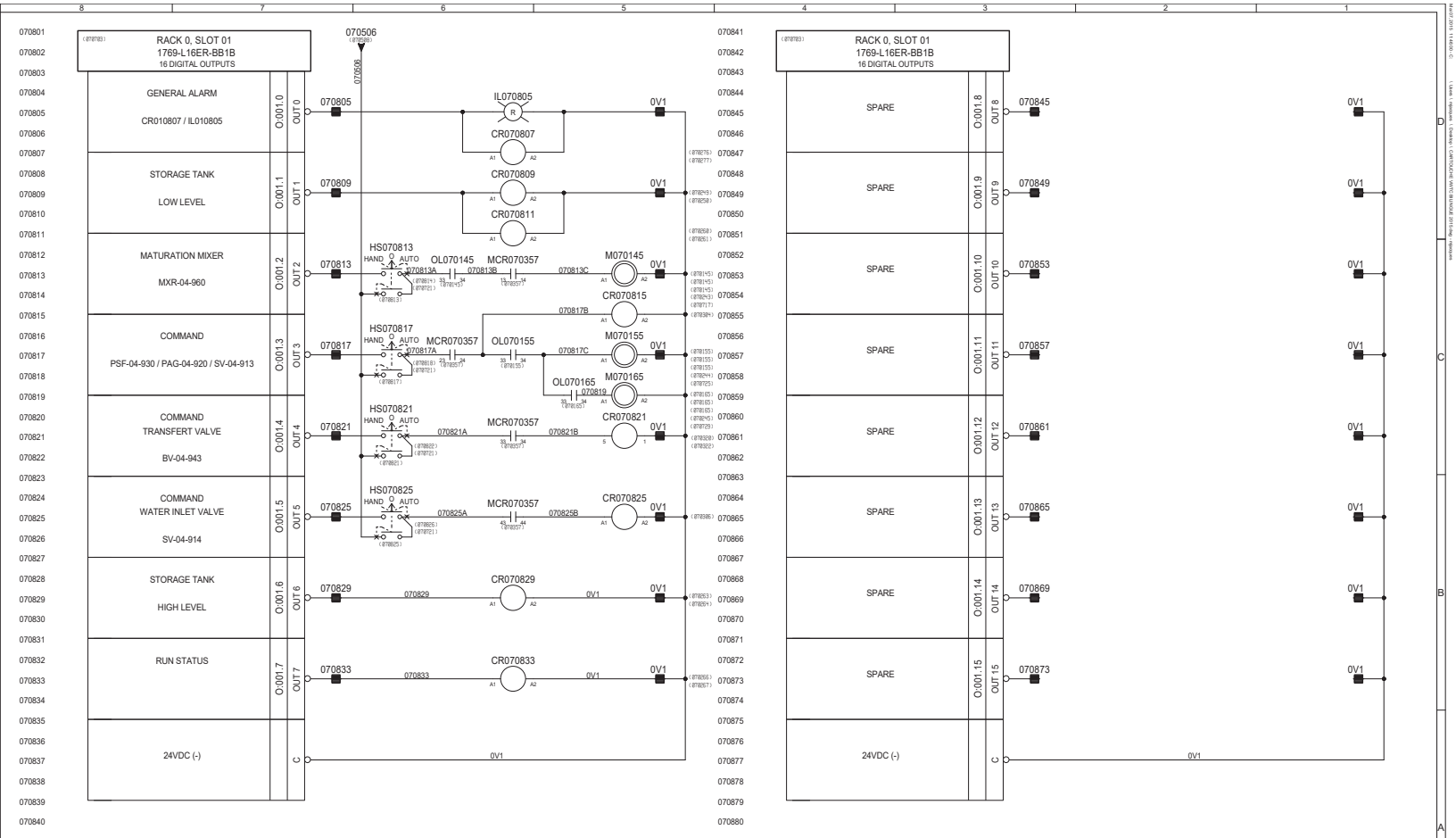

4	AS COMMISSIONNING	2019-05-17	SD				
3	AS BUILT	2019-05-03	SD				
2	FOR FAB	2019-04-02	RM				
1	FOR APPROVAL	2019-03-18	RM				
REV.	DESCRIPTION	DATE	REV.	VERIF/CHK	APPR	ECN	

CONFIDENTIALITY AND INTELLECTUAL PROPERTY NOTICE
ALL INFORMATION CONTAINED IN THIS DOCUMENT IS THE SOLE PROPERTY OF VEOLIA WATER TECHNOLOGIES CANADA INC. AND CONTAINS CONFIDENTIAL AND PROPRIETARY INFORMATION AND OTHER INTELLECTUAL PROPERTY LAWS. THE DESIGN CONCEPTS AND INFORMATION CONTAINED HEREIN ARE PROPRIETARY TO VWT, AND ARE FURNISHED SUBJECT TO AND IN CONFIDENCE. THIS DOCUMENT MUST BE USED ONLY FOR THE PURPOSE FOR WHICH THE DOCUMENT IS EXPRESSLY SUBMITTED AND NO IMPLICIT LICENCE IS GRANTED TO ANY INTELLECTUAL PROPERTY CONTAINED IN IT. THIS DOCUMENT IS CONFIDENTIAL AND PRIVILEGED INFORMATION OF VWT, AND THEY MUST NOT BE DISCLOSED, REPRODUCED, LOANED, WHETTED OR USED IN WHOLE OR IN PART FOR ANY PURPOSE OTHER THAN THAT FOR WHICH IT IS SENT. VWT ASSUMES NO RESPONSIBILITY OR LIABILITY FOR THE USE OF THIS DOCUMENT OR THE DESIGN CONCEPTS AND INFORMATION CONTAINED OR EXPRESSED HEREIN IN CONNECTION WITH ANY USE THAT RELATES TO THE OTHER FOR PURPOSES OF THIS DOCUMENT. IN NO EVENT SHALL THIS DOCUMENT OR THE DESIGN CONCEPTS AND INFORMATION CONTAINED OR EXPRESSED HEREIN BE USED BY ANY PARTY FOR ANY PURPOSE OTHER THAN THAT SPECIFICALLY AUTHORIZED BY VWT. ALL COPYRIGHT, PATENT AND OTHER INTELLECTUAL PROPERTY RIGHTS ARE RESERVED. ACCEPTANCE OF THE DELIVERY OF THIS DOCUMENT CONSTITUTES AGREEMENT TO THESE TERMS AND CONDITIONS.

AVIS DE CONFIDENTIALITÉ ET DE PROPRIÉTÉ INTELLECTUELLE
L'INFORMATION CONTENUE DANS CE DOCUMENT EST LA PROPRIÉTÉ EXCLUSIVE DE VEOLIA WATER TECHNOLOGIES CANADA INC. ET CONTIENT DES RENSEIGNEMENTS CONFIDENTIELS ET EXCLUSIFS AINSI QUE D'AUTRES LOIS SUR LA PROPRIÉTÉ INTELLECTUELLE. LES IDÉES ET CONCEPTS ET INFORMATIONS CONTENUES DANS CE DOCUMENT SONT LA PROPRIÉTÉ DE VWT ET SONT DONNÉES EN CONFIDENCE. CE DOCUMENT NE DOIT ÊTRE UTILISÉ QUE DANS LE BUT POUR LEQUEL IL A ÉTÉ SOUMIS EXPRESSÉMENT ET AUCUNE LICENCE IMPLICITE N'EST ACCORDÉE POUR TOUTE PROPRIÉTÉ INTELLECTUELLE CONTENUE DANS CE DOCUMENT. CE DOCUMENT CONFIDENTIEL ET PRIVILÉGIÉ CONTIENT DES RENSEIGNEMENTS EXCLUSIFS QUI NE DOIVENT PAS ÊTRE DIVULGUÉS, REPRODUITS, PRÊTÉS, MIS EN GAGE OU UTILISÉS EN TOUTE OU EN PARTIE À DES FINS AUTRES QUE CELLES POUR LESQUELLES IL A ÉTÉ ENVOYÉ. VWT N'ASSUME AUCUNE RESPONSABILITÉ OU OBLIGATION POUR L'UTILISATION DE CE DOCUMENT OU DES IDÉES ET RENSEIGNEMENTS QUI Y SONT CONTENUS OU EXPRIMÉS AUX PRÉSENTES QUI SE RAPPORTENT À L'UTILISATION DE CE DOCUMENT À DES FINS AUTRES QUE CELLES POUR LESQUELLES IL A ÉTÉ FOURNI. EN AUCUN CAS CE DOCUMENT OU LES IDÉES ET CONCEPTS OU RENSEIGNEMENTS QUI Y SONT CONTENUS OU EXPRIMÉS AUX PRÉSENTES NE DOIVENT ÊTRE UTILISÉS PAR QUICONQUE À DES FINS AUTRES QUE CELLES EXPRESSÉMENT AUTORISÉES PAR VWT. TOUS LES DROITS D'AUTEUR, BREVET ET AUTRES DROITS DE PROPRIÉTÉ INTELLECTUELLE SONT RÉSERVÉS. L'ACCEPTATION DE LA LIVRAISON DE CE DOCUMENT IMPLIQUE LE CONSENTEMENT AUX CONDITIONS ET MODALITÉS QUI PRÉCÈDENT.

DESSINÉ DESIGNER	M.JACQUES
DATE	2019-02-12
VÉRIFIÉ CHECKER	S.DUQUET
DATE	2019-02-12
INGÉNIEUR ENGINEER	
DATE	
ÉCHELLE/SCALE:	

TITRE/TITLE: HYDRAPOL 500 CONTROL PANEL
RACK 00 SLOT 01 OUTPUTS, 1769-L18ER-BB1B

CLIENT: IQALUIT WWTP

VEOLIA
VEOLIA WATER TECHNOLOGIES CANADA INC. 4105 Sartelon, Saint-Laurent, Qc, Canada Tel: (514) 334-7230

PROJET/PROJECT	DESSIN/DRAWING No	INTERNE/INTERNAL	FEUILLET/SHEET	REV.
5000218036-ELD-0007-AUT-VWT	JOME01	8 DE 9		4

LR 60892

STD: "D" 22x34 | EBI ELECTRIC - 58011-P02 | BAR = 1" À L'ÉCHELLE D'IMPRESSION/BAR = 1" AT PLOT SCALE

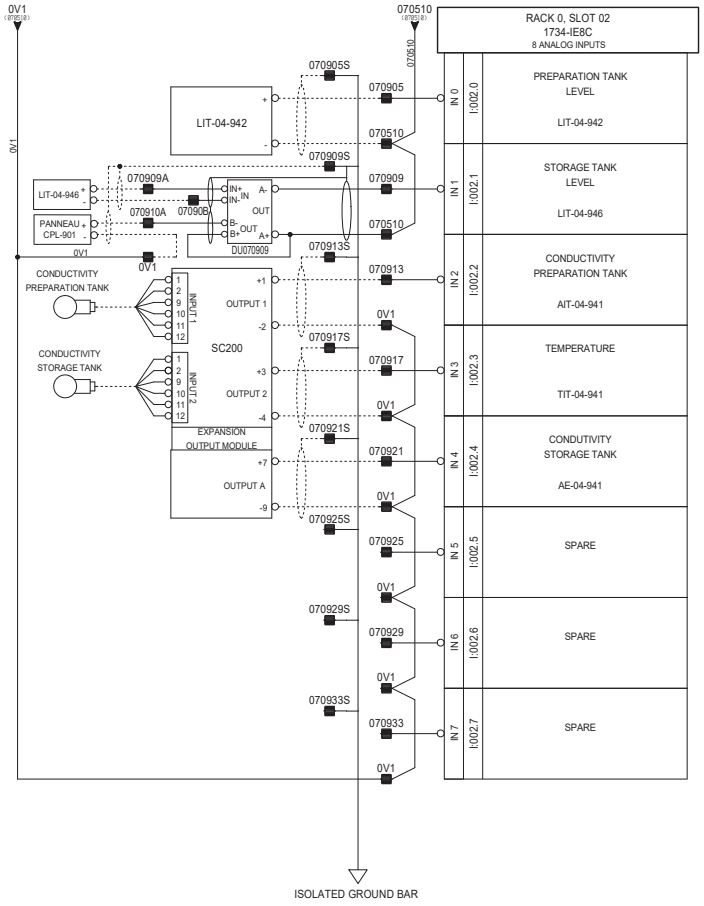

REV.	DESCRIPTION	DATE	REV.	VERIF/CHK	APPR	ECN
4	AS COMMISSIONNING	2019-05-17	SD			
3	AS BUILT	2019-05-03	SD			
2	FOR FAB	2019-04-02	RM			
1	FOR APPROVAL	2019-03-18	RM			

CONFIDENTIALITY AND INTELLECTUAL PROPERTY NOTICE
ALL INFORMATION CONTAINED IN THIS DOCUMENT IS THE SOLE PROPERTY OF VEOLIA WATER TECHNOLOGIES CANADA INC. AND CONTAINS CONFIDENTIAL AND PROPRIETARY INFORMATION AND OTHER INTELLECTUAL PROPERTY LAWS. THE DESIGN CONCEPTS AND INFORMATION CONTAINED HEREIN ARE PROPRIETARY TO V.W.T. AND ARE SUBMITTED IN CONFIDENCE. THIS DOCUMENT OR ANY PART THEREOF MUST BE USED ONLY FOR THE PURPOSE FOR WHICH THE DOCUMENT IS EXPRESSLY SUBMITTED AND NO IMPLICIT LICENCE IS GRANTED BY THE SUBMISSION OF THIS DOCUMENT. THIS DOCUMENT CONTAINS CONFIDENTIAL AND PRIVILEGED INFORMATION OF V.W.T. AND THEY MUST NOT BE DISCLOSED, REPRODUCED, LOANED, WRITTEN OR USED IN WHOLE OR IN PART FOR THE BENEFIT OF ANY THIRD PARTY WITHOUT V.W.T.'S ASSUMED RESPONSIBILITY. OR LIABILITY FOR THE USE OF THIS DOCUMENT OR THE DESIGN CONCEPTS AND INFORMATION CONTAINED HEREIN FOR PURPOSES OTHER THAN THOSE SPECIFICALLY RELATED TO THE INTENDED FOR PURPOSE OF THIS DOCUMENT. IN NO EVENT SHALL THIS DOCUMENT OR THE DESIGN CONCEPTS AND INFORMATION CONTAINED HEREIN BE USED FOR ANY PURPOSE DETRIMENTAL TO THE INTERESTS OF V.W.T. ALL COPYRIGHT, PATENT AND OTHER INTELLECTUAL PROPERTY RIGHTS ARE RESERVED. ACCEPTANCE OF THE DELIVERY OF THIS DOCUMENT CONSTITUTES AGREEMENT TO THESE TERMS AND CONDITIONS.

AVIS DE CONFIDENTIALITÉ ET DE PROPRIÉTÉ INTELLECTUELLE
L'INFORMATION CONTENUE DANS CE DOCUMENT EST LA PROPRIÉTÉ EXCLUSIVE DE VEOLIA WATER TECHNOLOGIES CANADA INC. ET CONTIENT DES RENSEIGNEMENTS CONFIDENTIELS ET EXCLUSIFS AINSI QUE D'AUTRES LOIS SUR LA PROPRIÉTÉ INTELLECTUELLE. LES IDÉES ET CONCEPTS ET L'INFORMATION CONTENUS DANS CE DOCUMENT SONT EXPRIMÉES EN CONFIANCE. CE DOCUMENT OU UNE PARTIE DE CE DOCUMENT DOIT ÊTRE UTILISÉ UNIQUEMENT AUX FINS POUR LESQUELLES CE DOCUMENT EST EXPRESSÉMENT SOUMIS ET AUCUNE LICENCE IMPLICITE N'EST OCTROYÉE DE PAR LA SOUMISSION DE CE DOCUMENT. CE DOCUMENT CONTIENT DES RENSEIGNEMENTS CONFIDENTIELS ET PRIVILÉGIÉS QUI S'Y TROUVENT DE LA V.W.T. ET NE DOIVENT PAS ÊTRE DIVULGUÉS, REPRODUITS, PRÊTÉS, RÉDIGÉS OU UTILISÉS EN TOUTE OU EN PARTIE AU PROFIT DE TOUTE AUTRE PARTIE SANS QUE LA V.W.T. N'ASSUME SA RESPONSABILITÉ. AUCUNE RESPONSABILITÉ OU OBLIGATION POUR L'UTILISATION DE CE DOCUMENT OU DES CONCEPTS ET L'INFORMATION CONTENUS DANS CE DOCUMENT À DES FINS AUTRES QUE CELLES QUI SE RAPPORTENT DIRECTEMENT À L'OBJET DE CE DOCUMENT NE SERA ACCEPTÉE PAR LA V.W.T. EN AUCUN CAS CE DOCUMENT NE DOIT ÊTRE UTILISÉ DE FAÇON À NUIRE AUX INTÉRÊTS DE LA V.W.T. TOUS LES DROITS D'AUTEUR, BREVET ET AUTRES DROITS DE PROPRIÉTÉ INTELLECTUELLE SONT RÉSERVÉS. L'ACCEPTATION DE LA LIVRAISON DE CE DOCUMENT NE CONSTITUE PAS UNE CESSION DE CES DROITS.

DESSINÉ DESIGNER	M.JACQUES	2019-02-12
VÉRIFIÉ CHECKER	S.DUQUET	2019-02-12
INGÉNIEUR ENGINEER		
ÉCHELLE/SCALE:		

TITRE/TITLE: HYDRAPOL 500 CONTROL PANEL
RACK 0, SLOT 02, 1734-IE8C

CLIENT: IQALUIT WWTP

VEOLIA
VEOLIA WATER TECHNOLOGIES CANADA INC. 4105 Sartelon, Saint-Laurent, Qc, Canada Tel: (514) 334-7230

PROJET/PROJECT	DESSIN/DRAWING No	INTERNE/INTERNAL	FEUILLET/SHEET	REV.
5000218036-ELD-0007-AUT-VWT	JOME01	9 DE 9		4

LR 60892

STD: "D" 22x34 | EBI ELECTRIC - 58011-P02 | BAR = 1" À L'ÉCHELLE D'IMPRESSION/BAR = 1" AT PLOT SCALE

Mar 28, 2019 11:07:55 - G:\Projets A67XX\A6798A @ A6798B - VEOLIA - 5000218036 Iqaluit WWTP Upgrade\DOC\DESSIN\000-DRAWINGS\JB-001\REV 3
AS BUILT\5000218036-EPL-0002-AU-VWT-001.dwg - zhu

BAR = 1" AT PLOT SCALE

REF: A6798A

STD: "B" 11x17

WWTP UPGRADE
CITY OF IQALUIT
CONTROL JUNCTION BOX
JB-001
PROJECT: 5000218036

REV	DESCRIPTION	DATE	REVD	CHKD	APVD	ECN
3	AS BUILT	2019-03-26	HZ	RA	-	-
2	FOR FABRICATION	2019-03-15	MR	RA	-	-
1	FOR APPROVAL	2019-01-09	HZ	RA	-	-

CONFIDENTIALITY AND INTELLECTUAL PROPERTY NOTICE
ALL INFORMATION CONTAINED IN THIS DOCUMENT IS THE SOLE PROPERTY OF VEOLIA WATER TECHNOLOGIES CANADA INC. AND IS PROTECTED BY ALL APPLICABLE LAWS, INCLUDING BUT NOT LIMITED TO COPYRIGHT AND OTHER INTELLECTUAL PROPERTY LAWS. THE DESIGN CONCEPTS AND INFORMATION CONTAINED HEREIN ARE PROPRIETARY TO V.W.T. AND ARE SUBMITTED IN CONFIDENCE. THEY ARE NOT TRANSFERABLE. THEY MUST BE USED ONLY FOR THE PURPOSE FOR WHICH THE DOCUMENT IS EXPRESSLY SUBMITTED AND NO IMPLICIT LICENCE IS GRANTED OTHERWISE BY THE SUBMISSION OF THIS DOCUMENT. THEY ARE CONFIDENTIAL AND PRIVILEGED INFORMATION OF V.W.T. AND THEY MUST NOT BE DISCLOSED, REPRODUCED, LOANED, REMITTED OR USED IN ANY OTHER MANNER WITHOUT THE EXPRESS WRITTEN CONSENT OF V.W.T. V.W.T. ASSUMES NO RESPONSIBILITY OR LIABILITY FOR THE USE OF THIS DOCUMENT OR THE DESIGN CONCEPTS AND INFORMATION CONTAINED HEREIN FOR ANOTHER PROJECT, OR IN A MANNER THAT DOES NOT RELATE TO THE FITNESS OR PURPOSE OF THIS DOCUMENT. IN NO EVENT SHALL THIS DOCUMENT OR THE DESIGN CONCEPTS AND INFORMATION CONTAINED HEREIN BE USED IN A MANNER DETRIMENTAL TO THE INTEREST OF V.W.T. ALL COPYRIGHT, PATENT AND OTHER INTELLECTUAL PROPERTY RIGHTS ARE RESERVED. ACCEPTANCE OF THE DELIVERY OF THIS DOCUMENT CONSTITUTES AGREEMENT TO THESE TERMS AND CONDITIONS.

DESIGNER	-
DATE	-
CHECKER	-
DATE	-
ENGINEER	-
DATE	-
SCALE:	N/A

TITLE: JB-001 CONTROL JUNCTION BOX TITLE PAGE

CLIENT: WWTP UPGRADE CITY OF IQALUIT

VEOLIA

VEOLIA WATER TECHNOLOGIES CANADA INC. 4105 Sartelon, Saint-Laurent, Qc, Canada. Tel: (514) 334-7230

PROJECT	DRAWING	INTERNAL	SHEET	REV
5000218036-EPL	0002-AU-VWT	-	01 OF 05	3

DRAWING LIST

DESCRIPTION	DRAWING NUMBER
CONTROL JUNCTION BOX JB-001	
TITLE PAGE	5000218036-EPL-0002-AU-VWT-001
LEGEND & DRAWING LIST	5000218036-EPL-0002-AU-VWT-002
EXTERNAL & INTERNAL LAYOUT	5000218036-EPL-0002-AU-VWT-003
BILL OF MATERIAL	5000218036-EPL-0002-AU-VWT-004
TERMINAL LAYOUT	5000218036-EPL-0002-AU-VWT-005
FIELD WIRING	5000218036-EID-0002-AU-VWT-001
FIELD WIRING	5000218036-EID-0002-AU-VWT-002

LEGEND

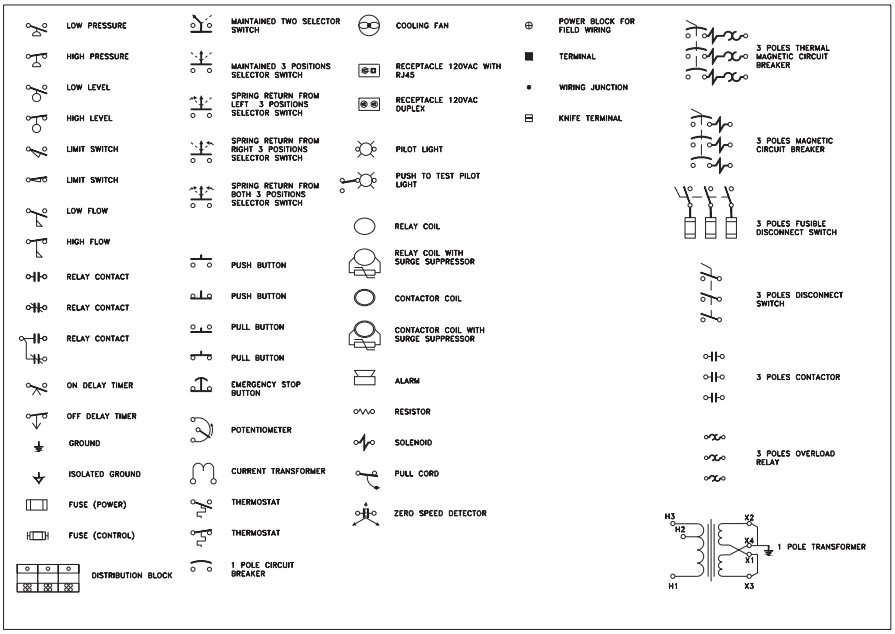

WIRE COLOR CODE	
MINIMAL 18AWG GAUGE	
POWER 120VAC	BLACK
CONTROL 120VAC	RED
NEUTRAL	WHITE
24VDC	BLUE
0VDC	BLUE/WHITE
DRY CONTRACT	YELLOW, 14AWG
NON-ISOLATED GROUND	GREEN
ISOLATED GROUND	GREEN/YELLOW
TWISTED PAIR	(+) BLACK & (-) WHITE

REV	DESCRIPTION	DATE	REVD	CHKD	APVD	ECN
3	AS BUILT	2019-03-26	HZ	RA	–	–
2	FOR FABRICATION	2019-03-15	MR	RA	–	–
1	FOR APPROVAL	2019-01-09	HZ	RA	–	–

CONFIDENTIALITY AND INTELLECTUAL PROPERTY NOTICE
ALL INFORMATION CONTAINED IN THIS DOCUMENT IS THE SOLE PROPERTY OF VEOLIA WATER TECHNOLOGIES CANADA INC. AND IS PROTECTED BY ALL APPLICABLE LAWS, INCLUDING BUT NOT LIMITED TO COPYRIGHT AND OTHER INTELLECTUAL PROPERTY LAWS. THE DESIGN CONCEPTS AND INFORMATION CONTAINED HEREIN ARE PROPRIETARY TO V.W.T. AND ARE SUBMITTED IN CONFIDENCE. THEY ARE NOT TRANSFERRED, NOR IS THE RECIPIENT GRANTED ANY LICENSE OR RIGHT OF USE, UNLESS IT IS EXPRESSLY SUBMITTED AND NO IMPLICIT LICENCE IS GRANTED OTHERWISE BY THE SUBMISSION OF THIS DOCUMENT. THEY ARE CONFIDENTIAL AND PRIVILEGED INFORMATION OF V.W.T. AND THEY MUST NOT BE DISCLOSED, REPRODUCED, LOANED, REWRITED OR USED IN ANY OTHER MANNER WITHOUT THE EXPRESS WRITTEN CONSENT OF V.W.T. V.W.T. ASSUMES NO RESPONSIBILITY OR LIABILITY FOR THE USE OF THIS DOCUMENT OTHER THAN FOR THE PURPOSE FOR WHICH IT HAS BEEN PROVIDED BY V.W.T. ANY MODIFICATION OR IN A MANNER THAT DOES NOT RELATE TO THE FITNESS OR PURPOSE OF THIS DOCUMENT, IN NO EVENT SHALL THIS DOCUMENT OR THE DESIGN CONCEPTS AND INFORMATION CONTAINED HEREIN BE USED IN A MANNER DETRIMENTAL TO THE INTEREST OF V.W.T. ALL COPYRIGHT, PATENT AND OTHER INTELLECTUAL PROPERTY RIGHTS ARE RESERVED. ACCEPTANCE OF THE DELIVERY OF THIS DOCUMENT CONSTITUTES AGREEMENT TO THESE TERMS AND CONDITIONS.

DESIGNER	DATE –
CHECKER	DATE –
ENGINEER	DATE –
SCALE:	N/A

TITLE: JB-001 CONTROL JUNCTION BOX LEGEND & DRAWING LIST

CLIENT: WWTP UPGRADE CITY OF IQALUIT

VEOLIA WATER TECHNOLOGIES CANADA INC. 4105 Sartelon, Saint-Laurent, Qc, Canada, Tel: (514) 334-7230

PROJECT	DRAWING	INTERNAL	SHEET	REV
5000218036-EPL – 0002-AU-VWT		–	02 OF 05	3

Mar 28, 2019 11:07:55 - G:\Projets A67XX\A6798A @ A6798B - VEOLIA - 5000218036 Iqaluit WWTP Upgrade\DOC\DESSIN\000-DRAWINGS\JB-001\REV 3 AS BUILT\5000218036-EPL-0002-AU-VWT-002.dwg - zhu

BAR = 1" AT PLOT SCALE
REF: A6798A
STD: "B" 11x17

ENCLOSURE NEMA 4X-FIERGLASS / 14H'' X 12W'' X 6D'' (PJ14126RL)
cUL APPROVAL

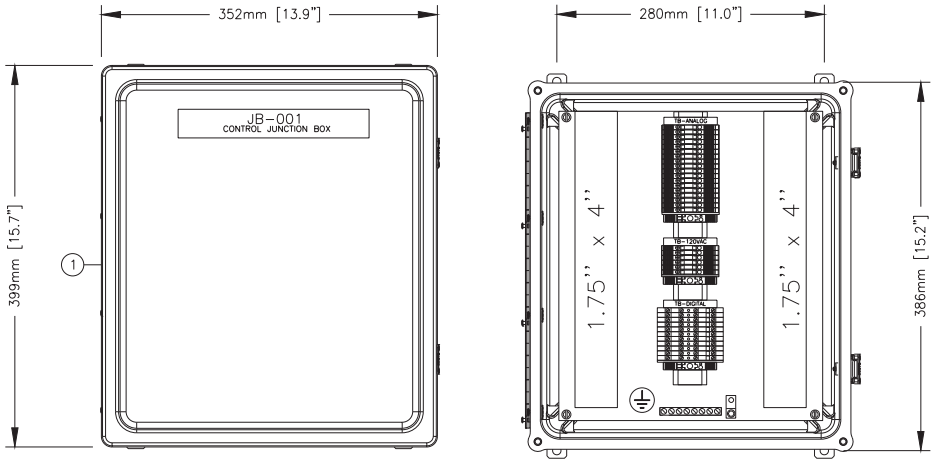

REV	DESCRIPTION	DATE	REVD	CHKD	APVD	ECN
3	AS BUILT	2019-03-26	HZ	RA	-	-
2	FOR FABRICATION	2019-03-15	MR	RA	-	-
1	FOR APPROVAL	2019-01-09	HZ	RA	-	-

CONFIDENTIALITY AND INTELLECTUAL PROPERTY NOTICE
ALL INFORMATION CONTAINED IN THIS DOCUMENT IS THE SOLE PROPERTY OF VEOLIA WATER TECHNOLOGIES CANADA INC. AND IS PROTECTED BY ALL APPLICABLE LAWS, INCLUDING BUT NOT LIMITED TO COPYRIGHT AND OTHER INTELLECTUAL PROPERTY LAWS. THE DESIGN CONCEPTS AND INFORMATION CONTAINED HEREIN ARE PROPRIETARY TO V.W.T AND ARE SUBMITTED IN CONFIDENCE. THEY ARE NOT TRANSFERABLE. THEY MUST BE USED ONLY FOR THE PURPOSE FOR WHICH THE DOCUMENT IS EXPRESSLY SUBMITTED AND NO IMPLICIT LICENCE IS GRANTED OTHERWISE BY THE SUBMISSION OF THIS DOCUMENT. THEY ARE CONFIDENTIAL AND PRIVILEGED INFORMATION OF V.W.T. AND THEY MUST NOT BE DISCLOSED, REPRODUCED, LOANED, REMITTED OR USED IN ANY OTHER MANNER WITHOUT THE EXPRESS WRITTEN CONSENT OF V.W.T. V.W.T. ASSUMES NO RESPONSIBILITY OR LIABILITY FOR THE USE OF THIS DOCUMENT OR THE DESIGN CONCEPTS AND INFORMATION CONTAINED HEREIN FOR ANOTHER PROJECT, OR IN A MANNER THAT DOES NOT RELATE TO THE FITNESS OR PURPOSE OF THIS DOCUMENT. IN NO EVENT SHALL THIS DOCUMENT OR THE DESIGN CONCEPTS AND INFORMATION CONTAINED HEREIN BE USED IN A MANNER DETRIMENTAL TO THE INTEREST OF V.W.T. ALL COPYRIGHT, PATENT AND OTHER INTELLECTUAL PROPERTY RIGHTS ARE RESERVED. ACCEPTANCE OF THE DELIVERY OF THIS DOCUMENT CONSTITUTES AGREEMENT TO THESE TERMS AND CONDITIONS.

DESIGNER	-	DATE -
CHECKER	-	DATE -
ENGINEER	-	DATE -
SCALE:	N/A	

TITLE: JB-001 CONTROL JUNCTION BOX EXTERNAL & INTERNAL LAYOUT

CLIENT: WWTP UPGRADE CITY OF IQALUIT

VEOLIA WATER TECHNOLOGIES CANADA INC. 4105 Sandton, Saint-Laurent, Qc, Canada. Tel: (514) 334-7230

PROJECT	DRAWING	INTERNAL	SHEET	REV
5000218036-EPL	0002-AU-VWT	-	03 OF 05	3

BAR = 1" AT PLOT SCALE

REF: A6798A

STD: "B" 11x17

Mar 28, 2019 11:07:57 - G:\Projets A67XX\A6798A @ A6798B - VEOLIA - 5000218036 Iqaluit WWTP Upgrade\DOC\DESSIN\000-DRAWINGS\JB-001\REV 3
AS BUILT\5000218036-EPL-0002-AU-VWT-003.dwg - zhu

Mar 28, 2019 11:07:59 - G:\Projets A67XX\A6798A @ A6798B - VEOLIA - 5000218036 Iqaluit WWTP Upgrade\DOC\DESSIN\000-DRAWINGS\JB-001\REV 3
AS BUILT\5000218036-EPL-0002-AU-VWT-004.dwg - zhu

BAR = 1" AT PLOT SCALE

REF: A6798A

STD: "B" 11x17

A

TB-ANALOG
011808+
011808-
SH
011814+
011814-
SH
-
-
SH
012129+
012129-
SH
012045+
012045-
SH
-
-
SH

K

A

TB-DIGITAL	
010814	010404
010816	010404
010818	010404
010828	010404
010830	010404
010832	010404
010834	010404
010836	010404
010904	010406
011606A	N
-	-

D

A

TB-120VAC
010144
010152
-
N
N
N

C

TERMINAL DESCRIPTION
A) ID(WAD8)
B) WDU6
C) WDU4
D) WDK2.5
E) DLD2.5
F) FUSE WSI 4/2
G) FUSE WSI 4
H) FUSE KDKS 1/EN4
J) WTR 2.5
K) WDU 2.5

REV	DESCRIPTION	DATE	REVD	CHKD	APVD	ECN
3	AS BUILT	2019-03-26	HZ	RA	-	-
2	FOR FABRICATION	2019-03-15	MR	RA	-	-
1	FOR APPROVAL	2019-01-09	HZ	RA	-	-

CONFIDENTIALITY AND INTELLECTUAL PROPERTY NOTICE
ALL INFORMATION CONTAINED IN THIS DOCUMENT IS THE SOLE PROPERTY OF VEOLIA WATER TECHNOLOGIES CANADA INC. AND IS PROTECTED BY ALL APPLICABLE LAWS, INCLUDING BUT NOT LIMITED TO COPYRIGHT AND OTHER INTELLECTUAL PROPERTY LAWS. THE DESIGN CONCEPTS AND INFORMATION CONTAINED HEREIN ARE PROPRIETARY TO V.W.T. AND ARE SUBMITTED IN CONFIDENCE. THEY ARE NOT TRANSFERABLE. THEY MUST BE USED ONLY FOR THE PURPOSE FOR WHICH THE DOCUMENT IS EXPRESSLY SUBMITTED AND NO IMPLICIT LICENCE IS GRANTED OTHERWISE BY THE SUBMISSION OF THIS DOCUMENT. THEY ARE CONFIDENTIAL AND PRIVILEGED INFORMATION OF V.W.T. AND THEY MUST NOT BE DISCLOSED, REPRODUCED, LOANED, REMITTED OR USED IN ANY OTHER MANNER WITHOUT THE EXPRESS WRITTEN CONSENT OF V.W.T. V.W.T. ASSUMES NO RESPONSIBILITY OR LIABILITY FOR THE USE OF THIS DOCUMENT OR THE DESIGN CONCEPTS AND INFORMATION CONTAINED HEREIN FOR ANOTHER PROJECT, OR IN A MANNER THAT DOES NOT RELATE TO THE FITNESS OR PURPOSE OF THIS DOCUMENT. IN NO EVENT SHALL THIS DOCUMENT OR THE DESIGN CONCEPTS AND INFORMATION CONTAINED HEREIN BE USED IN A MANNER DETRIMENTAL TO THE INTEREST OF V.W.T. ALL COPYRIGHT, PATENT AND OTHER INTELLECTUAL PROPERTY RIGHTS ARE RESERVED. ACCEPTANCE OF THE DELIVERY OF THIS DOCUMENT CONSTITUTES AGREEMENT TO THESE TERMS AND CONDITIONS.

DESIGNER	DATE
-	-
CHECKER	DATE
-	-
ENGINEER	DATE
-	-
SCALE: N/A	

TITLE
JB-001
CONTROL JUNCTION BOX
TERMINAL LAYOUT

CLIENT
WWTP UPGRADE
CITY OF IQALUIT

VEOLIA
VEOLIA WATER TECHNOLOGIES CANADA INC. 4105 Sanktion, Saint-Laurent, Qc, Canada. Tel: (514) 334-7230

PROJECT	DRAWING	INTERNAL	SHEET	REV
5000218036-EPL	0002-AU-VWT	-	04 OF 05	3

ITEM	DESCRIPTION	PART NUMBER	MANUF.	QTY	BY
1	NEMA 4X ENCLOSURE, C/W PAN 14R1311 DIM 14"H x 12"W x 6"D, FIBERGLASS REINFORCED POLYESTER	PJ14126RL	HAMMOND	1	ENV
2	TERMINAL 600VAC/DC, 20A WDU 2.5 C/W END PLATE 1050000000	1020000000	WEIDMULLER	A/R	ENV
3	TERMINAL 600VAC/DC, 30A WDU 4 C/W END PLATE 1050000000	1020100000	WEIDMULLER	A/R	ENV
4	TERMINAL 600VAC/DC, 50A WDU 6 C/W END PLATE 1050000000 OR SEPERATOR 1050100000	1020200000	WEIDMULLER	A/R	ENV
5	KNIFE TERMINAL 300VAC/DC, 10A, WTR 2.5 C/W END PLATE 1050000000	1855610000	WEIDMULLER	A/R	ENV
6	TERMINAL 2 LEVEL 300VAC/DC, 10A, WDK 2.5 C/W END PLATE 1059100000	1021500000	WEIDMULLER	A/R	ENV
7	TERMINAL 3 LEVEL 300VAC/DC, 10A, DLD 2.5 C/W END PLATE 1784210000	1784180000	WEIDMULLER	A/R	ENV
8	FUSE TERMINAL ¼ X 1¼, 300VAC/DC, 15A, WSI 4/2 C/W END PLATE 1880450000	1880430000	WEIDMULLER	A/R	ENV
9	FUSE TERMINAL 5 X 20mm, 300VAC/DC, 15A, WSI 4	1886580000	WEIDMULLER	A/R	ENV
10	FUSE TERMINAL 2 LEVEL 5 X 20mm, 300VAC/DC, 10A, KDKS 1/EN4 C/W END PLATE 9503330000	9503350000	WEIDMULLER	A/R	ENV
11	FUSE TERMINAL 2 LEVEL ¼ X 1¼, 300VAC/DC, 10A, KDKS 1/35DB C/W END PLATE 9532470000	9532440000	WEIDMULLER	A/R	ENV
12	END STOPPER WEW 35/2	1061200000	WEIDMULLER	A/R	ENV
13	COPPER GROUND BAR, #4-14	4C-190	NSI-INDUSTRIES	A/R	ENV
14	COPPER GROUND LUG, 600VAC, #6-14, STR	CB35-36-LY	PANDUIT	A/R	ENV

REV	DESCRIPTION	DATE	REVD	CHKD	APVD	ECN
3	AS BUILT	2019-03-26	HZ	RA	–	–
2	FOR FABRICATION	2019-03-15	MR	RA	–	–
1	FOR APPROVAL	2019-01-09	HZ	RA	–	–

CONFIDENTIALITY AND INTELLECTUAL PROPERTY NOTICE
ALL INFORMATION CONTAINED IN THIS DOCUMENT IS THE SOLE PROPERTY OF VEOLIA WATER TECHNOLOGIES CANADA INC. AND IS PROTECTED BY ALL APPLICABLE LAWS, INCLUDING BUT NOT LIMITED TO COPYRIGHT AND OTHER INTELLECTUAL PROPERTY LAWS. THE DESIGN CONCEPTS AND INFORMATION CONTAINED HEREIN ARE PROPRIETARY TO V.W.T. AND ARE SUBMITTED IN CONFIDENCE. THEY ARE NOT TRANSFERABLE. THEY SHALL NOT BE USED IN WHOLE OR IN PART FOR ANY PURPOSE UNLESS IT IS EXPRESSLY SUBMITTED AND NO IMPLICIT LICENCE IS GRANTED OTHERWISE BY THE SUBMISSION OF THIS DOCUMENT. THEY ARE CONFIDENTIAL AND PRIVILEGED INFORMATION OF V.W.T. AND THEY MUST NOT BE DISCLOSED, REPRODUCED, LOANED, REMITTED OR USED IN ANY OTHER MANNER WITHOUT THE EXPRESS WRITTEN CONSENT OF V.W.T. V.W.T. ASSUMES NO RESPONSIBILITY OR LIABILITY FOR THE USE OF THIS DOCUMENT, OR OF ANY DESIGN CONCEPTS OR INFORMATION CONTAINED IN IT, AND/OR INTERPRETATIONS BY A MANNER THAT GIVES RISE OR RELATE TO THE FITNESS OR PURPOSE OF THIS DOCUMENT. IN NO EVENT SHALL THIS DOCUMENT OR THE DESIGN CONCEPTS AND INFORMATION CONTAINED HEREIN BE USED IN A MANNER DETRIMENTAL TO THE INTEREST OF V.W.T. ALL COPYRIGHT, PATENT AND OTHER INTELLECTUAL PROPERTY RIGHTS ARE RESERVED. ACCEPTANCE OF THE DELIVERY OF THIS DOCUMENT CONSTITUTES AGREEMENT TO THESE TERMS AND CONDITIONS.

DESIGNER	DATE
–	–
CHECKER	DATE
–	–
ENGINEER	DATE
–	–
SCALE:	N/A

TITLE: JB-001
CONTROL JUNCTION BOX
BILL OF MATERIAL

CLIENT: WWTP UPGRADE
CITY OF IQALUIT

VEOLIA WATER TECHNOLOGIES CANADA INC. 4105 Sartelon, Saint-Laurent, Qc, Canada. Tel: (514) 334-7230

PROJECT DRAWING	INTERNAL	SHEET	REV
500021803G-EPL – 0002-AU-VWT	–	05 OF 05	3

Mar 28, 2019 11:08:00 - G:\Projets A67xx\A6798A @ A6798B - VEOLIA - 5000218036 Iqaluit WWTP Upgrade\DOC\DESSIN\000-DRAWINGS\JB-001\REV 3 AS BUILT\5000218036-EPL-0002-AU-VWT-005.dwg - zhu

BAR = 1" AT PLOT SCALE
REF: A6798A
STD: "B" 11x17

Mar 28, 2019 11:08:00 - G:\Projets A67xx\A6798A @ A6798B - VEOLIA - 5000218036 Iqaluit WWTP Upgrade\DOC\DESSIN\000-DRAWINGS\JB-001\REV 3
AS BUILT\5000218036-EID-0002-AU-VWT-001.dwg - zhu

BAR = 1" AT PLOT SCALE
REF: A6798A
STD: "B" 11x17

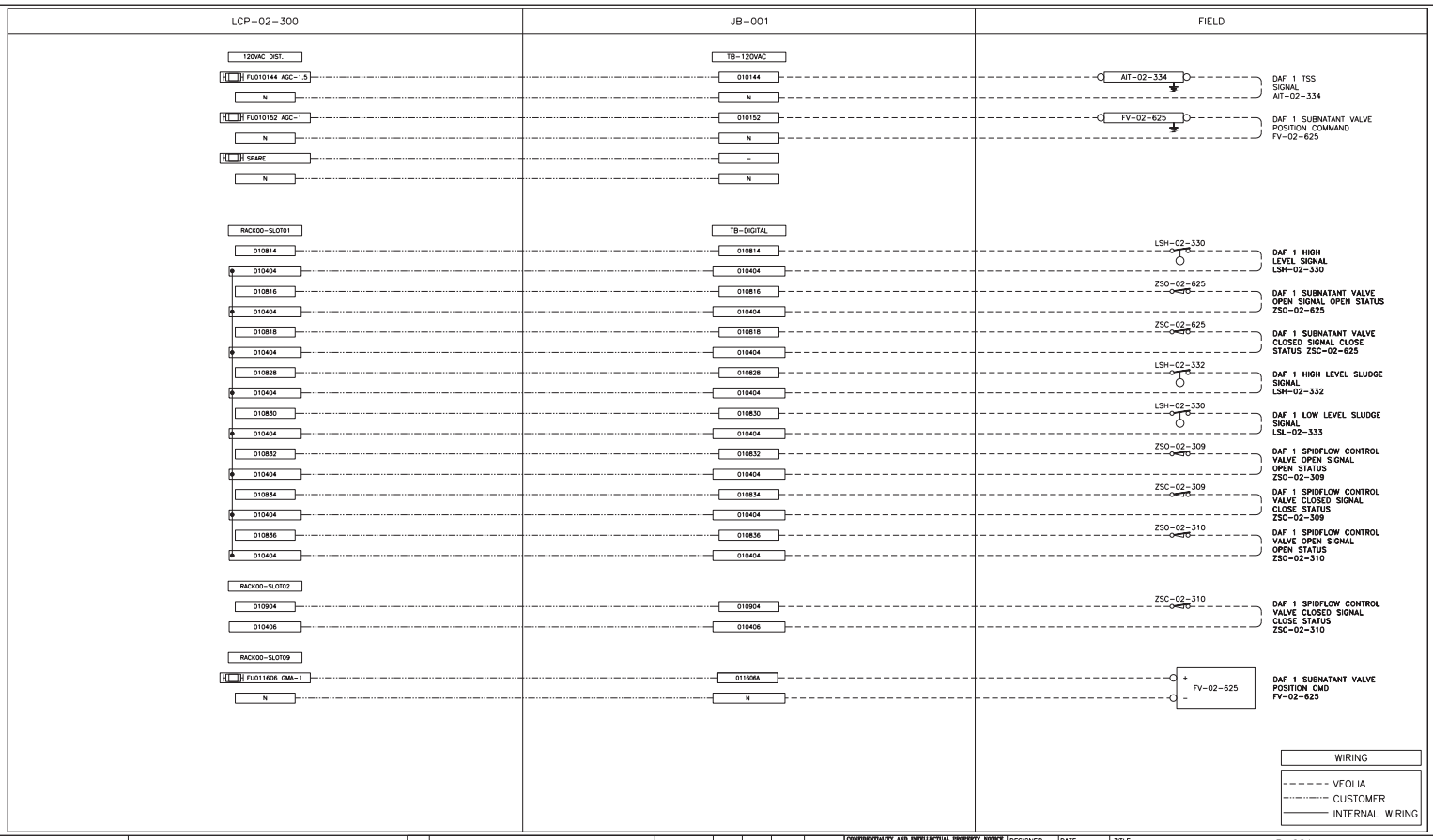

REV	DESCRIPTION	DATE	REVD	CHKD	APVD	ECN
3	AS BUILT	2019-03-26	HZ	RA	-	-
2	FOR FABRICATION	2019-03-15	MR	RA	-	-
1	FOR APPROVAL	2019-01-09	HZ	RA	-	-

CONFIDENTIALITY AND INTELLECTUAL PROPERTY NOTICE
ALL INFORMATION CONTAINED IN THIS DOCUMENT IS THE SOLE PROPERTY OF VEOLIA WATER TECHNOLOGIES CANADA INC. AND IS PROTECTED BY ALL APPLICABLE LAWS, INCLUDING BUT NOT LIMITED TO COPYRIGHT AND OTHER INTELLECTUAL PROPERTY LAWS. THE DESIGN CONCEPTS AND INFORMATION CONTAINED HEREIN ARE PROPRIETARY TO V.B.T. AND ARE SUBMITTED IN CONFIDENCE. THEY ARE NOT TRANSFERABLE. THEY SHALL NOT BE USED FOR ANY PURPOSE OTHER THAN THAT FOR WHICH IT IS EXPRESSLY SUBMITTED AND NO IMPLICIT LICENCE IS GRANTED OTHERWISE BY THE SUBMISSION OF THIS DOCUMENT. THEY ARE CONFIDENTIAL AND PRIVILEGED INFORMATION OF V.B.T. AND THEY MUST NOT BE DISCLOSED, REPRODUCED, LOANED, REWRITTEN OR USED IN ANY OTHER MANNER WITHOUT THE EXPRESS WRITTEN CONSENT OF V.B.T. V.B.T. ASSUMES NO RESPONSIBILITY OR LIABILITY FOR THE USE OF THIS DOCUMENT IN WHOLE OR IN PART IN ANY OTHER PROJECT OR EXTENSION OF THIS PROJECT. ANY MODIFICATION OR ALTERATION IN A MANNER THAT DOES NOT ADHERE TO THE FITNESS OR PURPOSE OF THIS DOCUMENT, IN NO EVENT SHALL THIS DOCUMENT OR THE DESIGN CONCEPTS AND INFORMATION CONTAINED HEREIN BE USED IN A MANNER DETRIMENTAL TO THE INTEREST OF V.B.T. ALL COPYRIGHT, PATENT AND OTHER INTELLECTUAL PROPERTY RIGHTS ARE RESERVED. ACCEPTANCE OF THE DELIVERY OF THIS DOCUMENT CONSTITUTES AGREEMENT TO THESE TERMS AND CONDITIONS.

		DATE
DESIGNER	-	-
CHECKER	-	-
ENGINEER	-	-
SCALE:	N/A	

TITLE: JB-001
CONTROL JUNCTION BOX
FIELD WIRING

CLIENT: WWTP UPGRADE
CITY OF IQALUIT

VEOLIA
VEOLIA WATER TECHNOLOGIES CANADA INC. 4105 Sartelon, Saint-Laurent, Qc. Canada. Tel: (514) 334-7230

PROJECT DRAWING	INTERNAL	SHEET	REV
5000218036-EID - 0002-AU-VWT	-	01 OF 02	3

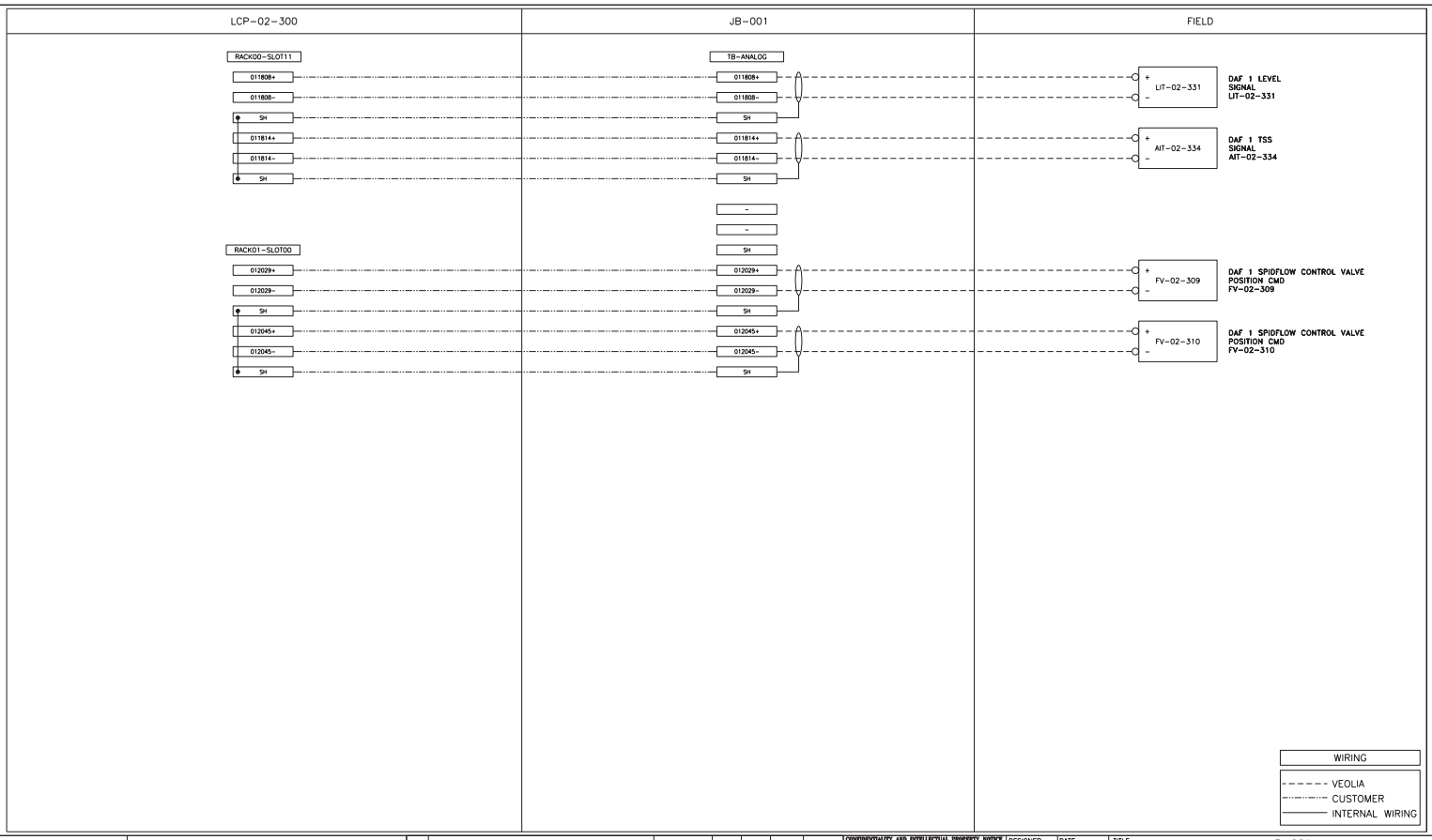

REV	DESCRIPTION	DATE	REVD	CHKD	APVD	ECN
3	AS BUILT	2019-03-26	HZ	RA	-	-
2	FOR FABRICATION	2019-03-15	MR	RA	-	-
1	FOR APPROVAL	2019-01-09	HZ	RA	-	-

CONFIDENTIALITY AND INTELLECTUAL PROPERTY NOTICE
ALL INFORMATION CONTAINED IN THIS DOCUMENT IS THE SOLE PROPERTY OF VEOLIA WATER TECHNOLOGIES CANADA INC. AND IS PROTECTED BY ALL APPLICABLE LAWS, INCLUDING BUT NOT LIMITED TO COPYRIGHT AND OTHER INTELLECTUAL PROPERTY LAWS. THE DESIGN CONCEPTS AND INFORMATION CONTAINED HEREIN ARE PROPRIETARY TO V.W.T. AND ARE SUBMITTED IN CONFIDENCE. THEY ARE NOT TRANSFERABLE. THEY MUST BE USED ONLY FOR THE PURPOSE FOR WHICH THE DOCUMENT IS EXPRESSLY SUBMITTED AND NO IMPLICIT LICENCE IS GRANTED OTHERWISE BY THE SUBMISSION OF THIS DOCUMENT. THEY ARE CONFIDENTIAL AND PRIVILEGED INFORMATION OF V.W.T. AND THEY MUST NOT BE DISCLOSED, REPRODUCED, LOANED, REMITTED OR USED IN ANY OTHER MANNER WITHOUT THE EXPRESS WRITTEN CONSENT OF V.W.T. V.W.T. ASSUMES NO RESPONSIBILITY OR LIABILITY FOR THE USE OF THIS DOCUMENT OR THE DESIGN CONCEPTS AND INFORMATION CONTAINED HEREIN FOR ANOTHER PROJECT, OR IN A MANNER THAT DOES NOT RELATE TO THE FITNESS OR PURPOSE OF THIS DOCUMENT. IN NO EVENT SHALL THIS DOCUMENT OR THE DESIGN CONCEPTS AND INFORMATION CONTAINED HEREIN BE USED IN A MANNER DETRIMENTAL TO THE INTEREST OF V.W.T. ALL COPYRIGHT, PATENT AND OTHER INTELLECTUAL PROPERTY RIGHTS ARE RESERVED. ACCEPTANCE OF THE DELIVERY OF THIS DOCUMENT CONSTITUTES AGREEMENT TO THESE TERMS AND CONDITIONS.

DESIGNER	-
DATE	-
CHECKER	-
DATE	-
ENGINEER	-
DATE	-
SCALE:	N/A

TITLE: JB-001 CONTROL JUNCTION BOX FIELD WIRING

CLIENT: WWTP UPGRADE CITY OF IQALUIT

VEOLIA

VEOLIA WATER TECHNOLOGIES CANADA INC. 4105 Sartelon, Saint-Laurent, Qc, Canada. Tel: (514) 334-7230

PROJECT	DRAWING	INTERNAL	SHEET	REV
5000218036-EID	0002-AU-VWT	-	02 OF 02	3

Mar 28, 2019 11:08:02 - G:\Projets A67XX\A6798A @ A6798B - VEOLIA - 5000218036 Iqaluit WWTP Upgrade\DOC\DESSIN\000-DRAWINGS\JB-001\REV 3
AS BUILT\5000218036-EID-0002-AU-VWT-002.dwg - zhu
BAR = 1" AT PLOT SCALE
REF: A6798A
STD: "B" 11x17

LEFT BLANK

Mar 28, 2019 11:13:04 - G:\Projets A67XX\A6798A @ A6798B - VEOLIA - 5000218036 Iqaluit WWTP Upgrade\DOC\DESSIN\000-DRAWINGS\JB-002\REV 3
AS BUILT\5000218036-EPL-0003-AU-VWT-001.dwg - zhu

WWTP UPGRADE
CITY OF IQALUIT
CONTROL JUNCTION BOX
JB-002
PROJECT: 5000218036

REV	DESCRIPTION	DATE	REVD	CHKD	APVD	ECN
3	AS BUILT	2019-03-26	HZ	RA	-	-
2	FOR FABRICATION	2019-03-19	HZ	RA	-	-
1	FOR APPROVAL	2019-01-09	HZ	RA	-	-

CONFIDENTIALITY AND INTELLECTUAL PROPERTY NOTICE
ALL INFORMATION CONTAINED IN THIS DOCUMENT IS THE SOLE PROPERTY OF VEOLIA WATER TECHNOLOGIES CANADA INC. AND IS PROTECTED BY ALL APPLICABLE LAWS, INCLUDING BUT NOT LIMITED TO COPYRIGHT AND OTHER INTELLECTUAL PROPERTY LAWS. THE DESIGN CONCEPTS AND INFORMATION CONTAINED HEREIN ARE PROPRIETARY TO V.W.T. AND ARE SUBMITTED IN CONFIDENCE. THEY ARE NOT TRANSFERABLE. THEY MUST BE USED ONLY FOR THE PURPOSE FOR WHICH THE DOCUMENT IS EXPRESSLY SUBMITTED AND NO IMPLICIT LICENCE IS GRANTED OTHERWISE BY THE SUBMISSION OF THIS DOCUMENT. THEY ARE CONFIDENTIAL AND PRIVILEGED INFORMATION OF V.W.T. AND THEY MUST NOT BE DISCLOSED, REPRODUCED, LOANED, REMITTED OR USED IN ANY OTHER MANNER WITHOUT THE EXPRESS WRITTEN CONSENT OF V.W.T. V.W.T. ASSUMES NO RESPONSIBILITY OR LIABILITY FOR THE USE OF THIS DOCUMENT OR THE DESIGN CONCEPTS AND INFORMATION CONTAINED HEREIN FOR ANOTHER PROJECT, OR IN A MANNER THAT DOES NOT RELATE TO THE FITNESS OR PURPOSE OF THIS DOCUMENT. IN NO EVENT SHALL THIS DOCUMENT OR THE DESIGN CONCEPTS AND INFORMATION CONTAINED HEREIN BE USED IN A MANNER DETRIMENTAL TO THE INTEREST OF V.W.T. ALL COPYRIGHT, PATENT AND OTHER INTELLECTUAL PROPERTY RIGHTS ARE RESERVED. ACCEPTANCE OF THE DELIVERY OF THIS DOCUMENT CONSTITUTES AGREEMENT TO THESE TERMS AND CONDITIONS.

DESIGNER	-
DATE	-
CHECKER	-
DATE	-
ENGINEER	-
DATE	-
SCALE:	N/A

TITLE: JB-002 CONTROL JUNCTION BOX TITLE PAGE

CLIENT: WWTP UPGRADE CITY OF IQALUIT

VEOLIA

VEOLIA WATER TECHNOLOGIES CANADA INC. 4105 Sartelon, Saint-Laurent, Qc, Canada. Tel: (514) 334-7230

PROJECT	DRAWING	INTERNAL	SHEET	REV
5000218036-EPL	0003-AU-VWT	-	01 OF 05	3

BAR = 1" AT PLOT SCALE
REF: A6798A
STD: "B" 11x17

DRAWING LIST

DESCRIPTION	DRAWING NUMBER
CONTROL JUNCTION BOX JB-002	
TITLE PAGE	5000218036-EPL-0003-AU-VWT-001
LEGEND & DRAWING LIST	5000218036-EPL-0003-AU-VWT-002
EXTERNAL & INTERNAL LAYOUT	5000218036-EPL-0003-AU-VWT-003
BILL OF MATERIAL	5000218036-EPL-0003-AU-VWT-004
TERMINAL LAYOUT	5000218036-EPL-0003-AU-VWT-005
FIELD WIRING	5000218036-EID-0003-AU-VWT-001
FIELD WIRING	5000218036-EID-0003-AU-VWT-002

LEGEND

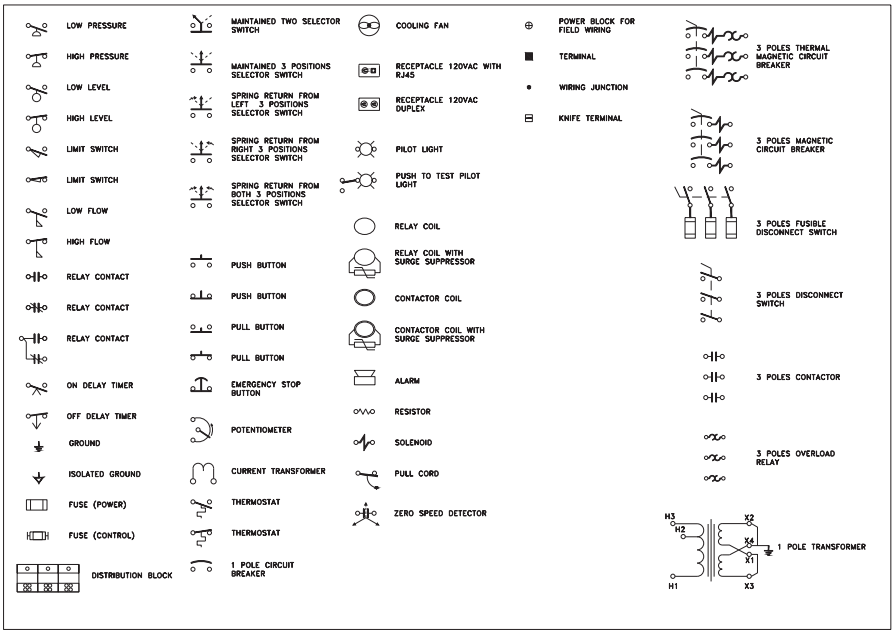

WIRE COLOR CODE	
MINIMAL 18AWG GAUGE	
POWER 120VAC	BLACK
CONTROL 120VAC	RED
NEUTRAL	WHITE
24VDC	BLUE
0VDC	BLUE/WHITE
DRY CONTRACT	YELLOW, 14AWG
NON-ISOLATED GROUND	GREEN
ISOLATED GROUND	GREEN/YELLOW
TWISTED PAIR	(+) BLACK & (-) WHITE

REV	DESCRIPTION	DATE	REVD	CHKD	APVD	ECN
3	AS BUILT	2019-03-26	HZ	RA	-	-
2	FOR FABRICATION	2019-03-19	HZ	RA	-	-
1	FOR APPROVAL	2019-01-09	HZ	RA	-	-

CONFIDENTIALITY AND INTELLECTUAL PROPERTY NOTICE
ALL INFORMATION CONTAINED IN THIS DOCUMENT IS THE SOLE PROPERTY OF VEOLIA WATER TECHNOLOGIES CANADA INC. AND IS PROTECTED BY ALL APPLICABLE LAWS, INCLUDING BUT NOT LIMITED TO COPYRIGHT AND OTHER INTELLECTUAL PROPERTY LAWS. THE DESIGN CONCEPTS AND INFORMATION CONTAINED HEREIN ARE PROPRIETARY TO V.W.T. AND ARE SUBMITTED IN CONFIDENCE. THEY ARE NOT TRANSFERRED, SOLD OR LICENSED TO THE RECIPIENT OF THIS DOCUMENT. THEY MAY BE EXPRESSLY SUBMITTED AND NO IMPLICIT LICENCE IS GRANTED OTHERWISE BY THE SUBMISSION OF THIS DOCUMENT. THEY ARE CONFIDENTIAL AND PRIVILEGED INFORMATION OF V.W.T. AND THEY MUST NOT BE DISCLOSED, REPRODUCED, LOANED, REWRITED OR USED IN ANY OTHER MANNER WITHOUT THE EXPRESS WRITTEN CONSENT OF V.W.T. V.W.T. ASSUMES NO RESPONSIBILITY OR LIABILITY FOR THE USE OF THIS DOCUMENT OTHER THAN FOR THE PURPOSE FOR WHICH IT HAS BEEN PROVIDED BY V.W.T. ANY MODIFICATION OR IN A MANNER THAT DOES NOT RELATE TO THE FITNESS OR PURPOSE OF THIS DOCUMENT, IN NO EVENT SHALL THIS DOCUMENT OR THE DESIGN CONCEPTS AND INFORMATION CONTAINED HEREIN BE USED IN A MANNER DETRIMENTAL TO THE INTEREST OF V.W.T. ALL COPYRIGHT, PATENT AND OTHER INTELLECTUAL PROPERTY RIGHTS ARE RESERVED. ACCEPTANCE OF THE DELIVERY OF THIS DOCUMENT CONSTITUTES AGREEMENT TO THESE TERMS AND CONDITIONS.

DESIGNER	DATE -
CHECKER	DATE -
ENGINEER	DATE -
SCALE:	N/A

TITLE: JB-002 CONTROL JUNCTION BOX LEGEND & DRAWING LIST

CLIENT: WWTP UPGRADE CITY OF IQALUIT

VEOLIA WATER TECHNOLOGIES CANADA INC. 4105 Sartelon, Saint-Laurent, Qc, Canada, Tel: (514) 334-7230

PROJECT	DRAWING	INTERNAL	SHEET	REV
5000218036-EPL	0003-AU-VWT	-	02 OF 05	3

BAR = 1" AT PLOT SCALE
REF: A6798A
STD: "B" 11x17
Mar 28, 2019 11:13:07 - G:\Projets A67XX\A6798A @ A6798B - VEOLIA - 5000218036 Iqaluit WWTP Upgrade\DOC\DESSIN\000-DRAWINGS\JB-002\REV 3 AS BUILT\5000218036-EPL-0003-AU-VWT-002.dwg - zhu

ENCLOSURE NEMA 4X-FIERGLASS / 14H'' X 12W'' X 6D'' (PJ14126RL)
cUL APPROVAL

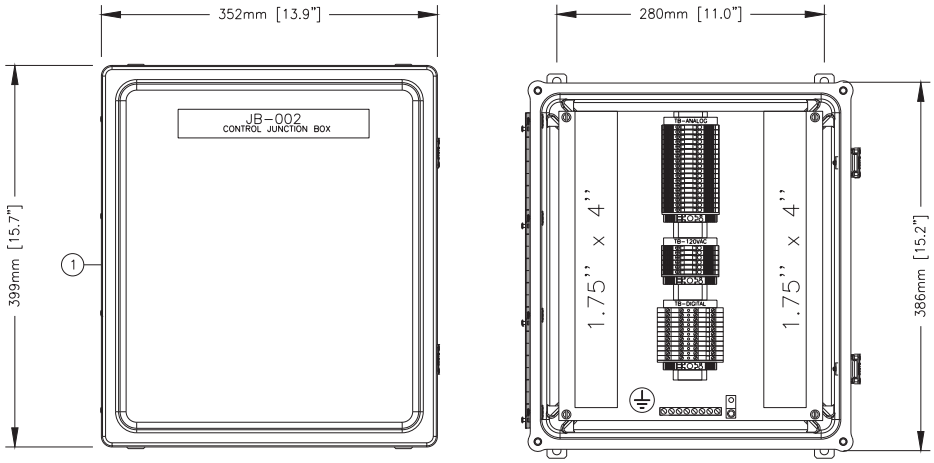

REV	DESCRIPTION	DATE	REVD	CHKD	APVD	ECN
3	AS BUILT	2019-03-26	HZ	RA	-	-
2	FOR FABRICATION	2019-03-19	HZ	RA	-	-
1	FOR APPROVAL	2019-01-09	HZ	RA	-	-

CONFIDENTIALITY AND INTELLECTUAL PROPERTY NOTICE
ALL INFORMATION CONTAINED IN THIS DOCUMENT IS THE SOLE PROPERTY OF VEOLIA WATER TECHNOLOGIES CANADA INC. AND IS PROTECTED BY ALL APPLICABLE LAWS, INCLUDING BUT NOT LIMITED TO COPYRIGHT AND OTHER INTELLECTUAL PROPERTY LAWS. THE DESIGN CONCEPTS AND INFORMATION CONTAINED HEREIN ARE PROPRIETARY TO V.W.T AND ARE SUBMITTED IN CONFIDENCE. THEY ARE NOT TRANSFERABLE. THEY MUST BE USED ONLY FOR THE PURPOSE FOR WHICH THE DOCUMENT IS EXPRESSLY SUBMITTED AND NO IMPLICIT LICENCE IS GRANTED OTHERWISE BY THE SUBMISSION OF THIS DOCUMENT. THEY ARE CONFIDENTIAL AND PRIVILEGED INFORMATION OF V.W.T. AND THEY MUST NOT BE DISCLOSED, REPRODUCED, LOANED, REMITTED OR USED IN ANY OTHER MANNER WITHOUT THE EXPRESS WRITTEN CONSENT OF V.W.T. V.W.T. ASSUMES NO RESPONSIBILITY OR LIABILITY FOR THE USE OF THIS DOCUMENT OR THE DESIGN CONCEPTS AND INFORMATION CONTAINED HEREIN FOR ANOTHER PROJECT, OR IN A MANNER THAT DOES NOT RELATE TO THE FITNESS OR PURPOSE OF THIS DOCUMENT. IN NO EVENT SHALL THIS DOCUMENT OR THE DESIGN CONCEPTS AND INFORMATION CONTAINED HEREIN BE USED IN A MANNER DETRIMENTAL TO THE INTEREST OF V.W.T. ALL COPYRIGHT, PATENT AND OTHER INTELLECTUAL PROPERTY RIGHTS ARE RESERVED. ACCEPTANCE OF THE DELIVERY OF THIS DOCUMENT CONSTITUTES AGREEMENT TO THESE TERMS AND CONDITIONS.

DESIGNER	DATE	TITLE: JB-002 CONTROL JUNCTION BOX EXTERNAL & INTERNAL LAYOUT
CHECKER	DATE	CLIENT: WWTP UPGRADE CITY OF IQALUIT
ENGINEER	DATE	VEOLIA
SCALE: N/A		VEOLIA WATER TECHNOLOGIES CANADA INC. 4105 Sandton, Saint-Laurent, Qc, Canada. Tel: (514) 334-7230

PROJECT	DRAWING	INTERNAL	SHEET	REV
5000218036-EPL	0003-AU-VWT	-	03 OF 05	3

BAR = 1" AT PLOT SCALE
REF: A6798A
STD: "B" 11x17

Mar 28, 2019 11:13:08 - G:\Projets A67XX\A6798A @ A6798B - VEOLIA - 5000218036 Iqaluit WWTP Upgrade\DOC\DESSIN\00-DRAWINGS\JB-002\REV 3
AS BUILT\5000218036-EPL-0003-AU-VWT-003.dwg - zhu

Mar 28, 2019 11:13:09 - G:\Projets A67XX\A6798A @ A6798B - VEOLIA - 5000218036 Iqaluit WWTP Upgrade\DOC\DESSIN\000-DRAWINGS\JB-002\REV 3
AS BUILT\5000218036-EPL-0003-AU-VWT-004.dwg - zhu

BAR = 1" AT PLOT SCALE

REF: A6798A

STD: "B" 11x17

A

TB-ANALOG
011848+
011848-
SH
011854+
011854-
SH
-
-
SH
012061+
012061-
SH
012069+
012069-
SH
-
-
K SH

A

TB-DIGITAL	
011026	010408
011028	010408
011030	010408
011104	010410
011106	010410
011108	010410
011110	010410
011112	010410
011114	010410
011608A	N
D -	-

A

TB-120VAC
010148
010154
-
N
N
C N

TERMINAL DESCRIPTION
A) ID(WAD8)
B) WDU6
C) WDU4
D) WDK2.5
E) DLD2.5
F) FUSE WSI 4/2
G) FUSE WSI 4
H) FUSE KDKS 1/EN4
J) WTR 2.5
K) WDU 2.5

REV	DESCRIPTION	DATE	REVD	CHKD	APVD	ECN
3	AS BUILT	2019-03-26	HZ	RA	-	-
2	FOR FABRICATION	2019-03-19	HZ	RA	-	-
1	FOR APPROVAL	2019-01-09	HZ	RA	-	-

CONFIDENTIALITY AND INTELLECTUAL PROPERTY NOTICE
ALL INFORMATION CONTAINED IN THIS DOCUMENT IS THE SOLE PROPERTY OF VEOLIA WATER TECHNOLOGIES CANADA INC. AND IS PROTECTED BY ALL APPLICABLE LAWS, INCLUDING BUT NOT LIMITED TO COPYRIGHT AND OTHER INTELLECTUAL PROPERTY LAWS. THE DESIGN CONCEPTS AND INFORMATION CONTAINED HEREIN ARE PROPRIETARY TO V.W.T. AND ARE SUBMITTED IN CONFIDENCE. IF THEY ARE NOT TRANSFERABLE, THEY MUST NOT BE DISCLOSED, REPRODUCED, LOANED, REMITTED OR USED IN ANY OTHER MANNER WITHOUT THE EXPRESS WRITTEN CONSENT OF V.W.T. IF THEY ARE TRANSFERABLE, THEY MUST NOT BE DISCLOSED, REPRODUCED, LOANED, REMITTED OR USED IN ANY OTHER MANNER WITHOUT THE EXPRESS WRITTEN CONSENT OF V.W.T., UNLESS OTHERWISE BY THE SUBMISSION OF THIS DOCUMENT, THEY ARE CONFIDENTIAL AND PRIVILEGED INFORMATION OF V.W.T. AND THEY MUST NOT BE DISCLOSED, REPRODUCED, LOANED, REMITTED OR USED IN ANY OTHER MANNER WITHOUT THE EXPRESS WRITTEN CONSENT OF V.W.T.. V.W.T. ASSUMES NO RESPONSIBILITY OR LIABILITY FOR THE USE OF THIS DOCUMENT, OR OF THE DESIGN CONCEPTS OR INFORMATION CONTAINED IN IT, FOR PURPOSES OTHER THAN THOSE FOR WHICH IT WAS INTENDED, OR FOR ANY MODIFICATIONS MADE BY ANYONE OTHER THAN V.W.T., OR FOR ANY USE OF THIS DOCUMENT, OR THE DESIGN CONCEPTS OR INFORMATION CONTAINED IN IT, ON ANY OTHER PROJECT OR EXTENSION TO THIS PROJECT, EXCEPT BY AGREEMENT IN WRITING AND WITH COMPENSATION TO V.W.T.. ANY USE OF THIS DOCUMENT, THE DESIGN CONCEPTS OR INFORMATION CONTAINED HEREIN, FOR ANY PURPOSE OTHER THAN THE SPECIFIC PROJECT FOR WHICH THEY WERE PREPARED, IS AT THE SOLE RISK OF THE USER AND WITHOUT LIABILITY OR LEGAL EXPOSURE TO V.W.T.. V.W.T. MAKES NO REPRESENTATIONS AND GIVES NO CONSENT TO, AND ACCEPTS NO RESPONSIBILITY OR LIABILITY FOR, ANY USE OF THIS DOCUMENT, THE DESIGN CONCEPTS OR INFORMATION CONTAINED HEREIN IN A MANNER DETRIMENTAL TO THE INTEREST OF V.W.T.. ALL COPYRIGHT, PATENT AND OTHER INTELLECTUAL PROPERTY RIGHTS ARE RESERVED. ACCEPTANCE OF THE DELIVERY OF THIS DOCUMENT CONSTITUTES AGREEMENT TO THESE TERMS AND CONDITIONS.

DESIGNER	DATE
-	-
CHECKER	DATE
-	-
ENGINEER	DATE
-	-
SCALE:	N/A

TITLE: JB-002
CONTROL JUNCTION BOX
TERMINAL LAYOUT

CLIENT: WWTP UPGRADE
CITY OF IQALUIT

VEOLIA WATER TECHNOLOGIES CANADA INC. 4105 Sartelon, Saint-Laurent, Qc, Canada. Tel: (514) 334-7230

PROJECT DRAWING	INTERNAL	SHEET	REV
5000218036-EPL – 0003-AU-VWT	-	04 OF 05	3

ITEM	DESCRIPTION	PART NUMBER	MANUF.	QTY	BY
1	NEMA 4X ENCLOSURE, C/W PAN 14R1311 DIM 14"H x 12"W x 6"D, FIBERGLASS REINFORCED POLYESTER	PJ14126RL	HAMMOND	1	ENV
2	TERMINAL 600VAC/DC, 20A WDU 2.5 C/W END PLATE 1050000000	1020000000	WEIDMULLER	A/R	ENV
3	TERMINAL 600VAC/DC, 30A WDU 4 C/W END PLATE 1050000000	1020100000	WEIDMULLER	A/R	ENV
4	TERMINAL 600VAC/DC, 50A WDU 6 C/W END PLATE 1050000000 OR SEPERATOR 1050100000	1020200000	WEIDMULLER	A/R	ENV
5	KNIFE TERMINAL 300VAC/DC, 10A, WTR 2.5 C/W END PLATE 1050000000	1855610000	WEIDMULLER	A/R	ENV
6	TERMINAL 2 LEVEL 300VAC/DC, 10A, WDK 2.5 C/W END PLATE 1059100000	1021500000	WEIDMULLER	A/R	ENV
7	TERMINAL 3 LEVEL 300VAC/DC, 10A, DLD 2.5 C/W END PLATE 1784210000	1784180000	WEIDMULLER	A/R	ENV
8	FUSE TERMINAL ¼ X 1¼, 300VAC/DC, 15A, WSI 4/2 C/W END PLATE 1880450000	1880430000	WEIDMULLER	A/R	ENV
9	FUSE TERMINAL 5 X 20mm, 300VAC/DC, 15A, WSI 4	1886580000	WEIDMULLER	A/R	ENV
10	FUSE TERMINAL 2 LEVEL 5 X 20mm, 300VAC/DC, 10A, KDKS 1/EN4 C/W END PLATE 9503330000	9503350000	WEIDMULLER	A/R	ENV
11	FUSE TERMINAL 2 LEVEL ¼ X 1¼, 300VAC/DC, 10A, KDKS 1/35DB C/W END PLATE 9532470000	9532440000	WEIDMULLER	A/R	ENV
12	END STOPPER WEW 35/2	1061200000	WEIDMULLER	A/R	ENV
13	COPPER GROUND BAR, #4-14	4C-190	NSI-INDUSTRIES	A/R	ENV
14	COPPER GROUND LUG, 600VAC, #6-14, STR	CB35-36-LY	PANDUIT	A/R	ENV

REV	DESCRIPTION	DATE	REVD	CHKD	APVD	ECN
3	AS BUILT	2019-03-26	HZ	RA	–	–
2	FOR FABRICATION	2019-03-19	HZ	RA	–	–
1	FOR APPROVAL	2019-01-09	HZ	RA	–	–

CONFIDENTIALITY AND INTELLECTUAL PROPERTY NOTICE
ALL INFORMATION CONTAINED IN THIS DOCUMENT IS THE SOLE PROPERTY OF VEOLIA WATER TECHNOLOGIES CANADA INC. AND IS PROTECTED BY ALL APPLICABLE LAWS, INCLUDING BUT NOT LIMITED TO COPYRIGHT AND OTHER INTELLECTUAL PROPERTY LAWS. THE DESIGN CONCEPTS AND INFORMATION CONTAINED HEREIN ARE PROPRIETARY TO V.W.T. AND ARE SUBMITTED IN CONFIDENCE. THEY ARE NOT TRANSFERABLE. THEY SHALL NOT BE USED IN WHOLE OR IN PART FOR ANY PURPOSE UNLESS IT IS EXPRESSLY SUBMITTED AND NO IMPLICIT LICENCE IS GRANTED OTHERWISE BY THE SUBMISSION OF THIS DOCUMENT. THEY ARE CONFIDENTIAL AND PRIVILEGED INFORMATION OF V.W.T. AND THEY MUST NOT BE DISCLOSED, REPRODUCED, LOANED, REWRITTEN OR USED IN ANY OTHER MANNER WITHOUT THE EXPRESS WRITTEN CONSENT OF V.W.T. V.W.T. ASSUMES NO RESPONSIBILITY OR LIABILITY FOR THE USE OF THIS DOCUMENT, OR OF ANY PORTION THEREOF, EITHER AS REGARDS THE INFORMATION OR ANY DESIGN CONTAINED IN A MANNER THAT DOES NOT RELATE TO THE FITNESS OR PURPOSE OF THIS DOCUMENT. IN NO EVENT SHALL THIS DOCUMENT OR THE DESIGN CONCEPTS AND INFORMATION CONTAINED HEREIN BE USED IN A MANNER DETRIMENTAL TO THE INTEREST OF V.W.T. ALL COPYRIGHT, PATENT AND OTHER INTELLECTUAL PROPERTY RIGHTS ARE RESERVED. ACCEPTANCE OF THE DELIVERY OF THIS DOCUMENT CONSTITUTES AGREEMENT TO THESE TERMS AND CONDITIONS.

DESIGNER	DATE
–	–
CHECKER	DATE
–	–
ENGINEER	DATE
–	–
SCALE:	N/A

TITLE: JB-002
CONTROL JUNCTION BOX
BILL OF MATERIAL

CLIENT: WWTP UPGRADE
CITY OF IQALUIT

VEOLIA WATER TECHNOLOGIES CANADA INC. 4105 Sartelon, Saint-Laurent, Qc, Canada. Tel: (514) 334-7230

PROJECT DRAWING	INTERNAL	SHEET	REV
500021803 6-EPL – 0003-AU-VWT	–	05 OF 05	3

BAR = 1" AT PLOT SCALE
REF: A6798A
STD: "B" 11x17

Mar 28, 2019 11:13:11 – G:\Projets A67xx\A6798A @ A6798B – VEOLIA – 500021803 6 Iqaluit WWTP Upgrade\DOC\DESIN\000-DRAWINGS\JB-002\REV 3 AS BUILT\500021803 6-EPL-0003-AU-VWT-005.dwg – zhu

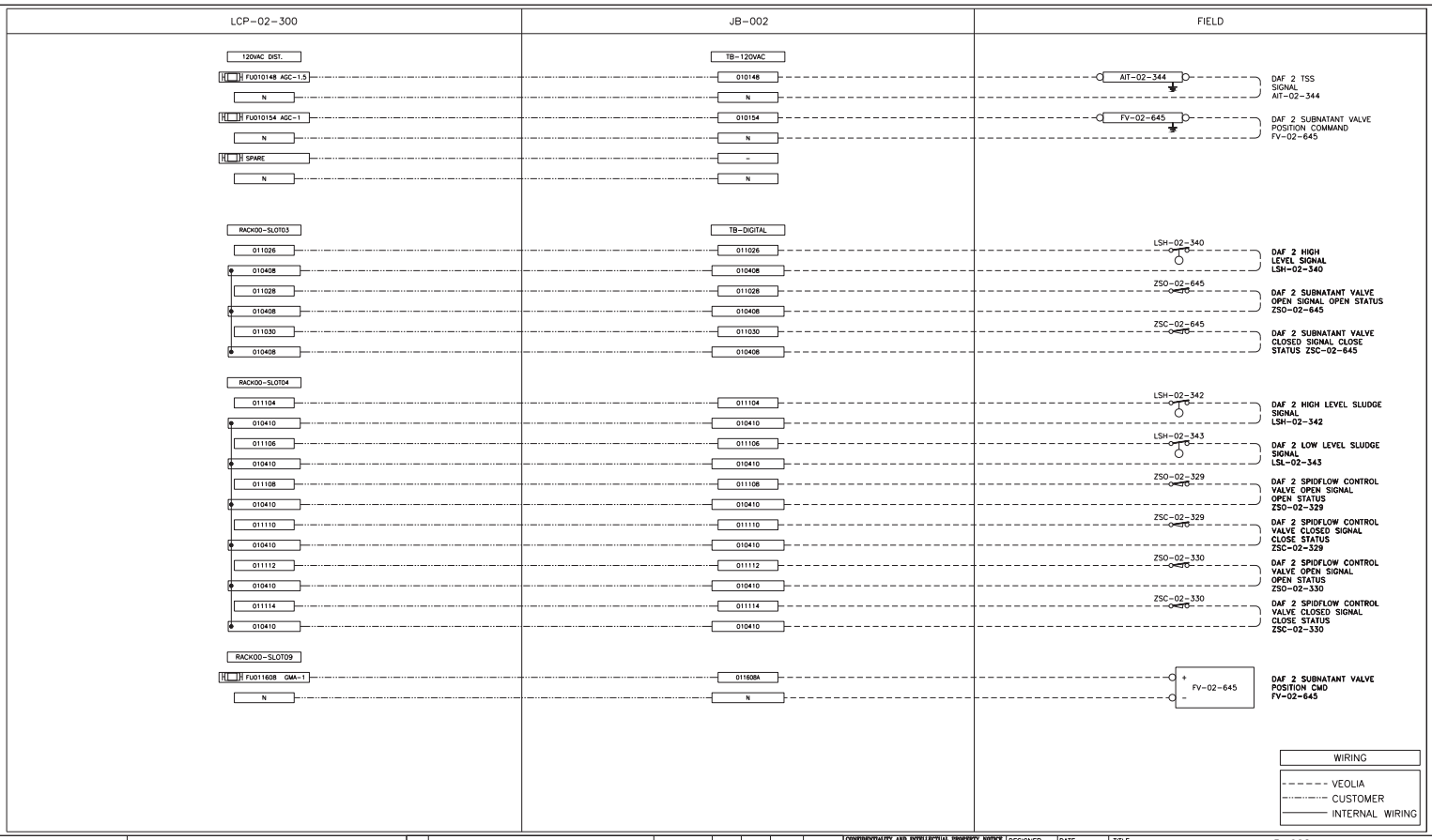

REV	DESCRIPTION	DATE	REVD	CHKD	APVD	ECN
3	AS BUILT	2019-03-26	HZ	RA	-	-
2	FOR FABRICATION	2019-03-19	MR	RA	-	-
1	FOR APPROVAL	2019-01-09	HZ	RA	-	-

CONFIDENTIALITY AND INTELLECTUAL PROPERTY NOTICE
ALL INFORMATION CONTAINED IN THIS DOCUMENT IS THE SOLE PROPERTY OF VEOLIA WATER TECHNOLOGIES CANADA INC. AND IS PROTECTED BY ALL APPLICABLE LAWS, INCLUDING BUT NOT LIMITED TO COPYRIGHT AND OTHER INTELLECTUAL PROPERTY LAWS. THE DESIGN CONCEPTS AND INFORMATION CONTAINED HEREIN ARE PROPRIETARY TO V.W.T. AND ARE SUBMITTED IN CONFIDENCE. THEY ARE NOT TRANSFERABLE. THEY MUST BE USED ONLY FOR THE PURPOSE FOR WHICH THE DOCUMENT IS EXPRESSLY SUBMITTED AND NO IMPLICIT LICENCE IS GRANTED OTHERWISE BY THE SUBMISSION OF THIS DOCUMENT. THEY ARE CONFIDENTIAL AND PRIVILEGED INFORMATION OF V.W.T. AND THEY MUST NOT BE DISCLOSED, REPRODUCED, LOANED, REMITTED OR USED IN ANY OTHER MANNER WITHOUT THE EXPRESS WRITTEN CONSENT OF V.W.T. V.W.T. ASSUMES NO RESPONSIBILITY OR LIABILITY FOR THE USE OF THIS DOCUMENT OR THE DESIGN CONCEPTS AND INFORMATION CONTAINED HEREIN FOR ANOTHER PROJECT, OR IN A MANNER THAT DOES NOT RELATE TO THE FITNESS OR PURPOSE OF THIS DOCUMENT. IN NO EVENT SHALL THIS DOCUMENT OR THE DESIGN CONCEPTS AND INFORMATION CONTAINED HEREIN BE USED IN A MANNER DETRIMENTAL TO THE INTEREST OF V.W.T. ALL COPYRIGHT, PATENT AND OTHER INTELLECTUAL PROPERTY RIGHTS ARE RESERVED. ACCEPTANCE OF THE DELIVERY OF THIS DOCUMENT CONSTITUTES AGREEMENT TO THESE TERMS AND CONDITIONS.

DESIGNER	DATE
-	-
CHECKER	DATE
-	-
ENGINEER	DATE
-	-
SCALE: N/A	

TITLE: JB-002 CONTROL JUNCTION BOX FIELD WIRING

CLIENT: WWTP UPGRADE CITY OF IQALUIT

VEOLIA

VEOLIA WATER TECHNOLOGIES CANADA INC. 4105 Sartelon, Saint-Laurent, Qc, Canada. Tel: (514) 334-7230

PROJECT	DRAWING	INTERNAL	SHEET	REV
5000218036-EID	0003-AU-VWT	-	01 OF 02	3

BAR = 1" AT PLOT SCALE

REF: A6798A

STD: "B" 11x17

Mar 28, 2019 11:13:11 - G:\Projets A67XX\A6798A @ A6798B - VEOLIA - 5000218036 Iqaluit WWTP Upgrade\DOC\DESSIN\000-DRAWINGS\JB-002\REV 3
AS BUILT\5000218036-EID-0003-AU-VWT-001.dwg - zhu

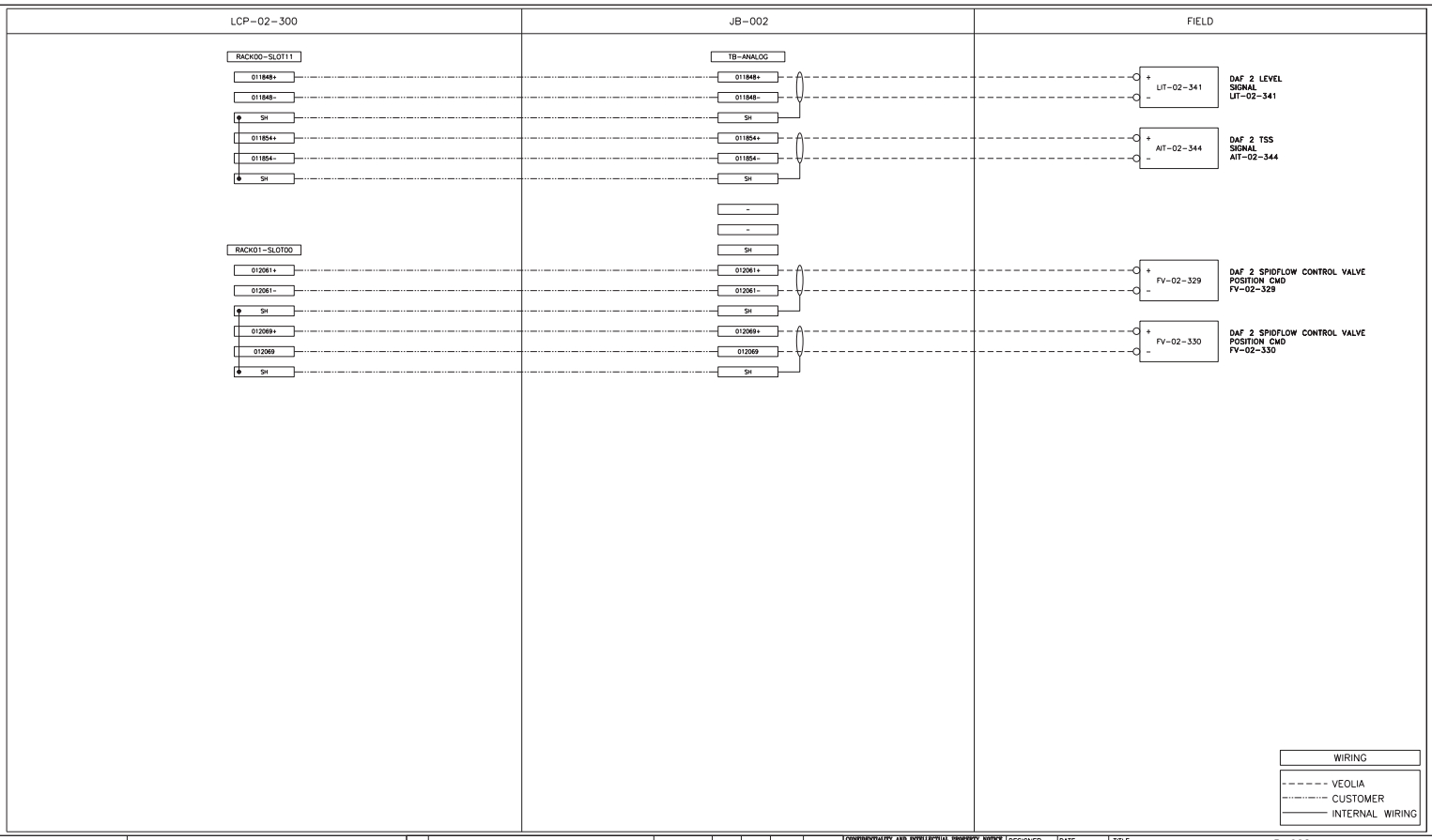

REV	DESCRIPTION	DATE	REVD	CHKD	APVD	ECN
3	AS BUILT	2019-03-26	HZ	RA	-	-
2	FOR FABRICATION	2019-03-19	HZ	RA	-	-
1	FOR APPROVAL	2019-01-09	HZ	RA	-	-

CONFIDENTIALITY AND INTELLECTUAL PROPERTY NOTICE
ALL INFORMATION CONTAINED IN THIS DOCUMENT IS THE SOLE PROPERTY OF VEOLIA WATER TECHNOLOGIES CANADA INC. AND IS PROTECTED BY ALL APPLICABLE LAWS, INCLUDING BUT NOT LIMITED TO COPYRIGHT AND OTHER INTELLECTUAL PROPERTY LAWS. THE DESIGN CONCEPTS AND INFORMATION CONTAINED HEREIN ARE PROPRIETARY TO V.W.T. AND ARE SUBMITTED IN CONFIDENCE. THEY ARE NOT TRANSFERABLE. THEY MUST BE USED ONLY FOR THE PURPOSE FOR WHICH THE DOCUMENT IS EXPRESSLY SUBMITTED AND NO IMPLICIT LICENCE IS GRANTED OTHERWISE BY THE SUBMISSION OF THIS DOCUMENT. THEY ARE CONFIDENTIAL AND PRIVILEGED INFORMATION OF V.W.T. AND THEY MUST NOT BE DISCLOSED, REPRODUCED, LOANED, REMITTED OR USED IN ANY OTHER MANNER WITHOUT THE EXPRESS WRITTEN CONSENT OF V.W.T. V.W.T. ASSUMES NO RESPONSIBILITY OR LIABILITY FOR THE USE OF THIS DOCUMENT OR THE DESIGN CONCEPTS AND INFORMATION CONTAINED HEREIN FOR ANOTHER PROJECT, OR IN A MANNER THAT DOES NOT RELATE TO THE FITNESS OR PURPOSE OF THIS DOCUMENT. IN NO EVENT SHALL THIS DOCUMENT OR THE DESIGN CONCEPTS AND INFORMATION CONTAINED HEREIN BE USED IN A MANNER DETRIMENTAL TO THE INTEREST OF V.W.T. ALL COPYRIGHT, PATENT AND OTHER INTELLECTUAL PROPERTY RIGHTS ARE RESERVED. ACCEPTANCE OF THE DELIVERY OF THIS DOCUMENT CONSTITUTES AGREEMENT TO THESE TERMS AND CONDITIONS.

DESIGNER	DATE
-	-
CHECKER	DATE
-	-
ENGINEER	DATE
-	-
SCALE: N/A	

TITLE: JB-002 CONTROL JUNCTION BOX FIELD WIRING

CLIENT: WWTP UPGRADE CITY OF IQALUIT

VEOLIA

VEOLIA WATER TECHNOLOGIES CANADA INC. 4105 Sartelon, Saint-Laurent, Qc, Canada. Tel: (514) 334-7230

PROJECT	DRAWING	INTERNAL	SHEET	REV
5000218036-EID	0003-AU-VWT	-	02 OF 02	3

BAR = 1" AT PLOT SCALE

REF: A6798A

STD: "B" 11x17

Mar 28, 2019 11:13:13 - G:\Projets A67XX\A6798A @ A6798B - VEOLIA - 5000218036 Iqaluit WWTP Upgrade\DOC\DESSIN\000-DRAWINGS\JB-002\REV 3
AS BUILT\5000218036-EID-0003-AU-VWT-002.dwg - zhu

LEFT BLANK

WWTP UPGRADE
CITY OF IQALUIT
CONTROL JUNCTION BOX
JB-003
PROJECT: 5000218036

REV	DESCRIPTION	DATE	REVD	CHKD	APVD	ECN
3	AS BUILT	2019-03-26	HZ	RA	-	-
2	FOR FABRICATION	2019-03-15	MR	RA	-	-
1	FOR APPROVAL	2019-02-07	HZ	RA	-	-

CONFIDENTIALITY AND INTELLECTUAL PROPERTY NOTICE
ALL INFORMATION CONTAINED IN THIS DOCUMENT IS THE SOLE PROPERTY OF VEOLIA WATER TECHNOLOGIES CANADA INC. AND IS PROTECTED BY ALL APPLICABLE LAWS, INCLUDING BUT NOT LIMITED TO COPYRIGHT AND OTHER INTELLECTUAL PROPERTY LAWS. THE DESIGN CONCEPTS AND INFORMATION CONTAINED HEREIN ARE PROPRIETARY TO V.W.T. AND ARE SUBMITTED IN CONFIDENCE. THEY ARE NOT TRANSFERABLE. THEY MUST BE USED ONLY FOR THE PURPOSE FOR WHICH THE DOCUMENT IS EXPRESSLY SUBMITTED AND NO IMPLICIT LICENCE IS GRANTED OTHERWISE BY THE SUBMISSION OF THIS DOCUMENT. THEY ARE CONFIDENTIAL AND PRIVILEGED INFORMATION OF V.W.T. AND THEY MUST NOT BE DISCLOSED, REPRODUCED, LOANED, REMITTED OR USED IN ANY OTHER MANNER WITHOUT THE EXPRESS WRITTEN CONSENT OF V.W.T. V.W.T. ASSUMES NO RESPONSIBILITY OR LIABILITY FOR THE USE OF THIS DOCUMENT OR THE DESIGN CONCEPTS AND INFORMATION CONTAINED HEREIN FOR ANOTHER PROJECT, OR IN A MANNER THAT DOES NOT RELATE TO THE FITNESS OR PURPOSE OF THIS DOCUMENT. IN NO EVENT SHALL THIS DOCUMENT OR THE DESIGN CONCEPTS AND INFORMATION CONTAINED HEREIN BE USED IN A MANNER DETRIMENTAL TO THE INTEREST OF V.W.T. ALL COPYRIGHT, PATENT AND OTHER INTELLECTUAL PROPERTY RIGHTS ARE RESERVED. ACCEPTANCE OF THE DELIVERY OF THIS DOCUMENT CONSTITUTES AGREEMENT TO THESE TERMS AND CONDITIONS.

DESIGNER	DATE
-	-
CHECKER	DATE
-	-
ENGINEER	DATE
-	-
SCALE: N/A	

TITLE: JB-003 CONTROL JUNCTION BOX TITLE PAGE

CLIENT: WWTP UPGRADE CITY OF IQALUIT

VEOLIA

VEOLIA WATER TECHNOLOGIES CANADA INC. 4105 Sandton, Saint-Laurent, Qc, Canada. Tel: (514) 334-7233

PROJECT	DRAWING	INTERNAL	SHEET	REV
5000218036-EPL	0004-AU-VWT	-	01 OF 05	3

STD: "B" 11x17 REF: A6798B BAR = 1" AT PLOT SCALE

Mar 26, 2019 11:04:58 - G:\Projets A67XX\A6798A @ A6798B - VEOLIA - 5000218036 Iqaluit WWTP Upgrade\DOC\DESSIN\000-DRAWINGS\JB-003\REV 2 - Copy\5000218036-EPL-0004-AU-VWT-001.dwg - zhu

DRAWING LIST

DESCRIPTION	DRAWING NUMBER
CONTROL JUNCTION BOX JB-003	
TITLE PAGE	5000218036-EPL-0004-AU-VWT-001
LEGEND & DRAWING LIST	5000218036-EPL-0004-AU-VWT-002
EXTERNAL & INTERNAL LAYOUT	5000218036-EPL-0004-AU-VWT-003
BILL OF MATERIAL	5000218036-EPL-0004-AU-VWT-004
TERMINAL LAYOUT	5000218036-EPL-0004-AU-VWT-005
FIELD WIRING	5000218036-EID-0004-AU-VWT-001
FIELD WIRING	5000218036-EID-0004-AU-VWT-002

LEGEND

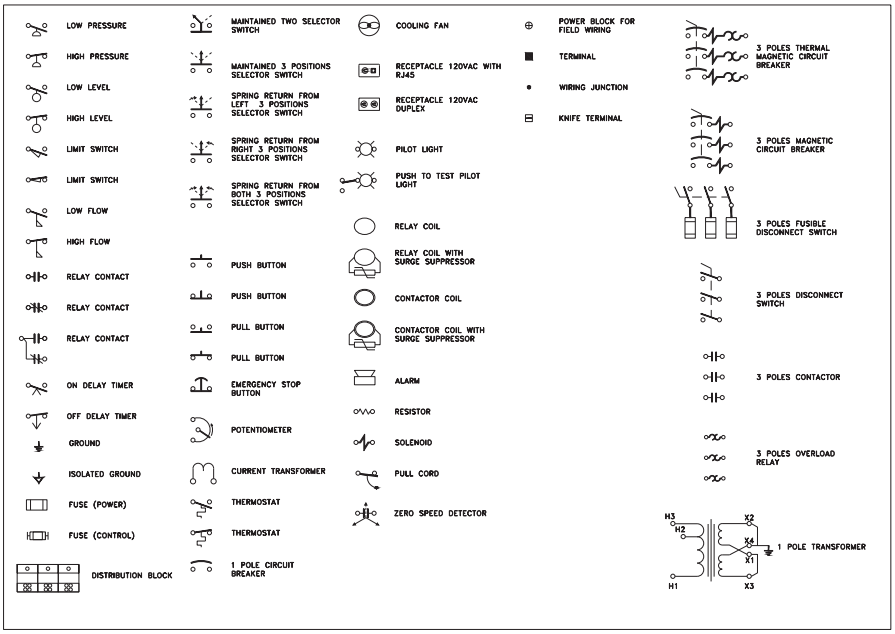

WIRE COLOR CODE	
MINIMAL 18AWG GAUGE	
POWER 120VAC	BLACK
CONTROL 120VAC	RED
NEUTRAL	WHITE
24VDC	BLUE
0VDC	BLUE/WHITE
DRY CONTRACT	YELLOW, 14AWG
NON-ISOLATED GROUND	GREEN
ISOLATED GROUND	GREEN/YELLOW
TWISTED PAIR	(+) BLACK & (-) WHITE

REV	DESCRIPTION	DATE	REVD	CHKD	APVD	ECN
3	AS BUILT	2019-03-26	HZ	RA	–	–
2	FOR FABRICATION	2019-03-15	MR	RA	–	–
1	FOR APPROVAL	2019-02-07	HZ	RA	–	–

CONFIDENTIALITY AND INTELLECTUAL PROPERTY NOTICE
ALL INFORMATION CONTAINED IN THIS DOCUMENT IS THE SOLE PROPERTY OF VEOLIA WATER TECHNOLOGIES CANADA INC. AND IS PROTECTED BY ALL APPLICABLE LAWS, INCLUDING BUT NOT LIMITED TO COPYRIGHT AND OTHER INTELLECTUAL PROPERTY LAWS. THE DESIGN CONCEPTS AND INFORMATION CONTAINED HEREIN ARE PROPRIETARY TO V.W.T. AND ARE SUBMITTED IN CONFIDENCE. THEY ARE NOT TRANSFERABLE. THEY SHALL NOT BE USED, IN WHOLE OR IN PART, FOR ANY PURPOSE OTHER THAN THAT FOR WHICH IT IS EXPRESSLY SUBMITTED AND NO IMPLICIT LICENCE IS GRANTED OTHERWISE BY THE SUBMISSION OF THIS DOCUMENT. THEY ARE CONFIDENTIAL AND PRIVILEGED INFORMATION OF V.W.T. AND THEY MUST NOT BE DISCLOSED, REPRODUCED, LOANED, REWRITTEN OR USED IN ANY OTHER MANNER WITHOUT THE EXPRESS WRITTEN CONSENT OF V.W.T. V.W.T. ASSUMES NO RESPONSIBILITY OR LIABILITY FOR THE USE OF THIS DOCUMENT, IN WHOLE OR IN PART, IN ANY OTHER PROJECT OR EXTENSION TO THE PROJECT FOR WHICH IT WAS PREPARED BY OR FOR V.W.T., OR IN A MANNER THAT GOES BEYOND THE RELATE TO THE FITNESS OR PURPOSE OF THIS DOCUMENT. IN NO EVENT SHALL THIS DOCUMENT OR THE DESIGN CONCEPTS AND INFORMATION CONTAINED HEREIN BE USED IN A MANNER DETRIMENTAL TO THE INTEREST OF V.W.T. ALL COPYRIGHT, PATENT AND OTHER INTELLECTUAL PROPERTY RIGHTS ARE RESERVED. ACCEPTANCE OF THE DELIVERY OF THIS DOCUMENT CONSTITUTES AGREEMENT TO THESE TERMS AND CONDITIONS.

DESIGNER	DATE –
CHECKER	DATE –
ENGINEER	DATE –
SCALE:	N/A

TITLE: JB-003 CONTROL JUNCTION BOX LEGEND & DRAWING LIST

CLIENT: WWTP UPGRADE CITY OF IQALUIT

VEOLIA WATER TECHNOLOGIES CANADA INC. 4105 Sartelon, Saint-Laurent, Qc, Canada, Tel: (514) 334-7230

PROJECT	DRAWING	INTERNAL	SHEET	REV
5000218036-EPL	0004-AU-VWT	–	02 OF 05	3

STD: "B" 11x17 | REF: A6798B | BAR = 1" AT PLOT SCALE

Mar 26, 2019 11:05:00 - G:\Projets A67XX\A6798A @ A6798B - VEOLIA - 5000218036 Iqaluit WWTP Upgrade\DOC\DESIGN\000-DRAWINGS\JB-003\REV 2 - Copy\5000218036-EPL-0004-AU-VWT-002.dwg - zhu

ENCLOSURE NEMA 4X–FIBERGLASS / 17,87H'' X 16W'' X 8D'' (PJ16148)
cUL APPROVAL

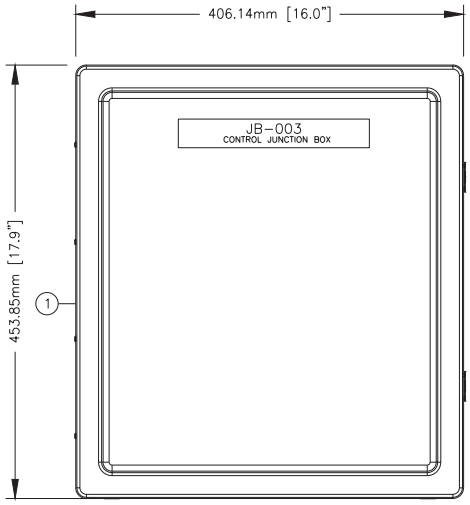

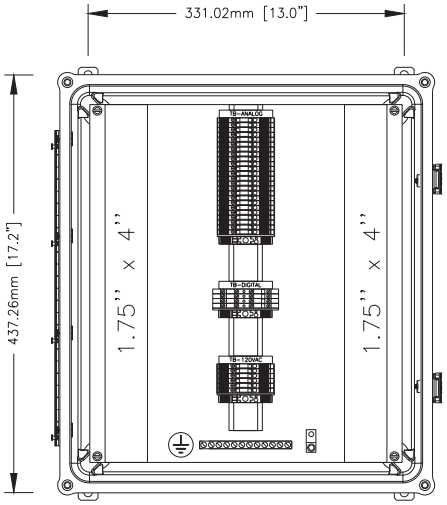

REV	DESCRIPTION	DATE	REVD	CHKD	APVD	ECN
3	AS BUILT	2019–03–26	HZ	RA	–	–
2	FOR FABRICATION	2019–03–15	MR	RA	–	–
1	FOR APPROVAL	2019–02–07	HZ	RA	–	–

CONFIDENTIALITY AND INTELLECTUAL PROPERTY NOTICE
ALL INFORMATION CONTAINED IN THIS DOCUMENT IS THE SOLE PROPERTY OF VEOLIA WATER TECHNOLOGIES CANADA INC. AND IS PROTECTED BY ALL APPLICABLE LAWS, INCLUDING BUT NOT LIMITED TO COPYRIGHT AND OTHER INTELLECTUAL PROPERTY LAWS. THE DESIGN CONCEPTS AND INFORMATION CONTAINED HEREIN ARE PROPRIETARY TO V.W.T. AND ARE SUBMITTED IN CONFIDENCE. IF THEY ARE NOT TRANSFERABLE, THEY REMAIN THE PROPERTY OF V.W.T. AND MUST BE RETURNED UPON REQUEST. IT IS EXPRESSLY SUBMITTED AND NO IMPLICIT LICENCE IS GRANTED OTHERWISE BY THE SUBMISSION OF THIS DOCUMENT. THEY ARE CONFIDENTIAL AND PRIVILEGED INFORMATION OF V.W.T. AND THEY MUST NOT BE DISCLOSED, REPRODUCED, LOANED, REMITTED OR USED IN ANY OTHER MANNER WITHOUT THE EXPRESS WRITTEN CONSENT OF V.W.T.. V.W.T. ASSUMES NO RESPONSIBILITY OR LIABILITY FOR THE USE OF THIS DOCUMENT, OR OF THE DESIGN CONCEPTS OR INFORMATION CONTAINED HEREIN, FOR PURPOSES OTHER THAN THOSE SPECIFICALLY RELATED TO THE FITNESS OR PURPOSE OF THIS DOCUMENT. IN NO EVENT SHALL THIS DOCUMENT OR THE DESIGN CONCEPTS AND INFORMATION CONTAINED HEREIN BE USED IN A MANNER DETRIMENTAL TO THE INTEREST OF V.W.T. ALL COPYRIGHT, PATENT AND OTHER INTELLECTUAL PROPERTY RIGHTS ARE RESERVED. ACCEPTANCE OF THE DELIVERY OF THIS DOCUMENT CONSTITUTES AGREEMENT TO THESE TERMS AND CONDITIONS.

		DATE
DESIGNER	–	–
CHECKER	–	–
ENGINEER	–	–
SCALE:	N/A	

TITLE: JB–003
CONTROL JUNCTION BOX
EXTERNAL & INTERNAL LAYOUT

CLIENT: WWTP UPGRADE
CITY OF IQALUIT

VEOLIA
VEOLIA WATER TECHNOLOGIES CANADA INC. 4105 Sartelon, Saint-Laurent, Qc, Canada. Tel: (514) 334-7230

PROJECT DRAWING	INTERNAL	SHEET	REV
500021803 6–EPL – 0004–AU–VWT	–	03 OF 05	3

STD: "B" 11x17 | REF: A6798B | BAR = 1" AT PLOT SCALE

Mar 26, 2019 11:05:01 – G:\Projets A67xx\A6798A @ A6798B – VEOLIA – 500021803 6 Iqaluit WWTP Upgrade\DOC\DESSIN\000–DRAWINGS\JB–003\REV 2 – Copy\500021803 6–EPL–0004–AU–VWT–003.dwg – zhu

Mar 26, 2019 11:05:03 - G:\Projets A67XX\A6798A @ A6798B - VEOLIA - 5000218036 Iqaluit WWTP Upgrade\DOC\DESSIN\000-DRAWINGS\JB-003\REV 2 - Copy\5000218036-EPL-0004-AU-VWT-004.dwg - zhu

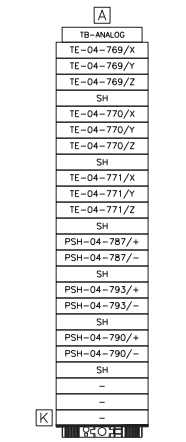

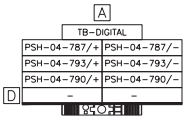

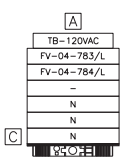

TERMINAL DESCRIPTION
A) ID(WAD8)
B) WDU6
C) WDU4
D) WDK2.5
E) DLD2.5
F) FUSE WSI 4/2
G) FUSE WSI 4
H) FUSE KDKS 1/EN4
J) WTR 2.5
K) WDU 2.5

REV	DESCRIPTION	DATE	REVD	CHKD	APVD	ECN
3	AS BUILT	2019-03-26	HZ	RA	-	-
2	FOR FABRICATION	2019-03-15	MR	RA	-	-
1	FOR APPROVAL	2019-02-07	HZ	RA	-	-

CONFIDENTIALITY AND INTELLECTUAL PROPERTY NOTICE
ALL INFORMATION CONTAINED IN THIS DOCUMENT IS THE SOLE PROPERTY OF VEOLIA WATER TECHNOLOGIES CANADA INC. AND IS PROTECTED BY ALL APPLICABLE LAWS, INCLUDING BUT NOT LIMITED TO COPYRIGHT AND OTHER INTELLECTUAL PROPERTY LAWS. THE DESIGN CONCEPTS AND INFORMATION CONTAINED HEREIN ARE PROPRIETARY TO V.W.T. AND ARE SUBMITTED IN CONFIDENCE. THEY ARE NOT TRANSFERABLE. THEY MUST BE USED ONLY FOR THE PURPOSE FOR WHICH THE DOCUMENT IS EXPRESSLY SUBMITTED AND NO IMPLICIT LICENCE IS GRANTED OTHERWISE BY THE SUBMISSION OF THIS DOCUMENT. THEY ARE CONFIDENTIAL AND PRIVILEGED INFORMATION OF V.W.T. AND THEY MUST NOT BE DISCLOSED, REPRODUCED, LOANED, REMITTED OR USED IN ANY OTHER MANNER WITHOUT THE EXPRESS WRITTEN CONSENT OF V.W.T. V.W.T. ASSUMES NO RESPONSIBILITY OR LIABILITY FOR THE USE OF THIS DOCUMENT OR THE DESIGN CONCEPTS AND INFORMATION CONTAINED HEREIN FOR ANOTHER PROJECT, OR IN A MANNER THAT DOES NOT RELATE TO THE FITNESS OR PURPOSE OF THIS DOCUMENT. IN NO EVENT SHALL THIS DOCUMENT OR THE DESIGN CONCEPTS AND INFORMATION CONTAINED HEREIN BE USED IN A MANNER DETRIMENTAL TO THE INTEREST OF V.W.T. ALL COPYRIGHT, PATENT AND OTHER INTELLECTUAL PROPERTY RIGHTS ARE RESERVED. ACCEPTANCE OF THE DELIVERY OF THIS DOCUMENT CONSTITUTES AGREEMENT TO THESE TERMS AND CONDITIONS.

DESIGNER	DATE
-	-
CHECKER	DATE
-	-
ENGINEER	DATE
-	-
SCALE: N/A	

TITLE: JB-003
CONTROL JUNCTION BOX
TERMINAL LAYOUT

CLIENT: WWTP UPGRADE
CITY OF IQALUIT

VEOLIA
VEOLIA WATER TECHNOLOGIES CANADA INC. 4105 Sartelon, Saint-Laurent, Qc, Canada. Tel: (514) 334-7230

PROJECT	DRAWING	INTERNAL	SHEET	REV
5000218036-EPL	0004-AU-VWT	-	04 OF 05	3

BAR = 1" AT PLOT SCALE
REF: A6798B
STD: "B" 11x17

ITEM	DESCRIPTION	PART NUMBER	MANUF.	QTY	BY
1	NEMA 4X ENCLOSURE, DIM 17,87H'' X 16W'' X 8D'', FIBERGLASS REINFORCED POLYESTER, C/W PAN 14R1513	PJ16148	HAMMOND	1	ENV
2	TERMINAL 600VAC/DC, 20A WDU 2.5 C/W END PLATE 1050000000	1020000000	WEIDMULLER	A/R	ENV
3	TERMINAL 600VAC/DC, 30A WDU 4 C/W END PLATE 1050000000	1020100000	WEIDMULLER	A/R	ENV
4	TERMINAL 600VAC/DC, 50A WDU 6 C/W END PLATE 1050000000 OR SEPERATOR 1050100000	1020200000	WEIDMULLER	A/R	ENV
5	KNIFE TERMINAL 300VAC/DC, 10A, WTR 2.5 C/W END PLATE 1050000000	1855610000	WEIDMULLER	A/R	ENV
6	TERMINAL 2 LEVEL 300VAC/DC, 10A, WDK 2.5 C/W END PLATE 1059100000	1021500000	WEIDMULLER	A/R	ENV
7	TERMINAL 3 LEVEL 300VAC/DC, 10A, DLD 2.5 C/W END PLATE 1784210000	1784180000	WEIDMULLER	A/R	ENV
8	FUSE TERMINAL ¼ X 1¼, 300VAC/DC, 15A, WSI 4/2 C/W END PLATE 1880450000	1880430000	WEIDMULLER	A/R	ENV
9	FUSE TERMINAL 5 X 20mm, 300VAC/DC, 15A, WSI 4	1886580000	WEIDMULLER	A/R	ENV
10	FUSE TERMINAL 2 LEVEL 5 X 20mm, 300VAC/DC, 10A, KDKS 1/EN4 C/W END PLATE 9503330000	9503350000	WEIDMULLER	A/R	ENV
11	FUSE TERMINAL 2 LEVEL ¼ X 1¼, 300VAC/DC, 10A, KDKS 1/35DB C/W END PLATE 9532470000	9532440000	WEIDMULLER	A/R	ENV
12	END STOPPER WEW 35/2	1061200000	WEIDMULLER	A/R	ENV
13	COPPER GROUND BAR, #4-14	4C-190	NSI-INDUSTRIES	A/R	ENV
14	COPPER GROUND LUG, 600VAC, #6-14, STR	CB35-36-LY	PANDUIT	A/R	ENV

REV	DESCRIPTION	DATE	REVD	CHKD	APVD	ECN
3	AS BUILT	2019-03-26	HZ	RA	–	–
2	FOR FABRICATION	2019-03-15	MR	RA	–	–
1	FOR APPROVAL	2019-02-07	HZ	RA	–	–

CONFIDENTIALITY AND INTELLECTUAL PROPERTY NOTICE
ALL INFORMATION CONTAINED IN THIS DOCUMENT IS THE SOLE PROPERTY OF VEOLIA WATER TECHNOLOGIES CANADA INC. AND IS PROTECTED BY ALL APPLICABLE LAWS, INCLUDING BUT NOT LIMITED TO COPYRIGHT AND OTHER INTELLECTUAL PROPERTY LAWS. THE DESIGN CONCEPTS AND INFORMATION CONTAINED HEREIN ARE PROPRIETARY TO V.W.T. AND ARE SUBMITTED IN CONFIDENCE. THEY ARE NOT TRANSFERABLE. THEY SHALL NOT BE USED IN WHOLE OR IN PART FOR ANY PURPOSE OTHER THAN THAT FOR WHICH IT IS EXPRESSLY SUBMITTED AND NO IMPLICIT LICENCE IS GRANTED OTHERWISE BY THE SUBMISSION OF THIS DOCUMENT. THEY ARE CONFIDENTIAL AND PRIVILEGED INFORMATION OF V.W.T. AND THEY MUST NOT BE DISCLOSED, REPRODUCED, LOANED, REWRITTEN OR USED IN ANY OTHER MANNER WITHOUT THE EXPRESS WRITTEN CONSENT OF V.W.T. V.W.T. ASSUMES NO RESPONSIBILITY OR LIABILITY FOR THE USE OF THIS DOCUMENT, OR OF ANY PORTION THEREOF, EITHER AS REGARDS THE INFORMATION OR ANY DESIGN CONTAINED IN A MANNER THAT DOES NOT RELATE TO THE FITNESS OR PURPOSE OF THIS DOCUMENT. IN NO EVENT SHALL THIS DOCUMENT OR THE DESIGN CONCEPTS AND INFORMATION CONTAINED HEREIN BE USED IN A MANNER DETRIMENTAL TO THE INTEREST OF V.W.T. ALL COPYRIGHT, PATENT AND OTHER INTELLECTUAL PROPERTY RIGHTS ARE RESERVED. ACCEPTANCE OF THE DELIVERY OF THIS DOCUMENT CONSTITUTES AGREEMENT TO THESE TERMS AND CONDITIONS.

DESIGNER	DATE
–	–
CHECKER	DATE
–	–
ENGINEER	DATE
–	–
SCALE:	N/A

TITLE: JB-003
CONTROL JUNCTION BOX
BILL OF MATERIAL

CLIENT: WWTP UPGRADE
CITY OF IQALUIT

VEOLIA WATER TECHNOLOGIES CANADA INC. 4105 Sartelon, Saint-Laurent, Qc, Canada. Tel: (514) 334-7230

PROJECT DRAWING	INTERNAL	SHEET	REV
5000218036-EPL – 0004-AU-VWT	–	05 OF 05	3

STD: "B" 11x17 | REF: A6798B | BAR = 1" AT PLOT SCALE

Mar 26, 2019 11:05:03 – G:\Projets A67xx\A6798A @ A6798B – VEOLIA – 5000218036 Iqaluit WWTP Upgrade\DOC\DESIN\000-DRAWINGS\JB-003\REV 2 – Copy\5000218036-EPL-0004-AU-VWT-005.dwg – zhu

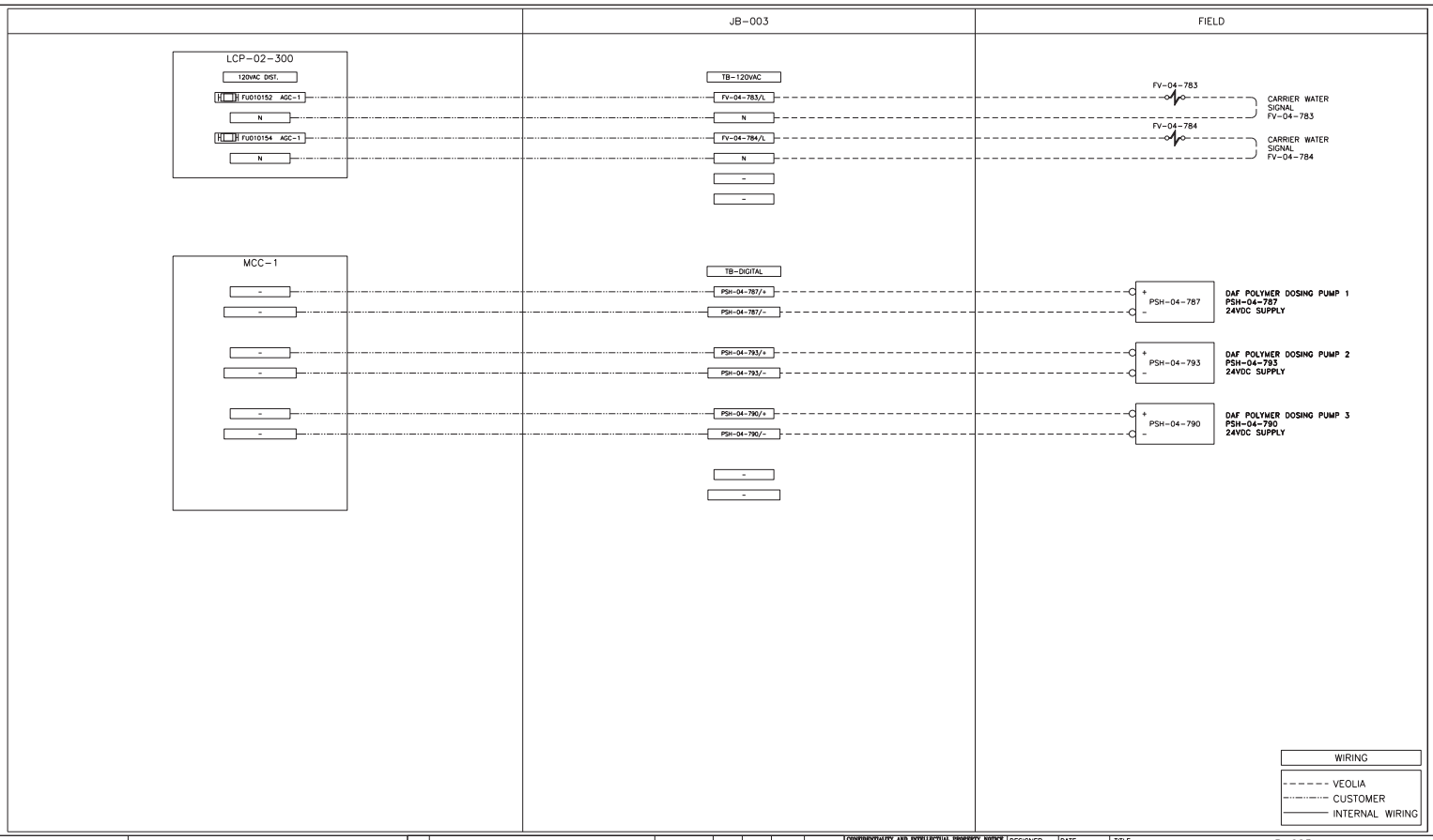

REV	DESCRIPTION	DATE	REVD	CHKD	APVD	ECN
3	AS BUILT	2019-03-26	HZ	RA	–	–
2	FOR FABRICATION	2019-03-15	MR	RA	–	–
1	FOR APPROVAL	2019-02-07	HZ	RA	–	–

CONFIDENTIALITY AND INTELLECTUAL PROPERTY NOTICE
ALL INFORMATION CONTAINED IN THIS DOCUMENT IS THE SOLE PROPERTY OF VEOLIA WATER TECHNOLOGIES CANADA INC. (VWT) AND IS PROTECTED BY ALL APPLICABLE LAWS, INCLUDING BUT NOT LIMITED TO COPYRIGHT AND OTHER INTELLECTUAL PROPERTY LAWS. THE DESIGN CONCEPTS AND INFORMATION CONTAINED HEREIN ARE PROPRIETARY TO V.W.T. AND ARE SUBMITTED IN CONFIDENCE. THEY ARE NOT TRANSFERABLE. THEY SHALL NOT BE USED FOR ANY PURPOSE OTHER THAN THAT FOR WHICH IT IS EXPRESSLY SUBMITTED AND NO IMPLICIT LICENCE IS GRANTED OTHERWISE BY THE SUBMISSION OF THIS DOCUMENT. THEY ARE CONFIDENTIAL AND PRIVILEGED INFORMATION OF V.W.T. AND THEY MUST NOT BE DISCLOSED, REPRODUCED, LOANED, REWRITTEN OR USED IN ANY OTHER MANNER WITHOUT THE EXPRESS WRITTEN CONSENT OF V.W.T. V.W.T. ASSUMES NO RESPONSIBILITY OR LIABILITY FOR THE USE OF THIS DOCUMENT, IN WHOLE OR IN PART, IN CONTRAVENTION OF THE CONDITIONS SET FORTH ABOVE. SUBJECT TO A WRITTEN AGREEMENT TO THE CONTRARY, V.W.T. MAKES NO EXPRESS OR IMPLIED WARRANTY AS TO THE FITNESS OR PURPOSE OF THIS DOCUMENT. IN NO EVENT SHALL THIS DOCUMENT OR THE DESIGN CONCEPTS AND INFORMATION CONTAINED HEREIN BE USED IN A MANNER DETRIMENTAL TO THE INTEREST OF V.W.T. ALL COPYRIGHT, PATENT AND OTHER INTELLECTUAL PROPERTY RIGHTS ARE RESERVED. ACCEPTANCE OF THE DELIVERY OF THIS DOCUMENT CONSTITUTES AGREEMENT TO THESE TERMS AND CONDITIONS.

DESIGNER	DATE –
CHECKER	DATE –
ENGINEER	DATE –
SCALE:	N/A

TITLE: JB-003
CONTROL JUNCTION BOX
FIELD WIRING

CLIENT: WWTP UPGRADE
CITY OF IQALUIT

VEOLIA WATER TECHNOLOGIES CANADA INC. 4105 Sartelon, Saint-Laurent, Qc, Canada. Tel: (514) 334-7230

PROJECT / DRAWING	INTERNAL	SHEET	REV
5000218036-EID – 0004-AU-VWT	–	01 OF 02	3

STD: "B" 11x17 | REF: A6798B | BAR = 1" AT PLOT SCALE

Mar 26, 2019 11:05:06 – G:\Projets A67xx\A6798A @ A6798B – VEOLIA – 5000218036 Iqaluit WWTP Upgrade\DOC\DESSIN\000-DRAWINGS\JB-003\REV 2 – Copy\5000218036-EID-0004-AU-VWT-001.dwg – zhu

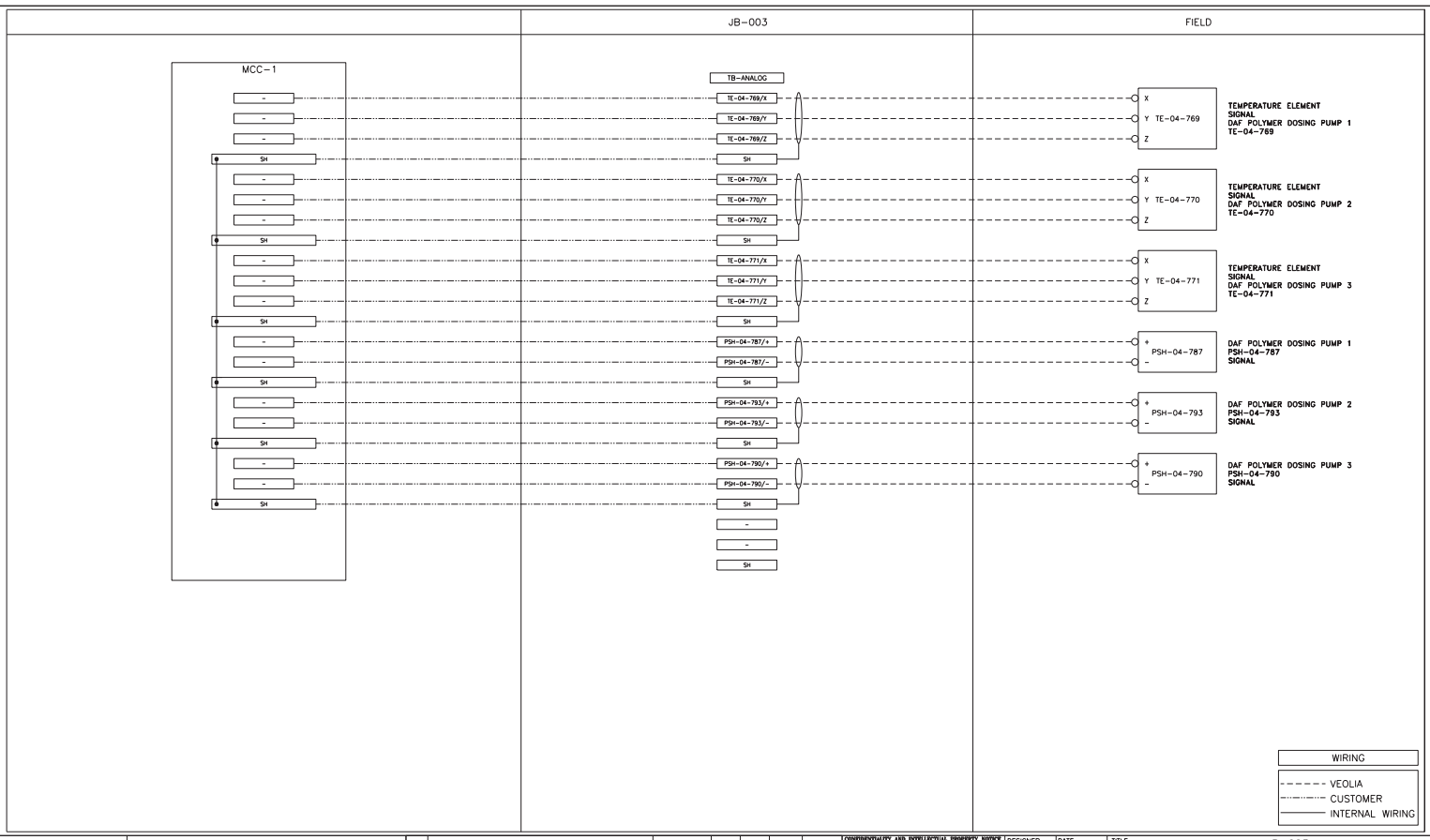

REV	DESCRIPTION	DATE	REVD	CHKD	APVD	ECN
3	AS BUILT	2019-03-26	HZ	RA	-	-
2	FOR FABRICATION	2019-03-15	MR	RA	-	-
1	FOR APPROVAL	2019-02-07	HZ	RA	-	-

CONFIDENTIALITY AND INTELLECTUAL PROPERTY NOTICE
ALL INFORMATION CONTAINED IN THIS DOCUMENT IS THE SOLE PROPERTY OF VEOLIA WATER TECHNOLOGIES CANADA INC. AND IS PROTECTED BY ALL APPLICABLE LAWS, INCLUDING BUT NOT LIMITED TO COPYRIGHT AND OTHER INTELLECTUAL PROPERTY LAWS. THE DESIGN CONCEPTS AND INFORMATION CONTAINED HEREIN ARE PROPRIETARY TO V.W.T. AND ARE SUBMITTED IN CONFIDENCE. THEY ARE NOT TRANSFERABLE. THEY MUST BE USED ONLY FOR THE PURPOSE FOR WHICH THE DOCUMENT IS EXPRESSLY SUBMITTED AND NO IMPLICIT LICENCE IS GRANTED OTHERWISE BY THE SUBMISSION OF THIS DOCUMENT. THEY ARE CONFIDENTIAL AND PRIVILEGED INFORMATION OF V.W.T. AND THEY MUST NOT BE DISCLOSED, REPRODUCED, LOANED, REMITTED OR USED IN ANY OTHER MANNER WITHOUT THE EXPRESS WRITTEN CONSENT OF V.W.T. V.W.T. ASSUMES NO RESPONSIBILITY OR LIABILITY FOR THE USE OF THIS DOCUMENT OR THE DESIGN CONCEPTS AND INFORMATION CONTAINED HEREIN FOR ANOTHER PROJECT, OR IN A MANNER THAT DOES NOT RELATE TO THE FITNESS OR PURPOSE OF THIS DOCUMENT. IN NO EVENT SHALL THIS DOCUMENT OR THE DESIGN CONCEPTS AND INFORMATION CONTAINED HEREIN BE USED IN A MANNER DETRIMENTAL TO THE INTEREST OF V.W.T. ALL COPYRIGHT, PATENT AND OTHER INTELLECTUAL PROPERTY RIGHTS ARE RESERVED. ACCEPTANCE OF THE DELIVERY OF THIS DOCUMENT CONSTITUTES AGREEMENT TO THESE TERMS AND CONDITIONS.

DESIGNER	DATE
-	-
CHECKER	DATE
-	-
ENGINEER	DATE
-	-
SCALE: N/A	

TITLE: JB-003 CONTROL JUNCTION BOX FIELD WIRING

CLIENT: WWTP UPGRADE CITY OF IQALUIT

VEOLIA

VEOLIA WATER TECHNOLOGIES CANADA INC. 4105 Sartelon, Saint-Laurent, Qc, Canada. Tel: (514) 334-7230

PROJECT	DRAWING	INTERNAL	SHEET	REV
5000218036-EID	0004-AU-VWT	-	02 OF 02	3

BAR = 1" AT PLOT SCALE

REF: A6798B

STD: "B" 11x17

Mar 26, 2019 11:05:07 - G:\Projets A67XX\A6798A @ A6798B - VEOLIA - 5000218036 Iqaluit WWTP Upgrade\DOC\DESSIN\000-DRAWINGS\JB-003\REV 2 - Copy\5000218036-EID-0004-AU-VWT-002.dwg - zhu

LEFT BLANK

Mar 26, 2019 11:15:24 - G:\Projets A67XX\A6798A @ A6798B - VEOLIA - 5000218036 Iqaluit WWTP Upgrade\DOC\DESSIN\000-DRAWINGS\JB-004\REV 3
AS BUILT\5000218036-EPL-0005-AU-VWT-001.dwg - zhu

WWTP UPGRADE
CITY OF IQALUIT
CONTROL JUNCTION BOX
JB-004
PROJECT: 5000218036

REV	DESCRIPTION	DATE	REVD	CHKD	APVD	ECN
3	AS BUILT	2019-03-26	HZ	RA	-	-
2	FOR FABRICATION	2019-03-15	MR	RA	-	-
1	FOR APPROVAL	2019-02-07	HZ	RA	-	-

CONFIDENTIALITY AND INTELLECTUAL PROPERTY NOTICE
ALL INFORMATION CONTAINED IN THIS DOCUMENT IS THE SOLE PROPERTY OF VEOLIA WATER TECHNOLOGIES CANADA INC. AND IS PROTECTED BY ALL APPLICABLE LAWS, INCLUDING BUT NOT LIMITED TO COPYRIGHT AND OTHER INTELLECTUAL PROPERTY LAWS. THE DESIGN CONCEPTS AND INFORMATION CONTAINED HEREIN ARE PROPRIETARY TO V.W.T. AND ARE SUBMITTED IN CONFIDENCE. THEY ARE NOT TRANSFERABLE. THEY MUST BE USED ONLY FOR THE PURPOSE FOR WHICH THE DOCUMENT IS EXPRESSLY SUBMITTED AND NO IMPLICIT LICENCE IS GRANTED OTHERWISE BY THE SUBMISSION OF THIS DOCUMENT. THEY ARE CONFIDENTIAL AND PRIVILEGED INFORMATION OF V.W.T. AND THEY MUST NOT BE DISCLOSED, REPRODUCED, LOANED, REMITTED OR USED IN ANY OTHER MANNER WITHOUT THE EXPRESS WRITTEN CONSENT OF V.W.T. V.W.T. ASSUMES NO RESPONSIBILITY OR LIABILITY FOR THE USE OF THIS DOCUMENT OR THE DESIGN CONCEPTS AND INFORMATION CONTAINED HEREIN FOR ANOTHER PROJECT, OR IN A MANNER THAT DOES NOT RELATE TO THE FITNESS OR PURPOSE OF THIS DOCUMENT. IN NO EVENT SHALL THIS DOCUMENT OR THE DESIGN CONCEPTS AND INFORMATION CONTAINED HEREIN BE USED IN A MANNER DETRIMENTAL TO THE INTEREST OF V.W.T. ALL COPYRIGHT, PATENT AND OTHER INTELLECTUAL PROPERTY RIGHTS ARE RESERVED. ACCEPTANCE OF THE DELIVERY OF THIS DOCUMENT CONSTITUTES AGREEMENT TO THESE TERMS AND CONDITIONS.

DESIGNER	-
DATE	-
CHECKER	-
DATE	-
ENGINEER	-
DATE	-
SCALE:	N/A

TITLE: JB-004 CONTROL JUNCTION BOX TITLE PAGE

CLIENT: WWTP UPGRADE CITY OF IQALUIT

VEOLIA

VEOLIA WATER TECHNOLOGIES CANADA INC. 4105 Sartelon, Saint-Laurent, Qc, Canada. Tel: (514) 334-7230

PROJECT	DRAWING	INTERNAL	SHEET	REV
5000218036-EPL	0005-AU-VWT	-	01 OF 05	3

BAR = 1" AT PLOT SCALE
REF: A6798B
STD: "B" 11x17

DRAWING LIST

DESCRIPTION	DRAWING NUMBER
CONTROL JUNCTION BOX JB-004	
TITLE PAGE	5000218036-EPL-0005-AU-VWT-001
LEGEND & DRAWING LIST	5000218036-EPL-0005-AU-VWT-002
EXTERNAL & INTERNAL LAYOUT	5000218036-EPL-0005-AU-VWT-003
BILL OF MATERIAL	5000218036-EPL-0005-AU-VWT-004
TERMINAL LAYOUT	5000218036-EPL-0005-AU-VWT-005
FIELD WIRING	5000218036-EID-0005-AU-VWT-001
FIELD WIRING	5000218036-EID-0005-AU-VWT-002

LEGEND

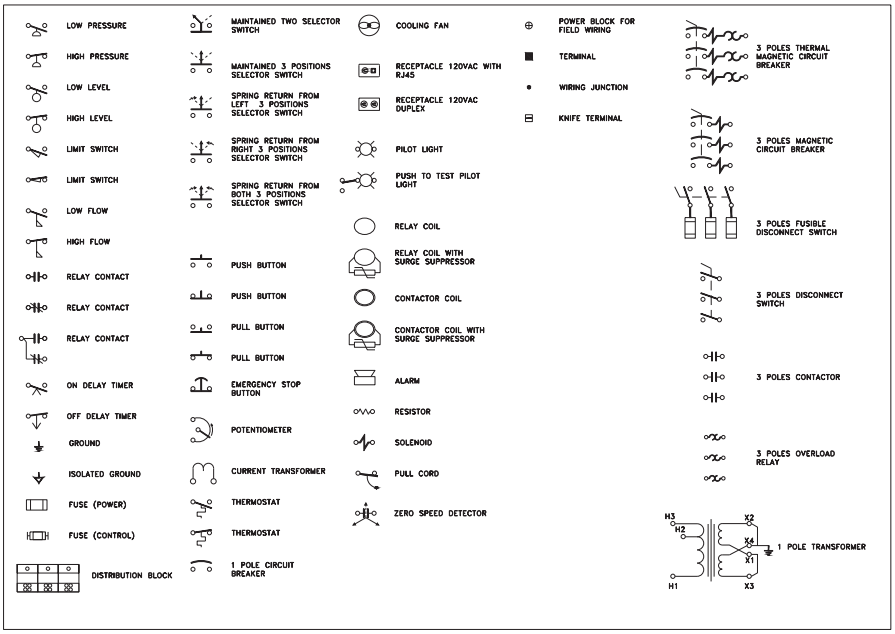

WIRE COLOR CODE	
MINIMAL 18AWG GAUGE	
POWER 120VAC	BLACK
CONTROL 120VAC	RED
NEUTRAL	WHITE
24VDC	BLUE
0VDC	BLUE/WHITE
DRY CONTRACT	YELLOW, 14AWG
NON-ISOLATED GROUND	GREEN
ISOLATED GROUND	GREEN/YELLOW
TWISTED PAIR	(+) BLACK & (-) WHITE

REV	DESCRIPTION	DATE	REVD	CHKD	APVD	ECN
3	AS BUILT	2019-03-26	HZ	RA	–	–
2	FOR FABRICATION	2019-03-15	MR	RA	–	–
1	FOR APPROVAL	2019-02-07	HZ	RA	–	–

CONFIDENTIALITY AND INTELLECTUAL PROPERTY NOTICE
ALL INFORMATION CONTAINED IN THIS DOCUMENT IS THE SOLE PROPERTY OF VEOLIA WATER TECHNOLOGIES CANADA INC. AND IS PROTECTED BY ALL APPLICABLE LAWS, INCLUDING BUT NOT LIMITED TO COPYRIGHT AND OTHER INTELLECTUAL PROPERTY LAWS. THE DESIGN CONCEPTS AND INFORMATION CONTAINED HEREIN ARE PROPRIETARY TO V.W.T. AND ARE SUBMITTED IN CONFIDENCE. THEY ARE NOT TRANSFERRED, NOR IS THE RECEIVER GIVEN ANY RIGHT TO USE THEM, EXCEPT AS MAY BE EXPRESSLY AGREED IN WRITING. THEY ARE EXPRESSLY SUBMITTED AND NO IMPLICIT LICENCE IS GRANTED OTHERWISE BY THE SUBMISSION OF THIS DOCUMENT. THEY ARE CONFIDENTIAL AND PRIVILEGED INFORMATION OF V.W.T. AND THEY MUST NOT BE DISCLOSED, REPRODUCED, LOANED, REWRITTEN OR USED IN ANY OTHER MANNER WITHOUT THE EXPRESS WRITTEN CONSENT OF V.W.T. V.W.T. ASSUMES NO RESPONSIBILITY OR LIABILITY FOR THE USE OF THIS DOCUMENT, OR OF ANY PORTION THEREOF, EITHER AS REGARDS ANY PERSON TO WHOM THE DOCUMENT IS ISSUED OR TO ANY PERSON OTHERWISE OBTAINING IT OR IN A MANNER THAT DOES NOT RELATE TO THE FITNESS OR PURPOSE OF THIS DOCUMENT. IN NO EVENT SHALL THIS DOCUMENT OR THE DESIGN CONCEPTS AND INFORMATION CONTAINED HEREIN BE USED IN A MANNER DETRIMENTAL TO THE INTEREST OF V.W.T. ALL COPYRIGHT, PATENT AND OTHER INTELLECTUAL PROPERTY RIGHTS ARE RESERVED. ACCEPTANCE OF THE DELIVERY OF THIS DOCUMENT CONSTITUTES AGREEMENT TO THESE TERMS AND CONDITIONS.

DESIGNER	DATE –
CHECKER	DATE –
ENGINEER	DATE –
SCALE:	N/A

TITLE: JB-004 CONTROL JUNCTION BOX LEGEND & DRAWING LIST

CLIENT: WWTP UPGRADE CITY OF IQALUIT

VEOLIA WATER TECHNOLOGIES CANADA INC. 4105 Sartelon, Saint-Laurent, Qc, Canada, Tel: (514) 334-7230

PROJECT / DRAWING	INTERNAL	SHEET	REV
5000218036-EPL – 0005-AU-VWT	–	02 OF 05	3

Mar 26, 2019 11:15:26 - G:\Projets A67XX\A6798A @ A6798B - VEOLIA - 5000218036 Iqaluit WWTP Upgrade\DOC\DESSIN\000-DRAWINGS\JB-004\REV 3 AS BUILT\5000218036-EPL-0005-AU-VWT-002.dwg - zhu

BAR = 1" AT PLOT SCALE
REF: A6798B
STD: "B" 11x17

ENCLOSURE NEMA 4X-FIBERGLASS / 17,87H'' X 16W'' X 8D'' (PJ16148)
cUL APPROVAL

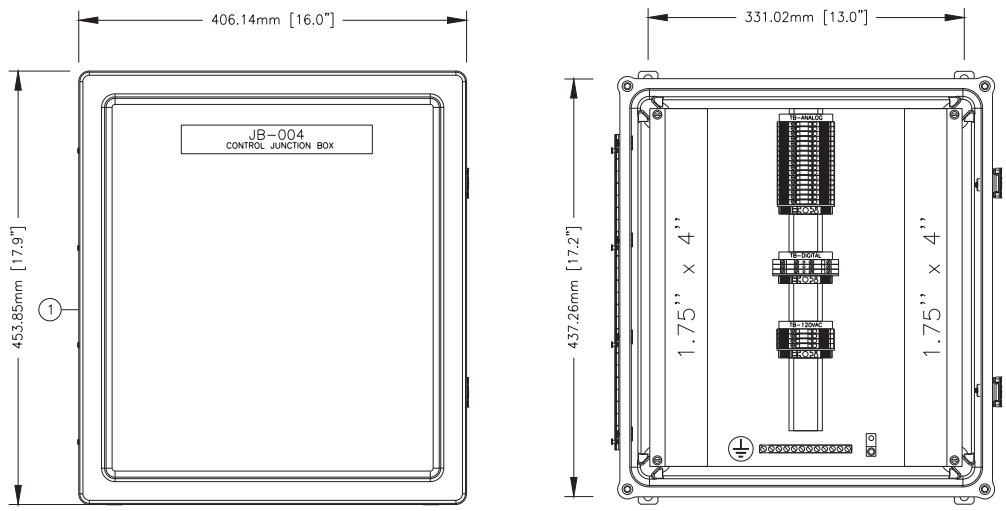

REV	DESCRIPTION	DATE	REVD	CHKD	APVD	ECN
3	AS BUILT	2019-03-26	HZ	RA	-	-
2	FOR FABRICATION	2019-03-15	MR	RA	-	-
1	FOR APPROVAL	2019-02-07	HZ	RA	-	-

CONFIDENTIALITY AND INTELLECTUAL PROPERTY NOTICE
ALL INFORMATION CONTAINED IN THIS DOCUMENT IS THE SOLE PROPERTY OF VEOLIA WATER TECHNOLOGIES CANADA INC. AND IS PROTECTED BY ALL APPLICABLE LAWS, INCLUDING BUT NOT LIMITED TO COPYRIGHT AND OTHER INTELLECTUAL PROPERTY LAWS. THE DESIGN CONCEPTS AND INFORMATION CONTAINED HEREIN ARE PROPRIETARY TO V.W.T AND ARE SUBMITTED IN CONFIDENCE. THEY ARE NOT TRANSFERABLE. THEY MUST BE USED ONLY FOR THE PURPOSE FOR WHICH THE DOCUMENT IS EXPRESSLY SUBMITTED AND NO IMPLICIT LICENCE IS GRANTED OTHERWISE BY THE SUBMISSION OF THIS DOCUMENT. THEY ARE CONFIDENTIAL AND PRIVILEGED INFORMATION OF V.W.T. AND THEY MUST NOT BE DISCLOSED, REPRODUCED, LOANED, REMITTED OR USED IN ANY OTHER MANNER WITHOUT THE EXPRESS WRITTEN CONSENT OF V.W.T. V.W.T. ASSUMES NO RESPONSIBILITY OR LIABILITY FOR THE USE OF THIS DOCUMENT OR THE DESIGN CONCEPTS AND INFORMATION CONTAINED HEREIN FOR ANOTHER PROJECT, OR IN A MANNER THAT DOES NOT RELATE TO THE FITNESS OR PURPOSE OF THIS DOCUMENT. IN NO EVENT SHALL THIS DOCUMENT OR THE DESIGN CONCEPTS AND INFORMATION CONTAINED HEREIN BE USED IN A MANNER DETRIMENTAL TO THE INTEREST OF V.W.T. ALL COPYRIGHT, PATENT AND OTHER INTELLECTUAL PROPERTY RIGHTS ARE RESERVED. ACCEPTANCE OF THE DELIVERY OF THIS DOCUMENT CONSTITUTES AGREEMENT TO THESE TERMS AND CONDITIONS.

DESIGNER	DATE	-
CHECKER	DATE	-
ENGINEER	DATE	-
SCALE:	N/A	

TITLE: JB-004 CONTROL JUNCTION BOX EXTERNAL & INTERNAL LAYOUT

CLIENT: WWTP UPGRADE CITY OF IQALUIT

VEOLIA WATER TECHNOLOGIES CANADA INC. 4105 Sartelon, Saint-Laurent, Qc, Canada. Tel: (514) 334-7230

PROJECT	DRAWING	INTERNAL	SHEET	REV
5000218036-EPL	0005-AU-VWT	-	03 OF 05	3

BAR = 1" AT PLOT SCALE

REF: A6798B

STD: "B" 11x17

Mar 26, 2019 11:15:27 - G:\Projets A67XX\A6798A @ A6798B - VEOLIA - 5000218036 Iqaluit WWTP Upgrade\DOC\DESSIN\000-DRAWINGS\JB-004\REV 3
AS BUILT\5000218036-EPL-0005-AU-VWT-003.dwg - zhu

Mar 26, 2019 11:15:29 - G:\Projets A67XX\A6798A @ A6798B - VEOLIA - 5000218036 Iqaluit WWTP Upgrade\DOC\DESSIN\000-DRAWINGS\JB-004\REV 3
AS BUILT\5000218036-EPL-0005-AU-VWT-004.dwg - zhu

BAR = 1" AT PLOT SCALE
REF: A6798B
STD: "B" 11x17

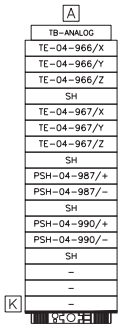

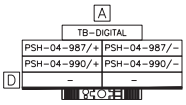

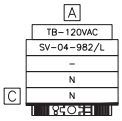

TERMINAL DESCRIPTION
A) ID(WAD8)
B) WDU6
C) WDU4
D) WDK2.5
E) DLD2.5
F) FUSE WSI 4/2
G) FUSE WSI 4
H) FUSE KDKS 1/EN4
J) WTR 2.5
K) WDU 2.5

REV	DESCRIPTION	DATE	REVD	CHKD	APVD	ECN
3	AS BUILT	2019-03-26	HZ	RA	-	-
2	FOR FABRICATION	2019-03-15	MR	RA	-	-
1	FOR APPROVAL	2019-02-07	HZ	RA	-	-

CONFIDENTIALITY AND INTELLECTUAL PROPERTY NOTICE
ALL INFORMATION CONTAINED IN THIS DOCUMENT IS THE SOLE PROPERTY OF VEOLIA WATER TECHNOLOGIES CANADA INC. AND IS PROTECTED BY ALL APPLICABLE LAWS, INCLUDING BUT NOT LIMITED TO COPYRIGHT AND OTHER INTELLECTUAL PROPERTY LAWS. THE DESIGN CONCEPTS AND INFORMATION CONTAINED HEREIN ARE PROPRIETARY TO V.W.T. AND ARE SUBMITTED IN CONFIDENCE. THEY ARE NOT TRANSFERABLE. THEY SHALL NOT BE USED FOR ANY PURPOSE OTHER THAN THAT FOR WHICH IT IS EXPRESSLY SUBMITTED AND NO IMPLICIT LICENCE IS GRANTED OTHERWISE BY THE SUBMISSION OF THIS DOCUMENT. THEY ARE CONFIDENTIAL AND PRIVILEGED INFORMATION OF V.W.T. AND THEY MUST NOT BE DISCLOSED, REPRODUCED, LOANED, REWRITTEN OR USED IN ANY OTHER MANNER WITHOUT THE EXPRESS WRITTEN CONSENT OF V.W.T. V.W.T. ASSUMES NO RESPONSIBILITY OR LIABILITY FOR THE USE OF THIS DOCUMENT, OR OF THE DESIGN CONCEPTS AND INFORMATION CONTAINED HEREIN, FOR CONSTRUCTION IN A MANNER THAT CONFLICTS WITH OR IS RELATIVE TO THE FITNESS OR PURPOSE OF THIS DOCUMENT. IN NO EVENT SHALL THIS DOCUMENT OR THE DESIGN CONCEPTS AND INFORMATION CONTAINED HEREIN BE USED IN A MANNER DETRIMENTAL TO THE INTEREST OF V.W.T. ALL COPYRIGHT, PATENT AND OTHER INTELLECTUAL PROPERTY RIGHTS ARE RESERVED. ACCEPTANCE OF THE DELIVERY OF THIS DOCUMENT CONSTITUTES AGREEMENT TO THESE TERMS AND CONDITIONS.

DESIGNER	DATE
-	-
CHECKER	DATE
-	-
ENGINEER	DATE
-	-
SCALE:	N/A

TITLE: JB-004
CONTROL JUNCTION BOX
TERMINAL LAYOUT

CLIENT: WWTP UPGRADE
CITY OF IQALUIT

VEOLIA WATER TECHNOLOGIES CANADA INC. 4105 Sartelon, Saint-Laurent, Qc, Canada. Tel: (514) 334-7230

PROJECT DRAWING	INTERNAL	SHEET	REV
5000218036-EPL – 0005-AU-VWT	-	04 OF 05	3

ITEM	DESCRIPTION	PART NUMBER	MANUF.	QTY	BY
1	NEMA 4X ENCLOSURE, DIM 17,87H'' X 16W'' X 8D'', FIBERGLASS REINFORCED POLYESTER, C/W PAN 14R1513	PJ16148	HAMMOND	1	ENV
2	TERMINAL 600VAC/DC, 20A WDU 2.5 C/W END PLATE 1050000000	1020000000	WEIDMULLER	A/R	ENV
3	TERMINAL 600VAC/DC, 30A WDU 4 C/W END PLATE 1050000000	1020100000	WEIDMULLER	A/R	ENV
4	TERMINAL 600VAC/DC, 50A WDU 6 C/W END PLATE 1050000000 OR SEPERATOR 1050100000	1020200000	WEIDMULLER	A/R	ENV
5	KNIFE TERMINAL 300VAC/DC, 10A, WTR 2.5 C/W END PLATE 1050000000	1855610000	WEIDMULLER	A/R	ENV
6	TERMINAL 2 LEVEL 300VAC/DC, 10A, WDK 2.5 C/W END PLATE 1059100000	1021500000	WEIDMULLER	A/R	ENV
7	TERMINAL 3 LEVEL 300VAC/DC, 10A, DLD 2.5 C/W END PLATE 1784210000	1784180000	WEIDMULLER	A/R	ENV
8	FUSE TERMINAL ¼ X 1¼, 300VAC/DC, 15A, WSI 4/2 C/W END PLATE 1880450000	1880430000	WEIDMULLER	A/R	ENV
9	FUSE TERMINAL 5 X 20mm, 300VAC/DC, 15A, WSI 4	1886580000	WEIDMULLER	A/R	ENV
10	FUSE TERMINAL 2 LEVEL 5 X 20mm, 300VAC/DC, 10A, KDKS 1/EN4 C/W END PLATE 9503330000	9503350000	WEIDMULLER	A/R	ENV
11	FUSE TERMINAL 2 LEVEL ¼ X 1¼, 300VAC/DC, 10A, KDKS 1/35DB C/W END PLATE 9532470000	9532440000	WEIDMULLER	A/R	ENV
12	END STOPPER WEW 35/2	1061200000	WEIDMULLER	A/R	ENV
13	COPPER GROUND BAR, #4-14	4C-190	NSI-INDUSTRIES	A/R	ENV
14	COPPER GROUND LUG, 600VAC, #6-14, STR	CB35-36-LY	PANDUIT	A/R	ENV

REV	DESCRIPTION	DATE	REVD	CHKD	APVD	ECN
3	AS BUILT	2019-03-26	HZ	RA	–	–
2	FOR FABRICATION	2019-03-15	MR	RA	–	–
1	FOR APPROVAL	2019-02-07	HZ	RA	–	–

CONFIDENTIALITY AND INTELLECTUAL PROPERTY NOTICE
ALL INFORMATION CONTAINED IN THIS DOCUMENT IS THE SOLE PROPERTY OF VEOLIA WATER TECHNOLOGIES CANADA INC. AND IS PROTECTED BY ALL APPLICABLE LAWS, INCLUDING BUT NOT LIMITED TO COPYRIGHT AND OTHER INTELLECTUAL PROPERTY LAWS. THE DESIGN CONCEPTS AND INFORMATION CONTAINED HEREIN ARE PROPRIETARY TO V.W.T. AND ARE SUBMITTED IN CONFIDENCE. THEY ARE NOT TRANSFERABLE. THEY SHALL NOT BE USED IN WHOLE OR IN PART FOR ANY PURPOSE OTHER THAN THAT FOR WHICH IT IS EXPRESSLY SUBMITTED AND NO IMPLICIT LICENCE IS GRANTED OTHERWISE BY THE SUBMISSION OF THIS DOCUMENT. THEY ARE CONFIDENTIAL AND PRIVILEGED INFORMATION OF V.W.T. AND THEY MUST NOT BE DISCLOSED, REPRODUCED, LOANED, REWRITTEN OR USED IN ANY OTHER MANNER WITHOUT THE EXPRESS WRITTEN CONSENT OF V.W.T. V.W.T. ASSUMES NO RESPONSIBILITY OR LIABILITY FOR THE USE OF THIS DOCUMENT, OR OF THE DESIGN CONCEPTS AND INFORMATION CONTAINED IN IT, FOR PURPOSES OTHER THAN THOSE SPECIFICALLY RELATED TO THE FITNESS OR PURPOSE OF THIS DOCUMENT. IN NO EVENT SHALL THIS DOCUMENT OR THE DESIGN CONCEPTS AND INFORMATION CONTAINED HEREIN BE USED IN A MANNER DETRIMENTAL TO THE INTEREST OF V.W.T. ALL COPYRIGHT, PATENT AND OTHER INTELLECTUAL PROPERTY RIGHTS ARE RESERVED. ACCEPTANCE OF THE DELIVERY OF THIS DOCUMENT CONSTITUTES AGREEMENT TO THESE TERMS AND CONDITIONS.

		DATE
DESIGNER	–	–
CHECKER	–	–
ENGINEER	–	–
SCALE:	N/A	

TITLE: JB-004
CONTROL JUNCTION BOX
BILL OF MATERIAL

CLIENT: WWTP UPGRADE
CITY OF IQALUIT

VEOLIA WATER TECHNOLOGIES CANADA INC. 4105 Sartelon, Saint-Laurent, Qc, Canada. Tel: (514) 334-7230

PROJECT DRAWING	INTERNAL	SHEET	REV
500021803G-EPL – 0005-AU-VWT	–	05 OF 05	3

STD: "B" 11x17 | REF: A6798B | BAR = 1" AT PLOT SCALE

Mar 26, 2019 11:15:29 - G:\Projets A67xx\A6798A @ A6798B - VEOLIA - 500021803G Iqaluit WWTP Upgrade\DOC\DESIN\000-DRAWINGS\JB-004\REV 3
AS BUILT\500021803G-EPL-0005-AU-VWT-005.dwg - zhu

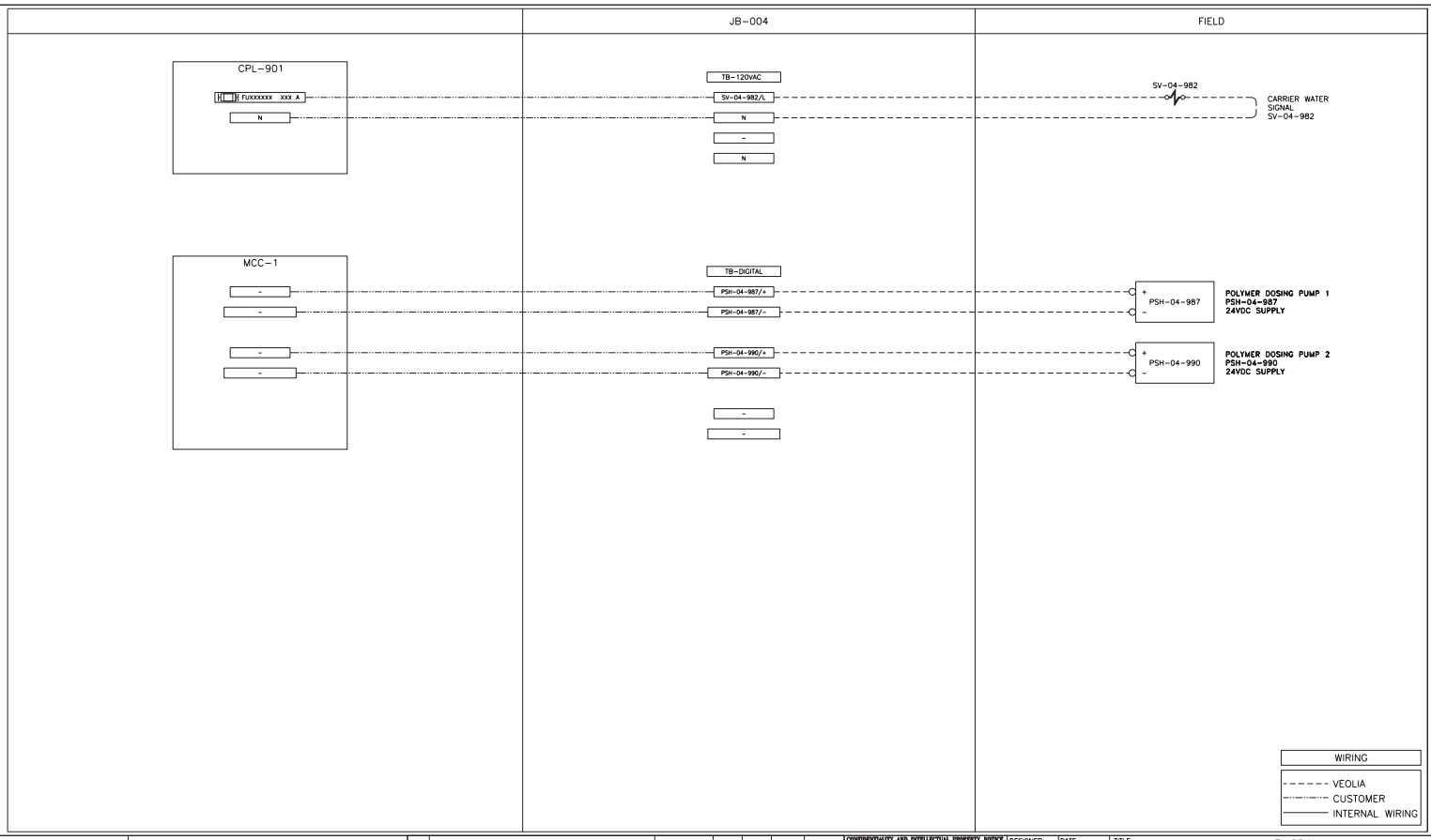

REV	DESCRIPTION	DATE	REVD	CHKD	APVD	ECN
3	AS BUILT	2019-03-26	HZ	RA	-	-
2	FOR FABRICATION	2019-03-15	MR	RA	-	-
1	FOR APPROVAL	2019-02-07	HZ	RA	-	-

CONFIDENTIALITY AND INTELLECTUAL PROPERTY NOTICE
ALL INFORMATION CONTAINED IN THIS DOCUMENT IS THE SOLE PROPERTY OF VEOLIA WATER TECHNOLOGIES CANADA INC. AND IS PROTECTED BY ALL APPLICABLE LAWS, INCLUDING BUT NOT LIMITED TO COPYRIGHT AND OTHER INTELLECTUAL PROPERTY LAWS. THE DESIGN CONCEPTS AND INFORMATION CONTAINED HEREIN ARE PROPRIETARY TO V.W.T. AND ARE SUBMITTED IN CONFIDENCE. THEY ARE NOT TRANSFERABLE. THEY MUST BE USED ONLY FOR THE PURPOSE FOR WHICH THE DOCUMENT IS EXPRESSLY SUBMITTED AND NO IMPLICIT LICENCE IS GRANTED OTHERWISE BY THE SUBMISSION OF THIS DOCUMENT. THEY ARE CONFIDENTIAL AND PRIVILEGED INFORMATION OF V.W.T. AND THEY MUST NOT BE DISCLOSED, REPRODUCED, LOANED, REMITTED OR USED IN ANY OTHER MANNER WITHOUT THE EXPRESS WRITTEN CONSENT OF V.W.T. V.W.T. ASSUMES NO RESPONSIBILITY OR LIABILITY FOR THE USE OF THIS DOCUMENT OR THE DESIGN CONCEPTS AND INFORMATION CONTAINED HEREIN FOR ANOTHER PROJECT, OR IN A MANNER THAT DOES NOT RELATE TO THE FITNESS OR PURPOSE OF THIS DOCUMENT. IN NO EVENT SHALL THIS DOCUMENT OR THE DESIGN CONCEPTS AND INFORMATION CONTAINED HEREIN BE USED IN A MANNER DETRIMENTAL TO THE INTEREST OF V.W.T. ALL COPYRIGHT, PATENT AND OTHER INTELLECTUAL PROPERTY RIGHTS ARE RESERVED. ACCEPTANCE OF THE DELIVERY OF THIS DOCUMENT CONSTITUTES AGREEMENT TO THESE TERMS AND CONDITIONS.

DESIGNER	DATE
-	-
CHECKER	DATE
-	-
ENGINEER	DATE
-	-
SCALE: N/A	

TITLE: JB-004 CONTROL JUNCTION BOX FIELD WIRING

CLIENT: WWTP UPGRADE CITY OF IQALUIT

VEOLIA

VEOLIA WATER TECHNOLOGIES CANADA INC. 4105 Sartelon, Saint-Laurent, Qc, Canada. Tel: (514) 334-7230

PROJECT	DRAWING	INTERNAL	SHEET	REV
5000218036-EID	0005-AU-VWT	-	01 OF 02	3

Mar 26, 2019 11:15:31 - G:\Projets A67XX\A6798A @ A6798B - VEOLIA - 5000218036 Iqaluit WWTP Upgrade\DOC\DESSIN\000-DRAWINGS\JB-004\REV 3
AS BUILT\5000218036-EID-0005-AU-VWT-001.dwg - zhu
BAR = 1" AT PLOT SCALE
REF: A6798B
STD: "B" 11x17

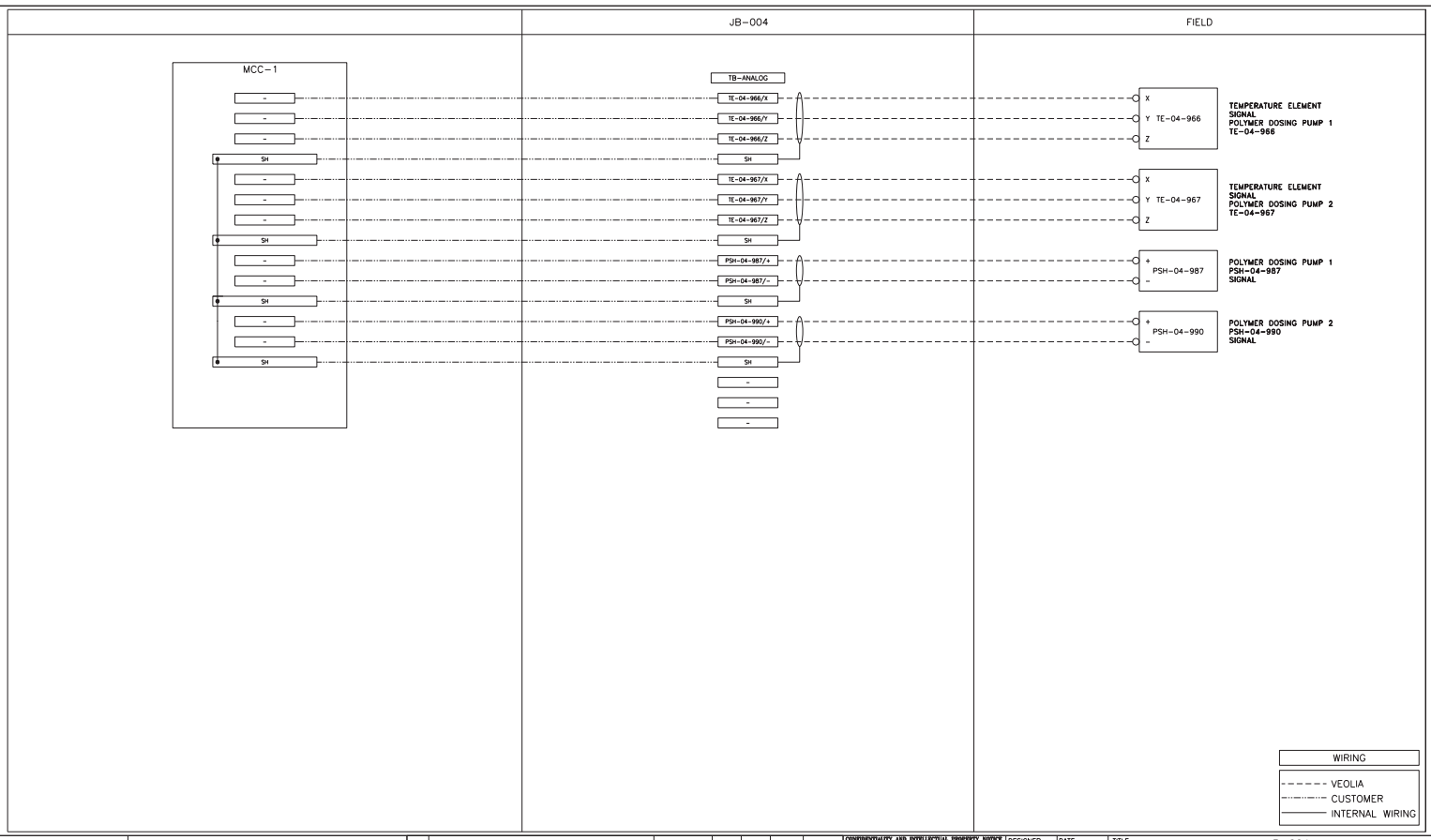

REV	DESCRIPTION	DATE	REVD	CHKD	APVD	ECN
3	AS BUILT	2019-03-26	HZ	RA	-	-
2	FOR FABRICATION	2019-03-15	MR	RA	-	-
1	FOR APPROVAL	2019-02-07	HZ	RA	-	-

CONFIDENTIALITY AND INTELLECTUAL PROPERTY NOTICE
ALL INFORMATION CONTAINED IN THIS DOCUMENT IS THE SOLE PROPERTY OF VEOLIA WATER TECHNOLOGIES CANADA INC. AND IS PROTECTED BY ALL APPLICABLE LAWS, INCLUDING BUT NOT LIMITED TO COPYRIGHT AND OTHER INTELLECTUAL PROPERTY LAWS. THE DESIGN CONCEPTS AND INFORMATION CONTAINED HEREIN ARE PROPRIETARY TO V.W.T. AND ARE SUBMITTED IN CONFIDENCE. THEY ARE NOT TRANSFERABLE. THEY MUST BE USED ONLY FOR THE PURPOSE FOR WHICH THE DOCUMENT IS EXPRESSLY SUBMITTED AND NO IMPLICIT LICENCE IS GRANTED OTHERWISE BY THE SUBMISSION OF THIS DOCUMENT. THEY ARE CONFIDENTIAL AND PRIVILEGED INFORMATION OF V.W.T. AND THEY MUST NOT BE DISCLOSED, REPRODUCED, LOANED, REMITTED OR USED IN ANY OTHER MANNER WITHOUT THE EXPRESS WRITTEN CONSENT OF V.W.T. V.W.T. ASSUMES NO RESPONSIBILITY OR LIABILITY FOR THE USE OF THIS DOCUMENT OR THE DESIGN CONCEPTS AND INFORMATION CONTAINED HEREIN FOR ANOTHER PROJECT, OR IN A MANNER THAT DOES NOT RELATE TO THE FITNESS OR PURPOSE OF THIS DOCUMENT. IN NO EVENT SHALL THIS DOCUMENT OR THE DESIGN CONCEPTS AND INFORMATION CONTAINED HEREIN BE USED IN A MANNER DETRIMENTAL TO THE INTEREST OF V.W.T. ALL COPYRIGHT, PATENT AND OTHER INTELLECTUAL PROPERTY RIGHTS ARE RESERVED. ACCEPTANCE OF THE DELIVERY OF THIS DOCUMENT CONSTITUTES AGREEMENT TO THESE TERMS AND CONDITIONS.

DESIGNER	-
DATE	-
CHECKER	-
DATE	-
ENGINEER	-
DATE	-
SCALE:	N/A

TITLE: JB-004 CONTROL JUNCTION BOX FIELD WIRING

CLIENT: WWTP UPGRADE CITY OF IQALUIT

VEOLIA

VEOLIA WATER TECHNOLOGIES CANADA INC. 4105 Sartelon, Saint-Laurent, Qc, Canada. Tel: (514) 334-7230

PROJECT	DRAWING	INTERNAL	SHEET	REV
5000218036-EID	0005-AU-VWT	-	02 OF 02	3

BAR = 1" AT PLOT SCALE

REF: A6798B

STD: "B" 11x17

Mar 26, 2019 11:15:33 - G:\Projets A67XX\A6798A @ A6798B - VEOLIA - 5000218036 Iqaluit WWTP Upgrade\DOC\DESSIN\000-DRAWINGS\JB-004\REV 3 AS BUILT\5000218036-EID-0005-AU-VWT-002.dwg - zhu

LEFT BLANK

5 – ELECTRICITY AND CONTROL

5.5 – EXCHANGE TABLE

LEFT BLANK

Iqaluit WWTP Upgrade

5000218036-XL-0001-AU-VWT

Exchange Table

Project number 5000218036

VARIABLE TYPE:		
	DIGITAL WRITE	DW
	DIGITAL READ	DR
	ANALOG READ	AR
	ANALOG WRITE (Set point)	AW

Rev	By	Chckd	App	Revision date	Description
1	HM	XM	CB	2019-04-26	For Approval

REV.	DESCRIPTION	TAG	PLC ADRESS	PANEL	TYPE	DATA TYPE	ALARM	ENGINEERING UNITS		SECURITY LEVEL	TEST
								RANGE	UNITS		OK
1	System Outlet Flow	RAW_OUTLET_FLOW		PLC01		AR		0-200	L/s		
1	Start Command Spidflow 01	DAF1_START		PLC01		DR					
1	Stop Command Spidflow 01	DAF1_STOP		PLC01		DR					
1	Inlet Valve Opened Status Spidflow 01	FV_02_312_ZSO		PLC01		DR					
1	Sludge Pump Running Status Spidflow 01	P_02_610_YI		PLC01		DR					
1	Sludge Pump Fault Spidflow 01	P_02_610_FAULT		PLC01		DR	x				
1	Polymer Dosing Running Status Spidflow 01	P_04_770_YI		PLC01		DR					
1	Polymer Dosing Fault Spidflow 01	P_04_770_FAULT		PLC01		DR	x				
1	Start Command for Spidflow 02	DAF2_START		PLC01		DR					
1	Stop Command for Spidflow 02	DAF2_STOP		PLC01		DR					
1	Inlet Valve Opened Status Spidflow 02	FV_02_332_ZSO		PLC01		DR					
1	Sludge Pump Running Status Spidflow 02	P_02_620_YI		PLC01		DR					
1	Sludge Pump Fault Spidflow 02	P_02_620_FAULT		PLC01		DR	x				
1	Polymer Dosing Running Status Spidflow 02	P_04_780_YI		PLC01		DR					
1	Polymer Dosing Fault Spidflow 02	P_04_780_FAULT		PLC01		DR					
1	Open Inlet Valve Spidflow 01	FV_02_312_OPEN		PLC01		DW					
1	Close Inlet Valve Spidflow 01	FV_02_312_CLOSE		PLC01		DW					
1	Start Polymer Dosing Spidflow 01	P_04_770_START		PLC01		DW					
1	Stop Polymer Dosing Spidflow 01	P_04_770_STOP		PLC01		DW					
1	Start Sludge Pump Spidflow 01	P_02_610_START		PLC01		DW					
1	Stop Sludge Pump Spidflow 01	P_02_610_STOP		PLC01		DW					
1	Spidflow 01 Ready Status	DAF1_READY		PLC01		DW					
1	Spidflow 01 Running Status	DAF1_RUNNING		PLC01		DW					
1	Spidflow 01 Fault Status	DAF1_FAULT		PLC01		DW	x				
1	Open Inlet Valve Spidflow 02	FV_02_332_OPEN		PLC01		DW					
1	Close Inlet Valve Spidflow 02	FV_02_332_CLOSE		PLC01		DW					
1	Start Polymer Dosing Spidflow 02	P_04_780_START		PLC01		DW					
1	Stop Polymer Dosing Spidflow 02	P_04_780_STOP		PLC01		DW					
1	Start Sludge Pump Spidflow 02	P_02_620_START		PLC01		DW					
1	Stop Sludge Pump Spidflow 02	P_02_620_STOP		PLC01		DW					
1	Spidflow 02 Ready Status	DAF2_READY		PLC01		DW					
1	Spidflow 02 Running Status	DAF2_RUNNING		PLC01		DW					
1	Spidflow 02 Fault Status	DAF2_FAULT		PLC01		DW	x				
1	Spidflow 01 Sludge Overflow Alarm	LSH_02_332_ALM		PLC01		DW	x				
1	Spidflow 02 Sludge Overflow Alarm	LSH_02_342_ALM		PLC01		DW	x				

LEFT BLANK

6 – OPERATION AND MAINTENANCE

6.1 – MBBR

6.1.1 – HANDLING, STORAGE AND INSTALLATION MANUAL

LEFT BLANK



Handling, Storage and Installation Manual

MBBR

Document No: HSI_0001_MBBR

Revision: 02 -- Date: 2019-03-25

WATER TECHNOLOGIES

TABLE OF CONTENTS

1 INTRODUCTION 4

2 SAFETY 5

2.1 INTRODUCTION 5
2.2 CONFINED SPACES 5
2.3 CHEMICAL HAZARDS 5
2.4 BIOLOGICAL HAZARDS 6
2.5 DROWNING 6
2.6 HOT SURFACE 6
2.7 ELECTRICAL CONNECTIONS 6

3 SHIPPING 7

4 RECEIVING 7

5 HANDLING 8

5.1 GENERAL 8
5.2 MEDIA BAGS HANDLING 8
5.3 STAINLESS STEEL MATERIAL HANDLING 9

6 STORAGE 10

6.1 GENERAL 10
6.1.1 Indoor storage 10
6.1.2 Outdoor storage 11
6.2 CHEMICAL ANCHORS STORAGE 11
6.3 MEDIA STORAGE 12
6.3.1 K5 Media storage 12
6.4 STAINLESS STEEL MATERIAL STORAGE 12
6.5 INSTRUMENT STORAGE (WHERE APPLICABLE) 12
6.6 SPECIAL MAINTENANCE REQUIREMENTS DURING STORAGE 13
6.6.1 Mixers and blowers (where applicable) 13
6.7 EQUIPMENT CLEANING 13

7 INSTALLATION 14

7.1 GENERAL 14
7.2 REACTOR(S) 15
7.3 ANCHORS 16
7.4 OUTLET SIEVE 16
7.4.1 Installation of standard cylindrical sieve 16
7.4.2 Installation of plane perforated plate sieve and bar screen 16
7.4.3 Sieve aeration or sparger pipes (if applicable) 17
7.4.4 Immediate Verification after installation 17

7.5 AERATION GRID 17
7.5.1 Air grid header/manifold 18
7.5.2 Lateral 18
7.5.3 Aeration grids check before start-up 18
7.5.4 Aeration grid assembly contraction/expansion 18
7.6 BLOWER AND AIR DISTRIBUTION CHECK AND START-UP 19
7.7 MIXER(S) (NOT APPLICABLE) 20
7.7.1 Installation 20
7.7.2 Start- up 20
7.8 MEDIA LOADING 21
7.8.1 Media filling 21
7.8.1.1 General recommendations 21
7.8.1.2 Filling up procedure for reactor equipped with aeration system 22
7.8.1.3 Filling up procedure for reactor equipped with mixers only (not applicable) 22
7.8.1.4 Biofilm growth in media 23
7.8.1.5 Avoiding media leakage 23
8 INSTALLATION INSPECTION 25
9 START-UP PLANNING 26
APPENDIX A PRE-OPERATIONAL CHECKOUT CHECKLIST 28
APPENDIX B FUNCTIONAL START-UP CHECKOUT 29

LIST OF FIGURES

Figure 1: Handling of media bags with forklift 8
Figure 2: Media bags in container 8
Figure 3: Handling of media bags with crane 8
Figure 4: Handling of media bags 8
Figure 5: Example of sharp objects and gaps not allowed into MBBR reactor 15
Figure 6: Example of edges allowed into MBBR reactor 16
Figure 7: Aeration grids assembly 17
Figure 8: Manifold support 18
Figure 9: Aeration grid distribution test 19
Figure 10: Media bag emptying into the reactor with forklift 21
Figure 11: Media bag emptying into the reactor with crane 21
Figure 12: Media entrapped in a sieve 24

LIST OF TABLES

Table 1: Instruments storage conditions 13
Table 2: Estimated time for biofilm development on the media 23

1 INTRODUCTION

This document provides handling, storage and installation instructions for a MBBR system. As this is intended to be a general document, considerations related to a specific project will be dealt either on the contract installation drawings or in separate documents.

The components of the MBBR are supplied by Veolia Water Technologies Canada (**VWTC**).

To obtain any additional information regarding characteristics or instructions on this equipment, please do not hesitate to contact us.

The system was designed in Canada by:

Veolia Water Technologies Canada
4105, Sartelon
Saint-Laurent, Qc.
Canada H4S 2B3
Phone: 514-334-7230
Fax: 514-334-5070

For technical support or service needs, for spare parts or to get assistance during your warranty period, you may contact us at the following number during regular business hours or write us at:

Veolia Water Technologies Canada – After Sales Support
1-844-SER-VWT9 | 1-844-737-8989 | vwtservicecanada@veolia.com

Our business hours are from:
Monday to Friday
8:30am to 5pm (EST)

Have the following information on hand for each request or call:

Project Name:
VWTC Reference Number:

2 SAFETY

2.1 INTRODUCTION

The safety rules and guidelines issued to the contractor are the primary precautions that are necessary for the prevention of accidents. The contractor's employees should be very familiar with these rules. The purpose of this section is to highlight specific common hazards of aerated wastewater treatments, in order to help the contractor to improve their own safety plan.

Workers should always wear the required safety equipment: hard hat, safety shoes, safety glasses, gloves, breathing protection, protective clothing, protection harness and hearing protection are very basic and go a long way in preventing accidents.

Never operate a unit unless safety devices and a First-aid kit are installed nearby.

2.2 CONFINED SPACES

Before entering or working in any tank, be sure to check if it is a potential Confined Space and if a permit is required for entrance. MBBR reactors usually require a Confined Space Entry Permit and following the applicable safety laws, regulations and guidelines for confined spaces including ventilation, gas monitoring, lockout/ blockout procedures, and using the proper level of PPE and rescue equipment.

2.3 CHEMICAL HAZARDS

Material Safety Data Sheets (MSDS) should be available for each chemical product.

Since chemicals or chemical dosage systems are used during normal operation of the treatment facility, the risks of fire, explosion and exposure to toxic chemicals or chemical burns are present. Chemicals that may be used regularly without limitation are antifoam and pH buffer solutions.

Operators should be made aware of the following:

- All chemicals which are used and any potentially dangerous reactions that could occur.
- Toxicity of all chemicals that are used or could be formed via reactions.
- Acidic or basic properties of all materials used.
- Potential fire or explosion hazards posed by the chemicals.
- Antidotes for exposure to toxic materials.
- Protective clothing that is recommended.
- Any other information that helps makes the operators aware of a hazard. (audible beacon or flash).

2.4 BIOLOGICAL HAZARDS

Wastewater can be hazardous to human health.

- Make sure that all personnel who may come into contact with biological hazards are vaccinated against diseases to which they may be exposed.
- In case of an installation in an existing basin, it is recommended to disinfect the tank before starting installation.
- Observe strict personal cleanliness.

2.5 DROWNING

Spaces that are not fully drained or dry can pose a risk of drowning. It takes relatively little standing water or other liquid to create a drowning hazard.

WARNING:

Air grids provide the advantages of an efficient oxygenation and good mixing capabilities, but their downward draft prohibits any swimming, even when wearing a life jacket.

Do not climb on, climb over, or lean over guardrails or other protective barriers. If it is necessary to extend beyond a protective fall protection barrier, use personal fall arrest or positioning equipment.

2.6 HOT SURFACE

Depending on the blower flowrate and discharge pressure, aeration pipes or other exposed surfaces that are within 2.1 m (7 ft) may have an external surface temperature of 60°C (140°F) or higher. Guard against contact or cover with thermal insulating material.

2.7 ELECTRICAL CONNECTIONS

Electrical connections must be made by certified electricians in compliance with all applicable codes and regulations.

3 SHIPPING

Most of the equipment and material for this project will be drop shipped from **VWTC** facilities and delivered directly to the site.

- All items delivered will be clearly identified with **VWTC**'s name, **VWTC**'s project name, **VWTC**'s project number.
- All shipments will have a clear Packing List identifying all parts in the shipment.
- All equipment will be tagged with the corresponding tag numbers shown on the design drawings (if applicable).

If there are more stringent requirements in the contract documents, they will take precedence over the above. If any of these requirements are not being followed, please notify the **VWTC** Project Manager immediately.

4 RECEIVING

The condition of all delivered equipment must be verified by the responsible party upon arrival at site. Verification that all equipment has been delivered as per contract must also be done upon arrival at site. Notification of missing or damaged items must be sent to Veolia Water Technologies Canada within five (5) working days of receipt of equipment. If there is no documented notification of missing or damaged parts within five (5) working days, Veolia Water Technologies Canada is not responsible for replacement of any items found to be missing or damaged at the time of installation and start-up of the supplied equipment. It is the responsibility of the party receiving the equipment to ensure all packaging is opened at the time of receipt to uncover and document any and all damages to the Freight Company and Veolia Water Technologies Canada.

Photographs and written documentation should be provided for all damaged equipment.

5 HANDLING

5.1 GENERAL

Equipment will arrive at the project site in several different shipments, from various freight companies and in several different packaging containers. Typically a flatbed truck is used which requires a fork lift or a crane to remove the items.

The Contractor is responsible for unloading and handling the equipment. The Installation Contractor will have 2 hours to unload each container, after it arrives on site, before demurrage charges are assessed. The Installation Contractor shall be responsible for any demurrage charges.

5.2 MEDIA BAGS HANDLING

The bags can be lifted by the four (4) lifting straps with a crane or a lift truck.
The picture below shows proper handling of the bags prior covering them with UV resistant tarps.



Figure 1: Handling of media bags with forklift



Figure 2: Media bags in container



Figure 3: Handling of media bags with crane



Figure 4: Handling of media bags

5.3 STAINLESS STEEL MATERIAL HANDLING

In order to minimize potential corrosion damage or unsightly surface marking, measures shall be taken to prevent contamination by iron, aluminium, copper, chlorides, and sulphides from lifting equipment. Stainless steel slippers or wooden packers should be used on forklift trucks to prevent contamination. Any resultant incidental contamination shall be removed at the earliest opportunity.

6 STORAGE

6.1 GENERAL

The following instructions outline the duties and responsibilities of the responsible party for equipment storage. The responsible party shall assume responsibility for the equipment upon arrival at the project site. These instructions shall define the minimum expectations for storage of all equipment.

While this storage specification takes into account common environmental issues that may affect the system during storage, common sense should be the overriding factor in determining the best method to ensure the integrity and proper storage of the ***VWTC*** equipment.

For contractual purposes, ***VWTC*** demands the Client to send pictures of major equipment once it is placed in storage, any time it gets moved during storage and again prior to removing from storage. For outside storage, pictures must be sent every month. Alternatively, a written document (check list, etc.) confirming that proper storage conditions are maintained will suffice. Failing to do so would cancel the proposed warranty.

Should it be necessary to delay installation and subsequent operation of a unit for more than one month from date of receipt at Site, special precautions must be taken.

Although some equipment can be stored outdoors, indoor storage is preferred for most equipment.

The storage environment into which a system is placed can have a severe effect on the long-term usefulness of some parts. Key environmental factors are:

- Temperature
- Relative humidity
- Pollutants

Air may contain excessive moisture, pollutants, microorganisms, and other particulates that accelerate the deterioration of some materials. Humidity and pollutants can produce an aggressive atmosphere.

6.1.1 Indoor storage

Indoor storage refers to storage in a climate controlled environment in a clean, non-aggressive, dry (non-condensing) and sheltered environment having a relatively constant temperature (especially for gear reducers, motors, bearings, etc.). Storage volume depends on the size of the project.

The environmental indoor conditions should not exceed the following ranges.

Min/Max Temperature Range between:	5°- 40°C
Relative Humidity (RH) Range between:	35% - 70%

1. Equipment should be stored in such a manner that it is free from allowing insects/rodents etc. from entering the equipment.
2. Cover the equipment with a tarp or similar protective shield to prevent direct exposure to dust or any other contamination. However, never enclose the unit or components totally in plastic covers; always leave adequate ventilation of air to prevent condensation.

Equipment must be checked on a weekly basis for tarp/wrap integrity and accumulation of dust or contaminants.

- **To avoid damage, do NOT stack crates.**
- **To avoid damage, do NOT stack enclosures.**
- **Do not store equipment or spares parts in barns, equipment sheds, or any other building without the capacity for heating and cooling as needed.**

6.1.2 Outdoor storage

Some equipment such as stainless steel pipes may be stored outdoors, but the following instructions must be applied:

- Equipment must be shielded from the sun, humidity and moisture, using tents or tarpaulins.
- Provide adequate ventilation when using tents or tarpaulins.
- Equipment must be stored with adequate support and anchoring, to prevent distortion and to raise equipment above any undesirable ground or floor conditions. This will also prevent flooding damage.
- Remove all snow, dust and water accumulation from the top of the units.
- Recoat any parts with paint, primer or grease, which have been scratched or wiped clean of their protective coating during shipment or delivery. Periodic verification is necessary to remove any accumulated condensation or rust and to recoat as necessary.

Where applicable:

Drain water completely with special attention to sections without drains at the lowest point.
Remove all motors, electronic equipment and instruments and store them indoors (heated and ventilated area).

6.2 CHEMICAL ANCHORS STORAGE

The adhesive mortar for chemicals anchors shall be kept in a cool, dry and dark place; maintained at a temperature of 5°C to 25°C.

Protect from heat and direct sunlight. Storage class as per VCI (1991) storage classification concept.

6.3 MEDIA STORAGE

The bags are UV light sensitive. They need to be protected from direct sunlight if stored for more than 2 weeks. A standard tarpaulin can be used to cover the bags in case of longer outside storage before use. If very hot temperatures are expected, the cover should not be put directly on the bags not to increase too much temperature on the bags. An air circulation under the cover should be provided to ensure safer storage.

The media are packed and shipped in bags containing 1 to 2.8 m^3 of media for K1, K1 heavy, K3 and K5.

The media shall be stored in the bags. The 1 m^3 media bags can be stacked **no more than 2 bags high**. This is valid for the temperature range +10°C to +50°C. For temperatures outside this range, bags should not be stacked.

6.3.1 K5 Media storage

- AnoxKaldnes K5 media has a nominal specific gravity of 0.95 for normal density media.
- Each bag is approximately 1.07 m x 1.07 m x 0.9 m, or 1 m^3 per bag and has at least two (2) handles on the top side, which can be used to remove the bags from the container. Bags weigh approximately 118 kg each.
- Media bags will be shipped individually or shrink-wrapped 2-3 to a pallet.

6.4 STAINLESS STEEL MATERIAL STORAGE

Stainless steel materials and products shall be stored separately from carbon steels and nonferrous materials. Materials should be stored under conditions that minimise the accumulation of dust and deposits. Any resultant incidental contamination shall be removed at the earliest opportunity.

6.5 INSTRUMENT STORAGE (where applicable)

All instruments must be stored indoors. Refer to manufacturer documentation in the O&M Manual.

The following table presents the storage conditions for the main instruments.

Table 1: Instruments storage conditions

Instruments	Storage conditions
Foam detector	Probe: - 35°C to 205°C Electronics: - 40°C to 85°C
DO probe and transmitter	DO probe: - 20°C to 70°C Transmitter: - 20°C to 70°C; 95% relative humidity, non-condensing
Level float	Max temperature: 60°C
Ammonia Analyzer and transmitter	Sensor: - 20°C to 60°C; Sensor cartridge: 5° to 40°C Transmitter: - 20°C to 70°C; 95% relative humidity, non-condensing
Flowmeter	Storage temperature: - 50°C to 70°C
pH sensor and transmitter	pH sensor: 4°C to 70°C; 0 to 95% relative humidity, non-condensing Transmitter: - 20°C to 70°C; 95% relative humidity, non-condensing

6.6 SPECIAL MAINTENANCE REQUIREMENTS DURING STORAGE

6.6.1 Mixers and blowers (where applicable)

After three (3) months of storage, long term storage methods must be applied to the unit including complete fill with lubricant. Protect machined surfaces and rotate shafts periodically (every month). Five (5) complete rotations of the output shafts are recommended each time.

Periodic checks should be made to ensure that no rusting or other damage has occurred. Should such be noted, corrective action should be taken immediately. Prior to putting the unit into service, drain lubricant and refill to the proper level as determined by the mounting position. Refer to manufacturer documentation.

All motors must be removed and stored indoors (in a heated and ventilated area). All motors must be run every 3 month as a preventive measure against the formation of corrosion.

6.7 EQUIPMENT CLEANING

VWTC is not responsible for cleaning of any equipment prior to installation and start-up due to the storage of the equipment. This is the complete responsibility of others.

Upon completing installation and terminating all activities in the area, all debris (rags, tie-wraps, coffee cups, bolts, nuts, etc.) and objects shall be removed from the basins and all pipe lines to and from the process shall be flushed prior to filling basins with water. In most cases, a thorough sweeping of the area followed by a visual inspection will suffice.

7 INSTALLATION

7.1 GENERAL

VWTC will supply specific Installation Manuals for equipment manufactured by **VWTC**. **VWTC** will supply specific installation instructions and/or drawings for material supplied by **VWTC**. These manuals, instructions and/or drawings will be provided to the Contractor prior to delivery of the equipment or materials. For equipment not manufactured by **VWTC**, refer to the appropriate section in the Installation, Operation and Maintenance Manual to determine the manufacturer's installation requirements (if applicable).

The Contractor is responsible for installation of **VWTC** supplied equipment in accordance with the installation instructions. In certain cases **VWTC**'s presence may be required during the installation of specific equipment or materials in accordance with the contract agreement.

The Contractor is responsible for proper protection of the equipment during and after installation until this responsibility is taken over by the Owner. This includes covering or wrapping equipment to protect it from water or dust infiltration during the course of installation or construction. Special attention should be paid to ensure that equipment and media is adequately protected from adjacent construction activity such as welding, concrete finishing, etc. Open conduit or junctions boxes must be covered to ensure that water cannot enter or damage equipment.

The Contractor is responsible for the installation of field electrical and control wiring, including terminations, for all **VWTC** equipment and control panels. This includes verification that wiring has been correctly installed and terminated prior to requesting **VWTC** installation inspection services.

The Contractor is responsible for supplying and installing of lubricants in accordance with the manufacturer's recommendations (if applicable).

The installation of MBBR equipment must be completed on site by the Installation Contractor. Please find below the list of tasks that need to be performed by the contractor at job site:

- The Installation Contractor must ensure that the necessary lifting equipment is available on site to carry out the installation.
- All nuts and bolts need to be verified, accounted for and tightened.
- Refer to all field installation drawings for the installation of each MBBR.
- Installation should be performed by millwrights.

VWTC will provide installation inspection services for **VWTC** supplied equipment and/or systems as required by our purchase agreement with the Contractor. It is the Contractor's responsibility to ensure that all supplied equipment is installed prior to **VWTC**'s inspection visit. With some installations, a separate inspection may be required prior to grouting supplied equipment. In these cases, it is the Contractor's responsibility to ensure that VWT inspects and approves the installation prior to addition of the required grout.

VWTC requests a minimum of three weeks' notice to schedule installation inspection services; therefore it is essential that the Contractor notify our Project Manager at least three (3) weeks before our personnel are needed on site. Upon receipt of this notice, **VWTC**'s Field Service Manager will schedule our personnel. However, no VWT

personnel will be dispatched to the jobsite until we receive the completed Pre-Operational MBBR Checklist from the Contractor certifying that the work is complete and ready for our visit.

If site readiness requires rescheduling of **VWTC**'s installation or start-up visits after the Contractor's formal request, it is the Contractor's responsibility to promptly notify us of the new schedule. We will make every effort to accommodate schedule delays but cannot guarantee availability of installation inspection or start-up personnel with less than three (3) week's advance notice.

In the event of **VWTC** personnel arriving on site as scheduled to find that work the Contractor has certified as complete is not yet finished, additional costs and delays could result and additional visits may be required. The Contractor is responsible for any additional costs **VWTC** incurs as a result.

Following sections indicate installation guidelines of each component of the MBBR.

7.2 REACTOR(S)

The inside surface of the reactor must be **smooth and wall quality and smoothness must be checked and validated by a VWTC inspector before filling the reactor with the media. This is to avoid media wear** and **to guarantee the service life** of the media.

Concrete: Sharp edges as joint bridges or ballast stones should be ground smooth and cavities larger than 5 mm should be patched with matter. The concrete surface does not require painting or coating.

No protruding objects are allowed. All metal objects must be removed or grinded down to the surface of the concrete. If that is not possible due to the water, apply a smooth layer of mortar on top of it to reduce the damaging effects.



Figure 5: Example of sharp objects and gaps not allowed into MBBR reactor

The figure below is an example of edges that are sufficiently smooth.



Figure 6: Example of edges allowed into MBBR reactor

Other materials (Stainless steel, Glass reinforced plastic/Glass coated steel with prefabricated plate): Special attention may be paid with the quality of joining of the prefabricated plates: check that bolt heads are free of sharp edges. If necessary, they may be grinded. The floor reactor must be cleaned prior to aeration grids installation.

7.3 ANCHORS

The Standard anchor model used for MBBR air grid installation is the HY 200 from Hilti. Installation instructions are provided with each product package please refer to those instructions before installation.

7.4 OUTLET SIEVE

7.4.1 Installation of standard cylindrical sieve

The cylindrical sieve can be fixed in one the following:

1. Bolted directly to the reactor wall with anchor bolts or chemical anchor bolts. Chemical anchor bolts are recommended for concrete wall to avoid possible galvanic corrosion between the concrete steel armouring and the sieves.
2. Welded to an embedded steel flange / pipe.
3. Welded directly to the collecting chamber (if using collecting chamber).
4. Connected to a pipe flange (normal method when using glass coated steel tanks).

Depending on the sieve size, additional support can be required and is indicated on VWT's drawings.

7.4.2 Installation of plane perforated plate sieve and bar screen

Generally the frame of these plane sieves/screens is manufactured in a workshop. The order of installation is:

1. Fixation of the screen frame to the reactor wall.
2. Welding of the perforated plate or bar screen inserts to the frame by field weld.
3. Fixation of the top perforated plate/bar screen.
4. Welding of side and bottom plates.

7.4.3 Sieve aeration or sparger pipes (if applicable)

When used for cylindrical sieves, sparger pipes are installed only under **upper sieves** as the risk of media clogging is higher. The **air flow of the sieve aeration must be set by the manual valve**. This is done after the reactor is filled with water. The adjustment of the air flow must be done **very carefully as too aeration leads to air lift effect**. Air escapes behind the sieve leading to metal fatigue and much considerably increase the risk of media accumulation on the sieve (sieve clogging by the media could occur quickly.)

7.4.4 Immediate Verification after installation

- Check for gaps at the sieves/screens where the media may pass through.
- Check for gaps above the sieves/screens as the level of media might rise in case of foaming.
    - Any gaps should be:
        - Less than 5 mm for K1 and K3
        - Less than 2 mm (long apertures) for Biofilm Chip and K5
        - Less than 20 mm for K3
- Check the solidity of sieve fixing on reactor wall.
- Check that no sharp edges are protruding from the sieves and screens. If necessary, they should be grinded.

7.5 AERATION GRID

Aeration grids are typically assembled in a workshop and delivered on stacked frames as presented in figure below.



Figure 7: Aeration grids assembly

7.5.1 Air grid header/manifold

Supports:

- Distance between 2 supports should be between 2000 to 3000 mm.
- All hangers must be secured with **a double nuts** or **tack welded.**

The figure below shows the principle of the air grid header pipe support (see VWTC's FI drawing for details).



Figure 8: Manifold support

7.5.2 Lateral

Supports:

- Under a lateral length of 2200 mm, 1 support is acceptable.
- A **U-bolt** or **equivalent system** must be secured with **double nuts** or **tack welding**.
- **Clamp**: each clamp is **welded at 4 points** (2x lateral, 2x angle bar).

See VWTC FI drawing for details.

7.5.3 Aeration grids check before start-up

Check the **vertical deviation tolerance** of the lateral branches to ensure it meets the tolerance requirements:

+/- 2.5 mm for one set of aeration grids and a tolerance of **+/- 10 mm** for all sets of aeration grids in one tank.

Verify the vertical deviation tolerance of the laterals using one of the two methods:

- Method 1: is to use a rotating 2 axis laser level set at a fixed height. VWTC recommends model "Hilti PRE 38" with an accuracy of +/- 0.5 mm @ 10 m.
- Method 2: is to use the water level as reference and adjust the level accordingly.

7.5.4 Aeration grid assembly contraction/expansion

The larger extent of contraction/expansion of the aeration grid assembly will often occur during installation, when basins are empty and exposed to direct sunlight. Installation practices must take this phenomenon into account.

7.6 BLOWER AND AIR DISTRIBUTION CHECK AND START-UP

Before starting aeration, check that metal shavings have been properly removed from the inside of the pipes.

After completed installation of all internal equipment, fill the reactor with **clean water to a level of 0.5 meter over the laterals for initial testing of the blowers and aeration system**. The aeration grid test will also show where any air leaks are within the system (flange connections) which might require fixing.

1. Start one blower and aerate the reactor at full capacity with all valves in the open position. Close one section and slowly open the valve.

2. Observe and document with pictures or videos the aeration pattern in the reactor. The entire tank floor should have even distribution of air from the grid system. Each lateral should have the same air flow (visually). The air should be distributed evenly over the whole lateral. No flow from a lateral indicates low position.

The figures presented below shows an uneven air distribution on the left and an even air distribution on the right side.



Figure 9: Aeration grid distribution test

3. After testing the first blower it is recommended to test the other blower(s) supplied for the treatment system. The valves on the blowers may also be tested at this time to restrict air into and/out of the blower. The valves located on the process air lines can also be checked. Decrease the amount of air to each grid section using the valves and observe the air flow pattern within the tank. Also notice the surge protection on the blower and at what valve position would cause the blower going to surge.

4. After evaluation and adjustment (if needed) of the aeration grids the reactor is ready for operation. Raw water must be put into the reactor to a level of 30%-50% before adding of media can start. **You will find the procedure for filling the media in paragraph 7.8.1 Media filling**.

5. Once the raw water and media placed in the reactor, test the blowers at design air flow rates and observe the aeration pattern at this air flow. There will be lots of turbulence in the water. With the media in the reactor, you may experience burping within the tank. This occurs due to retention of air in the tank by the carrier elements.

7.7 MIXER(S) (not applicable)

7.7.1 Installation

See **VWTC**'s OMM manual.

7.7.2 Start-up

If there are bottom diffusers in the reactor, the start-up of mixers should be done after a biofilm is established on the biomedia by aeration. The biofilm improves the mixing quality as it leads to increase media 'density' favourable for mixing.

If there are no bottom diffusers the mixers should be started up after the biomedia have been wetted for minimum 1-2 weeks to avoid damages. Alternatively, the biomedia can be added into the reactor over a period of 2-3 weeks, with the mixer running. The media should be added in amounts so that it will not accumulate in layers on the surface.

7.8 MEDIA LOADING

Check that all instrumentation sensors are protected from media shock.

The filling operations need at least 2 workers (1 forklift/crane operator and 1 for bag operation. The bags are emptied into the reactor (see the detailed filling up procedure below):

If there is a crane on site, it could be used to suspend the bag above the reactor as shown. See pictures below.



Figure 10: Media bag emptying into the reactor with forklift



Figure 11: Media bag emptying into the reactor with crane

If there is no crane on site or if the reactor is in a building:

- For buried reactor, the forklift truck can be used to handle bag to the reactor.
- For very high reactor, an air lift can be used.

7.8.1 Media filling

7.8.1.1 General recommendations

Because the new biomedia have some surface tension from fabrication that makes air-bubbles easily attach to the biomedia when filled with water, it will tend to float on the top of the water and not mix well. Due to this, the new media must **be charged into the reactor in several steps**.

Anti-foaming chemical can be added to reduce the surface effects and speed up the immersion of the new media. It should be noted that water-based anti-foams should be used and SILICON-based should not be used due to effects on the media.

7.8.1.2 Filling up procedure for reactor equipped with aeration system

After the aeration test described in paragraph 7.6 Blower and air distribution check and start-up, fill the reactor with water to a level of 30%-50% of normal level. The media installation will be easier/faster by filling the reactor with waste water or activated sludge (from an existing system) and in warm water.

Start adding media to the reactor and use one or two blowers depending on the necessary amount of air required to keep the media moving. Due to the excess amount of air being added to the reactor, foaming will likely occur. Another alternative is to use only some of the aeration grids instead of all three (3) to help in moving and mixing of the new media. Addition of an antifoam agent may be required.

For the following three (3) days add more media (if not already added to the reactor) and raw wastewater to the reactor to help start the mixing of the media and to establish of a biofilm on the media.

The amount of raw wastewater to be added on the second day is up to the 50% of normal level, by the third day the water level in the tank should be near 70% of normal level and on the last day of media addition the water level should be near or at the operation level in the tank. A good mixing (visible movement of biomedia on the surface) of the media must be obtained before more biomedia is added. Once media is mixing well, start the waste water flow through reactor with about 25%-50% of normal flow.

Increase water flow and airflow up to normal flows over some days or by taking into account the organic load.

Due to the nature of the wastewater being easily degradable, monitoring of the system should begin during the first week of running as a continuous system. Typical analysis should be on COD (total & soluble), ammonia, phosphorus and TSS/VSS. This will allow operators to see what degree of COD & NH_3-N removal/biomass growth the system is providing. By analyzing the system during the start-up, one will be able to see what type of removal the system is providing and be able to increase the flow rate to the reactor based on these results.

Note: In some cases, for example if leak testing has been carried out, the reactors will be almost completely filled with water. For one reason or other, it could be decided not to drain the reactors. In this case the media can be filled in **a little at a time** in respect of the two recommendations below:

1. Aeration must be run at normal capacity during all the filling period.
2. Prior to each new media load (bag) check that the media is mixing well.

7.8.1.3 Filling up procedure for reactor equipped with mixers only (not applicable)

Recommended method:

- Fill the reactor with water (clean or waste water) to ¾ of its normal level.
- Add the media without mixers running.
- After a period of 1 to 2 weeks, once the media have been well wetted, start up the mixers.

Alternative method:

The media can be added while the mixers are running. In this case, the addition of the media should be very progressive in such way to avoid any accumulation of media in layers on the water surface that could lead to damages of the media. The filling operation could then last 2 to 3 weeks.

Note: Mixing quality in an anoxic reactor: unlike mixing in an aerated reactor. The water surface could be immobile or only slightly moving, while there is adequate mixing below the surface.

7.8.1.4 Biofilm growth in media

The time for generation of a biofilm on the carrier elements varies depending on type of waste water and temperature, but estimated timer based on experience are shown in the table below.

The biofilm will develop and become more efficient and robust over time, and reach its optimal capacity after up to a year of normal operation.

Table 2: Estimated time for biofilm development on the media

Type of Wastewater	Delay
Municipal waste water	3 – 4 weeks
Municipal waste water	4 – 8 weeks for nitrification
Municipal waste water	4 – 8 weeks for denitrification (pre/post DN with methanol) after established nitrification biofilm
Food industry	1 – 2 weeks
Paper/pulp industry	3 – 4 days

A sludge input from another water treatment plant provides a seed and reduce the biofilm development time (ask **VWTC** requirements for Total Volume Percentage).

7.8.1.5 Avoiding media leakage

The following list covers the main items to check and double check in order to avoid media leakages.

1. Make sure sieves are installed properly, see section 7.4
2. Civil work shall not leave any open slots or holes below the water surface and also not above the water surface.
3. Each tank shall be equipped with level sensors or level switches or floats. These sensors/switches/floats shall also be activated and verified that they function properly.
4. Establish clear and effective operation routines and train the operations personnel on what to do in case the water level rises.
5. During the start-up phase it is recommended not to perform high flow tests without careful monitoring.
6. Make sure that the air blower's function properly and sufficient back-up capacity exists, as a blower malfunction can cause sieve blockage in a relatively short amount of time.

The following figure shows media blockage in a sieve:

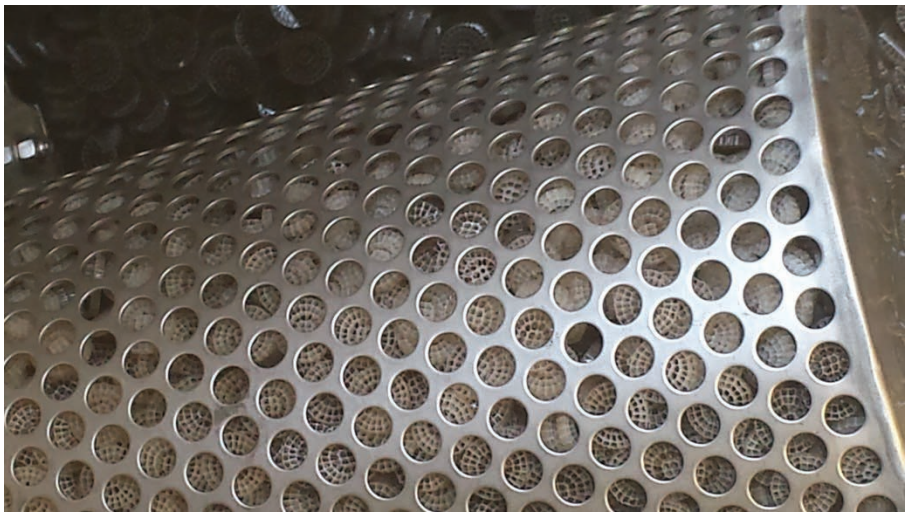

Figure 12: Media entrapped in a sieve

8 INSTALLATION INSPECTION

Included in appendices of this HSI manual are standard **VWTC** Checklist Forms to be completed by the Contractor and returned to **VWTC**'s Project Manager prior **VWTC** onsite installation inspection. **VWTC** will schedule our field service visits prior to return of completed checklists but it is our policy to not dispatch field personnel to the jobsite until the completed and signed checklist is received by our Project Manager or Field Service Manager.

NOTICE: **VWTC** policy does not allow **VWTC** service personnel to perform installation inspections or field start-up until applicable checklist is completed and returned by the Contractor.

9 START-UP PLANNING

In order for equipment inspection and start-up activities to proceed in an efficient manner, it is essential that the necessary preparatory work is complete prior to **VWTC** personnel arriving on site. The Contractor, Owner, Engineer, and **VWTC** should have a common understanding of the activities to be performed on-site and the role each must play.

The **VWTC** Start-Up Plan consists of three (3) phases. The **Pre-Operational Checkout** and the **Functional Start-Up** phases are part of the Installation Inspection and are conducted prior to putting the equipment and/or systems on line. The third phase is the **Process Start-Up** phase which occurs when the equipment and/or system is on line.

The **Pre-Operational Checkout** is a **dry checkout** of the equipment and aeration grids; water cannot be in the basins or tanks. During this checkout, the installation of the equipment is closely inspected for any problems. At this time, VWT will notify the Contractor of any incomplete work or deficiencies. It is our policy that field service personnel cannot be dispatched back to the jobsite until we receive the Contractor's confirmation that identified incomplete work or deficiencies have been completed or resolved.

Work that must be completed prior to **VWTC**'s Pre-Operational Checkout visit includes:

- Installation of all **VWTC** supplied equipment.
- Installation and termination of interconnecting wiring between MCC's, control panels, and field instruments for all equipment supplied by **VWTC** (if applicable).
- Lubrication of all **VWTC** supplied equipment (if applicable).
- Installation of permanent power to all **VWTC** supplied equipment (if applicable).

The **Functional Start-Up Checkout** is a **wet checkout** with water in the basins or tanks. During this check-out, the equipment and/or systems are confirmed to be functioning properly and ready to be put on line. Blowers, mixers, etc. that are a part of the process, shall be operational for this check.

Work that must be completed prior to VWTC's Functional Start-Up Checkout visit includes:

- Installation of all upstream and downstream systems necessary to provide inflow to VWT's system and to handle discharge flows from **VWTC**'s system. Blowers, mixers, (where applicable) etc. that are a part of the process, shall be operational for this check.
- Installation and termination of interconnecting wiring between MCC's, control panels, and field instruments for all equipment that **VWTC** must communicate with or control.
- Removal of all construction debris and flushing of pipelines, etc.

The **Pre-operational Checkout** and **Functional Start-Up Checkout** can be combined with the **Process Start-Up**, depending on the installation.

The **Process Start-Up** is when the treatment process is put on line with influent coming into the process and effluent being discharged from the process. **VWTC** will help the operators to optimize the process performance and conduct maintenance and process training during this phase. At this time, **VWTC** considers the facility to be getting beneficial use of the equipment and/or process and the warranty requirements shall apply.

Work that must be completed prior to **VWTC**'s Process Start-Up includes:

- Operational checkout and wet testing of all upstream and downstream systems necessary to provide inflow to **VWTC**'s system and to handle discharge flows from **VWTC**'s system.
- Operational checkout and wet testing of equipment or systems that is not supplied by **VWTC** but must be operational to allow completion of **VWTC** process start-up.
- Identification of the personnel operating the plant during the process start-up and their responsibilities during this phase.
- Scheduling of the training sessions for both maintenance and process training.
- Confirmation of chemicals, power and influent water available to put process on line.

APPENDIX A

PRE-OPERATIONAL CHECKOUT CHECKLIST

(TO BE COMPLETED BY CONTRACTOR)

PRE-OPERATIONNAL MBBR CHECKLIST

	Project			Date	
	Structure			Revision	
	Number			Doc. N°	
	Reactor			Written by	

N°	Items	X	Comments
1	**General**		
1.1	Inspection of received equipment.		
1.2	Control that all inside equipment are mounted.		
1.3	General cleanness of reactor floor.		
1.4	Visual control of reactor wall quality (no cavities>5 mm, no sharp edges, no buldges on the joints …)		
1.5	Control that gaps/openings are sufficiently smaller than the biomedia (e.g.: reactor drain, chemical injection pipe … protected by perforated sheet metal)		
1.6	Visual control of pipe-lines (support, assembly, welds…) for air, water and chemicals.		
1.7	Control of adequate protection of instrument sensor against media shock.		
2	**Outlet sieve/screen**		
2.1	Confirm elevation of sieves		
2.2	Check all anchor bolts, visually inspect bolt size, straightness, depth, material and hardware.		
2.3	Check tightness of all anchor bolts, verify torque settings used and the use of double nut. (if applicable)		
2.4	Check clamps and counter nuts for the sieve aeration pipes.(if applicable)		
2.5	Control that sharpe edges do not protrude from the surface.		
2.6	Control of sieve aeration (if applicable)		
2.7	Check clamps and counter nuts for the sieve aeration pipes.(if applicable)		
2.8	Verify brackets and/or supports properly shimmed and/or grouted.		
3	**Bottom aeration system**		
3.1	Confirm orientation of manifold and diffuser piping. See Plan View Drawing.		

3.2	Confirm elevation of air grid.		
3.3	Visually inspect for flatness of air grid.		
3.4	Verify location and spacing of manifold drop pipe wall brackets, manifold supports, diffuser support beams, and diffuser support legs.		
3.5	Check all anchor bolts, visually inspect bolt size, straightness, depth, material and hardware.		
3.6	Check tightness of all anchor bolts, verify torque settings used and the use of double nut or tack welding.		
3.7	Verify brackets and/or supports are properly shimmed and/or grouted.		
3.8	Confirm diffuser support beams are properly attached to support legs.		
3.9	Verify pipe u-bolts or pipe risers tight and properly installed.		
3.10	Confirm gasket installed between pipe flanges and flanges properly bolted together.		
3.11	Verify that a 3/16” drain hole is located at the end of each backbone (see drawings)		
3.12	Visual control of welds.		
3.13	Check cleanness of the welds.		
3.14	Control of pipe supports solidity and that clamps are secured with double nuts.		
3.15	Check the levelling of bottom aeration system.		
3.16	Test of the bottom aeration system with 0,5-1,0 m fresh water. See details in the 'Installation Guide'.		
4	**Chemical and water piping**		
4.1	Tightening of water pipes support		
4.2	Tightening of chemicals pipes support		
4.3	Tightening of water pipes flange		
4.4	Tightening of chemicals pipes flange		

Sign: ……..……

APPENDIX B

FUNCTIONAL START-UP CHECKOUT

FUNCTIONNAL MBBR CHECK LIST

Projet/Project	
Structure	
Nombre/Number	
Reacteur/Reactor	

N°	Items	X	Comments
1	**General**		
1.1	Inspection of received equipment.		
1.2	Contractor shall fill basins or tanks (bioreactors) with nonpotable water.		
1.3	All peripheral equipment supplied by others, must be fully operational. Contractor or equipment supplier shall confirm check-out and operation of the equipment.		
1.4	Contractor shall confirm that influent pumping or collection systems are capable of supplying influent water to the system.		
1.5	Contractor shall confirm that systems downstream are ready to accept effluent water from the process.		
1.6	Contractor shall confirm that waste solids, recycle solids and solids disposal systems are ready to accept solids from the MBBR Process.		
1.7	Contractor shall confirm that all deficiencies noted by VWTC have been resolved.		
1.8	Contractor shall add media to each basin or tank (bioreactor) per the Installation,Operation and Maintenance Manual provided by VWTC.		
1.9	Contractor shall complete and sign attachment A , which documents the amount media and the date the media was added to each basin or tank (bioreactor).		

Signature: ..... Date :

6 – OPERATION AND MAINTENANCE

6.1 – MBBR

6.1.2 – OPERATION AND MAINTENANCE MANUAL

LEFT BLANK

VEOLIA

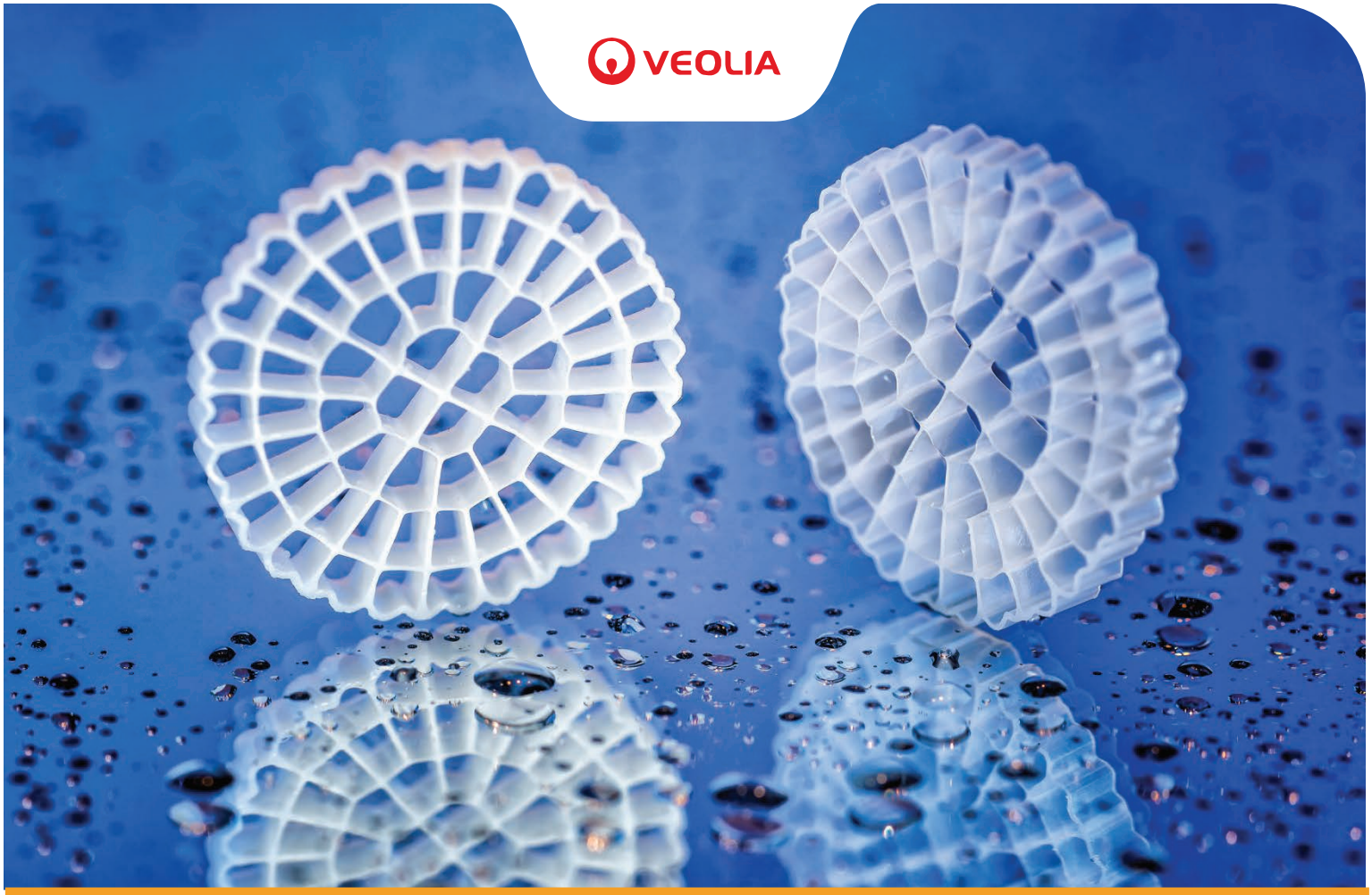

Operation and Maintenance Manual

MBBR

Document No: OMM_0001_MBBR

Revision: 02 -- Date: 2016-05-02

WATER TECHNOLOGIES

TABLE OF CONTENTS

1 SAFETY PRECAUTIONS 5

1.1 INTRODUCTION 5
1.2 CONFINED SPACE 5
1.3 CHEMICALS HAZARDS 5
1.4 BIOLOGICAL HAZARDS 6
1.5 DROWNING 6
1.6 HOT SURFACE 6
1.7 ELECTRICAL CONNECTIONS 6

2 DESCRIPTION OF THE ANOXKALDNES™ MBBR TREATMENT SYSTEM 7

2.1 THE PROCESS 7
2.2 THE MEDIA 7
2.3 THE REACTOR 7

3 DESIGN SUMMARY 9

4 INITIAL START-UP 10

4.1 PREPARATIONS 10
4.2 AERATION GRID TEST 10
4.3 CARRIER ELEMENT FILL IN REACTOR 11

5 OPERATION OF THE MBBR TREATMENT SYSTEM 12

5.1 FLOW THROUGH SYSTEM 12
5.2 BOD, COD, NH_3-N, NO_3-N CONCENTRATIONS 12
5.3 DISSOLVED OXYGEN CONCENTRATION 12
5.3.1 BOD removal 12
5.3.2 Nitrification 13
5.4 PH & ALKALINITY 13
5.4.1 BOD removal 13
5.4.2 Nitrification 13
5.5 TEMPERATURE 14

6 LAB TESTING 15

7 SAMPLING PROGRAM / DAILY ROUTINE 15

8 TROUBLESHOOTING 16

9 MAINTENANCE SCHEDULE 17

10 SHUT DOWN PROCEDURES 19

11 MEDIA TRANSFER PROCEDURE 19

12 CALCIUM DEPOSIT REMOVAL PROCEDURE 19

APPENDICES:

APPENDIX 1: MEDIA TRANSFER
APPENDIX 2: TREATMENT AGAINST CALCIUM DEPOSIT IN AERATION NETWORK
APPENDIX 3: MAINTENANCE AND LUBRICATION PROGRAM

PREFACE

This manual comprises instructions for operation and maintenance of MBBR reactors.

This manual should remain on site and be located in a place that is easily accessible to operating and maintenance personnel at all times.

It is important that:

- The manual and other applicable documents are preserved during the whole life span of the equipment. The manual and other applicable documents constitute a part of the equipment.
- This manual is carefully studied by all users of the equipment, and always kept at hand for future reference.

The MBBR system was designed in Canada by:

Veolia Water Technologies Canada
4105, Sartelon
Saint-Laurent, Qc.
Canada H4S 2B3
Phone: 514-334-7230
Fax: 514-334-5070

For technical support or service needs, for spare parts or to get assistance during your warranty period, you may contact us at the following number during regular business hours or write us at:

Veolia Water Technologies Canada After Sales Support
1-844-SER-VWT9 | 1-844-737-8989 | vwtservicecanada@veolia.com

Our business hours are from
Monday to Friday
8:30am to 5pm EST

1 SAFETY PRECAUTIONS

1.1 Introduction

The safety rules and guidelines issued to the employees are the primary precautions that are necessary for the prevention of accidents. The employee should be very familiar with these rules. The purpose of this section is to highlight specific common wastewater aerated treatment hazards, in order to help the contractor to improve its own safety plan.

Workers should always wear the safety equipment: hard hats, safety shoes, safety glasses, gloves, breathing protection, protective clothing, protection harness and hearing protection are very basic and go a long way in preventing accidents.

Never operate a unit unless safety devices and First-aid kit are installed.

1.2 Confined Space

Before entering or breaking the plane of any tank, be sure to check if it is a potential Confined Space and if a permit is required for entrance. MBBR reactors usually require a Confined Space Entry Permit, follow the applicable safety laws, regulations and guidelines for confined spaces including ventilation, gas monitoring, lockout/ block out procedures, and using the proper level of PPE and rescue equipment.

1.3 Chemicals Hazards

WHMIS Material Safety Data Sheets (MSDS) should be available for each chemical product. Since chemicals or chemical dosage are used during normal operation of treatment facility, the risks of fire, explosion and exposure to toxic chemicals or chemical burns are present. Chemicals that may be used regularly without limitation are antifoam and pH buffer solutions.

Operators should be made aware of the following:

- All chemicals which are used and any potentially dangerous reaction that could occur.
- Toxicity of all chemicals that are used or could be formed via reactions.
- Acidic or basic properties of all materials used.
- Potential fire or explosion hazards posed by the chemicals.
- Antidotes for exposure to toxic materials.
- Protective clothing that is recommended.
- Any other information that makes the operators aware of a hazard. (Audible beacon or flash).

1.4 Biological Hazards

Wastewater can be hazardous to human health.

- Make sure that all personnel who may come into contact with biological hazards are vaccinated against diseases to which they may be exposed.
- In case of an installation in an existing basin, it is recommended to disinfect the tank before starting installation.
- Observe strict personal cleanliness.

1.5 Drowning

Spaces that are not fully drained or dry can pose a risk of drowning. It takes relatively little standing water or other liquid to create a drowning hazard.

WARNING:

Air grids have the advantage of an efficient oxygenation and well mixing capabilities. But their downward draft at the opposite side of the aerators prohibits any swimming, even when wearing a life jacket.

Do not climb on, climb over, or lean over guardrails or other protective barriers. If it is necessary to extend beyond a protective fall protection barrier, use personal fall arrest or positioning equipment.

1.6 Hot Surface

Depending on the blower flowrate and discharge pressure, aeration pipes or other exposed surfaces that are within 2.1 m (7 ft) may have an external surface temperature of 60°C (140°F) or higher. Guard against contact or cover with thermal insulating material.

1.7 Electrical Connections

Electrical connections must be made by certified electricians in compliance with all applicable codes and regulations.

2 DESCRIPTION OF THE ANOXKALDNES™ MBBR TREATMENT SYSTEM

2.1 The Process

The Moving Bed Biofilm Reactor was developed in Norway at the NTNU (Norwegian University of Science and Technology) under the direction of Professor Hallvard Odegaard and was first marketed by the Norwegian company Kaldnes Miljøteknologi, who installed the first plant in 1989.

The original Kaldnes MBBR process was developed as a stand-alone biological treatment system, with no need for sludge recycle or backwashing of the media. In an MBBR mode the wastewater treatment plant will operate as a fixed film process with no return activated sludge being pumped back from the clarifiers instead of wasting all the biomass settled out in a clarifier when operated in the original process mode.

Regardless of what process is used, original MBBR, the process utilizes a cylindrical plastic carrier of about 25 mm diameter to provide an environment in which bacterial populations and protozoa can grow very effectively. The carriers are retained in tanks and aerated to provide the oxygen needed for growth in aerobic configurations. This aeration also supplies mixing energy to cause the carriers to be dispersed throughout the liquid and completely mixed. Due to the agitation created by the aeration system provided, the biomass continuously sloughs, maintaining a thin biological film. The process is therefore generically described as a Moving Bed Biofilm Reactor Process (MBBR) but has also been described as a suspended carrier process or as the Integrated Fixed Film Activated Sludge (IFFAS) when operated in the Hybrid MBBR mode. It has some similarities with submerged aerated filters because a biofilm is used to provide biological treatment in a submerged reactor.

2.2 The Media

The medium for the support of biofilm growth consists of high-density polyethylene (HDPE) cylinders with approximate dimensions of 25 mm diameter and 7 mm long (next figure). The cylinders have small fins on the outer circumference and a cross piece in the center. This media has an effective surface area for biofilm growth of 800 m^2/m^3. There are approximately one million individual pieces of media per cubic meter.

2.3 The Reactor

A MBBR reactor consists of a tank equipped with an outlet sieve to retain the media, the media itself, and a means of aeration or mixing. Aeration is by a medium bubble system design using stainless steel laterals and diffusers. Within the reactor the media, wastewater and air are completely mixed resulting in very efficient contact between the biofilm and substrates within the liquid. One of the important features of the process is that biofilm thickness is controlled by the movement of the media so that oxygen diffusion through the biofilm is encouraged. Detached/sloughed biofilm is suspended within the reactor and leaves the reactor with the treated wastewater.

Aeration is by a medium bubble system typically using 4 mm holes in stainless steel laterals of 1 inch to 1.5 inch diameter. These laterals and associated headers are usually fabricated in rigid stainless steel pipe and fixed to the base of the reactors. Even with a coarse bubble diffuser system, the oxygen transfer in an MBBR is not inferior to that of a fine-bubble diffuser system in activated sludge. This is caused by the fact that the bubbles are partly caught by the moving carriers and partly broken in contact with the carriers.

Sieves are used to retain the media and our design uses horizontally mounted perforated pipe sieves with appropriate holes spacing. In use there have been no problems with blockage etc. of these sieves even when used in conjunction with typical 5/8 inch preliminary screening or primary clarifiers.

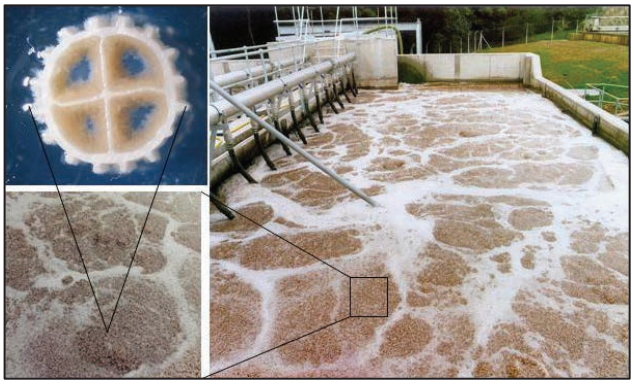

Moving bed biofilm reactor

3 DESIGN SUMMARY

Refer to the project *Process Datasheet* (PDS) in the *Detailed Technical Section* of the *Operation and Maintenance Manual – Volume 1*.

4 INITIAL START-UP

4.1 Preparations

- If the tank has never been used with AnoxKaldnes, refer to Handling, Storage and Installation Manual. If it has been, follow recommendations below.
- Check that the outlet sieve supports are sufficiently secured to reactor wall and the U-bolt brackets are anchoring the sieve assembly to the supports and that there are no openings in the sieve flange connections where the carrier elements can penetrate. Gaps should be less than 5 mm.
- Check that the aeration system is level and secured to reactor bottom. All supports should be tightened. In order to obtain an even distribution of air the diffuser manifolds in a reactor should be level to within a maximum of ¼ inch (6 mm) tolerance.

4.2 Aeration Grid Test

- Fill the reactor with water to a height of 4-5 feet for initial testing of the blowers and aeration system. The aeration grid test will also show where any air leaks are within the system (flange connections) which might require fixing.
- Start one blower and aerate the reactor at full capacity with all valves in the open position. Observe the aeration pattern of the tank. The entire tank floor should have good distribution of air from the grid system across the entire tank floor. Due to spacing between the aeration grids, you should easily see these areas of minimal air flow during the aeration grid test, but will be difficult to see when operating at the normal water level in the reactor. Refer to the picture on the next page showing the air distribution in the tank.
- After testing the first blower it is recommended to test the other blower(s) supplied for the treatment system. You also may want to test the valves on the blowers to restrict air into and/or out of the blower. The valves located in the process air lines can also be checked. Decrease the amount of air to each grid section using the valves and observe the air flow pattern within the tank. Also notice the surge protection on the blower and at what valve positions would create the blower going into surge.
- Once the tanks are completely filled with water (after start-up and media placed in the reactor) you will want to test the blowers at design air flow rates and observe the aeration pattern at this air flow. There will be lots of turbulence within the water at this time due to the small reactor and the amount of air being added to the system. With the media in the reactor, you may experience burping within the tank. This occurs due to the retention of air in the tank by the carrier elements.

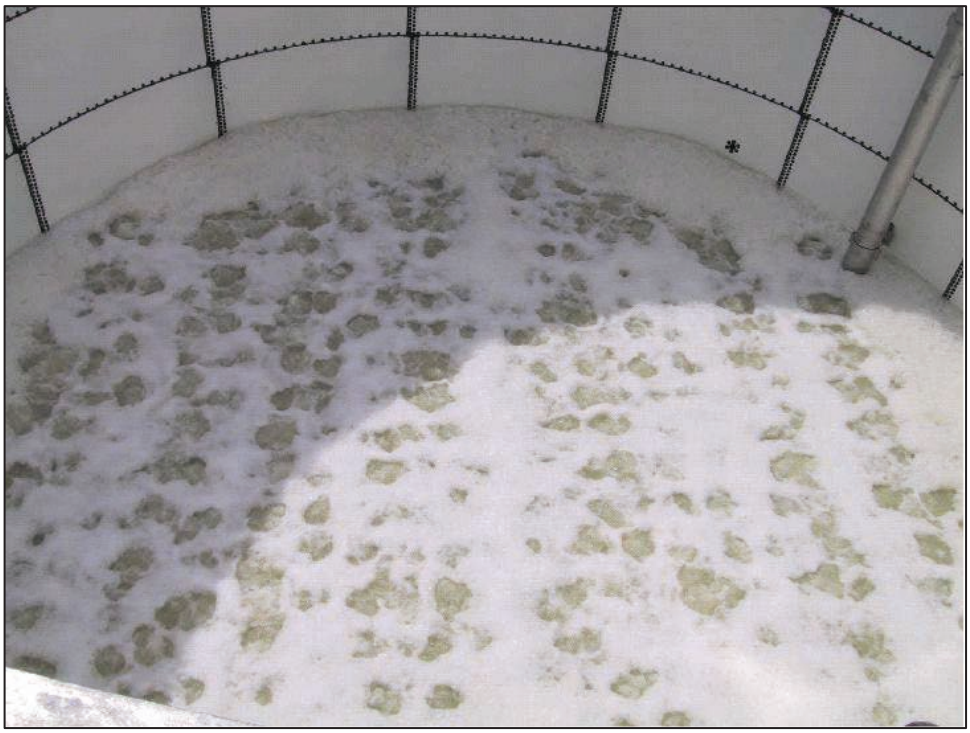

Aeration Grid Pattern when testing the blowers with 6 ft of water in tank

4.3 Carrier Element Fill in Reactor

Refer to Handling, Storage and Installation Manual for Media Filling Procedure.

The carrier elements have some surface affects from fabrication and air bubbles from the aeration system easily attach to the carrier elements when first placed in the water. Due to this surface effect, the media will tend to float on top of the water and not mix relatively well. There are a few things that can be done to help speed up the wetting process for the media.

1) The first is to add primary effluent wastewater and/or trickling filter effluent from the existing plant. The influent wastewater will provide a food source for the seeding bacteria and the trickling filter effluent will help in reducing the surface affects and allow the media to start moving.
2) Anti-foam will likely be required to be dosed into the reactor, which will cancel out the hydrophobic effects of the media and minimize foaming during the start-up phase. Dosing of anti-foam will vary from case to case but it seems to be required when a) the wastewater temperature is cool (<15°C) and/or b) the influent wastewater has low suspended solids and organic concentration. Dosing of anti-foam can last for 1-2 months after start-up depending on how fast an established biomass attaches itself to the media.
3) The last thing one can do is to have both blowers on to mix the media around. The increase in turbulence within the reactor will help keep the media in motion, but when placing the media in the reactor it will most likely be a judgment call on whether adding the second blower will be required.

5 OPERATION OF THE MBBR TREATMENT SYSTEM

Due to the fact the MBBR treatment system has media contained within the system, there are only a handful of items that control the degree of treatment the AnoxKaldnes™ MBBR treatment system will provide and these items are:

1. Flow through system.
2. BOD, COD and/or NH_3-N, NO_3-N Concentrations.
3. Dissolved Oxygen Concentration.
4. pH & Alkalinity.
5. Temperature.

5.1 Flow Through System

The AnoxKaldnes™ MBBR treatment system runs best at steady flows and when the biomass sees a constant load over time. When the flow or organic load is increased, the system will respond to the increase if the proper nutrients are available and enough dissolved oxygen is supplied to the system.

5.2 BOD, COD, NH_3-N, NO_3-N Concentrations

The AnoxKaldnes™ MBBR solutions are used for BOD/COD removal and nitrification.
BOD, COD and/or ammonia and nitrate concentrations are important parameters to be monitored for the correct operation of the AnoxKaldnes™ MBBR treatment system.

5.3 Dissolved Oxygen Concentration

The dissolved oxygen concentration is very important for the microorganisms. Without the necessary dissolved oxygen, the amount of nutrients that can be degraded will be diminished.

This is due to two (2) factors: 1) the bacteria start working faster at higher temperatures and the required surface area to perform a certain amount of work decreases and 2) the solubility of oxygen decreases as the temperature increases. The cooler the wastewater temperature, the more oxygen can be dissolved into water and vice versa the warmer the wastewater the less oxygen can be dissolved in water. This translates into requiring more air at a higher water temperature to maintain the same dissolved oxygen concentration within the water.

5.3.1 BOD removal

At times when the organic concentration is lower than the designed load, the dissolved oxygen within the reactor will be greater than those specified above. This elevated dissolved oxygen concentration will not harm the MBBR process, but nitrification can start and decreases the pH.

5.3.2 Nitrification

Nitrifying organisms are obligate aerobes that require oxygen for metabolism.

The oxygen demand of 22 mg/L ammonia–nitrogen is equal to approximately 100 mg/L of carbonaceous biochemical oxygen demand (cBOD).

A residual dissolved oxygen concentration of 5 to 7 mg O_2/L is required to ensure a good nitrification.

At times when the organic concentration is lower than the designed load, the dissolved oxygen within the reactor will be greater than those specified above. This elevated dissolved oxygen concentration will not harm the MBBR process, but nitrification can start and decreases the pH.

5.4 pH & Alkalinity

5.4.1 BOD removal

The best performance from the AnoxKaldnes™ MBBR treatment system for BOD removal should be 7.5 - 8.0.

pH & alkalinity are not a concern for heterotrophic bacteria, except if aeration is too high for the load to be treated. In this case, nitrification could occur and pH could decrease.

5.4.2 Nitrification

The best performance from the AnoxKaldnes™ MBBR treatment system for nitrification should be 7.1 - 8.0.

This range could narrowly be reduced due to potential scaling on media carriers.

Alkalinity is consumed at a rate of 7.5 mg per mg NH_3-N oxidized by the bacteria. If there is not enough alkalinity contained within the wastewater the pH within the system will start to decrease below 7. It will result in a permit violation and even inhibition of nitrite oxidizer bacteria, which results in an accumulation of nitrite.

5.5 Temperature

Like all biological creatures, all bacteria growth rate increases and decreases with wastewater temperature.

Refer to the project *Process Datasheet* (PDS) in the *Detailed Technical Section* of the *Operation and Maintenance Manual – Volume 1* to know the design temperature of your MBBR.

Below is a graph of the growth rate of nitrification bacteria with respect to temperature.

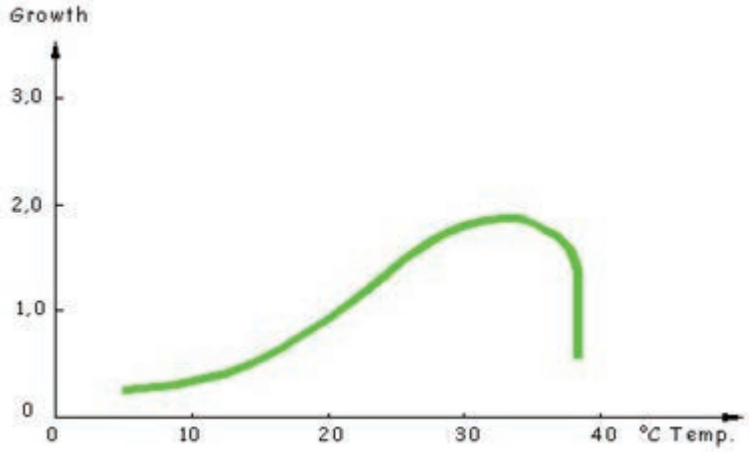

6 LAB TESTING

As with all biological treatment systems, there should be a few parameters tested each day during normal operation of the AnoxKaldnes™ MBBR system to ensure proper performance. Upon the process objective these analyses can typically include:

BOD Removal	Nitrification
Chemical Oxygen Demand (COD)	Ammonia-nitrogen (NH_3-N),
Biochemical Oxygen Demand (BOD)	Nitrite-Nitrogen (NO_2^-N),
Phosphorus (PO_4-P)	Phosphorus (PO_4-P)
Total Suspended Solids (TSS)	Total Suspended Solids (TSS)

Refer to commissioning protocol for more details.

The BOD, COD, NH_3-N, NO_2 –N and PO_4-P tests are very easy to perform and if using the Hach testing equipment, the COD and PO_4-P are USEPA approved.

Sampling of the system should be at the following locations:

1) Primary Effluent.
2) Effluent from the 1st MBBR reactor.
3) Effluent from the 2nd MBBR reactor and more (if applicable)
4) Final Clarifier effluent.

Due to the nature of the raw wastewater entering and exiting the AnoxKaldnes™ MBBR treatment system there will be a fair amount of solids in samples taken from these two locations. Because of this, the tests being performed should be run on the soluble portion of the sample. The soluble portion of a sample is the filtrate created when filtering a sample though a 1.0–1.5 micron glass fiber filter. Daily monitoring of the system should be performed and results recorded for reference purposes at later dates.

7 SAMPLING PROGRAM / DAILY ROUTINE

a) Take manual readings of treatment system (dissolved oxygen, temperature, flow, and pH).
b) Collect necessary samples from the treatment system to look at COD, NO_3-N & NH_3-N reduction as well as the TSS of the system.
c) Run COD Analysis per instructions from Hach Company.
d) Run Ammonia analysis per instructions from Hach Company.
e) Run Nitrate & Nitrite analysis per instructions from Hach Company.
f) Run TSS on all samples provided (MLSS, RAS, WAS, Effluent, Influent, etc).
g) Log, in computer, the previous day's readings and analytical data.

8 TROUBLESHOOTING

PROBLEMS	POSSIBLE CAUSES	DETAILS	ACTION
Media floats and does not go down	New media addition	Hydrophobic effects of the media	Antifoam injection. Dose between 20 and 50 ml/m^3 Use only antifoam product without silicon. The antifoaming agents will also act as a media wetting agent and will improve the start-up of the "moving bed". (refer to note below)
Foam	Plant Start up	During start-up of bioreactors, when establishing biofilm on the plastic elements, it is usual that foaming activity is generated. This is due to compounds (polysaccharides) synthesized by the bacteria to attach themselves onto the plastic carrier. Also big load changes may result in foaming activity. Experience from municipal plants shows that anti-foaming action will not be necessary after a 2-3 months period for water treated by pre-sedimentation. For pre-precipitated water anti-foaming continuous dosing period is generally longer. The need will change to periodic dosing when the biofilm is fully developed.	Antifoam injection. Dose between 20 and 50 ml/m^3 Use only antifoam product without silicon (refer to note below)
	Nutrient deficiency	Foam may also indicate a possible nutrient deficiency. This type of foam may be due to bacteria producing a natural polymer when subjected to nutrient deficient conditions for an excessive period of time.	
	Fats, oil or grease	Fats, oils grease and other non-degraded surface active organics can cause foam problems.	
Irregular aeration	Air grid blocking	Calcium deposit on air grid	See treatment against calcium deposit procedure
	Blower backpressure or relief valve open		Inspect blowers
	Loose flange		Air grid inspection

Note: Silicon-based antifoams are prohibited due to their negative effect on the media.

9 MAINTENANCE SCHEDULE

The maintenance of the treatment system is like any typical activated sludge system. The aeration grids, sieve assemblies and media require very little operator attention. Only fine screen, blowers and dosing skids require a preventive maintenance.

Operating personnel should follow lock-out/tag-out procedures and confined space entry procedures in accordance with the site health and safety plan, before conducting any maintenance activities. The personnel must document all activities so that an accurate record of all repairs is in place.

For certain equipment, in addition to the cards, a lubrication record should be kept. On this record, the equipment is listed, as well as instructions for lubricating, including the type of oil or grease suggested and the frequency of lubrication. From this record the maintenance supervisor should be able to see when equipment should be lubricated again.

This table highlights main required maintenance tasks. Always refer to manufacturer's O&M before starting any maintenance.

EQUIPMENT	TYPICAL PREVENTIVE MAINTENANCE	FREQUENCY
Blowers	Check belt tension	24 h after initial commissioning
	Check all electrical connections and tighten if necessary	50 h after initial commissioning
	Change the lubricating oil.	500 h after initial commissioning
	Check oil level	Up to 500 h or monthly
	Check belt tension	Up to 500 h or monthly
	Check the air filter	Up to 3000 h At least once a year
	Change the lubricating oil (FGB 220)	Up to 3000 h At least once a year
	Check the safety relief valve	Annually
	Check all electrical connections and tighten if necessary	Annually
	Change the lubricating oil (SB220)	Up to 6000 h At least every 2 years
	Replace the drive belts	Up to 12000 h At least every 4 years
Butterfly Valve	No maintenance	

EQUIPMENT	TYPICAL PREVENTIVE MAINTENANCE	FREQUENCY
pH Probe	The following activities must be carried out: • Cleaning the sensor (In particular when the membrane is soiled) • If necessary, replacing wear and tear materials: – sealing ring – electrolyte – membrane cap • Check the measuring function • Recalibration	Every month
DO Sensor	The following activities must be carried out: • Cleaning the sensor (In particular when the membrane is soiled) • If necessary, replacing wear and tear materials: – sealing ring – electrolyte – membrane cap • Check the measuring function • Recalibration	Every Month

10 SHUT DOWN PROCEDURES

If it becomes necessary to stop the supply of raw feed to the bioreactor for a short period of time, less than one week, the reactors should be moderately aerated to keep aerobic conditions and nutrient feed system, if utilized, be shut off.

If it becomes necessary to stop the supply of raw feed to the bioreactor for a longer period of time, one month or longer, it is recommended to aerate the reactors for two weeks after the stop of raw feed and drain the reactor. Prior to re-introducing wastewater to the MBBR, the system should be aerated 5 days prior to re-loading the reactor with raw wastewater. When re-starting the raw feed to the bioreactor, start at 50% of design flow and work up to 100% within 3 to 4 days. Another way to speed up the start-up would be to add activated sludge during the re-aeration of the tank to seed it prior to addition of raw wastewater.

11 MEDIA TRANSFER PROCEDURE

If for any reason the media has to be transferred from one basin to another, the media can be transferred. Please refer to the special procedure shown in Appendix 1 – Media Transfer.

Reminder: On the market there are several types of anti-foaming additives developed especially for municipal, food industry and forest industry waste water. AnoxKaldnes has tested, or have recommended, the following types of anti-foaming liquids, which are either water or mineral oil based. Silicon based anti-foams are prohibited due to their negative effect on the media.

12 CALCIUM DEPOSIT REMOVAL PROCEDURE

In Moving Bed® biofilm plants that treat wastewater with high concentrations of calcium, scaling inside of the air diffuser system can occur. This is more typical for industrial wastewater (P&P, Dairy) than municipal wastewater.

Scaling inside of the aeration system will clog the diffuser holes and decrease the aeration capacity, create uneven distribution of the air and increase the working pressure for the blower.

Please refer to the special procedure shown in Appendix 2 – Treatment Against Calcium Deposit in Aeration Network.

APPENDIX 1

MEDIA TRANSFER

Decommissioning of AnoxKaldnes™ Biofilm Media from a Moving Bed Biofilm Reactor

GENERAL

Removal

If removal of media from a MBBR biofilm reactor for some reason becomes necessary the method of emptying the reactor depends of which type of media being used. The smaller K media can be pumped with a standard centrifugal pump while the Biofilm Chip™ media and Natrix™ media is pumped with an air lift pump.

Both methods are dependent on the aeration (or mixers in anoxic reactors) still running to maintain good mixing of the media. There should be no feed of wastewater to the reactor during the removal.

The Natrix™ media and Biofilm Chip™ media are generally pumped to a screen for separation of water and media. The water is returned to the reactor and the media collected in a container or similar. The K media can also be pumped directly to the same types of bags it was delivered in and the water will drain directly from the bag. As an alternative the media can be pumped to a vacant tank or reactor for temporary storage. It must be possible to mix media in the reactor if an air lift pump is to be used when media is to be returned to the original reactor.

The screens are different depending on media type. For the Natrix™ media a bar screen is normally used and for the other media types a perforated plate or pipe is used.

The K1 and K2 media can also be removed from a drained reactor with vacuum suction. All other media are not to be removed from an emptied reactor unless the media is not to be reused. Vacuum suction causes too much mechanical stress to the media and will cause structural damage.

Refill

Individual procedures are often needed for refilling of media. Media stored wet in a nearby reactor can be refilled using more or less the same procedure as for removal of media. Media being stored can be filled in various ways depending on the way it has been stored, amount and type of media.

METHODS

K1, K2, K3 and K5

Removal and storage

The K media (in the water phase) may be pumped out of the reactor with an ordinary submersible rotation/centrifugal pump with a retracted rotor. It's important that the blower or mixer is still running to keep the media in suspension. The pump should have a free passage (free ball opening) of ≥ 60 mm for pumping K1 and K2, ≥ 100 mm for pumping K3 and be able to lift the required height. The media can also be pumped with an air lift pump (refer to method for Biofilm Chip™ media and Natrix™ media).

The media/water mix can be pumped directly into the type of bags it was delivered in (the water is drained directly from the bag) or pumped to a temporary dry or wet storage.

For dry storage the water/media can also be pumped to a screen made of perforated plate for separation of the water. The screen is located in a way to allow easy return of separated water to the reactor. For K1 and K2 the holes in the screen are 5 mm and for K3 15 mm. The media is collected and stored in containers or any vacant tank located nearby. The temporary storage tank must be equipped with an aeration system for mixing if the media is to be too returned to the original reactor by pumping. If the media is stored dry it can be returned to the original tank by using a vacuum pump.

Media should not be stored in direct sunlight and storage at temperatures below freezing point should be avoided.

Refilling of stored media

Refill of media stored in wet volumes is done by using the same pump as for emptying of the media.

Refill of media stored dry but not in bags can also be made using an air-injector.

Refill of media stored bags is done in the same way as for virgin media.

Biofilm Chip™ and Natrix™ media

Removal and storage

The feed to the reactor is stopped but the aeration is still running to maintain good mixing of the media.

An air lift pump is placed on the reactor floor with the pump influent about 0,5 m from the floor. The pump is standing on two legs and must be fixed to the reactor wall above water level. The dimension of the pipe is typically 200 to 300 mm. The air to feed the pump is normally taken from the existing aeration system (a DN 50 valve needs to be installed to the distribution manifold). The air inlet to the pump is at the lower part of the pipe and normally a smaller parallel air pipe is used to avoid having a hose under water. The capacity of the pump is controlled by the air flow.

The media/water-mix is pumped thru a perforated pipe were the water is separated and returned to the reactor. The media is collected directly in a container or an intermediate pocket and then transported by a conveyer to a storage container. The top of the perforated pipe should be open to make it possible to remove media if blocking the pipe. As an alternative the media can be pumped directly to a vacant tank or reactor for temporary wet storage. The temporary storage tank must be equipped with an aeration system for mixing of media to make it possible to return the media back to the original reactor.

The major part of the media is removed quickly but the last amount needs to be removed by hand after the reactor is emptied from water.

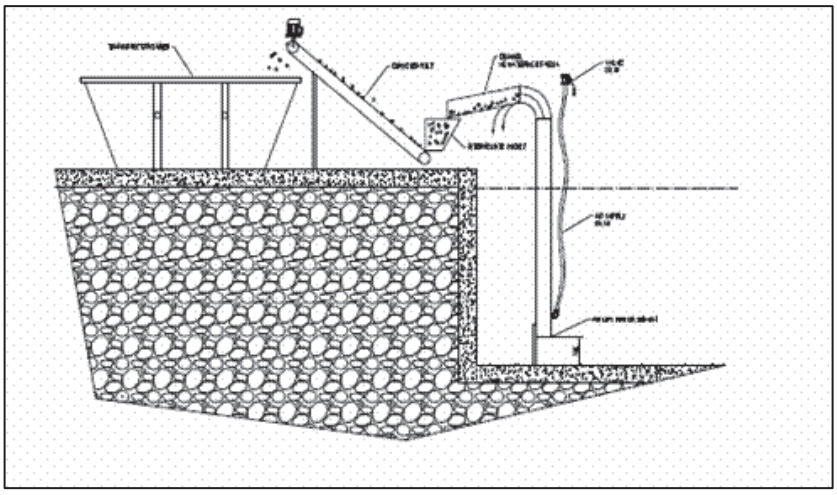

Removal of media from a MBBR biofilm reactor using an air lift pump

Example

Below are pictures from an industrial installation using the above described method for removal of Natrix™ media using an air lift pump and bar-screen for separation of water.



Water separated in the bar screen



Media separated in the bar screen



End of transport channel



Storage container for pumped media

Refilling of stored media

The stored media can be pumped back with an air lift pump if the storage is a reactor equipped with an aeration system to provide good mixing of the media. If the distance between the MBBR biofilm reactor and the storage volume is long the media can be transported using a channel and water for transportation of media.

Media stored dry in containers can theoretically be emptied directly into the original reactor by using a mobile crane if the reactor is outdoor and without cover. For covered reactors or indoor reactors individual procedures will be used.

APPENDIX 2

TREATMENT AGAINST CALCIUM DEPOSIT IN AERATION NETWORK

Problem

In Moving Bed® biofilm plants that treat wastewater with high concentrations of calcium, scaling inside of the air diffuser system can occur. This is more typical for industrial wastewater (P&P, Dairy) than municipal wastewater.

Scaling inside of the aeration system will clog the diffuser holes and decrease the aeration capacity, create uneven distribution of the air and increase the working pressure for the blower.

Method 1: Water flushing

This solution consists in stopping the blower and letting the aeration system be filled with wastewater and starting the blower again. This has to be done on regular bases during normal operation of the plant. The objective of this procedure is to rapidly flush water into the aeration holes and the share forces (high velocities and turbulence, KJ) will remove any deposition (scale) that about to establish in the aeration pipes/holes.

To evacuate the air contained into the aeration system and fill it quickly with water, a valve (manual or automatic) at the reactor main air header must be installed. The opening time needed to for evacuate the air must be measured for each plant.

Stop/start of the blower can be done manually at the frequency you find required (once a week or once a month).

Method 2: Formic acid dosing

If calcium scale has already developed inside the aeration system the best way of removing it is by dosing formic acid (HCOOH) directly into the main aeration pipe while the blowers are in normal operation.

A tapping (30 mm pipe and valve) must be added to the main header into the bioreactor. Formic acid shall then be dosed directly into the tapping and will be distributed into the aeration system by the air. In the following we have described the main data for the dosing:

- Formic acid: 85% HCOOH.
- Dosing: approx 10 ml of 85% HCOOH / Nm^3/h (100 l/h @ 10000 Nm^3/h of air).
- Time: the dosing should continue for approximately 2 hours.
- Pump: any pump that has the required capacity and can handle to pump acid.

After the dosing of Formic acid, water should be added into the pipe to clean out any remaining acid. The washing procedure described under Method 1 should be done a minimum of two times to make sure that loose scales are washed out.

APPENDIX 3

MAINTENANCE AND LUBRICATION PROGRAM

EQUIPMENT:		**TAG:**	
MANUFACTURER:		**MODEL:**	

ITEM NO:	WORK TO BE DONE	FREQUENCY	TIME

Record

DATE	WORK DONE	SIGNED

6 – OPERATION AND MAINTENANCE

6.2 – SPIDFLOW DAF

6.2.1 – INSTALLATION, OPERATION AND MAINTENANCE MANUAL

LEFT BLANK

INSTALLATION, OPERATION AND MAINTENANCE MANUAL

SPIDFLOW™ PACK

Document No: 5000218036_IOM_0001_SPF
Revision: 1
Date: July 7, 2019

TABLE OF CONTENTS

1 INTRODUCTION 6

2 WARRANTY 6

3 SAFETY 8

3.1 INTRODUCTION 8
3.2 CONFINED SPACES 8
3.3 CHEMICAL HAZARDS 8
3.4 BIOLOGICAL HAZARDS (IF WASTEWATER APPLICATION) 8
3.5 DROWNING 9
3.6 HOT SURFACES 9
3.7 ROTATING PARTS 9
3.8 ELECTRICAL CONNECTIONS 9

4 SHIPPING 10

5 RECEIVING 10

6 HANDLING 11

6.1 GENERAL 11
6.2 STAINLESS STEEL MATERIAL HANDLING 12
6.3 PAINT PROTECTION 13

7 STORAGE 14

7.1 GENERAL 14
7.2 ADDITIONAL EXTENDED STORAGE PRECAUTIONS 15
7.3 GEAR REDUCER 15

8 SPIDFLOW™ PACK INTEGRATION ELEMENTS 16

8.1 HYDRAULIC ELEMENTS 16
8.2 CONCRETE PAD/FOUNDATION REQUIREMENTS 16
8.3 PLATFORMS AND STAIRS 16
8.4 COVER 16

9 MECHANICAL INSTALLATION 17

9.1 GENERAL 17
9.2 MODIFICATION DONE BY THE CLIENT 17
9.3 SPIDFLOW™ PACK COMPONENT INSTALLATION 18
9.3.1 Isometric View 18
9.3.2 Anchoring 19
9.3.3 Skimmer Installation 20
9.3.4 Chain Guard Installation 21
9.3.5 Instruments Installation 22
9.3.5.1 Raw Water Turbidimeter (optional) and/or Clarified Water Turbidimeter (optional) 22
9.3.5.2 Raw Water Flowmeter (optional) 22
9.3.5.3 Sludge Hopper Level Switches 22
9.3.5.4 Flotation Zone Level Transmitter 23
9.3.6 White Water System 23

9.4 PIPING INTERCONNECTIONS 25
9.5 RAW WATER COLLECTOR 25
9.6 WHITE WATER EQUIPMENT 25
9.7 AIR INLET UPSTREAM OF WHITE WATER PUMPS 25
9.8 TANK DRAINS 25
9.9 SLUDGE COMPARTMENT DRAIN 25
9.10 CLARIFIED WATER COLLECTOR 25
9.11 SERVICE WATER (OPTIONAL) 25
9.12 COMPRESSED AIR 25
9.13 TORQUE VALUES 26
9.13.1 Flange to Flange Connection 26
9.13.2 Butterfly Valves 26

10 ELECTRICAL INSTALLATION 27

10.1 EARTHING 27
10.2 CONTROL PANEL 27
10.3 SKIMMER 27
10.4 INSTRUMENTATION 28

11 OPERATION 29

11.1 EQUIPMENT AND PROCESS DESCRIPTION 29
11.1.1 General Description 29
11.1.2 White Water Production 29
11.1.3 Flotation 30
11.1.4 Sludge Skimming 31
11.2 FIRST START UP 31
11.2.1 Preliminary Verification 31
11.2.2 Skimmer Initial Start Up 32
11.2.3 Multiphase Pump Initial Start-Up 32
11.2.4 White Water Flow Rate Adjustment 32
11.2.5 Polymer Dosage Control 32
11.3 OPERATION FOLLOW-UP 33
11.4 SITE INSPECTION 34
11.5 HMI INSPECTION 35
11.6 PROCESS MONITORING 35
11.6.1 Sampling 35
11.6.2 Analysis 35

12 TROUBLESHOOTING GUIDE 36

12.1 MECHANICAL TROUBLESHOOTING 36
12.2 MULTIPHASE PUMPS 36
12.3 SKIMMER 36
12.4 PROCESS TROUBLESHOOTING 37

13 MAINTENANCE 39

13.1 SUMMARY TABLE 39
13.2 REGULAR DRAINAGE 40
13.3 SKIMMER 40
13.4 NOZZLES GRID 41

13.5 WHITE WATER SKID 41
13.6 MANUAL VALVES 42
13.7 CHEMICAL INJECTION 42
13.8 CHEMICALS DOSING SETS 42
13.9 LUBRICATION 42

14 SPECIAL PROCEDURES 43

14.1 PAINT REPAIR PROCEDURE (WHEN APPLICABLE) 43

APPENDIX A: EDUR MULTIPHASE PUMP O&M MANUAL 44

APPENDIX B: SKIMMER ASSEMBLY DRAWING 45

APPENDIX C: GEARBOX O&M MANUAL 46

APPENDIX D: BUTTERFLY VALVES TORQUES 47

APPENDIX E: SHAFT POWER MONITOR MANUAL 48

LIST OF FIGURES

Figure 1: Typical Tank Lifting 11
Figure 2: Typical SPIDFLOW™ PACK General View 18
Figure 3: Typical Skimmer General Arrangement 20
Figure 4: Typical White Water System General Arrangement 24
Figure 5: Overload Monitoring Device EMOTRON 28
Figure 6: White Water Nozzle 30
Figure 7: SPIDFLOW™ PACK Scheme 30
Figure 8: SPIDFLOW™ PACK Computerized Fluid Dynamic 31
Figure 9: Process Troubleshooting Guide – Part 1 37
Figure 10: Process Troubleshooting Guide – Part 2 38

LIST OF TABLES

Table 1: Typical SPIDFLOW™ PACK General View - Assembly Details 19
Table 2: Typical Skimmer General Assembly - Assembly Details 20
Table 3: Typical White Water System General Arrangement - Description 24
Table 4: Torque Values for 304 and 316 Stainless Steel Fasteners 26
Table 5: Operation Log Book - General Maintenance Work 33
Table 6: Site Inspection Check List 34
Table 7: HMI Inspection Check List 35
Table 8: Sampling Monitoring 35
Table 9: Analysis Check List 35
Table 10: Skimmer Troubleshooting Guide 36
Table 11: Maintenance Schedule 39
Table 12: Lubrication Schedule 42

Left Blank

1 INTRODUCTION

This document describes the functions of the various components of the SPIDFLOW™ PACK and related equipment as well as procedures for the installation, start-up and standard operation of the system. It also includes a description of preventive maintenance measures.

The components of the SPIDFLOW™ PACK are supplied by Veolia Water Technologies Canada (VWTC). This equipment of superior quality and proven design will ensure years of operation without problems. However, in order to maintain peak efficiency and performance of the system, it is imperative to take into consideration the preventive measures and procedures described in this manual. These measures include the operation and maintenance of its components.

To obtain any additional information regarding characteristics, operation or maintenance of this equipment, or if a problem persists, please do not hesitate to contact us.

The SPIDFLOW™ PACK is manufactured in Canada by:

Veolia Water Technologies Canada Inc.
4105, Sartelon
Saint-Laurent, Qc.
Canada H4S 2B3
Phone: 514-334-7230
Fax: 514-334-5070

For technical support or service needs, for spare parts or to get assistance during your warranty period, you may contact us at the following number during regular business hours or write to us at:

Veolia Water Technologies Canada – After Sales Support
1-844-SER-VWT9 | 1-844-737-8989 | vwtservicecanada@veolia.com

Our business hours are from
Monday to Friday
8:30am to 5pm EST

2 WARRANTY

All equipment manufactured by Veolia Water Technologies Canada Inc. (herein defined as “Veolia Canada”) is guaranteed to be free from defects in material and workmanship for a period of twelve (12) months from the date at which unit is placed in service, eighteen (18) months from the date of shipment, whichever occurs first. All equipment found with defects during this period will be replaced at no extra charge when shipped prepaid FOB to the manufacturer’s shop. All parts sold by Veolia Canada are warranted the same way for a period of three (3) months from the date of shipment.

If the customer promptly notifies Veolia Canada in writing of a claimed defect in the equipment and said equipment is found not to be in conformity with this warranty, Veolia Canada will, at its option and expenses, repair or replace such defective part, prepaid FOB to the manufacturer’s shop.

Veolia Canada must be given notice of such defect, and, where requested, such material must be returned to the manufacturer's shop, transportation charges prepaid, with written approval for the shipment by Veolia Canada

This warranty shall be void if the start-up of equipment is not authorized by Veolia Canada, or if repairs and/or alterations are made without a written authorization by Veolia Canada. If the equipment or parts supplied by Veolia Canada are altered in any way without Veolia Canada consent, the present warranty will not be valid and have no effect.

The customer will use only Veolia Canada parts for all labour covered by this warranty.

The foregoing warranty excludes responsibility or liability for:

(a) Failures not reported promptly within the warranty period, above specified.
(b) Damage due to accident, abuse, shipment, improper installation or operation, or abnormal operation condition.
(c) Damage caused by the client's replacement, repair or inspection of parts.
(d) Lesion or personal accidents, material damage or any direct or indirect expenses or loss of profit related to this warranty.
(e) Damage, loss, expenses, lesion or personal accidents directly or indirectly related to the installation, the operation or the failure of the equipment supplied by Veolia Canada.

The foregoing warranty is exclusive and replaces all other warranties, expressed or implied, including but not limited to any warranty of bargaining or modification for a particular purpose.

This warranty does not cover the following:

(a) Costs of repair, modification or other work done or requested by the customer or the management and all indirect costs.
(b) All expenses related to regular maintenance of parts as prescribed in the operation and maintenance manuals supplied by Veolia Canada.
(c) Costs of dismantling, installation, transportation and insurance.
(d) Travelling and living expenses for the personnel carrying out the repair under such warranty.
(e) This warranty is not a performance or production warranty.
(f) Veolia Canada has the right to examine or to ask for details about defects before empowering the present warranty.

3 SAFETY

3.1 INTRODUCTION

The safety rules and guidelines issued to the employees are the primary precautions that are necessary for the prevention of accidents. The employee should be very familiar with these rules. The purpose of this section is to highlight the most common hazards associated with the installation of this product, in order to help the contractor to improve its own safety plan.

Workers should always wear the safety equipment: hard hats, safety shoes, safety glasses, gloves, breathing protection, protective clothing, protection harness and hearing protection are very basic and go a long way in preventing accidents.

Never operate a unit unless safety devices and first aid kit are installed.

3.2 CONFINED SPACES

Before entering or breaking the plane of any tank, be sure to check if it is a potential Confined Space and if a permit is required for entrance. SPIDFLOW™ PACK tanks usually require a Confined Space Entry Permit, follow the applicable safety laws, regulations and guidelines for confined spaces including ventilation, gas monitoring, lockout/block out procedures, and using the proper level of PPE and rescue equipment.

3.3 CHEMICAL HAZARDS

WHMIS Material Safety Data Sheets (MSDS) should be available on site for each chemical product. Since chemicals or chemical dosage may be used during normal operation of treatment facilities, the risks of fire, explosion and exposure to toxic chemicals or chemical burns are present. Chemicals typically used with SPIDFLOW™ PACK are polymer and sometimes coagulant.

Operators should be made aware of the following:

- All chemicals which are used and any potentially dangerous reaction that could occur.
- Toxicity of all chemicals that are used or could be formed via reactions.
- Acidic or basic properties of all materials used.
- Potential fire or explosion hazards posed by the chemicals.
- Antidotes for exposure to toxic materials.
- Protective clothing that is recommended.
- Chemicals spills that may be slippery.
- Any other information that helps makes the operators aware of a hazard (audible beacon or flash).

3.4 BIOLOGICAL HAZARDS (if wastewater application)

The SPIDFLOW™ PACK can be used to treat wastewater. Wastewater can be hazardous to human health.

- Make sure that all personnel who may come into contact with biological hazards are vaccinated against diseases to which they may be exposed.
- In case of an installation in an existing basin, it is recommended to disinfect the tank before starting installation.
- Observe strict personal cleanliness.

3.5 DROWNING

Spaces that are not fully drained or dry can pose a risk of drowning. It takes relatively little standing water or other liquid to create a drowning hazard.

Do not climb on, climb over, or lean over guardrails or other protective barriers. If it is necessary to extend beyond a protective fall protection barrier, use personal fall arrest or positioning equipment.
Do not climb on, climb over or lean over the tank walls.

3.6 HOT SURFACES

Depending on the blower flow rate and discharge pressure, aeration pipes or other exposed surfaces that are within 2.1 m (7 ft) may have an external surface temperature of 60°C (140°F) or higher. Guard against contact or cover with thermal insulating material.

3.7 ROTATING PARTS

Operators must keep hands away from the rotating parts of the machine when the machine is in operation. When something needs to be adjusted, operators must make sure that the rotating elements are not moving and that all electric and compressed air connections are switched off and locked.

3.8 ELECTRICAL CONNECTIONS

Electrical connections must be made by a certified electrician in compliance with all applicable codes and regulations.

4 SHIPPING

Most of the equipment and material for this project will be drop-shipped and delivered directly to the site.

- All items delivered will be clearly identified with VWTC's name, VWTC's project name, VWTC's project number.
- All shipments will have a clear Packing List identifying all parts in the shipment.
- All equipment will be tagged with the corresponding tag numbers shown on the design drawings (if applicable).

If there are more stringent requirements in the contract documents, they will take precedence over the above. If any of these requirements are not being followed, please notify the VWTC Project Manager immediately.

5 RECEIVING

The condition of all delivered equipment must be verified by the responsible party upon arrival on site. Verification that all equipment has been delivered as per contract must also be done upon arrival on site. Notification of missing or damaged items must be sent to Veolia Water Technologies Canada (VWTC) within ten (10) days of receipt of equipment. If there is no documented notification of missing or damaged parts within ten (10) days, VWTC is not responsible for replacement of any items found to be missing or damaged at the time of installation and start-up of the supplied equipment. It is the responsibility of the party receiving the equipment to ensure all packaging is opened at the time of receipt to uncover and document any and all damages to the Freight Company and VWTC.

Photographs and written documentation should be provided on all damaged equipment.

6 HANDLING

6.1 GENERAL

Equipment will arrive at the project site in several different shipments, from various freight companies and in several different packaging containers. Typically, a flatbed truck is used which requires a fork lift or a crane for unloading the items.

The contractor is responsible for rigging, unloading, handling and securing the tank.

The tank must be raised by chains attached to lifting lugs. A minimum angle of 60 degrees should be maintained (refer to sketch below).The lifting should be done with a spreader bar to keep an angle of 90 degrees between the chains and the longitudinal side of the tank.

WARNING: Do not use the welded lugs on SPIDFLOW™ PACK unit sides to lift the tank. These are for transportation purpose only.

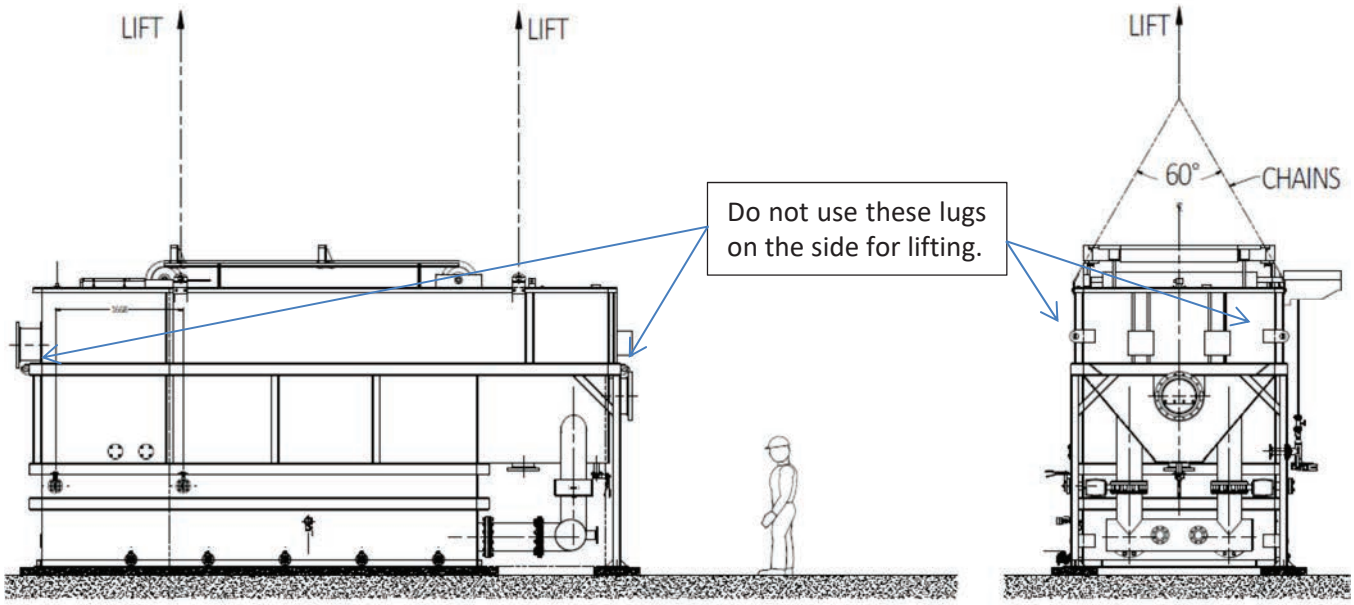

Figure 1: Typical Tank Lifting

For installation, the tank should be lifted from the top. In case another handling solution is to be used by the contractor, a handling procedure should be submitted by written to VWTC prior to installation.
Direct rigging of the tank on the floor is prohibited as it can damage the bottom of the tank and create risks of corrosion.

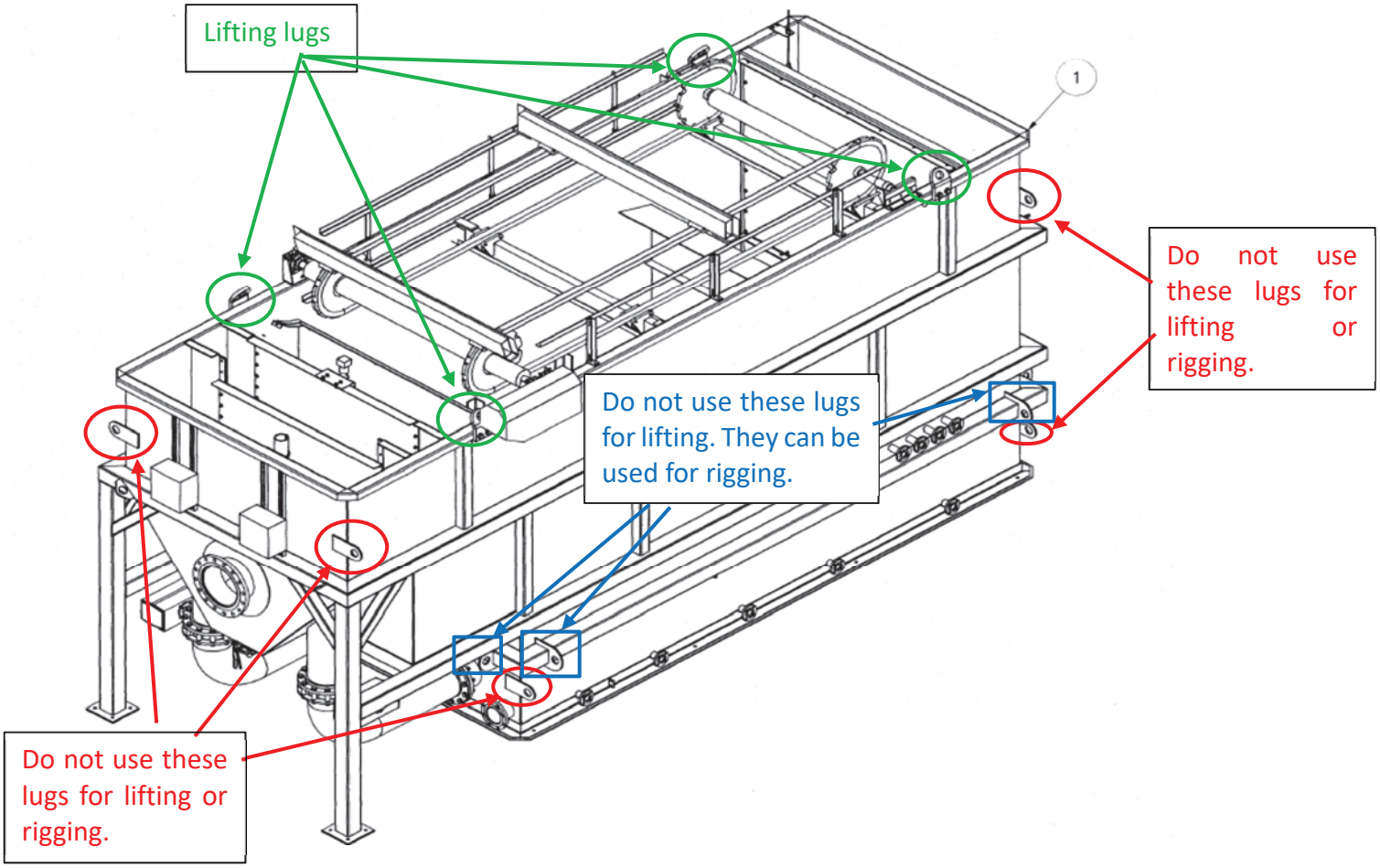

6.2 STAINLESS STEEL MATERIAL HANDLING

In order to minimize potential corrosion damage or unsightly surface marking, measures shall be taken to prevent contamination by iron, aluminum, copper, chlorides, and sulphides from lifting equipment. Stainless steel slippers or wooden packers should be used on forklift trucks to prevent contamination. Any resultant incidental contamination shall be removed at the earliest opportunity.

6.3 PAINT PROTECTION

IMPORTANT NOTE TO CONTRACTORS

VWTC wants to warn the installation contractor about potential problems related to the installation of large steel units protected against corrosion by paint.

VWTC maintains a comprehensive quality program to prevent equipment from being affected by corrosion. Our fabrication methods are specially adapted to manufacturing of painted equipment. Every step of our fabrication and assembly process is checked to reduce corrosion issues. Each unit is also delivered under strict measures, meant to reduce potential corrosion problems and long product life.

However, VWTC have identified that handling unit at the job site is a key element of corrosion protection process. This operation completely escapes our control and is your responsibility. Consequently, we invite the installation contractor to perform a thorough review of his installation procedures before handling VWTC products. Protecting units during and after installation is paramount to maintain corrosion risks to a bare minimum.

Likewise, after the installation of units, the installation contractor must ensure complete equipment protection from working environment before unit is put into service. This will prevent damages caused by work not related to VWTC products taking place on site. Contractor is responsible for the installation of any additional protection necessary at the job site.

In order to maintain quality products free of defects, VWTC requests from contractor, that he/she takes all necessary measures to reduce risks of paint or equipment damage leading to steel corrosion. Among most important protection measures of paint protection, here are the principal ones:

- Making all persons, working close to units, conscious of paint fragility and potential corrosion problems. Please encourage them to act with extreme care while working around the installation.
- Protecting units from weld projections or falling debris, by covering the unit with appropriate plastic or cardboard hoods and padding.
- Protecting unit's tank bottom when installing equipment inside the unit.
- Keeping area and the unit clean at all times.

All measures taken by contractor to ensure paint protection will assure transfer to the client of a quality product and will benefit to all.

7 STORAGE

7.1 GENERAL

The following instructions outline the duties and responsibilities of the responsible party for equipment storage. The responsible party shall assume responsibility for the equipment upon arrival at the project site. These instructions shall define the minimum expectations for storage of all equipment.

While this storage specification takes into account common environmental issues that may affect the system during storage, common sense should be the overriding factor in determining the best method to ensure the integrity and proper storage of the VWTC.

Should it be necessary to delay the installation and subsequent operation of a unit for more than one month from the date of receipt at the site, storage conditions must be recorded and sent to the VWTC's project manager every month. A written document (check list, etc.) and pictures of major equipment confirming that proper storage conditions are maintained will suffice. Failing to do so would cancel the proposed warranty.

The storage environment into which a system is placed can have a severe effect on the long-term usefulness of some spare parts. Key environmental factors are: temperature, relative humidity, pollutants. Air may contain excessive moisture, pollutants, microorganisms, and other particulates that accelerate the deterioration of some materials. Humidity and pollutants can produce an aggressive atmosphere.

All equipment storage exceeding one month must be indoor.

All electrical components (instruments, motors, control panel, etc.) must be stored indoors.

Indoor storage refers to storage in a climate-controlled area in a clean, non-aggressive, dry (non-condensing) and sheltered environment having a relatively constant temperature (especially for gear reducers, motors, bearings, etc.).

The indoor environmental conditions should not exceed the following ranges:

Min/Max Temperature Range between:	5°- 40°C
Relative Humidity Range between:	35% - 70%

Equipment should be stored in such manner that it is free from allowing insects/rodents, etc. from entering the equipment.

Cover the equipment with a tarp or similar protective shield to prevent direct exposure to dust or any other contamination. However, never enclose the unit or components totally in plastic covers; always leave adequate ventilation of air to prevent condensation.

Do not store equipment and spare parts in barns, equipment sheds, or any other building without the capacity for heating and cooling as needed.

To avoid damage, do NOT stack crates.

To avoid damage, do NOT stack enclosures.

Equipment must be checked on a weekly basis for the tarp/wrap integrity and accumulation of dust or contaminants.

Some equipment such as tanks or stainless steel pipes may be stored outdoors, but the following instructions must be applied:

- Stored for less than one month.
- Equipment must be shielded from the sun, humidity and moisture, using tents or tarpaulins. Provide adequate ventilation when using tents or tarpaulins.
- Equipment must be stored with adequate support and anchoring, to prevent distortion and to raise equipment above any undesirable ground or floor conditions. This will also prevent flooding damages.
- Remove all snow, dust and water accumulation from the top of the units.
- Drain water completely with special attention to sections without drains at the lowest point.
- Remove all motors, electronic equipment and instruments and store them indoors.

7.2 ADDITIONAL EXTENDED STORAGE PRECAUTIONS

Over three (3) months, special precautions must be taken in order to keep some items in good storage conditions.

7.3 GEAR REDUCER

In order to inhibit corrosion of gears and bearings, gear reducer manufacturers recommend draining all sumps and filling the sumps completely with oil of the proper type and viscosity. Replace vents with plugs if sumps are completely filled.

The oil must be drained to operating level and vents reopened or reinstalled before use.

8 SPIDFLOW™ PACK INTEGRATION ELEMENTS

8.1 HYDRAULIC ELEMENTS

The client or his/her representative (i.e. consultant) shall refer to the hydraulic profile provided by VWTC with the engineering deliverables before undertaking the integration of the unit in the treatment line.

The main elements of coordination are the following:

- If the raw water inlet is pumped and the flow rate is controlled by a butterfly modulating valve, the inlet pressure shall not exceed 14 psig.
- It is very important to ensure a free fall discharge at the clarified water weirs.
- If the sludge is not extracted by a pump, but rather by gravity, the pipe must be designed in such a way to avoid any gas backflow.

8.2 CONCRETE PAD/FOUNDATION REQUIREMENTS

Concrete foundations capable of withstanding the full working load of the unit should be in place before receiving the system. It is recommended to include a housekeeping pad under the SPIDFLOW™ PACK tank.

The design of the concrete pad and the foundation underneath must take into account the total weight of the installation, as well as the characteristics of the ground and the type of concrete used. The concrete surface must be ± 3 mm across the whole foundation base. The finished surface must be smooth and free of protruding rocks or hard objects.

In some weather conditions and depending on the building ventilation system, condensation may appear on steel tanks; it is recommended to incorporate a small trench in the concrete pad design and connect it to a drain.

8.3 PLATFORMS AND STAIRS

Operation and maintenance of the SPIDFLOW™ PACK require access via a platform around the unit. If several SPIDFLOW™ PACK units are installed, access must be kept between the units.

8.4 COVER

The flotation process cannot be operated outdoor without a cover. Rain or snow might disturb the sludge flotation.

9 MECHANICAL INSTALLATION

9.1 GENERAL

The SPIDFLOW™ PACK is pre-assembled. However, for freight purpose and practical reasons, the installation of some items must be completed on site by a contractor.

Installation should be performed by qualified contractors. Please find below the list of tasks that need to be performed by the contractor at the job site:

- Ensure that the necessary lifting equipment is available on site to carry out the installation.
- Follow instructions provided on field installation drawings and in this document for the installation of each SPIDFLOW™ PACK unit.
- Read accompanying documentation in appendices
- After installation is completed, clean the tank sections of all debris and objects that could damage the tank paint, rotating mechanisms, valves, or pumps or that could clog the white water nozzles. It is recommended to cover the tank with a tarp when other disciplines (electrical, HVAC, etc.) work around the equipment.
- If any paint repair (touch up) is required, refer to the touch up paint procedure presented in this document.

9.2 MODIFICATION DONE BY THE CLIENT

Please note that it is mandatory to contact VWTC before undertaking any modification work on the equipment supplied in this project. In fact, any alteration made to any equipment (mechanical, control, computers, etc.) without prior notification to and consent of VWTC voids the warranty of the mentioned equipment. Furthermore, the client is responsible for any additional cost necessary to restore the equipment to its original state.

9.3 SPIDFLOW™ PACK COMPONENT INSTALLATION

9.3.1 Isometric View

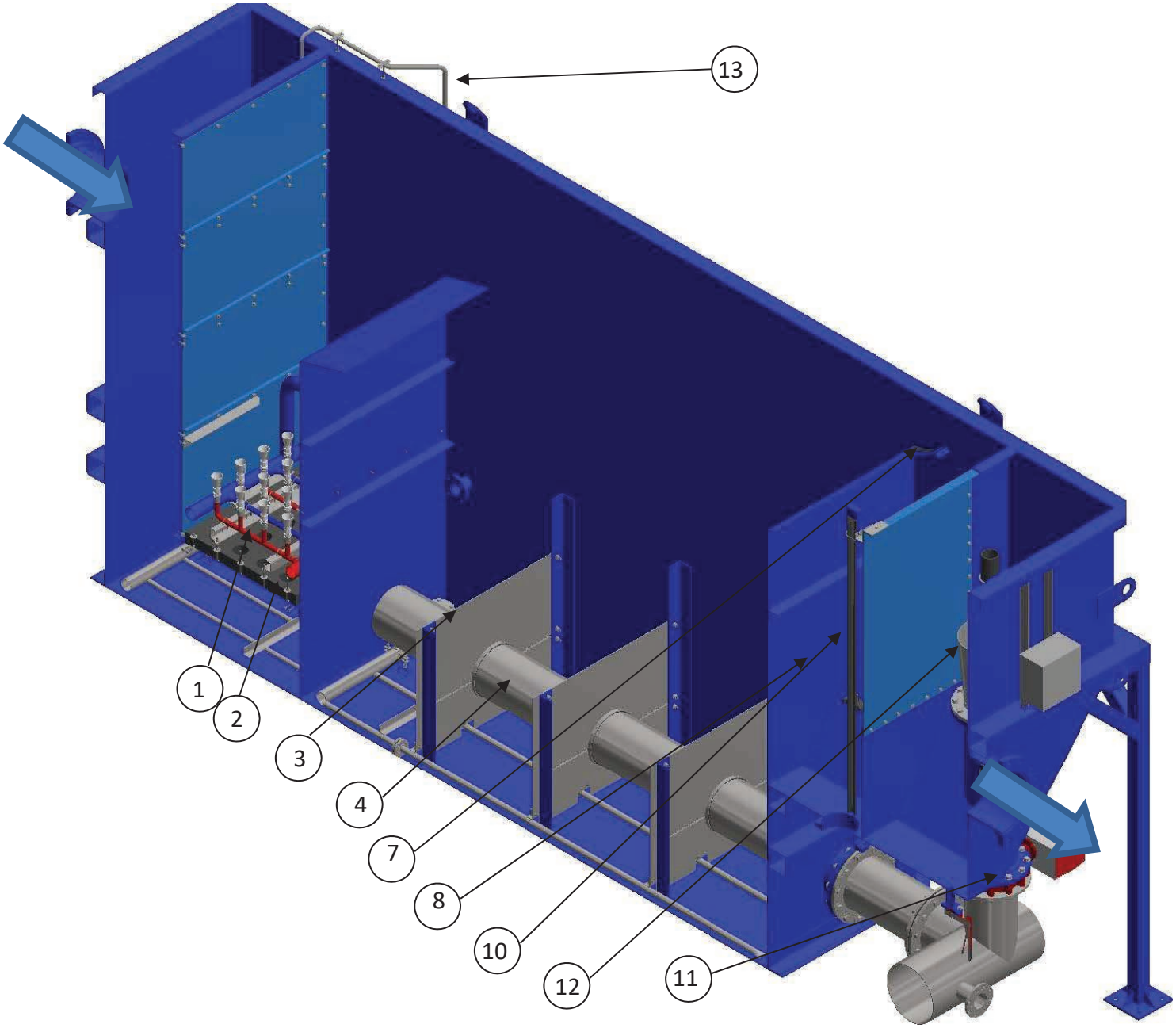

Figure 2: Typical SPIDFLOW™ PACK General View

Table 1: Typical SPIDFLOW™ PACK General View - Assembly Details

TAG	DESCRIPTION	ASSEMBLY
1	Nozzles grid	Pre-mounted in shop
2	Distribution floor	Pre-mounted in shop
3	Antispiral flow plates	Pre-mounted in shop
4	Treated water perforated pipes	Pre-mounted in shop
5	Chain skimmer (see figure 3)	To be installed on site
6	Chain guard (when applicable)	To be installed on site
7	Sludge beach plate	Pre-mounted in shop
8	Sludge hopper	Pre-mounted in shop
9	Level transmitter (not shown)	To be installed on site
10	Sludge hopper level switch	Pre-mounted in shop
11	Modulating valves	Pre-mounted in shop
12	Internal clarified water weir	Pre-mounted in shop
13	White water air purge	To be installed on site

9.3.2 Anchoring

The contractor must anchor the tank and the other skids as per instructions on General Arrangement or Field Installation drawings.

9.3.3 Skimmer Installation

The contractor should also refer to the skimmer assembly drawing included in the Appendix B. The following figure shows the elements of a typical skimmer.

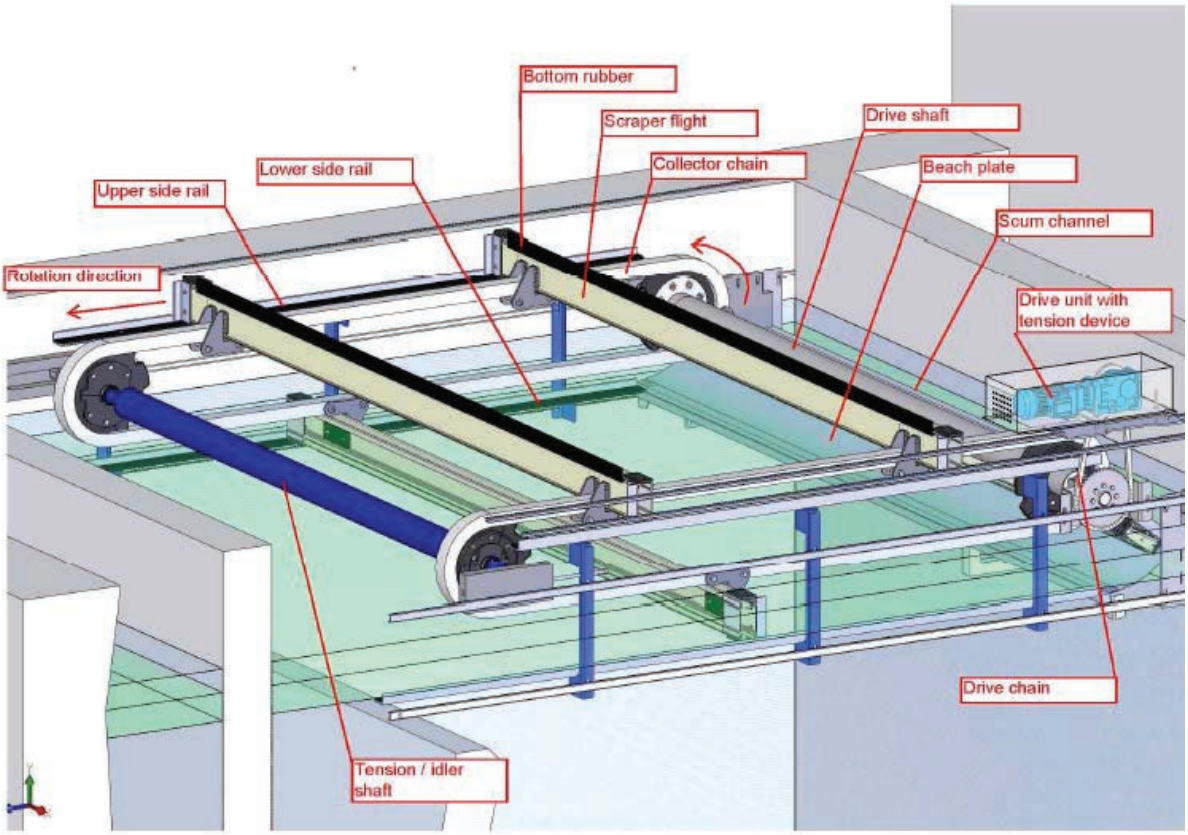

Figure 3: Typical Skimmer General Arrangement

Table 2: Typical Skimmer General Assembly - Assembly Details

DESCRIPTION	ASSEMBLY
Beach plate	Pre-mounted in shop
Scum Channel or Sludge hopper	Pre-mounted in shop
Drive Shaft	To be installed on site
Collector Chain	To be installed on site
Scraper Flight or skimmer flight	To be installed on site
Bottom rubber	Pre-mounted in shop
Lower side rail	To be installed on site
Upper side rail	To be installed on site
Tension /idler shaft	To be installed on site
Drive chain	To be installed on site
Drive unit with tension device	To be installed on site

Typical assembly sequence of the skimmer on top of the tank:

1. Install guiding rails on each side of the tank
2. Insert the end of the tension shaft in the ring of the tensioning device (for each end of the shaft)
3. Install the tension shaft by bolting-on the tensioning devices to the top of the tank (see pictures in section 13.3)
4. Bolt-on the drive shaft supports to the top of the tank
5. Install the drive shaft
6. Install the chain
7. Install the flights and tension the chain (refer to section 13.3)
8. Install the gear reducer and motor

First site installation of the tensioning device

To ease the first site installation of the tensioning device, VEOLIA technician has drawn a black line on the tensioning device and on the edge of the tank to show the approximate position of the tensioning device on the tank.

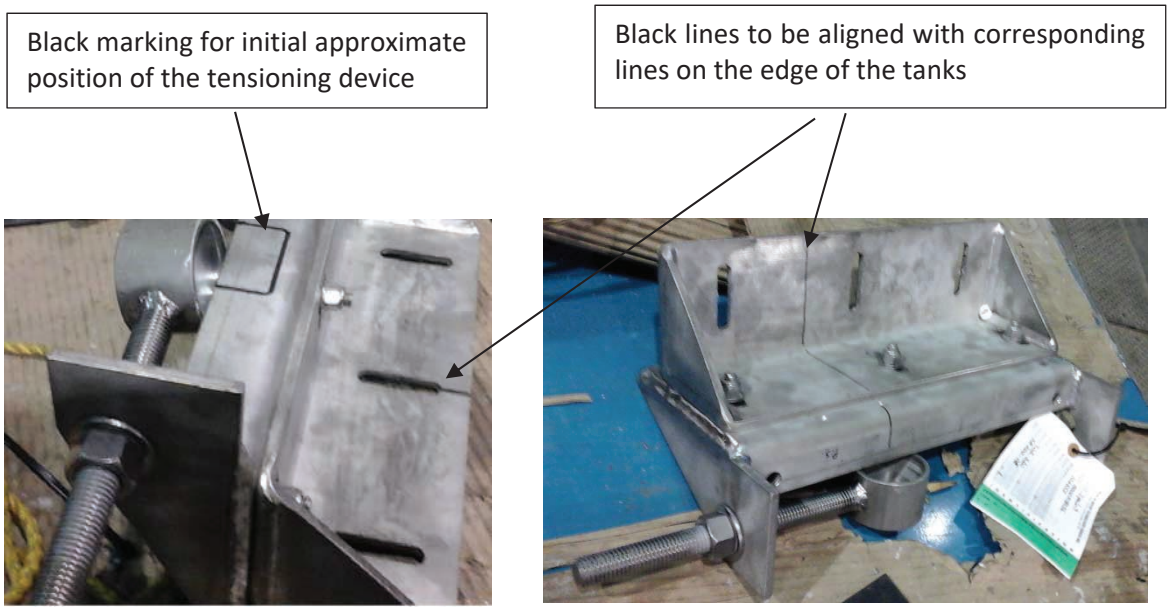

9.3.4 Chain Guard Installation

The skimmer chain and sprockets pose a risk of injury when operated (moving parts). Safety railings/Chain guards must be installed by the contractor on site before operating the skimmer.

9.3.5 Instruments Installation

The SPIDFLOW™ PACK is typically provided with the instruments described hereafter. The instruments are delivered separately and need to be installed on site by the installation contractor. Refer to Field Installation drawings for detailed instructions.

9.3.5.1 Raw Water Turbidimeter (optional) and/or Clarified Water Turbidimeter (optional)

The raw water turbidimeter may be installed: 1) in the raw water line, 2) immersed or 3) mounted on a skid. Refer to the P&ID to determine which option applies for the project.

1. Inline installation

   The inline installation requires that an adaptor be welded on the raw water pipe. Refer to Field installation drawings for proper location and installation.

2. Immersed probe

   The raw water turbidimeter may be immersed in the first compartment of the SPIDFLOW™ tank. The installation contractor shall:

   - Install the pole supporting the probe.
   - Install its transmitter.

3. On-skid installation

   The raw water turbidimeter may be provided on a skid. The contractor shall:

   - Level the skid.
   - Anchor the skid.
   - Provide, install and connect a sampling line between the raw water pipe and the skid.
   - Provide, install and connect the drain.

The clarified water turbidimeter is usually installed with the immersion mounting, in the clarified water outlet box. The same instructions as described under item 2 above apply.

9.3.5.2 Raw Water Flowmeter (optional)

The SPIDFLOW™ PACK raw water flowmeter is typically an electromagnetic flowmeter. The contractor shall:

- Follow manufacturer installation recommendations (refer to the manufacturer's manual) to ensure adequate operation.
- Install the magnetic flowmeter.
- Install and connect the grounding rings.
- Install the wall mounted transmitter (on a wall or on a support).

9.3.5.3 Sludge Hopper Level Switches

The sludge hopper level switches are pre-assembled in shop.

9.3.5.4 Flotation Zone Level Transmitter

The installation contractor shall:

- Install the level sensor and its remote transmitter. Refer to Field Installation drawings for proper location and installation.
- Make sure not to cut the cable connecting the sensor to the transmitter.

9.3.6 White Water System

The white water production of SPIDFLOW™ PACK is based on a recycle flow pressurization concept. It means that a part of the clarified water is pumped by special multiphase pumps capable of handling water and sucking air without cavitation. These pumps operate at high pressures, increasing both air saturation and volumetric efficiency.

The overall system consists of the following items:

- EDUR Multiphase pumps.
- Strainers.
- Valves.
- Instruments.
- Pressure relief valve (if required by the piping design).

If the items have not been ordered pre-assembled on a skid, the installation contractor shall install them.

If the items are skid mounted, the installation contractor shall level and install the skid as per instructions on Field Installation drawings.

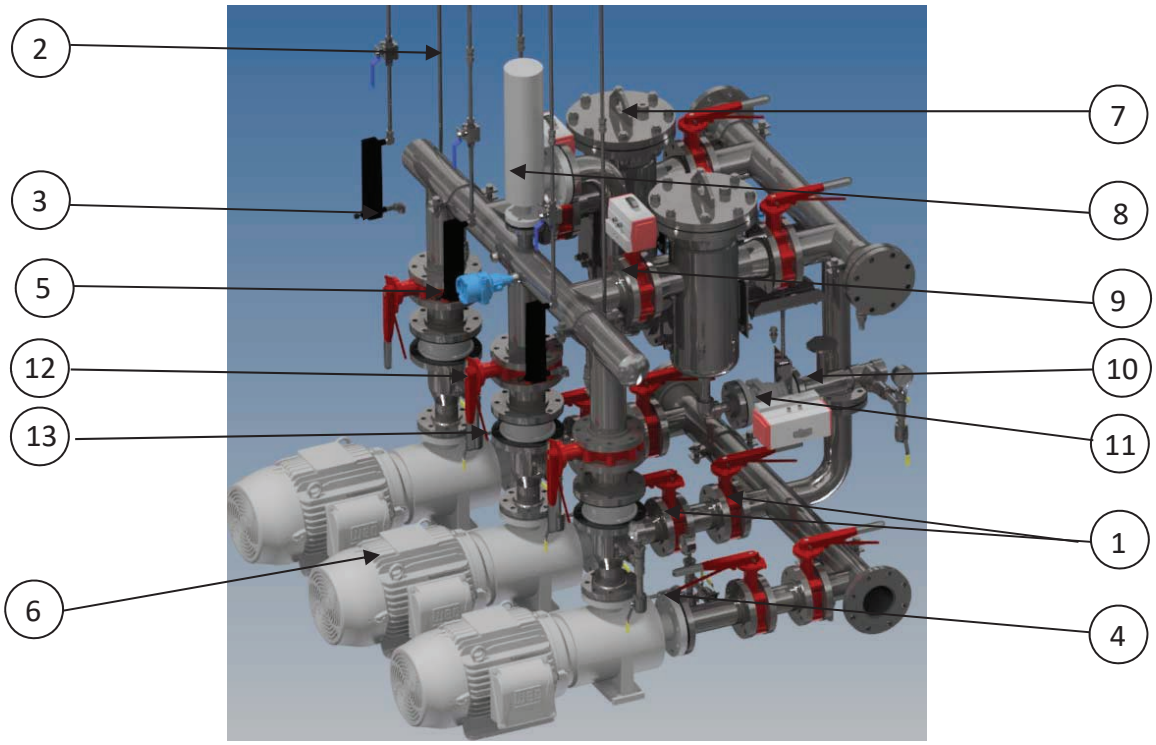

Figure 4: Typical White Water System General Arrangement

Table 3: Typical White Water System General Arrangement - Description

TAG	DESCRIPTION
1	Isolation and throttle valves
2	Check valve for air suction
3	Air flow measuring device with needle valve
4	Air injection
5	Pressure transmitter
6	EDUR Multiphase pump
7	Strainer
8	Pressure relief valve
9	Strainer inlet automatic valve
10	Strainer drain backpressure valve
11	Strainer drain automatic valve
12	Pump discharge isolation valve
13	Pump discharge check valve

9.4 PIPING INTERCONNECTIONS

Remove the protecting grease on flanges prior to the installation of the valves and pipes.

9.5 RAW WATER COLLECTOR

Install a pipe from the raw water collector to the inlet flange of the SPIDFLOW™ PACK tank.

9.6 WHITE WATER EQUIPMENT

The contractor needs to install interconnecting pipes between the white water equipment supplied by VWTC (SPIDFLOW™ PACK unit, white water pumps and strainers) .

The contractor shall:

- Install pipe from the common header of clarified water pipes to the white water pumps.
- Install pipe from the pump discharge to the nozzles grid inlet.
- Inspect tanks and perforated pipes. They should be free of any debris.

9.7 AIR INLET UPSTREAM OF WHITE WATER PUMPS

Install an air inlet pipe upstream of each white water pump, including the air flowmeter and valves supplied by VWTC

Important: The pipe is designed to make a protection loop above the water level in SPIDFLOW™ PACK tank.

9.8 TANK DRAINS

Supply and install piping from the tank drain valves (flanged connections) to the main drain.

9.9 SLUDGE COMPARTMENT DRAIN

Supply and install a pipe from the sludge outlet nozzle (flanged connection), located under the sludge outlet compartment, to the trench drain.

9.10 CLARIFIED WATER COLLECTOR

Install the pipe from the outlet flange of the white water skid to the clarified water collector.

9.11 SERVICE WATER (optional)

Supply and install a pipe from white water system production to the nozzles grid inlet.

9.12 COMPRESSED AIR

The SPIDFLOW™ PACK requires compressed air for actuating the modulating valves (3 SCFM @ 85 psig).

9.13 TORQUE VALUES

9.13.1 Flange to Flange Connection

Table 4: Torque Values for 304 and 316 Stainless Steel Fasteners

BOLT	304 STAINLESS STEEL		316 STAINLESS STEEL	
SIZE	DRY	LUBRICATED	DRY	LUBRICATED
	in-lbs	in-lbs	in-lbs	in-lbs
1/4-20	75	64	79	67
1/4-28	94	80	99	84
5/16-18	132	112	138	117
5/16-24	142	121	147	125
3/8-16	236	201	247	210
3/8-24	259	220	271	230
7/16-14	376	320	393	334
7/16-20	400	340	418	355
	ft-lbs	ft-lbs	ft-lbs	ft-lbs
1/2-13	43	37	45	38
1/2-20	45	38	47	40
9/16-12	56	48	59	50
9/16-18	62	53	65	55
5/8-11	92	78	96	82
5/8-18	103	88	108	92
3/4-10	127	108	131	111
3/4-16	124	105	129	110
7/8-9	194	165	202	172
7/8-14	193	164	201	171
1 -8	286	243	299	254
1 -14	259	220	270	230
1-1/8 -7	413	351	432	367
1-1/8 -12	390	332	408	347
1-1/4 -7	523	445	546	464
1 1/4 -12	480	408	504	428
1-1/2 -6	888	755	930	791
1-1/2 -12	703	598	732	622

Notes:
Suggested maximum torque values is a guide based upon lab testing on dry or near dry fasteners wiped clean. The use of this information is at sole risk of the user.
Values through 7/16" diameters are stated in inch-pounds; 1/2" diameter and over are stated in foot-pounds.

9.13.2 Butterfly Valves

Butterfly valves installation requires a lower torque than a flange to flange connection. Refer to Appendix D.

10 ELECTRICAL INSTALLATION

Note: Electrical work should be performed by a qualified contractor. Refer to control panel and electrical diagram for proper wiring installation.

10.1 EARTHING

Connect tanks earthing lugs in order to ground the tank. Connect white water system skid earthing lugs (if provided).

10.2 CONTROL PANEL

Control Panels provided by VWTC may have two configurations:

- With integrated power sections (with starters and VFD).
- Without integrated power sections (with starters and VFD). In this case they are installed in a separate motor control centre (MCC).

With the first option, the contractor shall:

- Supply and install wiring between SPIDFLOW™ PACK unit junction box and the control panel (power and control).
- Supply and install wiring between white water skid components and the control panel (power and control).
- Feed to the control panel.

With the second option, the contractor shall:

- Supply and install wiring between SPIDFLOW™ PACK unit junction box and the control panel (control).
- Supply and install wiring between white water skid components and the control panel (control).
- Feed to the control panel.
- Supply and install wiring between the MCC and the motors (power).
- Install the overload protection device in the MCC.

Before permanently wiring the control panel, verify the rotation of each motor (clockwise or counter-clockwise).

10.3 SKIMMER

The chain skimmer system has been equipped with overload protection in case of possible overload situation arising in the machinery. An electronic overload protection system must be installed in the motor control centre (MCC). Such a protection system can be easily adjusted at the time of test running the chain skimmer system. This system is suitable for measuring both overload and underload. See separate instructions given by the manufacturer of the equipment in Appendix E.

Electrical circuits may be energized in the torque overload control box even though the main power is off. Always check for live contacts before making adjustments within the box.

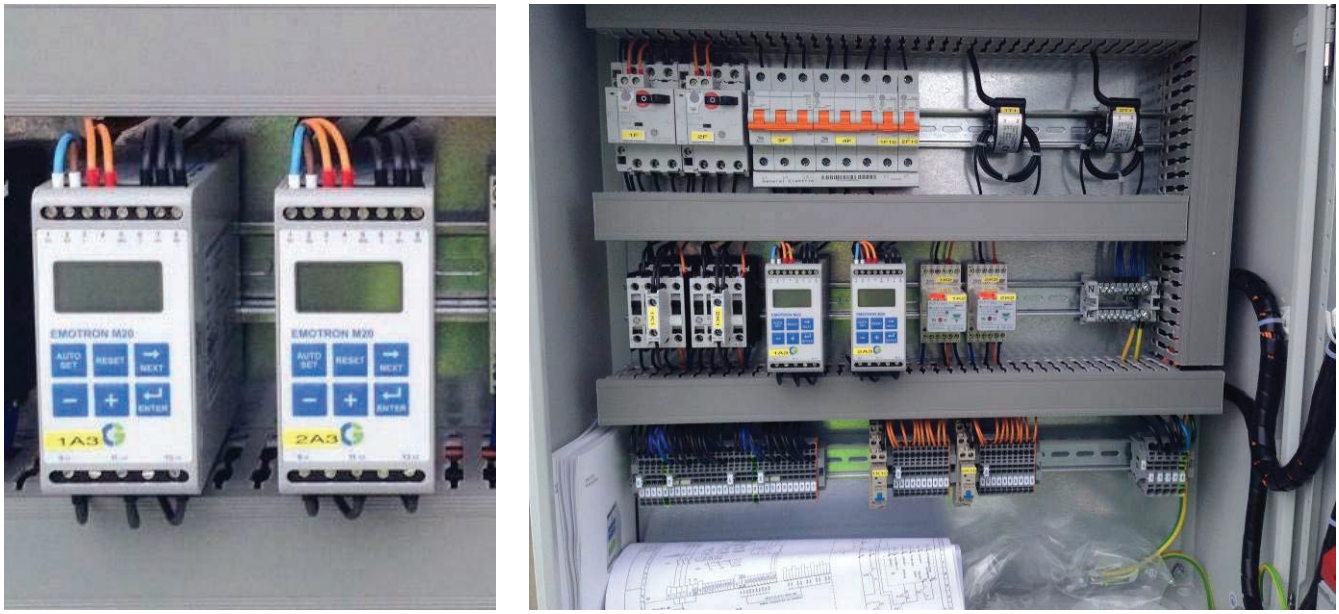

Figure 5: Overload Monitoring Device EMOTRON

The electrician contractor shall also:

- Connect skimmer motor to control panel.
- Verify the rotation of each motor.

10.4 INSTRUMENTATION

- Supply wiring between the unit and the control panel.
- Complete connection if any.
- Recommended supplier wiring instructions are given in the supplier manual.

Warning: Never cut the original cable between pH probe and/or turbidimeter probe and its power supply unit (transmitter). This cable must remain at full length.

11 OPERATION

11.1 EQUIPMENT AND PROCESS DESCRIPTION

11.1.1 General Description

SPIDFLOW™ PACK is the new generation of rapid flotation system to treat water and wastewater by effectively removing colour, suspended solids and algae. SPIDFLOW™ PACK is a high-performance system. Its benefits are:

- High-performance system.
- Flotation velocity rate up to 50 m/h.
- Highly reactive to influent water quality and flow rate variations.
- Very compact process.
- High sludge concentration.
- Low operating costs.
- Well managed energy consumption.
- Moderate use of chemicals.

It is mainly used for the following applications:

- Water with high colour and rich in algae, organic matter and humic substances.
- Clarification of municipal and industrial wastewater including episodic hydraulic and TSS peaks.
- Clarification downstream moving bed biofilm reactor (MBBR).

The SPIDFLOW™ PACK comprises a white water mixing zone, a flotation zone with sludge/skimming equipment and a white water preparation skid. The floated sludge is extracted at the surface of the flotation tank by surface scraper mechanical skimming in towards the sludge channel at the top end of the flotation tank. The floated water is collected at the bottom of the flotation tank through perforated pipes. A proportion part of the floated water is recirculated under pressure (5 to 6 bars) and enriched with air at saturation. The release to atmospheric pressure via nozzles creates “white water” thanks to micro bubbles of 40 to 70 µm in the mixing zone (at the entrance of the flotation tank).

11.1.2 White Water Production

Floated water is pumped in the recirculation line (typically about 10% to 25%) and mixed with ambient air inside a specific multiphase pump to the pressure of 6 bars. Air is dissolved, in respect to the Henry law, below the saturation point. A screen with openings below 2000 µm is installed on the recirculation line to protect the nozzles. Air enriched pressurized water is depressurized from 6 bars to atmospheric pressure through nozzles where air “degassing” occurs. Micro bubbles in the water give it a milky aspect, hence the name “white water”. An automatic purge valve allows purging large bubbles that might be created by coalescence in the pipe between the multiphase pumps and the nozzles.



Figure 6: White Water Nozzle

11.1.3 Flotation

In quiescent liquids, impurities will float, due to the Archimedes' principle. The buoyancy effect is enhanced, with white water created at the mixing zone prior to the flotation zone.

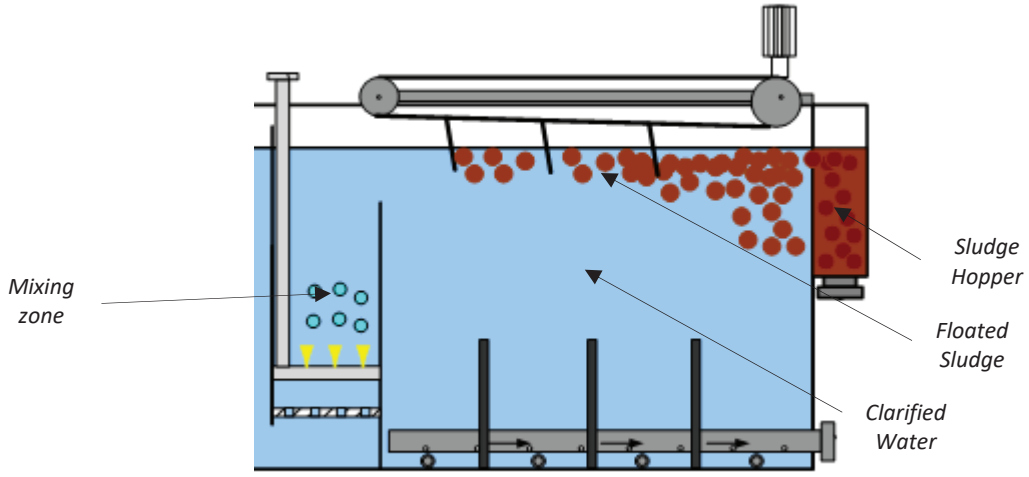

Figure 7: SPIDFLOW™ PACK Scheme

The efficiency of the flotation depends on the white water quality. A maximum quantity of air has to be dissolved in recirculated floated water (through multiphase pump on the white water skid). The operated pressure is around 5 to 6 bars.

The hydraulic sequencing of the various compartments of the SPIDFLOW™ PACK process in the flotation zone has been designed in accordance with specific computerized fluid dynamics (CFD) type studies. To improve floated water quality, SPIDFLOW™ PACK includes anti-spiral flow plates that break down any short circuits and collection lines which uniformly collect floated water flow.

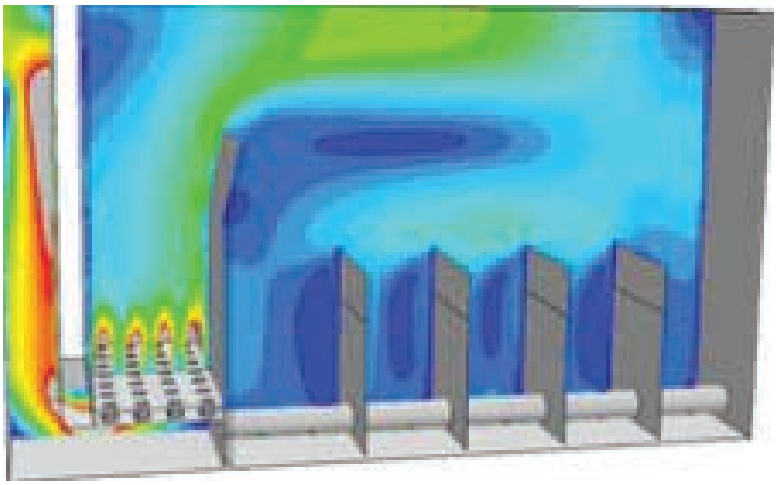

Figure 8: SPIDFLOW™ PACK Computerized Fluid Dynamic

11.1.4 Sludge Skimming

A chain skimmer removes the sludge at the surface of the tank to a sludge channel for external treatment. A timer sets the frequency of skimming. Skimmer flights should be set so they remove only the bottom solids and not excess water from the unit.

11.2 FIRST START UP

11.2.1 Preliminary Verification

Before starting the SPIDFLOW™ PACK the following points must be done or checked:

- Remove any debris from the tank.
- Every part of the SPIDFLOW™ PACK must be filled with water.
- Chemical metering systems must be ready to operate.
- Chemical storage tanks must be full.
- Chemical metering pumps must be calibrated and set for the desired dosage. These can however be adjusted once that the system is operational.
- All the field instruments must be calibrated (flowmeter, pressure transmitter).
- Verify the oil level in the skimmer gear reducers, and grease in the pumps.
- Verify the rotation of each motor.
- Verify the rotation of each pump.
- Adjust skimmer motor overload protection to the proper value.

Once all these conditions have been checked, the system can be put into operation.

11.2.2 Skimmer Initial Start Up

Gear Box

In case of long-time storage, take special precautions:

- Check position of oil level plug with help of mounting position tables in applicable manual.
- Check oil level.
- Prior to starting-up, remove vent plug from vent screw if necessary.
- If not specified otherwise, proceed with oil filling as indicated in the list of lubricants.

11.2.3 Multiphase Pump Initial Start-Up

Refer to Appendix A.

11.2.4 White Water Flow Rate Adjustment

The required white water flow rate will be determined at the design phase of the project. This parameter depends on the designed total suspended solids (TSS) concentration to be removed. The required quantity and size of the micro bubbles are directly linked to the TSS removal. If there is insufficient air for the solids entering the SPIDFLOW™ PACK, then the solids will not rise to the surface, and thus will reduce the efficiency of the process.

Each multiphase pump has an ambient air intake line on which the operator can control the air flow rate inserted into the white water stream. The flow rate is measured by a flow measuring device and can be adjusted via a manual needle valve.

The multiphase pumps will operate at fixed speed at all times. The required air flow rate to be injected into the white water stream will be set during commissioning. The air flow rate added to the white water stream has an impact on multiple parameters, including white water pressure, dissolved air concentration and flow rate in addition to impacting the micro bubbles formation (size and quantity) and global efficiency of the flotation. It is important that the air flow rate injected into each white water line be within the range set by the vendor and/or during commissioning.

During start up or when a unit is restarted after maintenance, the multiphase pump initial start-up sequence should be respected (refer to section 11.2.3). For each multiphase pump in operation, the operator should confirm that the air flow rate and the white water pressure are within the appropriate range.

11.2.5 Polymer Dosage Control

The SPIDFLOW™ PACK is sized to operate without polymer dosage for average design conditions. Since both flow rate and TSS concentration can be highly variable throughout the day, especially in the case of wastewater, an automatic polymer dosage system is provided with each SPIDFLOW™ PACK.

Polymer dosage will start under one of the two following conditions:

1. Flow rate to the SPIDFLOW™ PACK unit surpasses an adjustable set point, determined during commissioning, above which clarified water quality was proven to deteriorate.
2. Clarified water TSS (or turbidity) concentration surpasses a set point, based on the effluent TSS objective. Polymer dosage will then vary according to polymer dosage control loops, adjusted and tuned during commissioning, in order to achieve the required clarified wastewater TSS objective.

11.3 OPERATION FOLLOW-UP

This section refers to the operation of the SPIDFLOW™ PACK process. The operation of each peripheral piece of equipment (pump, mixer, polymer preparation, etc.) is not described in the following section. For more detailed information about the operation of the equipment, refer to the manufacturer's operating manual.

To ensure a proper treatment, follow-up of the running units has to be made, and any work achieved/data has to be registered into an operation book. Information must include:

- General check of the units to detect eventual faults.
- Chemicals preparation (quantities, frequencies).
- Treatment tests.
- Raw and clarified water analysis (turbidity, pH, etc).

The following table is an example of an operation log book:

Table 5: Operation Log Book - General Maintenance Work

OPERATION LOG BOOK – General Maintenance Work				
DATE	HOUR	OPERATOR'S NAME	WORK ACHIEVED	FAULT IF ANY
15/02/16	*15:00*	*F.JONES*	*Measurement of residual chlorine in clarified water*	*none*

The operation of the plant includes:

- Visual check and monitoring of the installation (site inspection).
- Monitoring of the installation through the HMI.
- Process monitoring.
- Troubleshooting.

11.4 SITE INSPECTION

As part of the visual monitoring of the installation, the following elements must be checked throughout the day.

Table 6: Site Inspection Check List

	CHECK	FREQUENCY
COAGULATION (if applicable)	Check the manual stroke position on each coagulant dosing pump	1/day
FLOCCULATION (if applicable)	Check visually floc quality and size in flocculation tank	1/day
	Check polymer solution aspect in preparation unit (usual viscosity, homogenized solution, no lumps)	1/day
	Check the manual stroke position on each polymer dosing pump	1/day
	Check polymer level in the preparation unit	1/week
	Control a polymer preparation (process water flow, polymer dosing)	1/week
FLOTATION	Check floated water aspect: no floc loss	1/day
	Check floated sludge aspect and thickness	1/day
	Control floated sludge skimming frequency	1/week
	Check white water aspect: milky colour, opacity, micro bubbles size (degas speed: 25 cm/min)	1/week
	Check depressurization pressure	1/week
	Check air flow on flowmeters	1/week
	Check continuous flow at the air blow down point	1/week
	Check chemical dosage and injection (coagulation & flocculation)	1/week
	Check visually the strainer sieve after an automatic backwash. Make sure to depressurize and lock the system before opening	2/month

11.5 HMI INSPECTION

The following section details the various items on the HMI System that need to be monitored.

Table 7: HMI Inspection Check List

	CHECK	FREQUENCY
Coagulation	Check coagulant dosing rate (if applicable)	1/day
	Check pH curve	1/day
	Check coagulant level in the storage tank and order if necessary	1/week
Flocculation	Check polymer dosing rate	1/day
Flotation	Check pressurized water flow curves	1/week
	Check flotation zone PIT level curves and PID regulation	1/week
	Check Strainers Sieves Head loss in operation and after an automatic flush	1/week

11.6 PROCESS MONITORING

11.6.1 Sampling

Table 8: Sampling Monitoring

SAMPLE	LOCATION	FREQUENCY	ANALYSIS
Floated water	Over the floated water weir	Once a day	pH and Turbidity
Floated Sludge	Floated sludge sampling panel	Once a day	TSS

11.6.2 Analysis

Table 9: Analysis Check List

	CHECK LIST	FREQUENCY
Coagulation (if applicable)	Carry out analysis on coagulated water sample (in the SPIDFLOW™ PACK inlet chamber): pH and iron/Al concentration	1/day
Flocculation (if applicable)	Ensure that the number of flocculation tanks online is in accordance with the plant capacity	1/day
Flotation	Carry out analysis of floated water: pH, turbidity, iron concentration	1/day

12 TROUBLESHOOTING GUIDE

12.1 MECHANICAL TROUBLESHOOTING

If an alarm rings and its origin is not defined by the HMI, check the following points. Check all electromechanical equipment and repair if needed:

- Multiphase pump(s).
- Skimmer(s).

12.2 MULTIPHASE PUMPS

The multiphase pumps are the heart of the white water production. If any disturbance is observed, refer to the EDUR's troubleshooting guide (Appendix A).

12.3 SKIMMER

Table 10: Skimmer Troubleshooting Guide

FAILURE	POSSIBLE CAUSE	ACTIONS
Skimmer system does not start up	The emergency stop button is in interlocking position.	Open the interlocking by turning the knob clockwise.
	The thermal relay has gone off or the fuse has blown.	Control the reason for overload: turn the thermal relay on, install a new fuse.
	The torque switch has switched off the circuit.	Guide the torque switch back to its normal position by hand and check the system.
	The skimmer system is overloaded.	Check the reason for overload.
Skimmer system stops	The thermal relay is gone off or the fuse has blown.	Check the reason for overload: turn the thermal relay on, install a new fuse.
	The skimmer system is overloaded.	Guide the torque switch back to its normal position by hand and check the reason for overload
	Chain is broken.	Check the reason of rupture, fix the chain.
Vibrations in the chain	Lengthening points of side or/and bottom rails are uneven.	Check the lengthening points and level the welding joints.
	Slide bearings are damaged or worn too much.	Change new slide bearings and check the reason for damage.
	After new assembly, the surfaces of the rails are not smooth.	Rails have been made from hot-rolled steel, so wait for 1 or 2 weeks.
Skimmer blades drift too much to the other side of the tank	Bottom rails are not straight.	Fix the bottom rails.
	One of the chains has tightened too much/less.	Check tightening of the chain.
	The pitch of the skimmer blades is different on the other side of the tank.	Check the pitch of the scraper blades and fix it if needed.
Rupture of the non-metallic chain	Too much load.	Find out the reason why there is too much sludge on the bottom of the tank. Sludge has to be pumped out all the time during the process.
Lack of tension in the non-metallic chain	Normal elongation in the chain has happened.	Tighten the chain. See also instruction: Shortening of the chain.
Drive unit troubleshooting	See the instructions given by the drive unit manufacturer (Appendix C).	

12.4 PROCESS TROUBLESHOOTING

If these two (2) steps are not sufficient, check the following table:

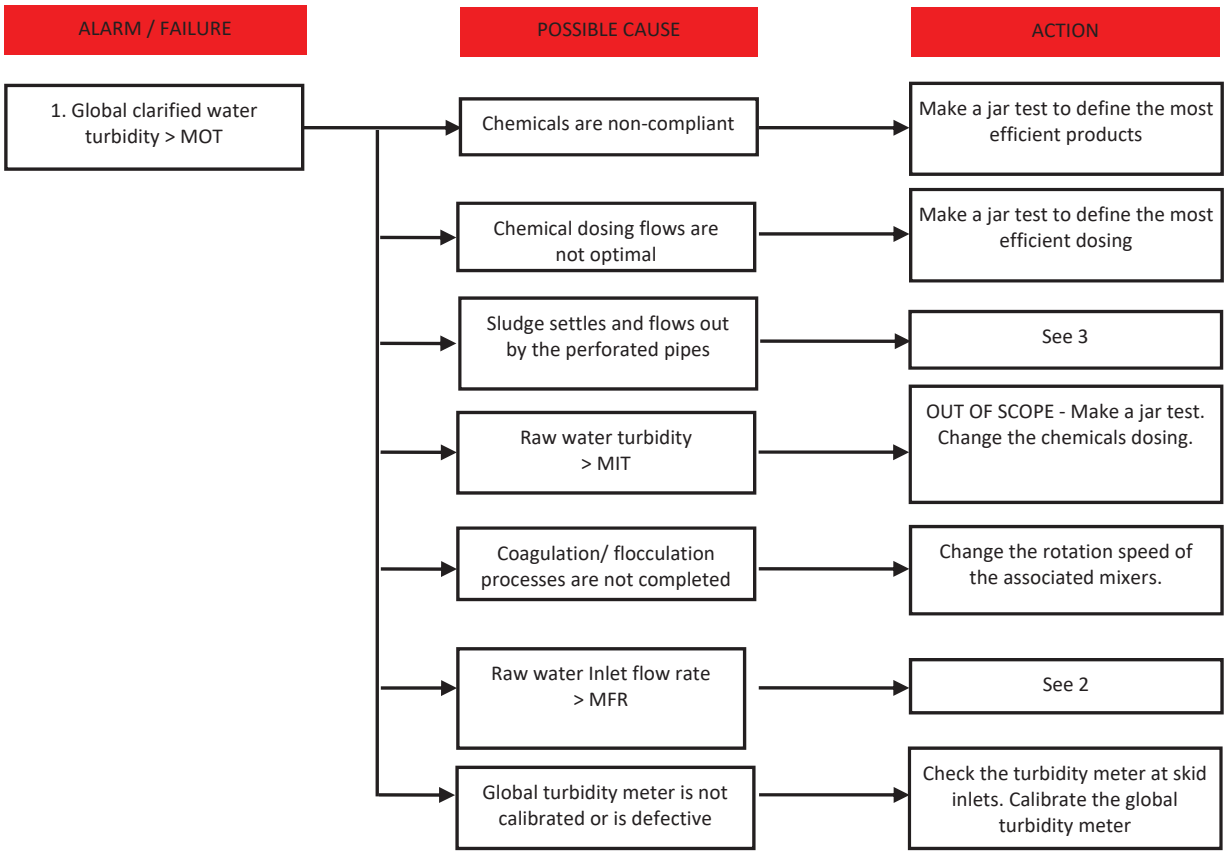

Figure 9: Process Troubleshooting Guide – Part 1

MOT = Maximum outlet turbidity
MIT = Maximum inlet turbidity
MFR = Maximum flow rate

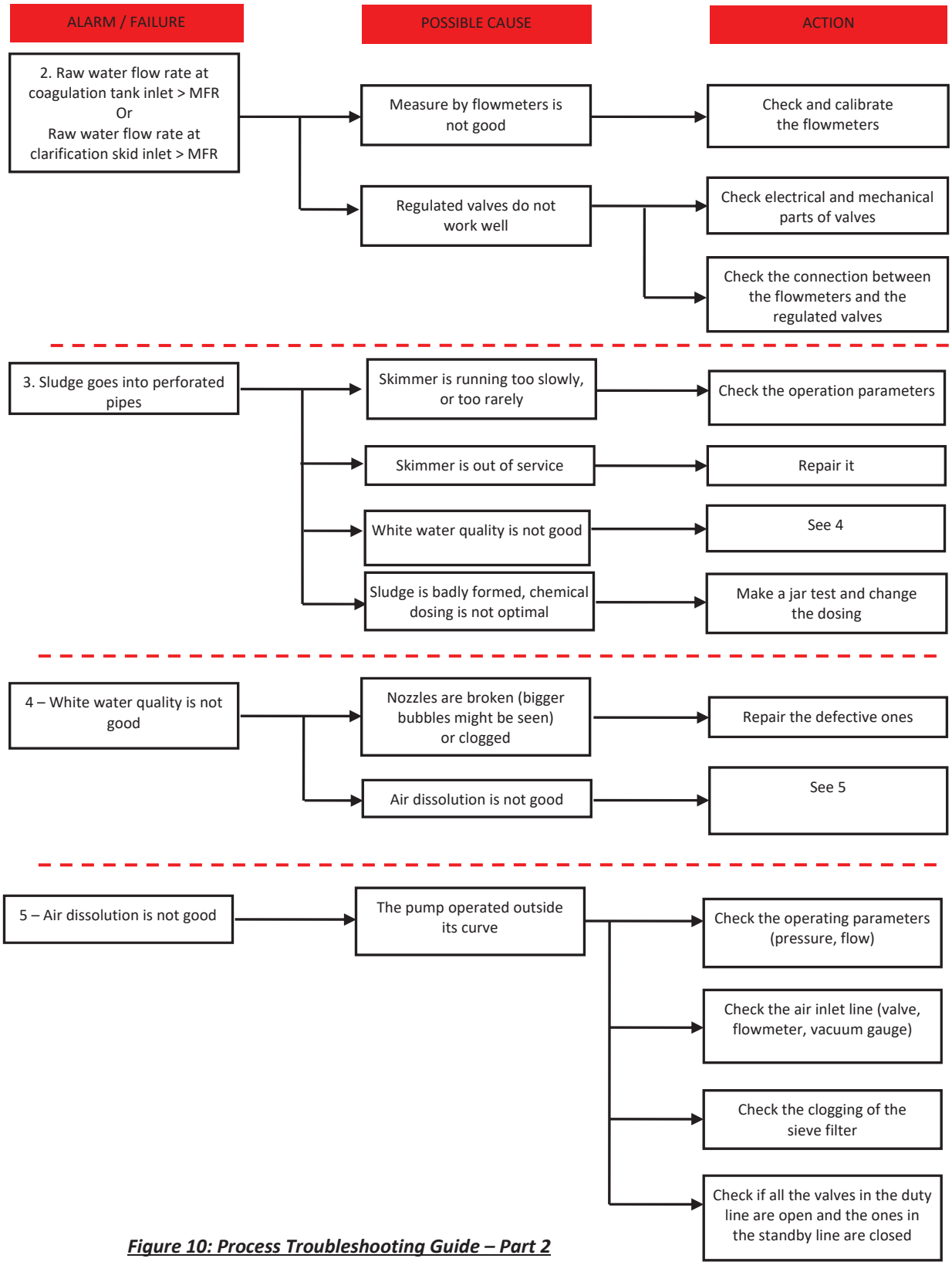

Figure 10: Process Troubleshooting Guide – Part 2

13 MAINTENANCE

13.1 SUMMARY TABLE

A treatment plant such as SPIDFLOW™ PACK can properly run as long as periodical maintenance is carried out.

Each part of this unit must be checked regularly. Maintenance details can be found in the manufacturer O&M manual supplied with the unit. Some parts should be replaced if they are already damaged and no longer work. Refer to the list of spare parts for more information.

Before any maintenance work in electrical or electromechanical equipment, it is necessary to switch off the concerned equipment on the electrical cabinet. For safety reasons, turn off electrical circuit breakers inside the cabinet.

Maintenance works are as follows:

Table 11: Maintenance Schedule

LOCATION	MAINTENANCE TASK	RECOMMENDED MAINTENANCE SCHEDULE
Tank	Drain unit	Monthly
Tank	Drain unit and inspect interior coatings. Touch up as necessary	Yearly
Skimmer – Drive unit	Visual inspection – control of oil leakage	Every 3 months
Skimmer – chain	Visual inspection – Tenseness and elongation	Every 3 months
Skimmer – Oil level of gear motor	Sight glass – Oil change	12 months
Skimmer – Wear shoe	Visual inspection – Fastening and wearing	12 months
Skimmer – Drive and driven sprocket	Visual inspection – Fastening and wearing (position)	24 months
Skimmer – Tension system / Non-metallic chain	Visual inspection – Tenseness and elongation	First inspection 3 months All others after 6 months
Skimmer – Drive and idler sprocket	Wearing, possible to turn on time	24 months
Skimmer – Slide bearing	Wearing of slide bearing / fastening of bearing blocks	First inspection 12 months All others after 24 months
Skimmer – Slide rail	Wearing of rail / fastening of support bracket	24 months
Skimmer – Bottom rail	Fastening / wear of bottom rails	36 months

13.2 REGULAR DRAINAGE

Drainage of the tank every month is highly recommended as good maintenance practice. The monthly drain allows cleaning the interior walls, the bottom and the equipment of the tank, and inspecting the condition of equipment to ensure a proper operation of the whole skid. The bottom of the flotation tank is particularly subject to clogging, and especially after a long period of shutdown.

13.3 SKIMMER

MOTOR: Ensure that the cooling air flow circulation areas are kept clean. If the motor has to operate in moist or wet environment, it is very important, when reassembling the motor, to coat the end shield spigots with a plastic SEALING compound. Also, the TERMINAL BOX has to be SEALED with a good watertight seal.

HELICAL GEAR UNITS: Refer to nameplate on helical gear units. Regularly check the oil levels. Oil replacements are due every 10 000 operating hours or every 2 years. If a synthetic lubricant is used, then the periods between replacements can be extended to 20 000 operating hours or every 4 years. In applications under severe operating conditions, (high humidity, corrosive environment or large temperature changes), the lubricant should be changed more frequently.

IMPORTANT: WE DO NOT RECOMMEND MIXING DIFFERENT KINDS OF LUBRICANT.

While draining, check:

- That the skimmer blades are not damaged.
- That the blades do not touch the bottom of the settling tank.

For more details, refer to the supplier documentation (Appendix C).

SCRAPER PARTS: Flights of the chain scraper must be cleaned monthly with service water to avoid dried sludge stuck on the surface of flights. Beach plates and sludge channel cleanliness must be checked as well, at least monthly. In case of sludge accumulated in the sludge channel, wash with service water.

If during regular controls it is noticed that the scraper flights, when appearing at the surface, do not slide on the side rail in vertical position for 0,5 to 1 m, the tensioning system must be used for bringing them in upright position. For this purpose, there are tensioning devices at the end of the tank at both sides, either on the back wall or above wall surface.

For tensioning the chain, a ¾" wrench and a 1 meter rule are needed. The scraper system should remain in operation. Please act carefully. The spindle of the tensioning device is turned upward 30 mm by means of the wrench. The length of the upper part of the spindle is measured. The tensioning device on the other side of the tank is handled the same way. In the end, the upper parts of the spindles should both have the same length. Thereafter the skimmer flights are checked again. If they move in vertical position, it is OK. If not, the same procedure should be repeated once more, this time maybe in smaller steps. At the end of the tensioning, both sides must be equal.

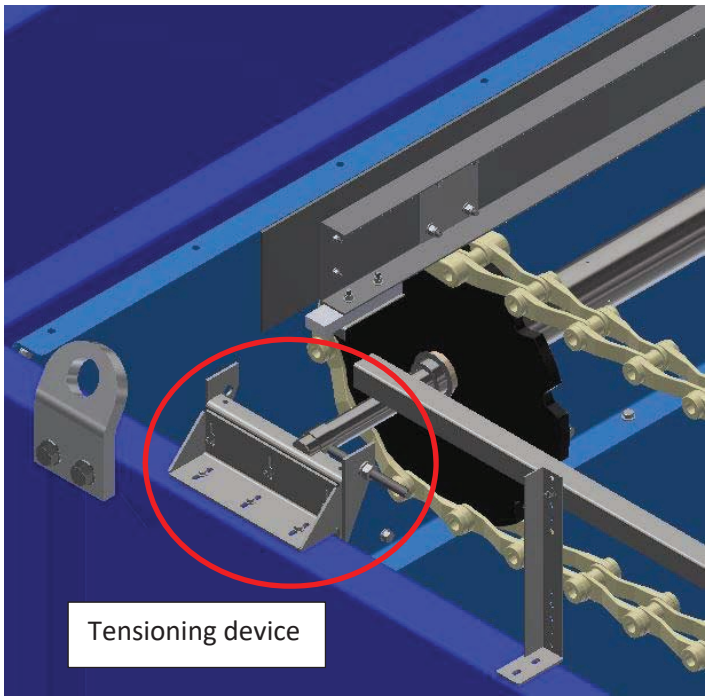

If the tensioning length of the spindle is fully used, the chain must be shortened. This shortening of the chain should be done when the tank is empty or after the water level has been lowered. At the same time, we recommend doing a complete revision of the system. Therefore, the system must be switched off. Both tensioning spindles are released completely.

After cleaning the bottom of the tank or creating a working platform, one of the chains will be tied together using a winch. Now, a chain link can be removed after having removed the pins between the chain links. Once the chain link has been removed, both ends of the chain are put together and connected again by using new pins The same procedure is applied to the second chain, between the same scraper flights as the first chain. After completing the work and after doing the rest of the review, the chains are tensioned again using the above-mentioned tensioning system.

Note: The tension in chain is sufficient only when scraper flights after settling on the return rail are sliding in vertical position and the chain is straight.

13.4 NOZZLES GRID

- Conduct a regular inspection to ensure the proper operation of each nozzle grid.
- Replace nozzles when they get clogged or damaged.

13.5 WHITE WATER SKID

- Conduct a cleaning of the white water skid with clear water after each shutdown of the unit to ensure the proper condition of the equipment while not running.
- Clean the strainer sieve regularly (every month) and whenever the operating point of the pump changes.

13.6 MANUAL VALVES

- Regularly operate the manual valves.

13.7 CHEMICAL INJECTION

- Check leakages on the injection points, if any.

13.8 CHEMICALS DOSING SETS

- Operate the drain manual valve regularly.
- Once a year, drain and clean the tanks.

13.9 LUBRICATION

It is important to regularly carry out the greasing and the maintenance of electromechanical equipment (pumps, mixers, etc.) following the suppliers' "maintenance notes". The operator has to keep a log book with:

- Operating time of the engines (hour meter), etc.
- Dates when greasing was done.
- Dates of possible equipment parts replacement.
- Refer to the following table for the lubrication schedule.
- Refer to the manufacturer equipment manual for complete lubrication, inspection and maintenance requirements (Appendix C).

Table 12: Lubrication Schedule

Equipment to be serviced	Component serviced	Type of lubrication	Lubricant manufacturer	Lubricant brand name	Quantity of lubricant	Lubrication schedule	Comments
Skimmer	Gear motor	Mineral oil ISO VG 220	Refer to Appendix C	Refer to Appendix C	3.7 liters	Change oil every 10 000 hours of operation or every 2 years	Always refer to gear motor nameplate for oil specifications. Check oil level and quality on a regular basis. When changing the oil, check the condition of the gear box seals.

14 SPECIAL PROCEDURES

14.1 PAINT REPAIR PROCEDURE (WHEN APPLICABLE)

This procedure applies to Sherwin Williams Macropoxy NSF 646, B58LX600 “LIGHT BLUE” applied as an internal lining system for potable or fresh-water tank.

If the painted surface is damaged or requires repairs, perform the following:

1. Clean the surface with solvent according to surface preparation standard SSPC SP1 to remove any contamination.
2. Perform abrasive blasting of the surface according to surface preparation standard SSPC SP10 or perform power tool cleaning to bare metal as per SSPC SP11.
3. Surface preparation must create or expose existing profile to meet the minimum requirement set in the Sherwin Williams product data sheet.
4. Lessen the unevenness between the existing coating and steel by sanding the edges of the existing coating to a smoother transition.
5. Sand 5 to 10 cm on the existing coating surrounding the repair area in order to obtain a matte and rough surface.
6. Clean again the surface according to SSPC SP1 to remove any contamination or dust.
7. Apply Macropoxy NSF 646 to restore specified dry film thickness (DFT) measurement.

APPENDIX A: EDUR MULTIPHASE PUMP O&M MANUAL

Operating Instruction

for Segmental Type Pumps

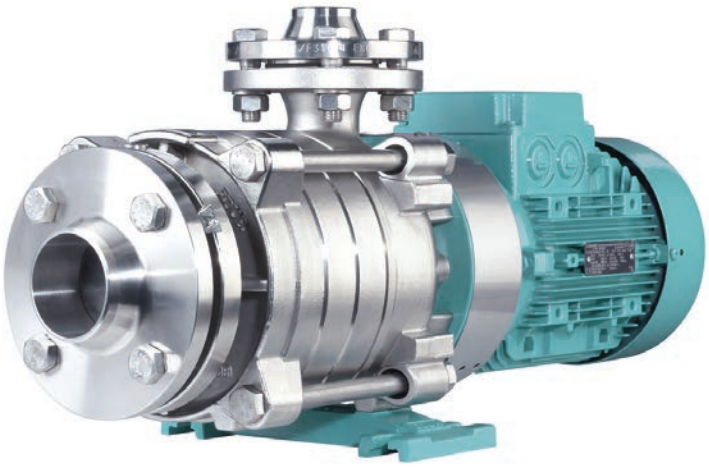

Please keep your Operating Instruction in a safe place! Translation of the original operating instructions!

EDUR-Pumpenfabrik Eduard Redlien GmbH & Co. KG • Edisonstraße 33 • D-24145 Kiel
Tel. +49 431 6898-68 • Fax +49 431 6898-800 • info@edur.de • www.edur.com

Contents

1	General information	3
1.1	Design	3
1.2	Intended Use	3
1.3	Place of Operation	4
2	Security	4
2.1	Identification of Safety Instructions in the Operating Manual	4
2.2	Qualification and Training of Operating Personnel	4
2.3	Hazards in the Event of Non-Compliance with the Safety Instructions	4
2.4	Compliance with Regulations Pertaining to Safety at Work	5
2.5	Safety Instructions relevant for Operation	5
2.6	Safety Instructions relevant for Maintenance, Inspection and Assembly Work	5
2.7	Unauthorized Alterations and Production of Spare Parts	5
2.8	Unauthorized Modes of Operation	5
3	Transport and Intermediate Storage	6
3.1	Transport	6
3.2	Intermediate Storage	7
3.2.1	Internal Preservation	7
3.2.2	Preservation Control	7
3.2.3	Removal of Preservation	7
4	Mounting	7
4.1	Installation	7
4.2	Connected Loads	8
4.3	Direction	8
4.4	Coupling Protection / Protective equipment	8
4.5	Piping	9
4.5.1	General Remarks	9
4.5.2	Permitted loads and torques	9
4.5.3	Suction Pipeline	9
4.5.4	Pressure Pipeline	10
4.5.5	Additional Connections	10
4.6	Low-Noise Installation	10
5	Starting Operation/ Stopping Operation	10
5.1	Preparations for Initial Starting	10
5.2	Initial Starting	10
5.3	Restarting	10
5.4	Stopping Operation	11
6	Service/Maintenance	11
6.1	Supervision of Operation	11
6.1.1	Shaft Bearing	11
6.1.2	Mechanical Seal	12
6.1.3	Gland Packing	12
6.2	Maintenance	12
6.2.1	Preparation	12
6.2.2	Dismounting	12
6.2.2.1	Pump	13
6.2.2.2	Dismounting of Mechanical Seal	13
6.2.2.3	Motor	13
6.2.3	Mounting	13
6.2.3.1	General Remarks	13
6.2.3.2	Mounting of the Motor	13
6.2.3.3	Replacing the Gland Packing	13
6.2.3.4	Mounting of Mechanical Seal	14
7	Disturbance	15
8	Pump View and List of Spare Parts	16
8.1	LBU	16
8.2	VBU	17

Translation
When shipping to EEA Countries, the operating instructions are to be translated into the respective language of the country where the device is to be used. In the event that discrepancies arise in the translated text, the original operating instructions (German) are to be consulted or the manufacturer is to be contacted in order to clarify the discrepancy.

Copyright
The forwarding and reproduction of this document, the use and disclosure of the contents of this document is forbidden unless explicitly permitted. Failure to comply with this will result in liability for damages.

All rights reserved.

1 General information

The most important operating data can be found on the identification plate. **It must be ensured that the pump type and all technical data correspond to the system / machine project data.** It must be observed that the electric motor is provided with its own identification plate complete with additional technical data. The motor data must also correspond with the system / machine project data.

The separately enclosed operating instructions are also to be observed when dealing with pumps in accordance with EC Directive 94/9/EC (ATEX). These instructions contain additional instructions and requirements with regards to the correct and proper use of pumps in potentially explosive areas.

The pumps may not be commissioned until the following points have been observed / ensured:

- Inappropriate physical and mental strain placed upon the operation staff must be reduced to an absolute minimum level by taking ergonomic principles in to account.
- A safe working environment must be guaranteed. Controls are to be designed and constructed in such a manner that no hazardous situations can occur. Furthermore, such situations may not occur even in the event of faults / breakdown of the control. In particular, the pump may not be unintentionally started. It must also be the case that the supply / discharge lines to and from the pump can also be closed.
- It must be guaranteed that the pump can be safety stopped. Irrespective of the type of operation, the EMERGENCY STOP function must be available and ready for operation at all times. In doing so, it must be taken into consideration that equipment connected to the pump can also be stopped in the event that a hazard can occur if such equipment continues to be operated.
- The supply / discharge lines must be able to withstand the possible internal and external pressure loads
- By implementing suitable precautions, it must be the ensured that no injuries can occur by touching the pumps, e.g. with regards to extreme temperatures.
- When conveying materials that pose a hazard to health / environment, it must be ensured that these materials can also be collected and taken away safely. Any risk with regards to inhalation, ingestion as well as contact with the eyes, skin and mucus membranes must be prevented.

1.1 Design

Horizontal and vertical, single-stage or multi-stage ring section pumps, with or without an electric drive unit, on a common bed-plate or unit-construction pumps, available in different construction materials, sizes and with different shaft sealings.
Self-priming pumps are provided with an inlet bend fitted at the suction branch.

1.2 Intended Use

Temperature:

LBU, LBE, VBU, VBE, NU, NHT, NHP, ZU, NU100:	-40°C up to120°C (140°C)
E, SUB, S:	-25°C (-40°C) up to 90°C
ZP:	-40°C up to 110°C
ZT:	-40°C up to 160°C

Operating Pressure:

LBU, LBE, VBU, VBE, NU, NHT, NHP, ZU:	25 bar (30bar)
SUB, NU100:	10 bar
E:	15 bar
S:	16 bar

Viscosity:	≤ 115 mm^2/s
E, SUB, S:	≤ 30 mm^2/s

Ambient Temperature: -20°C up to 40 °C

Power adjustment
The power of the motors is to be reduced in accordance with the guidelines provided by the motor supplier in the event that the motors are positioned in ambient temperatures of above 40°C or in a location that is more than 1000m above sea-level.



The conveying of liquids that may chemically corrode the pump material or that contain abrasive components will destroy the pumps. The conveyed material must be suitable for use with the pump material.

The power consumption of the pump proportionally changes based upon the density of the conveyed material. The densities must correspond to the order data in order to avoid excess strain being placed upon the pump and motor.

1.3 Place of Operation

The pump unit must be freely accessible for the purpose of supervision, servicing, maintenance, mounting and dismounting.
Avoid using it in corrosive and very dusty surroundings.
The limiting values of the electric drive unit with regard to the insulation material class and the types of protection must be observed.
For other drive units supplied, see the enclosed separate operating instructions.

The most important operational data are mentioned on the type label. The sound pressure L_{pA} following VDI-guidelines 3743 sheet 1 depending on the nominal pump power input P will be seen

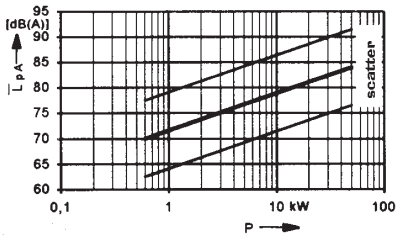

from the diagram underneath.

Fig. Noise emission

The actual sound level ascertained at place of installation will possibly differ considerably from these values due to the operating conditions and the conditions of installation.

Increased noise emissions may be caused by cavitation, faulty / worn bearings or vibrations. Installation, maintenance and service instructions are to be observed.

2 Security

This operating manual gives basic instructions which are to be observed during installation, operation and maintenance of the pump. it is therefore imperative that this manual be read by the responsible personnel/operator prior to assembly and commissioning. It is always to be kept available at the installation site.

It is not only the general safety instructions contained under this main heading safety that are to be observed but also the specific information provided under the other main headings.

2.1 Identification of Safety Instructions in the Operating Manual

Safety instructions given in this manual non-compliance with which would affect safety are identified by the following symbol:



see DIN 4844-W9
or where electrical safety is involved, with



see DIN 4844-W8

Instructions non-compliance with which would give rise to malfunctioning of the machinery are identify by the word

CAUTION

It is imperative that signs affixed to the machine, e. g.

- arrow indicating the direction of rotation
- symbols indicating fluid connections

be observed and kept legible.

2.2 Qualification and Training of Operating Personnel

The personnel responsible for operation, maintenance, inspection and assembly must be adequately qualified. Scope of responsibility and supervision of the personnel must be exactly defined by the plant operator. If the staff does not have the necessary knowledge, they must be trained and instructed, which may be performed by the machine manufacturer or supplier on behalf of the plant operator. Moreover the plant operator is to make sure that the contents of the operating manual are fully understood by the personnel.

2.3 Hazards in the Event of Non-Compliance with the Safety Instructions

Non-compliance with the safety instructions may produce a risk to the personnel as well as to the environment and the machine and results in a loss of any right to claim damages.

For example, non-compliance may involve the following hazards:

- Failure of important functions of the machine/plant
- Failure of specified procedures of maintenance and repair
- Exposure of people to electrical, mechanical and chemical hazards
- Endangering the environment owing to hazardous substances being released



Injuries to hands can occur during maintenance and repair works. Ensure that all safety instructions are observed.

Danger areas on the pump

During maintenance and cleaning work, an area measuring approximately 1 m around the pump will serve as a danger area. This area may also be increased in size in the event of faults. The operating area is only located at the operation elements.

2.4 Compliance with Regulations Pertaining to Safety at Work

When operating the pump, the safety instructions contained in this manual, the relevant national accident prevention regulations and any other service and safety instructions issued by the plant operator are to be observed.

2.5 Safety Instructions relevant for Operation

- If hot or cold machine components involve hazards, they must be guarded against accidental contact.
- Guards for moving parts (e.g. coupling) must not be removed from the machine while in operation.
- Any leakage of hazardous (e.g. explosive, toxic, hot) fluids (e.g. from the shaft seal) must be drained away so as to prevent any risk occurring to persons or the environment. Statutory regulations are to be complied with.
- Hazards resulting from electricity are to be precluded (see, for example, the VDE Specifications and the bye-laws of the local power supply utilities).

2.6 Safety Instructions relevant for Maintenance, Inspection and Assembly Work

It shall be the plant operator's responsibility to ensure that all maintenance, inspection and assembly work is performed by authorized and qualified personnel who have adequately familiarized themselves with the subject matter by studying this manual in detail.

Any work on the machine shall only be performed when it is at a standstill, it being imperative that the procedure for shutting down the machine described in this manual be followed.

Pumps and pumps units which convey hazardous media must be decontaminated.

Replacement parts that have not been supplied by the manufacturer are not tested and not approved for use. The installation and usage of such replacement parts can have a negative impact upon the pump characteristics.

The manufacturer is not liable for any damages caused by the usage of non-original parts.

On completion of work all safety and protective facilities must be re-installed and made operative again.

Prior to restarting the machine, the instructions listed under Initial commissioning are to be observed.

2.7 Unauthorized Alterations and Production of Spare Parts

Any modifications may be made to the machine only after consultation with the manufacturer. Using spare parts and accessories authorised by the manufacturer is in the interest of safety. Use of other parts may exempt the manufacturer from any liability.

2.8 Unauthorized Modes of Operation

The reliability of the machine delivered will be only guaranteed if it is used in the manner intended, in accordance with our order documentation, especially with the order confirmation.
The limit values specified in the data sheet must under no circumstances be exceeded. The pump may only be operated in the authorised curve range.

3 Transport and Intermediate Storage

3.1 Transport

The pump unit must be transported in a level or horizontal manner.

When transporting the complete pump unit by crane, mount the ropes as shown in the figure.

CAUTION The crane facility and the ropes must be of sufficient capacity. The ring loop of the motor must not be used for transport of the complete pump unit.



A pump that is insufficiently secured can lead to persons being seriously injured.

Hoisting equipment and slinging belts are to be sufficiently measured for the entire weight of the pump. If necessary, ensure that the pump is secured during transport with the use of appropriate slinging equipment. The pump is only to be positioned on a surface that is sufficiently solid and is level in all directions.

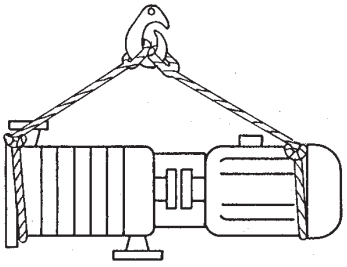

Fig. 2.1a Pumps of structural form V

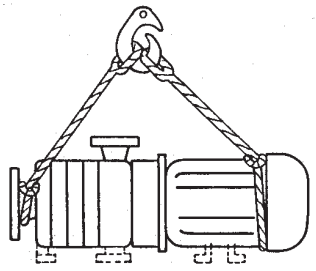

Fig. 2.1b Pumps of structural form L

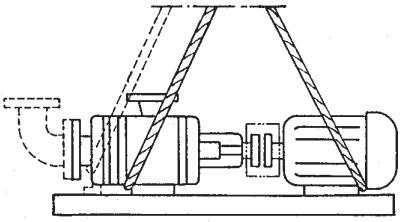

Fig. 2.1c Pumps of structural forms N, S and N1-N9

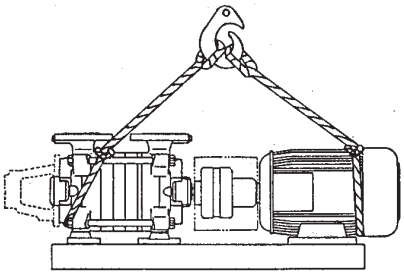

Fig. 2.1d Pumps of structural form Z

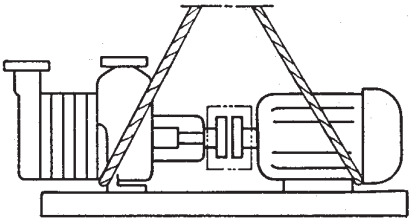

Fig. 2.1e Pumps of structural forms V1-V6, E1-E6, E11-E16

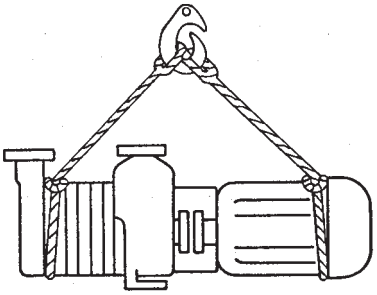

Fig. 2.1f Pumps of structural forms NVB(K)1-NVB(K)9, V1-V6, E1-E6, E11-E16, NuV25

CAUTION For transport only the screws between foot of suction casing and base plate are tightened at our works. Please take care that before setting into operation the screws have to be released by all means resp. in case of a transport again have to be tightened.
In this regard also see section 4.1

3.2 Intermediate Storage

On delivery, all pumps are preserved. Thus, they can be stored for 6-12 months. If the storage time is longer or the pumps are not in operation, they must receive additional preservation on the inside. The preservation means (please consult us) depends on the used materials and conditions of operation.
The storage room must be roofed and well ventilated. Avoid temperatures below zero and high humidity.

3.2.1 Internal Preservation

Close the suction branch securely. Fill the pump with the preservation means and slowly turn the rotor manually. Close the pressure branch securely.



A rotating impeller can cut or crush hands and arms. Do not reach into the pressure or suction sockets of the pump housing.

3.2.2 Preservation Control

Check the filling level of the pump and turn the rotor by hand at regular intervals of 3 months. Refill preservation means, if necessary.

3.2.3 Removal of Preservation

Prior to operation, the pump must be rinsed thoroughly. In the case of additional preservation, the preservation means on the inside must at first be removed.

4 Mounting

4.1 Installation

The complete pump unit is generally mounted on a pedestal. The pedestal must be even and must have fasteners and a sufficient load capacity. Instead of the pump being secured by means of fasteners, the bed-plate of horizontal pumps or the suction casing of vertical pumps can be sealed in the pedestal by a depth of about 20 mm. The complete pump unit must be adjusted by means of a spirit level when it is being mounted on the pedestal. The levelling plates are to be installed between the bed-plate or suction casing and the pedestal as well as close to any existing fasteners. All levelling plates must be well set. The fasteners must be tightened steadily after the complete pump unit has been adjusted.
In the case of self-priming pumps, the pipe bend must not be removed or distorted.



Physical injury can occur during the pump installation phase.
Safety regulations and the generally recognised engineering regulations are to be observed.

The operator is to ensure a direct and barrier-free access to the pump and must also guarantee good visibility conditions. The operator is to protect the pump against environmental impacts (wind, rain, frost, sand, etc.).

CAUTION Even if the pump unit is delivered completely mounted on the bed-plate, the coupling must be checked thoroughly after the piping has been connected and the bed-plate secured. If necessary, pump and motor must be readjusted.

When checking the coupling and adjusting the unit, first loosen the pump footings and then retighten them but without stresses.

CAUTION If the pump has two pump footings, the pump footing below the suction casing must never be screwed to the bed-plate in order to avoid axial distortion.

Pump and motor are correctly adjusted if the distance between a straight-edge which is placed on the coupling halves and the relevant shaft is the same for the entire circumference of the shaft. The coupling rubber must have free motion of 1 to 2 mm between the coupling halves for the entire circumference on both sides (Fig. 4.1a).

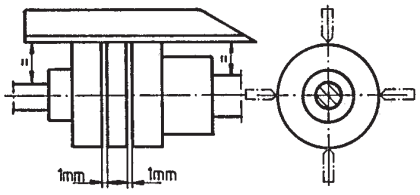

Fig. 4.1a Adjustment of the Coupling

The permissible axial and radial deviation measured at the front end and the circumference of the coupling is 0.1 mm. If this is not the case, the pump unit of the motor must be readjusted. Subsequently, the motor footing must also be tightened without stresses and the adjustment of the coupling must be checked once again.

CAUTION Errors in adjustment can increase the load on the bearing, shaft and shaft sealings.

4.2 Connected Loads



Work must only be executed when electricity is switched off. Make sure that the system cannot be powered on accidentally.

CAUTION An overload protection system (e.g. motor protection switch, etc.) must be in place in order to protect the pump and the motor.

The separately enclosed motor safety guidelines and instructions are to be observed.

When using motors that are equipped with frequency converters (FC), the safety guidelines and instructions contained in the separately enclosed FC operating instructions are to be observed. An appropriate risk analysis is to be carried out by the system operator due to the fact faults and malfunctions of the frequency converter cannot be completely prevented as a result of electromagnetic radiation.

Prior to connecting the pump to the power system, fill it with pumped liquid. The pump must by no means be operated without liquid!

The pump must be connected according to international national requirements as well as according to the requirements of the local mains system. Voltage and frequency must correspond to the winding of the electric drive. For details of the respective winding, see the type label.
The motor must not be operated without motor protection facility.
For motors with explosion protection, the range of temperature of the motor indicated on the type label must correspond to the range of the fuel gas.



Overheating damages the three-phase alternating current motor.
Ensure that a sufficient supply of cool air is in place during operation.



Electrical power can lead to death.
Ensure that a potential equalisation connection is in place between the pump housing and the building earthing.



Incorrect electrical switching modes will lead to the breakdown of the three-phase alternating current motor. Observe the switching mode.

4.3 Direction

Switch on the motor briefly in order to check the direction of rotation. The motor must not reach its operational speed. The direction of rotation must correspond to the arrow indicating the direction of rotation on top of the pump. If the direction of rotation is not correct, perform the relevant modifications at the phase-sequence.

CAUTION The switching on / operation of opened pumps (outside of the pipe line network) is forbidden.



A rotating impeller can cut or crush hands and arms. Do not reach into the pressure or suction sockets of the pump housing. Secure the pump appropriately when carrying out a rotational direction check.



The dry operation of the pump destroys / damages the mechanical seal and leads to leakage and the discharge of the conveyed material. Ensure that the pump is switched off again immediately after the warm-up phase.



The incorrect rotational direction of the pump destroys / damages the mechanical seal and leads to leakage and the discharge of the conveyed material.

4.4 Coupling Protection / Protective equipment



The pump must not be operated if coupling protection is not fitted. If this coupling protection is not supplied by the manufacturer, the operator of the pump must supply it himself.

CAUTION In the event that hot or cold pump parts lead to hazards, appropriate protective measures (contact protection) are to be installed on-site. Operation without affixed protective equipment is forbidden.

4.5 Piping

4.5.1 General Remarks

Pressure lines are to be laid in accordance with the respectively valid guidelines as well as the relevant accident prevention regulations. Pipe lines and pumps are to be secured against tripping. If required, a safety area is to be provided against tripping.
The flange covers located on the suction and pressure sockets on the pump are to be removed before installing into the pipe line. The containers, pipe lines and connections must be thoroughly cleaned and rinsed before commissioning. It is often the case that welding beads, scale and further contaminants only disengage after some time. These contaminants are to be kept away from the pump by implementing appropriate measures, e.g. using a filter in the suction line.

CAUTION Observe the conveying and connection direction (suction / pressure flange) of the pump. An incorrect conveying direction of the pump can lead to system faults.

The nominal widths of the pipes must be at least as wide as those of the pump connection joints.
For adapters, use extension angles of 8°, if possible.
The pipes must be gathered and secured right in front of the pump so that their weight does not affect the pump. The negative effects of variations in temperature and occurring oscillation may be reduced by installing a suitable bellow expansion joint (see section 4.6).
Measuring equipment for supervision of the pump operation is required.
Prior to operation, all parts in contact with liquids must be thoroughly cleaned.

CAUTION

Under no circumstances may the pump be used as a fixed point for the pipe line. No loads or torques arising from the pipe line system, e.g. as a result of twisting, heat expansion, etc. may have an impact on the pump.



Hot and discharged conveyed materials pose a risk to life.
Do not exceed the permitted pipe line forces.

4.5.2 Permitted loads and torques

Maximum permitted loads and torques Data based upon DIN EN ISO 5199					
sockets	loads [N]				torques [Nm]
ø DN	Fy	Fz	Fx	∑F*	∑M*
40	300	375	330	585	490
65	510	630	555	990	595
80	615	750	675	1185	648
100	810	1005	900	1575	735
125	960	1185	1065	1860	893

*∑F and ∑M represent the vector sums of the loads and torques

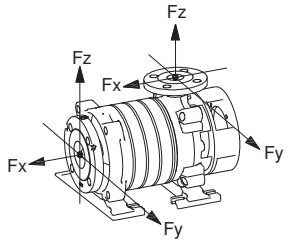

CAUTION The data concerning the loads and torques are only valid for static pipe line strains. All values given for loads and torques are related to the standard cast iron material (0.6025).

4.5.3 Suction Pipeline

The suction pipeline must be as short as possible. Variations in diameter and additional piping must be kept to a minimum. The suction pipeline towards the pump must be rising, the inlet must be descending to prevent an air pocket from being formed. For non-self-priming pumps, installation of a foot valve into the suction pipeline is compulsory in order to avoid that, in case of a standstill, the pump and the suction pipeline run out of liquid during suction operation.
Contamination of the pumped liquid is to be avoided by using a suction hose or a filter. By no means must air penetrate through the liquid level via the suction hose or dirt be whirled up from the liquid pool. Clean the suction hose and filter regularly.
To close the suction pipeline in the case of mounting or maintenance work, a stop valve must be provided near the pump. The stop valve must not be used for adjustment and must be completely open during operation.

4.5.4 Pressure Pipeline

For adjustment, repair and mounting of the pump, a stop valve is to be provided near the pressure joint.

4.5.5 Additional Connections

For the position and dimension of required additional connections as e.g. for rinse, stop and quench liquid, refer to the labels supplied with the pump or to the drawings in the operating instructions. The rinse, stop and quench liquids must be checked at regular intervals.
Connections for ventilation and release of the leakage liquid are also described in the drawings.

4.6 Low-Noise Installation

A reduction in noise (Fig. 4.6a) can be achieved by isolating the pedestal (1) from the ground by means of an appropriate insulation board (2) and by using suitable bellow expansion joints between the piping and the pump. The pedestal (1) must not be secured to the ground or to the walls.

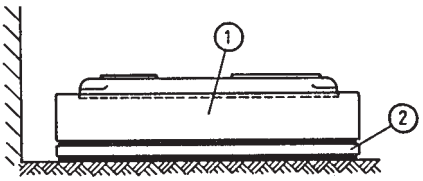

Fig. 4.6a Low-Noise Installation

Another possibility to reduce the noise is the use of oscillation absorbers. In this case, you need to install a frame under the base of the pump.

Bellow expansion joints must be checked regularly for brittle and cracks.

5 Starting Operation/ Stopping Operation

5.1 Preparations for Initial Starting

Prior to the start, the pump and the suction pipeline must be drained of air and be completely filled with the pumped liquid. The stop valve in the suction or inlet pipeline must be completely open, if there is one. For self-priming pumps, the pump must only be completely drained of air and filled with the pumped liquid.

CAUTION A pump / pipe line that is not deaerated leads to the destruction / damage of the mechanical seal. Conveyed material may be discharged.

Before commissioning, it must be ensured that the pump and pipe lines have been connected / assembled in accordance with the guidelines and in a fixed manner. The pump may only be operated provided that protective equipment (coupling protection / fan guard) is in place. The pump must be operated with contact protection when dealing with hot conveyed material.

CAUTION Do not block the motor fan with foreign articles. Blockage will lead to the ejection of foreign articles and overheating / breakdown of the motor.

5.2 Initial Starting

The pump must not be started until the outlet stop valve is closed so as to avoid overload of the motor. Immediately after reaching the operational speed, slowly open the stop valve of the pressure pipeline and adjust the operating point.
Until the liquid starts moving against atmospheric pressure, the hydrostatic pressure for self-priming pumps must not exceed 1 bar with reference to the difference in height between suction and outlet liquid level and to the density of the pumped liquid.

The pump must never be operated for a longer period if the outlet stop valve is closed. The pump unit will be damaged if the pumped liquid exceeds the permitted temperature.

5.3 Restarting

Do not restart the pump until the pump shaft stands still.

CAUTION Backflow of liquid must not result in a change of direction of rotation of the pump. If this is the case, mechanical seals dependent on direction of rotation may be damaged.

CAUTION Before re-starting the pump, it must be ensured that the pump has not incurred any damage during the downtime and that all safety and protective equipment is affixed.

5.4 Stopping Operation

Close stop valve of the pressure pipeline. If there is a backflow stop and sufficient counter pressure in the pipeline, the stop valve can remain open. Switch off the motor and observe that it slows down smoothly. Close stop valve of the pressure pipeline.
If the pumped liquid reaches temperatures below zero and/or if longer periods of standstill occur, the pump must be drained completely and be preserved (see section 3.2.1).

6 Service/Maintenance

6.1 Supervision of Operation

CAUTION The pump is to be secured against being unintentionally switched on during maintenance and cleaning work. Work may only be carried out provided that the system / pump is in a pressure-free condition.

Maintenance and cleaning work may only be carried out by expert staff members. The expert staff members must be provided with personal protective equipment.
Ensure that the pump is cleaned and maintained at regular intervals in order to be able to ensure a trouble-free operation.

CAUTION Conveyed material that poses a hazard to health can place a person's health at risk. The operator is to equip the system with collection equipment or other appropriate protective measures.
Personal protective equipment such as gloves and protective goggles must always be worn.

Ensure that the pump runs free of vibration and smoothly. Ensure that the pump runs in a quiet and vibration-free manner. Inspect the pump for loose connections at regular intervals (an interval of 4 months is recommended). Regularly remove deposits of dust as well as contaminations.



Physical injury can occur when carrying out maintenance and cleaning work on the pump.
Safety regulations and the generally recognised engineering regulations are to be observed.

The pump must by no means be operated without liquid.
There is only a minimal or invisible loss of leakage (steam) if the mechanical seals function correctly. Gland packings should drip slightly.
Do not operate the pump for a longer period with a closed stop valve.
The maximum permitted environmental temperature is 40°C. The storing temperature measured at the motor or pump casing may exceed the environmental temperature by 50°C. It must not exceed 90°C. Only operate the pump at a higher temperature with the manufacturer's approval.

We have to point out that an increased wear may occur in case of transport of abrasive / corrosive media.

In case of corrosive / abrasive media to be pumped pressurized components have to be checked regularly in order to detect wear in time - before a damage occurs. The intervals have to comply with the liquids to be pumped and initially have to be carried out more frequently, until perceptions about the progress of wear are attained.

Installed pumps must be powered on and off briefly once a week in order to guarantee that they are ready for operation.



Insufficient rotary motion of the motor shaft will lead to the impeller becoming stuck and the mechanical seal breaking down. This can lead the discharge of the conveyed material.

6.1.1 Shaft Bearing

CAUTION Under normal operation conditions, replace the motor bearings after 20.000 hours of operation or at the latest after 2,5 years. In the case of bad operation conditions, as e.g. a high environmental temperature or a corrosive and dusty environment, the motor bearings must be checked at an earlier date and, if necessary, be replaced.
Pump bearings with a lubrication device must be checked every 5000 hours of operation. Dirty bearings must be cleaned and filled with new lubricant. The free space in the bearing and casing should be filled by 30-50% with lubricant. Do not use resinous or acid lubricants. Its consistencies (NLGI grade) should correspond to a worked penetration of 265 to 295 mm/10. Lithium-base soap lubricants with a drop point of more than 185°C are to be used for pumped liquids which have a maximum temperature of 110°C. For pumped liquid with a higher temperature, use silicon lubricants with a lithium-base soap and with a drop point of more than 215°C.
If necessary, the bearings can also be lubricated with lubricants of a different soap base. For this based on different soaps must not be mixed. The required re-lubrication periods must then be adapted to the type of lubricant used.
Faulty / worn bearings lead to subsequent damage and can result in increased noise emission.

6.1.2 Mechanical Seal

The mechanical seals are maintenance-free. If leakages occur after a longer period of operation, replace the complete seal.

CAUTION When dealing with conveyed materials that pose a hazard to health and to the environment, the operator is to equip the system with collection equipment or other appropriate protective measures. Personal protective equipment such as gloves and protective goggles must always be worn.

6.1.3 Gland Packing

Gland packings are low-maintenance parts and must leak slightly during operation. Do not tighten a gland packing after its first operation. Considerable leakage at the beginning disappears by itself. If greater leakages occur during operation, the gland lid or insert must be slightly tightened, however it must never be tightened at a slant.
It must be possible to rotate the slide slightly after having tightened the lid or insert. If tightening of the gland lid or insert results in the pump being heated excessively or if it is not possible to tighten the gland lid or insert any further, the gland packing must be replaced completely.

CAUTION If the gland lid or insert is tightened too much the shaft will be damaged.

6.2 Maintenance

6.2.1 Preparation



In order to make sure that the pump cannot be started, separate the power cable from the motor. Secure the unit against accidental switch-on.

The stop valves located in the pressure and suction line are to be closed and secured against unauthorised opening. The pump casing must have reached the environmental temperature and be drained of liquid and pressure. In the case of pumps in unit-construction with mounting flange, the container must be drained completely.



Leaking conveyed material can injure hands and arms. Ensure that the pump housing is in a pressure-free condition. Only then may the pump be emptied.



When dealing with pumps that have been used to convey materials that pose a hazard to health / to the environment, ensure that no danger to persons and the environment can occur when emptying the pump. Wear appropriate protective clothing and, if required, protective mask.

The rinsing liquid used and the remaining liquid located in the pump must be professionally collected and disposed of without posing any hazards to persons or to the environment.

6.2.2 Dismounting

By no means use force while dismounting the pump.



Pumps that are used to convey material that is hazardous to health and to the environment must be decontaminated. When releasing the material, ensure that no danger to persons and the environment can occur when emptying the pump. Legal requirements are to be observed and adhered to.



The pump must always be secured against tipping over. There is a risk of tipping over when loosening the pump from the outside of the pipe line network. Persons can be seriously injured if the pump tips over.
During the transport phase, ensure that the pump is secured using appropriate slinging equipment. The pump is only to be positioned on a surface that is sufficiently solid and is level in all directions.

CAUTION The pump may only be dismantled when in a pressure-free, empty, de-contaminated (if required) and secured condition. Protective clothing and protective mask must be worn if required.

Unit-construction pumps:
- Separate the pump from the piping and any additional connections
- Loosen the fasteners

Pumps with a motor on a common bed-plate:
- Separate the pump from the piping and any additional connections
- Remove the coupling protection
- Loosen the pump from the bed-plate and remove it from the motor

For fixed parts of the casings, impellers and couplings, use appropriate dismounting facilities.
Impellers, which cannot easily be removed from the shaft, can be pushed back from the shaft by means of two hexagon screws.

6.2.2.1 Pump

CAUTION The pump is always dismounted on the suction side and with the shaft in a horizontal position. Refer to enclosed drawings on page 13 to 14 (only pumps of structural forms LBU and VBU) or in the supplementary sheet for the dismounting sequence.
For unit-construction pumps, the pump and motor must not be separated for the axial fixing of the pump shaft.
To prevent the partially mounted pump or the complete pump unit from tilting, put blocks as a mounting aid under the step casing and, if necessary, under the drive unit.
Mark the position and sequence of the pump parts for later mounting.

6.2.2.2 Dismounting of Mechanical Seal

In order to replace the mechanical seal, the pump must be dismounted (see Fig. 6.2.2) first. After that the pump must be dismantled before the seal can be removed. Dismantle the pump in the sequence shown in the exploded view diagrams, pages 13 or 14. Remove impeller (230), casing (108,117), key (940.1) and the circlip (932), pull the delivery casing (107) off the shaft with the mechanical seal (433).

6.2.2.3 Motor

For vertical pumps and unit-construction pumps, it is not necessary to dismount the pump unit. The pump can remain in the piping. First, remove the coupling protection and loosen the hexagon screws of the coupling. After having loosened the hexagon screws at the motor flange, remove the motor from the pump.
For pumps with a motor on a common bed-plate, first remove the coupling protection. Then, loosen the mounting screws of the motor and separate the motor from the pump.

6.2.3 Mounting

6.2.3.1 General Remarks

Prior to mounting, all parts must be cleaned thoroughly. Remove remaining parts of the seals. Slight scratches and grooves on the shaft near the shaft seal and on other sealing surfaces of the casings are to be polished with linen.
If this is not possible, replace the parts. Gaskets must always be renewed. Check O-rings for damage and replace them, if necessary.

Mounting is effected in the reverse order of dismounting. Heat up the coupling joints of rigid couplings to approximately 250 °C prior to mounting them onto the shaft.

In the case of flexible couplings, the coupling half on the pump shaft must be tightened thoroughly by means of the shaft nut and/or the hexagon nut. If this is not observed, the bearings will be damaged.

The starting torques for the tie bolts and locking screws non lubricated condition are displayed in fig. 6.2.3.1a.

thread	M 10	M 12	M 14	M16	M20
torque Nm	30	40	50	110 70*	120

* for pumps with more than 4 tie bolts
Abb. 6.2.3.1a Starting torque

6.2.3.2 Mounting of the Motor

For initial mounting of motor and pumps with rigid coupling, first of all, remove the transport safeguards of the lantern or of the intermediate flange, then remove the motorside coupling half. Subsequently, put this part onto the motor shaft. This coupling half must be next to the motor shaft collar. Tighten screws, join motor and pump centrically without tilting them. Tighten screws between motor and lantern or intermediate flange and then coupling screws.

CAUTION The inner parts of the pump will be damaged if motor and pump are connected and the motorside or pumpside coupling half has been installed incorrectly or not at all.

6.2.3.3 Replacing the Gland Packing

Remove gland lid or insert and remove the old packing rings. Clean gland packing compartment of any remaining packing material. Insert new gland packing, ring by ring with staggered open butt joint, see Fig. 6.2.3.3a and slightly tighten it with gland lid or insert. No lubricant must touch the gland packing.

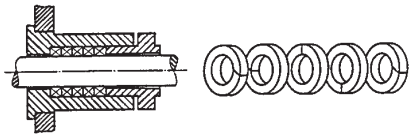

Fig. 6.2.3.3a Gland packing

During the first hours of operation, watch out for any considerable increase in heat or leakage.

6.2.3.4 Mounting of Mechanical Seal

CAUTION When mounting the mechanical seals, you must proceed very carefully and with precision.

Do not touch the surfaces of the seal. Do not damage the sealing parts. To facilitate the mounting, moisten elastomer with low-surface tension water.

Mechanical seals and sealingparts with elastomer made of EP rubber must by no means come in contact with oil or grease.

The shape of spare mechanical seals may differ from those of the installed mechanical seal. However, the dimensions of the spare mechanical seal are the same and for that reason it can be replaced.

To avoid distortion of the counter-ring, mechanical seals with doubled PTFE-wrapped sealing O rings are additionally secured by a leading pin inside the casing. The pin must be removed when replacing the type of mechanical seals and when using a type with different O-ring material.

For details of the individual types of mechanical seals observe the following procedures.

CAUTION Observe the enclosed, separate mounting instructions for those types of mechanical seals which are not listed.

1. Stressed mechanical seal independent of direction of rotation with elastomer bellows (fig. 6.2.3.4a)

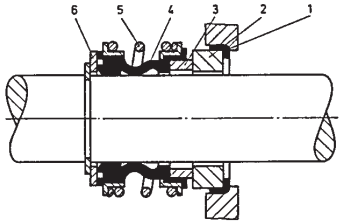

Fig. 6.2.3.4a

Carefully press angle collar (1) together with counter ring (2) into the counter ring fit. Twist the rotating unit (3,4,5) onto the shaft as far as the counter ring. Put on supporting ring and mount circlip (932*) and/or, push shaft sleeve for mechanical seal (516*) onto the shaft.
For suction-side mechanical seals (only pumps of type Z), mount circlip (932.1*). Push rotating unit (5,4,3) on to the shaft up to the circlip (932.1*).

2. Loaded, rotational direction-dependent mechanical seal with conical spring (fig. 6.2.3.4b)

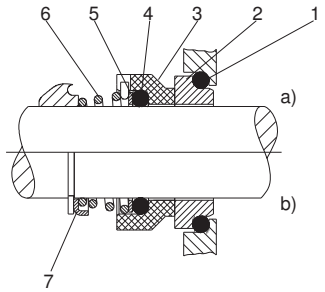

Fig. 6.2.3.4b

Insert O-ring (1) into counter ring fit and carefully press counter ring (2) into it.
Push mechanical seal (3) onto the shaft as far as the counter ring. Press O-ring (4) into the mechanical seal by means of the supporting ring. The pivot of the pressure spring (6) must be situated in the groove of the mechanical seal ring.

a) Put on impeller (230)* (only pumps of type CB..., ECD..., SU...) or

b) Put on locking ring (7). Mount circlip (932)* and/or shaft sleeve for mechanical seal (516)*

*see drawing in the operating instruction

CAUTION Prior to start pump again, the pump must be filled with liquid to be pumped.

7 Disturbance

CAUTION To eliminate disturbance, the pump must have reached the environmental temperature and must be drained of air and pressure.

The chart shows a list of potential errors and their possible causes. For errors which are not listed here or which have other reasons, please consult us.

Pump is blocked	Coupling fault	Heads too low	Rates of flow too low	Bearing temperature too high	Pump operates badly	Leakages at the casing	Overload of the drive	Shaft seal leaks badly	Motor protection activated	Pump is becoming too hot	**Cause**	**Elimination**
		●	●								Pump and/or suction pipeline is not completely drained of air/filled	Drain of air and fill
		●	●		●					●	Suction level too high, NPSH value of the unit too high	Completely open stop slide in the suction pipeline, check suction bag/footing valve, if necessary, increase liquid level, if necessary
		●	●							●	Air inclusion in the pumped liquid too high	Seal suction pipeline once again, check suction bag, increase liquid level, if necessary
		●	●		●					●	Formation of air bag in suction pipeline	Change suction pipeline/attach drain valve
		●	●								Direction of rotation incorrect	Check and change phase sequence, if necessary
										●	Rates of flow too low	Readjust operating point
		●	●								Wear of inner parts	Replace inner parts
					●		●		●		Pump operates out of tolerance	Readjust operating point
								●			Shaft seal damaged	Replace shaft seal
								●			Stuffing box gland jammed or tightened too heavily	Correct
		●	●		●			●			Air entry through shaft sealing on suction side	Check liquid sealing or replace packing
		●	●								Speed too low	Increase speed[1]
							●		●		Speed too high	Reduce speed[1]
						●					Connecting screws, seals	Tighten connecting screws, replace seals
	●			●							Pump/motor not adjusted	Replace defective parts, adjust pump/motor
	●			●	●						Problems via piping	Check pipe connections/pump fasteners/bearing distance of pipe clips, installation with oscillation absorbers
				●							Insufficient, excessive or wrong lubrication grease	Add, remove or change grease[2]
	●										Incorrect coupling gap	Readjust motor
●											Defective bearing	Replace bearing
		●	●				●		●		Density/viscosity of pumped liquid higher than indicated in the order	[1]
									●		Motor protection unit set incorrectly or defective	Check motor protection unit, replace it, if necessary
●											Impeller blocked	Clean interior parts from particles and impurities

[1] Please consult us
[2] Only pumps with lubricator

8 Pump View and List of Spare Parts

8.1 LBU

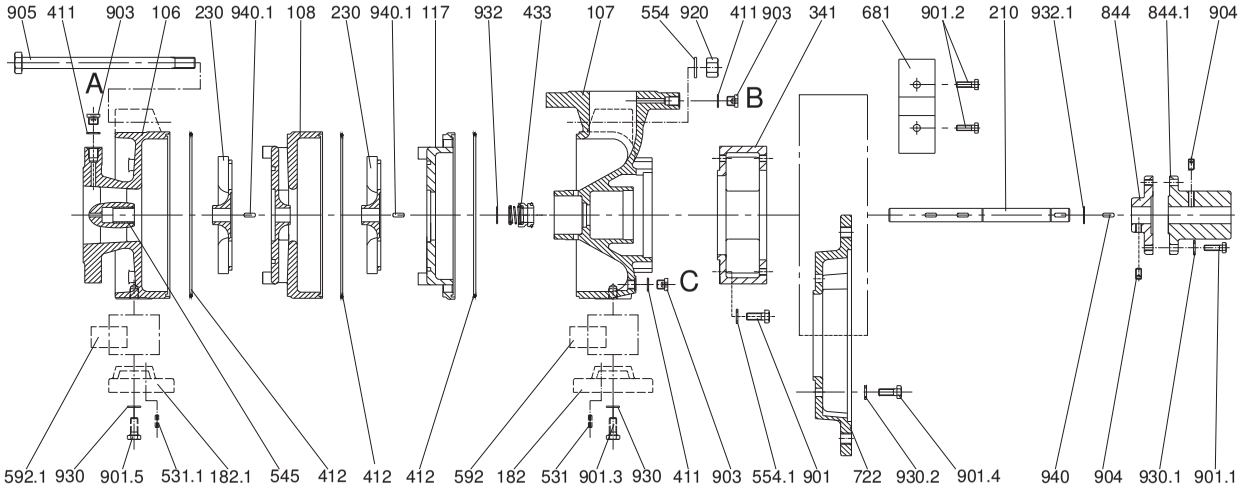

part no.	designation
106	suction casing
107	delivery casing
108	stage casing
117	endstage casing
182/.1	foot
210	shaft

part no.	designation
230	impeller
341	lantern
411	joint ring
412	o-ring
433	mechanical seal
531/.1	locking sleeve

part no.	designation
554/.1	washer
592/.1	base
681	coupling guard
722	intermediate flange
844/.1	disc type coupling
901/.1-.5	hexagon screw

part no.	designation
903	screwed plug
904	hexagon socket set screw
905	tie bolt
920	nut
930/.1-.2	tooth lock washer
932/.1	circlip
940/.1	key

A: Screwed plug G¼ for vent connection and pressure gauge connection
B: Screwed plug G¼ for vent connection and pressure gauge connection
C: Screwed plug G¼ for drain

When ordering spare parts, please indicate serial no., type no. and parts no. by all means.

EDUR®

8.2 VBU

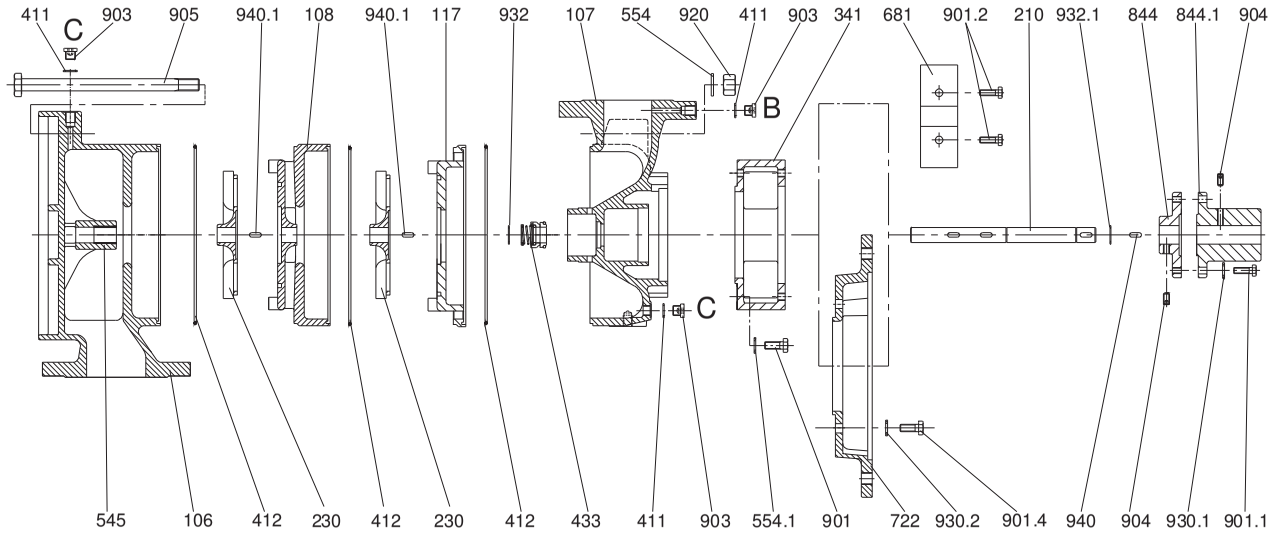

part no.	designation
106	suction casing
107	delivery casing
108	stage casing
117	endstage casing
210	shaft
230	impeller

part no.	designation
341	lantern
411	joint ring
412	o-ring
433	mechanical seal
554/.1	washer
681	coupling guard

part no.	designation
722	intermediate flange
844/.1	disc type coupling
901/.1-.3	hexagon screw
903	screwed plug
904	hexagon socket set screw
905	tie bolt
920	nut

part no.	designation
930/.1	tooth lock washer
932/.1	circlip
940/.1	key

B: Screwed plug G¼ for vent connection and pressure gauge connection
C: Screwed plug G¼ for drain

When ordering spare parts, please indicate serial no., type no. and parts no. by all means.

EG Declaration of Conformity
In accordance with EC Machinery Directive 2006/42 EC, Appendix II, 1 A

We, EDUR Pumpenfabrik Eduard Redlien GmbH & Co. KG
Edisonstraße 33
D-24145 Kiel

hereby declare that the compact design rotary pump – see cover sheet for information regarding pump model,

conforms to all of the relevant regulations of EC Machinery Directive 2006/42/EC. The protection objectives of the low voltage directive were observed in accordance with Appendix I, No. 1.5.1 of the machinery directive. The following harmonised standards applied:

DIN EN ISO 12100 DIN EN 809

Person responsible for the documentation: Mr. A. Weiss

Declaration of Incorporation
In accordance with EC Machinery Directive 2006/42/EC, Appendix II, 1 B

We, EDUR Pumpenfabrik Eduard Redlien GmbH & Co. KG
Edisonstraße 33
D-24145 Kiel

hereby declare that the incomplete compact design rotary pump – see cover sheet for information regarding pump model – supplied without motor conforms to the following essential requirements of EC Machinery Directive 2006/42/EC, Appendix I: 1.1.1.; 1.1.2.; 1.1.3.; 1.1.5.

The following harmonised standards applied:

DIN EN ISO 12100 DIN EN 809

This incomplete machine may only be put into operation after it has been determined that the machine into which this incomplete machine is to be installed, conforms to the regulations of the machinery directive.

Person responsible for the documentation: Mr. A. Weiss

Additional Remarks for the Installation and initial Starting of EDUR Multiphase Pumps

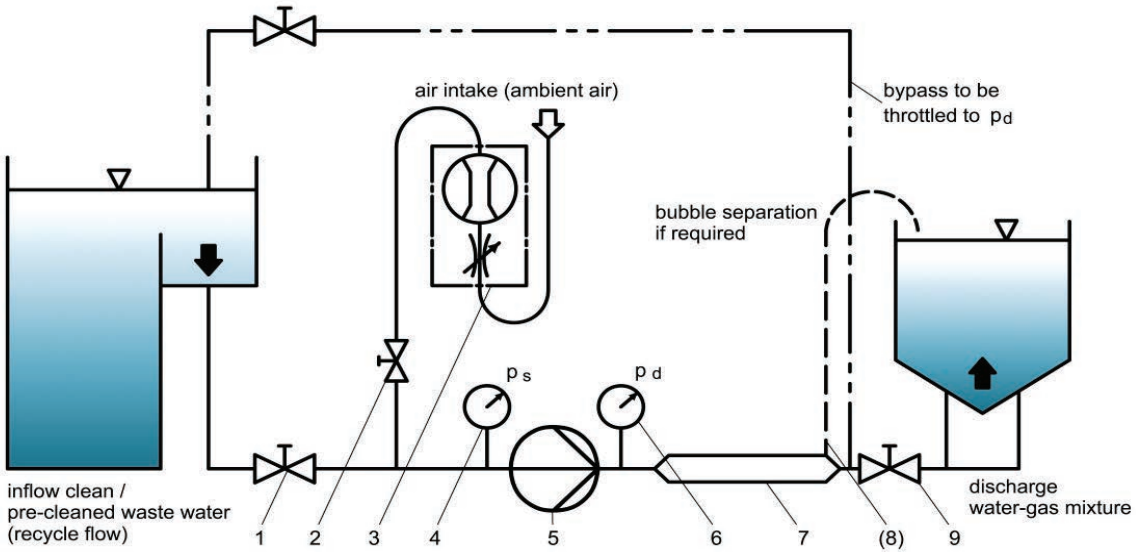

1	Throttle valve for water flow at pump inlet
2	Check valve for air suction (atmospheric air)
3	Air flow measuring device with neddle valve
4	Inlet side manometer (vacuum gauge)
5	EDUR Multiphase (flotation) pump
6	Pressure side manometer
7	Solution line (may not apply for simple gassing)
(8)	Bubble separation (if required)
9	Pressure relief valve (if required)

General Advices for Installation of EDUR Multiphase (Flotation) Pump

- realize inflow conditions at pump inlet side
- select throttle valve (1) and pressure relief valve (9) with good dosing features
- gas supply line guidance above highest liquid-level in order to avoid that water will attain the air flow measuring device (3)
- select air flow measuring device (3) with suitable metering range and with needle valve for optimal adjustment of the air flow
- design inflow-pipe for the range of air inlet till pump inlet flange in a short and horizontal way in order to ensure that always a constant water-air proportion arrives at the pump
- as solution line for dissolved air flotation a pipe line with corresponding larger nominal width will be suitable in order to achieve a dwell period of approx. 1 min. until relaxation. If required, surplus air can be led away by means of a bubble separation (8) at highest position before relaxation (pipe line with very small nominal width).

Additional Remarks for the Installation and initial Starting of EDUR Multiphase (Flotation) Pumps

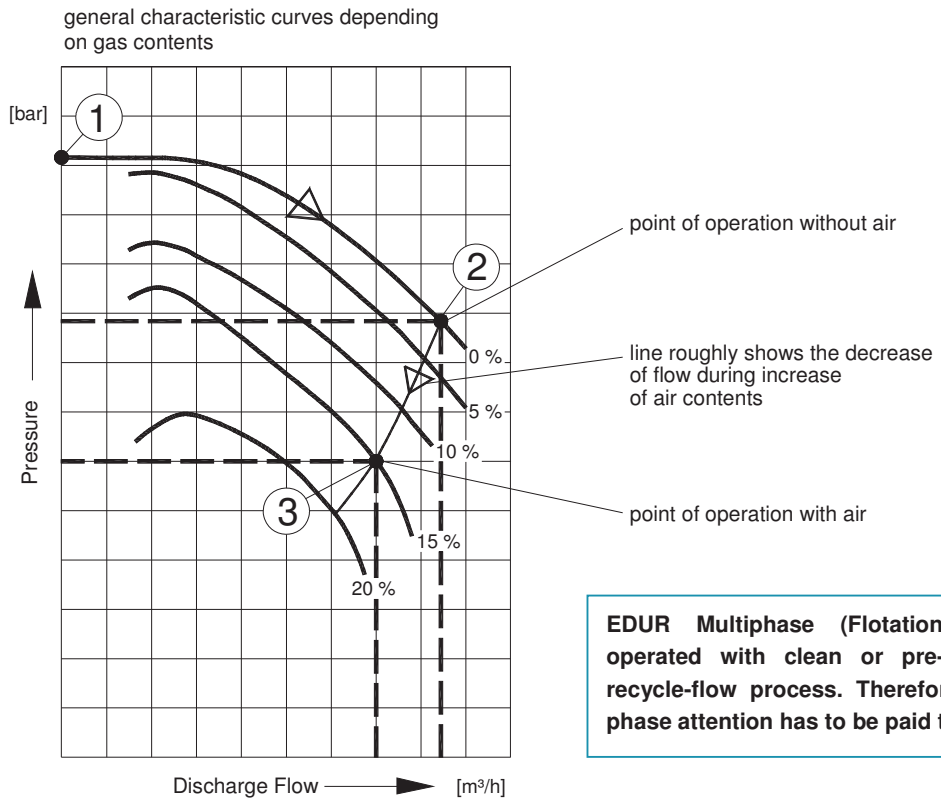

EDUR Multiphase (Flotation) Pumps are being operated with clean or pre-cleaned water in the recycle-flow process. Therefore also during starting phase attention has to be paid to the water cleanness !

1. Initially pump has to be put into operation according to para 5 of the known operating instructions for pure water supply (without air) and to check the maximum pump pressure as per characteristic curve – point 1 (by means of short-time closing of the pressure relief valve at the pressure side – pos. 9 – while the bubble separation pipe is closed)

2. Open the pressure relief valve so far until the required operation pressure for pure water supply has been reached – point 2. At the same time it has to be considered that the flow rate for pure water supply has to be approx. 10…20 % higher than for the supply of water-gas mixtures

3. The water flow has to be adjusted slightly at the inlet side by means of a throttle valve (Pos. 1) till a pressure (vacuum) of approx. -0,2…-0,3 bar will be achieved at the suction side manometer (Pos. 4) in front of the pump

4. Open the air supply at the throttle valve (Pos. 2) and adjust required air flow at needle valve (Pos. 3). The operating pressure at the pressure side manometer (Pos. 6) in doing so decreases slightly to point 3 (where necessary re-adjust the vacuum at the pump inlet side in case that the required air flow will not be sucked in from the atmospheric air). In case that the delivery stops the air flow has to be reduced accordingly.

   In order to avoid large bubbles the gas contents must not exceed the physically possible solubility. After the pressure relaxation (behind pressure relief valve Pos. 9) a very fine white water effect is being generated this way.
   Other gases also can be charged considering the solubility.
   Differing methods also will be possible after consulting.

2.2 Initial Starting and Operation of EDUR Multiphase Pumps

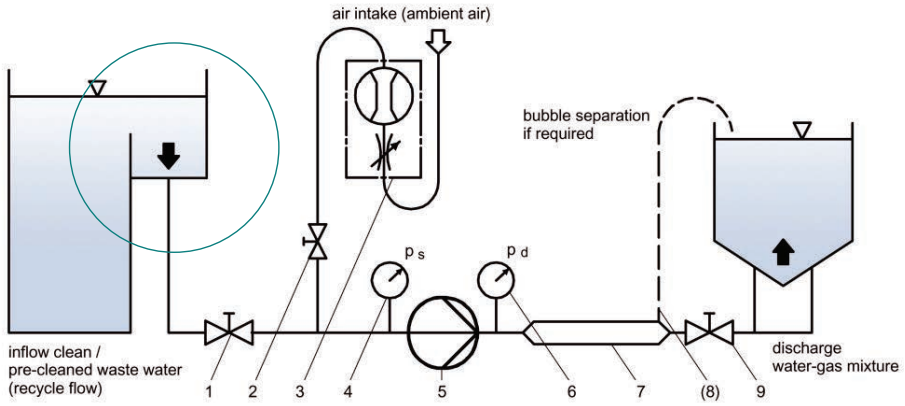

Realize inflow conditions at pump inlet side

2.2 Initial Starting and Operation of EDUR Multiphase Pumps

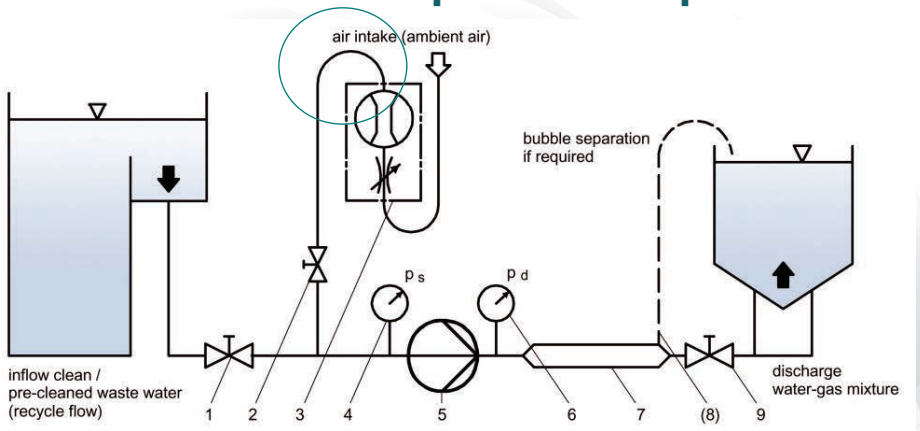



Gas supply line guidance above highest liquid-level in order to avoid that water will attain the air flow measuring device (3)

2.2 Initial Starting and Operation of EDUR Multiphase Pumps

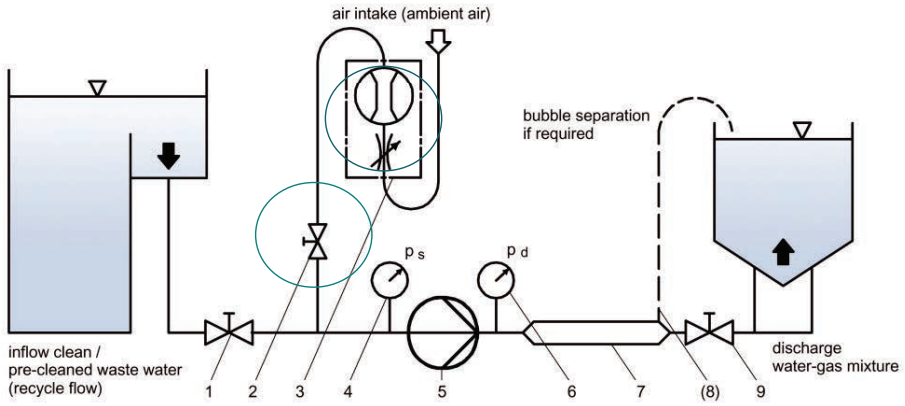



(3)

(2)

Select air flow measuring device (3) with suitable metering range and with needle valve (2) for optimal adjustment of the air flow

2.2 Initial Starting and Operation of EDUR Multiphase Pumps

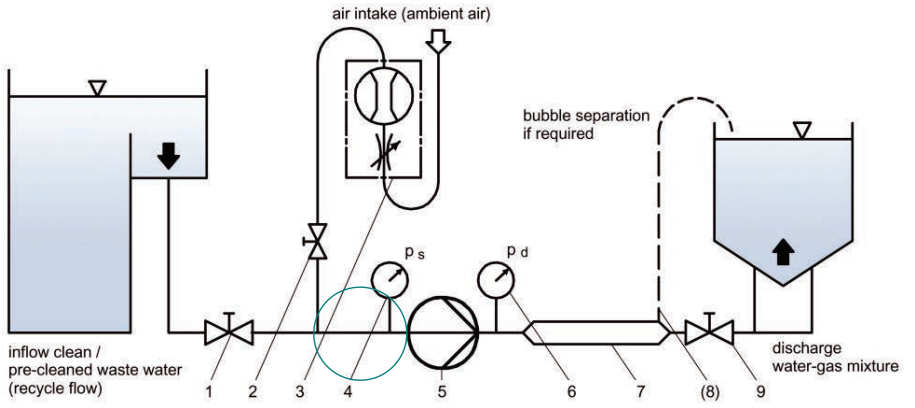

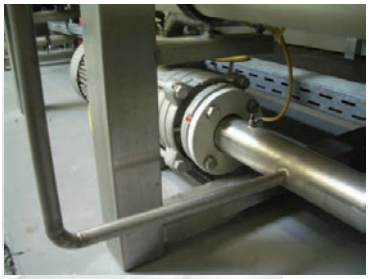

Design inflow pipe for the range of air inlet til pump inlet flange in a short and horizontal way in order to ensure that always a constant water-air proportion arrives at the pump

2.2 Initial Starting and Operation of EDUR Multiphase Pumps

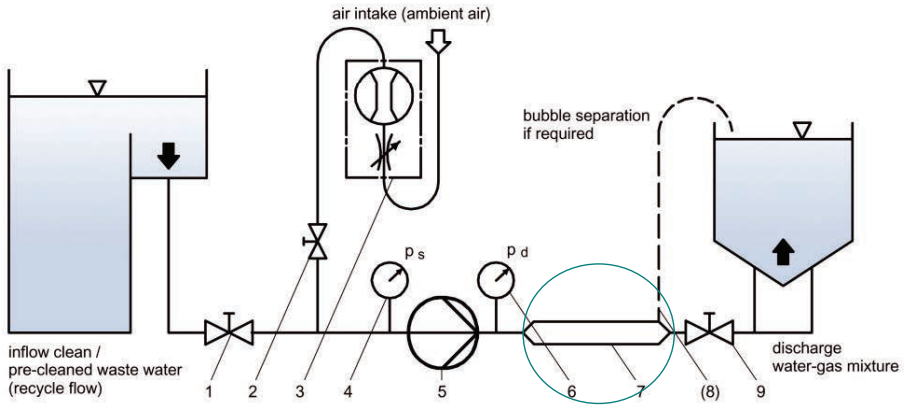



As solution line for DAF a pipe line with corresponding larger nominal width (7) will be suitable in order to achieve a dwell period of approx. 1 minute until relaxation. If required, surplus air can be led away by means of a bubble separator (8) at highest position before relaxation (pipe line with very small nominal width)

APPENDIX B: SKIMMER ASSEMBLY DRAWING

ITEM: 5000218036-SA301-22 (1X) ⚠

ITEM: 5000218036-SA305-22 (1X)

TOTAL QUANTITY : 2

WEIGHT 367 Kg (808 Lbs)

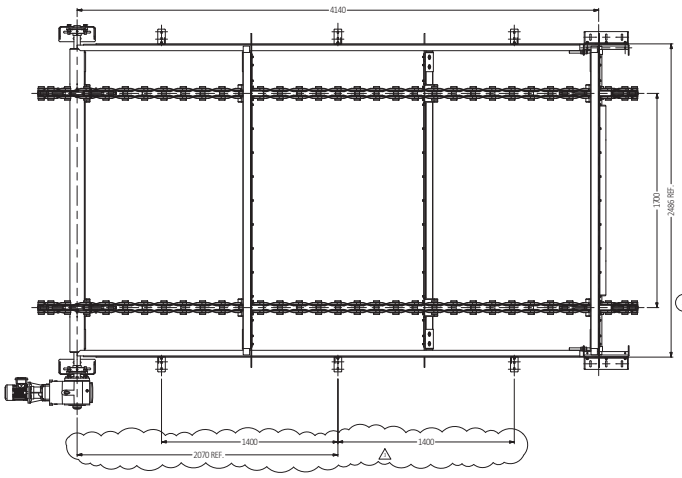

INSTALL REDUCER AND MOTOR
1 RIGHT
1 LEFT
⚠ (REFER TO REDUCER MANUAL FOR PROPER INSTALLATION)

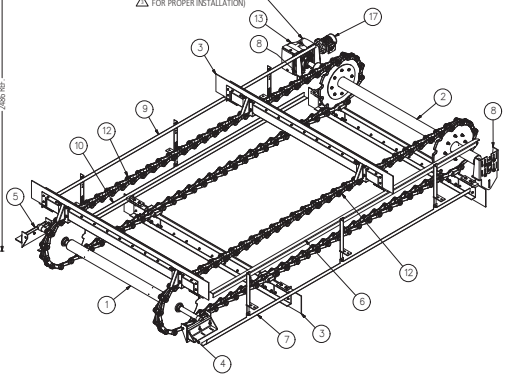

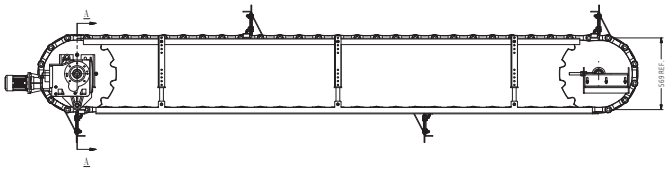

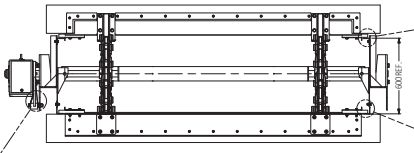

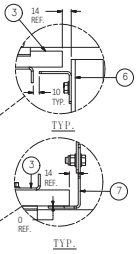

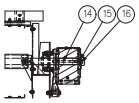

SECTION A-A

SCALE: 1 : 15

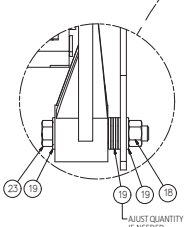

PA X	ITEM	DESCRIPTION	MATÉRIEL MATERIAL	NUMÉRO REF. REF. NUMBER	QTÉ QTY	ATELIER SHOP QTÉ TOT. TOT. QTY	⚠	Δ
	1	TENSION SHAFT WITH SPROCKETS		SA501	1	2		
	2	DRIVE SHAFT WITH SPROCKETS		SA502	1	2		
	3	SCRAPER FLIGHTS		SA503	⚠ 4	8		
	4	TENSIONING DEVICE (RIGHT)		SA504	1	2		
	5	TENSIONING DEVICE (LEFT)		SA505	1	2		
	6	TOP GUIDING RAIL (RIGHT)	Generic	SA506	1	2		
	7	BOTTOM GUIDING RAIL (RIGHT)	Generic	SA507	1	2		
	8	DRIVE SHAFT SUPPORT		SA508	2	4		
	9	TOP GUIDING RAIL (LEFT)	Generic	SA509	1	2		
	10	BOTTOM GUIDING RAIL (LEFT)	Generic	SA510	1	2		
	12	NON METALLIC CHAIN (ALLIED-LOCKE) #NCS7205 , LENGTH:10.100m		ST-999-201	2	4		
	13	RIGHT ANGLE HELICAL-BEVEL SPEED REDUCER/GEAR MOTOR (NORD) SK 9033.1 AZBD 56C		ST-999-210	1	2		
	14	KEY 1/2" WIDE X 1/2" HIGH	Generic	ST-999-210	1	2		
	15	FLAT WASHER Ø3/4" TYPE A, THIN	AISI 304	ST-999-210	1	2		
	16	HEX. HEAD BOLT Ø3/4"-10UNC X 1 1/2" LG.	ASTM-F593D-304	ST-999-210	1	2		
	17	MOTOR (NORD) 6.1L/4	Generic	ST-999-211	1	2		
	18	NUT Ø5/8"-11UNC	ASTM-F594C-304	FXNUYX200221	1	2		
	19	FLAT WASHER Ø5/8" TYPE A, THIN	AISI 304	FXWAYY200674	7	14		
	23	HEX. BOLT, Ø5/8"-11UNC X 4 LG.	ASTM-F593C-304	FXSCYY200501	1	2		

REV.	DESCRIPTION	DATE	REVISÉ REVISED	VÉRIFIÉ CHECKED	APPROUVÉ APPROVED
3	FOR ASSEMBLY	2019-07-02	A.D.	S.M.	F.V.

OVERALL TOLERANCES:

DIMENSIONS IN mm:
0 @ 600 : ± 0.5
600 @ 4000 : ± 1.0
> 4000 : ± 3.0

DIMENSIONS IN inches:
0 @ 24 : ± 1/32 [± .03]
24 @ 160 : ± 1/16 [± .05]
> 160 : ± 1/8 [± .1]

ANGLES: ± 0° 10'
REMOVE SHARP EDGES
MACHINED SURFACES : 250

DESSINATEUR/DESIGNER	A.D.	2019-03-26
FABRICATEUR/CHECKER	S.M.	2019-03-26
INGÉNIEUR/ENGINEER	F.V.	2019-03-26

CLIENT: IQALUIT WWTP

VEOLIA WATER TECHNOLOGIES

TITRE / TITLE:
SPIDFLOW
SCRAPER
ASSEMBLY

ÉCHELLE / SCALE: 1:15

PROJET / PROJECT - DESSIN No / DRAWING No: 5000218036 - SA500

INTÉRIEUR / INTERNAL use

FEUILLET / SHEET 1 / 1

REV/REV 3

Ce document est la propriété de VEOLIA et ne peut être reproduit sans son autorisation écrite.
This document is the property of VEOLIA and cannot be reproduced without its written authorization.

APPENDIX C: GEARBOX O&M MANUAL

NORD GEAR LIMITED

Member of the NORD DRIVESYSTEMS Group

Reprint

NORD Gear Limited / 41 West Drive / Brampton ON L6T 4A1

Veolia Water Technologies
4105 Rue Sartelon
St-Laurent QC H4S 2B3

Phone	(905) 796-3606 Jatinder
Contact	Singh
Direct	(905) 456-5029
Fax	(905) 796-8130
Email	Jatinder.Singh@nord.com
Website	www.nord.com

Item	Description	Part Number	Qty	Total

200 SK9033.1AZBD 56C0.5

Product Name	Heli-Bvl Gearbox w/NEMA Adapt.
Nominal Motor Speed	1,750
Ratio	1,361.37
Nominal Output Speed	1.300 rpm
Service Factor	1.00
Nominal Output Torque (lb-in)	13,719.00
Max. Torque Capacity (Nm)	1,550.00
Max. Torque Capacity (lb-in)	13,719.00
Maximum Motor Power (kW)	0.209
Maximum Motor Power (HP)	0.280
Gearbox Mounting Position	M1
Housing Type	Hollow Shaft/B14 Flange
Input Adapter	N56C0.5
Output Shaft Dimensions	2.000"
Breather	Autovent
Torque Arm / Bracket	Torque arm
Torque Arm Position	Ship Torque Arm Loose.
Fixing Element	Fixing Element Kit
Lubricant Type	SHELL OMALA S2 G 220
Lubricant Supplier	Shell
Lubricant	CLP 220
Quantity Lubricant(l)	3.700
Qty. lubricant (Qts)	3.910
Color	Stainless Steel Gray
Paint Option	Standard
CE Logo	No
Separate part	Coupling half + sprocket Fixing element Torque arm

Weight	approx. 77 KG /PC

Item	Description	Part Number	Qty	Total

400 63L/4 CUS 56C **31610013**

Product Name	Motor
Motor Type	CUS
Motor Speed	1,690 1/min
Environmental temp. motor	40°C
Motor Power (KW)	0.180
Motor Power (HP)	0.250
Voltage (V)	332/575
Frequency (Hz)	60
Duty Cycle	S1
Insulation Class	F
Rated Current Low Volt (A)	0.80
Rated Current High Volt (A)	0.46
Power Factor 1	0.71
Motor Position	NEMA Motor 56C
Motor Connection	Star; High Voltage
Motor Enclosure Type	IP55
Terminal Box Position	1/I
CE Logo	Yes
CCC Logo	No
Paint Option	Without paint
Weight	approx. 4.200 KG /PC

Betriebs- und Wartungsanleitung
Operating and Maintenance Instruction
Käyttö- ja huolto-ohje

B 1010
08/2002
D GB FIN

Diese Sicherheitshinweise sind aufzubewahren
These safety instructions must be kept available
Säilytä nämä ohjeet

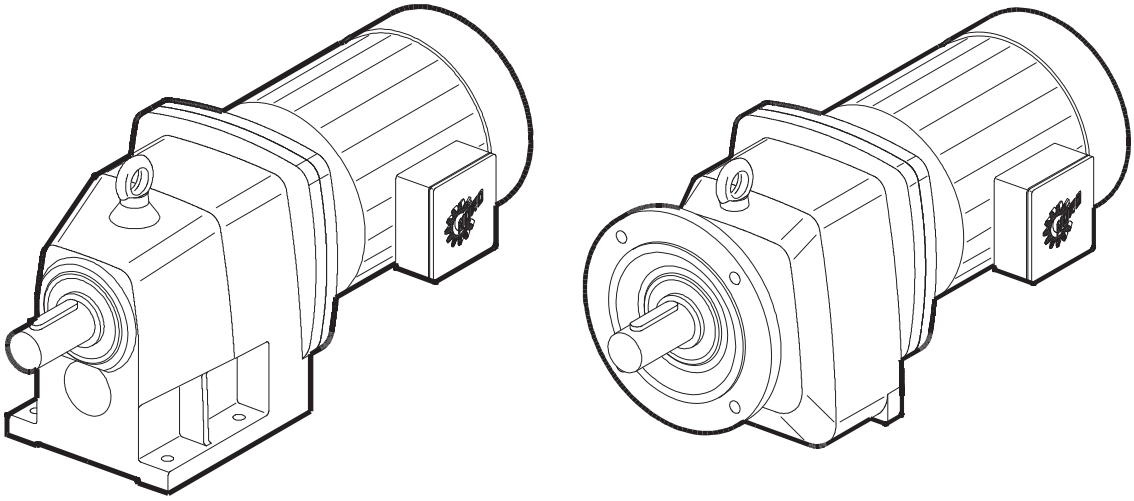

Block – Stirnradgetriebe

Unicase Helical Gearboxes

Unicase -Hammasvaihteet

∆ **Warnung**
Es wird vorausgesetzt, daß die grundsätzlichen Planungsarbeiten der Anlage sowie Transport, Montage, Installation, Inbetriebnahme, Wartung und Reparaturen von qualifiziertem Personal ausgeführt bzw. durch verantwortliche Fach-kräfte kontrolliert werden. Bei Arbeiten am Getriebemotor muß garantiert sein, daß keinerlei Spannung anliegt, und dieser gegen Wieder-einschaltung gesichert ist.

∆ **Caution**
It is presumed that fundamental project work as well as all work with regard to transport, assembly, installation, starting-up, maintenance and repair is performed by qualified personnel or supervised by skilled labour taking overall responsibility. Make absolutely sure that no voltage is applied at all while work is being done on the geared motor. Drive must also be secured against switching on.

∆ **Varoitus**
Edellytyksenä on, että laitteiston perussuunnittelutyön sekä kuljetus-, kokoonpano-, asennus-, käyttöönotto-, huolto- ja korjaustöiden suorittajalla tai töitä valvovalla ja niistä vastaavalla henkilöllä on asianmukainen ammattipätevyys. Varmista ehdottomasti, ettei moottorille tule minkäänlaista jännitettä tehtäessä moottoriin tai vaihteeseen kohdistuvia töitä ja ettei käyttölaitetta kytketä vahingossa päälle.

∆ **Warnung**
Veränderungen gegenüber dem Normalbetrieb (höhere Leistungsaufnahme, Temperaturen, Schwingungen, Geräusche usw. oder An-sprechen der Überwachungseinrichtungen) lassen vermuten, daß die Funktion beein-trächtigt ist. Zur Vermeidung von Störungen, die ihrerseits mittelbar oder unmittelbar schwere Personen- oder Sachschäden bewirken könnten, muß das zuständige Wartungspersonal dann umgehend verständigt werden.

∆ **Caution**
Any deviation from normal operating conditions (increased power consumption, temperature, vibrations, noise etc.) or warning signals by monitoring equipment suggest malfunction. Inform the responsible maintenance personnel at once to prevent the trouble from getting worse and causing, directly or indirectly, serious physical injury or material damage.

∆ **Varoitus**
Kaikki poikkeamat normaaleista toiminta-arvoista (tehonkulutuksen kasvu, lämpötilan kohoaminen, tärinä, melu tms.) tai valvontalaitteiden antamat varoitusviestit viittaavat toimintahäiriöihin. Kerro niistä välittömästi huollosta vastaavalle henkilöstölle ongelman pahenemisen ja siitä aiheutuvan suoran tai epäsuoran henkilö- tai materiaalivahingon ehkäisemiseksi.

∆ Im Zweifelsfall die entspechenden Betriebsmittel sofort abschalten!

∆ In case of doubt disconnect the machine immediately!

∆ Epäilyttävissä tapauksissa sammuta laite välittömästi !

Aufstellung, Vorbereitung
- Transportösen am Getriebe sind für das Gewicht des Antriebs ausgelegt
- Fundamente ausreichend bemessen und schwingungsfrei ausführen
- Getriebe oder -motor fest und ohne Verspannung montieren
- ausreichende Belüftung vorsehen
- serienmäßiges Innengewinde nach DIN 332 zum Aufziehen von Verbindungselementen auf die Wellen benutzen
- Schläge auf die Wellen vermeiden (Lagerbeschädigung!)
- Maschine und Getriebe möglichst mit elastischen Kupplungen verbinden
- vor dem Einschalten Abtriebselemente aufziehen bzw. Paßfeder sichern
- bei Aufsteckgetrieben mit Drehmomentstütze Gummipuffer verwenden

Preparing and performing installation
- Lifting devices on the drive are designed to carry the drive weight
- the foundation (base) should be of adequate size and vibration-proof
- install gear unit or geared motor rigid and braceless
- ensure sufficient ventilation
- make use of tapped hole (DIN 332) to suit fastening to the shaft end
- avoid shocks on shafts (bearing damage!)
- preferably use flexible coupling between output shaft and driven machine
- fit output elements to shaft end or secure feather key before starting the motor
- use torque arm with rubber buffer on shaft mounting gearboxes

Asennuksen valmistelu ja asennus
- vaihteessa olevat nostosilmukat on suunniteltu kantamaan vaihdemoottorin paino
- kiinnitysalustan (perustusten) mitoituksen on oltava riittävä ja alustan on oltava tärinätön
- asenna vaihde lujasti kiinni siten, ettei sen runkoon kohdistu jännityksiä
- varmista ilmanvaihdon riittävyys
- käytä kytkimiä ja ketjupyöriä kiinnitettäessä hyväksi akselin päässä olevaa, standardin DIN 332 mukaista kierrereikää
- vältä akseleihin kohdistuvia iskuja (laakerivaurion vaara!)
- mikäli mahdollista, käytä toisioakselin ja käytettävän koneen välissä joustavaa kytkintä
- kiinnitä voimansiirtoelementit akselin päähän tai varmista akselikiila ennen moottorin käynnistämistä
- käytä akselille kiinnitettävien vaihteiden yhteydessä kumityynyllä varustettua momenttivartta tai momenttituen kumeja

Elektrischer Anschluß
- Motoranschluß nach Schaltbild vornehmen
- Übereinstimmung von Netzspannung und Frequenz mit den Typenschild-Daten sicherstellen
- Sichere Schutzleiterverbindung herstellen
- evtl. falsche Drehrichtung korrigieren durch Vertauschen von 2 Phasen
- Nicht benötigte Kabeleinführungsöffnungen und den Kasten selbst staub- und wasserdicht verschließen
- Überbelastung und Phasenausfall durch Schutzschalter vorbeugen
- Einstellen des Motorschutzschalters auf Nennstrom
- Schaltbilder auf der letzten Seite

Connection of motor
- Connect motor according to diagram
- make sure that mains voltage/frequency are in accordance with nameplate information
- make secure protective conductor conection
- if motor is running in reverse direction, interchange two phases
- Close unused cable entrances holes and the box itself in a dust- and watertight manner.
- install protective switches to prevent overload and phase failure
- set motor protection switch to nominal current
- wiring diagrams on the last page

Moottorin sähköinen kytkentä
- kytke moottori kytkentäkaavion mukaisesti
- varmista, että verkon jännite ja taajuus vastaavat tyyppikilvessä annettuja arvoja
- varmista, että suojamaajohdin tulee kytketyksi oikein
- sulje käyttämättömät kaapeliläpivientireiät ja itse liitäntäkotelo pöly- ja vesitiiviisti
- mikäli moottorin pyörimissuunta on väärä, vaihda kahden vaihejohdon paikkaa keskenään
- asenna laitteistoon ylikuormitus- ja vaihekatkossuojakytkimet
- säädä moottorinsuojakytkimen virta-arvo moottorin nimellisvirran mukaisesti
- kytkentäkaavio löytyy tämän ohjekirjan viimeiseltä sivulta

Inbetriebnahme
- bei längeren Lagerzeiten besondere Vorkehrungen treffen (siehe Werknormblatt "Langzeitlagerung")
- Lage der Ölstandschraube nach Bauformtabellen des entsprechenden Kataloges feststellen
- Prüfen des Ölstandes
- Entfernen des Verschlußstopfens vor Inbetriebnahme (Überdruck!), ggf. Druckentlüftungsschraube montieren
- Normale Erstbefüllung: siehe Schmierstofftabelle
- Luftgekühlte Motoren sind für Umgebungstemperaturen von - 20°C bis +40°C sowie Aufstellungshöhen â 1.000 m über NN ausgelegt

Der Einsatz im Ex-Bereich ist nicht zulässig, sofern nicht ausdrücklich hierfür vorgesehen

Starting up
- in case of long-time storage take special precautions (as provided in works standard sheet "Extended Storage")
- check position of oil-level plug with help of mounting position tables in applicable catalogue
- check oil-level
- prior to starting-up, remove vent plug from vent screw if necessary
- if not specified otherwise, first oil filling as is shown in list of lubricants
- air-cooled motors are designed for ambient temperautres between -20°C and +40°C and for installation at altitudes â 1.000 m above M.S.L.

Their use in hazardous areas is prohibited unless they are expressly intended for such use (follow additional instructions)

Käyttöönotto
- pidemmän varastoinnin jälkeen tee erityiset, tehdasstandardilehdellä ”Pitkäaikaisvarastointi” mainitut varotoimet
- tarkista öljyn pinnankorkeuden tarkistustulpan ja huohottimen paikat asennusasento taulukosta
- tarkista öljyn pinnankorkeus
- **poista huohottimessa oleva kumitappi**, (estää öljyn valumisen huohottimesta kuljetuksen aikana)
- ellei muuta ole mainittu, ensimmäinen öljytäytös voiteluainetaulukon mukaan
- tuuletinjäähdytteiset moottorit on suunniteltu ympäristölämpötila-alueelle -20°C ... +40°C ja asennettaviksi enintään 1000 metrin korkeudelle merenpinnasta

niiden käyttö räjähdysvaarallisissa tiloissa on kielletty, ellei niitä ole nimenomaan tarkoitettu tällaiseen käyttöön (noudata lisäohjeita)

Wartung
MOTOR
- Staubablagerungen entfernen (Überhitzung!)
- Wälzlager ausbauen, reinigen und einfetten
- Es ist zu beachten, daß der gesamte Freiraum um das Lager ca. 1/3 mit Fett gefüllt ist
- Schmierstoffsorten siehe unten

GETRIEBE
- regelmäßige Ölstandskontrolle
- Wechseln des Schmierstoffes alle 10.000 Betriebsstunden oder spätestens nach 2 Jahren.
- Doppelte Fristen bei synthetischen Produkten
- Verkürzung der Schmierstoffwechselintervalle bei extremen Betriebsbedingungen (hohe Luftfeuchtigkeit, aggressive Umgebung und hohe Temperaturschwankungen)
- Verbinden des Schmierstoffwechsels mit gründlicher Reinigung des Getriebes

∆ Synthetische und mineralische Schmierstoffe nicht miteinander mischen! Das gilt auch für die Entsorgung der Schmierstoffe!

Maintenance
MOTOR
- remove dust deposit (overheating)
- dismount anti-friction bearings for cleaning and refill with grease
- ensure that the bearing cage is packed to about 1/3 with grease, distribute evenly
- select proper type of lubricating grease from following table

GEARBOX
- regular oil level check
- change lubricant every 10.000 working hours or after two years at the latest.
- combine the lubricant change with thorough cleaning of gear unit
- lubricant changing intervals will be twice as long if synthetic products are used
- extreme working conditions (high air humidity, aggressive media and large temperature variations) call for reduced lubricant changing intervals

∆ Synthetic and mineral lubricants must not be mixed either for filling or for disposal!

Huolto
MOOTTORI
- puhdista moottori pölystä (ylikuumenemisen ehkäisemiseksi!)
- irrota laakerit puhdistusta varten ja täytä ne uudelleen rasvalla
- rasvaa tulee olla laakeripesässä noin 1/3 sen tilavuudesta tasaisesti levitettynä
- valitse rasva jäljempänä olevasta voiteluainetaulukosta

VAIHDE
- tarkista öljymäärä säännöllisesti
- vaihda voiteluaine 10.000 käyttötunnin tai vähintään kahden vuoden välein
- puhdista vaihde perusteellisesti öljynvaihdon yhteydessä
- öljynvaihtovälit voidaan kaksinkertaistaa synteettistä öljyä käytettäessä
- äärimmäiset käyttöolosuhteet (korkea ilmankosteus, aggressiivisten aineiden korkea pitoisuus ilmassa ja suuret lämpötilanvaihtelut) vaativat öljynvaihtovälin lyhentämistä

∆ Älä sekoita synteettisiä ja mineraaliöljypohjaisia voiteluaineita keskenään vaihteen voitelussa.

ÖLFÜLLMENGE [cm³]	**CAPACITY [cm³]**								**VOITELUAINEEN MÄÄRÄ [cm³]**			
	Waagerechte Anordnung Horizontal position Vaakasuora asennusasento								Senkrechte Anordnung Vertical position Pystysuora asennusasento			
	Stirnradgetriebe einstufig				**Helical Gearboxes single reduction**				**Hammasvaihteet, yksiportaiset**			
	B 3	**B 6**	**B 7**	**B 8**	**B 5**	**B 5I**	**B 5II**	**B 5III**	**V 1**	**V 3**	**V 5**	**V 6**
SK 11 E	250	350	350	550	300	500	400	400	300	350	400	500
SK 21 E	600	1.000	1.000	1.200	500	1.100	900	900	700	1.400	1.000	1.200
SK 31 E	1.100	1.700	1.700	2.200	800	1.650	2.000	2.000	1.100	1.300	2.300	2.700
SK 41 E	1.700	2.600	2.600	3.300	1.000	2.800	3.300	3.300	1.600	2.600	2.500	2.600
SK 51 E	2.200	3.400	3.400	4.700	1.800	4.100	3.800	3.800	3.000	3.500	4.000	4.400
	Stirnradgetriebe zweistufig				**Helical Gearboxes double reduction**				**Hammasvaihteet, kaksiportaiset**			
	B 3	**B 6**	**B 7**	**B 8**	**B 5**	**B 5I**	**B 5II**	**B 5III**	**V 1**	**V 3**	**V 5**	**V 6**
SK 02	150	400	400	700	250	600	500	500	600	600	600	600
SK 12	250	500	500	850	350	900	600	600	900	850	750	750
SK 22	500	1.350	1.350	2.000	700	2.000	1.550	1.550	1.800	2.000	1.800	1.800
SK 32	900	2.000	2.000	3.000	1.300	3.300	2.400	2.400	3.100	2.900	2.900	2.500
SK 42	1.300	3.200	3.200	4.500	1.800	4.500	3.700	3.700	4.000	4.400	4.300	5.800
SK 52	2.500	5.100	5.100	6.800	3.000	6.200	5.600	5.600	7.400	6.800	6.800	7.000
SK 62	6.500	15.000	15.000	13.000	7.000	14.000	16.000	16.000	18.500	15.000	16.000	15.000
SK 72	9.000	23.000	23.000	18.000	10.000	18.500	23.000	23.000	28.000	23.000	26.000	23.000
SK 82	14.000	32.000	32.000	27.000	15.000	29.000	34.500	34.500	45.000	37.000	44.000	35.000
SK 92	25.000	52.000	52.000	47.000	26.000	47.000	52.000	52.000	78.000	73.000	76.000	73.000
SK 102	36.000	71.000	71.000	66.000	40.000	66.000	72.000	72.000	104.000	81.000	102.00	79.000
	Stirnradgetriebe dreistufig				**Helical Gearboxes triple reduction**				**Hammasvaihteet, kolmiportaiset**			
	B 3	**B 6**	**B 7**	**B 8**	**B 5**	**B 5I**	**B 5II**	**B 5III**	**V 1**	**V 3**	**V 5**	**V 6**
SK 03	300	600	600	800	500	900	800	800	1.100	800	900	1.000
SK 13	600	700	700	1.100	850	1.200	950	950	1.200	1.200	1.200	1.250
SK 23	1.300	1.600	1.600	2.300	2.500	1.500	2.800	2.800	2.800	2.600	2.350	2.400
SK 33 N	1.600	2.300	2.300	3.200	1.900	3.500	2.600	2.600	4.400	3.400	4.200	2.900
SK 43	3.000	3.600	3.600	5.200	3.500	5.000	4.100	4.100	6.100	5.700	6.600	5.600
SK 53	4.500	6.000	6.000	7.700	5.200	7.000	6.700	6.700	8.900	8.400	8.700	8.700
SK 63	10.000	13.000	13.000	11.000	11.000	12.000	14.000	14.000	18.000	14.000	16.000	14.500
SK 73	14.000	20.000	20.000	17.500	14.000	18.000	20.000	20.000	27.500	22.500	27.000	20.000
SK 83	22.000	33.000	33.000	26.000	23.000	27.000	34.000	34.000	40.000	34.000	37.000	31.000
SK 93	40.000	49.000	49.000	44.000	40.000	44.000	49.000	49.000	74.000	70.000	72.000	70.000
SK 103	55.000	67.000	67.000	55.000	55.000	59.000	67.000	67.000	99.000	78.000	97.000	71.000

Die Normalbefüllung der Getriebe ist Mineralöl. Synthetisches Öl ist gegen Mehrpreis lieferbar.
Standard lubricant for the gearboxes is mineral-oil. Synthetic oil is available at a surcharge.
Vaihde toimitetaan vakiona mineraaliöljytäytöksellä. Synteettinen öljy saatavissa lisähintaan.

HINWEIS / REMARK / HUOMAUTUS:
Ölfüllmengen sind ca.Angaben. Ölniveau anhand der Ölkontrollschraube prüfen.
Filling quantities are approx. figures. Oil level must be checked according to oil-level plugs.
Öljyn täyttömäärät ovat likimääräisiä. Öljyn pinnankorkeus on tarkistettava pinnankorkeuden tarkastustulpan kautta.

Hinweis:
Diese Tabelle stellt vergleichbare Schmierstoffe unterschiedlicher Hersteller dar. Innerhalb einer Viskosität und Schmierstoffsorte kann der Ölhersteller gewechselt werden. Beim Wechsel der Viskosität bzw. der Schmierstoffsorte muß Rücksprache mit uns gehalten werden, da sonst keine Gewährleistung für die Funktionstüchtigkeit unserer Getriebe übernommen werden kann.

Note:
This table lists compatible lubricants of different suppliers. Within the same viscosity class and type of lubricant the supplier can be chosen freely. In case you change the viscosity class resp. the type of lubricant you should contact us in advance as otherwise we cannot assure the proper function of our drive and the warranty becomes void.

Huom:
Voiteluaineiden vertailutaulukko valmistajittain.
Voiteluaineen merkki voidaan valita vapaasti samasta viskositeettiluokasta. Vaihdettaessa viskositeettiluokkaa on voiteluaineen sopivuus varmistettava NORDilta jotta voimme taata vaihteen moitteettoman toiminnan ja takuun voimassaolon.

Schmierstoffarten / Type of lubricant / Voiteluainetyyppi												
Schmierstoffart Type of lubrcant Voiteluaineen tyyppi	**Umgebungstemp. Ambient temp. Temp. Ambiante Ympäristön lämpötila**	ARAL	BP	Castrol	DEA	ESSO	FUCHS	KLÜBER LUBRICATION	Mobil	Optimol	Shell	Tribol
Mineralöl Mineral oil Mineraaliöljy	Worm gear Kierukkavaihde 0 ... 40°C ISO VG 680	Degol BG 680 Degol BG 680 plus	--	Alpha SP 680	Falcon CLP 680	--	Renolin CLP 680 CLP 680 Plus	Klüberoil GEM 1-680	Mobilgear: - 636 - XMP 680	Optigear BM 680	Shell Omala 680	Tribol 1100/680
	ISO VG 220 - 5 ... 40°C (normal)	Degol BG 220 BG 220 plus	Energol GR-XP 220	Alpha SP 220 Alpha MW220 Alpha MAX 220	Falcon CLP 220	Spartan EP 220	Renolin CLP 220 Renolin CLP 220 Plus	Klüberoil GEM 1-220	Mobilgear 630 Mobilgear XMP 220	Optigear BM 220	Shell Omala 220	Tribol 1100 / 220
	ISO VG 100 - 15 ... 25°C	Degol BG 100 BG 100 plus	Energol GR-XP 100	Alpha SP 100 Alpha MW 100 Alpha MAX 100	Falcon CLP 100	Spartan EP 100	Renolin CLP 100 Renolin CLP 100 Plus	Klüberoil GEM 1-100	Mobilgear: - 627 - XMP 110	Optigear BM 100	Shell Omala 100	Tribol 1100 / 100
	ISO VG 15 - 45 ... - 15°C *	Vitamol 1010	Bartran HV 15	Hyspin AWS 15 Hyspin SP 15 Hyspin ZZ 15	Astron HVLP 15	Univis J13	Renolin B 15 HVI	Isoflex MT 30 rot	Mobil DTE 11 M	Ultra 10	Shell Tellus T 15	Tribol 943 AW 22
Synthetisches Öl Synthetic oil Synteettinen öljy	Worm gear Kierukkavaihde -5 ... 60°C ISO VG 680	Degol GS 680	Energol SG-XP 680	--	--	--	Renolin PG 680	Klübersynth GH-6-680	Glygoyle HE 680	Optiflex A 680	Shell Tivela S 680	Tribol 800 / 680
	ISO VG 220 -25 ... 80°C *	Degol GS 220	Enersyn SG-XP 220	Alphasyn PG 220	Polydea PGLP 220	Glycolube 220	Renolin PG 220	Klübersynth GH-6-220	Glygoyle HE 220	Optiflex A 220	Shell Tivela WB Tivela S 220	Tribol 800/ 220
Biologisch abbaubares Öl Biodegradable oil Biohajoava öljy	Worm gear Kierukkavaihde ISO VG 680 -5 ... 40°C	--	--	--	--	--	Plantogear CLP 680	--	--	--	--	--
	ISO VG 220 -5 ... 40°C	Degol BAB 220	Biogear SE 220	Carelub GES 220	Ergon ELP 220	--	Plantogear CLP 220	Klüberbio GM2-220	--	Optisynt BS 220	--	Tribol BioTop 1418 / 220
Lebensmittelverträgliches Öl [1] Food-grad oil [1] Elintarvikelpoinen öljy[1]	Worm gear Kierukkavaihde -5 ... 40°C ISO VG 680	--	--	--	--	--	Bel-Ray No-Tox Synt.Worm Gear Oil 680	Klüberoil 4 UH1-680 Klübersynth UH1 6-680	--	Optileb GT 680	Shell Cassida Fluid GL680	Tribol FoodProof 1800 / 680
	ISO VG 220 -25 ... 40°C	Eural Gear 220	--	Vitalube GS 220	--	Gear Oil FM 220	Bel-Ray No-Tox Gear Oil 90 Synt.Gear Oil 220	Klüberoil 4 UH1-220 Klübersynth UH1 6-220	Mobil DTE FM 220	Optileb GT 220	Shell Cassida Fluid GL220	Tribol FoodProof 1810 / 220 oder 1800 / 220
Synth. Fließfett Synth. fluid grease Synteettinen juokseva rasva	- 25 ... 60°C	Aralub BAB EP0	Enersyn GSF	Alpha Gel 00	--	Fließfett S 420	Renolit LX-PG 00	Klübersynth GE 46-1200 Klübersynth UH1 14-1600 [1]	Glygoyle Grease 00	Obeen UF 00	Tivela Comp. A Tivela GL 00	Tribol 800 / 1000

Schmierstoffarten für Wälzlager / Type of lubricant for anti friction bearings / Laakereiden voiteluainetyyppi												
Schmierstoffart Type of lubricant Voiteluaineen tyyppi	**Umgebungstemp. Ambient temp. Temp. Ambiante Ympäristön lämpötila**	ARAL	BP	Castrol	DEA	ESSO	FUCHS	KLÜBER LUBRICATION	Mobil	Optimol	Shell	Tribol
Fett (Mineralöl-basis) Grease (mineral oil basis) Rasva (mineraaliöljy pohjainen)	- 30 ... 60°C (normal)	Aralub HL 2	Energrease LS 2	Spheerol AP 2 LZV-EP	Glissando 20	Mehrzweckfett Beacon2	Renolit FWA 160	Klüberplex BEM 41-132	Mobilux 2	Longtime PD 2	Shell Alvania R2	Tribol 4020/220-2
	* - 50 ... 40°C	Aralub SEL 2	--	Spheerol EPL2	--	--	Renolit JP 1619	--	--	Longtime PD 1	Shell Alvania RL 2	Tribol 3785
Synthetisches Fett Synthetic grease Syntettinen rasva	* - 25 ... 80°C	Aralub SKL 2	--	Product 783/46	Discor B EP 2 LF	Beacon 325	Renolit S 2 Renolit HLT 2	Isoflex Topas NCA 52 Isoflex Topas NB 52	Mobiltemp SHC 32	Optitemp LG 2	Aero Shell Grease 16 oder 7	Tribol 3499
Biologisch abbaubares Fett Biodegradable Grease Biohajoava rasva	- 25 ... 40°C	Aralub BAB EP 2	BP Biogrease EP 2	Biotec	Dolon E EP 2	--	Plantogel 2 S	Klüberbio M 32-82	Schmierfett UE 100 B	EF 584	Shell Alvania RLB 2	Molub-Alloy BioTop 9488
Lebensmittelverträgliches Fett [1] Food-grade grease [1] Elintarvikekelpoinen rasva [1]	- 25 ... 40°C	Eural Grease EP 2	BP Energrease FM 2	Vitalube HT Grease 2	Tamix FRA 1	Carum 330	Renolit G 7 FG 1	Klübersynth UH1 14-151	Mobilgrease FM 102	Obeen UF 2	Shell Cassida RLS 2	Molub-Alloy Food-Proof 823-2 FM

***** Bei Umgebungstemperaturen unterhalb -30°C und oberhalb 60°C sind Wellendichtringe in besonderer Werkstoffqualität einzusetzen
***** With ambient temperatures below -30°C and above approx. 60°C shaft sealing rings of a special material quality must be used
* Ympäristölämpötilan ollessa alle -30°C tai yli +60°C on käytettävä erikoismateriaalista valmistettuja akselitiivisterenkaita

[1] Lebensmittelverträgliche Öle + Fette nach Vorschrift H1 / FDA 178.3570
[1] Food grade lubricants with USDA-H1 approval FDA 178.3570
[1] Elintarvikekelpoiset voiteluaineet, USDA-H1 hyväksyntä FDA 178.3570

BAUFORMEN
MOUNTING POSITIONS
ASENNUSASENNOT

Waagerechte Anordnung
Horizontal position
Vaakasuora asennusasento

	SK 11 E - SK 51 E	SK 02 - SK 52 SK 03 - SK 53	SK 62 - SK 103
B 3	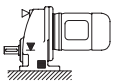	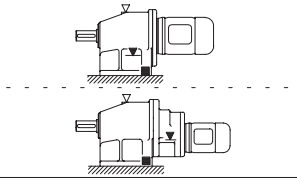	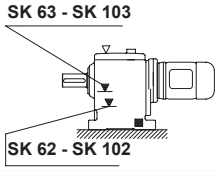
B 6	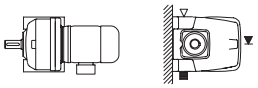	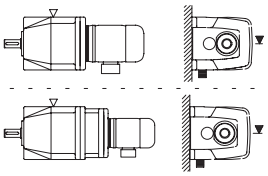	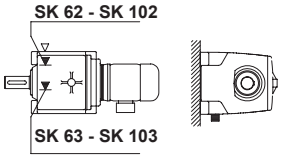
B 7	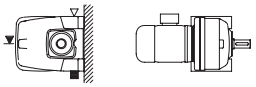	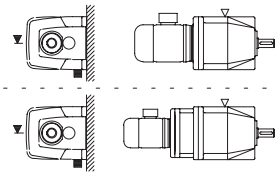	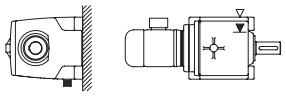
B 8	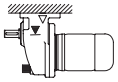	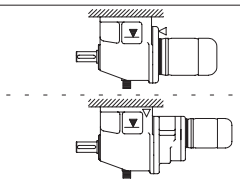	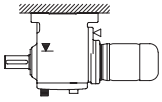
B 5	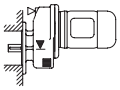	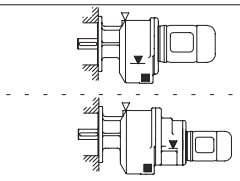	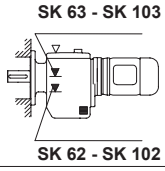
B 5 I	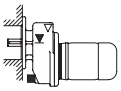	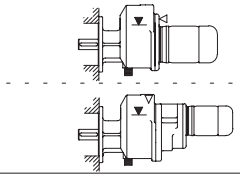	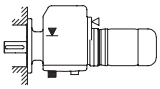
B 5 II	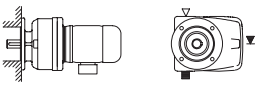	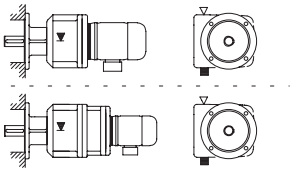	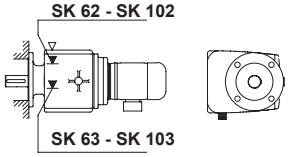
B 5 III	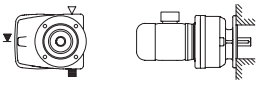	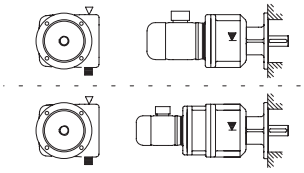	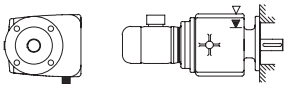

Senkrechte Anordnung
Vertical position
Pystysuora asennusasento

	SK 11 E - SK 51 E	SK 02 - SK 52	SK 03 - SK 53	SK 62 - SK 103
V1 *	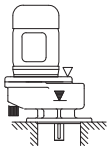	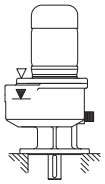	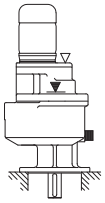	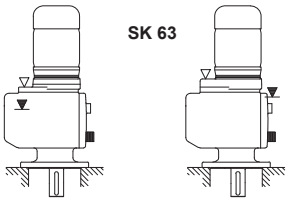
V3	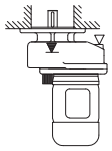	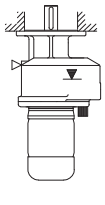	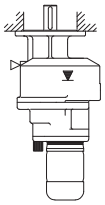	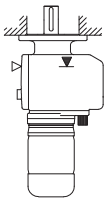
V5 *		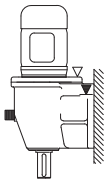	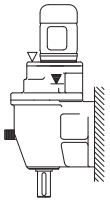	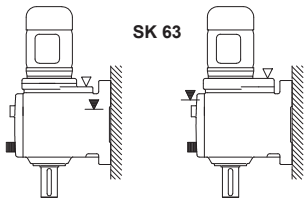
V6	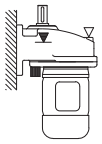	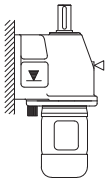	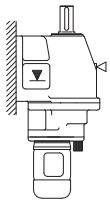	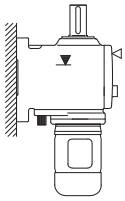

Symbole: **Entlüftung**
Symboles: **Vent plug**
Symbolit: **Huohotih**

Ölstand
Oil level
Öljyn pinnankorkeus

Ölablaß
Drain plug
Öljyn tyhjennys

Befestigung
Mounting surface
Kiinnitys

*** Bauformen V1 oder V5 mit Ölausgleichsbehälter (siehe Katalog G1000)**
*** Mounting position V1 or V5 with lubricant expansion unit (see catalogue G1000)**
*** Asennuslajien V1 ja V5 vaihteissa öljyn paisuntasäiliö (ks. luettelo G1000)**

Schaltbilder / Wiring diagrams / Kytkentäkaaviot

Drehstrom-Motor mit Kurzschlußanker
Three phase squirrel-cage motor
Kolmivaiheinen oikosulkumoottori

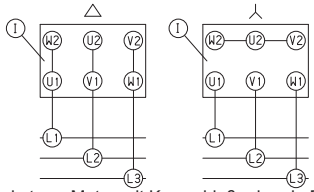

Drehstrom-Motor mit Kurzschlußanker, in Dahlander-Schaltung
Three phase squirrel-cage motor, Dahlander connection
Kolmivaiheinen, Dahlander-kytketty oikosulkumoottori

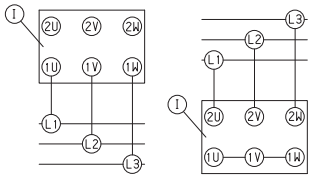

niedrige - Drehzahl - hohe
low - speed - high
pieni - käyntinopeus - suuri

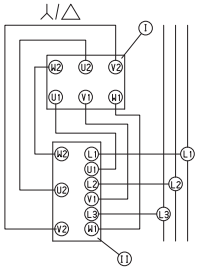

I) Klemmbrett
Terminal board
Riviliitin

II) Schalter
Switch
Kytkin

Drehstrom-Motor, polumschaltbar, zwei getrennte Wicklungen
Three phase motor, polechanging, two separate windings, two speeds
Kolmivaiheinen, vaihtonapainen kaksinopeusmoottori, kaksi erillistä käämitystä

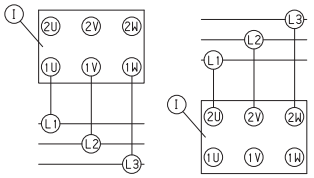

niedrige - Drehzahl - hohe
low - speed - high
pieni - käyntinopeus - suuri



Getriebebau NORD

Schlicht + Küchenmeister GmbH & Co.
P.O.Box 1262, D-22934 Bargteheide
Rudolf-Diesel-Str. 1, D-22941 Bargteheide
Tel. +49 4532 4010, Telefax +49 4532 401253, Telex 261 505
www.nord.com

NORD Gear Oy

Aunankorvenkatu 7
33840 TAMPERE, FINLAND
Puh. (03)254 1800, Fax (03)254 1820
info@nordgear.fi
www.nordgear.fi

Intelligent Drivesystems, Worldwide Services



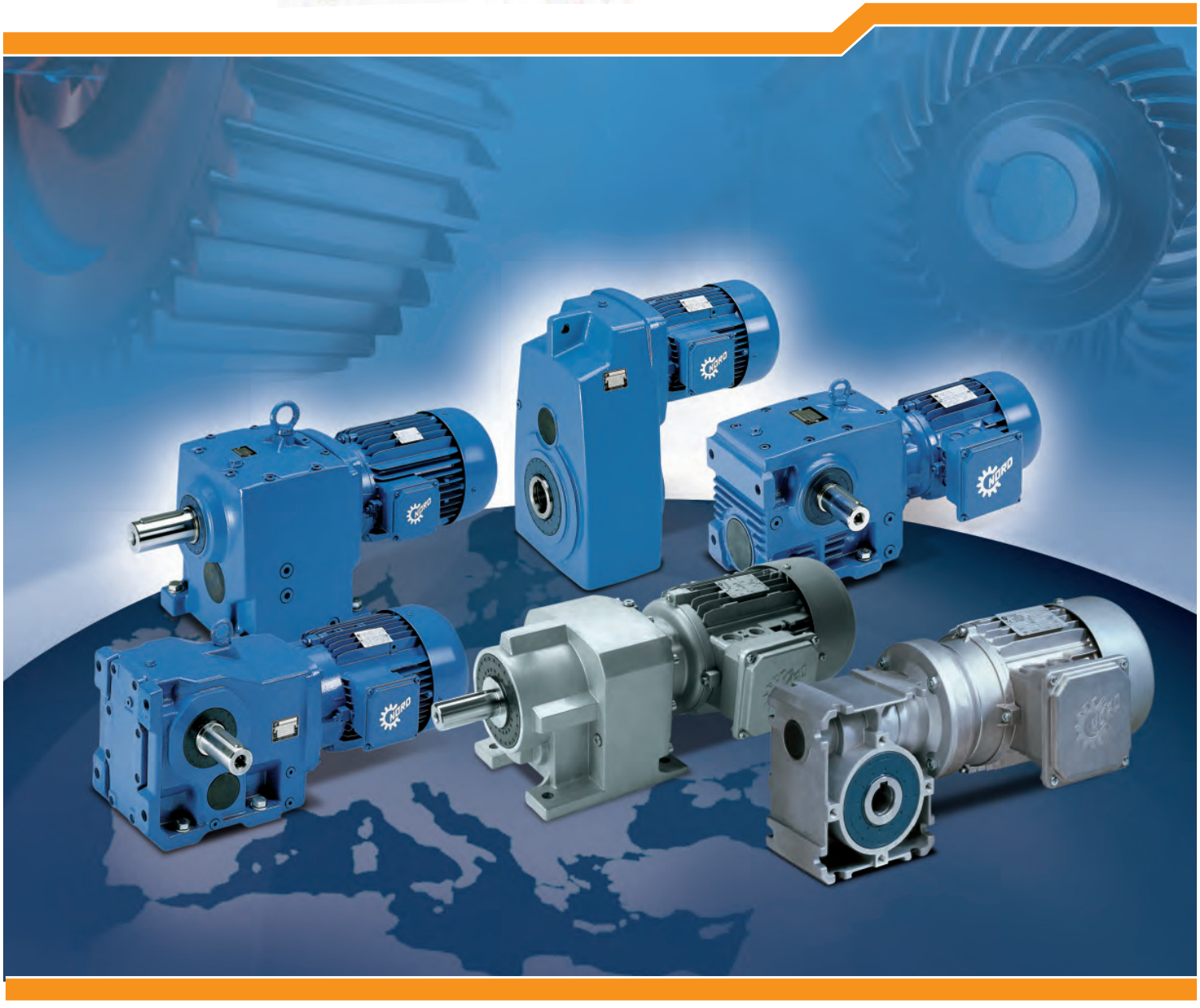

GB

B1000

Operating and Assembly Instructions for Gear Units and Geared Motors

NORD DRIVESYSTEMS



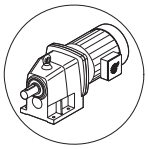









1. Notes **4**
1.1 General information 4
1.2 Safety and information symbols 4
1.3 Correct use 4
1.4 Safety information 5
1.5 Other documents 6
1.6 Disposal 6

2. Description of gear units **7**
2.1 Type designations and gear unit types 7
2.2 Type plate 8

3. Assembly instructions, storage, preparation, installation **9**
3.1 Storing the gear unit 9
3.2 Long-term storage 9
3.3 Transporting the gear unit 10
3.4 Preparing for installation 10
3.5 Installing the gear unit 11
3.6 Fitting hubs on the gear shafts 12
3.7 Fitting push-on gear units 13
3.8 Fitting shrink discs 15
3.9 Fitting the covers 16
3.10 Fitting a standard motor 16
3.11 Retrospective paintwork 18
3.12 Fitting the cooling coil to the cooling system 18

4. Commissioning **19**
4.1 Checking the oil level 19
4.2 Activating the automatic lubricant dispenser 19
4.3 Operation with lubricant cooling 20
4.4 Running-in time for the worm gear unit 20
4.5 Checklist 20

5. Service and maintenance **21**
5.1 Service and maintenance intervals 21
5.2 Service and maintenance work 21

6. Appendix **24**
6.1 Versions and maintenance 24
6.2 Torque values 35
6.3 Troubleshooting 35
6.4 Lubricants 36
6.5 Lubricant quantities 38
6.6 List of addresses 43

1. Notes

1.1 General information

Read the Operating Manual carefully prior to performing any work on or putting the gear unit into operation. Strict compliance with the instructions in this Operating Manual is essential. Getriebebau NORD accepts no liability for damage to persons, materials or assets as a result of the non-observance of this Operating Manual, operating errors or incorrect use. General wearing parts, e.g. radial seals are excluded from the warranty.

If additional components are attached to or installed in the gear unit (e.g. motor, cooling system, pressure sensor etc.) or components (e.g. cooling system) are supplied with the order, the operating instructions for these components must be observed.

If geared motors are used, compliance with the Motor Operating Manual is also necessary.

If you do not understand the contents of this Operating Manual or additional operating instructions, please consult Getriebebau NORD!

1.2 Safety and information symbols

Please always observe the following safety and information symbols!

	**Danger!**
	Risk of fatalities and injury
	**Attention!**
	Machine may be damaged
	**Note!**
	Useful information

1.3 Correct use

These gear units generate a rotational movement and are intended for use in commercial systems. The gear units may only be operated according to the instructions in the Getriebebau NORD technical documentation.

	**Danger!**
	Use in explosion hazard areas is prohibited.

Strict compliance with the technical data on the rating plate is essential.

The documentation must be observed.

Appropriate safety measures must be taken for applications where failure of a gear unit or geared motor may result in injury.

1.4 Safety information

All work including transportation, storage, installation, electrical connection, commissioning, servicing, maintenance and repair must be performed **only by qualified specialist personnel**. It is recommended that repairs to NORD Products are carried out by the NORD Service department.

	**Danger!** Installation and maintenance work may only be performed when gear units are at a standstill. The drive must be isolated and secured to prevent accidental start-up. Tighten the drive elements or secure the parallel key before switching on.

	**Danger!** Only transport use the eyebolts attached to the gear unit. No additional loads may be attached. Transportation aids and lifting gear must have an adequate load-bearing capacity.

If geared motors have an additional eyebolt attached to the motor, this must also be used. Avoid pulling the eyebolts at an angle. The thread of the eyebolt must be fully screwed in.

Observe all safety information, including that provided in the individual sections of this Operating Manual. All national and other regulations on safety and accident prevention must also be observed.

	**Danger!** **Serious physical and property damage** may result from inappropriate installation, non-designated use, incorrect operation, non-compliance with safety information, unauthorised removal of housing components or safety covers and structural modifications to the gear unit.

1.5 Other documents

Further information may be obtained from the following documents:

- Gear unit catalogues (G1000, G2000, G1011, G1012, G1034, G1035)
- Operating and maintenance instructions for the electric motor
- if applicable, operating instructions for attached or supplied options

1.6 Disposal

Observe the current local regulations. In particular, lubricants must be collected and disposed of correctly.

Gear unit components:	**Material:**
Toothed wheels, shafts, rolling bearings, parallel keys, locking rings, …	Steel
Gear unit housing, housing components, …	Grey cast iron
Light alloy gear unit housing, light alloy gear unit housing components, …	Aluminium
Worm gears, bushes, ...	Bronze
Radial seals, sealing caps, rubber components,…	Elastomers with steel
Coupling components	Plastic with steel
Flat seals	Asbestos-free sealing material
Gear oil	Additive mineral oil
Synthetic gear oil (rating plate code: CLP PG)	Polyglycol-based lubricants
Cooling spiral, embedding material of the cooling spiral, screw fittings	Copper, epoxy, yellow brass

2. Description of gear units

2.1 Type designations and gear unit types

Helical gear units SK 11E, SK 21E, SK 31E,SK 41E, SK 51E (single-stage) SK 02, SK 12, SK 22, SK 32, SK 42, SK 52, SK 62N (2-stage) SK 03, SK 13, SK 23, SK 33N, SK 43, SK 53 (3-stage) SK 62, SK 72, SK 82, SK 92, SK 102 (2-stage) SK 63, SK 73, SK 83, SK 93, SK 103 (3-stage)	**Versions / Options** - Foot mounting with solid shaft A Hollow shaft version V Solid shaft version L Solid shaft both sides Z Drive flange B14 F Output flange B5 X Foot mounting XZ Base and output flange B14 XF Base and output flange B5 AL Reinforced axial drive bearings 5 Reinforced output shaft (Standard helical gear unit) V Reinforced drive shaft (Standard helical gear unit) D Torque support K Torque console S Shrink disc VS Reinforced shrink disc EA Hollow shaft with internal spline G Rubber buffer VG Reinforced rubber buffer R Back stop B Fixing element H Covering cap as contact guard H66 Covering cap IP66 VL Reinforced bearings VLII Agitator design VLIII Drywell agitator design IEC Standard motor mounting NEMA Standard motor mounting W With free drive shaft VI Viton radial seals OA Oil expansion vessel OT Oil level tank SO1 Synthetic oil ISO VG 220 CC Casing cover with cooling spiral DR Spring Loaded Breather H10 Modular contrate pre-stage /31 Worm pre-stage /40 Worm pre-stage
NORDBLOC helical gear units SK 320, SK 172, SK 272, SK 372, SK 472, SK 572, SK 672, SK 772, SK 872, SK 972 (2-stage) SK 273, SK 373, SK 473, SK 573, SK 673, SK 773, SK 873, SK 973 (3-stage) SK 072.1, SK 172.1, SK 372.1, SK 572.1, SK 672.1, SK 772.1 SK 872.1, SK 972.1 (2-stage) SK 373.1, SK 573.1, SK 673.1, SK 773.1, SK 873.1, SK 973.1 (3-stage)	
Standard helical gear units SK 0, SK 01, SK 20, SK 25, SK 30, SK 33 (2-stage) SK 010, SK 200, SK 250, SK 300, SK 330 (3-stage)	
Parallel shaft gear units SK 0182NB, SK 0282NB, SK 1282, SK 2282, SK 3282, SK 4282, SK 5282, SK 6282, SK 7282, SK 8282, SK 9282, SK 10282, SK 11282 (2-stage) SK 1382NB, SK 2382, SK 3382, SK 4382, SK 5382, SK 6382, SK 7382, SK 8382, SK 9382, SK 10382, SK 11382, SK 12382 (3-stage)	
Bevel gear units SK 92072, SK 92172, SK 92372, SK 92672, SK 92772 (2-stage) SK 9012.1, SK 9016.1, SK 9022.1, SK 9032.1, SK 9042.1, SK 9052.1, SK 9062.1, SK 9072.1, SK 9082.1, SK 9086.1, SK 9092.1, SK 9096.1 (3-stage) SK 9013.1, SK 9017.1, SK 9023.1, SK 9033.1, SK 9043.1, SK 9053.1 (4-stage)	
Contrate worm gear unit SK 02040, SK 02050, SK 12063, SK 12080, SK 32100,SK 42125 (2-stage) SK 13050, SK 13063, SK 13080, SK 33100, SK 43125 (3-stage)	
MINIBLOC worm gear units SK1 S32, SK1 S40, SK 1S50, SK 1S63, SK 1SU... SK 1SM31, SK 1SM40, SK 1SM50, SK 1SM63 (single-stage) SK 2S32NB, SK 2S40NB, SK 2S50NB, SK 2S63NB, SK 2SU…, SK 2SM40, SK 2SM50, SK 2SM63 (2-stage)	
UNIVERSAL worm gear units SK 1SI31, SK 1SI40, SK 1SI50, SK 1SI63, SK 1SI75, SK 1SIS31,…, SK 1SIS75, SK 1SD31, SK 1SD40,SK 1SD50, SK 1SD63, SK 1SIS-D31,…, SK 1SIS-D63 (single-stage) SK 2SD40, SK 2SD50, SK 2SD63, SK 1SI…/31, SK 1SI…/H10, SK 2SIS-D40,…, SK 2SIS-D63 (2-stage)	

Double gear units consist of two single gear units. They are to be treated as per the instructions in this Manual, i.e. as two individual gear units. Type designation of double gear units: e.g. SK 73/22 (consisting of single gears SK 73 and SK 22)

2.2 Type plate

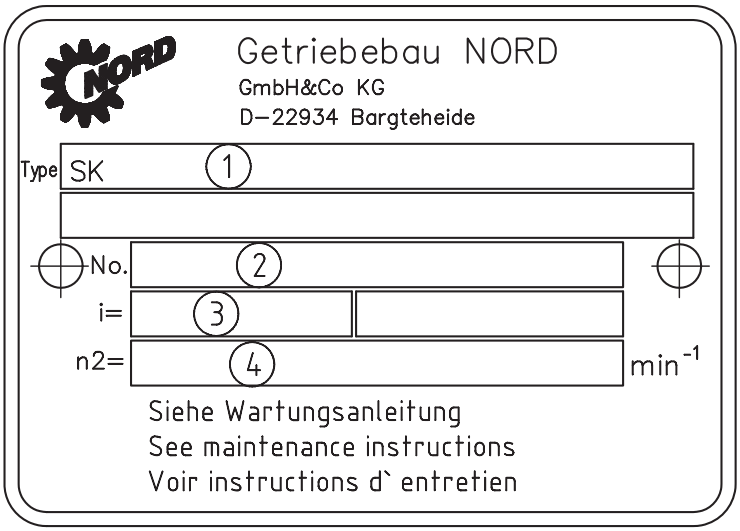

Explanation of the Rating Plate

1 NORD gear unit type

2 Serial number

3 Overall gear unit ratio

4 Rated speed of gear unit drive shaft

3. Assembly instructions, storage, preparation, installation

Please observe the general safety information in Sections 1.4, 1.3 and in the individual sections.

3.1 Storing the gear unit

For short-term storage before commissioning, please observe the following:

- Store in the fitting position (see Section 6.1) and secure gear units against falling
- Lightly grease bare metal housing surfaces and shafts
- Store in dry rooms
- Temperature must not fluctuate beyond the range of –5 °C to +40 °C
- Relative humidity less than 60%
- No direct exposure to sunlight or UV light
- No aggressive, corrosive substances (contaminated air, ozone, gases, solvents, acids, alkalis, salts, radioactivity etc.) in the immediate vicinity
- No vibration or oscillation

3.2 Long-term storage

	Note!
	For storage or standstill periods in excess of 9 months, Getriebebau NORD recommends the long-term storage option. With the long-term storage option and the use of the measures listed below, storage for up to 2 years is possible. As the actual influences on the unit greatly depend on the local conditions, these times should only be regarded as guide values.

Conditions of the gear unit and storage area for long-term storage prior to commissioning:

- Store in the fitting position (see Section 6.1) and secure gear units against falling
- Transportation damage to the external paint must be repaired. Check that a suitable rust inhibitor is applied to the flange bearing surfaces. If necessary apply a suitable rust inhibitor to the surfaces.
- Gear units with the long-term storage option are completely filled with lubricant or have VCI corrosion protection agents added to the gear oil. (See label on gear unit)
- The sealing band in the vent plug must not be removed during storage. The gear unit must remain sealed tight.
- Store in a dry place.
- In tropical regions, the drive unit must be protected against damage by insects
- Temperature must not fluctuate beyond the range of –5 °C to +40 °C
- Relative humidity less than 60%
- No direct exposure to sunlight or UV light
- No aggressive, corrosive substances (contaminated air, ozone, gases, solvents, acids, alkalis, salts, radioactivity etc.) in the immediate vicinity
- No vibration or oscillation

Measures during storage or standstill periods

- If the relative humidity is <50% the gear unit can be stored for up to 3 years.

Measures before commissioning

- If the storage or standstill period exceeds 2 years or the temperature during short-term storage greatly deviates from the standard range, the lubricant in the gear unit must be replaced before commissioning.
- If the gear unit is completely filled, the oil level must be reduced before commissioning.

3.3 Transporting the gear unit

	**Danger!**
	To prevent injury, **the danger area must be generously cordoned off.** Standing under the gear unit during transport is **extremely dangerous.**

	**Attention!**
	Avoid damage to the gear unit. Impacts to the free ends of the shafts may cause internal damage to the gear unit. Use adequately dimensioned and **suitable means of transportation.** Lifting tackle must be designed for the weight of the gear unit. The weight of the gear unit can be obtained from the dispatch documents.

3.4 Preparing for installation

The drive unit must be inspected and may only be installed if no transportation damage or leaks are visible. In particular the radial seals and the sealing caps must be inspected for damage.

Thoroughly remove rust inhibitor from the drive shafts and flange surfaces before assembly.

In applications where an incorrect rotational direction may result in damage or potential risk, the correct rotational direction of the drive shaft is to be established by test running the drive when uncoupled and guaranteeing such for subsequent operation.

Gears with integrated return stops are marked with arrows on the driven/driving sides. The arrows point in the rotation direction of the gear unit. It must be ensured, when connecting the motor and during motor control, that the gear unit can only operate in the rotation direction, e.g. by means of a rotary field test. (For further explanations see catalogue G1000 and WN 0-000 40)

	**Attention!**
	With gear units with an integrated back stop, switching the drive motor to the blocked rotation direction, i.e. incorrect rotation direction, can lead to gear damage.

Ensure that no aggressive or corrosive substances are present in the area surrounding the installation site or are subsequently expected during operation, which attack metal, lubricants or elastomers. In case of doubt, please contact Getriebebau NORD and take the recommended action.

Oil expansion tanks (Option OA) must be fitted in accordance with the attached works standard WN 0-530 04. For gear units with an M10x1 vent plug, works standard WN 0-52135 must be observed.

Oil expansion tanks (Option OA) must be fitted in accordance with the attached works standard WN 0-521 30.

If a vent plug is fitted, the sealing cord must be removed from the vent plug before commissioning. Position of the vent plug: see Section 6.1.

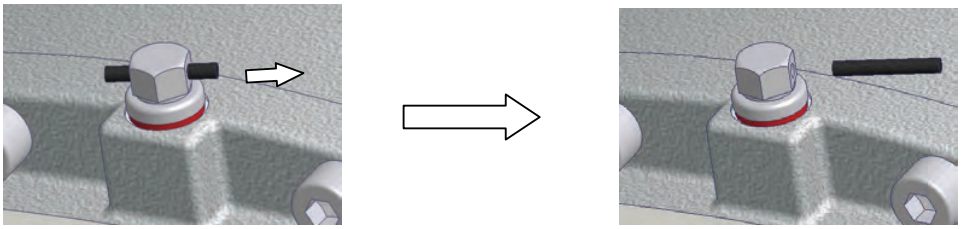

Figure 3-1: Activating the vent plug

If in case of drive units with the option DR the pressure vent is not fitted, the vent plug must be replaced with the supplied pressure vent before commissioning. This is achieved by screwing out the vent fitting and replacing it with the pressure vent and seal (refer to Section 6.2 for torque values). Double gear units consist of two single units and are equipped with 2 oil chambers and 2 pressure vents.

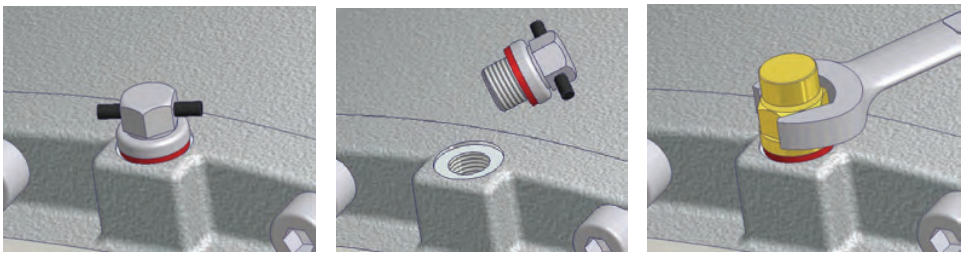

Figure 3-2: Removing vent plug and fitting the pressure vent

3.5 Installing the gear unit

The eyebolts screwed into the gear units must be used during installation. The safety notes in Section 1.4 must be observed.

The base and/or flange to which the gear unit is fitted should be vibration-free, torsionally strong and flat. The smoothness of the mating surface on the base or flange must be according to tolerance clad K of DIN ISO 2768-2. All contamination to the bolting surfaces of gear unit and base and/or flange must be thoroughly removed.
The gear unit must be precisely aligned with the drive shaft of the machine in order to prevent additional forces from being imposed on the gear unit due to tension.

The tolerances of the shaft ends comply with DIN 784.

Drive/driven shafts	≤ ø50 mm = ISO k6	> ø50 mm = ISO m6
Hollow shafts	ISO H7	
Centring holes	DIN 332, Sheet 2	

The tolerances of the flange attachment dimensions comply with DIN 42 948.

Flange centring – ø	≤ ø 230 mm = ISO j6	> ø 230 mm = ISO h6
IEC/Servo flange centring – ø	ISO H7	

Welding of the gear unit is prohibited. The gear unit must not be used as the earth connection for welding work, as this may cause damage to the bearings and gear wheels.

The gear unit must be installed in the correct configuration (see Section 6.1) (UNIVERSAL gear unit types SI and SIS are independent of the configuration). For changes to the installation position, the vent plug and the oil level must be modified (see Section 6.1). All gear unit feet and/or all flange bolts on each side must be used. Bolts must have a minimum quality of 8.8. The bolts must be tightened to the correct torques (refer to Section 6.2 for torque values). Tension-free bolting must be ensured, particularly for gear units with a foot and flange.

Danger!

To ensure that the gearbox does not get too warm and to avoid injury to persons, observe the following during installation:

- The surfaces of gear units or geared motors may become hot during or shortly after operation. **Attention: danger of burns!!** Protection against accidental contact may need to be installed.
- With geared motors, the **cooling air of the motor fan** must be able to flow **unobstructed** onto the gear unit.

3.6 Fitting hubs on the gear shafts

Attention!

Do not subject the gear unit to harmful axial forces when fitting the hubs.

Drive and driven elements, e.g. coupling and chain-wheel hubs must be mounted onto the drive and driven shaft of the gear unit using suitable pullers that will not apply damaging axial forces onto the gear unit. In particular, do not hit the hubs with a hammer.

Use the end thread of the shafts for pulling. Fitting can be aided by coating the hub with lubricant or heating it up to approx. 100°C beforehand.

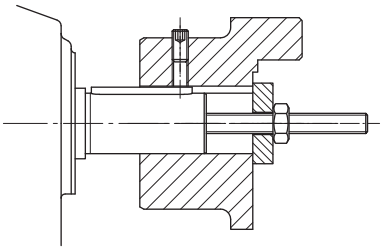

Figure 3-3: Example of a simple pulling device

Danger!

Drive and driven elements, such as belt drives, chain drives and couplings **must be fitted with contact protection.**

Driven elements may only subject the drive units to the maximum radial force F_R and axial force F_A as specified in the catalogue. Observe the correct tension, particularly on belts and chains. Additional loads due to unbalanced hubs are not permitted. The radial force must be applied to the gear unit as closely as possible.

3.7 Fitting push-on gear units

STOP	**Attention!**
	The bearings, gear wheels, shafts and housing may be damaged by incorrect fitting.

The push-on gear unit must be fitted onto the shaft using a suitable puller, which will not exert damaging axial forces on the gear unit. In particular, do not hit the gear unit with a hammer.

Assembly and subsequent dismantling is aided by applying an anti-corrosive lubricant to the shaft before fitting.

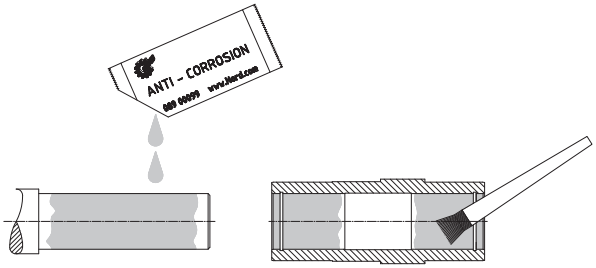

Figure 3-4: Applying lubricant to the shaft and the hub

	Note!
	The gear unit can be fitted to shafts with and without a shoulder using the fastening element (Option B). Tighten the bolt of the fastening element to the correct torque. (See Chapter 6.2 for torque values)

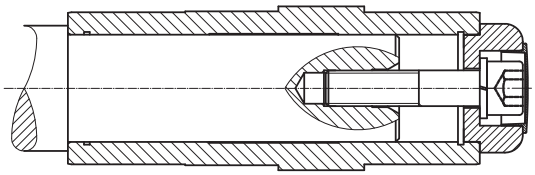

Figure 3-5: Gear unit mounted to shaft with a shoulder using the fastening element

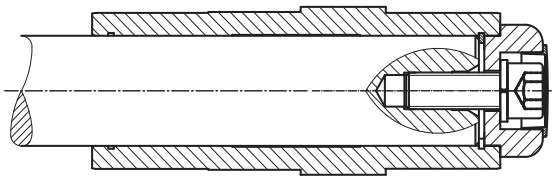

Figure 3-6: Gear unit mounted to shaft without a shoulder using the fastening element

A gear unit can be dismantled from a shaft with shoulder using the following device, for example.

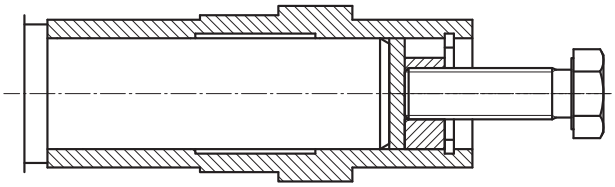

Figure 3-7: Dismantling using dismantling device

When mounting push-on gears with torque supports, the support must not be distorted. Tension-free mounting is aided by the rubber buffer (Option G and/or VG).

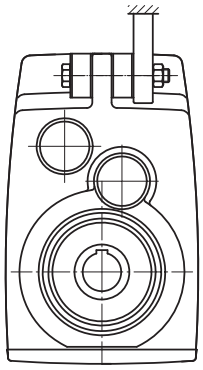

Figure 3-8: Mounting the rubber buffer (Option G and/or VG) on parallel shaft gear units

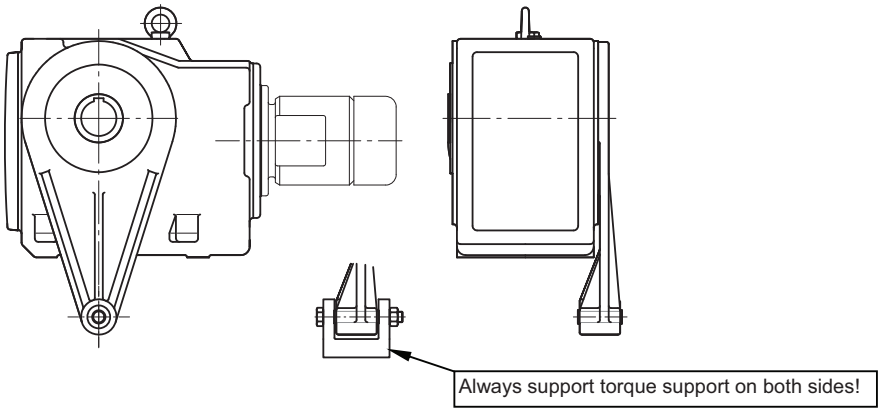

Figure 3-9: Attaching the torque support on bevel gear and worm gear units

Tighten the bolts on the rubber buffer and the torque support to the correct torque (see Section 6.2 for torque values) and secure to prevent loosening (e.g. Loctite 242, Loxeal 54-03).

3.8 Fitting shrink discs

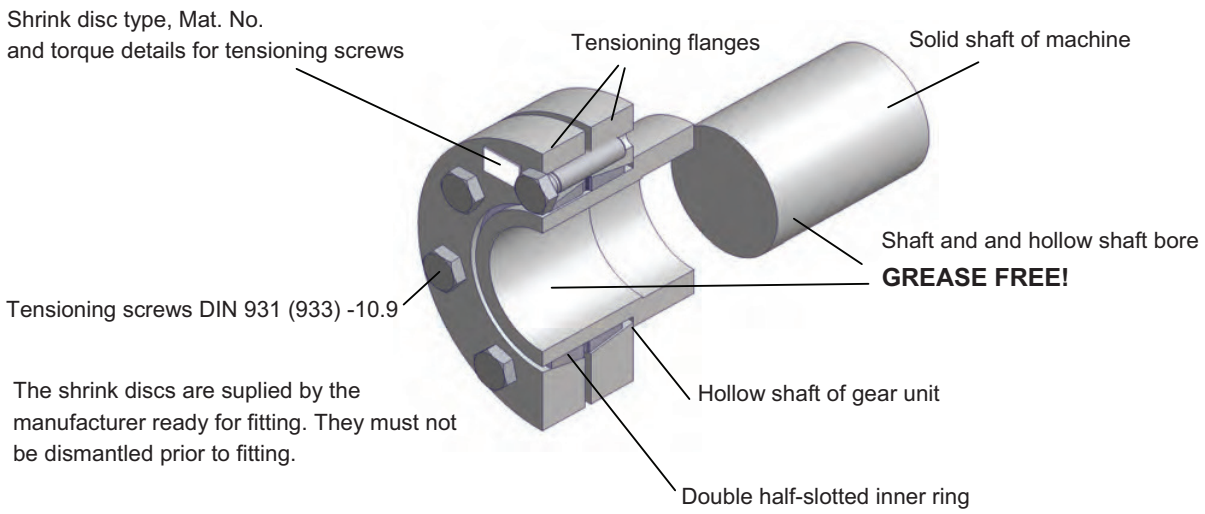

Figure 3-10: Hollow shaft with shrink disc

STOP	**Attention!**
	Do not tighten bolts if the solid shaft is not inserted!

Assembly sequence:

1. Remove any transport securing devices.
2. Loosen but do not remove tightening bolt and tighten gently by hand until there is no play between the flanges and the inner ring.
3. Slide the shrink disc onto the hollow shaft until the outer clamping flange is flush with the hollow shaft. The shrink disc is easier to slide on if the bore of the inner ring is lightly greased.
4. Prior to mounting, grease the solid shaft only in the area which will later come into contact with the bronze bush in the hollow shaft of the gear unit. Do not grease the bronze bush, in order to prevent grease penetrating the area around the shrink connection.
5. The hollow shaft of the gear unit must be completely de-greased and **completely free of grease.**
6. In the area of the shrink connection the solid shaft of the machine must be degreased and **completely free of grease**.
7. Insert the solid shaft of the machine into the hollow shaft so as to completely fill the area around the shrink connection.
8. Position the clamping flange by gently tightening the bolts.
9. Tighten the bolts successively in a clockwise direction by several turns – not crosswise – with approx. ¼ rotation per turn. Tighten the bolts with a torque wrench to the torque indicated on the shrink disc.

10. When the tensioning bolts have been tightened, there must be an even gap between the clamping flanges. If this is not the case, the gear unit must be dismantled and the shrink disc connection checked for correct fit.

	Danger!
	Risk of injury from incorrect mounting and dismantling of the shrink disc.

Dismantling sequence:

1. Loosen the bolts successively in a clockwise direction by several turns with approx. ¼ rotation per turn. Do not remove the bolts from their thread.
2. Loosen the clamping flanges from the cone of the inner ring.
3. Remove the gear unit from the solid shaft of the machine.

3.9 Fitting the covers

	Danger!
	Shrink discs and exposed rotating shaft ends require contact guards in order to prevent injuries. A cover (Option H and Option H66) can be used as a guard. If this does not achieve sufficient protection against contact according to the required protection type, the machinery and plant constructor must ensure this be means of special attached components.

All fixing screws must be used and tightened to the correct torque. (See Section 6.2 for torque values) With Option H66 covers, lightly press in the cover cap by means of light hammer blows.



Figure 3-11: Fitting the covers, Option SH, Option H, and Option H66

3.10 Fitting a standard motor

The maximum permitted motor weights indicated in the table below must not be exceeded when attaching the motor to an IEC- / NEMA adapter

Maximum permitted motor weights														
IEC motor size	63	71	80	90	100	112	132	160	180	200	225	250	280	315
NEMA Motor size		56C	143T	145T	182T	184T	210T	250T	280T	324T	326T	365T		
Max. motor weight [kg]	25	30	40	50	60	80	100	200	250	350	500	700	1000	1500

Assembly procedure to attach a standard motor to the IEC adapter (Option IEC)/NEMA adapter

1. Clean motor shaft and flange surfaces of motor and IEC /NEMA adapter and check for damage. Mounting dimensions and tolerances of the motor must conform to DIN EN 50347/NEMA MG1 Part 4.
2. Push the coupling sleeve onto the motor shaft so that the motor parallel key engages into the groove in the sleeve on tightening.
3. Tighten the coupling sleeve on the motor shaft in accordance with the motor manufacturer's instructions until it touches the collar. With motor sizes 160, 180 and 225, any spacer bushes must be positioned between the coupling sleeve and the collar. With standard helical gear units, dimension B between the coupling sleeve and the collar must be observed. Certain **NEMA adapters** require the adjustment of the coupling in accordance with the specifications indicated on the adhesive plate.
4. Secure the coupling half with the threaded pin. The threaded pin must be coated prior to use with a securing lubricant e.g. Loctite 242, Loxeal 54-03 and tightened to the correct torque. (See Chapter 6.2 for torque values)
5. Sealing of the flange surfaces of the motor and the IEC /NEMA adapter is recommended if the motor is installed outdoors or in a humid environment. **The flange surfaces** of motor and adapter must be completely coated with **surface sealant** Loctite 574 or Loxeal 58-14 prior to mounting so that the flange seals after mounting.
6. Mount the motor to the IEC /NEMA adapter, do not forget to fit the gear rim or the sleeve. (See Figure 3-12)
7. Tighten the IEC /NEMA adapter bolts to the correct torque. (See Chapter 6.2 for torque values)

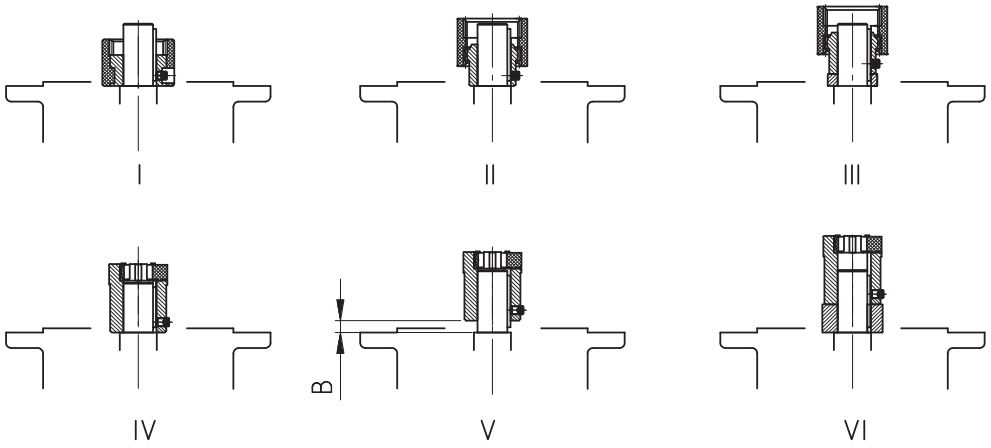

Figure 3-12: Fitting the coupling onto the motor shaft - various types of coupling

I Gear coupling (BoWex®), one-part

II Gear coupling (BoWex®), two-part

III Gear coupling (BoWex®), two-part with spacer bush

IV Claw coupling (ROTEX®), two-part

V Claw coupling (ROTEX®), two-part, observe dimension B:

Standard helical gear unit:	SK0, SK01, SK20, SK25, SK30, SK33 (2-stage) SK010, SK200, SK250, SK300, SK330 (3-stage)	
	IEC size 63	IEC size 71
Dimension B (Fig. 3-12V)	B = 4.5mm	B = 11.5 mm

VI Claw coupling (ROTEX®), two-part with spacer bush

3.11 Retrospective paintwork

Attention!

For retrospective painting of the gear unit, the radial seals, rubber elements, pressure venting valves, hoses, type plates, adhesive labels and motor coupling components must not come into contact with paints, lacquers or solvents, as otherwise components may be damaged or made illegible.

3.12 Fitting the cooling coil to the cooling system

Cutting ring screw threads (see Item 1, Figs. 3-13) are located at the casing cover for the connection of a pipe with an external diameter of 10 mm according to DIN 2353. **Remove the drain plug from the screw neck prior to assembly to avoid any contamination of the cooling system**. The screw necks should be connected with the coolant circuit, which must be provided by the operator. The flow direction of the coolant is irrelevant.
Make sure not to twist the screw necks during or after assembly as the cooling coil may be damaged (see Item 3, Fig. 3-13). You must ensure that no external forces act on the cooling coil.

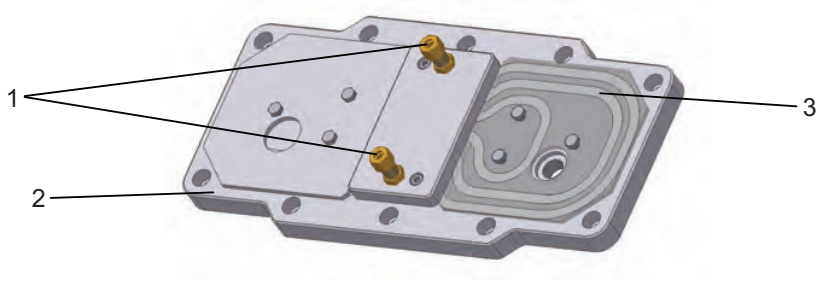

Figure 3-13: Cooling cover

Danger!

The pressure released from the cooling circuit before carrying out any work on the gear unit.

4. Commissioning

4.1 Checking the oil level

The oil level must be checked prior to commissioning. See Section 5.2.

4.2 Activating the automatic lubricant dispenser

Some gear unit types with standard motor (Option IEC/NEMA) have an automatic lubricant dispenser for the rolling bearings. This dispenser must be activated prior to commissioning. The cartridge case cover has a red information sign for the activation of the lubricant dispenser.

Activating the Automatic Lubricant Dispenser:

1. Loosen and remove cylinder bolts M8x16 **(1)**
2. Lift off cartridge case cover **(2)**
3. Insert activation screw **(3)** into the lubricant dispenser **(5)** until the lug **(4)** breaks off at the defined fracture point
4. Refit cartridge case cover **(2)** and fasten using cylinder bolt **(1)**. (See Chapter 6.2 for torque values)
5. Mark activation date on the adhesive plate **(6)** indicating month/year

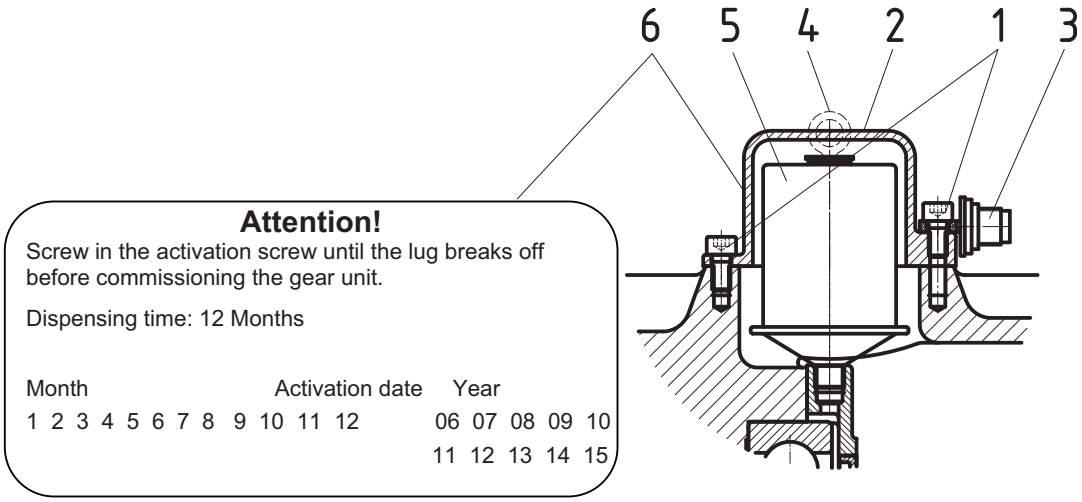

Figure 4-1: Activating the automatic lubricant dispenser with standard motor mounting

4.3 Operation with lubricant cooling

Water cooling

	**Caution!**
	The drive may only be commissioned after the cooling spiral has been connected to the cooling circuit, and the cooling circuit has been put into operation.

The coolant must have a similar thermal capacity as water (specific thermal capacity at 20°C c=4.18 kJ/kgK). Industrial water without any air bubbles or sediments is recommended as a coolant. The water hardness must be between 1° dH and 15° dH, and the pH value must be between pH 7.4 and pH 9.5. No aggressive liquids should be added to the coolant!
The **coolant pressure** must not exceed **8 bar**. The required **quantity of coolant** is **10 litres/minute**, and the **coolant inlet temperature** should not exceed 40°C; we recommend **10°C**.
We also recommend fitting a pressure reducer at the coolant inlet to avoid any damage due to excessive pressure.
If there is a danger of frost the operator should add a suitable anti-freeze solution to the cooling water.

The **temperature of the cooling water** and the **cooling water flow rate** must be **supervised** and **ensured** by the operator.

Air/Oil cooler

This version and all important data concerning the air/oil cooler can be obtained from Catalogue G1000, or contact the manufacturer of the cooling unit.

4.4 Running-in time for the worm gear unit

	**Note!**
	In order to achieve maximum efficiency of the worm gear unit, the gear unit must be subjected to a running-in period of approx. 25 h – 48 h under maximum load. There may be a reduction in efficiency before the running-in period is complete.

4.5 Checklist

Checklist		
Object of the check	**Checked on:**	**Information – see Section**
Is the vent plug activated or the pressure vent screwed in?		Sec. 3.4
Does the required configuration conform with the actual installation?		Sec. 6.1
Are the external gear shaft forces within permitted limits (chain tension)?		Sec. 3.6
Is the torque support correctly fitted?		Sec. 3.7
Are contact guards fitted to rotating components?		Sec. 3.9
Is the automatic lubricant dispenser activated?		Sec. 4.2
Is the cooling cover connected to the cooling circuit?		Sec. 3.12/4.3

5. Service and maintenance

5.1 Service and maintenance intervals

Service and Maintenance Intervals	Service and Maintenance Work	Information – see Section
At least every six months	-Visual inspection	5.2
	- Check for running noises	5.2
	– Check oil level	5.2
	– Re-grease (applicable only to free drive shaft / Option W and on agitator bearings / Option VLII / VLIII)	5.2
	-Replace automatic lubricator (for operating times < 8 h/day: a replacement interval for the lubricant dispenser of 1 year is permissible) (only with IEC/NEMA standard motors)	5.2
Every 10000 operating hours, at least every 2 years	- Change oil (if filled with synthetic oil, this period is doubled)	5.2
	Reduction of lubricant replacement interval under extreme operating conditions (high humidity, aggressive environment and high temperature fluctuations)	5.2
	- Check the cooling coil for deposits	
At least every 10 years	– General overhaul	5.2

5.2 Service and maintenance work

Servicing and maintenance work must only be performed by qualified specialist personnel.

Installation and maintenance work must only be performed when gear units are at a standstill. The drive must be isolated and secured to prevent accidental start-up.

Visual inspection

The gear unit must be checked for leaks. In addition, the gear unit must be inspected for external damage and cracks in the hoses, hose connections and rubber buffers. Have the gear unit repaired in case of leaks, e.g. dripping gear oil or cooling water, damage or cracks. Please contact the NORD service department.

Check for running noises

If the gear unit produces unusual running noises and/or vibrations, this could indicate damage to the gear unit In this case the gear should be shut down and a general overhaul carried out.

Check the oil level

Section 6.1 describes the versions and the corresponding oil level screws. With double gear units, the oil level must be checked on both units. The pressure vent must be at the position marked in Section 6.1.

The oil level does not need to be checked on gear units without oil level screw (see Section 6.1).

Gear unit types that are not supplied full of oil must be filled before the oil level is checked. (see “Changing the oil”)

Checking the oil level:

1. The oil level may only be checked when the gear unit is **at a standstill and has cooled down**. The gear unit must be secured to prevent accidental switch-on.
2. The oil level screw corresponding to the version must be screwed out. (See Section 6.1)

	Note!
	At the first oil level check a small amount of oil may escape, as the oil level may be below the lower edge of the oil level hole.

3. Gear units with oil level screw: The maximum oil level is the lower edge of the oil level hole. The minimum oil level is 4 mm below the oil level hole. If the oil level is too low, this must be corrected using the correct type of oil. An oil level glass is available instead of the oil level screw
4. Gear units with an oil level vessel: The oil level must be checked **in the oil level vessel** with the aid of the dipstick plug (thread G1 1/4). The oil level must be between the upper and lower mark when the dipstick is completely screwed in (see Fig. 5-1). The oil level must be corrected with the correct type of oil if necessary. These gearboxes may only be operated in the configuration stated in Section 6.1.
5. The oil level screw or the cap screw with dipstick and all other loosened screws must be correctly re-tightened.

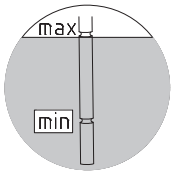

Figure 5-1: Check the oil level with a dipstick

Regreasing

Some gear unit designs (free drive shaft, Option W, agitator designs VLII and VLIII) are equipped with a regreasing device.

For agitator versions VLII and VLIII, the vent screw located opposite to the grease nipple must be unscrewed before regreasing. Grease should be injected until a quantity of 20-25g escapes from the vent hole. After this, the vent plug must be reinserted and tightened.

For Option W and some IEC adapters, the outer roller bearing must be regreased with approx. 20-25g of grease via the grease nipple provided

Recommended grease: Petamo GHY 133N (see Section 6.4: Klüber Lubrication).

Replacing the automatic lubricant dispenser

Screw-off the cartridge case cover (2), (see Fig. 4-1). The lubrication dispenser (5) is screwed out and replaced with a new component (Part No. 283 0100). Then activate (see Chapter 4.2)!

Changing the oil

The figures in Section 6.1 show the oil drain screw, the oil level screw and the pressure vent screw for various designs.

Sequence:

1. Place the drip tray below the oil drain screw or the oil drain cock
2. Completely remove oil level screw, screwed sealing plug with dipstick if an oil level tank is being used and oil drain screw.

Danger!

Warning: Hot oil!

3. Drain all the oil from the gear unit.
4. If the screw lock coating of the oil drain screw or oil level screw is damaged in the thread, a new oil level screw must be used or the thread cleaned and coated with securing lubricant, e.g. Loctite 242, Loxeal 54-03 prior to inserting. The seal ring must be replaced if damaged.
5. Support the seal ring, insert the oil drain screw into the hole and tighten to the correct torque! (See Section 6.2 for torque values)
6. Using a suitable filling device, refill with oil of the same type through the oil level hole until oil emerges from the oil level hole. (The oil can also be filled through the pressure vent screw or a sealing plug located higher than the oil level). If an oil level vessel is used, fill the oil through the upper inlet (thread G1¼) until the oil level is set as described in Section 5.2.
7. Wait at least 15 minutes, or at least 30 minutes if an oil level tank is used, and then check the oil level. Proceed as described in Section 5.2.

Note!

The oil does not need to be changed on gear units without oil level screw (see Section 6.1). These gear units are lubricated for life.

Standard helical gear units have no oil level screw. Here, the oil is topped up through the pressure vent bolt using the quantities listed in the table in Section 6.5.

General overhaul

The gear units must be completely dismantled The following work must be carried out:

- Clean all gear unit components
- Examine all gear unit components for damage
- All damaged components must be replaced
- All roller bearings must be replaced
- Replace back stops if fitted
- Replace all seals, radial seals and Nilos rings
- Replace plastic and elastomer components of the motor coupling

The general overhaul must be carried out by a specialist workshop with appropriate equipment and qualified specialist personnel. We recommend that the general overhaul is carried out by the NORD service department.

6. Appendix

6.1 Versions and maintenance

Explanation of symbols for the following version illustrations:

Vent

Oil level

Oil drain

Note!
SK 320, SK 172, SK 272, SK 372K, SK 273 and SK373 as well as SK 01282 NB, SK 0282 NB, SK 1382 NB and UNIVERSAL / Minibloc gear units are lubricated for life. These gear units do not have an oil filler screw.

Parallel shaft gear units with oil level vessel

The following applies for SK 9282, SK 9382, SK 10282, SK 10382, SK 11282, SK 11382 parallel gear units and SK 12382 in the M4 configuration with oil level vessels:

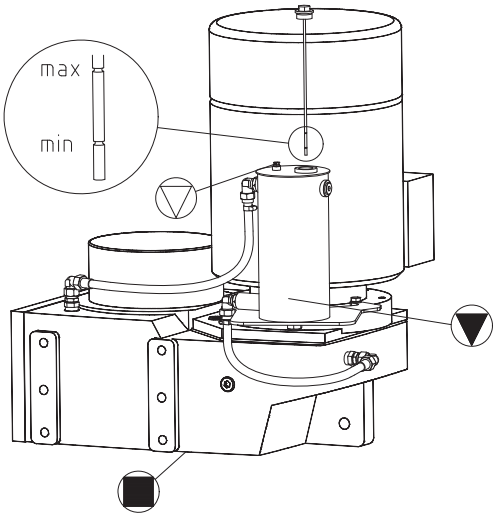

Figure 6-1: Check the oil level with an oil level tank

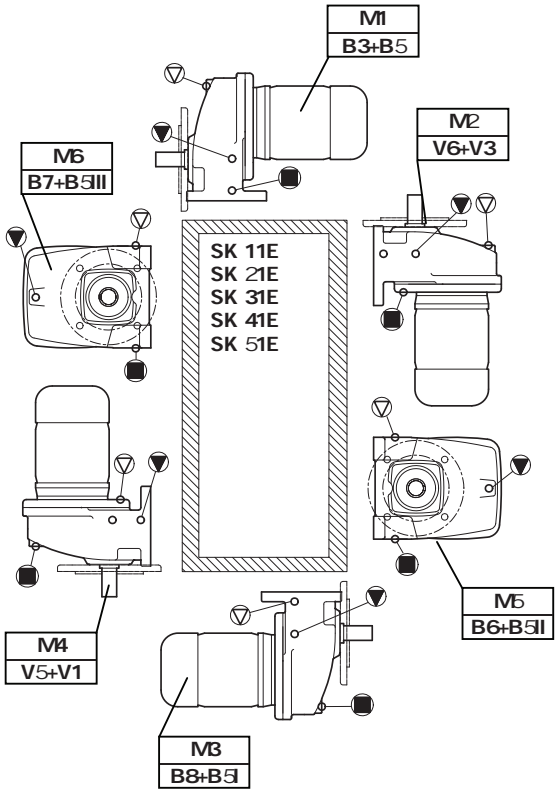
M1
B3+B5
M2
V6+V3
M6
B7+B5II
SK 11E
SK 21E
SK 31E
SK 41E
SK 51E
M5
B6+B5II
M4
V5+V1
M3
B8+B5I

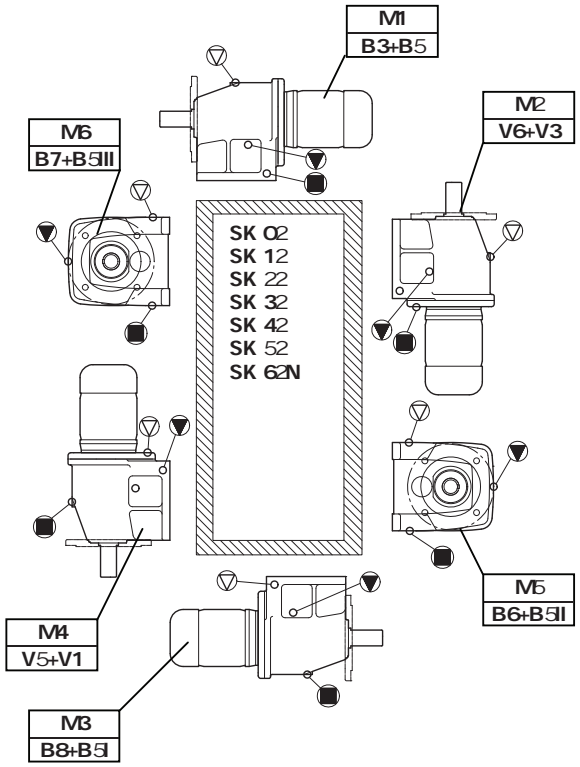
M1
B3+B5
M2
V6+V3
M6
B7+B5II
SK 02
SK 12
SK 22
SK 32
SK 42
SK 52
SK 62N
M5
B6+B5II
M4
V5+V1
M3
B8+B5I

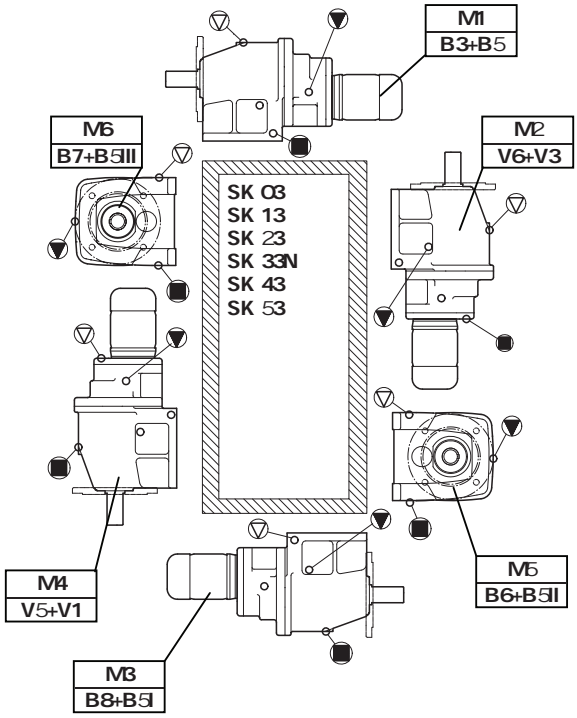
M1
B3+B5
M6
B7+B5II
M2
V6+V3
SK 03
SK 13
SK 23
SK 33N
SK 43
SK 53
M5
B6+B5II
M4
V5+V1
M3
B8+B5I

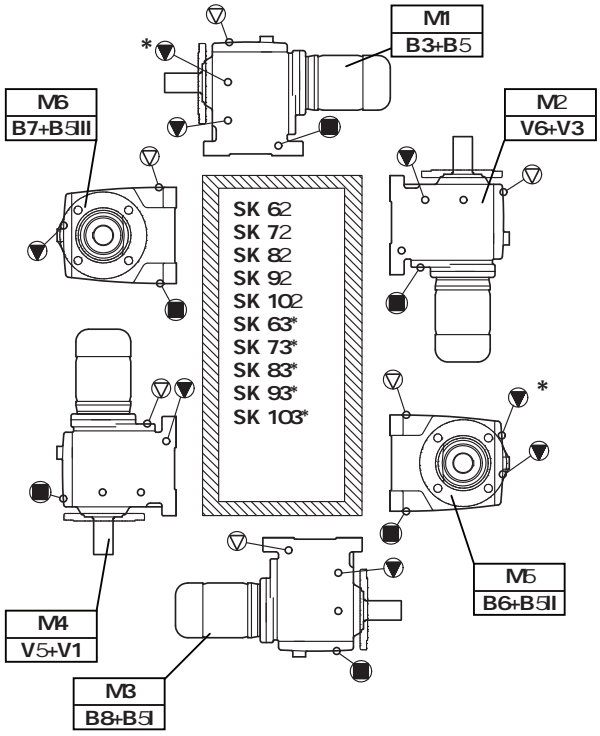
M1
B3+B5
*
M6
B7+B5II
M2
V6+V3
SK 62
SK 72
SK 82
SK 92
SK 102
SK 63*
SK 73*
SK 83*
SK 93*
SK 103*
*
M5
B6+B5II
M4
V5+V1
M3
B8+B5I

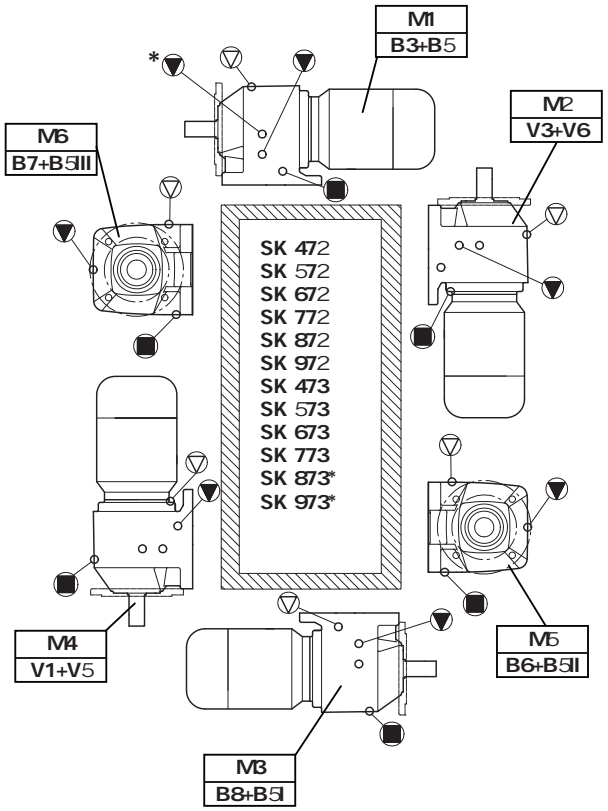
M1
B3+B5
M2
V3+V6
M6
B7+B5II
SK 472
SK 572
SK 672
SK 772
SK 872
SK 972
SK 473
SK 573
SK 673
SK 773
SK 873*
SK 973*
M4
V1+V5
M5
B6+B5II
M3
B8+B5I

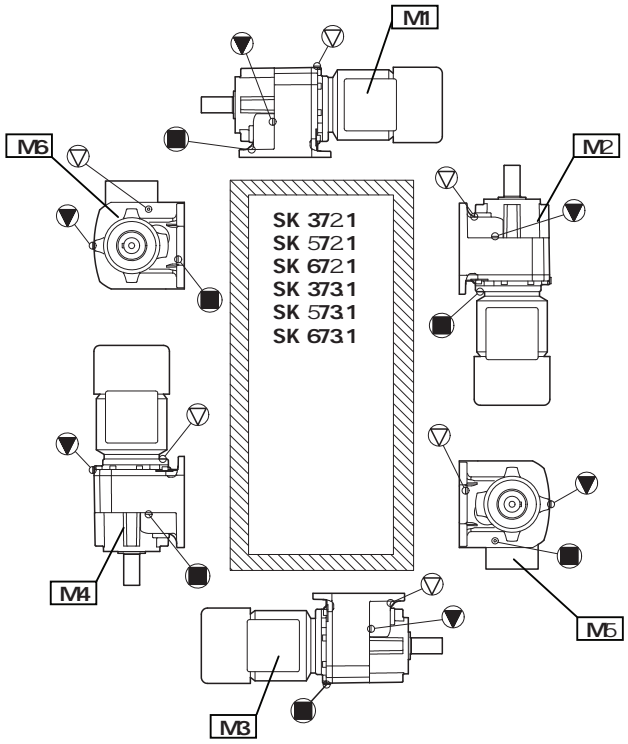
M1
M6
M2
SK 3721
SK 5721
SK 6721
SK 3731
SK 5731
SK 6731
M4
M5
M3

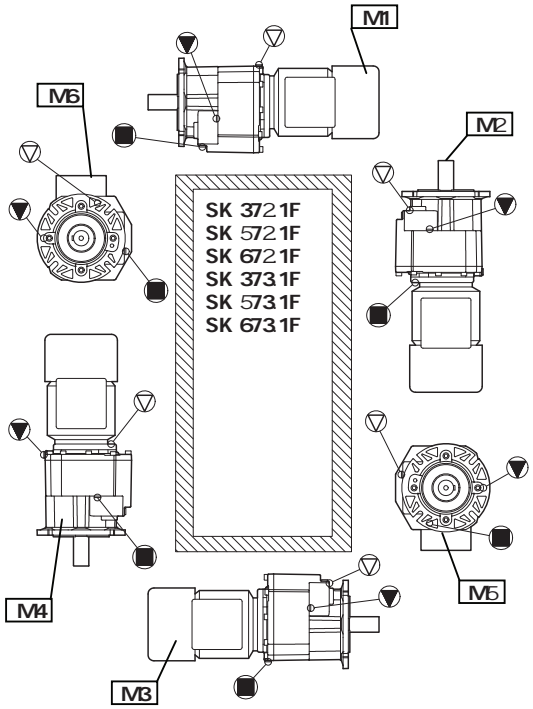
M1
M6
M2
SK 3721F
SK 5721F
SK 6721F
SK 3731F
SK 5731F
SK 6731F
M4
M5
M3

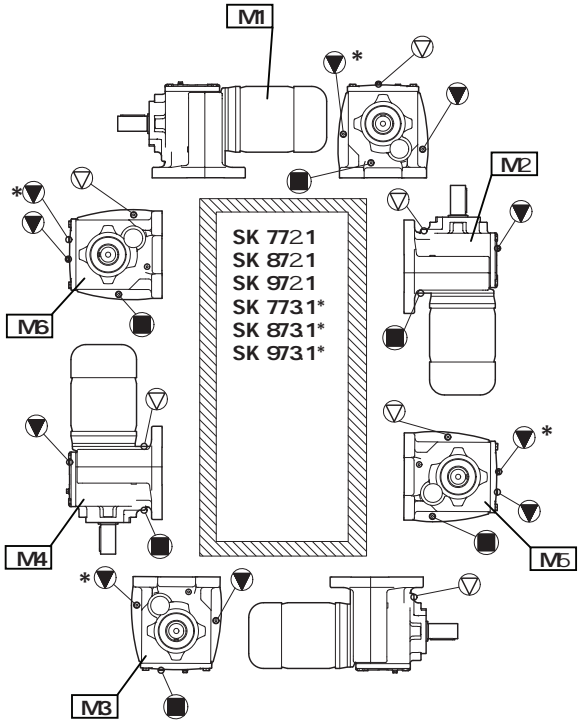
M1
M2
SK 7721
SK 8721
SK 9721
SK 7731*
SK 8731*
SK 9731*
M6
M4
M5
M3

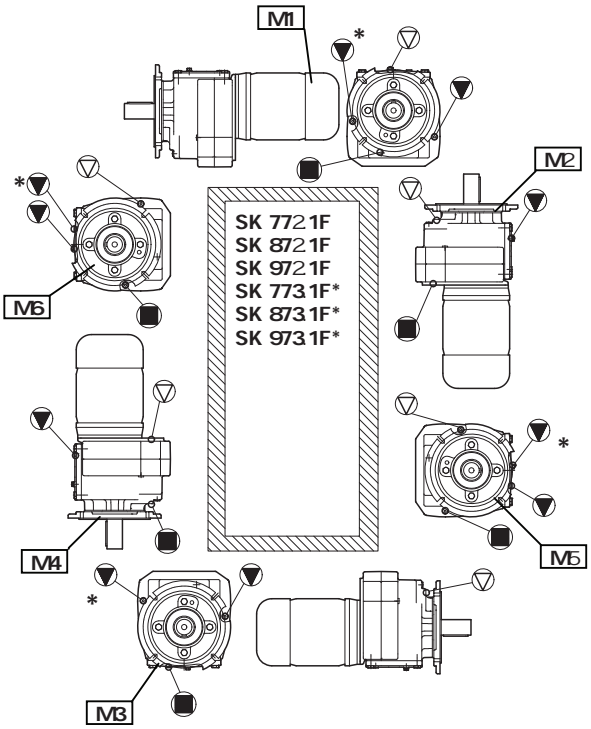
M1
M2
M3
M4
M5
M6
*
SK 772 1F
SK 872 1F
SK 972 1F
SK 773 1F*
SK 873 1F*
SK 973 1F*

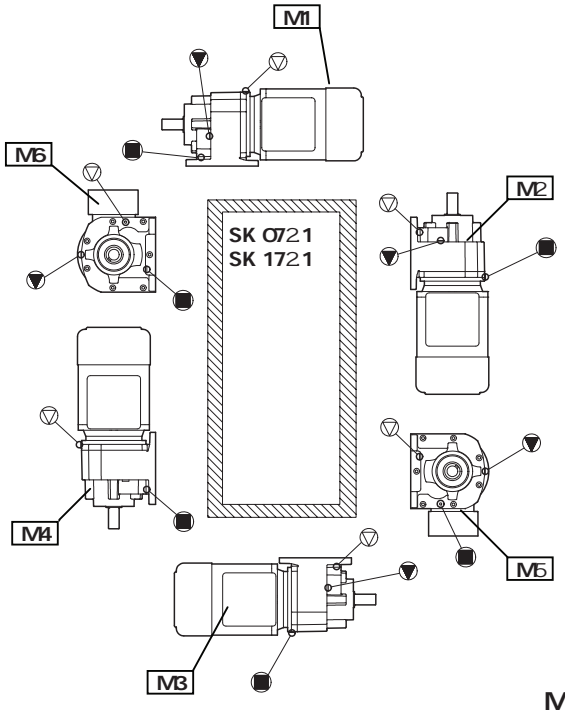
M1
M2
M3
M4
M5
M6
SK 072 1
SK 172 1

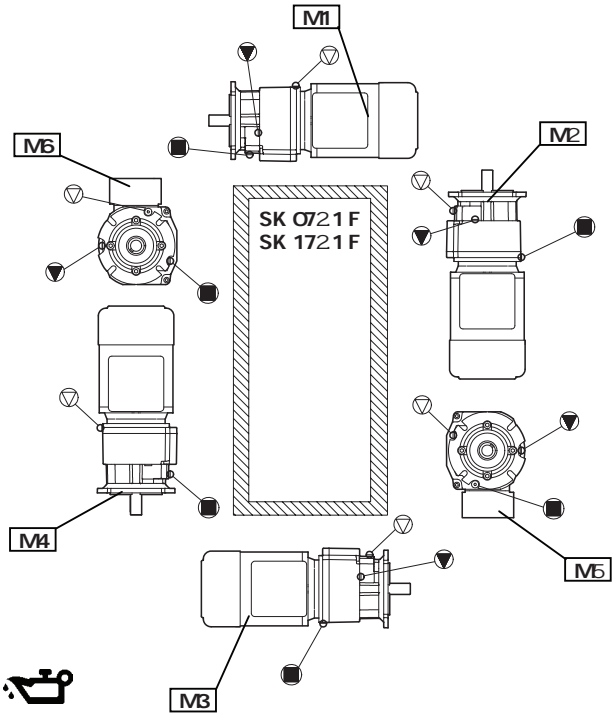
M1
M2
M3
M4
M5
M6
SK 072 1 F
SK 172 1 F

M4

⇨ 40

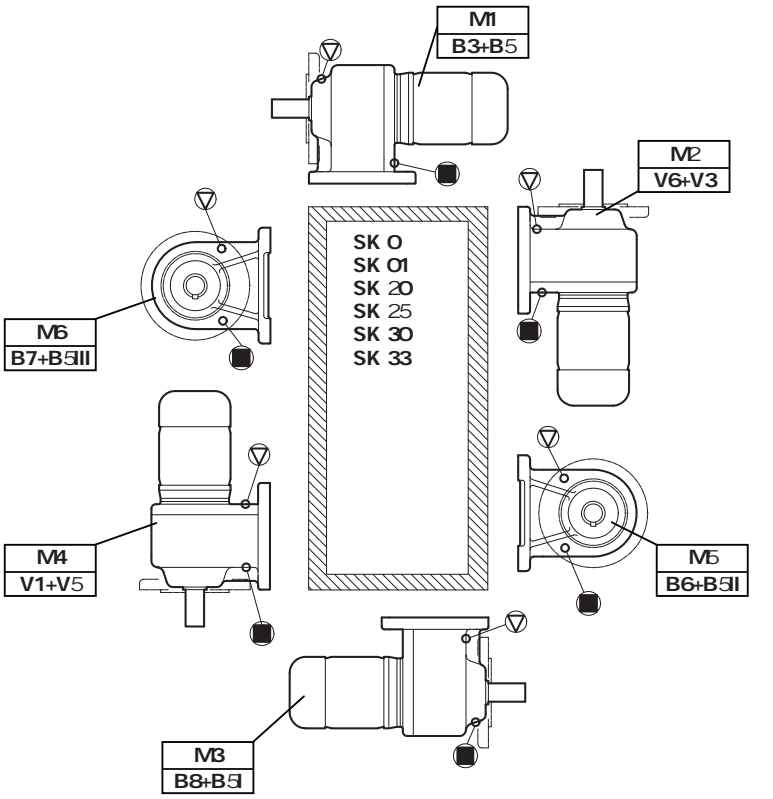
M1
B3+B5
M2
V6+V3
SK 0
SK 01
SK 20
SK 25
SK 30
SK 33
M6
B7+B5II
M4
V1+V5
M5
B6+B5II
M3
B8+B5I

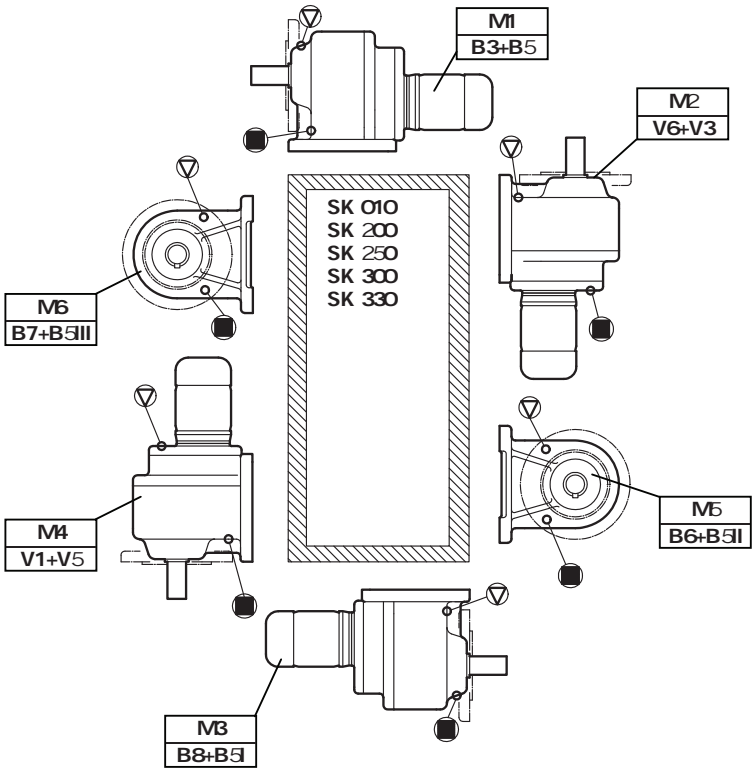
M1
B3+B5
M2
V6+V3
SK 010
SK 200
SK 250
SK 300
SK 330
M6
B7+B5II
M4
V1+V5
M5
B6+B5II
M3
B8+B5I

⇨ 🕮 41

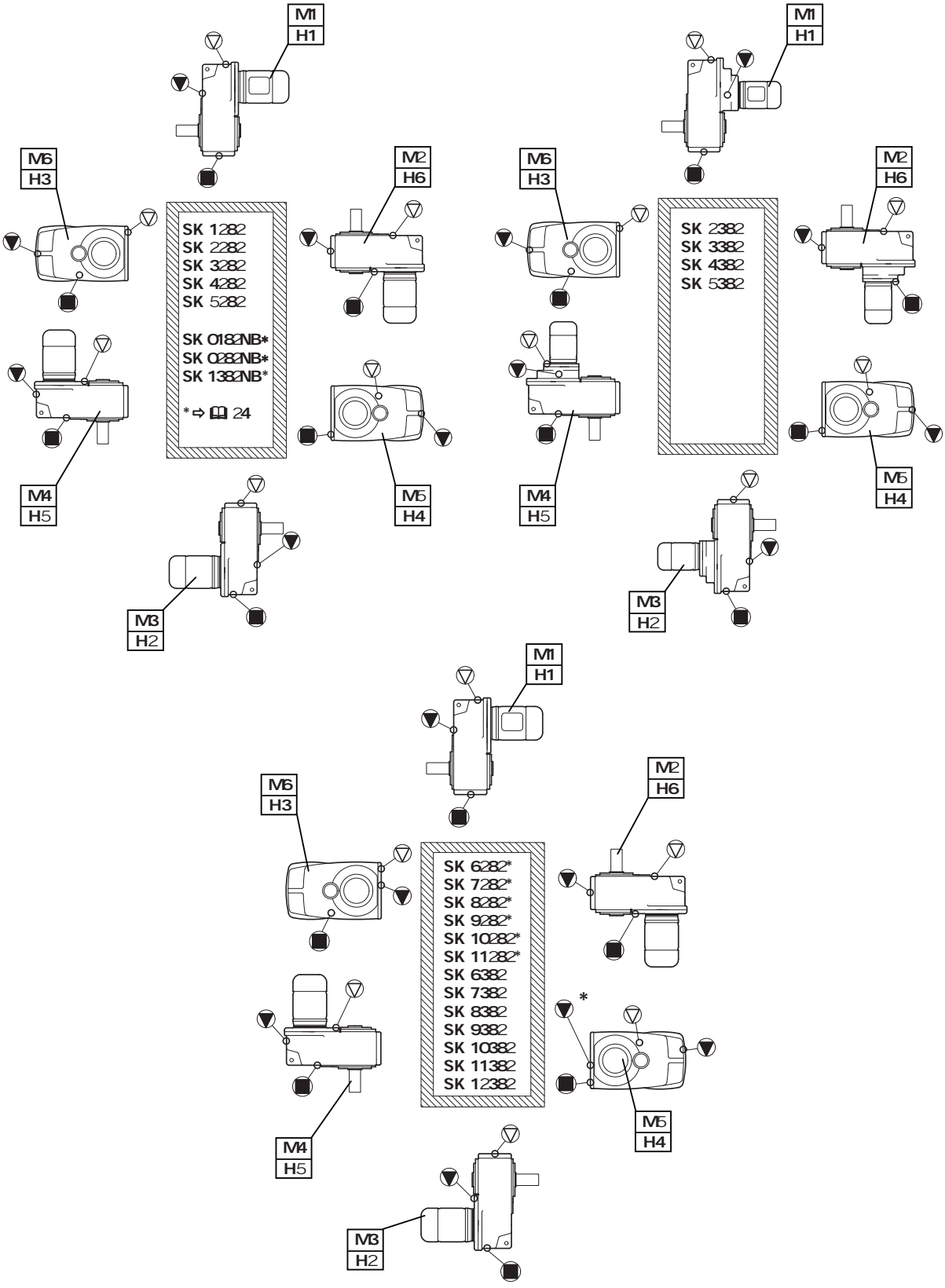
M1
H1
M6
H3
M2
H6
SK 1282
SK 2282
SK 3282
SK 4282
SK 5282
SK 0182NB*
SK 0282NB*
SK 1382NB*
* ⇨ 🕮 24
M4
H5
M5
H4
M3
H2
M1
H1
M6
H3
M2
H6
SK 2382
SK 3382
SK 4382
SK 5382
M4
H5
M5
H4
M3
H2
M1
H1
M6
H3
M2
H6
SK 6282*
SK 7282*
SK 8282*
SK 9282*
SK 10282*
SK 11282*
SK 6382
SK 7382
SK 8382
SK 9382
SK 10382
SK 11382
SK 12382
*
M4
H5
M5
H4
M3
H2

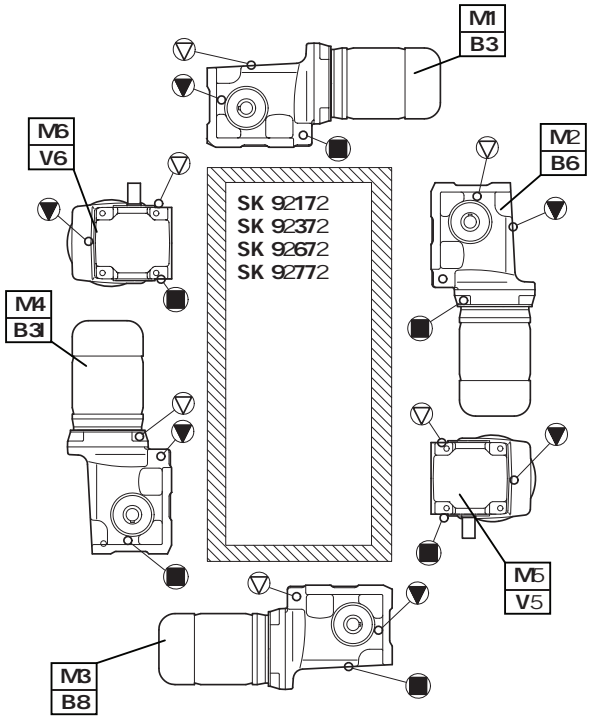
M1
B3
M6
V6
M2
B6
SK 9217.2
SK 9237.2
SK 9267.2
SK 9277.2
M4
B3.1
M5
V5
M3
B8

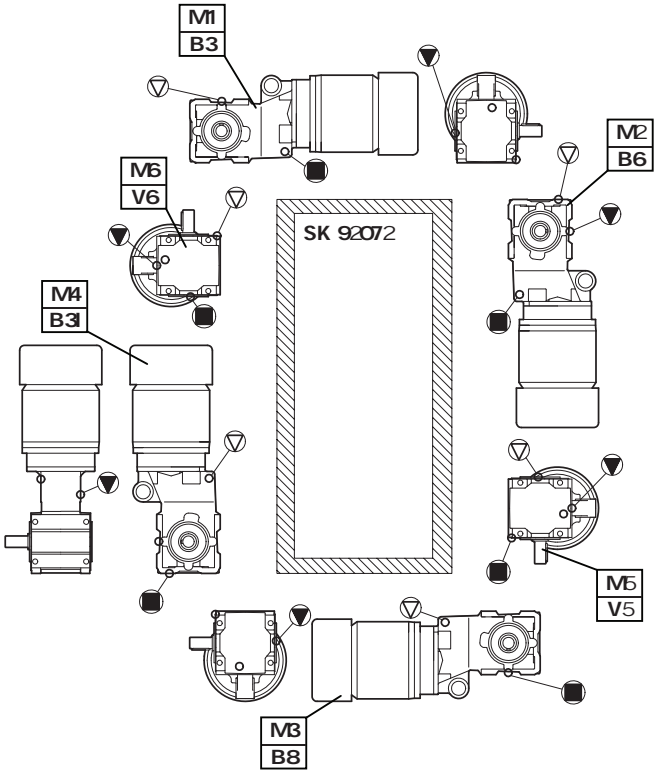
M1
B3
M6
V6
M2
B6
SK 9207.2
M4
B3.1
M5
V5
M3
B8

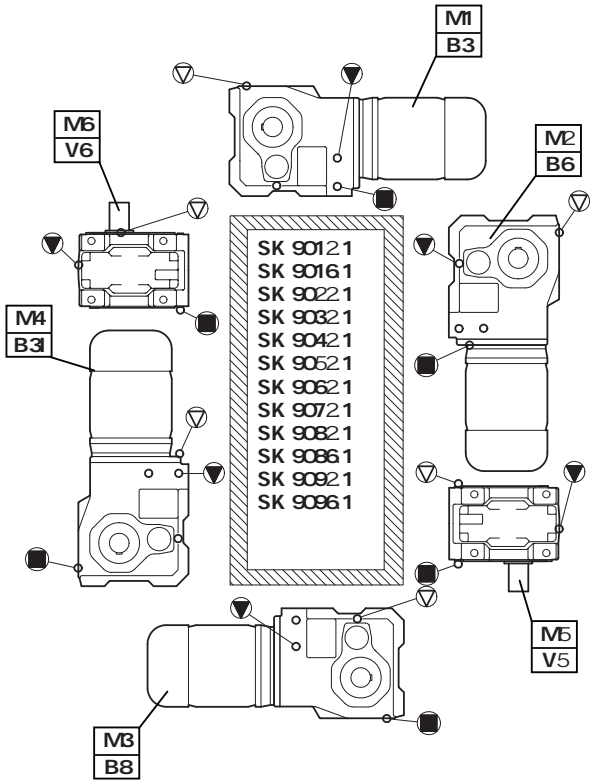
M1
B3
M6
V6
M2
B6
SK 9012.1
SK 9016.1
SK 9022.1
SK 9032.1
SK 9042.1
SK 9052.1
SK 9062.1
SK 9072.1
SK 9082.1
SK 9086.1
SK 9092.1
SK 9096.1
M4
B3.1
M5
V5
M3
B8

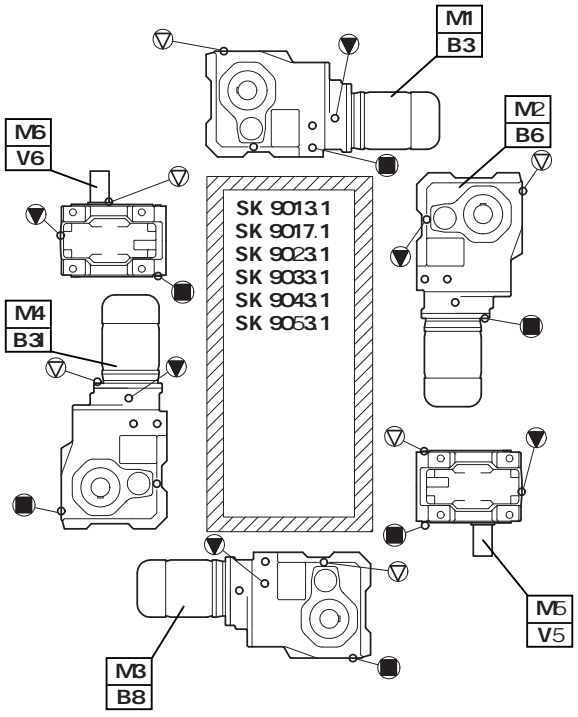
M1
B3
M6
V6
M2
B6
SK 9013.1
SK 9017.1
SK 9023.1
SK 9033.1
SK 9043.1
SK 9053.1
M4
B3.1
M5
V5
M3
B8

*

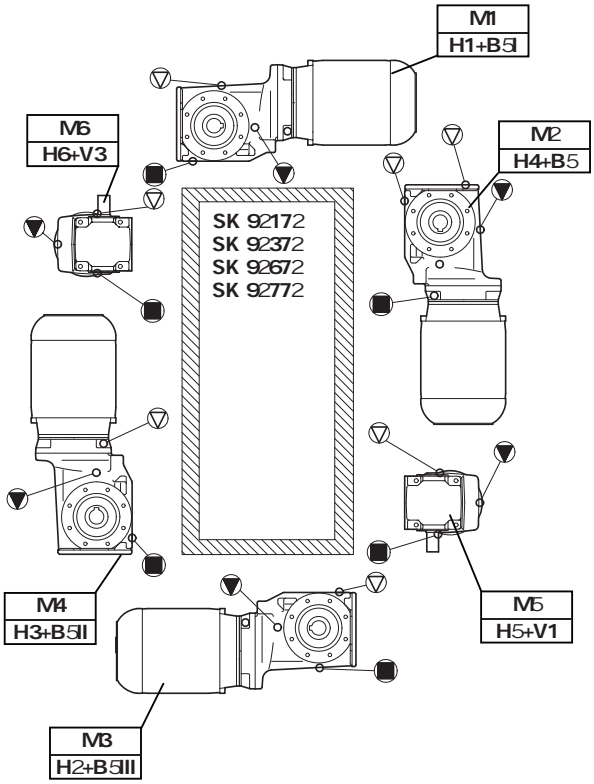
M1
H1+B5I
M6
H6+V3
M2
H4+B5
SK 9217.2
SK 9237.2
SK 9267.2
SK 9277.2
M4
H3+B5II
M5
H5+V1
M3
H2+B5III

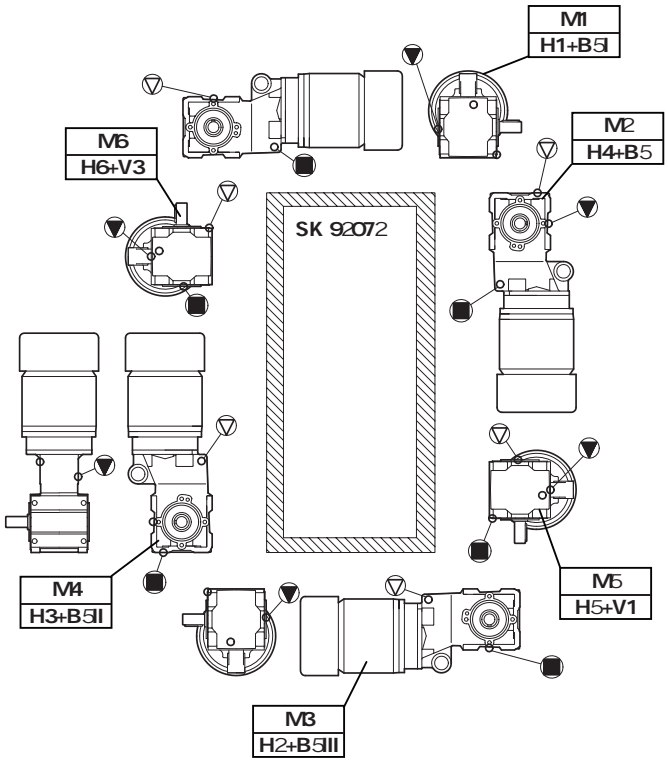
M1
H1+B5I
M6
H6+V3
M2
H4+B5
SK 9207.2
M4
H3+B5II
M5
H5+V1
M3
H2+B5III

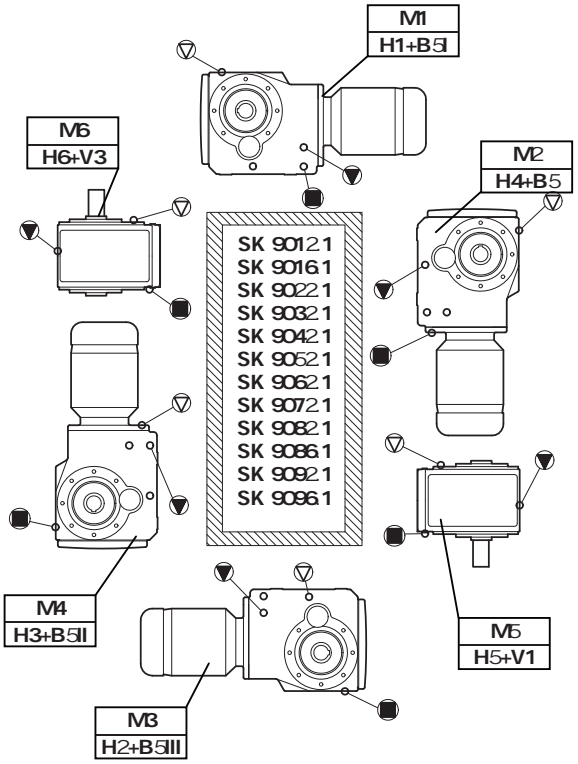
M1
H1+B5I
M6
H6+V3
M2
H4+B5
SK 9012.1
SK 9016.1
SK 9022.1
SK 9032.1
SK 9042.1
SK 9052.1
SK 9062.1
SK 9072.1
SK 9082.1
SK 9086.1
SK 9092.1
SK 9096.1
M4
H3+B5II
M5
H5+V1
M3
H2+B5III

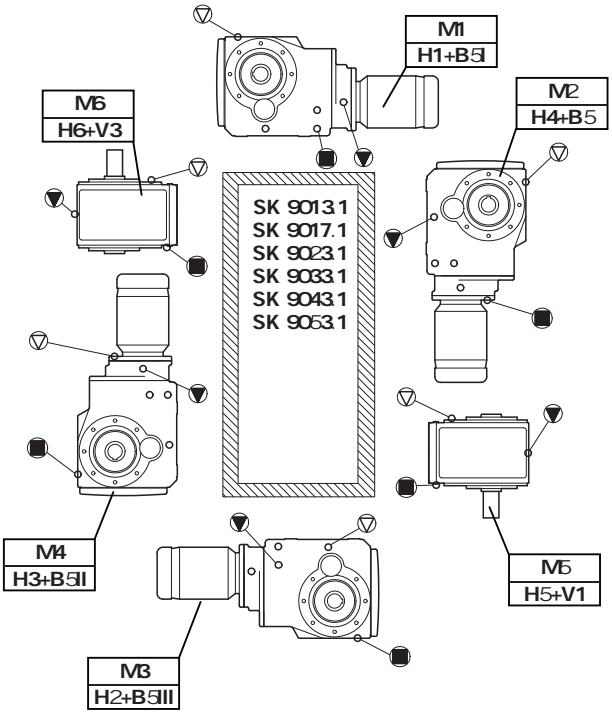
M1
H1+B5I
M6
H6+V3
M2
H4+B5
SK 9013.1
SK 9017.1
SK 9023.1
SK 9033.1
SK 9043.1
SK 9053.1
M4
H3+B5II
M5
H5+V1
M3
H2+B5III

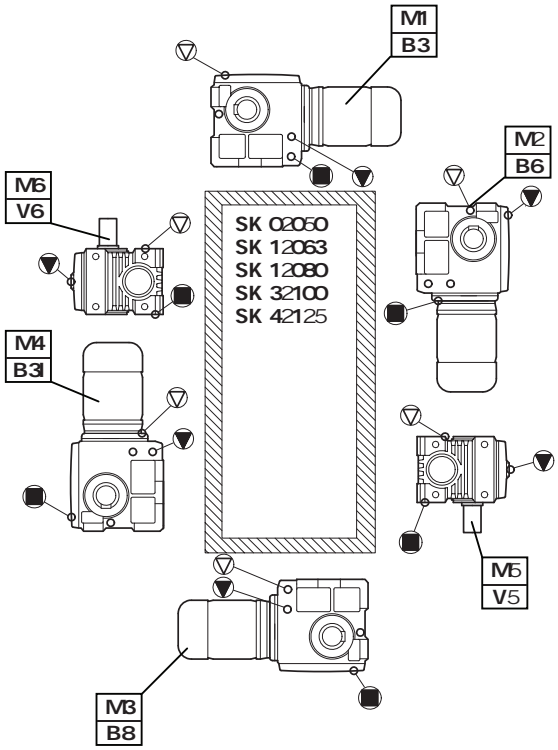
M1
B3
M2
B6
M6
V6
SK 02050
SK 12063
SK 12080
SK 32100
SK 42125
M4
B3I
M5
V5
M3
B8

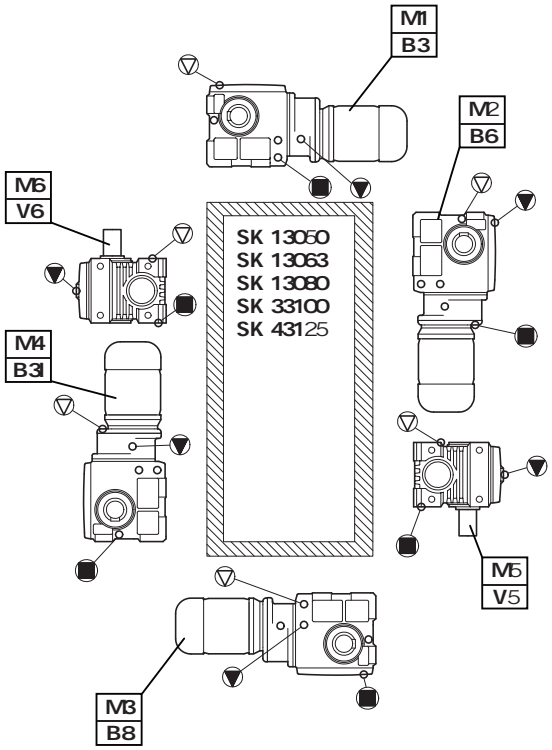
M1
B3
M2
B6
M6
V6
SK 13050
SK 13063
SK 13080
SK 33100
SK 43125
M4
B3I
M5
V5
M3
B8

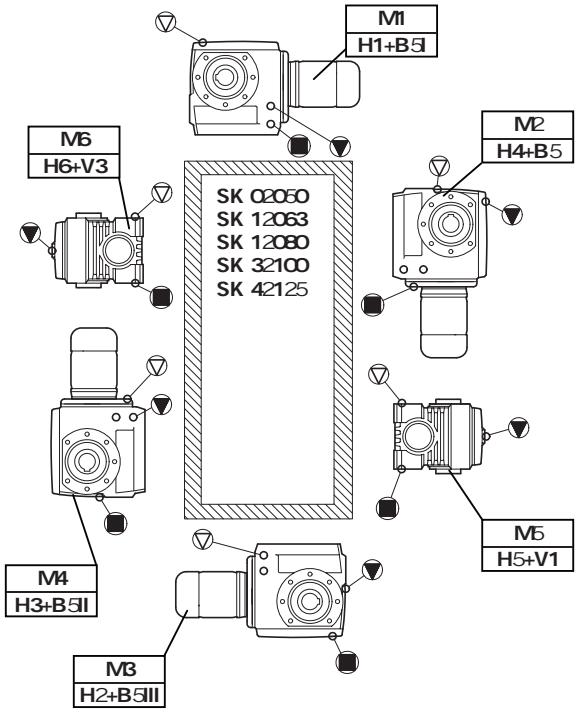
M1
H1+B5I
M2
H4+B5
M6
H6+V3
SK 02050
SK 12063
SK 12080
SK 32100
SK 42125
M5
H5+V1
M4
H3+B5II
M3
H2+B5III

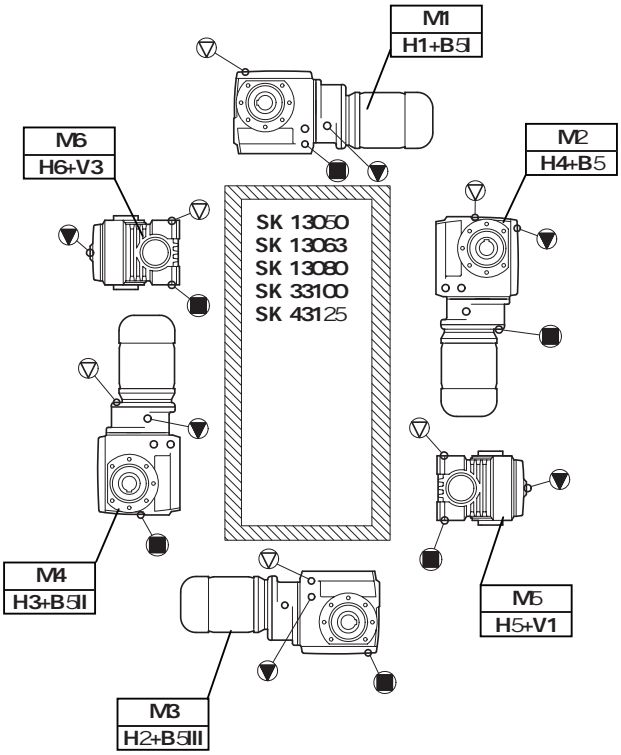
M1
H1+B5I
M2
H4+B5
M6
H6+V3
SK 13050
SK 13063
SK 13080
SK 33100
SK 43125
M4
H3+B5II
M5
H5+V1
M3
H2+B5III

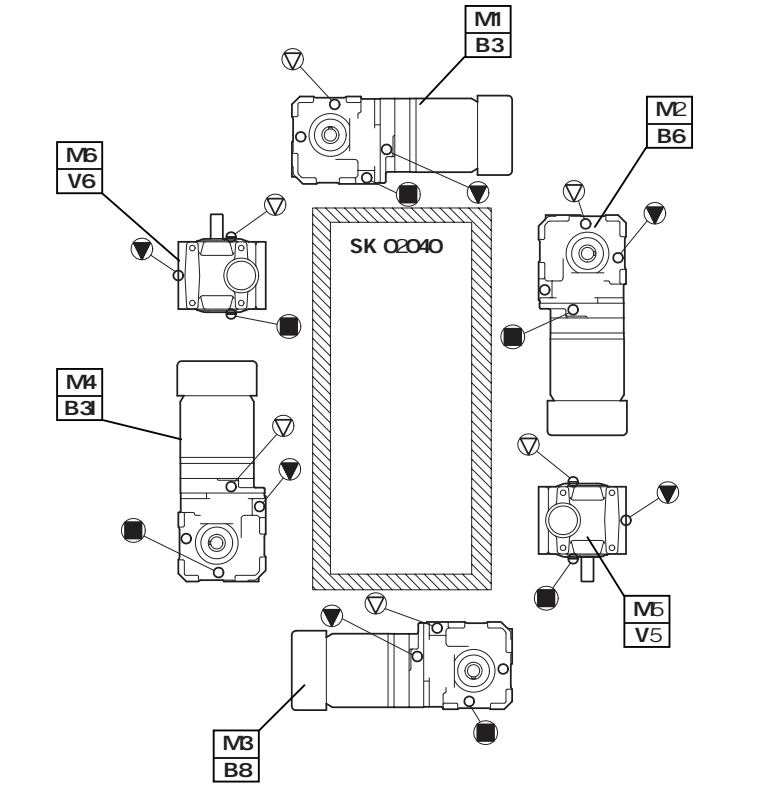
M1
B3
M2
B6
M6
V6
SK 02040
M4
B3I
M5
V5
M3
B8

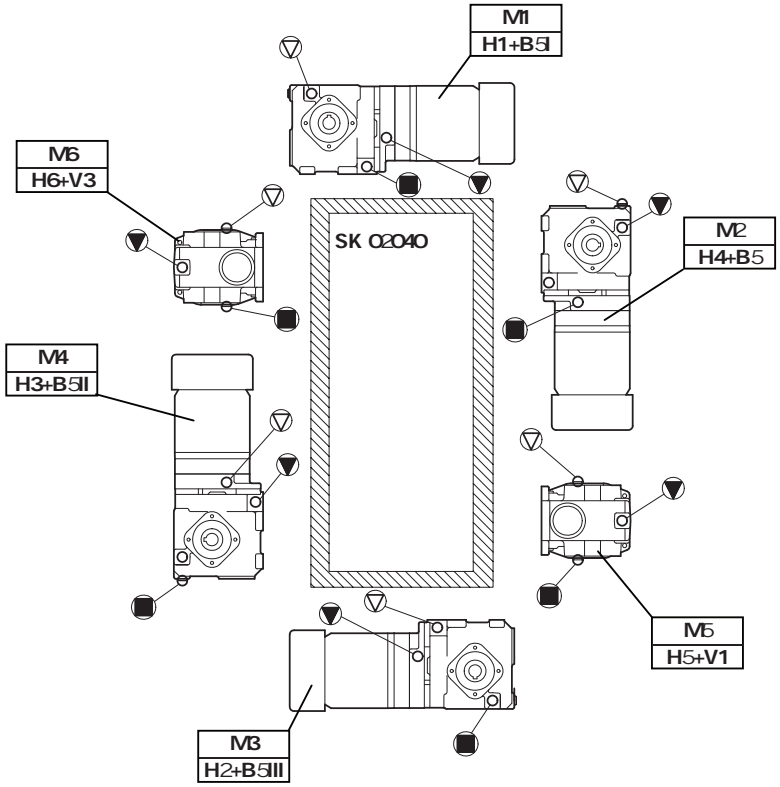
M1
H1+B5I
M6
H6+V3
SK 02040
M2
H4+B5
M4
H3+B5II
M5
H5+V1
M3
H2+B5III

SK 1SI31 – SK 1SI75
SK 1SIS31 – SK 1SIS75
SK 1SIS-D31 – SK 1SIS-D63
SK 2SIS-D40 – SK 2SIS-D63
SK 1S32 - SK 1S63
SK 2S32NB – SK 2S63NB
SK 1SU32 – SK 1SU63
SK 2SU32NB - SK 2SU63NB
SK 1SM31 – SK 1SM63
SK 2SM40 – SK 2SM63

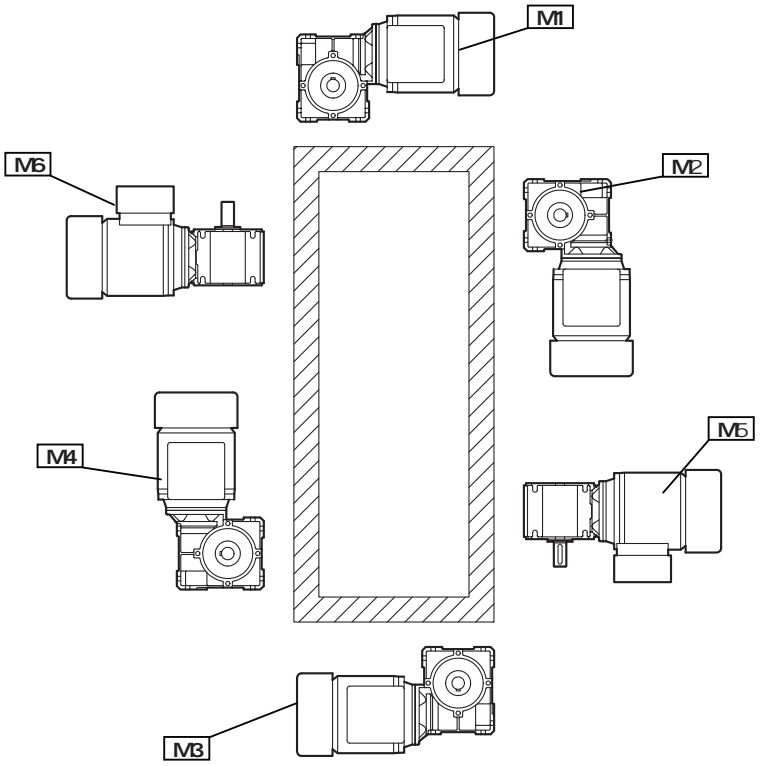

⇨ 24

6.2 Torque values

Bolt Torques [Nm]						
Size	Screw connections in the strength classes			Sealing screws	Threaded pin on coupling	Screw connections on protective covers
	8.8	10.9	12.9			
M4	3,2	5	6	-	-	
M5	6,4	9	11	-	2	
M6	11	16	19	-	-	6,4
M8	27	39	46	5	10	11
M10	53	78	91	8	17	27
M12	92	135	155	27	40	53
M16	230	335	390	-	-	92
M20	460	660	770	-	-	230
M24	790	1150	1300	80	-	460
M30	1600	2250	2650	170	-	
M36	2780	3910	4710	-	-	
M42	4470	6290	7540	-	-	
G1¼	-	-	-	20	-	

6.3 Troubleshooting

Gear unit malfunctions		
Fault	Possible cause	Remedy
Unusual running noises, vibrations	Oil too low or bearing damage or toothed wheel damage	Consult NORD Service
Oil escaping from gear unit or motor	Defective seal	Consult NORD Service
Oil escaping from pressure vent	Incorrect oil level or incorrect, contaminated oil or unfavourable operating conditions	Oil change Use oil expansion tank (Option OA)
Gear unit becomes too hot	Unfavourable installation conditions or gear unit damage	Consult NORD Service
Shock when switched on, vibrations	Defective motor coupling or loose gear unit mounting or defective rubber element	Replace elastomer gear rim, tighten motor and gear unit fastening bolts, replace rubber element
Drive shaft does not rotate although motor is running	Fracture in gear unit or defective motor coupling or shrink disc slippage	Consult NORD Service

STOP	**Attention!**
	Warning: shut down the gear unit immediately should any of the above faults occur!

6.4 Lubricants

With the exception of type SK 11282, SK 11382 and SK 12382 gear units, all gear units are filled with lubricant ready for operation in the required installation position when delivered. This initial filling corresponds to a lubricant from the column for the ambient temperatures (normal version) in the lubricant table.

Roller bearing greases

This table shows comparable roller bearing greases from various manufacturers. The manufacturer can be changed for a given grease type. Getriebebau NORD must be contacted in case of change of grease type or ambient temperature range, as otherwise no warranty for the functionality of our gear units can be accepted.

Lubricant type	Ambient temperature	ARAL	BP	Castrol	ESSO	FUCHS	KLÜBER LUBRICATION	Mobil	Shell
Grease (mineral oil based)	-30 ... 60°C (Normal version)	Aralub HL 2	Enegrease LS 2	Sheerol AP 2 LZV-EP	Mehrzweck-fett Beacon 2	Renolit FWA 160	Klüberplex BEM 41-132	Mobilux 2	–
	-50 ... 40°C	Aralub SEL 2	–	Spheerol EPL 2	–	Renolit JP 1619	–	–	Alvania RL 2
Synthetic grease	-25 ... 80°C	Aralub SKL 2	–	Product 783/46	Beacon 325	Renolit S2 Renolit HLT 2	Isoflex Topas NCA 52 Petamo GHY 133 N	Mobiltemp SHC 32	Aero Shell Grease 16 or 7
Biodegradable grease	-25… 40°C	Aralub BAB EP 2	Biogrease EP 2	Biotec	–	Plantogel 2 S	Klüberbio M 72-82	Schmierfett UE 100 B	Alvania RLB 2
Food compatible grease	-25 ... 40°C	Eural Grease EP 2	Energrease FM 2	Vitalube HT Grease 2	Carum 330	Renolit G 7 FG 1	Klübersynth UH1 14-151	Mobilgrease FM 102	Cassida RLS 2

Lubricant table

This table shows comparable lubricants from various manufacturers. The manufacturer can be changed within a particular viscosity or lubricant type. Getriebebau NORD must be contacted in case of change of viscosity or lubricant type, as otherwise no warranty for the functionality of our gearboxes can be accepted.

Lubricant type	**Ambient temperature**	ARAL	BP	Castrol	ESSO	FUCHS	KLÜBER LUBRICATION	Mobil	Shell
Mineral oil	Worm gear ISO VG 680 0 ... 40°C	Degol BG 680 Degol BG 680 plus	–	Alpha SP 680	Spartan EP 680	Renolin CLP 680 CLP 680 Plus	Klüberoil GEM 1-680N	Mobilgear 636 XMP 680	Omala 680
	ISO VG 220 -10 ... 40°C (Normal version)	Degol BG 220 Degol BG 220 plus	Energol GR-XP 220	Alpha SP 220 Alpha MW 220 Alpha MAX 220	Spartan EP 220	Renolin CLP 220 Renolin CLP 220 Plus	Klüberoil GEM 1-220	Mobilgear 630 XMP 220	Omala 220
	ISO VG 100 -15 ... 25°C	Degol BG 100 Degol BG 100 plus	Energol GR-XP 100	Alpha SP 100 Alpha MW 100 Alpha MAX 100	Spartan EP 100	Renolin CLP 100 Renolin CLP 100 Plus	Klüberoil GEM 1-100	Mobilgear 627 XMP 110	Omala 100
Synthetic oil (Polyglycol)	Worm gear ISO VG 680 -20 ... 60°C (Normal version)	Degol GS 680	Enersyn SG-XP 680	–	–	Renolin PG 680	Klübersynth GH 6-680	Glygoile HE 680	Tivela S 680
	ISO VG 220 - 25 ... 80°C	Degol GS 220	Enersyn SG-XP 220	Alphasyn PG 220	Glycolube 220	Renolin PG 220	Klübersynth GH 6-220	Glygoile HE 220	Tiveal S 220
Synthetic oil (hydrocarbons)	Worm gear CLP HC ISO VG 460 -30… 80°C	–	–	–	–	–	Klübersynth EG 4-460	Mobil SHC 634	Omala 460 HD
	CLP HC ISO VG 220 -40… 80°C	Aral Degol PAS 220	–	–	–	Renolin Unisyn CLP 220	Klübersynth EG 4-220	Mobil SHC 630	Omala 220 HD
Bio-degradable oil	Worm gear ISO VG 680 -5… 40°C	–	–	–	–	Plantogear 680 S	–	–	–
	ISO VG 220 -5 ... 40°C	Degol BAB 220	Biogear SE 220	Carelub GES 220	–	Plantogear 220 S	Klübersynth-GEM 2-220	–	Naturelle Gear Oil EP 220
Food compatible oil as per regulation H1 / FDA 178.3570	Worm gear ISO VG 680 -5 ... 40°C	–	–	–	–	Geralyn SF 680	Klüberoil 4UH1-680N Klübersynth UH1 6-680	Mobil DTE FM 680	Cassida Fluid GL 680
	ISO VG 220 - 25 ... 40°C	Eural Gear 220	–	Vitalube GS 220	Gear Oil FM 220	Geralyn AW 220 Geralyn SF 220	Klüberoil 4UH1-220N Klübersynth UH1 6-220	Mobil DTE FM 220	Cassida Fluid GL 220
Synth. Synthetic liquid grease	- 25 ... 60°C	Aralub BAB EP0	–	Alpha Gel 00	Fließfett S 420	Renolit LST 00	Klübersynth GE 46-1200 UH1-220N Klübersynth UH1 14-1600	Glygoile Grease 00	Tivela GL 00

6.5 Lubricant quantities

	Note!
	After changing the lubricant, and in particular after the initial filling, the oil level may change during the first few hours of operation, as the oil galleries and hollow spaces only fill gradually during operation. The oil level is still within the permissible tolerance. If at the express request of the customer, an oil inspection glass is installed at an additional charge, we recommend that the customer corrects the oil level after an operating period of approx. 2 hours, so that when the gear unit is at a standstill and has cooled down, the oil level is visible in the inspection glass. Only then, is it possible to check the oil level by means of the inspection glass. The stated filling quantities are guide values. The exact quantities vary according to the exact gear ratio. When filling, always observe the oil level screw hole as an indicator of the precise quantity of oil.

*Type SK11282, SK11382 and SK12382 gear units are normally supplied without oil.

[L]							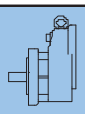					
⇨ 📖 6.1	M1	M2	M3	M4	M5	M6	M1	M2	M3	M4	M5	M6
⇨ 📖 6.1	B3	V6	B8	V5	B6	B7	B5	V3	B5I	V1	B5II	B5III
SK11E	0,25	0,50	0,55	0,40	0,35	0,35	0,30	0,35	0,50	0,30	0,40	0,40
SK21E	0,60	1,20	1,20	1,00	1,00	1,00	0,50	1,40	1,10	0,70	0,90	0,90
SK31E	1,10	2,70	2,20	2,30	1,70	1,70	0,80	1,30	1,65	1,10	2,00	2,00
SK41E	1,70	2,60	3,30	2,50	2,60	2,60	1,00	2,60	2,80	1,60	3,30	3,30
SK51E	2,20	4,40	4,70	4,00	3,40	3,40	1,80	3,50	4,10	3,00	3,80	3,80
[L]	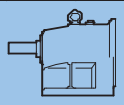						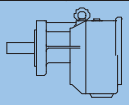					
SK02	0,15	0,60	0,70	0,60	0,40	0,40	0,25	0,60	0,60	0,60	0,50	0,50
SK12	0,25	0,75	0,85	0,75	0,50	0,50	0,35	0,85	0,90	0,90	0,60	0,60
SK22	0,50	1,80	2,00	1,80	1,35	1,35	0,70	2,00	2,00	1,80	1,55	1,55
SK32	0,90	2,50	3,00	2,90	2,00	2,00	1,30	2,90	3,30	3,10	2,40	2,40
SK42	1,30	4,50	4,50	4,30	3,20	3,20	1,80	4,40	4,50	4,00	3,70	3,70
SK52	2,50	7,00	6,80	6,80	5,10	5,10	3,00	6,80	6,20	7,40	5,60	5,60
[L]	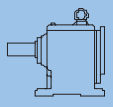						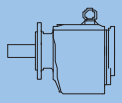					
SK62	6,50	15,00	13,00	16,00	15,00	15,00	7,00	15,00	14,00	18,50	16,00	16,00
SK72	10,00	23,00	18,00	26,00	23,00	23,00	10,00	23,00	18,50	28,00	23,00	23,00
SK82	14,00	35,00	27,00	44,00	32,00	32,00	15,00	37,00	29,00	45,00	34,50	34,50
SK92	25,00	73,00	47,00	76,00	52,00	52,00	26,00	73,00	47,00	78,00	52,00	52,00
SK102	36,00	79,00	66,00	102,00	71,00	71,00	40,00	81,00	66,00	104,00	72,00	72,00
[L]	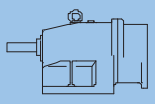						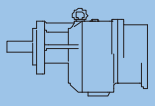					
SK03	0,30	1,00	0,80	0,90	0,60	0,60	0,50	0,80	0,90	1,10	0,80	0,80
SK13	0,60	1,25	1,10	1,20	0,70	0,70	0,85	1,20	1,20	1,20	0,95	0,95
SK23	1,30	2,40	2,30	2,35	1,60	1,60	1,50	2,60	2,50	2,80	2,80	2,80
SK33N	1,60	2,90	3,20	3,70	2,30	2,30	1,90	3,40	3,50	4,40	2,60	2,60
SK43	3,00	5,60	5,20	6,60	3,60	3,60	3,50	5,70	5,00	6,10	4,10	4,10
SK53	4,50	8,70	7,70	8,70	6,00	6,00	5,20	8,40	7,00	8,90	6,70	6,70
[L]	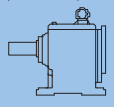						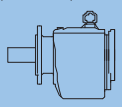					
SK63	13,00	14,50	14,50	16,00	13,00	13,00	13,50	14,00	15,50	18,00	14,00	14,00
SK73	20,50	20,00	22,50	27,00	20,00	20,00	22,00	22,50	23,00	27,50	20,00	20,00
SK83	30,00	31,00	34,00	37,00	33,00	33,00	31,00	34,00	35,00	40,00	34,00	34,00
SK93	53,00	70,00	59,00	72,00	49,00	49,00	53,00	70,00	59,00	74,00	49,00	49,00
SK103	74,00	71,00	74,00	97,00	67,00	67,00	69,00	78,00	78,00	99,00	67,00	67,00

[L]	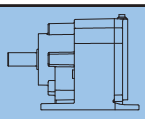						[L]	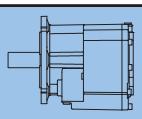					
⇨ 🕮 6.1	M1	M2	M3	M4	M5	M6	⇨ 🕮 6.1	M1	M2	M3	M4	M5	M6
SK072.1	0,16	0,32	0,21	0,23	0,18	0,20	SK072.1 F	0,16	0,32	0,21	0,23	0,18	0,20
SK172.1	0,27	0,59	0,42	0,45	0,32	0,39	SK172.1 F	0,27	0,59	0,42	0,45	0,32	0,39
SK372.1	0,45	1,05	0,75	1,00	0,60	0,65	SK372.1 F	0,45	1,05	0,75	1,00	0,60	0,65
SK572.1	0,75	1,90	1,50	2,00	1,10	1,15	SK572.1 F	0,75	1,90	1,50	2,00	1,10	1,15
SK672.1	1,10	2,60	2,15	2,70	1,55	1,65	SK672.1 F	1,10	2,60	2,15	2,70	1,55	1,65
SK772.1	1,15	3,65	2,25	3,15	1,35	2,15	SK772.1 F	1,15	3,65	2,25	3,15	1,35	2,15
SK872.1	2,60	8,00	5,30	7,00	2,80	4,60	SK872.1 F	2,60	8,00	5,30	7,00	2,80	4,60
SK972.1	4,50	12,90	8,10	12,70	4,60	7,80	SK972.1 F	4,50	12,90	8,10	12,70	4,60	7,80
[L]	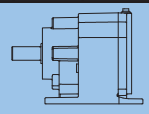						[L]	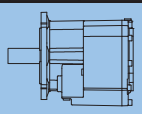					
⇨ 🕮 6.1	M1	M2	M3	M4	M5	M6	⇨ 🕮 6.1	M1	M2	M3	M4	M5	M6
SK373.1	0,45	1,05	0,75	1,00	0,60	0,65	SK373.1 F	0,45	1,05	0,75	1,00	0,60	0,65
SK573.1	0,75	1,90	1,50	2,00	1,10	1,15	SK573.1 F	0,75	1,90	1,50	2,00	1,10	1,15
SK673.1	1,10	2,60	2,15	2,70	1,55	1,65	SK673.1 F	1,10	2,60	2,15	2,70	1,55	1,65
SK773.1	1,95	3,50	3,20	2,90	2,25	2,95	SK773.1 F	1,95	3,50	3,20	2,90	2,25	2,95
SK873.1	4,05	7,60	6,85	6,55	5,00	6,55	SK873.1 F	4,05	7,60	6,85	6,55	5,00	6,55
SK973.1	7,40	12,20	11,10	11,60	8,00	10,90	SK973.1 F	7,40	12,20	11,10	11,60	8,00	10,90

[L]	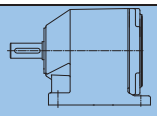						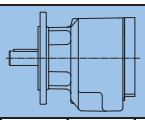					
⇨ 🕮 6.1	M1	M2	M3	M4	M5	M6	M1	M2	M3	M4	M5	M6
⇨ 🕮 6.1	B3	V6	B8	V5	B6	B7	B5	V3	B5I	V1	B5II	B5III
SK172	0,35	0,50	0,50	0,50	0,50	0,50	0,35	0,50	0,50	0,50	0,50	0,50
SK272	0,60	1,00	1,00	1,00	1,00	1,00	0,60	1,00	1,00	1,00	1,00	1,00
SK372	0,60	1,00	1,00	1,00	1,00	1,00	0,60	1,00	1,00	1,00	1,00	1,00
SK472	1,00	1,90	1,90	2,00	1,80	1,80	1,00	1,90	1,90	1,90	1,90	1,50
SK572	1,00	1,90	1,90	2,00	1,80	1,80	1,00	1,90	1,90	1,90	1,90	1,50
SK672	1,40	3,40	3,10	3,15	1,45	3,15	1,15	3,40	2,70	2,80	1,25	2,70
SK772	2,00	3,30	3,50	4,20	2,70	3,30	1,60	3,30	3,50	3,30	3,10	3,10
SK872	3,70	9,60	9,10	7,30	4,70	8,00	3,50	9,00	7,90	7,70	3,90	7,20
SK972	6,50	16,00	15,70	14,70	8,50	14,00	6,50	15,00	13,00	13,50	6,50	12,00
[L]	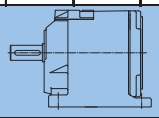						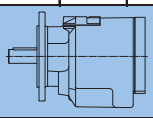					
SK273	0,62	1,10	1,10	1,10	1,10	1,10	0,62	1,10	1,10	1,10	1,10	1,10
SK373	0,55	1,10	1,10	1,10	1,10	1,10	0,55	1,10	1,10	1,10	1,10	1,10
SK473	1,30	2,50	2,10	2,40	2,10	2,10	1,25	2,40	2,10	2,50	2,10	2,10
SK573	1,30	2,50	2,10	2,40	2,10	2,10	1,25	2,40	2,10	2,50	2,10	2,10
SK673	1,80	3,80	3,20	3,40	2,90	3,00	1,70	3,80	3,00	3,20	3,00	3,00
SK773	2,50	4,50	3,70	4,60	3,30	3,30	2,30	5,00	3,60	4,50	3,90	3,90
SK873	6,20	8,40	7,50	9,10	7,50	7,50	5,00	8,80	7,60	8,00	8,00	8,00
SK973	11,00	15,80	13,00	16,00	13,30	13,00	10,30	16,50	13,00	16,00	14,00	14,00

[L]	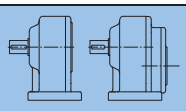						[L]	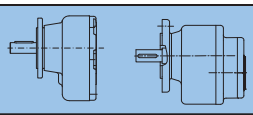					
⇨ 🕮 6.1	M1	M2	M3	M4	M5	M6	⇨ 🕮 6.1	M1	M2	M3	M4	M5	M6
	B3	V6	B8	V5	B6	B7		B5	V3	B5I	V1	B5II	B5III
SK0	0,13	0,22	0,13	0,22	0,13	0,13	SK0 F	0,13	0,22	0,13	0,22	0,13	0,13
SK01	0,22	0,38	0,22	0,38	0,22	0,22	SK01 F	0,22	0,38	0,22	0,38	0,22	0,22
SK20	0,55	1,00	0,55	1,00	0,55	0,55	SK20 F	0,35	0,60	0,35	0,60	0,35	0,35
SK25	0,50	0,90	0,50	0,90	0,50	0,50	SK25 F	0,50	0,90	0,50	0,90	0,50	0,50
SK30	0,80	1,40	0,70	1,40	0,70	0,70	SK30 F	0,80	1,40	0,70	1,40	0,70	0,70
SK33	0,80	1,60	1,00	1,60	0,80	1,00	SK33 F	1,00	1,60	1,00	1,60	0,80	1,00
SK000	0,24	0,41	0,24	0,41	0,24	0,24	SK000 F	0,24	0,41	0,24	0,41	0,24	0,24
SK010	0,38	0,60	0,38	0,60	0,38	0,38	SK010 F	0,38	0,60	0,38	0,60	0,38	0,38
SK200	0,80	1,30	0,80	1,30	0,80	0,80	SK200 F	0,60	1,04	0,60	1,04	0,60	0,60
SK250	1,40	1,50	1,40	1,50	1,40	1,40	SK250 F	1,40	1,50	1,40	1,50	1,40	1,40
SK300	1,40	1,50	1,40	1,50	1,40	1,40	SK300 F	1,40	1,50	1,40	1,50	1,40	1,40
SK330	1,50	1,58	1,50	1,58	1,50	1,50	SK330 F	2,00	1,58	1,50	2,80	1,50	1,50

[L]	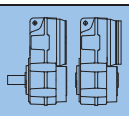						[L]	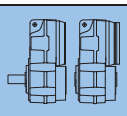					
⇨ 🕮 6.1	M1	M2	M3	M4	M5	M6	⇨ 🕮 6.1	M1	M2	M3	M4	M5	M6
⇨ 🕮 6.1	H1	H6	H2	H5	H4	H3	⇨ 🕮 6.1	H1	H6	H2	H5	H4	H3
SK0182NB A	0,40	0,55	0,60	0,55	0,35	0,35							
SK0282NB A	0,70	1,00	0,80	1,10	0,90	0,90							
							SK1382NB A	1,30	2,30	1,40	2,10	2,00	1,90
[L]	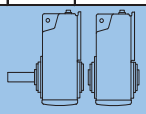						[L]	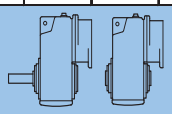					
SK1282 A	0,90	1,30	0,90	1,20	0,95	0,95							
SK2282 A	1,65	2,40	1,90	2,00	1,80	1,80	SK2382 A	1,70	2,60	1,90	3,10	1,50	1,50
SK3282 A	3,15	4,10	3,25	4,10	3,15	3,15	SK3382 A	4,10	4,90	3,30	5,60	3,30	3,30
SK4282 A	4,70	6,10	4,75	5,40	4,70	4,70	SK4382 A	5,90	6,80	4,90	8,30	4,90	4,90
SK5282 A	7,50	8,80	7,50	8,80	7,20	7,20	SK5382 A	12,50	12,00	6,70	14,00	8,30	8,30
[L]	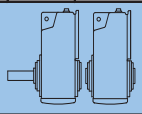						[L]	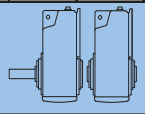					
SK6282 A	17,00	14,00	12,00	17,50	10,00	14,00	SK6382 A	16,50	13,00	9,60	18,00	14,00	12,50
SK7282 A	25,00	21,00	20,00	27,00	16,00	21,00	SK7382 A	22,00	20,00	16,00	25,00	23,00	19,00
SK8282 A	37,00	33,00	30,00	41,00	31,00	31,00	SK8382 A	34,00	32,00	25,00	38,00	35,00	30,00
SK9282 A	74,00	70,00	55,00	72,00	60,00	59,00	SK9382 A	73,00	70,00	45,00	74,00	65,00	60,00
[L]	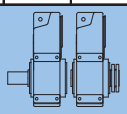						[L]	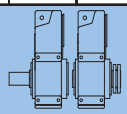					
SK10282 A	90	90	40	90	60	82	SK10382 A	85	100	73	100	80	80
SK11282 A	165	160	145	195	100	140	SK11382 A	160	155	140	210	155	135
							SK12382 A	160	155	140	210	155	135

* ⇨ 🕮 38

[L]	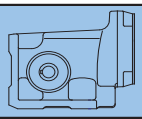						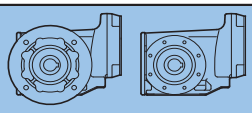					
⇨ 6.1	M1	M2	M3	M4	M5	M6	M1	M2	M3	M4	M5	M6
⇨ 6.1	B3	B6	B8	B3I	V5	V6	B5I	B5	B5III	B5II	V1	V3
							H1	H4	H2	H3	H5	H6
SK92072	0,40	0,60	0,50	0,50	0,40	0,40	0,40	0,60	0,50	0,50	0,40	0,40
SK92172	0,55	0,90	0,95	1,10	0,75	0,62	0,50	0,92	0,87	1,05	0,75	0,65
SK92372	0,90	1,30	1,45	1,60	1,20	1,20	1,15	1,50	1,20	1,70	1,15	1,15
SK92672	1,80	3,50	3,20	3,40	2,60	2,60	1,55	2,80	2,50	3,30	2,40	2,40
SK92772	2,30	4,50	4,60	5,30	4,10	4,10	2,75	4,40	4,50	5,50	3,50	3,50
[L]	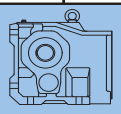						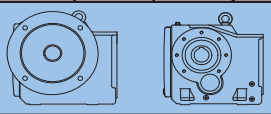					
SK9012.1	0,70	1,60	1,90	2,40	1,20	1,70	0,70	1,90	1,90	2,40	1,20	1,70
SK9016.1	0,70	1,60	1,90	2,40	1,20	1,70	0,70	1,90	1,90	2,40	1,20	1,70
SK9022.1	1,30	2,60	3,50	4,20	2,00	2,80	1,30	2,60	3,50	4,20	2,00	2,80
SK9032.1	1,70	4,80	6,40	6,70	4,10	5,10	1,90	5,20	6,40	7,30	3,30	5,10
SK9042.1	4,40	8,70	10,00	9,80	6,80	7,50	3,60	9,70	11,40	11,50	6,50	8,20
SK9052.1	6,50	16,00	19,00	21,50	11,00	15,50	7,50	16,50	20,00	22,50	11,50	18,00
SK9062.1	10,00	27,50	32,00	36,00	18,00	24,00	12,00	27,50	33,00	38,50	19,00	26,00
SK9072.1	10,00	27,50	32,00	36,00	18,00	24,00	12,00	27,50	33,00	38,50	19,00	26,00
SK9082.1	17,00	51,50	62,50	71,50	33,00	46,50	21,00	54,00	66,00	80,00	38,00	52,00
SK9086.1	29,00	73,00	85,00	102,00	48,00	62,00	36,00	78,00	91,00	101,00	53,00	76,00
SK9092.1	41,00	157,00	170,00	172,00	80,00	90,00	40,00	130,00	154,00	175,00	82,00	91,00
SK9096.1	70,00	187,00	194,00	254,00	109,00	152,00	80,00	187,00	193,00	257,00	113,00	156,00
[L]	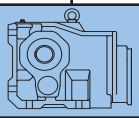						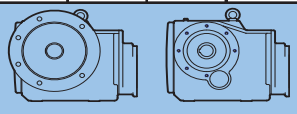					
SK9013.1	1,20	2,00	2,20	3,00	1,40	1,90	1,20	2,30	2,20	3,00	1,40	1,90
SK9017.1	1,20	2,00	2,20	3,00	1,40	1,90	1,20	2,30	2,20	3,00	1,40	1,90
SK9023.1	2,40	3,00	3,80	5,30	2,20	3,10	2,40	3,00	3,80	5,30	2,20	3,10
SK9033.1	3,30	6,60	7,00	7,80	4,30	5,10	3,80	5,70	6,90	8,50	3,60	5,60
SK9043.1	4,60	10,20	10,70	12,80	5,20	6,70	5,70	10,20	14,70	14,70	6,60	9,60
SK9053.1	10,00	17,00	20,00	24,20	11,50	16,50	12,50	18,00	21,50	26,50	13,00	17,00

[L]	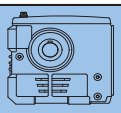						[L]	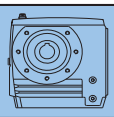					
⇨ 📖 6.1	M1	M2	M3	M4	M5	M6		M1	M2	M3	M4	M5	M6
⇨ 📖 6.1	B3	B6	B8	B3I	V5	V6		B5I	B5	B5III	B5II	V1	V3
⇨ 📖 6.1								H1	H4	H2	H3	H5	H6
SK02040	0,45	0,60	0,60	0,60	0,50	0,50	SK02040 A	0,40	0,80	0,65	0,60	0,50	0,50
SK02050	0,40	1,20	0,70	1,15	0,70	0,70	SK02050 A	0,45	1,10	0,90	1,10	0,80	0,80
SK12063	0,60	1,70	1,20	1,55	1,00	1,00	SK12063 A	0,50	1,45	1,20	1,40	1,10	1,10
SK12080	0,80	2,60	1,70	2,70	1,70	1,70	SK12080 A	0,90	3,10	3,00	3,00	2,20	2,20
SK32100	1,60	5,50	3,40	5,40	3,20	3,20	SK32100 A	1,50	5,20	3,80	5,30	3,80	3,80
SK42125	2,80	11,00	6,20	10,30	5,80	5,80	SK42125 A	3,20	12,90	6,10	10,50	6,30	6,30
[L]	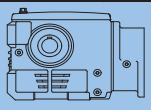						[L]	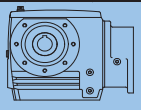					
SK13050	0,95	1,55	1,10	1,45	0,95	0,95	SK13050 A	0,85	1,75	1,25	1,35	1,15	1,15
SK13063	0,85	2,30	1,60	2,00	1,25	1,25	SK13063 A	0,90	2,10	1,55	2,10	1,45	1,45
SK13080	1,70	3,20	2,10	3,40	1,95	1,95	SK13080 A	1,70	3,75	3,60	3,60	2,55	2,55
SK33100	2,10	7,60	4,00	6,80	3,70	3,70	SK33100 A	2,10	6,10	4,80	6,60	4,20	4,20
SK43125	7,80	14,00	7,20	13,50	6,70	6,70	SK43125 A	4,80	13,50	7,40	14,50	8,00	8,00
[L]	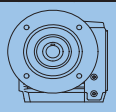						[L]	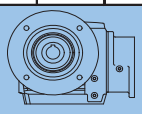					
SK02040 F	0,50	0,80	0,75	0,60	0,50	0,50							
SK02050 F	0,45	1,40	0,90	1,25	1,00	1,00	SK13050 F	0,90	1,80	1,15	1,75	1,25	1,25
SK12063 F	0,50	1,60	1,40	1,80	1,50	1,50	SK13063 F	0,95	2,10	1,65	2,15	1,75	1,75
SK12080 F	0,95	3,20	3,10	3,70	2,50	2,50	SK13080 F	1,40	4,20	3,35	4,20	2,75	2,75
SK32100 F	1,50	7,10	4,90	7,10	4,40	4,40	SK33100 F	2,30	7,60	5,50	7,80	4,85	4,85
SK42125 F	3,30	11,20	6,10	10,40	6,80	6,80	SK43125 F	4,30	12,90	7,10	12,10	7,70	7,70

6.6

Getriebebau **NORD** national:

Niederlassung **N**ord Hamburg /Schleswig-Holstein / Niedersachsen	Getriebebau NORD GmbH & Co. **K**G Postfach 1262 · 22943 Bargteheide Rudolf-Diesel-Straße 1 · 22941 Bargteheide	Tel.: +49(0) 4532 / 401-0 Fax: +49(0) 4532 / 401-253 E-mail: info@nord-de.com
Vertriebsb¸ro **B**remen westliches Niedersachsen / Bremen	Getriebebau NORD GmbH & Co. **K**G **V**ertriebsbüro Bremen Wohlers Feld 16 27211 Bassum	Tel.: +49(0) 4249 / 9616-75 Fax: +49(0) 4249 / 9616-76 E-mail: nl-bremen@nord-de.com
Niederlassung **W**est **K**öln /**K**oblenz / südl. Nordrhein-Westfalen / Ruhrgebiet /Düsseldorf	Getriebebau NORD GmbH & Co. **K**G Niederlassung West Großenbaumer Weg 10 40472 Düsseldorf	Tel.: +49(0) 211 / 99555-0 Fax: +49(0) 211 / 99555-45 E-mail: nl-duesseldorf@nord-de.com
Vertriebsb¸ro **B**utzbach Hessen /Frankfurt / Wiesbaden /Darmstadt	Getriebebau NORD GmbH & Co. **K**G **V**ertriebsbüro Butzbach **M**arie-Curie-Straße 2 35510 Butzbach	Tel.: +49(0) 6033 / 9623-0 Fax: +49(0) 6033 / 9623-30 E-mail: nl-frankfurt@nord-de.com
Niederlassung **O**st Sachsen /südl. Sachsen-Anhalt / Thüringen	Getriebebau NORD GmbH & Co. **K**G Niederlassung Ost Leipziger Straße 58 09113 Chemnitz /Sachsen	Tel.: +49(0) 371 / 33407-0 Fax: +49(0) 371 / 33407-20 E-mail: nl-chemnitz@nord-de.com
Vertriebsb¸ro **B**erlin Berlin /Brandenburg **M**ecklenb.-**V**orpommern / nördl. Sachsen-Anhalt	Getriebebau NORD GmbH & Co. **K**G **V**ertriebsbüro Berlin Roedernstr. 8 12459 Berlin	Tel.: +49(0) 30 / 639794-13 Fax: +49(0) 30 / 639794-14 E-mail: nl-berlin@nord-de.com
Niederlassung **S¸d** Stuttgart /Baden-Würtemberg / Saarland /südl. Rheinland-Pfalz	Getriebebau NORD GmbH & Co. **K**G Niederlassung Süd **K**atharinenstr. 2-6 70797 Filderstadt – Sielmingen	Tel.: +49(0) 7158 / 95608-0 Fax: +49(0) 7158 / 95608-20 E-mail: nl-stuttgart@nord-de.com
Vertriebsb¸ro **N¸**rnberg Nürnberg /Nord-Bayern	Getriebebau NORD GmbH & Co. **K**G **V**ertriebsbüro Nürnberg Schillerstraße 3 90547 Stein	Tel.: +49(0) 911 / 672311 Fax: +49(0) 911 / 672471 E-mail: nl-nuernberg@nord-de.com

Getriebebau NORD International:

AT Getriebebau NORD GmbH
Deggendorfstraße 8, A-4030 Linz
Tel.: +43-732-31 89 20 Fax: +43-732-31 89 20-85
info@nord-at.com

AUS NORD Drivesystems
18 Stoney Way
3030 Derrimut Vic, Australia
Tel: +61 (0) 488 588 200
mark.alexander@nord.com

BE NORD Aandrijvingen België N.V.
Boutersem Dreef 24, B-2240 Zandhoven
Tel.: +32-3-484 59 21 Fax: 32-3-484 59 24
info@nord-be.com

BR Nord Motoredutores do Brasil Ltda.
Rua Dr. Moacyr Antonio de Morais 700
CEP: 07140-285 São Paulo
Tel.: +55-11-64 02 88 55 Fax: +55-11-64 02 88 30
info@nord-br.com

CA Nord Gear Limited
41 West Drive, CDN - Brampton, Ontario L6T 4A1
Tel.: +1-905-796-36 06 Fax: +1-905-796-81 30
info@nord-ca.com

CN NORD Drivesystems
No. 510 Chang Yang Street, Suzhou Industrial Park, 215021
P.R. China, Jiangsu Province
Tel.: +86-512-85180277-191 Fax: +86-512-85180278
jblock@nord-cn.com

HR NORD-Pogoni d.o.o.
Obrtnicka 9, HR-48260 Krizevci
Tel.: +385-48-71 19 00 Fax: +385-48-27 04 94
info@nord-hr.com

CZ NORD-Poháněcí technika, s. r. o.
Bečovská 1398/11, CZ 104 00 Praha 10 - Uhříněves
Tel.: +420 222 287 222 Fax: +420 222 287 228
info@nord-cz.com

DK NORD-Gear Danmark A/S
Kliplev Erhvervspark 28 – Kliplev, DK - 6200 Aabenraa
Tel.: +45-73 68 78 00 Fax: +45-73 68 78 10
info@nord-dk.com

FI NORD Gear Oy
Aunankorvenkatu 7, FIN - 33840 Tampere
Tel.: +358-3 25 41 800 Fax: +358-3 25 41 820
info@nord-fi.com

FR NORD Réducteurs sarl.
17-19 Av. G. Clémenceau, F-93421 Villepinte Cedex
Tel.: +33-1 49 63 01 89 Fax: +33-1 49 63 08 11
info@nord-fr.com

HU NORD Hajtastechnika Kft.
Törökkö u. 5-7, H-1037 Budapest
Tel.: +36-1 437 01 27 Fax: +36-1 250 55 49
info@nord-hu.com

IN Nord Drivesystem Pvt. LTD
282/2, 283/2, Village Mann, Tal. Mulshi,
IN – Pune – 411 057
Tel.: +91-(0)20-39801-200 Fax: +91-(0)20-39801-216
info@nord-in.com

ID PT. NORD Indonesia
Jln. Raya Serpong KM 7
Kompleks Rumah Multi Guna Blok D-No. 1
Pakulonan, Serpong 15310 – Tangerang - West Java
Tel.: +62-21-53 12 22 22 Fax: +62-21-53 12 22 88
info@nord-id.com

IT NORD-Motoriduttori s.r.l.
Via Newton 22, IT-40017 San Giovanni In Persiceto (BO)
Tel.: +39-051-68 70 711 Fax: +39-051-68 70 793
info@nord-it.com

MX NORD Gear corporation
Av. Lázaro Cárdenas 1007 Pte, San Pedro Garza Caría, N.L.
MX – 66266 Mexico, C.P.
Tel.: +52-81-82 20 91 65 Fax: +52-81-82 20 90 44
HGonzales@nord-mx.com

NL NORD Aandrijvingen Nederland B.V.
Voltstraat 12, NL-2181 HA Hillegom
Tel.: +31-252-52 95 44 Fax: +31-252-52 22 22
info@nord-nl.com

NO NORD Gear Norge AS
Hestehagen 5, PB 1043, N – 1442 Drøbak
Tel.: +47-64 90 55 80 Fax: +47-64 90 55 85
info@nord-no.com

PL NORD Napędy sp. z o.o.
Ul. Grottgera 30, PL-32-020 Wieliczka
Tel.: +48-012-28 89 900 Fax: +48-012-28 89 911
biuro@nord.pl

RU OOO NORD Privody
Ul.A. Nevsky 9, RU-191167 St. Petersburg
Tel.: +7-812-327 0192 Fax: +7-812-327 0192
info@nord-ru.com

SG NORD GEAR Pte. Ltd.
33 Kian Teck Drive, 628850 Jurong - Singapore
Tel.: +65-62 65 91 18 Fax: +65-62 65 68 41
info@nord-sg.com

SK NORD Pohony, s.r.o.
Stromová 13, SK - 831 01 Bratislava
Tel.: +421-2-54 79 13 17 Fax: +421-2-54 791402
info@nord-sk.com

ES NORD Motorreductores S.A.
Aptdo. de Correos 166, ES - 08200 Sabadell
Tel.: +34 93 72 35 322 Fax: +34 93 72 33 147
info@nord-es.com

SE NORD Drivsystem AB
Ryttargatan 277 / Box 2097, SE-194 02 Upplands Väsby
Tel.: +46-8-59 41 14 00 Fax: +46-8-59 41 14 14
info@nord-se.com

CH Getriebebau NORD AG
Bächigenstr.18, CH-9212 Arnegg
Tel.: +41-71-38 89 911 Fax: +41-71-38 89 915
info@nord-ch.com

TR NORD-Drivesystems Güç Aktarma
Sýstemlerý San. Ve. Ltd. Ptý
Ticaret Ltd. Sti., TR-34959 - Tuzla - Istanbul
Tel.: +90-216-30 41 360 Fax: +90-216-30 41 369
info@nord-tr.com

UKR Getriebebau NORD GmbH
Vasilkovskaja 1, Office 100/3, Ukr-03040 Kyiv
Tel.: +380-44-53 70 615 Fax: +380-44-53 70 615
vtsoka@nord-ukr.com

UK Nord Gear Limited (UK)
11 Barton Lane, Abingdon Science Park, GB-Abingdon,
Oxfordshire OX14 3NB
Tel.: +44-1235-53 44 04 Fax: +44-1235-53 44 14
info@nord-uk.com

US NORD Gear Corporation
800 Nord Drive, P.O. 367, USA-Waunakee, WI 53597
Tel.: +1-608-84 97 300, +1-888-314-6673
Fax: +1-800-373-6673
info@nord-us.com

VN NORD Gear Pte. Ltd
Unit 401, 4F, An Dinh Building,
18 Nam Quoc Cang Street
Pham Ngu Lao Ward
District 1, Ho Chi Minh City, Vietnam
Tel: +84- 8 925 7270 Fax: +84 8 925 7271
info@vn.nord.com

Intelligent Drivesystems, Worldwide Services

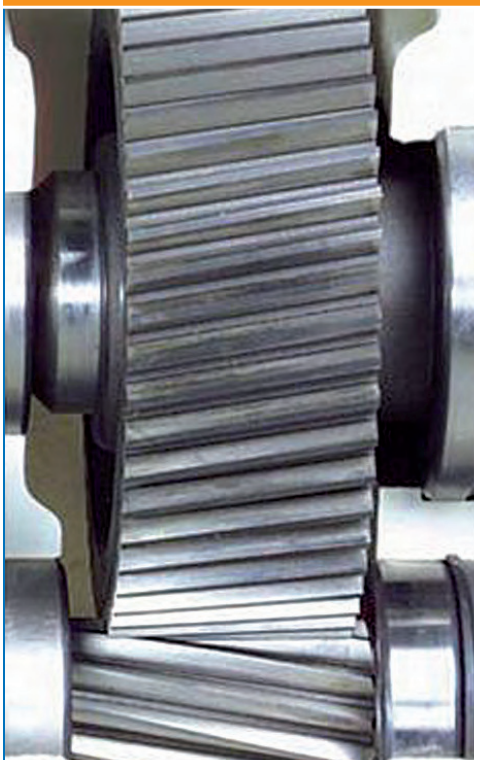





Getriebebau NORD GmbH & Co. KG
Rudolf-Diesel-Str. 1
D - 22941 Bargteheide
Fon +49 (0) 4532 / 401 - 0
Fax +49 (0) 4532 / 401 - 253
info@nord.com
www.nord.com

NORD
DRIVESYSTEMS

Mat.-Nr. 6052802/0110

APPENDIX D: BUTTERFLY VALVES TORQUES

Bray® CONTROLS

A Division of BRAY INTERNATIONAL, Inc.



Resilient Seated Butterfly Valves

Technical Manual

TM1050 - 12/12/2011

Resilient Seated Butterfly Valves

Technical Manual - Table of Contents

Topic	Page(s)
Introduction to Torques	3
Reduced Disc Diameter Bray Valves 30/31/3A	6
Seating & Unseating Torques	7
20/21, 30/31 Imperial (Lb-Ins)	8
20/21, 30/31 Metric (N-m)	9
32/33, 35/36 Imperial (Lb-Ins) & Metric (N-m)	10
22/23 Imperial (Lb-Ins) & Metric (N-m)	11
Dynamic Torque Factors	
Imperial (Lb-In/psi)	12
Metric (N-m/bar)	13
Valve Sizing Coefficients	14
Imperial (Cv)	15
Metric (Kv)	17
Flange to Valve Bolting Guide	19
Flange Bolt Tensioning Data	20
Standard Metal Specifications	
20/21 & 22/23	23
30/31, 31H, 3A/3AH, 31U	24
32/33, 35/36, 35F, 36H	25



All statements, technical information, and recommendations in this bulletin are for general use only. Consult Bray representatives or factory for the specific requirements and material selection for your intended application. The right to change or modify product design or product without prior notice is reserved.

Torques:

INTRODUCTION

There are a number of torques which butterfly valves may experience such as:

- **T_{su} - Seating and Unseating Torque**
- **T_d - Dynamic Torque Resulting from fluid flow**
- **T_{bf} – Bearing Friction Torque**
- **T_{ss} – Stem Seal Friction Torque**
- **T_e – Eccentricity Torque resulting from disc offset from centerline of stem (either single, double or triple offset)**
- **T_h – Hydrostatic Torque**

Factors which influence the butterfly valve torque values shown above are:

Type of Seat and Seat Material

Interference of Seat I.D. and Disc O.D.

Shaft Diameter

Valve Diameter

Bearing Coefficient of Friction

Angle of Opening

Shut-off Pressure

Fluid Velocity

Disc Shape and Configuration

Piping System and Location/Orientation of Valve in Pipe Line

System Head Characteristics

Physical Size of Disc/Shaft Obstructing Flow

Disc Edge Finish

With respect to Butterfly Valves, the two major conditions for determining total valve operating torque (T_T) exists as follows:

CASE I (Angle = 0° , Disc in Closed Position)

$$T_T = T_h + T_{bf} + T_{ss} + T_{su}$$

Analyzed

Total Torque for Case I using a symmetrical disc butterfly valve is the sum of hydrostatic torque, bearing friction torque, stem seal, friction torque, and seating/unseating torque.

A. Hydrostatic Torque (T_h)

We will ignore discussion of the hydrostatic torque values as they are generally insignificant compared to the seating/unseating, bearing friction and stem seal torque values (the safety factor applied to seating/unseating, stem seal friction and bearing friction torque values more than compensates for the hydrostatic torque which is usually less than 2% of these total torques).

B. Bearing Friction Torque (T_{bf})

Bearing friction torque occurs because pressure forces against the disc are transmitted to the stem. As the stem is forced against the bearing supports, bearing friction torque is created between the stem material and the support material as the stem is turned. Bearing friction torques are normally included in the seating/unseating torque values.

Bearing friction torques can be determined by using the following equation:

$$T_{bf} = .785\ C_f\ D_v^2\ (d/2)\ \Delta P$$

Where:

- T_{bf} = Bearing Friction Torque
- C_f = Coefficient of Friction (approximately .25 for non-corroded stem to cast iron body) (dimensionless).
- D_v = Valve Diameter (Inches)
- d = Diameter of Shaft (Inches)
- ΔP = Pressure Differential (psi)

C. Stem Seal Friction Torque (T_{ss})

For all practical purposes stem seal friction torque values are insignificant when compared to seating/unseating and bearing friction torques. Stem seal friction torques are normally included in the seating/unseating torque values.

All information herein is proprietary and confidential and may not be copied or reproduced without the expressed written consent of BRAY INTERNATIONAL, Inc.
The technical data herein is for general information only. Product suitability should be based solely upon customer's detailed knowledge and experience with their application.

D. Seating/Unseating Torques (T_{su})

The seating/unseating torque value (T_{su}) is a function of the pressure differential, the seat material's coefficient of friction, the finished surface of the disc edge, the amount of interference between the seat I.D. and disc O.D. when flanged in piping, the seat thickness, and the type of service (media) for which the valve is being used. In determining the T_{su} values for Bray resilient seated butterfly valves, Bray has developed Seating/Unseating Torque Charts incorporating all bearing friction and stem seal friction torques for three classes of services for both the valves with standard discs (rated to full pressure) and for valves with reduced diameter discs (rated for 50 psi [3.5 bar]). The three service classes are:

Class I – Non-Corrosive, Lubricating Service

Class II – General Service

Class III – Severe Service

Please review the guidelines for each class in the technical manual when determining which Seating/Unseating Torque Class should be used. Most butterfly valves are used in Class II, General Service applications.

E. Total Torque (T_T)

The total torque values for Bray symmetrical disc valves for Case I applications are shown in the Seating/Unseating Torque Charts within this manual.

CASE II (Disc in Partial To Full Opening Position)

$$T_T = T_{bf} + T_{ss} + T_d$$

The total Torque for Case II using a symmetrical disc butterfly valve is the summation of bearing friction torque, stem seal friction torque and dynamic torque.

A. Bearing Friction Torque (T_{bf})

See Case I discussion. This torque value is normally included in the Dynamic Torque Value.

B. Stem Seal Friction Torque (T_{ss})

See Case I discussion. This torque value is normally included in the Dynamic torque value.

C. Dynamic Torque (T_d)

In a symmetrical disc design, dynamic torque occurs between the closed position, 0° and the full open position, 90°. With the disc in the partially open position, velocity of the fluid passing the leading disc edge is less than the velocity passing the trailing edge. This variance in velocity past the leading disc edge and trailing disc edge results in an unbalanced distribution of pressure forces on the upstream side of the face of the disc. The total pressure forces acting perpendicular to the disc face on the leading edge half of the disc are greater than the total pressure acting perpendicular on the trailing half of the disc. This uneven distribution of pressure on the disc face (exists on both sides of the disc) results in a torsional force which tries to turn the disc to the closed position **(Figure 1)**. This torsional closing force can become greater than the seating/unseating torque value depending on the valve angle of opening and differential pressure.

To determine dynamic torque, the following equation is applied:

$$T_d = C_{dt}\, d^3\, \Delta P$$

Where:

T_d = Dynamic Torque (lbs- in).

C_{dt} = Coefficient of Dynamic Torque (based on disc shape and angle of opening) (dimensionless)

d = Diameter of Disc (Inches)

ΔP = Pressure Differential Across Valve (psi)

Figure 1 - Pressure Distribution

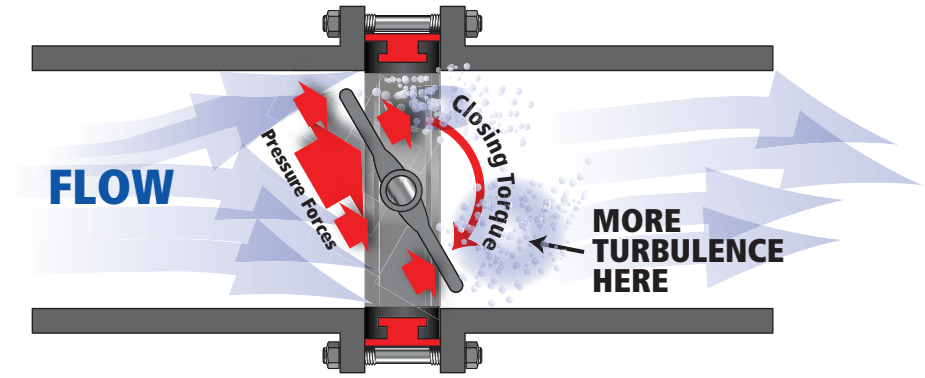

All information herein is proprietary and confidential and may not be copied or reproduced without the expressed written consent of BRAY INTERNATIONAL, Inc.
The technical data herein is for general information only. Product suitability should be based solely upon customer's detailed knowledge and experience with their application.

As shown in **Figure 2**, dynamic torque for Bray's symmetrical disc valves is at 0° angle of opening and increases until the angle of opening reaches 75°-80°, where it then decreases to a zero value at full open (90°) (no internal friction factors considered, just dynamic torque only).

One final comment about dynamic torque is that one may minimize the dynamic torque by the orientation of the valve (stem horizontal or vertical) in the pipeline as well as by the location (distance) in the pipeline from elbows, other valves, etc. (See Bray Resilient Seated BFV Operations and Maintenance Manual).

D. Total Torque (T_T)

The total torque required for operating a Bray symmetrical disc butterfly valve at an angle opening between 0°and 90° is shown in the Dynamic Torque section of this manual. Note that the dynamic torque includes all internal friction torque values.

CONCLUSION

In most applications for butterfly valves, especially 20″ (508mm) or smaller, the maximum torque required to operate the valve will be seating/unseating torque. However, dynamic torque should be considered particularly in:

- Control applications using larger valves (24″ [610mm] and above) where the disc is maintained in the open position
- Applications using larger valves (24″ [610mm] and above) where the velocity is high (16 ft./sec [5.3m/sec]).

Figure 2 - Angle of Opening

The C_{dt} value for Bray symmetrical disc valves are approximately:

Angle of Opening	0°	10°	20°	30°	40°	50°	60°	70°	75°	80°	90°
C_{dt}	0	0.0126	0.0140	0.0251	0.0505	0.0809	0.1394	0.2384	0.3419	0.401	0

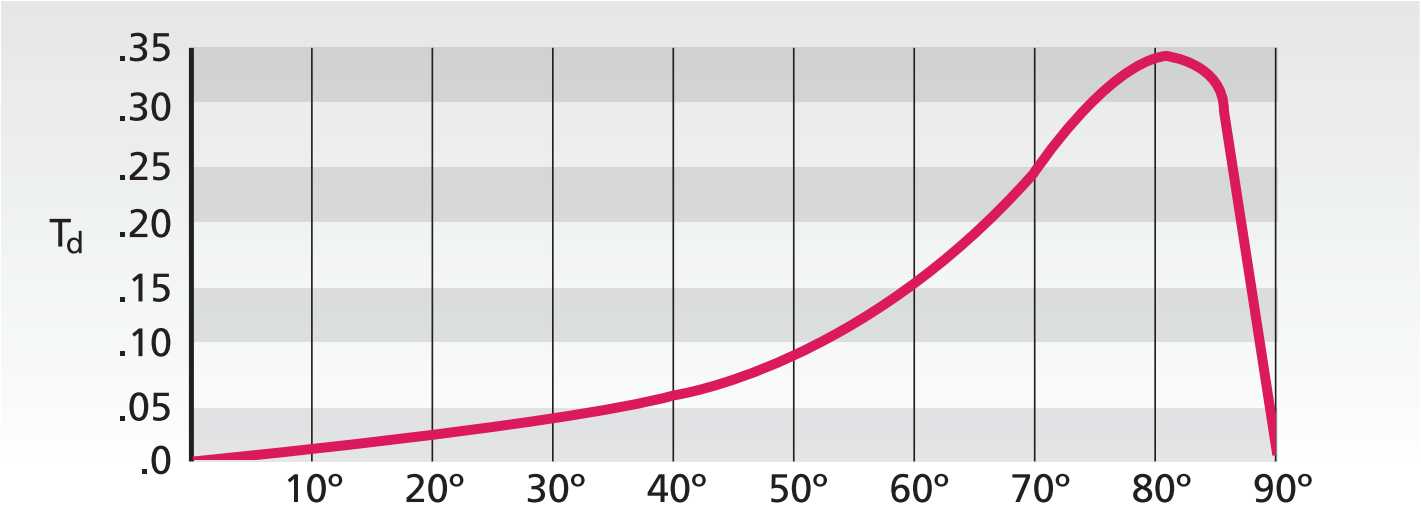

All information herein is proprietary and confidential and may not be copied or reproduced without the expressed written consent of BRAY INTERNATIONAL, Inc.
The technical data herein is for general information only. Product suitability should be based solely upon customer's detailed knowledge and experience with their application.

Reduced Disc Diameter
Bray Series 30/31/3A Valves

Bray offers a reduced disc diameter for 4”-20” for Series 30, 31 and 3A valves. The purpose of reducing the disc diameter is to decrease the seating/unseating torques and extend the seat life on low pressure applications.

By reducing the disc diameter, the interference between the disc O.D. and seat I.D. is decreased and the valve pressure rating, which is a function of this interference, is reduced to 50 PSI. Less interference between the disc and seat results in reduced seating/unseating torques. Lower seating/unseating torque may allow for the use ofa smaller actuator on the valve. In other applications where abrasive dry bulk materials such as cement, sugar, plastic, pallets, flour, etc., are generally pneumatically conveyed at 50 PSI or less, the reduced disc diameter not only reduces the seating/unseating torque but, very importantly, usually significantly increases the services life of the seat.

Bray does the following to differentiate reduced diameter discs from full diameter discs:

Metal Discs: An “ R ” is stamped above the part number

Nylon 11 Coated Discs: Discs are differentiated by the color of the Nylon 11:

Grey – Full Disc Diameter

White – Reduced Disc Diameter

All information herein is proprietary and confidential and may not be copied or reproduced without the expressed written consent of BRAY INTERNATIONAL, Inc.
The technical data herein is for general information only. Product suitability should be based solely upon customer’s detailed knowledge and experience with their application.

Seating & Unseating Torques:

Bray has developed Seating/Unseating Torque Charts for three Classes of Service for its valves with standard discs (rated for full pressure) and for valves with reduced diameter discs (rated for 50 PSI / 3.5 bar.).

The guidelines for selecting a Class to be used for determining a valve's seating/unseating torque are given below. Each valve application should comply with all five Class characteristics in order to be qualified for that Class.

Characteristics of Application	**Class A** Non-Corrosive, Lubricating Service	**Class B** General Service	**Class C** Severe Service
Media Type	Lubricating hydrocarbons; Aqueous processes and Water (See Note 1)	Water; aqueous processes; all other aqueous liquids including salt water; Lubricating gases	Dry, non-lubricating such as air, dry gas, cement, pneumatic conveying mediums
Corrosion by Media	Insignificant if any	No major corrosion or deposits from media	Can incur significant corrosion such as Ductile Iron disc in water
Chemical Reactions of Media with Seat	Insignificant if any	Only minor or insignificant in nature	Reactions causing swelling and hardness occur
Media Temperature	45º to 160ºF (7º to 71ºC)	Within seat temperature limits, not near limits	Near or at seat temperature limits
Frequency of Valve Cycling	Once weekly or more frequently	Minimum once every 3-6 weeks, or more frequently	Infrequently, sometimes not cycled for long periods

NOTE:

1. For aqueous processes and water, Class A torques may be used only if a Nylon 11 coated disc is selected and all other Class A characteristics apply. Otherwise, Class B torques should be used.
2. All the material trims may be classified into Class A, B, or C except Series 20/21 valves with a PTFE Lined Elastomer seat, PTFE molded disc/stem, or rubber molded disc/stem. These trims must always use Class C Seating/Unseating Torque Values unless they are used only in a throttling application. Valves with bonded seats must always be classified as Class C.
3. If a valve is used strictly in a throttling application, that is, it is never put in the closed position but throttled between 20° and 80°, then Class A torques may be used provided you have checked to see that dynamic torques do not exceed the Class A torque values.
4. With the exception of dry, non-lubricating medias, one is usually safe electing to use Class B torques for sizing actuators for all other valve service applications. Seating/Unseating Torque values shown include friction bearing torques for stated differential pressure.
5. Dynamic Torque values are not considered. See the Dynamic Torque chart in this manual for determination of Dynamic Torque.
6. Do not apply a safety factor to torque values when determining actuator output torque requirement.
7. **For 3-way assemblies where one valve is opening and another is closing, multiply torque by a 1.5 factor.**

All information herein is proprietary and confidential and may not be copied or reproduced without the expressed written consent of BRAY INTERNATIONAL, Inc.
The technical data herein is for general information only. Product suitability should be based solely upon customer's detailed knowledge and experience with their application.

Series 20/21 and 30/31 Torques (Lb-Ins)

	Valve Size Inches	Valve Differential Pressure (PSIG)						
		Full Disc					Reduced Disc	
		0 psi	50 psi	100 psi	150 psi	175 psi	0 psi	50 psi
Class A Non-Corrosive, Lubricating Service	1	54	59	65	70	73	54	59
	1.5	81	86	91	97	100	81	86
	2	109	114	119	123	128	109	114
	2.5	169	178	187	196	200	169	178
	3	220	236	250	264	273	220	236
	4	341	364	387	410	423	225	248
	5	510	560	610	660	687	324	374
	6	632	712	792	872	912	344	488
	8	1,182	1,341	1,500	1,660	1,741	735	894
	10	1,764	2,018	2,272	2,526	2,653	1,204	1,358
	12	2,701	3,110	3,519	3,928	4,132	1,665	2,074
	14	3,818	4,500	5,182	5,864	—	2,318	3,000
	16	4,638	5,819	7,000	8,182	—	2,699	3,880
	18	5,265	7,065	8,865	10,665	—	2,970	4,788
	20	7,000	9,364	11,728	14,091	—	3,356	6,243
Class B General Service	1	59	65	71	77	80	59	65
	1.5	89	95	100	106	110	89	95
	2	120	125	130	135	140	120	125
	2.5	185	195	205	215	220	185	195
	3	245	260	275	290	297	245	260
	4	375	400	425	450	462	252	267
	5	560	615	670	725	755	355	410
	6	695	783	871	953	1,003	427	537
	8	1,300	1,475	1,650	1,825	1,915	808	983
	10	1,960	2,240	2,520	2,800	2,940	1,213	1,493
	12	2,970	3,420	3,870	4,320	4,545	1,830	2,280
	14	4,200	4,950	5,700	6,450	—	2,550	3,300
	16	5,100	6,400	7,700	9,000	—	2,967	4,267
	18	5,850	7,850	9,850	11,850	—	3,267	5,267
	20	7,700	10,300	12,900	15,500	—	4,267	6,867
Class C Severe Service	1	74	82	89	97	100	74	82
	1.5	111	119	125	133	137	111	119
	2	151	157	163	169	175	151	157
	2.5	231	244	257	269	275	231	244
	3	306	325	344	363	375	306	325
	4	468	500	532	563	582	316	348
	5	700	769	838	907	944	444	513
	6	870	980	1,090	1,200	1,255	525	672
	8	1,625	1,844	2,063	2,282	2,394	1,011	1,230
	10	2,450	2,800	3,150	3,500	3,675	1,517	1,867
	12	3,712	4,275	4,838	5,400	5,682	2,287	2,850
	14	5,251	6,188	7,125	8,063	—	3,189	4,126
	16	6,375	8,000	9,625	11,250	—	3,709	5,334
	18	7,315	9,815	12,315	14,815	—	4,084	6,584
	20	9,625	12,875	16,125	19,375	—	5,334	8,584

All information herein is proprietary and confidential and may not be copied or reproduced without the expressed written consent of BRAY INTERNATIONAL, Inc.
The technical data herein is for general information only. Product suitability should be based solely upon customer's detailed knowledge and experience with their application.

Series 20/21 and 30/31 Torques (N-m)

	Valve Size mm	Valve Differential Pressure (Bar)						
		Full Disc					Reduced Disc	
		0 bar	3.4 bar	7 bar	10.3 bar	12 bar	0 bar	3.4 bar
Class A Non-Corrosive, Lubricating Service	25	6	7	7	8	8	6	7
	40	9	10	10	11	11	9	10
	50	12	13	13	14	14	12	13
	65	19	20	21	22	23	19	20
	80	25	27	28	30	31	25	27
	100	39	41	44	46	48	25	28
	125	58	63	69	75	78	37	42
	150	71	80	89	99	103	39	55
	200	134	152	169	188	197	83	101
	250	199	228	257	285	300	136	153
	300	305	351	398	444	467	188	234
	350	431	508	585	663	—	262	339
	400	524	657	791	924	—	305	438
	450	595	798	1,002	1,205	—	336	541
	500	791	1,058	1,325	1,592	—	379	705
Class B General Service	25	7	7	8	9	9	7	7
	40	10	11	11	12	12	10	11
	50	14	14	15	15	16	14	14
	65	21	22	23	24	25	21	22
	80	28	29	31	33	34	28	29
	100	42	45	48	51	52	28	30
	125	63	69	76	82	85	40	46
	150	79	88	98	108	113	48	61
	200	147	167	186	206	216	91	111
	250	221	253	285	316	332	137	169
	300	336	386	437	488	514	207	258
	350	475	559	644	729	—	288	373
	400	576	723	870	1,017	—	335	482
	450	661	887	1,113	1,339	—	369	595
	500	870	1,164	1,458	1,751	—	482	776
Class C Severe Service	25	8	9	10	11	11	8	9
	40	13	13	14	15	15	13	13
	50	17	18	18	19	20	17	18
	65	26	28	29	30	31	26	28
	80	35	37	39	41	42	35	37
	100	53	56	60	64	66	36	39
	125	79	87	95	102	107	50	58
	150	98	111	123	136	142	59	76
	200	184	208	233	258	270	114	139
	250	277	316	356	395	415	171	211
	300	419	483	547	610	642	258	322
	350	593	699	805	911	—	360	466
	400	720	904	1,087	1,271	—	419	603
	450	826	1,109	1,391	1,674	—	461	744
	500	1,087	1,455	1,822	2,189	—	603	970

All information herein is proprietary and confidential and may not be copied or reproduced without the expressed written consent of BRAY INTERNATIONAL, Inc.
The technical data herein is for general information only. Product suitability should be based solely upon customer's detailed knowledge and experience with their application.

Series 32/33, 35/36 Torques (Lb-Ins)

	Valve Size inches	32, 35 - Max △P = 75 psi				33, 36 - Max △P = 150 psi			
		0 psi	25 psi	50 psi	75 psi	0 psi	50 psi	100 psi	150 psi
Class B General Service (Imperial)	24	6,700	8,100	9,500	10,900	10,500	15,000	19,500	24,000
	26	7,900	9,800	11,700	13,600	12,400	18,400	24,400	30,400
	28	9,200	11,600	14,000	16,400	14,200	21,700	29,200	36,700
	30	10,400	13,300	16,200	19,100	16,100	25,100	34,100	43,100
	32	11,700	15,600	19,400	23,300	18,400	29,700	41,100	52,400
	34	13,500	18,500	23,500	28,500	20,950	34,750	48,600	62,400
	36	14,300	20,100	25,900	31,700	23,000	39,000	55,000	71,000
	40	18,200	26,200	34,100	42,000	24,300	46,300	68,300	90,300
	42	20,200	29,200	38,200	47,200	25,000	50,000	75,000	100,000
	44	20,800	32,500	44,200	55,800	26,700	56,700	86,700	118,300
	48	22,000	39,000	56,000	73,000	30,000	70,000	110,000	150,000
Class C	54	41,500	73,500	105,500	138,000	56,300	131,000	173,000	282,000
	60	55,500	98,200	141,000	184,800	75,100	174,500	208,000	376,000
	66	115,700	159,400	203,200	247,000	161,500	277,500	393,400	509,400
	72	Consult Factory							
	78	Consult Factory							
	84	Consult Factory							
	90	Consult Factory							
	96	Consult Factory							

Series 32/33, 35/36 Torques (N-m)

	Valve Size mm	32, 35, - Max △P = 5 bar				33, 36 - Max △P = 10.3 bar			
		0 bar	1.7 bar	3.4 bar	5.2 bar	0 bar	3.4 bar	7 bar	10.3 bar
Class B General Service (Metric)	600	757	915	1,074	1,232	1,187	1,695	2,204	2,712
	650	893	1,107	1,322	1,537	1,401	2,079	2,757	3,435
	700	1,040	1,311	1,582	1,853	1,605	2,452	3,300	4,147
	750	1,175	1,503	1,831	2,158	1,819	2,836	3,853	4,870
	800	1,322	1,763	2,192	2,633	2,079	3,356	4,644	5,921
	850	1,526	2,091	2,656	3,221	2,367	3,927	5,492	7,051
	900	1,616	2,271	2,927	3,582	2,599	4,407	6,215	8,023
	1,000	2,057	2,961	3,853	4,746	2,746	5,232	7,718	10,204
	1,050	2,283	3,300	4,317	5,334	2,825	5,650	8,475	11,300
	1,100	2,350	3,673	4,995	6,305	3,017	6,407	9,797	13,368
	1,200	2,486	4,407	6,328	8,249	3,390	7,910	12,430	16,950
Class C	1,400	4,689	8,304	11,920	15,592	6,361	14,801	19,546	31,862
	1,500	6,271	11,095	15,931	20,880	8,485	19,716	23,501	42,482
	1,650	13,072	18,010	22,959	27,907	18,247	31,353	44,448	57,555
	1,800	Consult Factory							
	2,000	Consult Factory							
	2,200	Consult Factory							
	2,250	Consult Factory							
	2,400	Consult Factory							

All information herein is proprietary and confidential and may not be copied or reproduced without the expressed written consent of BRAY INTERNATIONAL, Inc.
The technical data herein is for general information only. Product suitability should be based solely upon customer's detailed knowledge and experience with their application.

Seating/Unseating Torques
Bray Series 22/23 Valves

	In.	Mm.	ΔP = 0-150 psi	ΔP = 0-10.3 bar
			Lb-In	N-m
Valve Size	2	50	288	33
	2.5	65	350	40
	3	80	560	63
	4	100	720	81
	5	125	960	108
	6	150	1,300	147
	8	200	2,402	271
	10	250	3,840	434
	12	300	5,812	657
	14	350	8,000	904
	16	400	11,000	1,243
	18	450	15,500	1,751
	20	500	19,300	2,181
	24	600	30,500	3,446

1) Torques listed are for PTFE and UHMWPE trims.
2) All information based on full rated pressure differential.

All information herein is proprietary and confidential and may not be copied or reproduced without the expressed written consent of BRAY INTERNATIONAL, Inc.
The technical data herein is for general information only. Product suitability should be based solely upon customer's detailed knowledge and experience with their application.

Dynamic Torque Factors (Imperial)

To Use the Torque Chart, note the following:

1. Dynamic Torque values include all bearing friction and stem-seal friction torques.
2. Dynamic Torque values are per 1 PSI ΔP. To determine dynamic torque (lb-in) at a desired angle of opening, multiply the pressure drop ΔP at this angle by the appropriate dynamic torque factor in the charts below.
3. Bray recommends sizing control valves between 20° and 70°, with 60° the preferred angle.
4. Dynamic Torque will tend to close all Bray valves whose disc are symmetrical to the stem.

Series 20/21 and 30/31(Dynamic Torque Factor - lb-in./psi)

Angle of Opening		10°	20°	30°	40°	50°	60°	70°	75°	80°	90°
Valve Size inches	2	0.113	0.126	0.225	0.453	0.726	1.251	2.139	3.068	3.052	0.000
	2.5	0.216	0.240	0.430	0.865	1.386	2.388	4.085	5.858	5.827	0.000
	3	0.367	0.408	0.732	1.473	2.359	4.065	6.952	9.970	9.918	0.000
	4	0.855	0.949	1.702	3.425	5.486	9.454	16.168	23.187	23.065	0.000
	5	1.650	1.833	3.287	6.613	10.593	18.253	31.217	44.769	44.533	0.000
	6	2.494	2.771	4.969	9.997	16.014	27.594	47.192	67.680	67.323	0.000
	8	6.603	6.736	12.077	24.298	38.925	67.073	114.707	164.506	163.64	0.000
	10	11.990	13.322	23.885	48.056	76.985	132.653	226.862	325.353	323.640	0.000
	12	20.892	23.214	41.619	83.735	134.142	231.141	395.295	566.910	563.925	0.000
	14	30.039	33.377	59.841	120.396	192.873	332.342	568.366	815.119	810.828	0.000
	16	45.652	50.724	90.942	182.970'	293.115	505.070	863.764	1,238.762	1,232.240	0.000
	18	65.909	73.232	131.295	264.159	423.178	729.184	1,247.040	1,788.435	1,779.020	0.000
	20	91.415	101.573	182.105	366.387	586.945	1,011.373	1,729.637	2,480.549	2,467.498	0.000

Example: 4" Valve; 60° Open with a 10 PSI pressure drop: [Td = (9.454)(10) = 94.54 lb-in]

Series 32/33, 35/36 (Dynamic Torque Factor - lb-in./psi)

Angle of Opening		10°	20°	30°	40°	50°	60°	70°	75°	80°	90°
Valve Size inches	24	158.358	175.953	315.459	634.688	1,016.758	1,751.990	2,996.230	4,297.026	4,274.403	0.000
	30	315.318	350.353	628.133	1,263.773	2,024.539	3,488.513	5,966.008	8,556.117	8,511.072	0.000
	36	551.884	613.205	1,099.388	2,211.917	3,543.447	6,105.766	10,441.998	14,975.332	14,896.492	0.000
	Larger Size Valves - Consult Factory										

Example: 24" Valve; 60° Open with a 10 PSI pressure drop: [Td = (1,751.990)(10) = 17,519.90 lb-in]

All information herein is proprietary and confidential and may not be copied or reproduced without the expressed written consent of BRAY INTERNATIONAL, Inc.
The technical data herein is for general information only. Product suitability should be based solely upon customer's detailed knowledge and experience with their application.

Dynamic Torque Factors (Metric)

To Use the Torque Chart, note the following:

1. Dynamic Torque values include all bearing friction and stem-seal friction torques.
2. Dynamic Torque values are per 1 Bar ΔP. To determine dynamic torque (N-m) at a desired angle of opening, multiply the pressure drop ΔP at this angle by the appropriate dynamic torque factor in the charts below.
3. Bray recommends sizing control valves between 20° and 70°, with 60° the preferred angle.
4. Dynamic Torque will tend to close all Bray valves whose disc are symmetrical to the stem.

Series 20/21 and 30/31(Dynamic Torque Factor - N-m/bar)

Angle of Opening		10°	20°	30°	40°	50°	60°	70°	75°	80°	90°
Valve Size mm	50	0.001	0.001	0.002	0.004	0.006	0.010	0.017	0.024	0.024	0.000
	65	0.002	0.002	0.003	0.007	0.011	0.019	0.032	0.046	0.045	0.000
	80	0.003	0.003	0.006	0.011	0.018	0.032	0.054	0.078	0.077	0.000
	100	0.007	0.007	0.013	0.027	0.043	0.074	0.126	0.181	0.180	0.000
	125	0.013	0.014	0.026	0.052	0.083	0.142	0.243	0.349	0.347	0.000
	150	0.019	0.022	0.039	0.078	0.125	0.215	0.368	0.528	0.525	0.000
	200	0.052	0.053	0.094	0.190	0.304	0.523	0.895	1.283	1.276	0.000
	250	0.094	0.104	0.186	0.375	0.600	1.035	1.770	2.538	2.524	0.000
	300	0.163	0.181	0.325	0.653	1.046	1.803	3.083	4.422	4.399	0.000
	350	0.234	0.260	0.467	0.939	1.504	2.592	4.433	6.358	6.324	0.000
	400	0.356	0.396	0.709	1.427	2.286	3.940	6.737	9.662	9.611	0.000
	450	0.514	0.571	1.024	2.060	3.301	5.688	9.727	13.950	13.876	0.000
	500	0.713	0.792	1.420	2.858	4.578	7.889	13.491	19.340	19.246	0.000

Example: 100 mm Valve; 60° Open with a 10 Bar pressure drop: [Td = (.074)(10) = .74 N-m]

Series 32/33, 35/36 (Dynamic Torque Factor - N-m/bar)

Angle of Opening		10°	20°	30°	40°	50°	60°	70°	75°	80°	90°
Valve Size mm	600	1.235	1.372	2.461	4.951	7.931	13.666	23.371	33.517	33.340	0.000
	750	2.459	2.733	4.899	9.857	15.791	27.210	46.535	66.738	66.386	0.000
	900	4.305	4.783	8.575	17.253	27.639	47.625	81.448	116.808	116.193	0.000
	Larger Size Valves - Consult Factory										

Example: 600 mm Valve; 60° Open with a 10 Bar pressure drop: [Td = (13.666)(10) = 136.66 N-m]

All information herein is proprietary and confidential and may not be copied or reproduced without the expressed written consent of BRAY INTERNATIONAL, Inc.
The technical data herein is for general information only. Product suitability should be based solely upon customer's detailed knowledge and experience with their application.

Valve Sizing Coefficients:

1. Valve Sizing Coefficients (Cv) ..... Pages 14-15

1. **Cv** stands for **Valve Sizing Coefficient**, sometimes called the **Flow Rate Coefficient**.
2. **Cv** varies with the valve size, angle of opening and the manufacturer's valve style.
3. **Cv** is defined as the volume of water in USGPM that will flow through a given restriction or valve opening with a pressure drop of one (1) psi at room temperature.

2. Valve Sizing Coefficients (Kv) ..... Pages 16-17

1. **Kv** stands for **Valve Sizing Coefficient**, sometimes called the **Flow Rate Coefficient**.
2. **Kv** varies with the valve size, angle of opening and the manufacturer's valve style.
3. **Kv** is defined as the volume of water in Cubic Meters/Hour (m^3/hr) that will flow through a given restriction or valve opening with a pressure drop of one (1) bar at room temperature.

All information herein is proprietary and confidential and may not be copied or reproduced without the expressed written consent of BRAY INTERNATIONAL, Inc.
The technical data herein is for general information only. Product suitability should be based solely upon customer's detailed knowledge and experience with their application.

Series 20/21 - Valve Sizing Coefficient (Cv)

Valve Size inches	Disc Position (Degrees)								
	10°	20°	30°	40°	50°	60°	70°	80°	90°
1	0.1	1	3	6	11	21	36	56	61
1.5	0.2	2	6	11	26	50	87	129	147
2	0.9	7	16	27	45	73	123	172	244
2.5	1	11	25	43	71	115	201	310	439
3	2	16	35	62	102	165	290	488	691
4	4	28	63	110	182	294	515	906	1,282
5	6	44	98	172	284	459	805	1,416	2,070
6	7	59	130	227	376	607	1,065	1,873	2,786
8	13	106	244	427	714	1,147	1,935	3,402	5,191
10	21	168	387	675	1,130	1,815	3,062	5,385	8,238
12	31	245	562	981	1,642	2,636	4,448	7,820	12,102
14	40	307	706	1,234	2,064	3,313	5,590	9,829	15,210
16	52	403	925	1,617	2,706	4,343	7,328	12,885	19,940
18	68	528	1,213	2,121	3,549	5,695	9,610	16,898	26,150
20	85	660	1,517	2,651	4,436	7,120	12,014	21,124	32,690

Series 22/23 - Valve Sizing Coefficient (Cv)

Valve Size inches	Disc Position (Degrees)								
	10°	20°	30°	40°	50°	60°	70°	80°	90°
2	1	7	16	27	44	62	85	115	146
2.5	1	11	24	43	69	110	176	235	300
3	2	15	35	61	98	158	286	413	586
4	3	27	62	109	177	285	503	812	1,051
5	5	43	98	171	276	440	798	1,297	1,814
6	6	57	129	226	364	580	1,048	1,737	2,576
8	12	104	242	424	698	1,111	1,908	3,142	4,354
10	20	165	385	672	1,105	1,761	3,004	4,976	6,834
12	29	241	559	975	1,604	2,591	4,420	7,392	10,090
14	35	300	720	1,280	2,100	3,300	5,700	9,350	12,880
16	45	350	850	1,650	2,750	4,400	7,500	12,320	16,900
18	55	510	1,200	2,100	3,600	5,700	9,830	15,600	21,600
20	80	650	1,550	2,700	4,480	7,100	12,200	19,900	27,500
24	180	1,000	2,450	4,600	7,000	11,300	18,900	28,500	34,800

All information herein is proprietary and confidential and may not be copied or reproduced without the expressed written consent of BRAY INTERNATIONAL, Inc.
The technical data herein is for general information only. Product suitability should be based solely upon customer's detailed knowledge and experience with their application.

Series 30/31/31H/3A/3AH/31U - Valve Sizing Coefficient (Cv)

Valve Size Inches	Disc Position (Degrees)								
	10°	20°	30°	40°	50°	60°	70°	80°	90°
2	0.8	7	16	27	43	61	84	114	144
2.5	1	11	24	43	67	107	163	223	282
3	2	15	35	61	96	154	267	364	461
4	3	27	62	109	171	274	496	701	841
5	5	43	98	170	268	428	775	1,146	1,376
6	6	56	129	225	354	567	1,025	1,542	1,850
8	12	102	241	421	680	1,081	1,862	2,842	3,316
10	19	162	382	667	1,076	1,710	2,948	4,525	5,430
12	27	235	555	1,005	1,594	2,563	4,393	6,731	8,077
14	34	299	756	1,320	2,149	3,384	5,939	8,874	10,538
16	45	397	1,001	1,749	2,847	4,483	7,867	11,761	13,966
18	58	507	1,281	2,237	3,643	5,736	10,065	14,496	17,214
20	72	632	1,595	2,786	4,536	7,144	12,535	18,812	22,339

Series 32/33/35/36/35F/36H - Valve Sizing Coefficient (Cv)

Valve Size Inches	Disc Position (Degrees)								
	10°	20°	30°	40°	50°	60°	70°	80°	90°
22	103	916	2,070	3,510	5,640	9,036	14,562	22,028	27,168
24	259	1,028	2,387	4,244	6,962	11,040	18,235	27,186	33,154
26	289	1,141	2,752	4,890	7,824	12,496	19,921	29,700	36,220
28	295	1,324	3,133	5,399	8,636	13,838	22,578	34,683	41,619
30	420	1,652	3,986	7,080	11,328	18,090	28,844	43,003	52,443
32	550	2,026	4,636	7,983	12,743	20,410	32,591	48,558	60,658
34	533	2,304	5,210	8,834	14,194	22,741	36,648	55,438	68,374
36	740	2,775	5,936	9,790	15,572	25,053	40,086	59,667	77,089
40	757	2,971	6,925	11,862	19,307	30,636	50,406	73,990	90,175
42	783	3,502	7,879	12,997	21,010	35,016	54,584	83,421	102,989
44	904	4,066	8,698	14,346	22,818	36,712	58,740	87,430	112,960
48	1,023	4,651	10,365	17,010	27,242	43,853	70,431	108,968	132,888
52	Consult Factory								
54	1,299	5,904	13,158	21,594	34,583	55,671	89,411	138,334	168,700
60	1,480	6,400	14,500	24,500	39,400	63,200	102,000	154,000	190,000
66	1,650	7,110	16,100	27,300	43,800	70,200	113,000	171,000	211,000
72	1,900	8,220	18,600	31,500	50,700	81,200	131,000	198,000	244,000
78	2,290	9,910	22,400	38,000	61,000	97,800	158,000	238,000	294,000
84	2,290	11,390	25,800	43,700	70,200	112,400	181,000	274,000	338,000
90	Consult Factory								
96	Consult Factory								

All information herein is proprietary and confidential and may not be copied or reproduced without the expressed written consent of BRAY INTERNATIONAL, Inc.
The technical data herein is for general information only. Product suitability should be based solely upon customer's detailed knowledge and experience with their application.

Series 20/21 - Valve Sizing Coefficient (Kv)

Valve Size mm	Disc Position (Degrees)								
	10°	20°	30°	40°	50°	60°	70°	80°	90°
25	0.087	0.865	2.595	5.190	9.515	18.165	31.140	48.440	52.765
40	0.173	1.730	5.190	9.515	22.490	43.250	75.255	111.585	127.155
50	0.779	6.055	13.840	23.355	38.925	63.145	106.395	148.780	211.060
65	0.865	9.515	21.625	37.195	61.415	99.475	173.865	268.150	379.735
80	1.730	13.840	30.275	53.630	88.230	142.725	250.850	422.120	597.715
100	3.460	24.220	54.495	95.150	157.430	254.310	445.475	783.690	1,108.930
125	5.190	38.060	84.770	148.780	245.660	397.035	696.325	1,224.840	1,790.550
150	6.055	51.035	112.450	196.355	325.240	525.055	921.225	1,620.145	2,409.890
200	11.245	91.690	211.060	369.355	617.610	992.155	1,673.775	2,942.730	4,490.215
250	18.165	145.320	334.755	583.875	977.450	1,569.975	2,648.630	4,658.025	7,125.870
300	26.815	211.925	486.130	848.565	1,420.330	2,280.140	3,847.520	6,764.300	10,468.230
350	34.600	265.555	610.690	1,067.410	1,785.360	2,865.745	4,835.350	8,502.085	13,156.650
400	44.980	348.595	800.125	1,398.705	2,340.690	3,756.695	6,338.720	11,145.525	17,248.100
450	58.820	456.720	1,049.245	1,834.665	3,069.885	4,926.175	8,312.650	14,616.770	22,619.750
500	73.525	570.900	1,312.205	2,293.115	3,837.140	6,158.800	10,392.110	18,272.260	28,276.850

Series 22/23 - Valve Sizing Coefficient (Kv)

Valve Size mm	Disc Position (Degrees)								
	10°	20°	30°	40°	50°	60°	70°	80°	90°
50	0.865	6.055	13.840	23.355	38.060	53.630	73.525	99.475	126.290
65	0.865	9.515	20.760	37.195	59.685	95.150	152.240	203.275	259.500
80	1.730	12.975	30.275	52.765	84.770	136.670	247.390	357.245	506.890
100	2.595	23.355	53.630	94.285	153.105	246.525	435.095	702.380	909.115
125	4.325	37.195	84.770	147.915	238.740	380.600	690.270	1,121.905	1,569.110
150	5.190	49.305	111.585	195.490	314.860	501.700	906.520	1,502.505	2,228.240
200	10.380	89.960	209.330	366.760	603.770	961.015	1,650.420	2,717.830	3,766.210
250	17.300	142.725	333.025	581.280	955.825	1,523.265	2,598.460	4,304.240	5,911.410
300	25.085	208.465	483.535	843.375	1,387.460	2,241.215	3,823.300	6,394.080	8,727.850
350	30.275	259.500	622.800	1,107.200	1,816.500	2,854.500	4,930.500	8,087.750	11,141.200
400	38.925	302.750	735.250	1,427.250	2,378.750	3,806.000	6,487.500	10,656.800	14,618.500
450	47.575	441.150	1,038.000	1,816.500	3,114.000	4,930.500	8,502.950	13,494.000	18,684.000
500	69.200	562.250	1,340.750	2,335.500	3,875.200	6,141.500	10,553.000	17,213.500	23,787.500
600	155.700	865.000	2,119.250	3,979.000	6,055.000	9,774.500	16,348.500	24,652.500	30,102.000

All information herein is proprietary and confidential and may not be copied or reproduced without the expressed written consent of BRAY INTERNATIONAL, Inc.
The technical data herein is for general information only. Product suitability should be based solely upon customer's detailed knowledge and experience with their application.

Series 30/31/31H/3A/3AH/31U - Valve Sizing Coefficient (Kv)

Valve Size mm	Disc Position (Degrees)								
	10°	20°	30°	40°	50°	60°	70°	80°	90°
50	0.692	6.055	13.840	23.355	37.195	52.765	72.660	98.610	124.560
65	0.865	9.515	20.760	37.195	57.955	92.555	140.995	192.895	243.930
80	1.730	12.975	30.275	52.765	83.040	133.210	230.955	314.860	398.765
100	2.595	23.355	53.630	94.285	147.915	237.010	429.040	606.365	727.465
125	4.325	37.195	84.770	147.050	231.820	370.220	670.375	991.290	1,190.240
150	5.190	48.440	111.585	194.625	306.210	490.455	886.625	1,333.830	1,600.250
200	10.380	88.230	208.465	364.165	588.200	935.065	1,610.630	2,458.330	2,868.340
250	16.435	140.130	330.430	576.955	930.740	1,479.150	2,550.020	3,914.125	4,696.950
300	23.355	203.275	480.075	869.325	1,378.810	2,216.995	3,799.945	5,822.315	6,986.605
350	29.410	258.635	653.940	1,141.800	1,858.885	2,927.160	5,137.235	7,676.010	9,115.370
400	38.925	343.405	865.865	1,512.885	2,462.655	3,877.795	6,804.955	10,173.265	12,080.590
450	50.170	438.555	1,108.065	1,935.005	3,151.195	4,961.640	8,706.225	12,539.040	14,890.110
500	62.280	546.680	1,379.675	2,409.890	3,923.640	6,179.560	10,842.775	16,272.380	19,323.235

Series 32/33/35/36/35F/36H - Valve Sizing Coefficient (Kv)

Valve Size mm	Disc Position (Degrees)								
	10°	20°	30°	40°	50°	60°	70°	80°	90°
550	89.095	792.340	1,790.550	3,036.150	4,878.600	37,887.000	12,596.130	19,054.220	23,500.320
600	224.035	889.220	2,064.755	3,671.060	6,022.130	43,855.500	15,773.275	23,515.890	28,678.210
650	249.985	986.965	2,380.480	4,229.850	6,767.760	52,765.000	17,231.665	25,690.500	31,330.300
700	255.175	1,145.260	2,710.045	4,670.135	7,470.140	60,723.000	19,529.970	30,000.795	36,000.435
750	363.300	1,428.980	3,447.890	6,124.200	9,798.720	37,887.000	24,950.060	37,197.595	45,363.195
800	475.750	1,752.490	4,010.140	6,905.295	11,022.695	43,855.500	28,191.215	42,002.670	52,469.170
850	461.045	1,992.960	4,506.650	7,641.410	12,277.810	52,765.000	31,700.520	47,953.870	59,143.510
900	640.100	2,400.375	5,134.640	8,468.350	13,469.780	60,723.000	34,674.390	51,611.955	66,681.985
1,000	654.805	2,569.915	5,990.125	10,260.630	16,700.555	37,887.000	43,601.190	64,001.350	78,001.375
1,050	677.295	3,029.230	6,815.335	11,242.405	18,173.650	43,855.500	47,215.160	72,159.165	89,085.485
1,100	781.960	3,517.090	7,523.770	12,409.290	19,737.570	52,765.000	50,810.100	75,626.950	97,710.400
1,200	884.895	4,023.115	8,965.725	14,713.650	23,564.330	60,723.000	60,922.815	94,257.320	114,948.120
1,300	Consult Factory								
1,400	1,123.635	5,106.960	11,381.670	18,678.810	29,914.295	48,155.415	77,340.515	119,658.910	145,925.500
1,500	1,280.200	5,536.000	12,542.500	21,192.500	34,081.000	54,668.000	88,230.000	133,210.000	164,350.000
1,650	1,427.250	6,150.150	13,926.500	23,614.500	37,887.000	60,723.000	97,745.000	147,915.000	182,515.000
1,800	1,643.500	7,110.300	16,089.000	27,247.500	43,855.500	70,238.000	113,315.000	171,270.000	211,060.000
2,000	1,980.850	8,572.150	19,376.000	32,870.000	52,765.000	84,597.000	136,670.000	205,870.000	254,310.000
2,200	1,980.850	9,852.350	22,317.000	37,800.500	60,723.000	97,226.000	156,565.000	237,010.000	292,370.000
2,250	Consult Factory								
2,400	Consult Factory								

All information herein is proprietary and confidential and may not be copied or reproduced without the expressed written consent of BRAY INTERNATIONAL, Inc.
The technical data herein is for general information only. Product suitability should be based solely upon customer's detailed knowledge and experience with their application.

Examples of Typical Flange to Valve Bolting*

** Lug Style Bolting

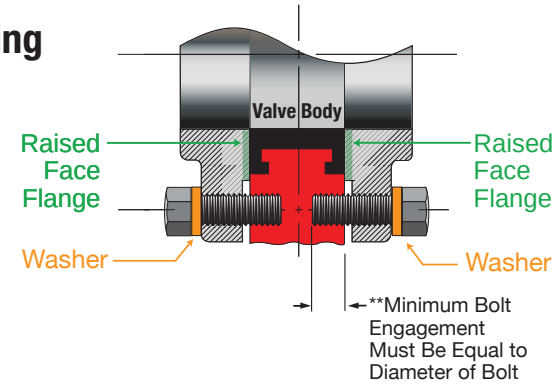



** Wafer Style Bolting

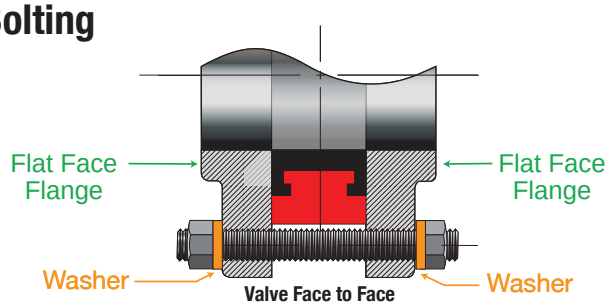

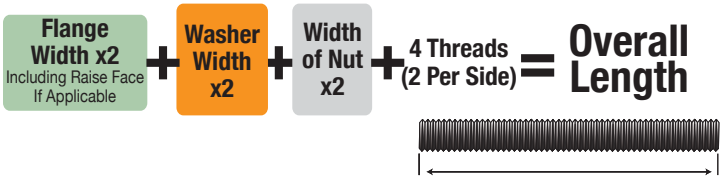

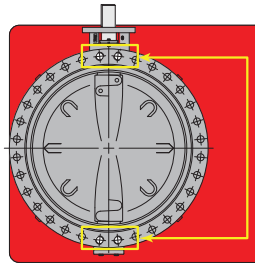

**** Note: Please refer to Appropriate Bray Dimensional Drawings for specific valve drilling information on Wafer and Lug Valves 20" and larger.**

Please refer to ASME B-16.5 or B-16.47 for Flange and Bolt Dimension Information

* Double flange style bolting not shown.
** Lug threads may be tapped from both sides and therefore tap may not be continuous.

All information herein is proprietary and confidential and may not be copied or reproduced without the expressed written consent of BRAY INTERNATIONAL, Inc.
The technical data herein is for general information only. Product suitability should be based solely upon customer's detailed knowledge and experience with their application.

Flange Bolt Tensioning
Bray Butterfly Valves with Metal Mating Flanges

A question frequently asked at Bray is "What torque do I apply to the flange bolts to insure the valve is properly installed?". Initially this seems to be a simple request until all of the factors are analyzed. The installation of a valve requires several components: the valve, mating flanges, nuts, bolts and studs. Each is supplied by different manufacturers and each has different characteristics. The proper torque for one combination may be too much or too little for a second combination. The following is a list of information which needs to be known in order to start calculating the torque requirements.

Valve
- Type
- Size
- Materials of construction (Body)
- Surface finishes / Surface conditions

Flange
- Type
- Size
- Finish / both sides
- Condition of flange / surface contamination

Bolt (or Stud)
- Type
- Materials of Construction
- Surface Conditions

Nut
- Type
- Materials of Construction
- Surface Conditions

Lubrication
- Type
- Coverage

General Factors
- Temperature and relative humidity at the time of installation
- Speed at which bolts are turned

Note: A gasket is required between the valve and flange. The elastomer valve seat manufactured by Bray also acts as the flange gasket. No additional gaskets are required or recommended. Other valve styles which do not have integral gaskets will need to have this component supplied. The characteristics of this component will also need to be considered.

Complete knowledge of all relevant conditions is almost impossible to obtain. As a result, the computation of the exact torque requirement is not practical. No reputable manufacturer can provide accurate information when so many outside factors are present.

The International Fasteners Institute covers some of the details required to "compute" a torque value. Even with this information the use of a torque wrench is only considered to be 25% accurate. Based on the difficulty and inaccuracy of using this method, Bray recommends the use of the "Turn of the nut" method.

"Turn of the Nut" Tightening (For ANSI Standard Iron and Steel Flanges)

**For Non-Metalic or non-standard flanges, follow the manufacturers installation procedures.

1. The valve and flange faces must be aligned parallel to each other.

   Note: For rubber seated butterfly valves manufactured by Bray, it is required that the valve be fully opened prior to the tightening of the flange bolts.

2. After aligning the holes in a joint, sufficient bolts shall be placed and brought to a 'snug-tight' condition to ensure that the parts of the joint are *brought into full contact* with each other. 'Snug-Tight' is the tightness attained by the full effort of a man using a spud wrench.

3. Following the initial snugging operation, bolts shall be placed in any remaining holes and brought to snug-tightness. Re-snugging may be necessary in large joints.

4. Tighten opposite bolts in sequence to insure even pressure around the entire flange.

5. When all bolts are snug-tight, each bolt in the joint then shall be tightened additionally by the applicable amount

All information herein is proprietary and confidential and may not be copied or reproduced without the expressed written consent of BRAY INTERNATIONAL, Inc.
The technical data herein is for general information only. Product suitability should be based solely upon customer's detailed knowledge and experience with their application.

of nut rotation given in Note 1. During tightening there shall be no rotation of the valve or flange.

Note 1

For bolt lengths **not exceeding** 8 diameters or 8 inches (203.2 mm) = **1/4 turn**
For bolt lengths **exceeding** 8 diameters or 8 inches (203.2 mm) = **1/2 turn**

Disclaimer:
Bray Controls is issuing these recommendations only as a guide to installation. This recommendation is based on the full compliance of all materials supplied to their appropriate specifications. Since many of the components are not manufactured by Bray we can take no responsibility for any damage caused during installation.

Series 20/21 and 30/31 - Flange Bolt Torque Chart

Valve Size		Normal Torque Range	Normal Torque Range
In	mm	Ft-lbs	N-m
2	50	30	40
2.5	65	30	40
3	80	35	50
4	100	35 - 40	50 - 55
5	125	35 - 45	50 - 60
6	150	35 - 50	50 - 65
8	200	45 - 55	60 - 75
10	250	55 - 75	75 - 100
12	300	65 - 110	90 - 150
14	350	75 - 120	100 - 165
16	400	75 - 120	100 - 165
18	450	85 - 130	115 - 175
20	500	85 - 130	115 - 175

Please note that the N-m and Ft-lbs values are based on bolt size in respective metric and ANSI flanges, i.e. these values are not a direct conversion between N-m and Ft-lbs.

The values represent average torques needed to ensure full compression of the resilient valves' seats into the valves' bodies when installed in pipeline flanges. The face of both flanges must come into full contact with the valves' metal bodies.

No additional torque is required for proper functioning of the Bray resilient seated valves.

The torque values are based on using new, coarse-threaded, lubricated fasteners. Up to 25% may be added to the Normal Torque Range values when using non-lubricated fasteners.

Torque Values specified by flange manufacturers ***must not be exceeded.***

All information herein is proprietary and confidential and may not be copied or reproduced without the expressed written consent of BRAY INTERNATIONAL, Inc.
The technical data herein is for general information only. Product suitability should be based solely upon customer's detailed knowledge and experience with their application.

Series 22/23 Installation - Flange Bolt Torque Chart, 150 lb Flanges

Valve Size		Normal Torque Range		Max Torque Range	
In	mm	Ft-lbs	N-m	Ft-lbs	N-m
2	50	30	40	35	50
2.5	65	30	40	35	50
3	80	35	50	40	55
4	100	35 - 40	50 - 55	40	55
5	125	35 - 45	50 - 60	50	65
6	150	35 - 50	50 - 65	65	90
8	200	45 - 55	60 - 75	80	110
10	250	55 - 75	75 - 100	100	135
12	300	65 - 110	90 - 150	120	165
14	350	75 - 120	100 - 165	140	190
16	400	75 - 120	100 - 165	140	190
18	450	85 - 130	115 - 175	170	230
20	500	85 - 130	115 - 175	180	245
24	600	100 - 150	135 - 205	220	300

The torque values are based on using new, coarse-threaded, lubricated fasteners. Up to 15% may be added to the Normal Torque Range values when using non-lubricated fasteners. However, the maximum torque should not be exceeded.

Flange gaskets are normally not used for installation of S22/23 valves. Flange leakage may be caused by combination of out-of-parallel and/or misaligned flanges, and surface damage on the flange face and/or the face of the valve seat. In such cases, suitable flange gaskets may be used to control flange leakage.

Torque values specified by manufacturers of certain flanges, for example plastic flanges, could be lower than the values specified above. In such cases, the flange manufacturers' torque values must not be exceeded. Use flange gaskets if necessary to secure flange seal.

All information herein is proprietary and confidential and may not be copied or reproduced without the expressed written consent of BRAY INTERNATIONAL, Inc.
The technical data herein is for general information only. Product suitability should be based solely upon customer's detailed knowledge and experience with their application.

Series 20/21 - Standard Metal Specifications

Part		Material	ASTM No.	UNS No.
Body		Cast Iron	A126 Class B	
		Ductile Iron	A395 Gr. 60-40-18	F32800
		316 Stainless Steel	A351 CF8M	J92900
		Aluminum	B26 Class B	
Disc/Stem 1-12" (25-300mm) One Piece		316 Stainless Steel	A351 CF8M	J92900
		Hastelloy® C22 *	B494 CX2MW	N26022
		17-4 ph Stainless Steel	A747 CB7Cu1 Heat Treated	J92180
Disc/Stem 14-20" (350-500mm) Fabricated	**Disc**	316 Stainless Steel	A240	S31600
		Hastelloy® C276 *	B575	N10276
		17-4 ph Stainless Steel	A564 630 Heat Treated	S17400
	Stem	316 Stainless Steel	A276	S31600
		Hastelloy® C276 *	B575	N10276
		17-4 ph Stainless Steel	A564 630 Heat Treated	S17400

Series 22/23 - Standard Metal Specifications

Part	Material	ASTM No.	UNS No.
Body	Ductile Iron	A395 Gr. 60-40-18	F32800
	316 Stainless Steel	A351 CF8M	J92900
	Carbon Steel	A216 WCB	J030002
Disc	316 Stainless Steel	A351 CF8M	J92900
	PTFE/316 SS (2"-12")	A351 CF8M	J92900
	PTFE/17-4 ph SS (14"-24")	A547 CB7Cu1	J92180
	UHMWPE/316 SS (2"-6")	A351 CF8M	J92900
	UHMWPE/DI (8"-12")	A536 Gr 65-45-12	F33100
	Hastelloy® C22 *	B494 CX2MW	N26022
	Titanium		
Stem	17-4 ph Stainless Steel	A564 630 Heat Treated	S17400

* Hastelloy® is a registered trademark of Haynes International, Inc.

All information herein is proprietary and confidential and may not be copied or reproduced without the expressed written consent of BRAY INTERNATIONAL, Inc.
The technical data herein is for general information only. Product suitability should be based solely upon customer's detailed knowledge and experience with their application.

Series 30/31, 31H, 3A/3AH, 31U - Standard Metal Specifications

Part	Material	ASTM No.	UNS No.	30/31	31H	3A/3AH	31U
Body	Cast Iron	A126 Class B		●	●	●	
	Ductile Iron	A536 Gr. 65-45-12	F33100	●	●	●	
	Ductile Iron	A395	F32800				●
	Carbon Steel	A216 WCB	J030002	●		●	●
	Nickel Aluminum Bronze	B148	C95800				●
	Aluminum	B26 Class B		●			
Disc	Aluminum Bronze	B148	C95400	●	●	●	
	Nickel Aluminum Bronze	B148	C95800				●
	Nylon Coated Ductile Iron	A536 Gr. 65-45-12	F33100	●	●	●	
	316 Stainless Steel	A351 CF8M	J92900	●	●	●	●
	304 Stainless Steel	A351 CF8	J92600	●		●	
	Duplex Stainless Steel	A995 Gr 4A	J92205	●		●	
	Super Duplex Stainless Steel	A995 Gr 5A	J93404	●		●	
	Super Austenitic Stainless Steel (254 SMO™)*	A351 Grade CK3MCuN	S31254	●		●	
	Hastelloy® C-276 *	B575	N10276	●		●	
Stem	304 Stainless Steel	A276	S30400	●		●	
	316 Stainless Steel	A276	S31600	●		●	
	416 Stainless Steel	A582	S41600	●	●	●	●
	17-4 ph Stainless Steel	A564 630 Heat Treated	S17400				●
	Monel® *	B865	N05500	●		●	●

* Hastelloy® is a registered trademark of Haynes International, Inc.
Monel® is a registered trademark of International Nickel Company, Inc.
254 SMO™ is a registered trademark of Avesta AB.
AL-6XN® is a registered trademark of ATI Properties, Inc.

All information herein is proprietary and confidential and may not be copied or reproduced without the expressed written consent of BRAY INTERNATIONAL, Inc.
The technical data herein is for general information only. Product suitability should be based solely upon customer's detailed knowledge and experience with their application.

Series 32/33, 35/36, 35F, 36H - Standard Metal Specifications

Part	Material	ASTM No.	UNS No.	32-36	36H	35F
Body	Cast Iron	A126 Class B		●		●
	Ductile Iron	A536 Gr. 65-45-12	F33100	●	●	●
	Carbon Steel	A216 Gr. WCB	J030002	●		
	316 Stainless Steel	A351 CF8M	J92900	●		
Disc	Nickel Aluminum Bronze	B148	C95800	●	●	
	Nylon Coated Ductile Iron	A536 Gr. 65-45-12	F33100	●	●	
	316 Stainless Steel	A351 CF8M	J92900	●		
	304 Stainless Steel	A351 CF8	J92600	●		
	Hastelloy® C-276 *	B575	N10276	CF		●
	Hastelloy® C-22 *	B494 CX2MW	N26022	CF		
	Duplex Stainless Steel	A995 Gr 5A	J93404	●	●	●
	Super Austenitic Stainless Steel (254 SMO ™) *	A351 Grade CK3MCuN	S31254	●	●	●
	Monel® *	A494 Grade M-35-1	N24135	●		
Stem	304 Stainless Steel	A276	S30400	●		●
	316 Stainless Steel	A276	S31600	●		●
	416 Stainless Steel	A582	S41600	●		
	17-4 ph Stainless Steel	A564 630 Heat Treated	S17400	●	●	
	Duplex Stainless Steel	A479	S31651	●		
	Super Austenitic Stainless Steel (AL-6XN®) *	A276	N08367	●	●	
	Monel® *	B865	N05500	●		

* Hastelloy® is a registered trademark of Haynes International, Inc.
Monel® is a registered trademark of International Nickel Company, Inc.
254 SMO™ is a registered trademark of Avesta AB.
AL-6XN® is a registered trademark of ATI Properties, Inc.

All information herein is proprietary and confidential and may not be copied or reproduced without the expressed written consent of BRAY INTERNATIONAL, Inc.
The technical data herein is for general information only. Product suitability should be based solely upon customer's detailed knowledge and experience with their application.

APPENDIX E: SHAFT POWER MONITOR MANUAL

Emotron M20
Shaft Power Monitor



Data Sheet
English

The M20 provides complete flexibility in terms of the type of protection required for your application. You may select either overload and underload protection or simply overload with pre-alarm or underload with pre-alarm. Independent response delays are selectable for both overload and underload protection. Additional flexibility is provided in the form of programmable output relays, number of start attempts, number of reversing attempts etc.

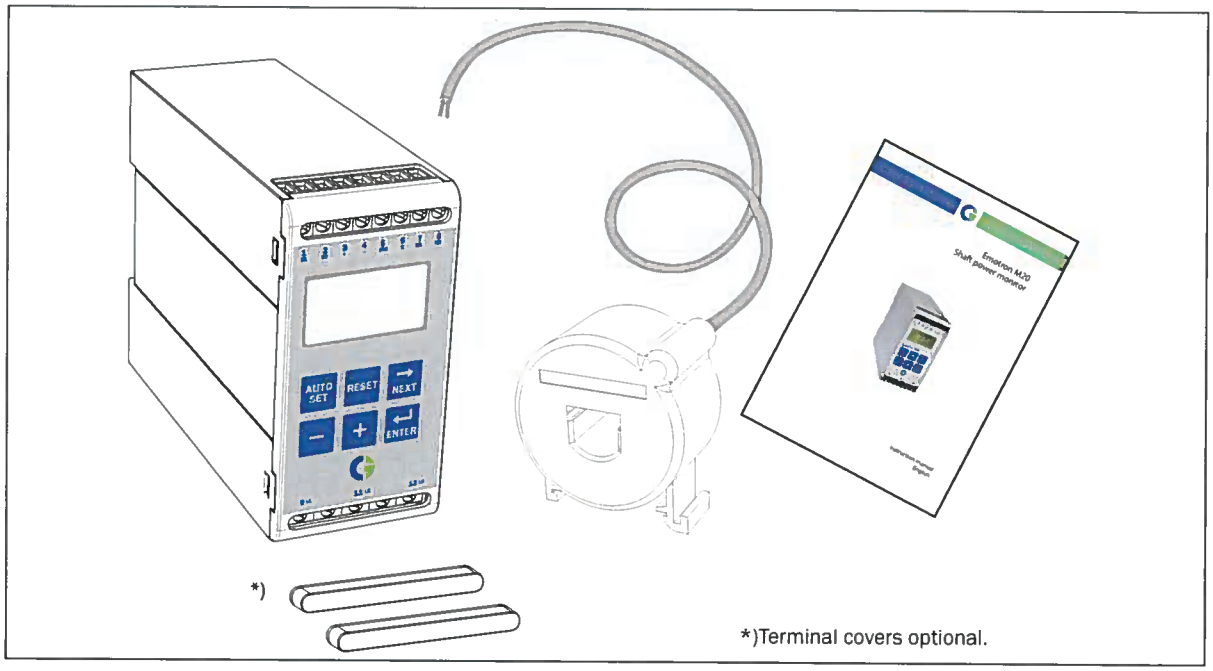

Fig. 1 Emotron M20 and current transformer (CT), both for mounting on standard DIN rail 35mm.

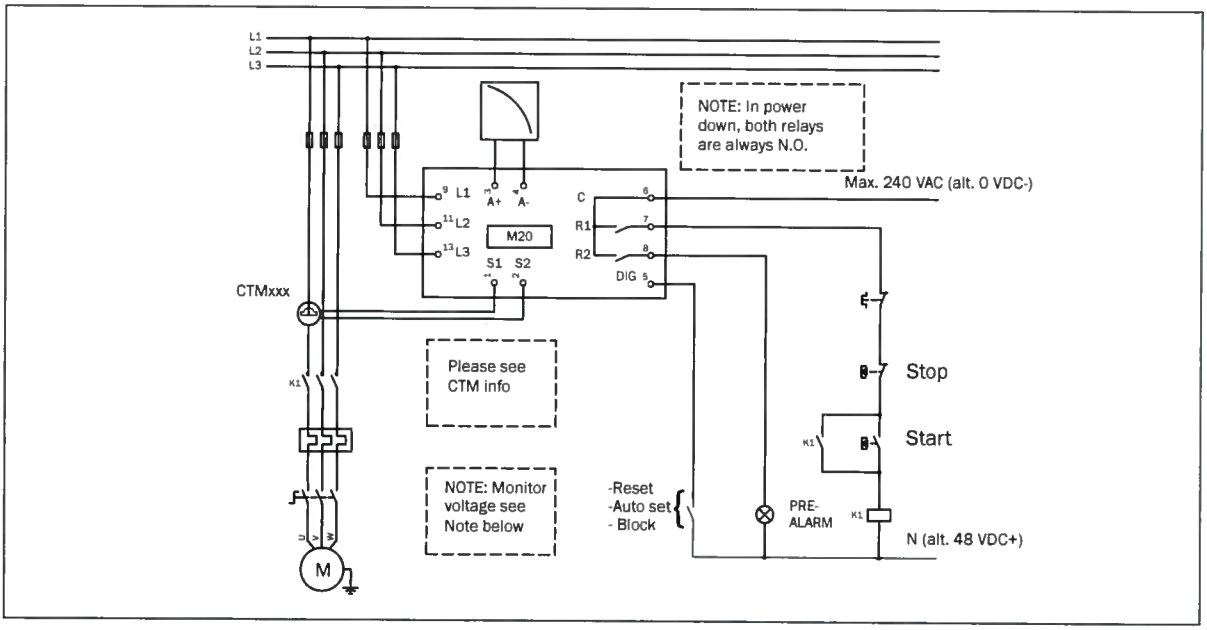

Fig. 2 Connection example

NOTE: Make sure that the monitor voltage range e.g. 3x380-500 VAC matches the connected motor/line voltage, e.g. 3x 400 V.

Table 1 Motor and CT less than 100 A

RATED MOTOR CURRENT [A]	CURRENT TRANSFORMER TYPE and NUMBER OF WINDINGS			
	CTM 010	CTM 025	CTM 050	CTM 100
0.4 - 1.0	10			
1.01 - 2.0	5			
2.01 - 3.0	3			
3.1 - 5.0	2			
5.1 - 10.0	1			
10.1 - 12.5		2		
12.6 -25.0		1		
26.0 - 50.0			1	
51.0 - 100.0				1

In order to ensure an accurate calibration of the M20, it is essential that you use the correct CTM and apply the exact number of windings in accordance with the tables.

Table 2 CT greater than 100A

RATED MOTOR CURRENT [A]	CURRENT TRANSFORMER TYPE and NUMBER OF PRIMARY WINDINGS
101 - 150	150:5 + CTM 010 1 + 2
151 - 250	250:5 + CTM 010 1 + 2
251 - 500	500:5 + CTM 010 1 + 2
501 - 999	1000:5 + CTM 010 1 + 2

NOTE: The current transformer (CTMxxx) must be placed in the same phase that is connected to terminal 9, phase L1, see Fig. 2.

Technical Data

Dimensions (WxHxD)	45x90x115 mm (1.77" x 3.54" x 4.53") 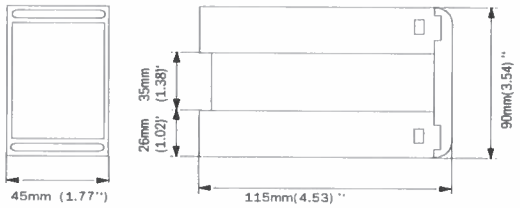
Mounting	35 mm DIN rail 46277
Weight	0.30 kg (10.5 oz)
Supply voltage (±10%)	1x100-240 VAC, 3x100-240 VAC, 3x380-500 VAC 3x525-690 VAC
Frequency	50 or 60 Hz
Current input	Current transformer; CTM 010, 025, 050 and 100. Input 0-55 mA. (>100 A extra transformer needed)
Power consumption	Max. 6 VA
Start-up delay	1-999 s
Hysteresis	0-50% of rated motor power
Response delay max	0.1-500 s
Response delay min	0.1-500 s
Relay output	5 A/240 VAC Resistive, 1.5 A/240 VAC Pilot duty/AC12
Analogue output	Max. load 500 ohm
Digital input	Max. 240 VAC or 48 VDC. High: ≥24 VAC/DC, Low: <1 VAC/DC. Reset >50 ms
Fuse	Max. 10 A
Terminal wire size	Use 75 °C copper (CU) wire only. 0.2-4.0 mm^2 single core (AWG12). 0.2-2.5 mm^2 flexible core (AWG14), stripped length 8 mm (0.32")
Terminal tightening torque	0.56-0.79 Nm (5-7 lb-in)
Accuracy	±2%, ±1 unit cos phi>0.5; excl. current transformer; +20 °C (+68 °F)
Repeatability	±1 unit 24h; +20 °C (+68 °F)
Temperature tolerance	Max. 0.1%/ °C
Operating temperature	-20 to +50 °C (-4 °F to +122 °F)
Storage temperature	-30 to +80 °C (-22 °F to +176 °F)
Protection class	IP20
RoHS directive	2002/95/EC
Approved to	CE (up to 690VAC), UL and cUL (up to 600 VAC)

Article numbers

Article number	Designation
01-2520-25	Emotron M20 1x100-240/3x100-240 VAC
01-2520-45	Emotron M20 3x380-500 VAC
01-2520-55	Emotron M20 3x525-690 VAC

Technical Data for Current Transformer (CT)

Type	Dimension (WxQ)	Weight*	Mounting
CTM 010	27 (35) xØ48mm	0.20 kg	35mm DIN rail 46277
CTM 025	27 (35) xØ48mm	0.20 kg	35mm DIN rail 46277
CTM 050	27 (35) xØ48mm	0.20 kg	35mm DIN rail 46277
CTM 100	45 (58) xØ78mm	0.50 kg	35mm DIN rail 46277

*)Weight including 1m (39 inch) cable. Please note that max. length of the CTM cable is 1 m and this cable cannot be extended.

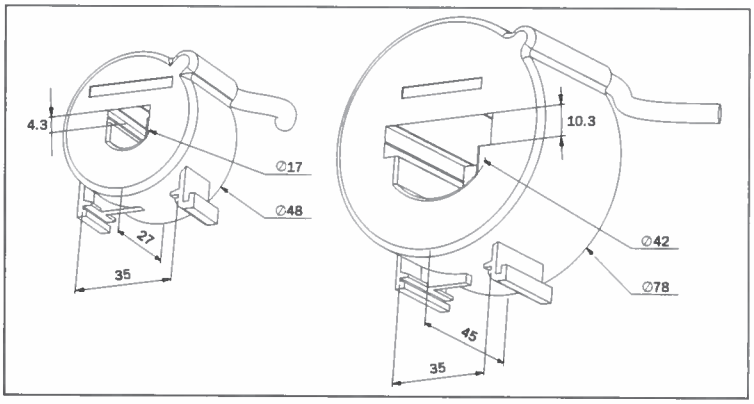

Fig. 3 Current transformer, CTM xxx.

Accessories and documentation

Article number	Designation
01-2471-10	Current Transformer (CT) CTM010, max. 10 A
01-2471-20	Current Transformer (CT) CTM025, max. 25 A
01-2471-30	Current Transformer (CT) CTM050, max. 50 A
01-2471-40	Current Transformer (CT) CTM100, max. 100 A
01-2368-00	Front Panel Kit 1 (2xterminal covers included)
01-4136-01	2xTerminal covers
01-5958-00	Instruction manual (Swedish)
01-5958-01	Instruction manual (English)
01-5958-02	Instruction manual (German)
01-5958-03	Instruction manual (Dutch)
01-5958-04	Instruction manual (Spanish)
01-5958-08	Instruction manual (French)
01-5958-09	Instruction manual (Russian)

EU (European Union) specifications

EMC	EN 50081-1, EN 50081-2, EN 50082-1, EN 61000-6-2
Electrical safety	IEC 947-5-1
Rated insulated voltage	690 V
Rated impulse withstand voltage	4000 V
Pollution degree	2

Terminals 3, 4, 5, 6, 7 and 8 are basic insulated from the line.

Terminals 3 and 4 are basic insulated from terminals 5, 6, 7 and 8.

Parameter List

Window	Function	Range	Default	Custom	Symbol
00	Alarm indication				
01	Measured shaft power in % of rated power	0-125			%
	Measured shaft power in kW	0-745			kW
	Measured shaft power in % of rated power	0-125			%
	Measured shaft power in HP	0-999			
02	Measured line voltage	90-760 V			V
03	Measured current	0.00-999 A			A
04	Parameter lock	0-999			🔒
05	Monitor function	OVER- and UNDERLOAD, OVERLOAD, UNDERLOAD	OVERLOAD and UNDERLOAD		
11	MAX Main Alarm (relay R1)	0-125	100		%
		0-745	2.2		kW
		0-125	100		%
		0-999	3		
12	MAX Pre-Alarm (relay R2)	0-125	100		%
		0-745	2.2		kW
		0-125	100		%
		0-999	3		
13	MIN Pre-Alarm (relay R2)	0-125	0		%
		0-745	0		kW
		0-125	0		%
		0-999	0		
14	MIN Main Alarm (relay R1)	0-125	0		%
		0-745	0		kW
		0-125	0		%
		0-999	0		
21	MAX Main Alarm margin	0-100	16		%
22	MAX Pre-Alarm margin	0-100	8		%
23	MIN Pre-Alarm margin	0-100	8		%
24	MIN Main Alarm margin	0-100	16		%
31	Start delay	1-999	2		s
32	Response delay, overload	0.1-500 s	0.5		s
33	Hysteresis	0-50	0		%
34	Response delay, underload	0.1-500s	0.5		s
35*	Pause/Reverse time	3-90	5		s
36*	Autoreset (start attempts)	0-5	0		
41	Rated motor power	0.10-745	2.2		kW
		0.13-999	3		
42	Rated current	0.01-999	5.6		A
43	Number of phases	1PH/3PH	3PH		
61	Main alarm latch	on/OFF	OFF		
62	Alarm at no motor current	on/OFF	OFF		

Window	Function	Range	Default	Custom	Symbol
63	Main Alarm relay R1	nc/no	nc		
64	Pre-Alarm relay R2	nc/no	no		
65*	Relay function	0 = M20 1 = DLM 2 = Reverse	0		
81	Digital input	rES/AU/bLo	rES		
82	Block timer	0.0-90	0.0		s
91	Analogue output	0.20/4.20/20.0/20.4	0.20		
92**	Analogue Out low value	0-100			
93**	Analogue Out high value	0-125			
99	Factory defaults	dEF/USr	dEF		

* See Special functions in chapter 9, Emotron M20 Instruction manual.

** See Setting analogue output range in chapter 9, Emotron M20 Instruction manual.

CG Drives & Automation Sweden AB
Mörsaregatan 12
Box 222 25
SE-250 24 Helsingborg
Sweden
T +46 42 16 99 00
F +46 42 16 99 49
www.emotron.com / www.cgglobal.com

CG Drives & Automation, 01-5959-01r0 2013-09-09

emotron



EL-FI® M20

SHAFT POWER MONITOR

INSTRUCTION MANUAL

Motor shaft output power measurement

Protected by utility patent SE 9703952-3
International utility patent application pending WO 9925049

01-2551-01-11

Emotron AB
Mörsaregatan 12
Box 222 25
SE-250 24 Helsingborg
Sweden
Tel.: +46 42 169900
Fax: +46 42 169949
www.emotron.com

1 INSIDE THE BOX ...

This instruction manual describes the installation and commissioning of the M20 load monitor. The M20 supervises induction motor driven equipment and provides alarms when abnormal conditions are detected. The M20's ability to provide reliable monitoring & protection ensures production equipment is optimised and expensive breakdowns and interruptions are minimized. Due to the special method of subtracting motor power losses, the monitor is able to accurately measure the shaft power supplied by the motor to the application. This advanced technique allows the M20 to monitor the "application" load only as opposed to the "total" motor load, which includes the varying motor losses.

- Check the delivery. Your shipment should contain the M20 load monitor, a current transformer and this instruction manual.
- Check carefully that the ordered equipment complies with the motors input voltage and that the current transformer rating is as stated on the delivery packaging.
- Check that the contents have not been damaged in shipping.

Note!
If in doubt contact your supplier before starting to install or commissioning the product.

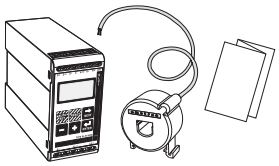

2 SAFETY

- Study this manual thoroughly before installing and using the monitor.
- The monitor must be installed by qualified personal.
- Always disconnect supply circuits prior to installing.
- The installation must comply with standard and local regulations.
- Pay special attention to this SAFETY section and the part marked "CAUTION!" in the OPERATION section.
- Should questions or uncertainties arise, please contact your local sales outlet or see section 11 SERVICE.

Note!
Do not remove or break the seal on the housing. The warranty will be cancelled.

3 WIRING

This wiring example shows how the M20 can be used to control the starting and stopping circuit of the motor. Other wiring configurations are possible.

1. The current transformer CTMxxx must be placed in the same phase that is connected to terminal 9, phase L1.
2. For single-phase connection see fig 2.

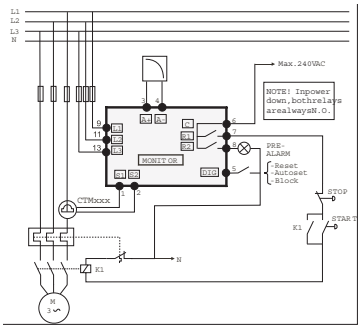

Fig 1. Connection example

Note!
If the START/STOP is connected according to fig. 1, it is recommended that terminals 6 and 7 be by-passed during programming. After the programming is completed the by-pass must be taken out.

3 Continue

ALTERNATIVE EXAMPLE FOR SINGLE-PHASE CONNECTION

This wiring example shows the deviant power connection to be made with regard to a single-phase connection. Refer to fig. 1 for the remaining wiring.

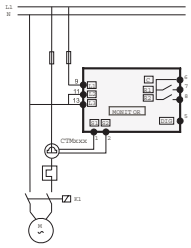

Fig 2. Single-phase connection example.

EXAMPLE - DIGITAL INPUT

The Digital Input use the terminals 5 (DIG) and 6 (C-reference). It can have either a VAC or a VDC signal. See also section 7 ADVANCED FEATURES.

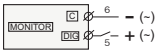

Fig 3. Wiring example for digital input.

4 SELECTION CURRENT TRANSFORMER

FOR MOTORS LESS THAN 100A

1. Check the rated motor current on the motor plate.
2. Compare this value with the current in table 1.
3. From table 1, select the current transformer and the appropriate numbers of windings.

Note!
Max length of the CTM cable is 1 m (39.37 in).

EXAMPLE:

- Rated motor current = 12A.
- Select 10.1-12.5A from the first colon in table 1.
- This gives:
  - CTM025 with 2 windings.

RATED MOTOR CURRENT [A]	CURRENT TRANSFORMER TYPE NUMBER OF WINDINGS			
	CTM 010	CTM 025	CTM 050	CTM 100
0.4 – 1.0	10			
1.01 – 2.0	5			
2.01 – 3.0	3			
3.1 – 5.0	2			
5.1 – 10.0	1			
10.1 – 12.5		2		
12.6 –25.0		1		
26.0 – 50.0			1	
51.0 – 100.0				1

Table 1. CT less than 100A.

Note!
Normally the appropriate Current Transformer (CT) will have been ordered and shipped with the M20, check that this is the case; contact the supplier if in doubt.

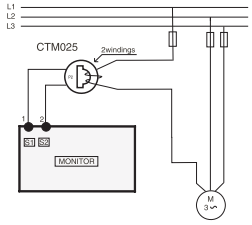

Fig 4. Example CTM 025 with 2 windings for an 12 A motor.

Note!
The transformer connection and orientation are not polarity sensitive.

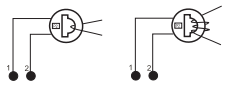

Fig 5. Example 1 and 3 windings.

6:4 Monitor Function (Window 05)

Monitor (Protection)	Indication in window 05	Alarm	Output Relay (default)
OVER- and UNDER-LOAD (default)	–	MAX Main-Alarm	Relay 1 (NC): 6-7
	–	MAX Pre-Alarm	Relay 2 (NO): 6-8
		MIN Pre-Alarm	Relay 2 (NO): 6-8
		MIN Main-Alarm	Relay 1 (NC): 6-7
OVERLOAD	–	MAX Main-Alarm	Relay 1 (NC): 6-7
		MAX Pre-Alarm	Relay 2 (NO): 6-8
UNDERLOAD		MIN Pre-Alarm	Relay 2 (NO): 6-8
	–	MIN Main-Alarm	Relay 1 (NC): 6-7

Programming

1. Go to window 05. The default selection is OVER- and UNDER-LOAD monitor.
2. Press – or + to select UNDERLOAD or OVERLOAD monitor.



OVER- and UNDERLOAD UNDERLOAD OVERLOAD

3. Press ↵ to confirm the change.

Over- and underload monitor

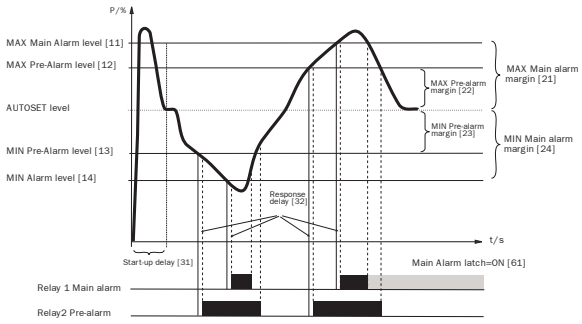

Fig 7. Over- and underload monitor

6:5 Set the START DELAY (window 31)

A START DELAY must be set to allow the motor and machine to speed up and to allow the power in-rush currents to be ignored by the monitor.

Programming

1. Determine in seconds, how long it takes for the motor and machine to reach speed and for the power in-rush to pass. This will be the minimum START DELAY.
2. Go to window 31 (default = 2.0s).
3. Press – or + to set the determined START DELAY time in seconds.
4. Press ↵ to confirm the change.

Example: Start Delay 2.0 s





Fig 8. Start Delay

6:6 Set Alarm levels with AUTOSET

The AUTOSET command performs a measurement of the actual motor load and automatically sets the relevant Alarm levels depending on the selected monitor function.

Protection (Monitor function window 5)	Alarm	Margin Value (Default margins)	Margins (Windows)	Alarm Level at AUTOSET
OVER- and UNDERLOAD (Default)	MAX Main-Alarm	16%	21: MAX Main Alarm margin	Normal machine load+Window 21
	MAX Pre-Alarm	8%	22: MAX Pre-Alarm margin	Normal machine load+Window 22
	MIN Pre-Alarm	8%	23: MIN Pre-Alarm margin	Normal machine load-Window 23
	MIN Main-Alarm	16%	24: MIN Main Alarm margin	Normal machine load-Window 24
OVERLOAD	MAX Main-Alarm	16%	21: MAX Main Alarm margin	Normal machine load+Window 21
	MAX Pre-Alarm	8%	22: MAX Pre-Alarm margin	Normal machine load+Window 22
UNDERLOAD	MIN Pre-Alarm	8%	23: MIN Pre-Alarm margin	Normal machine load-Window 23
	MIN Main-Alarm	16%	24: MIN Main Alarm margin	Normal machine load-Window 24

Programming

1. Start the motor and let it run at the normal machine load, until the START DELAY has expired.
2. Press AUTO SET for 3 seconds. This can be done in any window.
3. The display shows "SEt", to confirm that the AUTOSET level has been measured and the Alarm levels have been set. The display reverts to window 01.



4. If the alarm levels are too high or too low, readjust the appropriate MARGINS (see table above) and perform a new AUTOSET. Alternatively, alarm levels can be set manually - see section 7.

6:7 Set the RESPONSE DELAY (Window 32)

A RESPONSE DELAY allows the machine to remain in an over- or underload condition for a specific time before the alarm relays are activated.

Programming

1. Determine in seconds, how long an under- or overload condition is allowed. This depends on machine properties and behavior. This will be the RESPONSE DELAY.
2. Go to window 32 (default = 0.5s).
3. Press – or + to set the determined RESPONSE DELAY time in seconds.
4. Press ↵ to confirm the change.

Example: RESPONSE DELAY



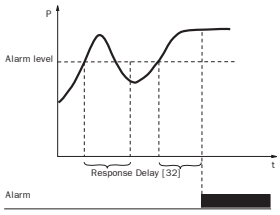

Fig 9. Response Delay

7 ADVANCED FEATURES

Set ALARM LEVELS manually (Window 11-14)

The alarm levels can be set manually, without using the AUTOSET. Also after an AUTOSET has been performed, these levels can be readjusted e.g. for fine-tuning.

Protection (Monitor function window 05)	Alarm levels (Window)	Default
OVER- and UNDERLOAD (Default)	11: MAX Main Alarm	100%
	12: MAX Pre-Alarm	100%
	13: MIN Pre-Alarm	0%
	14: MIN Main Alarm	0%
OVERLOAD	11: MAX Main Alarm	100%
	12: MAX Pre-Alarm	100%
UNDERLOAD	13: MIN Pre-Alarm	0%
	14: MIN Main Alarm	0%

Set MARGINS (window 21-24)

The MARGINS for the AUTOSET can be changed manually. After the adjustment, the AUTOSET action must be performed once again to activated the new margins.

Protection (Monitor function window 05)	Window	Default
OVER- and UNDERLOAD (Default)	21: MAX Main Alarm margin	16%
	22: MAX Pre-Alarm margin	8%
	23: MIN Pre-Alarm margin	8%
	24: MIN Main Alarm margin	16%
OVERLOAD	21: MAX Main Alarm margin	16%
	22: MAX Pre-Alarm margin	8%
UNDERLOAD	23: MIN Pre-Alarm margin	8%
	24: MIN Main Alarm margin	16%

Set HYSTERESIS (Window 33)

The HYSTERESIS of an Alarm level prevents the alarm relay "chattering" if the load fluctuates even in a normal "stable" condition . Apply also for pre-alarm. This feature is normally only used if the "Main Alarm Latch" (Window 61) is set to "OFF". Default = 0%.

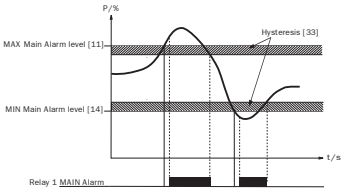

Fig. 10 Hysteresis

Set MAIN ALARM LATCH (Window 61)

The MAIN ALARM LATCH keeps the MAIN ALARM output active, even if the alarm condition has been removed (relay R1). A latched alarm output can be reset by:

- the reset key
- external reset via Digital input (see window 81).
- switching of the power of the monitor (see also "Wiring").

Default = OFF.

Set ALARM AT NO MOTOR CURRENT (Window 62)

The "ALARM AT NO MOTOR CURRENT" gives an alarm if the motor current becomes zero (ON). Default = OFF (No alarm at no motor current).

Set RELAY OUTPUTS (Window 63 and 64)

The RELAY OUTPUTs R1 and R2 can be set to NO or NC contacts.

Note!
If the power to the load monitor is switched off the relay contacts are allways in the NO.

Set DIGITAL INPUT (window 81)

The DIGITAL INPUT can be set for:

RES: External RESET (Default)	to reset an Alarm.
AU: External AUTOSET	to perform an AUTOSET with an external command.
bLo: Block Pre-Alarm	to block the Pre-Alarm function and start the Block timer. If the input is high a Pre-Alarm is blocked, e.g. it is neglected. See also window 82.

Set BLOCK TIMER (window 82)

To set the timer for the blocking time after the Block command is released (see also window 81). Default = 0.0 sec.

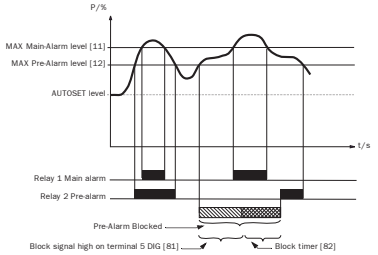

Fig 11. Block timer

Emotron M20
Shaft power monitor



Instruction manual
English

Contents

1 Inside the Box 3

2 Safety 4

3 Description 5

4 Getting Started 7

4.1 Please note 7
4.2 Connection and set-up before first start 7
4.3 First start 8
4.4 Manual setting of alarm levels, alternative A 9
4.5 Manual setting of alarm levels, alternative B 10
4.6 Manual setting of alarm levels, alternative C 10

5 Wiring 11

5.1 Alternative example for single-phase connection 13
5.2 Example - digital input 14

6 Selection of Current Transformer 14

6.1 Motors less than 100 A 14
6.2 Motors greater than 100 A 17

7 Operation 19

7.1 Overview 19
7.2 Window menu 20
7.3 How to change a value 21

8 Programming 22

8.1 Set measurement unit, kW or HP 22
8.2 Setting rated motor power and current (window 41 and 42) 24
8.3 Setting number of phases (window 43) 25
8.4 Monitor function (window 05) 25
8.5 Setting the Start Delay (window 31) 27

8.6 Setting alarm levels with Auto set 28
8.7 Setting the Response Delay (windows 32 and 34) 29

9 Advanced Features 31

9.1 Setting alarm levels manually (windows 11-14) 31

10 Troubleshooting 41

11 Technical Data 43

12 Parameter List 48

13 Service 51

1 Inside the Box

Please check the delivery. Despite the fact that all products from CG Drives & Automation are carefully inspected and packed, transport damage may occur:

- Your shipment should contain the Emotron M20 shaft power monitor, a current transformer, 2x terminal covers (option*) and this instruction manual.
- Check carefully that the equipment ordered complies with the motor's input voltage and that the current transformer rating is as stated on the delivery packaging.
- Check that the contents have not been damaged during shipping.
- If something is missing, or has been damaged, contact the supplier as well as the forwarding agent within 48 hours of receipt.

NOTE: If in doubt contact your supplier before installing or commissioning the product.

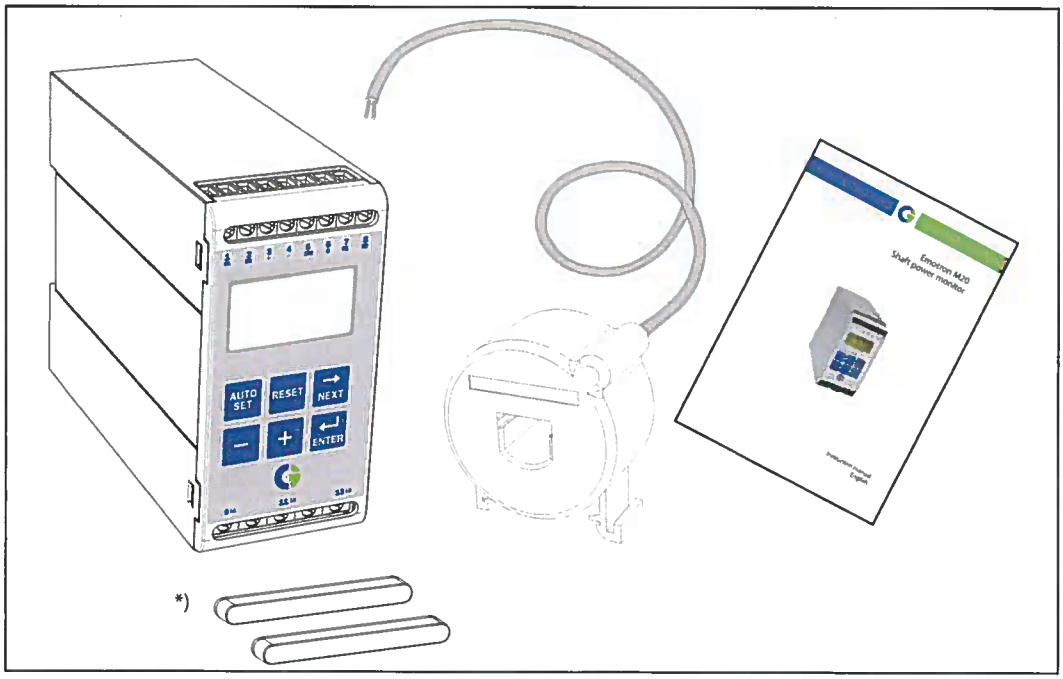

2 Safety

- Study this manual thoroughly before installing and using the monitor.
- The monitor must be installed by qualified personnel.
- Always disconnect supply circuits prior to installing.
- The installation must comply with standard and local regulations.
- Pay special attention to the information in this chapter and the parts marked CAUTION in the Operation and Programming chapters.
- Check that the monitor and the equipment are correctly connected before it is taken into use.
- Should questions or uncertainties arise, please contact your local sales outlet or see chapter 13, Service.
- Faults that arise due to faulty installation or operation are not covered by the warranty.

NOTE: Removing or tampering with the seal on the housing will invalidate the warranty.

---

3 Description

This instruction manual describes the installation and commissioning of the Emotron M20 shaft power monitor. The Emotron M20 supervises induction motor driven equipment and provides warnings when abnormal conditions are detected. It protects for example, pumps and other equipment. The M20's ability to provide reliable monitoring and protection ensures that production equipment is optimized and expensive breakdowns and interruptions are minimized.

The Emotron M20 uses the motor as its own sensor and no external sensors or extra cabling are required. Due to the special method of subtracting motor power losses, the monitor is able to accurately measure the shaft power supplied by the motor to the application. This advanced technique allows the M20 to monitor only the "application" load rather than the "total" motor load, which includes the varying motor losses.

The shaft power is calculated by measuring motor input power, and subtracting the motor power loss calculated using a unique principle. The shaft power output is indicated on the monitor display in kW or HP, or as a percentage of rated power. Calculating shaft power gives more reliable supervision than non-linear techniques, such as current and phase angle measurements. Current measurement is only sufficient at high motor loads and phase angle only at low loads. Input power is sometimes called true or real power. Input power is linear, but ignores motor power loss.

The M20's analogue output and two relay outputs allow the combination of direct and indirect control. The unit offers high accuracy in the event of very small load variations. The analogue output signal can be used to scale the machine load to represent the actual working range.

The monitor is very easy to install and set up and should be mounted on a standard DIN rail. It is also very easy to use. The "Auto set" function makes it possible to adjust the monitor automatically by pressing just one key.

The M20 provides complete flexibility in terms of the type of protection required for your application. You may select either overload and underload protection or simply overload with pre-alarm or underload with pre-alarm. Independent response delays can be selected for both overload and underload protection. Additional flexibility is provided in the form of programmable output relays, number of start attempts, number of reversing attempts etc.

The Emotron M20 shaft power monitor offers advanced multi-function monitoring and a display for load indication and parameter setting. It is ideal for
protecting many different applications including pumps in general, centrifugal pumps, magnetic pumps, screw and impeller pumps, mixers, scrapers, crushers, conveyor systems, etc.

For further information, please see www.emotron.com.

4 Getting Started

4.1 Please note

1. Pay special attention to the safety section in this manual and parts marked CAUTION.
2. Check that motor/supply voltage corresponds to values on the monitor product label at the side of the unit.
3. Make a note of the motor's rated power and full load amps from its nameplate. Confirm that the current transformer supplied is of the correct size according to tables 1 and 2 in chapter 6 of this manual.

4.2 Connection and set-up before first start

1. Connect the Emotron M20 according to chapter 5 and Fig. 1.
2. Make sure all safety measures have been taken and switch on the supply voltage.
3. Use the NEXT key to scroll through the menu. Press and hold the ENTER key and press the NEXT key to scroll back.
4. Set rated motor power and current in windows 41 and 42. Additional settings to be programmed are discussed in chapter 8.
5. Set monitor function in window 05, overload and underload or only underload or only overload. See chapter 12, Parameter list, for range and default values.
6. Set start delay and response delay in window 31 and 32/34.
7. Compare all set values with the parameter list in chapter 12 to confirm that all relevant values are set. Advanced features will be found in chapter 9.

4.3 First start

CAUTION!
Make sure that all safety measures have been taken before switching on the supply voltage and starting the motor/machine in order to avoid personal injury.

1. Start the motor/machine and let it run at normal load, until the Start Delay has expired.
2. Press AUTO SET for 3 seconds.

Hint!

Short-circuit the output relays during the set-up; this prevents the equipment from stopping unintentionally.

More Hints!

The monitor can be set in three different ways:

1. **Automatically** by pressing the Auto set key as described above. The Auto set function performs a measurement (momentarily) of the actual load and sets relevant alarm levels for this actual load plus/minus the "margins" (Default; Max +16% and Min -16%).
2. If Auto set is used as above, the **margins can be re-adjusted** manually (windows 21-24). When the margin values are changed a new Auto set must always be performed to activate the changes and the new margins. More information is provided in chapter 9, Advanced Features.
3. **Manual setting** of alarm levels (windows 11-14). The alarm levels can be set manually, without using the Auto set. See sections Manual setting of alarm levels, alternative A, B and C.

NOTE: If any window parameter is manually adjusted, the display will flash the new value to indicate that a change has been made. The Enter key must be pressed for the M20 to accept this new value.

4.4 Manual setting of alarm levels, alternative A

Running and setting at normal load

- Start the motor/machine or pump and let it run at normal load, until the Start Delay (window 31) has expired.
- Read off the load on the monitor display, e.g. 65%, window 01 (or kW/HP).
- Set the max. main alarm level to something between e.g. 70-85% in window 11. This must be set to the actual application requirements, maximum load for machine/process.
- Set the min. main alarm level to something between e.g. 60-45% in window 14. This must also be set to the actual application requirements.

See also Fig. 7 in section 8.4, Over- and underload monitor.

4.5 Manual setting of alarm levels, alternative B

Running and setting at maximum load as well as at minimum load

- Start the motor/machine or pump and let it run at maximum load, until the Start Delay has expired. E.g. fill the conveyor with maximum allowed goods.
- Read off the load on the monitor display, e.g. 85% (window 01).
- Set the max. main alarm level to something between e.g. 90-95% in window 11. This must be set to the actual application requirements, maximum load for both machine and processes.
- Then run the motor/machine and let it run at minimum load, e.g. idling, until the Start Delay has expired.
- Read off the load on the monitor display, e.g. 30%.
- Set the min. main alarm level to something between e.g 25-20% in window 14. This must also be set to the actual application requirements.

See also Fig. 7 in section 8.4, Over- and underload monitor.

4.6 Manual setting of alarm levels, alternative C

It is also possible to approximately calculate or estimate the alarm levels. If e.g. the motor used is 22 kW, 22 must be set in window 41. This means that each percentage point corresponds to 220 W (22 kW/100 = 220 W), and the alarm limits in window 11- 14 can be set in steps of 220 W. If the max. alarm level is set to 80% in this example, the monitor will emit an alarm and stop the machine at approx. max. 17.6 kW shaft output power.

NOTE: If the pre-alarm is not used, the values for Min. pre-alarm and Max. pre-alarm can be set to 0 (window 13) and 125% (window 12) respectively. This will eliminate pre-alarm warning indications in the monitor display when not in use.

See also Setting alarm levels manually in chapter 9, Advanced Features.

5 Wiring

The following wiring diagram provides an example of how the M20 can be connected to control the start/stop circuit of a three-phase motor, Fig. 1. Connections to a single-phase motor are described later in this manual (Fig. 2) as are the programming changes necessary for such applications. The default setting for the M20 is 3-phase.

1. The current transformer CTMxxx must be placed in the same phase that is connected to terminal 9, phase L1, see Fig. 1. Failure to follow this requirement will result in the monitor failing to function.
2. For single-phase connection see fig 2.

When using DC voltage, terminal 6 should be connected to negative polarity (ground) and terminal 5 to positive polarity (max. 48 VDC). See also Alternative auxiliary circuit (Fig. 16) in chapter 9.

Note: The current transformer (CTMxxx) must be placed in the same phase that is connected to terminal 9, phase L1, see Fig. 1.

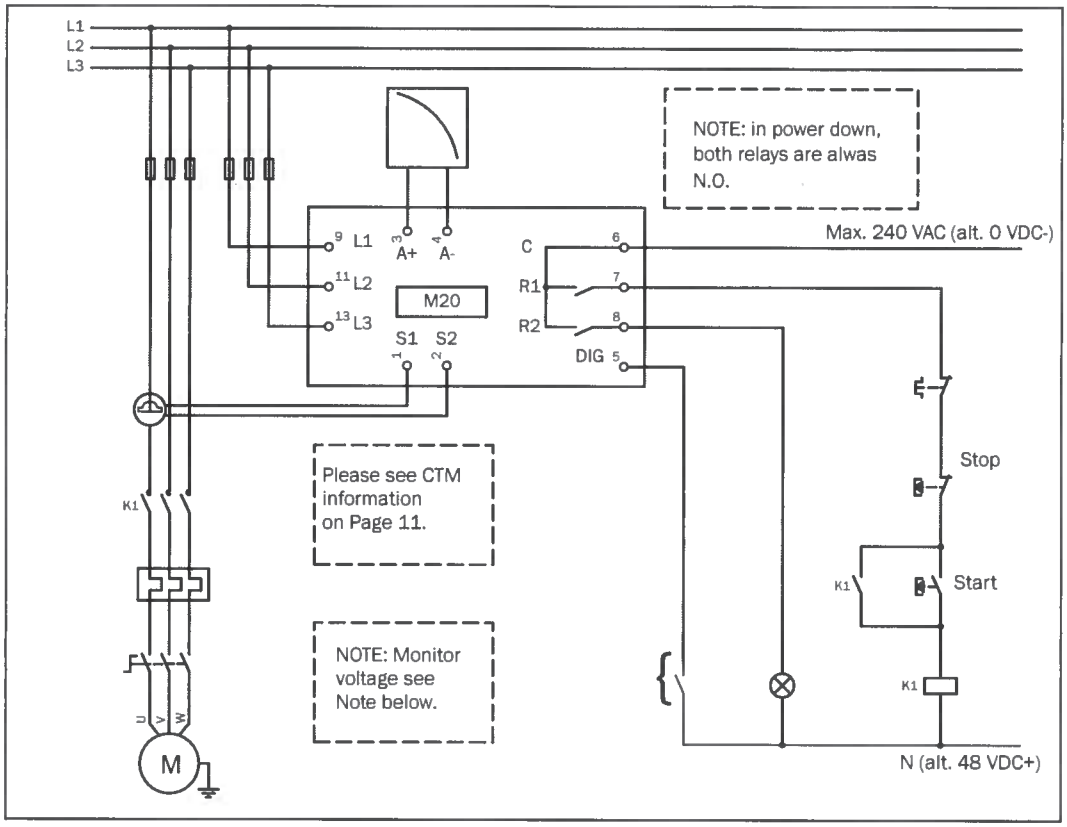

Fig. 1 Connection example

NOTE: If the START/STOP is connected as per Fig. 1, it is recommended that terminals 6 and 7 be bypassed during programming. After the programming is completed the bypass must be taken out. Make sure that the monitor voltage range e.g. 3x380-500 VAC matches the connected motor/line voltage, e.g. 3x 400 V.

Please use the enclosed plastic (rubber) insert (if ordered, optional) to cover the monitor terminals.

5.1 Alternative example for single-phase connection

This wiring example shows the connections required for single-phase applications. Refer to Fig. 1 for the remaining wiring.

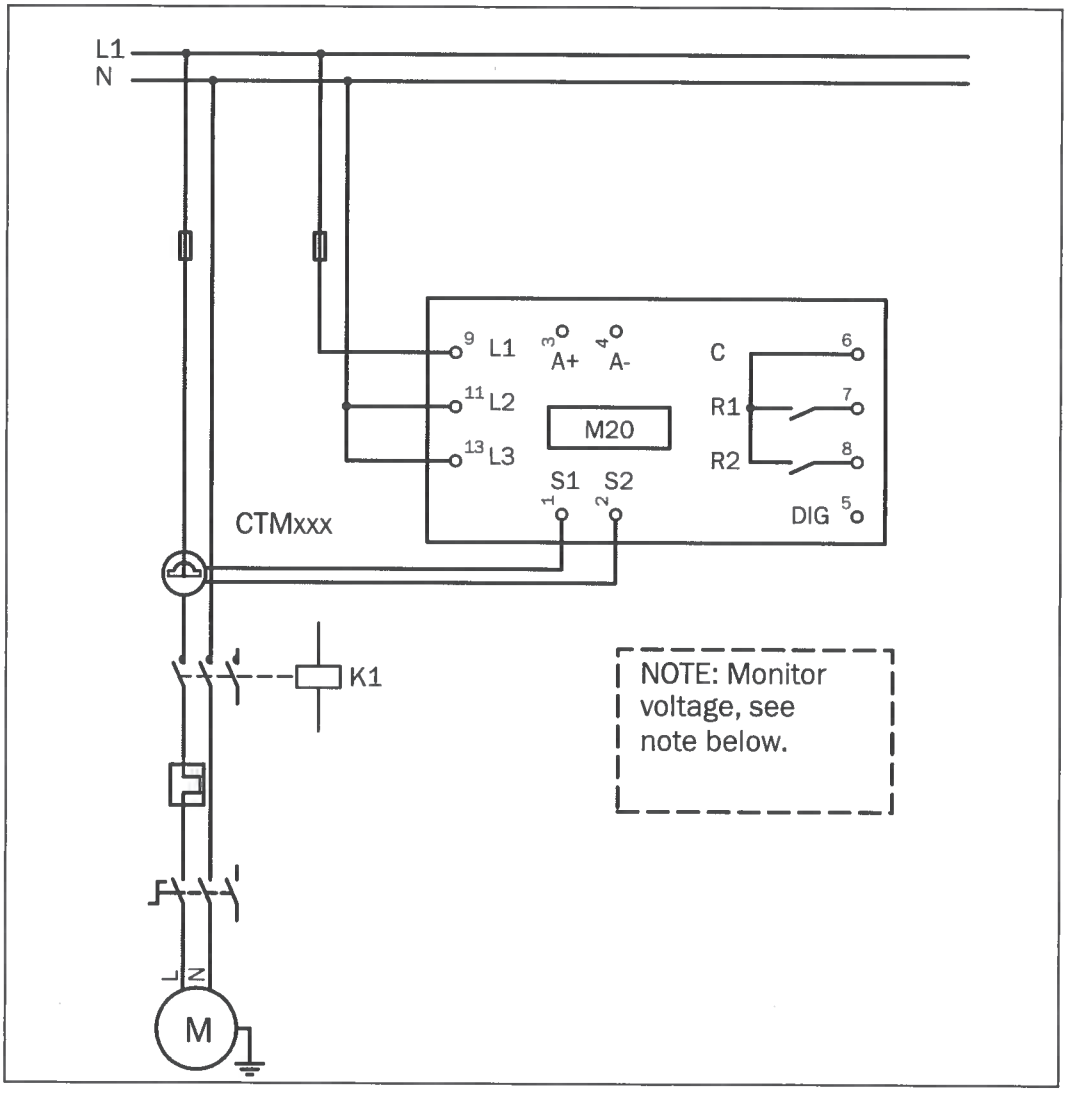

Fig. 2 Single-phase connection example.

NOTE: In Fig. 2 make sure that the monitor voltage range e.g. 1x100-240 VAC matches the connected motor/"line – neutral" voltage, e.g. 1x 230 V.

5.2 Example - digital input

The digital input uses terminals 5 (DIG) and 6 (C - reference). Either a VAC or a VDC signal may be used. Connect + to terminal 5 (DIG) and - to terminal 6 for VDC signal. Please note the polarity when DC voltage is used. See also Fig1 and terminal 6: Max. 240 VAC (or 0 VDC-) and on terminal 5: N (or 48 VDC+). See also chapter 9, Advanced Features.

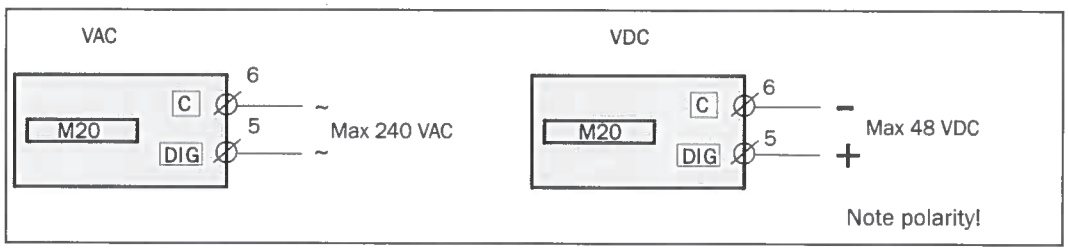

Fig. 3 Wiring example for digital input.

6 Selection of Current Transformer

6.1 Motors less than 100 A

1. Check the rated motor current on the motor plate.
2. Compare this value with the current in Table 1.
3. From Table 1, select the current transformer and the appropriate number of windings.

Fig. 5 shows the different types of current transformer (CT) windings. In Fig. 5:1 the motor wire is just drawn through the CT, in the text and tables below this is described as 1 (one) winding. Fig. 5:2 shows a CT with 2 windings and Fig. 5:3, 3 windings. In other words the number windings is equal to the number of times the motor wire "L1" is drawn through the hole of the current transformer.

NOTE: Maximum length of the CTM cable is 1 m (39 inches).

Example

- Rated motor current = 12 A.
- Select 10.1-12.5 A from the first column in Table 1.
- This gives:
  CTM025 with 2 windings (the motor wire is drawn through the CT's hole twice).

Table 1 Motors and CT less than 100 A

RATED MOTOR CURRENT [A]	CURRENT TRANSFORMER TYPE and NUMBER OF WINDINGS			
	CTM 010	CTM 025	CTM 050	CTM 100
0.4 - 1.0	10			
1.01 - 2.0	5			
2.01 - 3.0	3			
3.1 - 5.0	2			
5.1 - 10.0	1			
10.1 - 12.5		2		
12.6 -25		1		
26 - 50			1	
51 - 100				1

In order to ensure an accurate calibration of the M20, it is essential that you use the correct CTM and apply the exact number of windings in accordance with the above table.

NOTE: Normally the appropriate Current Transformer will have been ordered and shipped with the M20. Check that this is the case; contact the supplier if in doubt.

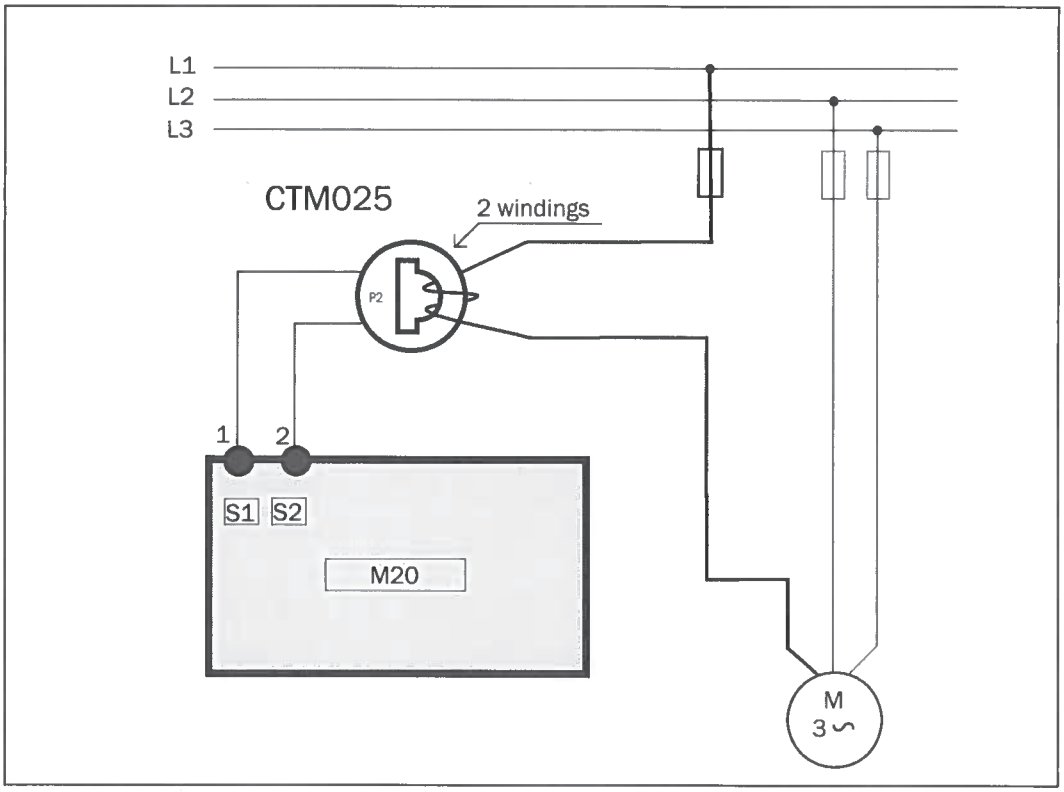

Fig. 4 Example CTM 025 with 2 windings for a 12 A motor

NOTE: The current transformer connection and orientation are not polarity sensitive, but must be connected to the same phase that is being referenced for terminal 9 of the M20.

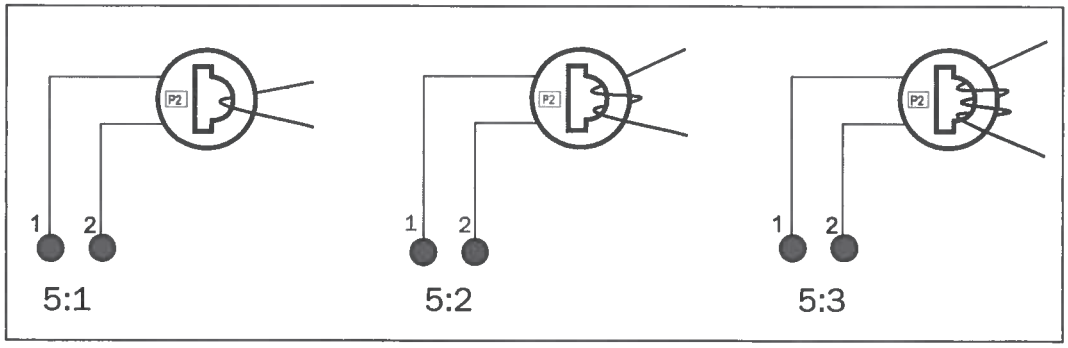

Fig. 5 Example 1, 2 and 3 windings.

6.2 Motors greater than 100 A

1. Check the rated motor current on the motor plate.
2. Compare this value with the current in Table 2.
3. Select the primary and secondary current transformer and the appropriate number of windings from the columns in Table 2.

Please note that the ratio of the primary transformer must be exactly as provided in the table below, otherwise the monitor power calculations will be inaccurate. This will affect power readings, settings etc.

Example

- Rated motor current = 260 A.
- Select 251-500 A from the first column in Table 2.
- This gives:
  - Primary transformer 500:5, 1 winding. (The motor wire is drawn through the primary transformer once).
  - CTM010 with 2 windings. (The wire from the primary transformer is drawn through the hole in the CT, "CTM10", twice).

Table 2 CT greater than 100 A.

RATED MOTOR CURRENT [A]	CURRENT TRANSFORMER TYPE and NUMBER OF PRIMARY WINDINGS
101 - 150	150:5 + CTM 010 1 + 2
151 - 250	250:5 + CTM 010 1 + 2
251 - 500	500:5 + CTM 010 1 + 2
501 - 999	1000:5 + CTM 010 1 + 2

NOTE: Check that the appropriate Current Transformers has been ordered and shipped with the M20. Contact the supplier if in doubt.

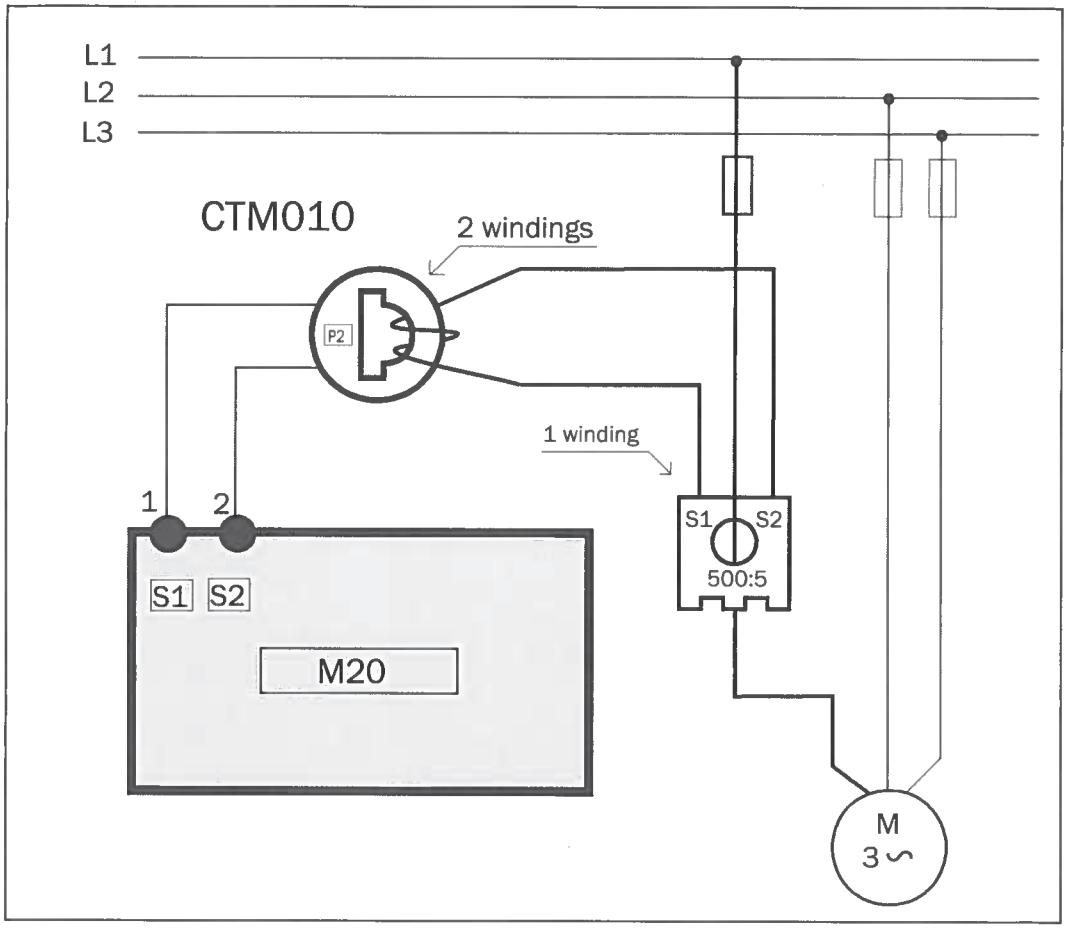

Fig. 6 Example of a CTM 010 with 2 windings and a primary transformer 500:5 with 1 winding for a 260 A motor.

NOTE: The transformer connection and orientation are not polarity sensitive, but must be connected to the same phase that is being referenced for terminal 9 of the M20.

7 Operation

Make sure the enclosed plastic (rubber) insert (if ordered, optional) covers the monitor terminals before you start programming.

7.1 Overview

Control Terminals

1 S1 Current transformer input
2 S2 Current transformer input
3 + Analogue output
4 - Analogue output
5 DIG External RESET or AUTO SET or Block Pre-Alarm
6 C Common: RELAY, DIG
7 R1 Main Alarm Relay 1*
8 R2 Pre-Alarm Relay 2

Display

12 Function (window) number
123 Function Value
⚠ Warning signal
Start, response delay or block timer active
Parameter locked
V Voltage indicator
A Current indicator
mA Milliampere indicator
kW Kilowatt indicator
S Second indicator
% Per cent indicator

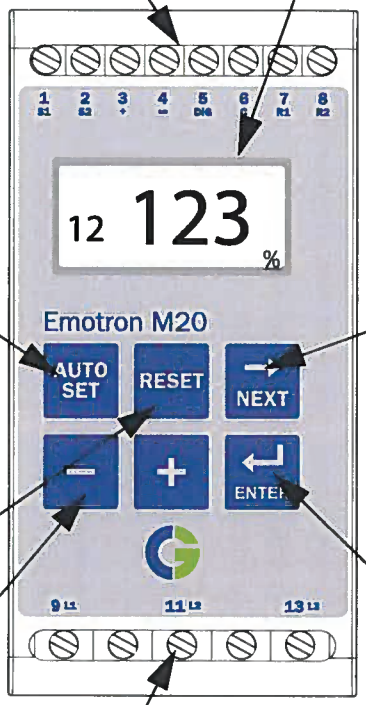

AUTO SET Key
Press for 3 seconds during normal and stable load to apply the automatic setting of the alarm levels. Not available if Parameter Locked.

NEXT Key
Proceeds to next window. If no key is pressed for 1 minute the display returns to window 01 automatically. Scroll back by pressing and holding ENTER at the same time as the NEXT key is pressed.

ENTER Key
Confirm (save) changes.

After Power up window 01 appears, the actual load value is shown.

Default view (example shows 54% load):



Use the NEXT key to scroll through the function menu.

RESET Key
To reset ALARM

+/- Keys
For increasing and decreasing value

Monitor Supply Terminals

9 L1 Motor phase
11 L2 Motor phase
13 L3 Motor phase

* For alternative relay function, see Special functions in chapter 9.

7.2 Window menu

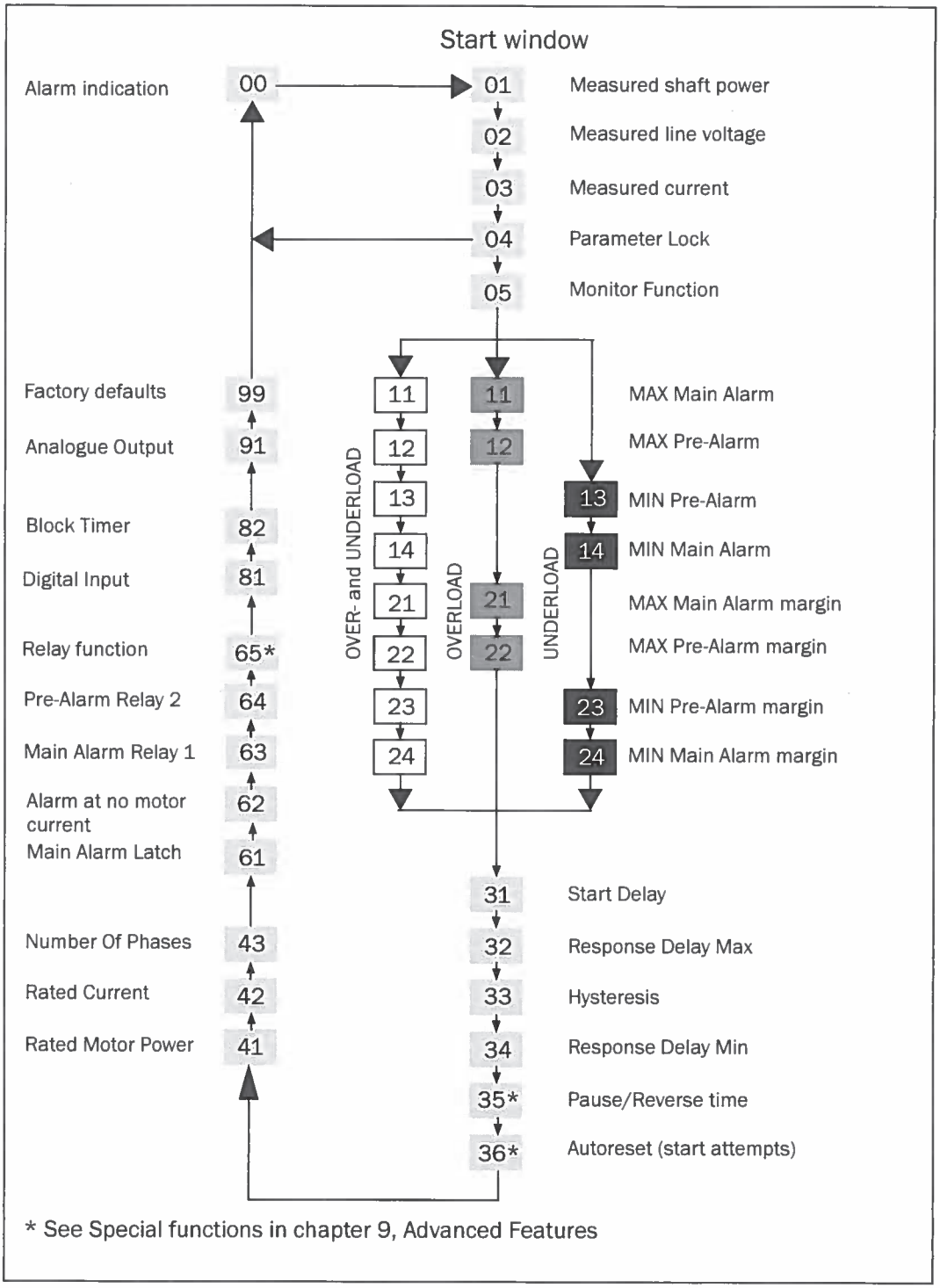

* See Special functions in chapter 9, Advanced Features

- The Alarm window 00 only appears if an Alarm output is active.
- The Actual Load window 01 appears after power up.
- Use the NEXT key to scroll through the menu. Scroll back by pressing and holding ENTER at the same time as the NEXT key is pressed.
- The Actual Load window (or alternative alarm window) will appear automatically if no keys are pressed for longer than 1 minute.
- If the Parameter Lock is on, only windows 00 (if alarm active) 01 02 03 04 are visible.
- Window 05 selects the monitor function, see section 8.4.

7.3 How to change a value

Example: setting the rated motor current in window 42.

1. Press NEXT until the window number 42 appears.



2. Press + or − until the desired value is reached (e.g. 23 A), value flashes.



3. Press ENTER to confirm and save the change, value stops flashing.

NOTE: If the value is NOT to be changed, press the NEXT key.

CAUTION!
In order to avoid personal injury, make sure that all safety measures have been taken before switching on the supply voltage and starting the motor/ machine.

8 Programming

8.1 Set measurement unit, kW or HP

8.1.1 Selecting the unit of measurement

The unit of measurement can be set to kilowatts or horsepower both as absolute or relative values. This setting is valid for the alarm levels, rated motor power and the actual load read-out in window 01.

Measurement unit	Read-out load window 01	Rated power window 41	Alarm levels windows 11, 12, 13, 14
Kilowatt relative value (def.)*	%	kW	%
Horsepower absolute value	HP	HP	HP
Horsepower relative value*	%	HP	%
Kilowatt absolute value	kW	kW	kW

* Measured shaft power as % of rated power.

CAUTION!
In order to avoid personal injury, make sure that all safety measures have been taken before switching on the supply voltage and starting the motor/ machine.

Programming

1. Go to window 01.
2. Press and hold RESET and + simultaneously for 3 seconds.
3. The next unit of measurement is set and appears for 2 sec (see examples).

Repeat to select the desired measurement unit according to the table.

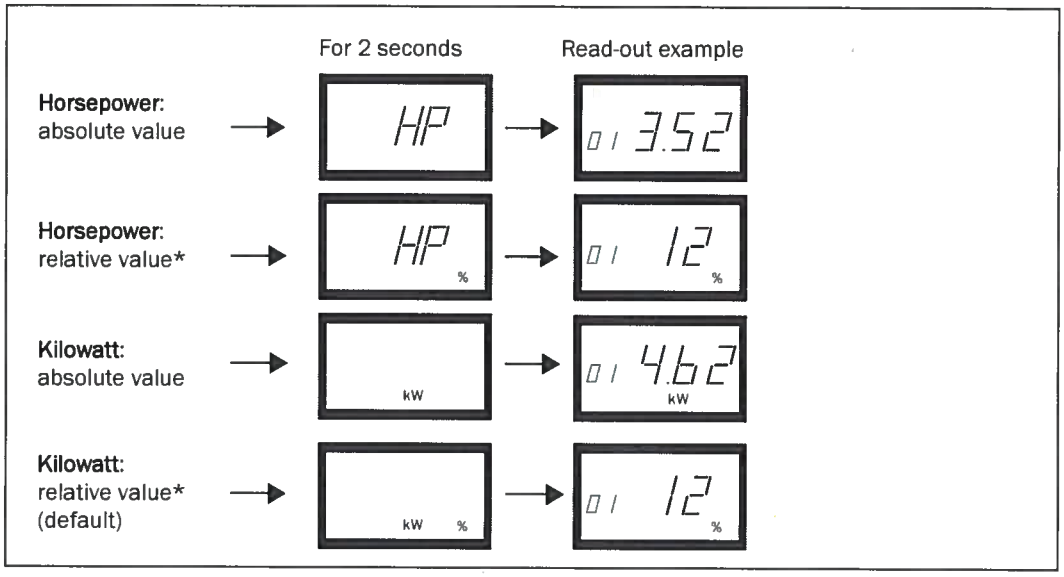

* Measured shaft power as % of rated power.

8.2 Setting rated motor power and current (window 41 and 42)

The rated motor power and the rated motor current must be set in windows 41 and 42.

Example motor plate:

TYPE: T56BN/4		NR: 948287		Prot. IP: 54	
Serv: S1		Cos φ: 0.78		Is. Cl:F	
V:Y/Δ	Hz	HP	kW	RPM	A:Y/Δ
240/415	50	3	2.2	1400	5.6/9.4
260/440	60	3	2.2	1680	5.8/9.1
ASYNCHRONOUS THREE-PHASE MOTORS					

8.2.1 Programming

1. Go to window 41 (default = 2.2 kW).
2. Press − or + to set the rated motor power as indicated on the motor plate (see example).
3. Press ENTER to confirm the change.
4. Go to window 42 (default = 5.6 A).
5. Press − or + to set the rated motor current as indicated on the motor plate (see example).
6. Press ENTER to confirm the change.

8.3 Setting number of phases (window 43)

The number of phases must be set according to the number of motor phases. Default is 3 phases, see also chapter 5, Wiring.

8.3.1 Programming

1. Go to window 43 (default = 3PH).



2. Press – or + to set the number of phases to 1 if a single-phase motor is used.

3. Press ENTER to confirm the change.



8.4 Monitor function (window 05)

Monitor (Protection)	Indication in window 05	Alarm	Output Relay (default)
OVER- and UNDER-LOAD (default)	—	MAX Main Alarm	Relay 1 (NC): 6-7
	—	MAX Pre-Alarm	Relay 2 (NO): 6-8
		MIN Pre-Alarm	Relay 2 (NO): 6-8
		MIN Main Alarm	Relay 1 (NC): 6-7
OVERLOAD	—	MAX Main Alarm	Relay 1 (NC): 6-7
		MAX Pre-Alarm	Relay 2 (NO): 6-8
UNDERLOAD	—	MIN Pre-Alarm	Relay 2 (NO): 6-8
		MIN Main Alarm	Relay 1 (NC): 6-7

If separate output relays are required for overload and underload alarms, please refer to chapter 9 and chapter 12.

Overload and underload Monitor

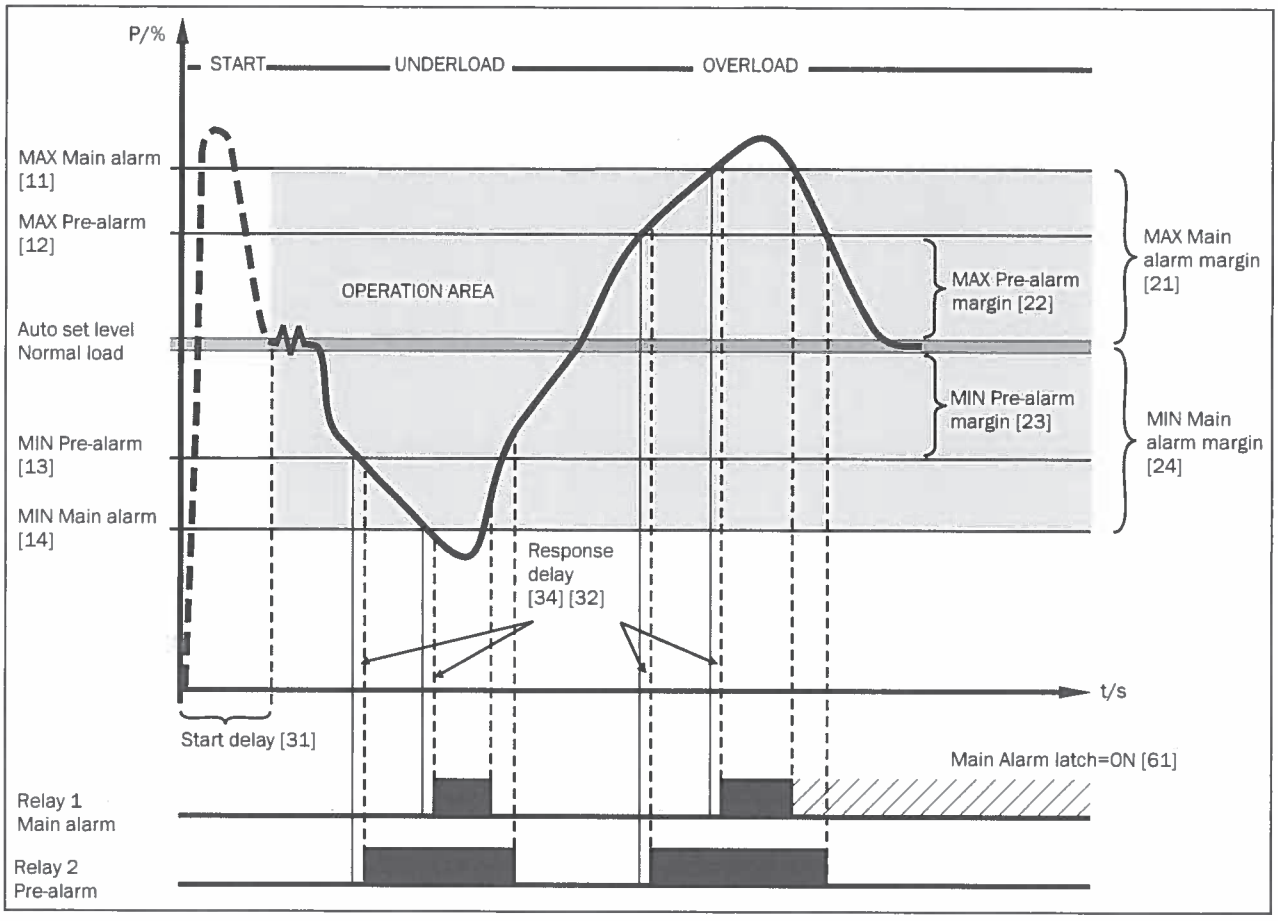

Fig. 7 Overload and underload monitor.

Programming

1. Go to window 05. The default selection is Overload and Underload monitor.
2. Press **–** or **+** to select underload or overload monitor.

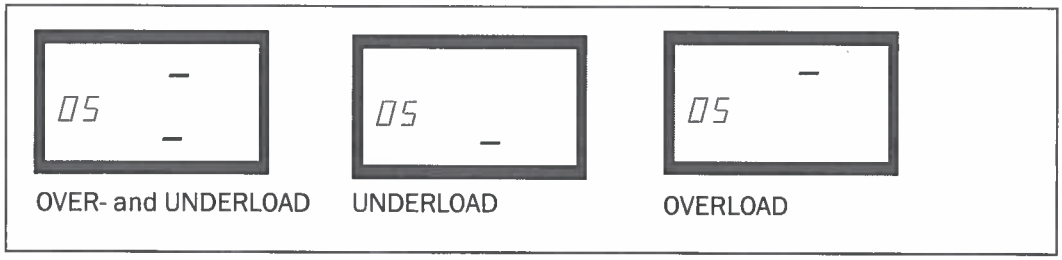

3. Press **ENTER** to confirm the change.

8.5 Setting the Start Delay (window 31)

To avoid false alarms during start up a Start Delay must be set to allow the motor and machine to speed up and to allow the power in-rush currents.

Programming

1. Determine in seconds how long it takes for the motor and machine to reach speed and for the power in-rush to pass. This will be the Start Delay.
2. Go to window 31 (default = 2.0 s).
3. Press − or + to set the determined Start Delay time in seconds.
4. Press ↵ ENTER to confirm the change.

If the monitor is being used on a self-priming pump, it may also be necessary to set the Start Delay long enough to allow the pump to become fully primed.

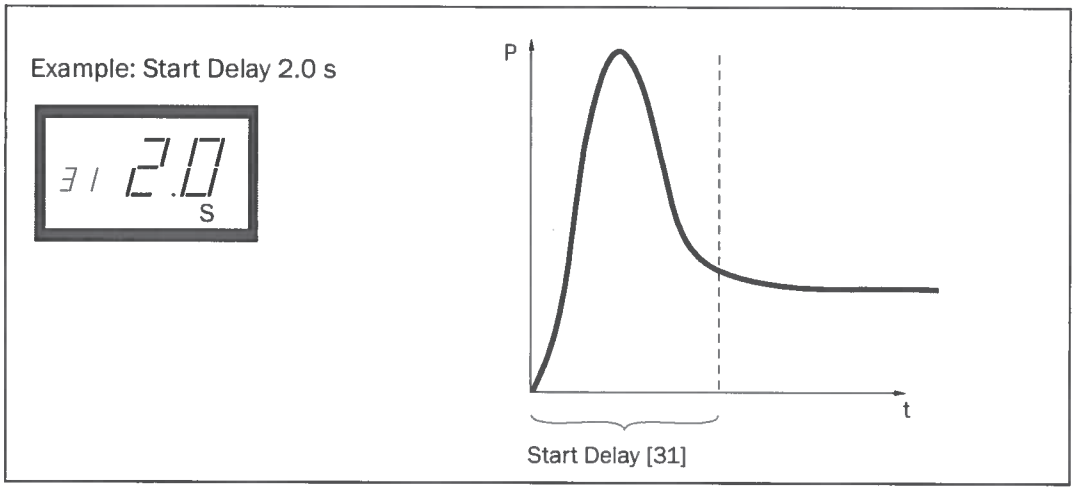

Fig. 8 Start Delay.

8.6 Setting alarm levels with Auto set

The Auto set command performs a measurement (momentarily) of the actual motor load and automatically sets the relevant alarm levels depending on the selected monitor function.

Protection (Monitor function window 05)	Alarm	Margin Value (Default margins)	Margins (Windows)	Alarm Level at Auto set
OVER- and UNDERLOAD (Default)	MAX Main Alarm	16%	21: MAX Main Alarm margin	Normal machine load + Window 21
	MAX Pre-Alarm	8%	22: MAX Pre-Alarm margin	Normal machine load + Window 22
	MIN Pre-Alarm	8%	23: MIN Pre-Alarm margin	Normal machine load - Window 23
	MIN Main Alarm	16%	24: MIN Main Alarm margin	Normal machine load - Window 24
OVERLOAD	MAX Main Alarm	16%	21: MAX Main Alarm margin	Normal machine load + Window 21
	MAX Pre-Alarm	8%	22: MAX Pre-Alarm margin	Normal machine load + Window 22
UNDERLOAD	MIN Pre-Alarm	8%	23: MIN Pre-Alarm margin	Normal machine load - Window 23
	MIN Main Alarm	16%	24: MIN Main Alarm margin	Normal machine load - Window 24

Programming

1. Start the motor and let it run at the normal machine load until the Start Delay has expired.
2. Press AUTO SET for 3 seconds. This can be done in any window.

3. The display shows "SEt", to confirm that the Auto set level has been measured and the alarm levels have been set. The display reverts to window 01.

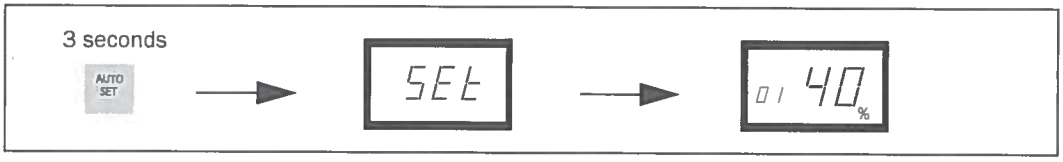

4. If the alarm levels are too high or too low, readjust the appropriate MARGINS (see table) and perform a new Auto set. Alternatively, alarm levels can be set manually, see chapter 9.

8.7 Setting the Response Delay (windows 32 and 34)

A Response Delay allows the machine to remain in an over- or underload condition for a specific time before the alarm relays are activated. Set the response delay for the overload condition in window 32 (max.), and set the response delay for the underload condition in window 34 (min.). The default value for both windows are 0.5 s. The valves may be adjusted upwards to avoid triggering a "false alarm".

Programming

1. Determine in seconds the response delay required for both overload and underload conditions. This is normally determined by the unique properties and behaviour of each application.
2. Go to window 32 (overload, default = 0.5 s).
3. Press − or + to set the determined Response Delay time in seconds.
4. Press ↵ ENTER to confirm the change.

The response delay for the underload condition (min.) is set in window 34 in a similar way.

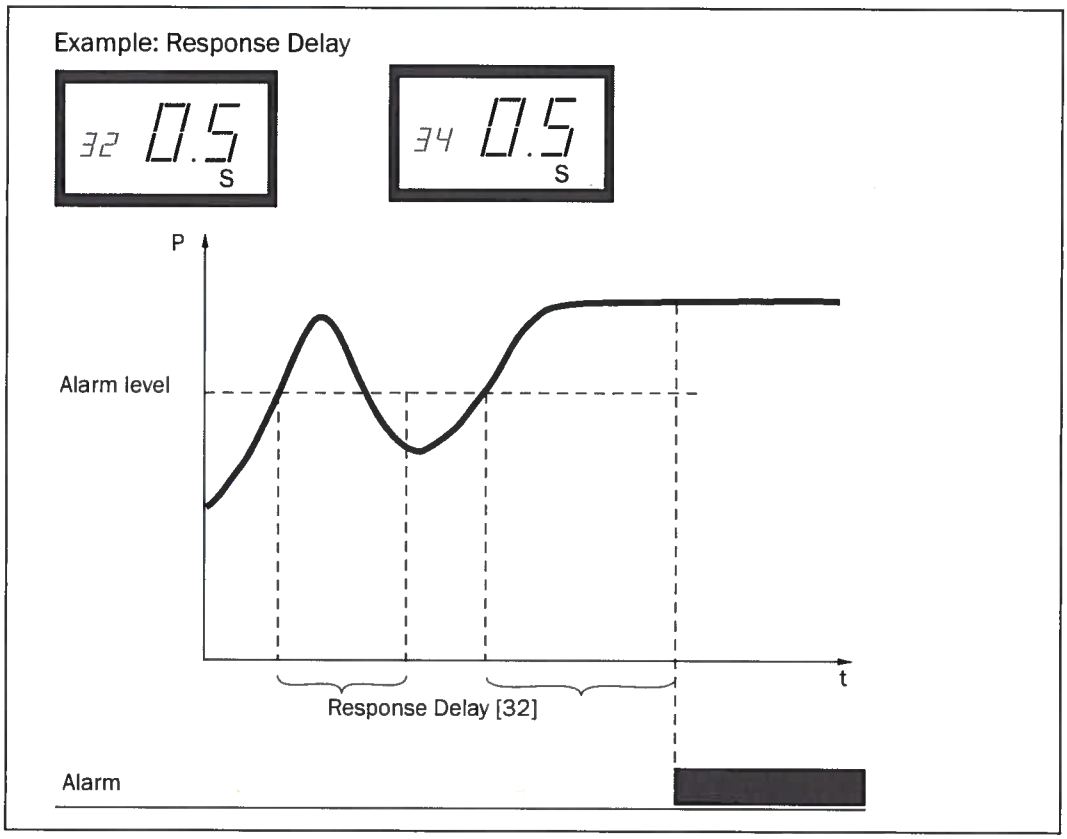

Fig. 9 Response Delay.

9 Advanced Features

9.1 Setting alarm levels manually (windows 11-14)

The alarm levels can be set manually, without using the Auto set. These levels can also be readjusted, e.g. for fine-turning, after an Auto set has been performed. See also section 4.3 to 4.6.

Protection (Monitor function window 05)	Alarm levels (Window)	Default
OVER- and UNDERLOAD (Default)	11: MAX Main Alarm	100%
	12: MAX Pre-Alarm	100%
	13: MIN Pre-Alarm	0%
	14: MIN Main Alarm	0%
OVERLOAD	11: MAX Main Alarm	100%
	12: MAX Pre-Alarm	100%
UNDERLOAD	13: MIN Pre-Alarm	0%
	14: MIN Main Alarm	0%

Setting margins (windows 21-24)

The margins for the Auto set can be changed manually. After the adjustment, the Auto set action must be performed again.

Protection (Monitor function window 05)	Window	Default
OVER- and UNDERLOAD (Default)	21: MAX Main Alarm margin	16%
	22: MAX Pre-Alarm margin	8%
	23: MIN Pre-Alarm margin	8%
	24: MIN Main Alarm margin	16%
OVERLOAD	21: MAX Main Alarm margin	16%
	22: MAX Pre-Alarm margin	8%
UNDERLOAD	23: MIN Pre-Alarm margin	8%
	24: MIN Main Alarm margin	16%

Setting hysteresis (window 33)

The hysteresis of an alarm level prevents the alarm relay "chattering" if the load fluctuates even in a normal "stable" condition. This also applies to a pre-alarm. This feature is normally only used if the main alarm latch (window 61) is set to Off. Default = 0%.

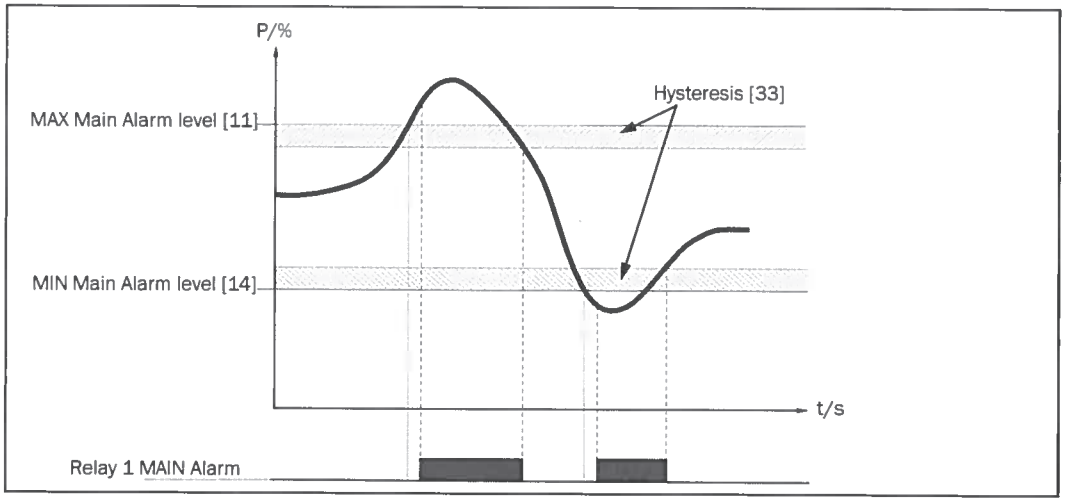

Fig. 10 Hysteresis

Setting main alarm latch (window 61)

The main alarm latch keeps the main alarm output active, even if the alarm condition has been removed. A latched alarm output can be reset by:

- The reset key
- External reset via digital input (see window 81).
- Switching off the power to the monitor (see also Wiring).

Default = Off.

Setting alarm at no motor current (window 62)

The alarm at no motor current gives an alarm if the motor current goes down to zero (62 = on). Default = Off (No alarm at no motor current).

Setting relay output (window 63 and 64 alt. 65)

The relay outputs R1 and R2 can be set to NO or NC contacts.

NOTE: If the power to the load monitor is switched off, the relay contacts are always in position NO.

If separate output relays are required for overload (max., relay R1) and underload (min., relay R2), see Special functions in chapter 9 and chapter 12.

Setting digital input (window 81)

The digital input can be set for:

RES: External RESET (Default)	To reset an alarm.
AU: External Auto set	To perform an Auto set with an external signal.
bLo: Block Pre-Alarm	To block the Pre-Alarm function and start the Block timer. If the input is high a Pre-Alarm is blocked, i.e. it is neglected. See also window 82.

Setting block timer (Window 82)

To set the timer for the blocking time after the Block command is released (see also window 81). Default = 0.0 sec.

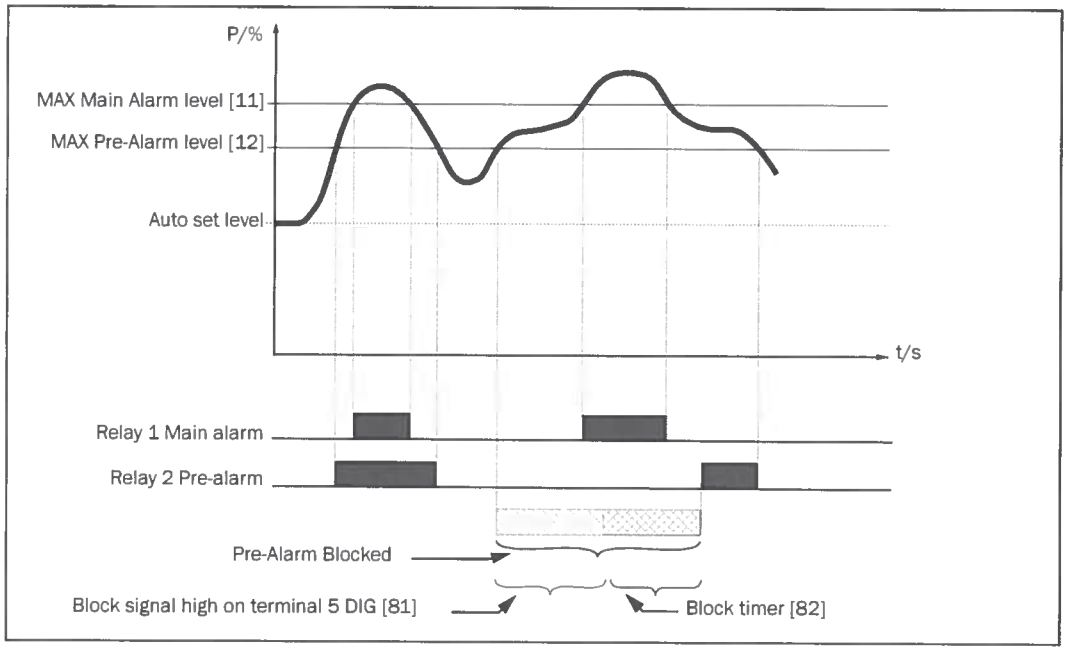

Fig. 11 Block timer

Setting analogue output (window 91)

The analogue output provides an analogue signal of either 0-20 mA or 4-20 mA which represents the motor shaft power. The signal can be inverted (20-0 or 20-4 mA). Full scale: rated motor power, see Fig. 12. To set P-span/scaling (full scale) see Fig. 13.

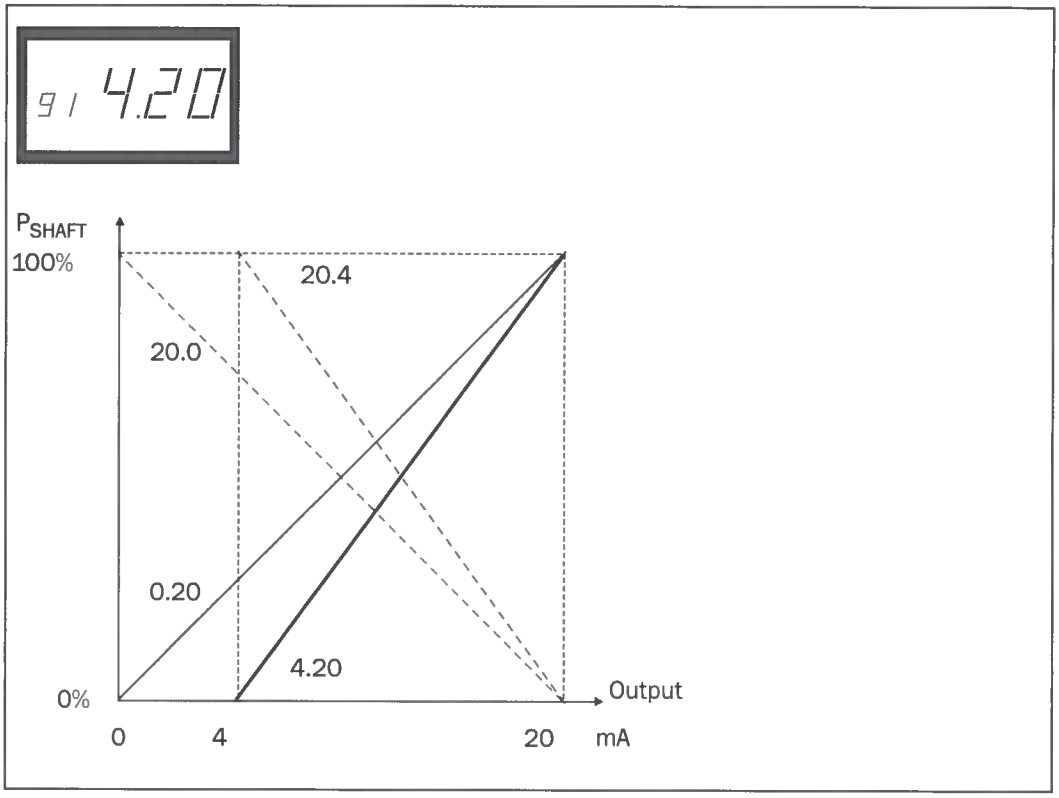

Fig. 12

Setting analogue output load range: P-span (window 92-93)

With windows 92 and 93 the full scale of the analogue output can be set according to the minimum and maximum load (P-span).

1. In window 91, press RESET and + for two seconds until "on" shows. Windows 92 and 93 are now active.

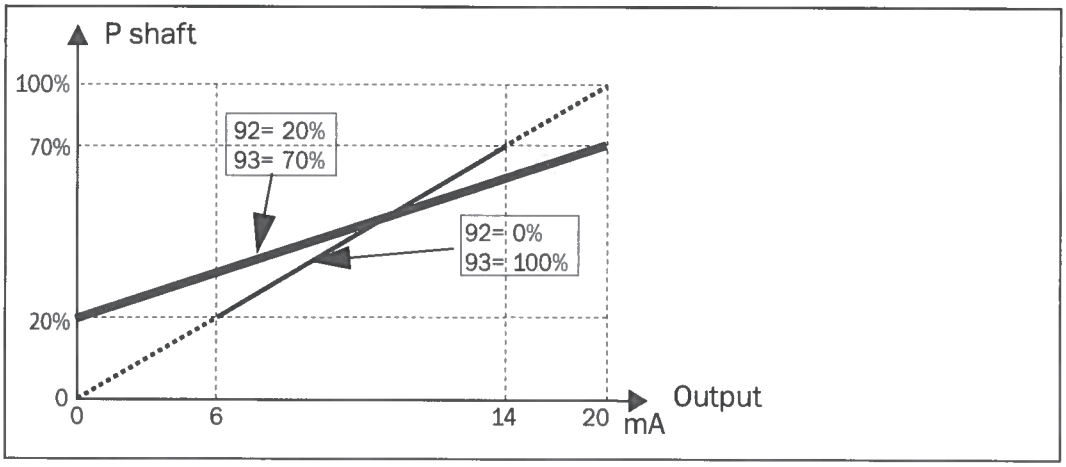

Fig. 13

2. Set the lowest load value in window 92 (e.g. 20%)
3. Set the highest load value in window 93 (e.g. 70%)

The full scale of the analogue output is now set between 20% and 70% load. See Fig. 13. To deactivate: Press RESET and + for two seconds until "Off" shows in window 91.Windows 92 and 93 are now inactive.

Locking parameters (window 04)

To avoid the parameter settings being changed unintentionally, the programming can be locked by entering the code "369" in window 04. Now only Load [01], Voltage [02] and Current [03] can be checked. Follow the same procedure to unlock the monitor. The Auto set key is disabled when parameters are locked. Auto set via digital input is always active if window 81 is set to AU (Auto set).



NOTE: The symbol appears in all windows.

Resetting to factory defaults (window 99)

The factory defaults are reset by entering "dEF" in window 99. If window 99 shows "USr" it indicates that the settings have been changed to user specific settings.

View alarm message (window 00)

In an alarm condition, the window 00 appears automatically. The window indicates the following alarm conditions. Window 00 flashes at all times.

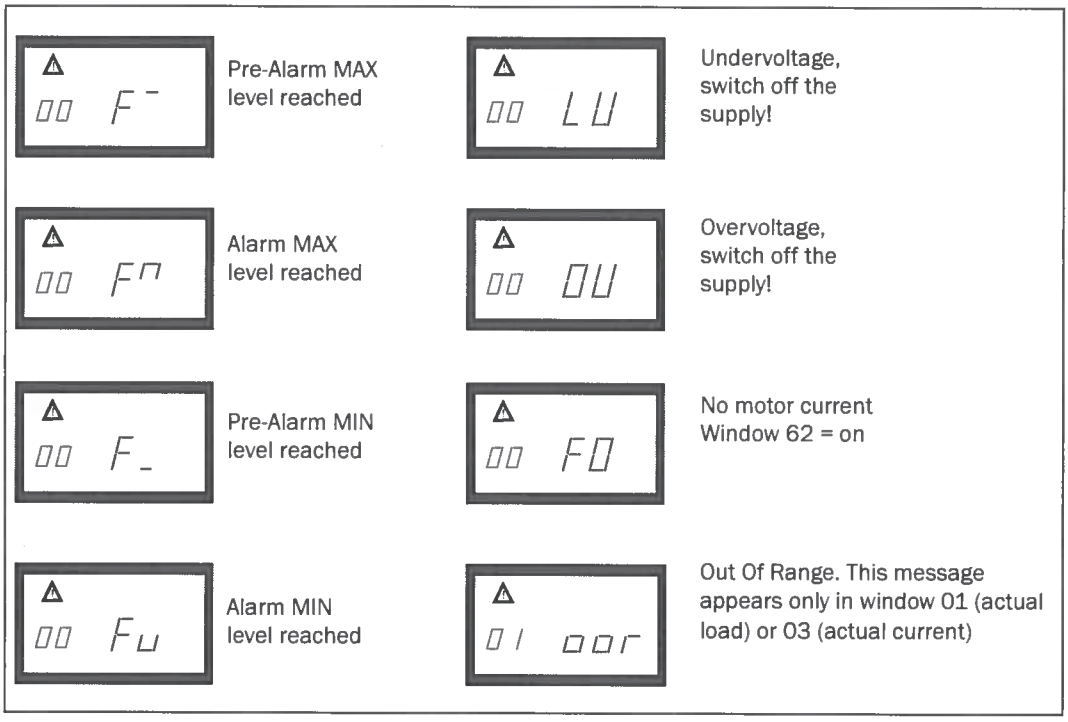

When the monitor is switched on (power up), the voltage on phases L1, L2 and L3 is checked. If the wrong voltage is detected, an LU (undervoltage) or OU (overvoltage) alarm is generated. No relay alarm will be indicated or activated.

Special functions (windows 35, 36 and 65)

Special functions are separate relays for overload and underload alarm/stop, start attempts and a reverse function with start attempts:

- Window 65 = 0, Normal M20
- Window 65 = 1, Separate relays for overload and underload alarm (DLM)
- Window 65 = 2, Reverse function

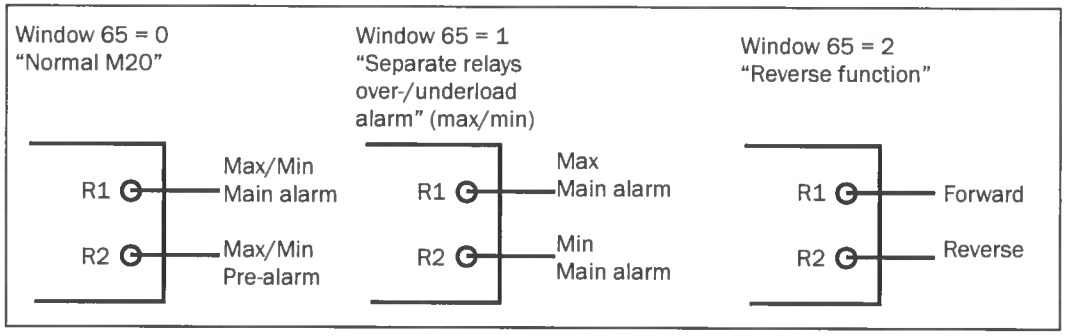

Fig. 14 Window 65 and relay functions

In all three cases the number of start attempts after a main alarm may be set in window 36. The pause time between start attempts may be set in window 35. This time is also used as the time to run the motor in the reverse direction when window 65=2.

The reverse function can be used to reverse e.g. a screw conveyor or pump when a "jam" occurs. Reversing the motor may remove the blockage. Should one reverse cycle not be enough to release the material, the M20 will repeat this operation up to a maximum of 5 cycles (window 36, 0-5 start attempts). Relay R1 = forward, relay R2 = reverse.

NOTE: For special handling of analogue output in reverse mode, see below.

The analogue output will go to its maximum e.g. 20 mA when the number of allowed start attempts has elapsed.

Resetting an alarm

A reset will cause the start attempt counter to be reset (new start attempts may be performed).

NOTE: In order to accomplish the above result, it will be necessary for a forward and reversing motor starter to be installed. See Fig. 15 Example of connection with a forward and reversing motor starter (contactor).

For more information contact your local sales outlet or visit us at:
www.emotron.com

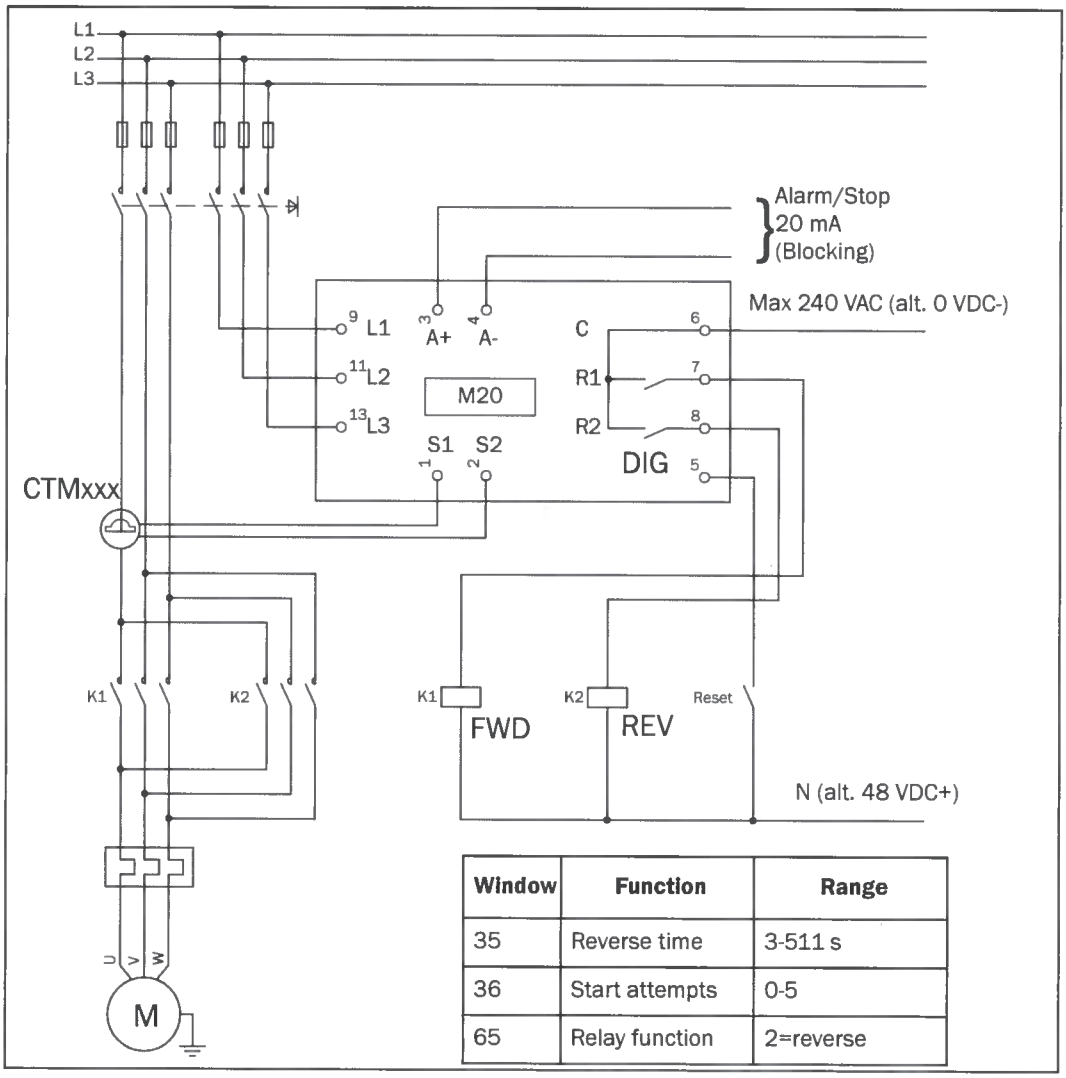

Window	Function	Range
35	Reverse time	3-511 s
36	Start attempts	0-5
65	Relay function	2=reverse

Fig. 15 Example of connection with a forward and reversing motor starter (contactor).

NOTE: In Fig. 15, R1 and R2 (K1 and K2) must not be energized/on at the same time as this will generate a short circuit. Therefore it is important that window 65 = 2 before the relays are connected to the contactors.

Alternative auxiliary circuit

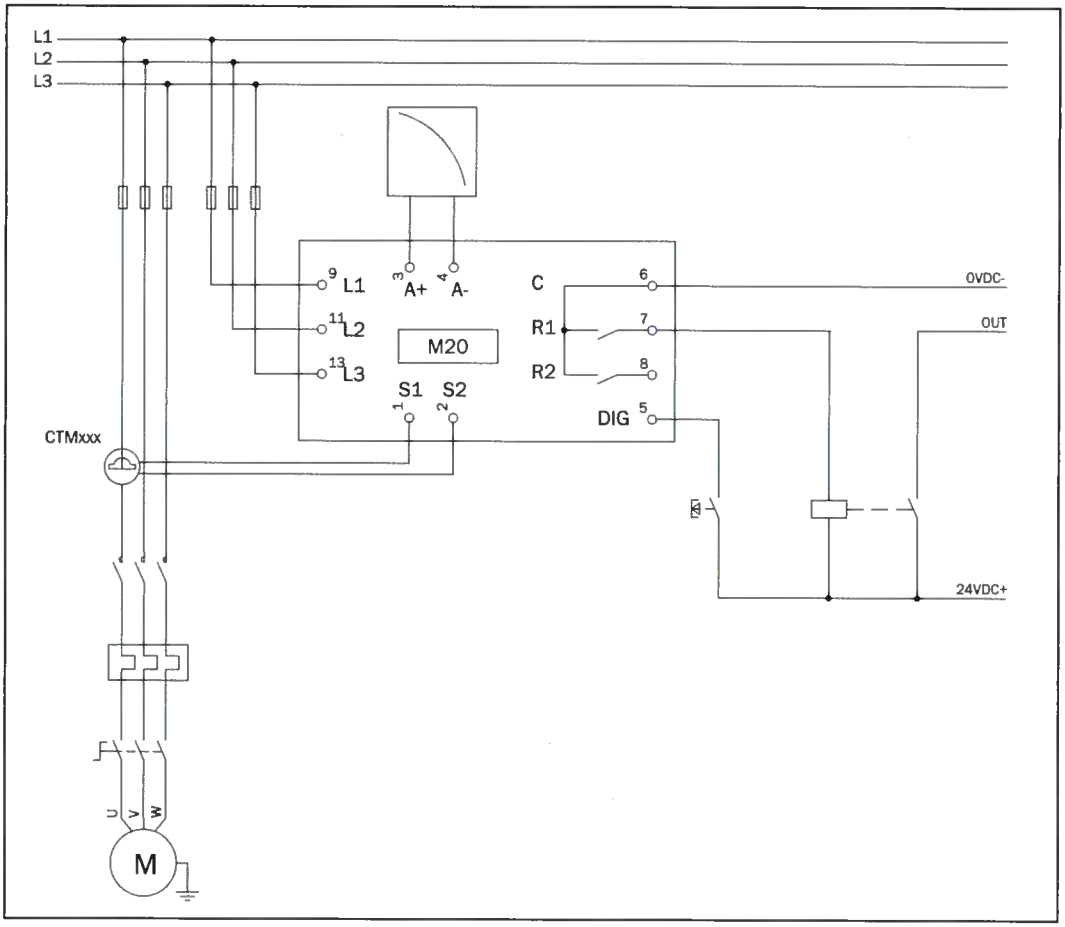

Fig. 16 Example of auxiliary circuit when VDC is used.

The example above can be used when a high VDC signal output is required.

10 Troubleshooting

Ensure that the installation has been correctly carried out, e.g. check the terminals and that the cables are properly stripped. The monitor is maintenance-free. However, you should regularly check wirings and terminals etc.

Problem	Solution
Window 01 always shows zero load, even if the motor is running	- Check the connection of the current transformer(s). - Check that the value of the rated motor power in window 41 is the same as the rated motor power on the motor plate. - Check that window 03 shows a phase current value that agrees with with the rated motor current.
Window 01 shows an improper power value when the motor is running	- Check that the motor is not oversized for its application, check power transmission and gear ratio. - Check that there is a load on the motor during normal operation. - Check that the change in motor load is greater than about 3% (window 01). - Check that the current transformer is connected in phase L1.
Window 03 shows an improper value for the phase current	- Check that the current transformer has been selected as per Tables 1 and 2. - Check that the number of windings is as per Tables 1 and 2. - Check that the value of the motor current in window 42 is the same as the value of the motor current on the motor plate.
The monitor never gives an alarm	- Check that window 01 shows a value greater than zero. - Check the alarm levels in windows 11 to 14. If incorrect readjust the levels or perform an Auto set.

Problem	Solution
The monitor always gives an alarm	- Check the alarm levels in windows 11 to 14. If incorrect readjust the levels or perform an Auto set. - Check if the monitor is programmed for "latched alarm" (window 61=on). If so reset the monitor by pressing the reset key.
Window 00 shows "LU" or "OU". Under- or over-voltage alarm.	Switch off the supply: - Check that the supply voltage agrees with the voltage range on the monitor type plate.
Window 01 shows "oor". "Out Of Range" alarm.	- The measured shaft power is higher than 125% of the rated motor power programmed in window 41.
Window 03 shows "oor". "Out Of Range" alarm.	- The measured motor current is higher than 125% of the rated motor current programmed in window 42.
Over and undervoltage is not detected	This is only detected at monitor power up and not during continued operation. The relays will not trip, only indication in the display.
The alarm relays are not switching	- Check that the wire links between terminals 6 and 7 are removed as per "Wiring".
Not all windows are shown	When the special functions are used (windows 35, 65 etc.) blocked windows for settings are not shown.

11 Technical Data

Dimensions (WxHxD)	45x90x115 mm (1.77" x 3.54" x 4.53") 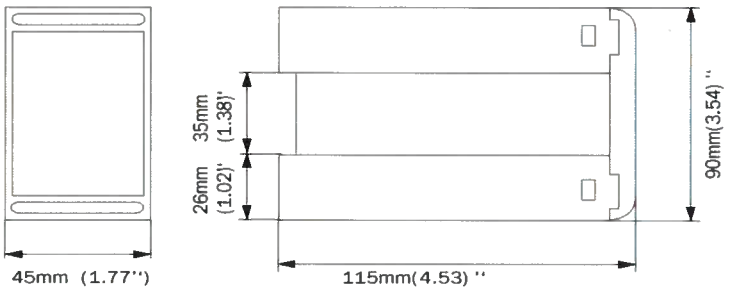
Mounting	35 mm DIN rail 46277
Weight	0.30 kg (10.5 oz)
Supply voltage (±10%)	1x100-240 VAC, 3x100-240 VAC, 3x380-500 VAC or 3x525-690 VAC
Frequency	50 or 60 Hz
Current input	Current transformer; CTM 010, 025, 050 and 100. Input 0-55 mA. (>100 A extra transformer needed)
Power consumption	Max. 6 VA
Start-up delay	1-999 s
Hysteresis	0-50% of rated motor power
Response delay max	0.1-500 s
Response delay min	0.1-500 s
Relay output	5 A/240 VAC Resistive, 1.5 A/240 VAC Pilot duty/AC12
Analogue output	Max. load 500 ohm
Digital input	Max. 240 VAC or 48 VDC. High: ≥24 VAC/DC, Low: <1 VAC/DC. Reset >50 ms
Fuse	Max. 10 A
Terminal wire size	Use 75 °C copper (CU) wire only. 0.2-4.0 mm^2 single core (AWG12). 0.2-2.5 mm^2 flexible core (AWG14), stripped length 8 mm (0.32")

Terminal tightening torque	0.56-0.79 Nm (5-7 lb-in)
Accuracy	±2%, ±1 unit cos phi>0.5; excl. current transformer; +20°C (+68°F)
Repeatability	±1 unit 24h; +20°C (+68°F)
Temperature tolerance	max 0.1%/°C
Operating temperature	-20 to +50°C (-4°F to +122°F)
Storage temperature	-30 to +80°C (-22°F to +176°F)
Protection class	IP20
RoHS directive	2002/95/EC
Approved to	CE (up to 690VAC), UL and cUL (up to 600 VAC)

Article number	Designation
01-2520-25	Emotron M20 1x100-240/3x100-240 VAC
01-2520-45	Emotron M20 3x380-500 VAC
01-2520-55	Emotron M20 3x525-690 VAC

Technical Data for Current Transformer (CT)

Type	Dimensions (WxØ)	Weight*	Mounting
CTM 010	27 (35) x Ø48 mm	0.20 kg	35mm DIN rail 46277
CTM 025	27 (35) x Ø48 mm	0.20 kg	35mm DIN rail 46277
CTM 050	27 (35) x Ø48 mm	0.20 kg	35mm DIN rail 46277
CTM 100	45 (58) x Ø78 mm	0.50 kg	35mm DIN rail 46277

* Weight including 1m (39 inch) cable. Please note that max. length of the CTM cable is 1 m and this cable cannot be extended.

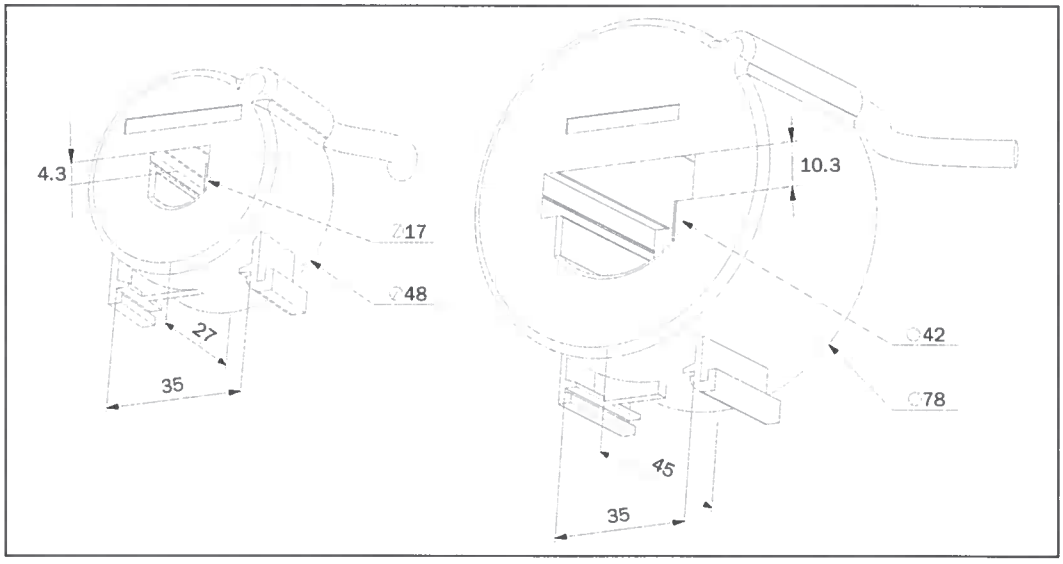

Fig. 17 Current Transformer CTM xxx.

Accessories and documentation

Article number	Designation
01-2471-10	Current Transformer (CT) CTM010, max. 10 A
01-2471-20	Current Transformer (CT) CTM025, max. 25 A
01-2471-30	Current Transformer (CT) CTM050, max. 50 A
01-2471-40	Current Transformer (CT) CTM100, max. 100 A
01-2368-00	Front Panel Kit 1 (2x terminal covers included)
01-4136-01	2x Terminal covers
01-5958-00	Instruction manual (Swedish)
01-5958-01	Instruction manual (English)
01-5958-02	Instruction manual (German)
01-5958-03	Instruction manual (Dutch)
01-5958-04	Instruction manual (Spanish)
01-5958-08	Instruction manual (French)
01-5958-09	Instruction manual (Russian)

Dismantling and disposal

The product is designed to comply with the RoHS directive, and shall be handled and recycled in accordance with local legislations.

EU (European Union) specifications

EMC	EN 61000-6-3, EN 61000-6-2 EN 61000-4-5
Electrical safety	EN 60947-5-1
Rated insulated voltage	690 V
Rated impulse withstand voltage	4000 V
Pollution degree	2

Terminals 3, 4, 5, 6, 7 and 8 are basic insulated from the line.
Terminals 3 and 4 are basic insulated from terminals 5, 6, 7 and 8.

US specifications

FCC (Federal Communications Commission). This equipment has been tested and found to comply with the limits for a Class A digital device pursuant to Part 15 of the FCC Rules. These limits are designed to provide reasonable protection against harmful interference when the equipment is operated in a commercial environment. This equipment generates, uses and can radiate radio frequency energy and, if not installed and used in accordance with the instruction manual, may cause harmful interference, in which case the user will be required to correct the interference at their own expense.

Canadian specifications

DOC (Department of Communications). This digital apparatus does not exceed the Class A limits for radio noise emissions from digital apparatus as set out in the Canadian Interference-Causing Equipment Regulations. Le présent appareil numérique n'ément pas de bruits radio-électriques dépassant les limites applicables aux appareils numériques de la Classe A prestite dans le Régelement sur le brouillage radioélectrique édicté du Canada.

12 Parameter List

Window	Function	Range	Default	Custom	Symbol
00	Alarm indication				
01	Measured shaft power in % of rated power	0-125			%
	Measured shaft power in kW	0-745			kW
	Measured shaft power in % of rated power	0-125			%
	Measured shaft power in HP	0-999			
02	Measured line voltage	90-760 V			V
03	Measured current	0.00-999 A			A
04	Parameter lock	0-999			
05	Monitor function	OVER- and UNDERLOAD, OVERLOAD, UNDERLOAD	OVERLOAD and UNDER-LOAD		
11	MAX Main Alarm (relay R1)	0-125	100		%
		0-745	2.2		kW
		0-125	100		%
		0-999	3		
12	MAX Pre-Alarm (relay R2)	0-125	100		%
		0-745	2.2		kW
		0-125	100		%
		0-999	3		

Window	Function	Range	Default	Custom	Symbol
13	MIN Pre-Alarm (relay R2)	0-125	0		%
		0-745	0		kW
		0-125	0		%
		0-999	0		
14	MIN Main Alarm (relay R1)	0-125	0		%
		0-745	0		kW
		0-125	0		%
		0-999	0		
21	MAX Main Alarm margin	0-100	16		%
22	MAX Pre-Alarm margin	0-100	8		%
23	MIN Pre-Alarm margin	0-100	8		%
24	MIN Main Alarm margin	0-100	16		%
31	Start delay	1-999	2		s
32	Response delay over-load	0.1-500	0.5		s
33	Hysteresis	0-50	0		%
34	Response delay underload	0.1-500s	0.5		s
35*	Pause/Reverse time	3-511	5		s
36*	Autoreset (start attempts)	0-5	0		
41	Rated motor power	0.10-745	2.2		kW
		0.13-999	3		
42	Rated current	0.01-999	5.6		A
43	Number of phases	1PH/3PH	3PH		
61	Main alarm latch	on/OFF	OFF		

Window	Function	Range	Default	Custom	Symbol
62	Alarm at no motor current	on/OFF	OFF		
63	Main Alarm relay R1	nc/no	nc		
64	Pre-Alarm relay R2	nc/no	no		
65*	Relay function	0 = M20 1 = DLM 2 = Reverse	0		
81	Digital input	rES/AU/bLo	rES		
82	Block timer	0.0-90	0.0		s
91	Analogue output	0.20/4.20/ 20.0/20.4	0.20		
92**	Analogue output low value	0-100			
93**	Analogue output high value	0-125			
99	Factory defaults	dEF/USr	dEF		

* See Special functions in chapter 9.

** See Set analogue output range in chapter 9.

13 Service

This manual is valid for the following model:

Emotron M20 (from software version R3b)

Document number:	01-5958-01
Document version:	r0
Date of release:	2012-04-02

CG Drives & Automation Sweden AB reserves the right to alter product specifications without prior notification. No part of this document may be reproduced without permission from CG Drives & Automation Sweden AB.

For more information contact your local sales outlet or visit us at:
www.emotron.com / www.cgglobal.com

Protected by utility patents EP 1027759 and US 6879260

CG Drives & Automation Sweden AB
Mörsaregatan 12
Box 222 25
SE-250 24 Helsingborg
Sweden
T +46 42 16 99 00
F +46 42 16 99 49
www.cgglobal.com / www.emotron.com

CG Drives & Automation, 01-5958-01r0, 20123-04-02

CERTIFICATE OF COMPLIANCE

Certificate Number	20120917-E101067
Report Reference	E101067-20000620
Issue Date	2012-SEPTEMBER-17
Issued to:	CG DRIVES & AUTOMATION SWEDEN AB MORSAREGATAN 12 PO BOX 222 25 SE-250 24 HELSINGBORG SWEDEN
This is to certify that representative samples of	AUXILIARY DEVICES Open type Auxiliary Devices, Type "EMOTRON DCM": Cat. No. 01-2110-, Type "EMOTRON M20": Cat. No. 01-2520-, followed by 20, 25, 40, 45, 50 or 55, may be followed by FL; Type "EMOTRON DLM": Cat. No. 01-0669-10; Cat. No. 01-2487-10. Accessories, current transformers Cat. No. 01-2471, followed by 10, 20, 30 or 40.
	Have been investigated by UL in accordance with the Standard(s) indicated on this Certificate.
Standard(s) for Safety:	UL508, Industrial Control Equipment CSA C22.2 No. 14-10, Industrial Control Equipment
Additional Information:	See the UL Online Certifications Directory at www.ul.com/database for additional information

Only those products bearing the UL Listing Mark for the US and Canada should be considered as being covered by UL's Listing and Follow-Up Service meeting the appropriate requirements for US and Canada.
The UL Listing Mark for the US and Canada generally includes: the UL in a circle symbol with "C" and "US" identifiers: c(UL)us the word "LISTED"; a control number (may be alphanumeric) assigned by UL; and the product category name (product identifier) as indicated in the appropriate UL Directory.

Look for the UL Listing Mark on the product.

William R. Carney

William R. Carney, Director, North American Certification Programs

UL LLC

Any information and documentation involving UL Mark services are provided on behalf of UL LLC (UL) or any authorized licensee of UL. For questions, please contact a local UL Customer Service Representative at www.ul.com/contactus

LEFT BLANK

6 – OPERATION AND MAINTENANCE

6.3 – HYDRA-POL POLYMER PREPARATION SYSTEM

6.3.1 – INSTALLATION, OPERATION AND MAINTENANCE MANUAL

LEFT BLANK



VEOLIA

Hydra-Pol ™

Polymer Preparation System

Installation, Operation and Maintenance Manual

Document No: IOM_0001_HYDP
Revision: 02
Date: 2018.05.07

WATER TECHNOLOGIES

LEFT BLANK

TABLE OF CONTENTS

1 INTRODUCTION 4
2 SAFETY 5
2.1 INTRODUCTION 5
2.1.1 Utility Hazards 5
2.1.1.1 Electrical 6
2.1.1.2 Pressurized Water 6
2.1.2 Equipment Hazards 6
2.1.2.1 Rotating Parts 6
2.1.2.2 Operation and Maintenance 7
2.1.3 Chemical Hazards 7
3 SHIPPING 8
4 RECEIVING 8
5 HANDLING 9
5.1 GENERAL 9
5.2 STAINLESS STEEL MATERIAL HANDLING 9
6 STORAGE 10
6.1 GENERAL 10
6.2 STAINLESS STEEL MATERIAL STORAGE 11
6.3 SPECIAL MAINTENANCE REQUIREMENTS DURING STORAGE 11
6.4 EQUIPMENT CLEANING 11
7 HYDRA-POL™ PRINCIPLE AND DESCRIPTION 12
7.1 POLYMER HYDRATION PRINCIPLE 12
7.2 DESIGN SUMMARY 13
7.2.1 Datasheet 13
7.2.2 P&ID 14
7.2.3 General Arrangement Drawings 15
7.3 COMPONENTS DESCRIPTION 16
7.3.1 Dry Polymer Storage and Dosing 16
7.3.1.1 Hopper with Vacuum or Bulk Bag Unloader 16
7.3.1.2 Volumetric Feeder 16
7.3.2 Polymer Wetting and Transfer to the Maturation Tank 16
7.3.2.1 Isolation Valve 16
7.3.2.2 Solenoid Valve 17
7.3.2.3 Service Water Pressure Switch 17
7.3.2.4 Pressure Gauge 17
7.3.2.5 Wetting Cone and Eductor 17

7.3.2.6 Check Valve 17
7.3.2.7 Static Mixer 17
7.3.2.8 Level Switch 17
7.3.3 Polymer Maturation 18
7.3.3.1 Preparation Tank 18
7.3.3.2 Mixer 18
7.3.3.3 Butterfly Valve 18
7.3.3.4 Conductivity Probe (optional) 18
7.3.3.5 Pressure Transmitter 18
7.3.4 Polymer Solution Storage 18
7.3.4.1 Storage Tank 18
7.3.4.2 Pressure Transmitter 19
7.3.4.3 Control Panel 19
8 INSTALLATION 20
8.1 SERVICE WATER 20
8.1.1 Flowrate and Inlet Pressure 20
8.1.2 Water Temperature 20
8.1.3 Water Quality 21
8.2 RECOMMENDED ARRANGEMENT 21
8.3 PIPES CONNECTIONS 22
8.4 ELECTRICAL REQUIREMENT 22
9 INSTALLATION AND PRE START-UP INSPECTION 23
9.1 PRE-OPERATIONAL CHECKOUT 23
9.2 START-UP CHECKOUT 23
9.2.1 Mechanical, Electrical and Control Start-Up 23
9.2.1.1 Initial Checking and Adjustment 24
9.2.2 Hydraulic Test 25
9.2.3 Control Start-Up 25
9.2.4 Process Start-Up 26
9.2.4.1 Screw Calibration Procedure 26
9.2.4.1.1 Dosage Calculation 26
9.2.4.1.2 Feeder Capacity 26
9.2.5 Process Start-Up Records 27
10 TROUBLESHOOTING GUIDE 28
11 MAINTENANCE 30
12 SPARE PARTS 31
APPENDIX A START-UP CHECKOUT CHECKLIST 32
APPENDIX B COMPONENTS DATA SHEETS AND MAINTENANCE MANUALS 33

1 INTRODUCTION

This document provides handling, storage, installation, operation and maintenance instructions for the Hydra-Pol™ polymer preparation system. The components of the Hydra-Pol™ are supplied by Veolia Water Technologies Canada (**VWTC**).

To obtain any additional information regarding characteristics or instructions on this equipment, please do not hesitate to contact us.

The system was designed in Canada by:

Veolia Water Technologies Canada
4105, Sartelon
Saint-Laurent, Qc.
Canada H4S 2B3
Phone: 514-334-7230
Fax: 514-334-5070

For technical support or service needs, for spare parts or to get assistance during your warranty period, you may contact us at the following number during regular business hours or write us at:

Veolia Water Technologies Canada After Sales Support
1-844-SER-VWT9 | 1-844-737-8989 | vwtservicecanada@veolia.com

Our business hours are from
Monday to Friday
8:30am to 5pm EST

2 SAFETY

2.1 INTRODUCTION



It is important that the operator has understood the instructions of use, security and maintenance before using the Hydra-Pol™ system. The manufacturer cannot be held responsible for use or improper maintenance resulting from a breach or non-compliance with instructions. The Operation and Maintenance manual contents must be kept permanently close to the system in a safe place.

It is important for Operations and Maintenance individuals to understand the nature of the chemicals they are working with. Hydra-Pol™ systems are for the preparation and dosage of different chemicals, some of which can pose extreme slip/trip hazards if spilled. Other chemicals create fine dust and pose a risk to respiratory health.

The safety rules and guidelines issued to the operators are the primary precautions that are necessary for the prevention of accidents. The operators should be very familiar with these rules. The safety pictograms used in the plant are to be respected at all times.



Operators should always wear the safety equipment that is provided or required by their management. Such items as hard hats, safety shoes, safety glasses, gloves, breathing protection, protective clothing, protection harness and hearing protection are very basic and go a long way in preventing accidents.

Operators should be aware of the location of eye wash stations, safety showers, self-contained breathing apparatus, first aid stations, and other safety equipment furnished for the plant.



Good housekeeping will also eliminate safety hazards such as tripping or slipping. When spills happen, the floor should be cleaned as soon as possible (see Chemicals Hazards section).

2.1.1 Utility Hazards

Utility hazards exist on a system including high-voltage electricity, pressurized water, and high pressure air. Care should be taken when utilizing this system.

2.1.1.1 Electrical



Electrical connections must be made by certified electricians in compliance with all applicable codes and regulations. Electrical equipment should never be worked on unless it is turned off and locked and tagged out. The lockout system key should belong to the person doing the repair or the on-site electrician. This will remove the potential danger for electrical shock or accidental start-up.

Even though most electrical motors and switch boxes are designed to be water tight, the presence of water around electrical equipment always presents a hazard and therefore should be used with care.

2.1.1.2 Pressurized Water



Only the proper pressure fittings should be used in the piping system. Leaks should be repaired as soon as possible. Isolation valves on piping that are being repaired should be shut tight and locked out. Lock out the water inlet and remove pressure before starting any maintenance.

2.1.2 Equipment Hazards

2.1.2.1 Rotating Parts



<u>General instructions</u>

Since the system includes equipment with rotating parts (Dry polymer feeder and mixer), operators should avoid wearing loose clothing and jewellery. Loose clothing can present one of the biggest safety hazards that exist when working near equipment in process.

<u>Dry polymer Feeder</u>

- Never introduce hands into a running micro-batch feeder.
- Never open the inspection hatch when the feeder is running.
- It is however necessary fitting upstream the machine a fix safety grid or a hopper high enough to prevent damages to limbs according to the Machine Directive inforce. The same approach is necessary for the outlet: it is required using a vertical outlet or similar systems meant to prevent foreign bodies from entering the machine and cause damage to it, to persons or to their limbs. Always ensure the Machine Directive in force is being followed.
- Lock out the system before starting any maintenance.

<u>Mixer</u>

- Never introduce hands into the preparation tank if the system is not locked out.
- Lock-out the motor starter before starting any maintenance.

2.1.2.2 Operation and Maintenance

The system in its normal use can present a hazard if not operated or repaired in a safe manner.

All equipment should only be operated and repaired according to the recommended procedures of the manufacturer, and by qualified individuals.

Only recommended spare parts should be used.



Maintenance on pumps, piping, etc. should be performed only after valves are locked and tagged or slip blanks are installed to completely isolate the equipment being worked on. Instrumentation and controls should always be kept in good working order to help assure the safe operation of equipment. Never remove instruments or controls out of service until having communicated with the operator and have established a plan to define the operation maintenance steps. If air operated valves are used for isolation, the air line should be removed to prevent inadvertent operation of the valves. When possible the valve can also be locked in position.



When maintenance is finished on equipment, the protective caps provided must be reinstalled. If a protection must be left off, unwary personnel should be notified by using safety pictograms or installing temporary protection. Equipment should never be inspected or maintenance attempted while the equipment is operating. All pumps and various automatic valves may cause harm to an operator if care is not taken.

2.1.3 Chemical Hazards

Dry Polymer Material Safety Data Sheets (MSDS) should be available close to the system.

Since chemicals or chemical dosage are used during normal operation of treatment facility, the risks of exposure to toxic chemicals or chemical burns are present.

All plant personnel should be required to wear proper protective clothing when handling or working near these chemicals. A minimum wardrobe should include, but not be limited to, a plastic hard hat, coat, boots and gloves of a resistant material as well as a pair of safety glasses. Safety glasses, even with shields, are not adequate for use in areas where very acidic or basic materials are handled.

In the presence of water, polymer becomes very slippery. Spill recovery or remediation kits that include cat litter, rock salt and absorbent pads are very helpful in preventing trip/slip risks that result from polymer spills. In case of spill, wear appropriate personal protective equipment. Ventilate area. Prevent material from entering sewers, remove as much dry polymer as possible with a vacuum.

If the polymer has been wetted, the operator will remove as much as possible the wet polymer with a can and then, he will add an absorbent material (cat litter). He will let it soak it up for a while before he will shovel it into a disposal container. After the spill has been dried then a floor drain will allow washing the containment with a hose garden (warmest water possible).

3 SHIPPING

Most of the equipment and material for this project will be drop shipped from **VWTC** facilities and delivered directly to the site.

- All items delivered will be clearly identified with **VWTC**'s name, **VWTC**'s project name, **VWTC**'s project number.
- All shipments will have a clear Packing List identifying all parts in the shipment.
- All equipment will be tagged with the corresponding tag numbers shown on the design drawings (if applicable).

If there are more stringent requirements in the contract documents, they will take precedence over the above. If any of these requirements are not being followed, please notify the **VWTC** Project Manager immediately.

4 RECEIVING

The condition of all delivered equipment must be verified by the responsible party upon arrival at site. Verification that all equipment has been delivered as per contract must also be done upon arrival at site. Notification of missing or damaged items must be sent to Veolia Water Technologies Canada within five (5) working days of receipt of equipment. If there is no documented notification of missing or damaged parts within five (5) working days, Veolia Water Technologies Canada is not responsible for replacement of any items found to be missing or damaged at the time of installation and start-up of the supplied equipment. It is the responsibility of the party receiving the equipment to ensure all packaging is opened at the time of receipt to uncover and document any and all damages to the Freight Company and Veolia Water Technologies Canada.

Photographs and written documentation should be provided for all damaged equipment.

5 HANDLING

5.1 GENERAL

Equipment will arrive at the project site in several different shipments, from various freight companies and in several different packaging containers. Typically a flatbed truck is used which requires a fork lift or a crane to remove the items.

The Contractor is responsible for unloading and handling the equipment.

5.2 STAINLESS STEEL MATERIAL HANDLING

In order to minimize potential corrosion damage or unsightly surface marking, measures shall be taken to prevent contamination by iron, aluminium, copper, chlorides, and sulphides from lifting equipment. Stainless steel slippers or wooden packers should be used on forklift trucks to prevent contamination. Any resultant incidental contamination shall be removed at the earliest opportunity.

6 STORAGE

6.1 GENERAL

The following instructions outline the duties and responsibilities of the responsible party for equipment storage. The responsible party shall assume responsibility for the equipment upon arrival at the project site. These instructions shall define the minimum expectations for storage of all equipment. While this storage specification takes into account common environmental issues that may affect the system during storage, common sense should be the overriding factor in determining the best method to ensure the integrity and proper storage of the **VWTC** equipment.

For contractual purposes, **VWTC** demands the Client to send pictures of major equipment once it is placed in storage, any time it gets moved during storage and again prior to removing from storage. For outside storage, pictures must be sent every month. Alternatively, a written document (check list, etc.) confirming that proper storage conditions are maintained will suffice. Failing to do so would cancel the proposed warranty.

Should it be necessary to delay installation and subsequent operation of a unit for more than one month from date of receipt at Site, special precautions must be taken.

Although some equipment can be stored outdoors, indoor storage is preferred for most equipment.

The storage environment into which a system is placed can have a severe effect on the long-term usefulness of some parts. Key environmental factors are:

- Temperature
- Relative humidity
- Pollutants

Air may contain excessive moisture, pollutants, microorganisms, and other particulates that accelerate the deterioration of some materials. Humidity and pollutants can produce an aggressive atmosphere.

Indoor storage refers to storage in a climate controlled environment in a clean, non-aggressive, dry (non-condensing) and sheltered environment having a relatively constant temperature (especially for gear reducers, motors, bearings, etc.). Storage volume depends on the size of the project.

The environmental indoor conditions should not exceed the following ranges:

Min/Max Temperature Range between:	5°- 40°C
Relative Humidity (RH) Range between:	35% - 70%

1. Equipment should be stored in such a manner that it is free from allowing insects/rodents etc. from entering the equipment.
2. Cover the equipment with a tarp or similar protective shield to prevent direct exposure to dust or any other contamination. However, never enclose the unit or components totally in plastic covers; always leave adequate ventilation of air to prevent condensation.

Equipment must be checked on a weekly basis for tarp/wrap integrity and accumulation of dust or contaminants.

To avoid damage, do NOT stack crates.

To avoid damage, do NOT stack enclosures.

Do not store equipment or spares parts in barns, equipment sheds, or any other building without the capacity for heating and cooling as needed.

6.2 STAINLESS STEEL MATERIAL STORAGE

Stainless steel materials and products shall be stored separately from carbon steels and nonferrous materials. Materials should be stored under conditions that minimise the accumulation of dust and deposits. Any resultant incidental contamination shall be removed at the earliest opportunity.

6.3 SPECIAL MAINTENANCE REQUIREMENTS DURING STORAGE

After three (3) months of storage, long term storage methods must be applied to the unit including complete fill with lubricant. Protect machined surfaces and rotate shafts periodically (every month). Five (5) complete rotations of the output shafts are recommended each time.

Periodic checks should be made to ensure that no rusting or other damage has occurred. Should such be noted, corrective action should be taken immediately. Prior to putting the unit into service, drain lubricant and refill to the proper level as determined by the mounting position. Refer to manufacturer documentation.

All motors must be run every 3 month as a preventive measure against the formation of corrosion.

6.4 EQUIPMENT CLEANING

VWTC is not responsible for cleaning of any equipment prior to installation and start-up due to the storage of the equipment. This is the complete responsibility of others.

7 HYDRA-POL™ PRINCIPLE AND DESCRIPTION

7.1 POLYMER HYDRATION PRINCIPLE

Dry polymers must be diluted with water before use. The Hydra-Pol™ system is designed to handle all kind of dry polymer encountered in water treatment application (cationic, anionic and non-ionic). The uses of the Hydra-Pol™ polymer make up system allow activating between 90% and 100% of the dry polymer and help to minimize shipping and handling costs.

The challenge of dry polymer wetting is that the best activation each dry polymer particle should be wetted individually. When a clump of particles is wet, it forms an agglomeration called fisheyes that will dissolve slowly.

To avoid large agglomeration, the first polymer wetting and dilution must be done with a ratio between the service water and the dry polymer dosage. The wetting cone is designed for an optimal dissolving of dry polymer. The whirl created in the cone a high shearing stream that allows the polymer dispersion. After the powder dosage it cleans the cone. After the fast dispersion, the polymer hydration starts by forming a gel layer all around the polymer particles.

This dilution ratio is different depending on the type of polymer and the particle size. Anionic polymer must be more diluted than cationic polymer (see Table below).

The wetted polymer needs an aging time to reach its full activity; this aging time depends also on polymer type.

Polymer Powder	First Dilution	Aging Time
Anionic	0.2% – 0.25%	60 – 90 min
Cationic	0.3% – 0.5%	45 – 60 min

The polymer hydration changes its properties:

- Increase in molecule weight
- Charge interaction increase molecule size
- Entanglement in molecule increase viscosity
- Increase of conductivity

Dry polymers are susceptible to caking if stored under humid conditions. Caking interferes with the dilution process. It is recommended to store dry polymer in dry environment and respect powder life time.

LEFT BLANK

7.2 DESIGN SUMMARY

7.2.1 Datasheet

If this polymer preparation system is integrated to a processing plant, refer to the Detailed Technical Documentation section of the Operation and Maintenance Manual for the preparation system datasheet.

LEFT BLANK

7.2.2 P&ID

If this polymer preparation system is integrated to a processing plant, refer to the Process and/or Detailed Technical Documentation section of the Operation and Maintenance Manual for the preparation system drawings.

LEFT BLANK

FLOWS AND LINES

- NEW MAIN FLOW
- EXISTING MAIN FLOW
- FUTURE MAIN FLOW
- NEW SECONDARY FLOW
- EXISTING SECONDARY FLOW
- FUTURE SECONDARY FLOW
- CHEMICALS
- BY OTHERS
- MATERIAL SPECIFICATION CHANGE (CS / SS)
- ( ) AVERAGE FLOW
- [ ] PEAK FLOW

ABBREVIATIONS

A TO C	–	AIR TO CLOSE
A TO O	–	AIR TO OPEN
AVG	–	AVERAGE
B/EL	–	BOTTOM ELEVATION
CL	–	CENTER LINE
CFM	–	CUBIC FEET PER MINUTE
CW	–	CITY WATER (POTABLE)
DIA	–	DIAMETER
DWG	–	DRAWING
EL	–	ELEVATION
F.C.	–	FAIL CLOSED
F.O.	–	FAIL OPEN
FRL	–	FILTER\REGULATOR\LUBRICATOR
GAL	–	GALLONS
GPD	–	GALLONS PER DAY
GPH	–	GALLONS PER HOUR
GPM	–	GALLONS PER MINUTE
JVS	–	JOINT VENTURE SUPPLY
HB	–	HOSE BIB
HG	–	INCHES OF MERCURY
HI	–	HIGH
HOA	–	HAND/OFF/AUTO
HP	–	HORSEPOWER
IA	–	INSTRUMENT AIR
ID	–	INSIDE DIAMETER
INV	–	INVERT
LO	–	LOW
MH	–	MANHOLE
MW	–	MANWAY
N.C.	–	NORMALLY CLOSED
N.O.	–	NORMALLY OPEN
OAL	–	OVERALL LENGTH
O.D.	–	OUTSIDE DIAMETER
OF	–	OVERFLOW
PA	–	PLANT AIR
PSIG	–	POUNDS PER SQUARE INCH – GAUGE
PW	–	PLANT WATER
RED	–	REDUCER
RPM	–	REVOLUTIONS PER MINUTE
SCFM	–	STANDARD CUBIC FEET PER MINUTE
SCH	–	SCHEDULE
SG	–	SPECIFIC GRAVITY
SL	–	SHIPPED LOOSE
SP	–	SETPOINT
SSH	–	STRAIGHT SIDE HEIGHT
STD	–	STANDARD
SW	–	SEAL WATER
SWD	–	SIDE WATER DEPTH
TDH	–	TOTAL DYNAMIC HEAD(FT OF FLUID)
T/EL	–	TOP ELEVATION
TYP	–	TYPICAL
VAC	–	VACUUM
VSD	–	VARIABLE SPEED DRIVE
WC	–	WATER COLUMN
WD	–	WATER DEPTH
WL	–	WATER LEVEL
VWSS	–	VEOLIA WATER SYSTEMS SUPPLY
WV	–	WORKING VOLUME (DOES NOT INCLUDE FREEBOARD OR HEEL)

VALVE SYMBOLS

- ANGLE
- BALL
- VENTED BALL VALVE
- V–PORT BALL VALVE
- BUTTERFLY
- CHECK VALVE
- CHECK
- DIAPHRAGM VALVE NOT SPECIFIED
- HYDRAULIC
- GLOBE
- KNIFE
- NEEDLE
- PINCH
- PLUG
- PRESSURE REDUCING
- RELIEF ON LINE
- RELIEF
- SQUEEZE
- THREE WAY
- FOUR WAY
- FLOAT VALVE
- VACUUM BREAKER
- AIR RELEASE
- HOSE BIBB
- INTEGRAL BLOCK & BLEED
- PENSTOCK
- WASTE PLUG
- MULTI–FONCTION VALVE
- CALIBRATION COLUMN
- EVENT
- AIR TRAP
- MANUAL GEAR OPERATOR
- FILTER/REGULATOR WITH/PRESSURE GAUGE
- 4 WAY SOLENOID VALVE

PIPING AND TUBING MATERIALS

SEE PIPING SPECIFICATIONS

INSTRUMENTATION AND RELATED ITEMS

- CAPILLARY TUBING
- ELECTRICAL or CONTROL
- HYDRAULIC
- PNEUMATIC
- DATA LINK

ACTUATORS

- CYLINDER
- DIAPHRAGM–SPRING
- ELECTRO HYDRAULIC
- PISTON SPRING TO CLOSE
- ELECTRO PNEUMATIC
- MOTOR
- SOLENOID
- POSITIONER * – TYPE

PIPING ACCESSORIES

- FLUME
- MAGNETIC FLOW METER
- SONIC FLOW METER
- TURBINE FLOW METER
- VENTURI
- WEIR
- VORTEX SENSOR
- ROTAMETER
- FUNNEL
- DIAPHRAGM SEAL
- DRESSER COUPLING
- EJECTOR/EDUCTOR
- EXPANSION JOINT
- FLANGED CONNECTION
- FLEXIBLE HOSE
- HOSE CONNECTION
- PIPE TO TUBING ADAPTER
- INSULATION
- INSULATED PIPE WITH ELECTRIC HEAT TRACE
- INSULATED PIPE WITH STEAM HEAT TRACE
- VACUUM BREAKER
- PULSATION DAMPENER
- END CAP DISCONNECT
- QUICK DISCONNECT
- CONCENTRIC REDUCER
- ECCENTRIC REDUCER
- RUPTURE DISK
- CARTRIDGE FILTER
- BASKET FILTER
- MIXING VALVE
- SIGHT FLOW INDICATOR
- STRAINER
- UNION
- STEAM TRAP
- AIR FILTER
- AIR LUBRICATOR
- AIR REGULATOR
- COMB. AIR FILTER/REGULATOR W/GAUGE
- FLOW ORIFICE
- SIGHT FLOW STRAINER
- SPECTACLE BLIND (OPEN)
- SPECTACLE BLIND (CLOSE)
- PIGTAIL SIPHON
- STATIC MIXER
- INJECTION QUILL
- STOP LOG

INSTRUMENT SYMBOLS

	PRIMARY LOCATION ***NORMALLY ACCESSIBLE TO OPERATOR	FIELD MOUNTED	AUXILIARY LOCATION ***NORMALLY ACCESSIBLE TO OPERATOR
DISCRETE INSTRUMENTS	1 (* – IP1**)	2	3
SHARED DISPLAY, SHARED CONTROL	4	5	6
COMPUTER FUNCTION	7	8	9
PROGRAMMABLE LOGIC CONTROL	10	11	12

* SYMBOL SIZE MAY VARY ACCORDING TO THE USER'S NEEDS AND THE TYPE OF DOCUMENT. A SUGGESTED SQUARE AND CIRCLE SIZE FOR LARGE DIAGRAMS IS SHOWN ABOVE. CONSISTENCY IS RECOMMENDED.

** ABBREVIATIONS OF THE USER'S CHOICE SUCH AS IP1 (INSTRUMENT PANEL #1), IC2 (INSTRUMENT CONSOLE #2), CC3 (COMPUTER CONSOLE #3), ETC., MAY BE USED WHEN IT IS NECESSARY TO SPECIFY INSTRUMENT OR FUNCTION LOCATION.

*** NORMALLY INACCESSIBLE OR BEHIND–THE–PANEL DEVICES OR FUNCTIONS MAY BE DEPICTED BY USING THE SAME SYMBOL BUT WITH DASHED HORIZONTAL BARS, I.E.

ISA INSTRUMENT IDENTIFICATION TABLE

	FIRST LETTER		SUCCEEDING LETTERS	
	PROCESS VARIABLE	MODIFIER (IF NEEDED)	READOUT OR COMPUTER FUNCTION	MODIFIER (IF NEEDED)
A	ANALYSIS		ALARM	
B	BURNER, COMBUSTION		USER'S CHOICE	USER'S CHOICE
C	USER'S CHOICE		CONTROL	
D	USER'S CHOICE	DIFFERENTIAL		
E	VOLTAGE		SENSOR (PRIMARY ELEMENT)	
F	FLOW RATE	RATIO (FRACTION)		
G	USER'S CHOICE		GLASS, VIEWING DEVICE	
H	HAND			HIGH
I	CURRENT (ELECTRICAL)		INDICATE	
J	POWER	SCAN		
K	TIME, TIME SCHEDULE	TIME RATE OF CHANGE	CONTROL STATION	
L	LEVEL		LIGHT	LOW
M	USER'S CHOICE	MOMENTARY		MIDDLE, INTERMEDIATE
N	USER'S CHOICE		USER'S CHOICE	USER'S CHOICE
O	USER'S CHOICE		ORIFICE (RESTRICTION)	
P	PRESSURE, VACUUM		POINT (TEST CONNECTION)	
Q	QUANTITY	INTEGRATE, TOTALIZE		
R	RADIATION		RECORD	
S	SPEED, FREQUENCY	SAFETY	SWITCH	
T	TEMPERATURE		TRANSMIT	
U	MULTIVARIABLE		MULTIFUNCTION	MULTIFUNCTION
V	VIBRATION, MECH. ANALYSIS		VALVE, DAMPER, LOUVER	
W	WEIGHT, FORCE		WELL	
X	UNCLASSIFIED	X–AXIS	UNCLASSIFIED	UNCLASSIFIED
Y	EVENT, STATE OR PRESENCE	Y–AXIS	RELAY, COMPUTE, CONVERT	
Z	POSITION, DIMENSION	Z–AXIS	DRIVER, ACTUATOR, UNCLASSIFIED FINAL CONTROL ELEMENT	

LEGEND BASED ON ISA STANDARD S 5.1

INSTRUMENT TAG NUMBERS

TIC 103 – INSTRUMENTATION IDENTIFICATION OR TAG NUMBER
103 – LOOP NUMBER
TIC – FUNCTIONAL IDENTIFICATION
NOTE: HYPHENS ARE OPTIONAL AS SEPARATORS

ELECTRICAL AND RELATED ITEMS

- SELECTOR SWITCHES
- VFD – VARIABLE FREQUENCY DRIVE
- EM – EMERGENCY POWER
- INTERLOCK
- PILOT LIGHT

LINE NUMBER IDENTIFICATION

1"–P–110–CS

- MATERIAL CLASS
- LINE NUMBER
- FLUID SERVICE DESIGNATION
- LINE SIZE

LINE CONTINUATIONS

INDICATES A LINE GOING TO OR COMING FROM BATTERY LIMITS (CONTRACT LIMITS)

5 / A 2 – INDICATES CONTINUATION OF LINE IS ON SHEET NUMBER 5 (SAME DRAWING NUMBER) IN ZONE A 2

SHT 5 – INDICATES CONTINUATION OF A SIGNAL IS ON SHEET NUMBER 5

EQUIPMENT TAG NUMBERS

MXXXX	AGITATORS, AERATORS
BXXXX	AIR HANDLING–BLOWERS, COMPRESSORS, DRYERS
RXXXX	CLARIFIERS, THICKENERS, SEPARATORS
FXXXX	FILTERS–VACUUM, PRESSURE, CENTRIFUGES
PXXXX	PUMPS
TXXXX	TANKS
EXXXX	HEAT EXCHANGER
IXXXX	SOFTENERS, DEMINERALIZERS
ROXXXX	REVERSE OSMOSIS UNITS
SGXXXX	STEAM GENERATORS

VALVE & ACCESSORY TAG

VXXXX	VALVE
EJXXXX	EXPANSION JOINT
HXXXX	HOSE
FXXXX	FILTER
SXXXX	STRAINER
SBXXXX	SPECTACLE BLIND
STXXXX	STEAM TRAP

REV	DESCRIPTION	DATE	REV'D	CHK'D	APV'D	ECN
A	FOR INFORMATION	2016–04–18	N.L.	S.M.	S.M.	N/A

CONFIDENTIALITY AND INTELLECTUAL PROPERTY NOTICE
ALL INFORMATION CONTAINED IN THIS DOCUMENT IS THE SOLE PROPERTY OF A VEOLIA WATER TECHNOLOGIES COMPANY AND IS PROTECTED BY VEOLIA WATER TECHNOLOGIES' COPYRIGHT AND OTHER INTELLECTUAL PROPERTY LAWS. THE RIGHTS CONCEPTS AND TECHNICAL INFORMATION CONTAINED IN THIS DOCUMENT ARE PROPRIETARY TO VEOLIA WATER TECHNOLOGIES. ANY USE OF THIS DOCUMENT IN WHOLE OR IN PART, INCLUDING BUT NOT LIMITED TO THE REPRODUCTION, DISCLOSURE OR DISTRIBUTION OF ITS CONTENTS, OR ANY FORM OF COPYING OR RECEIVING OR STORING ADDITIONAL COPIES OF THIS DOCUMENT, WITHOUT THE PRIOR WRITTEN CONSENT OF VEOLIA WATER TECHNOLOGIES IS PROHIBITED. ANY USE OR DISCLOSURE, IN WHOLE OR IN PART, OF THIS INFORMATION TO ANY THIRD PARTY FOR ANY PURPOSE WHATSOEVER WITHOUT THE PRIOR WRITTEN CONSENT OF VEOLIA WATER TECHNOLOGIES IS STRICTLY PROHIBITED AND MAY RESULT IN SEVERE CIVIL AND CRIMINAL PENALTIES. IF YOU ARE NOT AN EMPLOYEE OF VEOLIA WATER TECHNOLOGIES OR AUTHORIZED BY VEOLIA WATER TECHNOLOGIES TO RECEIVE THIS DOCUMENT, YOU ARE NOT AUTHORIZED TO COPY, DISCLOSE, OR DISTRIBUTE THIS DOCUMENT IN WHOLE OR IN PART, OR USE THE INFORMATION HEREIN FOR ANY PURPOSE WHATSOEVER, AND YOU MAY NOT RELY ON THIS DOCUMENT IN ANY MANNER. IF YOU HAVE RECEIVED THIS DOCUMENT IN ERROR, PLEASE IMMEDIATELY NOTIFY VEOLIA WATER TECHNOLOGIES BY TELEPHONE AND PROMPTLY RETURN THIS DOCUMENT TO VEOLIA WATER TECHNOLOGIES AT THE ADDRESS ABOVE. BY READING THE REMAINDER OF THIS PAGE, YOU ACKNOWLEDGE AND AGREE TO THE TERMS CONTAINED HEREIN, OR YOU ARE NOT AUTHORIZED TO READ THE REMAINDER OF THIS DOCUMENT AND MUST IMMEDIATELY DESTROY THIS DOCUMENT UNREVIEWED. YOUR RECEIPT, REVIEW OR POSSESSION OF THIS DOCUMENT CONSTITUTES AGREEMENT TO THESE TERMS AND CONDITIONS.

DESIGNER		DATE
CHECKER		DATE
ENGINEER		DATE
SCALE:		

TITLE: WATER TREATMENT SYSTEM
PROCESS & INSTRUMENTATION DIAGRAM
LEGEND

CLIENT

VEOLIA WATER TECHNOLOGIES CANADA INC., 4105 Sartelon St., Saint-Laurent, QC, Canada, H4S 2B3 (514) 334-7230

PROJECT	DRAWING	INTERNAL	SHEET	REV
5000XXXXXX – PIXXX		PCH	1 OF	A

STD: "D" 22x34 | REF: | BAR = 1" AT PLOT SCALE

Oct 14, 2016 - 1:40:22 – C:\...\Desktop Standard\5000–PROCESS_DWG (PCH)\5001 HYDRAULIC\PID\5000XXXXX–PROCESS LEGEND.dwg – bgarnier

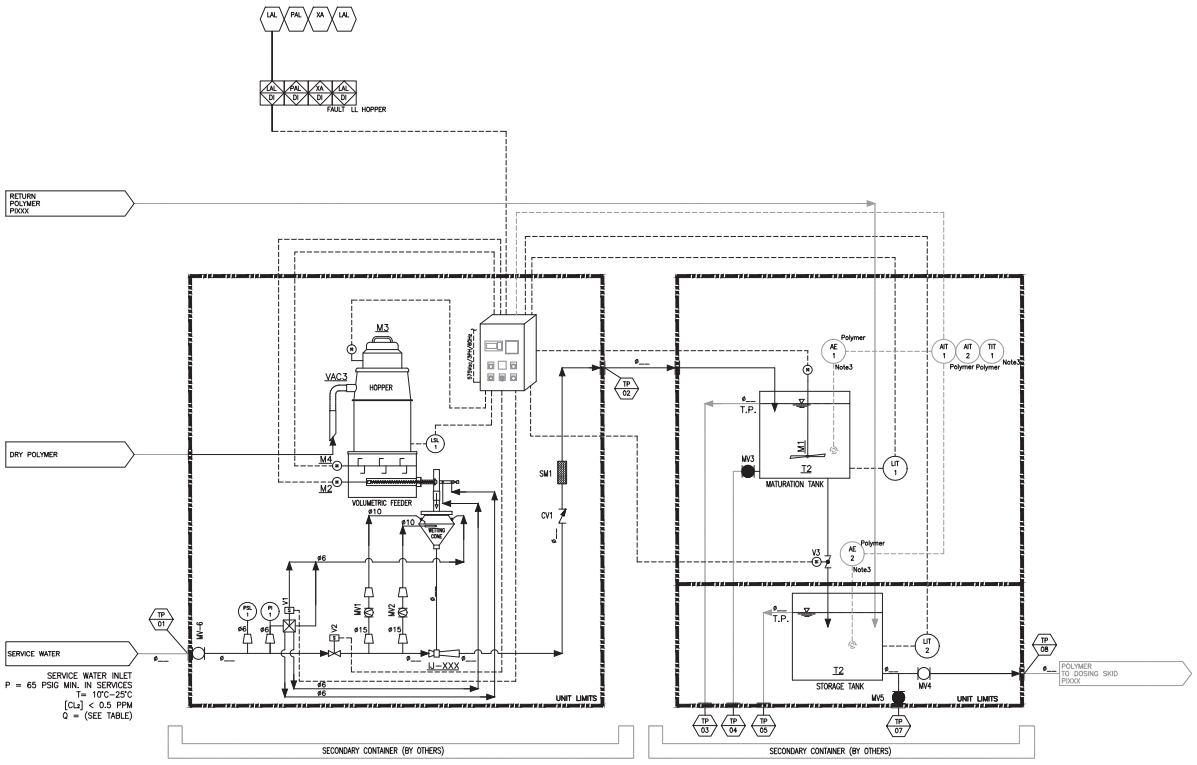

NOTES:
1- IT IS RECOMMENDED TO ALIGN THE DILUTED POLYMER OUTLET (TP08) WITH THE DILUTED POLYMER OUTLET.

2- THE HYDRAPOL UNIT IS PREMOUNTED AS MUCH AS POSSIBLE BUT FOR FREIGHT PURPOSE SOME COMPONENTS HAVE TO BE INSTALLED ON SITE BY CLIENT OR INSTALLATOR.
REFER TO HANDLING STORAGE AND INSTALLATION INSTRUCTION MANUAL.

3- IF HYDRASTAT OPTION IS TAKEN.

MODEL	INLET WATER FLOW RATE
HP 250	5.2 M3/H
HP 500	5.2 M3/H
HP 750	5.2 M3/H
HP 1000	5.2 M3/H
HP 1250	5.2 M3/H
HP 1500	5.2 M3/H
HP 1750	5.2 M3/H
HP 2000	8.0 M3/H
HP 2500	8.0 M3/H
HP 3000	8.0 M3/H
HP 3500	8.0 M3/H
HP 4000	8.0 M3/H

VAC3
VACUUM CONVEYOR
CAPACITY: XXm.cu /min
MODEL: _____

M3
VACUUM CONVEYOR MOTOR
POWER Req.: XXX AMP
VOLTAGE: XXXV/XXPh/XXHz

M2
FEEDER SCREW
POWER Req.: X.XXHP
VOLTAGE: XXXV/XPh/XXHz
TYPE: _____

M4
FEEDER HOPPER AGITATOR
POWER Req.: X.XXHP
VOLTAGE: XXXV/XPh/XXHz
TYPE: _____

T1
MATURATION TANK
VOLUME: XXXXL

T2
STORAGE TANK
VOLUME: XXXXL

M1
MATURATION TANK MIXER MOTOR
POWER Req.: ____HP
VOLTAGE: ____V/_Ph/__Hz
TYPE: _____
MODEL: _____

REV	DESCRIPTION	DATE	REV'D	CHK'D	APV'D	ECN
A	FOR INFORMATION	2016-04-18	N.L.	S.M.	S.M.	N/A

CONFIDENTIALITY AND INTELLECTUAL PROPERTY NOTICE
ALL INFORMATION CONTAINED IN THIS DOCUMENT IS THE SOLE INTELLECTUAL PROPERTY OF VEOLIA WATER TECHNOLOGIES CANADA INC. A DIVISION OF VEOLIA WATER TECHNOLOGIES CANADA INC. AND SHALL NOT BE DISCLOSED, REPRODUCED, USED OR TRANSFERRED IN ANY FORM WITHOUT PRIOR, WRITTEN PERMISSION. THE DESIGN CONCEPTS AND INFORMATION CONTAINED IN THIS DOCUMENT, INCLUDING BUT NOT LIMITED TO ARCHITECTURE, SOFTWARE AND PROCESS, ARE THE PROPRIETARY PROPERTY OF VEOLIA WATER TECHNOLOGIES CANADA INC. AND ARE SUPPLIED SUBJECT TO CONFIDENTIALITY AND NON-DISCLOSURE RESTRICTIONS. ALL RIGHTS ARE RESERVED IN THE EVENT OF PUBLICATION. IF YOU ARE NOT AN EMPLOYEE OF VEOLIA WATER TECHNOLOGIES CANADA INC. OR OTHERWISE AUTHORIZED, YOU ARE PROHIBITED FROM USING, DISCLOSING, COPYING, REPRODUCING, MODIFYING, DISTRIBUTING OR TRANSFERRING ANY INFORMATION CONTAINED HEREIN IN ANY MANNER WITHOUT PRIOR WRITTEN PERMISSION FROM VEOLIA WATER TECHNOLOGIES CANADA INC. IF YOU HAVE RECEIVED THIS DOCUMENT IN ERROR, PLEASE NOTIFY VEOLIA WATER TECHNOLOGIES CANADA INC. IMMEDIATELY AND PERMANENTLY DELETE ALL ELECTRONIC COPIES AND DESTROY ALL HARD COPIES OF THIS DOCUMENT. THANK YOU FOR YOUR COOPERATION IN THIS MATTER. NOTHING CONTAINED HEREIN SHALL BE CONSTRUED AS GRANTING, BY IMPLICATION, ESTOPPEL OR OTHERWISE, ANY LICENSE OR RIGHT TO ANY INTELLECTUAL PROPERTY OF VEOLIA WATER TECHNOLOGIES CANADA INC. EXCEPT AS EXPRESSLY PROVIDED IN ANY WRITTEN AGREEMENT BETWEEN YOU AND VEOLIA WATER TECHNOLOGIES CANADA INC. THIS DOCUMENT CONSTITUTES AGREEMENT TO THESE TERMS AND CONDITIONS.

DESIGNER	DATE
CHECKER	DATE
ENGINEER	DATE
SCALE:	

TITLE: POLYMER PREPARATION SYSTEM
HYDRAPOL, VACUM CONVEYOR
STANDARD PROCESS & INSTRUMENTATION DIAGRAM

CLIENT

VEOLIA WATER TECHNOLOGIES CANADA INC. 2105 Sandiford Blvd. East, Montreal, Qc, Canada H1J 3Z7 514.351.2720

PROJECT	DRAWING	INTERNAL	SHEET	REV
5000XXXXXX – PIXXX		PCH	OF	A

STD: "D" 22x34 | REF: | BAR = 1" AT PLOT SCALE

Oct 19, 2016 - 14:53:17 - D:\1_Libraries Standard\5000-PROCESS\5000-PROCESS.DWG (PCH) (SS) HYDRAPOL\PAID\5000XXXXXX-PROCESS.DWG - Layout: A

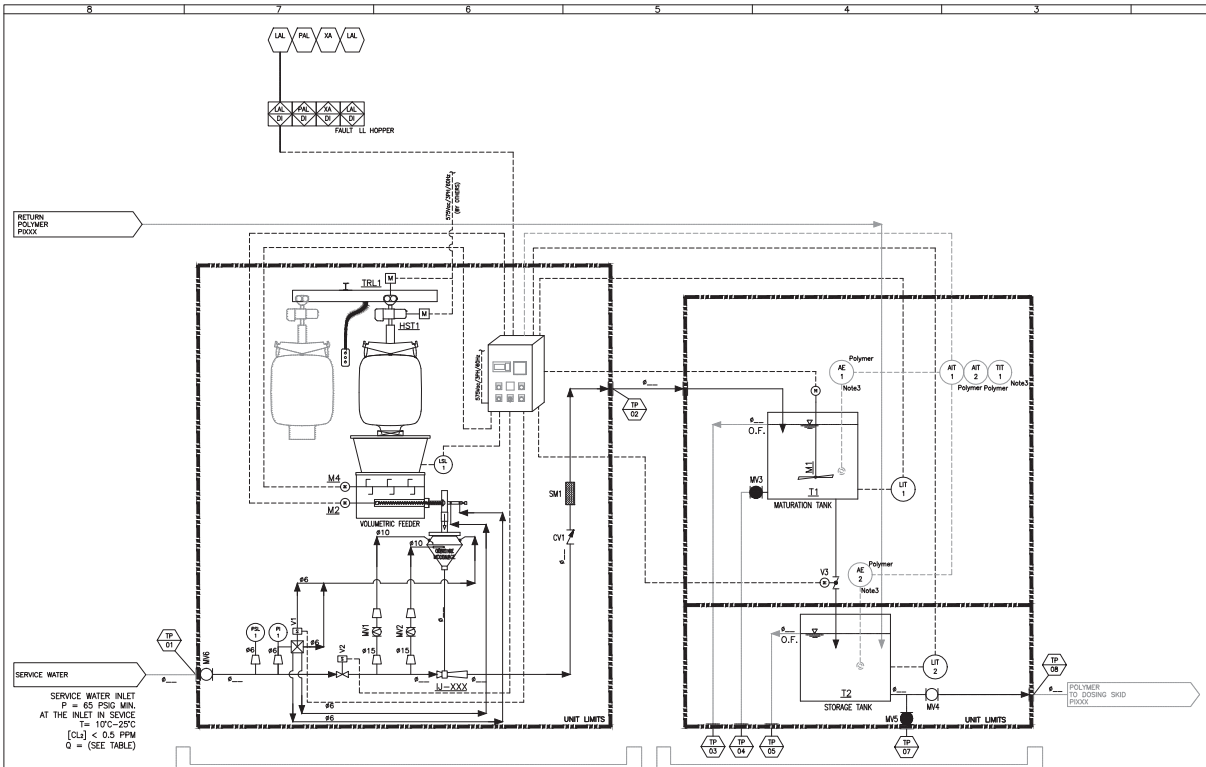

NOTES:
1- IT IS RECOMMENDED TO ALIGN THE DILUTED POLYMER OUTLET (TP08) WITH THE DILUTED POLYMER OUTLET.

2- THE HYDRAPOL UNIT IS PREMOUNTED AS MUCH AS POSSIBLE BUT FOR FREIGHT PURPOSE SOME COMPONENTS HAVE TO BE INSTALLED ON SITE BY CLIENT OR INSTALLATOR.
REFER TO HANDLING STORAGE AND INSTALLATION INSTRUCTION MANUAL.

3- IF HYDRASTAT OPTION IS TAKEN.

MODEL	INLET WATER FLOW RATE
HP 250	5.2 M3/H
HP 500	5.2 M3/H
HP 750	5.2 M3/H
HP 1000	5.2 M3/H
HP 1250	5.2 M3/H
HP 1500	5.2 M3/H
HP 1750	5.2 M3/H
HP 2000	8.0 M3/H
HP 2500	8.0 M3/H
HP 3000	8.0 M3/H
HP 3500	8.0 M3/H
HP 4000	8.0 M3/H

TRL1
TROLLEY MOTOR
POWER req.: XX HP
VOLTAGE: XXXV/XPh/XXHz

M2
FEEDER SCREW MOTOR
POWER Req.: X,XXHP
VOLTAGE: XXXV/XPh/XXHz

M4
FEEDER MIXER MOTOR
POWER Req.: X,XXHP
VOLTAGE: XXXV/XPh/XXHz

HST1
HOIST MOTOR
POWER req.: XX HP
VOLTAGE: XXXV/Xph/XXHz

T1
MATURATION TANK
VOLUME: XXXXL

M1
MATURATION TANK MIXER MOTOR
POWER Req.: ____HP
VOLTAGE: ___V/_Ph/__Hz
MODEL: _____

T2
STORAGE TANK
VOLUME: XXXXL

REV	DESCRIPTION	DATE	REV'D	CHK'D	APV'D	ECN
A	FOR INFORMATION	2016-04-18	N.L.	S.M.	S.M.	N/A

CONFIDENTIALITY AND INTELLECTUAL PROPERTY NOTICE
ALL INFORMATION CONTAINED IN THIS DOCUMENT IS THE SOLE PROPERTY OF VEOLIA WATER TECHNOLOGIES CANADA INC. AND IS PROTECTED BY VEOLIA WATER TECHNOLOGIES CANADA INC. COPYRIGHT AND OTHER INTELLECTUAL PROPERTY LAWS. THE DEVICE CONCEPTS AND PROCESSES DESCRIBED IN THIS DOCUMENT ARE PROPRIETARY AND CONFIDENTIAL AND ARE SUBMITTED IN CONFIDENCE. THEY ARE NOT TO BE DISCLOSED, USED, COPIED OR REPRODUCED, IN WHOLE OR IN PART, FOR ANY PURPOSE, EXCEPT WITH THE EXPRESSED WRITTEN CONSENT OF VEOLIA WATER TECHNOLOGIES CANADA INC. BY ACCEPTANCE OF THIS DOCUMENT, YOU ARE AGREEING TO BE BOUND BY THE FOREGOING RESTRICTIONS. THE PROPRIETARY AND CONFIDENTIAL INFORMATION IN THIS DOCUMENT IS NOT TO BE USED IN ANY MANNER DETRIMENTAL TO THE INTERESTS OF VEOLIA WATER TECHNOLOGIES CANADA INC. AND IS NOT TO BE USED BY OR DISCLOSED TO ANY THIRD PARTY WITHOUT THE EXPRESSED WRITTEN CONSENT OF VEOLIA WATER TECHNOLOGIES CANADA INC. VEOLIA WATER TECHNOLOGIES CANADA INC. RESERVES ALL RIGHTS AND REMEDIES AVAILABLE AT LAW OR IN EQUITY IN THE EVENT OF ANY MISUSE OR UNAUTHORIZED DISCLOSURE OF THIS DOCUMENT. THE RECEIPT OR POSSESSION OF THIS DOCUMENT DOES NOT CONVEY OR IMPLY ANY RIGHT TO REPRODUCE, DISCLOSE OR MANUFACTURE ANYTHING DESCRIBED HEREIN OR MAKE ANY USE THEREOF, EXCEPT AS EXPRESSLY AGREED IN WRITING BY VEOLIA WATER TECHNOLOGIES CANADA INC. ANY RIGHTS NOT EXPRESSLY GRANTED HEREIN ARE RESERVED. IN THE EVENT OF ANY CONFLICT BETWEEN THE TERMS OF THIS NOTICE AND ANY OTHER AGREEMENT, THE TERMS OF THE LATTER AGREEMENT SHALL CONSTITUTE THE AGREEMENT OF THE PARTIES WITH RESPECT TO THESE TERMS AND CONDITIONS.

DESIGNER	DATE
CHECKER	DATE
ENGINEER	DATE
SCALE:	

TITLE: POLYMER PREPARATION SYSTEM
HYDRAPOL, BULK BAG WITH HOIST & TROLLEY
STANDARD PROCESS & INSTRUMENTATION DIAGRAM

CLIENT

VEOLIA
VEOLIA WATER TECHNOLOGIES CANADA INC., 2105 Dollard, Saint-Laurent, Qc, Canada H4A 2H2 (514) 334-4720

PROJECT	DRAWING	INTERNAL	SHEET	REV
5000XXXXXX – PIXXX		PCH	OF	A

STD: "D" 22x34 | REF: | BAR = 1" AT PLOT SCALE

Oct 19, 2016 - 14:48:24 — D:\1_Dossiers Standard\5000-PROCESS\5000XXXXXX-PROCESS\5000XXXXXX-PIXXX\5000XXXXXX-PIXXX_DWG.dwg [PCH] (1:1) HYDRAPOL\Hp01\5000XXXXXX-PROCESS TO PROCESS_A ENGLISH.dwg — bgerner

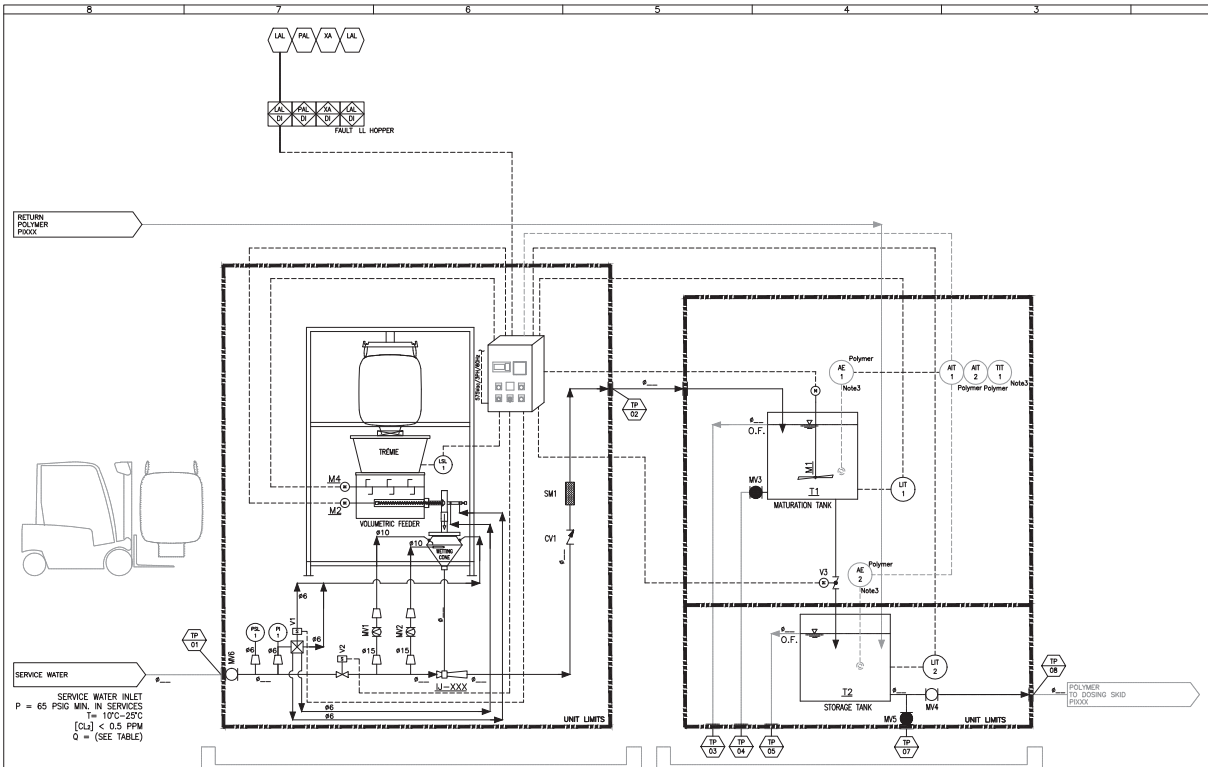

SERVICE WATER INLET
P = 65 PSIG MIN. IN SERVICES
T= 10°C–25°C
[Cl2] < 0.5 PPM
Q = (SEE TABLE)

M2
FEEDER SCREW
POWER Req.: X.XXHP
VOLTAGE: XXXV/XPh/XXHz

M4
FEEDER HOPPER AGITATOR
POWER Req.: X.XXHP
VOLTAGE: XXXV/XPh/XXHz

T1
MATURATION TANK
VOLUME: XXXXL

M1
MATURATION TANK MIXER MOTOR
POWER Req.: ____HP
VOLTAGE: ____V/_Ph/__Hz
MODEL: _____

T2
STORAGE TANK
VOLUME: XXXXL

NOTES:
1- IT IS RECOMMENDED TO ALIGN THE DILUTED POLYMER OUTLET (TP08) WITH THE DILUTED POLYMER OUTLET.

2- THE HYDRAPOL UNIT IS PREMOUNTED AS MUCH AS POSSIBLE BUT FOR FREIGHT PURPOSE SOME COMPONENTS HAVE TO BE INSTALLED ON SITE BY CLIENT OR INSTALLATOR.
REFER TO HANDLING STORAGE AND INSTALLATION INSTRUCTION MANUAL.

3- IF HYDRASTAT OPTION IS TAKEN.

MODEL	INLET WATER FLOW RATE
HP 250	5.2 M3/H
HP 500	5.2 M3/H
HP 750	5.2 M3/H
HP 1000	5.2 M3/H
HP 1250	5.2 M3/H
HP 1500	5.2 M3/H
HP 1750	5.2 M3/H
HP 2000	8.0 M3/H
HP 3500	8.0 M3/H
HP 3000	8.0 M3/H
HP 3500	8.0 M3/H
HP 4000	8.0 M3/H

REV	DESCRIPTION	DATE	REV'D	CHK'D	APV'D	ECN
A	FOR INFORMATION	2016-04-18	N.L.	S.M.	S.M.	N/A

CONFIDENTIALITY AND INTELLECTUAL PROPERTY NOTICE
ALL INFORMATION CONTAINED IN THIS DOCUMENT IS THE SOLE PROPERTY OF VEOLIA WATER TECHNOLOGIES CANADA INC. AND IS PROTECTED BY A SERIES OF LEGAL RIGHTS, INCLUDING BUT NOT LIMITED TO COPYRIGHT, TRADE SECRET AND TRADEMARK LAWS, AND OTHER INTELLECTUAL PROPERTY LAWS. THE ENTIRE CONCEPTS AND DESIGNS CONTAINED IN THIS DOCUMENT ARE CONFIDENTIAL AND SUBMITTED IN CONFIDENCE. YOU ARE HEREBY NOTIFIED THAT ANY DISCLOSURE, COPYING, DISTRIBUTION OR USE OF ANY OF THE CONCEPTS OR OPERATION OF THIS DOCUMENT, OR ANY COMPANY OR PRODUCT INFORMATION CONTAINED IN THIS DOCUMENT, WITHOUT THE PRIOR WRITTEN CONSENT OF VEOLIA WATER TECHNOLOGIES CANADA INC. OR ANY OF ITS SUBSIDIARIES OR AFFILIATES, IS STRICTLY PROHIBITED. IF YOU HAVE RECEIVED THIS DOCUMENT IN ERROR, PLEASE NOTIFY VEOLIA WATER TECHNOLOGIES CANADA INC. IMMEDIATELY BY TELEPHONE AND DESTROY ANY AND ALL COPIES OF THIS DOCUMENT IN YOUR POSSESSION, CUSTODY OR CONTROL. BY VIEWING OR USING THIS DOCUMENT YOU AGREE TO ABIDE BY THE TERMS NOTED ABOVE. THE SENDING AND RECEIPT OF THIS DOCUMENT DOES NOT GIVE RISE TO ANY LICENSE OR AUTHORIZATION TO USE THIS DOCUMENT EXCEPT FOR THE NOTED PURPOSE. THE UNAUTHORIZED USE OF THIS DOCUMENT MAY SUBJECT YOU TO SERIOUS LIABILITY. THE INFORMATION CONTAINED HEREIN IS PROVIDED "AS IS" WITHOUT WARRANTY OF ANY KIND, EITHER EXPRESS OR IMPLIED, INCLUDING BUT NOT LIMITED TO THE IMPLIED WARRANTIES OF MERCHANTABILITY AND FITNESS FOR A PARTICULAR PURPOSE. IN NO EVENT SHALL VEOLIA WATER TECHNOLOGIES CANADA INC. BE LIABLE FOR ANY DAMAGES ARISING OUT OF OR IN CONNECTION WITH THE USE OF THIS DOCUMENT, INCLUDING BUT NOT LIMITED TO DIRECT, INDIRECT, INCIDENTAL, PUNITIVE, AND CONSEQUENTIAL DAMAGES. IN THE EVENT OF ANY CONFLICT BETWEEN THE TERMS OF THIS NOTICE AND ANY OTHER AGREEMENT, THE TERMS OF THE AGREEMENT SHALL GOVERN. BY USING THIS DOCUMENT YOU AGREE TO THESE TERMS AND CONDITIONS.

DESIGNER	DATE
CHECKER	DATE
ENGINEER	DATE
SCALE:	

TITLE: POLYMER PREPARATION SYSTEM
HYDRAPOL, BIG BAG WITH FRAME UNLOADER
STANDARD PROCESS & INSTRUMENTATION DIAGRAM

CLIENT

VEOLIA
VEOLIA WATER TECHNOLOGIES CANADA INC. | 2105 Sandiford Blvd. East, Montréal, Québec, Canada, H1J 8Y3 | T 514.356.8200

PROJECT	DRAWING	INTERNAL	SHEET	REV
5000XXXXXX – PIXXX		PCH	OF	A

STD: "D" 22x34 | REF: | BAR = 1" AT PLOT SCALE

Oct 19, 2016 - 144653 - C:\...\Desktop\5000-PROCESS_DWG (PCH)\5XX) HYDRAPOL\PAID\5000XXXX-PROC TO PROCU_ENGLISH.dwg - bgerror

7.2.3 General Arrangement Drawings

If this polymer preparation system is integrated to a processing plant, refer to the Process and/or Detailed Technical Documentation section of the Operation and Maintenance Manual for the preparation system drawings.

LEFT BLANK

7.3 COMPONENTS DESCRIPTION

The components of the Hydra-Pol™ system provide four main functions:

- Dry polymer storage and dosing
- Polymer wetting and transfer to the maturation tank
- Polymer maturation
- Polymer solution storage

7.3.1 Dry Polymer Storage and Dosing

7.3.1.1 Hopper with Vacuum or Bulk Bag Unloader

An integrated vacuum can fill a storage hopper located above the feeder. This vacuum allows manual transfer of polymer from dry bulk bags or other containers to the Hydra-Pol™ system.

The Hydra-Pol™ system is available with a bulk bag unloader option. It may be configured with a hoist and trolley or with a special frame for forklift loading. Each bulk bag unloader includes four (4) attachment points that raise the bulk bag to the polymer preparation system. An iris valve allows the discharge of the powder to a storage hopper.

7.3.1.2 Volumetric Feeder

WAM, model MBF, is a volumetric feeder that doses a dry material at a constant rate. It includes a homogenizer agitator installed in a hopper for a better material flow. The feed screw is made of stainless steel 304. The feeder includes, at the outlet, a T nozzle which directs the flow of the material, allows for isolation of the dosing screw, and has an inspection window where the powder dosing can be observed. The feeder contains a level switch, preventing the volumetric feeder from running when empty. A transition hopper is optional. It can be integrated with the volumetric feeder. It is made of stainless steel 304 and has a capacity of 100 L.

The feeder is also composed of a plunger which closes the T nozzle (at the exit of the metering) of the wetting cone. The operation of this device is controlled by a solenoid valve that allows a flow of water to the cylinder.

7.3.2 Polymer Wetting and Transfer to the Maturation Tank

7.3.2.1 Isolation Valve

An isolation ball valve is placed at the entry of the system to close the water inlet to the Hydra-Pol™. Two (2) others valves are placed at the outlet of the storage tank to drain or to close the conduit of the system. The valve is made of PVC with EPDM seals.

7.3.2.2 Solenoid Valve

Two solenoid valves are placed in the system. The first valve monitors the pressure of the inlet to the service water line. When the switch detects a fault, a switch commands the solenoid valve to close.

The second valve is used to let the water flow to the cylinder that triggers the opening of the dispenser. The return of this cylinder water flow goes to the wetting cone.

7.3.2.3 Service Water Pressure Switch

The pressure switch activation will trigger an error message and close the service water inlet valve if the inlet pressure is below its set point.

7.3.2.4 Pressure Gauge

The gauge is used to read the water inlet pressure.

7.3.2.5 Wetting Cone and Eductor

The wetting cone is a device that wets the metered powder and prevents material accumulation in the cone at the feeder output. It includes a tangential inlet to the cone that is controlled by a manual ball valve. It is very important to have the right amount of flow from this inlet into the cone to avoid having too little flow and a resulting accumulation of half-dry powder. However too much flow is also an issue, as it can cause water to splash up out of the cone and into the T nozzle.

An eductor, installed at the bottom of the wetting cone, draws the powder into the water flow through the system.

7.3.2.6 Check Valve

A check valve is placed after the output of the eductor. It prevents the return of the solution into the wetting cone when the system stops.

7.3.2.7 Static Mixer

The static mixer is a device which uses the flow energy to mix the water and the pre-wet polymer powder by means of mixing elements.

7.3.2.8 Level Switch

A level switch is installed in the hopper to signal the operator and stop the system when the level of powder becomes too low.

7.3.3 Polymer Maturation

7.3.3.1 Preparation Tank

The cylindrical preparation tank, made of stainless steel, allows the maturation process of the polymer solution. As stated in section 7.1, this timing depends on the volume of the batch, type of polymer and dosage. The tank plastic cover includes an access trap made of stainless steel. A butterfly valve is installed at the bottom of the tank to allow the transfer of the polymer solution to the storage tank. A hydrostatic pressure transmitter installed at the bottom of the tank to measure the level in the tank. An overflow is installed at the top of the tank.

7.3.3.2 Mixer

A mixer is installed on the cover of the preparation tank to allow maturation of the polymer solution. During the batching sequence, the mixer does not begin to run until the water level has reached the impellers. This level is set during commissioning and also dictates the point during the batching sequence when the volumetric feeder begins dosing.

7.3.3.3 Butterfly Valve

An open/closed actuated butterfly valve allows the solution transfer from the preparation tank to the storage tank when tanks are superimposed.

7.3.3.4 Conductivity Probe (optional)

A conductivity probe is installed in the preparation tank. Given experience, this conductivity probe will be able to reflect how the batch turned out. The conductivity is dependent on the service water, the temperature, the mixing/blending of the polymer, the polymer type and the dosage of polymer.

7.3.3.5 Pressure Transmitter

A hydrostatic pressure transmitter installed at the bottom of the tank measures the level in the tank. This level is set on commissioning and is integral to the batching sequence.

7.3.4 Polymer Solution Storage

7.3.4.1 Storage Tank

The cylindrical storage tank, made of stainless steel, allows the storage of the polymer solution. A support structure mounts the preparation tank above the storage tank. However, with tanks that have a larger capacity, tanks can be installed side by side and a pump allows the solution to be transfer from the

preparation tank to the storage tank. Anchor points are provided for fastening. An overflow is installed at the top of the tank.

7.3.4.2 Pressure Transmitter

A hydrostatic pressure transmitter installed at the bottom of the tank measures the level in the tank. This level is set on commissioning and controls when the batch in the preparation tank is transferred to the storage tank.

7.3.4.3 Control Panel

A control panel allows the fully automated system operation. It also allows the transmission of alarm signals to an external system.

8 INSTALLATION

8.1 SERVICE WATER

The Hydra-Pol™ system needs a clean water supply for the polymer activation a clean water supply. This water must meet quality criteria. The installer must connect the water supply as indicated on the general arrangement drawing.

8.1.1 Flowrate and Inlet Pressure

The required flow and pressure indicated on the technical data sheet are important to ensure proper system operation. These conditions must be met as a requirement for starting a batching sequence. When setting these inlet water standards, the dynamic head losses have to be taken into account. Non-compliance can lead to overflows at the wetting cone or plugging of the wetting cone due to improper blending. Inlet pressure is not to exceed 120 psig working pressure and must exceed 65 psig.

8.1.2 Water Temperature

The water temperature for the polymer make-up must preferably be between 10°C and 30°C. The ideal temperature is 15°C.

8.1.3 Water Quality

The service water should have preferably a low residual chlorine content (<0.5 mgCl_2/L). Chlorine can quickly deteriorate polymer solutions and thus reduce their effectiveness. Water having a high content of hardness (> 300 ppm $CaCO_3$) or alkalinity (>75 ppm) should also be avoided.

Parameter	Impact	Upper Allowable Limit
Total Hardness	High hardness causes precipitation in makedown vessels (most prevalent in high charge products)	<300 mg/L as Ca CO_3
pH	Low pH causes precipitation in makedown vessels	Makedown water pH in range of 6.0 to 8.0
Conductivity	High conductivity slows dissolution and reduces viscosity Low conductivity slows dissolution and reduces viscosity	< 10,000 µS/cm See following notes on conductivity
Chloride	No specific impacts distinct from that of conductivity as indicated above.	None specified. Refer to Conductivity limits.
Suspended Solids	High TSS promotes flocculation in makedown tank. Possible plugging of feed system.	< 5 mg/l (filtration at 100 µm).
Temperature	Warmer water promotes dissolution. Low temperature result in increased mixing time and potential for incomplete dissolution. Higher solution viscosities develop in low temperature solutions.	10 to 30°C
Metals(Fe^{2+}, Cu^{2+}...)	Cleavage of polymer chain and loss of activity.	< 1 mg/l each
Residual Oxidant	Degradation of polymer chain.	< 0.5 mg/l
Microbiological Activity	Degradation of polymer chain	< 10^3 CFU/ml aerobic or SRB

8.2 RECOMMENDED ARRANGEMENT

The installation should be performed by qualified personnel.

Select a location providing:

- An easy access to the system and an easy polymer handling.
- At least a clearance of one meter in front of the electrical panel.
- At least 72 inches of clearance behind the feeder for the maintenance.

In the presence of water, polymer becomes very slippery, it is recommended to take this hazard into account in the equipment layout.

It is recommended:

- To build a curb all around the area or install a plastic secondary containment.
- To secure the access to the top of tanks without entering into the secondary containment.
- To install a resistant coating and easy-to-wash on floors and curbs.
- To install tempered water hose close to the system.
- To install a closed floor drain in the secondary containment into which deteriorated polymer and the total volume of the Hydra-Pol™ tanks can be emptied.
- To design a concrete pad under the polymer tank to avoid flood damage to the instruments.
- To do not install equipment in areas of extreme heat, cold, dust or humidity. Avoid areas where objects or fluids can drop from overhead. Units are to be installed as close to the point of application as possible.

After selecting the optimal location, the installer will:

- Unpack the components.
- Install the preparation tank above the storage tank (if any) on a sturdy level surface. Fasten to prevent movement.
- Position powder dosing skid as the corresponding drawings on a sturdy level surface. Fasten to prevent movement.

8.3 PIPES CONNECTIONS

The installer has to connect the following pipes:

- Service water inlet.
- Tanks overflows and drains (they should be directed to an appropriate location according to local regulations).
- Pipe between the dosing system and the preparation tank. The dosing system should be located as close as possible from the preparation tank to reduce at the maximum the interconnecting pipe as shown on the General Arrangement drawing. Any extension of the pipe could bring an additional backpressure on the educator and change its performance.
- Transfer pipe between the two tanks (model over Hydra-Pol™ 7500).

8.4 ELECTRICAL REQUIREMENT

Electrical connections and maintenance must only be performed by qualified personnel. Electrical elements have to be connected according to local regulations. The Hydra-Pol™ system is usually provided with its own control panel.

The electrician has to connect:

- The mixer motor to the control panel
- Main power supply to the control panel
- Cables of instruments to the control panel

It is recommended to ground the dosing system frame and the two tanks (if made of steel).

9 INSTALLATION AND PRE START-UP INSPECTION

9.1 PRE-OPERATIONAL CHECKOUT

Included in appendices of this manual are standard **VWTC** checklist forms to be completed by the installer and returned to **VWTC** project manager prior **VWTC** onsite installation inspection. **VWTC** will schedule our field service visits prior to return of completed checklists but it is our policy to not dispatch field personnel to the jobsite until the completed and signed checklist is received by our project manager or field service manager.

9.2 START-UP CHECKOUT

9.2.1 Mechanical, Electrical and Control Start-Up

The mechanical and electrical start-up of the polymer make-up system includes the connection, verification and inspection of the following elements:

- Mounting
- Motors
- Mixers
- I/O Check
- Tubing and process connections
- Power connections and supply
- Valves
- Instrument calibration

9.2.1.1 Initial Checking and Adjustment

Prior to calibration the following elements will be verified:

FUNCTIONAL START-UP CHECKOUT	
Vacuum	Check that the air filter is in place.
	Check suction of the system. Do not put your hands on the suction nozzle.
Hoist & Trolley	Check that the hoist and the trolley operate correctly.
Feeder	Check whether foreign substances or water have entered the feeder. In such a case, clean thoroughly.
	Avoid any friction between the metering screw and the body. This requires opening the hopper and removing the T nozzle. Inspecting the screw/auger to be sure that it is flush with the walls of the hopper and inside the T nozzle is very important because removing the material can be difficult and risky.
	Check that the inspection hatch is closed (stainless steel feeder only).
	Check oil level in gear reducer.
	Check that the metering screw rotates counter clockwise when looking from the rear of the drive unit.
	Check that the feeder is working properly.
	Minimum speed and maximum speed must be verified.
Wetting Cone	Check that the wetting cone is completely clean and free from dirt or foreign objects.
	Check that the water flows tangentially into the cone.
	Ensure that the water speed is sufficient to create a vortex.
	Ensure that water speed is not too great to create splashing up into the T nozzle.
	Check that the metered powder falls vertically in the middle of the wetting cone.
Eductor	Check that the eductor is completely clean and free from dirt or foreign objects.
	Check that the service water pressure is higher than 65 psig in operation.
	Check that the eductor is working properly.
Piping	Check that the pipework are completely clean and free from dirt or foreign objects.
Manual valves	Check that all manual valves are working properly.
	The manual valves control the whirl and blending of the powder. Ensure that the flow is appropriate.
Automatic valves	Check that all automatic/electric valves are connected to the control panel.
	Check that all automatic/electric valves are working at proper times and the limit switches are set.
Instruments	Check that all instruments are properly calibrated.
	Check that all instruments are properly installed.
Pressure switch	Check that the pressure switch works properly by closing the water inlet valve.
	Check that the pressure switch is connected to the control panel.
	Check that the pressure switch works properly.
	Check the pressure gauge is working correctly.
Mixer	Check all bolts and nuts are properly tightened.
	Check the oil level in the gearbox.
	Check if installation of the mixer shaft is adequate.
	Check the direction of rotation of the agitator.
	Adjust the motor overload protection to the value shown on each motor nameplate.
	During start-up, listen for unusual noises and check for excessive vibration.
	Check the temperature of the motor and the gear reducer. The temperature should not exceed 180°F (82°C).
Static mixer	Check that the static mixer works properly.
Level transmitter	Check the calibration of the level transmitter.

9.2.2 Hydraulic Test

Due to the nature of the materials used in the Hydra-Pol™ systems, it is important that the hydraulic integrity of the system is verified even before the Control Start-Up is performed. The hydraulic inspection and testing is comprised of the following elements:

- Connect all fittings and walk the piping to be sure that the hydraulic pathway meets operational specifications.
- Verify that the service water system is ready to provide water and that the client is ready to accept water into their downstream system.
  - NOTE: this step is of extreme importance as during the construction phase, often communication with other workers is complicated and difficult. Be sure that you yourself check the discharge point and that no one is working in the area and that all risks are mitigated.
- Briefly allow water through the system by manually operating the valves. Check for leaks. Provided no leaking or loose connections are found, continue to the next step.
- Verify that the preparation tank and storage tank are clean and have head space to accept a few minutes of water. Manually operate the valves and booster pumps to allow for the operational pressure of the system is met. Walk the Hydra-Pol™ to verify that all tubing fittings are tight, that the T nozzle plunger is pulled back, and that the whirl in the wetting code is adequate.
  - NOTE: this step is of importance. If the whirl of the wetting cone is not adequate, then the wetting cone will clog with polymer and the clean-up will take hours.
- Allow the preparation and storage tank to fill with service water. Check that the level set-points give the desired volume for the sequencing and batching in the Process Start-Up section.
- Stop the system and do a final walk-through of all hydraulic and mechanical integrity.

9.2.3 Control Start-Up

The control start-up for the polymer make-up system include; connection, verification and inspection of the following elements:

- The alarms, start-up and shut down of the motors.
- The transmission of the electric signals of the different components as well as their configuration parameters if needed.
- The pumps alarm transmission to the plant system.
- I/O verification of instrumentation.
- Sequencing.
- The proper functioning of the electrical and process alarms.
- The variable frequency drives connection.
- The control panel.
- Other elements of control, if required.

Start-up and shut down sequencing will be checked:

- Normal start and stop sequencing.
- Alarms stop sequencing.
- Clearing alarms and restarting the process.

9.2.4 Process Start-Up

Once the mechanical, electrical, hydraulic and control start-up of the preparation system have been completed, the equipment commissioning can begin. The following steps will be performed.

9.2.4.1 Screw Calibration Procedure

Tests will be performed using water for the initial testing and the specific chemical for the final test.

- Calibration of the dosing screw at minimum, full range and intermediate speeds to set the functional output curve.
- Preparation unit concentration and dosage settings.

Powder polymer is injected into a preparation tank using a dosing apparatus. The apparatus operating time is calculated based on its capacity and the desired concentration.

9.2.4.1.1 Dosage Calculation

The operating dosing time is calculated based with the following formula:

$$T_s = \frac{CONC \times \left(\left(LEV_{stop} - LEV \right) \times SURF \right)}{CAP} \times 60$$

T_s:	Dosing apparatus operating time (sec)
CONC:	Polymer concentration adjustable to operator interface (g/l)
LEV:	Preparation tank current level (m)
LEV_{stop}:	Preparation stop level set point (m)
SURF:	Preparation tank surface (m^2)
CAP:	Dosing apparatus capacity adjustable to operator interface (kg/min)

Note: This formula may also be used to perform a manual preparation in case of automatic system failure. To ensure dosing accuracy of the tank, capacity must be validated by the operator.

9.2.4.1.2 Feeder Capacity

The feeder capacity must be checked by weighing the discharged amount of polymer powder/time.

The operator must repeat four (4) times the following procedure:

- Set a frequency on the VFD – Start with 60 Hz.
- Hold a sample shovel just under the outlet of the powder feeder.
- Then turn the switch for FEEDER to position H for a specific time.
- Weigh the contents in the sample shovel.

EXAMPLE (dry polymer):

Obtained value 2000 g/20 sec = 6 kg/min = feeder capacity

Assume that 0,3% concentration is to be mixed in a 400 L tank (see the actual value on the data sheet). The amount needed for each batch will be:

$$\frac{0.3 \times Size\ of\ tank\ (dm^3)}{100} = \frac{0.3 \times 400}{100} = 1.2\ kg$$

The dosing time of the powder feeder will then be:

$$\frac{1.2\ [Amount\ of\ polymer\ in\ kg]}{6\ [Capacity\ of\ feeder\ in\ kg/min]} = 0.2\ minute$$

This dosing time is set on the interface. Record the test procedures and test results/settings within the manual.

9.2.5 Process Start-Up Records

The personal in charge of the commissioning will furnish inspection sheets for equipment including:

- Project name
- Tag number and description
- Manufacturer
- Model and serial number
- Date, time and person who will perform calibration
- Calibration data to include:
  - Input, output and error at minimum, intermittent and maximum output range
- Space for comments
- Certification by installer and acknowledgment by contractor and date
- Adjustment of the service water flow rate and pressures (if required)

10 TROUBLESHOOTING GUIDE

COMPONENT	ISSUES	POSSIBLE CAUSES	ACTION
SERVICE WATER INLET	Service water low pressure.	Service water feed system low pressure.	Inspect service water system and booster pumps.
		Obstruction.	Clean pipes.
VACUUM	Reduction of the suction capacity at the vacuum filling of the polymer powder.	Clogging of the dust filter.	Remove the external filter and clean. Verify that the lid and viewport have no leaks.
		Max level in the powder hopper is exceeded and/or malfunctioning level sensors.	Stop the filling. Inspect the feedback from level indicators. If not reflective of material's level, inspect wiring and ability to detect material.
		The feeder shutter at the outlet of the feeder is not shut.	Filling must not be done while the feeder is operating. Wait until the feeder has stopped.
WETTING CONE	Clogging of the wetting cone.	The feeder shutter at the outlet of the feeder is not shut.	Check the function of the solenoid valve to the feeder shutter, or clean the shutter from possible polymer powder clogging.
		The water whirl in the wetting cone is too small.	Check water pressure.
FEEDER	Feeder does not run.	No power to the feeder.	Check the button or the on / off switch of the machine is turned on.
			Check that the isolating switch is in the on position.
			Check that the inverter is not set to 0 Hz.
			Check if there are short circuits, blown fuses or tripped breakers.
			Check that the power supply corresponds to control and motor requirements.

			Check if there are error messages in the drive controller screen.
	Feeder screw or agitator is damaged.	Foreign body inside feeder.	Remove foreign body and replace damaged components
	Feeder screw or agitator stops.	Hygroscopic material inside feeder has absorbed humidity.	Unload feeder completely when shutting down for long periods.
	Feeder – Rotating components unscrewed, no material handled.	Motor incorrectly wired.	Rewire (metering screw must turn counter clockwise when viewed from behind drive unit).
	Feeder – Sticking of hygroscopic products; Agglomeration of viscous materials; Contamination of the product.	Long shutdown period.	Unload feeder completely when shutting down for longer periods.
	Feeder makes scraping or grinding noise.	Foreign body inside feeder. Poor alignment of gearbox, hopper wall welding.	Visually inspect the hopper and the level of the auger by removing the T nozzle.
TANK	Maturation tank or storage tank overflow.	Level transmitter default.	Inspect level transmitter.
	Incorrect concentration of the polymer solution.	Wrong dosing time set point	Calibrate the dosing screw and adjust parameter.
		Polymer density change.	Calibrate the dosing screw and adjust parameter.
TRANSFER VALVE	Transfer valve not closing tight.	Debris present in the valve.	Remove the foreign object and check for possible damages.
		The adjustment of the travel stop is incorrect.	Adjust the actuator travel stop according to the manufacturer's instructions.
		Prepared polymer solution concentration is too high	Adjust the concentration

Note: If the preparation sequence is interrupted by a power failure or by component failure then the current polymer batch will be lost and will have to be drained. Broken components will have to be replaced before starting a new polymer batch.

11 MAINTENANCE

Any manipulation of metering equipment and chemicals should be done by qualified and trained personnel. Refer to product MSDS for safe material handling.

ITEM	DESCRIPTION	WEEKLY	MONTHLY	BI-MONTHLY	YEARLY	COMMENTS
MIXER	Gearbox visual inspection and noise	X				
	Check gearbox oil level	X				
PREPARATION TANK AND STORAGE TANK	Empty storage and preparation tanks. Check the presence of foreign matter at the bottom. Clean if necessary.				Every 6 months	Dispose of chemical residues appropriately
PIPING	Check for leaks.	X				
	Rinse pipes with lukewarm water.				Every 6 months	
LEVEL TRANSMITTER	Calibrate on a regular basis and / or when readings become inaccurate (specific to each type of use).				Every 6 months	
STATIC MIXER	Visual check. Clean if required	X				
FEEDER	If the feeder uses MBTX, MBTN or MBTT type shaft seals, check these on a monthly basis to make sure they are in good working condition.		X			Grease monthly
DISSOLVER CONE	Inspect the cone for the presence of polymer agglomeration. In case of loss of suction, remove and clean eductor with hot water. Inspect weekly to ensure that there is no accumulation of polymer or fouling and, if necessary, clean by draining the cone and the eductor with water.	X				
VALVES	Inspected and clean if required. Refer to supplier's maintenance manual.				Every 6 month	
DOSING SKID FRAME OR BULK BAG UNLOADER	Check the appearance of the structure, paying particular attention to the state of welds.		X			
	Check that all bolts are correctly tightened, in particular the vibrator fixing bolts.		X			

12 SPARE PARTS

It is highly recommended to keep in stock spare parts in sufficient quantity for all critical components to the proper functioning of the system.

Only the use of original Veolia spare parts will ensure proper and reliable operation of the system.

When ordering a spare part, please give the following information:

- Veolia's project number
- Veolia's project name
- Part number

APPENDIX A

START-UP CHECKOUT CHECKLIST
(TO BE COMPLETED BY CONTRACTOR)

LEFT BLANK

VEOLIA	HYDRA-POL START-UP CHECKOUT CHECKLIST		
Project		Date	
Structure		Revision	
Number		Doc. N°	
Reactor		Written by	

N°	ITEMS	X	COMMENTS
1	**AUXILIARY COMPONENTS TEST PROCEDURE**		
1.1	Place Main Disconnect to "ON"		
1.2	Put Water inlet valve in manual mode "OPEN" position		
1.3	Check service water pressure when valve placed in OPEN position		
1.4	Check water whirl in wetting cone		
1.5	Adjust manual wetting cone valve for desired whirl level		
1.6	Check service water is going to mixing tank		
1.7	Close manual water inlet valve		
1.8	Verify that water pressure switch alarm activates after 100 seconds		
1.9	Open manual water inlet valve		
1.10	Verify that water pressure switch alarm is disabled		
1.11	Simulate (if possible) the function of powder hopper level switch		
1.12	Start powder vacuum conveyor (if supplied)		
1.13	Check suction capacity of vacuum conveyor (if supplied)		
1.14	Stop powder vacuum conveyor (if supplied)		
1.15	Start hoist & trolley (if supplied)		
1.16	Stop hoist & trolley (if supplied)		
1.17	AUXILIARIES COMPONENTS TEST PROCEDURE COMPLETED		
2.0	**MANUAL WET TEST PROCEDURE**		
2.1	Place Main Disconnect to "ON"		
2.2	Put water inlet valve in manual mode "OPEN" position		
2.3	Check service water pressure when valve placed in OPEN position		
2.4	Check water whirl in wetting cone		
2.5	Adjust manual wetting cone valve for desired whirl level		
2.6	Check service water is going to mixing tank		
2.7	Wait water level in mixing tank reaches mixer level + 100 mm (fully covering the impeller)		
2.8	Place mixer selector in manual mode "START" position		
2.9	Confirm impeller rotation follows supplier requirement		
2.10	Put feeder discharge valve in manual mode "OPEN" position		
2.11	Check feeder discharge valve is "OPEN"		

N°	ITEMS	X	COMMENTS
2.12	Place blending motor (if applicable) selector in manual mode "START" position		
2.13	Check blending motor (if applicable) is in"RUN" mode		
2.14	Place feeder motor selector in Manual mode "START" position		
2.15	Check feeder motor (if applicable) is in "RUN" mode		
2.16	Confirm screw feeder rotation follows requirement		
2.17	Place feeder motor selector in manual mode "STOP" position		
2.18	Place blending motor (if applicable) selector in manual mode "STOP" position		
2.19	Put feeder discharge valve in manual mode "CLOSE" position		
2.20	Put mixer in manual mode "STOP" position		
2.21	Put water inlet valve in manual mode "CLOSE" position		
2.22	Put mixing tank transfer valve in manual mode "OPEN" position		
2.23	Verify that water transfers from mixing tank to storage tank		
2.24	Put mixing tank transfer valve in manual mode "CLOSE" position		
2.25	MANUAL WET TEST PROCEDURE COMPLETED		
3.0	**FEEDER CALIBRATION PROCEDURE**		
3.1	Place polymer powder in storage hopper		Follow IOM for specific requirements
3.2	Put water inlet valve in manual mode "OPEN" position		
3.3	Check service water pressure when valve placed in OPEN position		
3.4	Check water whirl in wetting cone		
3.5	Adjust manual wetting cone valve for desired whirl level		
3.6	Check service water is going to mixing tank		
3.7	Put feeder discharge valve in manual mode "OPEN" position		
3.8	Check feeder discharge valve is "OPEN"		
3.9	Place blending motor (if applicable) selector in manual mode "START" position		
3.10	Install powder test sampling collection device at feeder discharge		
3.11	Place feeder motor selector in manual mode "START" position		
3.12	Let feeder run for 2-3 minutes until flowrate reach steady state is reached		
3.13	Place feeder motor selector in manual mode "STOP" position		
3.14	Dispose collected powder in storage hopper		
3.15	Install powder test sampling collection device at feeder discharge		
3.16	Place feeder motor selector in manual mode "START" position		
3.17	Run feeder for 1 minute and weigh collected powder sample		

N°	ITEMS	X	COMMENTS
3.18	Dispose collected powder in storage hopper		
3.19	Place feeder motor selector in manual mode "STOP" position		
3.20	Repeat 4 times the powder sampling procedure (1 min for each test)		
3.21	Remove highest and lowest weighted values and determine feeder real capacity by calculating the average value between the three closest values		
3.22	Insert feeder real capacity value in Hydra-Pol HMI (feeder calibration screen)		
3.23	Place all motor selectors on "STOP"		
3.24	Place all valve switches on "OFF"		
3.25	FEEDER CALIBRATION PROCEDURE IS COMPLETED		
4.0	**AUTOMATIC START-UP PROCEDURE**		
4.1	Put all valve selector switches in "AUTO" position		
4.2	Put all motor selector switches in "AUTO" position		
4.3	Check service water pressure when valve placed in AUTO position		
4.4	Check water whirl in wetting cone		
4.5	Adjust manual wetting cone valve for desired whirl level		
4.6	Check service water is going to mixing tank		
4.7	Confirm that mixer starts automaticaly		
4.8	Confirm that feeder discharge valve opens		
4.9	Confirm that blending motor starts		
4.10	Confirm that feeder starts		
4.11	Confirm that powder is fed to wetting system		
4.12	Confirm that feeder motor stops when feeding time is completed		
4.13	Confirm that blending motor stops		
4.14	Confirm that feeder discharge valve closes		
4.15	Confirm that water inlet valve closes when water level reaches HIGH LEVEL		
4.16	Confirm that mixer stops when mixing time is completed		
4.17	Confirm that mix tank discharge valve opens when mixing time is completed and liquid level in storage tank is under low level storage tank		
4.18	Confirm that mix tank discharge valve closes after transfer		
4.19	Confirm that new batch restarts automaticaly		
4.20	AUTOMATIC START-UP PROCEDURE IS COMPLETED		

N°	ITEMS	X	COMMENTS
5.0	**HYDRASTAT START-UP PROCEDURE**		
5.1	Calibrate probes according to MFG procedure		
5.2	Start SC-200 according to MFG procedure		
5.3	Wait until 2-3 automatic batches are completed		
5.4	Put Hydra-Stat in "Autocalibration mode" on HMI		
5.5	Hydra-Stat will generate setpoints and reference curve		
5.6	If make-up concentration is changed, new auto-calibration is required		

APPENDIX B

COMPONENTS DATA SHEETS AND MAINTENANCE MANUALS

If this polymer preparation system is integrated to a processing plant, refer to the Manufacturer Operation and Maintenance Manual section of the Operation and Maintenance Manual for the preparation system component manufacturer manuals.

LEFT BLANK

6 – OPERATION AND MAINTENANCE

6.4 – POLYMER DOSING SKID

6.4.1 – INSTALLATION, OPERATION AND MAINTENANCE MANUAL

LEFT BLANK

Installation, Operation and Maintenance Manual

NETZSCH PROGRESSIVE CAVITY PUMP DOSING SKID SYSTEM

DOCUMENT NO: IOM_0081_PCH

APRIL 2019, REVISION 1

Veolia Water Technologies Canada Inc.
ISO 9001:2008
4105 Sartelon, St-Laurent (QC) H4S 2B3
Tel: 514-334-7230 ● Fax: 514-334-5070
www.veoliawatertechnologies.ca

NOTICE OF CONFIDENTIALITY
This document is confidential and contains proprietary information. It must not be shared with a third party without the written consent of Veolia Water Technologies Canada Inc.

WATER TECHNOLOGIES

TABLE OF CONTENTS

1 INTRODUCTION 3

2 SAFETY 4

2.1 INTRODUCTION 4
2.2 FALL HAZARDS 4
2.3 CHEMICALS HAZARDS 5
2.4 ELECTRICAL CONNECTIONS 5

3 SHIPPING 6

4 RECEIVING 6

5 HANDLING 6

5.1 GENERAL 6
5.2 MATERIAL HANDLING 6

6 STORAGE 7

6.1 GENERAL 7
6.2 PVC PIPING STORAGE CONDITIONS 7

7 SKID OVERVIEW 8

8 INSTALLATION 9

8.1 OWNER-INSTALLED PIPING / TUBING 9
8.2 SUCTION LINE / TRANSPORT WATER LINE 10
8.3 DISCHARGE LINE 10

9 INITIAL START-UP 11

9.1 SETTING VALVES 11
9.2 PRESSURE RELIEF VALVE 11
9.3 FLOW CALIBRATION 12
9.4 VARIABLE FREQUENCY DRIVE SETTINGS 12

10 OPERATION PROCEDURES 13

11 ROUTINE MAINTENANCE 14

12 TROUBLESHOOTING GUIDE 15

13 LUBRICATION SCHEDULE (REFER TO PUMP MANUAL) 16

14 SPARE PARTS 17

15 DRAWINGS 18

16 COMPONENTS TECHNICAL DATA SHEET 19

17 MANUFACTURERS OPERATION AND MAINTENANCE MANUAL 20

1 INTRODUCTION

This document provides installation, operation and maintenance instructions for a polymer dosing skid equipped with Netzsch progressive cavity pump(s). For specific information regarding the pump installed on the dosing system, refer to the manual of the manufacturer.

The skid components supplied by Veolia Water Technologies Canada (VWTC).

To obtain any additional information regarding characteristics or instructions on this equipment, please do not hesitate to contact us.

The system was designed in Canada by:

Veolia Water Technologies Canada
4105, Sartelon
Saint-Laurent, Qc.
Canada H4S 2B3
Phone: 514-334-7230
Fax: 514-334-5070

For technical support or service needs, for spare parts or to get assistance during your warranty period, you may contact us at the following number during regular business hours or write us at:

Veolia Water Technologies Canada After Sales Support
1-844-SER-VWT9 | 1-844-737-8989 | vwtservicecanada@veolia.com

Our business hours are from
Monday to Friday
8:30am to 5pm EST

2 SAFETY

2.1 INTRODUCTION

Your safety is of the utmost concern. Dosing pumps and systems can handle harsh or toxic chemicals and exposure can lead to serious injury or death. Always wear appropriate protective clothing (for example, safety glasses, gloves, coveralls, etc.) and follow safe handling procedures. Pay attention to what you're doing and note safety advisories where they are shown throughout this manual. Some examples of safety issues and precautions for chemical dosing systems are:

- Do not use dosing skid systems for flammable liquids.
- Prior to working on any portion of the skid system, disconnect pump(s) from power supply, de-pressurize the system and drain chemicals from the lines.
- Inspect tubing regularly and replace as necessary. When inspecting tubing, wear protective clothing and safety glasses.
- If skid system is exposed to sunlight, use UV-resistant tubing.
- Follow directions and warnings provided with chemicals from the chemical manufacturer. User/Owner is responsible for determining chemical compatibility with chemical feed pump(s) and system components.
- Secure chemicals, metering pump(s) and system, making them inaccessible to children, pets, and unauthorized personnel.
- Always wear protective clothing, including gloves and safety goggles when working on or near chemical metering pump(s) and system.
- All connections (threaded, screwed or bolted) may only be loosened when the system is not under pressure.
- Installation and start-up of chemical dosing system will require both mechanical (plumbing) and electrical work. Only qualified and licensed plumbers and electricians should perform this.

2.2 FALL HAZARDS

As per OSHA statistic's, the majority of falls results from trips and slips. Common causes of slips are due to wet or oily surfaces and occasional spills.

Operators should reduce the risk of slipping on wet flooring by:

- Cleaning all spills immediately.
- Marking spills and wet area by using a cone or other warning device.

2.3 CHEMICALS HAZARDS

WHMIS Material Safety Data Sheets (MSDS) should be available for each chemical product. Since chemicals or chemical dosage are used during normal operation of treatment facility, the risks of fire, explosion and exposure to toxic chemicals or chemical burns are present. Chemicals typically used with dosing system are coagulant and polymer.

Operators should be made aware of the following:

- All chemicals which are used and any potentially dangerous reaction that could occur.
- Toxicity of all chemicals that are used or could be formed via reactions.
- Acidic or basic properties of all materials used.
- Potential fire or explosion hazards posed by the chemicals.
- Antidotes for exposure to toxic materials.
- Protective clothing that is recommended.
- Chemicals spills may be slippery.

2.4 ELECTRICAL CONNECTIONS

Electrical connections must be made by certified electricians in compliance with all applicable codes and regulations.

3 SHIPPING

Most of the equipment and material for this project will be drop shipped and delivered directly to the site.

- All items delivered will be clearly identified with VWTC's name, VWTC's project name and VWT's project number.
- All shipments will have a clear Packing List identifying all parts in the shipment.
- All equipment will be tagged with the corresponding tag numbers shown on the design drawings (if applicable).

If there are more stringent requirements in the contract documents, they will take precedence over the above. If any of these requirements are not being followed, please notify the VWTC Project Manager immediately.

4 RECEIVING

The condition of all delivered equipment must be verified by the responsible party upon arrival at site. Verification that all equipment has been delivered as per contract must also be done upon arrival at site. Notification of missing or damaged items must be sent to VWTC within five (5) working days of receipt of equipment. If there is no documented notification of missing or damaged parts within five (5) working days, VWTC is not responsible for replacement of any items found to be missing or damaged at the time of installation and start-up of the supplied equipment. It is the responsibility of the party receiving the equipment to ensure all packaging is opened at the time of receipt to uncover and document any and all damages to the Freight Company and VWTC.

Photographs and written documentation should be provided for all damaged equipment.

5 HANDLING

5.1 GENERAL

Equipment will arrive at the project site in several different shipments, from various freight companies and in several different packaging containers. Typically a flatbed truck is used which requires a fork lift or a crane to remove the items.

The Contractor is responsible for unloading and handling the equipment.

5.2 MATERIAL HANDLING

Care should be taken to avoid damages to the surface of the polypropylene panels or steel frame due to dragging or from sharp objects.

6 STORAGE

6.1 GENERAL

The following instructions outline the duties and responsibilities of the responsible party for equipment storage. The responsible party shall assume responsibility for the equipment upon arrival at the project site. These instructions shall define the minimum expectations for storage of all equipment.

While this storage specification takes into account common environmental issues that may affect the system during storage, common sense should be the overriding factor in determining the best method to ensure the integrity and proper storage of the VWTC equipment.

For contractual purposes, VWTC demands the Client to send pictures of major equipment once it is placed in storage, any time it gets moved during storage and again prior to removing from storage. Alternatively, a written document (check list, etc.) confirming that proper storage conditions are maintained will suffice. Failing to do so would cancel the proposed warranty.

Should it be necessary to delay installation and subsequent operation of a unit for more than one month from date of receipt at site, special precautions must be taken.

The polymer dosing skid shall be stored indoor at a temperature above 5°C. The storage environment into which a system is placed can have a severe effect on the long-term usefulness of some spare parts. Key environmental factors are:

- Temperature
- Relative humidity
- Pollutants

Air may contain excessive moisture, pollutants, microorganisms, and other particulates that accelerate the deterioration of some materials. Humidity and pollutants can produce an aggressive atmosphere.

6.2 PVC PIPING STORAGE CONDITIONS

Pipe units should be stored and placed on level ground. Caution shall be taken to avoid compression, damage or deformation to the ends of the pipes. Racks or dunnage shall be used to prevent damage to the bottom pipes during storage and to support them. Supports should be spaced to prevent pipe bending.

When exposure in excess of one year to direct sunlight is unavoidable, the pipes should be covered with an opaque material while permitting adequate air circulation above and around the pipes as required preventing excess heat accumulation. The interior of the pipes, as well as all end surfaces, should be kept free from dirt and foreign matter until the pipes are ready to be used.

7 SKID OVERVIEW

The dosing skid system is designed to pump chemicals at precisely controlled rates into another process or system. Dilution water provides a minimum dilution ratio of 3:1 of dilution water to dosing chemical.

Proper arrangement of piping and appurtenances on both the supply side are critical to the successful operation of the overall system. These are the responsibility of the owner/operator of the system, and attention should be paid to the comments below:

SUPPLY SIDE

Dosing chemicals are usually sourced from a preparation system. When the source is located above the centerline of the pump(s) this is referred to as a 'flooded suction'. Connections to and from the solution tank are most commonly made with hard piping. The solution tank should be covered to prevent contamination.

Supply line should gradually slope downward from the solution tank to the skid suction connection.

It is strongly recommended to add a drain provision on the suction side to facilitate emptying and flushing of the system for maintenance.

8 INSTALLATION

Prior to attempting installation, familiarize yourself with the layout and components furnished with your dosing skid system. These vary from system to system and review the documentation supplied with your system. Inspect your skid system for damages which may have occurred during transit. If damages are discovered, immediately file a claim with the carrier and contact Veolia Water Technologies for any required parts or components.

Skid systems, including pump(s), have been tested with water prior to shipment.

Some dosing chemicals will react with water, e.g., acids, polymers, etc. Check the MSDS for the chemical to be handled. If adverse reaction with water is indicated, ensure that all portions of the skid piping, its components and the pump, are free of water prior to filling the skid system with chemical.

Skid systems may be wall or floor mounted. Mounting holes are provided or can be drilled on the skid for both types of mounting. Securely attach the skid in its installation position to prevent falling or tipping.

The installation area should provide ease of access to skid components, including pump(s), and the area should be kept free of clutter to enable safe operation and maintenance.

Note that pumps/motors are designed for ambient temperatures of 104°F (40°C) maximum. It is preferable that skid systems and pump(s) be located out of direct sunlight. If the skid system is exposed to sunlight, provide protection for the pump/motor to prevent overheating and if the skid is exposed to sunlight, use UV resistant tubing.

If skid is exposed to sunlight, use UV-resistant tubing.

Most chemical dosing skids will have Netzsch pump(s) mounted on them before shipment, and the pump(s) will be connected to the skid integral piping with tubing.

8.1 OWNER-INSTALLED PIPING / TUBING

The next series of steps are the connection of your piping/tubing which include the chemical supply line, discharge line, pressure relief/bypass line and an air bleed return line.

These are your responsibility and ensure that for all piping, tubing, fitting and other appurtenances, their materials are compatible with the liquid to be pumped and the design is suitable for the pressures and temperatures of the application. System design must ensure safety for operation and maintenance as well as for anyone who may be in proximity to the system. Failure to do so may result in damage to equipment, personal injury or death.

8.2 SUCTION LINE / TRANSPORT WATER LINE

This line connects the source of the dosing chemical to the dosing skid. Include whatever provisions you consider necessary to facilitate the maintenance and operation such as isolation valve(s), drain and/or flush connections, etc., making sure that this sub-system enables safe operation.

8.3 DISCHARGE LINE

This line connects the dosing skid to the served process. Include whatever provisions you consider necessary to facilitate maintenance and operation, such as isolation valve(s), drain and/or flush connections, etc., making sure that this system enables **SAFE OPERATION**.

9 INITIAL START-UP

The pump must be primed before it can function within the system. This will require an initial start of the pump.

Thoroughly review the installation, operation and maintenance manual for your pump prior to starting. Follow pump start-up instructions. Failure to do so may result in damage to equipment or serious injury.

FLOODED SUCTION SYSTEM

1. Close skid discharge valve and column isolation valve.
2. Connect pump/motor to power source (pump/motor off).
3. Start pump using manufacturer's recommendations for initial operation settings.
4. Shut off pump.

9.1 SETTING VALVES

If furnished with your dosing skid system, the pressure relief valve and back pressure valve will be preset prior to shipment. These pressure settings are related to the piping and components furnished with your skid as well as the pump(s) if furnished with the skid. Your system requirements may demand changes to these settings and the valves will have to be reset after maintenance such as diaphragm replacement. A general description and the setting procedures for these components are as follows.

9.2 PRESSURE RELIEF VALVE

A pressure relief valve (PRV) must always be used with a chemical metering system that uses a positive displacement pump. This device is designed to protect the pump and system from over pressurization and it must be set to relieve at the maximum allowable pressure for the weakest point in the total system. This may be in your piping on the discharge side of the skid. The pressure relief valves are factory set and cannot be modified. If the pressure set point is surpassed, the valve will need to be replaced. The pressure settling is indicated on the P&ID drawings.

Most dosing skid systems include a pressure relief valve and suction header where the PRV is directly connected from the discharge header to the suction header. If your skid system does not include a suction header, or if you are providing your own PRV, relief flow from the pressure relief port on the PRV must be directed to either the suction source or a separate receptacle. This is usually done with tubing.

Care must be taken to channel any free flow from the pumping system into an appropriate receptacle. Eliminate any possibility of splashing, spraying or spillage. Always wear suitable protective equipment (gloves, safety goggles/glasses, coveralls, etc.) when working with or around chemical dosing systems.

Check all system piping/tubing connections to ensure that they are properly tightened (handtight for plastic fittings) and leak free.

Pumping system is now ready for operation.

9.3 FLOW CALIBRATION

Chemical metering systems are designed to provide chemicals to a process at precise flow rates. Metering pump output (flow rate) can be set with a variable frequency drive (VFD). A calibration column is used to determine pump flow rate and to enable flow rate adjustments.

The procedures for filling the calibration column and for calibrating the pumps are described below. Review both complete procedures before proceeding with next steps.

FILLING THE CALIBRATION COLUMN BY OPENING THE COLUMN ISOLATION VALVE

- Use extreme care when handling chemicals.
- Avoid any spray, splatter or spilling.
- Always wear appropriate protective clothing.

FOR SYSTEMS WITH FLOODED SUCTION:

1. Open column isolation valve.
2. Liquid level in the column should rise to the level in the suction source. This may be higher than the top of the column, so prevent overfill by closing the column isolation valve when the liquid level in the calibration column reaches slightly above the top scale mark.
3. If the liquid level in the suction source is lower than the top scale mark, close the column isolation valve and add liquid through the top of the column to a point slightly above the top scale mark.

Calibration column is filled and ready for the calibration procedure.

9.4 VARIABLE FREQUENCY DRIVE SETTINGS

When powered up, the operator should check the direction of rotational direction of the pump. The following checklist indicates the steps to set the VFD parameters of an AC Tech drive. Other VFD may require different parameters.

1. Set start control source to terminal strip or local keypad.
2. Set acceleration parameter.
3. Set deceleration parameter.
4. Set motor overload in %.
5. Set start method on start on power up.
6. Set input function to 4-20 mA.
7. Set relay output to run (energizes when the drive is running).
8. Set drive mode to vector speed.
9. Set motor rated voltage.
10. Set motor rated current.
11. Set motor rated speed.
12. Run motor auto-calibration.

For more information refer to the VFD manual.

10 OPERATION PROCEDURES

The calibration column is filled to slightly above the top mark of the scale. The pump is then run in the system while being fed from the calibration column. After a start-up period, the liquid level reading on the scale will be a direct readout of the pump flow rate in US Gallons/hr (note that a millilitre scale is also shown on the calibration column).

With the pump running in the system:

1. Open the column isolation valve so that the column feeds into the suction header and immediately close the skid suction valve.
2. Observe the liquid level in the calibration column. When it reaches the top scale mark, begin timing.
3. Allow 30 seconds to pass.
4. Open the skid suction valve and immediately close the column isolation valve.
5. Read pump output flow rate directly on the scale in US Gallons/hr or other flow units.

Once the calibration is complete, compare the reading to the desired rate for your system. Refer to your pump operation manual and adjust flow rate up or down accordingly (this is usually done by changing the frequency). After pump adjustment is made, repeat calibration procedure. Continue until the desired flow rate is achieved.

11 ROUTINE MAINTENANCE

Before performing any maintenance on your skid system or pump(s), skid components, pump(s) and your process piping may be under pressure!

Prior to working on any portion of the skid system:

- Disconnect pump(s) from power supply.
- De-pressurize the entire system.
- Drain chemicals from the lines.
- Flush and neutralize as necessary.
- Always wear suitable protection (gloves, safety glasses/goggles, etc.).

Routine maintenance will depend upon your service requirements: dosing chemical being handled, environmental conditions, duty cycle(s) of pump(s), etc. When working on any component of your system, i.e., pump(s) and valves, refer to the installation, operation and maintenance manual for that particular item.

Some operational and maintenance checks that need to be performed are:

Piping/Tubing Integrity:	Routinely check piping, tubing, isolation valves and connections for leaks. Replace tubing as necessary. Recommend weekly check.
System Operation:	Perform flow calibration regularly to ensure that dosing chemical is being added at the proper rate. Recommend monthly.
Pressure Relief:	Check to ensure that bolts are tight. Recommend monthly. Diaphragms should be replaced on an annual basis.
Calibration Column:	If handling sticky chemicals, may require cleaning to view liquid level inside. Perform as necessary.
Progressive Cavity Pump:	Check oil level weekly. Oil should be changed on a 2 years or 10000 operating hours basis. Motor bearings are permanently lubricated. Refer to Section 13 Lubrication. Schedule

Note: Special tools are required for dismantling and re-assembly of the pump. Before starting the dismantling, refer to the installation, operation and maintenance manual of the pump.

12 TROUBLESHOOTING GUIDE

PROBLEM	POSSIBLE CAUSE	REMEDY
Pump doesn't deliver product	Air entering suction line	Check fittings for tightness Check integrity of tubing Check level in suction source-must be above foot valve at inlet
	Air trapped in suction line	Re-configure suction line to eliminate air pocket(s)
	Suction line kinked or clogged	Inspect, replace tubing
	Chemical source empty	Refill, re-prime pump
	Pump not primed, air/gas in system	Refer to pump instructions
	Air/gas bubbles forming in chemical	Reduce suction lift or change to flooded suction Consider chemical storage temperature
	Strainer clogged	Check strainer, clean
	Pressure relief valve open	Check pressure relief valve integrity Check pressure relief valve settings
	Pump problem(s) may be: Stator wear, rupture Check valves worn or clogged Low pump flow setting Voltage/electrical difficulty	Refer to pump instructions
	High temperature alert is triggered (overheating)	Check overheating causes Acknowledge the alert/release relay: - Press reset button
Piping Vibration/chatter	Pulsation dampener malfunction (if applicable)	Check pulsation dampener integrity Check dampener air pressure
Injection rate too high, too low	Pump output setting incorrect	Perform flow calibration
	Chemical concentration too high, low	Adjust chemical source strength
	Injector clogged, scaled, restricted	Check injector for solids or corrosion Clean as necessary or replace
Tubing failure	Sunlight/UV exposure	Change to UV resistant tubing
	Corrosive attack	Determine material compatibility, change as necessary
Leaky fittings	Loose fittings	Tighten fittings-plastic fittings should be handtight only
	Corrosive attack	Determine material compatibility, change as necessary

If problem(s) persist, please contact Veolia Water Technologies

13 LUBRICATION SCHEDULE (REFER TO PUMP MANUAL)

ITEM	ACTION	FREQUENCY	TYPE OF LUBRICANT
Gear Reducer	Check oil level Change Oil	Weekly 2 years/10000 operating hours	ISO VG 220 (oil) (ambient T°: -5 to 40°C)
Motor Bearing	Permanently lubricated Repack with grease (if applicable)	17000 operating hours	NLGI EP 2 (grease) (refer to motor nameplate)
Pump Pin Joint	Change Oil	2 years	CLP 460 (oil) (refer to Netzsch manual)

14 SPARE PARTS

It is highly recommended to keep in stock spare parts in sufficient quantity for all critical equipment to the proper functioning of the process.

Only the use of original Veolia spare parts will ensure proper and reliable operation.

When ordering a spare part, please give the following information:

- Veolia project number.
- Project name.
- Part number

15 DRAWINGS

If this dosing system is integrated to a processing plant, refer to the Process and/or Detailed Technical Documentation section of the Operation and Maintenance Manual for the dosing system drawings.

16 COMPONENTS TECHNICAL DATA SHEET

If this dosing system is integrated to a processing plant, refer to the Detailed Technical Documentation section of the Operation and Maintenance Manual for the dosing system data sheets.

17 MANUFACTURERS OPERATION AND MAINTENANCE MANUAL

If this dosing system is integrated to a processing plant, refer to the Manufacturer Operation and Maintenance Manual section of the Operation and Maintenance Manual for the dosing system manufacturer manuals.

7 – SPARE PARTS

Iqaluit wastewater treatment plant upgrade
SPARE-PART LIST #5000218036_SPLS_0001 Rev 1

P&ID tags	Equipment	Veolia equipment code	Manufacturer	Model number	Recommended spare parts	Recommended Qty
B02-110 and eqvlt	Process air blower	ST-999-100	AERZEN	GM 15L DN 100	- One set of belts	1
					- One set of bearings	1
					- One set of seals	1
SV-02-211 and eqvlt	1/2" solenoid valve	VASDBR303370	ASCO	8210G094 120VAC	Whole unit	1
SV-04-982	1.5" solenoid valve	VASDBR308795	ASCO	8210G056 NC 120VAC	Whole unit	1
SV-04-714 SV-04-914	1" solenoid valve	VASDBR308797	ASCO	8210G004 120VAC	Whole unit	1
SV-04-713 SV-04-913	1/4" 4 way solenoid valve	VASDBR330455	ASCO	8345G001 120VAC	Whole unit	1
CV-02-405 and eqvlt	4" check valve	ST-912-045	Bray	V0415XEZ205	Whole unit	1
BFV-02-625 BFV-02-645	3" butterfly valve with 120V actuator	ST-999-005	Bray	310300-1101030A 700061-113DA536 7070A1-22600536 70A000-22901536	Whole unit	1
BFV-02-511 and eqvlt	4" butterfly valve with 120V actuator	ST-999-006	Bray	310400-1101030A 700061-113DA536 7070B1-22600536 70A000-22901536	Whole unit	1
BFV-02-521 and eqvlt	2" butterfly valve with 120V actuator	ST-999-007	Bray	140200-11000SSRR-NN 700082-113DA536 EZ-010D-3 70A000-22901536	Whole unit	1
BFV-02-168 and eqvlt	3" butterfly valve	ST-999-008	Bray	310300-1101030A 010200-21100007	Whole unit	1
BFV-02-406 and eqvlt	4" butterfly valve with handle locking plate	ST-999-009	Bray	310400-1101030A 010400-21100007 020400-70050529	Whole unit	1
BFV-02-513 and eqvlt	4" butterfly valve	ST-999-010	Bray	310400-1101030A 010400-21100007	Whole unit	1
BFV-02-165	2" butterfly valve	ST-999-016	Bray	310200-1101030A	Whole unit	1
BFV-02-309 and eqvlt	12" butterfly level valve with pneumatic actuator	ST-999-030	Bray	311200-1101130A 922100-11300532 9000E2-22600536 F/O, PERPENDICULAR ACTUATOR 6A6DR5-0200NN305KA0 6A1600-24610536 9C5500-74604536	Whole unit	1
BV-04-743 BV-04-943	2" butterfly valve with 120V actuator	VABFPV352256	Chemline	57A020AEL-P/ER20.12	Whole unit	1
BV-04-775 and eqvlt	1/2" PVC ball valve	VABLPV200249	Chemline	21A005EC	Whole unit	1
BV-04-910 and eqvlt	1" PVC ball valve	VABLPV200251	Chemline	21A010EC	Whole unit	1
BV-04-947	1.5" PVC ball valve	VABLPV200253	Chemline	21A015EC	Whole unit	1
NV-04-984	1.5" metering valve	VABLPV207251	Chemline	SMA015ES	Whole unit	1
NV-04-787 NV-04-788	1/2" metering valve	VABLPV346917	Chemline	SM2A005ES	Whole unit	1
CV-04-700 CV-04-701	1/2" check valve	VANRPV200034	Chemline	BTA005EC	Whole unit	1
CV-04-918 and eqvlt	1.5" check valve	VANRPV200667	Chemline	BTA015EC	Whole unit	1
PSV-772 and eqvlt	1/2" pressure relief valve	VAPSPV329498	Chemline	SB12A005EU	Whole unit	1
PSV-968 PSV-969	1" pressure relief valve	VARFPV207282	Chemline	SB12A010EU	Whole unit	1
BPV-790 BPV-791	1/2" back-pressure valve	VARFPV348510	Chemline	SB12A005EU + SGA-005-002-P-G + P025-160-BM (CONFIG.L U)	Whole unit	1
BPV-04-990 BPV-04-991	1" back-pressure valve	VARFPV348513	Chemline	SB12A005EU + SGA-005-002-P-G + P025-160-BM (CONFIG.L U)	Whole unit	1
P-02-410 and eqvlt	White water pump	ST-912-003	EDUR	LBUX 602C 160L	Whole unit	1
CV-02-404 and eqvlt	1/2" check valve	ST-999-018	FCC	90B05	Whole unit	1
STR-02-510 and eqvlt	304 SS spiral wound cover gasket for strainer	ST-912-005	IFC	B150FSS4BW1-OB	- One gasket	1
BV-02-314 and eqvlt	1/2" ball valve	ST-999-015	KingTron	S-212T	Whole unit	1
GV-02-510 and eqvlt	2" globe valve	ST-999-017	Kitz	AKUJM2	Whole unit	1
GV-02-313 GV-02-333	3/4" globe valve	ST-999-019	Kitz	AKUJM07	Whole unit	1
P04-770 and eqvlt	Progressive cavity pump	ST-999-001	NETZSCH	NM015BY01L06B	- 8056342 Rod&washer kit	1
					- 8016162 Mechanical seal uNS-Seal®	1
					- 516498 O-ring	1
P04-970 P04-980	Progressive cavity pump	ST-999-001	NETZSCH	NM021BY01L06B	- 8056341 Rod&washer kit	1
					- 8016162 Mechanical seal uNS-Seal®	1
					- 516498 O-ring	1
P-02-610 P-02-620	Progressive cavity pump	ST-999-120	NETZSCH	NM031BY01L06B	- One set of gaskets & O-rings	1
					- One set rod and washers	1
					- Mechanical Seal	1
P-02-630 P-02-640	Progressive cavity pump	ST-999-110	NETZSCH	NM045BY01L07V	- One set of gaskets & O-rings	1
					- One set rod and washers	1
					- Mechanical Seal	1
DDR-02-311	DAF scraper	ST-999-210	NORD	SK9033.1AZBD 56C0.5	- Gearbox with NEMA adapter	1
DDR-02-321		ST-999-211	NORD	63L/4 CUS 56C	- Motor	1
T-02-310 T-02-320	DAF white water nozzle	ST-912-004	OPALIUM	Model # 3,3	Whole unit	2
PLV-02-301 and eqvlt	2" plug valve	ST-999-004	Pratt	611A-E1-L-2"	Whole unit	1
GV-02-401 and eqvlt	3" globe valve	ST-999-020	Sharpe	SV45114030	Whole unit	1

WASTE WATER TREATMENT PLANT UPGRADE

IQALUIT, NUNAVUT

VEOLIA Project 5000 218 036



Operation and Maintenance Manual
Volume 2

Prepared by:
Veolia Water Technologies Canada Inc.
4105, Sartelon
Montreal, Quebec, Canada
H4S 2B3
Tel.: 514-334-7230

Revision: 1
Date: September 2019

LEFT BLANK

The system was manufactured in Canada by:

Veolia Water Technologies Canada
4105, Sartelon
Saint-Laurent, Qc.
Canada H4S 2B3
Phone: 514-334-7230
Fax: 514-334-5070

For technical support or service needs, for spare parts or to get assistance during your warranty period, you may contact us at the following number during regular business hours or write us at:

Veolia Water Technologies Canada – After Sales Support
1-844-SER-VWT9 | 1-844-737-8989 | vwtservicecanada@veolia.com

Our business hours are from:
Monday to Friday
8:30am to 5pm (EST)

Have the following information on hand for each request or call:

Project Name:
VWTC Reference Number:

LEFT BLANK

TABLE OF CONTENTS
Operation & Maintenance Manual
Iqaluit – Waste Water Treatment Plant Upgrade

1 INTRODUCTION ..... VOLUME 1

1.1 GENERAL DESCRIPTION

2 SAFETY ..... VOLUME 1

2.1 GENERAL RECOMMENDATIONS

3 DRAWINGS ..... VOLUME 1

3.1 PROCESS AND INSTRUMENTATION DIAGRAM
3.2 HYDRAULIC PROFILE
3.3 GENERAL ARRANGEMENT DRAWINGS
3.4 FIELD INSTALLATION DRAWINGS

4 DETAILED TECHNICAL DOCUMENTATION ..... VOLUME 1

4.1 N/A
4.2 N/A
4.3 SHOP DRAWINGS SUBMITTAL PACKAGES
4.3.1 Spidflow DAF
4.3.1.1 Process Data Sheet
4.3.1.2 Scraper
4.3.1.3 Pumps
4.3.1.4 Strainers
4.3.1.5 White Water Diffusion Nozzles
4.3.1.6 Valves
4.3.1.7 Instrumentation
4.3.1.8 Paint Specifications
4.3.2 MBBR
4.3.2.1 Process Data Sheet
4.3.2.2 Supplier Technical Data Sheets
4.3.3 Blowers
4.3.3.1 Suppliers Technical Data Sheets

TABLE OF CONTENTS
Operation & Maintenance Manual
Iqaluit – Waste Water Treatment Plant Upgrade

4.3.4 Polymer Preparation System for Belt Filter Press – Hydra-Pol 500
4.3.4.1 Process Data Sheet
4.3.4.2 Supplier Technical Data Sheets
4.3.5 Polymer Preparation System for DAF – Hydra-Pol 250
4.3.5.1 Process Data Sheet
4.3.5.2 Supplier Technical Data Sheets
4.3.6 Duplex Polymer Dosing Skid for Belt Filter Press
4.3.6.1 Process Data Sheet
4.3.6.2 Pumps
4.3.6.3 Valves
4.3.6.4 Calibration Cylinder
4.3.6.5 Instrument
4.3.7 Triplex Polymer Dosing Skid for DAF
4.3.7.1 Process Data Sheet
4.3.7.2 Pumps
4.3.7.3 Valves
4.3.7.4 Calibration Cylinder
4.3.7.5 Instrument
4.3.8 Progressive Cavity Transfer Pumps
4.3.8.1 Supplier Technical Data Sheets
4.4 LIST OF SUPPLIERS
4.5 COMMISSIONING AND PERFORMANCE TEST REPORTS

5 ELECTRICITY AND CONTROL ..... VOLUME 1

5.1 CONTROL ARCHITECTURE
5.2 ELECTRICAL LOAD LIST
5.3 PROCESS FUNCTIONAL DESCRIPTION
5.3.1 MBBR
5.3.2 Spidflow DAF
5.3.3 Hydra-Pol 500 for Belt Filter Press Polymer
5.3.4 Hydra-Pol 250 for DAF Polymer
5.3.5 Polymer Dosing Skid for Belt Filter Press
5.3.6 Polymer Dosing Skid for DAF

TABLE OF CONTENTS
Operation & Maintenance Manual
Iqaluit – Waste Water Treatment Plant Upgrade

5.4 WIRING DIAGRAMS

5.5 EXCHANGE TABLE

6 OPERATION AND MAINTENANCE ..... VOLUME 1

6.1 MBBR

6.1.1 Handling, Storage and Installation Manual

6.1.2 Operation and Maintenance Manual

6.2 SPIDFLOW DAF

6.2.1 Installation, Operation and Maintenance Manual

6.3 HYDRA-POL POLYMER PREPARATION SYSTEM

6.3.1 Installation, Operation and Maintenance Manual

6.4 POLYMER DOSING SKID

6.4.1 Installation, Operation and Maintenance Manual

7 SPARE PARTS ..... VOLUME 1

8 MANUFACTURER MAINTENANCE MANUAL ..... VOLUME 2

8.1 MANUFACTURER LIST

8.2 MANUFACTURER INSTALLATION, OPERATION AND MAINTENANCE MANUAL

LEFT BLANK

OPERATION AND MAINTENANCE MANUAL

VOLUME 2

LEFT BLANK

8 – MANUFACTURER MAINTENANCE MANUAL

8.1 – MANUFACTURER LIST

LEFT BLANK

IQALUIT - WWTP UPGRADE - NUNAVUT			
MANUFACTURER INSTALLATION, OPERATION AND MAINTENANCE MANUAL			
SECTION		MANUFACTURER LIST	
8.2			
	001	AERZEN	
		Model GM 15L DN 100, Blower	
		c/w accessories	
	002	ALLEN BRADLEY	
		Model 836T, Pressure switch	
	003	ASCO	
		Model 8210G004, Solenoid valve	
		Model 8210G056, Solenoid valve	
		Model 8210G094, Solenoid valve	
		Model 8345G001, Solenoid valve	
	004	ASHCROFT	
		Type 1009, Pressure gauge	
		Type 310, Diaphragm seal	
	005	BRAY	
		Series 31, Butterfly valve	
		Series 92, Pneumatic actuator	
		Series 6A, Electro-pneumatic positioner	
		Series 70, Electric actuator	
		Series 63, Solenoid valve	
		Series 50, Valve status monitor (limit switch)	
		Series 1, Manual operator (handle)	
		Series 55, Filter-Regulator	
	006	CHEMLINE	
		Type 21, Ball valve	
		Type 57, Butterfly valve	
		ER Series, Electric actuator	
		BT-BC-FT-FV Series, Ball check and foot valve	
		FC-FS Series, Variable area flowmeter	
		SB 12 Series, Back pressure and pressure relief valve	
		SG Series, Gauge isolator	
		SM-SM2 Series, Metering ball valve	
	007	CROMPTON GREAVES	
		Model Emotron M20, Shaft power monitor	
	008	EDUR	
		Model LBUX602C 160L, Pump (white water)	
	009	ENDRESS + HAUSER	
		Proline Promag W 400, Electromagnetic flowmeter	
		Cerabar PMC21, Pressure transducer	
		Cerabar M PMP51, Pressure transmitter	
		Soliswitch FTE31, Level switch (paddle)	
	010	ENVIREQUIP	
		Series EVG, Mixers	
		c/w Nord gearmotor	
	011	FLOW CONTROL COMPONENTS	
		Figure 90B-200NPT, Check valve	

SECTION	MANUFACTURER LIST
012	FLOW-TEK
	Series 7000, Ball valve
	Series F15, Ball valve
013	FLYGT
	Model ENM-10, Level switch (float)
014	GEMS
	Series 27, Controller
015	GUILMONT
	Model GF 8431-2125, Flowmeter
016	HACH
	Model sc200, Universal controller
	Model D3725E2T, Conductivity sensor
	Model TSS sc, Turbidity sensor
	Model LDO Model 2, Dissolved oxygen probe
017	IFC
	Model B150FSS4BW1-OB, Strainer
018	IFM EFECTOR
	Model PN7294, Pressure switch
019	KINGTRON
	Figure S-212T, Ball valve
020	KITZ
	Series AKUJM, Globe valve
021	KOFLO
	Model 1.5-40C-4-6-2, Static mixer
022	NETZSCH
	Model NM015BY01L06B, Progressive cavity pump (DAF polymer)
	Model NM021BY01L06B, Progressive cavity pump (BFP polymer)
	Model NM031BY01L06B, Progressive cavity pump (TWAS)
	Model NM045BY01L07V, Progressive cavity pump (BFP)
023	NORD
	Clincher series, Gearmotor
	90 series right angle, Gearmotor
024	PRATT
	Model 611A-E1-L, Ballcentric plug valve
025	PRIMARY FLUID SYSTEM
	Accudraw PVC Series, Calibration cylinder
026	RITE CORPORATION
	Model V0415XEZ205, Check Valve
027	SCHUTTE & KOERTING
	Figure 264, Eductor

IQALUIT - WWTP UPGRADE - NUNAVUT			
MANUFACTURER INSTALLATION, OPERATION AND MAINTENANCE MANUAL			
SECTION		MANUFACTURER LIST	
	028	SHARPE	
		Series 45114, Globe valve	
	029	TIGER-VAC	
		Model EC-12, Vacuum powerhead	
	030	WAM	
		Model MBF, Feeder	
	031	WEG	
		Model FC25504W01, Motor (chain scraper system)	
		Model 02036ET3H256TC-W22, Motor (white water pump)	

LEFT BLANK

8 – MANUFACTURER MAINTENANCE MANUAL

8.2 – MANUFACTURER INSTALLATION, OPERATION AND MAINTENANCE MANUAL

LEFT BLANK

AERZEN

MODEL GM 15L DN 100, BLOWER

LEFT BLANK

OPERATING INSTRUCTIONS

POSITIVE DISPLACEMENT BLOWER
DELTA BLOWER

Read the instructions prior to performing any task!
Keep for future reference!



G4-006 Q

Translation of the original operating instructions
Material no.:2000020148
Doc content: 01.04.2017
Series: : GM 3 S - GM 400 L
GB

AERZEN

Aerzener Maschinenfabrik GmbH
Reherweg 28
31855 Aerzen
Germany
Telephone: +49 (0) 5154 81-0
Fax: +49 (0) 5154 81-9191
Email: info@aerzener.de
Internet: www.aerzen.com

G4-006 Q, 1, en_GB

This manual was created by:
Technical documentation department of Aerzener Maschinenfabrik GmbH
Technical editing and illustration
Heiko Nickel / Angela Pedack

© Aerzener Maschinenfabrik GmbH 2017

Table of contents

1 General Information ... 8
1.1 Information about these instructions ... 8
1.2 Explanation of symbols ... 8
1.3 Copyright protection ... 10
1.4 Addresses ... 11
1.4.1 Manufacturer ... 11
1.4.2 Customer service ... 11
2 Safety ... 12
2.1 Residual risks and fundamental risks ... 12
2.1.1 Electrical hazards ... 13
2.1.2 Hazards associated with the acoustic hood ... 15
2.1.3 Risks of machines with belt guard ... 18
2.1.4 Hazards at the installation site and operating site ... 20
2.1.5 Mechanical hazards ... 23
2.1.6 Thermal hazards ... 24
2.1.7 Risks from pressurised components ... 24
2.1.8 Risks from hazardous substances ... 25
2.1.9 Risks from flammable substances ... 26
2.1.10 Risks associated with conveyance of nitrogen ... 27
2.2 Intended use ... 28
2.3 Foreseeable misuse ... 29
2.4 Responsibility of the operator ... 31
2.5 Replacement parts ... 34
2.6 Requirements for personnel ... 34
2.6.1 Qualifications ... 34
2.6.2 Unauthorised personnel ... 37
2.6.3 Training ... 38
2.7 Personal protective equipment ... 39
2.8 Safety devices ... 40
2.8.1 EMERGENCY STOP function ... 40
2.8.2 Hinged support with lifting device ... 43
2.8.3 Motor mount without lifting device ... 43
2.8.4 Acoustic hood ... 43
2.8.5 Belt guard ... 44
2.8.6 Cover of the sheave ... 44
2.9 Safety classification ... 44
2.10 Instruction signs ... 47
2.11 Hazards in the operating and/or display area ... 48
2.12 Securing the machine against restarting ... 49
2.13 Environmental protection ... 50
3 Design and operation ... 52
3.1 Overview of assemblies ... 52
3.2 Overview of assemblies ... 53

3.3 Overview of assemblies ... 54
3.4 Operating principle ... 55
3.5 Operating modes ... 55
3.6 Operating methods ... 56
3.6.1 Operating information for pneumatic conveyance ... 56
3.6.2 Operating information for air-separation systems ... 56
3.6.3 Description of assemblies ... 56
3.7 Control elements (optional) ... 59
3.7.1 Factory-installed control element ... 59
3.7.2 Customer-installed control element ... 59
3.8 Accessories ... 60
3.8.1 Drive motor ... 60
3.8.2 AERtronic ... 62
3.8.3 Instrumentation ... 62
3.8.4 Frequency converter ... 63
3.8.5 Machine terminal box ... 64
3.8.6 Discharge pressure gauge ... 65
3.8.7 Nitrogen gauge ... 65
3.8.8 Maintenance indicator ... 65
3.8.9 Intake silencer ... 66
3.8.10 Discharge silencer ... 67
3.8.11 Safety valve ... 67
3.8.12 Non-return flap ... 68
3.8.13 Start-up relief device for DN80 to DN400 ... 68
3.8.14 Start-up relief device for DN50 to DN80 ... 69
3.8.15 Belt drive ... 69
3.8.16 Acoustic hood ... 70
3.9 Required tools ... 71

4 Transport, packaging and storage ... 73
4.1 Transport ... 73
4.1.1 Safety instructions ... 73
4.1.2 Delivery method ... 76
4.1.3 Packaging ... 77
4.1.4 Transport inspection ... 80
4.1.5 Transport of packaged units ... 81
4.1.6 Transport to the installation site ... 83
4.2 Storage and preservation ... 85
4.2.1 Storage ... 85
4.2.2 Preservation ... 87

5 Set-up and installation ... 89
5.1 Safety instructions ... 89
5.2 Requirements for the installation site ... 91
5.3 Installation ... 93
5.4 Connecting the system pipeline ... 94
5.5 Connecting the drive motor ... 95

5.5.1 Preparing the connection 95
5.5.2 Routing cables 96
5.5.3 Connecting the drive motor 96
5.6 Connecting the drive motor 97
5.6.1 Preparing the connection 97
5.6.2 Routing cables 98
5.6.3 Connecting the drive motor 98
5.7 Connecting the machine's terminal strip 99
5.8 Connecting the earthing 99
5.9 Connecting the earthing 100
5.10 Laying the insulation mat 100
6 Initial start-up 101
6.1 Safety instructions 101
6.2 Preparation for commissioning 102
6.3 Performing commissioning 106
6.3.1 Filling oil, version featuring oil system 106
6.3.2 Filling with oil, models without oil system 108
6.3.3 Establishing an electrical connection 108
6.3.4 Handling the hinged motor support *with* lifting device 110
6.3.5 Handling hinged motor support *without* lifting device 112
6.3.6 Carrying out a test run 114
6.4 Performing checks after commissioning 119
7 Operation 120
7.1 Safety instructions 120
7.2 Shut-down in case of emergency 121
7.3 Switching on 122
7.3.1 On-site operation 122
7.3.2 Remote operation 123
7.3.3 Automatic operation 123
7.4 Displaying operating parameters 124
7.5 Switching off 124
7.5.1 On-site operation 124
7.5.2 Remote-controlled operation 125
7.5.3 Automatic operation 125
7.5.4 Switching off in nitrogen operation 125
7.6 Decommissioning 126
7.7 Measures for recommissioning 126
7.7.1 Commissioning after adjustment works 126
7.7.2 Commissioning after maintenance work 126
7.7.3 Commissioning after fault rectification 126
7.8 Adjusting valves 126
7.8.1 Adjusting the start unloading device 127
7.8.2 Commissioning after adjustments 129

8 Maintenance 130
8.1 Safety instructions 130
8.2 Maintenance schedule 132
8.2.1 Maintenance schedule for normal operation 133
8.3 Maintenance work 135
8.3.1 First oil filling 136
8.3.2 Checking the oil level 139
8.3.3 Correcting the oil level 141
8.3.4 Replacing the grease on gas-tight drive shafts 147
8.3.5 Changing oil 148
8.3.6 Replacing the intake filter 155
8.3.7 Checking the sheaves 155
8.3.8 Moving and checking the protective cover of the sheaves 156
8.3.9 Replacing belts, version *with* lifting device 156
8.3.10 Replacing belts, version *without* lifting device 158
8.3.11 Checking the AERZEN safety valve 160
8.3.12 Checking that sealing plugs have been removed 161
8.3.13 Checking the non-return flap 161
8.3.14 Cleaning the nozzle of the start-up relief device .. 162
8.3.15 Checking the inlet and exhaust air openings on the acoustic hood 163
8.3.16 Checking the belt guard 164
8.3.17 Checking pipelines for tightness 164
8.4 Cleaning after maintenance 164
8.5 Commissioning after maintenance 165
8.6 Checks after maintenance work 165

9 Malfunctions 166
9.1 Safety instructions 166
9.2 Fault displays 168
9.3 Fault diagnosis and troubleshooting 168
9.4 Status and error messages (component suppliers) .. 170
9.5 Commissioning after malfunction rectification 170
9.6 Checks after malfunction rectification 171

10 Disassembly and disposal 172
10.1 Safety instructions 172
10.2 Disassembly 174
10.3 Disposal 174

11 Technical specifications 178
11.1 Dimensions and weights 178
11.2 Dimension specifications sheet 179
11.3 Operating data 180
11.4 Technical performance data 181
11.5 Type plate(s) and placement 182
11.6 Noise emissions 185

11.7 Operating materials 187
11.7.1 Lubricant oil specifications 187
11.7.2 Lubricant oil in the food and pharmaceutical industry 189
11.7.3 Grease specifications 190
11.7.4 Lubricant quantities 191
11.8 Coating 193
11.9 Electrical details 194
11.9.1 Voltage fluctuations 194
11.9.2 Earthing strap cross-sections 194
11.9.3 Motor overload protection 194
11.10 Accessory information 194
11.10.1 Intake filter 194
11.10.2 Start unloading device DN 50 to DN 80 194
11.10.3 Start-up unloading device DN 80 to DN 400 195
11.10.4 Balancing grade 195
12 Notes on the Declaration of Conformity 196
13 Glossary 197
14 Index 198

1 General Information

1.1 Information about these instructions

These instructions allow for the safe and efficient handling of this machine. These instructions are an integral part of the machine and must be kept in the immediate vicinity of the machine so that it is accessible for personnel at all times. Keep these instructions in a safe place for future reference.

Personnel must read these instructions carefully and have understood them before beginning work. A fundamental requirement for working safely is compliance with all specified safety notes and guidelines in these instructions.

In addition, the local occupational health and general safety regulations apply to the machine's range of applications.

The diagrams in these instructions serve to provide the user with a basic understanding and may deviate somewhat from the actual design.

The following is a list of additional, supplementary documents:

Declaration of Conformity	CE MRL 1012-1 PED
Installation drawing	
Operating manual Drive motor	
Operating manual AERZEN Safety Valve	G4-002...

1.2 Explanation of symbols

Safety instructions

Safety instructions in this manual are illustrated using symbols. The safety instructions are organised into signalling words which designate the level of danger posed.

DANGER!
This combination of symbol and signalling word points to an imminently dangerous situation that could be fatal or lead to serious injury if it is not avoided.



WARNING!
This combination of symbol and signalling word points to a potentially dangerous situation that could be fatal or lead to serious injury if it is not avoided.



CAUTION!
This combination of symbol and signalling word points to a potentially dangerous situation that could lead to minor injuries if it is not avoided.



NOTICE!
This combination of symbol and signalling word points to a potentially dangerous situation that could lead to material damage if it is not avoided.



ENVIRONMENT!
This combination of symbol and signalling word points to a potential risk for the environment.

Safety instructions as part of operating guidelines

Safety instructions may relate to certain individual operating guidelines. These safety instructions are integrated into the operating guidelines themselves so as to simplify the task of reading while carrying out work. The signalling words mentioned above are used.

For example:

1. Loosen screw.
2. 

   CAUTION!
   Pinch hazard on the cover!

   Close cover carefully.
3. Tighten screw.

Tips and recommendations



This symbol draws attention to useful tips and recommendations as well as information about efficient and trouble-free operation.

Special safety instructions

To draw attention to exceptional hazards, the following symbols are used as part of the safety instructions:

Warning signs	Type of danger
	Warning – automatic start-up.
	Warning – hand injuries.
	Warning – high-voltage.
	Warning – flammable substances.
	Warning – danger zone.

Additional designations

To draw attention to operating guidelines, events, listings, references and other elements in this manual, the following designations are used:

Designation	Explanation
1., 2., 3. ...	Step-by-step operating guidelines
	References to sections of this manual and to relevant documentation
	Lists without a designated sequence
[push-button]	Control elements (e.g. push-buttons, switches), display elements (e.g. signal lamps)
„Display“	Screen elements (e.g. buttons, allocation of function keys)

1.3 Copyright protection

The contents of this manual is protected by copyright. The use of this manual is permitted within the framework of machine use. Any other use is excluded unless there is written approval by the manufacturer.

1.4 Addresses

1.4.1 Manufacturer

Tab. 1: Manufacturer

Address	Aerzener Maschinenfabrik GmbH Reherweg 28 31855 Aerzen Germany
Telephone	+49 (0) 51 54 8 10
Fax	+49 (0) 51 54 8 1 9191
E-mail	info@aerzener.de
Internet	www.aerzen.com

1.4.2 Customer service

Our customer service staff are on hand to provide you with technical information:

Tab. 2: After sales service/service contact

Address	Aerzener Maschinenfabrik GmbH Reherweg 28 31855 Aerzen Germany
Service hotline	+49 171 3 51 18 34
E-mail	info@aerzener.de
Internet	www.aerzen.com

In addition, we are always interested in receiving information and feedback pertaining to machine use that could be useful in helping us improve our products.

2 Safety

This section gives an overview of all important safety aspects relevant to the protection of persons and to safe and trouble-free operation. Further task-based safety instructions are contained in the section on the individual phases of the machine's service life.

Non-compliance with the handling and safety instructions provided in this manual can lead to serious hazards.

The following section outlines the residual risks and hazards during the service life of the product that may arise as a result of non-compliance with safety instructions or the disabling of safety devices.

In order to reduce health and safety risks and to avoid dangerous situations, observe the safety and warning notes in this manual.

2.1 Residual risks and fundamental risks

The following chapter states the general residual risks that have been established on the basis of a risk analysis.

- Compliance with these safety instructions and the safety instructions in the main chapters reduces the risk of personal injury, property damage and environmental harm and prevents dangerous situations.

2.1.1 Electrical hazards

Electric current



DANGER!

Risk of fatal injury from electric current!

Coming into contact with live parts poses an immediate and potentially fatal risk of an electric shock. Damage to insulation or individual components can prove fatal.

- Work on the electrical system should only be carried out by qualified electrical personnel.
- If the power supply's insulation is damaged, switch off the machine immediately and have the damage repaired.
- Before starting to work on active parts of the electrical systems and operating equipment, ensure that the machine is completely disconnected from any power source and remains so for the for the duration of the work.

  When doing this observe the following 5 safety rules:
  - Disconnect the machine completely.
  - Secure the machine against restarting.
  - Confirm that the machine is completely disconnected from any power source.
  - Earth and short-circuit the device.
  - Cover or shut off adjacent live parts.
- Never bypass or deactivate fuses.
- When changing fuses, comply with the correct specified amperage.
- Keep moisture away from live parts. Moisture can cause the machine to short-circuit.

Stored charges



DANGER!

There is a risk of fatal injury from stored charges!

Electrical charges can be stored in electronic components and maintained even after the deactivation and separation of the electric power supply. Coming into contact with these components can lead to fatal injuries.

- Observe all applicable safety rules.
- Before performing any work on the listed components, disconnect them completely from the power supply.
- Observe a waiting period of 15 minutes under all circumstances! This will allow the internal capacitors to discharge.
- Measure to ensure there is no live voltage!

Operating faults caused by short-circuiting



WARNING!

Risk of injury from operating faults!

If the electrical system short circuits this can render the entire system inoperable. Operating faults can lead to serious injuries.

- Connect the machine's earthing connections and acoustic hood to the local equipotential bonding rail.
- Install a fault-current circuit breaker in order to prevent sparks and contact voltage in the event of a fault.
- After all work on the machine has been carried out, ensure that the earthing connection and equipotential bonding are connected correctly.

2.1.2 Hazards associated with the acoustic hood

Inside the acoustic hood

DANGER!

Risk of injury if the acoustic hood is open during operation!

By opening the acoustic hood while the machine is in operation there is a risk of direct contact with hazardous zones, e.g. hot surfaces or rotating or moving components.

– Never open the acoustic hood while the machine is in operation or in stand-by mode.
– Never stand on or reach into the acoustic hood while the machine is in operation.
– Always lock the acoustic hood with the key provided and keep it locked.
– Only allow authorised personnel access to the key.

Falling parts

CAUTION!

Risk of injury from unsecured parts of the acoustic hood!

Unsecured parts of the acoustic hood can lead to injuries if they fall from the machine.

– Secure loose elements against falling.
– Always wear protective gear.
– Have a second person help you.

Air flow at the air outlet

CAUTION!

Risk of injury from the strong air flow at the air outlet of the acoustic hood!

Strong air flows at the air outlet on the acoustic hood can suck in dirt particles from the environment and disperse them.

– Avoid standing in the direct vicinity of the air flow.
– Wear safety goggles and a safety mask.

Noise



WARNING!

Risk of injury from noise!

The noise level present at the installation area can cause hearing damage. The magnitude of the noise level is dependent on operational data, among other factors.

– Never undertake measures to bypass or deactivate sound insulation.
– Wear hearing protection while working.
– Only stand in the high-noise-level area if it is absolutely necessary.

Risk of falling



CAUTION!

Risk of injury from standing on the acoustic hood!

Standing on the acoustic hood carries with it a risk of injury from the potential collapse of the roof elements. Persons could fall into the internal area of the machine.

– Never stand on the acoustic hood.
– Never exert pressure on roof elements.

Spark-generating work



WARNING!

Risk of fire and injury / damage to property from spark-generating work in the immediate vicinity of the machine!

Welding or cutting work on the machine or in the immediate vicinity of the machine can cause fire to break out. This can result in damage to property or personal injury.

Sparks and incandescent or flammable objects could be sucked in through the air openings on the acoustic hood or through the intake silencer. The ventilator can fan flames leading to the formation of smouldering objects. The insulation material may, under unfavourable conditions, begin to smoulder.

– Avoid allowing sparks to fly in the direction of the machine.
– Never carry out work that generates sparks while the machine is in operation.

Risk of fire and injury



WARNING!

Risk of fire from easily-flammable materials that are sucked into the machine!

Easily-flammable material, fluids or gases can be sucked into the machine and cause it to catch fire. This can lead to serious or fatal injuries.

- Never allow flammable materials to be sucked into the machine.
- In case of emergencies, have extinguishing agents (fire blanket, fire extinguisher, fire-extinguishing powder for fire class A, B, C) at hand.
- Immediately report suspicious materials, liquids or gases to the responsible persons.
- In case of fire, stop your work immediately and make an emergency call.

Use of non-original belts



WARNING!

Risk of fire and injury from using non-original belts!

If, for a number of possible reasons, the machine is running sluggishly or is blocked, the belts may slip if non-original belts are being used. This results in heat generation which may lead to a fire.

- Only use original belts from the machine manufacturer.
- Adhere strictly to the designated belt type, as only this type will have the required characteristics.
- Never select and use random belts.
- Activate motor overload protection and observe the setting values.

2.1.3 Risks of machines with belt guard

Lärm



WARNING!

Risk of injury from noise!

The noise level present at the installation area can cause severe hearing damage. The magnitude of the noise level is dependent on operational data, among other factors.

– Never undertake measures to bypass or deactivate sound insulation.
– Wear hearing protection while working.
– Only stand in the high-noise-level area if it is absolutely necessary.

Spark-generating work



WARNING!

Risk of fire and injury / damage to property from spark-generating work in the immediate vicinity of the machine!

Welding or cutting work on the machine or in the immediate vicinity of the machine can cause fire.

Sparks and incandescent or flammable objects could be sucked in through the intake silencer. The air flow can fan flames leading to the formation of smouldering objects. The insulation material may, under unfavourable conditions, begin to smoulder.

– Avoid allowing sparks to fly in the direction of the machine.
– Never carry out work that generates sparks while the machine is in operation.

Risk of fire and injury



WARNING!

Risk of fire from easily-flammable materials that are sucked into the machine!

Easily-flammable material, fluids or gases can be sucked into the machine and cause it to catch fire. This can lead to serious or fatal injuries.

- Never allow flammable materials to be sucked into the machine.
- In case of emergencies, have extinguishing agents (fire blanket, fire extinguisher, fire-extinguishing powder for fire class A, B, C) at hand.
- Immediately report suspicious materials, liquids or gases to the responsible persons.
- In case of fire, stop your work immediately and make an emergency call.

Use of non-original belts



WARNING!

Risk of fire and injury from using non-original belts!

If, for a number of possible reasons, the machine is running sluggishly or is blocked, the belts may slip if non-original belts are being used. This results in heat generation which may lead to a fire.

- Only use original belts from the machine manufacturer.
- Adhere strictly to the designated belt type, as only this type will have the required characteristics.
- Never select and use random belts.
- Activate motor overload protection and observe the setting values.

2.1.4 Hazards at the installation site and operating site

Securing the machine against restarting



DANGER!

An unauthorised or unregulated restart can have fatal consequences.

An unauthorised or unregulated restart of the machine can lead to serious or fatal injuries. There may be people located in the hazard zone. Activating the energy supply and starting the machine could result in those people being fatally injured.

- Prevent the machine from restarting by:
  - disconnecting the electrical power supply.
  - activating the EMERGENCY STOP function
  - operating the main circuit breaker
  - attaching a padlock to the main circuit breaker
  - checking and ensuring that the machine is completely disconnected from the power source
  - displaying a sign on the machine that prohibits a machine start
  - displaying a sign on the remote station that prohibits a machine start
- Before restarting, ensure that safety devices are installed and functioning correctly and that there are no potential hazards to the safety of any persons.

Water contact with live components



DANGER!

Risk of fatal injury from water contact with live components!

Risk of fatal injury from cleaning work with water in areas with live components. Water spray may enter electrical and electronic components.

- Do not use water.
- When performing cleaning operations, proceed with care and make sure that no water comes into contact with live components.
- Water spray must not enter electrical and electronic components.
- Under no circumstances must areas with live voltage be cleaned using a high-pressure jet.

Unexpected machine start



WARNING!

Risk of injury or personal shock if the machine starts suddenly!

For example, a superordinate control system could send a start command to the machine so that it starts operating.

- Shut down the machine for all work and secure it against restarting.
- When operating via a control centre, also take suitable measures at that location to prevent restarting.
- You must be prepared for the machine to start at any time.

Sharp edges and corners



CAUTION!

Risk of injury from sharp edges and corners!

Sharp edges and corners can cause excoriations and cuts on the skin.

- If working in the vicinity of sharp edges and corners, proceed with caution.
- If in doubt, wear protective gloves.

Intake components



WARNING!

Risk of injury from intake components!

Intake-side silencers, at their inlets, suck in ambient air with great force.

- During operation, never place body parts or objects in front of the inlet of the silencer.
- Maintain a safe distance from intake components.

Sudden gas emission



CAUTION!

Risk of injury from sudden gas emission!

Components such as safety valves and start unloading devices may open suddenly during operation and emit hot compressed gas. Dust particles may be blown around.

- Never attempt to look inside the blow-off opening.
- Wear safety glasses when in the immediate vicinity of these components.
- Never close the blow-off opening.
- Always keep the blow-off opening clean.

Vibrations



WARNING!

Risk of injury from vibrations!

Vibrations may, in the long term, lead to injuries and chronic damage to personal health. The vibration source is decoupled from the surrounding environment by means of a vibration damper.

- Do not deactivate the vibration damper.
- Avoid coming into contact with vibrating areas.

Build-up of fluids



CAUTION!

Risk of injury from slipping as a result of a build-up of fluids!

Slipping on fluids that have built up on the floor area may lead to a fall. A fall may result in injury.

- Immediately remove built-up fluids with a suitable medium.
- Wear non-slip safety shoes.
- Place a warning notice and mandatory sign on or in the vicinity of any area where there could be a build-up of fluids on the floor area.

2.1.5 Mechanical hazards

Rotating components



WARNING!

Risk of injury from rotating components!

Rotating components may cause serious injury.

- During operation never reach into or perform work on rotating components.
- Never open covers during operation.
- Observe the lag time: before opening covers, make sure that no components are still moving.
- When in a hazard area, wear tight-fitting protective work clothing with minimal tensile strength.

Fan



WARNING!

Risk of injury from rotating components of the ventilator!

Rotating components of the ventilator can cause serious injuries due to their high revolution speed.

- Prior to any work, switch off the machine and secure it against restarting.
- Observe the lag time.
- Before opening covers, check that no components are still moving.
- Never open covers or maintenance covers and work on the ventilator during operation.
- The blade wheel must not be accessible during operation.

Risk of crushing and shearing injuries



WARNING!

Risk of crushing and shearing injury from the hinged motor support!

Risk of injury from moving or adjusting the hinged motor support!

- When transporting the machine, always have the hinged motor support fixed in place.
- Never step or reach into the swivelling range of the hinged motor support.

2.1.6 Thermal hazards

Hot surfaces

WARNING!

Risk of injury from hot surfaces!

Component surfaces may become very hot during operation. Skin contact with hot surfaces causes serious burns.

– For all work performed in the vicinity of hot surfaces, always wear protective work clothing and protective gloves.
– Before beginning any work, ensure that all surfaces have cooled down to the environment temperature.

Hot media

WARNING!

There is a risk of injury from the sudden emission of hot media from the valve, e.g. a pressure valve!

The emission of hot media may lead to scalding.

– Never stand in the immediate vicinity of the outlet vent.
– Never attempt to look inside the outlet vent.
– Never close or cover the outlet vent.

2.1.7 Risks from pressurised components

Pressurised components

WARNING!

Risk of injury from compressed conveyed materials!

When disassembling pressurised components, or in the case of a fault in a pressurised component such as pipes, containers, hoses or valves, hot conveying material can escape with a strong gas flow. This can result in serious injury.

– Before beginning work, fully relieve pressurised components of pressure.
– Check that components are not pressurised.
– Replace malfunctioning components immediately.
– Only disassemble pressurised components when they are not under pressure.

Noise during disassembly

CAUTION!

Risk of injury from noise during the disassembly of pressurised gas pipes!

For the disassembly of pressurised components, such as pipes, containers, hoses or valves, hot conveying material is released, resulting in noise. This can cause hearing damage.

– Before beginning work, fully relieve pressurised components of pressure.
– Check that components are not pressurised.
– Only disassemble pressurised components when they are not under pressure.

2.1.8 Risks from hazardous substances

Hazardous substances

WARNING!

Risk of poisoning due to hazardous substances! Risk of skin irritation and allergic reactions!

Substances such as lubricants and cleaning agents contain hazardous components. These can lead to serious poisoning, skin irritation or allergic reactions.

– Observe the safety data sheets.
– Avoid shaking these substances and avoid mist formation.
– If inhalation occurs, bring the affected person out into fresh air immediately. Seek medical help.
– If a substance is swallowed, seek medical help immediately. The mouth must be rinsed out thoroughly with water.
– Avoid skin and eye contact:
  Before working with these substances apply suitable hand protection cream.
  Wear plastic or rubber protective gloves.
– Remove any soiling from the workspace properly and in an environmentally-friendly way.
  Lubricants and cleaning agents must not enter the sewerage system or run into soil.
– Do not eat, drink or smoke when working with these substances.

Hazardous dust



WARNING!

Risk of injury from rising dust!

Dust deposits may rise during machine operation.

Inhaling this dust may, in the long term, lead to lung damage or other health problems.

– Avoid the relevant hazardous area.
– For all work in the hazard zone wear light respiratory protection.

2.1.9 Risks from flammable substances

Fire hazard



WARNING!

Risk of fire from spark-generating work and ignition sources in the immediate vicinity of the machine!

Easily-flammable substances, fluids or gases may catch fire and cause serious or fatal injury.

– Take measures to protect against the build-up of steam in deep-lying or closed areas.
– Take measures to protect against electro-static pressure charging.
– Do not smoke in the hazard zone or in the direct vicinity of the machine.
  Do not use naked lights, fire or ignition sources of any kind.
– Immediately report suspicious materials, liquids or gases to the responsible persons.
– Have extinguishing agents (fire-extinguishing powder) for fire class A, B, and C at hand.
– In case of fire, stop your work immediately. Leave the hazard zone until it is safe to return and notify the fire brigade.

Improper fire protection

WARNING!

There is a risk of injury and material damage from limited or improper fire protection!

If, in the event of fire, the fire extinguisher is not operational or not suited to the specific class of fire, there is a risk of serious or fatal injury and considerable material damage.

- Ensure that only suitable fire extinguishers (fire-extinguishing powder for fire classes A, B and C) are at hand.
- Inspect fire extinguishers every 2 years to ensure they are functioning correctly.
- Refill fire extinguishers after each use.
- Only use extinguishing agents and replacement parts that correspond to the recognised model specified on the fire extinguisher.
- In case of use, observe the safety and operating instructions on the fire extinguisher.

2.1.10 Risks associated with conveyance of nitrogen

Leaking gas

DANGER!

Risk of suffocation from build-up of leaking gases during nitrogen conveyance!

Gaseous nitrogen displaces the oxygen in the room. High concentrations can cause persons to suffocate. Symptoms here include the loss of physical mobility and loss of consciousness. An affected person will not notice that they are “suffocating”. Escaping nitrogen can accumulate for example in recesses, wells, acoustic hoods.

- Avoid the occurrence of leaks.
- Ventilate the installation site properly.
- Set the lag time for the fan of the acoustic hood and pay close attention to it.
- After a machine downtime, ventilate the machine for a period.
- Guide leaking gases directly out of the machine.
- Guide leaking gases directly into a collective line.

Leaking gases during machine downtime

DANGER!

Risk of suffocation from build-up of leaking gases during machine downtime!

Depending on the type of sealing used, gaseous nitrogen can escape into the environment during machine downtime. This can lead to a build-up of gases inside the acoustic hood or at the installation site. High concentrations can cause persons to suffocate.

– Interrupt the flow of nitrogen into the conveying system.
– Guide nitrogen away using a collective line.
– Ventilate the installation site properly.

Build-up of gas

DANGER!

Risk of suffocation from build-up of nitrogen during conveyance!

When the safety valve is opened, nitrogen is released from the system. There may be a build-up of gas with high concentrations of nitrogen.

Gaseous nitrogen displaces the oxygen in the room. High concentrations of nitrogen can cause persons to suffocate. Symptoms here include the loss of physical mobility and loss of consciousness. The persons affected do not notice that they are “suffocating”.

Escaped nitrogen can accumulate in recesses, wells, acoustic hoods etc.

– Avoid a build-up of gas
– Guide gases directly out of the machine.
– Guide gases directly into a collective line.
– Ventilate the installation site properly.

2.2 Intended use



Fig. 1: Correct use

The **positive displacement blower** machine is intended for conveying and compressing air and non-flammable gases.

The **positive displacement blower** machine is intended for operation with non-flammable gases in a non-explosive atmosphere.

The **positive displacement blower** machine has been designed and constructed solely for its “intended use” in the industrial field, as described here.

Observe and comply with the job-based operating data and operational limits!

This intended use also includes compliance with all information in this instruction manual.

Any application that deviates from the intended use, or any other type of non-standard application, is considered misuse.



Operating data that deviate from the standard must be coordinated with the manufacturer.

2.3 Foreseeable misuse

Serious injury



DANGER!

Danger in case of misuse! Dangerous situations could occur that may lead to fatal or serious injury!

- Never disregard the instructions for “intended use”.
- Never operate the machine in an operating area other than the one intended.
- Never convey or compress gases that are not listed in the order confirmation and the technical data.
- Never disregard the following information on misuse.

Serious material damage

NOTICE!

Danger in case of misuse! Dangerous situations could occur that may lead to serious machine damage!

– Never disregard the instructions for “intended use”.
– Never operate the machine in an operating area other than the one intended.
– Never convey or compress gases that are not listed in the order confirmation and the technical data.
– Never disregard the following information on misuse.

Misuse



Fig. 2: Prohibited use

The machine is not intended for:

- Conveying media in solid, liquid or powder form.
- Conveying caustic media.
- Conveying corrosive media.
- Conveying flammable or poisonous gases, vapours or mists.
- Alteration, retrofitting or modification of the overall design or of individual equipment parts, with the aim of altering the field of application or scope of use.

Further examples of misuse

The following operating modes/applications and uses are considered improper and must be avoided!

- **Operation:**
  - outside the scope of intended use.
  - outside the scope of the intended operating data.
  - using gases other than those originally intended.
  - with the machine operating in the incorrect direction of rotation.
  - in a potentially-explosive atmosphere.
  - With closed flange connections
  - with missing or damaged components
  - without a correctly connected control system, fault transmitter, EMERGENCY STOP function.
  - without any or with damaged protective equipment.
  - with contaminated intake filter or starting strainer.
  - without sufficient ventilation of the room.
  - activation while the machine is coming to a stop or when it is rotating backwards.
  - pole changing to a lower rotational speed before the drive motor has come to a standstill.
  - Non-compliance with maintenance intervals.
  - Exceeding the maximum oil level.
- **Operation without:**
  - Intake filter
  - Safety valve
  - Intake silencer
  - oil
- **Applications:**
  - using the machine to “purge” blockages in the conveying pipes. exceeding the maximum permissible discharge pressure.
  - using the safety valve or pressure valve to regulate the operating data.
- **Installation:**
  - installation on inclined, sloped or lamellar surfaces.
  - installation outdoors without due consideration of particular protective measures for avoiding the effects of weather conditions.
  - attachment of transportation equipment to the acoustic hood.
  - open flames or spark formation in the immediate vicinity of the machine.

2.4 Responsibility of the operator

Operator

The operator is the person who either operates the machine himself, for commercial or business purposes, or who assigns the use of the machine to a third party. During operation, the operator holds legal responsibility pertaining to the product, for the protection of the user, personnel or a third party.

Operator's obligations

The machine is used for commercial purposes. The operator of the machine is thus subject to the applicable legal obligations for occupational safety.

Alongside the safety instructions in this manual, the safety, occupational and environmental regulations relevant to the field of application for the machine must also be complied with.

The operator is obligated to:

- Inform himself about the applicable occupational protection regulations. As part of a hazard assessment, the operator must also establish the hazards that could result from special working conditions at the machine location. He must implement these for the operation of the machine in the form of operating instructions. The necessary safety data sheets can be obtained from the relevant manufacturer.
- During the entire service life of the machine, check that the operating instructions created by the manufacturer correspond to the current status of the applicable regulations. If necessary, adjust the operating instructions accordingly.
- Clearly structure and specify the responsibilities for installation, operation, fault rectification, maintenance and cleaning.
- Ensure that all persons who come into contact with the machine have read and understood these instructions. in addition, the operator must regularly provide personnel training as pertains to machine use and inform personnel of the related hazards.
- Provide personnel with the necessary protective equipment and communicate to personnel that the wearing of this protective equipment is compulsory.

In addition, the operator is responsible for ensuring that the machine is in perfect technical condition.

For this reason the following applies:

- The maintenance intervals described in this instruction manual must be complied with.
- All safety devices must be regularly inspected to ensure they are in good working order.

Additional obligations of the operator

The operator must ensure that the following requirements are complied with and put into practice:

- The machine is only operated in its original delivered condition. In cases where the operator adds his own add-on parts or makes modifications, the manufacturer's declaration of conformity is rendered void.
- Any working behaviour that jeopardises the safety of the machine is prohibited.
- The machine must always be kept in a technically-perfect and operationally-safe condition. Replace damaged or non-operational components immediately. If in doubt, be sure to contact the manufacturer or the responsible contact person.
- Do not operate the machine when the protective equipment has been disassembled or disabled.

- Observe all warnings and notices displayed on the machine and make sure they are legible. You must replace any loose or illegible signs. Ask the manufacturer for replacements.
- Install the separately provided components listed in the scope of delivery on the machine and incorporate these in the safety concept.
- Do not disassemble or incorrectly fit any electrical, mechanical or hydraulic connections.
- For protection against potential damage caused by lightning, make sure a suitable earthing system is in place.
- If the conveyed medium tends to form condensate, the condensate must be bled off (e.g. using collection tanks, residual gas pipes or by briefly opening the lower condensation bores).
- Separate any accompanying dusty material before it enters the machine. Material that collects in the conveying chamber or the rotors presents a particular danger to the working safety of the machine.

Operator's obligations at the installation site

The operator must ensure that the following requirements are complied with and put into practice:

- Machine use only in a stable three-phase power supply. Voltage fluctuations / drops beyond the tolerance level may cause serious damage to the drive system.
- Activate motor overload protection.
- For system variants without a main circuit breaker featuring an EMERGENCY STOP function, the safety circuit of the machine should be incorporated into the EMERGENCY STOP concept for the overall system. Ensure the accessibility of additional EMERGENCY STOP switches in the vicinity of the machine.

  The machine must be equipped with one or more EMERGENCY STOP command devices for the purposes of operation.

  The EMERGENCY STOP function must be available and operational at all times, independent of the operating mode.
- It must not be possible for a powered-down machine to start automatically.
- For the purposes of operation, the machine must be equipped with a command device that shuts down the machine in dangerous situations.

  The power supply to the motor must be cut off.

  If this is not possible, the "standstill" operating condition must be monitored and maintained.
- Avoid electrostatic charges. Connect an equipotential bonding.
- For accidents and emergencies, incorporate emergency measures for the machine into the overall emergency measures. Make particular efforts to integrate these measures into the evacuation and rescue plan and the fire warning plan.

2.5 Replacement parts

Use of incorrect replacement parts

CAUTION!

Safety risk from using incorrect replacement parts!

Incorrect, defective or unsuitable replacement parts or copies of original components may endanger personal safety and lead to damage, faults or the total failure of the machine.

– Only use the manufacturer's original replacement parts or parts approved by the manufacturer.
– If in doubt, always contact the manufacturer.

Purchase replacement parts from an authorized dealer or from the manufacturer directly. For contact information see Customer service *on page 11*.

Replacement parts

Replacement parts that have not been provided by AERZEN have not been tested or approved. They do not correspond to the original components. The use of such products can potentially have an effect on the default design characteristics of the system. The manufacturer assumes no liability for damage resulting from the use of non-original components.

2.6 Requirements for personnel

2.6.1 Qualifications

The various tasks described in this instruction manual represent a variety of requirements in terms of the qualifications of the persons responsible for carrying out these tasks.

Insufficient qualifications

WARNING!

Risk if persons are not sufficiently qualified!

Insufficiently qualified persons are unable to gauge the risks presented by the use the machine and put themselves, and others, at risk of serious or fatal injury.

– Only allow work to carried out by suitably qualified persons.
– Observe the information on qualifications in this manual.
– Keep insufficiently qualified persons away from the operating range of the machine.

For the purposes of all work with this machine, only allow persons who are expected to carry out their work reliably to do so. Persons whose reaction times have been impaired, e.g. through drug or alcohol consumption or medication, must not be permitted to work.

This instruction manual contains the following qualification requirements for the various tasks:

Authorised electricians
Authorised electricians, on the basis of their field-specific training, expertise, experience and knowledge of the relevant standards and requirements, are able to carry out their work on electrical systems safely while independently recognising and avoiding hazards.

Authorised electricians are specially trained for the environment in which they work and are familiar with the relevant standards and requirements.

Authorised electricians with additional qualifications
Authorised electricians have the additional qualifications needed for working in the field of frequency converters and EMC. Authorised electricians are familiar with the relevant standards and requirements.

Written documentation acts as proof of a completed safety instructional course and evidence of the necessary additional knowledge.

Due to their additional qualifications, these authorised electricians are able to carry out work on electrical systems with frequency converters and can independently recognise and avoid possible hazards. The additional skills that constitute this qualification should be taught through regular practical application.

Manufacturer's customer service division
Certain work may only be performed by the customer service division of the manufacturer. On the basis of its special, field-specific training, expertise and experience, the customer service division is up to the task of performing highly-skilled work.

The customer service division is a competent point of contact for all stages of the machine's service life. It is able to perform all work on the machine with the highest efficiency.

Service personnel
Service personnel are able to carry out their work on the basis of their field-specific training, expertise, experience and knowledge of the relevant standards and requirements. Personnel recognise hazards independently and avoid risks.

Service personnel in particular possess practical experience and extensive field-specific expertise for the variety of tasks.

- Transport
- Set-up / installation
- Commissioning
- Maintenance
- Fault rectification
- Disassembly

Depending on the designated job, the person must have additional qualifications:

- Operation and handling of compressors.
- Parameterisation of compressors.
- Optimisation work within the persmissible operating data range.

Skilled staff for industrial waste
Skilled staff for industrial waste posses comprehensive, field-specific expertise relating to the disposal and recycling of industrial waste. Skilled staff transports the industrial waste to the waste disposal company and holds responsibility for proper sorting of waste. The staff incorporates this sorting into the recycling and disposal processes.

Trained persons
A trained person has been expressly instructed and, if necessary, trained on site by the responsible management about the tasks delegated to him or her and the risks that are posed by improper behaviour. A trained person has been instructed regarding the necessary protective equipment and protective measures. He or she is in a position to work cautiously and to recognise hazards and react accordingly. The trained person may not interfere with the handling and operation of the machine.

Depending on the designated job, the person must have the following expertise:

- Transport and handling of packaged units.
- Ability to perform visual inspections of the machine.

User
The machine user is trained by the system operator in terms of operation, maintenance work and basic fault rectification. He or she is informed of possible operational hazards and improper behaviour. Tasks that go beyond those for which the machine user is trained or instructed may only be carried out if these tasks are listed in this instruction manual and the operator has expressly designated these tasks to the user.

2.6.2 Unauthorised personnel

Unauthorised personnel in the installation area



WARNING!

Risk of fatal injury for unauthorised persons in the installation area!

Unauthorised persons who do not fulfil the requirements described here, are not familiar with the hazards in the installation area. Therefore, unauthorised persons are at risk of serious or fatal injury.

– Keep unauthorised persons away from the installation area.
– If in doubt, instruct such persons to leave the installation area.
– Stop all work as long as unauthorised persons are in the installation area.

2.6.3 Training

The operator must regularly provide safety training for personnel. For tracking purposes, a training report must be drafted with the following mandatory content:

- Date of training
- Name of the training participant
- Content of the training
- Name of the training instructor
- Signatures of the participant and instructor

Date	Name	Type of training	Training provided by	Signatures

2.7 Personal protective equipment

Personal protective equipment serves to protect persons from breaches of safety and health hazards when working.

Personnel, when working near or with the machine, must wear the personal protective equipment described separately in the various sections of this instruction manual.

Description of personal protective equipment

The following is a description of the personal protective equipment:



Hearing protection
Hearing protection serves to protect against hearing damage from noise generation.



Industrial hard hat
Industrial hard hats protect the head against falling or stray objects and loads and from collisions against stationary objects.



Light respiratory protection
Light respiratory protection protects against harmful dusts.



Protective gloves
Protective gloves protect hands from friction, abrasion, puncture hazards or more serious injuries and from contact with hot surfaces.

They are oil-resistant and protect hands from coming into contact with lubricants.



Protective work clothing
Protective work clothing is tight-fitting work clothing with minimal tensile strength, tight sleeves and without protruding parts.



Safety goggles
Safety goggles serve to protect the eyes against flying particles and splashing liquids.



Safety shoes
Safety shoes protect feet from being crushed, from falling objects and from slipping on slippery surfaces.

2.8 Safety devices

Correct functioning of safety devices

WARNING!
Risk of fatal injury from non-functioning safety devices!
Non-functioning or deactivated safety devices may cause serious or fatal injury.

- Before beginning work, check that all safety devices are functioning correctly and are correctly installed.
- Never deactivate or bypass safety devices.
- Ensure that all safety devices are accessible at all times.

2.8.1 EMERGENCY STOP function

The EMERGENCY STOP function serves, in cases where there is a hazard or when one is averting a hazard, to bring the machine quickly to a safe stop (standstill).

Depending on the customer's specifications, machine variants are available with or without a power circuit breaker system.

Depending on the model, the machine:

- may not feature a control system
- may not feature an EMERGENCY STOP function

Before operating the machine:

Check whether the EMERGENCY STOP function is in place and installed.

It must function perfectly.

EMERGENCY STOP control device



Fig. 3: Example: EMERGENCY STOP control device

An EMERGENCY STOP control device includes a special command unit which is connected to the control system.

The EMERGENCY STOP function allows for the machine to be shut down safely and immediately in case of a potential or existing hazard.

The power supply to all turning components is interrupted immediately when the EMERGENCY STOP function is activated.

It is also possible to install additional EMERGENCY STOP control devices.

Without a power circuit breaker system

- For this variant, an EMERGENCY STOP control device is not installed on the machine at the factory.
- The machine is delivered without an EMERGENCY STOP apparatus.
- The operator must provide a power circuit breaker system with electrical overload protection, an On/Off command unit and an EMERGENCY STOP function.
- Activate Stop Category 0.
- Detail the performance data of the electrical installation in accordance with the operating data of the motor. Take into consideration the necessary data, for example: voltage, current, frequency.
- The connection to the power supply is made using the installed and delivered power cabinet.
- The lines running to the power supply are fed directly to the electric motor and are connected inside a terminal box.
- Feed the connection lead through the cable conduit to the terminal box.
- Protect the motor against overheating.
- A main circuit breaker must be installed.

With a power circuit breaker system

- Depending on the model, an EMERGENCY STOP control device is installed at the factory in the power circuit breaker system.
  - If the factory-installed power circuit breaker system *does not* feature an EMERGENCY STOP command device, this must be provided by the operator.
    Activate Stop Category 0.
  - If the factory-installed power circuit breaker system *does* feature an EMERGENCY STOP command device, Stop Category 0 is performed.
- A main circuit breaker must be installed if it is not part of the power circuit breaker system.
- The power supply is connected at the power cabinet.
- Observe the wiring diagram!

Notes on installation by the operator

The EMERGENCY STOP facility must:

- be installed and integrated into the safety line of the system controller.
- be clearly recognisable, highly visible and quickly accessible.
- shut down dangerous operation quickly without causing any additional risks.
- if necessary, trigger specific safety measures or authorise the triggering of safety measures.
- be installed in such a way that the machine user can activate it immediately in an emergency.
- be designed in such a way that, in cases where there is an interruption in the power supply or the power supply is activated after an interruption, no situations can occur in which there is a threat of personal injury or material damage.
- supplement other protective measures without acting as a substitute for them.

Requirements for installation by the operator

The EMERGENCY STOP function must be available and operational at all times, independent of the operating mode.

The EMERGENCY STOP facility must not require the entire machine to be voltage-free. In situations where a risk is detected, it must be possible for the user to stop the machine in order to protect against a hazard. For the purposes of a controlled shut-down, electrical voltage may be necessary. The electrical system is still under voltage.

If several EMERGENCY STOP devices are in place, all of these devices must be able to shut down the machine.

The EMERGENCY STOP function must, after being triggered, remain effective until authorisation is given for a restart.

It must not be possible to attempt to block the EMERGENCY STOP device without a “stop” command being issued.

Ensure that it is only be possible to release the EMERGENCY STOP device by means of authorised activation.

This authorisation must not cause the machine to start operating again automatically but rather it should make a machine restart possible.

2.8.2 Hinged support with lifting device

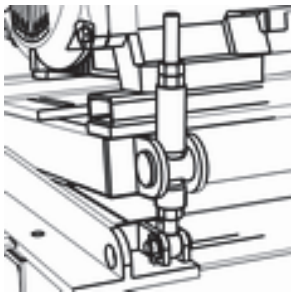

Fig. 4: Hinged support

The hinged support serves to protect against mechanical hazards.

- The hinged support holds the motor hinge in place during transport and assembly. It prevents uncontrolled movement of the motor hinge.
- When operating the machine, the hinged support must be released and positioned accordingly.

2.8.3 Motor mount without lifting device

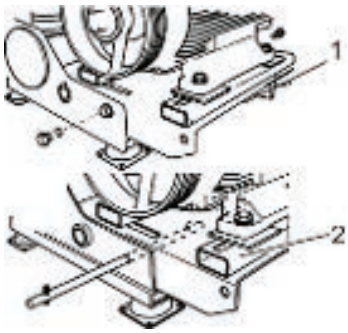

Fig. 5: Motor mount

1 DN50
2 DN80

The motor mount serves to protect against mechanical hazards.

- The hinged support holds the motor hinge in place during transport and assembly. It prevents uncontrolled movement of the motor hinge.
- When operating the machine, the motor mount must be released and positioned accordingly.

2.8.4 Acoustic hood

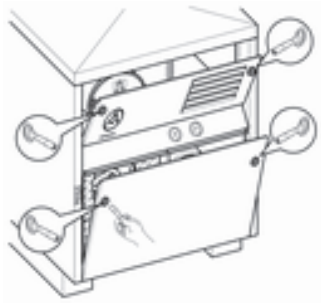

Fig. 6: Acoustic hood, front view (example)

The acoustic hood serves to protect against mechanical and thermal hazards.

- The acoustic hood is an essential safety component of the product.
- The elements of the acoustic hood must be locked with the provided special locks during operation and in stand-by mode.
- Operation with an open acoustic hood is not permissible.
- The locking key for the acoustic hood is a component of the overall safety concept. Access to the key must only be possible for personnel who have been briefed in the safe operation of the machine and the contents of the instruction manual.

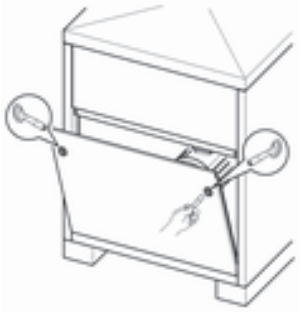

Fig. 7: Acoustic hood, rear view (example)

2.8.5 Belt guard

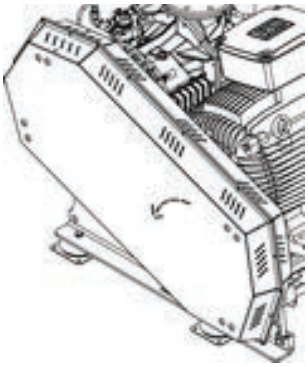

Fig. 8: Belt guard

The belt guard serves to protect against rotating components.

- A belt guard is always used in machines without an acoustic hood. It serves to protect against rotating components.

2.8.6 Cover of the sheave

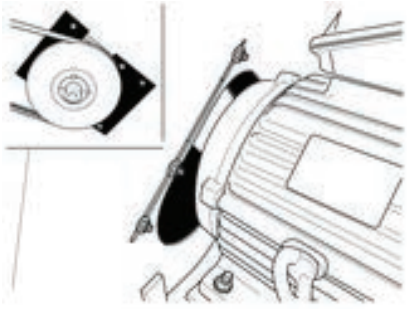

Fig. 9: Cover

The cover serves to protect against rotating components.

- The belt guard features two plastic covers.
- These serve to protect the rotating sheaves and prevent persons from reaching directly into the belt drive.

2.9 Safety classification

The following symbols and notices are displayed on the machine. They relate to the immediate vicinity in which they are located.

Unreadable signage

WARNING!

There is a risk from unreadable signage!

There is a risk of injury resulting from dirty or unreadable signs. It may be impossible to recognise hazards and to follow the necessary operating information.

– Keep all safety, warning and operating information in a thoroughly readable condition.
– Replace damaged signs or stickers immediately.

Safety and warning signs

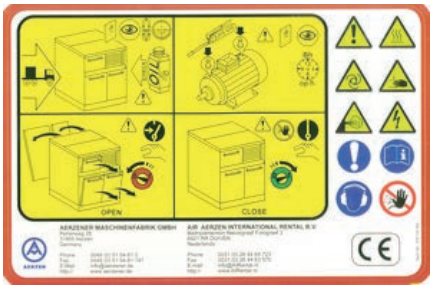

The layout of warning signs involves a set of stickers affixed to the machine. These constitute warning, instruction and prohibition signs. Furthermore, signs relating to lubricants and their handling are only visible when the acoustic hood is closed.

Fig. 10: Layout of warning signs



Placement of the sticker set on the acoustic hood.

Fig. 11: Position on the acoustic hood

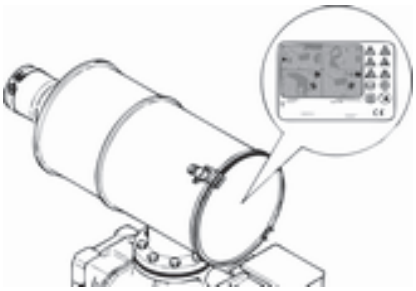

Placement of the sticker set on the intake silencer.

Fig. 12: Position on the belt guard model

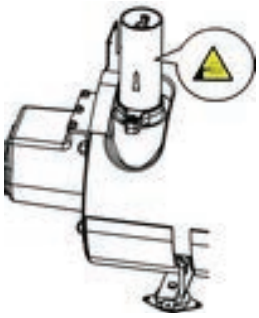

Warning sign on the AERZEN safety valve.

Fig. 13: Position on the AERZEN safety valve

Access for unauthorised persons forbidden



Only persons given authorisation by the operator may enter the hazard area.

Electrical voltage



Only qualified electrical personnel may work in the signposted working area.

Unauthorised persons are not permitted to enter the signposted working area or open the signposted cabinet.

Automatic start-up



The sudden start-up of operational machines in the rest position is possible at any time.

Take heed of the stand-by mode! A sudden start is possible.

Hot surfaces



Hot surfaces, such as hot machine parts, containers or materials - but also hot liquids - are not always noticeable. Do not touch them without protective gloves.

Hand injuries



Keep hands away from areas that carry this warning sign.

There is a risk that hands could be crushed, trapped or injured in some other way.

Gas emission



Risk from sudden gas emission.

The opening of the safety valve results in the emission of gas and accompanying noise emissions. There is a risk of hearing damage and injuries to eyes or skin.

Pressure in the piping



Pipelines may be placed under pressure.

Before carrying out disassembly work, deactivate the pressure in the pipelines.

Draw-in of gas



Pipelines can suck in large volumes of air in the immediate vicinity of the intake openings.

Avoid the air-intake area. Shut down the machine before undertaking any activities in this area.

2.10 Instruction signs

Wear hearing protection



In areas where this symbol is displayed there is a risk of hearing damage. Therefore, wear hearing protection when in these areas.

Information on wearing hearing protection	
< 80 dBA	Hearing protection is not prescribed as mandatory but should be worn as a matter of personal responsibility.
80 to 85 dBA	Hearing protection is recommended
> 85 dBA	**Hearing protection must be worn**

Observe the instruction manual



Only use the labelled machine once you have read the instruction manual.

2.11 Hazards in the operating and/or display area



Hazard area
Operating and/or display area

The hazard area is located in the marked zone (in the acoustic hood interior zone). The opening of acoustic hood elements and protective covers during operation is not permissible. Opening is permissible only for maintenance work or for troubleshooting and provided all safety precautions are observed. The operating and/or display area is the position marked in green (example).

Fig. 14: Hazard area and operating and/or display area (top-down view)



Hazard area
Operating and/or display area

The hazard area is located in the marked zone. The opening of the protective cover is not permissible. The operating and/or display area is the position marked in green (example).

Fig. 15: Hazard area and operating and/or display area (top-down view)

2.12 Securing the machine against restarting

Sudden restart

DANGER!

An unauthorised or unregulated restart can have fatal consequences.

An unauthorised or unregulated restart of the machine can lead to serious or fatal injuries. There may be people located in the hazard zone. Activating the energy supply and starting the machine could result in those people being fatally injured.

- Prevent the machine from restarting by:
  - disconnecting the electrical power supply.
  - activating the EMERGENCY STOP function
  - operating the main circuit breaker
  - attaching a padlock to the main circuit breaker
  - checking and ensuring that the machine is completely disconnected from the power source
  - displaying a sign on the machine that prohibits a machine start
  - displaying a sign on the remote station that prohibits a machine start
- Before restarting, ensure that safety devices are installed and functioning correctly and that there are no potential hazards to the safety of any persons.

EMERGENCY STOP button (option)

1. Press the EMERGENCY STOP button
   ⇨ The power supply is shut off.
2. Activate the main circuit breaker.
   ⇨ The machine is free of current.
3. Attach a padlock to the main circuit breaker.
4. Ensure that the machine is completely disconnected from the power source.
5. Inform supervisory personnel of work in the hazard area.

6. Place a sign on the machine and (where applicable) remote station that notifies persons of the work being carried out in the hazard area and forbids activation of the machine. The sign must contain the following information:
   - Shut-down on:
   - Shut-down at:
   - Shut-down by:
   - Important: Do not switch on!
   - Important: Only switch on the machine once it has been ensured that there is no risk to personal safety.

EMERGENCY STOP feature (operator-installed)

The particular approach to preventing a restart is dependent on the operator-installed EMERGENCY STOP feature.

1. Secure the machine against restarting in accordance with the operator's instructions.
2. Follow the instructions of the responsible supervisory personnel.
3. Once all work has been completed, ensure that there is no risk to personal safety.
4. Ensure that all safety and protective equipment is installed and operational.

2.13 Environmental protection

Environmentally hazardous materials

ENVIRONMENT!

Improper handling of environmentally hazardous materials presents a threat to the environment!

Incorrect handling of environmentally hazardous materials, particularly in the case of improper disposal, can cause considerable damage to the environment.

– Always observe the information below on the handling of environmentally hazardous materials and their disposal.
– If environmentally hazardous materials are inadvertently released into the environment, take appropriate action immediately. If in doubt, inform the responsible local authority about the damage and seek advice on taking appropriate measures.

The following environmentally hazardous materials are used:

Lubricants

Lubricants such as greases and oils contain poisonous substances. They must not be released into the environment. Disposal must be carried out by a certified waste management company.

AERtronic batteries

Batteries contain poisonous heavy metals. They require special waste treatment and must be deposited at local collection points or disposed of by specialist companies.

Electronics

Electrical and electronic components may contain poisonous material. These components must be collected separately and deposited at local collection points or disposed of by specialist companies.

Anti-corrosion agents

Anti-corrosion agents may contain poisonous substances. They must not be released into the environment. Disposal must be carried out by a certified waste management operator.

3 Design and operation

3.1 Overview of assemblies

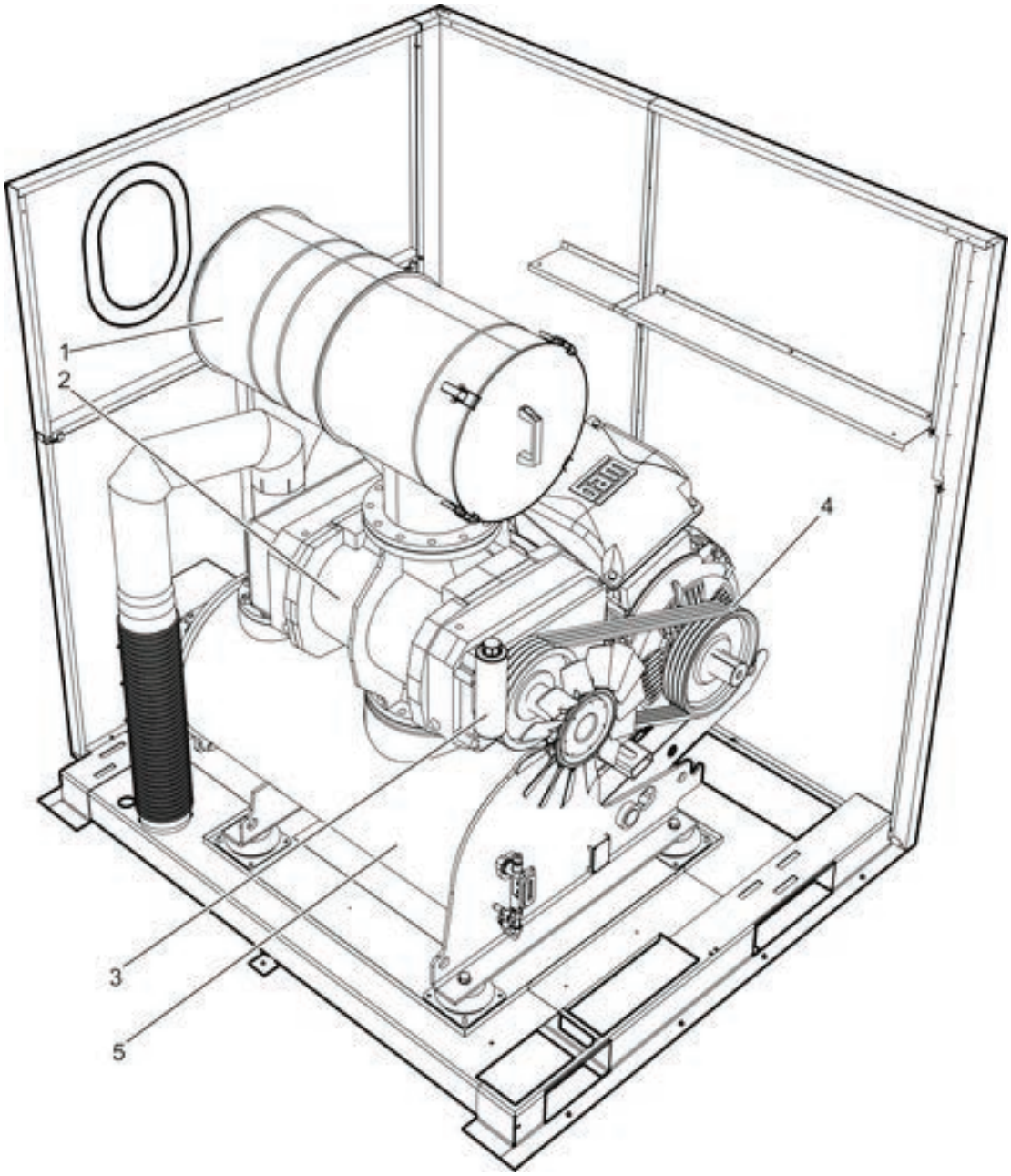

Fig. 16: Acoustic hood with oil system

1 Intake side
2 Machine stage
3 Oil system
4 Drive system
5 Discharge side

3.2 Overview of assemblies

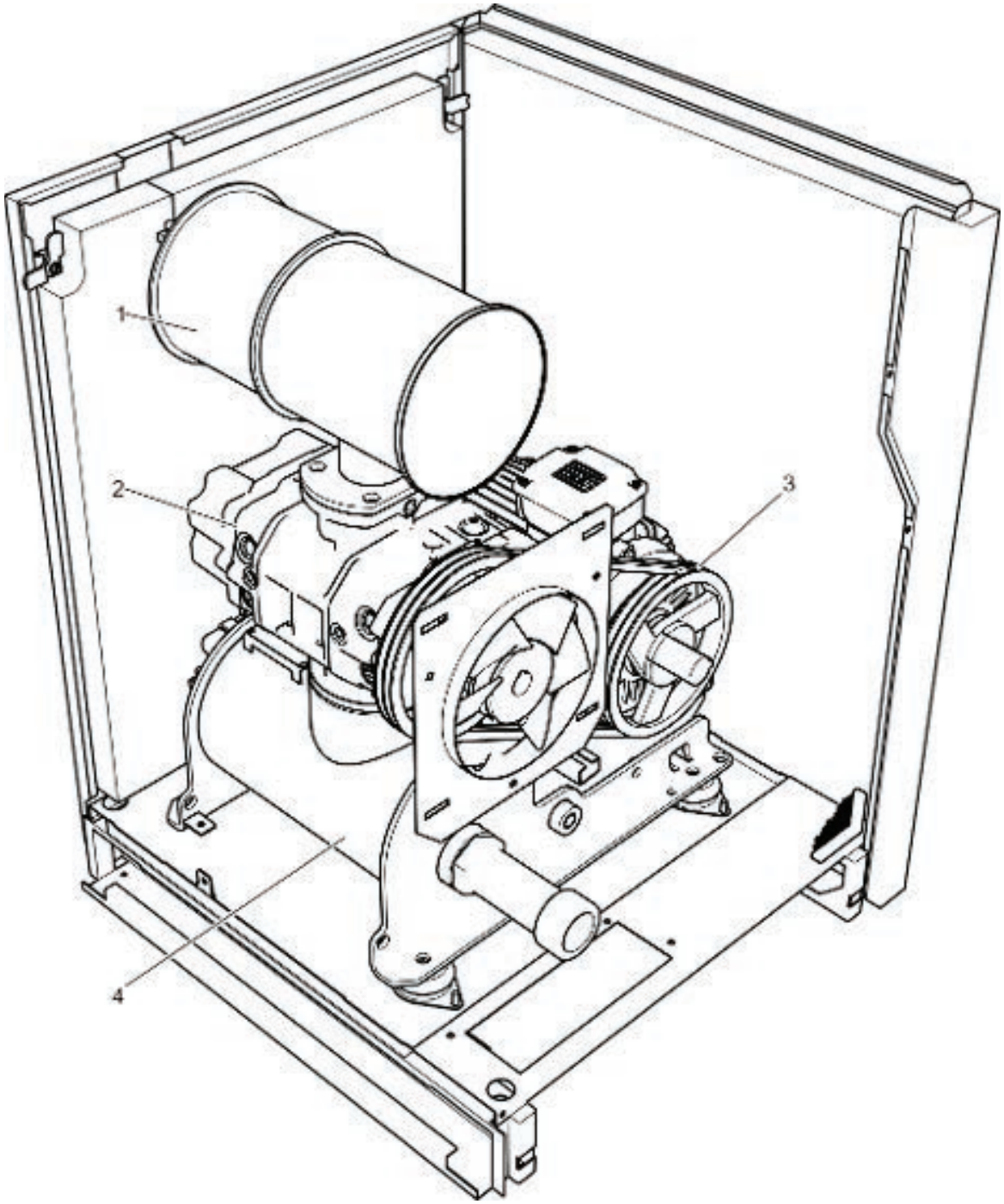

Fig. 17: Acoustic hood without oil system

1 Intake side
2 Machine stage
3 Drive system
4 Discharge side

3.3 Overview of assemblies

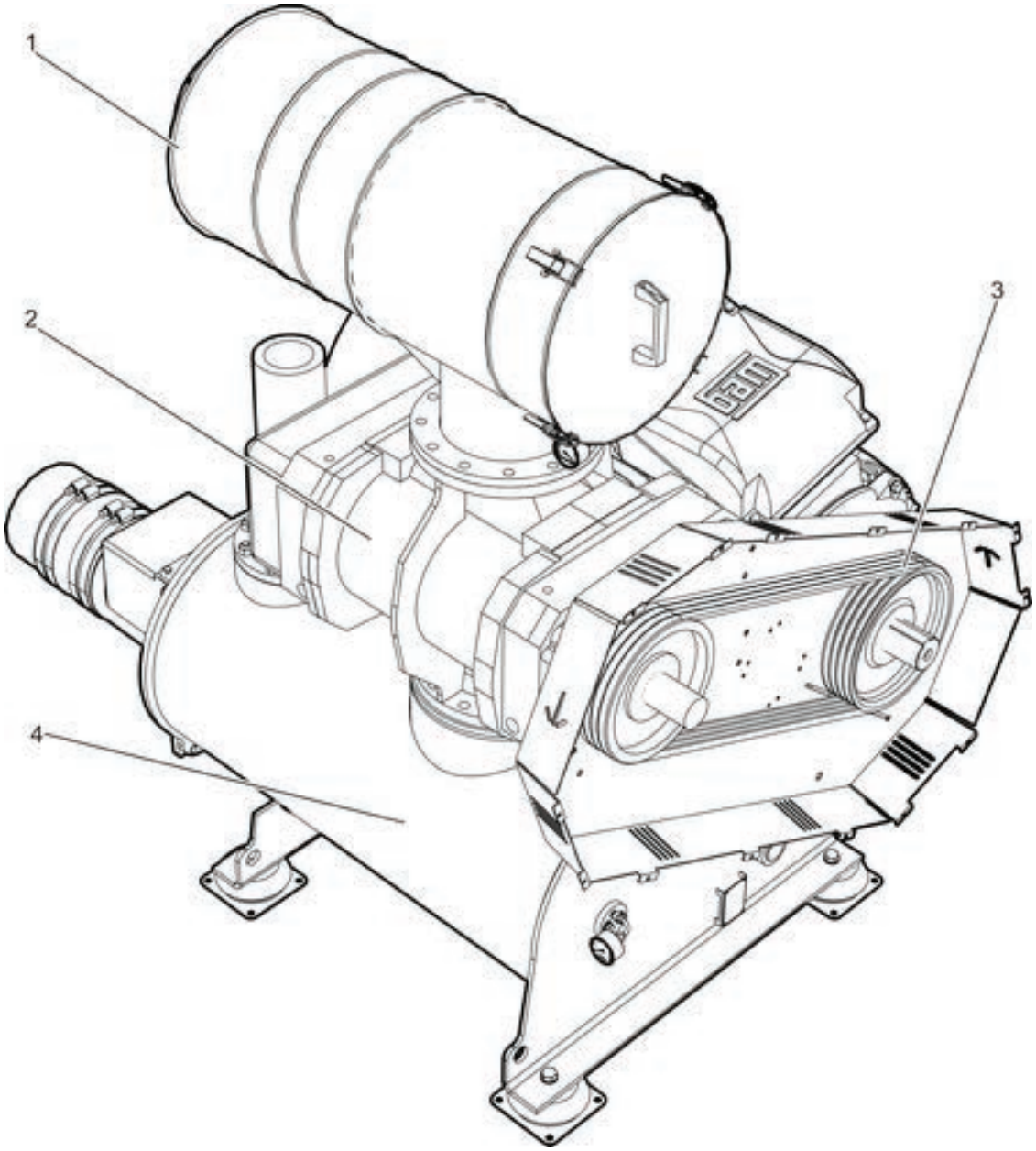

Fig. 18: Overview

1 Intake side
2 Machine stage
3 Drive system
4 Discharge side

3.4 Operating principle

The medium to be conveyed is connected using an elastic rubber sleeve or the compensator of the discharge-side connection casing.

The medium to be conveyed enters through the intake silencer. This offers the possibility of a intake-side pipe connection. There is a replaceable filter element located inside the intake silencer. Dirt levels in the filter element can be displayed using a service indicator or the control system display.

The positive displacement blower conveys and compresses the medium to be conveyed. The medium then flows through the discharge silencer, via a non-return flap, into the customer's system. The positive displacement blower is powered by a drive motor using a belt drive. The belt drive derives tension automatically from the weight of the motor. The drive motor is powered by connecting its power lines in the terminal box.

A safety valve is installed on the base support or on the connection housing. The working pressure can be displayed by a pressure gauge or in the control system screen.

The acoustic hood is ventilated by a fan.

3.5 Operating modes

On-site operation

Operation of the machine is carried out directly on site.

Remote operation

Operation of the machine is carried out via control station.

Automatic operation

Automatic operation of the machine is carried out by sensors or a system switch.

Load operation

Load operation is the operating mode in which the machine processes the specified operating data.

3.6 Operating methods

3.6.1 Operating information for pneumatic conveyance

Pneumatic conveyance

When the machine is being used for the purposes of pneumatic conveyance, pressure surges must not occur when switching between different delivery lines.

Pressure surges can be prevented by making the switching process for the intake-side and discharge-side valves take at least five seconds. This pre-accelerates the gas column in the pipework. The gas can no longer accelerate suddenly. This prevents damage to the machine.

The distance between the switchover valve and the intake-side flange must be at least 10 x DN. DN = nominal diameter of the pipework.

This safety note applies to both pressure and vacuum mode.

3.6.2 Operating information for air-separation systems

Operating information for air-separation systems

When the machine is being used in air-separation systems with alternating air-separation columns, pressure surges must not occur when switching between different delivery lines.

Pressure surges can be prevented by making the switching process for the intake-side and discharge-side valves take at least five seconds. This pre-accelerates the gas column in the pipework. The gas can no longer accelerate suddenly. This prevents damage to the machine.

The distance between the switchover valve and the intake-side flange must be at least 10 x DN. DN = nominal diameter of the pipework.

This safety note applies to both positive pressure and vacuum pressure mode.

3.6.3 Description of assemblies

For the purposes of explaining its functionality, the machine is divided into several assemblies. Each assembly consists of a number of components which, combined, perform a specific machine function. One assembly can consist of sub-assemblies and additional components.

3.6.3.1 Intake side



Fig. 19: Intake side

3410 Intake silencer, housing
3470 Intake silencer, filter element

The intake side assembly comprises the components of the conveying system's intake side. The intake side assembly includes all components located upstream of the machine stage gas inlet. The medium to be conveyed is drawn into the machine stage by these components. An intake silencer serves to reduce noise emissions. A filter ensures clean intake gas.

3.6.3.2 Machine stage

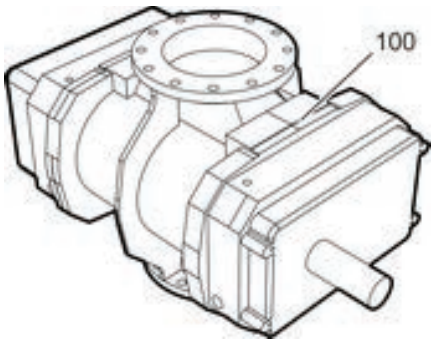

Fig. 20: Machine stage

100 Machine stage

The machine stage is the core of the machine and includes all components for gas compression. The gas compression process takes place in the machine stage.

3.6.3.3 Oil system

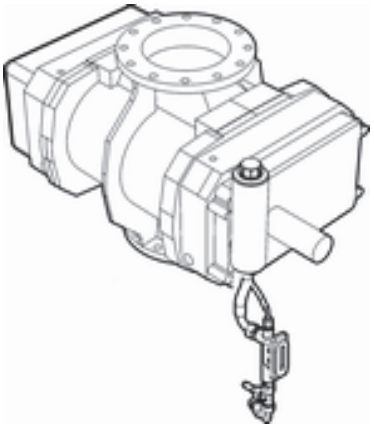

Fig. 21: Oil system

The oil system contains all components necessary for providing lube oil to the machine stage.

3.6.3.4 Drive system

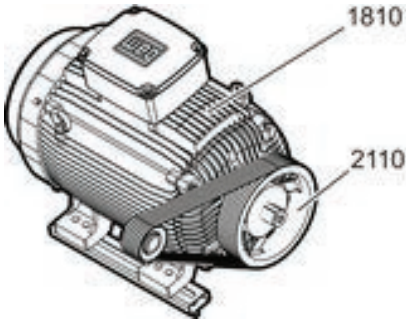

1810 Motor
2110 Belt drive

The drive system comprises the drive motor and the drive elements, e.g. the belts and sheaves. The drive system provides a high revolution speed for the rotational motion of the machine stage.

Fig. 22: Drive system

3.6.3.5 Discharge side

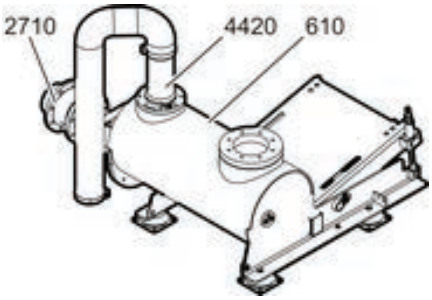

610 Base support
4420 Safety valve
2710 Flexible pipe connection

The discharge-side assembly represents the components of the discharge-side conveying system. The discharge-side assembly includes all components fitted downstream from the machine stage gas outlet. All components are pressurised during operation and have hot surfaces. A discharge silencer serves to reduce noise emissions.

Fig. 23: Discharge side with base support

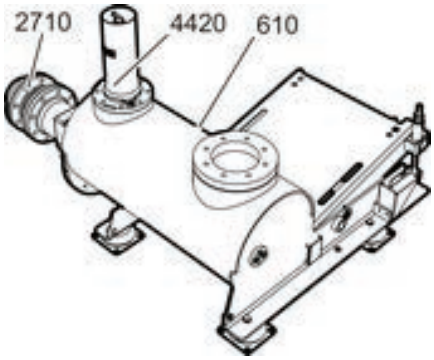

610 Base support
4420 Safety valve
2710 Flexible pipe connection

The discharge-side assembly represents the components of the discharge-side conveying system. The discharge-side assembly includes all components fitted downstream from the machine stage gas outlet. All components are pressurised during operation and have hot surfaces. A discharge silencer serves to reduce noise emissions.

Fig. 24: Discharge side with base support

3.7 Control elements (optional)

3.7.1 Factory-installed control element

Factory-installed control element

Observe the AERtronic instruction manual.

The AERtronic instruction manual is included with the product.

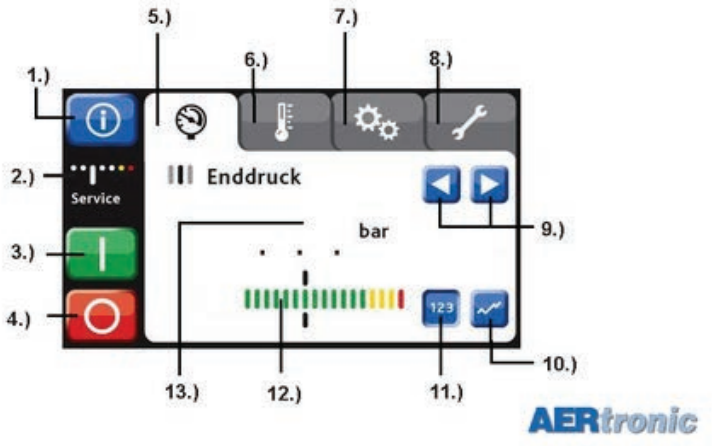

Fig. 25: Operator interface

1 Information menu
2 Service display
3 Local/ LOCATION / START
4 Local/ LOCATION / STOP
5 Pressure ranges register
6 Temperature ranges register
7 Additional operating parameters register
8 Service and setup register
9 Selection buttons of the given display menu within a register
10 Graphic representation
11 Numerical representation
12 Bar graph display
13 Measurement value display

3.7.2 Customer-installed control element

Customer-installed control element

Depending on the model and version - with or without a corresponding controller - the control elements are not part of the scope of delivery. The installation and design of the control elements is then the responsibility of the customer.

3.8 Accessories

The accessories are the total collection of components belonging to the machine or to the supplementary equipment.

3.8.1 Drive motor

Motor connection requirements

The cable and lead sheathing must be resistant to the normal wear expected due to the movement of the hinged motor support and the effects of contaminants in the atmosphere.

General requirements

- Fine-core cable is recommended for the connecting leads.
- The connecting hardware must be suitable for the cross-section and type of the connecting leads.
- Cables, leads and connections must not be subjected to excessive bending and tensile forces. Install the connecting cable via a stayed cable bridge (not provided) to prevent the terminal box being subjected to forces or stress.
- Install cables and leads in such a way that they cannot sustain any external damage.
- Avoid contact with the machine, excessive friction and excessive radiant heat.
- The connecting cable must be resistant to light movements, e.g. the changes in the rotational speed of the motor.

General requirements

- Fine-core cable is recommended for the connecting leads.
- The connecting hardware must be suitable for the cross-section and type of the connecting leads.
- It may be necessary to remove the intake console and the acoustic hood cover to connect the motor, depending on the size and output of the machine.
- Cables, leads and connections must not be subjected to excessive bending and tensile forces. Install the connecting cable via a stayed cable bridge (not provided) to prevent the terminal box being subjected to forces or stress.
- Install cables and leads in such a way that they cannot sustain any external damage.
- Avoid contact with the machine, excessive friction and excessive radiant heat.
- The connecting cable must be resistant to light movements, e.g. the changes in the rotational speed of the motor.

Requirements for the electricity network

NOTICE!

There is a risk of material damage from voltage fluctuations / drops!

Voltage fluctuations / drops beyond the tolerance interval may lead to serious damage to the drive system.

Requirements for operating positive displacement machines with electric induction motors in a three-phase AC supply system:

– Use suitable protective equipment that will shut the motor down and safeguard it against an automatic restart if impermissible electrical operating data is detected.
– Connect the motor and control voltage to a stable common network to ensure that the power contactor is no longer latched if the power supply fails.
– Comply with voltage and frequency limits. *Chapter 11.9.1 „Voltage fluctuations“ on page 194*

Connection

- Only authorised electricians may perform the connection.
- Electricians must observe all applicable regulations when connecting the drive motor.
- Observe the tightening torques of the terminal screws.
- Secure all connections against inadvertent release or loosening.
- Ensure that the nominal electrical data is complied with during operation.

Control circuit types

- Star-delta connection
- Pole changing
- Speed control using frequency converter
- Direct start

Permissible starting frequency

up to 160 kW	6 starts per hour
from 200 kW	3 cold starts or 2 warm starts per hour

Refer to the operating manual provided by the drive motor manufacturer for further specifications and information.

3.8.1.1 Drive motor - factory installation

Factory installation

Observe the information on the type plate and in the drive motor instruction manual.

Refer to the drive motor instruction manual for electrical operating data, maintenance intervals and suitable lubricants.

3.8.2 AERtronic

AERtronic



Fig. 26: AERtronic Display

The AERtronic is used as a control device and as a display and monitoring device.

The AERtronic is fitted with a colour graphics display with a touch-screen interface.

When starting for the first time, these settings can be changed.

Other handling and operation of the controller is defined on the display; the user is guided through the menu by prompts in a structured manner.

The AERtronic includes all the functions necessary for start and shut-down procedures and displays the operating parameters and prompts.

Observe the operating manual for the purposes of commissioning and operation!

AERZEN reserves the right to change, expand or improve the hardware and software of this product as required. This does not include any obligation to update units already shipped.

3.8.3 Instrumentation

The instrumentation consists of several assemblies.

1.) Pressure and temperature sensors in conjunction with the AERZEN AERtronic controller.

2.) Pressure and temperature switches in conjunction with the display instruments.

Shut-down locking

- The shut-down devices are set at the factory.
- All shut-downs must be self-locking. Once the shut-down has been given clearance, the machine must not be able to start automatically.
- Prior to a restart, the cause of the fault must be determined and eliminated. Start-up must then take place manually.

NOTICE!
The switching points of the switches/sensors are fixed and must not be changed.

Pressure and temperature switches

If, to safeguard the machine, an intake pressure, discharge pressure or discharge temperature switch is used, it must also be ensured that the drive motor switches off when the limit switch is triggered.

Contacts open →Drive motor off.

Pressure switch (optional)

It is also possible to use an additional pressure switch. A calibrated gauge is used to adjust the switching limit point. The scale on the switch only serves as a guide.

3.8.4 Frequency converter

Description

Observe the frequency converter manufacturer's operating manual!

NOTICE!
- If the electric motor is driven by frequency converters, we strongly recommend using an engine throttle and power choke. These are specifically designed for the frequency converter and filter dangerous harmonics from the actuator current. This prevents damage to the motor winding. The electromagnetic compatibility of the system is also improved. Reactions of the frequency converter in the current are reduced.
- The maximum current limit of the motor must not be exceeded. Observe the information on the motor name plate.
- To prevent operational faults the function "Interception circuit" must not be parameterised in the control of the frequency converter. When the frequency converter is switched off, a restart should only be possible after a complete shut-down of the blower or compressor.
- The machine must shutdown without braking. The activation of a brake ramp or quick stop is not permissible.

For machine use, observe the following

- Take into account the electrical and mechanical properties of the drive motor.
- The minimum frequency must always be fixed. This frequency must never fall below the fixed minimum during operation.
- The maximum frequency is to be set by taking into account the maximum rotational speed of the motor and the maximum machine speed.
- The run-up time of the drive motor from standstill up to minimum speed can be 3 to 6 seconds.
- The frequency converter must be designed with a constant load torque for operation with a working machine.
- Never exceed maximum and or drop below minimum speed thresholds.
- When exceeding the value, e.g. due to excessively long cables, frequency converter type etc. a motor throttle or motor filter coil to match the frequency converter is to be used.

NOTICE!

Not using these components can lead to damage of the motor isolation and a motor breakdown.

- The highest admissible voltage increase speed of the motor is 1,200 V/µs.
- The maximum rotational changeover speed must not exceed 1 Hz per second during operation.
- Minimum frequency = 20 Hz // maximum frequency = 50 Hz results in a control time of 30 seconds from minimum to maximum.

Pole changing

For a motor speed changeover from a high to a low speed, the drive motor must have reached zero rotational speed each time.

Changeover from a low to a high speed can take place directly and instantaneously.

3.8.5 Machine terminal box

Terminal box

The machine's terminal box contains the electrical and electronic components that are not located directly on the machine (e.g. sensors).

It contains terminals for connecting electrical and electronic components with the external power supply.

When the terminal box is closed, accidental or unintended contact with voltage-carrying components is not possible.

The distribution cabinet is locked due to internal components which are charged with dangerous voltage. It can only be opened using special tools (distribution cabinet key, triangular/ square wrench).

3.8.6 Discharge pressure gauge

Positive pressure mode



The gauge displays the discharge pressure of the compressed gas.

It is a display instrument without a switching function.

The gauge is connected on the discharge side.

Fig. 27: Gauge

3.8.7 Nitrogen gauge

Nitrogen mode



The gauge is used when conveying nitrogen.

The gauge displays the pressure in the inlet pipe.

It is a display instrument without a switching function.

The gauge is connected on the intake side.

Fig. 28: Gauge

3.8.8 Maintenance indicator

Positive pressure mode

The maintenance indicator shows the dirt levels in the intake filter.

The maintenance requirements of the intake filter depend on the dirt levels of the medium taken in.

Replace the filter element when the following display values are reached and no later:



At -45 mbar (red display field): replace intake filter

After the filter has been changed, reset the pointer to its initial position by “pressing” the reset button.

Fig. 29: Variation a)



Fig. 30: Variation b)

When the level of contamination increases, the red trailing pointer will be pulled over with the black pointer and stay at the maximum intake pressure.

Replace the filter element when the trailing pointer reaches the red area of the scale.

Once the filter has been replaced, reposition the trailing pointer between 0 and -10 mbar.

3.8.9 Intake silencer

Intake silencer

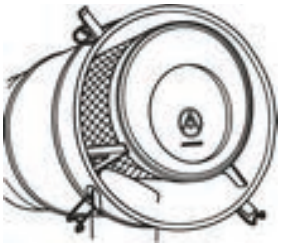

Fig. 31: Opening intake silencer with filter

The intake silencer contains the intake filter. The intake filter prevents harmful particulate matter entering the conveying chamber of the machine.

The intake filter corresponds to filter class G4

NOTICE!

Risk of machine damage! Never operate the machine without the intake filter.

Machine damage caused by the intake filter

NOTICE!

There is a risk of machine damage from the use of contaminated, damaged or non-original intake filters!

Heavily contaminated or damaged intake filters reduce performance. They affect functionality and may cause machine failure. Copies and reproductions of intake filters do not have the necessary properties.

- Inspect for damage.
- Comply with maintenance intervals.
- Only use original replacement parts.

3.8.10 Discharge silencer

Discharge silencer

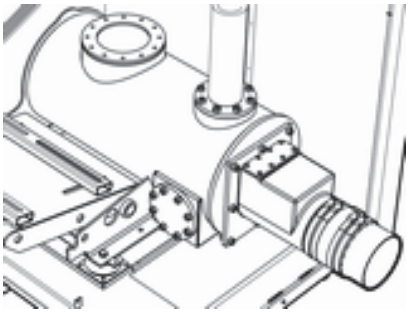

Fig. 32: Discharge silencer

The base support serves as the base for the whole bodywork of the machine. The base support also acts as a discharge silencer. The discharge silencer is an absorbtion-agent-free component. The acoustic energy inside the discharge silencer is reduced by means of air deflection.

3.8.11 Safety valve

AERZEN safety valve



Fig. 33: Safety valve

Observe the valve instruction manual. It is included with the product.

The safety valve is used for the conveyance of air.

The safety valve is set at the factory.

If the set value is exceeded, the valve opens and releases excess conveyed material into the atmosphere.

The safety valve is NOT a control component and is not to be used as such.

The safety valve can be used up to a temperature of 200°C.

NOTICE!

Risk of premature wear and tear and breakdown! The valve is not intended for controlling the operating data!

The deactivation of the valve, e.g. by increasing the opening pressure, may lead to serious material damage! Risk of total machine failure!

The valve outlet must not be made narrower or closed. Keep the cross-section unobstructed!

3.8.12 Non-return flap

Non-return flap



Fig. 34: Non-return flap

The non-return flap prevents the compressed conveyed medium from entering the machine stage once the compressor has been switched off. This prevents the machine stage from running "in reverse".

3.8.13 Start-up relief device for DN80 to DN400

Start-up relief device



Fig. 35: DN 80 to DN 400

NOTICE!

Risk of premature wear and tear and breakdown! The start-up relief is not intended for controlling the operating data!

The use of the start-up relief device as a controller for operating data leads to premature wear and tear and breakdown!

The start-up relief device can be used in machines that are run by an electric motor with a “star-delta connection”.

This allows for a relieved start-up against existing mains pressure.

In the case of drives with pole-changing motors, it is also possible to use a start-up relief device with a solenoid valve.

This provides a relieved start-up at higher speeds.

After a correct set-up, the start-up relief device operates maintenance-free.

The start-up relief is not necessary for drives with frequency converters.

3.8.14 Start-up relief device for DN50 to DN80

Start-up relief device

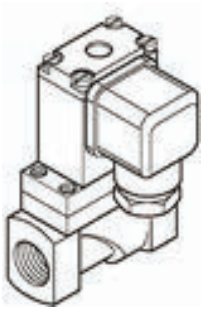

Fig. 36: DN 50 / 80

NOTICE!
Risk of premature wear and tear and breakdown!
The start-up relief device is not intended for controlling the operating data!

A solenoid valve offers the possibility of relieved start-up for DN 50/80 (“star-delta connection”). The valve closes if voltage is present.

The valve may only close after the switch from “star to delta”.

For pole changing: In “star-double-star starting”, the solenoid valve is to be switched so that it opens before the high-speed operation and closes after ramping up.

The start-up relief device is not necessary for drives with frequency converters.

3.8.15 Belt drive

Belt drive



Fig. 37: Belt drive

The belt pulleys are mostly fitted and aligned in the factory.

The belt pulley for the machine stage is fitted to the drive shaft. The position and orientation of this belt pulley therefore affects the alignment of the drive motor belt pulley.

Check the alignment:

- Before first commissioning
- According to the maintenance plan
- After replacing the pulley(s)

The maximum permitted belt pulley offset is 0.5 mm.

It is extremely important that only original replacement parts be used for the purposes of belt-pulley operation!

Only use replacement parts that are recommended and approved by AERZEN!

Original replacement parts

NOTICE!

Risk of material damage! Pulleys must only come from one manufacturer and from one production batch.

– Otherwise varying belt tensions can occur which can result in uneven running and premature wear.
– As a result of a risk of snapping, the belt pulleys must be suitable for the peripheral speed encountered!

3.8.16 Acoustic hood

Acoustic hood

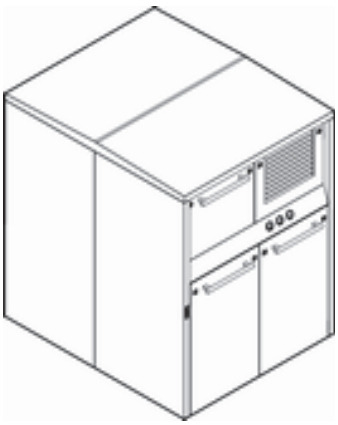

Fig. 38: Acoustic hood, version diagram

The acoustic hood serves to reduce noise and acts as an isolating safety device.

The acoustic hood is a component for product safety with lockable door elements.

Always keep the acoustic hood closed during operation.

The key must only be accessible for authorised personnel.

An earthing strap or threaded hole is located on the outer edge of the floor tray.

Lock

Operation with an open acoustic hood is not permissible!

– *Always lock the elements of the acoustic hood with the key provided.*
– *The key must only be accessible for trained persons.*

Fan

The acoustic hood is ventilated by a mechanical fan.

The fan is connected at the factory. The fan is activated in parallel with a machine start.

Intake from a pipeline

The acoustic hood makes intake-side suction possible from the system pipeline.

The pipeline is guided through the acoustic hood to the machine through prefabricated openings.

The following steps must be complied with: *Chapter 5.3 „Installation“ on page 93*

Acoustic hood heater

NOTICE!

There is a risk of material damage from low ambient temperatures!

Provide acoustic hood heating at ambient temperatures of under -10°C!

This prevents damage to the machine by heating up the housing and preheating the lube oil and medium to be conveyed.

3.9 Required tools

The following tools are required:

Auxiliary materials, aids
including collection containers for oil, drain hose, cleaning rags.

Conveyor rails
The conveyor rails must be made of steel. They act as slide-in modules in the forklift tunnel of the acoustic hood. The cables are pulled by the conveyor rails and joined above the machine using the lifting beams.

Drills
Drills for making fastening holes.

Electric drill
Electric drills, e.g. for drilling fixing holes.

General measurement tools and equipment
For example a steel ruler, plumb line, folding yardstick, spirit level.

General tool kit
including various screwdrivers, combination wrenches, set of socket spanners, set of Allen wrenches, hammers.

Lifting beams
Transverse truss required for crane transport for absorbing cable force.

Lifting equipment
For lifting loads, e.g. ropes, belt anchorages, shackles, eyebolts with nuts.

Locking key
The locking key is a component of the overall safety concept. This must be stored safely and should only be made accessible to trained personnel. It is intended for the proper opening and closing of the acoustic hood elements.

Oil funnel
The oil funnel is used for the precise filling of lubricant oil.

Ratchet wrench
The ratchet wrench is used to adjust the hinged motor support fastener.

Test pump
The test pump is used to simulate system pressure in the measurement lines during commissioning. This allows for the operation of the pressure switch or the pressure sensors to be checked.

Tools for authorised electricians
Basic electrical engineering equipment, e.g. multimeter, voltage detector, insulated tools.

Transport equipment
for transporting packaged units and the machine, e.g. with lift trucks, forklifts.

4 Transport, packaging and storage

4.1 Transport

4.1.1 Safety instructions

Improper transport



WARNING!

Risk of injury and damage from improper transport!

Improper transport may result in personal injury.

- Proceed with caution upon delivery and unloading of the machine and during in-house transport.
- Observe the symbols and information on the packaging.
- Only use the intended anchorage points.
- Observe the machine's centre of gravity.
- Attach lifting equipment accordingly and hang the load so that it is balanced.
- Remove the packaging shortly before setting up the machine.

Industrial trucks



WARNING!

There is a risk of fatal injury from industrial trucks!

Transport with industrial trucks can result in objects and other loads falling accidentally and causing serious or fatal injury. There is also the risk of the driver failing to see persons and running them over.

- Industrial trucks should only be operated by trained drivers (e.g. forklift drivers).
- Only walk past an industrial truck if the driver has signalled that he has recognised the person in his path.
- Only use approved industrial vehicles with sufficient load carrying capacity.
- Never transport materials over persons or the areas in which persons are located.

Suspended loads

WARNING!

There is a risk of fatal injury from suspended loads!

During lifting work, loads may swing out and fall. This can result in serious or fatal injury.

- Never walk under or into the range of a suspended load.
- Move loads under supervision only.
- Observe lashing points.
- Ensure that the lashing equipment is fitted securely.
- Do not hang lashing equipment on protruding machine parts or on the lugs of attached components.
- Only use approved hoists and lashing equipment with sufficient load carrying capacity.
- Do not use damaged hoists such as ropes or pulleys.
- Do not attach hoists such as ropes or belts to sharp edges and corners and do not knot or twist them.
- Set down the load when leaving the work area.

Disregard for the machine's centre of gravity

WARNING!

There is a risk of the unit toppling and falling over if there is disregard for the machine's centre of gravity!

If the machine's centre of gravity is disregarded the packaged unit may topple and cause life-threatening injury.

- Take into account the machine's centre of gravity.
- Observe the packaging information on the machine's centre of gravity.
- Attach lashing equipment in such a way that it is located above the centre of gravity.
- Raise the load carefully and ensure that it does not topple. If necessary, change the position of the lashing equipment.

Risk of slipping



CAUTION!

Risk of injury due to slipping on the packaging foil!

The packaging foil features a slippery surface that can cause persons to slip on it. Moisture, creases, edges and tension straps on the packaging foil entail a risk of slipping or stumbling. The packaging foil is not suitable for supporting weight. A fall may result in injury.

– Never stand on the packaging foil.
– Never lean on the packaging foil or use it for support.

Requirements for staff

Requirements for transport:

Transport of packaged units

Personnel: ■ Trained persons

Transport of unpacked machines

Personnel: ■ Service personnel

Requirements for staff

When checking storage criteria, you require the following:

Personnel: ■ Service personnel

When checking and applying preservation, you require the following:

Personnel: ■ Service personnel

Protective equipment

Requirements for transport:

Protective equipment:
- ■ Protective work clothing
- ■ Safety shoes
- ■ Protective gloves

Protective equipment

Preservation requires:

Protective equipment:
- ■ Protective work clothing
- ■ Safety shoes
- ■ Protective gloves
- ■ Light respiratory protection

Special tools

Requirements for transport:

NOTICE!
Risk of damage to the machine! Chains, steel cables and similar equipment are not suitable lifting equipment.

Special tool:
- Lifting equipment
- Transport equipment

Special tool:
- Lifting beams
- Locking key
- Conveyor rails

Dimensions of the conveyor rails

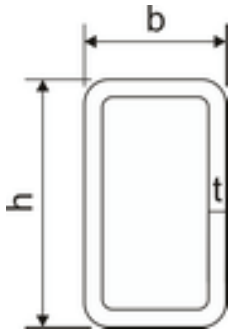

Fig. 39: Rectangular hollow profile

Nominal diameter Discharge nozzles	Profile dimensions H x W x D (mm)	Profile length (mm)
DN 50	80 x 60 x min. 4	950
DN 80	80 x 60 x min. 4	1285
DN 100	100 x 80 x min. 4	1870
DN 125	100 x 80 x min. 4	1870
DN 150	120 x 80 x min. 6	2520
DN 200	120 x 80 x min. 6	2520
DN 250	120 x 80 x min. 8	2750
DN 300	120 x 80 x min. 10	3350
Material: S 235 JR		

Profile length of at least 150 mm longer than the dimensions of the acoustic hood.

4.1.2 Delivery method

4.1.2.1 Delivery of the machine

The machine is shipped using a freight forwarder. In accordance with the given requirements the machine is sealed in foil and may be additionally packed in wood.

Transport on a truck

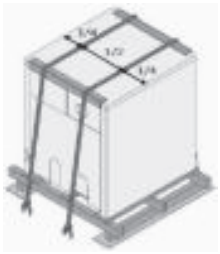

1. Strap the packaged unit to the truck in accordance with the diagram.
2. Always use appropriate edge protection to avoid damage to the packaged unit.

Fig. 40: Transport on a truck

4.1.3 Packaging

4.1.3.1 Symbole auf der Verpackung

Symbols on the packaging

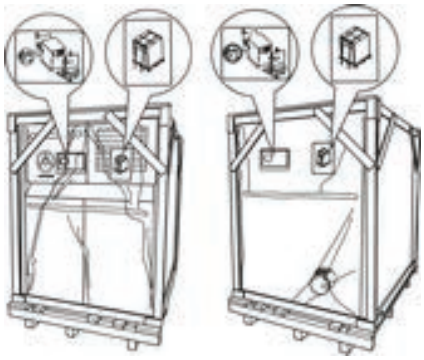

The following symbols are displayed on the packaging. Always observe these symbols during transport.

Fig. 41: Symbols on the front/rear side

Explanations

Centre of gravity



1. Displays the centre of gravity and weight of the machine.

   Observe the location of the centre of gravity for lifting work and transport.

Fig. 42: Centre of gravity

Transport on a truck



Fig. 43: Transport on a truck

2. Strap the packaged unit to the truck in accordance with the diagram.
3. Always use appropriate edge protection to avoid damage to the packaged unit.

Explanations

Comply with the order (pos.1-pos.3) of the work stages.

Transport without a palette

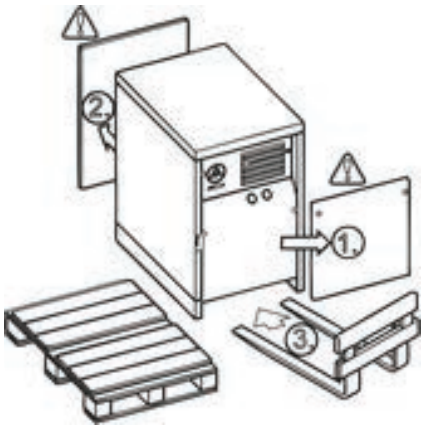

Fig. 44: Transport without a palette

1. Open the operating side of the acoustic hood (pos.1).
2. Open the rear side of the acoustic hood (pos.2).
3. Separate the machine from the transport palette by removing the holding screws.
4. Drive the fork of the forklift under the machine (pos.3).

WARNING!
Risk of injury if the machine topples or falls!
Observe the machine's centre of gravity.

5. Determine the machine's centre of gravity by raising it carefully.
6. Transport the machine so that it is balanced. The machine must not lean to one side.
7. Remove the lifting equipment at the installation area.

4.1.3.2 Handling packaging

Handling packaging

The various packaged items are packed in accordance with the anticipated transport conditions. In as far as it is possible, environmentally-friendly materials are used for the packaging.

The packaging is intended to protect individual components from transport damage, corrosion and other forms of damage. For this reason, do not destroy the packaging and only remove it shortly before assembly.

Only remove packaging for transport to the installation area if it has been expressly permitted.

Removing packaging

Packaging materials made of solid wood (e.g. wooden palettes, wooden crates) comply with the IPPC standard. They are re-usable. When disposing of the material, national and local requirements must be complied with.

From the machine

1. **CAUTION!**
   Risk of injury from rough packaging material and protruding nails!

   Remove packaging material.
2. Loosen the packaging foil and remove it.
3. Separate the machine from the transport pallet by removing the fastening screws.
4. **ENVIRONMENT!**
   Packaging materials are valuable resources. They can be used several times or recycled and then re-used. The improper disposal of packaging materials can present a risk to the environment.
5. Sort packaging according to the material used and dispose of it properly. *Chapter 10.3 „Disposal“ on page 174*

From the machine

1. Loosen the packaging foil and remove it.
2. Separate the machine from the transport pallet by removing the fastening screws.
3. **ENVIRONMENT!**
   Packaging materials are valuable resources. They can be used several times or recycled and then re-used. The improper disposal of packaging materials can present a risk to the environment.
4. Sort packaging according to the material used and dispose of it properly. *Chapter 10.3 „Disposal“ on page 174*

4.1.4 Transport inspection

Completeness

Checking for completeness
Check the goods for completeness immediately after delivery. Register missing parts and contact the manufacturer.

Check the delivery for completeness on the basis of the packing slip.

- The packing slip is provided with the product.

Transport damage

Transport damage
Register transport damage claims as soon as damage is discovered. Compensation claims for damage are only valid within the applicable claim periods.

Check the delivery immediately for transport damage.

In case of perceptible external damage, proceed as follows:

- Do not accept the delivery or only accept it under certain conditions.
- Note the scope of the damage in the transport documents or on the delivery docket provided by the carrier.
- Register the claim.

4.1.5 Transport of packaged units

4.1.5.1 Transport using industrial vehicles

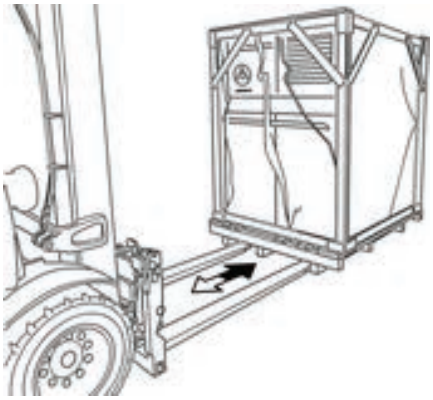

Fig. 45: Transport with acoustic hood

1. **NOTICE!**
   Risk of toppling loads! The transport of packaged units may only be carried out using lifting equipment that reaches under the machine and fits into the transport palette fully.
2. Insert the equipment into the provided opening in the transport palette.
3. Take into account the centre of gravity! See the labelling on the packaging.
4. **DANGER!**
   Risk of fatal injury from toppling components!

   Determine the packaged unit's centre of gravity by raising it carefully.
5. Transport the machine so that it is balanced. The packaged unit must not lean to one side.

4.1.5.2 Transport using a crane

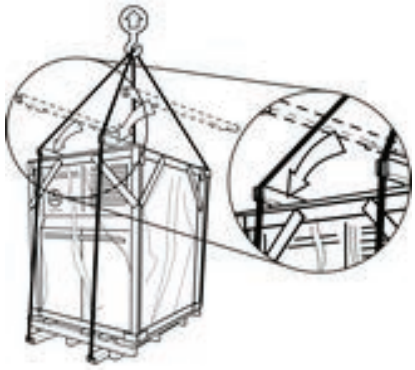

Fig. 46: Transport of packaged units

1. Guide the conveyor rails through the openings of the transport palette.
2. Place the lifting beams on to the acoustic hood. Span length of a minimum of 150 mm longer than the dimensions of the acoustic hood.
3. Guide lifting equipment, such as cables or straps through the conveyor rails and join them above the machine using the lifting beams.
4. Take into account the centre of gravity! See the labelling on the packaging.
5. **DANGER!**
   Risk of fatal injury from toppling components!

   Determine the packaged unit's centre of gravity by raising it carefully.

6. Transport the machine so that it is balanced. The packaged unit must not lean to one side.

4.1.5.3 Transport using industrial vehicles

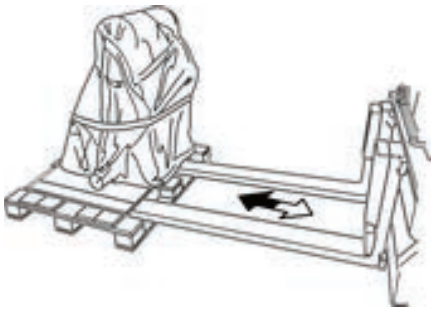

Fig. 47: Transport with belt guards

1.

NOTICE!
Risk of toppling loads! The transport of packaged units may only be carried out using lifting equipment that reaches under the machine and fits into the transport palette fully.

2. Insert the equipment into the provided opening in the transport palette.
3. Take into account the centre of gravity! See the labelling on the packaging.
4.

DANGER!
Risk of fatal injury from toppling components!

Determine the packaged unit's centre of gravity by raising it carefully.

5. Transport the machine so that it is balanced. The packaged unit must not lean to one side.

4.1.5.4 Transport using a crane



Fig. 48: Transport of packaged units

DANGER!
Risk of fatal injury from toppling components!

NOTICE!
Risk of damage to the machine from lifting equipment such as cables or straps.

Transport of the packaged unit with a crane is not permissible! The transport palette is not designed for crane transport.

4.1.6 Transport to the installation site

4.1.6.1 Transport using industrial vehicles

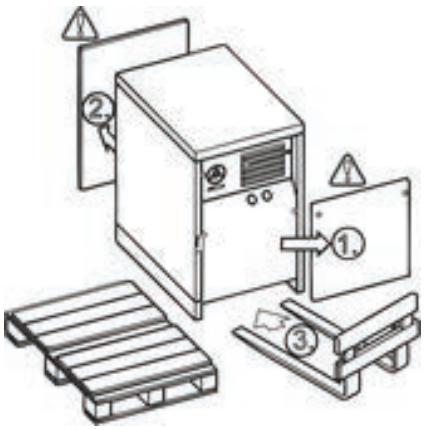

Fig. 49: Transport with acoustic hood

1. Completely remove packaging material.
2. Open the operating side of the acoustic hood (pos.1).
3. Open the rear side of the acoustic hood (pos.2).
4. Separate the machine from the transport palette by removing the holding screws.
5. Drive the transport fork under the machine (pos.3).
6. Take into account the centre of gravity! See the labelling on the packaging.
7. **DANGER!**
   Risk of fatal injury from toppling components!

   Determine the machine's centre of gravity by raising it carefully.
8. Transport the machine so that it is balanced. The machine must not lean to one side.
9. Remove the lifting equipment at the installation area.

DANGER!
Risk of fatal injury from toppling components!

Transport of the packaged unit using an industrial vehicle is not permissible!

4.1.6.2 Transport using a crane

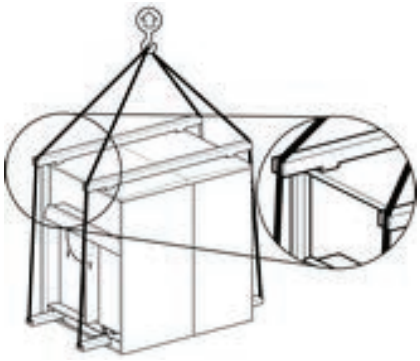

Fig. 50: Transport with acoustic hood

1. Completely remove packaging material.
2. Remove the front and rear elements of the acoustic hood and store them safely.
3. Guide the conveyor rails through the openings of the forklift tunnel.
4. Place the lifting beams on to the acoustic hood. Span length of a minimum of 150 mm longer than the dimensions of the acoustic hood.
5. Guide lifting equipment, such as cables or straps through the conveyor rails and join them above the machine using the lifting beams.
6. Separate the machine from the transport palette by removing the holding screws.
7. Take into account the centre of gravity! See the labelling on the packaging.
8. **DANGER!**
   Risk of fatal injury from toppling components!

   Determine the machine's centre of gravity by raising it carefully.
9. Transport the machine so that it is balanced. The machine must not lean to one side.
10. Remove the lifting equipment at the installation area.

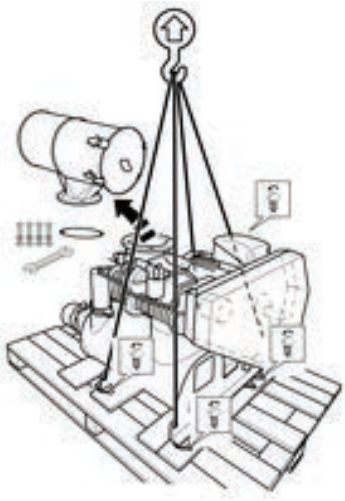

Fig. 51: Transport with belt guards

1. Completely remove packaging material.
2. Separate the machine from the transport palette by removing the holding screws.
3. **NOTICE!**
   Risk of machine damage if the material in the intake nozzle falls! Inspect for cleanliness.

   Dismantle the intake silencer on the flange joint.
4. **NOTICE!**
   Risk of damage from the force exerted by lifting equipment on accessory components!

   Only transport the machine with the hinged motor support fixed in place.

   Attach the lifting equipment carefully to the fastening device.

5. Take into account the centre of gravity! See the labelling on the packaging.
6. **DANGER!**
   Risk of fatal injury from toppling components!

   Determine the machine's centre of gravity by raising it carefully.
7. Transport the machine so that it is balanced. The machine must not lean to one side.
8. Remove the lifting equipment at the installation area.
9. Mount the intake silencer.

4.2 Storage and preservation

4.2.1 Storage

Storage notes

Store the packaged unit under the following conditions:

- Keep flange connections closed. Avoid entry of foreign substances.
- Do not store outdoors.
- Store in a dry and dust-free place.
- Do not expose it to any agressive media.
- Protect the packaged unit from exposure to the sun.
- Avoid mechanical vibrations.
- Avoid extreme temperature fluctuations.
- Avoid adverse water affects.
- Storage temperature: -10 to +40 °C.
- Relative humidity: maximum 80 %.
- If a vibration-free storage area is not available, move the movable components by 2 - 3 rotations every 6 - 8 weeks.

NOTICE!
Risk of corrosion! To avoid potential damage to the machine, an inspection of the overall scope of supply should be undertaken by the manufacturer every 2 years.

There may be information on the packaged unit regarding storage that goes beyond the requirements listed here. Comply with this information.

Storage information for periods of over 12 months

Additional measures:

- Packaging with VPI paper.
- Sealed in PVC foil.

Storage information for periods of over 12 months in a tropical climate

Additional measures:

- Drying agent (VPI power in a bag) inside the packaging.
- Packaging with VPI paper.
- Sealed in PVC foil.

Storage in air-conditioned rooms with minimum humidity has a positive influence on corrosion protection!

Packaging during storage

- Inspect the general condition of the packaging regularly. Immediately rectify damage to the packaging. If necessary, refresh or replace the anti-corrosion protection *„Carrying out preservation treatment“ on page 88*
- After opening the packaging:
  - Inspect uncoated parts for sufficient corrosion protection.
  - Protect against humidity and damaging environmental influences.
  - Sealing flaps from the connection openings must not be removed.
- Replace the drying agent regularly in accordance with climactic conditions.

NOTICE!

Risk of corrosion! Customised packaging is required for tropical climate zones and in the case of special customer requirements.

Damaged packaging

NOTICE!

Risk of corrosion! As a result of damaged packaging, moisture and damaging environmental influences could directly affect the product.

Measures in case of damaged packaging

- Immediately rectify damage to the packaging. If necessary, refresh or replace the preservation material.
- Dry the machine, if necessary.
- Inspect the drying agent, replace if necessary.
- Repair or replacement of the packaging.

4.2.2 Preservation

Preservation

Factory preservation protects the product for a certain time period in accordance with the relevant storage and packaging information.

Factory preservation/standard		
Conveying chamber	BIO-CHEM food tech oil	biodegradable, does not contaminate groundwater
Oil chamber	Mobil SHC 626	operating lubricant oil
Shelf-life	up to 12 months	with compliance with storage conditions
Repeat	after 12 months	
Extended shelf-life (no standard)	more than 12 months	only with suitable long-term preservation and packaging

Preservation from assembly to commissioning		
Treat the conveying chamber and move the rotors by 2-3 rotations.	more than 6 weeks of non-use	avoidance of corrosive and standstill damage

Preservation after period of non-use		
Preservation of conveying chamber, oil chamber	more than 6 months	special preservation measures necessary

Carrying out preservation treatment

Preservation measures:

1. Open the packaging. Check the machine for good accessibility.
2. **WARNING!**
   Risk of poisoning from inhaling oil vapour!

   Preservation treatment of the conveying chamber:

   spray suitable preservative oil over the intake nozzle at the machine stage.

   NOTICE!
   Risk of filter damage!

   Do not spray preservative oil into the intake filter. Never treat filter elements with preservative oil!
3. **WARNING!**
   Risk of poisoning from inhaling oil vapour!

   Preservation treatment of the oil chamber:

   Spray suitable preservative oil into the machine stage through the oil fill opening and oil drain opening.

   ⇨ Let excess preservative oil flow out of the oil drain opening.
4. Seal the oil fill opening and oil drain.
5. **WARNING!**
   Risk of poisoning from inhaling oil vapour!

   Treat the outer, uncoated surfaces with suitable preservative oil.
6. Inspect the sealing flaps.
7. Check and restore the packaging.

5 Set-up and installation

5.1 Safety instructions

Improper set-up/installation



WARNING!

Risk of injury from improper set-up and installation!

Improper set-up and installation can result in serious injury or damage.

- Before beginning any work, ensure there is sufficient space for installation.
- Check the tidiness and cleanliness of the work area.
- Only use commercially-available tools or, if necessary, special tools.

  Unsuitable or damaged tools may cause injury!
- Secure components against falling or tipping over during the installation.
- Install components correctly.
- Comply with the specified screw-tightening torques.

Electrical system



DANGER!

Risk of fatal injury from electrical current!

There is a risk of fatal injury from touching live components. Live electrical components may make uncontrolled movements and cause extremely serious, or even fatal injury.

- Before beginning work, switch off the electric power supply and secure it against restarting.

Electrostatic charges



WARNING!

Risk of injury from electrostatic charges!

The belt drive may generate electrostatic charges.

- Before commissioning put in place equipotential bonding.
- Only use electrically-conductive belts.

Requirements for staff

Requirements for set-up and installation:

Set-up and installation of electrical components

Personnel: ■ Authorised electricians

Set-up and installation of mechanical components

Personnel: ■ Service personnel

Protective equipment

Requirements for set-up and installation:

Protective equipment:
- Protective work clothing
- Safety shoes
- Protective gloves
- Safety goggles
- Industrial hard hat

Special tools

Requirements for set-up and installation:

Special tool:
- Tools for authorised electricians
- Electric drill
- Drills
- General tool kit
- General measurement tools and equipment

Special tool: ■ Locking key

5.2 Requirements for the installation site

Ground properties

Inspect the ground properties. These should be as follows:

- stable
- even
- free of vibrations
- without any incline
- without holes

NOTICE!
Risk of deformation of the acoustic hood substructure! Do not install or mount the machine on “hollow” or lamellar foundations.

Subsurface requirements for the cement floor.
The cement floor should have a recommended surface pressure resistance of 30 - 40 N/mm².

Flatness tolerance according to DIN 18202						
	Distance between measuring points in (m)					
	0.1	1	4	10	>15	/
Dimension tolerance in (mm)	2	4	10	12	15	/

Angular tolerance according to DIN 18202						
	Distance between measuring points in (m)					
	up to 1	over 1 up to 3	over 3 up to 6	over 6 up to 15	over 15 up to 30	over 30
Dimension tolerance in (mm)	±6	±8	±12	±16	±20	±30

Surroundings

- Ensure there is a suitable fresh air supply.
- Avoid heat accumulation.

NOTICE!
Risk of corrosion! There must not be any excessive levels of dust, acids, steam or explosive or flammable gases at the installation site!

Installation with belt guards

The machine is only suitable for indoor installation.

Machine installation site

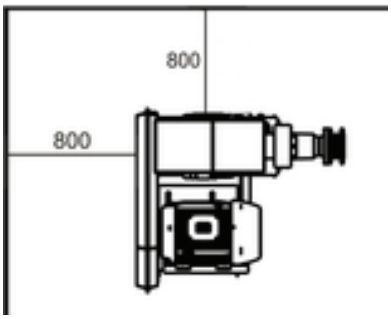

Fig. 52: Overall dimensions

- Comply with the overall dimensions for maintenance work. Observe the installation drawing.
- Provide measures for sound insulation.
- Take the following precautionary measures:
  - If possible, switch off the machine before entering the operating area. Otherwise wear hearing protection.
  - Provide appropriate signage at the installation site.
  - The installation site must only be accessible for trained persons.
  - Choose an installation site where the duration of time persons spend in the immediate vicinity of the machine is extremely limited.

Installation with acoustic hood

The machine is suitable for indoor and outdoor installation.

Machine installation site

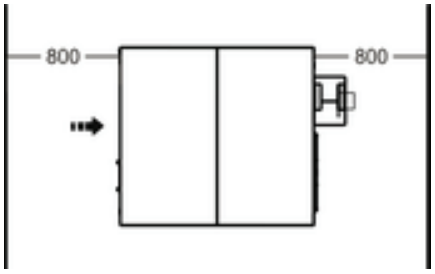

Fig. 53: Overall dimensions

- Comply with the overall dimensions for maintenance work. Also consult the installation drawing.
- Take the following precautionary measures:
  - If possible, switch off the machine before entering the operating area.
  - Otherwise wear hearing protection.
  - The installation site must only be accessible for trained persons.
  - Provide appropriate signage at the installation site.
  - Choose an installation site where the duration of time persons spend in the immediate vicinity of the machine is extremely limited.

5.3 Installation

Models with acoustic hoods; aligning and dowelling



Fig. 54: Spirit level alignment

1. Carefully align the machine.
2. Position it so that it is balanced.

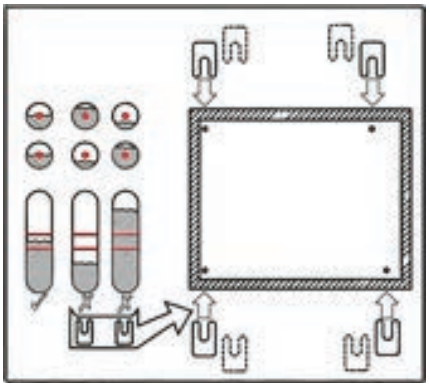

Fig. 55: Shim alignment

3. **NOTICE!**
   Risk of total machine damage! Installing a machine at an angle may, as a result of an undefined oil level, can lead to a total machine loss. Observe the level and angle tolerances.

   If necessary, use the intended shims on the bolting surfaces.

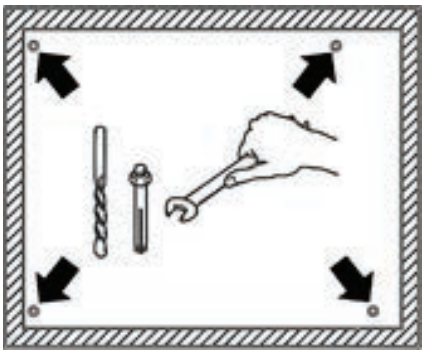

Fig. 56: Mounting holes

4. Recommendation: Drill and dowel four mounting holes and screw the machine into these.

Models without acoustic hoods; aligning and dowelling

1. Carefully align the machine.
2. Position it so that it is balanced.
3.

> **NOTICE!**
> Risk of irreversible machine failure! Installing a machine at an angle may, as a result of an undefined oil level, can lead to a total machine loss. Observe the level and angle tolerances.

If necessary, use the intended shims on the bolting surfaces.

4. A single bolt per machine foot is sufficient.

   Drilling, dowelling and screwing tight the mounting holes

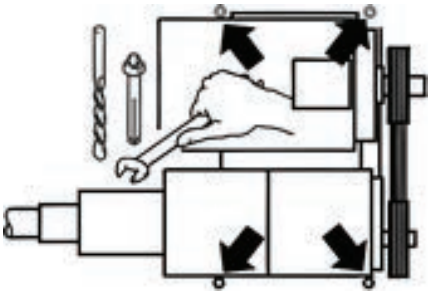

Fig. 57: Mounting holes

5.4 Connecting the system pipeline

System pipeline

> **NOTICE!**
> Risk of machine damage! The connected pipeline must not exert forces or moments that affect the machine.
>
> Secure and fasten the system pipeline.

> *Observe the labelling and dimensions on the installation drawing.*

1. Remove the sealing cover from the connection openings.

Bushings/2 clamps

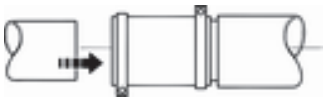

Fig. 58: 2 clamps

2. Connect the system pipeline.
   ⇨ Make sure that the clamps are offset by 180° to one another.

Bushings/4 clamps

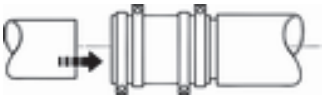

Fig. 59: 4 clamps

3. Connect the system pipeline.
   ⇨ Make sure that the clamps are offset by 180° to one another.

Connection of a compensator

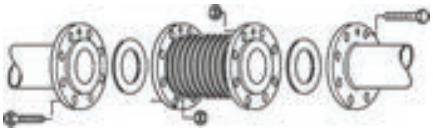

Fig. 60: Connection of a compensator

4. Connect the system pipeline.
5. Close off the pipeline duct using a shim.

5.5 Connecting the drive motor

5.5.1 Preparing the connection

Preparation with acoustic hood

1. *Chapter 3.8.1 „Drive motor“ on page 60*
2. **DANGER!**
   Risk of fatal injury in the case of incorrect electrical connection data!

   Compare the electrical connection data of the drive motor with those of the operator-side grid.
3. Shut down the power from the operator-side grid.
4. Observe the cable routing on the installation drawing!

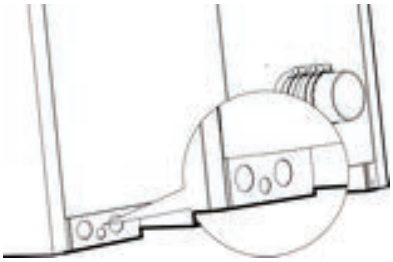

Fig. 61: Position on the acoustic hood

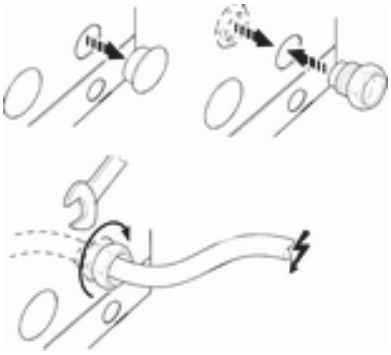

Fig. 62: Preparation

5. Prepare the cable feedthroughs.
6. **DANGER!**
   Risk of fatal injury from electric current!

   Check that there is no live current in the connection cable.
7. Lay the connection cable through the cable feedthroughs.

5.5.2 Routing cables

Routing the connection cable

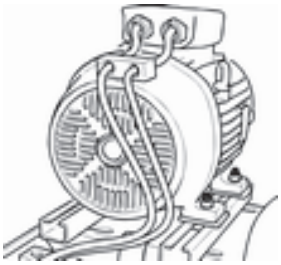

Fig. 63: Cable laying alignment

1. Route the connection cable in accordance with the installation drawing.
2. **NOTICE!**
   Risk of damage! The minimum bending radius must not be undershot!

   Observe the bending radii.

   ⇨ Bending radius of the connection cable = 15 x cable sheath diameter

5.5.3 Connecting the drive motor

Motor connection

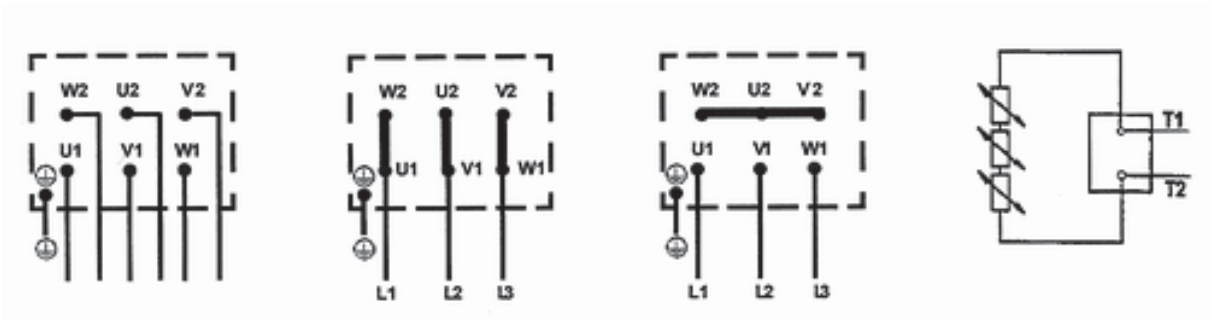

Fig. 64: Connection layout

Star-delta connection	Delta connection	Star connection	Thermal winding shield

1. Open the motor terminal box.
2. Check the alignment of the terminal box.
   ⇨ The terminal box must be aligned with openings for the cable feedthroughs facing in the direction of the motor fan.
3. Attach a screwed cable gland to the terminal box.
4. Guide the motor cable through the screwed cable gland.
5. Connect the cable connections with the motor terminals correctly, in accordance with the connection layout.
6. Close the terminal box.
7. Ensure that the connection cable is not damaged by the movement of the hinged motor support.

5.6 Connecting the drive motor

5.6.1 Preparing the connection

Preparation with belt guards

1. ↳ *Chapter 3.8.1 „Drive motor“ on page 60*.
2. **DANGER!**
   Risk of fatal injury in the case of incorrect electrical connection data!

   Compare the electrical connection data of the drive motor with those of the grid operator.
3. Shut down the power from the operator-side grid.
4. **DANGER!**
   Risk of fatal injury from electric current!

   Check that there is no live current in the connection cable.

5.6.2 Routing cables

Routing the connection cable

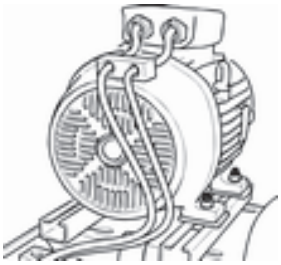

Fig. 65: Routing cables

1. Route the connection cable in accordance with the installation drawing.
2.

> **NOTICE!**
> Risk of damage! The minimum bending radius must not be undershot!

Observe the bending radii.

⇨ Bending radius of the connection cable = 15 x cable sheath diameter

5.6.3 Connecting the drive motor

Motor connection

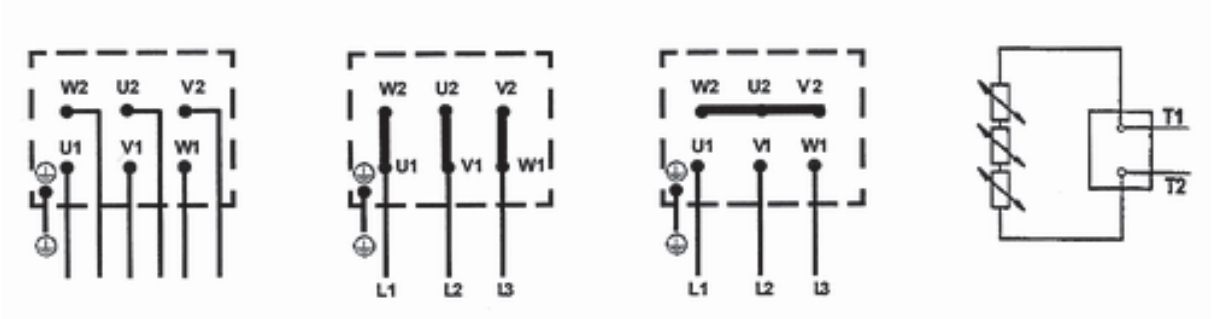

Fig. 66: Connection layout

Star-delta connection	Delta connection	Star connection	Thermal winding shield

1. Open the motor terminal box.
2. Check the alignment of the terminal box.
   ⇨ The terminal box must be aligned with openings for the cable feedthroughs facing in the direction of the motor fan.
3. Attach a screwed cable gland to the terminal box.
4. Guide the motor cable through the screwed cable gland.
5. Connect the cable connections with the motor terminals correctly, in accordance with the connection layout.
6. Close the terminal box.
7. Ensure that the connection cable is not damaged by the movement of the hinged motor support.

5.7 Connecting the machine's terminal strip

Machine terminal strip

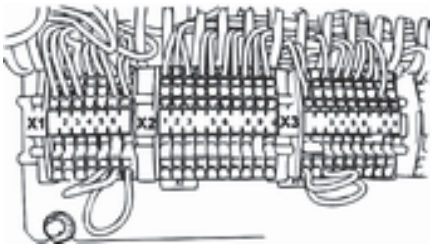

Fig. 67: Terminal box connections

1. Open the terminal box.
2. Observe the wiring scheme.

   The wiring scheme can be found in the terminal box or in the product documentation.
3. **DANGER!**
   Risk of fatal injury from electrical current!

   Ensure that the connecting cable is not live.
4. *Connection layout according to the AERZEN wiring scheme!*

   Guide the external connecting cable to the terminal box.
5. Guide the connecting cable correctly through the cable entry (dummy cover) to the terminals.
6. The cable entry (dummy cover) can be equipped on site with screwed cable glands.
7. Close the terminal box properly.

5.8 Connecting the earthing

Connecting the earthing

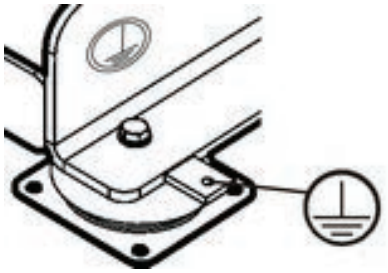

Fig. 68: Example connection

1. *The exact position of these connections can be found in the installation drawing.*

   Earth the machine on the provided connections.
2. Observe the cross-sections of the earthing strap! *Chapter 11.9.2 „Earthing strap cross-sections “ on page 194*.
3. Beware of uncovered metal contact surfaces.
4. Screw contacts tightly together.

5.9 Connecting the earthing

Connecting the earthing

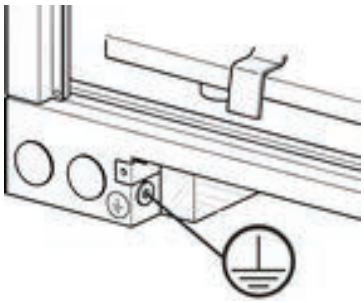

Fig. 69: Example connection

1. *The exact position of these connections can be found in the installation drawing.*

   Earth the machine on the provided connections.
2. Observe the cross-sections of the earthing strap!.
   See *Chapter 11.9.2 „Earthing strap cross-sections “ on page 194*.
4. Beware of uncovered metal contact surfaces.
5. Screw contacts tightly together.

5.10 Laying the insulation mat

Laying the insulation mat

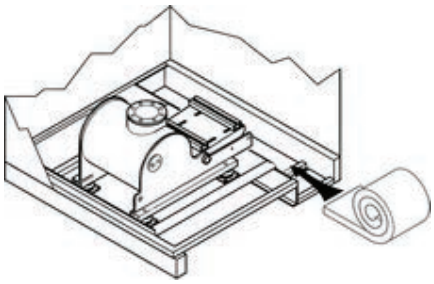

Fig. 70: Laying of the insulation mat

- Depending on the scope of delivery, the insulation mat is delivered separately.
- Lay the insulation mat in the exhaust duct of the acoustic hood.

6 Initial start-up

6.1 Safety instructions

Improper commissioning



WARNING!

Risk of injury from improper commissioning!

Improper commissioning may lead to serious injury and considerable material damage.

– Before commissioing, ensure that all installation work has been carried out and completed in accordance with the information and notes in this instruction manual.
– Before commissioing, ensure that there are no persons in the hazard area.

Requirements for staff

Requirements for commissioning:

Commissioning of electrical components

Personnel:
- Authorised electricians

Commissioning the frequency converter:

Personnel:
- Authorised electricians with additional qualifications

Commissioning of mechanical components

Personnel:
- Service personnel

Protective equipment

Requirements for commissioning:

Protective equipment:
- Protective work clothing
- Safety shoes
- Hearing protection
- Protective gloves
- Safety goggles
- Industrial hard hat

Special tools

Requirements for commissioning:

Special tool:
- Ratchet wrench
- Oil funnel
- Test pump
- General tool kit
- General measurement tools and equipment
- Tools for authorised electricians

Special tool:
- Locking key

6.2 Preparation for commissioning

Preparation

1. Check that the machine has been correctly installed. See requirements at the installation site ↳ *Chapter 5.2 „Requirements for the installation site“ on page 91*.
2. Check that the packaging has been fully removed.
3. Check that all seals and covers on the piping connections have been removed.
4. Check that the piping connections are clean. Remove any dirt, dust or foreign matter from the intake area.
5. Ensure that the inlet and exhaust air openings on the acoustic hood are unobstructed.

Ventilation

6. 

Take the ambient temperature into consideration. Operating conditions ↳ *Chapter 11.4 „Technical performance data“ on page 181*

Ensure that the installation site is adequately ventilated.

Take noise protection into consideration.

7. 

Natural vibrations and sound emissions may be induced in piping and foundations!

Prevent natural vibrations and associated sound emissions with suitable measures, e.g. insulation.

Ventilating the manometer

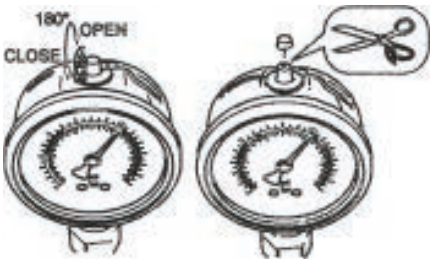

Fig. 71: Ventilating the manometer

8. Prepare the manometer in line with its specific design.

- Cut off the rubber connections on the upper section.
- Turn the bleeder flap to OPEN.

Maintenance indicator (a)



Fig. 72: Variation a)

9. Set to zero.

- Press the front reset button and set the pointer to the zero position.

Maintenance indicator



Fig. 73: Variation b)

10. Set to zero.

- Remove the plugs on the front.
- Adjust the set screw using a screwdriver.
- Observe the “+” and “-” markings.
- Position the red trailing pointer between 0 and -10 mbar.

Aligning the sheaves

11. Check the alignment of the sheaves.

- The maximum permitted sheave offset is 0.5 mm.

Connecting the piping

12. Connect the depressurised system piping.

Removing the sealing plugs

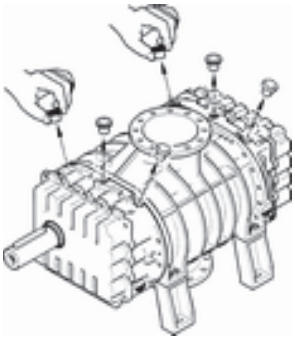

Fig. 74: Sealing plug configuration

13. Remove the sealing plugs from the balancing holes.

The sealing plugs may be coated in machine paint as part of the manufacturing process.

The number of sealing plugs varies depending on the machine type!

Depending on the design, they may already have been removed before shipping.

NOTICE!

Risk of damage if sealing plugs are not removed! If sealing plugs are not removed, there is a risk that the machine will start to leak oil. Lube oil could enter the conveying chamber.

No lube oil



Fig. 75: Do not fill with lubricant oil

14.

NOTICE!

Risk of damage! Lube oil must not enter these bore holes!

These bore holes are solely intended to discharge leaking gases. Filling with oil results in the need for considerable repairs.

Checking the acoustic hood fan

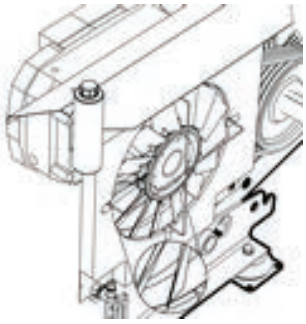

Fig. 76: Fan cover

15. Check the fan wheel for smooth movement and contact-free operation.

If necessary, adjust the cover plate.

Frequency converter installation and connection

16.

Observe the manufacturer's instruction manual!

Position and assemble the frequency converter.

- Connect it according to the manufacturer's instructions.
- See also the assembly group description for frequency converters. *Chapter 3.8.4 „Frequency converter“ on page 63*

Checking the EMERGENCY STOP function

17. Check whether the EMERGENCY STOP function is in place and installed.

- Check for correct operation.
- Enter the test result in the test book.

Preparing the hinged motor support

Handling *without* lifting device

Disassemble the transport safety lock.

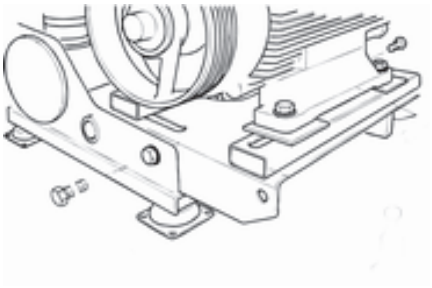

1. Remove the safety screws for transport.

Fig. 77: Example: DN50

Disassemble the transport safety lock.

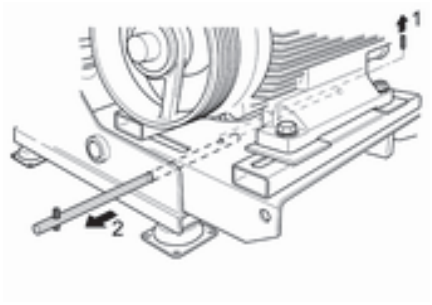

2.

- 1.) Remove the split pin.
- 2.) Disassemble the safety rod for transport.

⇨ The safety rod later acts as an aid for supporting the hinged motor support.

Fig. 78: Example: DN80

Preparing the hinged motor support

Handling *with* lifting device

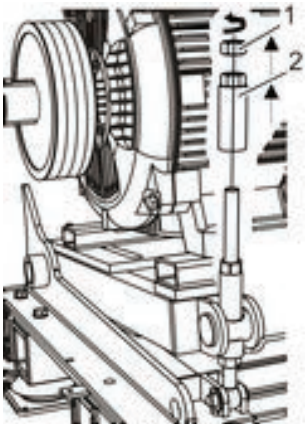

Fig. 79: Hinged motor support preparation

→ Remove counternut the (pos.1) and locking sleeve (pos.2).

6.3 Performing commissioning

6.3.1 Filling oil, version featuring oil system

1. → Open the maintenance elements of the acoustic hood.

Filling with oil

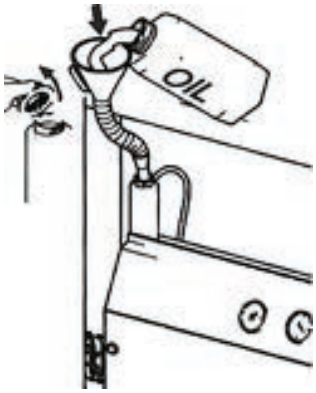

Fig. 80: Version with oil system

2. →

When working with operating materials such as lube oil, wear personal protective equipment.

ENVIRONMENT!
Environmental risks from incorrect handling of lubricants!

Fill with lube oil. ↬ *Chapter 8.3.1 „First oil filling“ on page 136*

Checking the acoustic hood's oil level.

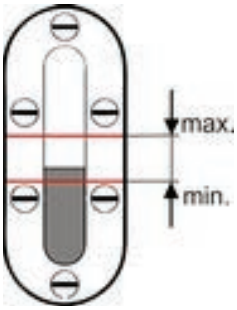

Fig. 81: Acoustic hood oil level display

3. Check the lube oil level on the acoustic hood's oil level display and adjust as necessary.

Check the machine stage's oil level

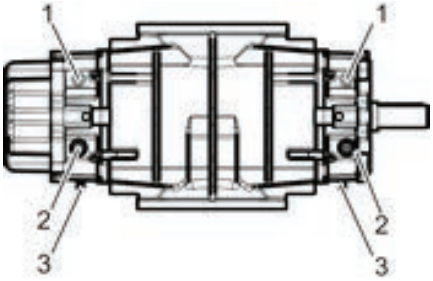

Fig. 82: Machine stage

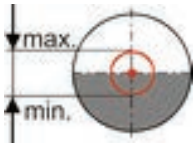

Fig. 83: Oil level display (item 2)

4. Check the lube oil level on the machine stage's oil level displays (item 2) and adjust as necessary.

6.3.2 Filling with oil, models without oil system

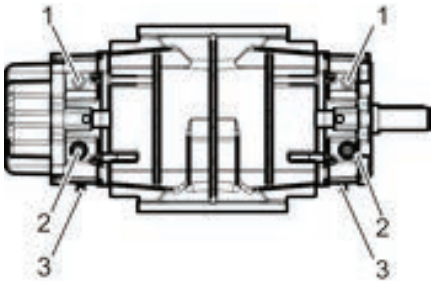

Fig. 84: Machine stage GM3S-GM80L

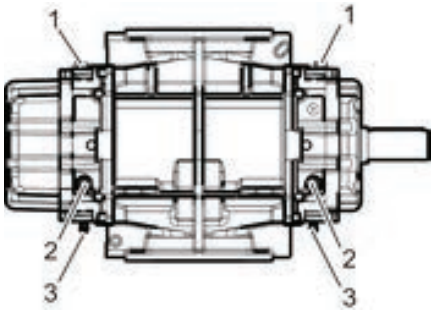

Fig. 85: Machine stage GM90L-GM400L

Checking the oil level

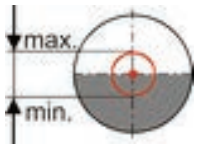

Fig. 86: Oil level display (Pos. 2)

1. *When working with operating materials such as lube oil, wear personal protective equipment.*

ENVIRONMENT!
Environmental risks from incorrect handling of lubricants!

Loosen the RED-marked locking screw (pos. 1). Fill with lube oil. *„Filling with oil“ on page 137*

2. Check the lube oil level and correct it if necessary.

6.3.3 Establishing an electrical connection

1. **DANGER!**
Risk of fatal injury from electric current!

Supply electrical components with electricity.

See *Chapter 5.5 „Connecting the drive motor“ on page 95*.

2. Connect and activate motor overload protection. *Chapter 11.9.3 „ Motor overload protection“ on page 194*

3. Observe the permissible starting frequency of the drive motor. *„Permissible starting frequency“ on page 61*

Checking direction of rotation/ models with acoustic hood

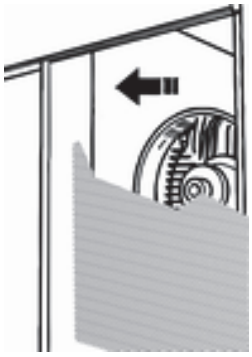

Fig. 87: Motor direction of rotation

4.

WARNING!
Risk of injury from rotating components!

NOTICE!
Risk of machine damage from incorrect direction of rotation!

Check the direction of rotation **without belts** in place.

- If in place, remove the perforated plate cover of the drive motor's sheave.
- Observe the sign with direction of rotation on the machine stage and on the drive motor.
- Start the drive motor briefly (approx. 1 to 2 seconds).
- Viewed towards the front of the drive shaft, the drive motor turns anti-clockwise.
  – Direction of rotation is correct = continue commissioning.
- From the viewing position, the drive motor turns right in front of the drive shaft.
  – Direction of rotation is incorrect = correct the electrical connection.
- Where applicable, attach the perforated plate cover of the drive motor.

Checking the direction of rotation/ models without acoustic hood

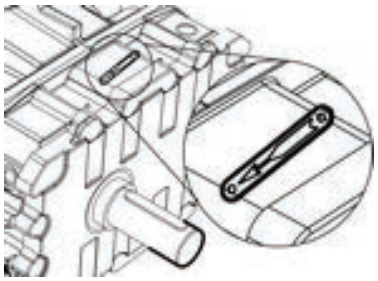

Fig. 88: Direction of rotation

5.

WARNING!
Risk of injury from rotating components!

NOTICE!
Risk of machine damage from incorrect direction of rotation!

Check the direction of rotation **without belts** in place.

- Remove the cover from the belt guard.
- Observe the sign with direction of rotation on the machine stage.
- Start the drive motor briefly (approx. 1 to 2 seconds).
- Viewed towards the front of the drive shaft, the drive motor turns anti-clockwise.
  - Direction of rotation is correct = continue commissioning.
- From the viewing position, the drive motor turns right in front of the drive shaft.
  - Direction of rotation is incorrect = correct the electrical connection.
- Mount the cover of the belt guard.

Disconnecting the electrical power supply

6.

WARNING!
Risk of injury from an automatic start-up!

Deactivate the machine and secure it against restarting.

6.3.4 Handling the hinged motor support *with* lifting device

Fitting the belt

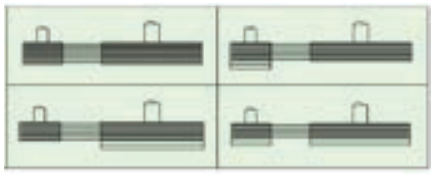

Fig. 89: Permissible belt layout

1.

WARNING!
Risk of injury from moving or rotating components!

Observe and comply with the permissible groove layout.

Loosening the self-locking nut

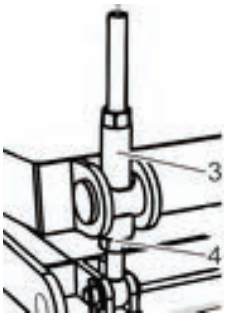

Fig. 90: Loosening the self-locking nut

2.

NOTICE!
Prevention of wear and tear on belts.

Screw the self-locking nut (pos.4) all the way downwards.

⇨ The hinged motor support can be adjusted to the correct position.

Pre-tensioning belts

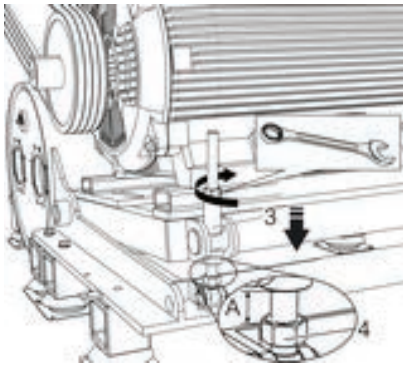

Fig. 91: Pre-tensioning belts

3.

CAUTION!
Risk of injury from tensioning components!

Turn guide bushing (pos.3) clockwise with the ratchet wrench until the belts are pre-tensioned.

⇨ The hinged motor support is partly held by the belt drive and rests lightly on the guide bushing (pos.3).

Adjusting the guide bushing

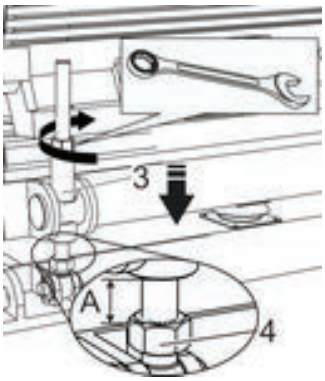

Fig. 92: Adjusting the guide bushing

4. Set gauge A.

- Set self-locking nut (pos.4) to gauge A. Turn guide bushing (pos.3) on to the self-locking nut (pos.4) using the ratchet wrench.

DN/discharge side	Gauge A in mm
80	20
100	25
125	30
150	35
200	40
250	45
300	50
Delta Blower G5	

Tensioning the belts

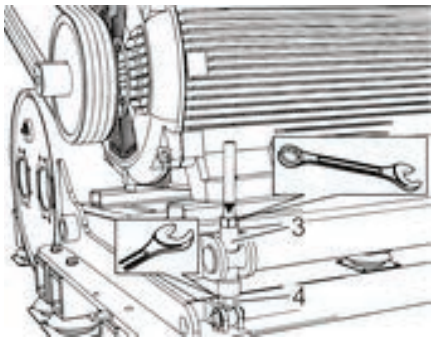

Fig. 93: Tensioning the belts

5. **CAUTION!**
Risk of injury from moving and rotating components!

Tension the belts.

- Secure the guide bushing (pos.3) with the self-locking nut (pos.4).
- The hinged motor support is supported entirely by the belt drive.

6.3.5 Handling hinged motor support *without* lifting device

Raising the hinged motor support of the DN50

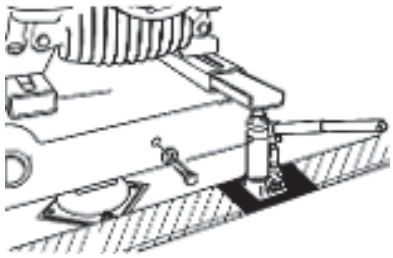

Fig. 94: Example: DN50

1. Insert the lifting bracket in the motor's attachment rail.

NOTICE!
Only use hydraulic lifts on solid, level ground.

Position the hydraulic lift securely.

2. **WARNING!**
Risk of shearing and crushing from moving loads!

Slowly raise the hinged motor support by pumping the hydraulic lift.

3. **WARNING!**
Risk of injury from the hydraulic lift tipping up or slipping!

Raise the hinged motor support in small steps and always support it with timbers! This prevents the sudden downward movement of the hinged motor support if the hydraulic lift tips up or slips.

Raising the hinged motor support of the DN80

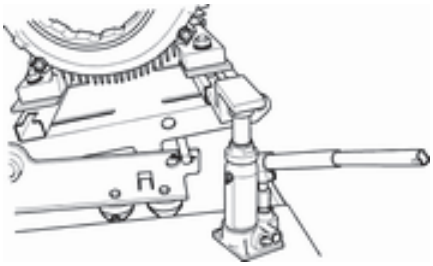

Fig. 95: Example: DN80

4. Insert the lifting bracket in the motor's attachment rail.

NOTICE!
Only use hydraulic lifts on solid, level ground.

Position the hydraulic lift securely.

5. **WARNING!**
Risk of shearing and crushing from moving loads!

Slowly raise the hinged motor support by pumping the hydraulic lift.

6. **WARNING!**
Risk of injury from the hydraulic lift tipping up or slipping!

Raise the hinged motor support in small steps. While doing so, use the transport safety rod to brace the hinged motor support in the recess of the base support. This prevents the sudden downward movement of the hinged motor support if the hydraulic lift tips up or slips.

7. Raise the hinged motor support until the belts can be fitted.

Fitting the belt

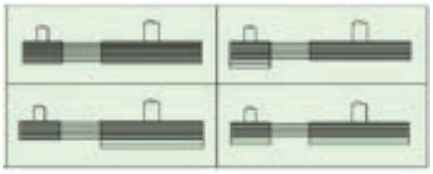

Fig. 96: Permissible belt layout

8. **CAUTION!**
Risk of injury from tensioning components!

Fit the belt. Observe and comply with the permissible groove layout.

Tensioning the belts

9. **WARNING!**
Risk of injury from tensioning, moving or rotating components!

Release the hydraulic lift carefully and slowly.

⇨ The hinged motor support is lowered.

If released too quickly, the hinged motor support drops suddenly.

The belts are tautened by the weight of the motor.

10. Completely remove the hydraulic lift and other auxiliary equipment and store them safely for future maintenance purposes.

11. **NOTICE!**
Risk of damage to the belt drive! The hinged motor support must not rest on the base support, the transport securing rod or similar equipment.

Completely remove the hydraulic lift, transport securing rod and other auxiliary equipment and store them safely for future maintenance purposes.

6.3.6 Carrying out a test run

Check the oil level.

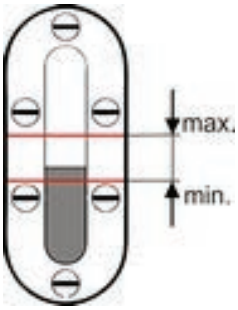

Fig. 97: Oil level display

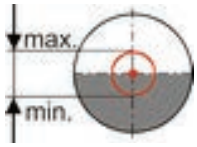

Fig. 98: Oil level display

1. Check the lube oil level on the oil level displays.
2. If the lube oil level is at the same position between all the oil displays' min.-/max. marks:
   ⇨ the oil level is OK.
3. If the lube oil level is not at the same position between the oil displays' min.-/max. marks:
   ⇨ correct the machine's alignment. Observe the filling quantities.

4. **CAUTION!**
Risk of injury from moving components!

Carry out a test run of the belt drive and check that it is operating correctly.

Characteristics:

- quiet, even operation.
- even load.
- no excessive vibrations.
- no whistling noises.
- no increased wear.

Checking the protective cover/ models without acoustic hood

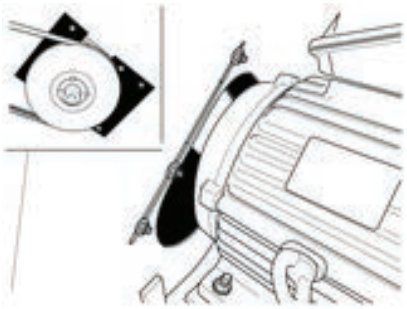

Fig. 99: Protective cover

5. Check the spacing of the pre-mounted protective cover for the motor drive shaft.
   - The protective cover should be at a distance of approx. 10 mm from the motor drive shaft.
   - By loosening the fastening screws, the protective cover can be moved.
   - Check the protective cover for firm seating and, if necessary, tighten it.

Adjusting the protective cover/ models without acoustic hood

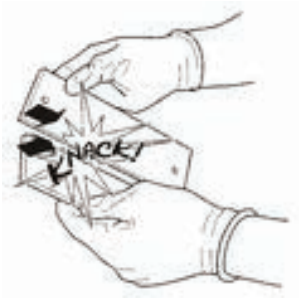

Fig. 100: Adjusting the protective cover

6. If the protective cover is supplied separately, adjust the cover plates accordingly. The cover plates can be snapped off at the required length.

Assembling and adjusting the protective cover/models without acoustic hood

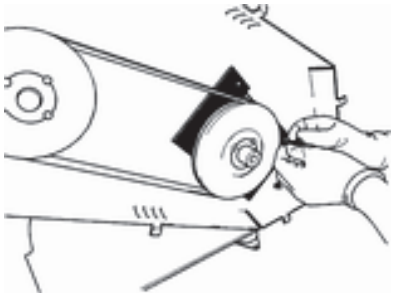

Fig. 101: Assembly/adjusting

7. **WARNING!**
Risk of injury from rotating components!

Assemble the protective cover after tensioning the belts.

- The protective cover should be at a distance of approx. 10 mm from the motor drive shaft.
- Operation is only permissible with a mounted cover!

Assembling the acoustic hood

8. Close the maintenance element of the acoustic hood.

Connecting the power supply

9. **WARNING!**
Risk of injury from electric current!

Supply electrical components with electricity.

Inspecting shut-downs

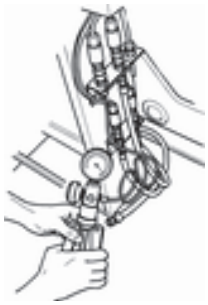

Fig. 102: Test pump

10. Check the correct operation of all pressure switches/sensors that can trigger a shut-down.
    - Connect the test pump to the corresponding measurement line.
    - Simulate the tripping pressure.
    - Check to see if a shut-down process is triggered.
    - Remove the measurement line from the test pump.
    - Fit the measurement line to the measuring point on the machine.

Opening the system line

11. Open valves on the system side.

Checking the safety valve

12. Check the safety valve for correct operation.

Starting briefly

13.

WARNING!
Risk of injury from rotating components!

WARNING!
Risk of injury from pressurised components!
Do not loosen or remove any locking screws or pipe connections.

Switch on the drive motor.

- After approx. 20 seconds, switch it off.
- Make sure the motor coasts down smoothly.

Checking the frequency converter for correct operation

14.

Read and follow the manufacturer's operating instructions!

DANGER!
Risk of fatal injury from electric current and residual energy for all work performed on frequency converters!

See also the assembly group description for frequency converters. *Chapter 3.8.4 „Frequency converter“ on page 63*

Starting the drive motor

15.

WARNING!
Risk of injury from rotating components!

As long as there are no malfunctions: restart the drive motor.

- Check the EMERGENCY STOP function.
- Check the machine's protective equipment.

Checking after first commissioning

16.

WARNING!
Risk of injury from pulling or opening pressurised lubricating and control oil pipes.

Perform the following checks:

Chapter 6.4 „Performing checks after commissioning“ on page 119

Acoustic hood protection

17.

WARNING!
Risk of injury if protective equipment is not present.

Correctly close the elements of the acoustic hood.

- Store the acoustic hood key safely.
- Only allow access for authorised personnel.

Belt protection

18.

WARNING!
Risk of injury if protective equipment is not present.

Mount the belt protection cover.

Operational readiness

19. If there are no malfunctions, the machine is ready for operation.

After the first few hours of operation, preservative oil may gather in the parting faces as a result of the machine warming up.

6.4 Performing checks after commissioning

Inspection	After the first 3 op. hrs	After the first 25 op. hrs
Screws	after the machine has cooled down, re-tighten if necessary	
Safety valve	Check for correct operation	
Oil level	check and, if necessary, correct	check and, if necessary, correct
Aligning the sheaves		check, correct if necessary
Condition of the belts		check, change if necessary, establish cause
Control system, fault transmitter, pressure and temperature sensors	check for correct operation	
Motor overload protection	connected and active	
Accumulation of preservative oil		check, remove if necessary
op. hrs = operating hours		

7 Operation

7.1 Safety instructions

Improper operation



WARNING!

Risk of injury from improper operation!

Improper operation may lead to serious injury and considerable material damage.

- Carry out all activities in accordance with the information and notes in this instruction manual.
- Before beginning work, observe the following:
  - Ensure that all covers and safety devices are installed and operating correctly.
  - Ensure that there are no persons in the hazard area.
- Never deactivate or bypass safety devices during operation.

Open acoustic hood



WARNING!

Risk of injury from operation with an open acoustic hood!

Open acoustic hoods may lead to dangerous situations and cause injury during machine operation.

- Always keep the acoustic hood closed during operation.

Adjusting valves



DANGER!

Risk of injury when adjusting valves!

When the machine is running and an attempt is made to adjust a valve, body parts may be injured by rotating components. Take into account the stand-by mode and/or automatic start-up

Only make adjustments if:

- The machine is not running.
- The machine is secured against a restart.

Explosion and fire hazards



DANGER!

There is a risk of explosion and fire from ignition hazards!

Avoid allowing ignition hazards (open flames, flying sparks, weld spatter) into the vicinity of the machine. Sparks and incandescent or flammable objects could be sucked in through the supply air openings on the acoustic hood or through the intake silencer. The fan may ignite these elements causing fire or an explosion.

– Avoid ignition hazards.
– Never carry out work that generates sparks while the machine is in operation.
– Ventilate the installation site properly.

Requirements for staff

Requirements for operation:

Operating the machine

Personnel:
- User

Adjusting valves

Personnel:
- User
- Authorised electricians

Protective equipment

Requirements for operation:

Protective equipment:
- Protective work clothing
- Safety shoes
- Hearing protection

Special tools

Adjusting the valves requires:

Special tool:
- General tool kit

Special tool:
- Locking key

7.2 Shut-down in case of emergency

In hazardous situations, the movements of components must be stopped as quickly as possible and the electric power supply must be shut off.

Shut-down in case of emergency

In an emergency, proceed as follows:

1. Activate the EMERGENCY STOP immediately.
2. Inform the responsible staff.
3. Switch off the main circuit breaker and secure it against restarting.
4. Assign qualified personnel the task of rectifying the fault.
5.

WARNING!
An unauthorised or unregulated restart can have fatal consequences.

Before commissioning, ensure that all safety devices are installed and operational.

7.3 Switching on

Operating modes

Depending on the operating mode, the machine can be switched on in the following ways:

If possible, start up the machine without load!

Observe the control circuit types!

When starting and stopping the drive motor, observe all of the machine's protective measures. Power take-offs must be actuated by a potential-free contact or be actuated directly. The start-up of the power take-offs runs in parallel to the drive motor.

AERtronic

The starting and stopping of the drive motor must be carried out by AERtronic. A potential-free contact is already in place.

7.3.1 On-site operation

On-site manual operation

DANGER!
Risk of injury if protective equipment is missing!

Manually activate the starter switch on the machine on site.

⇨ The machine starts and comes on stream.

7.3.2 Remote operation

Via remote station

DANGER!
Risk of fatal injury if protective equipment is missing!

WARNING!
Risk of injury if the machine starts suddenly!

Activate the starter switch in the remote station.

⇨ The machine is started remotely and comes on stream.

Remote station with AERtronic

- Remotely via potential-free contact
- Remotely via MODBUS RTU
- Remotely via PROFIBUS DP

7.3.3 Automatic operation

Automatic activation

DANGER!
Risk of fatal injury if protective equipment is missing!

WARNING!
Risk of injury if the machine starts suddenly!

The starting command is carried out by sensors or a system switch.

⇨ The machine starts automatically and comes on stream.

7.4 Displaying operating parameters

AERtronic (optional)



A detailed explanation is contained in the separate operating manual AS-002.

Fig. 103: AERtronic display

Analogue instruments (optional)

Depending on their deisgn, analogue instruments display the given operating data, e.g. discharge pressure, discharge temperature, oil pressure.

Control system (optional)

Depending on the customer's control system, additional operating parameters can be recorded and displayed.

7.5 Switching off

Operating mode

Depending on the operating setup, the machine can be switched off in the following ways:

7.5.1 On-site operation

On-site manual operation

WARNING!
Risk of injury from unbraked shut-down!

Manually activate the cut-out switch on the machine.

⇨ The machine is switched off and shuts down. The machine does not stop immediately.

7.5.2 Remote-controlled operation

Via remote station

WARNING!
Risk of injury from unbraked shut-down!

Activate the cut-out switch in the remote station.

⇨ The machine is switched off and shuts down. The machine does not stop immediately.

7.5.3 Automatic operation

Switching off automatically

WARNING!
Risk of injury from unbraked shut-down!

The shut-down command is carried out by sensors or a system switch.

⇨ The machine is switched off and shuts down. The machine does not stop immediately.

7.5.4 Switching off in nitrogen operation

Switching off in nitrogen operation

1. *Switch off as described above!*

Switch off the machine.

2. **DANGER!**
Risk of fatal injury from gas leaks!

For longer downtimes disconnect the unit from the gas network.

⇨ Otherwise there is a possibility that gas leaks will occur during downtime.

7.6 Decommissioning

Decommissioning means the shut-down of a machine for a longer period.

Measures

1. Switch off the machine properly and secure it against an unintentional start.
2. Disconnect fuses.
3. Close the shut-off valves of the delivery lines.
4. Prevent condensate from entering the machine.
5. For a downtime of over six weeks: preserve the conveying chamber.

Avoiding damage caused by down-time and corrosion

For a downtime of over six weeks
Preserve the conveying chamber. ☞ *„Preservation“ on page 87*
Move the rotors every six weeks by 2-3 rotations.

7.7 Measures for recommissioning

7.7.1 Commissioning after adjustment works

after adjustments

Work stages ☞ *„Commissioning“ on page 129*

7.7.2 Commissioning after maintenance work

after maintenance

Work stages ☞ *Chapter 8.5 „Commissioning after maintenance“ on page 165*

7.7.3 Commissioning after fault rectification

After fault rectification

Work stages ☞ *Chapter 9.5 „Commissioning after malfunction rectification“ on page 170*

7.8 Adjusting valves

DANGER!
Risk of injury when adjusting valves or equipment!

Preparation/models with acoustic hood

1. Agree adjustments with the responsible staff at the location.
2. Switch off the machine.
3. Activate the EMERGENCY STOP function.
4. Switch off the main circuit breaker and secure it against restarting.
5. Ensure there is no live electricity.
6. Open the maintenance elements.

Preparation/models without acoustic hood

1. Agree adjustments with the responsible staff at the location.
2. Switch off the machine.
3. Activate the EMERGENCY STOP function.
4. Switch off the main circuit breaker and secure it against restarting.
5. Ensure there is no live electricity.
6. Disassemble the belt guard.

7.8.1 Adjusting the start unloading device

DN 80 to DN 400



Fig. 104: Start unloading device

The start unloading device is preset with a maximum closing time at the factory. An adjustment is only necessary if the start unloading device does not close or the closing time is too long.

Chapter 11.10.3 „Start-up unloading device DN 80 to DN 400“ on page 195

Settings with star-delta starting

The start unloading device closes fully after:

– *the switch from star to delta.*
– *the nominal speed is reached.*

The closing procedure can be both heard and seen (on the gauge for discharge pressure).

Setting the closing time

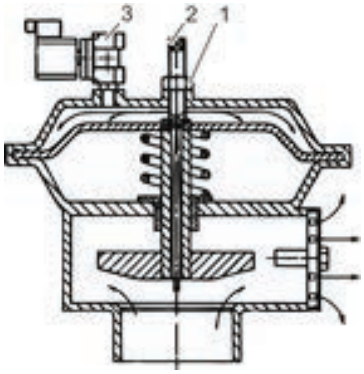

Fig. 105: Start unloading device positions

1. Open the maintenance elements.
2. Loosen the counternut (pos.1).
3. Move the spindle (pos.2) clockwise.
   ⇨ The closing time is reduced.
4. Move the spindle (pos.2) anti-clockwise.
   ⇨ The closing time is extended.
5. Set the closing time.
6. Tighten counternut (pos.1).
7. Mount all protective hardware and covers.
8. Close the maintenance elements.
9.

> **NOTICE!**
> Risk of damage! Observe the starting frequency of the drive motor!

   Start the machine.
10. Check the closing time.
11. If the closing time is in the permissible adjustment range:
    ⇨ adjustments are complete.
12. If the closing time is not in the permissible adjustment range:
    ⇨ repeat the adjustment steps.

Settings for pole changing

Set start unloading device to a lower speed in accordance with star-delta starting.

> *The closing time in the lower speed range must be set as long as possible, so that an acceptably long closing time is still available for the upper speed range.*

If this is not possible, then an additional solenoid valve is used.

The solenoid valve (pos.3) keeps the start unloading device open to the atmosphere when ramping up to “high-speed” mode directly.

Reasons for the above:

- The differences in conveyed amounts are too large.
- High-speed operation is started from low-speed operation in “star-double-star starting“.

The solenoid valve (pos.3) keeps the start unloading device open to the atmosphere during star-double-star starting.

The solenoid valve closes after ramping up.

7.8.2 Commissioning after adjustments

Commissioning

1. Inform the responsible on-site person about the result of the work carried out and agree commissioning steps with that person.
2. Check all previously loosened screw connections for tightness.
3. Ensure that there are no persons in the hazard area.
4. Re-attach all safety hardware.
5. Remove all used tools, materials and other equipment from the workspace.
6. Release the safety on the main circuit breaker and activate it.
7. Release the EMERGENCY STOP function.
   ⇨ Start operation in accordance with the instruction in the “Operation” chapter. *Chapter 7.3 „Switching on“ on page 122*
8. Inform the responsible on-site person about the result of the work carried out.

8 Maintenance

8.1 Safety instructions

Improperly performed maintenance work

WARNING!

Risk of injury from improperly performed maintenance work!

Improperly performed maintenance may lead to serious injury or material damage.

- Only perform maintenance work when the machine has been decommissioned.
- Secure against a restart.
- Allow the machine to cool down to the ambient temperature.
- Before beginning work, ensure that there is sufficient space for installation work.
- Check the tidiness and cleanliness of the work area.
- Only perform maintenance work with suitable tools.
- Ensure removed components are re-installed correctly.
- Re-install all fastening elements and observe the screw tightening torques.

Securing the machine against restarting

WARNING!

An unauthorised or unregulated restart can have fatal consequences.

An unauthorised or unregulated restart of the machine can lead to serious or fatal injuries. There may be people located in the hazard area.

- Before beginning work, switch off the energy supply and secure it against restarting.

Electrical system

DANGER!

Risk of fatal injury from electrical current!

There is a risk of fatal injury from touching live components. Live electrical components may make uncontrolled movements and cause extremely serious injury.

- Before beginning work, switch off the electric power supply and secure it against restarting.

Rotating or moving components

WARNING!

Risk of injury from rotating or moving components!

Rotating or moving components can cause serious injuries.

- Never touch rotating or moving components.
- Never reach into the clamping area of the belts, for example.
- Keep a safe distance from rotating or moving components.
- Wear tight-fitting protective work clothing with low tensile strength within the hazard area.

Hot operating materials

WARNING!

Risk of injury from hot operating substances!

Operating substances may reach high temperatures during operation. Skin contact with hot operating substances causes serious burns.

- For all work performed with hot operating substances, always wear protective work clothing and protective gloves.
- Before any work with operating substances, check whether they are hot. If necessary, allow them to cool down to the ambient temperature.

Requirements for staff

The maintenance work described here may only be performed by the designated personnel. The personnel entrusted with the respective maintenance tasks are listed in the maintenance plan.

For the preparation of the maintenance plan, the following is necessary:

Personnel:
- Authorised electricians
- Service personnel

For cleaning after maintenance, the following is necessary:

Personnel:
- User

Commissioning after maintenance requires:

Personnel:
- Authorised electricians
- Service personnel

Protective equipment

For maintenance, the following is necessary:

Protective equipment:
- Protective work clothing
- Safety shoes
- Protective gloves
- Safety goggles
- Industrial hard hat

Special tools

For maintenance the following is necessary:

Special tool:
- Ratchet wrench
- Oil funnel
- General tool kit
- General measurement tools and equipment
- Auxiliary materials, aids

Special tool:
- Locking key

8.2 Maintenance schedule

The following section describes the maintenance work that is required for optimal and fault-free operation of the machine.

If regular inspections reveal an increased level of abrasion, reduce the maintenance intervals in accordance with the signs of wear and tear. For questions on maintenance work and intervals contact the manufacturer. See contact details.

8.2.1 Maintenance schedule for normal operation

Interval	Maintenance work	Personnel
After the first 500 op. hrs	Replace the lube oil. *(Not when using Delta Lube 06!)* ↳ *Chapter 8.3.5 „Changing oil“ on page 148* For a gas-tight shaft seal, change the grease. ↳ *Chapter 8.3.4 „Replacing the grease on gas-tight drive shafts“ on page 147*	Service personnel
Weekly	Check the differential pressure.	User
	Check the intake filter for contamination. (display unit, max. permissible -45 mbar)	User
	Check the oil level. ↳ *Chapter 8.3.2 „Checking the oil level“ on page 139* If necessary, correct it. ↳ *Chapter 8.3.3 „Correcting the oil level“ on page 141*	User
	If the maximum value (-45 mbar) is exceeded, change the intake filter. ↳ *Chapter 8.3.6 „Replacing the intake filter“ on page 155*	Service personnel
	Check the belt guard for total stability and for damage and contamination. ↳ *Chapter 8.3.16 „Checking the belt guard“ on page 164* Remove any dirt from the outer belt guard.	User
	If it is insufficiently stable or damaged, contact customer service.	Manufacturer’s customer service division
Relubrication intervals for the drive motor	Observe the instruction manual and signage of the drive motor!	Service personnel
After every 4,000 op. hrs or every 6 months	Check and clean the inlet and exhaust air openings on the acoustic hood. ↳ *Chapter 8.3.15 „Checking the inlet and exhaust air openings on the acoustic hood“ on page 163* Check that the acoustic hood fan is operating correctly. ↳ *Chapter 8.3.15 „Checking the inlet and exhaust air openings on the acoustic hood“ on page 163*	Service personnel
	Check that the safety valve is operating correctly and clean it. ↳ *Chapter 8.3.11 „Checking the AERZEN safety valve“ on page 160*	Service personnel
	Check the condition of the belts. If necessary, replace them. ↳ *Chapter 8.3.9 „Replacing belts, version with lifting device“ on page 156* Check the condition of the belts. If necessary, replace them. ↳ *Chapter 8.3.10 „Replacing belts, version without lifting device “ on page 158* Inspect the sheaves for unusual wear and tear or obvious damage. Inspect for alignment and stability. ↳ *Chapter 8.3.7 „Checking the sheaves“ on page 155*	Service personnel

Interval	Maintenance work	Personnel
	Replace the lube oil at a discharge temperature of over 140 °C. *(Not when using Delta Lube 06!)* ↳ *Chapter 8.3.5 „Changing oil“ on page 148* When using AERZEN special rotary piston oil with a gas-tight shaft seal, replace the grease at a discharge temperature of over 140 °C. ↳ *Chapter 8.3.4 „Replacing the grease on gas-tight drive shafts“ on page 147* Replace grease when using lube oil with an ISO VG 220 viscosity class in conjunction with a gas-tight shaft seal. ↳ *Chapter 8.3.4 „Replacing the grease on gas-tight drive shafts“ on page 147*	
	If necessary, replace the sheaves.	Manufacturer’s customer service division
After every 8,000 op. hours or 12 months	Lube oil: Replace Delta Lube 06: only for pressure differentials > 800 mbar ↳ *Chapter 8.3.5 „Changing oil“ on page 148*	Service personnel
	For a gas-tight shaft seal, change the grease. ↳ *Chapter 8.3.4 „Replacing the grease on gas-tight drive shafts“ on page 147*	Service personnel
	Replace the lube oil. *(Not when using Delta Lube 06!)* ↳ *Chapter 8.3.5 „Changing oil“ on page 148*	Service personnel
	Replace intake filter. ↳ *Chapter 8.3.6 „Replacing the intake filter“ on page 155*	Service personnel
	Check the control system for correct operation.	Manufacturer’s customer service division
After every 16,000 op. hrs or every 2 years	Replace the belts. ↳ *Chapter 8.3.9 „Replacing belts, version with lifting device“ on page 156* Replace the belts. ↳ *Chapter 8.3.10 „Replacing belts, version without lifting device “ on page 158* Check the alignment of the sheaves. If necessary, correct it. ↳ *Chapter 8.3.7 „Checking the sheaves“ on page 155* Check non-return flap for wear and tightness. If necessary, replace them. ↳ *Chapter 8.3.13 „Checking the non-return flap“ on page 161* Check flexible pipe connections on the discharge and intake sides for tightness. If necessary, replace them. ↳ *Chapter 8.3.17 „Checking pipelines for tightness“ on page 164* Lube oil: Replace Delta Lube 06. ↳ *Chapter 8.3.5 „Changing oil“ on page 148*	Service personnel
After every 20,000 op. hrs or every 3 years	Check hose lines for tightness. Replace if necessary. Recommendation: replace hose lines every 6 years.	Service personnel

Interval	Maintenance work	Personnel
	Recommended main inspection/maintenance. Inspection, changing of replacement and expendable parts. Entire machine check.	Manufacturer's customer service division

op. hrs = operating hours

8.3 Maintenance work

Preparation

1. Agree maintenance work with the responsible staff at the location.
2. Switch off the machine.
3. Activate the EMERGENCY STOP function.
4. Switch off the main circuit breaker and secure it against restarting.
5. **DANGER!**
   Risk of injury from electric current!

   Ensure there is no live electricity.
6. **DANGER!**
   Risk of injury during maintenance work!

   Open the maintenance elements.
7. **DANGER!**
   Risk of injury during maintenance work!

   Open the belt guard cover.

8.3.1 First oil filling

8.3.1.1 Version *with* oil system

Filling with oil



Fig. 106: Filling with oil

1. Check the drain valve for firm seating.
2. Check that the sealing cap of the drain valve is firmly in place.
3. Open the oil container.
4. Ensure that the ventilation pipe in the oil filling container is unobstructed.
5.

CAUTION!
Risk of skin irritation from lube oil!

ENVIRONMENT!
Environmental risks from incorrect handling of lubricants!

Observe the oil quantity ↳ *Chapter 11.7.4 „Lubricant quantities“ on page 191* and specification ↳ *Chapter 11.7.1 „Lubricant oil specifications“ on page 187*.

First, fill 3/4 of the listed quantity of oil.

6. Wait 5 - 10 minutes. The lube oil continues to flow.
   ⇨ The oil level regulates itself in the oil system and in the oil chambers.
7. Check the oil level.

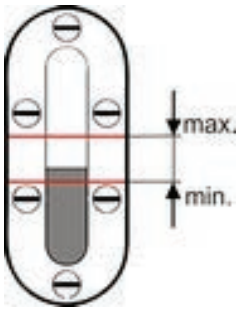

Fig. 107: Acoustic hood sight glass

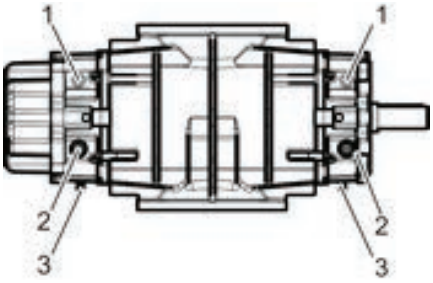

Fig. 108: Machine stage sight glasses

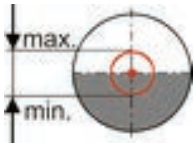

Fig. 109: Oil level display (item 2)

8. Check the lube oil level on the machine stage's oil level displays (item 2) and adjust as necessary.
9. Fill the rest of the lube oil up to the mark on the acoustic hood's sight glass. Observe the after-run time of the lube oil.
   ⇨ The oil level is correct when it is between min. and max.
10. Close the oil filling container.
11. **ENVIRONMENT!**
    Risk of environmental damage from incorrect storage of lube oil!

    Clean the workspace thoroughly.

    Dispose of residual lube oil in an environmentally-friendly way.

    Clean all auxiliary equipment.

8.3.1.2 Version *without* oil system

Filling with oil

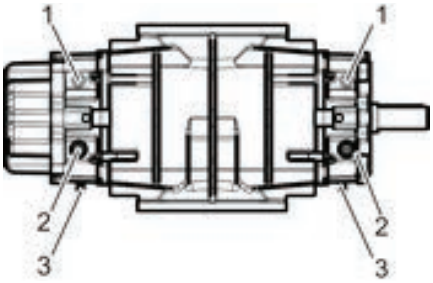

Fig. 110: GM 3S - GM 80L

1 Oil fill openings, marked in red
2 Oil level displays
3 Drain valves

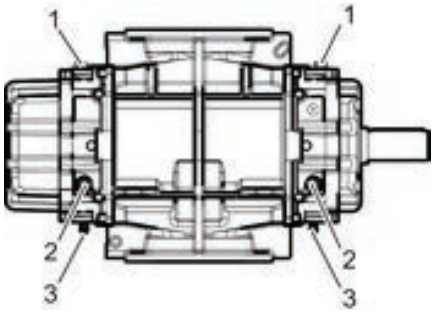

Fig. 111: GM 90S - GM 400L

1. Check the drain valves (pos. 3) for firm seating.
2. Check the sealing caps of the drain valves (pos. 3) for firm seating.
3. Open the oil fill openings (pos.1) – the RED-marked locking screws.
4. Observe the oil quantity distribution.

   Guide value:

   - 1/3 of the entire lube oil quantity in the driving side.
   - 2/3 of the entire lube oil quantity in the wheel side.

   The display in the oil level sight glass is crucial.
5. **CAUTION!**
   Risk of skin irritation from lube oil!

   ENVIRONMENT!
   Environmental risks from incorrect handling of lubricants!

   Observe the oil quantity ↳ *Chapter 11.7.4 „Lubricant quantities“ on page 191* and specification ↳ *Chapter 11.7.1 „Lubricant oil specifications“ on page 187*.

   Fill with lube oil. To do this, fill with approx. 3/4 of the entire oil quantity. Fill this reduced total oil quantity according to the oil quantity distribution (approx. 1/3 driving side, approx. 2/3 wheel side) into both oil chambers.
6. Observe the oil level. Wait 5 - 10 minutes. The lube oil continues to flow.

   ⇨ The oil level regulates itself in the oil system and in the oil chambers.

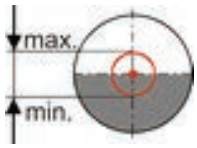

Fig. 112: Sight glass for oil level display (pos. 2)

7. Check the lube oil level.
8. Fill the rest of the lube oil up to the mark on the sight glass.

   ⇨ The oil level is correct when it is between min. and max.
9. Close the oil fill opening (pos. 1) tightly with a seal.
10. **ENVIRONMENT!**
    Risk of environmental damage from incorrect storage of lube oil!

    Clean the workspace thoroughly.

    Dispose of residual lube oil in an environmentally-friendly way.

    Clean all auxiliary equipment.

8.3.2 Checking the oil level

8.3.2.1 Version *with* oil system

Version with oil system

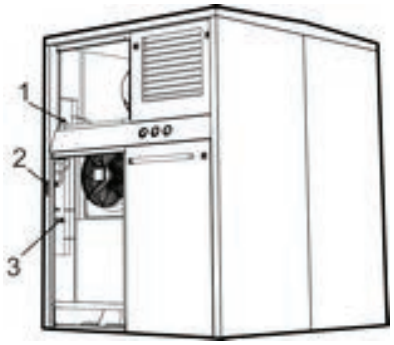

Fig. 113: Oil system

1 Oil fill opening (oil filling container)
2 Oil level display
3 Oil drain

Checking the oil level

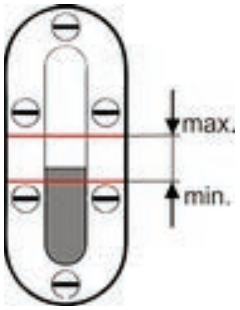

Fig. 114: Acoustic hood sight glass

1. Check the lube oil level and correct it if necessary.

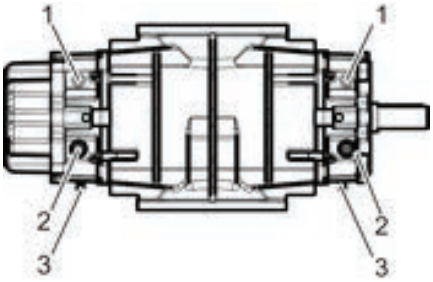

Fig. 115: Machine stage sight glasses

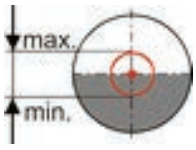

Fig. 116: Oil level display (item 2)

2. Check the lube oil level on the machine stage's oil level displays (item 2) and adjust as necessary.

8.3.2.2 Version *without* oil system

Version without oil system

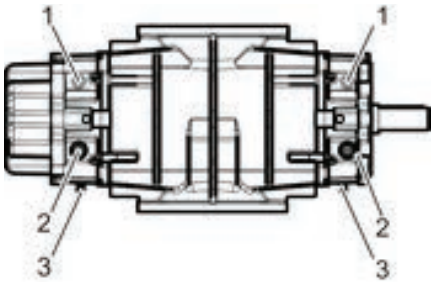

1 Oil fill openings, marked in red
2 Oil level displays
3 Drain valves

Fig. 117: GM 3S - GM 80L

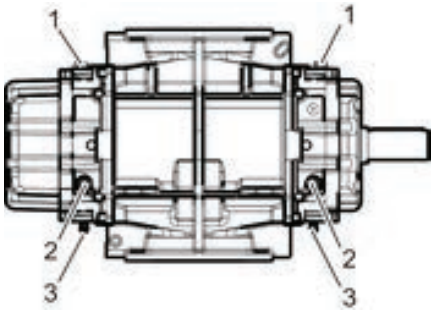

Fig. 118: GM 90S - GM 400L

Checking the oil level

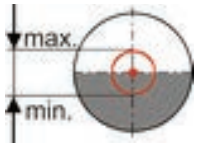

Fig. 119: Sight glass for oil level display

→ Check the lube oil level and correct it if necessary.

8.3.3 Correcting the oil level

8.3.3.1 Oil level too high

Draining oil/version with oil system

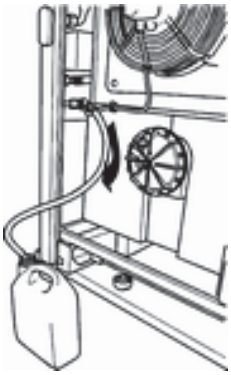

Fig. 120: Draining oil

1. **WARNING!**
   Risk of scalding from hot lube oil!

   NOTICE!
   Material damage to the drain hose from lube oil temperatures over 60°C!

   Allow the lube oil to cool down to the ambient temperature.

2. *Observe the volume of the waste oil and the oil-resistant receptacle.* ↳ *„Machine lube oil levels“ on page 191*

   Have a receptacle ready.

3. Open the oil opening on the oil filling container.
   ⇨ Lube oil flows out more evenly from the oil drain.

4. Feed the drain hose into the receptacle.



Fig. 121: Fitting the drain hose

5. **CAUTION!**
   Risk of skin irritation from old lube oil!

   Remove the sealing cap from the drain valve.

   Twist the drain hose onto the drain valve.

   ⇨ The drain valve opens automatically.

6. **CAUTION!**
   Risk of slipping from oil spillage!

   Guide excess lube oil into the receptacle.

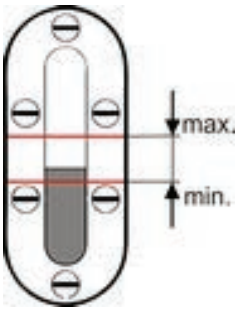

Fig. 122: Sight glass for oil level display

7. Observe and check the oil level.
8. If the permissible oil level is reached, remove the drain hose.
   ⇨ The drain valve closes automatically.
9. Screw the sealing cap onto the drain valve.
10. Close the oil fill opening.
11. **ENVIRONMENT!**
    Risk of environmental damage from waste oil!

    Collect waste lube oil and residual oil properly and dispose of it in an environmentally-friendly manner.

    Clean the workspace thoroughly.

    Clean all auxiliary equipment.

Draining oil/version without oil system

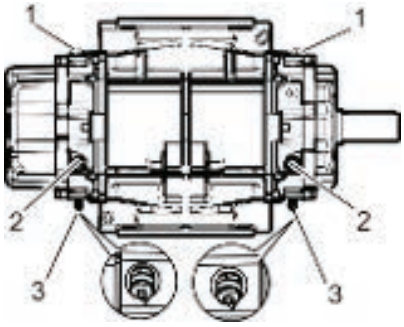

Fig. 123: Oil drain

3 Drain valves

1. **WARNING!**
   Risk of scalding from hot lube oil!

   Allow the lube oil to cool down to the ambient temperature.
2. *Observe the volume of the waste oil and the oil-resistant receptacle.* *↳ „Machine lube oil levels“ on page 191.*

   Have a receptacle ready.
3. Select an oil chamber with an excessively high filling capacity.
4. Open the oil fill opening.
   ⇨ Lube oil flows out more evenly from the oil drain.

5. **CAUTION!**
Risk of skin irritation from old lube oil!

A locking screw or a shut-off valve can be used as an alternative to the drain valve.

The oil chamber can be opened by:

- *removing the locking screw*
  or by
- *removing the sealing plug on the shut-off valve. Open the shut-off valve.*

Remove the sealing cap from the drain valve.

If the sealing cap is very tightly in place, secure the drain valve using a wrench and loosen the sealing cap with an additional wrench.

6. **NOTICE!**
Material damage to the drain hose from lube oil temperatures over 60°C!

Feed the drain hose into the receptacle.

7. Twist the drain hose onto the drain valve.
⇨ The drain valve opens automatically.

8. **CAUTION!**
Risk of slipping from oil spillage!

Guide any excess lube oil into the receptacle.

9. Observe and check the oil level.

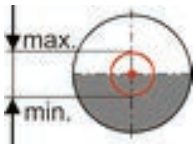

Fig. 124: Sight glass for oil level display

10. If the oil level has been corrected, remove the drain hose.
    ⇨ The drain valve closes automatically.

> *A locking screw or a shut-off valve can be used as an alternative to the drain valve.*
>
> *The oil chamber can be closed by:*
>
> – *mounting the locking screw with a new sealing ring*
>
> *or by*
>
> – *closing the shut-off valve. Seal the output of the shut-off valve with sealing plugs.*

11. Screw the sealing cap onto the drain valve.
12. Close the oil fill opening.
13. **ENVIRONMENT!**
    Risk of environmental damage from waste oil!

    Collect waste lube oil and residual oil properly and dispose of it in an environmentally-friendly manner.

    Clean the workspace thoroughly.

    Clean all auxiliary equipment.

8.3.3.2 Oil level too low

Filling oil/version with oil system

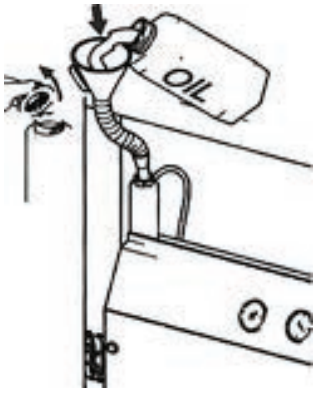

Fig. 125: Filling with oil

1. Check the drain valve for firm seating.
2. Check the sealing cap of the drain valve for firm seating.
3. Open the oil filling container.
4. Ensure that the ventilation pipe in the oil filling container is unobstructed.

5. **CAUTION!**
Risk of skin irritation from lube oil!

ENVIRONMENT!
Environmental risks from incorrect handling of lubricants!

Specifications *Chapter 11.7.1 „Lubricant oil specifications“ on page 187*

Fill the lube oil in stages and in small quantities.

6. Observe the oil level. Wait 5 - 10 minutes. The lube oil continues to flow.

⇨ The oil level regulates itself in the oil system and in the oil chambers.

7. Check the oil level.

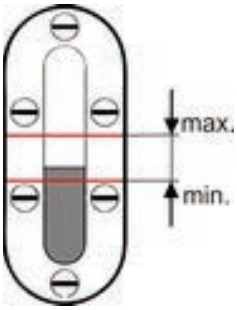

Fig. 126: Acoustic hood sight glass

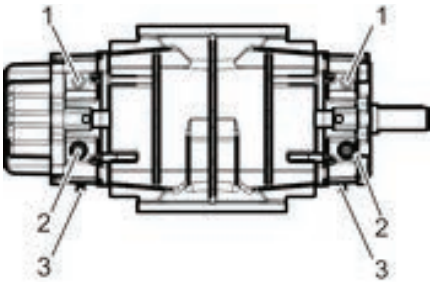

Fig. 127: Machine stage sight glasses

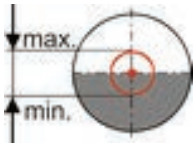

Fig. 128: Oil level display (item 2)

8. Check the lube oil level on the machine stage’s oil level displays (item 2) and adjust as necessary.

9. If the lube oil level is between the min.-/max. marks:

⇨ the oil level is OK.

10. If the lube oil level is beyond the min.-/max. marks:

⇨ Correct the oil level.

11. Close the oil filling container.

12. **ENVIRONMENT!**
Risk of environmental damage from incorrect storage of lube oil!

Clean the workspace thoroughly.

Dispose of residual lube oil in an environmentally-friendly way.

Clean all auxiliary equipment.

Filling oil/version without oil system

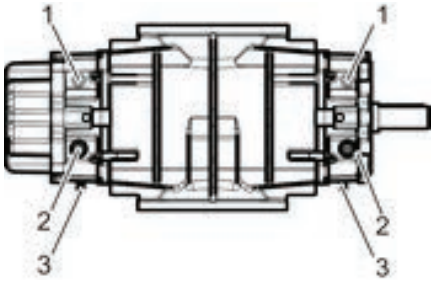

Fig. 129: GM 3S - GM 80L

1 Oil fill openings, marked in red
2 Oil level displays
3 Drain valves

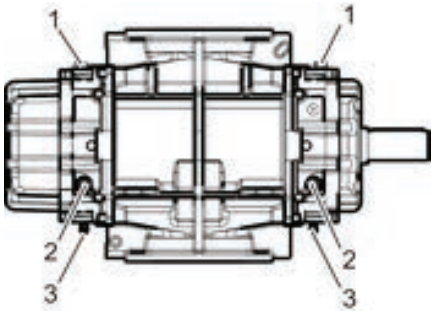

Fig. 130: GM 90S - GM 400L

1. Select the required oil chamber.
2. Check the drain valve (pos. 3) for firm seating.
3. Check sealing cap of the drain valve (pos. 3) for firm seating.
4. Open the oil fill opening, the RED-marked locking screw.
5. **CAUTION!**
Risk of skin irritation from lube oil!

ENVIRONMENT!
Environmental risks from incorrect handling of lubricants!

Observe the specifications *Chapter 11.7.1 „Lubricant oil specifications“ on page 187*.

Fill the lube oil in stages and in small quantities.

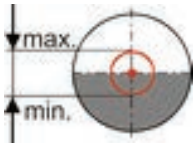

Fig. 131: Sight glass for oil level display (pos. 2)

6. Observe the oil level. Wait 5 - 10 minutes. The lube oil continues to flow.
   ⇨ The oil level regulates itself in the oil system and in the oil chambers.
7. Check the lube oil level.
8. If the lube oil level is between the min.-/max. marks:
   ⇨ the oil level is OK.
9. If the lube oil level is beyond the min.-/max. marks:
   ⇨ Correct the oil level.
10. Close the oil fill opening tightly with a seal.
11. If necessary, repeat the process at the other oil chamber.
12. **ENVIRONMENT!**
    Risk of environmental damage from incorrect storage of lube oil!

    Clean the workspace thoroughly.

    Dispose of residual lube oil in an environmentally-friendly way.

    Clean all auxiliary equipment.

8.3.4 Replacing the grease on gas-tight drive shafts

The replacement of grease is only required for the gas-tight version of the drive shaft (optional).

Press the grease a few operating hours before the lubricating oil change. The used, excess grease reaches the oil chamber of the machine stage and is discharged with the lubricating oil change.

Pressing the grease

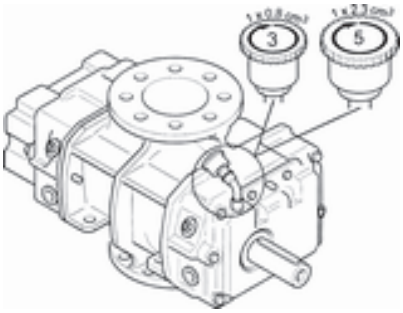

Fig. 132: Stauffer lubricator

1. **WARNING!**
   Risk of burning from hot housing surfaces!

   Allow the housing surfaces to cool down to ambient temperature.
2. Press the grease by turning the Stauffer lubricator.

   CAUTION!
   Risk of skin irritation from escaping grease!

   Observe the grease amount and number of turns. *„Grease filling quantity for machine stage“ on page 192*
3. After pressing the required amount of grease, turn the Stauffer lubricator one revolution backwards. The volume of grease can then expand when it is heated.
4. Open the Stauffer lubricators and fill them with grease. Observe the specification of the grease. *Chapter 11.7.3 „Grease specifications“ on page 190*

8.3.5 Changing oil

8.3.5.1 Draining oil/version *with* oil system

Draining oil/version with oil system

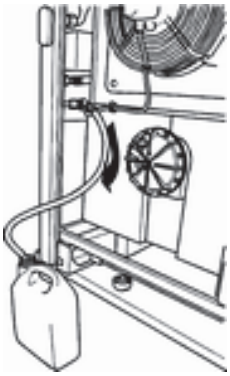

Fig. 133: Draining oil

1. **WARNING!**
   Risk of scalding from hot lube oil!

   NOTICE!
   Material damage to the drain hose from lube oil temperatures over 60°C!

   Allow the lube oil to cool down to the ambient temperature.
2. *Observe the volume of the waste oil and the oil-resistant receptacle.* *„Machine lube oil levels“ on page 191*

   Have a receptacle ready.



Fig. 134: Fitting the drain hose

3. Open the oil opening on the oil filling container.
   ⇨ Lube oil flows out more evenly from the oil drain.
4. Feed the drain hose into the receptacle.
5. **CAUTION!**
   Risk of skin irritation from old lube oil!

   Remove the sealing cap from the drain valve.

   Twist the drain hose onto the drain valve.
   ⇨ The drain valve opens automatically.
6. **CAUTION!**
   Risk of slipping from oil spillage!

   Guide all emerging lube oil into the receptacle.
7. Remove the drain hose.
   ⇨ The drain valve closes automatically.
8. Screw the sealing cap onto the drain valve.
9. Close the oil filling container.
10. **ENVIRONMENT!**
    Risk of environmental damage from waste oil!

    Collect waste lube oil and residual oil properly and dispose of it in an environmentally-friendly manner.

    Clean the workspace thoroughly.

    Clean all auxiliary equipment.

Filling with oil

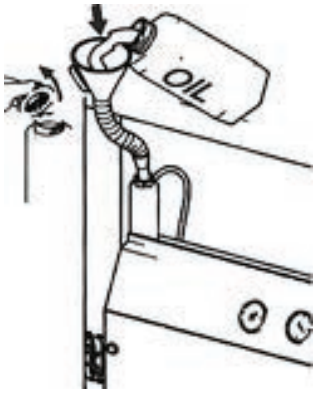

Fig. 135: Filling with oil

1. Check the drain valve for firm seating.
2. Check the sealing cap of the drain valve for firm seating.
3. Open the oil filling container.
4. Ensure that the ventilation pipe in the oil filling container is unobstructed.
5.

CAUTION!
Risk of skin irritation from lube oil!

ENVIRONMENT!
Environmental risks from incorrect handling of lubricants!

Observe the oil quantity ↳ *Chapter 11.7.4 „Lubricant quantities“ on page 191* and specification ↳ *Chapter 11.7.1 „Lubricant oil specifications“ on page 187*.

First, fill 3/4 of the listed total quantity of lube oil.

6. Wait 5 - 10 minutes. The lube oil continues to flow.

   ⇨ The oil level regulates itself in the oil system and in the oil chambers.

7. Check the oil level.

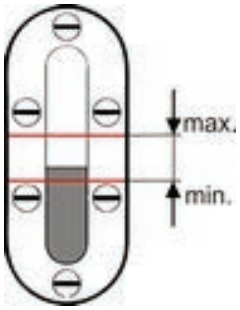

Fig. 136: Sight glass for oil level display

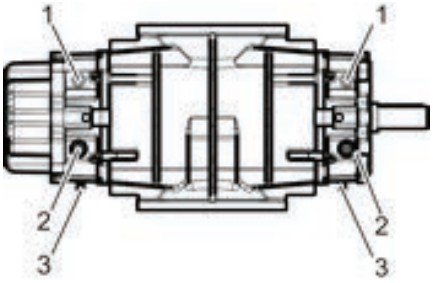

Fig. 137: Machine stage sight glasses

1 Oil fill openings, marked in red
2 Oil level displays
3 Drain valves

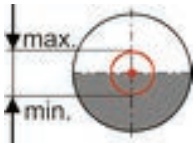

Fig. 138: Oil level display (item 2)

8. Check the lube oil level on the machine stage's oil level displays (item 2) and adjust as necessary.

9. If the lube oil level is between the min.-/max. marks:

⇨ The oil level is OK.

10. If the lube oil level is beyond the min.-/max. marks:

⇨ Correct the oil level.

11. Close the oil filling container.

12.

ENVIRONMENT!
Risk of environmental damage from incorrect storage of lube oil!

Clean the workspace thoroughly.

Dispose of residual lube oil in an environmentally-friendly way.

Clean all auxiliary equipment.

8.3.5.2 Draining oil/version *without* oil system

Draining oil/version without oil system

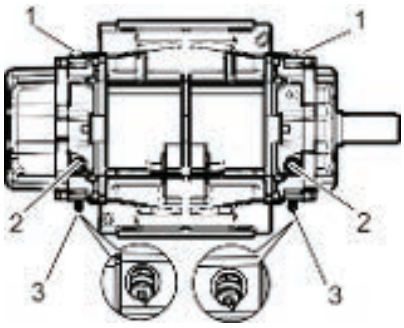

Fig. 139: Oil drain

1 Oil fill openings, marked in red
2 Oil level displays
3 Drain valves

1. **WARNING!**
Risk of scalding from hot lube oil!

Allow the lubricating oil to cool down to ambient temperature.

2. *Observe the volume of the waste oil and the oil-resistant receptacle.* *„Machine lube oil levels“ on page 191*

Have a receptacle ready.

3. Open the oil fill opening.

⇨ Allowing air to circulate in the oil chambers makes the lube oil drain more smoothly from the drain valves.

4. **CAUTION!**
Risk of skin irritation from old lube oil!

Remove the sealing cap from the drain valve.

A locking screw or a shut-off valve can be used as an alternative to the drain valve.

The oil chamber can be opened by:

– *removing the locking screw*
or by
– *removing the sealing plug on the shut-off valve. Open the shut-off valve.*

5. **NOTICE!**
Material damage to the drain hose from lube oil temperatures over 60 °C!

Place the drain hose into the receptacle.

6. Twist the drain hose onto the drain valve.

⇨ The drain valve opens automatically.

7. **CAUTION!**
Risk of slipping from oil spillage!

Guide all emerging lube oil into the receptacle.

8. Remove the drain hose.

⇨ The drain valve closes automatically.

A locking screw or a shut-off valve can be used as an alternative to the drain valve.

The oil chamber can be closed by:

– *mounting the locking screw with a new sealing ring*
or by
– *closing the shut-off valve. Seal the output of the shut-off valve with sealing plugs.*

9. Screw the sealing cap onto the drain valve.

10. Close the oil fill opening.

11. **ENVIRONMENT!**
Risk of environmental damage from waste oil!

Collect waste lube oil and residual oil properly and dispose of it in an environmentally-friendly manner.

Clean the workspace thoroughly.

Clean all auxiliary equipment.

Filling with oil

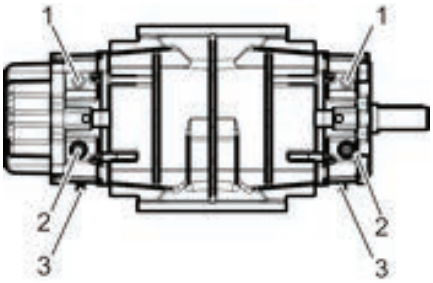

Fig. 140: GM 3S - GM 80L

1 Oil fill openings, marked in red
2 Oil level displays
3 Drain valves

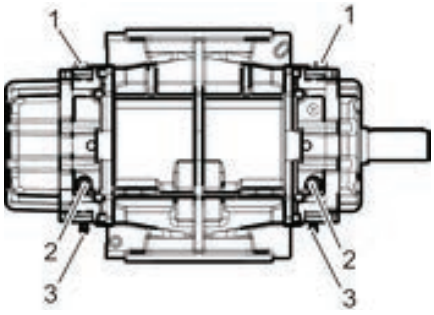

Fig. 141: GM 90S - GM 400L

1. Check the drain valves (pos. 3) for firm seating.
2. Check the sealing caps of the drain valves (pos. 3) for firm seating.
3. Open the oil fill openings (pos.1), the RED-marked locking screws.
4. Observe the oil quantity distribution.

   Guide value:

   - 1/3 of the entire lube oil quantity in the driving side.
   - 2/3 of the entire lube oil quantity in the wheel side.

   The display in the oil level sight glass is crucial.
5. **CAUTION!**
   Risk of skin irritation from lube oil!

   ENVIRONMENT!
   Environmental risks from incorrect handling of lubricants!

   Observe the oil quantity ↳ *Chapter 11.7.4 „Lubricant quantities“ on page 191* and specification ↳ *Chapter 11.7.1 „Lubricant oil specifications“ on page 187*.

   Fill with lube oil. To do this, fill with approx. 3/4 of the entire oil quantity. Fill this reduced total oil quantity according to the oil quantity distribution (approx. 1/3 driving side, approx. 2/3 wheel side) into both oil chambers.
6. Observe the oil level. Wait 5 - 10 minutes. The lube oil continues to flow.

   ⇨ The oil level regulates itself in the oil system and in the oil chambers.

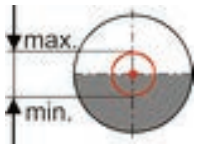

Fig. 142: Sight glass for oil level display (pos. 2)

7. Check the lube oil level.
8. Fill the rest of the lube oil up to the mark on the sight glass.

   ⇨ The oil level is correct when it is between min. and max.
9. Close the oil fill opening (pos. 1) tightly with a seal.
10. **ENVIRONMENT!**
    Risk of environmental damage from incorrect storage of lube oil!

    Clean the workspace thoroughly.

    Dispose of residual lube oil in an environmentally-friendly way.

    Clean all auxiliary equipment.

8.3.6 Replacing the intake filter

Replacing the intake filter

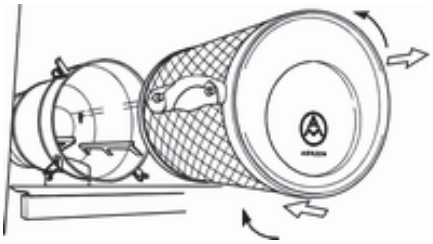

Fig. 143: Replacing the intake filter

1. **CAUTION!**
   Risk of air contamination from scattered dust particles.

   Open the cap locks of the intake silencer.
2. Remove the maintenance flap.
3. Loosen the intake filter by turning it anti-clockwise and remove it.
4. **NOTICE!**
   Risk of machine damage from objects inside the intake silencer that enter the intake opening.

   Remove residual dust inside the intake silencer.
5. Replace the intake filter.
6. Fasten the intake filter in place by turning it clockwise. Check that it is aligned correctly.
7. Fasten the maintenance flap on the housing of the intake silencer using the catch.
8. Reset the maintenance indicator (in accordance with the given variation).

8.3.7 Checking the sheaves

For wear and tear and damage

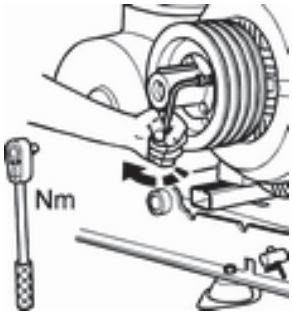

Fig. 144: Sheaves

1. Check for unusual wear and tear or obvious damage.
2. Check for correct alignment and stability.
3. If necessary, replace the sheaves.
4. Assemble the sheaves.
5. Fit the belt.

8.3.8 Moving and checking the protective cover of the sheaves

Moving on models without acoustic hood

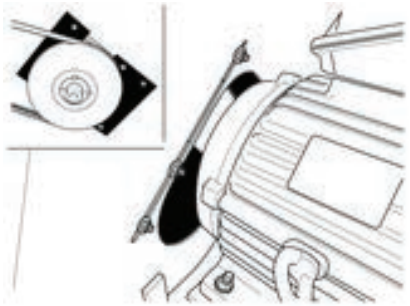

Fig. 145: Protective cover

1. Loosen the fitting of the protective cover before lifting the hinged motor support.
   ⇨ The protective cover can now be moved.
2. Lift the hinged motor support, e.g. for changing the belts.
3. Lower the hinged motor support.
   ⇨ The weight of the motor creates tension in the belts.
4. Push the protective cover in the direction of the motor shaft and tighten it.

Testing on models without acoustic hood

1. Check the spacing of the protective cover of the motor shaft.
   During operation, the protective cover should be at a distance of approx. 10 mm from the motor drive shaft.
2. Check the protective cover for firm seating and, if necessary, tighten it.

8.3.9 Replacing belts, version *with* lifting device

Raising the hinged motor support

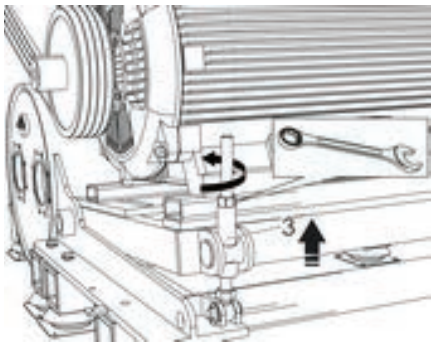

Fig. 146: Raising the hinged motor support

1. **WARNING!**
   Risk of injury from moving or rotating components!
   Lift the hinged motor support using the hinge jig.
2. Turn guide bushing (pos.3) anti-clockwise using the ratchet wrench.
   ⇨ The hinged motor support is raised.
3. Raise the hinged motor support until the belts are fully relieved of tension.
4. *Only replace belts as a set!*

5. Replace belts.

WARNING!
Risk of getting caught by rotating sheaves!

6. Observe the permissible groove layout.

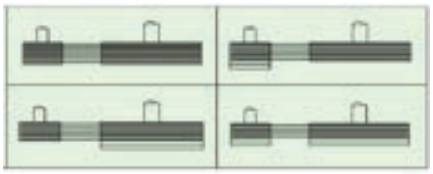

Fig. 147: Permissible belt layout

Pre-tensioning belts

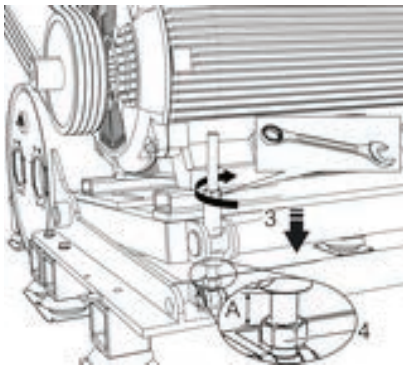

Fig. 148: Pre-tensioning belts

7.

CAUTION!
Risk of injury from tensioning components!

Turn guide bushing (pos.3) clockwise with the ratchet wrench until the belts are pre-tensioned.

⇨ The hinged motor support is partly held by the belt drive and rests lightly on the guide bushing (pos.3).

Adjusting the guide bushing

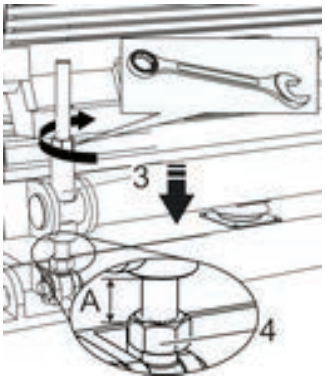

Fig. 149: Adjusting the gauge of the guide bushing

8. Set gauge A.

- Set self-locking nut (pos.4) to gauge A. Turn guide bushing (pos.3) on to the self-locking nut (pos.4) using the ratchet wrench.

DN/discharge side	Gauge A in mm
80	20
100	25
125	30
150	35
200	40
250	45
300	50
Delta Blower G5	

Tensioning the belts

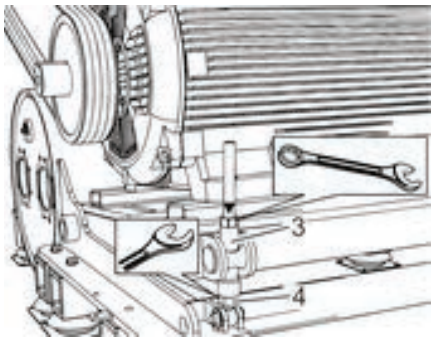

Fig. 150: Tensioning the belts

9. **CAUTION!**
Risk of injury from moving and rotating components!

Tension the belts.

- Secure the guide bushing (pos.3) with the self-locking nut (pos.4).
- The hinged motor support is supported entirely by the belt drive.

Checking the protective cover

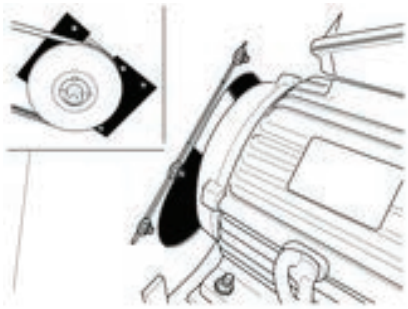

Fig. 151: Protective cover of the sheaves

10. Check the spacing of the protective cover of the motor shaft.

The protective cover should be at a distance of approx. 10 mm from the motor drive shaft.

By loosening the fastening screws, the protective cover can be moved.

Check the protective cover for firm seating and, if necessary, tighten it.

8.3.10 Replacing belts, version *without* lifting device

Raising the hinged motor support of the DN50

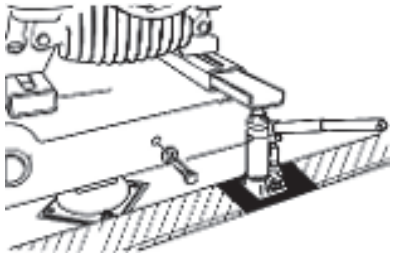

Fig. 152: Example: DN50

1. Insert the lifting bracket in the motor's attachment rail.

NOTICE!
Only use hydraulic lifts on solid, level ground.

Position the hydraulic lift securely.

2. **WARNING!**
Risk of shearing and crushing from moving loads!

Slowly raise the hinged motor support by pumping the hydraulic lift.

3. **WARNING!**
Risk of injury from the hydraulic lift tipping up or slipping!

Raise the hinged motor support in small steps and always support it with timbers! This prevents the sudden downward movement of the hinged motor support if the hydraulic lift tips up or slips.

Raising the hinged motor support of the DN80

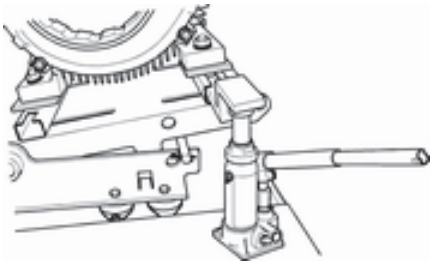

Fig. 153: Example: DN80

4. Insert the lifting bracket in the motor's attachment rail.

NOTICE!
Only use hydraulic lifts on solid, level ground.

Position the hydraulic lift securely.

5. **WARNING!**
Risk of shearing and crushing from moving loads!

Slowly raise the hinged motor support by pumping the hydraulic lift.

6. **WARNING!**
Risk of injury from the hydraulic lift tipping up or slipping!

Raise the hinged motor support in small steps. While doing so, use the transport safety rod to brace the hinged motor support in the recess of the base support. This prevents the sudden downward movement of the hinged motor support if the hydraulic lift tips up or slips.

7. Raise the hinged motor support until the belts can be fitted.

Fitting the belt

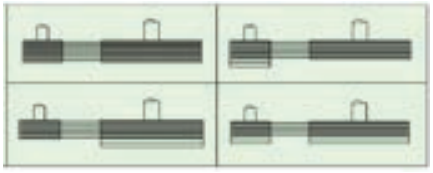

Fig. 154: Permissible belt layout

8. **CAUTION!**
Risk of injury from tensioning components!

Fit the belt. Observe and comply with the permissible groove layout.

Tensioning the belts

9. 

WARNING!
Risk of injury from tensioning, moving or rotating components!

Release the hydraulic lift carefully and slowly.

⇨ The hinged motor support is lowered.

If released too quickly, the hinged motor support drops abruptly.

The belts are tautened by the weight of the motor.

10. **NOTICE!**
Risk of damage to the belt drive! The hinged motor support must not rest on the base support, the transport securing rod or similar equipment.

Completely remove the hydraulic lift, transport safety rod and other auxiliary equipment and store them safely for future maintenance purposes.

8.3.11 Checking the AERZEN safety valve

Movement test

- G2", G3", DN 50, DN 80, DN 125

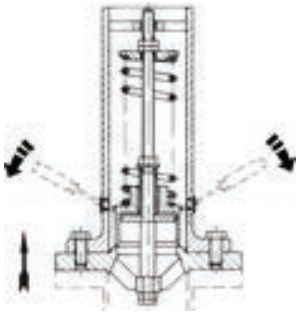

Fig. 155: using a screwdriver

1. Remove the protective caps or locking screws from the maintenance holes in the protective cylinder.
2. Guide a screwdriver into each hole.
3. Raise the valve bell with the screw drivers using leverage force.
   ⇨ The valve's opening function must be operational and the valve must move.
4. Lower the valve bell.
5. Remove the screwdrivers.
   ⇨ An intact valve will close.
6. Insert the protective caps or sealing screws into the maintenance holes in the protective cylinder.

Movement test

- DN 150, DN 200, DN 300

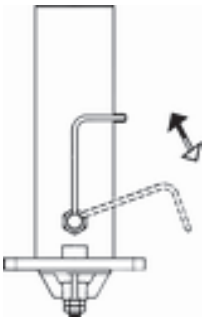

Fig. 156: using the stirrup

1. Raise the valve bell using the stirrup.
   ⇨ The valve's opening function must be operational and the valve must move.
2. Release the pressure on the stirrup and lower the valve bell.
   ⇨ An intact valve will close.

8.3.12 Checking that sealing plugs have been removed

Checking balancing holes

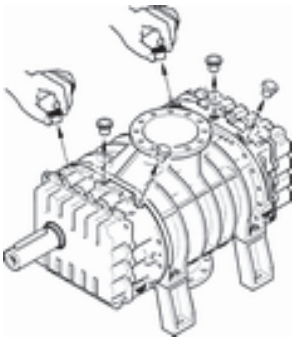

Fig. 157: Sealing plug configuration

1. Check that the (plastic) sealing plugs have been removed from the balancing holes.

   The sealing plugs are coated in machine-colour paint as part of the manufacturing process.

   The number of sealing plugs varies depending on the machine type!

   Depending on the design, they may already have been removed before shipping or during preparations for commissioning.

   ⇨ If there are no more sealing plugs in place: Finish the check.
2. The balancing holes are sealed.
   ⇨ Remove the sealing plugs. Finish the check.

8.3.13 Checking the non-return flap

Checking for wear and tear and tightness



Fig. 158: Non-return flap

1. Loosen the fastening screws.

   Light impact on the flange cover of the non-return flap loosens the sealing and makes disassembly easier.
2. Remove the non-return flap from the housing.
3. Carry out a visual inspection.

4. If no damage and/or hardening is visible, the sealing is acceptable.
   ⇨ Re-use the non-return flap.
5. If damage and/or hardening is visible, the sealing is not acceptable.
   ⇨ Replace the non-return flap.

Assembling the non-return flap

1. Remove dirt, grease and used sealing agent from the flange surface.
2. Apply sealing agent (liquid surface sealant) to the flange surface of the housing.
3. Guide the non-return flap into the housing.

Remove any bleeding sealing agent with a cloth.
Observe the curing time of the sealing material!

4. Screw on the flange cover.

8.3.14 Cleaning the nozzle of the start-up relief device

Cleaning the nozzle

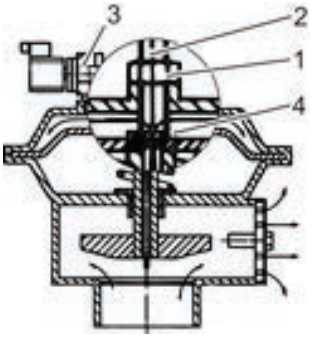

Fig. 159: Start-up relief device

1. Loosen the counternut (pos. 1).
2. Remove the spindle (pos. 2).
   ⇨ The nozzle (pos. 4) in the hole is accessible.
3. **WARNING!**
   Risk of injury from escaping dirt particles!

   Blow compressed air into the nozzle (pos. 4).
   ⇨ Unobstructed cross-section of the nozzle.
4. Mount the spindle (pos. 2).
5. Setting the closing time of the start-up relief device. *Chapter 11.10.3 „Start-up unloading device DN 80 to DN 400“ on page 195*
6. Secure the spindle (pos. 2) with the nut (pos. 1).

8.3.15 Checking the inlet and exhaust air openings on the acoustic hood

Checking the inlet and exhaust air openings

1. Visual inspection of the supply air and exhaust air openings on the acoustic hood.
2. Clean the openings. Remove dirt.

Checking fan operation

1. Check the direction of flow in the operating position with a closed acoustic hood. Observe the information in the installation drawing.
2. If exhaust air is extracted from the acoustic hood, the check is finished.
   ⇨ The acoustic hood fan is operating correctly.
3. If no exhaust air emerges from the acoustic hood, the fan is malfunctioning.
   ⇨ Replace the fan.

Replacing the fan

1. Open the maintenance elements of the acoustic hood.
2. 
   WARNING!
   Risk of injury from rotating components!

   Loosen the screws for attaching the fan.
3. Pull the fan from the shaft and replace it.
4. Seal the screw for attaching with liquid thread locker.
5. Screw on the fan.
6. Close the maintenance elements of the acoustic hood.
7. Check the cooling air flow during machine operation.

8.3.16 Checking the belt guard

Damage and stability

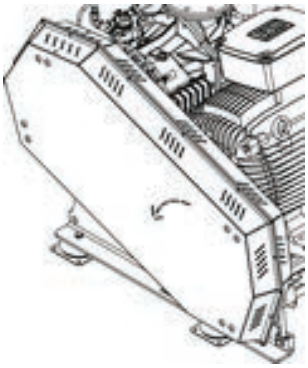

Fig. 160: Belt guard

1. **WARNING!**
   Risk of injury from hot surfaces!

   Check for damage and thorough stability.

   (stable on the base support and machine stage)
2. Remove dirt from the belt guard.
3. If necessary, tighten the belt guard fastener. If damaged, replace it.
4. Beware of any lubricant bleeding out of the drive motor. If lubricant bleeds out, inform the responsible staff at the location.

   Seal any leaks.

8.3.17 Checking pipelines for tightness

Checking discharge-side pipelines for tightness

1. Check pipelines for tightness (visual inspection).

   Ensure that the pipelines have been depressurised!
2. If there are leaks

   ⇨ Replace seals or bushing.
3. Reinforce the pipelines if necessary.
4. Disassemble leaking pipe connections.
5. Use new seals or bushing.
6. Assemble pipe connections.

8.4 Cleaning after maintenance

Cleaning after maintenance work

1. **NOTICE!**
   Risk of damage! Do not used high pressure cleaners, steam jet pumps, grease removal agents, thinners, compressed air etc. as cleaning methods.
2. Dust and dirt must be cleaned with suitable cloths.

3. Clean components susceptible to scratches, display units and touch panels of control systems, gauges etc. with a soft, wet towel.
4. Remove all cleaning agents from the immediate vicinity of the machine before commissioning.
5. Dispose of cloths in an environmentally-friendly way.

8.5 Commissioning after maintenance

Commissioning after maintenance

1. Inform the responsible on-site person about the result of the work carried out and agree commissioning steps with that person.
2. Check all previously loosened screw connections for tightness.
3. Mount all protective hardware and covers that were previously removed.
4. Remove all used tools, materials and other equipment from the workspace.
5. Clean the workspace. Remove operating substances, operating material, processing material and similar materials and dispose of them appropriately.
6. Ensure that there are no persons in the hazard area.
7. Release the main circuit breaker and activate it.
8. Release the EMERGENCY STOP function.
   ⇨ Start operation in accordance with the instructions in the “Operation” chapter.
9. Inform the responsible on-site person about the result of the work carried out.

8.6 Checks after maintenance work

Inspection	After the first 3 op. hrs	After the first 25 op. hrs
Safety valve	check for correct operation	
Oil level	check and, if necessary, correct	check and, if necessary, correct
Aligning the sheaves		check, if necessary correct
op. hrs = operating hours		

9 Malfunctions

The following chapters describe possible causes of faults and steps to be taken to rectify them.

If faults cannot be rectified using the following instructions, contact the manufacturer.

9.1 Safety instructions

Improper fault rectification



WARNING!

Risk of injury due to improper operation fault rectification!

Improper fault rectification may lead to serious injury or material damage.

- Only rectify faults after decommissioning the machine.
- Secure the machine against restarting.
- Allow the machine to cool down to the ambient temperature.
- Before beginning work, ensure that there is sufficient space for installation work.
- Check the tidiness and cleanliness of the work-space.
- Only attempt to rectify faults with suitable tools.
- Ensure removed components are re-installed correctly.
- Re-install all fastening elements and observe the screw tightening torques.
- Before restarting, check that:
  - All safety and protective equipment is installed and functioning correctly.
  - There are no persons in the hazard area.

Electrical system



DANGER!

Risk of fatal injury from electrical current!

There is a risk of fatal injury from touching live components. Live electrical components may make uncontrolled movements and cause extremely serious injury.

- Before beginning work, switch off the electric power supply and secure it against restarting.

Securing the machine against restarting

WARNING!

An unauthorised or unregulated restart can have fatal consequences.

An unauthorised or unregulated restart of the machine can lead to serious or fatal injuries. There may be people located in the hazard area.

– Before beginning work, switch off the energy supply and secure it against restarting.

Requirements for staff

The fault rectification work described here may only be performed by the designated personnel. The personnel entrusted with the respective fault rectification tasks are listed in the table of fault descriptions in addition to their designated tasks.

Requirements in the event of malfunctions and for preparations for fault rectification work:

Personnel:
- Authorised electricians
- Service personnel

For commissioning after rectification of a malfunction, the following is necessary:

Personnel:
- Authorised electricians
- Service personnel

Protective equipment

For fault rectification work the following is necessary:

Protective equipment:
- Protective work clothing
- Protective gloves
- Safety shoes

Special tools

For fault rectification work the following is necessary:

Special tool:
- General tool kit
- Ratchet wrench
- Tools for authorised electricians
- General measurement tools and equipment

Special tool:
- Locking key

Behaviour in the event of faults

1. **DANGER!**
   Risk of injury during fault rectification!
2. In the event of a malfunction, activate the EMERGENCY STOP immediately.
3. Switch off the main circuit breaker and secure it.
4. Immediately inform the responsible staff on location about the fault.
5. **DANGER!**
   Risk of fatal injury from electric current!
6. Ensure there is no live current.
7. Ground and short-circuit the unit.
8. Cover or shut off adjacent live parts.
9. Establish the cause of the fault.

9.2 Fault displays

AERtronic (optional) fault message



Fig. 161: AERtronic display

A detailed explanation of fault messages is contained in the separate operating manual AS-002.

Control system fault message

Depending on the customer's control system, additional fault messages can be recorded and displayed.

9.3 Fault diagnosis and troubleshooting

If, among the faults listed here, a fault occurs that can only be rectified by the manufacturer, contact customer service immediately. *Chapter 1.4.2 „Customer service“ on page 11*

Fault description	Cause	Remedy	Personnel
Abnormal running sounds	Sheaves are not aligned properly.	Check and, if necessary, correct alignment. ↳ *Chapter 8.3.7 „Checking the sheaves“ on page 155*	Service personnel
	Bearing damage.	Replace bearings.	Manufacturer’s customer service division
	Foreign bodies in gear wheels.	Check gear wheels, rectify the damaged areas and if necessary, replace them.	Manufacturer’s customer service division
	Shaft deflection.	Locate shaft deflection, replace it.	Manufacturer’s customer service division
Start unloading device does not close.	Nozzle is contaminated.	Clean the nozzle. ↳ *Chapter 8.3.14 „Cleaning the nozzle of the start-up relief device“ on page 162*	Service personnel
The machine becomes too hot.	Intake filter contaminated (display unit: max. -45 mbar).	Replace intake filter. ↳ *Chapter 8.3.6 „Replacing the intake filter“ on page 155*	Service personnel
	The ambient temperature is too high.	Ensure there is adequate ventilation.	User
	Openings of the acoustic hood for supply air and exhaust air are contaminated.	Clean the openings. ↳ *Chapter 8.3.15 „Checking the inlet and exhaust air openings on the acoustic hood“ on page 163*	User
	The acoustic hood fan is malfunctioning.	Replace the fan. ↳ *„Replacing the fan“ on page 163*	Service personnel
	The permissible operating data have been exceeded.	Check and comply with the operating data.	User
	Foreign bodies on the belt guard.	Remove dirt.	User
Oil present in conveyed medium.	Wear and tear on seals.	Replace seals.	Manufacturer’s customer service division
	Oil level too high.	Correct the oil level. ↳ *Chapter 8.3.3 „Correcting the oil level“ on page 141*	Service personnel
	Balancing holes are sealed.	Remove the sealing cap. ↳ *Chapter 8.3.12 „Checking that sealing plugs have been removed“ on page 161*	Service personnel

Fault description	Cause	Remedy	Personnel
Intake volume is too low.	Intake filter contaminated (display unit: max. -45 mbar).	Replace the intake filter. *Chapter 8.3.6 „Replacing the intake filter“ on page 155*	Service personnel
Intake volume is too low.	Intake piping is leaking.	Seal intake piping.	Service personnel
The motor requires too much power.	The operating data differs from the order data.	Check operating data, comply with correct data.	User
	Mechanical damage.	Replace malfunctioning components.	Service personnel
Belts are vibrating.	Wear and tear on belts.	Replace the belts. *Chapter 8.3.9 „Replacing belts, version with lifting device“ on page 156* Replace the belts. *Chapter 8.3.10 „Replacing belts, version without lifting device “ on page 158*	Service personnel
	Sheaves are not aligned properly.	Check and, if necessary, correct them. *Chapter 8.3.7 „Checking the sheaves“ on page 155*	Service personnel
Machine turns in reverse after being shut down.	Non-return flap is leaking or malfunctioning.	Replace the component. *Chapter 8.3.13 „Checking the non-return flap“ on page 161*	Service personnel
Medium leak at the safety valve.	Safety valve not opening or closing.	Replace the safety valve	Service personnel

9.4 Status and error messages (component suppliers)

Control system fault message

Depending on the customer’s control system, additional fault messages can be recorded and displayed.

9.5 Commissioning after malfunction rectification

Commissioning after fault rectification

1. Check all previously loosened screw connections for tightness.
2. Mount all protective hardware and covers that were previously removed.
3. Remove all used tools, materials and other equipment from the workspace.
4. Clean the workspace. Remove operating substances, operating material, processing material and similar materials and dispose of them appropriately.
5. Inform the responsible on-site person about the result of troubleshooting.
6. Ensure that there are no persons in the hazard area.

7. Release the main circuit breaker and activate it.
8. Release the EMERGENCY STOP function.
9. Confirm the removal of the fault in the control system.
10. Start operation in accordance with the instructions in the “Operation” chapter. ↳ *Chapter 7.3 „Switching on“ on page 122*
11. Inform the responsible on-site person about the result of the work carried out

9.6 Checks after malfunction rectification

Inspection	After the first 3 op. hrs	After the first 25 op. hrs
Safety valve	check for correct operation	
Oil level	check and, if neces-sary, correct	check and, if neces-sary, correct
Aligning the belt pulley		Check and, if neces-sary, correct
op. hrs = operating hours		

10 Disassembly and disposal

Protecting the environment and conserving resources are among AERZEN'S foremost priorities.

Once the machine's service life is over, it must be disassembled and disposed of in an environmentally-friendly way. The following is a set of recommendations for environmentally-friendly disposal.

10.1 Safety instructions

Improper disassembly

WARNING!

Risk of injury from improper disassembly!

Stored residual energy, sharp components, edges and corners on or in the machine or on the necessary tools can cause injury.

- Before beginning work, ensure there is sufficient space.
  Allow the machine to cool down to the ambient temperature.
- Proceed with caution when working with open, sharp-edged components.
- Ensure the tidiness and cleanliness of the workspace! Components and tools that are loosely stacked or lying around can cause accidents.
- Disassemble components correctly. Take into consideration the weight of each component. If necessary, use hoists.
- Secure components, so they do not topple or fall.
- If in doubt, contact the manufacturer.

Electric current

DANGER!

Risk of fatal injury from electrical current!

Disassembly of live components can cause serious or fatal injury.

- Switch off the power to the operating cable.
- Check there is no live current.

Disassembling the delivery line

WARNING!

Risk of injury from compressed conveyed materials!

For the disassembly of pressurised components such as pipes, containers, hoses or valves, hot conveying material escapes with a strong gas flow. This can result in serious injury.

- Before beginning work, fully relieve pressurised components of pressure.
- Check that components are not pressurised.
- Only disassemble pressurised components when they are not under pressure.

For conveyance of nitrogen

DANGER!

Risk of suffocation from escaping residual gas!

Opening piping and screws can allow gas to escape freely into the atmosphere, potentially leading to suffocation.

- Minimise residual gas as much as possible.
- Ventilate the work environment properly.
- Make a record of disassembly works after approval measurement by the operator

Requirements for staff

Requirements for disassembly:

Disassembly of electrical components

Personnel: ■ Authorised electricians

Personnel: ■ Authorised electricians with additional qualifications

Requirements for disassembly:

Disassembly of mechanical components

Personnel: ■ Service personnel

Protective equipment

Requirements for disassembly:

Protective equipment:
- Protective work clothing
- Safety shoes
- Hearing protection
- Protective gloves
- Safety goggles
- Industrial hard hat

Special tools

Requirements for disassembly:

Special tool:
- General tool kit
- Tools for authorised electricians
- Auxiliary materials, aids
- Lifting equipment
- Transport equipment

Special tool:
- Locking key

10.2 Disassembly

Preparing for disassembly:

1. Immediately inform the responsible staff on site about the disassembly.
2. Switch off the machine and secure it against restarting.
3. Seal off the pressure line and remove it.
4. Physically separate the entire electric power supply from the machine. Release stored residual energy.
5. If necessary, disconnect the machine control system from a connected process control system.
6. Remove operating and auxiliary materials and residual processing materials and dispose of them in an environmentally-friendly way.
7. In addition, clean assemblies and components thoroughly. Dismantle them in accordance with local regulations for occupational safety and environmental protection.
8. Remove the machine's foundation bolts.
9. During disassembly, there should be a general sorting of parts in accordance with disposal categories. *„Categories for sorting“ on page 176*

10.3 Disposal

The machine is composed primarily of steel, casting material and various non-ferrous metals. In general, metallic materials are fully recyclable.

Proper disposal

In as far as no agreement has been made on the return or disposal of the machine, send dismantled components for recycling:

- Scrap metals.
- Send plastics for recycling.
- Sort and dispose of other components according to material composition.

Improper disposal

ENVIRONMENT!

Environmental risk from improper disposal!

Improper disposal can present a risk to the environment.

– Have insulating materials, electronic waste, electronic components, auxiliary materials and chemicals disposed of by professional waste disposal companies.
– If in doubt, contact the local authorities or specialist companies for information on environmentally-friendly waste disposal.

Oil and lubricants

ENVIRONMENT!

Environmental risk from oil!

The improper disposal of oil and lubricants can present a risk to the environment.

– Collect oil carefully, store it and dispose of it properly or recycle it.
– If in doubt, contact the local authorities or specialist waste disposal companies for information on environmentally-friendly waste disposal.

Battery



ENVIRONMENT!

Environmental risk from batteries!

The improper disposal of batteries, e.g. from the control system, can present a risk to the environment.

– Collect batteries and dispose of them properly at local collection points.
– If in doubt, contact the local authorities or specialist waste disposal companies for information on environmentally-friendly waste disposal.

Requirements for personnel

Disposal requirements:

Personnel:
- Skilled staff for industrial waste

Protective equipment

Disposal requirements:

Protective equipment:
- Protective work clothing
- Safety shoes
- Hearing protection
- Protective gloves
- Safety goggles
- Industrial hard hat

Special tools

Disposal requirements:

Special tool:
- Lifting equipment

Categories for sorting

Scrap iron	Non-ferrous metal (except for scrap iron)	Insulation material	Electronic waste (encoder electronics)	Auxiliary materials and chemicals
Scrap ■ Scrap steel ■ Foundry scrap ■ Scrap from non-rusting steels ■ Stainless steel scrap	Aluminium	Various isolators (in terminal boxes)	Electrical tools	Lubricant and gear oils Grease
Used metal/2A materials ■ Steel beams ■ Steel sheets	Copper	Voltage and current transformers	Measurement, control and regulatory systems	Cleaning agents and solvents
Machines made of metal ■ Without electronics	Brass	Electric cables and leads		Paint residue
	Motor windings	Instrument wiring		Anti-corrosion agents
		Surge absorbers		Cloths (soaked in agents or chemicals)

Scrap iron	Non-ferrous metal (except for scrap iron)	Insulation material	Electronic waste (encoder electronics)	Auxiliary materials and chemicals
		Heat insulation materials		AERtronic batteries
This does not include: ■ Hazardous adhesions ■ Sealed hollow parts (due to danger of deflagration or hazardous contents)	Valve disposal ■ Remove the medium before disposal! Neutralise residual medium in the valves.		This does not include: ■ PCB capacitors	■ Solvents, cleaning agents and paint residue must not be allowed to mix! ■ Sort oils separately according to emulsions and solvents. ■ Agents and chemicals must be collected in separate, labelled containers.

Disposal of accessories

Motor

- For safety reasons, disposal may only be carried out by specialists for industrial waste or by return to the manufacturer!
- The encoder electronics are electronic waste.

Frequency inverter



DANGER!
Danger due to explosion of the capacitor and the formation of toxic gases!

- For safety reasons, disposal may only be carried out by specialists for industrial waste or by return to the manufacturer!
- The encoder electronics are electronic waste.

11 Technical specifications

11.1 Dimensions and weights

General information

The following dimensions and weights relate to standard variants and can vary depending on the specific design.

Exact details can be found on the installation drawing.

Information on weight can be found on the packing note and the designation on the type plate.

Dimensions, including packaging, are included in the forwarding order.

Tab. 3: Dimensions and weights

Positive pressure operation						
Size	**Width (W) mm**	**Depth (D) mm**	**Height (H) mm**	**Nominal diameter DN**	**Weight without acoustic hood, without motor and without belt drive approx. kg**	**Weight with acoustic hood, excluding motor and belt drive approx. kg**
GM 3 S	800	800	1055	50	160	220
GM 4 S	925	1135	1280	80	210	320
GM 7 L	925	1135	1280	80	210	320
GM 10 S / DN80	925	1135	1280	80	240	350
GM 10 S / DN100	1250	1350	1500	100	350	510
GM 15 L	1250	1350	1500	100	360	530
GM 25 S	1250	1350	1500	125	420	580
GM 30 L	1500	1800	1900	150	660	980
GM 35 S	1500	1800	1900	150	760	1040
GM 50 L / DN150	1500	1800	1900	150	810	1130
GM 50 L / DN200	1700	2055	2111	200	840	1310
GM 60 S	1700	2055	2111	200	1000	1460
These dimensions and weights relate to the standard design and are approximate values. The information can vary depending on the order.						

Positive pressure operation						
Size	**Width (W) mm**	**Depth (D) mm**	**Height (H) mm**	**Nominal diameter DN**	**Weight without acoustic hood, without motor and without belt drive approx. kg**	**Weight with acoustic hood, excluding motor and belt drive approx. kg**
GM 80 L	1900	2200	2308	250	2720	3570
GM 90 S	1900	2200	2308	250	2780	3630
GM 130 L	2100	2850	2345	300	2265	3230
GM 150 S	2100	2850	2345	300	2510	3470
These dimensions and weights relate to the standard design and are approximate values. The information can vary depending on the order.						

11.2 Dimension specifications sheet

An accompanying dimension specifications sheet is provided with the product documentation.

These documents contain important dimensions for installation and set-up.

11.3 Operating data

11.4 Technical performance data

Tab. 4: Operating and application limits

Positive pressure operation			
Size	**Differential pressure max. mbar**	**volume flow max. m³/h**	**Motor rating max. kW**
GM 3 S	1000	247	7.5
GM 4 S	1000	282	15
GM 7 L	700	493	15
GM 10 S / DN80	1000	542	22
GM 10 S / DN100	1000	696	30
GM 15 L	700	1038	30
GM 25 S	1000	1452	55
GM 30 L	700	2082	75
GM 35 S	1000	2418	90
GM 50 L / DN150	700	2610	75
GM 50 L / DN200	700	3306	90
GM 60 S	1000	3540	132
GM 80 L	700	5034	160
GM 90 S	1000	5418	200
GM 130 L	700	8040	200
GM 150 S	1000	9120	355
These operating limits are maximum values. Difficult operating conditions can adversely affect these data.			

Environmental limits

Data	Value	Unit
Temperature range	-10 to 40	°C
Relative humidity	0 to 80	%
Chemical-free atmosphere		

Maximum installation elevation

Data	Value	Unit
max. installation elevation above NN*	1000	m

If installing at a different elevation, observe the order-specific design data sheets.

Environmental limits

Data	Value	Unit
Temperature range	-10 to 40	°C
Mounting of acoustic hood heating	less than -10	°C
Relative humidity	0 to 80	%
Chemical-free atmosphere		

operating period

Data	Value	Unit
Maximum continuous operating period	24	hrs
Pause until next operation	/	hrs

11.5 Type plate(s) and placement

Placement on the machine stage

Manufacturer/type plate on the machine stage.

Pos.1 Manufacturer plate
Pos.2 Type plate

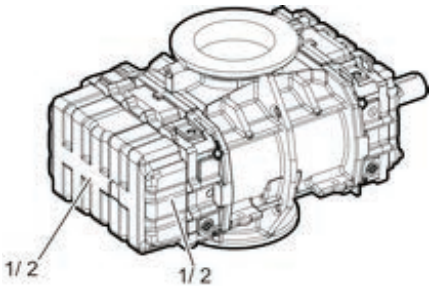

Fig. 162: Layout example

Manufacturer plate - pos.1

Manufacturer plate



Fig. 163: Manufacturer plate

Type plate - pos.2



Fig. 164: Type plate

Pos.1 Machine type
Pos.2 Factory/serial number
Pos.3 Order no.
Pos.4 Machine rotational speed
Pos.5 Power consumption
Pos.6 Year of manufacture
Pos.7 Weight
Pos.8 Motor rotational speed
Pos.9 Conveyed amount
Pos.10 Intake pressure (absolute) - p1
Pos.11 Positive pressure, discharge - p2e

Placement on the acoustic hood

The manufacturer/type plate is on the operating side of the acoustic hood.

Pos.1 / acoustic hood Manufacturer and type plate

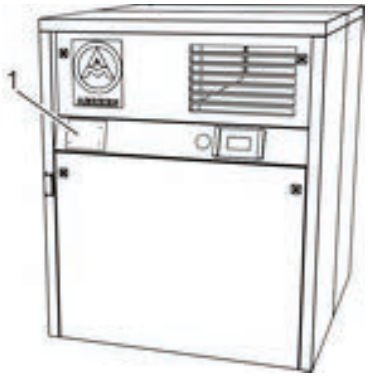

Fig. 165: Acoustic hood signage

Manufacturer and type plate - pos.1



Fig. 166: Acoustic hood manufacturer/performance data plate

Pos.1 Manufacturer, including address
Pos.2 Designation
Pos.3 Machine type
Pos.4 Customer order no.
Pos. 5 Serial number
Pos.6 Year of manufacture
Item 7 max. intake pressure (absolute)-p1
Item 8 max. discharge pressure (absolute) -p2
Item 9 Nominal power of motor
Item 10 Machine weight (total)

Type designation

The type designation is derived from the following table:

Tab. 5: Explanation using example: ***GM 90 S***

Designation	Explanation	Details
GM	Product designation	Positive displacement blower
90	Maximum flow volume in m³/min (approx.)	
S	Design	L: Pressure differences up to 700 mbar
		S: Pressure differences up to 1,000 mbar

Safety valve signage

When using the AERZEN safety valve the type plate is on the valve housing.

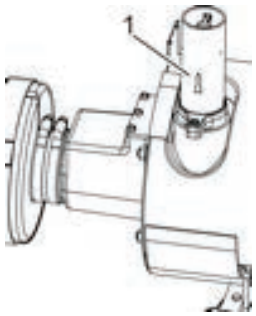

Pos. 1 Manufacturer and type plate

Fig. 167: Signage

Safety valve type plate

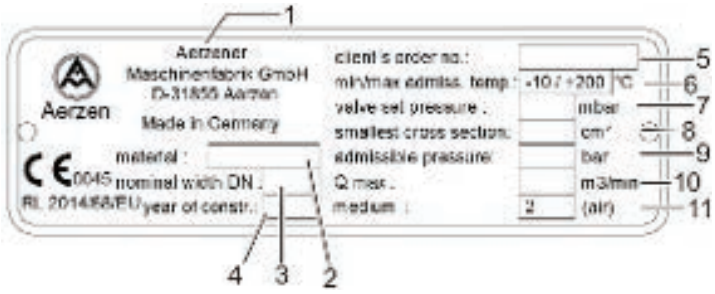

Fig. 168: Manufacturer/performance data plate

Pos.1 Manufacturer, including address
Pos.2 Material
Pos.3 Nominal diameter
Pos.4 Year of manufacture
Item 5 Customer order no.
Pos.6 Application temperatures
Pos.7 Valve set pressure
Pos.8 Narrowest cross-section
Pos.9 Maximum permissible pressure
Pos. 10 max. flow rate
Pos. 11 Medium type

11.6 Noise emissions

Information on noise emissions

This information is determined in accordance with the performance data. ↪ *Chapter 11.4 „Technical performance data“ on page 181*.

No-load operation or operation below the maximum performance values reduces noise emissions.

Machines without an acoustic hood have considerably higher noise emissions. Observe the measures for noise emission reduction ↪ *Chapter 5.2 „Requirements for the installation site“ on page 91*

Measurement requirements

- applied basic standard DIN EN ISO 2151
- measured according to basic standard DIN EN ISO 3744
- with acoustic hood
- connected, insulated pipelines
- tolerance: ±2 dB(A)

Positive pressure

Size	A-weighted sound pressure level, L_{pA}dB(A)
GM 3 S	72
GM 4 S	72
GM 7 L	72
GM 10 S / DN 80	74
GM 10 S / DN 100	74
GM 15 L	75
GM 25 S	75
GM 30 L	77
GM 35 S	77
GM 50 L / DN 150	77
GM 50 L / DN 200	78
GM 60 S	80
GM 80 L	82
GM 90 S	83
GM 130 L	86
GM 150 S	86

11.7 Operating materials

11.7.1 Lubricant oil specifications

Lube oil specification

Choice of lubricants

When operating the machine, only use lubricants that comply with this specification!

The quality of lube oil has a considerable effect on the service life of the machine.

When selecting the type of lube oil, the application conditions and the relevant additives and viscosity class are decisive.

Taking the operating conditions into account, only use the following oils with the corresponding viscosities and additives.

* Ambient temperature = the temperature in the immediate vicinity of the machine all year round.

Low-load operation

Using these machines for **"low-load operation with minor pressure differences"** requires prior consultation with AERZEN Customer Service or the sales company. To select a suitable lubricant, the operating conditions, load and operating data need to be taken into account.

Lube oil properties

Tab. 6: General requirements of the lube oil properties

Kinematic viscosity at operating oil temperature.	min. 10 - 13 cSt (mm^2/s)
Kinematic viscosity at -10°C	min. ≤ 3,500 cSt (mm^2/s)

Tab. 7: Minimum properties of the oil additive

EP wear-protection additives for use in rolling bearing drives
Oxidisation stability up to 110°C oil sump temperature
Foam suppressor
Detergent for deposit solutions
Neutrality with regard to seal materials of fluoropolymer elastomer (Viton)
Neutrality with regard to one-component resin primers
Sufficient shear stability

11.7.1.1 Lube oils

Tab. 8: Standard first oil filling

Delta Lube 06	
Intake temperature (machine stage)	up to 50°C
Final compression temperature (machine stage)	up to 140°C
Ambient temperature*	no constraints
This lube oil is used as initial oil filling for standard use conditions.	

11.7.1.1.1 Alternative lube oils

Tab. 9: One or two-shift operation/intermittent operation

AERZEN special rotary piston oil	
Intake temperature (machine stage)	up to 50°C
Final compression temperature (machine stage)	up to 140°C
Ambient temperature*	no constraints

Tab. 10: Continuous operation: 24 hours a day

ISO VG 150	
Fully-synthetic poly-alpha-olefin (PAO), drive or compressor oil	
Intake temperature (machine stage)	up to 50°C
Final compression temperature (machine stage)	up to 140°C
Ambient temperature*	no constraints
Example: MOBIL SHC 629	

Tab. 11: Operation with a final compression temperature of over 140°C

ISO VG 220	
Synthetic lube oil with a base oil of type polyglycol	
Continuous oil temperature	120°C - 140°C
Final compression temperature (machine stage)	over 140°C
Ambient temperature*	no constraints
Example: ESSO Glycolube 220, ARAL Degol GS 220	

11.7.1.2 Changing oil types

Delta Lube 06, AERZEN special rotary piston oil --> fully synthetic PAO lubricants

The AERZEN lubricants (Delta Lube 06, AERZEN special rotary piston oil) are fully compatible with fully synthetic PAO lubricants.

Measures: If you change to another oil type, no specific measures need be taken. However, to preserve the working properties of the new oil, the oil that is replaced should be drained completely and, after 100 operating hours and in addition to any scheduled oil changes, a full oil change including oil filter change (if there are any filters) should be performed. Only oil of the same type should be used for topping up.

Delta Lube 06, AERZEN special rotary piston oil, fully synthetic PAO lubricants --> polyglycol oils (PAG)

The AERZEN lubricants (Delta Lube 06, AERZEN special rotary piston oil) as well as PAO lubricants are ***not*** compatible with polyglycol oils (PAG) or perfluorinated polyether oils, e.g. Fomblin.

Measures: In order to change the oil type, the machine must be completely dismantled and the entire oil system thoroughly cleaned of residue. A rinsing is recommended before first commissioning. Only oil of the same type should be used for topping up.

11.7.2 Lubricant oil in the food and pharmaceutical industry

For rotary piston blowers, lubricating oils can be used which have approval according to the specification USDA H1.

Operational experience is **only** available for the following lubricating oils.

AERZEN issues no approval for any other oils.

It is recommended that you carry out an oil analysis after 1,000 op. hrs in coordination with the oil manufacturer.

ISO VG 100	
Continuous oil temperature	up to 100°C
Compressor discharge temperature	up to 120°C
Lubricant to be used: **Klüberöl 4UH1-100 N**	

ISO VG 220	
Continuous oil temperature	over 100°C
Compressor discharge temperature	over 120°C
Lubricant to be used: **Klüberöl 4UH1-220 N**	

11.7.3 Grease specifications

Only for the gas-tight version of the drive shaft!

Tab. 12: Greases for the gasket of the drive shaft

Grease KHC-2P-30	
Using the lubricating oils according to AERZEN lubricating oil specification, *excluding polyglycols*	
Filling at the factory	**KLÜBER PETAMO GHY 133 N**

Grease MPG2K-40	
Using the a polyglycol oil according to AERZEN lubricating oil specification	
Filling at the factory	**KLÜBER SYNTHESO PROBA 270**

Information on grease

- Avoid mixing different greases.
- Lubrication is only permitted with the same grease.
- If these greases are not available, completely remove the grease and replace it with another grease in accordance with KHC-2P-30 or MPG2K-40.
- Observe the seal compatibility with Viton!

11.7.4 Lubricant quantities

Machine lube oil levels

The following values for lube oil levels are guide values. The main factor in determining the oil fill quantity is the displays of the relevant oil level pointer.

Tab. 13: Version with oil system

Total oil quantity Oil level middle sight glass on the acoustic hood			
Operating material	**Machine type**	**Filling quantity, approx.**	**Unit**
Lube oil	GM 3 S	0.55	Litre (l)
	GM 4 S	1.00	
	GM 7 L	1.00	
	GM 10 S	1.40	
	GM 15 L	1.40	
	GM 25 S	1.75	
	GM 30 L	1.75	
	GM 35 S	3.75	
	GM 50 L	4.50	
	GM 60 S	7.50	
	GM 80 L	7.50	
	GM 90 S	12.50	
	GM 130 L	12.50	
	GM 150 S	12.00	

Tab. 14: Version without oil system

Total oil quantity Oil level at centre of sight glasses on machine stage			
Operating material	**Machine type**	**Filling quantity, approx.**	**Unit**
Lube oil	GM 3 S	0.55	Litre (l)
	GM 4 S	0.55	
	GM 7 L	0.55	
	GM 10 S	0.86	
	GM 15 L	0.86	

Total oil quantity Oil level at centre of sight glasses on machine stage			
Operating material	**Machine type**	**Filling quantity, approx.**	**Unit**
	GM 25 S	1.20	
	GM 30 L	1.20	
	GM 35 S	3.00	
	GM 50 L	3.50	
	GM 60 S	6.50	
	GM 80 L	6.50	
	GM 90 S	11.50	
	GM 130 L	11.50	
	GM 150 S	11.00	

Grease filling quantity for machine stage

Only for the gas-tight version of the drive shaft!

Operating material	Machine type	Filling quantity, approx.	Unit
Grease	GM 3 S	5	cm^3
	GM 4 S	5	
	GM 7 L	5	
	GM 10 S	5	
	GM 15 L	5	
	GM 25 S	5	
	GM 30 L	5	
	GM 35 S	10	
	GM 50 L	10	
	GM 60 S	10	
	GM 80 L	10	
	GM 90 S	10	
	GM 130 L	10	
	GM 150 S	20	

Stauffer lubricators

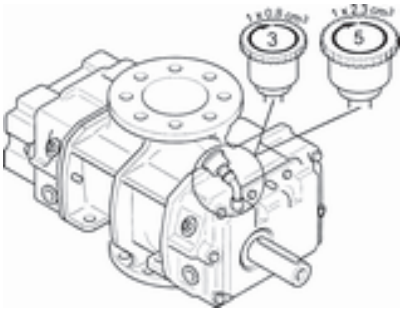

Fig. 169: Stauffer lubricator

Tab. 15: Grease amount per Stauffer lubricator for each rotation

Stauffer lubricator size	Rotation	Grease amount in cm^3
3	1	0.8
5	1	2.3

Drive motor grease quantity

Observe the separate motor documentation and the information on the type plate of the motor.

Operating material	Motor size	Filling quantity, approx.	Unit
Grease	Observe the information in the motor documentation and on the type plate!		

11.8 Coating

Corrosion protection

The housing surfaces receive the following coatings to protect them against corrosion:

Standard coating	
Undercoat	Corrosion protection on alkyd resin basis
End coating	Alkyd resin surface coating

Coating for increased corrosion protection	
Undercoat	Corrosion protection on 2-component, epoxy resin, micaceous iron oxide basis
Intermediate coating	
End coating	Polyurethane surface coating

11.9 Electrical details

11.9.1 Voltage fluctuations

Permissible voltage fluctuations

Permissible voltage fluctuations are described in the international standard IEC 60038 subject to country-specific supply voltage tolerances.

Machine use only in a stable three-phase power supply. Voltage fluctuations or drops beyond the tolerance level may cause serious damage to the drive system.

11.9.2 Earthing strap cross-sections

Earthing strap

	kW	mm^2
to	55	14
to	200	70
to	315	2 x 70

11.9.3 Motor overload protection

Setting value

Max. ... % value, nominal motor current
110 %

11.10 Accessory information

11.10.1 Intake filter

Technical data

Intake filter		Unit
Filter resistance in clean condition	> 10	mbar
max. filter resistance	45	mbar

11.10.2 Start unloading device DN 50 to DN 80

Technical data

Start unloading device		
Voltage	230	V
Frequency	50	Hz
Protection type	IP 65	

Start unloading device		
Power	8	W
open without current		

11.10.3 Start-up unloading device DN 80 to DN 400

Technical data

Start-up unloading device DN 80 to DN 400		Unit
Voltage	230	V
Frequency	50	Hz
Protection type	IP 65	
Power	8	W
closed without current		

11.10.4 Balancing grade

Balancing type

The vibration behaviour of the machines is determined not only by the balancing grade of the drive shafts but also by the balancing grade of the drive elements.

The drive shafts of the pistons and rotors are balanced according to the half-key principle. Sheaves and couplings must therefore correspond to balancing type “H”.

12 Notes on the Declaration of Conformity

This document is provided for informational purposes only and gives an account of the contents of the Declaration of Conformity. The original document is provided with the product or is sent in a separate document.

AERZEN

CE MRL 1012_1

Declaration of Conformity

pursuant to the EC Machinery Directive 2006/42/EC, Annex II 1A	
Translation of Original Declaration of conformity	CE
Manufacturer	**Representative pursuant to the Machinery Directive** **Representative for technical documentation**
Aerzener Maschinenfabrik GmbH Phone: +49 5154 81-0 Fax: +49 5154 81-9191 E-mail: info@aerzener.de Internet: www.aerzen.com Reherweg 28 31855 Aerzen, Germany	Mr Björn Irtel Aerzener Maschinenfabrik GmbH Phone: +49 5154 81-0 Fax: +49 5154 81-9191 E-mail: info@aerzener.de Internet: www.aerzen.com Reherweg 28 31855 Aerzen, Germany

Product	
Designation	
Type	
Serial no.	
Order no.	
Year of construction	

We hereby declare that the above product complies with all applicable provisions of the Machinery Directive 2006/42/EC.

The aforementioned product fulfils the requirements of the following applicable directives:

► Directive 2006/42/EC of the European Parliament and of the Council of 17 May 2006 on machinery, and amending Directive 95/16/EC (recast) 2006/42/EC

The following harmonised standards were applied:

► DIN EN ISO 12100:2011-03 Safety of machinery - General principles for design - Risk assessment and risk reduction (ISO 12100:2010)

► DIN EN 1012-1:2011-02 Compressors and vacuum pumps - Safety requirements - Part 1: Air compressors; German version EN 1012-1:2010

Information on Signatory	Managing director	Signature	Location, date of issue

27.10.2014_Docid CE MRL 1012_1_01_2014_1_en_GB

13 Glossary

•Bar chart display

A bar chart display is a display method which uses a scale to represent the size of a signal with a representative bar that changes in length depending on the signal size.

•Belt run

The belt section between two sheaves is termed a “belt run”.

•Discharge temperature

Temperature measured at the discharge sockets of the machine stage.

•EMERGENCY STOP function

A function intended to alleviate the danger of impending hazards in terms of injury or damage to persons and machines during operation or to reduce the danger of hazards that are already present.

A function that is activated by one single action by an individual person.

The purposeful shut-down of the machine to avoid a dangerous situation. Voltage-carrying components are still active.

Emergency stop.

•Machine

A machine is an assembly of linked parts or components, at least one of which moves. A machine is fitted or intended to be fitted with a drive system. The machine has a proper intended use and is assembled for a specific purpose. Another technical term for “machine” is “unit”.

•Machine stage

A machine stage is an incomplete machine. It is an assembly that almost constitutes a machine, but that does not fulfil a specific function. A machine stage is only intended to be installed in and added to other machines or other incomplete machines.

•Modbus RTU

Modbus RTU transfers data in binary form. This ensures a good data throughput rate. The data cannot be evaluated directly by persons, rather they must first be converted into a readable format.

•PROFIBUS-DP

PROFIBUS DP involves the communication of central control equipment via a fast serial connection with decentralized input /output modules.

•Sentinel filter

Another filter downstream from a filter

It fulfils an end cleaning function and a safety function.

•Stop category 0

Stop category 0.

Shut-down by means of immediate interruption of the power supply to the machine.

Shut-down by means of mechanical separation (uncoupling) of components that pose a danger and their mechanical drive elements and, if necessary, by means of a braking procedure.

Oil system

The oil system is used in a multitude of acoustic hoods. It comprises a filling vessel, an additional oil level display on the acoustic hood and the oil pipe connection.

14 Index

A

Accessories 60
Performance data 194
Acoustic hood 70
Safety device 43
AERtronic 59
Alignment
Dowelling 93, 94
Application limits 181
Assemblies
Description 56

B

Balancing grade
Technical data 195
Balancing type
Technical data 195
Belt
Replacement 156
Replacing 158
Belt drive 69
Belt guard
checking 164
Safety equipment 44

C

Changing oil 148, 152
Checking the oil level 139, 140
Cleaning
Maintenance 164
Coating 193
Commissioning
after a fault 170
After a fault 126
After adjustments 126
After maintenance 126, 165
Checks 119
performing 106
Performing 108
Preparation 102
Safety instructions 101
Control elements 59
Copyright protection 10
Corrosion protection 193
Customer service 11

D

Decommissioning 126
Delivery 76
Dimension specifications sheet 179
Dimensions
Weights 178
Disassembly 174
Safety instructions 172
Discharge silencer
Base support 67
Discharge-side pipeline
Checking 164
Disposal
Battery 175
Categories for sorting 176
Oil 175
proper disposal 175
Safety instructions 172
Drive motor
factory installation 62

E

Earthing strap, cross-sections 194
Electrical information
Earthing strap, cross-sections 194
Motor overload protection 194
Voltage fluctuations 194
EMERGENCY STOP 40
Emergency 122
Emissions 185
Environmental limits 181, 182

Environmental protection 50
Anti-corrosion agents 51
Batteries / control system 51
Electronics 51
Lubricants 51

F

Fan 70
Fault diagnosis
Troubleshooting 168
Fault displays 124
AERtronic 168
Fault rectification
Checks 171
Filling with oil
First filling 136, 137
Frequency converter
Operation 63

G

Gauge 65

H

Hazard area
Operating area 48
Hinged support 43

I

Information on AERtronic 62
Inlet and exhaust air openings 163
Installation
Safety instructions 89
Installation elevation 181
Instrumentation
Shut-down 62
Intake filter
replacing 155
Technical data 194
Intake silencer 66
Intended use 28

L

Lube oil specification
Oils 187
Lubricants
Filling quantities 191

M

Machine terminal strip 99
Maintenance
Safety instructions 130
Maintenance indicator 65
Maintenance schedule
Normal operation 133
Maintenance work 135
Checks 165
Malfunctions
Safety instructions 166
Manufacturer 11
max. operating period 182
Misuse
foreseeable 30
Motor mount 43
Motor overload protection 194
Motor shaft
Sheave cover 44

N

Noise emissions 185
Non-return flap 68
replacement 161

O

Oil level
too high 141, 142
too low 144, 146
Operating
Safety instructions 120
Operating area
Hazard area 48
Operating data 180
Operating materials 191

Operating mode 122
Operating principle 55
Operator 32
Overview
Assemblies 52, 53, 54

P

Packaging 78
Performance data 181
Personnel
Qualifications 34
Preservation 85, 86
Pressure and temperature switches 63
Protective cover
Sheaves 156
Protective equipment
Safety 39

Q

Qualifications
Personnel 34

R

Replacement parts 34
Replacing the grease 148
Requirements
Installation site 91
Residual risks 12

S

Safety 12
Safety classifications 44
Safety device 40
Safety valve 67
checking 160
Sealing plug
Removal 161
Securing the machine against restarting 49
Sheave
checking 155
Start unloading device
adjusting 127
Technical data 194
Start-up relief device 68
Cleaning the nozzle 162
Data DN 50 to DN 80 194
Solenoid valve 69
Start-up unloading device
Data: DN 80 to DN 400 195
Storage 85
Packaging 85
Storage for over 12 months
Packaging 86
Storage for over 12 months in a tropical climate
Packaging 86
Switching off
Operating mode 124
Switching on 122
Symbols
in the manual 8

T

Technical data 178
Tools 71
Transport
Installation site 83
Packaged units 81
Safety instructions 73
Transport inspection
Completeness 80
Transport damage 80
Troubleshooting
Behaviour 168
Type designation 184
Type plate 184
Manufacturer 183
Type plates
Manufacturer plate 182
Signage 182

V

Valves
adjusting 126

Voltage fluctuations 194

LEFT BLANK

TECO Westinghouse

MOTORS (CANADA) INC.

INSTALLATION AND MAINTENANCE INSTRUCTIONS FOR THREE PHASE INDUCTION MOTORS

Frames 143T - 449T

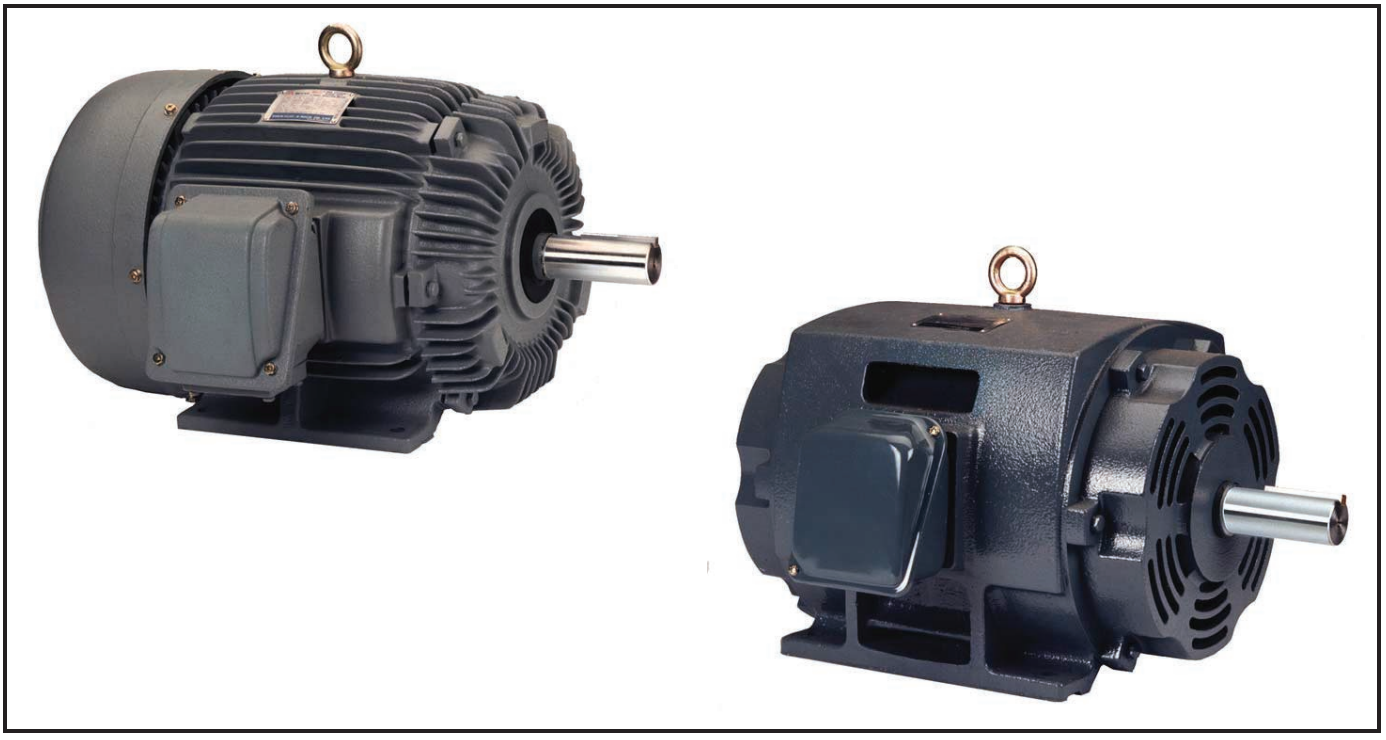

18060 -109 Ave Edmonton, AB T5S 2K2
Phone: 800-661-4023 780-444-8933 Fax: 888-873-8964

RECEIVING

1. Check nameplate data.
2. Check whether any damage has occurred during transportation.
3. After removal of shaft clamp, turn shaft by hand to check that it turns freely.
4. If motor is to be reshipped (alone or installed to another piece of equipment) the shaft must again be clamped to prevent axial movement.
   Note: Remove the bearing clamp before turning the shaft on 284T-449T frame motors.

WARNING
THE FOLLOWING SAFETY PRECAUTIONS MUST BE OBSERVED:

1. Electric rotating machinery and high voltage can cause serious or fatal injury if improperly installed, operated or maintained. Responsible personnel should be familiarized with NEMA MG2; Safety Standards for Construction and Guide Selection. Installation and Use of Electric Motors and Generators; National Electric Code and all local safety requirements.
2. When servicing, all power sources to the motor and to the accessory devices should be de-energized and disconnected and all rotating parts should be at standstill.
3. Lifting means, when supplied, are intended for lifting the motor only. When two lifting devices are supplied with the motor a dual chain must be used.
4. Suitable protection must be used when working near machinery with high noise levels.
5. Safeguard or protective devices must not be by-passed or rendered inoperative.
6. The frame of this machine must be grounded in accordance with the National Electric Code and applicable local codes.
7. A suitable enclosure should be provided to prevent access to the motor by other than authorized personnel. Extra caution should be observed around motors that are automatically or have automatic re-setting relays as they may restart unexpectedly.
8. Shaft key must be fully captive or removed before motor is started.
9. Provide proper safeguards for personnel against possible failure of motor-mounted brake, particularly on applications involving overhauling loads.
10. Explosion proof motors are constructed to comply with the label service procedure manual, repair of these motors must be made by TECO-Westinghouse or CSA/UL Listed service center in order to maintain CSA/UL Listing.

LOCATION

1. Drip-proof motors are intended for use where atmosphere is relatively clean, dry, well ventilated and non-corrosive.
2. Totally enclosed motors may be installed where dirt, moisture, or dust are present and in outdoor locations.
3. Explosion-proof motors are built for use in hazardous locations as indicated by Underwriters label on the motor.
4. Chemical duty enclosed motors are designed for installation in high corrosion or excessive moisture locations.
   Note: in all cases, no surrounding structure should obstruct normal flow or ventilating air through or over the motor.

MOUNTING

1. Mount motor securely on a firm, flat base. All ball bearing normal thrust motors up to and including 256T frame size may be side-wall or ceiling mounted; all others check nearest TECO-Westinghouse office for mounting recommendations.
2. Align motor accurately, using a flexible coupling if possible. For drive recommendations, consult with drive or equipment manufacturer, or TECO-Westinghouse.
3. Mounting bolts must be carefully tightened to prevent changes in alignment and possible damage to the equipment. The recommended tightening torque s for medium carbon steel bolts, identified by three radial lines at 120 degrees on the head, are:

Bolt Size	Recommended Torque (Ft-lb.)	
	Minimum	Maximum
2/8	25	37
1/2	60	90
5/8	120	180
3/4	210	320

4. V-belts Sheave Pitch Diameters should not be less than those shown in Table 1 (NEMA recommended values)
5. Tighten belts only enough to prevent slippage. Belt speed should not exceed 5000 ft. per min.

TABLE 1. V-Belt Sheave Pitch Diameters (MG1-14.42)

Frame Number	Horsepower at Synchronous Speed, RPM				V-Belt Sheave			
					Conventional A, B, C, D AND E		Narrow 3V, 5V, AND 8V	
	3600	1800	1200	900	Minimum Pitch Diameter Inches	*Maximum Width Inches	Minimum Outside Diameter Inches	**Maximum Width Inches
143T	1.5	1	.75	.5	2.2	4.25	2.2	2.25
145T	2-3	1.5-2	1	.75	2.4	4.25	2.4	2.25
182T	3	3	1.5	1	2.4	5.25	2.4	2.75
182T	5				2.6	5.25	2.4	2.75
184T			2	1.5	2.4	5.25	2.4	2.75
184T	5				2.6	5.25	2.4	2.75
184T	7.5	5			3.0	5.25	3.0	2.75
213T	7.5-10	7.5	3	2	3.0	6.5	3.0	3.375
215T	10		5	3	3.0	6.5	3.0	3.375
215T	15	10			3.8	6.5	3.8	3.375
254T	15		7.5	5	3.8	7.75	3.8	4
254T	20	15			4.4	7.75	4.4	4
256T	20-25		10	7.5	4.4	7.75	4.4	4
256T		20			4.6	7.75	4.4	4
284T			15	10	4.6	9	4.4	4.625
284T		25			5.0	9	4.4	4.625
286T		30	20	15	5.4	9	5.2	4.625

TABLE 1. V-Belt Sheave Pitch Diameters (MG1-14.42)

Frame Number	Horsepower at Synchronous Speed, RPM				V-Belt Sheave			
					Conventional A, B, C, D AND E		Narrow 3V, 5V, AND 8V	
	3600	1800	1200	900	Minimum Pitch Diameter Inches	*Maximum Width Inches	Minimum Outside Diameter Inches	**Maximum Width Inches
324T		40	25	20	6.0	10.25	6.0	5.25
326T		50	30	25	6.8	10.25	6.8	5.25
364T			40	30	6.8	11.5	6.8	5
364T		60			7.4	11.5	7.4	5.785
365T			50	40	8.2	11.5	8.2	5.785
365T		75			9.0	11.5	8.6	5.785
404T			60		9.0	14.25	8.0	7.25
404T				50	9.0	14.25	8.4	7.25
404T		100			10.0	14.25	8.6	7.25
405T			75	60	10.0	14.25	10.0	7.25
405T		100			10.0	14.25	8.6	7.25
405T		125			11.5	14.25	10.5	7.25
444T			100		11.0	16.75	10.0	8.5
444T				75	10.5	16.75	9.5	8.5
444T		125			11.0	16.75	9.5	8.5
444T		150				16.75	10.5	8.5
445T			125		12.5	16.75	12.0	8.5
445T				100	12.5	16.75	12.0	8.5
445T		150				16.75	10.5	8.5

*Max. Sheave width = 2(N-W) - .25

**Max Sheave width = N-W

***Sheave ratios grater than 5:1 and center-to-center distance less than the diameter of the large sheave should be referred to TECO-Westinghouse.

POWER SUPPLY & CONNECTIONS

1. Wiring of motor and control, overload protection and grounding should be in accordance with National Electrical Code and all local safety requirements.
2. Nameplate voltage and frequency should agree with power supply. Motor will operate satisfactorily on line voltage within –10% of nameplate voltage; or frequency with –5% and with a combined variation not to exceed –10%. 230-volt motors can be used on 208-volt network systems, but with slightly modified performance characteristics as shown on the nameplate.
3. Dual voltage and single voltage motors can be connected for the desired voltage by following connection diagram shown on the nameplate or inside of the conduit box.
4. All Explosion Proof motors have Temperature Limiting Devices in the motor enclosure to prevent excessive external surface temperature of the motor in accordance with CSA/UL standards. Terminals of thermal protectors (P1 & P2) should be connected to the motor control equipment, according to the connection diagram inside of the conduit box.
5. Standard connection diagram for three phase, not thermally protected, dual rotation motors are shown in diagrams A through E.
   (Note: To change rotation, interchange any two line leads)

A. 3 Lead, Single Voltage

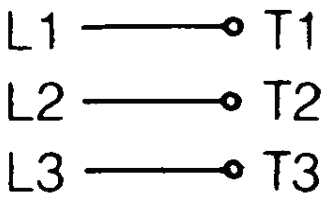

B. 6 Lead, Dual Voltage & Voltage Ration 1 to 3

B-1 Across the Line Start & Run

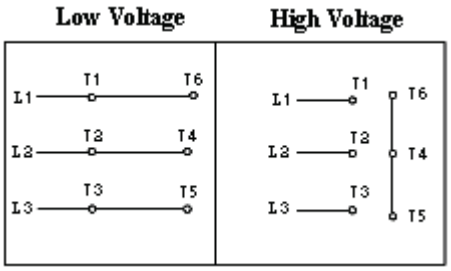

B-2 Wye Start & Delta Run
(Low Voltage only)

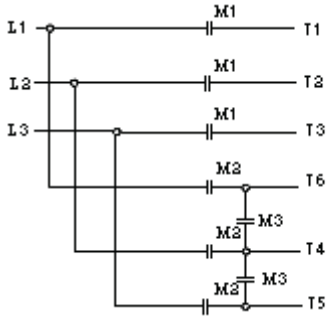

	START	RUN
M1	CLOSE	CLOSE
M2	OPEN	CLOSE
M3	CLOSE	OPEN

C. 9 Leads; Dual Voltage & Voltage Ratio 1 to 2, Wye Connected

C-1 Across the Line Start & Run

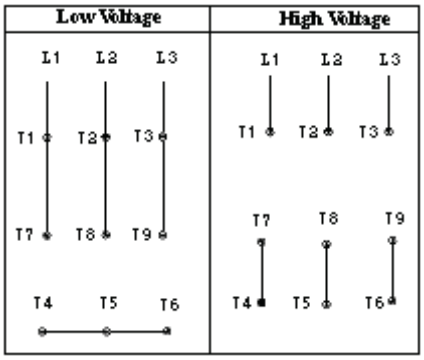

C-2 Part Winding Start
(Low Voltage only)

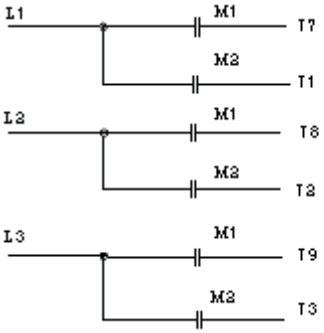

	START	RUN
M1	CLOSE	CLOSE
M2	OPEN	CLOSE
Tie Together	(T4-T5-T6)	

D. 9 Leads; Dual Voltage & Voltage Ration 1 to 2, Delta Connected

D-1 Across the Line Start & Run

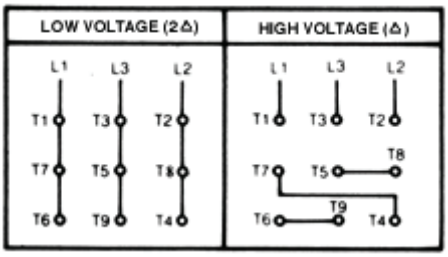

D-2 Part Winding Start
(Low Voltage only)

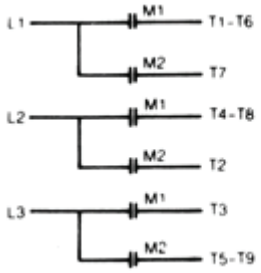

	START	RUN
M1	CLOSE	CLOSE
M2	OPEN	CLOSE

E. 12 Leads, Dual Voltage

E-1 Across the Line Start & Run

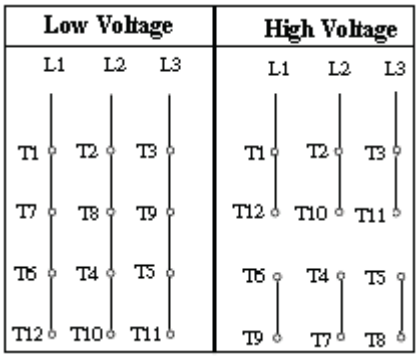

E-2-1 Wye Start & Delta Run (Low Voltage only)

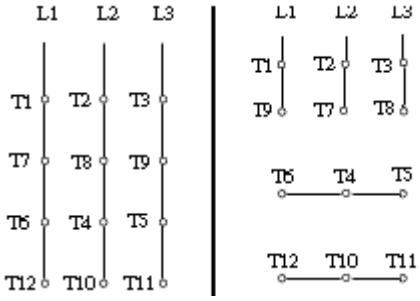

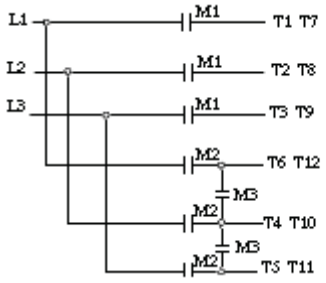

	START	RUN
M1	CLOSE	CLOSE
M2	OPEN	CLOSE
M3	CLOSE	OPEN

E-2-2 Wye Start & Delta Run (High Voltage only)

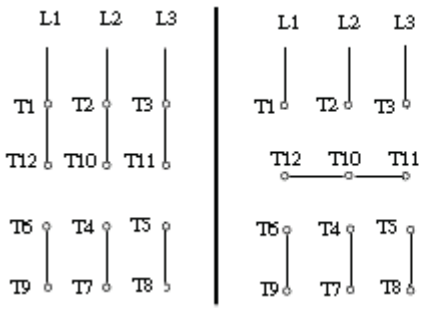

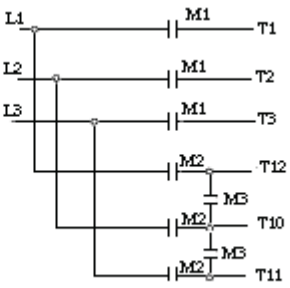

	START	RUN
M1	CLOSE	CLOSE
M2	OPEN	CLOSE
M3	CLOSE	OPEN

Tie Together (T4-T7); (T5-T8); (T6-T9)

E-3 Part Winding Start (Low Voltage only)

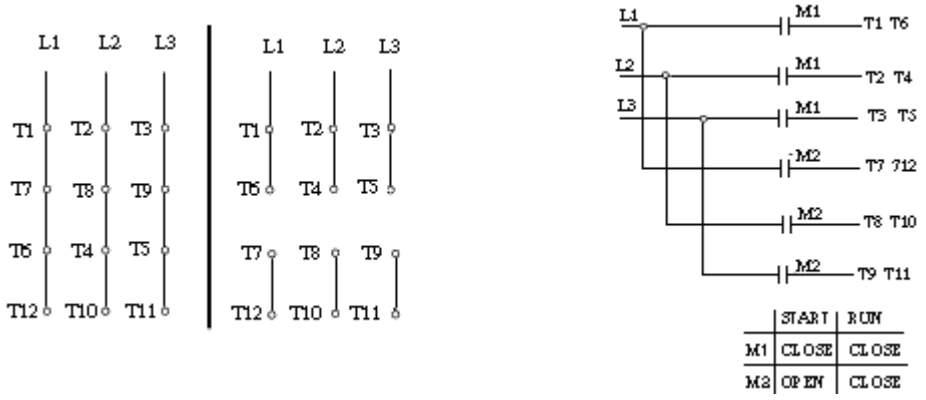

*Important: For Part Winding Start, M2 contactor should be closed within two (2) seconds after M1 contactor is closed.
Only 4 pole and above (e.g., 6P, 8P) motors are satisfactory for Part Winding Start at low voltage.

START UP

1. Disconnect load and start motor. Check direction of rotation. If rotation must be changed, ALLOW THE MOTOR TO STOP COMPLETLEY. Interchange any two leads of a three-phase motor.
2. Connect load. The motor should start quickly and run smoothly. If no, shut power off at once. Recheck the assembly including all connections before restarting.
3. If excessive vibration is noted, check for loose mounting bolts too flexible motor support structure or transmitted vibration from adjacent machinery. Periodic vibration checks should be made; foundations often settle.
4. Operate under load for short period of time and check operating current against nameplate.

TESTING

If the motor has been in storage for an extensive period or has been subjected to adverse moisture conditions, it is best to check the insulation resistance of the stator winding with a megometer. Depending on the length and conditions of storage it may be necessary to regrease or change rusted bearings.
If the resistance is lower than one megohm the windings should be dried in one of the following two ways:

1. Bake in oven at temperatures not exceeding 90ºC (194ºF) until insulation resistance becomes constant.
2. With rotor locked, apply low voltage and gradually increase the current through windings until temperature measured with a thermometer reaches 90ºC (194ºF). Do not exceed this temperature.

MAINTENANCE

INSPECTION

Inspect motor at regular intervals. Keep motor clean and ventilation openings clear.

LUBRICATION

1. Frame 143T-256T: Double shielded and pre-lubricated ball-bearing motors without grease fittings and don't need relubrication, except on Advantage Plus products which have regreasable features.
2. Frames 280TS, 320-449T(TS): Motors having grease fittings and grease discharge devices at brackets. Motors are shipped with grease for initial running. It is necessary to relubricate anti-friction bearing motors periodically, depending on size and type of service. See Table 2 to provide maximum bearing life. Excessive or too frequent lubrication may damage the motor.

TABLE 2

Horsepower	Standard Conditions	Severe Conditions	Extreme Conditions
1 Thru 30 Hp, 1800 rpm and below	7 years	3 years	180 days
40 Thru 75 Hp, 1800 rpm and below	210 days	70 days	30 days
100 Thru 150 Hp, 1800 rpm and below	90 days	30 days	15 days
1 Thru 20 Hp, 3600 rpm	5 years	2 years	90 days
25 Thru 75 Hp, 3600 rpm	180 days	60 days	30 days
100 Thru 150 Hp, 3600 rpm	90 days	30 days	15 days

Note:

A. Standard conditions: 8 hours operation per day, normal or light loading, clear and 40ºC ambient conditions.
B. Severe conditions: 24-hour operation per day or light shock loading, vibration or in dirty or dusty conditions.
C. Extreme conditions: With heavy shock loading or vibration or dusty conditions.
D. For double shielded bearings, above data (lubrication frequency) means that the bearing must be replaced.

3. Be sure fittings are clean and free from dirt. Using a low-pressure grease gun, pump in the recommended grease until new grease appears at grease discharge hole.
4. Use ExxonMobil Polyrex EM grease or equivalent polyurea based grease unless special grease is specified on the nameplate.
5. If relubrication is to be performed with the motor running, stay clear of rotating parts. After regreasing, allow the motor to run for ten to thirty minutes.

RENEWAL PARTS

1. Use only genuine TECO-Westinghouse renewal parts or as recommended by TECO-Westinghouse.
2. When you order renewal parts please specify complete information to TECO-Westinghouse office/agent such as type, frame no., poles, horsepower, voltage, series no., quantity, etc.

FOR FURTHER INFORMATION PLEASE CONTACT

TECO-WESTINGHOUSE MOTORS (CANADA) INC.

LEFT BLANK

ALLEN BRADLEY

MODEL 836T, PRESSURE SWITCH

LEFT BLANK

Bulletin 836T Pressure Controls

ATTENTION: To prevent electrical shock, disconnect from power source before installing or servicing.

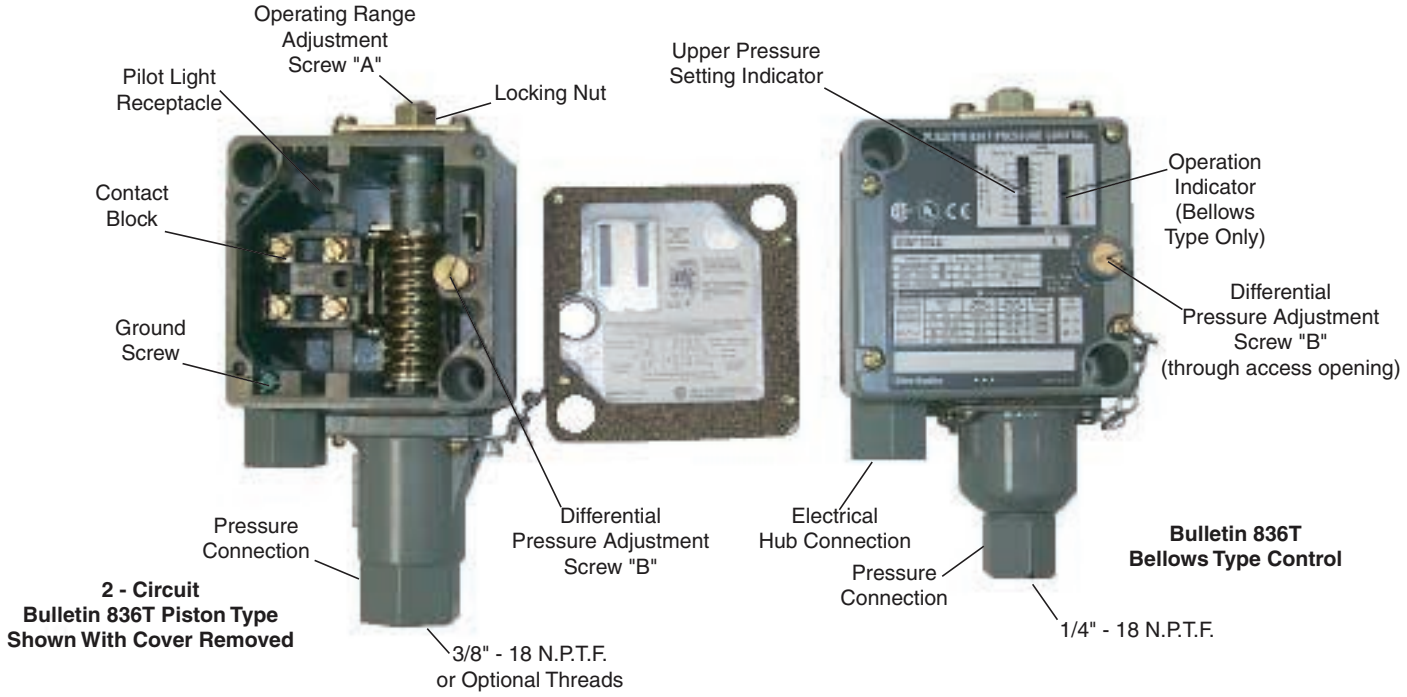

2 - Circuit Bulletin 836T Piston Type Shown With Cover Removed

Bulletin 836T Bellows Type Control

DESCRIPTION - Bulletin 836T, Type 1, 4, & 13 oiltight pressure controls are designed for use on machine tool applications where a stream of oil or water may flow over the enclosure. Other applications would include areas where it is desirable to resist the entrance of lint, dust, and dirt into the enclosure.

The operating range pressure and differential are adjustable externally.

Bellows type devices are available from vacuum to pressures up to 650 psi.

ATTENTION: Copper alloy bellows may be used on water or air and other liquids or gases not corrosive to this alloy. Type 316 stainless steel bellows are available and are used for the more corrosive liquids and gases.

Piston type devices are available for pressures up to 5000 psi.

ATTENTION: Stainless steel piston type controls are designed for use on oil, water and waterbased fluids but must not be used on air or gases.

The 2 - Circuit contact block has one set of normally open and one set of normally closed contacts. These contacts may be arranged for single pole double-throw operation or separate circuit operation having the same polarity.

A 4 - Circuit contact block assembly with two normally open and two normally closed contacts is also available. An isolated terminal is furnished to provide a termination point when an optional power source is used. These contacts may be arranged for double pole double-throw operation or two isolated single pole double-throw, electrically isolated circuits. Circuits must be of the same polarity.

MOUNTING - The pressure control should be mounted securely to a firm base using two mounting screws. The recommended fastener for mounting is a 1/4"-20 or M6X1 metric screw. The applied torque should not exceed 70 lb-in (8 Nm).The mounting holes (see sketch) are easily accessible without removing the front cover assembly.

ATTENTION: The control should not be supported by only the electricaland pressure connections. A support wrench should be used when tightening the electrical hub and pressure connections.

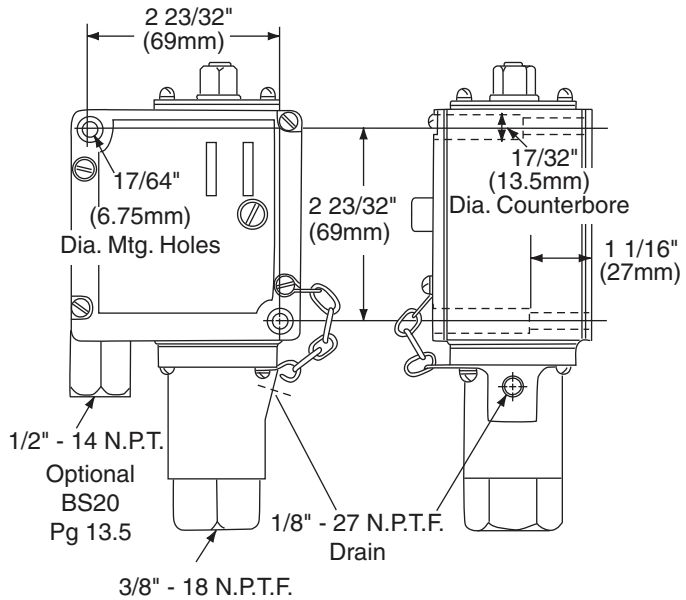

Piston Type Shown

OPERATION - A toggle mechanism operates the snap action switch at a predetermined pressure setting. For the 2 - Circuit snap switch the pressure causes the normally closed circuit 1-2 to open and normally open circuit 3-4 to close. This is known as the trip pressure. When the pressure returns to a lower predetermined setting, the circuit 1-2 will close and circuit 3-4 will open. This is known as the reset pressure. The difference between "trip" and "reset" pressure is the differential.
Similarly, for the 4 - Circuit snap switch, both normally closed circuits, 1-2 & 5-6 would open and both normally open circuits, 3-4 & 7-8 would close on increasing pressure. On decreasing pressure, the contacts would return to their original state at a predetermined setting.

Catalog number 836T-T251J can also be operated in a vacuum. At a higher vacuum setting (lower pressure toward 30" Hg) the 2 - Circuit switch contacts 1-2 will be closed and 3-4 open. At a lower vacuum (higher pressure toward 0 psi) circuit 1-2 will open and circuit 3-4 will close.

EXAMPLE: Control set to close contacts at 15" Hg vacuum, open at 5" Hg vacuum. For the 2 - Circuit switch, circuit 1-2 would be used. For the 4 - Circuit switch, circuits 1-2 or 5-6 would be used.

CONTACT BLOCK WIRING SYMBOL
(Increasing Pressure Operation)

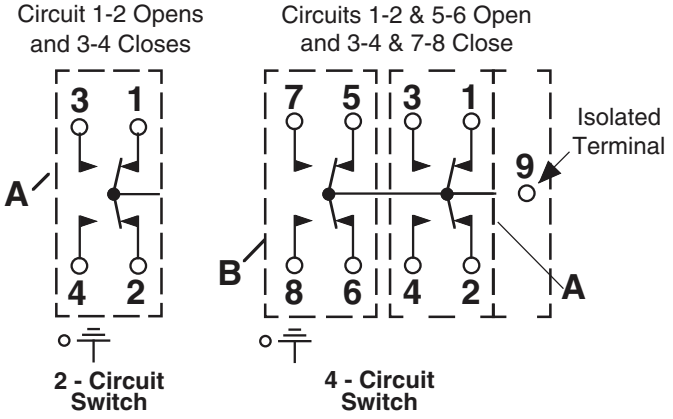

A or B circuits must be the same polarity.

ADJUSTMENT - Generally, unless otherwise specified, controls shipped from the factory are set at the maximum operating range pressure and minimum differential.

The following procedure should be used to set the control to a particular requirement.

OPERATING RANGE ADJUSTMENT: Turn lock nut on adjustment screw "A" counterclockwise to loosen. Turn range adjustment screw "A" clockwise to raise upper and lower pressure settings. To decrease the upper and lower settings, turn screw "A" counterclockwise. The approximate upper pressure setting is shown by an indicator in the left window between the calibration scales on the nameplate. When the proper setting is reached, tighten the lock nut on screw "A" clockwise.

DIFFERENTIAL ADJUSTMENT: When the differential screw "B" is up against the underside of the differential access opening in the cover the control will function at minimum differential. To increase the differential, turn adjustment screw "B" clockwise. This will decrease the lower setting only. The higher setting will not change. Similarly, to decrease the differential turn the differential adjustment screw "B" counterclockwise. This will raise the lower setting only.
Condensed instructions can be found on the inside of the front cover.

NOTE: The use of a pressure gauge is desirable when setting the control.

ATTENTION: The adjustment screw "A" should not be forced beyond the range of the control indicated on the calibrated scale. The adjustment screw "B" should not be adjusted beyond the maximum specified differential of the control.

Operating variables in a system may cause changing pressure requirements. It is recommended that a periodic inspection of the gauge pressure be made and the pressure control adjusted to compensate when necessary for these changes.

PISTON TYPE APPLICATIONS -

ATTENTION: All pistons are provided with a 1/8 inch threaded drainopening which should be connected to an oil return line leading to anoil reservoir which is vented to atmosphere. This reservoir may be at ahigher level of elevation than the control. The controls with seal ringsusually do not require return lines. However, the 1/8 inch threaded drainopening should never be plugged on either type of piston control. Thisalso includes the shipping plug which must be removed upon installa-tion. Filters should be used to reduce contamination of hydraulic fluid.

PILOT LIGHT OPTION - A high intensity neon glow pilot light is available for 120 volt, 60 hertz applications and can be installed at the factory or in the field. To order pilot light kit specify catalog number of existing control and add N9 to this number. Optional pilot lights are available on special orders.

The pilot light is wired to the contact block as follows:

A. **2 - Circuit**
Always connect lamp wires to same set of terminals used for the load. To light on increasing pressure connect across 1-2. To light on decreasing pressure connect across 3-4.

B. **4 - Circuit**
Consists of 2 electrically isolated single pole-double throw circuits. Connect lamp wires to same set of terminals used for load. To light on increasing pressure connect across 1-2 or 5-6. To light on decreasing pressure connect across 3-4 or 7-8.

(or)

An isolated terminal, 9, is provided as a termination point when an optional power source is used. This provides a convenient means for various circuit connections when separation of the load and pilot light is required. Circuits must be the same polarity for pilot light connections and switching of auxiliary equipment.

PAINTING - Standard controls are supplied with a removable paint mask on the nameplate. Remove the mask on final installation.

CONTACT BLOCK REPLACEMENT - To order Bulletin 836T Contact Block 2 - Circuit (SPDT-DB) Replacement Kit specify Catalog Number 836T-N1. For the 4 - Circuit (DPDT-DB) Contact Block Replacement Kit specify Catalog Number 836T-N2.

REPAIRS - Due to the integral construction of the Bulletin 836T Pressure Control, it is recommended it be returned to the factory for repairs (excluding contact block replacement). The control will be adjusted for optimum performance and tested to specifications.

ASCO

MODEL 8210G004, SOLENOID VALVE
MODEL 8210G056, SOLENOID VALVE

LEFT BLANK

Installation & Maintenance Instructions

2-WAY INTERNAL PILOT-OPERATED SOLENOID VALVES
NORMALLY CLOSED OPERATION — GENERAL SERVICE
1" , 1¼" OR 1½" NPT

SERIES
8210
8211

NOTICE: See separate solenoid installation and maintenance instructions for information on: Wiring, Solenoid Temperature, Cause of Improper Operation, Coil or Solenoid Replacement.

DESCRIPTION

Series 8210 valves are 2-way normally closed internal pilot-operated solenoid valves designed for general service. Valves are made of rugged forged brass or die cast stainless steel. Series 8210 valves are provided with a general purpose solenoid enclosure. Series EF8210 and 8211 are the same as Series 8210 except they are provided with an explosionproof or explosionproof/watertight solenoid enclosure.

Notice: Brass valves are not certified as lead-free under the Safe Water Drinking Act SWDA 1417 and are not intended for use on drinking water systems. They are intended for control of water in industrial applications. Consult ASCO for valves rated for use in potable water applications.

OPERATION

Normally Closed: Valve is closed when solenoid is de-energized; open when energized.

IMPORTANT: Minimum operating pressure differential is 5 psi.

Manual Operator (optional feature)

Manual operator allows manual operation when desired or during an electrical power outage. To engage manual operator(open the valve), turn lever clockwise until it hits a stop. Valve will now be in the same position as when the solenoid is energized. To disengage manual operator (close the valve), turn lever counterclockwise until it hits a stop.

To engage, turn lever clockwise until it hits a stop.

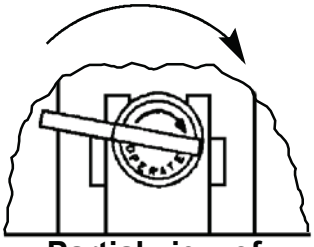

Partial view of Manual Operator

⚠ CAUTION: For valve to operate electrically, manual operator lever must be fully rotated counterclockwise.

INSTALLATION

Check nameplate for correct catalog number, pressure, voltage, frequency, and service. Never apply incompatible fluids or exceed pressure rating of the valve. Installation and valve maintenance to be performed by qualified personnel.

Future Service Considerations

Provision should be made for performing seat leakage, external leakage, and operational tests on the valve with a nonhazardous, noncombustible fluid after disassembly and reassembly.

Temperature Limitations

For maximum valve ambient and fluid temperatures, refer to chart below. Check catalog number prefix and watt rating on nameplate.

Watt Rating AC/DC	Catalog Number Prefix	Solenoid Class	Maximum Ambient Temp.	Maximum Fluid Temp.
6 AC	None or DF	F	122 °F (50 °C)	180 °F (82 °C)
	HT	H	140 °F (60 °C)	180 °F (82 °C)
6.1 AC	None, KF, SF or SC	F	125 °F (54 °C)	180 °F (82 °C)
	HT, KH, ST or SU	H	140 °F (60 °C)	180 °F (82 °C)
11.2 DC	None or HT	F or H	77 °F (25 °C)	150 °F (65 °C)
11.6 DC	None, HT, KF, KH, SC, SF or ST	F or H	104 °F (40 °C)	150 °F (65 °C)

Positioning

This valve is designed to perform properly when mounted in any position. However,for optimum life and performance, the solenoid should be mounted vertically and upright to reduce the possibility of foreign matter accumulating in the solenoid base sub-assembly area.

Piping

Connect piping to valve according to markings on valve body. Apply pipe compound sparingly to male pipe threads only. If applied to valve threads, the compound may enter the valve and cause operational difficulty. Avoid pipe strain by properly supporting and aligning piping. When tightening the pipe, do not use valve or solenoid as a lever. Locate wrenches applied to valve body or piping as close as possible to connection point.

⚠ CAUTION: To protect the solenoid valve, install a strainer or filter suitable for the service involved in the inlet side as close to the valve as possible. Clean periodically depending on service conditions. See ASCO Series 8600 and 8601 for strainers.

MAINTENANCE

⚠ WARNING: To prevent the possibility of death, injury or property damage, turn off electrical power, depressurize valve, and vent fluid to a safe area before servicing the valve

Note: It is not necessary to remove the valve from the pipeline for repairs

All Rights Reserved.

©ASCO Valve, Inc.® 50 Hanover Road, Florham Park, New Jersey 07932 www.ascovalve.com

Cleaning

All solenoid valves should be cleaned periodically. The time between cleanings will vary depending on the medium and service conditions. In general,if the voltage to the coil is correct, sluggish valve operation, excessive noise or leakage will indicate that cleaning is required. In the extreme case, faulty valve operation will occur and the valve may fail to open or close. Clean strainer or filter when cleaning the valve.

Preventive Maintenance

- Keep medium flowing through the valve as free from dirt and foreign material as possible.
- Periodic exercise of the valve should be considered if ambient or fluid conditions are such that corrosion, elastomer degradation, fluid contamination build up, or other conditions that could impede solenoid valve shifting are possible. The actual frequency of exercise necessary will depend on specific operating conditions. A successful operating history is the best indication of a proper interval between exercise cycles.
- Depending on the medium and service conditions, periodic inspection of internal valve parts for damage or excessive wear is recommended. Thoroughly clean all parts. If parts are worn or damaged, install a complete rebuild kit.

Causes of Improper Operation

- **Incorrect Pressure:** Check valve pressure. Pressure to valve must be within range specified on nameplate.
- **Excessive Leakage:** Disassemble valve and clean all parts. If parts are worn or damaged, install a complete ASCO Rebuild Kit.

Valve Disassembly

1. Disassemble valve in an orderly fashion using exploded views for identification and placement of parts. Refer to Figure 1 for AC construction; Figure 2 for DC construction. For 1" or 1 ¼" NPT valve construction, see Figure 1; for 1 ½" NPT valve construction, see Figure 2.
2. Remove solenoid enclosure. See separate instructions.

- For valves supplied with optional manual operators,see section on ***Disassembly of Manual Operator.***

3. Unscrew solenoid base sub-assembly from valve body. Then remove core assembly with core spring and solenoid base gasket. For AC construction (Figure 1) core spring is a loose piece.
4. For normal maintenance (cleaning) it is not necessary to remove the valve seat. However, for valve seat removal use a 7/16" thin wall socket wrench
5. Remove bonnet screws, valve bonnet, diaphragm spring, diaphragm assembly, body gasket, body passage eyelet(present on current valve constructions only) and body passage gasket.
6. All parts are now accessible for cleaning or replacement. If parts are worn or damaged, install a complete ASCO Rebuild Kit.

- Service Notice -

When installing a new ASCO Rebuild Kit, please be aware that the diaphragm assembly may not be identical to the diaphragm assembly in the valve. See Figure 1 for alternate diaphragm constructions. The two diaphragm constructions are interchangeable and will perform equally well.

⚠ CAUTION: To ensure proper valve operation, install all parts supplied in ASCO Rebuild Kit. Do not mix old and new parts.

Valve Reassembly

1. Lubricate body gasket, body passage gasket, bonnet gasket and solenoid base gasket with DOW CORNING® 200 Fluid lubricant or an equivalent high-grade silicone fluid.
2. Install body passage gasket, body passage eyelet, diaphragm assembly, diaphragm spring, valve bonnet and bonnet screws. Hand thread screws as far as possible. Then torque bonnet screws in a crisscross manner to 144 ± 15 in-lbs [16,3 ± 1,7 Nm].
3. If removed, install valve seat in valve body. Apply a small amount of thread compound compatible with valve media to valve seat threads. Torque valve seat to 75 ± 10 in-lbs [8,5 ± 1,1 Nm].

- For valves supplied with optional manual operator, see section on ***Reassembly of Manual Operator.***

4. For AC construction (Figure 1), install core spring in core assembly. Wide end of core spring in core first, closed end protrudes from top of core.
5. Install solenoid base gasket, core assembly with core spring and solenoid base sub-assembly in valve body. Torque solenoid base sub-assembly to 175 ± 25 in-lbs [19,8 ± 2,8 Nm].
6. Install solenoid. See separate instructions.

⚠ WARNING: To prevent the possibility of death, serious injury or property damage, check valve for proper operation before returning to service. Also perform internal seat and external leakage tests with a nonhazardous, noncombustible fluid.

7. Restore line pressure and electrical power supply to valve.
8. After maintenance is completed, operate the valve a few times to be sure of proper operation. A *metallic click* indicates the solenoid is operating.

Disassembly of Manual Operator

1. Unscrew solenoid base sub-assembly from manual operator body.
2. Unscrew manual operator body from valve body. Then remove stem retainer from base of manual operator body and stem/spacer sub-assembly.
3. Pull stem/spacer sub-assembly with stem gasket from side of manual operator body. Then remove core assembly with core spring, solenoid base gasket and manual operator bonnet gasket.
4. For further disassembly refer to section on *Valve Disassembly* step 4.

Reassembly of Manual Operator

1. Lubricate stem gasket with DOW CORNING® 111 Compound lubricant or an equivalent high-grade silicone grease.
2. For AC construction (Figure 1), install core spring in core assembly. Wide end of core spring in core first, closed end protrudes from top of core.
3. Holding the manual operator body in a horizontal position, install core assembly with core spring from the bottom end.
4. Insert the stem/spacer sub-assembly with the stem gasket into the side hole of the manual operator body. Rotate the lever of the stem/spacer sub-assembly to the 12 o'clock position.
5. Install stem retainer on base of manual operator body and simultaneously engage it into the slot provided on the stem/spacer sub-assembly.

IMPORTANT: The spacer on the stem/spacer sub-assembly must be inside of the stem retainer for AC construction (Figure 1) and outside of the stem retainer for DC construction (Figure 2).

6. Install manual operator bonnet gasket and body with preassembled parts into valve body. Torque manual operator body to 175 ± 25 in-lbs [19,8 ± 2,8 Nm].
7. Replace solenoid base gasket and solenoid base sub-assembly. Torque solenoid base sub-assembly to 175 ± 25 in-lbs [19,8 ± 2,8 Nm].
8. For further reassembly, refer to *Valve Reassembly* step 6.

©ASCO Valve, Inc.® 50 Hanover Road, Florham Park, New Jersey 07932 www.ascovalve.com

Torque Chart

Part Name	Torque Value Inch-Pounds	Torque Value Newton-Meters
Solenoid base sub-assembly	175 ± 25	19,8 ± 2,8
Manual operator body		
Bonnet screw	144 ± 15	16,3 ± 1,7
Valve seat	75 ± 10	8,5 ± 1,1

ORDERING INFORMATION FOR ASCO REBUILD KITS

Parts marked with an asterisk (*) in the exploded view are supplied in Rebuild Kits. When Ordering Rebuild Kits for ASCO valves, order the Rebuild Kit number stamped on the valve nameplate. If the number of the kit is not visible, order by indicating the number of kits required, and the Catalog Number and Serial Number of the valve(s) for which they are intended.

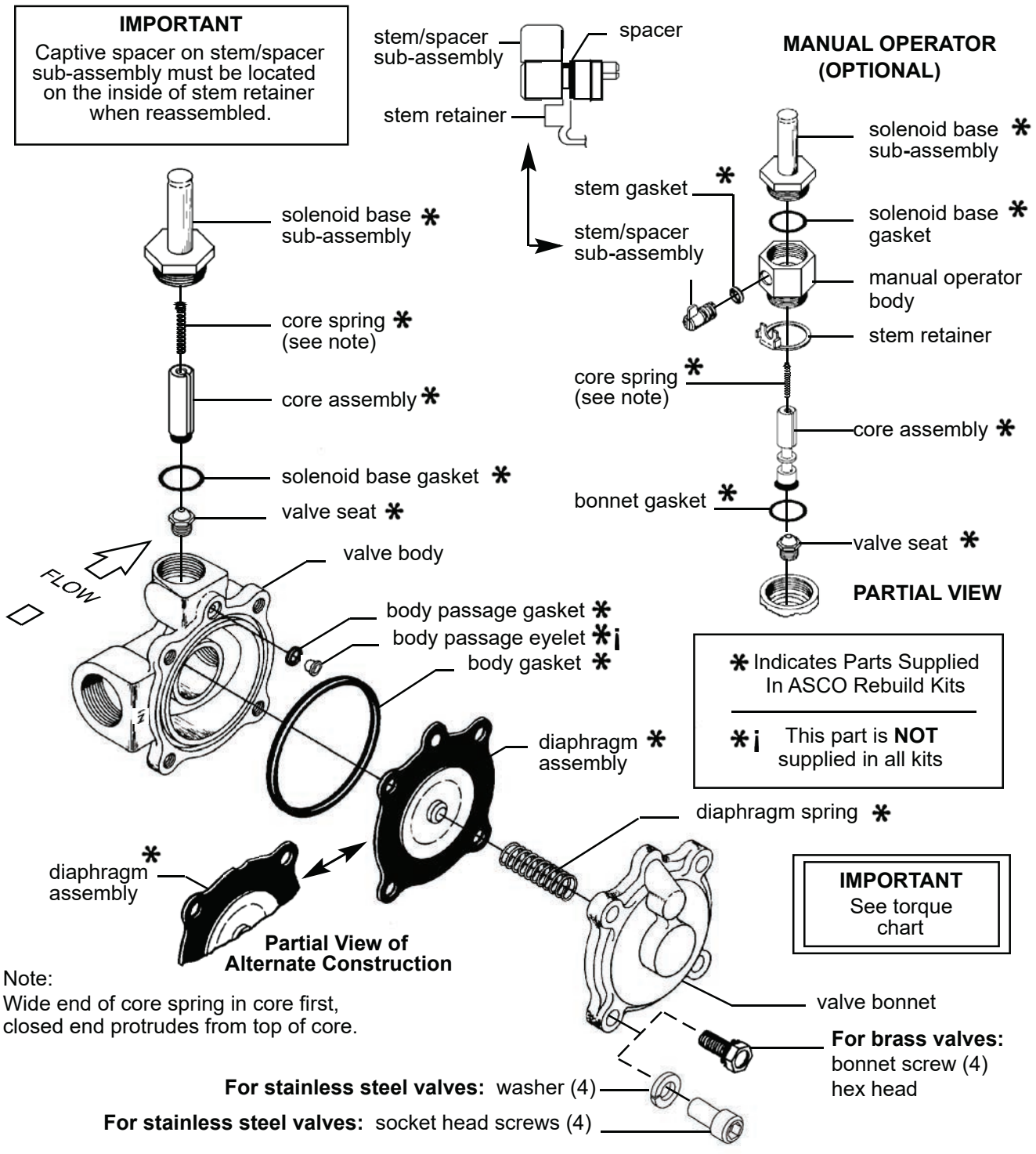

Figure 1. Series 8210 valve without solenoid, AC construction with 1 or 1 ¼" NPT valve body shown.

©ASCO Valve, Inc.® 50 Hanover Road, Florham Park, New Jersey 07932 www.ascovalve.com

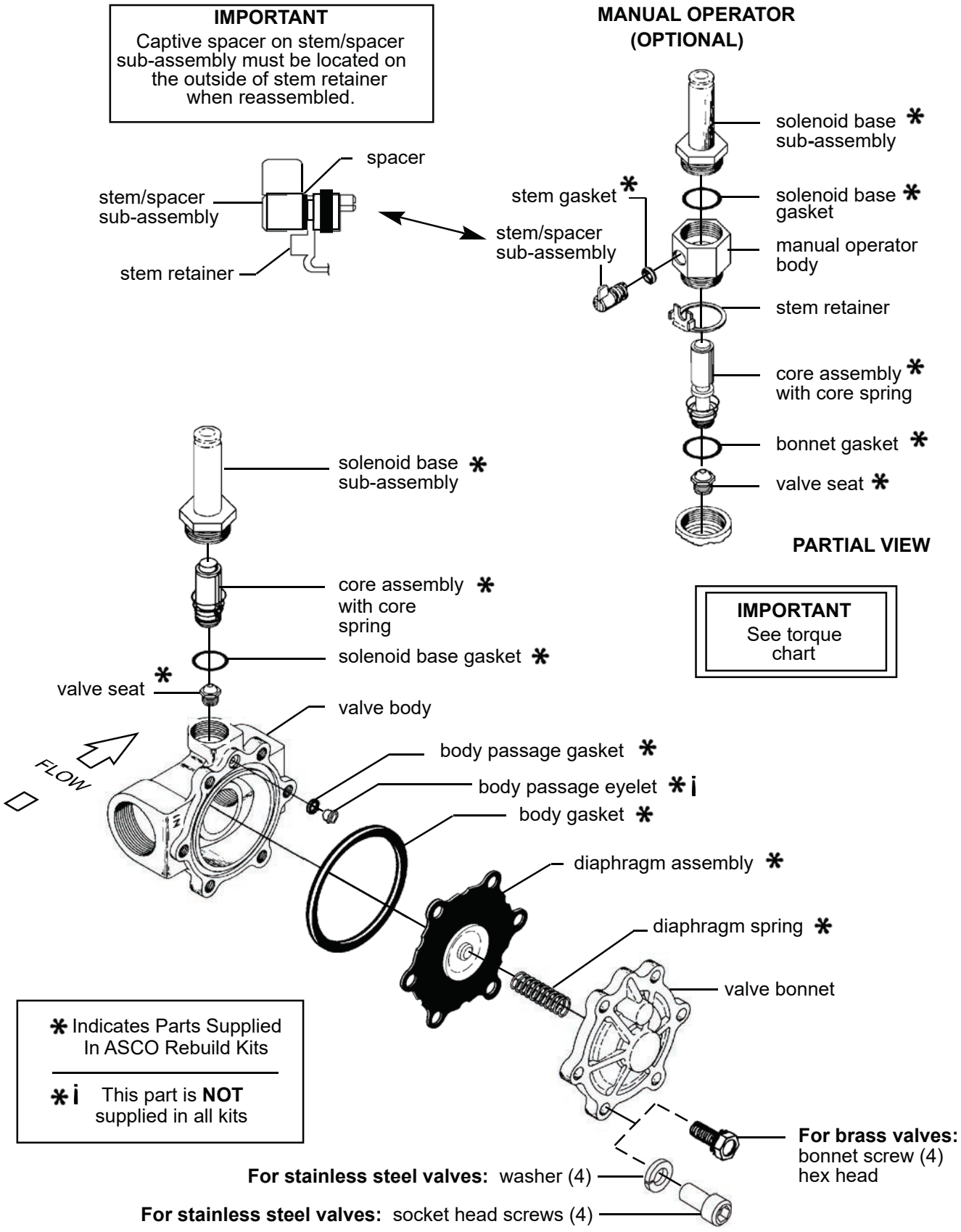

Figure 2. Series 8210 valve without solenoid, DC construction with 1 ½" NPT valve body shown.

©ASCO Valve, Inc.® 50 Hanover Road, Florham Park, New Jersey 07932 www.ascovalve.com

Installation&Maintenance Instructions

ASCO Red-Hat II™

OPEN-FRAME, GENERAL PURPOSE, WATERTIGHT/EXPLOSIONPROOF SOLENOIDS

SERIES

8016G/H

— SERVICE NOTICE —

ASCO™ solenoid valves with design change letter "G" or "H" in the catalog number (ex. 8210G1) have an epoxy encapsulated ASCO Red Hat II® solenoid. This solenoid replaces some of the solenoids with metal enclosures and open-frame constructions. Follow these installation and maintenance instructions if your valve or operator uses this solenoid.

DESCRIPTION

Catalog numbers 8016G/H1 and 8016G/H2 are epoxy encapsulated pull-type solenoids. The green solenoid with lead wires and 1/2 conduit connection is designed to meet Enclosure Type 1-General Purpose, Type 2-Dripproof, Types 3 and 3S-Raintight, and Types 4 and 4X-Watertight. The black solenoid on catalog numbers prefixed "EF" is designed to meet Enclosure Types 3 and 3S-Raintight, Types 4 and 4X-Watertight, Types 6 and 6P-Submersible, Type7, Explosionproof Class I, Division1 Groups A, B, C, & D and Type 9, -Dust-Ignitionproof Class II, Division1 Groups E, F & G. The Class II, Groups F & G Dust Locations designation is not applicable for solenoids or solenoid valves used for steam service or when a class "H" solenoid is used. See *Temperature Limitations* section for solenoid identification and nameplate/retainer for service. When installed just as a solenoid and not attached to an ASCO valve, the core has a 0.250-28 UNF-2B tapped hole, 0.38 minimum full thread.

Series 8016G/H are available in:

- **Open-Frame Construction:** The green solenoid may be supplied with 1/4″ spade, screw or DIN terminals. (Refer to Figure 4)
- **Panel Mounted Construction:** These solenoids are specifically designed to be panel mounted by the customer through a panel having a .062 to .093 maximum wall thickness. (Refer to Figure 3 and section on *Installation of Panel Mounted Solenoid*).

Optional Features For Type 1 - General Purpose Construction Only

- **Junction Box:** This junction box construction meets Enclosure Types 2, 3, 3S, 4, and 4X. Only solenoids with 1/4″ spade or screw terminals may have a junction box. The junction box provides a 1/2″ conduit connection, grounding and spade or screw terminal connections within the junction box (See Figure 5).
- **DIN Plug Connector Kit No. K236034:** Use this kit only for solenoids with DIN terminals. The DIN plug connector kit provides a two pole with grounding contact DIN Type 43650 construction (See Figure 6).

OPERATION

When the solenoid is energized, the core is drawn into the solenoid base sub-assembly.

IMPORTANT: When the solenoid is de-energized, the initial return force for the core, whether developed by spring, pressure, or weight, must exert a minimum force to overcome residual magnetism created by the solenoid. Minimum return force for AC construction is 0.69lbs (3.1N) and 0.31 lbs (1.38N) for DC.

INSTALLATION

Check nameplate for correct catalog number, service, and wattage. Check front of solenoid for voltage and frequency.

⚠ WARNING: Electrical hazard from the accessibility of live parts. To prevent the possibility of death, serious injury or property damage, install the open - frame solenoid in an enclosure.

FOR BLACK ENCLOSURE TYPES 7 AND 9 ONLY

⚠CAUTION: To prevent fire or explosion, do not install solenoid and/or valve where ignition temperature of hazardous atmosphere is less than 165°C. On valves used for steam service or when a class "H" solenoid is used, do not install in hazardous atmosphere where ignition temperature is less than 180°C. See nameplate/retainer for service.

NOTE: These solenoids have an internal non-resetable thermal fuse to limit solenoid temperature in the event that extraordinary conditions occur which could cause excessive temperatures. These conditions include high input voltage, a jammed core, excessive ambient temperature or a shorted solenoid, etc. This unique feature is a standard feature only in solenoids with black explosionproof/dust-ignitionproof enclosures (Types 7 & 9).

⚠CAUTION: To protect the solenoid valve or operator, install a strainer or filter, suitable for the service involved in the inlet side as close to the valve or operator as possible. Clean periodically depending on service conditions. See ASCO Series 8600 and 8601 for strainers.

Temperature Limitations

For maximum valve ambient temperatures, refer to chart. The temperature limitations listed, only indicate maximum application temperatures for field wiring rated at 90°C. Check catalog number prefix and watt rating on nameplate to determine maximum ambient temperature. See valve installation and maintenance instructions for maximum fluid temperature.

 All Rights Reserved.

NOTE: For steam service, refer to *Wiring* section, *Junction Box* for temperature rating of supply wires.

Temperature Limitations For Series 8016G Solenoids for use on Valves Rated at 6.1, 8.1, 9.1, 10.6 or 11.1 Watts			
Watt Rating	Catalog Number Coil Prefix	Class of Insulation	Maximum § Ambient Temp.
6.1, 8.1, 9.1 & 11.1	None, FB, KF, KP, SC, SD, SF & SP	F	125°F (52°C)
6.1, 8.1, 9.1 & 11.1	HB, HT, KB, KH, SS, ST & SU	H	140°F (60°C)
10.6**	None, KF, SF, SC, HT, KH, ST & SU	F & H	104°F (40°C)
7.1 @ 60Hz (8.1 @ 50Hz)		F & H	175°F (79°C)*
10.6**		F & H	140°F (60°C)

§ Minimum ambient temperature -40°F (-40°C).

* When used with watertight aluminum junction boxers (screw or spade) max. ambient and fluid temperature will be reduced to 157°F (69.4°C)

** 10.6 Watt solenoids rated for 104°F are 8030, 8260, 8316, 8321, 8320, 8360 & 8344 valves while those rated for 140°F are 8040 valves

Temperature Limitations for Series 8003H, 8007H and 8202H solenoids						
		Watt Ratings			Maximum Ambient Temperature	
Prefix ①	Coil Class	AC		DC		
		60 Hz	50 Hz		°C	°F
EF	FT	6.1	8.1	-	52	125
EF	FB	9.1	11.1	-		
	FT	6.1	8.1	-	55	131
	FB	9.1	11.1	-		
	HT	-	-	10.6	40 ②	104②
	HB	-	-	18.6		
EF	HT	-	-	10.6		
EF	HB	-	-	18.6		
	HT	6.1	8.1	-	60 ③	140 ③
	HB	9.1	11.1	-		
EF	HT	6.1	8.1	-		
EF	HB	9.1	11.1	-		

①= EF data applies to Explosionproof coils only.

②= Some DC solenoid valves can be operated at maximum ambient temperature of 55°C / 131°F with reduced pressure ratings. See valve I&M for maximum operating pressure differential ratings.

③= Steam Service Valves have a maximum ambient temperature of 55° C/ 131°F.

Positioning

This solenoid is designed to perform properly when mounted in any position. However, for optimum life and performance, the solenoid should be mounted vertically and upright to reduce the possibility of foreign matter accumulating in the solenoid base sub-assembly area.

Wiring

Wiring must comply with local codes and the National Electrical Code. All solenoids supplied with lead wires are provided with a grounding wire which is green or green with yellow stripes and a 1/2″ conduit connection. To facilitate wiring, the solenoid may be rotated 360°. For the watertight and explosionproof solenoid, electrical fittings must be approved for use in the approved hazardous locations.

Additional Wiring Instructions For Optional Features:

- **Open-Frame solenoid with 1/4″ spade terminals.**

For solenoids supplied with screw terminal connections use #12-18 AWG stranded copper wire rated at 90°C or greater. Torque terminal block screws to10±2 in-lbs [1,0±1,2 Nm]. A tapped hole is provided in the solenoid for grounding, use a #10-32 machine screw. Torque grounding screw to 15-20 in-lbs [1,7-2,3 Nm]. On solenoids with screw terminals, the socket head screw holding the terminal block to the solenoid is the grounding screw. Torque the screw to 15-20 in-lbs [1,7-2,3 Nm] with a 5/32″ hex key wrench.

- **Junction Box**

The junction box is used with spade or screw terminal solenoids only and is provided with a grounding screw and a 1/2″ conduit connection. Connect #12-18 AWG standard copper wire only to the screw terminals. Within the junction box use field wire that is rated 90°C or greater for connections. For steam service use 105°C rated wire up to 50 psi or use 125°C rated wire above 50 psi. After electrical hookup, replace cover gasket, cover, and screws. Tighten screws evenly in a crisscross manner.

- **DIN Plug Connector Kit No. K236034**

1. The open-frame solenoid is provided with DIN terminals to accommodate the plug connector kit.
2. Remove center screw from plug connector. Using a small screwdriver, pry terminal block from connector cover.
3. Use #12-18 AWG stranded copper wire rated at 90°C or greater for connections. Strip wire leads back approximately 1/4″ for installation in socket terminals. The use of wire-end sleeves is also recommended for these socket terminals. Maximum length of wire-end sleeves to be approximately 1/4″. Tinning of the ends of the lead wires is not recommended.
4. Thread wire through gland nut, gland gasket, washer and connector cover.

NOTE: Connector housing may be rotated in 90° increments from position shown for alternate positioning of cable entry.

5. Check DIN connector terminal block for electrical markings. Then make electrical hookup to terminal block according to markings on it. Snap terminal block into connector cover and install center screw.
6. Position connector gasket on solenoid and install plug connector. Torque center screw to 5±1 in-lbs [0,6±1,1 Nm].

NOTE: Alternating current (AC) and direct current (DC) solenoids are built differently and cannot be converted from one to the other by changing the coil.

©ASCO Valve, Inc. 50 Hanover Road, Florham Park, New Jersey 07932 www.ascovalve.com

Installation of Solenoid

Solenoids may be assembled as a complete unit. Tightening is accomplished by means of a hex flange at the base of the solenoid.

Installation of Panel Mounted Solenoid (See Figure 3)

Disassemble solenoid following instruction under *Solenoid Replacement* then proceed.

3/4" Valve Bonnet Construction

1. Install retainer (convex side to solenoid) in 1.312 diameter mounting hole in customer panel.
2. Position spring washer over plugnut/core tube sub-assembly.
3. Install plugnut/core tube sub-assembly through retainer in customer panel then replace solenoid, nameplate and red cap.

15/16" Valve Bonnet Construction

1. Install solenoid base sub-assembly through 0.69 diameter mounting hole in customer panel.
2. Position spring washer on opposite side of panel over solenoid base sub-assembly then replace.

Solenoid Temperature

Standard solenoids are designed for continuous duty service. When the solenoid is energized for a long period, the solenoid becomes hot and can be touched by hand only for an instant. This is a safe operating temperature.

MAINTENANCE

⚠ WARNING: To prevent the possibility of death, serious injury or property damage, turnoff electrical power, depressurize solenoid operator and/or valve, and vent fluid to a safe area before servicing.

Cleaning

All solenoid operators and valves should be cleaned periodically. The time between cleaning will vary depending on medium and service conditions. In general, if the voltage to the solenoid is correct, sluggish valve operation, excessive noise or leakage will indicate that cleaning is required. Clean strainer or filter when cleaning the valve.

Preventive Maintenance

- Keep the medium flowing through the solenoid operator or valve as free from dirt and foreign material as possible.
- Periodic exercise of the valve should be considered if ambient or fluid conditions are such that corrosion, elastomer degradation, fluid contamination build up, or other conditions that could impede solenoid valve shifting are possible. The actual frequency of exercise necessary will depend on specific operating conditions. A successful operating history is the best indication of a proper interval between exercise cycles.
- Depending on the medium and service conditions, periodic inspection of internal valve parts for damage or excessive wear is recommended. Thoroughly clean all parts. Replace any worn or damaged parts.

Causes of Improper Operation

- **Faulty Control Circuit:** Check the electrical system by energizing the solenoid. A metallic *click* signifies that the solenoid is operating. Absence of the *click* indicates loss of power supply. Check for loose or blown fuses, open-circuited or grounded solenoid, broken leadwires or splice connections.
- **Burned-Out Solenoid:** Check for open-circuited solenoid. Replace if necessary. Check supply voltage; it must be the same as specified on nameplate/retainer and marked on the solenoid. Check ambient temperature and check that the core is not jammed.
- **Low Voltage:** Check voltage across the solenoid leads. Voltage must be at least 85% of rated voltage.

Solenoid Replacement

1. On solenoids with lead wires disconnect conduit, coil leads, and grounding wire.

NOTE: Any optional parts attached to the old solenoid must be reinstalled on the new solenoid.

2. Disassemble solenoids with optional features as follows:
   - **Spade or Screw Terminals**

   Remove terminal connections, grounding screw, grounding wire, and terminal block (screw terminal type only).

NOTE: For screw terminals, the socket head screw holding the terminal block serves as a grounding screw.

   - **Junction Box**

   Remove conduit and socket head screw (use 5/32″ hex key wrench) from center of junction box. Disconnect junction box from solenoid.

   - **DIN Plug Connector**

   Remove center screw from DIN plug connector. Disconnect DIN plug connector from adapter. Remove socket head screw (use 5/32″ hex key wrench), DIN terminal adapter, and gasket from solenoid.

3. Snap off red cap from top of solenoid base sub-assembly.
4. Push down on solenoid. Then using a suitable screwdriver, insert blade in slot provided between solenoid and nameplate/retainer. Pry up slightly and push to remove. Then remove solenoid from solenoid base sub-assembly.
5. Reassemble using exploded views for parts identifcation and placement.

Disassembly and Reassembly of Solenoids

1. Remove solenoid, see *Solenoid Replacement*.
2. Remove spring washer from solenoid base sub-assembly.
3. Unscrew solenoid base sub-assembly.

NOTE: Some solenoid constructions have a plugnut/core tube sub-assembly, bonnet gasket and bonnet in place of the solenoid base sub-assembly. To remove bonnet use special wrench adapter supplied in ASCO Rebuild Kit. For wrench adapter only, order ASCO Wrench Kit No. K218948.

4. The core is now accessible for cleaning or replacement.
5. If the solenoid is part of a valve, refer to basic valve installation and maintenance instructions for further disassembly.
6. Reassemble using exploded views for identification and placement of parts.

©ASCO Valve, Inc. 50 Hanover Road, Florham Park, New Jersey 07932 www.ascovalve.com

ORDERING INFORMATION FOR ASCO SOLENOIDS

When Ordering Solenoids for ASCO Solenoid Operators or Valves, order the number stamped on the solenoid. Also specify voltage and frequency.

Torque Chart

Part Name	Torque Value in Inch-Pounds	Torque Value in Newton-Meters
solenoid base sub-assembly	175 ± 25	19,8± 2,8
valve bonnet (3/4" bonnet construction)	90 ± 10	10,2 ± 1,1
bonnet screw (3/8" or 1/2" NPT pipe size)	25	2,8
bonnet screw (3/4" NPT pipe size)	40	4,5

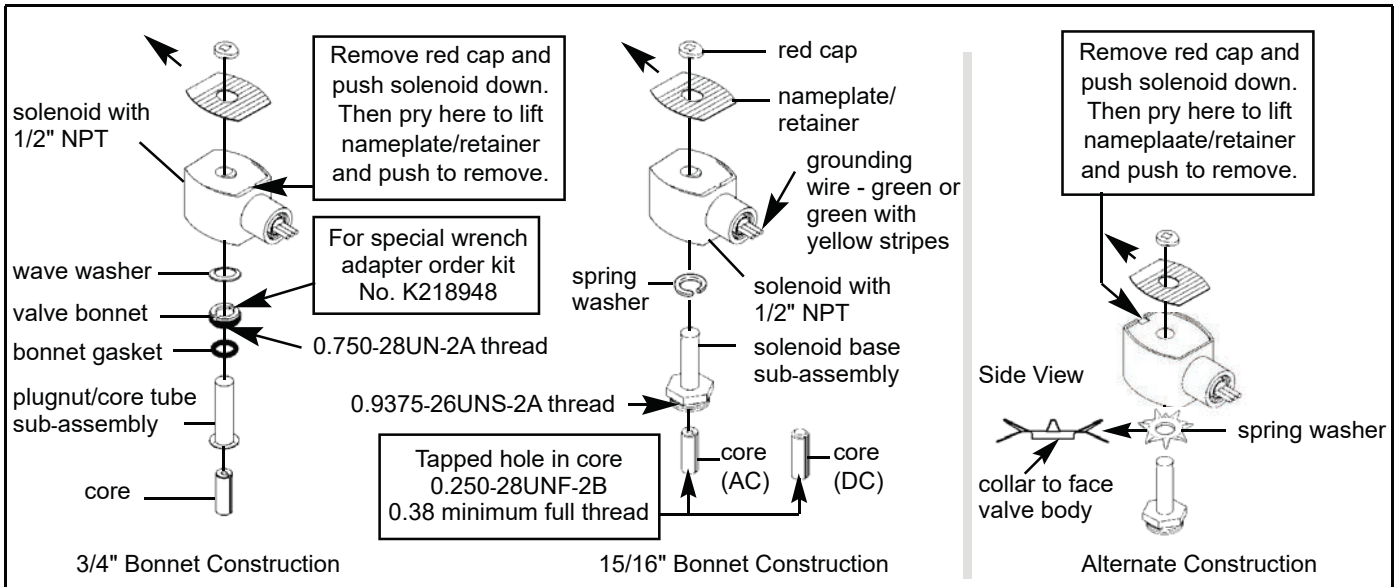

Figure 1. Series 8016G/H solenoids

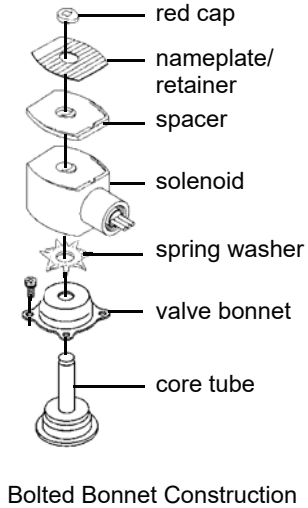

Figure 2. Series 8016G/H solenoids

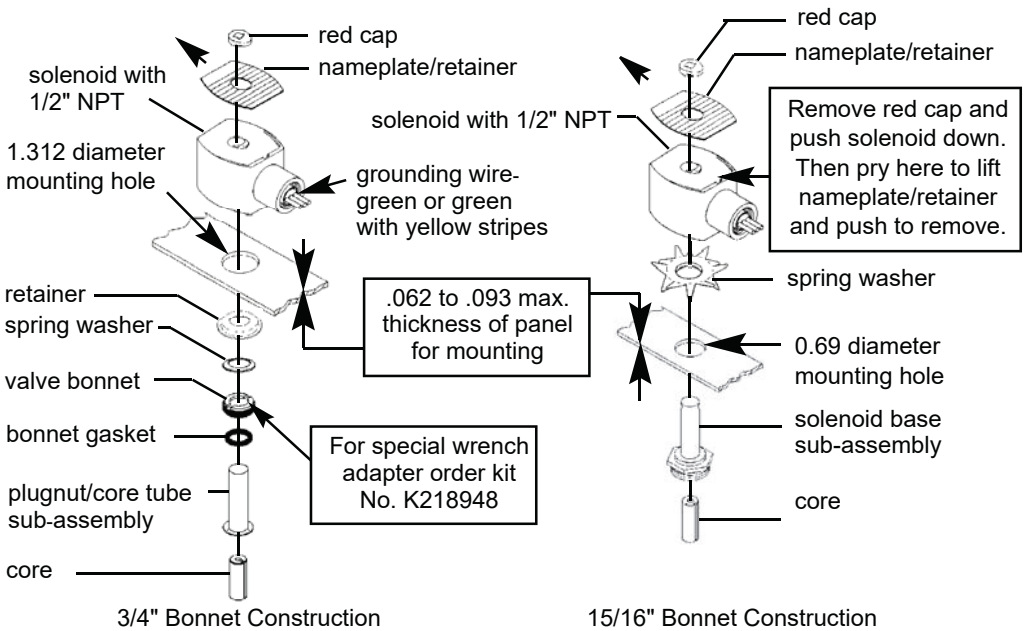

Figure 3. Series 8016G/H panel mounted solenoids

©ASCO Valve, Inc. 50 Hanover Road, Florham Park, New Jersey 07932 www.ascovalve.com

Installation&Maintenance Instructions

ASCO Red-Hat II™

OPEN-FRAME, GENERAL PURPOSE, WATERTIGHT/EXPLOSIONPROOF SOLENOIDS

SERIES

8016G/H

NOTICE: See Installation and Maintenance Instructions, I&M No. V6583R11 - Section 1 of 2 for detailed instructions.

Torque Chart

Part Name	Torque Value in Inch–Pounds	Torque Value in Newton–Meters
terminal block screws	10 ± 2	1,1 ± 0,2
socket head screw	15 – 20	1,7 – 2,3
center screw	5 ± 1	0,6 ± 0,1

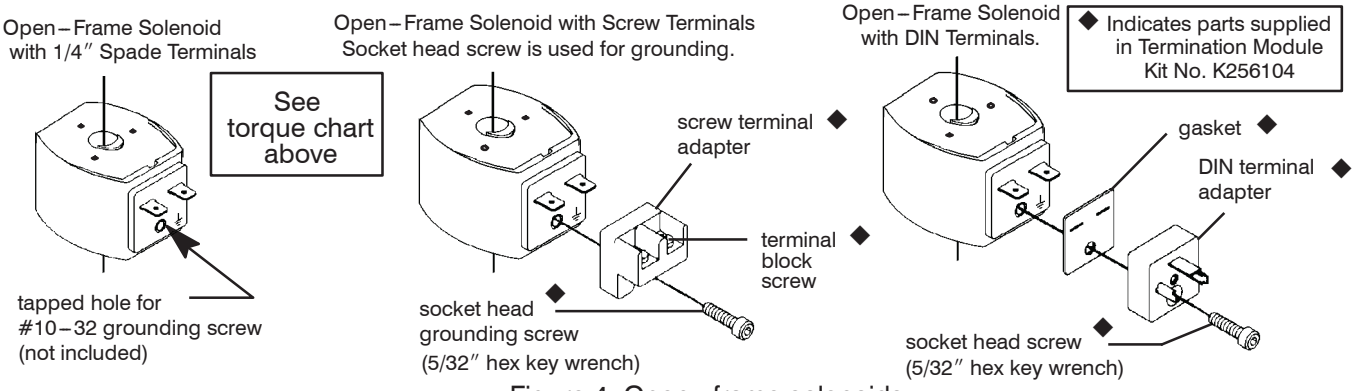

Figure 4. Open–frame solenoids

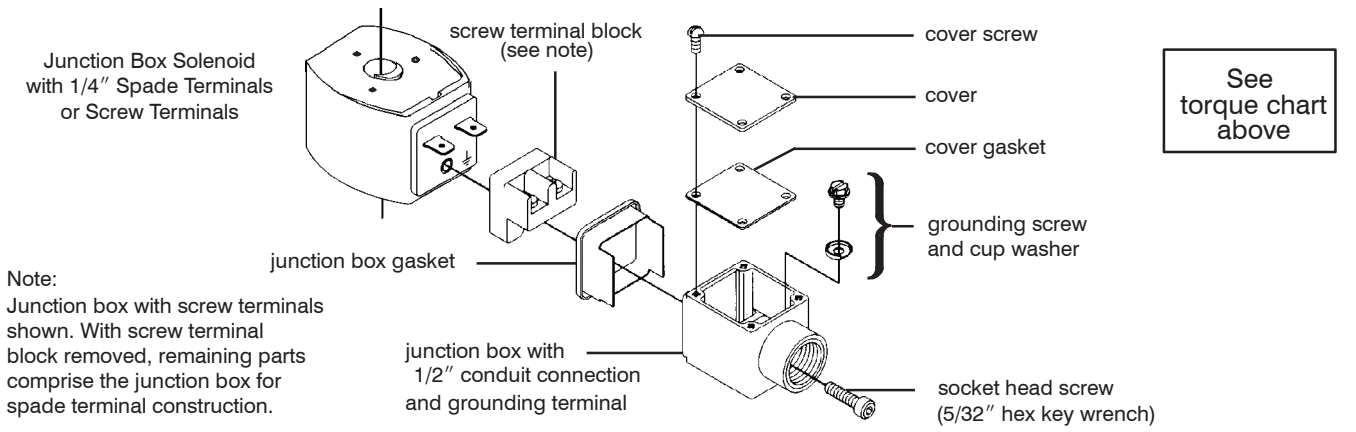

Figure 5. Junction box (optional feature)

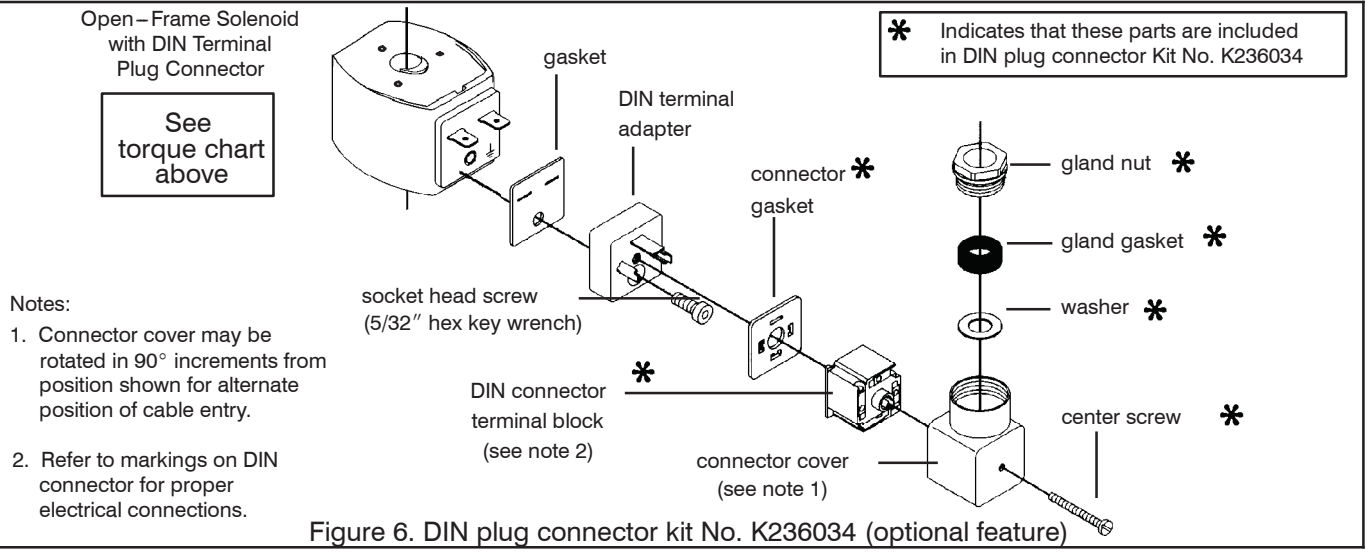

Figure 6. DIN plug connector kit No. K236034 (optional feature)

 All Rights Reserved.

©ASCO Valve, Inc. 50 Hanover Road, Florham Park, New Jersey 07932

GB

GENERAL INSTALLATION AND MAINTENANCE INSTRUCTIONS

Note: These general Installation and Maintenance Instructions must be read in conjunction with the Instruction Sheet for the specific product.

INSTALLATION

ASCO Numatics components are intended to be used only within the technical characteristics as specified on the nameplate. Changes to the equipment are only allowed after consulting the manufacturer or its representative. Before installation, depressurize the piping system and clean internally.
The equipment may be mounted in any position if not otherwise indicated on the product by means of an arrow.
The flow direction and pipe connection of valves are indicated on the body.

The pipe connections have to be in accordance with the size indicated on the nameplate and fitted accordingly.

Caution:
- Reducing the connections may cause improper operation or malfunctioning.
- For the protection of the equipment install a strainer or filter suitable for the service involved in the inlet side as close to the product as possible.
- If tape, paste, spray or a similar lubricant is used when tightening, avoid particles entering the system.
- Use proper tools and locate wrenches as close as possible to the connection point.
- To avoid damage to the equipment. DO NOT OVERTIGHTEN pipe connections
- Do not use valve or solenoid as lever.
- The pipe connections should not apply any force, torque or strain to the product.

ELECTRICAL CONNECTION

In case of electrical connections, they are only to be made by trained personnel and have to be in accordance with the local regulations and standards.

Caution:
- Turn off electrical power supply and de-energize the electrical circuit and voltage carrying parts before starting work.
- All electrical screw terminals must be properly tightened according to the standards before putting into service.
- Dependent upon the voltage electrical components must be provided with an earth connection and satisfy local regulations and standards.

The equipment can have one of the following electrical terminals:
- Spade plug connections according to ISO-4400 or 3 x DIN-46244 (when correctly installed, this connection provides IP-65 protection).
- Embedded screw terminals in metal enclosure with "Pg" cable gland
- Spade terminals (AMP type).
- Flying leads or cables.

PUTTING INTO SERVICE

Before pressurizing the system, first carry-out an electrical test. In case of solenoid valves, energize the coil a few times and notice a metal click signifying the solenoid operation.

SERVICE

Most of the solenoid valves are equipped with coils for continuous duty service. To prevent the possibility of personal or property damage, do not touch the solenoid which can become hot under normal operating conditions.

SOUND EMISSION

The emission of sound depends on the application, medium and nature of the equipment used. The exact determination of the sound level can only be carried out by the user having the valve installed in his system

MAINTENANCE

Maintenance of ASCO Numatics products is dependent on service conditions. Periodic cleaning is recommended, the timing of which will depend on the media and service conditions. During servicing, components should be examined for excessive wear. A complete set of internal parts is available as spare parts or rebuild kit. If a problem occurs during installation/maintenance or in case of doubt please contact ASCO Numatics or authorized representatives.

*A separate Declaration of Incorporation relating to EU-Directive 2006/42/EC Annex IIB is available on request for applicable products. Please provide product identification number and serial numbers of products concerned.

The product, , when marked CE, complies with the essential requirements of the EMC 2004/108/EC (until April 20th 2016) and EMC 2014/30/EU (from April 20th 2016) and LVD 2006/95/EC (until April 20th 2016) and LVD 2014/35/EU (from April 20th 2016). A separate Declaration of Conformity is available on request. Please provide product identification number and serial numbers of the products concerned.

FR

INSTRUCTIONS GÉNÉRALES D'INSTALLATION ET D'ENTRETIEN

Note: Ces instructions générales d'installation et d'entretien complètent la notice spécifique du produit.

MONTAGE

Les composants ASCO Numatics sont conçus pour les domaines de fonctionnement indiqués sur la plaque signalétique ou la documentation. Aucune modification ne peut être réalisée sur le matériel sans l'accord préalable du fabricant ou de son représentant. Avant de procéder au montage, dépressuriser les canalisations er effectuer un nettoyage inteme.
A moins qu'une fléche ou la notice n'indique un sens de montage spécifique de la tête magnétique, le produit peut être monté dans n'importe quelle position
Le sens de circulation du fluide est indiqué par repères sur le corps er dans la documentation.
La dimension des tuyauteries doit correspondre au raccordement indiqué sur le corps, l'étiquette ou la notice.

Attention:
- Une restriction des tuyauteries peut entraîner des dysfonctionnements.
- Afin de protéger le matériel, installer une crépine ou un filtre adéquat en amont, aussi près que possible du produit.
- En cas d' utilisation de ruban; pàte, aérosol ou autre lubrifiant lors du serrage, veiller à ce qu" aucun corps étranger ne pénètre dans le circuit.
- Utiliser un outillage approprié et placer les clés aussi près que possible du point de raccordement.
- Afin d'éviter toute détérioration, NE PAS TROP SERRER les raccords des tuyauteries.
- Ne pas se servir de la vanne ou de tête magnétique comme d'un levier.
- The pipe connections should not apply any force, torque or strain to the product.

RACCORDEMENT ÉLECTRIQUE

Le raccordement électrique doit être réalisé par un personnel qualifié et selon les normes et règlements locaux.

Attention:
- Avant toute intervention, couper l'alimentation électrique pour mettre hors tension les composants.
- Toutes les bornes à vis doivent être serrées correctement avant la mise en service.
- Selon la tension, les composants électrique doivent être mis à la terre conformément aux normes et règlements locaux.

Selon les cas, le raccordement électrique s'effectué par:
- Connecteur débrochable ISO-4400 ou 3 x DIN-46244 avec degré de protection IP-65 lorsque le raccordement est correctement effectué.
- Bornes à vis solidaires du bobinage, sous boîter métallique avec presse-étoupe "Pg--".
- Cosses (type AMP).
- Fils ou câbles solidaires de la bobine.

MISE EN SERVICE

Avant de mettre le circuit sous pression, effectuer un essai électrique. Dans le cas d'une électrovanne, mettre la bobine sous tension plusieurs fois er écouter le "clic" métallique qui signale le fonctionnement de la tête magnétique.

FONCTIONNEMENT

La plupart des électrovannes comportant des bobinages prévus pour mise sous tension permanente. Pour éviter toute brûlure, ne pas toucher la tête magnétique qui, en fonctionnement normal et en permanence sous tension, peut atteindre une température élevée.

BRUIT DE FONCTIONNEMENT

Le bruit de fonctionnement varie selon l'utilisation, le fluide et le type de matériel employé. L'utilisateur ne pourra déterminer avec précision le niveau sonore émis qu'après avoir monté le composant sur l'installation.

ENTRETIEN

L'entretien nécessaire aux produits ASCO Numatics varie avec leurs conditions d'utilisation. Il est souhaitable de procéder à un nettoyage périodique dont l'intervalle varie suivant la nature du fluide, les conditions de fonctionnement et le milieu ambiant. Lors de l'intervention. Les composants doivent être examinés our détecter toute usure excessive. Un ensemble de pièces internes est proposé en pièces de rechange pour procéder à la réfection. En cas de problème lors du montage/entretien ou en cas de doute, veuillez contacter ASCO Numatics ou ses représentants officiels.

*Une déclaration d'incorporation relative à la directive UE 2006/42/CE Annexe II B est disponible sur demande pour les produits applicables. Veuillez fournir le numéro d'identification du produit et les numéros de série des produits concernés.

Lorsqu'il est marqué du label CE, le produit est conforme aux exigences essentielles des directives CEM 2004/108/CE (jusqu'au 20 avril 2016) et CEM 2014/30/UE (à partir du 20 avril 2016) et des directives Basse tension 2006/95/CE (jusqu'au 20 avril 2016) et 2014/35/UE (à partir du 20 avril 2016). Une déclaration de conformité peut être fournie sur simple demande. Veuillez fournir le numéro d'identification du produit et les numéros de série des produits concernés.

DE

ALLGEMEINE BETRIEBSANLEITUNG

Achtung: Diese Allgemeine Betriebsanleitung gilt in Zusammenhang mit der jeweiligen Betriebsanleitung für die speziellen Produkte.

EINBAU

Die ASCO Numatics-Komponenten dürfen nur innerhalb der auf den Typenschildern angenebenen Daten eingesetzt warden, Veränderungen an den Produkten sind nur nach Rücksprache mit ASCO Numatics zulässig.
Vor dem Einbau der Ventile muß das Rohrleitungssystem drucklos geschaltet und innen gereinigt werden.
Die Einbaulage der Produkte ist genereil beliebig. Ausnahme: Die mit einem Pfeil gekennzeichneten Produkte müssen entsprechend der Pfeilrichtung montiert werden.
Die Durchflußrichtung und der Eingang von Ventilen sind gekennzeichnet.

Die Rohranschlüsse sollten entsprechend den Größenangaben auf den Typenschildern mit handelsüblichen Verschraubungen durchgeführt werden. Dabei ist folgendes zu beachten:
- Eine Reduzierung der Anschlüsse kann zu Leistungs-und Funktionsminderungen führen.
- Zum Schutz der Ventile sollten Schmutzfänger oder Filter so dicht wie möglich in den Ventileingang integriert werden.
- Bei Abdichtung am Gewinde ist darauf zu achten, daß kein Dichtungsmaterial in die Rohrleitung oder das Ventil gelangt.
- Zur Montage darf nur geeignetes Werkzeug verwendetwerden.
- Konische Verschraubungen sind sorgfältig anzuziehen. Es ist darauf zu achten, daß beim Anziehen das Gehäuse nicht beschädigt wird.
- Spule und Führungsrohr von Ventilen dürfen nicht als Gegenhalter benutzt werde.
- Die Rohrleitungsanschlüsse sollen fluchten und dürfen keine Spannungen auf das Ventil übertragen.

ELECTRISCHER ANSCHLUß

Der elektrische Anschluß ist von Fachpersonal entsprechend den geltenden VDE-und CEE Richtlinien auszuführen. Es ist besonders auf foigendes zu achten:
- Vor Beginn der Arbeiten ist sicherzustellen, daß alle elektrischen Leitungen und Netzteile spannungslos geschaltet sind.
- Alle Anschlußklemmen sind nach Beendigung der Arbeiten vorschriftsmäßig entsprechend den geltenden Regeln anzuziehen.
- Je nach Spannungsbereich muß das Ventil nach den geltenden Regeln einen Schutzleiteranschluß erhalten.

Der Magnetantrieb kann je nach Bauart folgende Anschlüsse haben:
- Anschluß für Gerätesteckdose nach DIN 43650 Form A/ISO 4400 oder 3 x DIN 46244 (durch ordnungsgemäße Montage der Gerätesteckdose wird Schutzklasse IP 65 erreicht).
- Anschlüsse innerhalb eines Blechgehäuses mittels Schraubklemmen. Kabeleinführung ins Gehäuse mit PG-Verschraubung.
- Offene Spulen mit Flachsteckern (AMP-Fahnen) oder mit eingegossenen Kabelenden.

INBETRIEBNAHME

Vor Druckbeaufschlagung des Produktes sollte eine elektrische Funktionsprüfung erfolgen:

Bei Ventilen Spannung an der Magnetspule mehrmals ein-und ausschalten. Es muß ein Klicken zu hören sein.

BETRIEB

Die meisten Ventile sind mit Spulen für Dauerbetrieb ausgerüstet. Zur Vermeidung von Personen-und Sachschäden sollte jede Berührung mit dem Ventil vermieden werden, da die Magnetspule bei längerem Betrieb sehr heiß werden kann.

GERÄUSCHEMISSION

Diese hängt sehr stark vom Anwendungsfall, den Betriebsdaten und dem Medium, mit denen das Produkt beaufschlagt wird, ab. Eine Aussage über die Geräuschemission des Produktes muß deshalb von demjenigen getroffen werden, der das Produkt innerhalb einer Maschine in Betrieb nimmit.

WARTUNG

Die Wartung hängt von den Einsatzbedigungen ab. In entsprechenden Zeitabständen muß das Produkt geöffnet und gereinigt werden. Für die Überholung der ASCO Numatics-Produkte können Ersatzteilsätze geliefert werden. Treten Schwierigkeiten bel Einbau, Betrieb oder Wartung auf, sowie bei Unklarheiten, ist mit ASCO Numatics Rücksprache zu halten.

ASCO Numatics Produkte sind entsprechend der EG-Richtlinie 89/392/EWG gefertigt.

*Eine separate Herstellererklärung im Sinne der Richtlinie 2006/42/EWG Anhang II B ist auf Anfrage für die entsprechenden Produkte erhältlich. Geben Sie bitte die Kennnummer sowie die Seriennummer der betreffenden Produkte an.

Das Produkt, wenn mit CE gekennzeichnet, erfüllt die Anforderungen von EMV 2004/108/EWG (bis 20. April 2016) und EMV 2014/30/EU (vom 20. April 2016) und LVD 2006/95/EWG (bis 20. April 2016) und LVD 2014/35/EU (vom 20. April 2016). Eine separate Konformitätserklärung ist auf Anfrage erhältlich. Geben Sie bitte die Kennnummer sowie die Seriennummer der betreffenden Produkte an.

ASCO
50 Hanover Road
Florham Park, New Jersey 07932
Tel. (973) 966-2000
Fax (973) 966-2628

ASCO
1561 Columbia Highway
Aiken, South Carolina 29801
Tel. (803) 641-9200
Fax (803) 641-9290

ASCO Valves®

E 264274 - 04/2016

All Rights Reserved.
©ASCO Valve, Inc. 50 Hanover Road, Florham Park, New Jersey 07932 www.ascovalve.com

ASCO

MODEL 8210G094, SOLENOID VALVE

LEFT BLANK

Installation & Maintenance Instructions

2-WAY INTERNAL PILOT-OPERATED SOLENOID VALVES
HUNG DIAPHRAGM — 3/8 ", 1/2" AND 3/4" NPT
NORMALLY CLOSED OPERATION

SERIES
8210
8211

NOTICE: See separate solenoid installation and maintenance instructions for information on: Wiring, Solenoid Temperature, Cause of Improper Operation, Coil or Solenoid Replacement.

DESCRIPTION

Series 8210 valves are 2-way normally closed, internal pilot operated solenoid valves. Valve body and bonnet are of brass construction. Series 8210 valves may be provided with a general purpose/watertight, open-frame or explosionproof/ watertight solenoid.

Series 8210 and 8211 valves with suffix "HW" in the catalog number are specifically designed for hot water service.

Notice: These valves are not certified as lead-free under the Safe Water Drinking Act SWDA 1417 and are not intended for use on drinking water systems. They are intended for control of water in industrial applications. Consult ASCO for valves rated for use in potable water applications.

OPERATION

Normally Closed: Valve is closed when solenoid is de-energized; open when energized.

Manual Operator (Optional)

Valves with suffix "MO" in catalog number are provided with a manual operator which allows manual operation when desired or during an interruption of electrical power. To operate valve manually, push in knurled cap and rotate 180°. Disengage manual operator by rotating knurled cap counterclockwise 180° before operating electrically.

Manual Operator Location (Refer to Figure 3)

Manual operator (when shipped from factory) will be located over the valve outlet. Manual operator may be relocated at 90° increments by rotating valve bonnet. Remove bonnet screws (4) and rotate valve bonnet with solenoid to desired position. Replace bonnet screws (4) and torque in a crisscross manner to 110±10 inch pounds.

If valve is installed in the system and is operational, proceed in the following manner:

⚠ WARNING: To prevent the possibility of death, serious injury or property damage, depressurize valve and vent fluid to a safe area before servicing the valve.

1. Remove the solenoid - see separate solenoid instructions.
2. Remove bonnet screws (4) and rotate valve bonnet to desire position.
3. Replace bonnet screws (4) and torque in a crisscross manner to 110±10 inch pounds.
4. Replace all solenoid parts.

INSTALLATION

Check nameplate for correct catalog number, pressure, voltage, frequency, and service. Never apply incompatible fluids or exceed pressure rating of the valve. Installation and valve maintenance to be performed by qualified personnel.

Temperature Limitations

For maximum valve ambient and fluid temperatures, refer to chart. The temperature limitations listed are for UL applications. For non UL applications, higher ambient and fluid temperature limitations are available. Consult factory. Check catalog number on nameplate to determine maximum temperatures.

Construction	Max. Fluid Temp, °F
AC Construction (Alternating Current)	180
DC Construction (Direct Current)	150
Catalog Numbers Suffixed "HW" AC Construction (Alternating Current)	210

Note: For Maximum Ambient Temperature specifications, see separate solenoid instructions.

Positioning

This valve is designed to perform properly when mounted in any position. However, for optimum life and performance, the solenoid should be mounted vertically and upright to reduce the possibility of foreign matter accumulating in the solenoid base sub-assembly area.

Mounting

For mounting bracket (optional feature) dimensions, refer to Figure 1.

Piping

Connect piping to valve according to markings on valve body. Apply pipe compound or PTFE tape sparingly to male pipe threads only. If applied to valve threads, the compound may enter the valve and cause operational difficulty. Avoid pipe strain by properly supporting and aligning piping. When tightening the pipe, do not use valve or solenoid as a lever. Locate wrenches applied to valve body or piping as close as possible to connection point.

IMPORTANT: Valves with Suffix "HW" in the catalog number have a special diaphragm material which is specifically compounded for hot water service. This material can be attacked by oil and grease. Wipe the pipe threads clean of cutting oils and use PTFE tape to seal pipe joints.

IMPORTANT: To protect the solenoid valve, install a strainer or filter suitable for the service involved in the inlet side as close to the valve as possible. Clean periodically depending on service conditions. See ASCO Series 8600 and 8601 for strainers.

All Rights Reserved.

©ASCO Valve, Inc.® 50 Hanover Road, Florham Park, New Jersey 07932 www.ascovalve.com

MAINTENANCE

⚠ WARNING: To prevent the possibility of death, serious injury or property damage, depressurize valve and vent fluid to a safe area before servicing the valve.

NOTE: It is not necessary to remove the valve from the pipeline for repairs.

Cleaning

All solenoid valves should be cleaned periodically. The time between cleanings will vary depending on the medium and service conditions. In general, if the voltage to the coil is correct, sluggish valve operation, excessive noise or leakage will indicate that cleaning is required. In the extreme case, faulty valve operation will occur and the valve may fail to open or close. Clean strainer or filter when cleaning the valve.

Preventive Maintenance

- Keep the medium flowing through the valve as free from dirt and foreign material as possible.
- Periodic exercise of the valve should be considered if ambient or fluid conditions are such that corrosion, elastomer degradation, fluid contamination build up, or other conditions that could impede solenoid valve shifting are possible. The actual frequency of exercise necessary will depend on specific operating conditions. A successful operating history is the best indication of a proper interval between exercise cycles.
- Depending on the medium and service conditions, periodic inspection of internal valve parts for damage or excessive wear is recommended. Thoroughly clean all parts. If parts are worn or damaged, install a complete ASCO Rebuild Kit.

Causes of Improper Operation

- **Incorrect Pressure:** Check valve pressure. Pressure to valve must be within range specified on nameplate.
- **Excessive Leakage:** Disassemble valve and clean all parts. If parts are worn or damaged, install a complete ASCO Rebuild Kit.

Coil Replacement (See separate solenoid instructions)

Valve Disassembly (Refer to Figures 2 and 3)

1. Remove the solenoid - see separate solenoid instructions.
2. Unscrew solenoid base sub-assembly and remove bonnet gasket.
3. Remove valve bonnet screws (4) and valve bonnet.
4. For normal maintenance, it is not necessary to disassemble the manual operator (optional feature) unless external leakage is evident. To disassemble, remove stem pin, manual operator stem, stem spring and stem gasket.
5. Remove core spring, core/diaphragm sub-assembly and body gasket. CAUTION: Do not damage or distort hanger spring between core/diaphragm sub-assembly.
6. All parts are now accessible for cleaning or replacement. Replace worn or damaged parts with a complete Spare Parts Kit for best results.

Valve Reassembly

1. Reassemble in reverse order of disassembly paying careful attention to exploded views provided for identification and placement of parts.
2. Lubricate body gasket and solenoid base gasket with DOW CORNING® 200 fluid lubricant or an equivalent high-grade silicone fluid. Lubricate manual operator stem gasket with DOW CORNING® 111 Compound lubricant or an equivalent high-grade silicone grease. On oxygen valves Suffix "N" and special cleaning valves where silicone lubricants are not allowed use FLOROLUBE® GR-362, LG-160 or KRYTOX® GPL -226.

Note: Only the gaskets specified above should be lubricated.

3. Replace body gasket and core/diaphragm sub-assembly. Locate the bleed hole in core/diaphragm sub-assembly approximately 45° from the valve outlet.
4. Replace core spring with wide end in core first; closed end protrudes from top of core.
5. If removed, replace manual operator stem, stem spring, stem gasket and stem pin.
6. Replace valve bonnet and bonnet screws (4). Torque bonnet screws (4) in a crisscross manner to 110±10 inch pounds.
7. Replace bonnet gasket and solenoid base sub-assembly. Put solenoid base sub-assembly to 175±25 inch pounds.
8. Replace solenoid enclosure and retaining cap or clip.
9. After maintenance, operate the valve a few times to be sure of proper opening and closing.

ORDERING INFORMATION FOR ASCO REBUILD KITS

Parts marked with an asterisk(*) in the exploded view are supplied in Rebuild Kits. When Ordering Rebuild Kits for ASCO Valves, order the Rebuild Kit number stamped on the valve nameplate. If the number of the kit is not visible, order by indicating the number of kits required, and the Catalog Number and Serial Number of the valve(s) for which they are intended.

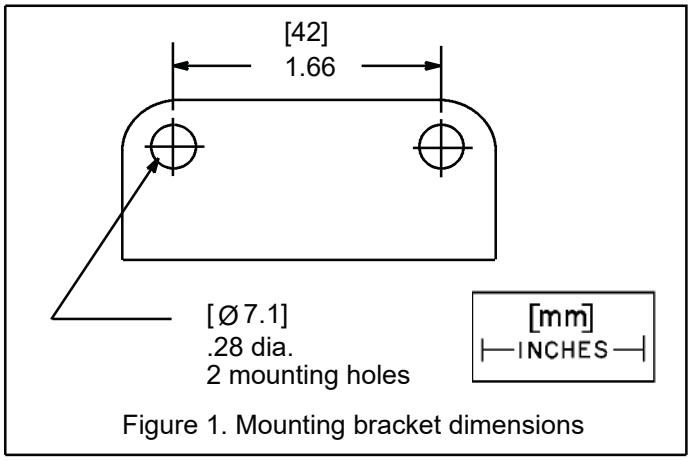

Figure 1. Mounting bracket dimensions

©ASCO Valve, Inc.® 50 Hanover Road, Florham Park, New Jersey 07932 www.ascovalve.com

* Indicates parts supplied in ASCO Rebuild Kit

Torque solenoid base sub-assembly to 175±25 inch pounds.

Torque bonnet screws (4) in a crisscross manner to 110±10 inch pounds.

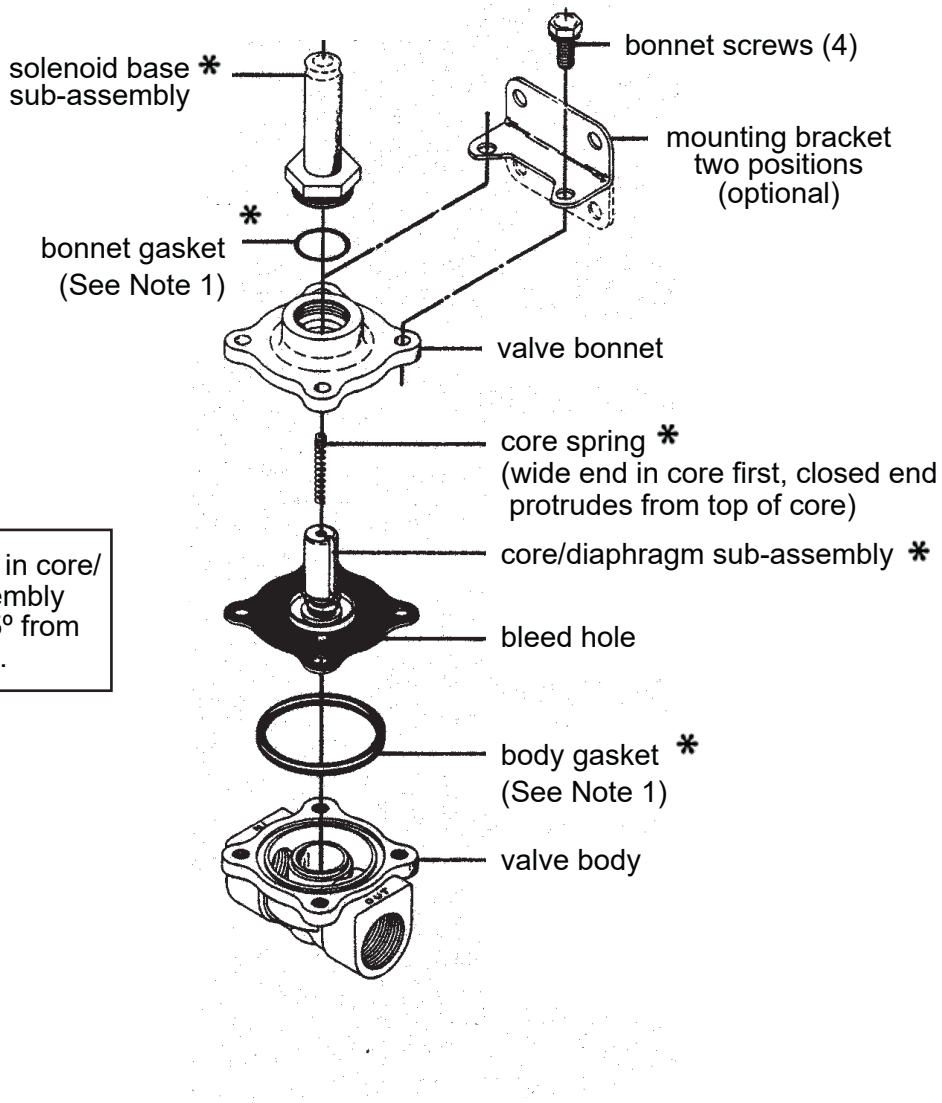

Locate bleed hole in core/ diaphragm assembly approximately 45º from valve outlet.

Note 1: Lubrication required for body and bonnet gaskets. See valve reassembly instructions

Figure 2. Series 8210 - 3/8", 1/2" & 3/4" NPT - AC Construction

©ASCO Valve, Inc.® 50 Hanover Road, Florham Park, New Jersey 07932 www.ascovalve.com

* Indicates parts supplied in ASCO Rebuild Kit

Torque solenoid base sub-assembly to 175±25 inch pounds.

Torque bonnet screws (4) in a crisscross manner to 110±10 inch pounds.

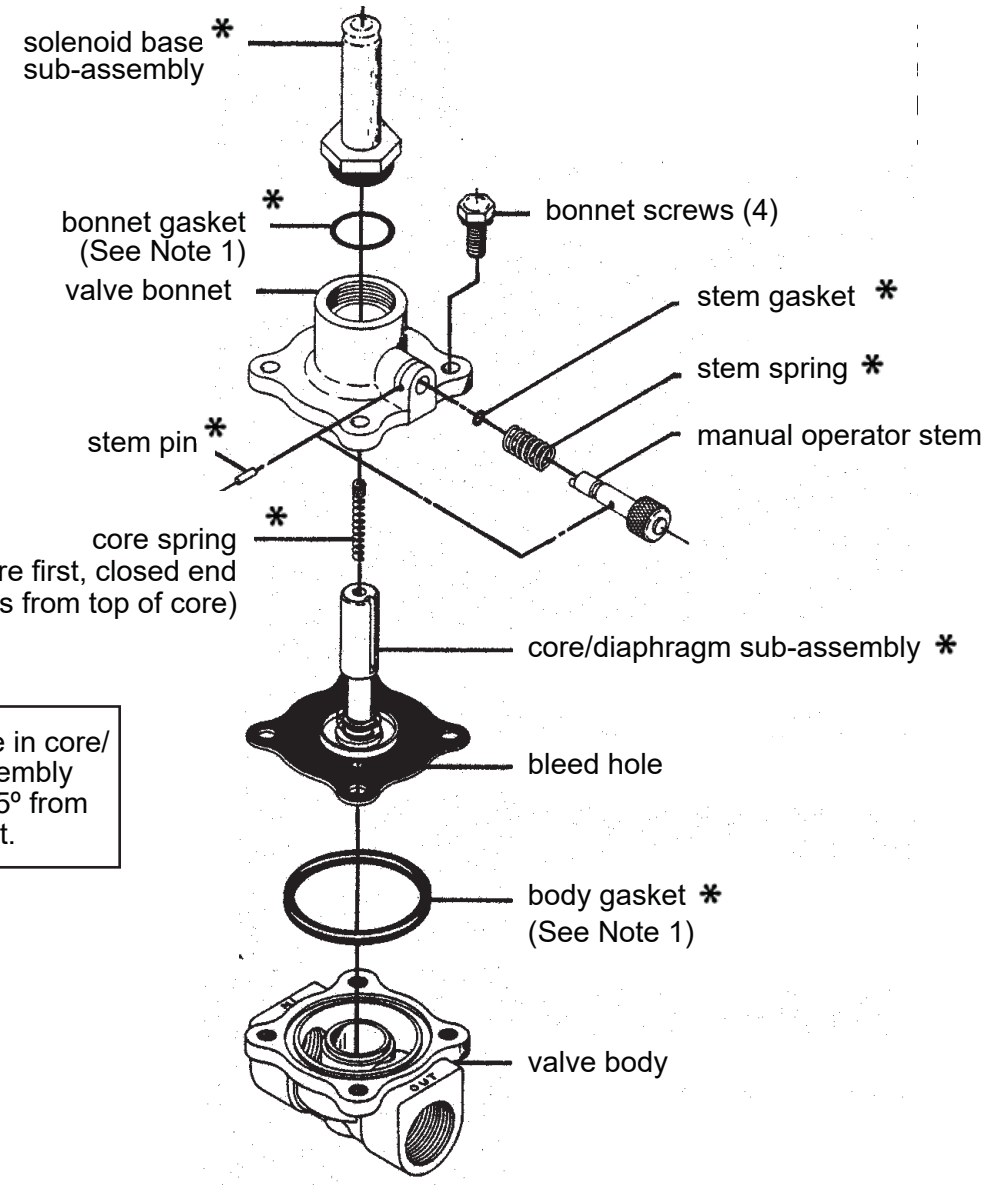

Locate bleed hole in core/ diaphragm assembly approximately 45º from valve outlet.

Note 1: Lubrication required for body and bonnet gaskets. See valve reassembly instructions

Figure 3. Series 8210 - Manual Operator

©ASCO Valve, Inc.® 50 Hanover Road, Florham Park, New Jersey 07932 www.ascovalve.com

Installation&Maintenance Instructions

ASCO Red-Hat II™

OPEN-FRAME, GENERAL PURPOSE, WATERTIGHT/EXPLOSIONPROOF SOLENOIDS
OPTIONAL FEATURE FOR OPEN FRAME (GENERAL PURPOSE) CONSTRUCTION ONLY

SERIES
8003G/H
8007G/H
8202G/H

— SERVICE NOTICE —

ASCO® solenoid valves with design change letter "G" or "H" in the catalog number (ex. 8210G1) have an epoxy encapsulated ASCO™ Red Hat II™ solenoid. This solenoid replaces some of the solenoids with metal enclosures and open-frame constructions. Follow these installation and maintenance instructions if your valve or operator uses this solenoid.

See separate instructions for basic valve.

DESCRIPTION

Catalog numbers 8003G/H, 8007G/H and 8202G/H and are epoxy encapsulated pull-type solenoids. The green solenoid with lead wires and 1/2 conduit connection is designed to meet Enclosure Type 1-General Purpose, Type 2-Dripproof, Types 3 and 3S-Raintight, and Types 4 and 4X-Watertight. The black solenoid on catalog numbers prefixed "EF" or "EV" is designed to meet Enclosure Types 3 and 3S-Raintight, Types 4 and 4X-Watertight, Types 6 and 6P-Submersible, Type 7, Explosionproof Class I, Division1 Groups A, B, C, & D and Type 9, -Dust-Ignitionproof Class II, Division1 Groups E, F & G. The Class II, Groups F & G Dust Locations designation is not applicable for solenoids or solenoid valves used for steam service or when a class "H" solenoid is used. See *Temperature Limitations* section for solenoid identification and nameplate/retainer for service. When installed just as a solenoid and not attached to an ASCO valve, the core has a 0.250-28 UNF-2B tapped hole, 0.38 or 0.63 minimum full thread.

NOTE: Catalog number prefix "EV" denotes stainless steel construction.

Solenoid catalog numbers 8202G/H1, 8202G/H3, 8202G/H5 and 8202G/H7 are epoxy encapsulated push-type, reverse-acting solenoids having the same enclosure types as previously stated for Catalog numbers 8003G/H1 and 8003G/H2. 8007G/H are 3-way solenoid operators with a pipe port or adapter, exhaust protector or vent at the top of the solenoid base sub-assembly.

Series 8003G/H, 8007G/H and 8202G/H solenoids are also available in:

- **Open-Frame Construction:** The green solenoid may be supplied with 1/4″ spade, screw or DIN terminals. (Refer to Figure 4)
  - □ **DIN Plug Connector Kit No. K236034:** Use this kit only for solenoids with DIN terminals. The DIN plug connector kit provides a two pole with grounding contact DIN Type 43650 construction (See Figure 6).
- **Panel Mounted Construction:** These solenoids are specifically designed to be panel mounted by the customer. Refer to Figures specified in this I&M and the section on *Installation of Panel Mounted Solenoid* for details.
- **Junction Box:** This junction box construction meets Enclosure Types 2, 3, 3S, 4, and 4X. Only solenoids with 1/4″ spade or screw terminals may have a junction box. The junction box provides a 1/2″ conduit connection, grounding and spade or screw terminal connections within the junction box (See Figure 5).
- **Multipin Connectors:** All Multipin connectors (VT, VB, ZT, ZB) do not have any enclosure ratings.

NOTE: For China RoHS Hazardous Substances table, please go to the link below or scan QR code:
www.asco.com/ChinaRoHSDisclosure

OPERATION

Series 8003G/H and 8007G/H - When the solenoid is energized, the core is drawn into the solenoid base sub-assembly.

IMPORTANT: When the solenoid is de-energized, the initial return force for the core, whether developed by spring,pressure, or weight, must exert a minimum force to overcome residual magnetism created by the solenoid. Minimum return force for AC construction is 11 ounces, and 5 ounces for DC construction.

Series 8202G/H - When the solenoid is energized, the disc holder assembly seats against the orifice. When the solenoid is de-energized , the disc holder assembly returns. **IMPORTANT: Initial return force for the disc or disc holder assembly, whether developed by spring, pressure, or weight, must exert a minimum force to overcome residual magnetism created by the solenoid. Minimum return force is 1pound, 5 ounces.**

INSTALLATION

Check nameplate for correct catalog number, service, and wattage. Check front of solenoid for voltage and frequency.

⚠ WARNING: Electrical hazard from the accessibility of live parts. To prevent the possibility of death, serious injury or property damage, install the open - frame solenoid in an enclosure.

⚠ AVERTISSEMENT: Risque d'accès aux parties électriques actives. Afin d'éviter tout risque de mort, blessure ou dommage, installer la bobine dans un boitier.

FOR BLACK ENCLOSURE TYPES 7 AND 9 ONLY

⚠ CAUTION: To prevent fire or explosion, do not install solenoid and/or valve where ignition temperature of hazardous atmosphere is less than 165°C. On valves used for steam service or when a class "H" solenoid is used, do not install in hazardous atmosphere where ignition temperature is less than 180°C. See nameplate/retainer for service.

⚠ ATTENTION : Afin d'éviter le risque de de feu ou d'explosion, ne pas installer la bobine ou l'électrovanne ou la température d'inflammation en atmosphère explosible est inferieure à 165°C. Pour les vannes vapeur ou lorsqu'une bobine de classe H est utilisée, ne pas installer en atmosphère explosible lorsque la température d'inflammation est inférieure à 180°C. Consulter les conditions d'utilisations sures indiquées sur le produit ou dans la notice.

NOTE: These solenoids have an internal non-resetable thermal fuse to limit solenoid temperature in the event that extraordinary conditions occur which could cause excessive temperatures. These conditions include high input voltage, a jammed core, excessive ambient temperature or a shorted solenoid, etc. This unique feature is a standard feature only in solenoids with black explosionproof/dust-ignitionproof enclosures (Types 7 & 9).

 All Rights Reserved.
©ASCO Valve, Inc. 50 Hanover Road, Florham Park, New Jersey 07932

⚠ CAUTION: To protect the solenoid valve or operator, install a strainer or filter, suitable for the service involved in the inlet side as close to the valve or operator as possible. Clean periodically depending on service conditions. See ASCO Series 8600 and 8601 for strainers.

⚠ ATTENTION : Afin de protéger l'électrovanne ou l'actionneur, installer une crépine ou un filtre adapté le plus proche possible en amont de l'électrovanne ou de l'actionneur. Nettoyer périodiquement le filtre en fonction des conditions d'utilisation. Se référer aux séries 8600 et 8601 pour les crépines.

Temperature Limitations

For maximum solenoid ambient temperatures, refer to chart. The temperature limitations listed, only indicate maximum application temperatures for field wiring rated at 90°C. Check catalog number prefix and watt rating on nameplate to determine maximum ambient temperature. See valve installation and maintenance instructions for maximum ambient and fluid temperatures.

NOTE: For steam service, refer to *Wiring* section, *Junction Box* for temperature rating of supply wires.

Temperature Limitations For Series 8003G, 8007G or 8202G			
Watt Rating	Catalog Number Coil Prefix	Class of Insulation	Maximum § Ambient Temp.
10.1 & 17.1	None, FB, KF, KP, SC, SD, SF, SP, VT, VB, ZT & ZB	F	125°F (52°C)
10.1, 17.1 & 24.6	HB, HT, KB, KH, SS, ST, SU, HC	H	140°F (60°C)
11.6 & 22.6	None, FB, KF, KP, SC, SD, SF, SP, VT, VB, ZT & ZB	F	104°F (40°C)
11.6 & 22.6	HP, HT, KB, KH, SS, ST, SU & SV	H	104°F (40°C)
15.6	None, KB, SS, SV	H	104°F (40°C)

§ Minimum ambient temperature -40°F (-40°C).

Temperature Limitations for Series 8003H, 8007H and 8202H solenoids						
		Watt Ratings			Maximum Ambient Temperature	
Prefix [1]	Coil Class	AC 60 Hz	AC 50 Hz	DC	°C	°F
EF, EV	FT	10.1	10.1	-	52	125
EF, EV	FB	17.1	17.1	-		
	FT	10.1	10.1	-	55	131
	FB	17.1	17.1	-		
	HT	-	-	11.6	40 [2]	104 [2]
	HF	-	-	15.6		
	HB	-	-	22.6		
EF, EV	HT	-	-	11.6		
EF, EV	HF	-	-	15.6		
EF, EV	HB	-	-	22.6		
	HT	10.1	10.1	-	60 [3]	140 [3]
	HB	17.1	17.1	-		
EF, EV	HT	10.1	10.1	-		
EF, EV	HB	17.1	17.1	-		
EF, EV	HC	-	-	24.6		

[1] = EF, EV data applies to Explosionproof coils only.

[2] = Some DC solenoid valves can be operated at maximum ambient temperature of 55°C / 131°F with reduced pressure ratings. See valve I&M for maximum operating pressure differential ratings.

[3] = Steam Service Valves have a maximum ambient temperature of 55° C/ 131°F.

Positioning

This solenoid is designed to perform properly when mounted in any position. However, for optimum life and performance, the solenoid should be mounted vertically and upright to reduce the possibility of foreign matter accumulating in the solenoid base sub-assembly area.

Wiring

Wiring must comply with local codes and the National Electrical Code. All solenoids supplied with lead wires are provided with a grounding wire which is green or green with yellow stripes and a 1/2″ conduit connection. To facilitate wiring, the solenoid may be rotated 360°. For explosionproof solenoid version, the conduit lead wires are factory sealed for use in hazardous locations.

⚠ CAUTION: Cryogenic Applications - Solenoid lead wire insulation should not be subjected to cryogenic temperatures. Adequate lead wire protection and routing must be provided.

⚠ ATTENTION: Application cryogénique. Les câbles électriques ne doivent pas être soumis à des températures cryogéniques. Une protection adequate des cables électriques doit être fournie.

Additional Wiring Instructions For Optional Features:

- **Open-Frame solenoid with 1/4″ spade terminals.**

For solenoids supplied with screw terminal connections use #12-18 AWG stranded copper wire rated at 90°C or greater. Torque terminal block screws to 10±2 in-lbs [1,0±1,2 Nm]. A tapped hole is provided in the solenoid for grounding, use a #10-32 machine screw. Torque grounding screw to 15-20 in-lbs [1,7-2,3 Nm]. On solenoids with screw terminals, the socket head screw holding the terminal block to the solenoid is the grounding screw. Torque the screw to 15-20 in-lbs [1,7-2,3 Nm] with a 5/32″ hex key wrench.

- **Junction Box**

The junction box is used with spade or screw terminal solenoids only and is provided with a grounding screw and a 1/2″ conduit connection. Connect #12-18 AWG standard copper wire only to the screw terminals. Within the junction box use field wire that is rated 90°C or greater for connections. For steam service use 105°C rated wire up to 50 psi or use 125°C rated wire above 50 psi. After electrical hookup, replace cover gasket, cover, and screws. Tighten screws evenly in a crisscross manner.

Multipin Connector		
Connector Type	Mating Connector	Application
VT / VB	4-Pin, M12, Female, Single Keyway	DC
	4-Pin, M12, Female, Dual Reverse Keyway	AC
ZT / ZB	3-Pin, Mini, Female, Single Keyway	AC / DC

- **DIN Plug Connector Kit No. K236034**
  1. The open-frame solenoid is provided with DIN terminals to accommodate the plug connector kit.
  2. Remove center screw from plug connector. Using a small screwdriver, pry terminal block from connector cover.
  3. Use #12-18 AWG stranded copper wire rated at 90°C or greater for connections. Strip wire leads back approximately 1/4″ for installation in socket terminals. The use of wire-end sleeves is also recommended for these socket terminals. Maximum length of wire-end sleeves to be approximately 1/4″. Tinning of the ends of the lead wires is not recommended.
  4. Thread wire through gland nut, gland gasket, washer and connector cover.

NOTE: Connector housing may be rotated in 90° increments from position shown for alternate positioning of cable entry.

©ASCO Valve, Inc. 50 Hanover Road, Florham Park, New Jersey 07932 www.ascovalve.com

5. Check DIN connector terminal block for electrical markings. Then make electrical hookup to terminal block according to markings on it. Snap terminal block into connector cover and install center screw.
6. Position connector gasket on solenoid and install plug connector. Torque center screw to 5±1 in-lbs [0,6±1,1 Nm].

NOTE: Alternating current (AC) and direct current (DC) solenoids are built differently and cannot be converted from one to the other by changing the coil.

Installation of Solenoid

Solenoids may be assembled as a complete unit. Tightening is accomplished by means of a hex flange at the base of the solenoid.

Installation of Panel Mounted Solenoid (See Figures 1 and 2)

1. Disassemble solenoid following instruction under *Solenoid Replacement* then proceed.
2. Install solenoid base sub-assembly through customer panel. 8202H panel mounted solenoids include a retainer to adapt the solenoid base sub-assembly to the customer panel. (See Figure 2)
3. Position finger washer on opposite side of panel over solenoid base sub-assembly.
4. Replace solenoid, nameplate/retainer and red cap.
5. Make electrical hookup, see *Wiring* section.

Solenoid Temperature

Standard solenoids are designed for continuous duty service. When the solenoid is energized for a long period, the solenoid becomes hot and can be touched by hand only for an instant. This is a safe operating temperature.

MAINTENANCE

⚠ WARNING: To prevent the possibility of death, serious injury or property damage, turnoff electrical power, depressurize solenoid operator and/or valve, and vent fluid to a safe area before servicing.

⚠ AVERTISSEMENT: Pour éviter tous danger de mort, de blessure grave ou de dommage matériel, avant d'intervenir sur la vanne, couper le courant, purger la vanne dans une zone sécurisée.

Cleaning

All solenoid operators and valves should be cleaned periodically. The time between cleaning will vary depending on medium and service conditions. In general, if the voltage to the solenoid is correct, sluggish valve operation, excessive noise or leakage will indicate that cleaning is required. Clean strainer or filter when cleaning the valve.

Preventive Maintenance

- Keep the medium flowing through the solenoid operator or valve as free from dirt and foreign material as possible.
- Periodic exercise of the valve should be considered if ambient or fluid conditions are such that corrosion, elastomer degradation, fluid contamination build up, or other conditions that could impede solenoid valve shifting are possible. The actual frequency of exercise necessary will depend on specific operating conditions. A successful operating history is the best indication of a proper interval between exercise cycles.
- Depending on the medium and service conditions, periodic inspection of internal valve parts for damage or excessive wear is recommended. Thoroughly clean all parts. Replace any worn or damaged parts.

Causes of Improper Operation

- **Faulty Control Circuit:** Check the electrical system by energizing the solenoid. A metallic *click* signifies that the solenoid is operating. Absence of the *click* indicates loss of power supply. Check for loose or blown fuses, open-circuited or grounded solenoid, broken leadwires or splice connections.
- **Burned-Out Solenoid:** Check for open-circuited solenoid. Replace if necessary. Check supply voltage; it must be the same as specified on nameplate/retainer and marked on the solenoid. Check ambient temperature and check that the core is not jammed.
- **Low Voltage:** Check voltage across the solenoid leads. Voltage must be at least 85% of rated voltage.

Solenoid Replacement

1. Disconnect conduit, coil leads, and grounding wire.

NOTE: Any optional parts attached to the old solenoid must be reinstalled on the new solenoid. For 3-way construction, piping or tubing must be removed from pipe adapter.

2. Disassemble solenoids with optional features as follows:
   - **Spade or Screw Terminals**
     Remove terminal connections, grounding screw, grounding wire, and terminal block (screw terminal type only).

NOTE: For screw terminals, the socket head screw holding the terminal block serves as a grounding screw.

   - **Junction Box**
     Remove conduit and socket head screw (use 5/32″ hex key wrench) from center of junction box. Disconnect junction box from solenoid.
   - **DIN Plug Connector**
     Remove center screw from DIN plug connector. Disconnect DIN plug connector from adapter. Remove socket head screw (use 5/32″ hex key wrench), DIN terminal adapter, and gasket from solenoid.
3. Remove red cap or retainer from top of solenoid base sub-assembly. For 3-way construction with pipe adapter (Figure 3), remove pipe adapter, nameplate and solenoid. Omit steps 4 and 5.
4. Push down on solenoid. Then using a suitable screwdriver, insert blade between solenoid and nameplate/retainer. Pry up slightly and push to remove. NOTE: Series 8202G/H solenoids have a spacer between the nameplate/retainer and solenoid.
5. Remove solenoid from solenoid base sub-assembly.
6. Reassemble in reverse order of disassembly. Use exploded views for identification and placement of parts.
7. Torque pipe adapter to 90 inch-pounds maximum [10,2 Nm maximum]. Then make up piping or tubing to pipe adapter on solenoid.

Disassembly and Reassembly of Solenoids

1. Remove solenoid, see *Solenoid Replacement*.
2. Remove spring washer from solenoid base sub-assembly. For 3-way construction, remove pipe adapter and plugnut gasket.
3. Unscrew solenoid base sub-assembly from valve body.
4. Remove internal solenoid parts for cleaning or replacement. Use exploded views for identification and placement of parts.
5. If the solenoid is part of a valve, refer to basic valve installation and maintenance instructions for further disassembly.
6. Torque solenoid base sub-assembly and adapter to 175±25 in-lbs [19,8±2,8 Nm].

ORDERING INFORMATION FOR ASCO SOLENOIDS

When Ordering Solenoids for ASCO Solenoid Operators or Valves, order the number stamped on the solenoid. Also specify voltage and frequency.

©ASCO Valve, Inc. 50 Hanover Road, Florham Park, New Jersey 07932 www.ascovalve.com

Torque Chart

Part Name	Torque Value in Inch-Pounds	Torque Value in Newton-Meters
solenoid base sub-assembly	175 ± 25	19,8 ± 2,8
pipe adapter	90 maximum	10,2 maximum

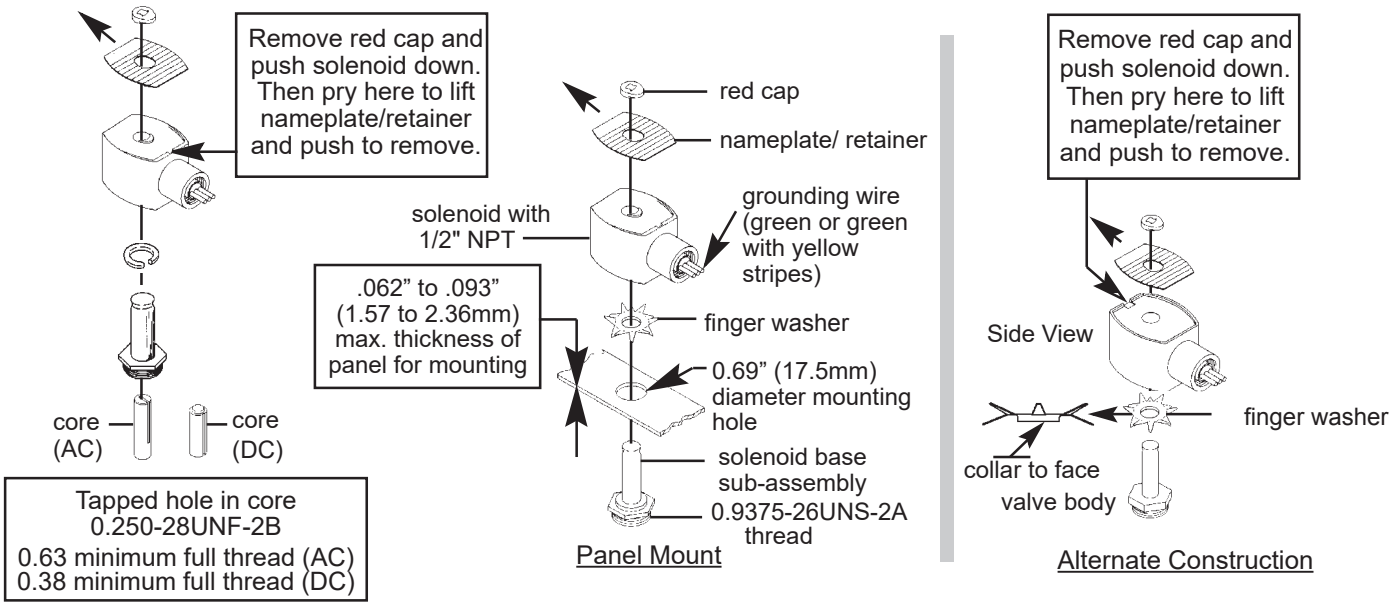

Figure 1. Series 8003G/H Solenoids

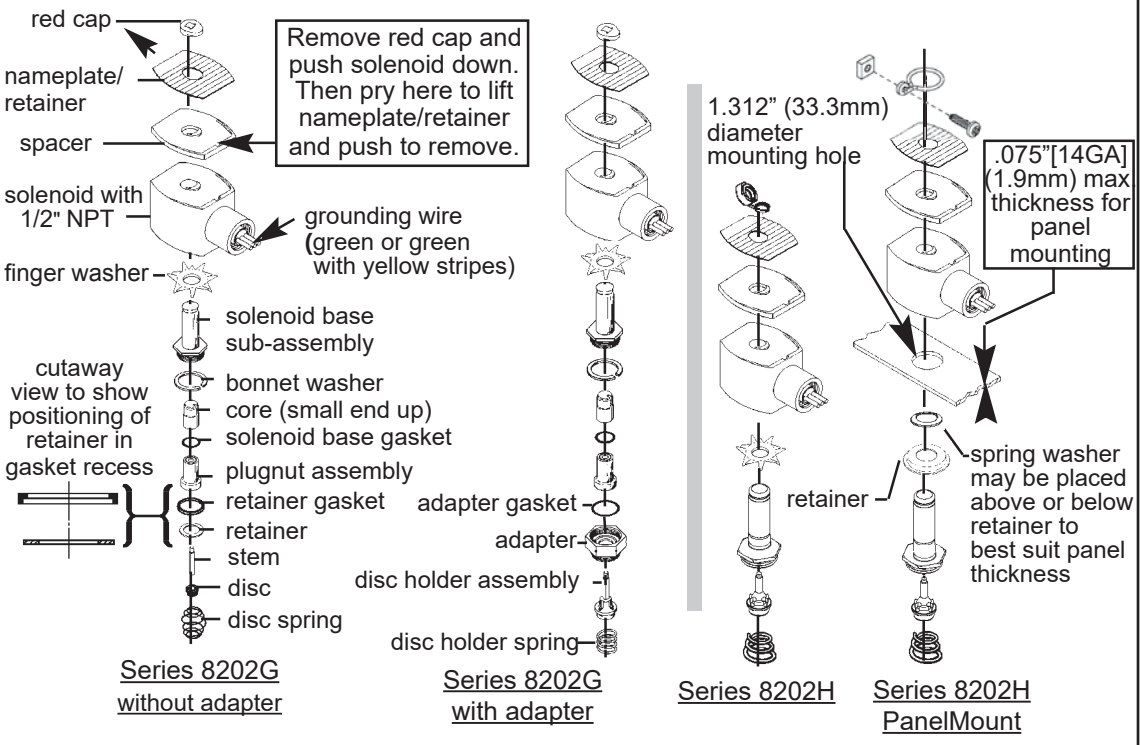

Figure 2. Series 8202G/H Solenoids

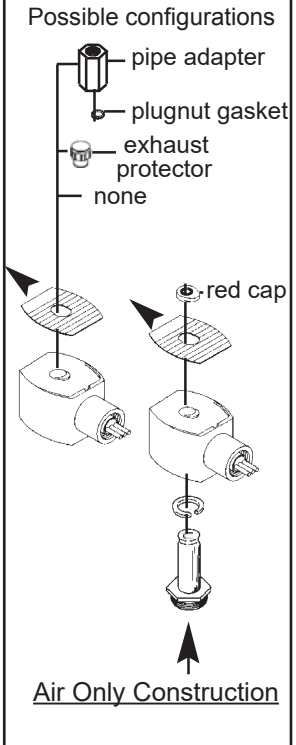

Figure 3. Series 8007G/H

©ASCO Valve, Inc. 50 Hanover Road, Florham Park, New Jersey 07932 www.ascovalve.com

Installation&Maintenance Instructions

ASCO Red-Hat II™

OPEN-FRAME, GENERAL PURPOSE, WATERTIGHT/EXPLOSIONPROOF SOLENOIDS
OPTIONAL FEATURE FOR OPEN FRAME (GENERAL PURPOSE) CONSTRUCTION ONLY

SERIES
8003G/H
8007G/H
8202G/H

NOTICE: See Installation and Maintenance Instructions, I&M No. V_6584_R19 - Section 1 of 2 for detailed instructions.

Torque Chart

Part Name	Torque Value in Inch-Pounds	Torque Value in Newton-Meters
terminal block screws	10 ± 2	1,1 ± 0,2
socket head screw	15 - 20	1,7 - 2,3
center screw	5±1	0,6 ± 0,1

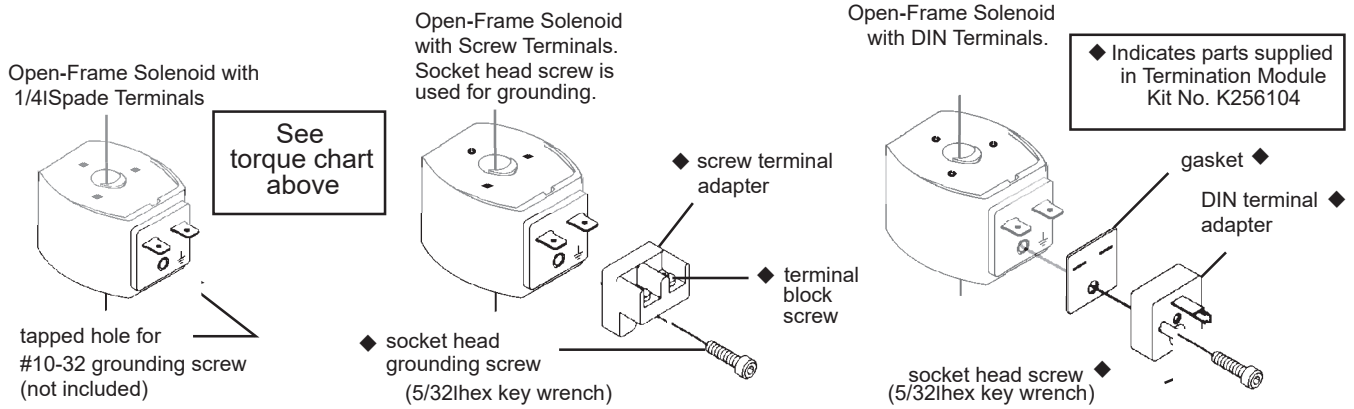

Figure 4. Open-frame solenoids

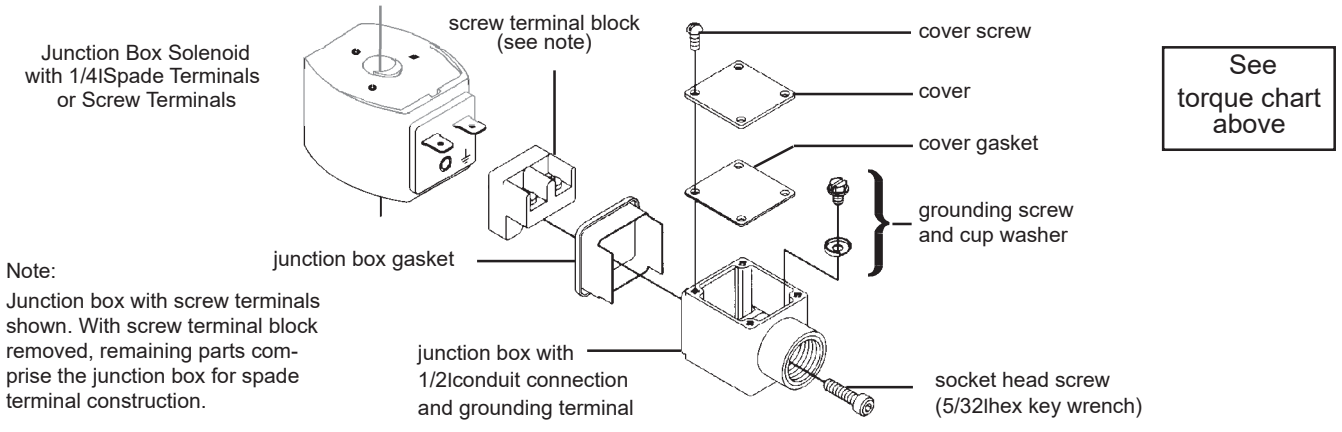

Figure 5. Junction box (optional feature)

 All Rights Reserved.

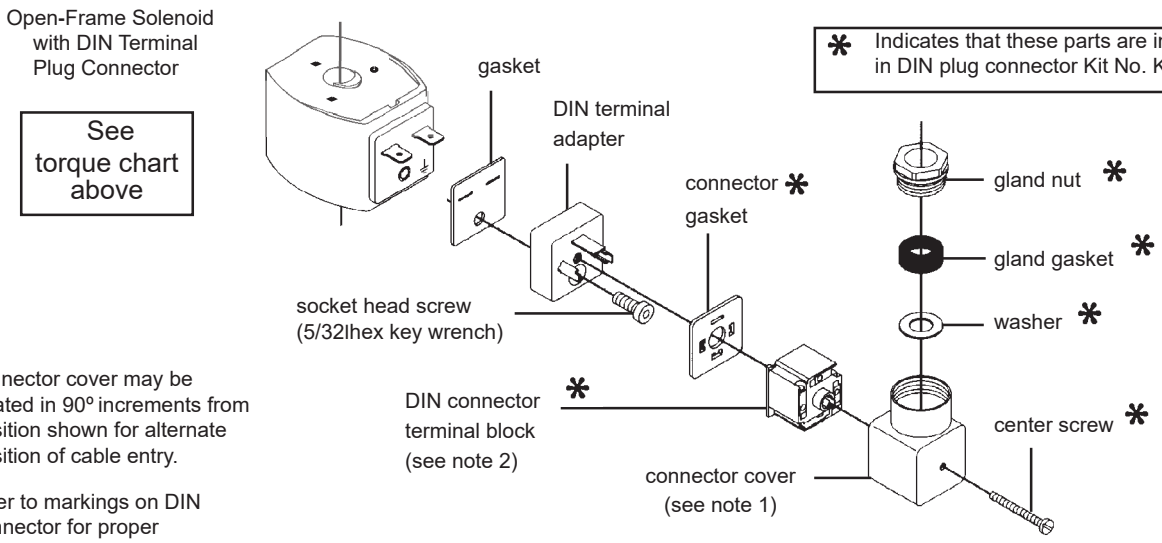

Figure 6. DIN plug connector kit No. K236034 (optional feature)

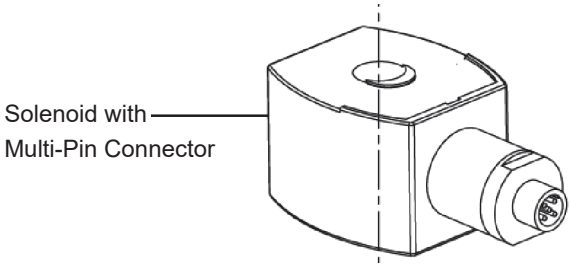

DC: For mating connector, use 4-pin M12 x 1 threaded female connector.

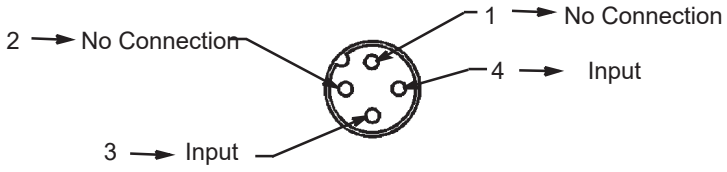

Electrical Connection Size:
DC: Single keyway M12 x 1 (*Not polarity sensitive)*
AC: Dual keyway 1/2-20UNF Thread

Figure 7.
4-Pin Anodized Aluminum Electrical Termination
(VT/VB)

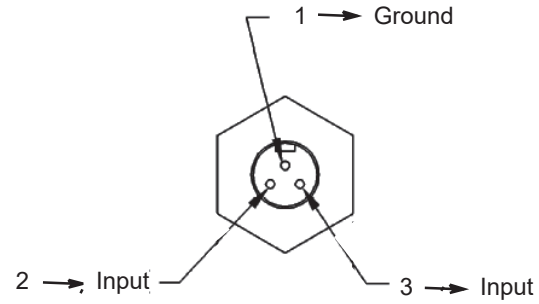

Electrical Connection Size:
DC/AC: 7/8-16 UNS-2A

Figure 8.
Mini 3-pin Epoxy Coated Zinc Electrical Termination
(ZT/ZB)

©ASCO Valve, Inc. 50 Hanover Road, Florham Park, New Jersey 07932 www.ascovalve.com

GB

GENERAL INSTALLATION AND MAINTENANCE INSTRUCTIONS

Note: These general Installation and Maintenance Instructions must be read in conjunction with the Instruction Sheet for the specific product.

INSTALLATION

ASCO Numatics components are intended to be used only within the technical characteristics as specified on the nameplate. Changes to the equipment are only allowed after consulting the manufacturer or its representative. Before installation, depressurize the piping system and clean internally.
The equipment may be mounted in any position if not otherwise indicated on the product by means of an arrow.
The flow direction and pipe connection of valves are indicated on the body.

The pipe connections have to be in accordance with the size indicated on the nameplate and fitted accordingly.

Caution:
- Reducing the connections may cause improper operation or malfunctioning.
- For the protection of the equipment install a strainer or filter suitable for the service involved in the inlet side as close to the product as possible.
- If tape, paste, spray or a similar lubricant is used when tightening, avoid particles entering the system.
- Use proper tools and locate wrenches as close as possible to the connection point.
- To avoid damage to the equipment. DO NOT OVERTIGHTEN pipe connections
- Do not use valve or solenoid as lever.
- The pipe connections should not apply any force, torque or strain to the product.

ELECTRICAL CONNECTION

In case of electrical connections, they are only to be made by trained personnel and have to be in accordance with the local regulations and standards.

Caution:
- Turn off electrical power supply and de-energize the electrical circuit and voltage carrying parts before starting work.
- All electrical screw terminals must be properly tightened according to the standards before putting into service.
- Dependent upon the voltage electrical components must be provided with an earth connection and satisfy local regulations and standards.

The equipment can have one of the following electrical terminals:
- Spade plug connections according to ISO-4400 or 3 x DIN-46244 (when correctly installed, this connection provides IP-65 protection).
- Embedded screw terminals in metal enclosure with "Pg" cable gland
- Spade terminals (AMP type).
- Flying leads or cables.

PUTTING INTO SERVICE

Before pressurizing the system, first carry-out an electrical test. In case of solenoid valves, energize the coil a few times and notice a metal click signifying the solenoid operation.

SERVICE

Most of the solenoid valves are equipped with coils for continuous duty service. To prevent the possibility of personal or property damage, do not touch the solenoid which can become hot under normal operating conditions.

SOUND EMISSION

The emission of sound depends on the application, medium and nature of the equipment used. The exact determination of the sound level can only be carried out by the user having the valve installed in his system

MAINTENANCE

Maintenance of ASCO Numatics products is dependent on service conditions. Periodic cleaning is recommended, the timing of which will depend on the media and service conditions. During servicing, components should be examined for excessive wear. A complete set of internal parts is available as spare parts or rebuild kit. If a problem occurs during installation/maintenance or in case of doubt please contact ASCO Numatics or authorized representatives.

*A separate Declaration of Incorporation relating to EU-Directive 2006/42/EC Annex IIB is available on request for applicable products. Please provide product identification number and serial numbers of products concerned.

The product, , when marked CE, complies with the essential requirements of the EMC 2004/108/EC (until April 20th 2016) and EMC 2014/30/EU (from April 20th 2016) and LVD 2006/95/EC (until April 20th 2016) and LVD 2014/35/EU (from April 20th 2016). A separate Declaration of Conformity is available on request. Please provide product identification number and serial numbers of the products concerned.

FR

INSTRUCTIONS GÉNÉRALES D'INSTALLATION ET D'ENTRETIEN

Note: Ces instructions générales d'installation et d'entretien complètent la notice spécifique du produit.

MONTAGE

Les composants ASCO Numatics sont conçus pour les domaines de fonctionnement indiqués sur la plaque signalétique ou la documentation. Aucune modification ne peut être réalisée sur le matériel sans l'accord préalable du fabricant ou de son représentant. Avant de procéder au montage, dépressuriser les canalisations er effectuer un nettoyage inteme.
A moins qu'une fléche ou la notice n'indique un sens de montage spécifique de la tête magnétique, le produit peut être monté dans n'importe quelle position
Le sens de circulation du fluide est indiqué par repères sur le corps er dans la documentation.
La dimension des tuyauteries doit correspondre au raccordement indiqué sur le corps, l'étiquette ou la notice.

Attention:
- Une restriction des tuyauteries peut entraîner des dysfonctionnements.
- Afin de protéger le matériel, installer une crépine ou un filtre adéquat en amont, aussi près que possible du produit.
- En cas d' utilisation de ruban; pàte, aérosol ou autre lubrifiant lors du serrage, veiller à ce qu" aucun corps étranger ne pénètre dans le circuit.
- Utiliser un outillage approprié et placer les clés aussi près que possible du point de raccordement.
- Afin d'éviter toute détérioration, NE PAS TROP SERRER les raccords des tuyauteries.
- Ne pas se servir de la vanne ou de tête magnétique comme d'un levier.
- The pipe connections should not apply any force, torque or strain to the product.

RACCORDEMENT ÉLECTRIQUE

Le raccordement électrique doit être réalisé par un personnel qualifié et selon les normes et règlements locaux.

Attention:
- Avant toute intervention, couper l'alimentation électrique pour mettre hors tension les composants.
- Toutes les bornes à vis doivent être serrées correctement avant la mise en service.
- Selon la tension, les composants électrique doivent être mis à la terre conformément aux normes et règlements locaux.

Selon les cas, le raccordement électrique s'effectué par:
- Connecteur débrochable ISO-4400 ou 3 x DIN-46244 avec degré de protection IP-65 lorsque le raccordement est correctement effectué.
- Bornes à vis solidaires du bobinage, sous boîter métallique avec presse-étoupe "Pg--".
- Cosses (type AMP).
- Fils ou câbles solidaires de la bobine.

MISE EN SERVICE

Avant de mettre le circuit sous pression, effectuer un essai électrique. Dans le cas d'une électrovanne, mettre la bobine sous tension plusieurs fois er écouter le "clic" métallique qui signale le fonctionnement de la tête magnétique.

FONCTIONNEMENT

La plupart des électrovannes comportant des bobinages prévus pour mise sous tension permanente. Pour éviter toute brûlure, ne pas toucher la tête magnétique qui, en fonctionnement normal et en permanence sous tension, peut atteindre une température élevée.

BRUIT DE FONCTIONNEMENT

Le bruit de fonctionnement varie selon l'utilisation, le fluide et le type de matériel employé. L'utilisateur ne pourra déterminer avec précision le niveau sonore émis qu'après avoir monté le composant sur l'installation.

ENTRETIEN

L'entretien nécessaire aux produits ASCO Numatics varie avec leurs conditions d'utilisation. Il est souhaitable de procéder à un nettoyage périodique dont l'intervalle varie suivant la nature du fluide, les conditions de fonctionnement et le milieu ambiant. Lors de l'intervention. Les composants doivent être examinés our détecter toute usure excessive. Un ensemble de pièces internes est proposé en pièces de rechange pour procéder à la réfection. En cas de problème lors du montage/entretien ou en cas de doute, veuillez contacter ASCO Numatics ou ses représentants officiels.

*Une déclaration d'incorporation relative à la directive UE 2006/42/CE Annexe II B est disponible sur demande pour les produits applicables. Veuillez fournir le numéro d'identification du produit et les numéros de série des produits concernés.

Lorsqu'il est marqué du label CE, le produit est conforme aux exigences essentielles des directives CEM 2004/108/CE (jusqu'au 20 avril 2016) et CEM 2014/30/UE (à partir du 20 avril 2016) et des directives Basse tension 2006/95/CE (jusqu'au 20 avril 2016) et 2014/35/UE (à partir du 20 avril 2016). Une déclaration de conformité peut être fournie sur simple demande. Veuillez fournir le numéro d'identification du produit et les numéros de série des produits concernés.

DE

ALLGEMEINE BETRIEBSANLEITUNG

Achtung: Diese Allgemeine Betriebsanleitung gilt in Zusammenhang mit der jeweiligen Betriebsanleitung für die speziellen Produkte.

EINBAU

Die ASCO Numatics-Komponenten dürfen nur innerhalb der auf den Typenschildern angenebenen Daten eingesetzt warden, Veränderungen an den Produkten sind nur nach Rücksprache mit ASCO Numatics zulässig.
Vor dem Einbau der Ventile muß das Rohrleitungssystem drucklos geschaltet und innen gereinigt werden.
Die Einbaulage der Produkte ist genereil beliebig. Ausnahme: Die mit einem Pfeil gekennzeichneten Produkte müssen entsprechend der Pfeilrichtung montiert werden.
Die Durchflußrichtung und der Eingang von Ventilen sind gekennzeichnet.

Die Rohranschlüsse sollten entsprechend den Größenangaben auf den Typenschildern mit handelsüblichen Verschraubungen durchgeführt werden. Dabei ist folgendes zu beachten:
- Eine Reduzierung der Anschlüsse kann zu Leistungs-und Funktionsminderungen führen.
- Zum Schutz der Ventile sollten Schmutzfänger oder Filter so dicht wie möglich in den Ventileingang integriert werden.
- Bei Abdichtung am Gewinde ist darauf zu achten, daß kein Dichtungsmaterial in die Rohrleitung oder das Ventil gelangt.
- Zur Montage darf nur geeignetes Werkzeug verwendetwerden.
- Konische Verschraubungen sind sorgfältig anzuziehen. Es ist darauf zu achten, daß beim Anziehen das Gehäuse nicht beschädigt wird.
- Spule und Führungsrohr von Ventilen dürfen nicht als Gegenhalter benutzt werde.
- Die Rohrleitungsanschlüsse sollen fluchten und dürfen keine Spannungen auf das Ventil übertragen.

ELECTRISCHER ANSCHLUß

Der elektrische Anschluß ist von Fachpersonal entsprechend den geltenden VDE-und CEE Richtlinien auszuführen. Es ist besonders auf foigendes zu achten:
- Vor Beginn der Arbeiten ist sicherzustellen, daß alle elektrischen Leitungen und Netzteile spannungslos geschaltet sind.
- Alle Anschlußklemmen sind nach Beendigung der Arbeiten vorschriftsmäßig entsprechend den geltenden Regeln anzuziehen.
- Je nach Spannungsbereich muß das Ventil nach den geltenden Regeln einen Schutzleiteranschluß erhalten.

Der Magnetantrieb kann je nach Bauart folgende Anschlüsse haben:
- Anschluß für Gerätesteckdose nach DIN 43650 Form A/ISO 4400 oder 3 x DIN 46244 (durch ordnungsgemäße Montage der Gerätesteckdose wird Schutzklasse IP 65 erreicht).
- Anschlüsse innerhalb eines Blechgehäuses mittels Schraubklemmen. Kabeleinführung ins Gehäuse mit PG-Verschraubung.
- Offene Spulen mit Flachsteckern (AMP-Fahnen) oder mit eingegossenen Kabelenden.

INBETRIEBNAHME

Vor Druckbeaufschlagung des Produktes sollte eine elektrische Funktionsprüfung erfolgen:

Bei Ventilen Spannung an der Magnetspule mehrmals ein-und ausschalten. Es muß ein Klicken zu hören sein.

BETRIEB

Die meisten Ventile sind mit Spulen für Dauerbetrieb ausgerüstet. Zur Vermeidung von Personen-und Sachschäden sollte jede Berührung mit dem Ventil vermieden werden, da die Magnetspule bei längerem Betrieb sehr heiß werden kann.

GERÄUSCHEMISSION

Diese hängt sehr stark vom Anwendungsfall, den Betriebsdaten und dem Medium, mit denen das Produkt beaufschlagt wird, ab. Eine Aussage über die Geräuschemission des Produktes muß deshalb von demjenigen getroffen werden, der das Produkt innerhalb einer Maschine in Betrieb nimmit.

WARTUNG

Die Wartung hängt von den Einsatzbedigungen ab. In entsprechenden Zeitabständen muß das Produkt geöffnet und gereinigt werden. Für die Überholung der ASCO Numatics-Produkte können Ersatzteilsätze geliefert werden. Treten Schwierigkeiten bel Einbau, Betrieb oder Wartung auf, sowie bei Unklarheiten, ist mit ASCO Numatics Rücksprache zu halten.

ASCO Numatics Produkte sind entsprechend der EG-Richtlinie 89/392/EWG gefertigt.

*Eine separate Herstellererklärung im Sinne der Richtlinie 2006/42/EWG Anhang II B ist auf Anfrage für die entsprechenden Produkte erhältlich. Geben Sie bitte die Kennnummer sowie die Seriennummer der betreffenden Produkte an.

Das Produkt, wenn mit CE gekennzeichnet, erfüllt die Anforderungen von EMV 2004/108/EWG (bis 20. April 2016) und EMV 2014/30/EU (vom 20. April 2016) und LVD 2006/95/EWG (bis 20. April 2016) und LVD 2014/35/EU (vom 20. April 2016). Eine separate Konformitätserklärung ist auf Anfrage erhältlich. Geben Sie bitte die Kennnummer sowie die Seriennummer der betreffenden Produkte an.

ASCO
50 Hanover Road
Florham Park, New Jersey 07932
Tel. (973) 966-2000
Fax (973) 966-2628

ASCO
1561 Columbia Highway
Aiken, South Carolina 29801
Tel. (803) 641-9200
Fax (803) 641-9290

ASCO Valves®

E 264274 - 04/2016

All Rights Reserved.
©ASCO Valve, Inc. 50 Hanover Road, Florham Park, New Jersey 07932 www.ascovalve.com

LEFT BLANK

ASCO

MODEL 8345G001, SOLENOID VALVE

LEFT BLANK

Installation & Maintenance Instructions

2-POSITION 4-WAY FUNCTION VALVES

MIDGET SIZE - 1/4 NPT

SERIES 8345G/H

IMPORTANT: See separate solenoid installation and maintenance instructions for information on: Wiring, Solenoid Temperature,Causes of Improper Operation,and Coil or Solenoid Replacement.

DESCRIPTION

Series 8345 valves are 2-position 4-way midget size solenoid valves with rugged forged brass or stainless steel bodies. These valves are extremely compact to meet the requirements where space and weight are important and are primarily used to control small double acting cylinders not larger than 4 inches in diameter. Series 8345 valves may be provided with a general purpose or explosionproof solenoid enclosure.

OPERATION

Solenoid De-energized: Flow is from Pressure "P" to Cylinder "A" and from Cylinder "B" to Exhaust "EB". Exhaust "EA" is closed.

Solenoid Energized: Flow is from Pressure "P" to Cylinder "B" and from Cylinder "A" to Exhaust "EA". Exhaust "EB" is closed.

IMPORTANT: Minimum operating pressure differential is 10 psi.

Flow Diagrams

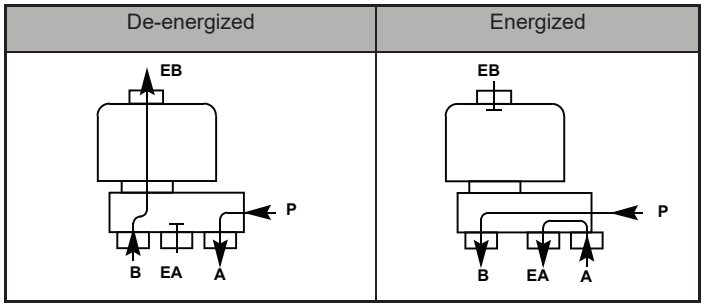

Manual Operator (optional feature)

Manual operator allows manual operation when desired or during an electrical power outage. To operate manual operator, rotate groove pin counter-clockwise 180º. Valve will then remain in the solenoid energized position until stem is rotated clockwise to original position. Manual operator must be in clockwise position for proper electrical operation.

INSTALLATION

Check nameplate for correct catalog number, pressure, voltage, frequency, and service. Never apply incompatible fluids or exceed pressure rating of the valve. Installation and valve maintenance to be performed by qualified personnel.

Temperature Limitations

For maximum valve ambient and fluid temperatures, refer to chart below. Check catalog number on nameplate to determine temperature limitation.

Wattage	Catalog Number Coil Prefix	Coil Class	Max. Ambient Temp.°F	Max. Fluid Temp.°F
10.1	none, KF, SF, SC, EF or EV	F	125	180
10.1	HT, KH, ST, SU, EFHT or EVHT	H	140	180
11.6	none, HT, KF, KH, SC, SF, EF or EV	F or H	104	104

Positioning

This valve is designed to perform properly when mounted in any position. However,for optimum life and performance, the solenoid should be mounted vertically and upright to reduce the possibility of foreign matter accumulating in the solenoid base sub-assembly area.

Mounting

Refer to Figure 1 for Mounting dimensions.

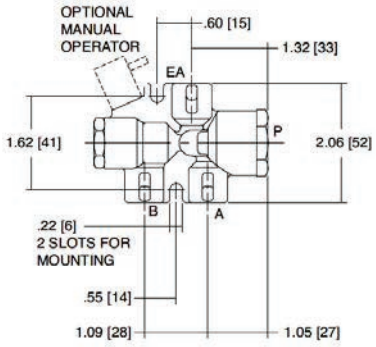

Figure 1. Mounting Dimensions

Piping

Connect piping to valve according to markings on valve body. Apply pipe compound or PTFE tape sparingly to male pipe threads only. If applied to valve threads, the compound may enter the valve and cause operational difficulty. Avoid pipe strain by properly supporting and aligning piping. When tightening the pipe, do not use valve or solenoid as a lever. Locate wrenches applied to valve body or piping as close as possible to connection point.

To ensure proper operation of the valve, the pressure and exhaust lines must be full area without restriction. A minimum differential pressure (10psi), as stamped on the nameplate, must be maintained between pressure and exhaust at the moment of shifting. Air reservoirs must have adequate capacity to maintain this minimum pressure during shifting. To check pressure during shifting, install a pressure gauge in the piping as close to valve as possible.

CAUTION: To protect the solenoid valve, install a strainer or filter suitable for the service involved in the inlet side as close to the valve as possible. Clean periodically depending on service conditions. See ASCO Series 8600 and 8601 for strainers.

Wiring

Wiring must comply with Local and National Electrical Codes. For valves equipped with an Explosionproof/Watertight Solenoid Enclosure, the electrical fittings must be approved for use in the approved hazardous Location. Housings for all solenoids are provided with accommodations or connections for a 1/2 inch conduit. To facilitate wiring, the solenoid enclosure may be rotated 360°.

Solenoid Temperature

Standard catalog valves are supplied with coils designed for continuous duty service. When the solenoid is energized for a long period, the solenoid becomes hot and can be touched by hand only for an instant. This is a safe operating temperature. Any excess heating will be indicated by smoke and the odor of burning coil insulation

MAINTENANCE

⚠ WARNING: To prevent the possibility of death, injury or property damage, turn off electrical power, depressurize valve, and vent fluid to a safe area before servicing the valve

Note: It is not necessary to remove the valve from the pipeline for repairs. However, piping or tubing must be removed from Pressure "P" connection and Exhaust "EB" connection on air and liquid constructions.

Cleaning

All solenoid valves should be cleaned periodically. The time between cleanings will vary depending on the medium and service conditions. In general,if the voltage to the coil is correct, sluggish valve operation, excessive noise or leakage will indicate that cleaning is required. In the extreme case, faulty valve operation will occur and the valve may fail to open or close. Clean strainer or filter when cleaning the valve.

All Rights Reserved.

©ASCO Valve, Inc. 50 Hanover Road, Florham Park, New Jersey 07932

Preventive Maintenance

- Keep medium flowing through the valve as free from dirt and foreign material as possible.
- Periodic exercise of the valve should be considered if ambient or fluid conditions are such that corrosion, elastomer degradation, fluid contamination build up, or other conditions that could impede solenoid valve shifting are possible. The actual frequency of exercise necessary will depend on specific operating conditions. A successful operating history is the best indication of a proper interval between exercise cycles.
- Depending on the medium and service conditions, periodic inspection of internal valve parts for damage or excessive wear is recommended. Thoroughly clean all parts. If parts are worn or damaged, install a complete rebuild kit.

Causes of Improper Operation

- **Faulty Control Circuit:** Check the electrical system by energizing the solenoid. A metallic click signifies that the solenoid is operating. The absence of the click indicates loss of power supply. Check for loose or blown fuses, open-circuited or grounded coil, broken lead wires or splice connections.
- **Burned-Out Coil:** Check for open-circuited coil. Replace if necessary. Check supply voltage; it must be the same as specified on nameplate and as marked on the coil.
- **Low Voltage:** Check voltage across the coil leads. Voltage must be at least 85% of nameplate rating.
- **Incorrect Pressure:** Check valve pressure. Pressure to valve must be within range specified on nameplate.
- **Excessive Leakage:** Disassemble valve and clean all parts. If parts are worn or damaged, install a complete ASCO Rebuild Kit.

Valve Disassembly

1. Disassemble valve in an orderly fashion using exploded views for identification and placement of parts.
2. Remove solenoid enclosure. See separate instructions.
3. Unscrew solenoid base sub-assembly and remove bonnet gasket.
4. For normal maintenance (cleaning) it is not necessary to disassemble the manual operator (optional feature) unless external leakage is evident. If disassembly is required, remove stem pin, manual operator stem, stem spring and stem gasket from valve body.
5. Remove core spring and core sub-assembly.
6. Unscrew end cap and remove end cap gasket, body gasket and disc.
7. Unscrew end plug and remove end plug gasket, piston and piston U-cup.
8. All parts are now accessible for cleaning or replacement. If parts are worn or damaged, install a complete ASCO Rebuild Kit

Valve Reassembly

1. Lubricate piston U-cup and all gaskets with Parker Super Lube Compound or an equivalent high-grade silicone grease.
2. Position piston U-cup on piston with mouth or open end facing in the direction of the end plug.
3. Install piston into valve body. Position end plug gasket on end plug and install into valve body. Torque end plug to 200±10 in-lbs [22,6±1,1 Nm].
4. Position body gasket and end cap gasket on end cap. Lubricate disc with DOW CORNING® 111 Compound or an equivalent high grade silicone grease. Install disc and end cap into valve body. Torque end cap to 200±10 in-lbs [22,6±1,1 Nm].
5. If removed, assembly and replace manual operator stem, stem spring, stem gasket and stem pin.
6. Position solenoid base gasket in valve body.
7. Install core assembly and core spring into solenoid base sub-assembly. Thread solenoid base sub-assembly into valve body. Torque solenoid base sub-assembly to 175±25 in-lbs [19,8±2,8 Nm].
8. Install solenoid,see separate solenoid instructions. Then make electrical hookup to solenoid.

⚠ WARNING: To prevent the possibility of death, serious injury or property damage, check valve for proper operation before returning to service. Also perform internal seat and external leakage tests with a nonhazardous, noncombustible fluid.

9 Restore line pressure and electrical power supply to valve.

10. After maintenance is completed, operate the valve a few times to be sure of proper operation. A metallic click signifies the solenoid is operating.

ORDERING INFORMATION FOR ASCO REBUILD KITS

Parts marked with an asterisk (*) in the exploded view are supplied in Rebuild Kits. When Ordering Rebuild Kits for ASCO valves, order the Rebuild Kit number stamped on the valve nameplate. If the number of the kit is not visible, order by indicating the number of kits required, and the Catalog Number and Serial Number of the valve(s) for which they are intended.

©ASCO Valve, Inc.® 50 Hanover Road, Florham Park, New Jersey 07932 www.ascovalve.com

Torque Chart

Part Name	Toque Value Inch-Pounds	Torque Value Newton-Meters
solenoid base sub-assembly	175 ± 25	19,8 ± 2,8
end cap/end plug	200 ± 10	22,6 ± 1,1

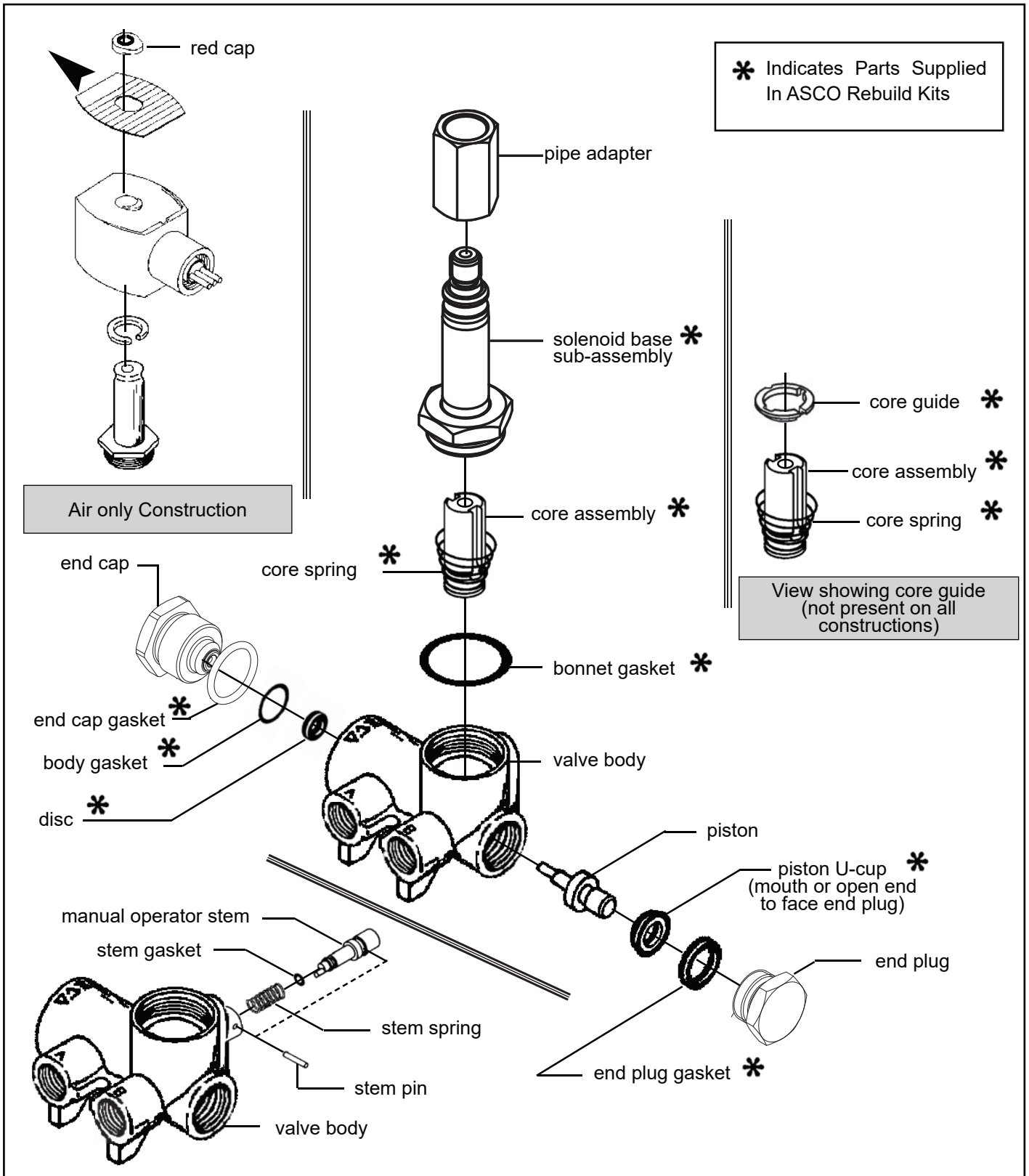

Series 8345 - without solenoid

©ASCO Valve, Inc.® 50 Hanover Road, Florham Park, New Jersey 07932 www.ascovalve.com

This page is intentionally left blank

Installation&Maintenance Instructions

ASCO Red-Hat II®

OPEN-FRAME, GENERAL PURPOSE, WATERTIGHT/EXPLOSIONPROOF SOLENOIDS

SERIES
8003G/H
8007G/H
8202G/H

— SERVICE NOTICE —

ASCO® solenoid valves with design change letter "G" or "H" in the catalog number (ex. 8210G1) have an epoxy encapsulated ASCO® Red Hat II® solenoid. This solenoid replaces some of the solenoids with metal enclosures and open-frame constructions. Follow these installation and maintenance instructions if your valve or operator uses this solenoid.

See separate instructions for basic valve.

DESCRIPTION

Catalog numbers 8003G/H, 8007G/H and 8202G/H and are epoxy encapsulated pull-type solenoids. The green solenoid with lead wires and 1/2 conduit connection is designed to meet Enclosure Type 1-General Purpose, Type 2-Dripproof, Types 3 and 3S-Raintight, and Types 4 and 4X-Watertight. The black solenoid on catalog numbers prefixed "EF" or "EV" is designed to meet Enclosure Types 3 and 3S-Raintight, Types 4 and 4X-Watertight, Types 6 and 6P-Submersible, Type7, Explosionproof Class I, Division1 Groups A, B, C, & D and Type 9, -Dust-Ignitionproof Class II, Division1 Groups E, F & G. The Class II, Groups F & G Dust Locations designation is not applicable for solenoids or solenoid valves used for steam service or when a class "H" solenoid is used. See *Temperature Limitations* section for solenoid identification and nameplate/retainer for service. When installed just as a solenoid and not attached to an ASCO valve, the core has a 0.250-28 UNF-2B tapped hole, 0.38 or 0.63 minimum full thread.

NOTE: Catalog number prefix "EV" denotes stainless steel construction.

Solenoid catalog numbers 8202G/H1, 8202G/H3, 8202G/H5 and 8202G/H7 are epoxy encapsulated push-type, reverse-acting solenoids having the same enclosure types as previously stated for Catalog numbers 8003G/H1 and 8003G/H2. 8007G/H are 3-way solenoid operators with a pipe port or adapter, exhaust protector or vent at the top of the solenoid base sub-assembly.

Series 8003G/H, 8007G/H and 8202G/H solenoids are available in:

- **Open-Frame Construction:** The green solenoid may be supplied with 1/4″ spade, screw or DIN terminals. (Refer to Figure 4)
- **Panel Mounted Construction:** These solenoids are specifically designed to be panel mounted by the customer. Refer to Figures specified in this I&M and the section on *Installation of Panel Mounted Solenoid* for details.

Optional Features For Type 1 - General Purpose Construction Only

- **Junction Box:** This junction box construction meets Enclosure Types 2, 3, 3S, 4, and 4X. Only solenoids with 1/4″ spade or screw terminals may have a junction box. The junction box provides a 1/2″ conduit connection, grounding and spade or screw terminal connections within the junction box (See Figure 5).
- **DIN Plug Connector Kit No. K236034:** Use this kit only for solenoids with DIN terminals. The DIN plug connector kit provides a two pole with grounding contact DIN Type 43650 construction (See Figure 6).

OPERATION

Series 8003G/H and 8007G/H - When the solenoid is energized, the core is drawn into the solenoid base sub-assembly.

IMPORTANT: When the solenoid is de-energized, the initial return force for the core, whether developed by spring,pressure, or weight, must exert a minimum force to overcome residual magnetism created by the solenoid. Minimum return force for AC construction is 11 ounces, and 5 ounces for DC construction.

Series 8202G/H - When the solenoid is energized, the disc holder assembly seats against the orifice. When the solenoid is de-energized , the disc holder assembly returns. **IMPORTANT: Initial return force for the disc or disc holder assembly, whether developed by spring, pressure, or weight, must exert a minimum force to overcome residual magnetism created by the solenoid. Minimum return force is 1pound, 5 ounces.**

INSTALLATION

Check nameplate for correct catalog number, service, and wattage. Check front of solenoid for voltage and frequency.

⚠ WARNING: Electrical hazard from the accessibility of live parts. To prevent the possibility of death, serious injury or property damage, install the open - frame solenoid in an enclosure.

FOR BLACK ENCLOSURE TYPES 7 AND 9 ONLY

⚠CAUTION: To prevent fire or explosion, do not install solenoid and/or valve where ignition temperature of hazardous atmosphere is less than 165°C. On valves used for steam service or when a class "H" solenoid is used, do not install in hazardous atmosphere where ignition temperature is less than 180°C. See nameplate/retainer for service.

NOTE: These solenoids have an internal non-resetable thermal fuse to limit solenoid temperature in the event that extraordinary conditions occur which could cause excessive temperatures. These conditions include high input voltage, a jammed core, excessive ambient temperature or a shorted solenoid, etc. This unique feature is a standard feature only in solenoids with black explosionproof/dust-ignitionproof enclosures (Types 7 & 9).

⚠CAUTION: To protect the solenoid valve or operator, install a strainer or filter, suitable for the service involved in the inlet side as close to the valve or operator as possible. Clean periodically depending on service conditions. See ASCO Series 8600 and 8601 for strainers.

 All Rights Reserved.

©ASCO Valve, Inc. 50 Hanover Road, Florham Park, New Jersey 07932

Temperature Limitations

For maximum valve ambient temperatures, refer to chart. The temperature limitations listed, only indicate maximum application temperatures for field wiring rated at 90°C. Check catalog number prefix and watt rating on nameplate to determine maximum ambient temperature. See valve installation and maintenance instructions for maximum fluid temperature.

NOTE: For steam service, refer to *Wiring* section, *Junction Box* for temperature rating of supply wires.

Temperature Limitations For Series 8003G, 8007G or 8202G Solenoids for use on Valves Rated at 10.1, 11.6, 15.6, 17.1, or 22.6 Watts			
Watt Rating	Catalog Number Coil Prefix	Class of Insulation	Maximum § Ambient Temp.
10.1 & 17.1	None, FB, KF, KP, SC, SD, SF, SP, VT, VB, ZT & ZB	F	125°F (52°C)
10.1 & 17.1	HB, HT, KB, KH, SS, ST, SU	H	140°F (60°C)
11.6 & 22.6	None, FB, KF, KP, SC, SD, SF, SP, VT, VB, ZT & ZB	F	104°F (40°C)
11.6 & 22.6	HP, HT, KB, KH, SS, ST, SU & SV	H	104°F (40°C)
15.6	None, KB, SS, SV	H	104°F (40°C)

§ Minimum ambient temperature -40°F (-40°C).

Temperature Limitations for Series 8003H, 8007H and 8202H solenoids						
		Watt Ratings			Maximum Ambient Temperature	
Prefix [1]	Coil Class	AC		DC		
		60 Hz	50 Hz		°C	°F
EF, EV	FT	10.1	10.1	-	52	125
EF, EV	FB	17.1	17.1	-		
	FT	10.1	10.1	-	55	131
	FB	17.1	17.1	-		
	HT	-	-	11.6	40 [2]	104 [2]
	HF	-	-	15.6		
	HB	-	-	22.6		
EF, EV	HT	-	-	11.6		
EF, EV	HF	-	-	15.6		
EF, EV	HB	-	-	22.6		
	HT	10.1	10.1	-	60 [3]	140 [3]
	HB	17.1	17.1	-		
EF, EV	HT	10.1	10.1	-		
EF, EV	HB	17.1	17.1	-		

[1] = EF, EV data applies to Explosionproof coils only.

[2] = Some DC solenoid valves can be operated at maximum ambient temperature of 55°C / 131°F with reduced pressure ratings. See valve I&M for maximum operating pressure differential ratings.

[3] = Steam Service Valves have a maximum ambient temperature of 55° C/ 131°F.

Positioning

This solenoid is designed to perform properly when mounted in any position. However, for optimum life and performance, the solenoid should be mounted vertically and upright to reduce the possibility of foreign matter accumulating in the solenoid base sub-assembly area.

Wiring

Wiring must comply with local codes and the National Electrical Code. All solenoids supplied with lead wires are provided with a grounding wire which is green or green with yellow stripes and a 1/2″ conduit connection. To facilitate wiring, the solenoid may be rotated 360°. For the watertight and explosionproof solenoid, electrical fittings must be approved for use in the approved hazardous locations.

⚠CAUTION: Cryogenic Applications - Solenoid lead wire insulation should not be subjected to cryogenic temperatures. Adequate lead wire protection and routing must be provided.

Additional Wiring Instructions For Optional Features:

- **Open-Frame solenoid with 1/4″ spade terminals.**

For solenoids supplied with screw terminal connections use #12-18 AWG stranded copper wire rated at 90°C or greater. Torque terminal block screws to 10±2 in-lbs [1,0±1,2 Nm]. A tapped hole is provided in the solenoid for grounding, use a #10-32 machine screw. Torque grounding screw to 15-20 in-lbs [1,7-2,3 Nm]. On solenoids with screw terminals, the socket head screw holding the terminal block to the solenoid is the grounding screw. Torque the screw to 15-20 in-lbs [1,7-2,3 Nm] with a 5/32″ hex key wrench.

- **Junction Box**

The junction box is used with spade or screw terminal solenoids only and is provided with a grounding screw and a 1/2″ conduit connection. Connect #12-18 AWG standard copper wire only to the screw terminals. Within the junction box use field wire that is rated 90°C or greater for connections. For steam service use 105°C rated wire up to 50 psi or use 125°C rated wire above 50 psi. After electrical hookup, replace cover gasket, cover, and screws. Tighten screws evenly in a crisscross manner.

- **DIN Plug Connector Kit No. K236034**

1. The open-frame solenoid is provided with DIN terminals to accommodate the plug connector kit.
2. Remove center screw from plug connector. Using a small screwdriver, pry terminal block from connector cover.
3. Use #12-18 AWG stranded copper wire rated at 90°C or greater for connections. Strip wire leads back approximately 1/4″ for installation in socket terminals. The use of wire-end sleeves is also recommended for these socket terminals. Maximum length of wire-end sleeves to be approximately 1/4″. Tinning of the ends of the lead wires is not recommended.
4. Thread wire through gland nut, gland gasket, washer and connector cover.

©ASCO Valve, Inc. 50 Hanover Road, Florham Park, New Jersey 07932 www.ascovalve.com

NOTE: Connector housing may be rotated in 90° increments from position shown for alternate positioning of cable entry.

5. Check DIN connector terminal block for electrical markings. Then make electrical hookup to terminal block according to markings on it. Snap terminal block into connector cover and install center screw.
6. Position connector gasket on solenoid and install plug connector. Torque center screw to 5±1 in-lbs [0,6±1,1 Nm].

NOTE: Alternating current (AC) and direct current (DC) solenoids are built differently and cannot be converted from one to the other by changing the coil.

Installation of Solenoid

Solenoids may be assembled as a complete unit. Tightening is accomplished by means of a hex flange at the base of the solenoid.

Installation of Panel Mounted Solenoid (See Figures 1 and 2)

1. Disassemble solenoid following instruction under *Solenoid Replacement* then proceed.
2. Install solenoid base sub-assembly through customer panel. 8202H panel mounted solenoids include a retainer to adapt the solenoid base sub-assembly to the customer panel. (See Figure 2)
3. Position finger washer on opposite side of panel over solenoid base sub-assembly.
4. Replace solenoid, nameplate/retainer and red cap.
5. Make electrical hookup, see *Wiring* section.

Solenoid Temperature

Standard solenoids are designed for continuous duty service. When the solenoid is energized for a long period, the solenoid becomes hot and can be touched by hand only for an instant. This is a safe operating temperature.

MAINTENANCE

⚠ WARNING: To prevent the possibility of death, serious injury or property damage, turnoff electrical power, depressurize solenoid operator and/or valve, and vent fluid to a safe area before servicing.

Cleaning

All solenoid operators and valves should be cleaned periodically. The time between cleaning will vary depending on medium and service conditions. In general, if the voltage to the solenoid is correct, sluggish valve operation, excessive noise or leakage will indicate that cleaning is required. Clean strainer or filter when cleaning the valve.

Preventive Maintenance

- Keep the medium flowing through the solenoid operator or valve as free from dirt and foreign material as possible.
- Periodic exercise of the valve should be considered if ambient or fluid conditions are such that corrosion, elastomer degradation, fluid contamination build up, or other conditions that could impede solenoid valve shifting are possible. The actual frequency of exercise necessary will depend on specific operating conditions. A successful operating history is the best indication of a proper interval between exercise cycles.
- Depending on the medium and service conditions, periodic inspection of internal valve parts for damage or excessive wear is recommended. Thoroughly clean all parts. Replace any worn or damaged parts.

Causes of Improper Operation

- **Faulty Control Circuit:** Check the electrical system by energizing the solenoid. A metallic *click* signifies that the solenoid is operating. Absence of the *click* indicates loss of power supply. Check for loose or blown fuses, open-circuited or grounded solenoid, broken leadwires or splice connections.
- **Burned-Out Solenoid:** Check for open-circuited solenoid. Replace if necessary. Check supply voltage; it must be the same as specified on nameplate/retainer and marked on the solenoid. Check ambient temperature and check that the core is not jammed.
- **Low Voltage:** Check voltage across the solenoid leads. Voltage must be at least 85% of rated voltage.

Solenoid Replacement

1. Disconnect conduit, coil leads, and grounding wire.

NOTE: Any optional parts attached to the old solenoid must be reinstalled on the new solenoid. For 3-way construction, piping or tubing must be removed from pipe adapter.

2. Disassemble solenoids with optional features as follows:
   - **Spade or Screw Terminals**

     Remove terminal connections, grounding screw, grounding wire, and terminal block (screw terminal type only).

NOTE: For screw terminals, the socket head screw holding the terminal block serves as a grounding screw.

   - **Junction Box**

     Remove conduit and socket head screw (use 5/32″ hex key wrench) from center of junction box. Disconnect junction box from solenoid.
   - **DIN Plug Connector**

     Remove center screw from DIN plug connector. Disconnect DIN plug connector from adapter. Remove socket head screw (use 5/32″ hex key wrench), DIN terminal adapter, and gasket from solenoid.

©ASCO Valve, Inc. 50 Hanover Road, Florham Park, New Jersey 07932 www.ascovalve.com

3. Remove red cap or retainer from top of solenoid base sub-assembly. For 3-way construction with pipe adapter (Figure 3), remove pipe adapter, nameplate and solenoid. Omit steps 4 and 5.
4. Push down on solenoid. Then using a suitable screwdriver, insert blade between solenoid and nameplate/retainer. Pry up slightly and push to remove. NOTE: Series 8202G/H solenoids have a spacer between the nameplate/retainer and solenoid.
5. Remove solenoid from solenoid base sub-assembly.
6. Reassemble in reverse order of disassembly. Use exploded views for identification and placement of parts.
7. Torque pipe adapter to 90 inch-pounds maximum [10,2 Nm maximum]. Then make up piping or tubing to pipe adapter on solenoid.

Disassembly and Reassembly of Solenoids

1. Remove solenoid, see *Solenoid Replacement*.
2. Remove spring washer from solenoid base sub-assembly. For 3-way construction, remove pipe adapter and plugnut gasket.
3. Unscrew solenoid base sub-assembly from valve body.
4. Remove internal solenoid parts for cleaning or replacement. Use exploded views for identification and placement of parts.
5. If the solenoid is part of a valve, refer to basic valve installation and maintenance instructions for further disassembly.
6. Torque solenoid base sub-assembly and adapter to 175±25 in-lbs [19,8±2,8 Nm].

ORDERING INFORMATION FOR ASCO SOLENOIDS

When Ordering Solenoids for ASCO Solenoid Operators or Valves, order the number stamped on the solenoid. Also specify voltage and frequency.

©ASCO Valve, Inc. 50 Hanover Road, Florham Park, New Jersey 07932 www.ascovalve.com

Installation&Maintenance Instructions

ASCO Red-Hat II®

OPEN-FRAME, GENERAL PURPOSE, WATERTIGHT/EXPLOSIONPROOF SOLENOIDS

SERIES
8003G/H
8007G/H
8202G/H

NOTICE: See Installation and Maintenance Instructions, I&M No. V_6584_R16 - Section 1 of 2 for detailed instructions.

Torque Chart

Part Name	Torque Value in Inch-Pounds	Torque Value in Newton-Meters
solenoid base sub-assembly	175 ± 25	19,8± 2,8
pipe adapter	90 maximum	10,2 maximum

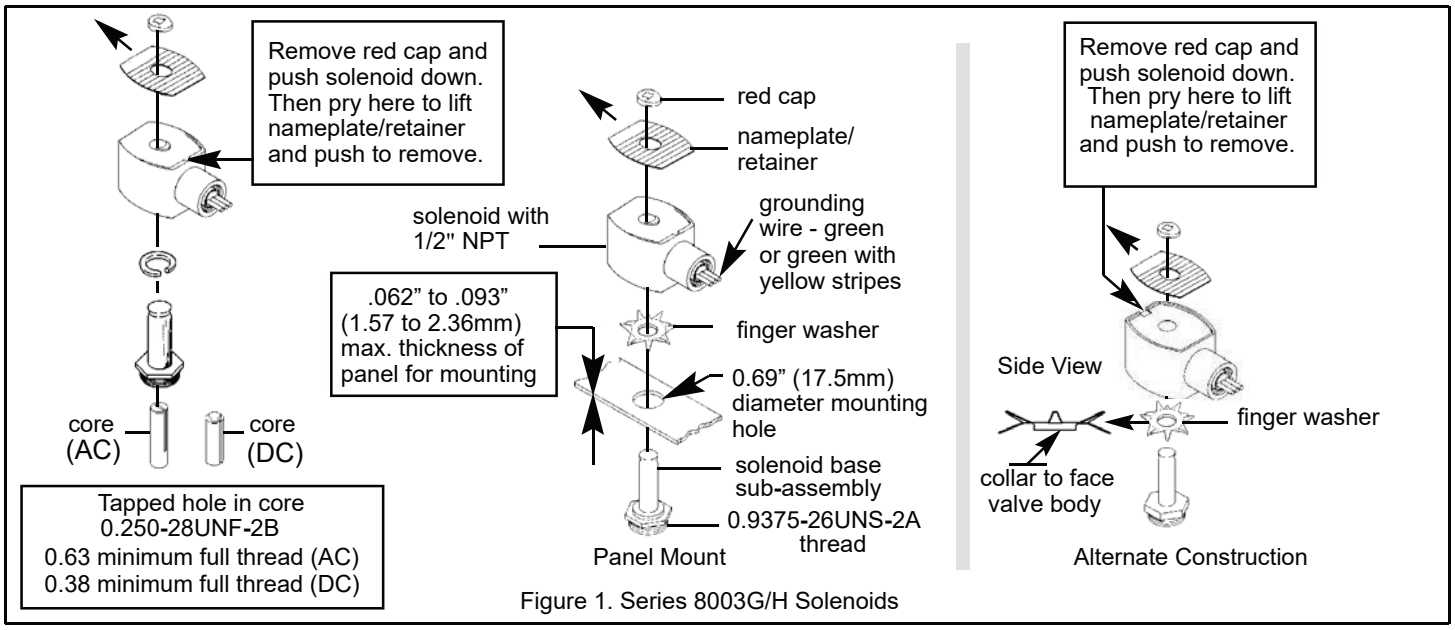

Figure 1. Series 8003G/H Solenoids

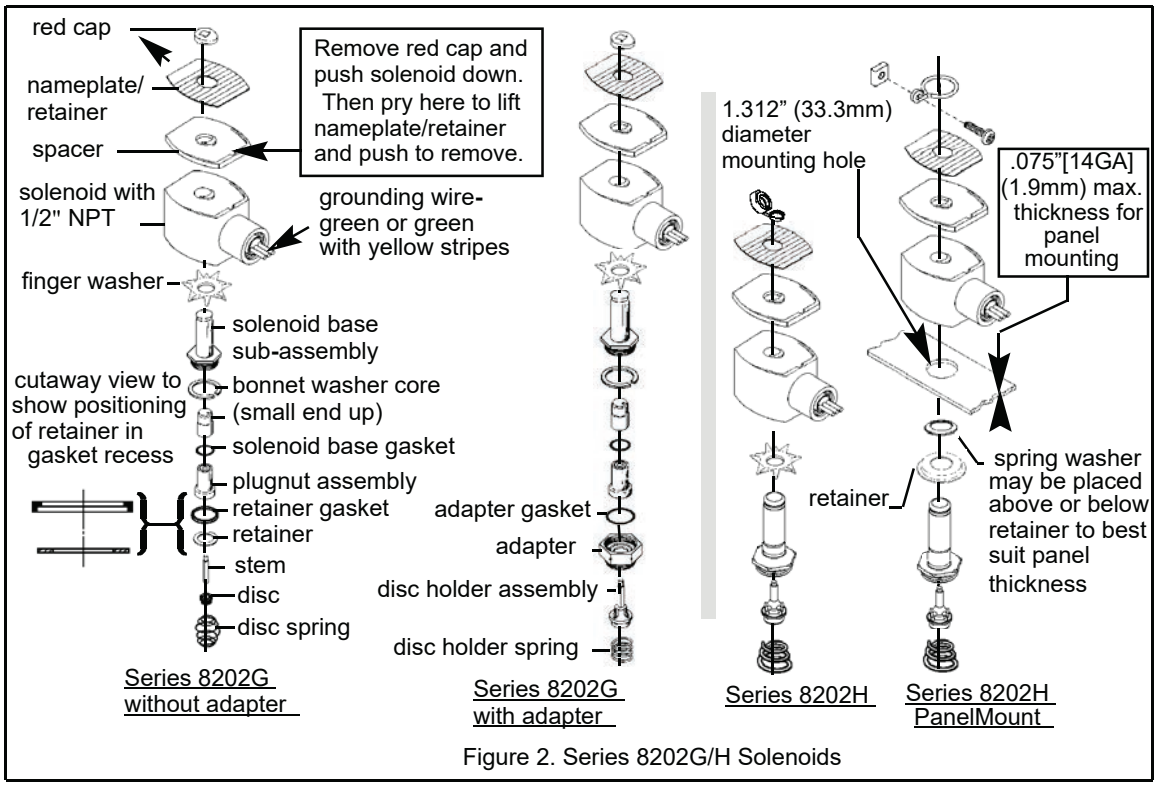

Figure 2. Series 8202G/H Solenoids

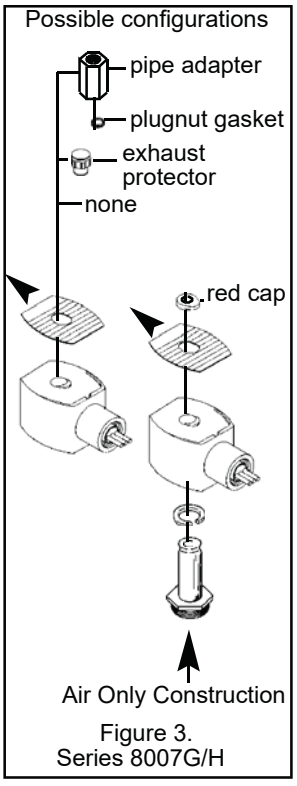

Figure 3. Series 8007G/H

 All Rights Reserved.

Torque Chart

Part Name	Torque Value in Inch-Pounds	Torque Value in Newton-Meters
terminal block screws	10 ± 2	1,1 ± 0,2
socket head screw	15 - 20	1,7 - 2,3
center screw	5±1	0,6 ± 0,1

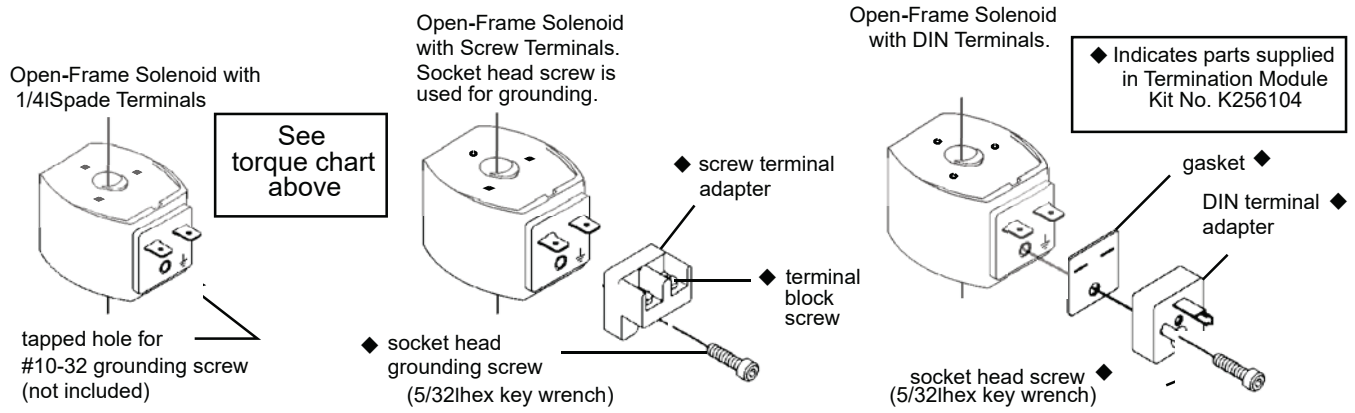

Figure 4. Open-frame solenoids

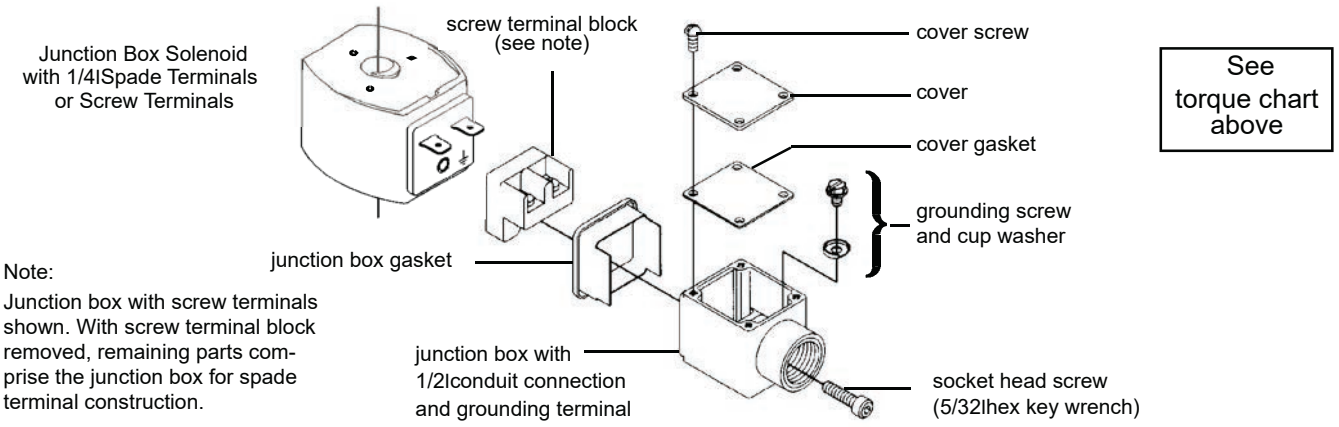

Figure 5. Junction box (optional feature)

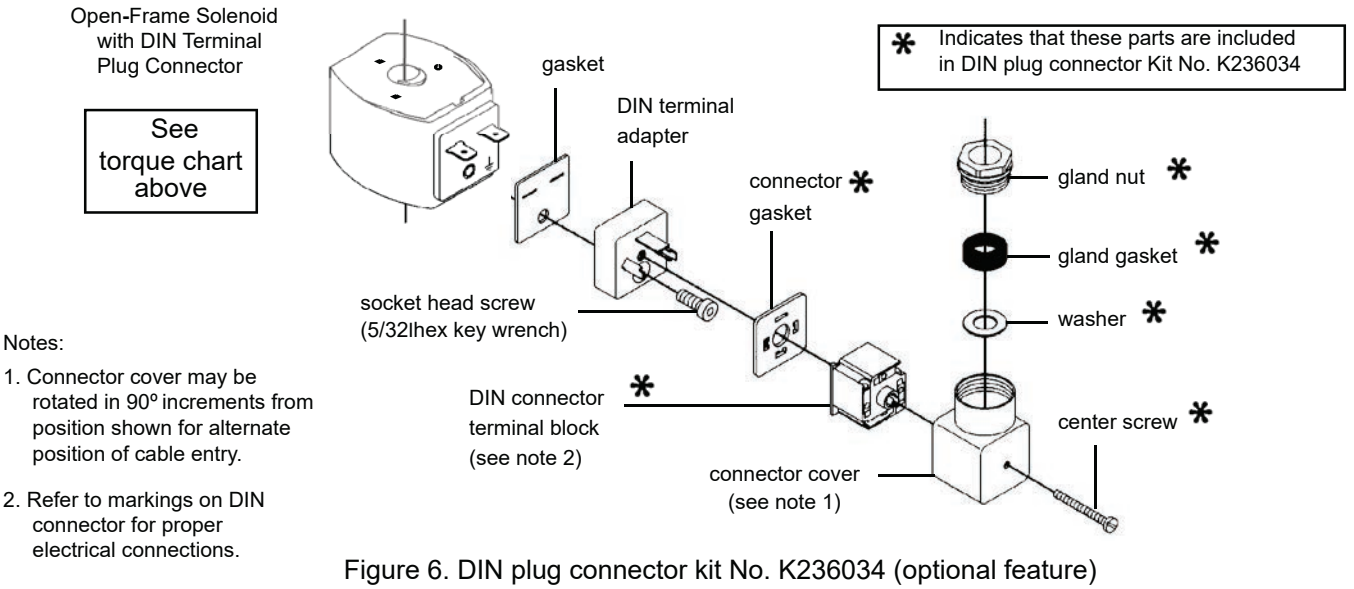

Figure 6. DIN plug connector kit No. K236034 (optional feature)

©ASCO Valve, Inc. 50 Hanover Road, Florham Park, New Jersey 07932 www.ascovalve.com

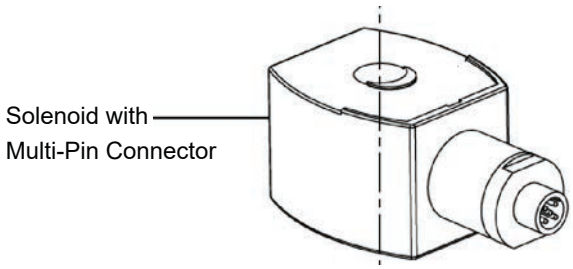

DC: For mating connector, use 4-pin M12 x 1 threaded female connector.

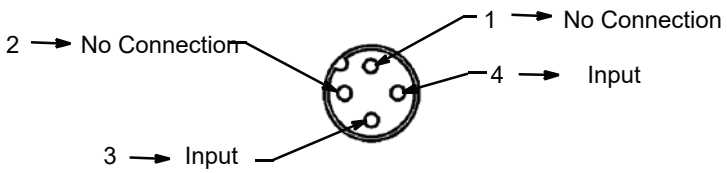

Electrical Connection Size:
DC: Single keyway M12 x 1 (*Not polarity sensitive)*
AC: Dual keyway 1/2-20UNF Thread

Figure 7.
4-Pin Anodized Aluminum Electrical Termination
(VT/VB)

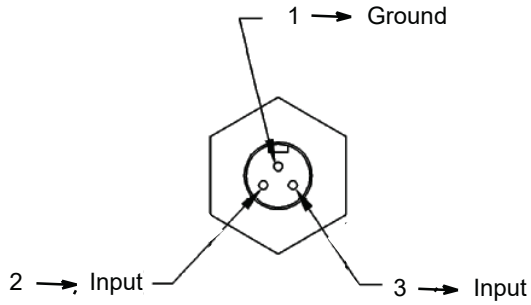

Electrical Connection Size:
DC/AC: 7/8-16 UNS-2A

Figure 8.
Mini 3-pin Epoxy Coated Zinc Electrical Termination
(ZT/ZB)

©ASCO Valve, Inc. 50 Hanover Road, Florham Park, New Jersey 07932 www.ascovalve.com

GB

GENERAL INSTALLATION AND MAINTENANCE INSTRUCTIONS

Note: These general Installation and Maintenance Instructions must be read in conjunction with the Instruction Sheet for the specific product.

INSTALLATION

ASCO Numatics components are intended to be used only within the technical characteristics as specified on the nameplate. Changes to the equipment are only allowed after consulting the manufacturer or its representative. Before installation, depressurize the piping system and clean internally.
The equipment may be mounted in any position if not otherwise indicated on the product by means of an arrow.
The flow direction and pipe connection of valves are indicated on the body.

The pipe connections have to be in accordance with the size indicated on the nameplate and fitted accordingly.

Caution:
- Reducing the connections may cause improper operation or malfunctioning.
- For the protection of the equipment install a strainer or filter suitable for the service involved in the inlet side as close to the product as possible.
- If tape, paste, spray or a similar lubricant is used when tightening, avoid particles entering the system.
- Use proper tools and locate wrenches as close as possible to the connection point.
- To avoid damage to the equipment. DO NOT OVERTIGHTEN pipe connections
- Do not use valve or solenoid as lever.
- The pipe connections should not apply any force, torque or strain to the product.

ELECTRICAL CONNECTION

In case of electrical connections, they are only to be made by trained personnel and have to be in accordance with the local regulations and standards.

Caution:
- Turn off electrical power supply and de-energize the electrical circuit and voltage carrying parts before starting work.
- All electrical screw terminals must be properly tightened according to the standards before putting into service.
- Dependent upon the voltage electrical components must be provided with an earth connection and satisfy local regulations and standards.

The equipment can have one of the following electrical terminals:
- Spade plug connections according to ISO-4400 or 3 x DIN-46244 (when correctly installed, this connection provides IP-65 protection).
- Embedded screw terminals in metal enclosure with "Pg" cable gland
- Spade terminals (AMP type).
- Flying leads or cables.

PUTTING INTO SERVICE

Before pressurizing the system, first carry-out an electrical test. In case of solenoid valves, energize the coil a few times and notice a metal click signifying the solenoid operation.

SERVICE

Most of the solenoid valves are equipped with coils for continuous duty service. To prevent the possibility of personal or property damage, do not touch the solenoid which can become hot under normal operating conditions.

SOUND EMISSION

The emission of sound depends on the application, medium and nature of the equipment used. The exact determination of the sound level can only be carried out by the user having the valve installed in his system

MAINTENANCE

Maintenance of ASCO Numatics products is dependent on service conditions. Periodic cleaning is recommended, the timing of which will depend on the media and service conditions. During servicing, components should be examined for excessive wear. A complete set of internal parts is available as spare parts or rebuild kit. If a problem occurs during installation/maintenance or in case of doubt please contact ASCO Numatics or authorized representatives.

*A separate Declaration of Incorporation relating to EU-Directive 2006/42/EC Annex IIB is available on request for applicable products. Please provide product identification number and serial numbers of products concerned.

The product, , when marked CE, complies with the essential requirements of the EMC 2004/108/EC (until April 20th 2016) and EMC 2014/30/EU (from April 20th 2016) and LVD 2006/95/EC (until April 20th 2016) and LVD 2014/35/EU (from April 20th 2016). A separate Declaration of Conformity is available on request. Please provide product identification number and serial numbers of the products concerned.

FR

INSTRUCTIONS GÉNÉRALES D'INSTALLATION ET D'ENTRETIEN

Note: Ces instructions générales d'installation et d'entretien complètent la notice spécifique du produit.

MONTAGE

Les composants ASCO Numatics sont conçus pour les domaines de fonctionnement indiqués sur la plaque signalétique ou la documentation. Aucune modification ne peut être réalisée sur le matériel sans l'accord préalable du fabricant ou de son représentant. Avant de procéder au montage, dépressuriser les canalisations er effectuer un nettoyage inteme.
A moins qu'une fléche ou la notice n'indique un sens de montage spécifique de la tête magnétique, le produit peut être monté dans n'importe quelle position
Le sens de circulation du fluide est indiqué par repères sur le corps er dans la documentation.
La dimension des tuyauteries doit correspondre au raccordement indiqué sur le corps, l'étiquette ou la notice.

Attention:
- Une restriction des tuyauteries peut entraîner des dysfonctionnements.
- Afin de protéger le matériel, installer une crépine ou un filtre adéquat en amont, aussi près que possible du produit.
- En cas d' utilisation de ruban; pàte, aérosol ou autre lubrifiant lors du serrage, veiller à ce qu" aucun corps étranger ne pénètre dans le circuit.
- Utiliser un outillage approprié et placer les clés aussi près que possible du point de raccordement.
- Afin d'éviter toute détérioration, NE PAS TROP SERRER les raccords des tuyauteries.
- Ne pas se servir de la vanne ou de tête magnétique comme d'un levier.
- The pipe connections should not apply any force, torque or strain to the product.

RACCORDEMENT ÉLECTRIQUE

Le raccordement électrique doit être réalisé par un personnel qualifié et selon les normes et règlements locaux.

Attention:
- Avant toute intervention, couper l'alimentation électrique pour mettre hors tension les composants.
- Toutes les bornes à vis doivent être serrées correctement avant la mise en service.
- Selon la tension, les composants électrique doivent être mis à la terre conformément aux normes et règlements locaux.

Selon les cas, le raccordement électrique s'effectué par:
- Connecteur débrochable ISO-4400 ou 3 x DIN-46244 avec degré de protection IP-65 lorsque le raccordement est correctement effectué.
- Bornes à vis solidaires du bobinage, sous boîter métallique avec presse-étoupe "Pg--".
- Cosses (type AMP).
- Fils ou câbles solidaires de la bobine.

MISE EN SERVICE

Avant de mettre le circuit sous pression, effectuer un essai électrique. Dans le cas d'une électrovanne, mettre la bobine sous tension plusieurs fois er écouter le "clic" métallique qui signale le fonctionnement de la tête magnétique.

FONCTIONNEMENT

La plupart des électrovannes comportant des bobinages prévus pour mise sous tension permanente. Pour éviter toute brûlure, ne pas toucher la tête magnétique qui, en fonctionnement normal et en permanence sous tension, peut atteindre une température élevée.

BRUIT DE FONCTIONNEMENT

Le bruit de fonctionnement varie selon l'utilisation, le fluide et le type de matériel employé. L'utilisateur ne pourra déterminer avec précision le niveau sonore émis qu'après avoir monté le composant sur l'installation.

ENTRETIEN

L'entretien nécessaire aux produits ASCO Numatics varie avec leurs conditions d'utilisation. Il est souhaitable de procéder à un nettoyage périodique dont l'intervalle varie suivant la nature du fluide, les conditions de fonctionnement et le milieu ambiant. Lors de l'intervention. Les composants doivent être examinés our détecter toute usure excessive. Un ensemble de pièces internes est proposé en pièces de rechange pour procéder à la réfection. En cas de problème lors du montage/entretien ou en cas de doute, veuillez contacter ASCO Numatics ou ses représentants officiels.

*Une déclaration d'incorporation relative à la directive UE 2006/42/CE Annexe II B est disponible sur demande pour les produits applicables. Veuillez fournir le numéro d'identification du produit et les numéros de série des produits concernés.

Lorsqu'il est marqué du label CE, le produit est conforme aux exigences essentielles des directives CEM 2004/108/CE (jusqu'au 20 avril 2016) et CEM 2014/30/UE (à partir du 20 avril 2016) et des directives Basse tension 2006/95/CE (jusqu'au 20 avril 2016) et 2014/35/UE (à partir du 20 avril 2016). Une déclaration de conformité peut être fournie sur simple demande. Veuillez fournir le numéro d'identification du produit et les numéros de série des produits concernés.

DE

ALLGEMEINE BETRIEBSANLEITUNG

Achtung: Diese Allgemeine Betriebsanleitung gilt in Zusammenhang mit der jeweiligen Betriebsanleitung für die speziellen Produkte.

EINBAU

Die ASCO Numatics-Komponenten dürfen nur innerhalb der auf den Typenschildern angenebenen Daten eingesetzt warden, Veränderungen an den Produkten sind nur nach Rücksprache mit ASCO Numatics zulässig.
Vor dem Einbau der Ventile muß das Rohrleitungssystem drucklos geschaltet und innen gereinigt werden.
Die Einbaulage der Produkte ist genereil beliebig. Ausnahme: Die mit einem Pfeil gekennzeichneten Produkte müssen entsprechend der Pfeilrichtung montiert werden.
Die Durchflußrichtung und der Eingang von Ventilen sind gekennzeichnet.

Die Rohranschlüsse sollten entsprechend den Größenangaben auf den Typenschildern mit handelsüblichen Verschraubungen durchgeführt werden. Dabei ist folgendes zu beachten:
- Eine Reduzierung der Anschlüsse kann zu Leistungs-und Funktionsminderungen führen.
- Zum Schutz der Ventile sollten Schmutzfänger oder Filter so dicht wie möglich in den Ventileingang integriert werden.
- Bei Abdichtung am Gewinde ist darauf zu achten, daß kein Dichtungsmaterial in die Rohrleitung oder das Ventil gelangt.
- Zur Montage darf nur geeignetes Werkzeug verwendetwerden.
- Konische Verschraubungen sind sorgfältig anzuziehen. Es ist darauf zu achten, daß beim Anziehen das Gehäuse nicht beschädigt wird.
- Spule und Führungsrohr von Ventilen dürfen nicht als Gegenhalter benutzt werde.
- Die Rohrleitungsanschlüsse sollen fluchten und dürfen keine Spannungen auf das Ventil übertragen.

ELECTRISCHER ANSCHLUß

Der elektrische Anschluß ist von Fachpersonal entsprechend den geltenden VDE-und CEE Richtlinien auszuführen. Es ist besonders auf foigendes zu achten:
- Vor Beginn der Arbeiten ist sicherzustellen, daß alle elektrischen Leitungen und Netzteile spannungslos geschaltet sind.
- Alle Anschlußklemmen sind nach Beendigung der Arbeiten vorschriftsmäßig entsprechend den geltenden Regeln anzuziehen.
- Je nach Spannungsbereich muß das Ventil nach den geltenden Regeln einen Schutzleiteranschluß erhalten.

Der Magnetantrieb kann je nach Bauart folgende Anschlüsse haben:
- Anschluß für Gerätesteckdose nach DIN 43650 Form A/ISO 4400 oder 3 x DIN 46244 (durch ordnungsgemäße Montage der Gerätesteckdose wird Schutzklasse IP 65 erreicht).
- Anschlüsse innerhalb eines Blechgehäuses mittels Schraubklemmen. Kabeleinführung ins Gehäuse mit PG-Verschraubung.
- Offene Spulen mit Flachsteckern (AMP-Fahnen) oder mit eingegossenen Kabelenden.

INBETRIEBNAHME

Vor Druckbeaufschlagung des Produktes sollte eine elektrische Funktionsprüfung erfolgen:

Bei Ventilen Spannung an der Magnetspule mehrmals ein-und ausschalten. Es muß ein Klicken zu hören sein.

BETRIEB

Die meisten Ventile sind mit Spulen für Dauerbetrieb ausgerüstet. Zur Vermeidung von Personen-und Sachschäden sollte jede Berührung mit dem Ventil vermieden werden, da die Magnetspule bei längerem Betrieb sehr heiß werden kann.

GERÄUSCHEMISSION

Diese hängt sehr stark vom Anwendungsfall, den Betriebsdaten und dem Medium, mit denen das Produkt beaufschlagt wird, ab. Eine Aussage über die Geräuschemission des Produktes muß deshalb von demjenigen getroffen werden, der das Produkt innerhalb einer Maschine in Betrieb nimmit.

WARTUNG

Die Wartung hängt von den Einsatzbedigungen ab. In entsprechenden Zeitabständen muß das Produkt geöffnet und gereinigt werden. Für die Überholung der ASCO Numatics-Produkte können Ersatzteilsätze geliefert werden. Treten Schwierigkeiten bel Einbau, Betrieb oder Wartung auf, sowie bei Unklarheiten, ist mit ASCO Numatics Rücksprache zu halten.

ASCO Numatics Produkte sind entsprechend der EG-Richtlinie 89/392/EWG gefertigt.

*Eine separate Herstellererklärung im Sinne der Richtlinie 2006/42/EWG Anhang II B ist auf Anfrage für die entsprechenden Produkte erhältlich. Geben Sie bitte die Kennnummer sowie die Seriennummer der betreffenden Produkte an.

Das Produkt, wenn mit CE gekennzeichnet, erfüllt die Anforderungen von EMV 2004/108/EWG (bis 20. April 2016) und EMV 2014/30/EU (vom 20. April 2016) und LVD 2006/95/EWG (bis 20. April 2016) und LVD 2014/35/EU (vom 20. April 2016). Eine separate Konformitätserklärung ist auf Anfrage erhältlich. Geben Sie bitte die Kennnummer sowie die Seriennummer der betreffenden Produkte an.

ASCO
50 Hanover Road
Florham Park, New Jersey 07932
Tel. (973) 966-2000
Fax (973) 966-2628

ASCO
1561 Columbia Highway
Aiken, South Carolina 29801
Tel. (803) 641-9200
Fax (803) 641-9290

ASCO Valves®

E 264274 - 04/2016

All Rights Reserved.
©ASCO Valve, Inc. 50 Hanover Road, Florham Park, New Jersey 07932 www.ascovalve.com

ASHCROFT

TYPE 1009, PRESSURE GAUGE

LEFT BLANK

ASHCROFT®

PRESSURE GAUGE INSTALLATION, OPERATION AND MAINTENANCE



I&M008-10098-5/02 (250-1353-L) Rev. 12/15

Left Blank

CONTENTS

		Page
1.0	**Selection and Application**	
1.1	Range	4
1.2	Temperature	4
1.3	Media	4
1.4	Oxidizing media	4
1.5	Pulsation/Vibration	4
1.6	Gauge fills	4
1.7	Mounting	4
2.0	**Temperature**	
2.1	Ambient Temperature	4
2.2	Accuracy	4
2.3	Steam service	4
2.4	Hot or very cold media	4
2.5	Diaphragm seals	5
2.6	Autoclaving	5
3.0	**Installation**	
3.1	Installation Location	5
3.2	Gauge reuse	5
3.3	Tightening of gauge	5
3.4	Process isolation	5
3.5	Surface mounting	5
3.6	Flush mounting	5
4.0	**Operation**	
4.1	Frequency of inspection	5
4.2	In-service inspection	5
4.3	When to check accuracy	5
4.4	When to recalibrate	5
4.5	Other considerations	5
4.6	Spare parts	5
5.0	**Gauge Replacement**	5
6.0	**Accuracy: Procedures/Definitions**	6
6.1	Calibration - Rotary movement gauges	7
7.0	**Diaphragm Seals**	
7.1	General	8
7.2	Installation	8
7.3	Operation	8
7.4	Maintenance	8
7.5	Failures	8
8.0	**Dampening Devices**	
8.1	General	8
8.2	Throttle Screws & Plugs	8
8.3	Ashcroft Pulsation Dampener	8
8.4	Ashcroft Pressure Snubber	8
8.5	Ashcroft Needle Valves	8
8.6	Chemiquip® Pressure Limiting Valves	8
9.0	**Test Equipment & Tool Kits**	
9.1	Pressure Instrument Testing Equipment	9
9.2	Tools & Tool Kits	9
9.3	Kits to Convert a Dry Gauge to a Liquid Filled or Weather Proof Case Gauge	9
9.4	2½ & 3½ 1009 Duralife® Gauge Tools	10
Appendix		
	Type 1188 Bellows Gauge Calibration Procedure	11
	Type 1009 Calibration Procedure (Vacuum-Previous Style)	12
	Type 1009 Calibration Procedure (Pressure-Previous Style)	13
	Type 1009 Calibration Procedure (Pressure & Vacuum-Current Style)	14
	Type 1279 & 1379 I&M Liquid Fill Conversion Instruction	15-16
	Type 1082 Calibration Procedure	17-18

Cover photo courtesy of Johnson/Yokogawa Co.

Chemiquip® is a registered trademark of Chemiquip Products Co. Inc.

1.0 SELECTION & APPLICATION

Users should become familiar with ASME B40.100 (Gauges – Pressure Indicating Dial Type – Elastic Element) before specifying pressure measuring gauges. That document – containing valuable information regarding gauge construction, accuracy, safety, selection and testing – may be ordered from:

ASME International
Three Park Avenue
New York, N.Y. 10016-5990
800-843-2763 (US/Canada)
001-800-843-2763 (Mexico)
973-882-1170 outside North America
email: infocentral@asme.org
www.asme.org

WARNING: To prevent misapplication, pressure gauges should be selected considering media and ambient operating conditions. Improper application can be detrimental to the gauge, causing failure and possible personal injury, property damage or death. The information contained in this manual is offered as a guide in making the proper selection of a pressure gauge. Additional information is available from Ashcroft Inc.

The following is a highlight of some of the more important considerations:

1.1 Range – The range of the instrument should be approximately twice the maximum operating pressure. Too low a range may result in (a) low fatigue life of the elastic element due to high operating stress and (b) susceptibility to overpressure set due to pressure transients that exceed the normal operating pressure. Too high a range may yield insufficient resolution for the application.

1.2 Temperature – Refer to Section 2 of this manual for important information concerning temperature related limitations of pressure gauges, both dry and liquid filled.

1.3 Media – The material of the process sensing element must be compatible with the process media. Use of a diaphragm seal with the gauge is recommended for process media that (a) is corrosive to the process sensing element; (b) contain heavy particulates (slurries) or (c) are very viscous including those that harden at room temperature.

1.4 Oxidizing media – Gauges for direct use on oxidizing media should be specially cleaned. Gauges for oxygen service should be ordered to variation X6B and will carry the ASME required dial marking "USE NO OIL" in red letters. Gauges for direct use on other oxidizing media may be ordered to variation X6W. They will be cleaned but carry no dial marking. *PLUS!*™ Performance gauges or Halocarbon filled gauge or diaphragm fill is required for use with oxidizing media; order variation XCF.

1.5 Pulsation/Vibration – Pressure pulsation can be dampened by several mechanisms; the patented *PLUS! Performance* gauge will handle the vast majority of applications. One exception to this is high frequency pulsation which is difficult to detect. The only indication may be an upscale zero shift due to movement wear. These applications should be addressed with a liquid filled gauge, or in extreme cases, a remotely mounted liquid filled gauge connected with a length of capillary line. The small diameter of the capillary provides excellent dampening, but can be plugged. The Ashcroft 1106 pulsation dampener and 1112 snubber are auxiliary devices which dampen pulsation with less tendency to plug.

1.6 Gauge fills. – Once it has been determined that a liquid filled gauge is in order, the next step is selecting the type of fill. **Glycerin** satisfies most applications. While being the least expensive fill, its usable temperature range is 20/180°F. **Silicone** filled gauges have a broader service range: –40/250°F. Oxidizing media require the use of **Halocarbon,** with a service range of –40/250°F. Pointer motion will be slowed at the low end of the low end of these temperature ranges.

1.7 Mounting – Users should predetermine how the gauge will be mounted in service: stem (pipe), wall (surface) or panel (flush). Ashcroft wall or panel mounting kits should be ordered with the gauge. See Section 3.

2.0 TEMPERATURE

2.1 Ambient Temperature – To ensure long life and accuracy, pressure gauges should preferably be used at an ambient temperature between –20 and +150°F (–30 to +65°C). At very low temperatures, standard gauges may exhibit slow pointer response. Above 150°F, the accuracy will be affected by approximately 1.5% per 100°F. Other than discoloration of the dial and hardening of the gasketing and degradation of accuracy, non-liquid filled Type 1279 (phenolic case) and 1379 (aluminum case) Duragauge® gauge, with standard glass windows, can withstand continuous operating temperatures up to 250°F. Unigauge models 2½˝ and 3½˝ 1009 and 1008S liquid filled gauges can withstand 200°F but glycerin fill and the acrylic window of Duragauge® gauges will tend to yellow. Silicone fill will have much less tendency to yellow. Low pressure, liquid filled Types 1008 and 1009 gauges may have some downscale errors caused by liquid fill expansion. This can be alleviated by venting the gauge at the top plug (pullout the blue plug insert). To do this the gauge must be installed in the vertical position.

Although the gauge may be destroyed and calibration lost, gauges can withstand short times at the following temperatures: gauges with all welded pressure boundary joints, 750°F (400°C); gauges with silver brazed joints, 450°F (232°C) and gauges with soft soldered joints, 250°F (121°C). For expected long term service below –20°F (–30°C) Duragauge® and 4½˝ 1009 gauges should be hermetically sealed and specially lubricated; add "H" to the product code for hermetic sealing. Add variation XVY for special lubricant. Standard Duralife® gauges may be used to –50°F (–45°C) without modification.

2.2 Accuracy – Heat and cold affect accuracy of indication. A general rule of thumb for **dry gauges** is 0.5% of full scale change for every 40°F change from 75°F. Double that allowance for gauges with hermetically sealed or liquid filled cases, except for Duragauge® gauges where no extra allowance is required due to the elastomeric, compensating back. Above 250°F there may exist very significant errors in indication.

2.3 Steam service – In order to prevent live steam from entering the Bourdon tube, a siphon filled with water should be installed between the gauge and the process line. Siphons can be supplied with ratings up to 4,000 psi. If freezing of the condensate in the loop of the siphon is a possibility, a diaphragm seal should be used to isolate the gauge from the process steam. Siphons should also be used whenever condensing, hot vapors (not just steam) are present. Super heated steam should have enough piping or capillary line ahead of the siphon to maintain liquid water in the siphon loop.

2.4 Hot or very cold media – A five foot capillary line assembly will bring most hot or cold process media within the recommended gauge ambient temperature range. For media above

750°F (400°C) the customers should use their own small diameter piping to avoid possible corrosion of the stainless steel. The five foot capillary will protect the gauges used on the common cryogenic (less than –300°F (200°C) gases, liquid argon, nitrogen, and oxygen.) The capillary and gauge must be cleaned for oxygen service. The media must not be corrosive to stainless steel, and must not plug the small bore of the capillary.

2.5 Diaphragm seals – A diaphragm seal should be used to protect gauges from corrosive media, or media that will plug the instrument. Diaphragm seals are offered in a wide variety of designs and corrosion resistant materials to accommodate almost any application and most connections. Visit www.ashcroft.com for details.

2.6 Autoclaving – Sanitary gauges with clamp type connections are frequently steam sterilized in an autoclave. Gauges equipped with polysulfone windows will withstand more autoclave cycles than those equipped with polycarbonate windows. Gauges equipped with plain glass or laminated safety glass **should not be autoclaved.** Gauge cases should be vented to atmosphere (removing the rubber fill/safety plug if necessary) **before** autoclaving to prevent the plastic window from cracking or excessively distorting. If the gauge is liquid filled, the fill should be drained from the case and the front ring loosened before autoclaving.

3.0 INSTALLATION

3.1 Location – Whenever possible, gauges should be located to minimize the effects of vibration, extreme ambient temperatures and moisture. Dry locations away from very high thermal sources (ovens, boilers etc.) are preferred. If the mechanical vibration level is extreme, the gauge should be remotely located (usually on a wall) and connected to the pressure source via flexible tubing.

3.2 Gauge reuse – ASME B40.100 recommends that gauges not be moved indiscriminately from one application to another. The cumulative number of pressure cycles on an in-service or previously used gauge is generally unknown, so it is generally safer to install a new gauge whenever and wherever possible. This will also minimize the possibility of a reaction with previous media.

3.3 Tightening of gauge – Torque should never be applied to the gauge case. Instead, an open end or adjustable wrench should always be used on the wrench flats of the gauge socket to tighten the gauge into the fitting or pipe. NPT threads require the use of a suitable thread sealant, such as pipe dope or teflon tape, and must be tightened very securely to ensure a leak tight seal.

CAUTION: Torque applied to a diaphragm seal or its attached gauge, that tends to loosen one relative to the other, can cause loss of fill and subsequent inaccurate readings. Always apply torque **only** to the wrench flats on the lower seal housing when installing filled, diaphragm seal assemblies or removing same from process lines.

3.4 Process isolation – A shut-off valve should be installed between the gauge and the process in order to be able to isolate the gauge for inspection or replacement without shutting down the process.

3.5 Surface mounting – Also known as wall mounting. Gauges should be kept free of piping strains. The gauge case mounting feet, if applicable, will ensure clearance between the pressure relieving back and the mounting surface.

3.6 Flush mounting – Also known as panel mounting. The applicable panel mounting cutout dimensions can be found at www.ashcroft.com

4.0 OPERATION

4.1 Frequency of inspection – This is quite subjective and depends upon the severity of the service and how critical the accuracy of the indicated pressure is. For example, a monthly inspection frequency may be in order for critical, severe service applications. Annual inspections, or even less frequent schedules, are often employed in non-critical applications.

4.2 In-service inspection – If the accuracy of the gauge cannot be checked in place, the user can at least look for (a) erratic or random pointer motion; (b) readings that are suspect – especially indications of pressure when the user believes the true pressure is 0 psig. Any gauge which is obviously not working or indicating erroneously, should be immediately valved-off or removed from service to avoid a possible pressure boundary failure.

4.3 When to check accuracy – Any suspicious behavior of the gauge pointer warrants that a full accuracy check be performed. Even if the gauge is not showing any symptoms of abnormal performance, the user may want to establish a frequency of bench type inspection.

4.4 When to recalibrate – This depends on the criticality of the application. If the accuracy of a 3-2-3% commercial type gauge is only 0.5% beyond specification, the user must decide whether it's worth the time and expense to bring the gauge back into specification. Conversely if the accuracy of a 0.25% test gauge is found to be 0.1% out of specification then the gauge should be recalibrated.

4.5 Other considerations – These include (a) bent or unattached pointers due to extreme pressure pulsation; (b) broken windows which should be replaced to keep dirt out of the internals; (c) leakage of gauge fill; (d) case damage – dents and/or cracks; (e) any signs of service media leakage through the gauge including its connection; (f) discoloration of gauge fill that impedes readability.

4.6 Spare parts – As a general rule it is recommended that the user maintain in inventory one complete Ashcroft® instrument for every ten (or fraction thereof) of that instrument type in service.

5.0 GAUGE REPLACEMENT

It is recommended that the user stock one complete Ashcroft® instrument for every ten (or fraction thereof) of that instrument type in service. With regard to gauges having a service history, consideration should be given to discarding rather than repairing them. Gauges in this category include the following:

a. Gauges that exhibit a span shift greater than 10%. It is possible the Bourdon tube has suffered thinning of its walls by corrosion.

b. Gauges that exhibit a zero shift greater than 25%. It is likely the Bourdon tube has seen significant overpressure leaving residual stresses that may be detrimental to the application.

c. Gauges which have accumulated over 1,000,000 pressure cycles with significant pointer excursion.

d. Gauges showing any signs of corrosion and/or leakage of the pressure system.

e. Gauges which have been exposed to high temperature or exhibit signs of having been exposed to high temperature – specifically 250°F or greater for soft soldered systems; 450°F or greater for brazed systems; and 750°F or greater for welded systems.

f. Gauges showing significant friction error and/or wear of the movement and linkage.

g. Gauges having damaged sockets, especially damaged threads.

h. Liquid filled gauges showing loss of case fill.

NOTE: ASME B40.100 does not recommend moving gauges from one application to another. This policy is prudent in that it encourages the user to procure a new gauge, properly tailored by specification, to each application that arises.

6.0 ACCURACY: PROCEDURES/DEFINITIONS

Accuracy inspection – Readings at approximately five points equally spaced over the dial should be taken, both upscale and downscale, before and after lightly rapping the gauge to remove friction. **A pressure standard with accuracy at least four times greater than the accuracy of the gauge being tested is recommended.**

Equipment – A finely regulated pressure supply will be required. It is critical that the piping system associated with the test setup be leaktight. The gauge under test should be positioned as it will be in service to eliminate positional errors due to gravity.

Method – ASME B40.100 recommends that **known** pressure (based on the reading from the pressure standard used) be applied to the gauge under test. Readings including any error from the nominal input pressure, are then taken from the gauge under test. The practice of aligning the pointer of the gauge under test with a dial graduation and then reading the error from the master gauge ("reverse reading") can result in inconsistent and misleading data and should NOT be used.

Calibration chart – After recording all of the readings it is necessary to calculate the errors associated with each test point using the following formula: ERROR in percent = 100 times (TRUE VALUE minus READING) ÷ RANGE. Plotting the individual errors (Figure 1) makes it possible to visualize the total gauge characteristic. The plot should contain all four curves: upscale – before rap; upscale – after rap; downscale – before rap; downscale – after rap. "*Rap*" means lightly tapping the gauge **before** reading to remove friction as described in ASME B40.100.

Referring to Figure 1, several classes of error may be seen:

Zero – An error which is approximately equal over the entire scale. This error can be manifested when either the gauge is

FIG. 1

TYPICAL CALIBRATION CHART

INDICATED VALUE (PSI)

True Value – PSI	Increasing – Without RAP	Increasing – With RAP	Decreasing – Without RAP	Decreasing – With RAP
0	–.4	0	–.4	0
40	+.8	+1.0	+1.4	+1.1
80	+.4	+.5	+1.2	+1.0
120	–.4	–1.0	+.8	+.6
160	–.8	–.5	+.6	+.4
200	+.4	+.8	+.4	+.4

ERROR (% OF FULL SCALE)

True Value – % of Range	Increasing – Without RAP	Increasing – With RAP	Decreasing – Without RAP	Decreasing – With RAP
0	–.20	0	–.20	0
20	+.40	+.50	+.70	+.55
40	+.20	+.25	+.60	+.50
60	–.20	–.05	+.40	+.30
80	–.40	–.25	+.30	+.20
100	+.20	+.40	+.20	+.20

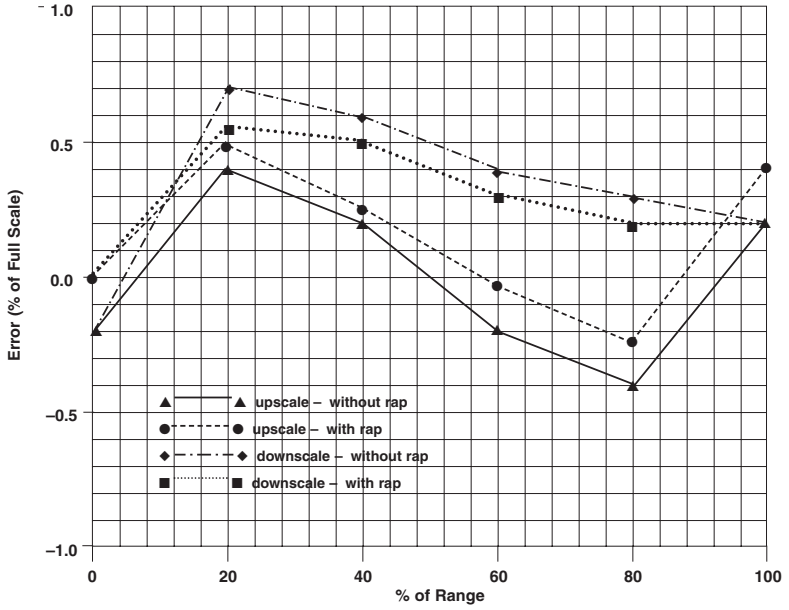

dropped or overpressured and the Bourdon tube takes a permanent set. This error may often be corrected by simply repositioning the pointer. Except for test gauges, it is recommended that the pointer be set at midscale pressure to "split" the errors.

Span – A span error exists when the error at full scale pressure is different from the error at zero pressure. This error is often proportional to the applied pressure. Most Ashcroft gauges are equipped with an internal, adjusting mechanism with which the user can correct any span errors which have developed in service.

Linearity – A gauge that has been properly spanned can still be out of specification at intermediate points if the response of the gauge as seen in Figure 1 (Typical Calibration Chart) is not linear. The Ashcroft Duragauge® pressure gauge is equipped with a rotary movement feature which permits the user to minimize this class of error. Other Ashcroft gauge designs (e.g., 1009 Duralife®) require that the dial be moved left or right prior to tightening the dial screws.

Hysteresis – Some Bourdon tubes have a material property known as hysteresis. This material characteristic results in differences between the upscale and downscale curves. This class of error can **not** be eliminated by adjusting the gauge movement or dial position.

Friction – This error is defined as the difference in readings before and after lightly tapping the gauge case at a check point. Possible causes of friction are burrs or foreign material in the movement gearing, "bound" linkages between the movement and the bourdon tube, or an improperly tensioned hairspring. If correcting these potential causes of friction does not eliminate excessive friction error, the movement should be replaced.

6.1 Calibration – Rotary Movement Gauges and Type 1259 Gauges – Inspect gauge for accuracy. Many times gauges are simply "off zero" and a simple pointer adjustment using the micrometer pointer is adequate. If inspection shows the gauge warrants recalibration to correct span and/or linearity errors, proceed as follows:

a. Remove ring, window and, if solid front case, the rear closure assembly.

b. Pressurize the gauge **once** to full scale and back to zero.

c. Refer to Figure 2 (Ashcroft System Assembly w/Rotary Gear Movement) for a view of a typical Ashcroft rotary system assembly with component parts identified. Refer to Figure 2A for link configuration of Type 1259 gauge.

FIG. 2 ASHCROFT SYSTEM ASSEMBLY W/ROTARY GEAR MOVEMENT

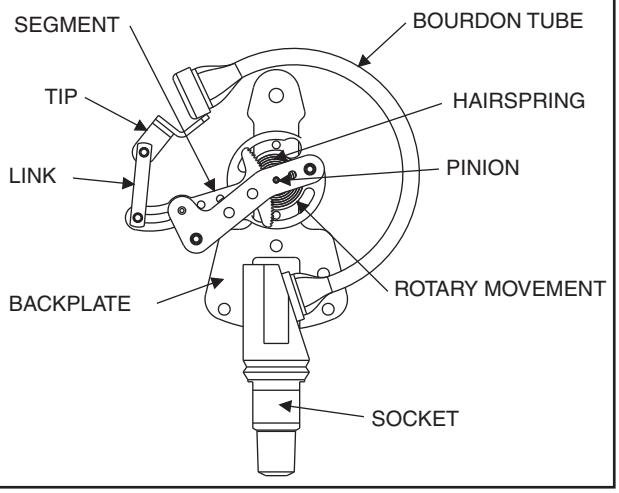

FIG. 2A ASHCROFT TYPE 1259 SYSTEM ASSEMBLY

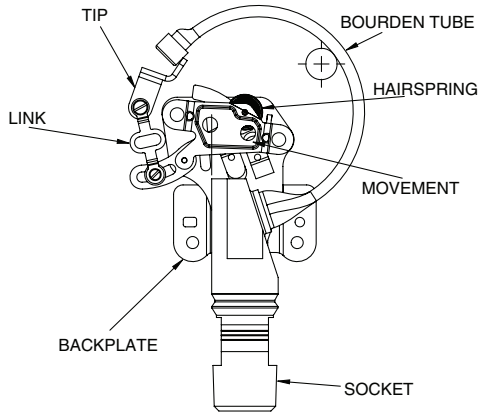

d. Adjust the micrometer pointer so that it rests at the true zero position. For open front gauges the pointer and dial must also be disassembled and the pointer should then be lightly pressed onto the pinion at the 9:00 o'clock position.

e. Apply full scale pressure and note the magnitude of the span error. With open front gauges, ideal span (270 degrees) will exist when at full scale pressure the pointer rests exactly at the 6:00 o'clock position.

f. If the span has shifted significantly (span error greater than 10%), the gauge should be replaced because there may be some partial corrosion inside the Bourdon tube which could lead to ultimate failure. If the span error exceeds 0.25%, loosen the lower link screw and move the lower end of the link toward the movement to increase span or away to decrease span. An adjustment of 0.004 inch will change the span by approximately 1%. This is a repetitive procedure which often requires more than one adjustment of the link position and the subsequent rechecking of the errors at zero and full scale pressure.

g. Apply midscale pressure and note error in reading. Even though the gauge is accurate at zero and full scale, it may be inaccurate at the midpoint. This is called linearity error. For corrections to linearity with the Type 1259 gauges refer to Figure 2B. For rotary movement gauges, note the following: if the error is positive, the movement should be rotated counter clockwise. Rotating the movement one degree will change this error by approximately 0.25%. Rotating the movement often affects span and it should be subsequently rechecked and readjusted if necessary according to step 6.1e and 6.1f.

FIG. 2B LINEARITY ADJUSTMENT & LINK CONFIGURATION FOR ASHCROFT TYPE 1259

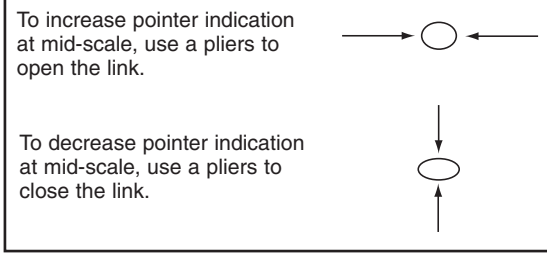

h. While recalibrating the gauge, the friction error – difference in readings taken with and without rap – should be

noted. This error should not exceed the basic accuracy of the gauge. If the friction error is excessive, the movement should be replaced. One possible cause of excessive friction is improper adjustment of the hairspring. The hairspring torque,or tension, must be adequate without being excessive. The hairspring should also be level, unwind evenly (no turns rubbing) and it should never tangle.

NOTES:

1 For operation of test gauge external zero reset, refer to page 17.

2 For test gauge calibration procedure, refer to Figure 2 on page 18.

7.0 DIAPHRAGM SEALS

7.1 General – A diaphragm seal (isolator) is a device which is attached to the inlet connection of a pressure instrument to isolate its measuring element from the process media. The space between the diaphragm and the instrument's pressure sensing element is solidly filled with a suitable liquid. Displacement of the liquid fill in the pressure element, through movement of the diaphragm, transmits process pressure changes directly to a gauge, switch or any other pressure instrument. When diaphragm seals are used with pressure gauges, an additional 0.5% tolerance must be added to the gauge accuracy because of the diaphragm spring rate.

Used in a variety of process applications where corrosives, slurries or viscous fluids may be encountered, the diaphragm seal affords protection to the instrument where:

- The process fluid being measured would normally clog the pressure element.
- Pressure element materials capable of withstanding corrosive effects of certain fluids are not available.
- The process fluid might freeze due to changes in ambient temperature and damage the element.

7.2 Installation – Refer to bulletin OH-1 for information regarding (a) seal configurations; (b) filling fluids; (c) temperature range of filling fluids; (d) diaphragm material pressure and temperature limits; (e) bottom housing material pressure and temperature limits; (f) pressure rating of seal assembly; (g) accuracy/temperature errors of seal assembly; (h) diaphragm seal displacement. The volumetric displacement of the diaphragm must at least equal the volumetric displacement of the measuring element in the pressure instrument to which the seal is to be attached.

It is imperative that the pressure instrument/diaphragm seal assembly be **properly** filled prior to being placed in service. Ashcroft diaphragm seal assemblies should only be filled by a seal assembler certified by Ashcroft Inc. Refer to section 3.3 for a cautionary note about not applying torque on either the instrument or seal relative to the other.

7.3 Operation – All Ashcroft® diaphragm seals, with the exception of Type 310 mini-seals, are continuous duty. Should the pressure instrument fail, or be removed accidentally or deliberately, the diaphragm will seat against a matching surface preventing damage to the diaphragm or leakage of the process fluid.

7.4 Maintenance – Clamp type diaphragm seals – Types 100, 200 and 300 – allow for replacement of the diaphragm or diaphragm capsule, if that ever becomes necessary. The Type 200 top housing must also be replaced with the diaphragm. With all three types the clamping arrangement allows field disassembly to permit cleaning of the seal interior.

7.5 Failures – Diaphragm failures are generally caused by either corrosion, high temperatures or fill leakage. Process media build-up on the process side of the diaphragm can also require seal cleaning or replacement. Consult Customer Service, Stratford CT for advice on seal failures and/or replacement.

WARNING: All seal components should be selected considering process and ambient operating conditions to prevent misapplication. Improper application could result in failure, possible personal injury, property damage or death.

8.0 DAMPENING DEVICES

8.1 General – Some type of dampening device should be used whenever the pressure gauge may be exposed to repetitive pressure fluctuations that are fairly rapid, high in magnitude and especially when transitory pressure spikes exceeding the gauge range are present (as with starting and stopping action of valves and pumps). A restricted orifice of some kind is employed through which pressure fluctuations must pass before they reach the Bourdon tube. The dampener reduces the magnitude of the pressure pulse thus extending the life of the Bourdon tube and movement. This reduction of the pressure pulsation as "seen" by the pressure gauge is generally evidenced by a reduction in the pointer travel. If the orifice is very small the pointer may indicate the average service pressure, with little or no indication of the time varying component of the process pressure.

Commonly encountered media (e.g. – water and hydraulic oil) often carry impurities which can plug the orifice over time thus rendering the gauge inoperative until the dampener is cleaned or replaced.

Highly viscous media and media that tend to periodically harden (e.g., asphalt) require a diaphragm seal be fitted to the gauge. The seal contains an internal orifice which dampens the pressure fluctuation within the fill fluid.

8.2 Throttle Screws & Plugs – These accessories provide dampening for the least cost. They have the advantage of fitting completely within the gauge socket and come in three types: (a) a screwed-in type which permits easy removal for cleaning or replacement; (b) a pressed in, non-threaded design and (c) a pressed in, threaded design which provides a highly restrictive, helical flow path. Not all styles are available on all gauge types.

8.3 Ashcroft Pulsation Dampener – Type 1106 Ashcroft pulsation dampener is a moving pin type in which the restricted orifice is the clearance between the pin and any one of five preselected hole diameters. Unlike a simple throttle screw/plug, this device has a self-cleaning action in that the pin moves up and down under the influence of pressure fluctuations.

8.4 Ashcroft Pressure Snubber – The heart of the Type 1112 pressure snubber is a thick porous metal filter disc. The disc is available in four standard porosity grades.

8.5 Ashcroft Needle Valves – Type 7001 thru 7004 steel needle valves provide varying degrees of dampening. These devices, in the event of plugging, can easily be opened to allow the pressure fluid to clear away the obstruction.

8.6 Chemiquip® Pressure Limiting Valves – Model PLV-255, PLV-2550, PLV-5460, PLV-5500 and PLV-6430, available with and without built-in snubbers, automatically "shut off" at adjustable preset values of pressure to protect the gauge from damage to overpressure. They are especially useful on hydraulic systems wherein hydraulic transients

(spikes) are common.

9.0 TEST EQUIPMENT & TOOL KITS

See our website www.ashcroft.com for more details

9.1 Pressure Instrument Testing Equipment

Type 1305D Deadweight Tester

Type 1327D Pressure Gauge Comparator

Type 1327CM “Precision” Gauge Comparator

9.2 Tools & Tool Kits For Recalibration of 4½˝ and Larger Gauges

Type 2505 universal carrying case for 1082 test gauge

Type 266A132-01 span wrench for 1082 test gauge

Type 1281 socket O-Ring kit for 1279/1379 lower connect

Type 1285 4½˝ ring wrench for 1279/1379 lower & back connect

Type 1286 6˝ ring wrench for 1379 lower & back connect

Type 3220 pointer puller (all gauges except 1009 Duralife®)

Type 3530 pinion back-up tool for 1009 Duralife®

Type 3220 Handjack set

Type 1105 Tool Kit

9.3 Kits to Convert a Dry Gauge to a Liquid Filled or Weather Proof Case Gauge

Type 1280 conversion kit for 4½˝ lower connect 1279/1379

Type 1283 conversion kit for 4½˝ back connect 1279/1379

Type 1284 conversion kit for 6˝ lower & back connect



TYPE 1105
TOOL KIT



TYPE 3220
HAND JACK SET

9.4 2½ & 3½ 1009 Duralife® Gauge Tools

Description	Part No.
Pointer Puller Screw/Pin[2][3][4]	112A381-01
Pointer Puller Body[2][3][4]	292A133-01
Pointer Staker[2][4]	188A101-01
Span Wrench[2][5] (to adjust span)	266A137-01
Ring Wrench 3½″[1][5] (for ring removal) (35 1009)	266B134-01
Ring Wrench 2½″[1][5] (for ring removal) (25 1009)	266B135-01
Nest 2½″ & 3½″[1][5] (to hold gauge for ring removal) (25/35 1009)	266B136-01
Ring Removal Tool[6] (25 1009)	101B221-02
Ring Removal Tool[6] (35 1009)	101B221-01
Nest 2½″[6] (to hold gauge for ring removal) (25 1009)	101B220-02
Nest 3½″[6] (to hold gauge for ring removal) (35 1009)	101B220-01
Type 1230 throttle plug insertion (¼ NPT) for 1009 Duralife®)	1230
Type 1231 throttle plug insertion (⅛ NPT) for 1009 Duralife® (body only)	1231
Tool to open orifice on push-in throttle plug	101A206-01

(1) Formerly 1206T Tool Kit.
(2) Formerly some parts in 1205T Tool Kit.
(3) Both parts must be purchased together.
(4) Previous and current design.
(5) Previous design only.
(6) Current design only.

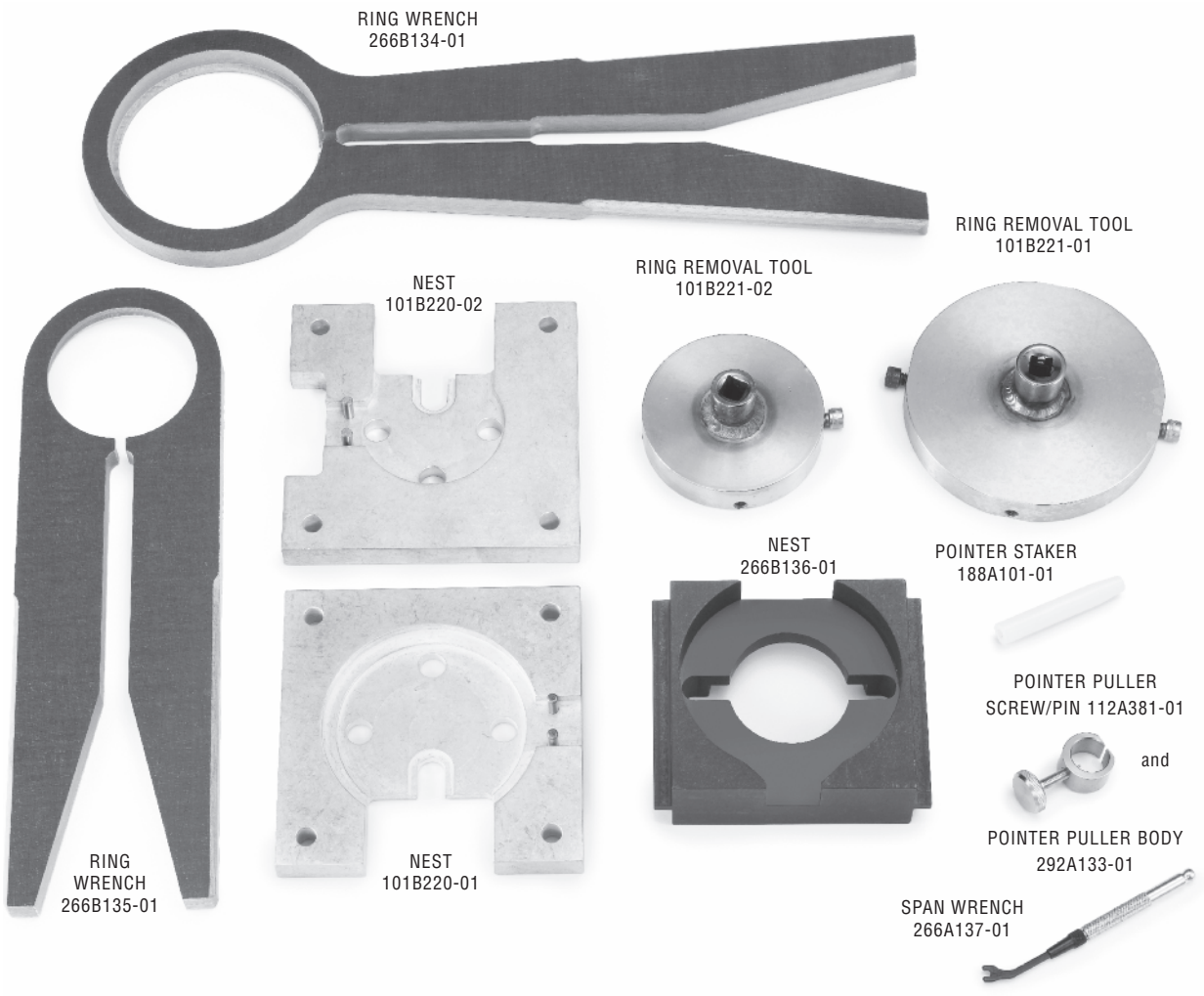

ASHCROFT® Type 1188 Bellows Gauge Calibration Procedure

CALIBRATION & TROUBLE CORRECTION DIAGRAM

RANGE SPAN ADJUSTMENT

- **RANGE TOO SHORT** — Adjust slide "S" inward
- **RANGE TOO LONG** — Adjust slide "S" outward

POINTER JUMPING

- **STICKY PARTS** — Clean all bearings and gear teeth
- **LOOSE HAIRSPRING** — Remove backlash by disengaging pinion & rotate to tighten
- **COUNTER BALANCE RUBBING** — Bend if necessary to clear socket in travel

NOTE: After adjusting range span, set both movement stops. Set the underload stop so that the pointer will stop at zero. Set the overload stop so that the pointer will pass the maximum range approximately 5˝.

After adjusting span re-zero pointer by removing from pinion and re-assembling at the proper dial mark.

SLUGGISH MOVEMENT

TIGHT HAIRSPRING — Loosen by disengaging pinion & rotate

NON LINEAR

NON LINEAR FIRST 3RD.

ADJ. ANGLE OF PULL BY INCREASING ANGLE "A"

NON LINEAR LAST 3RD.

ADJ. ANGLE OF PULL BY DECREASING ANGLE "A"

NOTE: To increase or decrease angle "A," bend tip inward or outward as required. Doing this may run the movement segment off the pinion. This can be corrected by cutting off one end off the link "E" decreasing its length, or makin a new length from .032 dia. phos. bronze wire.

Caution: When reproducing link end, follow figure 44 very closely. this will prevent too much play, or, binding in operation.

REF: Replacing System Bellows

After assembling bellows to the gauge socket securely, subject system to 30 psi for five minutes, allowing bellows to travel approximately 1/8˝ against the overload stop. After this, heat treat system for 15 hours at 250°F, this procedure is necssary to prevent gauge drift.

SLIDE AND LINK (angle "A")
Enlarged view of slide and link

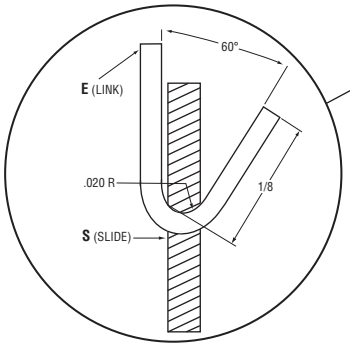

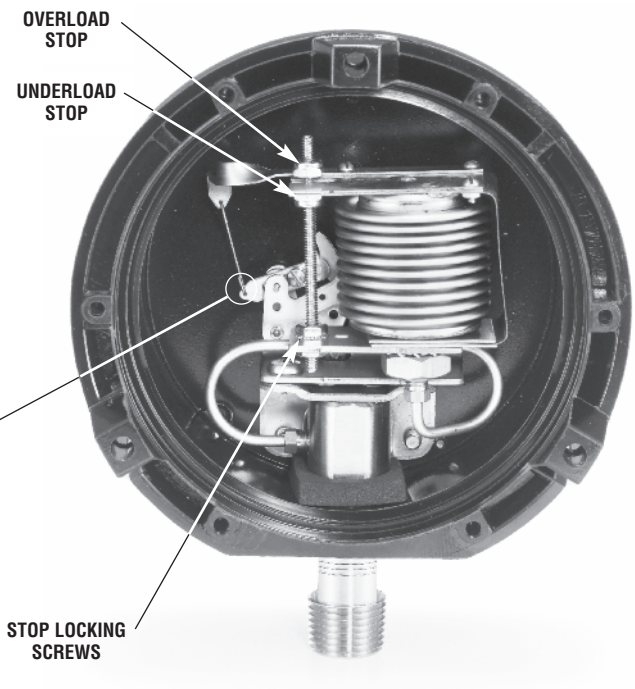

© Ashcroft Inc., 250 E. Main St., Stratford, CT 06614-5145, Tel: 203-378-8281, Fax: 203-385-0499, www.ashcroft.com
All sales subject to standard terms and conditions of sale. I&M008-10173-3/10 (1188)

1. Remove ring, window and gasket pointer.
2. Using a pencil, refer to dial and mark the 0 and 25˝ Hg positions on the case flange.
3. Remove dial.
4. Apply 25˝ Hg vac.
5. Lightly press pointer onto pinion carefully aligning it with the 25˝ Hg vac. mark on the flange.
6. Release vacuum fully.
7. Note agreement of pointer to zero mark on flange.
8. If span is high or low, turn span block as shown in Figure 1.

Figure 1 –

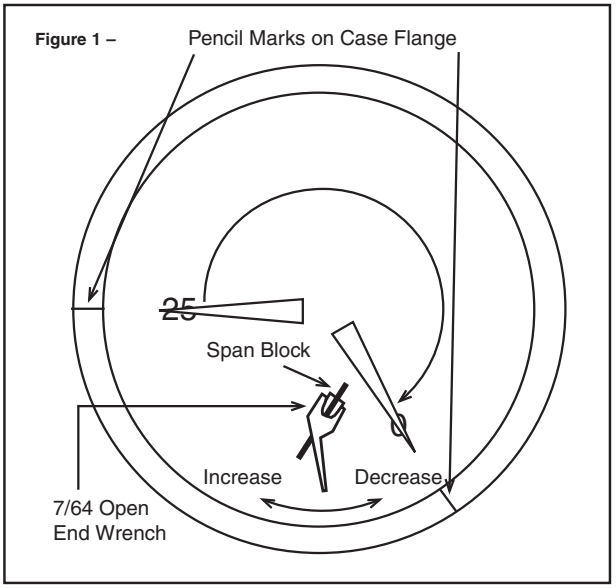

9. Repeat steps 4 through 8 until span is correct.
10. Remove pointer.
11. With 25˝ Hg vac applied, reassemble dial, dial screws (finger tight) and point.
12. Apply 15˝ Hg vac. and note accuracy of indication. If required, slide dial left or right to reduce error to 1% maximum.
13. Firmly tighten dial screws.
14. Firmly tap pointer onto pinion.
15. recheck accuracy at 15 and 25˝ Hg vac. (Figure 2).
16. Reassemble window, gasket and ring.

Figure 2 –

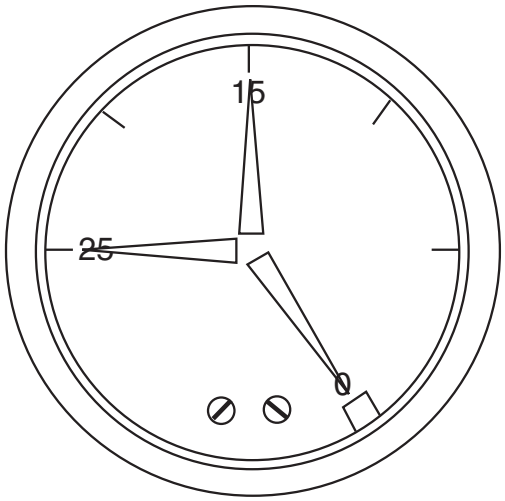

Notes: See page 10 for any tools required to calibrate.

For models produced prior to September 2008 for 2½˝ version and December 2008 for 3½˝ version.
Back of gauge will have a date code sticker.

© 2010 Ashcroft Inc., 250 East Main Street, Stratford, CT 06614-5145, USA, Tel: 203-378-8281, Fax: 203-385-0499, www.ashcroft.com
All sales subject to standard terms and conditions of sale. I&M008-10077 9/01 AMR 05/10

Step 1. With the dial off, install pointer at 9 o'clock "lightly," Figure 3.

Figure 3 –

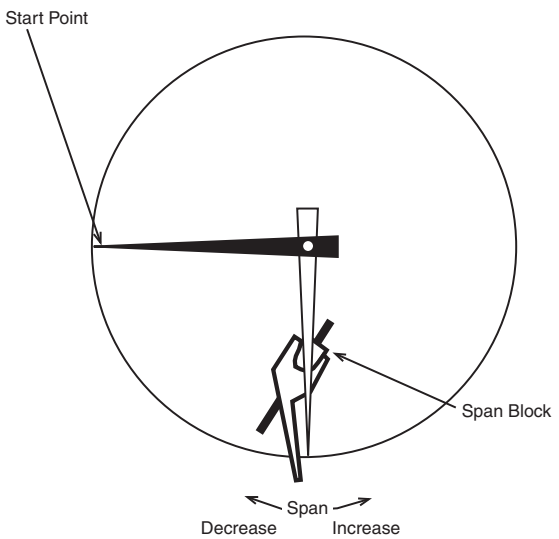

Step 2. Go to full scale pressure…rotate span block with tool until pointer rests at 6 o'clock.

Step 3. Go to zero pressure (9 o'clock)…if pointer has not moved away from start point, go to Step 4. If pointer has moved, repeat Step 1 until span is correct.

Step 4. Install dial with screws snug.

Figure 4 –

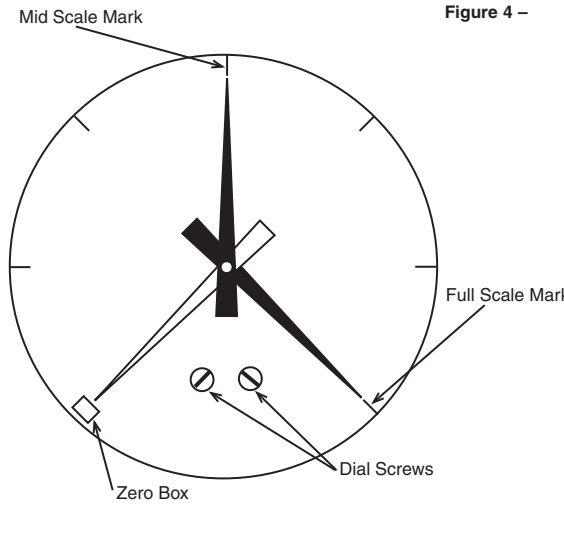

Step 5. Install pointer centered in zero box, Figure 4.

Step 6. Go to full scale pressure…check that pointer is within 1% of full scale mark. If not, remove pointer and dial and return to step 1, Figure 4.

Step 7. Go to mid-scale pressure…rotate dial until mid-scale mark is aligned with pointer, Figure 4.

Step 8. Tighten dials screws and stake on pointer.

Step 9. Check zero and full scale. Reassemble window, gasket and ring.

Notes: See page 10 for any tools required to calibrate.

For models produced prior to September 2008 for 2½˝ version and December 2008 for 3½˝ version.
Back of gauge will have a date code sticker.

© 2010 Ashcroft Inc., 250 East Main Street, Stratford, CT 06614-5145, USA, Tel: 203-378-8281, Fax: 203-385-0499, www.ashcroft.com
All sales subject to standard terms and conditions of sale. I&M008-10077 9/01 AMR 05/10

ASHCROFT® Current Type 1009 Duralife® Calibration Procedure – Pressure and Vacuum Range

Calibration – 1009 Duralife® Gauge –
Inspect gauge for accuracy. At times gauges are simply "off zero" and opening the ventable plug at the top of the gauge will relieve internal gauge pressure and correct the offset. If this is not adequate and inspection shows that the gauge warrants recalibration to correct zero, span and/or linearity errors, proceed as follows:

Remove ring, window, and gasket using Ashcroft Ring Removal Tools P/N 101B220-02 and 101B221-02 for 2½" gauges and 101B220-01 and 101B221-01 for 3½" gauges.

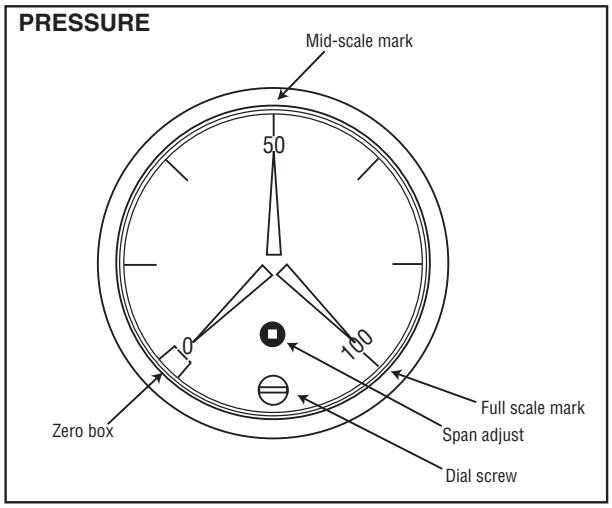

Positive Pressure Ranges –

1. Adjust pointer with a slotted screwdriver until it is in the center of the zero box. This is often all that is required it correct calibration issues.

2. Apply full scale pressure. If error exceeds 1% rotate the black span adjustment device with a #0 square drive bit. Clockwise increases span, counterclockwise decrease span.

3. Fully exhaust pressure and check that pointer still is still in the zero box. If not, repeat step 1 and 2

4. Once 0 and full scale are within tolerance, pressurize gauge to mid-scale.

5. If gauge is within 1%, calibration is complete. If not loosen the dial screw and rotate dial left or right to adjust midpoint. Retighten dial screw.

6. If an adjustment was made in step 5, recheck the gauge at zero and full scale, adjust accordingly until zero, mid and full scale points are in tolerance.

Vacuum Range –

1. Adjust pointer with a slotted screwdriver until it is in the center of the zero box. This is often all that is required it correct calibration issues.

2. Apply 25 inches Hg vacuum. If the error exceeds 1% adjust pointer with a slotted screwdriver until gauge is within tolerance.

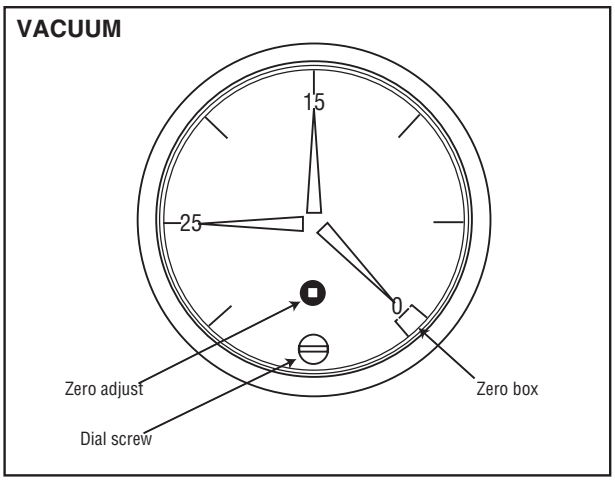

3. Vent to 0 pressure and check pointer position in the zero box. If error exceeds 1% rotate the black span adjustment device with a #0 square drive bit. Clockwise rotation moves pointer clockwise, counterclockwise rotation moves the pointer counterclockwise.

4. Repeat step 1 and 2 until 0 and 25 inches of Hg are within gauge tolerance.

5. Apply 15 inches Hg vacuum. If gauge is within 1%, calibration is complete. If not loosen the dial screw and rotate dial left or right to adjust midpoint. Retighten dial screw.

6. If an adjustment was made in step 4, recheck the gauge at zero and 25 inches of Hg vacuum, adjust accordingly until zero, 15 and 25 inches Hg are in tolerance.

7. Continue below.

Re-assemble window and ring to gauge:

a. If plastic window is used, push window back into front of gauge, ensure the o-ring does not roll out of window groove (lubricate if necessary). Align the tabs of the window with the tabs of the case front. Once window is in place, install ring and tighten with tools referenced above and shown on page 10.

b If safety glass is used, reinstall window, gasket, and ring. Ensure that the gasket is seated properly under all four tabs of the ring and does not wrinkle when ring is tightened.

Note: Tighten ring: Apply 120-200inlb of torque. Rotate ring clockwise to tighten. Warning: over tightening of safety glass may induce cracking.

Notes: See page 10 for any tools required to calibrate.

For models produced after September 2008 for 2½˝ version and December 2008 for 3½˝ version.
Back of gauge will have a date code sticker.

© 2010 Ashcroft Inc., 250 East Main Street, Stratford, CT 06614-5145, USA, Tel: 203-378-8281, Fax: 203-385-0499, www.ashcroft.com
All sales subject to standard terms and conditions of sale. I&M008-10081-05/10 AMR 05/10

TYPE 1279 & 1379 SOLID FRONT DURAGAUGE® PRESSURE GAUGE CONVERSION INSTRUCTIONS TO:

- **Convert A Standard Dry Gauge To A Liquid Filled Gauge**
- **Convert A Standard Dry Gauge To A Dry, Weatherproof IP66 Gauge**

ASHCROFT®

TYPICAL 45-1279_S-04L-100* GAUGE SHOWN WITH KIT 101A202-01

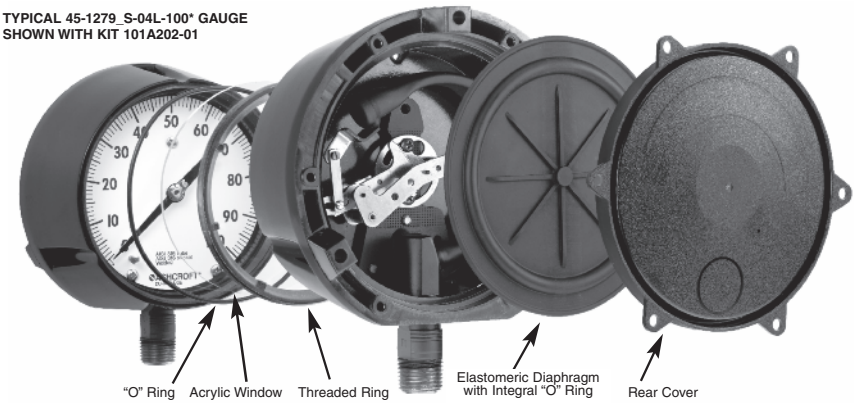

	1279		1379		
	4½˝ LOWER	4½˝ BACK	4½˝ LOWER	4½˝ BACK	6˝ LOWER & BACK
KIT PART NO.	101A202-01	101A203-01	1280	1283	1284
	QUANTITY INCLUDED				
ACRYLIC WINDOW	1	1	1	1	1
FRONT O-RING	1	1	1	1	1
DIAPHRAGM(1)	1	1	1	1	2(1-LC:1-BC)
REAR COVER	1	1	1	1	2(1-LC:1-BC)
COVER SCREWS	4	4	-	-	-
THROTTLE SCREWS	2	2	2	2	2
GARTER SPRING	–	1	1	1	1
FILL IDENTIFICATION	1	1	1	1	1
THREADED RING	–	–	1	1	1
TOP FILL PLUG	–	–	1	1	–

1. When Halocarbon fill is a requirement, rear case diaphragm bladder material is Viton instead of the standard Buna diaphragm bladder. Consult factory for part number.

TEMPERATURE LIMITS[1]				60 psi and Under Down Scale Zero Shift Required
	Ambient	Process	Storage	
Dry (IP66)	–20/200°F (–29/93°C)	–20/250°F(1) (–29/121°C)	–40/250°F (–40/121°C)	NONE
LF (glycerin)	20/150°F (7/66°C)	20/200°F (7/93°C)	0/150°F (–18/66°C)	NONE
(silicone)	–40/150°F (–40/66°C)	–40/200°F (–40/93°C)	–40/150°F (–40/66°C)	.12 psi
(halocarbon)	–40/150°F (–40/66°C)	–40/200°F (–40/93°C)	–40/150°F (–40/66°C)	.12 psi

Note: Other than discoloration of the dial and hardening of the gasketing that may occur as ambient or process temperatures exceeds 150°F, non-liquid-filled gauges with standard glass windows, can withstand continuous operating temperatures up to 250°F (121°C). Liquid-filled gauges can withstand 200°F (93°C) but glycerin fill and acrylic window will tend to yellow. Accuracy at temperatures above or below the reference ambient temperature of 68°F will be affected by approximately .4% per 25°F. Gauges with welded joints will withstand 750°F (450°F (232°C) with silver brazed joints) for short times without rupture, although other parts of the gauge will be destroyed and calibration will be lost. For continuous use and for process or ambient temperatures above 250°F (121°C), a diaphragm seal or capillary or siphon is recommended.
(1) Available for temperature below –20°F, see Production Information page ASH-PI-21B for details

1. Unscrew front threaded ring (turn CCW). Remove and discard glass window. For range spans 60 psi and under, shift pointer down scale by the amount shown in the table. With either the glass or plastic window, replace the O-ring with one furnished in the kit.
2. Remove protective paper from acrylic plastic window taking care not to scratch window. Assemble window in gauge.
3. Moisten face of threaded ring with silicone oil or silicone grease where ring bears up against window. Replace front threaded ring and tighten firmly hand tight. See instructions on reverse side for applying proper torque to ring to establish desired squeeze on O-ring seal. **(Fig. 4).**
It is important to hold gauge **rigidly,** otherwise ring lugs may be damaged during removal or assembly process.
4. From rear of gauge, remove and discard these parts: rear cover and cover gaskets from case.
Note: Disregard Step Nos. 5a and 5b if converting to hermetically sealed version.
When converting a 45-1379 with the top fill hole configuration, p/n 256A176-01 fill plug is required and must be ordered separately.
5. Filling Procedures:
a. Manual Filling Procedure: Place gauge face down on bench and **tip gauge** by blocking up front with a ⅜ inch block at the 12 o'clock dial position. Tipping of the gauge is necessary so fluid will flow into front cavity of the case. Pour in fill liquid to within about 1/16 inch of rear seal lip. When bubbles stop rising, front cavity is filled. Remove ⅜ inch block and pour in liquid until level is about 1/16 inch below rear sealing lip.
Note: An alternative method of filling is to fill the front dial cavity, adding the front window, etc., as in Step No. 3. Then fill the rear of the gauge. This method eliminates the need to tip the gauge.
b. Vacuum Pump Fill Procedure: (This procedure is recommended when filling a large number of gauges.) Place gauge face down and insert a ⅛ inch diameter tube, connected to a vacuum pump, through the 12 o'clock position hole in the rear, solid front portion of the case **(see Fig. 5).** Evacuate the air from the front dial cavity while pouring in the fill fluid through the case back. The vacuum will displace the air with fluid. When the dial cavity is solidly filled, remove the tubing and continue to pour the fill fluid to within 1/16 inch BELOW the O-ring channel lip.
Pre-measuring fill amount is not necessary with above methods. For reference, amount of fill is approximately 400 ml. or 14 fluid oz. (4½˝ GA.) and 455 ml. or 16 fluid oz. (6˝ GA.).
c. Note: The liquid fill level should be ⅜˝ (±⅛) as measured from the inside of the ring at the 12:00 o'clock position.
6. On lower connection gauges, assemble rear seal diaphragm to case.
For back connection gauges see instructions on reverse side. **(Fig. 2/4).**
7. For 1279:
Assemble rear cover and six self tapping screws in a criss-cross pattern and torque to 12 in lbs. (±2 in lbs.)
For 1379:
- Thread rear ring and torque to 200 in lbs
- Install stainless steel back cover using two screws. Torque screws to 14 in lbs. (±2 in lbs.)

8. Assemble throttle screw to threaded hole in socket.
Note: If system is monel (socket wrench flat stamped "PHS" or "PH") use monel throttle screw.
9. Check appropriate box on fill identification label, and peel off label back, and attach fill label to gauge case.
10. If gauge is to be repackaged:
a. Include enclosed instruction sheet inside carton.
b. Change type number on carton label to:
(1) Hermetically Sealed – 1279(*)SH.
(2) Liquid Filled – 1279(*)SL.
*Bourdon Tube System Code

Glycerin or silicone should not be used in applications involving Oxygen, Chlorine, Nitric Acid, Hydrogen Peroxide or other strong oxidizing agents, because of danger of spontaneous chemical reaction, ignition or explosion. Halocarbon should be specified. Products with this fill can be ordered from factory.

The use of fluids other than those listed in the table above (for example, Hydrocarbon-based oils) may result in leakage caused by a reaction between the fluid and the elastomeric seals. Consult the factory before filling with any other fluid.

© 2015 Ashcroft Inc., 250 East Main Street, Stratford, CT 06614 USA, Tel: 203-378-8281, Fax 203-385-0402 www.ashcroft.com
All sales subject to standard terms and conditions of sale. All rights reserved. I&M008-10090 (84B276) Rev 10/15

TYPE 1279 & 1379 SOLID FRONT DURAGAUGE®
PRESSURE GAUGE CONVERSION INSTRUCTIONS TO:

- **Convert A Standard Dry Gauge To A Liquid Filled Gauge**
- **Convert A Standard Dry Gauge To A Dry, Weatherproof IP66 Gauge**

ASHCROFT®

INSTRUCTIONS FOR USING CONE TOOL AND RING WRENCH

Garter Spring & Diaphragm Assembly (Back Connection Gauge Only)

A. Place cone tool over socket shank as shown.

B. Moisten lip of socket and outer O-ring surface with silicone oil or grease.

C. Place diaphragm with rib side facing upward over cone into case grove. Diaphragm O-ring must be completely in socket-shank grove.

D. Place garter spring over cone as shown and slide onto diaphragm in socket grove

E. Assemble rear cover with screws per step 7.

Front Ring Assembly (All Gauges)

A. Assemble ring to case by hand to start.

B. Place ring on wrench as shown

C. Use ½˝ drive extension and torque ring to 200 in. lb

Alternate Method

A. Tighten ring snugly by hand

B. Mark case and ring.

C. Turn ring another 100 to 120 degrees (slightly less than ½ turn) using the ring wrench and ½˝ drive socket wrench or place the blunt end of a wooden or plastic dowel against a ring lug and tap with a hammer.

BACK CONNECTION ASSEMBLED GAUGE

Fig. 2

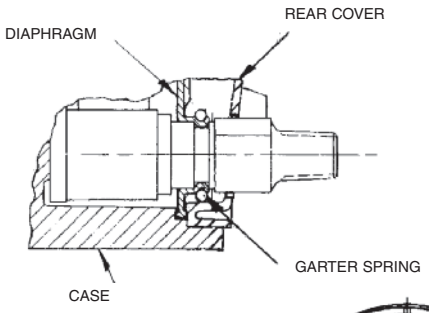

Fig. 3

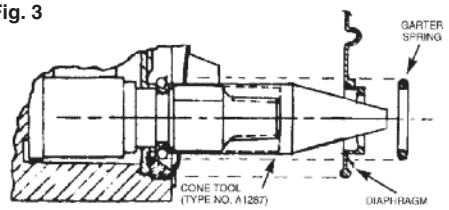

Fig. 4

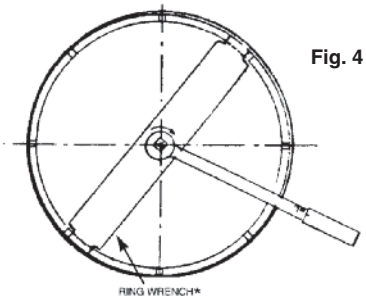

INSTRUCTIONS FOR LIQUID FILLING ASHCROFT® TYPE 1279 AND 1379 SOLID FRONT DURAGAUGE® PRESSURE GAUGES USING A VACUUM PUMP

A. Insert a length of ⅛ ˝ diameter tubing through the 12 o'clock position hole in the rear, solid front portion of the case, as shown.

B. Evacuate the air from the front dial cavity while pouring in the fill fluid through the case back. The vacuum will displace the air with fluid.*

C. When the dial cavity is solidly filled, remove the tubing and continue to pour the fill fluid to within 1/16 ˝ below the o-ring channel lip, as shown.

D. When converting a 45-1379 with the top fill hole configuration, p/n 256A176-01 fill plug is required and must be ordered separately.

*To prevent breakage, reduce vacuum to 15 in. Hg for plain glass and safety glass.

Fig. 5

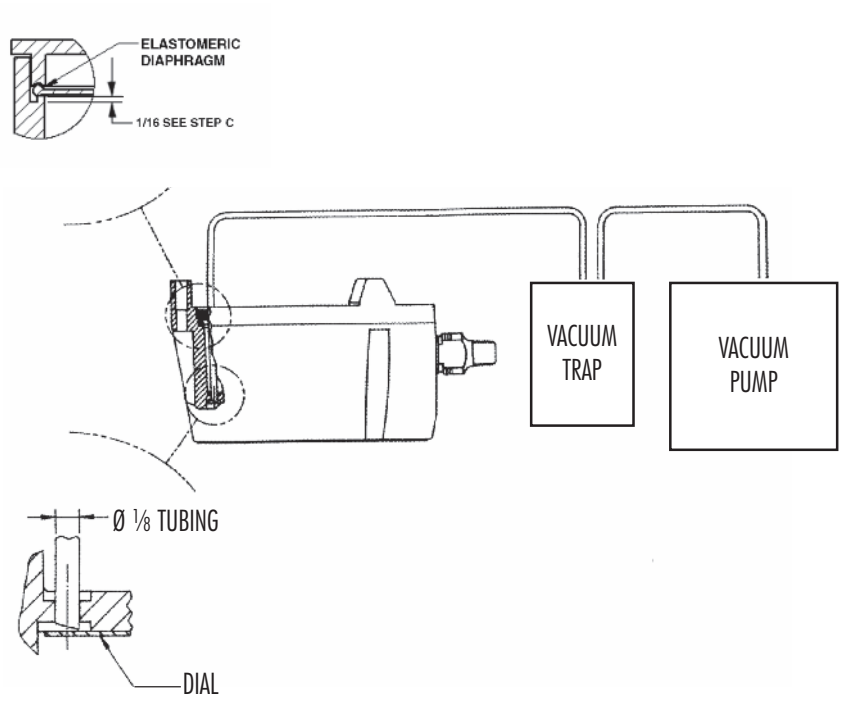

© 2015 Ashcroft Inc., 250 East Main Street, Stratford, CT 06614 USA, Tel: 203-378-8281, Fax 203-385-0402 www.ashcroft.com
All sales subject to standard terms and conditions of sale. All rights reserved. I&M008-10090 (84B276) Rev 10/15

INSTRUCTIONS FOR USE OF EXTERNAL EASY ZERO™ ADJUST FEATURE*

Fig. 1

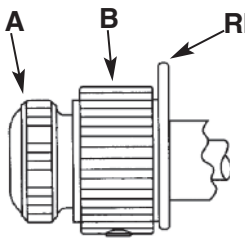

1. LOOSEN RING-LOCKING SCREW **A**.
2. OBTAIN REQUIRED ADJUSTMENT BY ROTATING KNOB **B** CLOCKWISE OR COUNTER-CLOCKWISE.
3. TIGHTEN SCREW **A** DOWN ON KNOB **B**.

*Applicable only for test gauge with hinged ring design.

ADDITIONAL CALIBRATION INSTRUCTIONS

1) "Standards shall have nominal errors no greater than ¼ of these permitted for the gauge being tested." *(Ref: ASME B40=100-1998)*
2) The instrument used as the calibration standard should have a maximum range no greater than 2x that of the gauge being tested. (i.e. Do not use a 400psi standard to test a 15psi gauge.)
3) "Known pressure shall be applied at each test point on increasing pressure (or vacuum) from one end to the other end of the scale. At each test point the gauge shall be . . .
lightly tapped, and then read . . ."
(*Ref: ASME B40.1 ¶ 6.2.4.1*)
4) To read gauge indication, move eye over red pointer tip at OD of printed dial until red reflection in mirror band is no longer visible, and then read the pointer position in reference to the dial.

© Ashcroft Inc., 250 E. Main St., Stratford, CT 06614-5145, Tel: 203-378-8281, Fax: 203-385-0499, www.ashcroft.com
All sales subject to standard terms and conditions of sale. I&M008-10082 11/01 RevB (250-2917-4) AMR 10/07

Fig. 2

THIS TEST GAUGE IS PROVIDED WITH A MICROSPAN™ ADJUSTMENT TO SIMPLIFY CALIBRATION. THE FLOW CHART BELOW OUTLINES THE RECOMMENDED CALIBRATION PROCEDURE

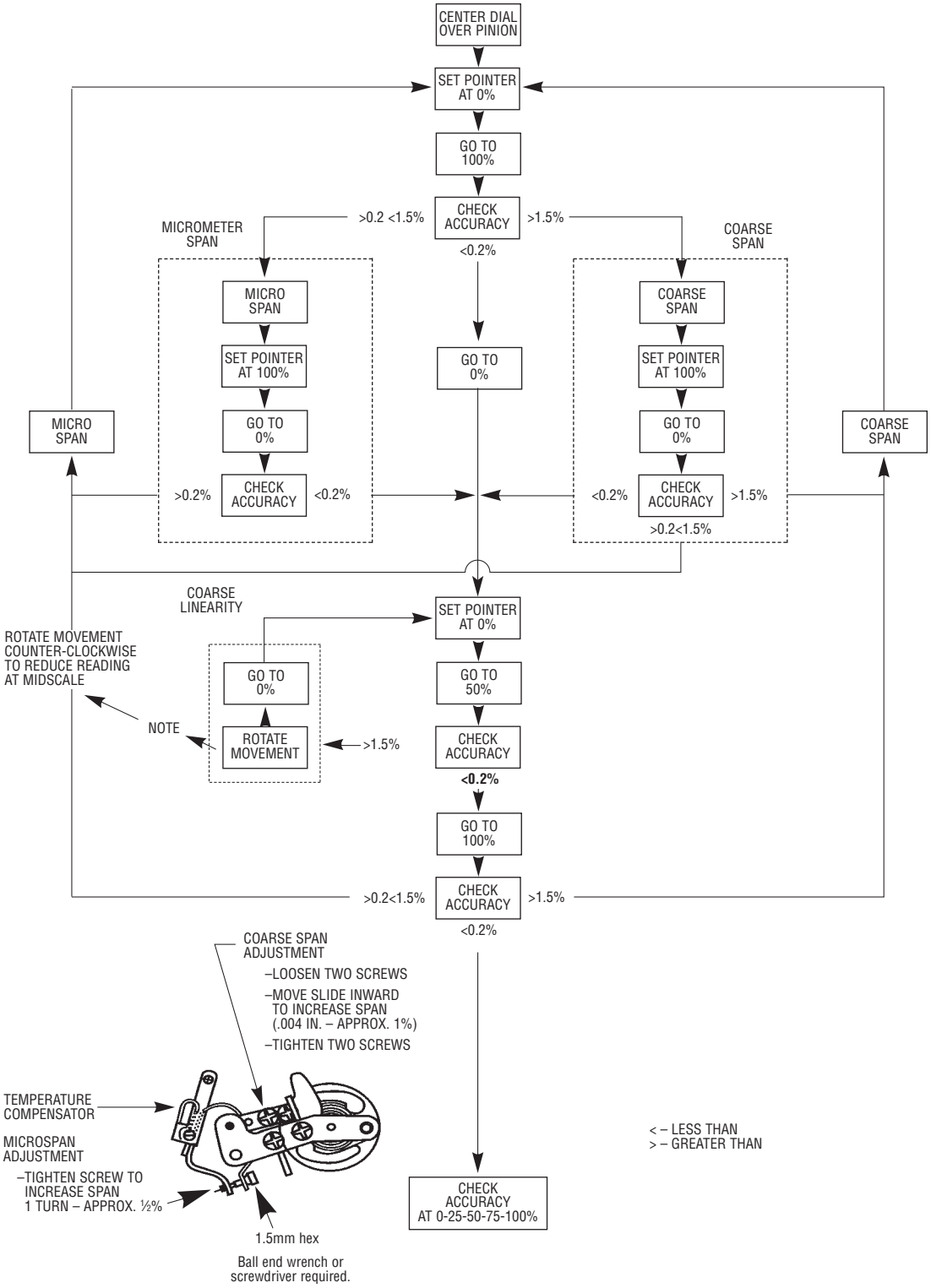

© Ashcroft Inc., 250 E. Main St., Stratford, CT 06614-5145, Tel: 203-378-8281, Fax: 203-385-0499, www.ashcroft.com
All sales subject to standard terms and conditions of sale. I&M008-10082 11/01 Rev C (250-2917-4) 12/15

Ashcroft Inc.,
250 East Main Street
Stratford, CT 06614-5145
U.S.A.
Tel: 203-378-8281
Fax: 203-385-0408 (Domestic)
Fax: 203-385-0357 (International)
email: info@ashcroft.com
www.ashcroft.com
I&M008-10098-5/02 (250-1353-L) Rev. 12/15

Visit our web site www.ashcroft.com

LEFT BLANK

ASHCROFT

TYPE 310, DIAPHRAGM SEAL

LEFT BLANK

ASHCROFT®
Trust the shield.®

310, 315 All-Welded “Mini” Diaphragm Seal

FEATURES

- No gaskets or bolts
- Available with ⅛ NPT flushing connection
- Designed for use with transducers and 3½″ or smaller gauges

TYPICAL USES

- Oil and gas
- Chemical processes
- Process equipment



310
Threaded Seal

SPECIFICATIONS	
Connection Style:	310: All-welded 315: All-welded with flushing connection
Process Connection Size:	310: ⅛ to 1 NPT Male, ¼ or ½ NPT Female 315: ¼ or ½ NPT Female
Instrument Connection Size:	⅛ or ¼ NPT Female
Pressure Rating (MAWP):	2,500 psi
Added Tolerance:	±0.5% typical
Wetted Components:	Diaphragm & bottom housing
Non-Wetted Components:	Top housing: 316L SS

WETTED COMPONENTS	
Diaphragm Material	Bottom Housing Material
See ordering code on page 2	See ordering code on page 2

NON-WETTED COMPONENTS
Top Housing
316L SS

KEY BENEFITS

- **Protects instrumentation in tight spaces**
- **Eliminates potential leak path with all-welded construction**
- **Low fill volume reduces temperature effects on instrument accuracy**

All specifications are subject to change without notice.
All sales subject to standard terms and conditions.
©2018 Ashcroft Inc. 310-315_seal_ds_RevC_07-18

ashcroft.com
info@ashcroft.com
1.800.328.8258

ASHCROFT®
Trust the shield.®

310, 315 All-Welded "Mini" Diaphragm Seal

ORDERING CODE Example:	01	310	S	S	01T	XCK	NH
Process Connection Size							
01 - ⅛ NPT Male, (available with 310 only)	01						
02 - ¼ NPT Male, (available with 310 only)							
04 - ½ NPT Male, (available with 310 only)							
06 - ¾ NPT Male, (available with 310 only)							
08 - 1 NPT Male, (available with 310 only)							
25 - ¼ NPT Female							
50 - ½ NPT Female							
Seal Type							
310 - All-welded Mini seal no flushing port		310					
315 - All-welded Mini seal with flushing port connection							
Diaphragm Material							
S - 316L SS			S				
H - Hastelloy® C-276							
U - Tantalum							
P - Monel® (Must be ordered with Monel® bottom housing)							
Bottom Housing Material							
S - 316L SS				S			
H - Hastelloy® C-276							
M - Monel®							
G - Hastelloy® B-2							
Instrument Connection Size							
01T - ⅛ NPT Female					01T		
02T - ¼ NPT Female							
Options (if choosing an option(s) must include an "X")						X__	
Filling Fluid							
CG - Glycerin							
CK - Silicon 50cST						CK	
CF - Halocarbon®							
See Filling Fluid Table Below							
Optional Features							
PU - Pipe Plug for flushing connection (Must match bottom housing material; 315 seal only)							
NH - SS instrument tag							NH
NN - Paper instrument tag							
DU - Instrument welded to seal							
MQ - Positive material identification							
W1 - Dye penetrant testing							
6B - Cleaned for oxygen service							

Filling Fluid Table

Fill	Service	Connection to Instrument	Temperature Range °F	Code
Glycerin	Pressure	Direct Only	0/400	CG
Silicone	Pressure/Vacuum	Direct or Flexible Line	–40/500	CK
Halocarbon®	Pressure/Vacuum in presence of strong oxidizing agent	Direct or Flexible Line	–70/300	CF
Syltherm®	Pressure	Direct or Flexible Line	–40/750	HA

All specifications are subject to change without notice.
All sales subject to standard terms and conditions.
©2018 Ashcroft Inc. 310-315_seal_ds_RevC_07-18

ashcroft.com
info@ashcroft.com
1.800.328.8258

310, 315 All-Welded “Mini” Diaphragm Seal

DIMENSIONS in [ ] are millimeters

Drawings are for reference only, consult Ashcroft for specific dimensional drawings.

	A		B		C	
	in	mm	in	mm	in	mm
Type 310	1.75	[38]	.81	[30]	1.34	[34]
Type 315	1.73	[44]	2.25	[57.2]	1.34	[34]

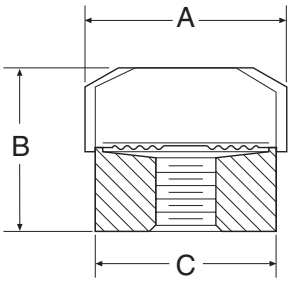

310 mini-seal – Threaded ¼, ½, ¾, NPT

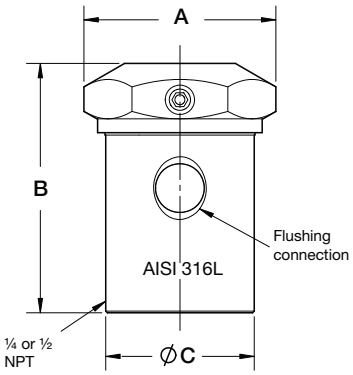

315 mini-seal – Threaded ¼, ½, ¾, NPT

All specifications are subject to change without notice.
All sales subject to standard terms and conditions.
©2018 Ashcroft Inc. 310-315_seal_ds_RevC_07-18

ashcroft.com
info@ashcroft.com
1.800.328.8258

LEFT BLANK

BRAY

SERIES 31, BUTTERFLY VALVE

LEFT BLANK

Bray® CONTROLS

OPERATION AND MAINTENANCE MANUAL

RESILIENT SEATED BUTTERFLY VALVES

20/21, 22/23, 30/31, 3A/3AH, 31H, 31U, 32/33, 35/36, 36H

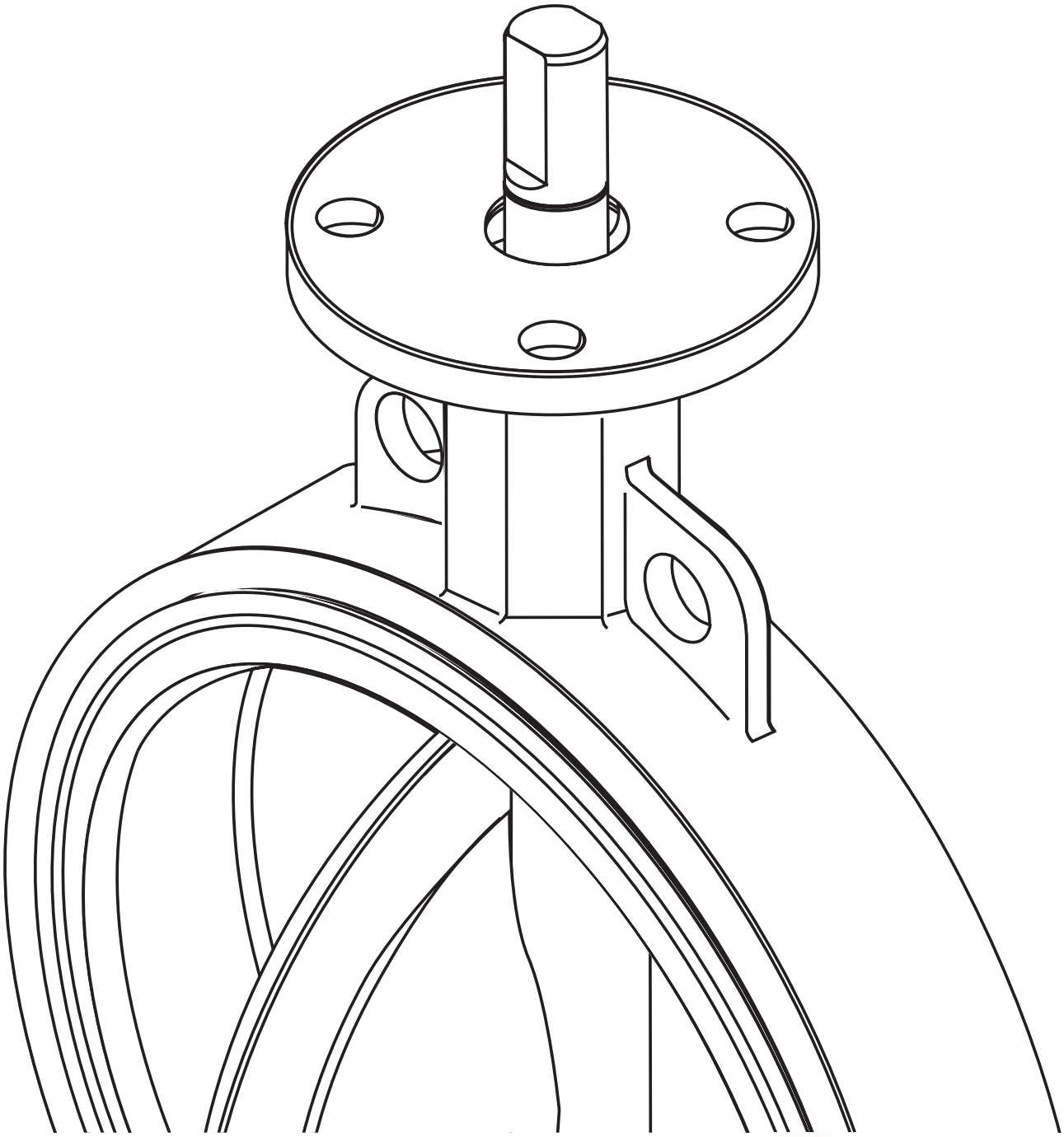

The High Performance Company

Table Of Contents:

PAGE

Safety Instructions: Definition Of Terms 1

Introduction 1

Shipment & Storage 1

Installation Considerations 2

Valves With Spring Return Actuators 2

- Fail Open Assembly 2
- Fail Closed Assembly 2

Valve Location And Orientation In Piping 3

- Valve Orientation Diagrams 4-6

Installation Procedure 6-9

- PTFE Seated Butterfly Valves in Plastic Flanges 9

Maintenance & Repair 9

Appendix 'A' - S20/21 Disassembly/Assembly Instructions 10-11

Appendix 'B' - S22/23 Disassembly/Assembly Instructions 12-13

Appendix 'C' - S30/31 Disassembly/Assembly Instructions 14-15

Appendix 'D' - S3A/3AH Disassembly/Assembly Instructions 16-17

Appendix 'E' - S31H Disassembly/Assembly Instructions 18-19

Appendix 'F' - S31U Disassembly/Assembly Instructions 20-21

Appendix 'G' - S32/33 Disassembly/Assembly Instructions 22-24

Appendix 'H' - S35/36 (Taper Pin Disc/Stem Connection)
Disassembly/Assembly Instructions 25-27

Appendix 'I' - S35/36 (Internal Spline or Keyed Disc/Stem Connection)
Disassembly/Assembly Instructions 28-33

Appendix 'J' - S36H Disassembly/Assembly Instructions 34-36

FOR INFORMATION ON THESE PRODUCTS AND OTHER BRAY PRODUCTS
PLEASE VISIT US AT OUR WEB PAGE - www.bray.com

Safety Instructions - Definition of Terms

READ AND FOLLOW THESE INSTRUCTIONS
SAVE THESE INSTRUCTIONS

WARNING	indicates a potentially hazardous situation which, if not avoided, **could** result in death or serious injury.
CAUTION	indicates a potentially hazardous situation which, if not avoided, may result in minor or moderate injury.
NOTICE	used without the safety alert symbol indicates a potential situation which, if not avoided, may result in an undesirable result or state, including property damage.

Introduction

Historical Experience

Based on over twenty years experience in the butterfly industry, Bray can state without question the majority of all field problems for resilient seated butterfly valves are directly related to poor installation procedures. For this reason, it is very important all distributor salespeople educate their customers regarding proper installation of resilient seated butterfly valves.

Butterfly Valve Seat / Disc Function

Before reviewing the proper installation, maintenance, and repair procedures for resilient seated butterfly valves, let's discuss the seat-disc function of a butterfly valve. The seat in a resilient seated butterfly valve has molded o-rings on its flange face. **As a result, no gaskets are required as these o-rings serve the function of a gasket.** The flange face and molded o-rings of the seat extend beyond the body face-to-face to ensure sealing at the flange faces. The seat material, which extends past the face is compressed in installation and flows toward the center of the valve seat I.D.

In essence, the elastomer seat acts as a liquid, and the displaced elastomer moves toward the point of least resistance. The seat I.D. of all resilient seated butterfly valves is smaller than the disc O.D. This difference, the disc-seat interference, plus the increased interference due to the elastomer movement toward the seat center after installation, has been engineered so as to be the basis for pressure rating capability and the related seating/unseating torques. **Any change in this interference due to improper installation directly affects the pressure rating and seating/unseating torques.**

Finally, unlike many valve types, the resilient seated butterfly valve's disc actually extends beyond the face of the valve body at given angles of opening (say, 30° or more) when installed between flanges.

CAUTION

It is very important before installation to ensure the critical chord dimension of the disc at the full open position is less than the adjacent pipe flange I.D.

Shipment & Storage

A. The seat, disc, stem and bushing of the resilient seated butterfly valve should be coated with silicone lubricant unless specified otherwise as recommended by Bray Technical Bulletin 1028.

B. The disc should be positioned at 10° open. **Note**: See page 2 for special considerations for valves with spring return actuators.

C. Valves should be stored indoors with a preferred temperature range from 40° F (4°C) to 85° F (29°C).

D. When valves are stored for a long time, open and close the valves once every 3 months.

E. Ship and store valves so that no heavy loads are applied to the bodies.

Installation Considerations – Piping and Valve Orientation and Placement

Piping and Flanged Compatibilities

Piping

These valves have been engineered so that the critical disc chord dimension at the full open position will clear the adjacent inside diameter of most types of piping, including Schedule 40, lined pipe, heavy wall, etc.

Metal Flanges

Resilient seated butterfly valves have been designed to be suitable for all types of flanges (ASME, DIN, JIS and other international flange standards), whether flat-faced, raised face, slip-on, weld-neck, etc. Proper alignment of any butterfly valve between flanges is critical to good performance of the valve. The flange bolts must also be evenly tightened around the circumference of the valve, providing consistent flange compression of the molded o-ring in the seat face.

Since Bray does not recommend the use of gaskets between flanges on resilient seated butterfly valves, a uniform flange face is critical to proper valve sealing. Most weld-neck and slip-on flanges conforming to ASME specifications have an appropriate flange face. Types A and B butt-weld stub-end flanges also provide a suitable mating surface for the molded o-ring.

It should be noted that Type C butt-weld stub-end flanges have an "as formed" flange face. The varying surface of this flange face can create sealing problems between any resilient-seated butterfly valve and the flange face. For this reason, Type C flanges are not recommended for use with resilient-seating butterfly valves.

Non-Metallic Flanges

When non-metallic flanges, such as plastic or PVC, are used with resilient seated butterfly valves, care must be taken not to over-tighten the flange bolts. The inherent flexibility of these non-metallic flange materials allow them to be over-tightened relatively easily. Flexing caused by this over-tightening can actually reduce the compression of the valve between the flanges, causing leaks between the valve and the flange face. Proper alignment and firm, even, but not excessive tightening of flange bolts are especially important with non-metallic flanges. In some cases, non-metallic flanges of low quality will not mate tightly with butterfly valves regardless of the care taken during installation.

Valves with Spring Return Actuators

1. Fail Closed Assemblies

If the valve is supplied with an actuator, the butterfly valve is shipped in the full closed position (as no air pressure is present to compress the springs and open the disc).

CAUTION

Installing the valve with the disc in the full closed position may create a compression set on the seat causing higher than expected torques or premature seat failure. It is recommended to:

- Remove the actuator. Be sure to scribe the valve and actuator to ensure the re-installed actuator is in the exact same quadrant as originally configured
- Install the valve per the attached installation tag instructions
- Re-install the actuator ensuring it is in the proper quadrant

2. Fail Open Assemblies

If the valve is supplied with an actuator, the butterfly valve disc is shipped in the full open position (as no air pressure is present to compress the springs and close the valve disc.) The sealing surface, or disc edge, is therefore exposed. Damage to that surface will cause premature seat failure.

CAUTION

Use caution installing the valve being careful not to damage the disc edge. It is recommended to:

- Remove the actuator. Be sure to scribe the valve and actuator to ensure the re-installed actuator is in the exact same quadrant as originally configured
- Install the valve per the attached installation tag instructions
- Re-install the actuator ensuring it is in the proper quadrant

3. Valve Location

a. Resilient seated butterfly valves should be installed if possible a minimum of 6 pipe diameters from other line elements, i.e., elbows, pumps, valves, etc. of course, 6 pipe diameters are not always practical, but it is important to achieve as much distance as possible.

b. Where the resilient seated butterfly valve is connected to a check valve or pump, use an expansion joint between them to ensure the disc does not interfere with the adjacent equipment.

4. Valve Orientation

a. In general, Bray recommends the resilient seated valve be installed with the stem in the vertical position and the actuator mounted vertically directly above the valve; however, there are those applications as discussed below where the stem should be horizontal. **NOTE:** Bray does not recommend valves be installed in an upside-down position.

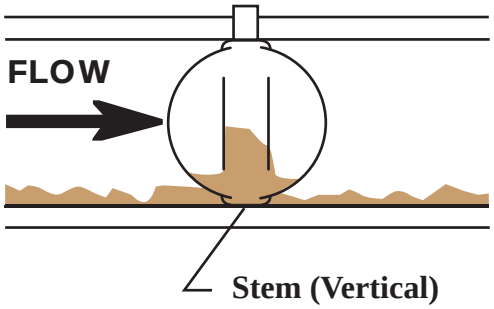

INCORRECT INSTALLATION

Sludge builds up on disc

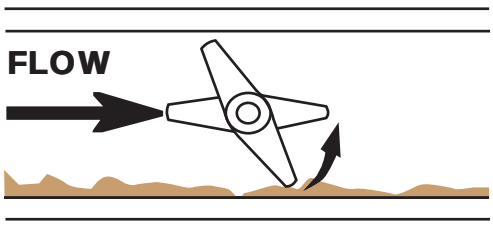

Stem (Horizontal)

CORRECT INSTALLATION

Sludge passes under disc

b. For slurries, sludge, mine tailing, pulp stock, dry cement, and any media with sediment or particles, Bray recommends the resilient seated valve be installed with the stem in the horizontal position with the lower disc edge opening in the downstream direction.

Valve Orientation (Continued)

c. Resilient seated butterfly valve located at the discharge of a pump should be oriented as follows:

	INCORRECT INSTALLATION	CORRECT INSTALLATION
i.) For centrifugal Pump – Pump shaft horizontal and stem vertical	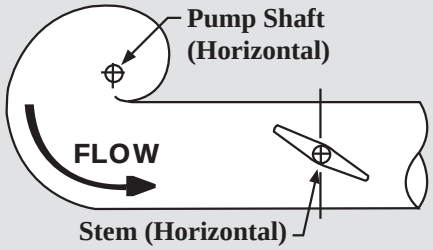	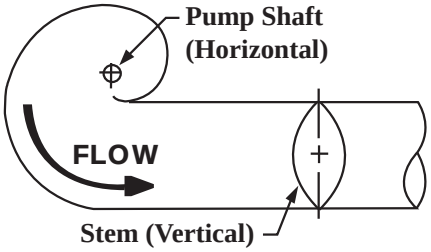
ii.) Centrifugal Pump – Pump shaft vertical & stem horizontal	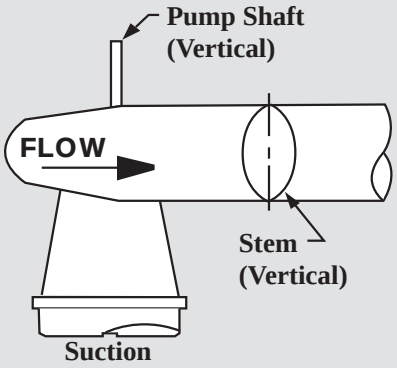	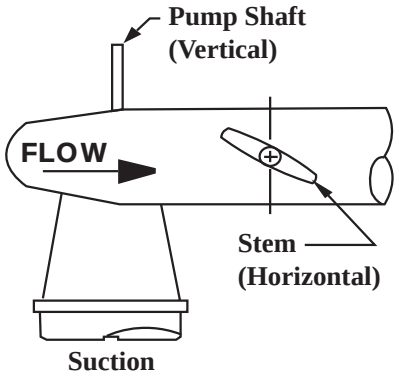
iii.) Axial Pump – Pump shaft vertical & stem vertical	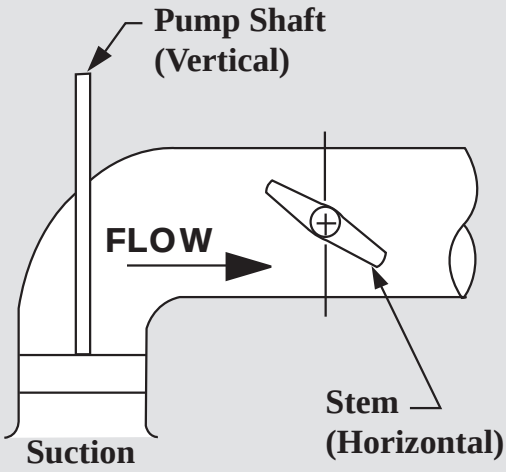	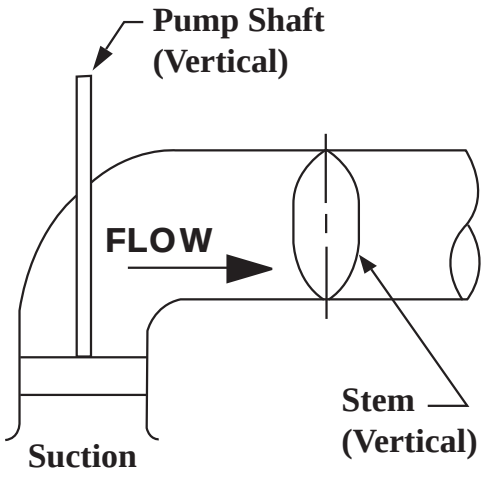

Valve Orientation (Continued)

d. Butterfly valves located downstream of a bend or pipe reducer should be oriented as follows:

	INCORRECT INSTALLATION	CORRECT INSTALLATION
i.) Bend	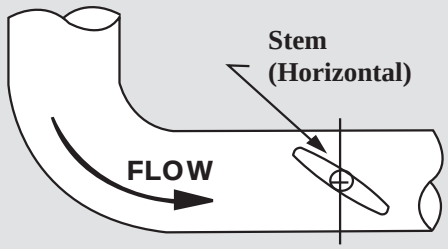	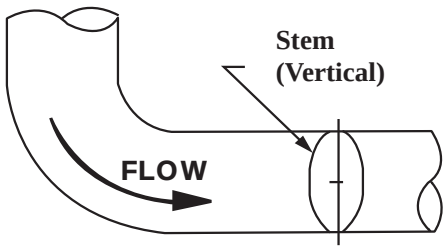
ii.) Tee	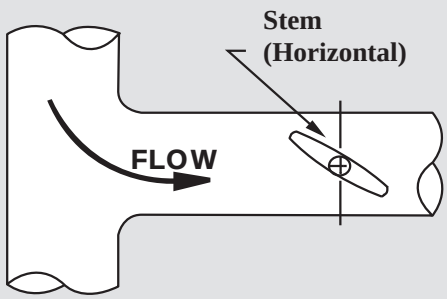	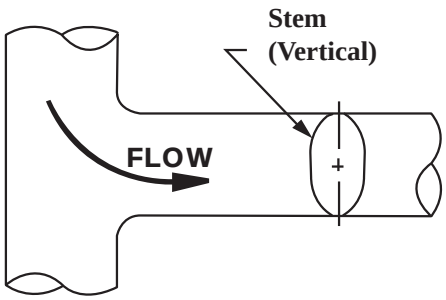
iii.) Pipe Reducer	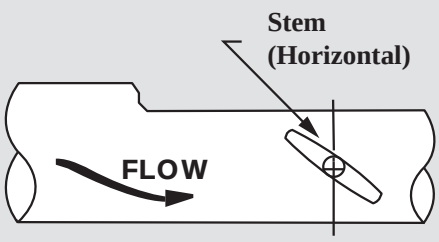	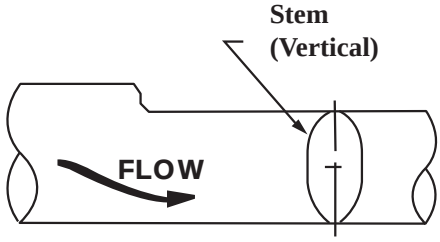

Valve Orientation (Continued)

e. Butterfly valves in combination for control/isolation applications should be installed as follows:

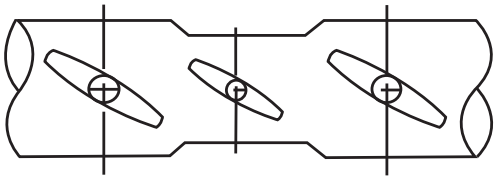

INCORRECT INSTALLATION

Combination with all valve stems in the same direction accelerates possible noise, vibration, & erosion problems.

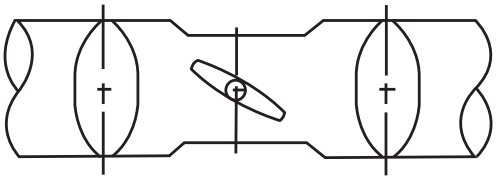

CORRECT INSTALLATION

Combination with the stem of the control valve at right angle to those of other valves tends to cancel the drift of the fluid, and reduces noises, vibration, and erosion.

Installation Procedure

A. General Installation

1. Make sure the pipeline and pipe flange faces are clean. Any foreign material such as pipe scale, metal chips, welding slag, welding rods, etc., can obstruct disc movement or damage the disc or seat.
2. The Bray elastomer seat has molded o-rings on the face of the seat. **As a result, no gaskets are required as these o-rings serve the function of a gasket.**
3. Align the piping and then spread the pipe flanges a distance apart so as to permit the valve body to be easily dropped between the flanges without contacting the pipe flanges ***(see figure 1 page 6).***
4. Check to see that the valve disc has been positioned to a partially open position, with the disc edge about 1/2 inch to 3/8 inch inside the face of the seat, (approximately 10° open) ***(see figure 1 page 6)*** **Note: See page 2 for special consideration for valves with spring return actuators.**
5. Insert the valve between the flanges as shown in figure 1 of page 6, taking care not to damage the seat faces. Always pick the valve up by the locating holes or by using a nylon sling on the neck of the body.

WARNING

Never pick up the valve by the actuator or operator mounted on top of the valve.

Figure 1 – Insert Resilient Seated Butterfly Valve Between Flanges

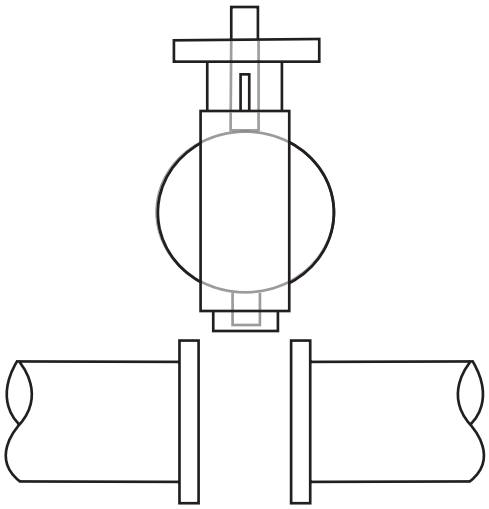

INCORRECT INSTALLATION

CAUTION

Pipe not spread, disc opened beyond valve body face; Results; Disc edge damaged when it hits pipe flange.

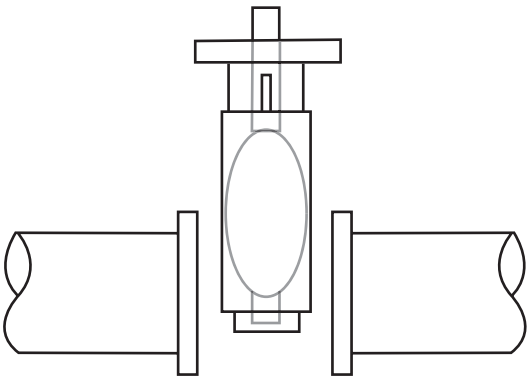

CORRECT INSTALLATION

Pipe spread and aligned, disc rotated; Results; no undesirable beginning seating/ unseating torque, disc edge protected.

6. Place the valve between the flanges, center it, and then span the valve body with all flange bolts, but do not tighten the bolts. Carefully open the disc to the full open position, making sure the disc does not hit the adjacent pipe I.D. Now systematically remove jack bolts or other flange spreaders, and hand-tighten the flange bolts as shown in **Figure 2** below. Very slowly close the valve disc to ensure disc edge clearance from the adjacent pipe flange I.D. Now open the disc to full open and tighten all flange bolts per specification as shown in **Figure 2**. Finally, repeat a full close to full open rotation of the disc to ensure proper clearances ***(See figures 3 & 4 page 7)***.

Figure 2 – Flange Bolt Tightening Pattern

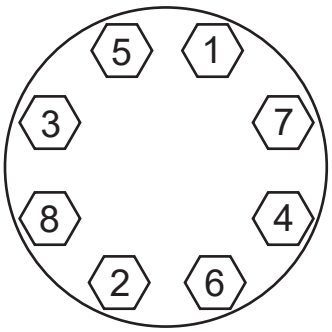

Figure 3 – Initial Centering & Flanging of Valve

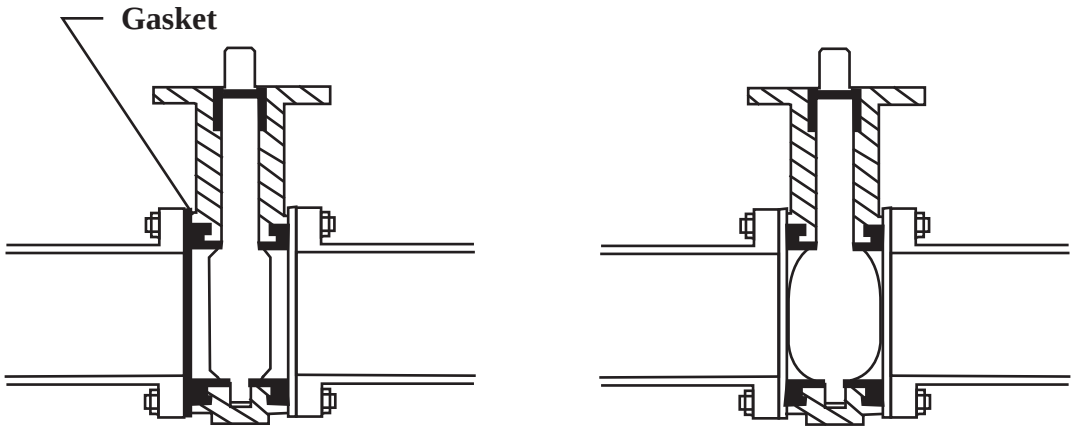

INCORRECT INSTALLATION

Disc in closed position; gaskets used; Results – Seat distorted and over-compressed causing high initial unseating torque problems.

CORRECT INSTALLATION

Bolts snugged, not torqued tight, disc edge within body face-to-face but not fully closed, no flange gaskets; Results: No disc edge damage, proper sealing allowed.

Figure 4 – Final Aligning & Tightening of Flange Bolts

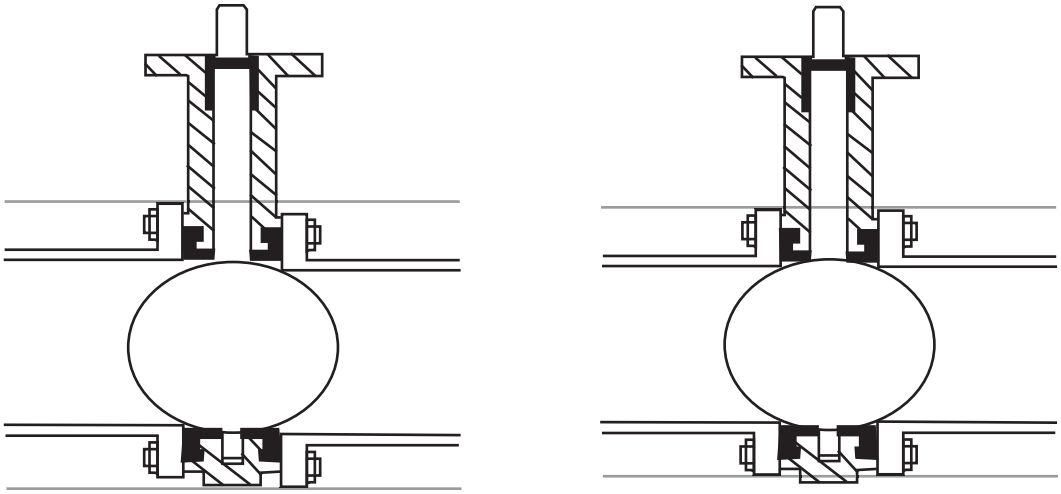

INCORRECT INSTALLATION

Piping misaligned; Results Disc O.D. strikes pipe I.D. causing disc edge damage, increased torque & leakage. Seat face o-rings will not seal properly with incorrectly aligned piping.

CORRECT INSTALLATION

Piping aligned properly when bolts tightened, disc in full open position; Results – disc clears adjacent pipe I.D., seat face seals properly, no excessive initial torque.

When resilient seated butterfly valves are to be installed between ASME welding type flanges, care should be taken to abide by the following procedure to ensure no damage will occur to the seat:

1. Place the valve between the flanges with the flange bores and valve body aligned properly. The disc should be in the 10° open position.
2. Span the body with the bolts.
3. Take this assembly of flange-body-flange and align it properly to the pipe.
4. Tack weld the flanges to the pipe.
5. When tack welding is complete, remove the bolts and the valve from the pipe flanges and complete the welding of the flanges. Be sure to let the pipe and flanges cool before installing the valve.

CAUTION

Never complete the welding process (after tacking) with the valve between pipe flanges. This causes severe seat damage due to heat transfer.

Installation of Bray PTFE Seated Butterfly Valves in Plastic Flanges.

Bray recommends the following guidelines when PTFE Seated Valves are installed between plastic flanges:

1. The valve body should be coated with epoxy, not nylon. The extra thickness of the nylon coating slightly reduces the seat compression, and every advantage to maximize seat compression should be taken with plastic flanges.
2. The plastic flange can be either one piece construction, or two piece construction comprised of a stub end and a backup ring.
3. The plastic flange style can be butt-weld, socket or slip-on, but butt-weld and socket are preferred.
4. The plastic flange face must be flat. Concave and convex flange faces are not acceptable. This includes flange faces that were originally flat but later distorted into a concave shape by over tightening the flange bolts.
5. The plastic flange face surface may have grooves or serrations, provided the grooves do not exceed .100" (2.54 mm) in width or .020" (.508 mm) in depth. If the grooves are less than .100" (2.54 mm) in width, the groove depth must not exceed the width. However, fine conentric or "phonograph record" grooves are acceptable regardless of the groove depth.
6. Flange gaskets must not be used with PTFE seats, since they create an uncontrolled over compression that can buckle the PTFE and damage the seat. If a damaged face, a flange gasket can appear to cure the leak to atmosphere, while simultaneously damaging the PTFE seat and creating a second leak across the disc or up the stem hole. Leaks across the plastic flange must be cured without the use of gaskets, by proper selection and installation of the flange.
7. The bolts holding plastic flanges should be installed in strict conformance to the recommended practices of the plastic flange manufacturer. This usually involves aligning the flanges accurately, using lubricated bolts, and tightening the bolts in the proper sequence and to the specified torque. Uniform stress across the flange prevents leakage.

Maintenance and Repair

The many Bray features minimize wear and maintenance requirements. No routine lubrication is required. **All components – stem, disc, seat, bushing, stem seal, etc., are field replaceable, no adjustment is required**. If components require replacement, the valve may be removed from the line by placing the disc in the near closed position, then supporting the valve and removing the flange bolts.

WARNING No valve maintenance, including removal of manual or power actuators, should be performed until the piping system is completely depressurized.

Appendix A

Disassembly/Assembly Instructions

Series 20/21 Resilient Seated Butterfly Valves

Disassembly

1. Remove handle, gear operator or power actuator from actuator mounting flange.
2. Remove the body bolts and pull the lower body half away from the seat.
3. Pull the seat and disc stem from the upper body half.
4. Remove bushing and seal from the upper body.
5. Push the seat into an oval shape and remove the disc stem by withdrawing the short stem end first.

Assembly

1. Push the long stem end of the disc into the seat.
2. Then push the seat over the disc's short stem.
3. Place the disc stem and seat into the upper body half.
4. Align the lower body with the upper body and position lower body in the seat.

NOTICE	The body halves have a matching casting node on one side only to ensure correct assembly of body halves.

5. Replace the body bolts and tighten.
6. Install the stem seal, then the stem bushing.

   Note: It is recommended that the stem bushing be coated with a light amount of silicone grease before installation in the valve body. This coating of silicone grease will assist in keeping the stem bushing in the valve body until an actuator is mounted on the valve.

7. Replace handle, manual gear operator or power actuator on the actuator mounting flange.

Appendix A

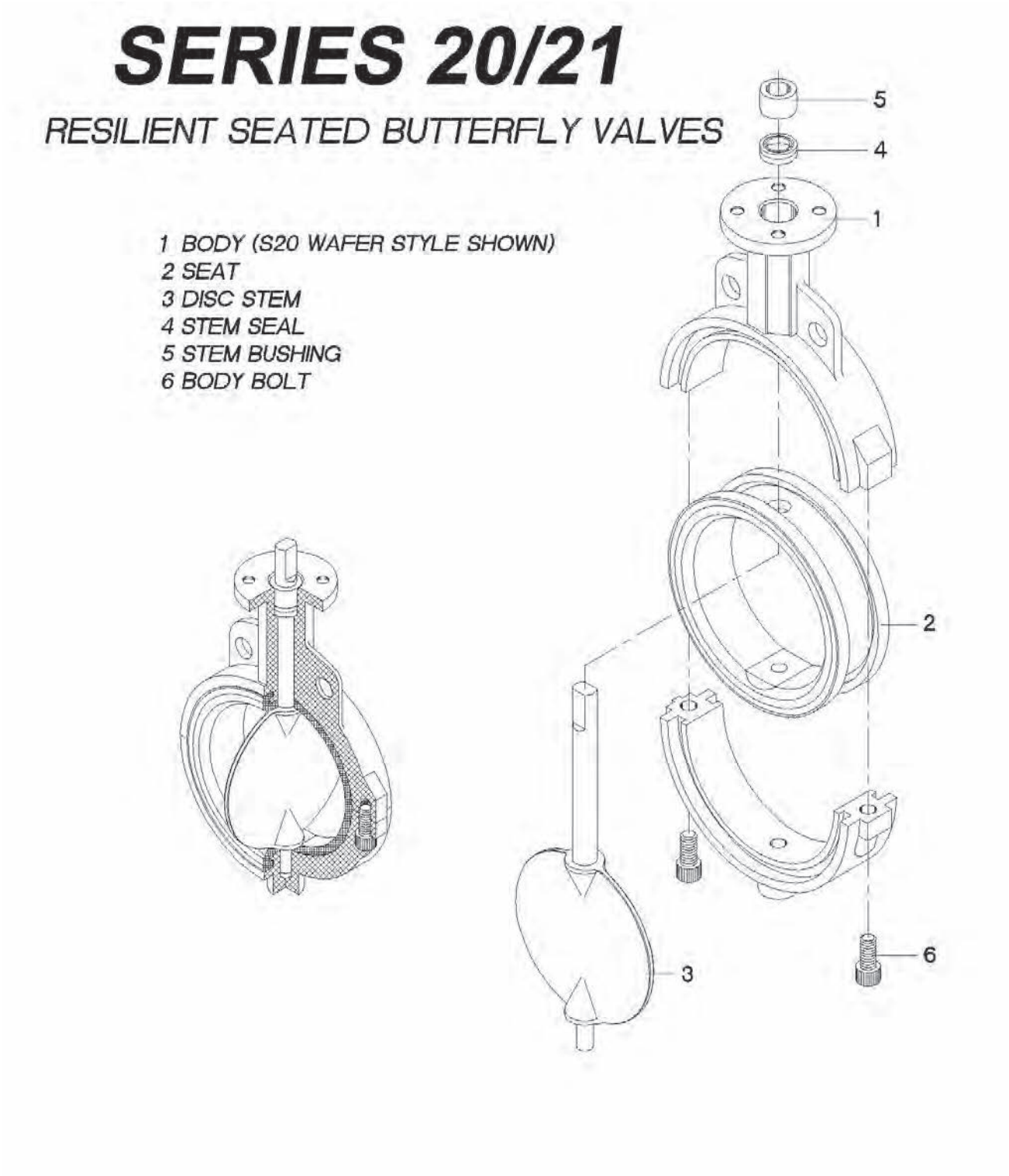
SERIES 20/21
RESILIENT SEATED BUTTERFLY VALVES
1 BODY (S20 WAFER STYLE SHOWN)
2 SEAT
3 DISC STEM
4 STEM SEAL
5 STEM BUSHING
6 BODY BOLT
5
4
1
2
3
6

Appendix B

Disassembly/Assembly Instructions

Series 22/23 Resilient Seated Butterfly Valves

Disassembly –

1. Remove the handle, gear operator, or power actuator from actuator mounting flange.
2. Remove the "Spirolox"® retaining ring and the two C-ring stem retainers from the stem hole.
3. Then remove the stem, bushing and seal.
4. Remove the disc from the seat, protecting the disc edge at all times.
5. Remove the seat energizer from the stems and seat.
6. Remove the lower and upper stems from the disc or remove the lower stem if the upper stem is connected to the disc
7. Compress the seat just enough to allow the disc to be removed along with the seal capsules.
8. Remove the retainer bushing and upper stem seal.

Assembly –

1. Install the stem bearings in upper and lower body halves.
2. Place the body seal strip on the lower body half, overlapping the body width by approximately 0.19" on both sides.
3. Press the seat to make the I.D. elliptical, then insert the shaft seals and place the disc into the seat. Rotate the disc hubs into alignment with the seat.
4. Insert the upper and lower stems.
5. Slip one seat energizer strip onto the lower portion of the upper shaft.
6. Insert the upper shaft with the pre-installed seat energizer strip into the disc/seat sub assembly.
7. Drive the upper shaft into the disc and slip one seat energizer strip onto the lower shaft.
8. Rotate the disc into the open position and insert the disc/seat/stems/energizer sub assembly into the upper body half.
9. Place the lower body half over the seat, and ensure that both body halves are properly aligned (identified by cast-on markings.
10. Attach and tighten the body fasteners.

SERIES 22/23

RESILIENT SEATED BUTTERFLY VALVES

1. BODY
2. DISC
3. SEAT
4. UPPER STEM
5. LOWER STEM
6. BUSHING
7. UPPER STEM SEAL
8. SEAL CAPSULE
9. BEARING
10. SEAT ENERGIZER
11. CAP SCREW
12. RETAINER
13. BODY SEAL
14. ID TAG

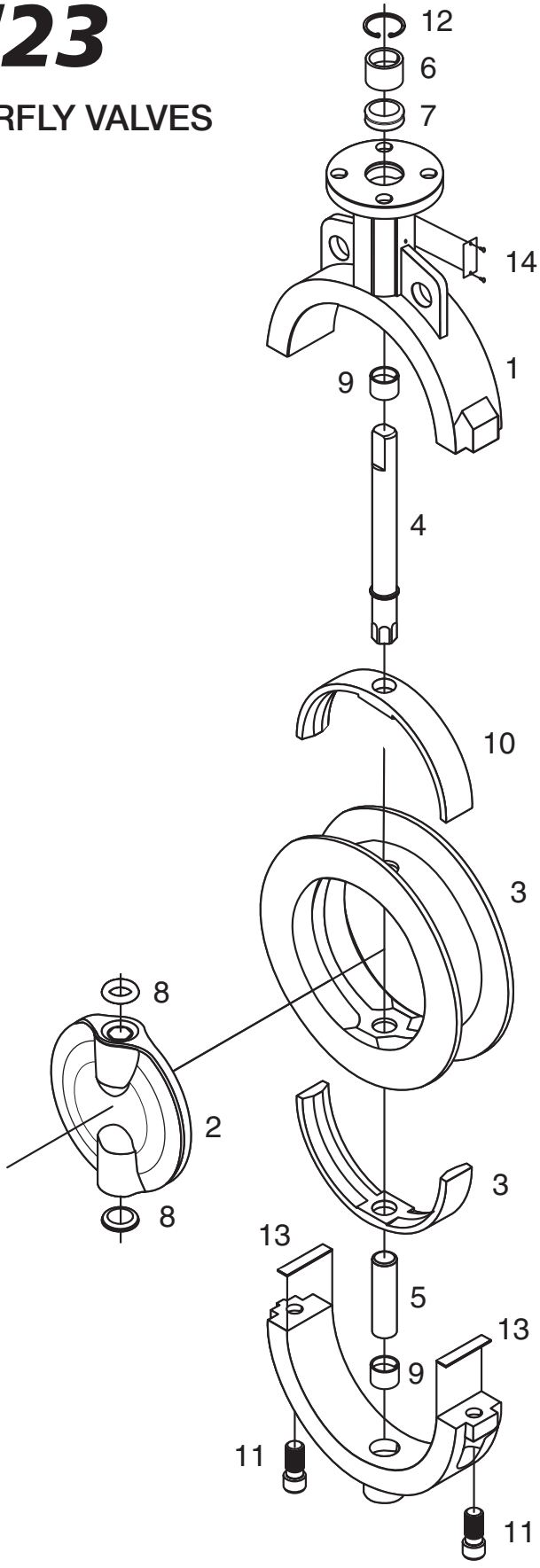

Appendix C

Disassembly/Assembly Instructions

Series 30/31 Resilient Seated Butterfly Valves

Disassembly –

1. Remove the handle, gear operator, or power actuator from actuator mounting flange.
2. Remove the "Spirolox"® retaining ring and the two C-ring stem retainers from the stem hole.
3. Then remove the stem, bushing and seal.
4. Remove the disc from the seat, protecting the disc edge at all times.
5. Push the seat into an oval shape, and then remove the seat from the body.

Assembly –

1. Push the valve seat into an oval and push it into the body with seat stem holes aligned to body stem holes.

NOTICE	When installing the seat the larger hole should be on top and the smaller hole should be on bottom.

2. Insert stem seal and bushing.
3. Push stem into the stem hole of the body until the bottom of the stem is flush with the inner top edge of the seat.
4. Install a light coating of silicone or grease on the I.D. of seat. Insert the disc into the seat by lining up the disc holes with the stem holes of the seat.

   Note: The broached double "D" flats in the disc must be toward the bottom of the valve body.

5. With a downward pressure and rotating the stem back and forth, push the stem until the stem touches the bottom of the body stem hole.
6. Make certain that when pushing the stem through the disc bottom, the broached flats of stem and disc are aligned.
7. Replace the stem bushing and two stem retainers, then replace the "Spirolox"® retaining ring back into position.
8. Replace handle, manual gear operator or power actuator on the actuator mounting flange.

SERIES 30/31

RESILIENT SEATED BUTTERFLY VALVES

1 BODY (S30 WAFER STYLE SHOWN)
2 SEAT
3 DISC
4 STEM
5 STEM SEAL
6 STEM BUSHING
7 STEM RETAINER
8 THRUST WASHER
9 RETAINING RING

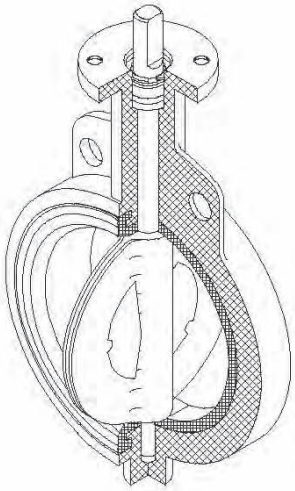

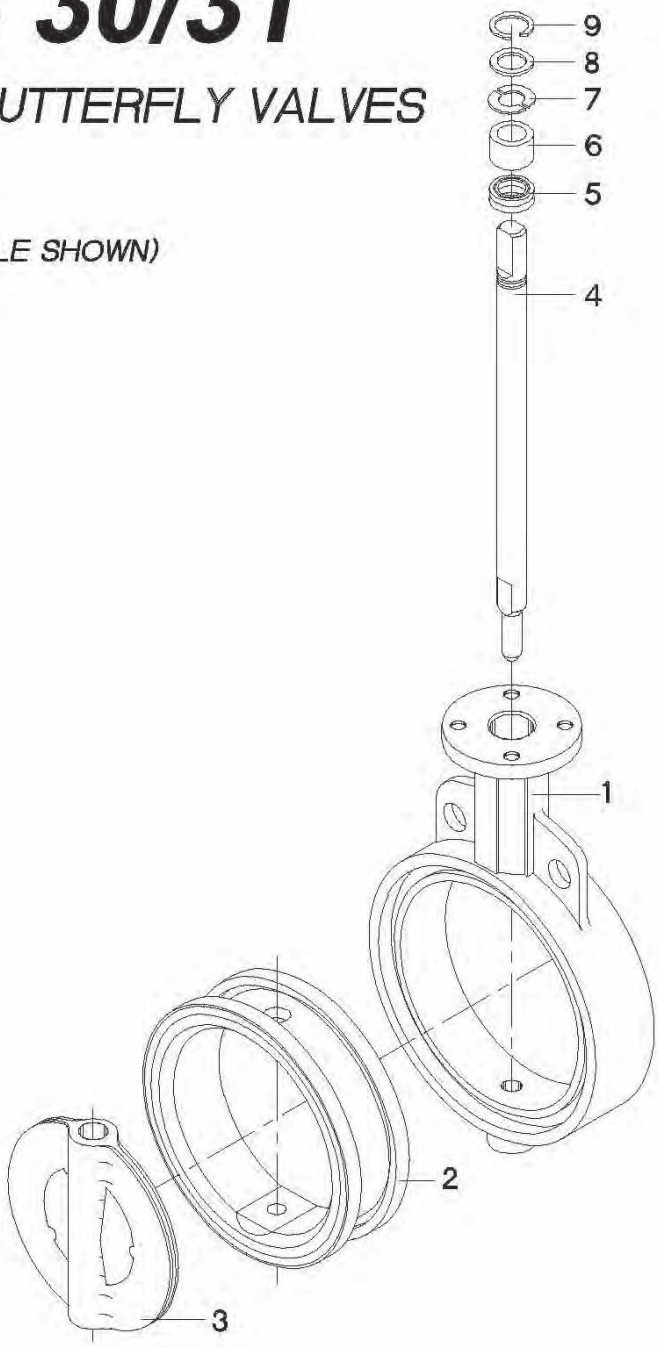

Appendix D

Disassembly/Assembly Instructions

Series 3A/3AH Resilient Seated Butterfly Valves

Disassembly –

1. Remove the handle, gear operator, or power actuator from actuator mounting flange.
2. Remove the "Spirolox"® retaining ring and the two C-ring stem retainers from the stem hole.
3. Then remove the stem, bushing and seal.
4. Remove the disc from the seat, protecting the disc edge at all times.

   Note: The seat is bonded to the body and is not easily field replaceable. Please contact your local Bray representative for seat replacement.

Assembly –

1. Insert stem seal and bushing.
2. Push stem into the stem hole of the body until the bottom of the stem is flush with the inner top edge of the seat.
3. Install a light coating of silicone or grease on the I.D. of seat. Insert the disc into the seat by lining up the disc holes with the stem holes of the seat.

   Note: The broached double "D" flats in the disc must be toward the bottom of the valve body.
4. With a downward pressure and rotating the stem back and forth, push the stem until the stem touches the bottom of the body stem hole.
5. Make certain that when pushing the stem through the disc bottom, the broached flats of stem and disc are aligned.
6. Replace the stem bushing and two stem retainers, then replace the "Spirolox"® retaining ring back into position.
7. Replace handle, manual gear operator or power actuator on the actuator mounting flange.

SERIES 3A/3AH

RESILIENT SEATED BUTTERFLY VALVES

1. BODY
2. SEAT
3. DISC
4. STEM
5. STEM SEAL
6. STEM BUSHING
7. STEM RETAINER
8. THRUST WASHER
9. RETAINING RING

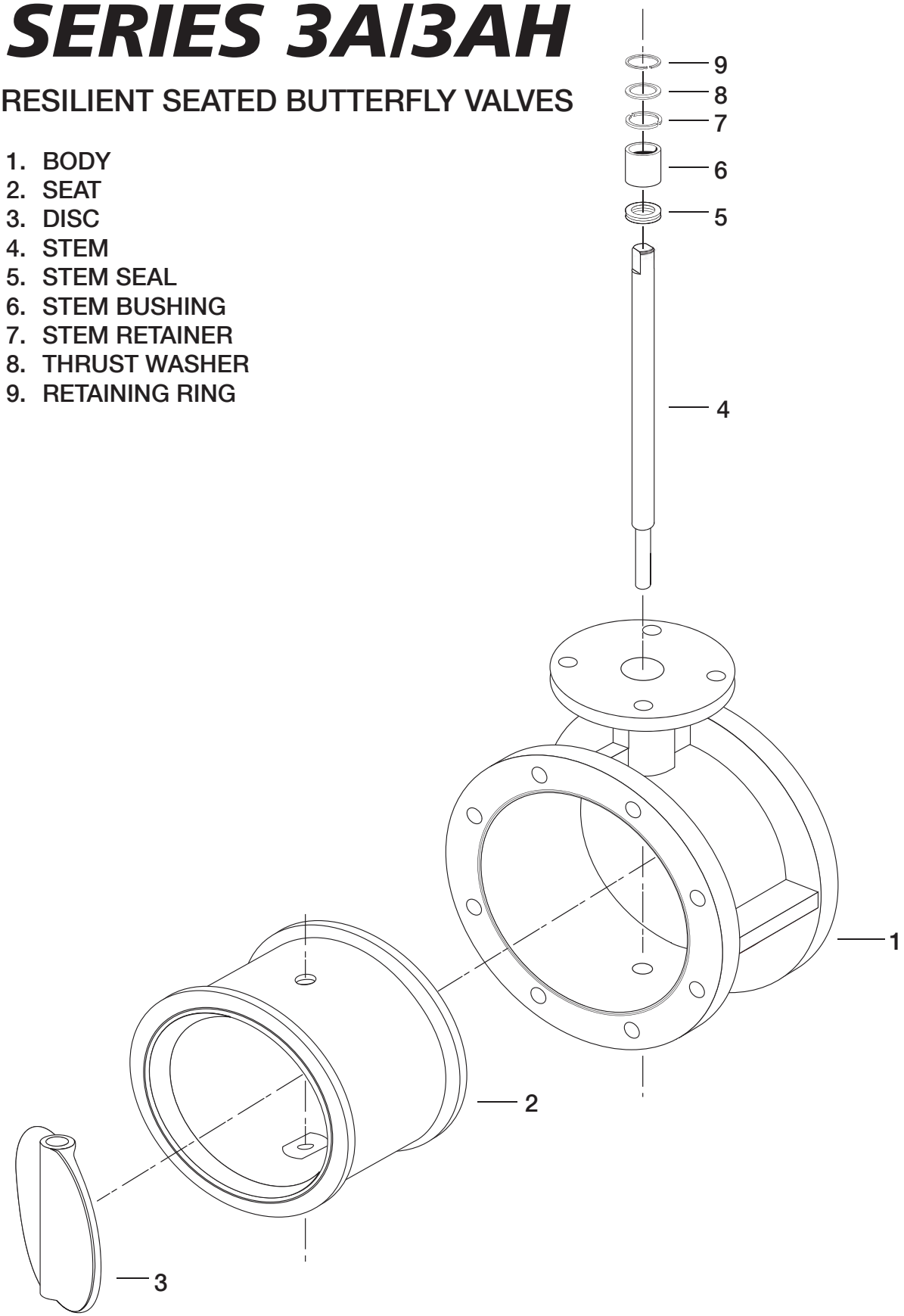

Appendix E

Disassembly/Assembly Instructions

Series 31H Resilient Seated Butterfly Valves

Disassembly –

1. Remove the handle, gear operator, or power actuator from actuator mounting flange.
2. Remove the "Spirolox"® retaining ring and the two C-ring stem retainers from the stem hole.
3. Then remove the stem, bushing and seal.
4. Remove the disc from the seat, protecting the disc edge at all times.

Note: Valve is provided with the seat bonded to the body and therefore is not easily field replaceable. Please contact your local Bray representative for seat replacement.

Assembly –

1. Insert stem seal and bushing.
2. Push stem into the stem hole of the body until the bottom of the stem is flush with the inner top edge of the seat.
3. Install a light coating of silicone or grease on the I.D. of seat. Insert the disc into the seat by lining up the disc holes with the stem holes of the seat.

Note: The broached double "D" flats in the disc must be toward the bottom of the valve body.

4. With a downward pressure and rotating the stem back and forth, push the stem until the stem touches the bottom of the body stem hole.
5. Make certain that when pushing the stem through the disc bottom, the broached flats of stem and disc are aligned.
6. Replace the stem bushing and two stem retainers, then replace the "Spirolox"® retaining ring back into position.
7. Replace handle, manual gear operator or power actuator on the actuator mounting flange.

SERIES 31H

RESILIENT SEATED BUTTERFLY VALVES

1. BODY (S30 WAFER STYLE SHOWN)
2. SEAT
3. DISC
4. STEM
5. STEM SEAL
6. STEM BUSHING
7. STEM RETAINER
8. THRUST WASHER
9. RETAINING RING

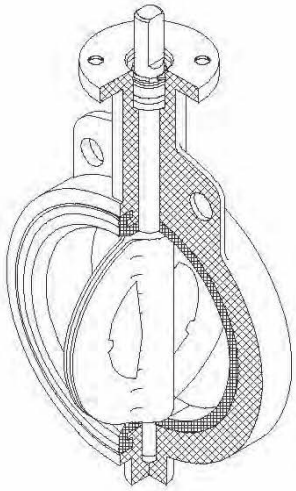

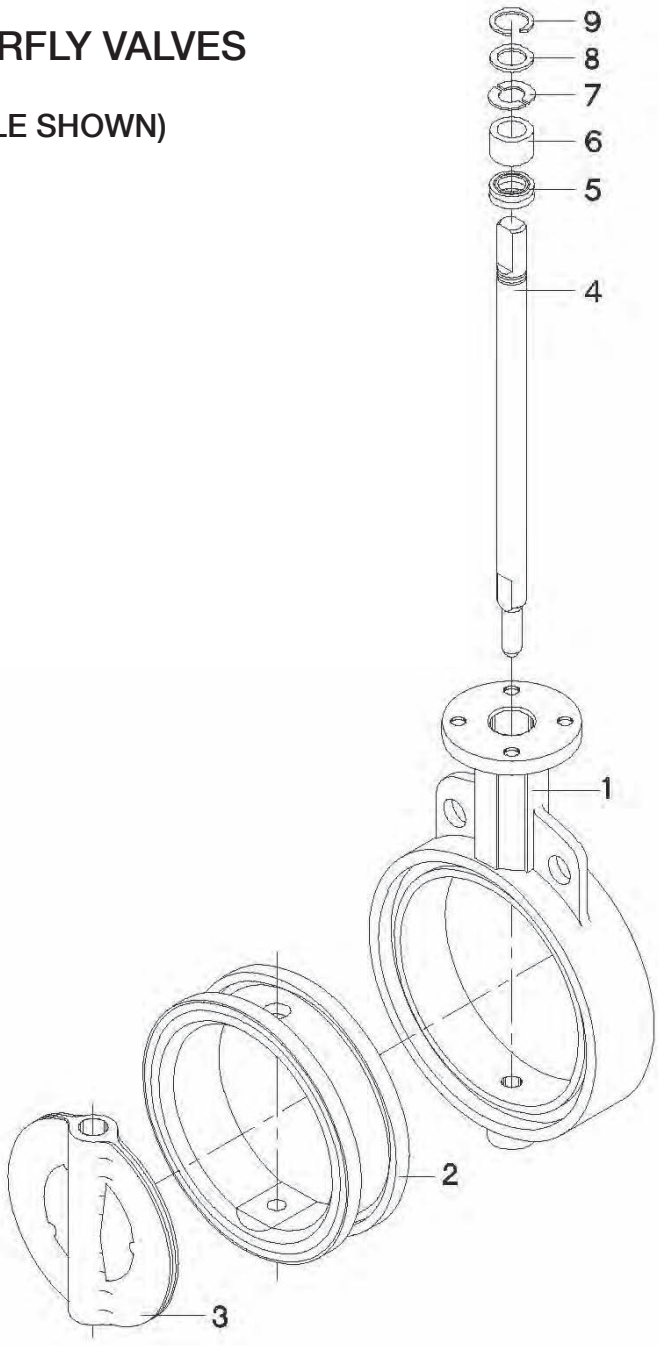

Appendix F

Disassembly/Assembly Instructions
Series 31U Resilient Seated Butterfly Valves

Disassembly –

1. Remove the handle, gear operator, or power actuator from actuator mounting flange.
2. Remove the "Spirolox"® retaining ring and the two C-ring stem retainers from the stem hole.
3. Then remove the top stem bushing and seal, upper stem and retaining rod.
4. Remove the disc from the seat, protecting the disc edge at all times.
5. The upper and lower stem bearings will remain in the valve behind the seat.

   Note: The seat is bonded to the body and is not easily field replaceable. Please contact your local Bray representative for seat replacement.

Assembly –

1. Install a light coating of silicone or grease on the I.D. of seat.
2. Insert the lower stem inside the disc before inserting the disc into the seat.
3. Insert the disc into the seat by lining up the disc holes with the stem holes of the seat.
4. Line up the disc using a T-Bar (Allan key style)
5. With a downward pressure and rotating the T-Bar back and forth, push the lower stem until the lower stem touches the bottom of the body stem hole recess.

   Note: The broached double "D" flats in the disc must be toward the bottom of the valve body.

6. Make certain that when pushing the stem through the disc bottom, the broached flats of stem and disc are aligned.
7. Insert the spacer bar and upper stem into the disc and valve.
8. Replace the top stem bushing and seal and two stem retainers.
9. Then replace the two "C" ring stem retainers and the "Spirolox"® retaining ring back into position in the top stem hole.

   Note: It is recommended that a torque and seat test be done to confirm all is in order with the maintenance of the valve.

10. Replace the handle, manual gear operator or power actuator on the actuator mounting flange.

SERIES 31U

RESILIENT SEATED BUTTERFLY VALVES

1. BODY
2. DISC
3. UPPER STEM
4. LOWER STEM
5. SEAT
6. BEARING
7. STEM SEAL
8. STEM BUSHING
9. STEM RETAINER C WASHERS
10. UPPER THRUST WASHER
11. RETAINING RING
12. LOWER THRUST WASHER
13. SPACER
14. SEAL PLUG

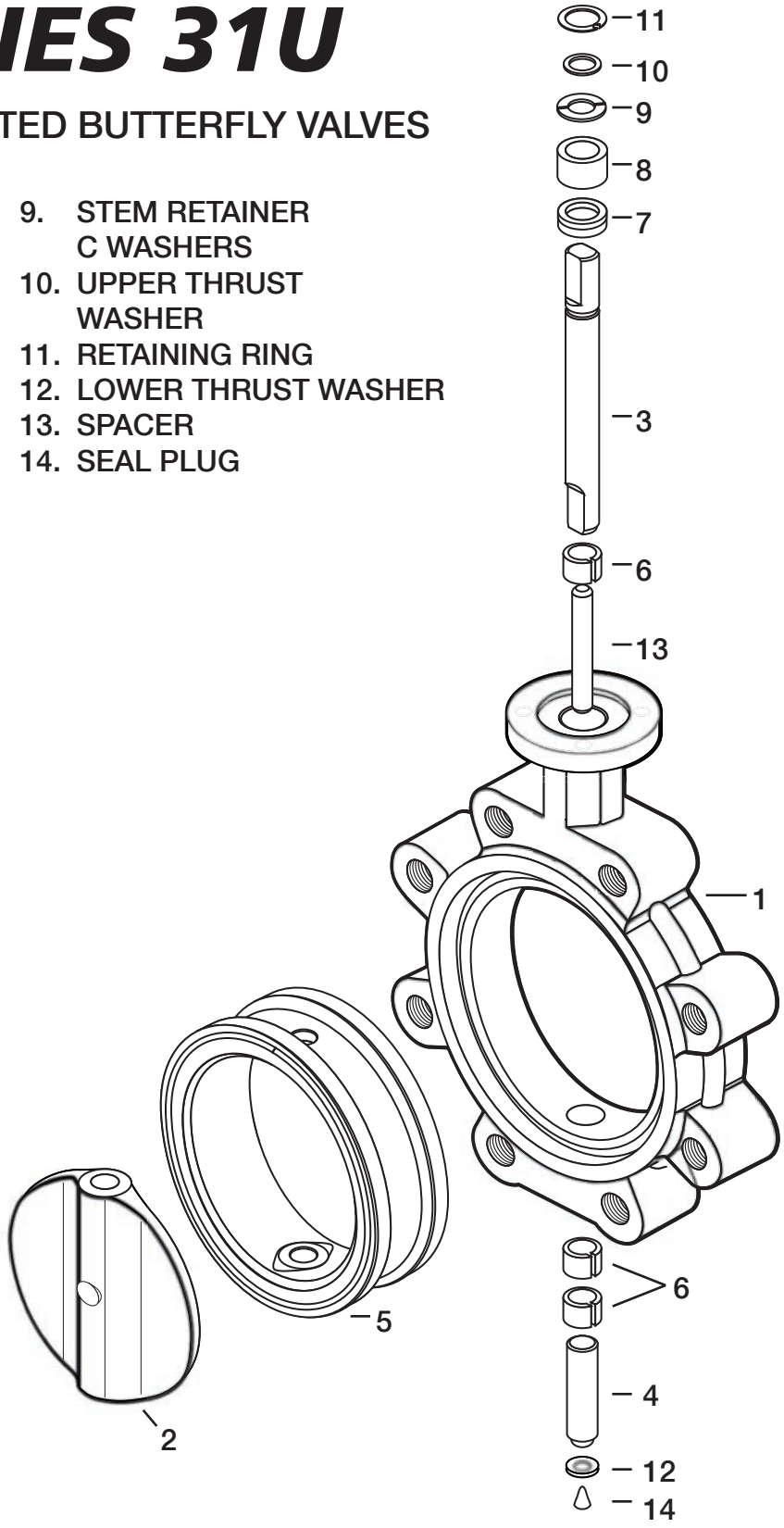

Appendix G

Disassembly/Assembly Instructions
Series 32/33 Resilient Seated Butterfly Valves

Disassembly –

1. Remove the gear operator or power actuator from the actuator mounting flange.
2. Secure the valve in a horizontal position with the taper-pin nuts facing upward.

CAUTION

Prior to removal of the valve stem the valve disc must be secured and supported to insure it does not drop out of the valve body once the stem is removed. Lay the valve down with two wood blocks located under the disc at the 6 o'clock and 12 o'clock positions making sure the blocks are in close contact with the disc but not supporting the valve.

3. Remove the packing gland by removing the retaining screws and sliding the gland off the top of the stem.
4. Remove bottom plate and thrust bearing to expose bottom of stem.
5. Remove nuts and washers from ends of taper pins and drive taper pins out of the disc. Avoid damaging the disc coating or surface when removing taper-pins.
6. Once taper-pins are removed, drive the stem, bushing, and packing out of the valve body through the top.
7. Remove the disc from the seat, protecting disc edge at all times.
8. Push the seat into an oval shape, and then remove the seat from the body.

Appendix G (Cont'd)

Disassembly/Assembly Instructions
Series 32/33 Resilient Seated Butterfly Valves

Assembly –

1. Replace bottom thrust bearing and plate.
2. Push the seat into an oval and push it into the body with seat stem holes aligned to body stem holes.
3. De-bur taper-pin grooves in the stem.
4. Push stem into stem hole of body until the bottom of the stem is flush with the inner top edge of the seat.

   Note: The end of the stem containing the keyway must be toward the top of the valve body.

5. Install a light coating of silicone or grease on the I.D. of the seat.
6. Insert the disc into the seat by lining up the disc hole with the upper stem hole of the seat.
7. With a downward pressure and rotating the stem back and forth, push the stem until the stem touches the bottom of the body stem hole.

   Note: Make certain that when pushing the stem to the bottom of the body, the taper-pin grooves in the stem line up with the holes in the disc face.

8. Tap the taper-pins into their holes from the large side of the hole, making sure the pins fit tightly in the hole and allow no movement of the stem in the disc.

   Note: Ensure that the taper-pin o-rings are in place before completing valve assembly.

9. Replace the washers and nuts on the ends of the taper-pins.
10. Replace bushing, packing, and packing gland, and then tighten the retaining screws snugly.
11. Replace manual gear operator or power actuator on the actuator mounting flange.

SERIES 32/33

RESILIENT SEATED BUTTERFLY VALVES

1 BODY
2 DISC
3 STEM
4 SEAT
5 STEM PACKING
6 STEM BEARING
7 TAPER PIN
8 WASHER
9 NUT
10 O-RING
11 THRUST BEARING
12 BOTTOM PLATE
13 BOTTOM PLATE GASKET
14 BOLT-HEX HEAD
15 KEY
16 STEM RETAINER
17 CAP SCREW
18 ID TAG
19 POP RIVET

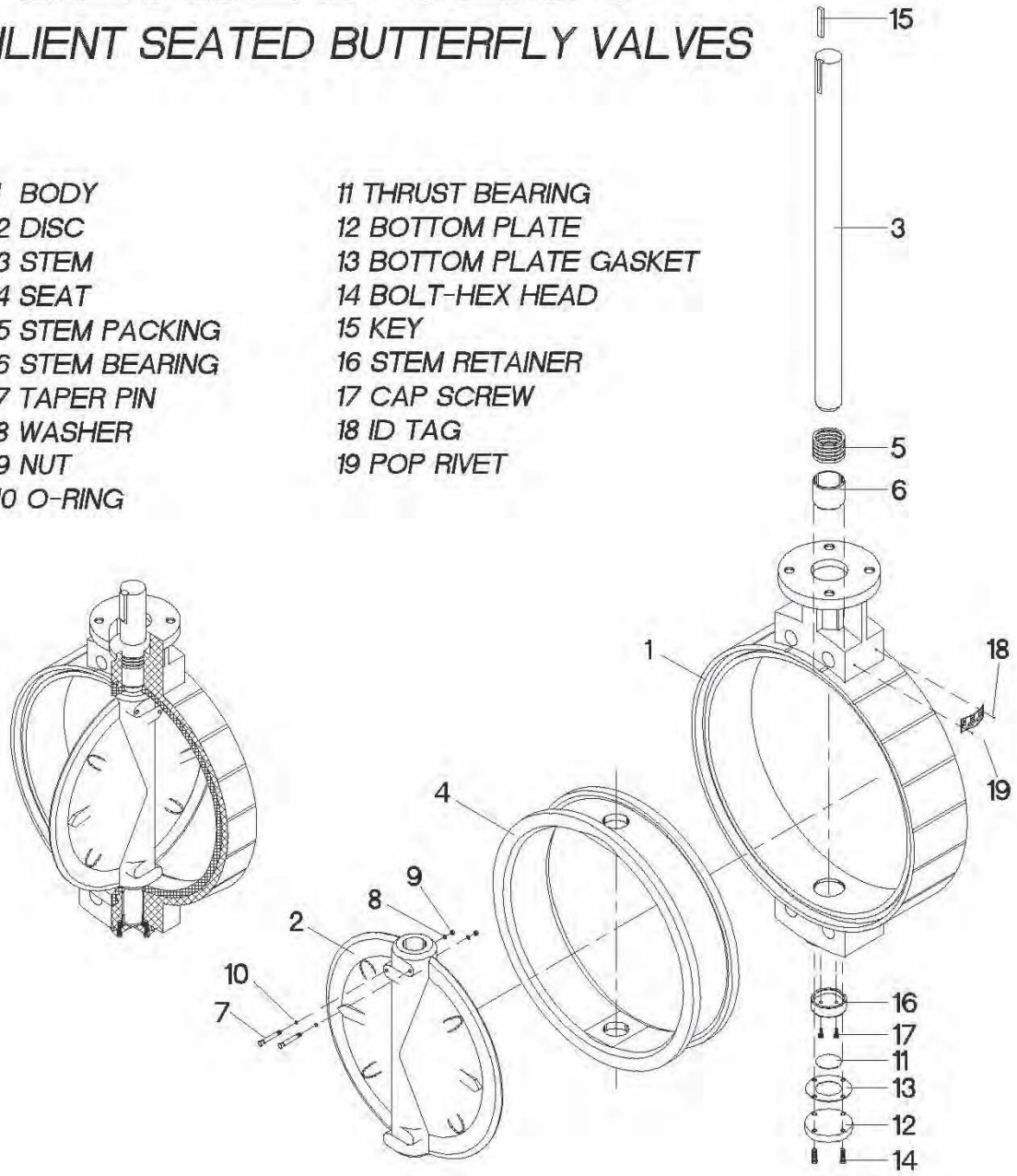

Appendix H

Disassembly/Assembly Instructions
Series 35/36 Resilient Seated Butterfly Valves
(Taper Pin Disc/Stem Connection)

Disassembly –

1. Remove the gear operator or power actuator from the actuator mounting flange.
2. Secure the valve in a horizontal position with the taper-pin nuts facing upward.



CAUTION

Prior to removal of the valve stem the valve disc must be secured and supported to insure it does not drop out of the valve body once the stem is removed. Lay the valve down with two wood blocks located under the disc at the 6 o'clock and 12 o'clock positions making sure the blocks are in close contact with the disc but not supporting the valve.

3. Remove the packing gland by removing the retaining screws and sliding the gland off the top of the stem.
4. Remove bottom plate and thrust bearing to expose bottom of stem.
5. Remove nuts and washers from ends of taper pins and drive taper pins out of the disc. Avoid damaging the disc coating or surface when removing taper-pins.
6. Once taper-pins are removed, drive the stem, bushing, and packing out of the valve body through the top.
7. Remove the disc from the seat, protecting disc edge at all times.
8. Push the seat into an oval shape, and then remove the seat from the body.

Note: Valves 54" and larger are provided with the seat bonded to the body and therefore is not easily field replaceable. Please contact your local Bray representative for seat replacement.

Appendix H (Cont'd)

Disassembly/Assembly Instructions
Series 35/36 Resilient Seated Butterfly Valves
(Taper Pin Disc/Stem Connection)

Assembly –

1. Replace bottom thrust bearing and plate.
2. Push the seat into an oval and push it into the body with seat stem holes aligned to body stem holes.

   Note: Valves 54" and larger are provided with the seat bonded to the body and therefore is not easily field replaceable. Please contact your local Bray representative for seat replacement.

3. De-bur taper-pin grooves in the stem.
4. Push stem into stem hole of body until the bottom of the stem is flush with the inner top edge of the seat.

   Note: The end of the stem containing the keyway must be toward the top of the valve body.

5. Install a light coating of silicone or grease on the I.D. of the seat.
6. Insert the disc into the seat by lining up the disc hole with the upper stem hole of the seat.
7. With a downward pressure and rotating the stem back and forth, push the stem until the stem touches the bottom of the body stem hole.

   Note: Make certain that when pushing the stem to the bottom of the body, the taper-pin grooves in the stem line up with the holes in the disc face.

8. Tap the taper-pins into their holes from the large side of the hole, making sure the pins fit tightly in the hole and allow no movement of the stem in the disc.

   Note: Ensure that the taper-pin o-rings are in place before completing valve assembly.

9. Replace the washers and nuts on the ends of the taper-pins.
10. Replace bushing, packing, and packing gland, and then tighten the retaining screws snugly.
11. Replace manual gear operator or power actuator on the actuator mounting flange.

SERIES 35/36

RESILIENT SEATED BUTTERFLY VALVES
(Taper Pin Disc/Stem Connection)

1. BODY
2. DISC
3. STEM
4. SEAT
5. STEM PACKING
6. STEM BEARING
7. TAPER PIN
8. WASHER
9. NUT
10. O-RING
11. THRUST BEARING
12. BOTTOM PLATE
13. BOTTOM PLATE GASKET
14. BOLT-HEX HEAD
15. KEY
16. STEM RETAINER
17. CAP SCREW
18. PACKING GLAND
19. BOLT-HEX HEAD
20. ID TAG
21. POP RIVET

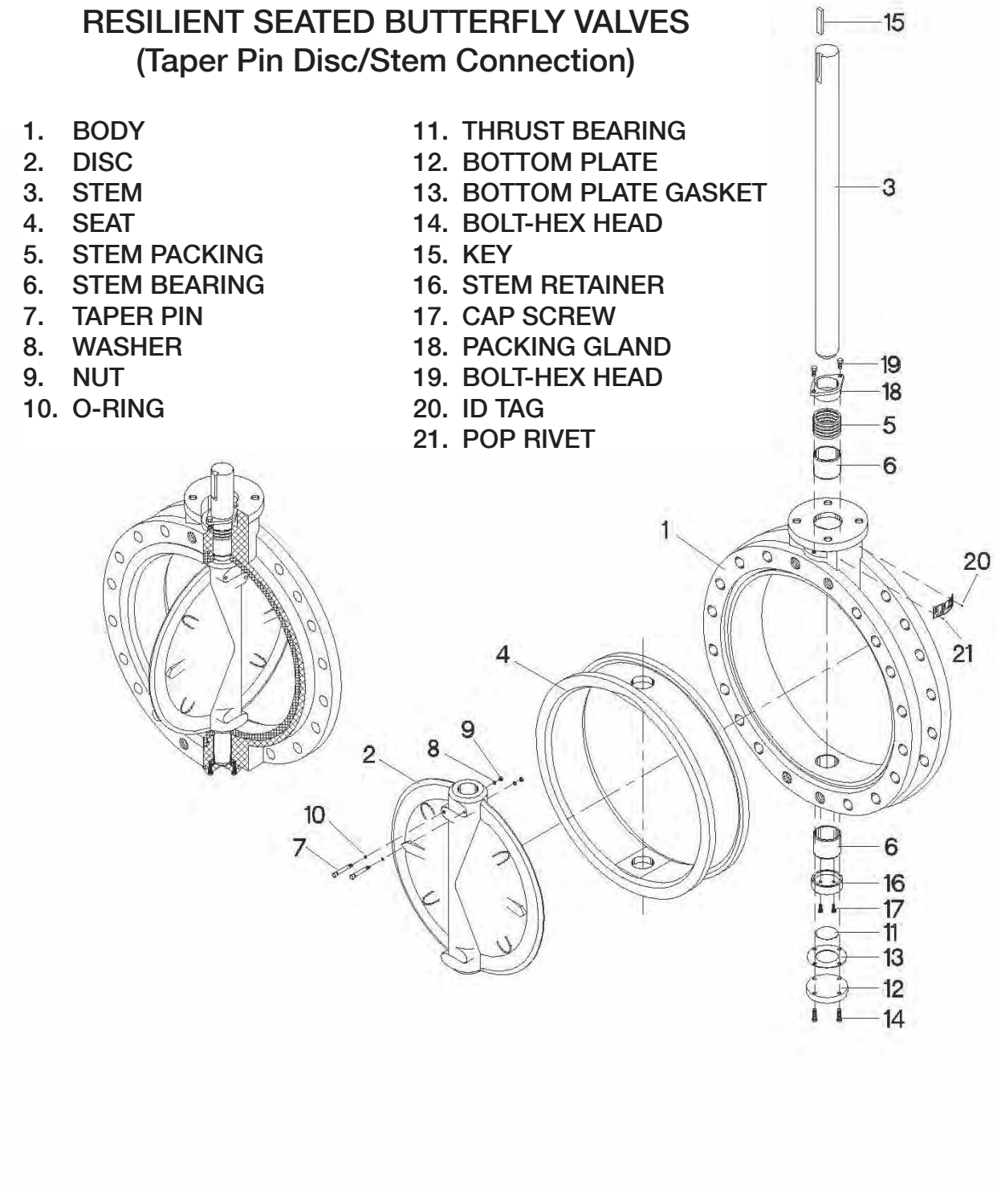

Appendix I
Disassembly/Assembly Instructions
Series 35/36 Resilient Seated Butterfly Valves
(Internal Spline or Keyed Disc/Stem Connection)

Disassembly –

1. Remove the gear operator or power actuator from the actuator mounting flange.
2. Secure the valve in a horizontal position.



CAUTION

Prior to removal of the valve stems the valve disc must be secured and supported to insure it does not drop out of the valve body once the stems are removed. Lay the valve down with two wood blocks located under the disc at the 6 o'clock and 12 o'clock positions making sure the blocks are in close contact with the disc but not supporting the valve.

3. Removal of the lower valve stem:

   a. Remove the bottom plate screws, bottom plate, bottom plate gasket and thrust bearing.

   b. Remove the locking nut from the tie bolt.

   c. Remove the stem retainer.

   d. Secure a hoist to the lower stem (end is imperial threaded).

   e. Then use the hoist to remove the lower stem from the valve body.

   f. Remove the stem bearing.

4. Removal of the upper valve stem:

   a. Remove the packing gland by removing the retaining screws and sliding the gland off the top of the stem.

   b. Secure a hoist to the upper stem (end is imperial threaded).

   c. Then use the hoist to remove the upper stem including the tie bolt from the valve body.

5. Removal of the valve disc:

   a. Remove the wood blocks noted above from below the disc.

   b. Using a rubber hammer, pound one area of the disc (ex. 12 o'clock position) repeatedly until the disc clears the face of the valve body.

Appendix I (Cont'd)
Disassembly/Assembly Instructions
Series 35/36 Resilient Seated Butterfly Valves
(Internal Spline or Keyed Disc/Stem Connection)

Disassembly –

6. Removal of packing and bearings:
    a. Remove the stem packing.
    b. Use a slotted screwdriver to carefully remove the upper and lower stem bearings.
7. Removal of the valve seat:

Note: Valves 54" and larger are provided with the seat bonded to the body and therefore is not easily field replaceable. Please contact your local Bray representative for seat replacement.

WARNING

a. Set the valve body in an upright position and secure it in a floor vice capable of handling the weight of the valve body and seat.

Note: Be sure to not clamp the seat in the vice.

b. Insert a slotted screwdriver into the space between the body and the seat on the face of the valve at the 12 o'clock position.
c. Carefully leverage the seat away from the body.
d. Push the seat into an oval shape and remove the seat from the body.

Assembly –

1. Installation of the valve seat:

Note: Valves 54" and larger are provided with the seat bonded to the body and therefore is not easily field replaceable. Please contact your local Bray representative for seat replacement.

WARNING

a. Set the valve body in an upright position and secure it in a floor vice capable of handling the weight of the valve body and seat.

Note: Be sure to not clamp the seat in the vice.

b. Check to assure the interior surface of the valve body is clean.
c. Install a light coating of silicone lubricant on the interior surface of the valve body.
d. Push the seat into an oval and push it into the body with seat stem holes aligned to the body stem holes.

Appendix I (Cont'd)
Disassembly/Assembly Instructions
Series 35/36 Resilient Seated Butterfly Valves
(Internal Spline or Keyed Disc/Stem Connection)

Assembly –

2. Installation of the valve disc:

   Note: Before installing the disc, check to assure the upper and lower stems are matched to the upper and lower stem holes in the disc.

   a. With the valve still in the vice in a vertical position, hoist the upper stem with the splined end or the double keyed end pointing upward.

   b. Push the upper stem into the stem hole of the upper body until the bottom of the stem exceeds the upper stem hole of the seat by 20-50 mm.

   c. Apply a light coating of silicone or grease on the I.D. of the seat.

   d. Insert the disc into the seat with the splined end or the double keyed end up.

   e. Push the disc into the seat while inserting the upper stem into the upper stem hole in the disc.

   f. Adjust the disc to assure the lower stem hole of the disc is properly aligned with the lower body stem hole.

3. Installation of the lower stem:

   a. Close the valve so that the disc is inside the edge of the seat.

   b. Carefully place the valve in a horizontal position assuring that there is no damage to the body and disc coatings and disc edge.

   c. Insert the stem bearing into the bottom stem hole of the body.

   d. Insert the lower stem into the body and disc.

      Note: The cone-shaped end of the lower stem should be toward the center of the disc.

Appendix I (Cont'd)
Disassembly/Assembly Instructions
Series 35/36 Resilient Seated Butterfly Valves
(Internal Spline or Keyed Disc/Stem Connection)

Assembly –

4. Installation of the upper stem:



CAUTION

a. Hoist the valve to an angle and secure it (be careful not to go to high so the lower stem does not drop out).

b. Remove the upper stem from the valve.

c. Screw the tie bolt with lock nut to the splined or the double keyed end of the upper stem, tighten the lock nut and insert the upper stem into the valve with the tie bolt end first.

Note: The tie bolt will go through the disc and reach to the bottom of the valve

Note: During this step, the keyway of the upper stem should be vertical to the front face of the valve.

5. Installation of packing and bearings (upper valve stem):

a. Insert the stem bearing into the top hole of the body followed by the stem packing and packing gland follower.

b. Use two hexagon bolts to fasten the packing gland.

6. Installation of packing and bearings (lower valve stem):

a. Insert the stem retainer into the bottom hole of the body using a nut to fasten it.

b. Install the locking nut on the tie bolt.

c. Install the thrust bearing, bottom plate gasket and bottom plate follower.

d. Use four hexagon bolts to fasten the bottom plate tightly.

SERIES 35/36

RESILIENT SEATED BUTTERFLY VALVES
(Internal Spline Valve)

1. BODY
2. DISC
3. UPPER STEM
4. SEAT
5. KEY
6. TIE BOLT
7. STEM BEARING
8. STEM PACKING
9. PACKING GLAND FOLLOWER
10. PACKING GLAND
11. BOLT-HEX HD
12. LOWER STEM
13. STEM RETAINER
14. HEX NUT
15. THRUST BEARING
16. BOTTOM PLATE GASKET
17. BOTTOM PLATE
18. BOLT-HEX HD
19. ID TAG
20. POP RIVET

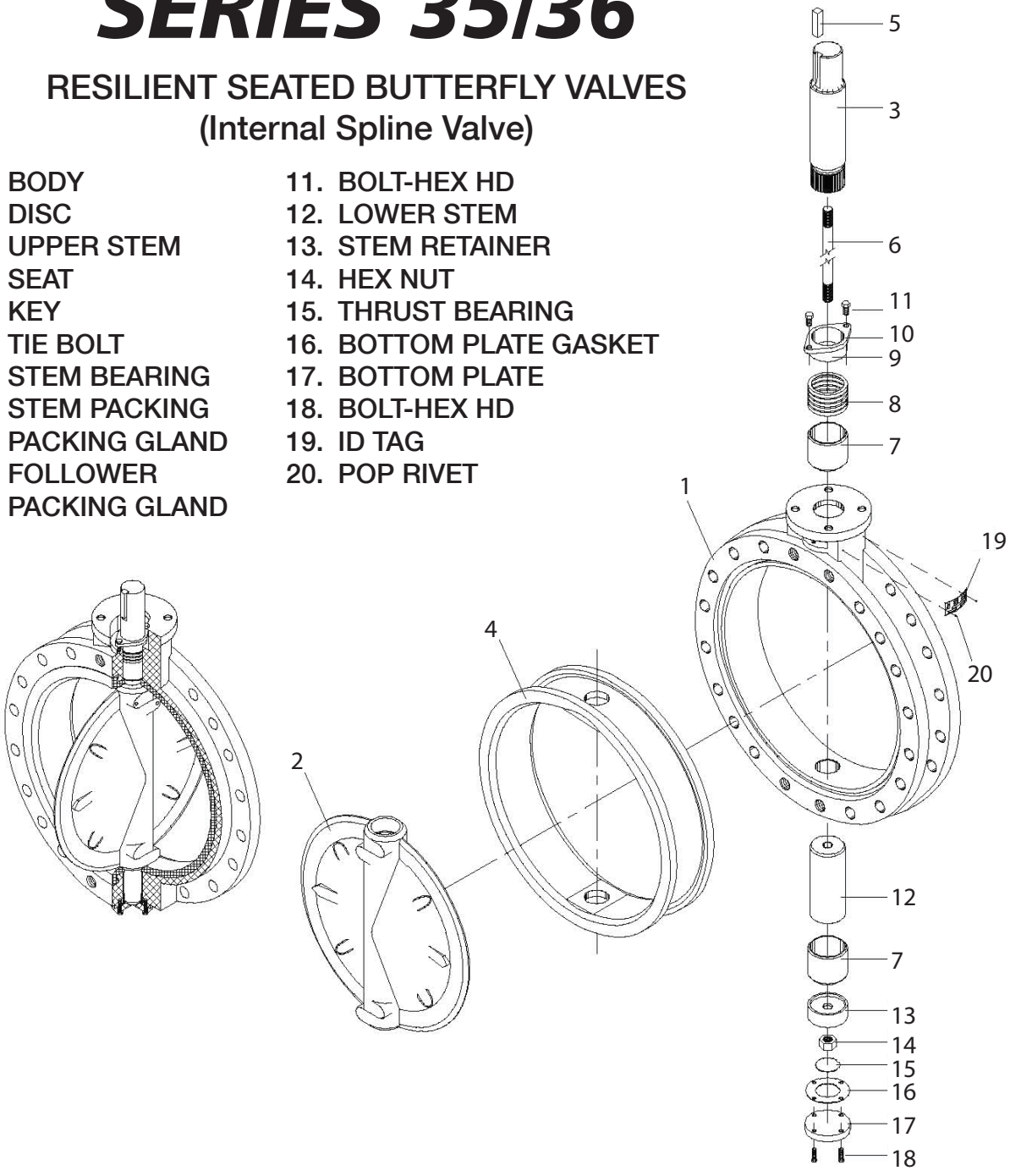

SERIES 35/36

RESILIENT SEATED BUTTERFLY VALVES
(Internal Keyed Valve)

1. BODY
2. DISC
3. UPPER STEM
4. SEAT
5. KEY
6. TIE BOLT
7. STEM BEARING
8. STEM PACKING
9. PACKING GLAND FOLLOWER
10. PACKING GLAND
11. BOLT-HEX HEAD
12. LOWER STEM
13. STEM RETAINER
14. HEX NUT
15. THRUST BEARING
16. BOTTOM PLATE GASKET
17. BOTTOM PLATE
18. BOLT-HEX HEAD
19. ID TAG
20. POP RIVET

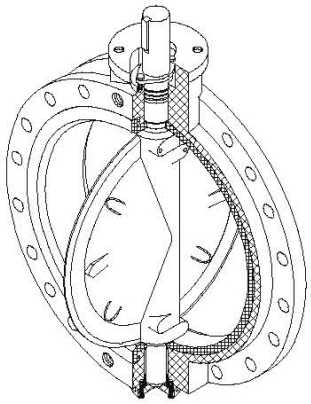

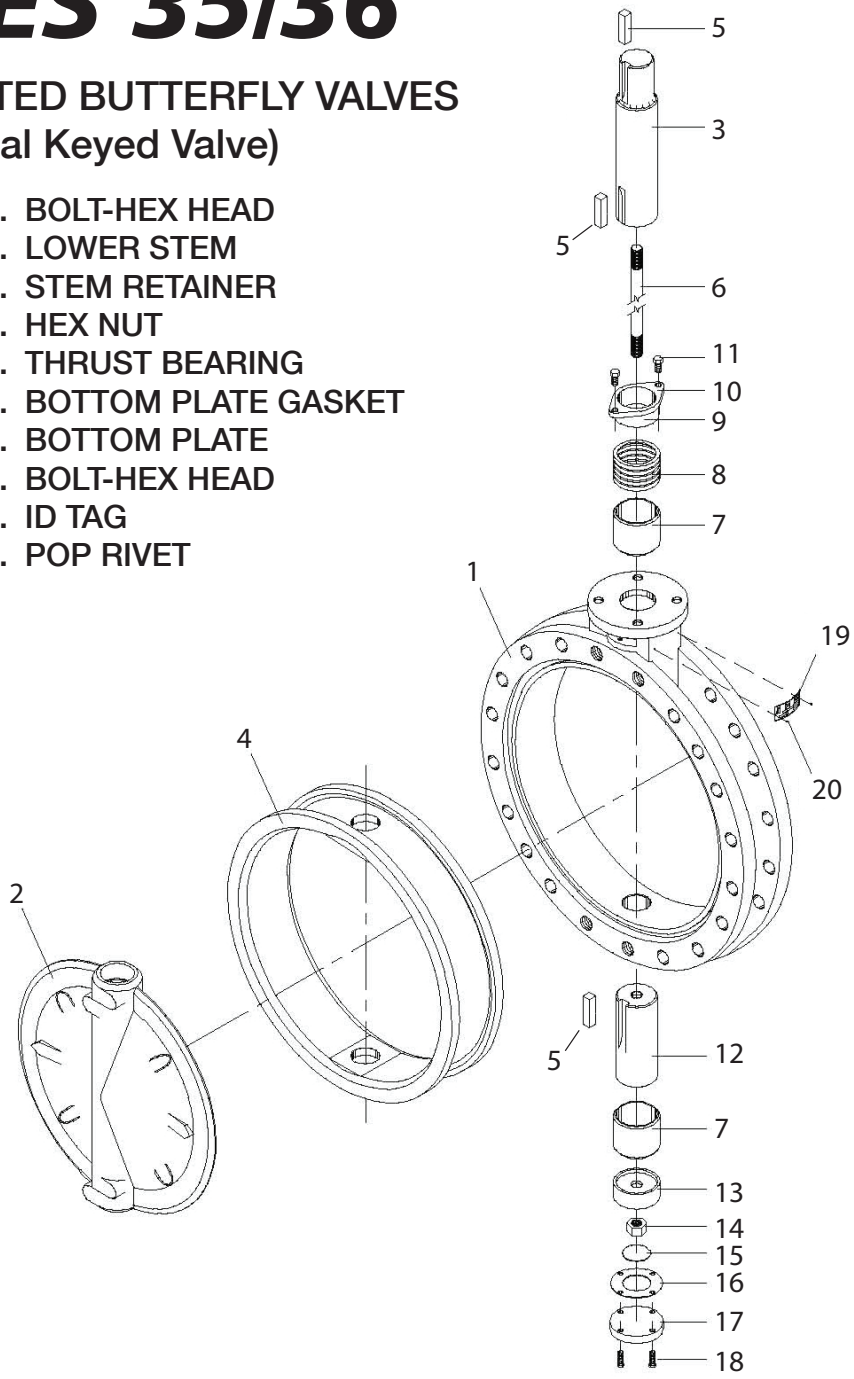

Appendix J

Disassembly/Assembly Instructions
Series 36H Resilient Seated Butterfly Valves

Disassembly –

1. Remove the gear operator or power actuator from the actuator mounting flange.
2. Secure the valve in a horizontal position with the taper-pin nuts facing upward.

CAUTION

Prior to removal of the valve stem the valve disc must be secured and supported to insure it does not drop out of the valve body once the stem is removed. Lay the valve down with two wood blocks located under the disc at the 6 o'clock and 12 o'clock positions making sure the blocks are in close contact with the disc but not supporting the valve.

3. Remove the packing gland by removing the retaining screws and sliding the gland off the top of the stem.
4. Remove bottom plate and thrust bearing to expose bottom of stem.
5. Remove nuts and washers from ends of taper pins and drive taper pins out of the disc. Avoid damaging the disc coating or surface when removing taper-pins.
6. Once taper-pins are removed, drive the stem, bushing, and packing out of the valve body through the top.
7. Remove the disc from the seat, protecting disc edge at all times.

Note: Valve is provided with the seat bonded to the body and therefore is not easily field replaceable. Please contact your local Bray representative for seat replacement.

Appendix J (Cont'd)

Disassembly/Assembly Instructions
Series 36H Resilient Seated Butterfly Valves

Assembly –

1. Replace bottom thrust bearing and plate.
2. De-bur taper-pin grooves in the stem.
3. Push stem into stem hole of body until the bottom of the stem is flush with the inner top edge of the seat.

   Note: The end of the stem containing the keyway must be toward the top of the valve body.

4. Install a light coating of silicone or grease on the I.D. of the seat.
5. Insert the disc into the seat by lining up the disc hole with the upper stem hole of the seat.
6. With a downward pressure and rotating the stem back and forth, push the stem until the stem touches the bottom of the body stem hole.

   Note: Make certain that when pushing the stem to the bottom of the body, the taper-pin grooves in the stem line up with the holes in the disc face.

7. Tap the taper-pins into their holes from the large side of the hole, making sure the pins fit tightly in the hole and allow no movement of the stem in the disc.

   Note: Ensure that the taper-pin o-rings are in place before completing valve assembly.

8. Replace the washers and nuts on the ends of the taper-pins.
9. Replace bushing, packing, and packing gland, and then tighten the retaining screws snugly.
10. Replace manual gear operator or power actuator on the actuator mounting flange.

SERIES 36H

RESILIENT SEATED BUTTERFLY VALVES

1. BODY
2. DISC
3. STEM
4. SEAT
5. STEM PACKING
6. STEM BEARING
7. TAPER PIN
8. WASHER
9. NUT
10. O-RING
11. THRUST BEARING
12. BOTTOM PLATE
13. BOTTOM PLATE GASKET
14. BOLT-HEX HEAD
15. KEY
16. STEM RETAINER
17. CAP SCREW
18. PACKING GLAND
19. BOLT-HEX HEAD
20. ID TAG
21. POP RIVET

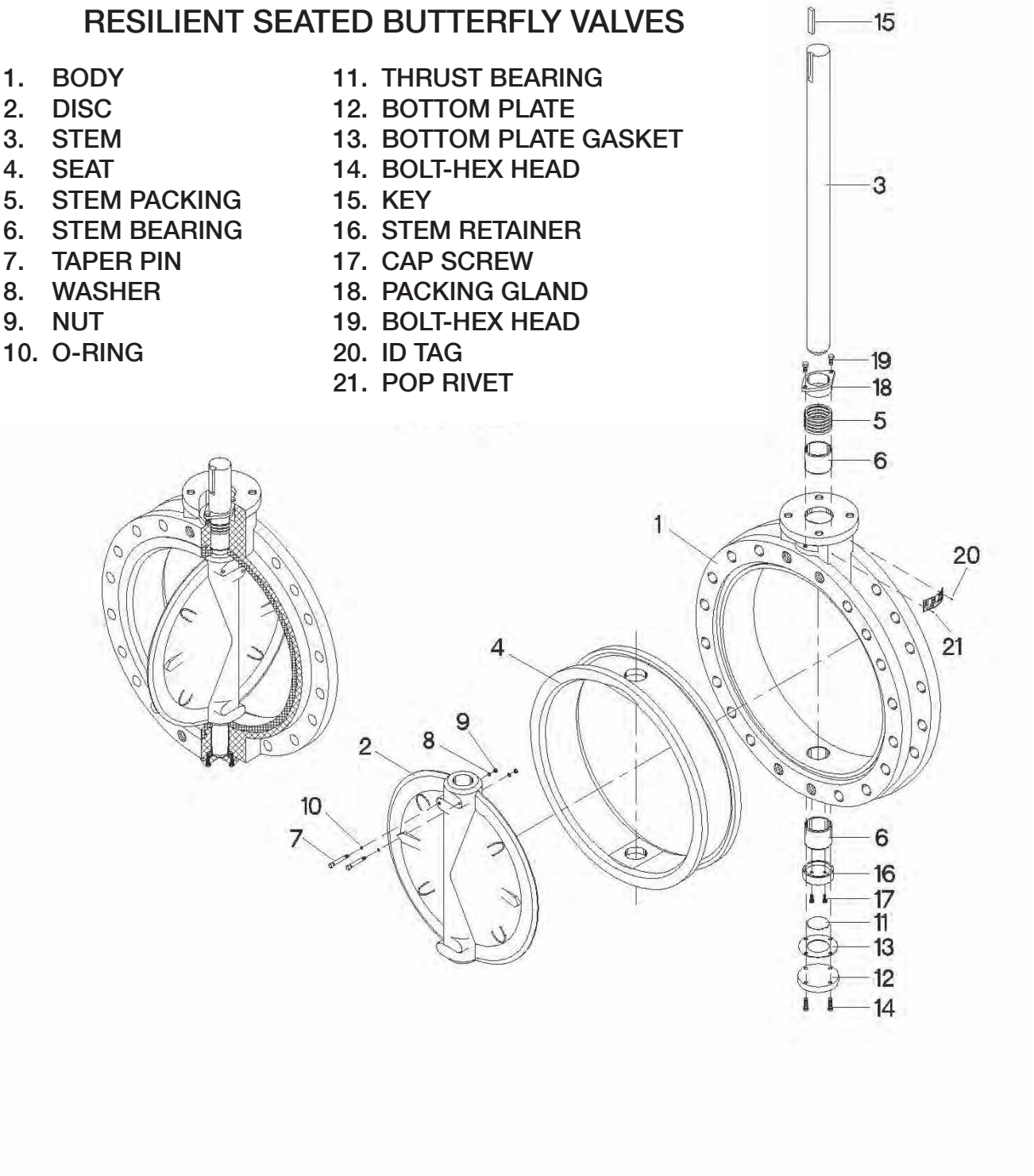









Bray® CONTROLS

A Division of BRAY INTERNATIONAL, Inc.
13333 Westland East Blvd. Houston, Texas 77041
281/894-5454 FAX 281/894-9499 www.bray.com

Bray® is a registered trademark of
BRAY INTERNATIONAL, Inc.
© 2012 Bray International. All rights reserved.
OM-RSBFV-001 08-2012

LEFT BLANK

BRAY

SERIES 92, PNEUMATIC ACTUATOR

LEFT BLANK

Bray®

Your Global Flow Control Partner™

Series 92/93
Pneumatic Actuator
Operation and Maintenance Manual

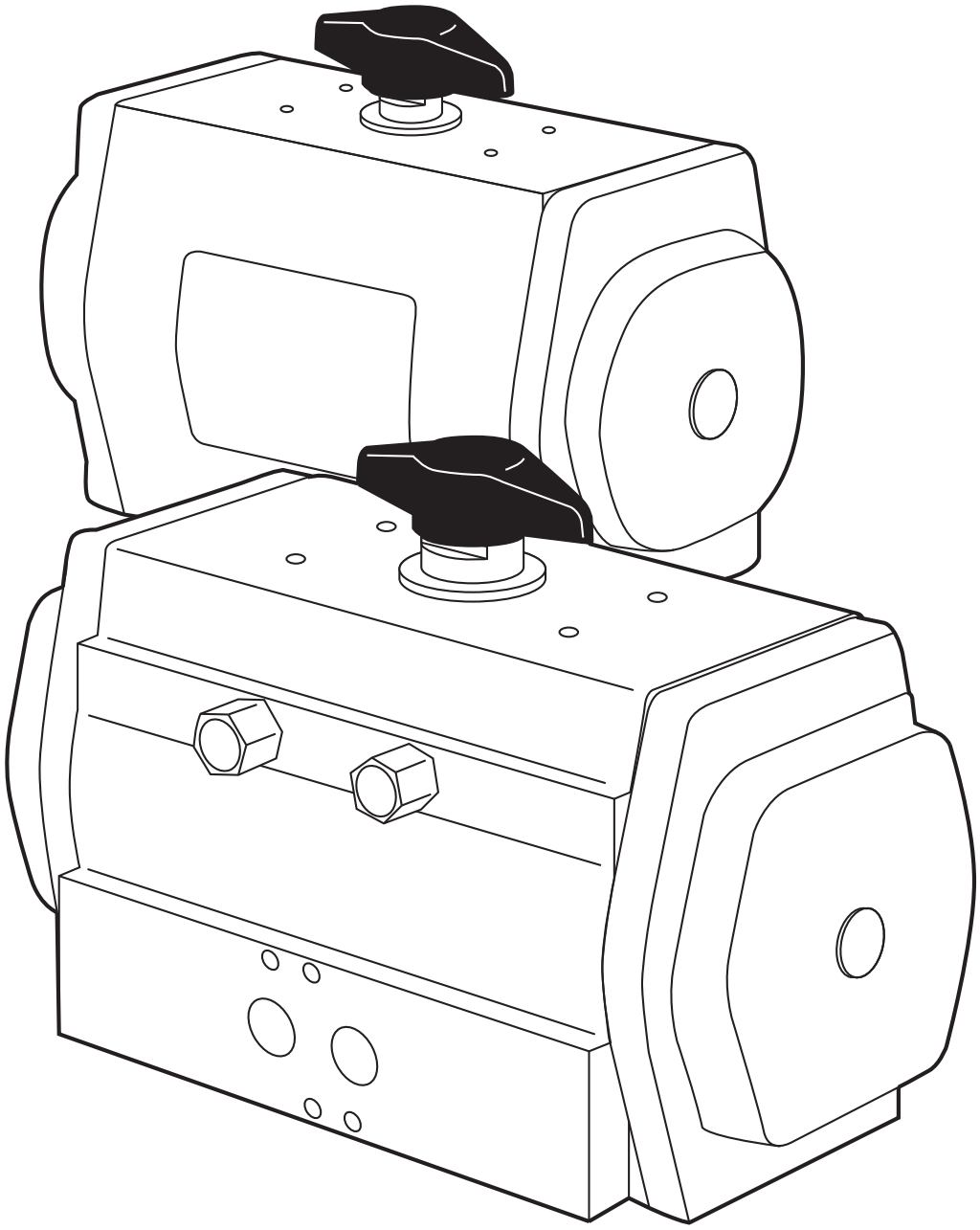

LLOYD'S REGISTER · LRQA
ISO 9001

CE

TABLE OF CONTENTS

Safety Information - Definition of Terms . . . 2
Hazard-free use . . . 2
Qualified Personnel . . . 2
Description of Operation . . . 3
Operating Medium . . . 3
Operating Temperature . . . 3
Installation . . . 3
- Fail Open Assemblies . . . 3
- Fail Open Method 1 . . . 4
- Fail Open Method 2 . . . 4
- Fail Open Method 3 . . . 4
- Fail Closed Assemblies . . . 5

Mounting the Actuator to the Valve . . . 5
Setting the Travel Stops . . . 5
Maintenance . . . 6
Troubleshooting . . . 7
Assembly . . . 7
Final Assembly and Testing . . . 8
Disassembly . . . 8
Adding Spring Cartridges . . . 9
Removing Spring Cartridges . . . 10
General Pneumatic System Recommendations . . . 11
Dimensional Data . . . 11
Series 92/93 Exploded View . . . 12

For information on this product and other Bray products please visit us at our web page - www.bray.com

Read and Follow These Instructions
Save These Instructions

SAFETY INFORMATION - DEFINITION OF TERMS

WARNING	indicates a potentially hazardous situation which, if not avoided, **could** result in death or serious injury.
CAUTION	indicates a potentially hazardous situation which, if not avoided, may result in minor or moderate injury.
NOTICE	used without the safety alert symbol indicates a potential situation which, if not avoided, may result in an undesirable result or state, including property damage.

HAZARD-FREE USE

This device left the factory in proper condition to be safely installed and operated in a hazard-free manner. The notes and warnings in this document must be observed by the user if this safe condition is to be maintained and hazard-free operation of the device assured.

Take all necessary precautions to prevent damage to the actuator due to rough handling, impact, or improper storage. Do not use abrasive compounds to clean the actuator, or scrape metal surfaces with any objects.

The control systems in which the actuator is installed must have proper safeguards to prevent injury to personnel, or damage to equipment, should failure of system components occur.

QUALIFIED PERSONNEL

A qualified person in terms of this document is one who is familiar with the installation, commissioning and operation of the device and who has appropriate qualifications, such as:

- Is trained in the operation and maintenance of pneumatic equipment and systems in accordance with established safety practices
- Is trained or authorized to energize, de-energize, ground, tag and lock electrical and pneumatic circuits and equipment in accordance with established safety practices
- Is trained in the proper use and care of personal protective equipment (PPE) in accordance with established safety practices
- Is trained in first aid
- In cases where the device is installed in a potentially explosive (hazardous) location – is trained in the operation, commissioning, operation and maintenance of equipment in hazardous locations

WARNING

The actuator must only be installed, commissioned, operated and repaired by qualified personnel.

The device generates large mechanical force when pressurized with air, and/or powered by springs.

The actuator stores a large amount of energy when pressurized with air, and/or when the springs are compressed.

To prevent injury, installation, commissioning, operation and maintenance must be carried out under strict observation of the safety regulations.

Reference is specifically made here to observe the applicable safety regulations for actuators installed in potentially explosive (hazardous) locations.

Correct and safe operation of this actuator is dependent upon proper transport, storage and installation in addition to proper operation and maintenance.

DESCRIPTION OF OPERATION

The Bray Series 92/93 Pneumatic Actuators feature a double piston, rack and pinion mechanism designed to automate quarter-turn valves. In the Series 92 Double-Acting Actuator, pressure introduced through Port A (the left port when facing the ports) forces the pistons away from each other and causes the pinion to rotate in a counter-clockwise direction. Pressure introduced through Port B (the right port when facing the ports) is directed through an internal passage to the opposite side of the pistons, which forces the pistons together and rotates the pinion in a clockwise direction. Normally, the clockwise rotation (pistons moving together) closes the attached valve, and the counter-clockwise rotation (pistons moving apart) opens the attached valve.

In the Series 93 Spring-Return Actuators, spring cartridges have been added to push the pistons together by spring force in the event the compressed air pressure being lost. This spring force normally closes the attached valve. However, in the event that the valve is required to open under spring force, refer to the fail open portion of the Installation section.

OPERATING MEDIUM

NOTICE

The recommended operating medium is clean, dry industrial compressed air, 40 - 140 psig (3 - 10 bar.) An air line lubricator is suggested for fast cycling applications, i.e. more than 10 cycles per minute. Other media such as hydraulic oil, water, or certain other inert gases may also be used in some instances, but the factory should be consulted for specific applications.

OPERATING TEMPERATURE

NOTICE

The recommended operating temperature range is -20°F to 200°F (-29°C to 95°C). Below 32°F (0°C) care must be taken to prevent condensed moisture from freezing in the air supply lines. Consider the use of an air dryer if the device is installed in a cold location. The air dryer must be capable of lowering the dew point of the air to a temperature 36°F (20 °C) lower than that of the surrounding environment. The air dryer must be properly maintained and kept in operation.

INSTALLATION

Bray Series 92/93 Actuators are designed to mount directly on the top plate of Bray Valves. Before the actuator is mounted on a valve, it is a good practice to lubricate the output bore of the actuator with thick grease. The grease will make it easier to remove the actuator from the valve stem, even after years of service.

Normally, the actuator is mounted with its long side parallel to the pipeline. A double acting actuator will normally rotate the valve stem clockwise to close, and counter-clockwise to open. Spring return actuators will normally rotate the valve stem clockwise to close with the spring stroke, and counter-clockwise to open with the air stroke. The normal operation of the spring cartridges is therefore fail closed.

Direction of operation may be changed to fail open by any one of several different methods. Refer to the Assembly Instructions and Exploded View on page 12 for more details.

Fail Open Assemblies

If the actuator is attached to a valve, the butterfly valve disc is shipped in the full open position (as no air pressure is present to compress the springs and close the valve disc.) The sealing surface, or disc edge, is therefore exposed. Damage to that surface will cause premature seat failure.

NOTE: Consult a factory representative when a non-standard actuator configuration is made in the field or is being changed in the field. Example: Mounting an actuator perpendicular to the pipe due to space restrictions on site.

CAUTION

Use caution installing the valve being careful not to damage the disc edge. It is recommended to:

- Remove the actuator. Be sure to scribe the valve and actuator to ensure the re-installed actuator is in the exact same quadrant as originally configured
- Install the valve per the attached installation tag instructions
- Re-install the actuator ensuring it is in the proper quadrant

Fail Open Method 1

Mounting the Actuator Perpendicular to the Pipeline

NOTICE

Fail Open Method 1 – Mounting the Actuator Perpendicular to the Pipeline – works only with concentric disc valves such as the Bray Series 20/21, 22/23 and 30/31 or other valves that allow the disc to be swung through the seat.

Turn the actuator so the long side is perpendicular to the pipeline. This will allow the spring cartridges to rotate the valve stem clockwise to open, and the air stroke to rotate the valve stem counter-clockwise to close. This is the easiest method if there is sufficient room to mount the actuator.

Fail Open Method 2

Rotating the Pinion

NOTICE

Fail Open Method 2 – Rotating the Pinion - works only with concentric disc valves such as the Bray Series 20/21, 22/23 and 30/31 or other valves that allow the disc to be swung through the seat.

See Assembly (page 7) for detailed instructions on reinstalling the travel stop cam on the pinion.

WARNING

Before disassembly of the actuator, the pneumatic air supply must be completely disconnected from the actuator, and all compressed air stored within the actuator must be released. Auxiliary devices connected to the actuator, such as tubing, ball valves, solenoid air valves, valve positioners, etc. can block the release of air from within the actuator. Do not rely upon the features or controls of any auxiliary device to release the air from inside the actuator to render it safe for disassembly.

WARNING

Some actuators may have spring cartridges installed. Before disassembly, all spring cartridges must be placed into the relaxed (fully extended) position. All compressed air must be removed from inside the actuator (See previous warning) and the actuator pinion must be allowed to rotate so the springs may be relaxed. Care must be taken to verify that any device connected to the actuator, such as a valve mounted underneath, is not preventing the movement of the springs to the relaxed position.

Remove the end caps, spring cartridges and pistons from the actuator. Remove the pinion, rotate it 90°, and reinstall the pinion in the actuator. This will also allow the spring cartridges to rotate the valve stem clockwise to open, and the air stroke to rotate the valve stem counter-clockwise to close. This is the second easiest method, and allows the actuator to be mounted with its long side parallel to the pipeline.

Fail Open Method 3

Reversing the Pistons

NOTICE

Fail Open Method 3 – Reversing the Pistons – works for all valves, but must be used with offset disc valves such as the Bray Series 40/41, 42/43 and 44/45, or other offset disc valves where the disc may only turn clockwise to close.

See Assembly (page 7) for detailed instructions on reinstalling the travel stop cam on the pinion.

Remove the end caps, spring cartridges and pistons from the actuator. Rotate the pistons so that the racks turn the pinion counter-clockwise as the pistons move toward each other. (With the air input ports of the actuator body facing you, the left hand piston rack should be on the side with the air ports.) This is the third easiest method, and allows the actuator to be mounted with its long side parallel to the pipeline, and clockwise to close rotation to be maintained.

Fail Closed Assemblies

If the actuator is attached to a valve, the butterfly valve is shipped in the full closed position (as no air pressure is present to compress the springs and open the disc).

CAUTION

Installing the valve with the disc in the full closed position may create a compression set on the seat causing higher than expected torques or premature seat failure. It is recommended to:

- Remove the actuator. Be sure to scribe the valve and actuator to ensure the re-installed actuator is in the exact same quadrant as originally configured
- Install the valve per the attached installation tag instructions
- Re-install the actuator ensuring it is in the proper quadrant

MOUNTING THE ACTUATOR TO THE VALVE

The actuator is attached to the valve by means of the studs and nuts furnished in the mounting kit. Thread the studs into the proper holes in the actuator, before installing the actuator on the valve. The studs should be snug in the bottom of the tapped holes; there is no need to torque them. Install the actuator on the valve making sure that the base of the actuator fits flat against the valve mounting flange. Use the nuts and washers from the kit to complete the installation. Torque the nuts in a diagonal pattern to assure equal loading of the studs.

SETTING THE TRAVEL STOPS

The final step in the installation process is to check the travel stop settings. The travel stops are set for 90° of travel at the factory; however, each installation is different so they should be checked before putting the valve in service. The actuators are designed with a nominal 5° over or under travel at each end of rotation. A screwdriver, an open end or box end wrench and a hex wrench, of the appropriate size, are the only tools required to make the necessary adjustments. Refer to Figure 1 below.

WARNING

Before setting the travel stops, the pneumatic air supply must be completely disconnected from the actuator, and all compressed air stored within the actuator must be released. Auxiliary devices connected to the actuator, such as tubing, ball valves, solenoid air valves, valve positioners, etc. can block the release of air from within the actuator. Do not rely upon the features or controls of any auxiliary device to release the air from inside the actuator to render it safe for disassembly.

Remove the black Position Indicator Pointer (23) to expose the wrench flats on the top of the Pinion (3).

Rotate the valve to the desired position by using a wrench on the wrench flats on the top of the Pinion (3).

Loosen the Lock Nut (12) on the Travel Stop Screw (13). It is not necessary to remove the nut completely. Using the hex wrench, turn the screw in or out until the desired travel stop position is reached. While holding the screw with the

Figure 1

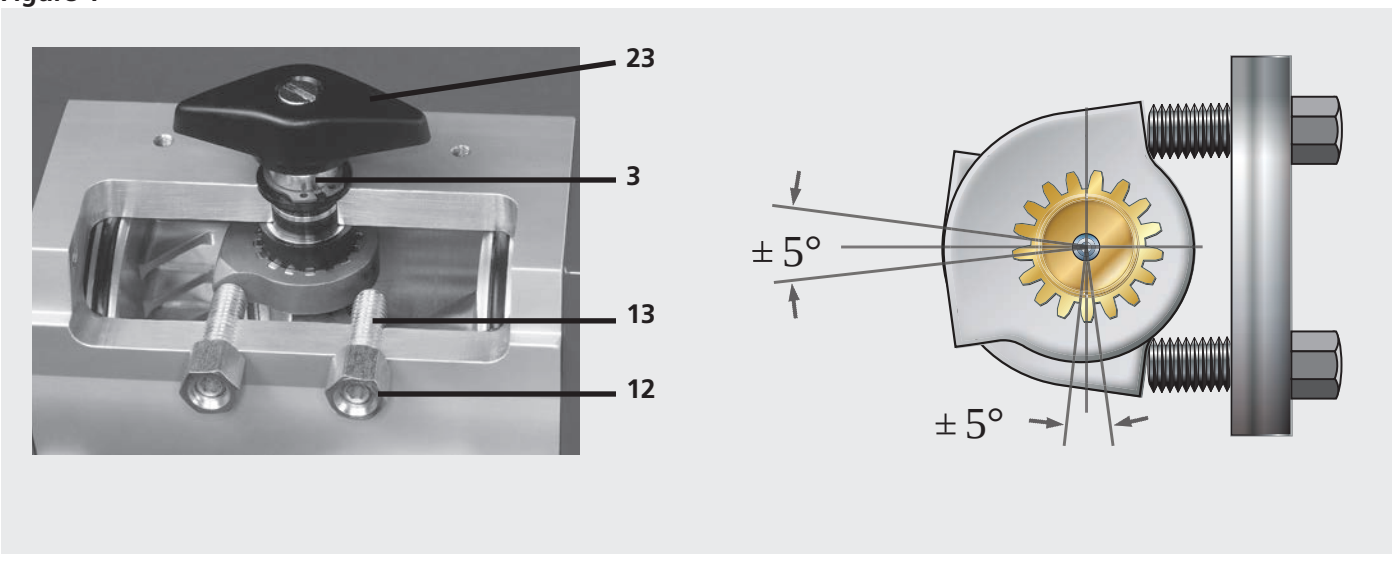

hex wrench, tighten the Lock Nut (12) with the box end wrench.

Replace the Position Indicator Pointer (23) making certain the pointer is aligned with the position of the valve, open or closed.

Some valves or operating conditions require that the actuator have more than 5° of travel adjustment. For these conditions, the Series 92/93 actuator can be fitted with extended travel stops in the end caps. (See page page 11 for instructions on finding dimensional data) Consult the Bray distributor in your area for this option.

Spring return actuators may be operated with only one air supply connected to Port A, since the spring cartridges will move the pistons when the air pressure in removed. This operation, however, will draw the surrounding atmosphere into the spring chambers through Port B.

NOTICE

To prevent contamination from entering the spring chamber, actuators configured to operate with only one air supply connected to Port A should be equipped with a 40 micron (or finer) filter element installed in Port B.

Even better service may be obtained on spring return actuators by installing a four-way solenoid, covering both Port A and Port B. A four-way solenoid will fill the spring chambers with compressed air from the plant air supply with each stroke. The plant air supply is often cleaner than the surrounding atmosphere, especially in heavy industrial or chemical areas.

MAINTENANCE

The rugged components and factory lubrication combine to ensure a long and trouble-free service life for Series 92/93 actuators. Dirt, rust and water are the most common causes for shortened service life, and they typically enter the actuator through the air supply line.

Remove any dirt, rust, water or other contaminants from inside the actuator. Any damaged or corroded components must be replaced.

NOTICE

To lengthen service life, it is strongly recommended that an adequately sized filter with a 40 micron (or finer) element be installed adjacent to the inlet of the directional control (solenoid air) valve. Air lubricators are recommended for rapid cycling applications (10 cycles or more per minute.)

Routine maintenance of Series 92/93 actuators consists primarily of maintaining the air supply system by changing filter elements before they start by-passing, adding oil to lubricators before they run dry, and preventing water from entering the air lines.

The second most common cause of shortened service life is misalignment between the valve and the actuator. This can cause premature failure due to excessive side loads on the bearings and gear teeth.

NOTICE

To lengthen service life, the mechanical connection between the actuator and the valve should be verified to be properly aligned and free to rotate throughout the full range of valve travel.

TROUBLESHOOTING

Table 1 shows several common symptoms and their remedies.

Table 1

Symptom	Probable Cause	Check	Remedy
Loss of Power	Low air supply pressure, or damaged O-rings	Air supply pressure at actuator, leakage across O-rings	Boost air supply pressure, repair air supply line leaks, replace O-rings
Binding between valve and actuator	Misalignment of coupling	Alignment	Realign coupling
Valve "pops" out of seat and slams open	Valve torque too high, actuator sized too small, or insufficient air supply flow	Valve torque, actuator sizing calculations, size of air supply lines and/or solenoid valve	Repair valve, use proper size actuator, use larger air supply lines and/or solenoid valve with higher flow
Air Leakage	Loose fasteners or worn, damaged seals	Fasteners and travel stop lock nuts	Tighten fasteners, travel stop lock nuts. Replace o-rings.

ASSEMBLY

To identify component names and shapes and for the numbers in parentheses ( ) below, refer to the exploded view of the actuator shown on Figure 3, page 12. Easiest assembly will result from lubricating all bearings and seals as they are installed. The lubricant should be a high pressure or extreme pressure petroleum grease with a lithium based thickener which meets the NLGI grade 2. Grease which meets this specification should be available from any automotive supply store.

Pinion (3) - Install bearing rings (6 & 7) and o-rings (21 & 22) in their appropriate grooves. Insert the pinion through the large hole in the center bottom of the body (1). With the pinion part of the way into the body, slide the cam (16) over the pinion being careful to align the punch mark on the cam with the punch mark(s) on the pinion. For normal installation and rotation (Fail Close), align the single marks. For Fail Open operation described in Method 2 on page 4, align the single mark on the cam with the two marks on the pinion. For Fail Open operation described in Method 3 on page 4, align the single marks. Next, install the spacer (15) above the cam. Then insert the pinion through the hole at the top of the body and secure it with the washer (9) and retaining ring (8).

Travel Stop Screws (13) - Slip the o-ring (14) over the flat end of the screw until it is 5-7 threads from the end. Thread the screw into the hole in the body, flat end first. Repeat these steps for the second screw. Thread the lock nuts (12) onto the screws and tighten the nuts against the body. This will seal the threads for testing. It is not necessary to set the travel stops at this time, as they may have to be reset when the actuator is installed on the valve.

Pistons (2) - Install the bearing pad (10) on the back of the rack and the o-ring (19) and guide ring (11) in their appropriate piston grooves. The o-ring goes in the groove nearest the rack. With the ports on the actuator body toward you, turn the pinion so that the slot is approximately 45° to the right of perpendicular with the long side of the body. Grasp the pistons in the spring pockets so that the piston in the right hand has the bearing pad toward you and the piston in the left hand has the bearing pad away from you. Slide the pistons into the body so that they both engage the teeth on the pinion at the same time. Apply enough steady force to compress the o-ring into the body bore. At this point, you may continue pushing or use a wrench on the top of the pinion to pull the pistons into the body.

NOTICE

Three important parameters must be verified before assembly may be continued.

The pinion must turn clockwise as the pistons moved toward the center of the body.

The 4 mm slot in the top of the pinion must be within a few degrees of perpendicular to the long side of the body.

The piston faces must both be the same distance from the end of the body.

If all three parameters above have been verified, the end caps may be installed.

If any parameter above is not verified, use a wrench on the pinion to drive the pistons out of the body and repeat the insertion process. It is not necessary to remove the pistons from the body unless the answer to the first question is no. It is only necessary to disengage the piston rack from the pinion.

NOTICE

The assembly procedure described here is the standard Fail Close method. For Fail Open actuators, refer to Method 2 or Method 3 on page 4.

End Caps (4) - Install the o-ring (20) in the groove. Attach the end cap to the body with the 4 bolts (17) and washers (18) making certain that the straight part of the o-ring groove is toward the bottom of the body. The air pressure will not flow to the outboard side of the pistons if the straight part of the o-ring groove is at the top.

Position Indicator (23) - Install the position indicator pointer on the top of the pinion and secure it with the flat head screw (24). Normally, the long axis of the pointer will be parallel to the groove in the pinion. If the actuator is installed across the pipe line, as described in Method 1 on page 4, the indicator should be turned so that it is in line with the butterfly valve disc or port in the ball or plug valve.

FINAL ASSEMBLY AND TESTING

CAUTION

Do not connect a compressed air supply to the actuator that exceeds the pressure rating of the actuator (140 psig / 10 barg)

Connect the compressed air supply to the actuator input ports and cycle the actuator fully open and fully closed to check for proper travel and absence of air leaks. Air supply lines should have a minimum inside diameter of 0.250" (6 mm). Restricted air supply lines, or any portion of the air supply system powering the actuator (such as solenoid air valves or valve manifolds) can reduce actuation time, cause unexpected popping of the valve, or even malfunction.

If compressed air is applied to Port A and the actuator reaches the end of travel, there should be no air flow out of Port B, and vice versa. There should be no air flow between the end caps and the body, through the travel stops, or out the top or the bottom of the pinion. A solution of soap and water applied to the sealing points can indicate leaks that are too small to be audible.

DISASSEMBLY

WARNING

Before disassembly of the actuator, the pneumatic air supply must be completely disconnected from the actuator, and all compressed air stored within the actuator must be released. Auxiliary devices connected to the actuator, such as tubing, ball valves, solenoid air valves, valve positioners, etc. can block the release of air from within the actuator. Do not rely upon the features or controls of any auxiliary device to release the air from inside the actuator to render it safe for disassembly.

WARNING

Some actuators may have spring cartridges installed. Before disassembly, all spring cartridges must be placed into the relaxed (fully extended) position. All compressed air must be removed from inside the actuator (See warning on previous page 8) and the actuator pinion must be allowed to rotate so the springs may be relaxed. Care must be taken to verify that any device connected to the actuator, such as a valve mounted underneath, is not preventing the movement of the springs to the relaxed position.

If the actuator is installed on a valve, remove the actuator from the valve, and move the actuator to a clean work area. Remove the indicator pointer. Remove both end caps by loosening the hex head end cap bolts. Remove both pistons by rotating the pinion counter-clockwise until the piston heads are protruding from the body. Pull the pistons out. Using snap-ring pliers, remove the pinion retaining ring and acetal washer, then remove the pinion from the body. The pinion bearings, o-rings, cam and spacer may then be removed.

ADDING SPRING CARTRIDGES

WARNING

Before disassembly of the actuator, the pneumatic air supply must be completely disconnected from the actuator, and all compressed air stored within the actuator must be released. Auxiliary devices connected to the actuator, such as tubing, ball valves, solenoid air valves, valve positioners, etc. can block the release of air from within the actuator. Do not rely upon the features or controls of any auxiliary device to release the air from inside the actuator to render it safe for disassembly.

Move the pinion to the fully closed (0°) position. Remove the end caps and insert the desired number of spring cartridges into the end cap pockets, up to a maximum of six cartridges per end cap.

NOTICE

For proper operation, actuators equipped with Spring Cartridges should have the spring cartridges installed in accordance with the positions shown in Figure 2.

Align the end cap with the body so the spring cartridges fit into the piston pockets. Attach the end caps to the body with the hex head end cap bolts. Tighten the bolts gradually in a diagonal sequence.

Proceed to Final Assembly and Testing.

Figure 2

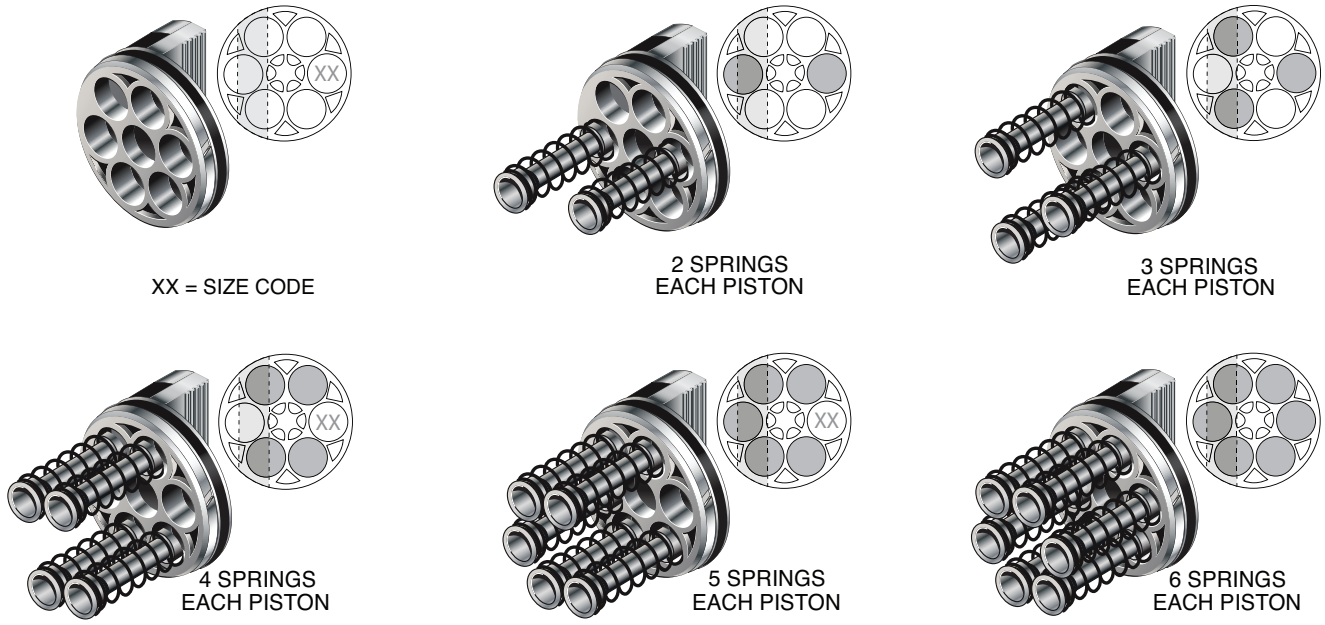

REMOVING SPRING CARTRIDGES

WARNING

Before disassembly of the actuator, the pneumatic air supply must be completely disconnected from the actuator, and all compressed air stored within the actuator must be released. Auxiliary devices connected to the actuator, such as tubing, ball valves, solenoid air valves, valve positioners, etc. can block the release of air from within the actuator. Do not rely upon the features or controls of any auxiliary device to release the air from inside the actuator to render it safe for disassembly.

CAUTION

Before disassembly, all spring cartridges must be placed into the relaxed (fully extended) position. All compressed air must be removed from inside the actuator (See warning above) and the actuator pinion must be allowed to rotate so the springs may be relaxed. Care must be taken to verify that any device connected to the actuator, such as a valve mounted underneath, is not preventing the movement of the springs to the relaxed position.

An actuator with spring cartridges installed and no compressed air connected will move to the spring fail position if the pinion is free to rotate. This may be either fully closed (0°) or fully open (90°). In either case, when the spring fail position is reached, remove the end caps by gradually loosening the hex head end cap bolts in a diagonal sequence.

CAUTION

When removing end caps from an actuator containing spring cartridges, the end cap bolts must be loosened gradually in a diagonal sequence until the spring cartridges are completely relaxed (fully extended.) The spring cartridges should reach the completely relaxed (fully extended) position while all four end cap bolts still have some thread engagement with the actuator body. Do not remove three end cap bolts completely from the body and expect the remaining single bolt to hold the spring cartridges in a compressed position.

Remove the spring cartridges. Replace the end caps and tighten the end cap bolts gradually in a diagonal sequence.

CAUTION

When replacing end caps onto an actuator containing spring cartridges, the end cap bolts must be tightened gradually in a diagonal sequence until the spring cartridges are slightly compressed into their fail position. The spring cartridges should reach the slightly compressed fail position while all four end cap bolts have some thread engagement with the actuator body. Do not attempt to tighten a single end cap bolt fully and compress the spring cartridges while the other three bolts have not been installed.

Proceed to Final Assembly and Testing.

GENERAL PNEUMATIC SYSTEM RECOMMENDATIONS

To maintain maximum efficiency with the Series 92/93 actuator, as well as many other pneumatic devices, the following suggestions are offered:

- Air supply lines should be run in accordance with a Standard Piping Practice, and should not have exaggerated loops, which may trap condensate.
- All pipe ends should be thoroughly cleaned and deburred after cutting to ensure that the pipeline is clear of cuttings.
- Where air pipelines are subjected to extremes of temperature, the system should be fitted with air drying equipment.
- If pipelines are hydraulically tested, the lines should be "blown down" with high pressure air to clear all water prior to connecting the lines to the actuator.
- Where a system is dependent on air filter equipment, the air filters should be in positions that allow easy access for maintenance and/or draining.
- Where pneumatic valve positioners or pneumatic controllers are installed in a valve actuator assembly, oil mist lubricated air should not be used unless the manufacturer states specifically that the positioner or controller is compatible with lubricated air. In general, lubricated air is not recommended for a positioner.
- Where pipe fitting sealants or tapes are used, they should be applied to the male threads only, and limited to the first three threads. When applied to female threads, excess compound or tape can be transmitted into the actuator control lines and cause malfunctions in downstream equipment.
- Lubricators should be installed downstream of regulators.
- Eliminate or minimize sharp bends in the air supply lines.

DIMENSIONAL DATA

For Dimensions see Bray ES Drawings:

- ES11A-0460
- ES11A-0533
- ES11A-0534
- ES12A-0533
- ES12A-0534

on www.bray.com

Figure 3:
Series 92/93 Exploded View

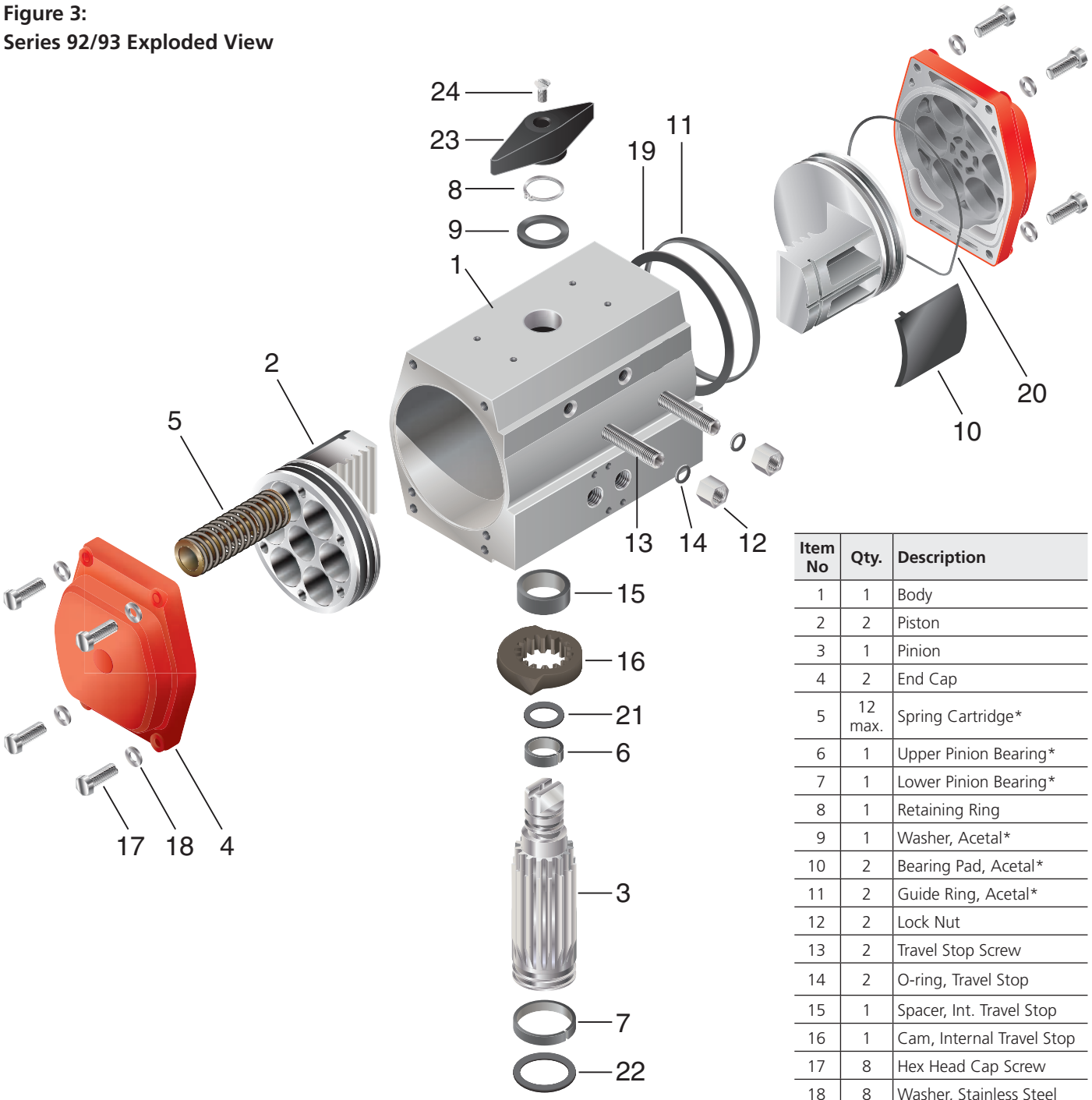

Item No	Qty.	Description
1	1	Body
2	2	Piston
3	1	Pinion
4	2	End Cap
5	12 max.	Spring Cartridge*
6	1	Upper Pinion Bearing*
7	1	Lower Pinion Bearing*
8	1	Retaining Ring
9	1	Washer, Acetal*
10	2	Bearing Pad, Acetal*
11	2	Guide Ring, Acetal*
12	2	Lock Nut
13	2	Travel Stop Screw
14	2	O-ring, Travel Stop
15	1	Spacer, Int. Travel Stop
16	1	Cam, Internal Travel Stop
17	8	Hex Head Cap Screw
18	8	Washer, Stainless Steel
19	2	O-ring, Piston
20	2	O-ring, End Cap
21	1	O-ring, Upper Pinion
22	1	O-ring, Lower Pinion
23	1	Position Indicator Pointer*
24	1	Flat Head Screw

*Extreme temperature trim actuator (-90U) uses proprietary components. Do not install other trim (Low, Standard, High) components. Only install components designed for the designated actuator trim. Contact Bray for service requirements.

All statements, technical information, and recommendations in this bulletin are for general use only. Consult Bray representatives or factory for the specific requirements and material selection for your intended application. The right to change or modify product design or product without prior notice is reserved. Patents issued and applied for worldwide.

Bray® is a registered trademark of Bray International, Inc.
© 2016 Bray International, Inc. All rights reserved.

OM_92/93_07_2016

YOUR GLOBAL FLOW CONTROL PARTNER

Bray Controls
A Division of Bray International, Inc.
13333 Westland East Blvd.
Houston, Texas 77041
Tel: 281.894.5454 • www.bray.com

BRAY

SERIES 6A, ELECTRO-PNEUMATIC POSITIONER

LEFT BLANK

Bray SERIES 6A

ELECTRO-PNEUMATIC POSITIONER

OPERATION AND MAINTENANCE MANUAL

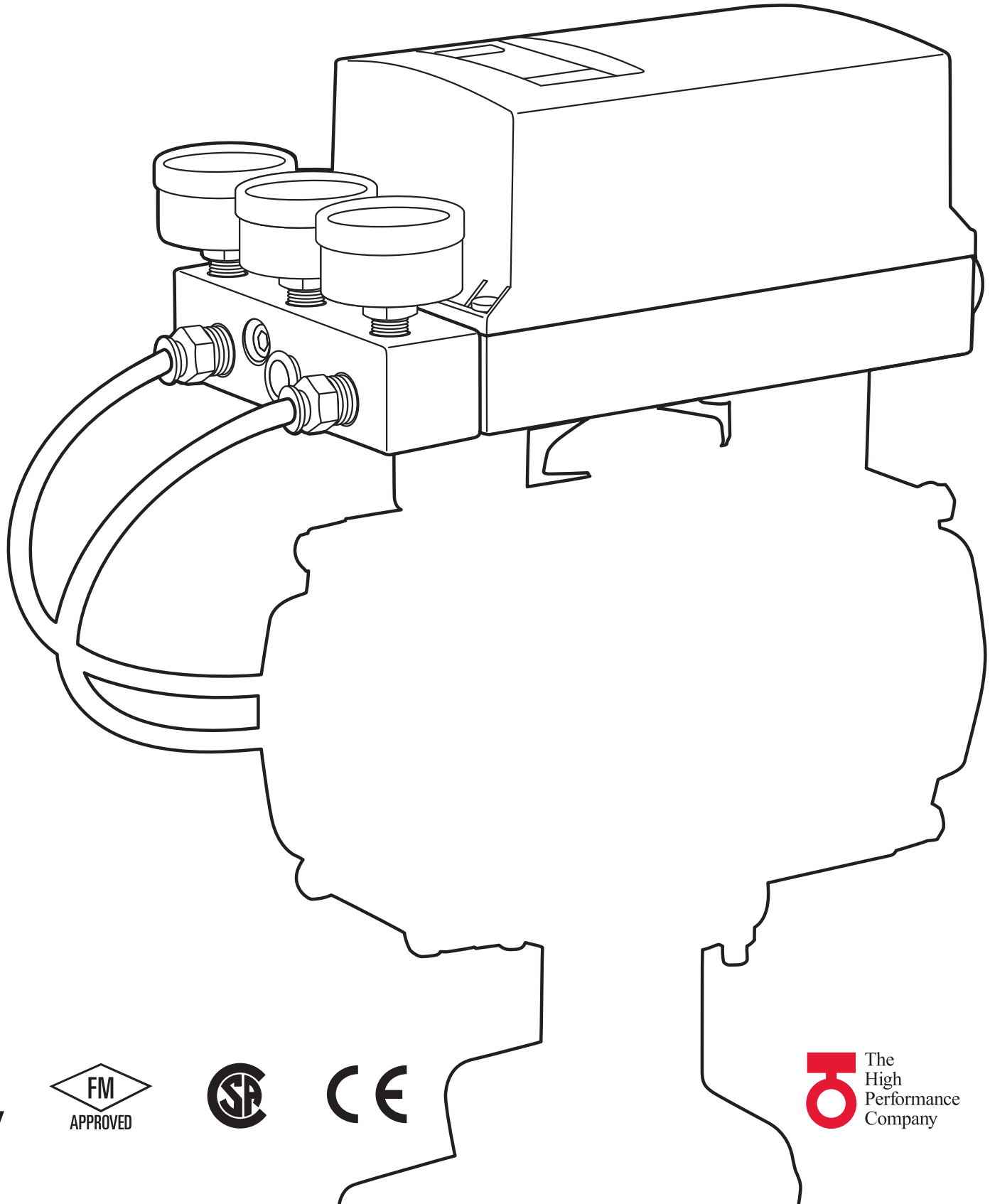

TÜV FM APPROVED CSA CE

The High Performance Company

CONTENTS

Safety Information - Definition of terms 3

Introduction 4

Installation. 5

Field Connections 6

Calibration and Commissioning 11

Factory or Field Installable Options 20

Troubleshooting 26

Service and Maintenance 29

Technical Data 30

Dimensional Drawings 40



All information herein is proprietary and confidential and may not be copied or reproduced without the expressed written consent of BRAY INTERNATIONAL, Inc.
The technical data herein is for general information only. Product suitability should be based solely upon customer's detailed knowledge and experience with their application.

SAFETY INFORMATION - DEFINITION OF TERMS

⚠ **WARNING**	indicates a potentially hazardous situation which, if not avoided, **could** result in death or serious injury.
⚠ **CAUTION**	indicates a potentially hazardous situation which, if not avoided, may result in minor or moderate injury.
NOTICE	used without the safety alert symbol indicates a potential situation which, if not avoided, may result in an undesirable result or state, including property damage.

Hazard-free use

This device left the factory in proper condition to be safely installed and operated in a hazard-free manner. The notes and warnings in this document must be observed by the user if this safe condition is to be maintained and hazard-free operation of the device assured.

- Take all necessary precautions to prevent damage due to rough handling, impact, or improper storage. Do not use abrasive compounds to clean, or scrape its surfaces with any objects.
- Configuration and calibration procedures are described in this document. Proper configuration and calibration is required for the safe operation.
- The control system in which the unit is installed must have proper safeguards to prevent injury to personnel, or damage to equipment, should failure of system components occur.
- This document does not cover every detail about every version of the product described. It cannot take into account every potential occurrence in installation, operation, maintenance and use.
- If situations transpire that are not documented in sufficient detail, please request the required information from the Bray Distributor or Representative responsible for your area.

Qualified Personel

A qualified person in terms of this document is one who is familiar with the installation, commissioning and operation of the device and who has appropriate qualifications, such as:

- Is trained in the operation and maintenance of electric equipment and systems in accordance with established safety practices.
- Is trained or authorized to energize, de-energize, ground, tag and lock electrical circuits and equipment in accordance with established safety practices.
- Is trained in the proper use and care of personal protective equipment (PPE) in accordance with established safety practices.
- Is trained in first aid.
- In cases where the device is installed in a potentially explosive (hazardous) location – is trained in the operation, commissioning, operation and maintenance of equipment in hazardous locations.

All information herein is proprietary and confidential and may not be copied or reproduced without the expressed written consent of BRAY INTERNATIONAL, Inc.
The technical data herein is for general information only. Product suitability should be based solely upon customer's detailed knowledge and experience with their application.

INTRODUCTION

The Bray S6A is a microcontroller based positioner for pneumatic actuators. The S6A converts an analog current signal into a valve position pressure signal and offers positioner, valve and actuator diagnostics using a variety of communication protocols. Optional modules can be added for full range valve position feedback, valve open/close verification, preset alarm warnings and electromagnetic compatibility.

Principles of Operation

The operation of the S6A can be described in three parts; the user defined setpoint, the pneumatic actuator air supply, and the S6A internal controller. The user defined setpoint, which is provided by the incoming analog signal or the communication protocol, tells the positioner where to set the actuator. The pneumatic actuators air supply provides the power to work the valve, and the S6A internal microcontroller monitors the actuator position and provides diagnostics to the end user.

When the microcontroller sees a deviation between the actual position of the actuator and the provided setpoint it will pulse the internal piezo electric valve in order to let air fill the corresponding actuator chambers and drive the actuator from the pneumatic supply lines. Once this deviation is within a desired tolerance or "dead band" the microcontroller will stop the pulsing. Using this process, the S6A only consumes air when it is needed, meaning it will pay for itself within a short period of time.

Electrical Operation

The standard S6A requires 4 to 20mA loop power for all of the internal electronics. It can be installed in a two wire, three wire, or four wire architecture. There is no need to run separate power and signal wiring. The S6A positioners with communication modules get their power directly from the network. All of the wiring diagrams for the different versions of the S6A and any optional modules are shown in the "Field Connections" portion of this manual.

Mechanical Operation

The S6A requires a pneumatic supply in the range of 20 - 102 psi (1.4 - 7 BAR). Using this pneumatic supply, the S6A will position the actuator and valve precisely where it needs to be to regulate the process. Once in the settled state, the S6A has one of the lowest air bleed rates in the market. The S6A requires a pneumatic supply rated at Class 2 in accordance with ISO 8573-1. An optional filter can be installed upstream of the S6A to clean incoming air. Diagrams are provided showing how to make the pneumatic connections in the "Field Connections"portion of this manual.

All information herein is proprietary and confidential and may not be copied or reproduced without the expressed written consent of BRAY INTERNATIONAL, Inc.
The technical data herein is for general information only. Product suitability should be based solely upon customer's detailed knowledge and experience with their application.

INSTALLATION

Mounting to an Actuator

All Bray S6A positioners are suitable for mounting on Bray pneumatic actuators with the use of a standard mounting bracket. With proper mounting hardware, the S6A positioner can be installed onto other linear or quarter turn pneumatic actuators. The standard mounting position is to orient the unit directly over the pneumatic actuator using the NAMUR mounting arrangement in such a way that the LCD and pushbuttons are easily accessible. If the positioner is to be mounted on a vertical pipe, it is recommended that the unit be positioned with the conduit entries on the bottom to prevent condensation from entering the positioner by way of conduit. In all cases, the conduit should be positioned to prevent drainage into the positioner.

Tools Needed:

- 5mm Allen Key 
- 5/16" Wrench 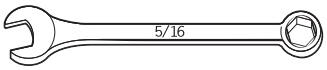

Parts Needed:

Item	Qty.	
Mounting Bolts [A]	(4)	
Lockwashers	(4)	
Mounting Bolts [B]	(4)	
Mounting Bracket	(1)	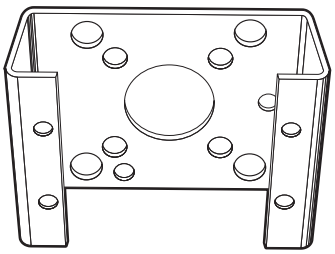

The positioner should be mounted to the actuator as follows:

1. Turn the positioner upside down and align the provided mounting bracket over the positioners output shaft. The bracket should align with the four threaded holes around the output shaft.
2. Using the 5mm allen key affix the mounting bracket to the positioner using the four lockwashers and mounting bolts [A].
3. Turn the positioner right side up and position the output shaft so that the flatted side is facing you.
4. Insert the coupler over the output shaft, ensuring that the couplers set screw is in alignment with the flat of the shaft. Tighten the couplers set screw.
5. Place the yellow indicator on the base of the coupler.
6. Mount the positioner on top of the actuator and tighten it using the 5/16" wrench and the four mounting bolts [B].

Refer to the S6A Quick Start Guide for details.

All information herein is proprietary and confidential and may not be copied or reproduced without the expressed written consent of BRAY INTERNATIONAL, Inc.
The technical data herein is for general information only. Product suitability should be based solely upon customer's detailed knowledge and experience with their application.

FIELD WIRING

Each S6A is provided with two conduit entries for power/incoming analog signal of the main unit and any optional modules.

Please refer to the wiring diagrams referenced in this document when connecting the positioner and any optional modules. It is essential to install the optional modules before connecting the positioner electrically. Refer to the following "Technical Description" portion of this manual for relevant power distribution sizing information when installing a S6A positioner and its optional modules.

Safety Notes:

- Local regulations regarding hazardous environments must be followed when installing this device in a hazardous location.
- The conduit connections must be properly sealed to maintain the weatherproof integrity of the actuator enclosure.
- Never connect the current input (terminals 6 and 7 as shown on the diagrams to the right) to a power source; the positioner will probably be destroyed in that case. Always use a current source with a maximum output current of I = 20 mA.
- To maintain auxiliary power, the input current must be a minimum of 3.6 mA.

Note: The plastic enclosure is metallized from inside to increase the electromagnetic compatibility (EMC) with respect to high-frequency radiation. The shield is connected to the threaded bush shown in Figure 1 such that it is electrically conductive. This protection is effective only if you connect at least one of the bushes to the grounded control valves through electrically conductive (bare) attachments.

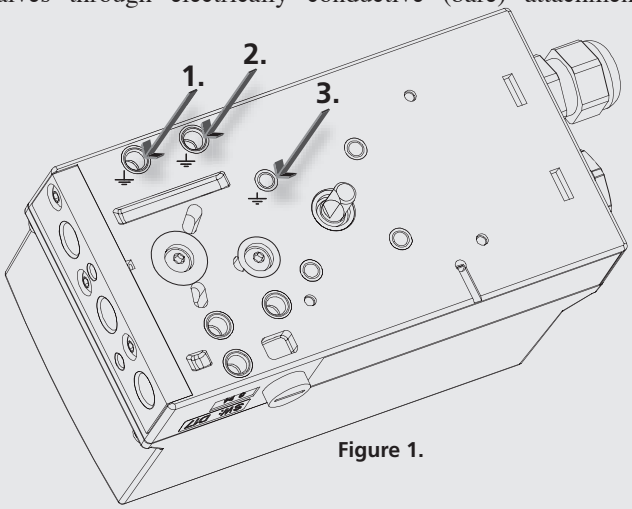

Figure 1.

Tools Needed:

- Instrument Screwdriver



I. General Area

1. Two Wire

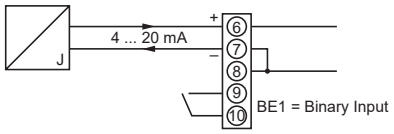

2. Two Wire Connection When Using a 2/3/4 Wire Device

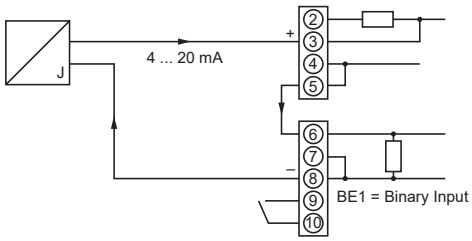

3. Three/Four Wire

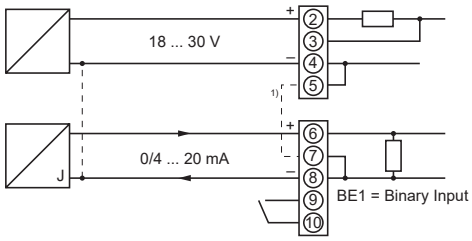

1) Jumper between 5 and 7 only for three-wire system

4. HART

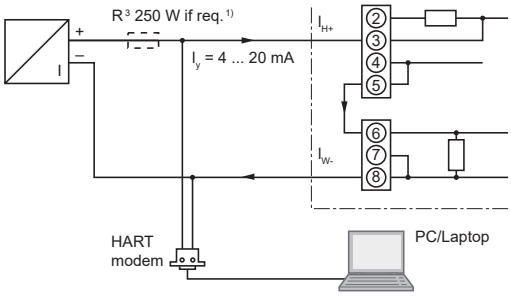

1) Only required with current sources not conforming to HART

5. Profibus DA/DP, Foundation Fieldbus

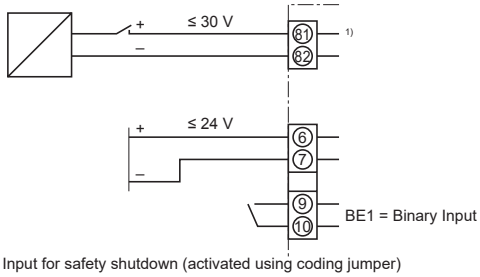

1) Input for safety shutdown (activated using coding jumper)

All information herein is proprietary and confidential and may not be copied or reproduced without the expressed written consent of BRAY INTERNATIONAL, Inc.
The technical data herein is for general information only. Product suitability should be based solely upon customer's detailed knowledge and experience with their application.

II. Hazardous Area (Intrinsically Safe)

A. Two Wire

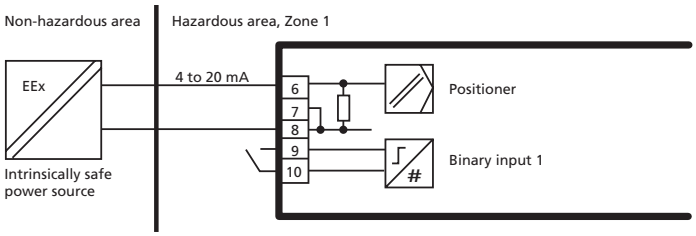

B. and C. Two Wire Connection When Using a 2/3/4 Wire Device and HART

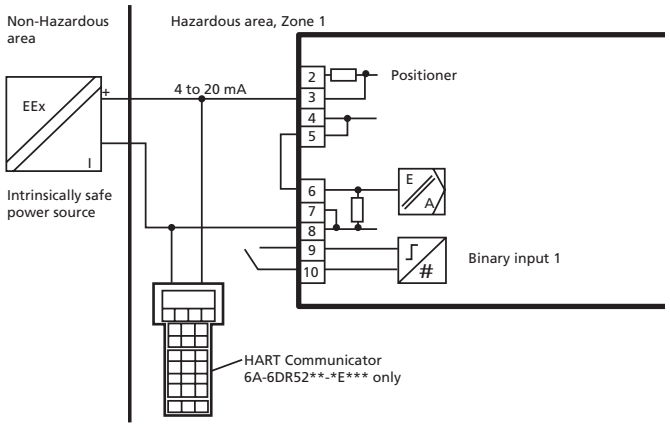

D. Three/Four Wire

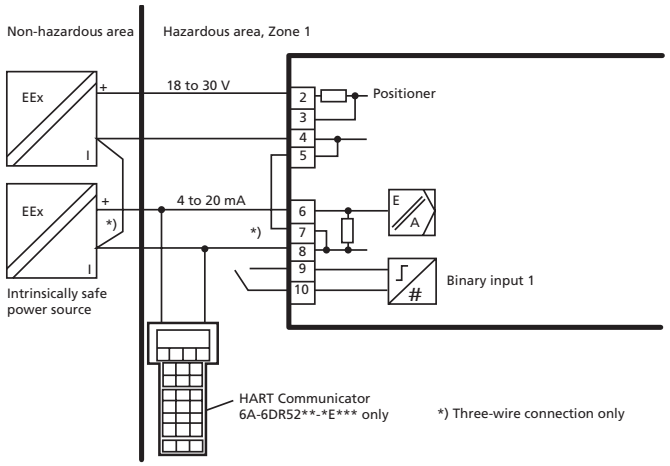

E. Profibus DA/DP, Foundation Fieldbus

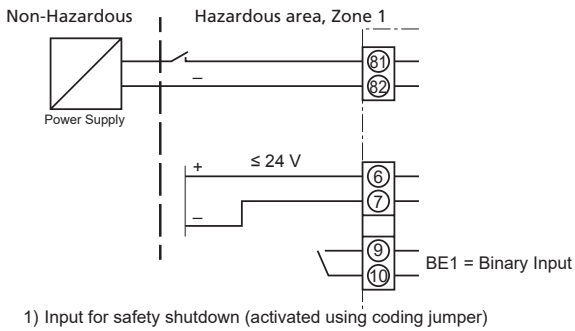

Multiple Positioners Field Wiring

Split Range

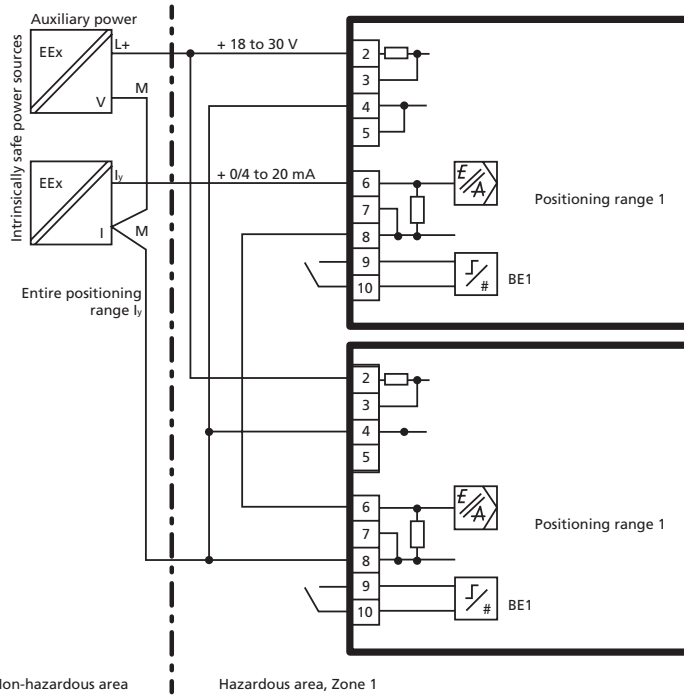

Series connection of 2 positioners, e.g. split range (auxiliary power wired separately), EEx i

All information herein is proprietary and confidential and may not be copied or reproduced without the expressed written consent of BRAY INTERNATIONAL, Inc.
The technical data herein is for general information only. Product suitability should be based solely upon customer's detailed knowledge and experience with their application.

Connecting Pneumatic Supply Lines

Refer to the Technical Data portion of this manual for specifications regarding air quality.

The S6A is equipped with three pneumatic connections, Y1, Y2 and PZ. PZ is for the pneumatic supply and Y1 and Y2 are used to supply the pneumatic actuator. The S6A can also be equipped with a pressure gauge block for monitoring supply and actuating pressure and a filter to ensure that the S6A is receiving clean air.

Proceed as follows to make the pneumatic connections:

Refer to Figure 2.

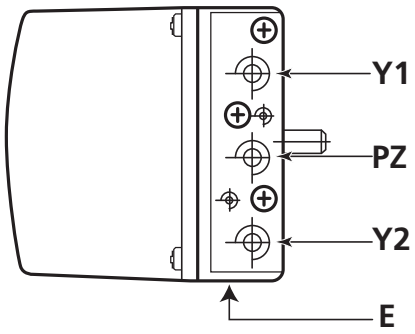

Figure 2. - Pneumatic connection on the standard controller

1. If required, connect the pressure gauge block for supply air and actuating pressure.
2. Connect supply air to PZ.

Connection using female thread G1/4 DIN 45141 or 1/4" NPT:

- PZ supply air 20psi to 102psi (1.4 to 7 bar)
- Y1: actuating pressure for single and double-acting actuators
- Y2: actuating pressure for double-acting actuators
- E: exhaust air outlet; remove the attenuator if required.

For double-acting actuators, connect actuating pressures Y1 or Y2 depending on the desired safety position. The three pneumatic connections will go to the following safety position in case of electrical auxiliary power supply failure:

- Y1: single-acting, depressurized
- Y1: double-acting, max. actuating pressure/supply air pressure.
- Y2: double-acting, depressurized

Note: Besides continuous air consumption, the positioner may try to compensate the position deviation due to leakage. This will lead to premature wear in the entire control unit. To prevent this ensure that all pneumatic connections are properly sealed and perform regular maintenance on their fittings.

All information herein is proprietary and confidential and may not be copied or reproduced without the expressed written consent of BRAY INTERNATIONAL, Inc.
The technical data herein is for general information only. Product suitability should be based solely upon customer's detailed knowledge and experience with their application.

Restrictors

The S6A is equipped with air restrictors to reduce the air output to achieve actuating times of T > 1.5 s for small actuators. Restrictors 1 and 2 are used for this purpose.

Tools Needed:

- Hexagon socket 2.5 mm



Refer to Figure 3.

When turned clockwise, they reduce the air output and finally shut it off.

In order to set the restrictors, it is recommended to close them and then open them slowly.

In case of double-acting actuators, ensure that both restrictors have approximately the same setting.

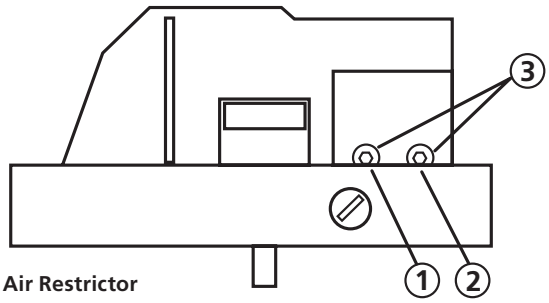

Figure 3. - Air Restrictor

① Restrictor for Y1

② Restrictor for Y2, only in the version for double-acting actuators

③ Hexagon socket-head screw 2.5 mm

Purging

The S6A is equipped with a purge air switch that allows the actuator to purge air either inside of the unit or directly outside. When the enclosure is open, the purge air switch above the pneumatic terminal strip on the pneumatic block can be accessed.

Tools Needed:

- Instrument Screwdriver



Refer to Figure 4.

In the IN position, the enclosure is flushed from inside with a small volume of clean and dry instrument air.

In the OUT position, the purge air is directed towards outside of the unit.

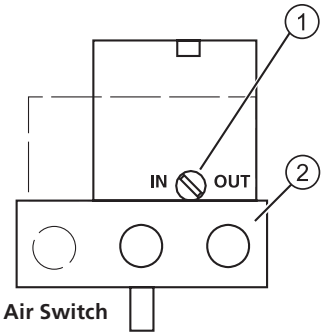

Figure 4. - Purge Air Switch

① Purge Air Switch

② Pneumatic Block

All information herein is proprietary and confidential and may not be copied or reproduced without the expressed written consent of BRAY INTERNATIONAL, Inc.
The technical data herein is for general information only. Product suitability should be based solely upon customer's detailed knowledge and experience with their application.

Natural Gas as an Actuator Medium

The S6A can also be operated with natural gas as an actuator medium. When operating the positioner with natural gas, you must follow and adhere to the following safety notes:

1. Only the "EEx ia" version of the positioner and optional modules with the "EEx ia" type of protection may be operated with natural gas. Positioners with other types of protection, i.e. flameproof enclosures for zones 1 and 2 are not permitted.
2. Do not operate the positioner with natural gas in closed spaces.
3. Natural gas is continuously blown off in the servo-drive depending on the model. Special care must therefore be taken during maintenance activities near the positioner. Always ensure that the immediate surroundings of the positioner are adequately ventilated.
4. The mechanical limit switch module may not be used when operating the positioner with natural gas.
5. Depressurize the devices operated with natural gas adequately during maintenance activities. Open the cover in an explosion-free atmosphere and depressurize the device for at least two minutes.

Normally you operate the positioner with compressed air. Natural gas has been approved as an actuator medium for intrinsically safe positioners with the "EEx ia" type of protection. Only use natural gas which is clean, dry and free from additives.

The positioner releases the used natural gas through the exhaust air outlet E (see Figure 2). The exhaust air outlet E is equipped with an attenuator. As an alternative to this standard configuration, the exhaust air outlet can be replaced with a G¼ screwed fitting. You have to dismantle the attenuator for this purpose. Natural gas escapes parallel to the exhaust air outlet E, from the enclosure vent at the bottom side of the device, and from the control air outlet near the pneumatic connections. This escaping natural gas cannot be collected and carried off. When using natural gas as an actuator medium refer to Figure 5 for maximum bleed off values.

Figure 5. Maximim bleed off values

Bleeding process	Operating mode	6A-6DR5*1*-*E***	6A-6DR5*2*-*E***
		Single-acting	Double-acting
		[Nl/min]	[Nl/min]
Bleed the enclosure volume through the bottom side of the device. Purge air switch is at "IN":	Operation, typical	0.14	0.14
	Operation, max.	0.60	0.60
	Error case, max.	60.0	60,0
Bleed through the control air outlet near the pneumatic connections:	Operation, typical	1.0	2.0
	Operation, max.	8.9	9.9
	Error case, max.	66.2	91.0
Bleed through the exhaust air outlet E	Operation, max.	358.2[1)]	339[1),]
	Error case, max.		
Volume	Max. [l]	1.26	1.23

Optional Accessories

1. **Pressure Gauges** – used to measure and indicate supply and actuating pressures

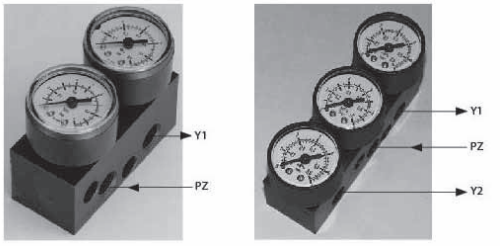

2. **Filter** – used to clean the supply medium
3. **Non Contacting/External Position Detection System** – used for harsh environments
4. **SIMATIC PDM Operation Software** – used for online diagnostics of the S6A

Contact your Bray representative for specific requirements for your intended application.

All information herein is proprietary and confidential and may not be copied or reproduced without the expressed written consent of BRAY INTERNATIONAL, Inc.
The technical data herein is for general information only. Product suitability should be based solely upon customer's detailed knowledge and experience with their application.

CALIBRATION AND COMMISSIONING

Installing a New Unit

Please refer to the S6A Quick Start Guide for the Standard Unit.

Replacing a Unit

The S6A can be replaced in a running system where a S6A was already in use without interrupting the process. By copying and transferring the device and initialization data, it is possible to commission a replacement positioner without needing to initialize it. The S6A uses the communication interface to transfer data. When this is performed, it is crucial to perform a standard initialization of the replacement positioner as soon as possible because the following properties can be ensured only after initializing:

- Optimum adjustment of the positioner as per the mechanical and dynamic properties of the actuator.
- Unrestricted accuracy and dynamic behavior of the positioner.
- Deviation-free position of the hard-end stops.
- Accuracy of the maintenance data

Copy the initialization data and the device parameters as follows:

1. Read in the initialization data and the device parameters of the positioner to be replaced. Use a suitable parameterization tool for this purpose.
2. Save the data in the parameterization tool.

Note: If the positioner to be replaced has already been initialized or configured using the parameterization tool, you need not read in and save the device data.

Proceed as follows to replace a positioner in a running system:

3. Fix the actuator at its current position mechanically or pneumatically.
4. Determine the actual position value.
   – Read the actual position value on the digital display of the positioner to be replaced.

Take note of the read value.

   – If the electronic unit of the positioner is defective, measure the actual position value at the actuator or the valve. Take note of the read value.

5. Dismantle the positioner.
6. Attach the lever arm of the positioner to be replaced to the replacement positioner.
7. Install the replacement positioner on the control valve.
8. Set the transmission ratio selector of the replacement positioner to the same position as that of the positioner to be replaced.
9. Use the parameterization tool to transfer the saved device and initialization data to the replacement positioner.
10. If the displayed actual position value differs from the noted value, correct the deviation by moving the friction clutch.
11. The replacement positioner is ready for operation when the displayed and the noted values match.

Operation

Reading the LCD screen

The S6A digital display has two lines, one on the bottom and one on top. Each element on the top line has seven segments while each element on the bottom line has fourteen. Contents of the display depend on the selected mode. Figure 6 below provides an example of what the display will look like when the unit is powered on.



Figure 6.
Example Display

Note: When operated in temperature ranges below 14°F (-10°C), the liquid crystal display of the positioner becomes sluggish and the repetition rate display is reduced considerably.

Using the pushbuttons

The S6A is manually operated using three pushbuttons. The cover of the positioner has to be removed in order to operate the buttons.

Note: The function of the buttons depends on the current Operating Mode. As a general rule the following applies:

The operating mode button is used to select the modes and to forward the parameters.

The decrement button is used to select parameter values when configuring. You can use this button to move the actuator in the manual mode.

The increment button is also used to select parameter values when configuring. You can use the increment button to move the actuator in the manual mode.

+ *Parameters are activated in the reverse order by pressing the operating mode button and the decrement button at the same time

Note: The IP66/NEMA 4x degree of protection is not ensured as long as the positioner is open.

All information herein is proprietary and confidential and may not be copied or reproduced without the expressed written consent of BRAY INTERNATIONAL, Inc.
The technical data herein is for general information only. Product suitability should be based solely upon customer's detailed knowledge and experience with their application.

Operating Modes

The S6A has five different operating modes described in detail below. Refer to Figure 7 to navigate between modes.

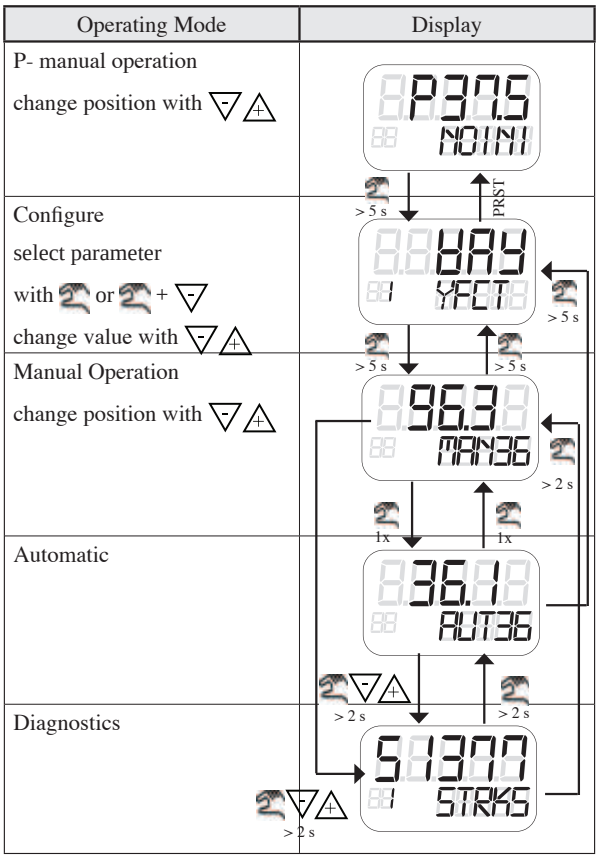

Figure 7. Operating Modes Display

P-manual mode (as-delivered condition)



The "P-manual mode" is preset for the positioner in the as-delivered condition. The digital display of the positioner shows the current potentiometer position in the upper line. "NOINI" blinks in the second line of the digital display. You can move the actuator using the decrement and increment buttons. Switch to Configuration" and "Initialization mode" to adapt the actuator as per the positioner.

Alarms or position feedbacks can be triggered only after initializing the positioner completely.

Configuration and initialization mode



To get to the "Configuration" mode, press the operating mode button for at least 5 seconds. You can use the "Configuration" mode to adjust the positioner individually as per your actuator and start commissioning or initialization. The positioner reports the "Configuration" mode with a configurable fault message. A position feedback or display of limits A1 and A2 is not possible.

Note: If electrical auxiliary power supply fails when configuring, the positioner responds as follows until the power supply is reestablished:

- The positioner switches to the first parameter.
- Settings of the values already configured are retained.

In order to save the changed parameter values, exit the "Configuration" mode or switch to another parameter. When the "Configuration" mode is restarted, the control in the digital display switches to the last activated parameter.

Manual mode (MAN)

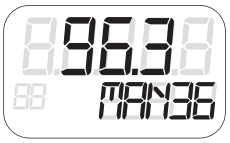

You can move the actuator using the decrement and increment buttons in this mode. The setting selected here is retained irrespective of the setpoint current and leakages, if any.

Note: To accelerate the actuator movement keep one of the two direction buttons pressed and simultaneously press the remaining direction. In the event of a failure of the power supply, once the power is reestablished the positioner switches to "Automatic" mode.

All information herein is proprietary and confidential and may not be copied or reproduced without the expressed written consent of BRAY INTERNATIONAL, Inc.
The technical data herein is for general information only. Product suitability should be based solely upon customer's detailed knowledge and experience with their application.

Automatic (AUT)

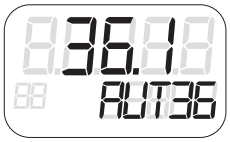

Automatic is the standard mode. In this mode, the positioner compares the setpoint position with the actual position. The positioner moves the actuator until the control deviation reaches the configurable dead zone. A fault message is displayed if the dead zone cannot be reached.

Diagnostics



Proceed as follows to call the “Diagnostics” mode from the “Automatic” or “Manual” modes:

Press the three buttons of the positioner at the same time for at least 2 seconds.

Current operating data can be called and displayed in this mode, e.g.:

- Stroke number
- Number of changes in direction
- Number of fault messages

Note: The “Automatic” and “Manual” modes remain set when switching to the “Diagnostics” mode. The positioner responds as per the set mode:

- The predefined setpoint is used as a control variable in the automatic mode.
- The last reached position is retained in the manual mode.

Using the built in Diagnostics

The S6A has various monitoring functions with which changes on the actuator and valve can be detected and signaled if applicable when a selectable limit has been exceeded. This information may be important for diagnosis of the actuator or valve and will help to schedule preventative maintenance. The measuring data that is monitored is listed below:

- Travel integral
- Number of changes in direction
- Alarm counter
- Self-adjusting dead zone
- Valve end limit position (for detection of valve seat wear or deposits)
- Operating Hours (also according to temperature and travel ranges) as well as min./max. temperature
- Operating Cycles of piezoelectric valves
- Valve positioning time
- Actuator leakages

The diagnostics display has similar structure to that of the “Configuration” mode:

- The upper line shows the value of the diagnosis variable.
- The lower line shows the number and the abbreviation of the displayed variable.

Some diagnostics values can be greater than 99999. In such a case, the display switches over to the exponential view. Example: The value “1234567” is shown as “1.23E6”.

In the event of a fault an error code will be shown on the lower left hand corner of the display. There is a fault table in the “Troubleshooting” section of this manual which explains what each of these codes represents.

The following table provides an overview of values that can be displayed. The last column contains “X” if the value can be set to zero.

All information herein is proprietary and confidential and may not be copied or reproduced without the expressed written consent of BRAY INTERNATIONAL, Inc.
The technical data herein is for general information only. Product suitability should be based solely upon customer’s detailed knowledge and experience with their application.

Overview of Diagnostics Values

No.	Abbreviation	Meaning	Values that can be displayed	Unit	Reset possible
1	STRKS	Stroke number (Strokes)	0 ... 4.29E9	-	X
2	CHDIR	Changes of direction (Changes of Direction)	0 ... 4.29E9	-	X
3	↳CNT	Number of fault messages (↳Counter)	0 ... 4.29E9	-	X
4	A1CNT	Number of alarms 1 (Alarm 1 Counter)	0 ... 4.29E9	-	X
5	A2CNT	Number of alarms 2 (Alarm 2 Counter)	0 ... 4.29E9	-	X
6	HOURS	Operating hours (Hours)	0 ... 4.29E9	Hours	-
7	WAY	Determined actuator travel (Way)	0 ... 130	mm or °	-
8	TUP	Actuating time up (Travel Time Up)	0 ... 1000	s	-
9	TDOWN	Actuating time down (Travel Time Down)	0 ... 1000	s	-
10	LEAK	Leakage (Leakage)	P 0.0 ... 100.0	%	-
11	PST	Monitoring of the partial stroke test	OFF / ###.#, fdini, notSt, SdtSt, fdtSt, notd, Strt	s for ###.#	-
12	PRPST	Time since the last Partial-Stroke-Test	###, notSt, Sdtst, fdtSt	Days	-
13	NXPST	Time until the next Partial-Stroke-Test	###, notSt, SdtSt, fdtSt	Days	-
14	DEVI	General control valve fault	OFF, 0.0 ... 100.0	%	-
15	ONLK	Pneumatic leakage	OFF, 0.0 ... 100.0	-	-
16	STIC	Static friction/Slipstick effect	OFF, 0.0 ... 100.0	%	-
17	ZERO	Zero point displacement	OFF, 0.0 .. 100.0	%	-
18	OPEN	Displacement of upper end stop	OFF, 0.0 ... 100.0	%	-
19	PAVG	Position average	0.0 ... 100.0	%	-
20	P0	Potentiometer value of lower end stop (0%)	0.0 ... 100.0	%	-
21	P100	Potentiometer value of upper end stop (100%)	0.0 ... 100.0	%	-
22	IMPUP	Impulse length up (Impuls Length Up)	2 ... 160	ms	-
23	IMPDN	Impulse length down (Impuls Length Down)	2 ... 160	ms	-
24	DBUP	Dead zone up (Dead Band Up)	0.1 ... 10.0	%	-
25	DBDN	Dead zone down (Dead Band Down)	0.1 ... 10.0	%	-
26	SSUP	Slow step zone up (Short Step Zone Up)	0.1 ... 100.0	%	-
27	SSDN	Slow step zone down (Short Step Zone Down)	0.1 ... 100.0	%	-
28	TEMP	Current temperature	-40 ... 85	°C	-
29	TMIN	Minimum temperature ("min/max pointer")	-40 ... 85	°C	-
30	TMAX	Maximum temperature ("min/max pointer")	-40 ... 85	°C	-
31	T1	Number of operating hours in temperature range 1	0 ... 4.29E9	Hours	-
32	T2	Number of operating hours in temperature range 2	0 ... 4.29E9	Hours	-
33	T3	Number of operating hours in temperature range 3	0 ... 4.29E9	Hours	-
34	T4	Number of operating hours in temperature range 4	0 ... 4.29E9	Hours	-
35	T5	Number of operating hours in temperature range 5	0 ... 4.29E9	Hours	-
36	T6	Number of operating hours in temperature range 6	0 ... 4.29E9	Hours	-

All information herein is proprietary and confidential and may not be copied or reproduced without the expressed written consent of BRAY INTERNATIONAL, Inc.
The technical data herein is for general information only. Product suitability should be based solely upon customer's detailed knowledge and experience with their application.

Overview of Diagnostics Values (cont.)

No.	Abbreviation	Meaning	Values that can be displayed	Unit	Reset possible
37	T7	Number of operating hours in temperature range 7	0 ... 4.29E9	Hours	-
38	T8	Number of operating hours in temperature range 8	0 ... 4.29E9	Hours	-
39	T9	Number of operating hours in temperature range 9	0 ... 4.29E9	Hours	-
40	VENT1	Number of switching cycles of pilot valve 1	0 ... 4.29E9	-	-
41	VENT2	Number of switching cycles of pilot valve 2	0 ... 4.29E9	-	-
42	STORE	Save the current value as "last maintenance" (press the increment button for 5 s) (Store)	-	-	-
43	PRUP	Prediction up	1 ... 40	-	-
44	PRDN	Prediction down	1 ... 40	-	-
45	WT00	Number of operating hours in the actuating range WT00	0 ... 4.29E9	Hours	X
46	WT05	Number of operating hours in the actuating range WT05	0 ... 4.29E9	Hours	X
47	WT10	Number of operating hours in the actuating range WT10	0 ... 4.29E9	Hours	X
48	WT30	Number of operating hours in the actuating range WT30	0 ... 4.29E9	Hours	X
49	WT50	Number of operating hours in the actuating range WT50	0 ... 4.29E9	Hours	X
50	WT70	Number of operating hours in the actuating range WT70	0 ... 4.29E9	Hours	X
51	WT90	Number of operating hours in the actuating range WT90	0 ... 4.29E9	Hours	X
52	WT95	Number of operating hours in the actuating range WT95	0 ... 4.29E9	Hours	X

Diagnostic value 53

No.	Abbreviation	Meaning	Values that can be displayed	Unit	Reset possible
53	mA	Setpoint current	0.0 to 20.0	mA	--

Series 6A with and without HART communications
Operation and Maintenance Manual, 09/2008, A5E00756809-03

All information herein is proprietary and confidential and may not be copied or reproduced without the expressed written consent of BRAY INTERNATIONAL, Inc.
The technical data herein is for general information only. Product suitability should be based solely upon customer's detailed knowledge and experience with their application.

Parameter	Function	Parameter Values	Description
1) YFCT	Type of position actuator	Turn	Automatically sets 2) YAGL to 90°
		WAY	Used for linear actuators
		LWAY	Used for linear actuators
		ncSt	Used for a non-contacting position sensor on a part turn actuator
		-ncSt	Used for a non-contacting position sensor on a part turn actuator with a reverse direction of action
		ncSL	Used for linear actuators
		ncSLL	Used for linear actuators
2) YAGL	Angle of rotation	33°	Used for linear actuators
		90°	
3) YWAY	Range of Stroke		Used for linear actuators
4) INITA	Initialization (automatic)	NOINI | no/ ###.# | Strt	Starts the automatic initialization process
5) INITM	Initialization (manual)	NOINI | no/ ###.# | Strt	Starts the manual initialization process
6) SCUR	Current range of setpoint	0 MA	0 MA only available for 3 to 4 wire connections.
		4 MA	Factory setting.
7) SDIR	Setpoint Setup	riSE	Used to reverse the direction of the action of the setpoint. Factory setting is “rise”
		FALL	
8) SPRA	Setpoint split range start	0.0 … 100.0	Used to limit the setpoint. Factory setting is “0”
9) SPRE	Setpoint split range end	0.0 … 100.0	Factory setting is “100”
10) TSUP	Setpoint ramp OPEN	Auto / 0 … 400	Limits the speed of change of the effective setpoint. Factory setting is “0”
11) TSDO	Setpoint ramp CLOSED	0 … 400	
12) SFCT	Setpoint Function	1 – 25	Equal Percentage. Linearizes valve characteristics. Factory setting is “Lin”
		1 – 33	
		1 – 50	
		n1 – 25	Inverse equal percentage
		n1 – 33	
		n1 – 50	
		FrEE	Freely Adjustable
13) SLO …33) SL20	Setpoint Turning Point	0.0 … 100.0	Assigns a flow metric to each setpoint interpolation in units of 5%.
34) DEBA	Dead Zone of Closed-Loop Controller	Auto / .1 … 10.0	Adjust the dead zone to the requirements of the control loop. Factory setting is “Auto”
35) YA	Start of the manipulated variable limit	0.0 … 100.0	Used to limit the mechanical actuator travel from stop to stop to the configured values. “YE” must always be larger than “YA”. Factory setting is “100”
36) YE	End of the manipulated variable limit	0.0 … 100.0	
37) YNRM	Manipulated variable scaling	MPOS	Mechanical position from 0 to 100% between hard stops.
		FLOW	Scaling from 0 to 100% over the range between “YA” and “YE”
38) YDIR	Direction of Manipulated Variable	riSE	Used to set the direction of action of the display and the position feedback Iy. Factory setting is “riSE”
		FALL	
39) YCLS	Manipulated variable tight closing	No	Used to move the valve into its seat with the maximum force of the actuator. Factory setting is “No”
		uP	
		Do	
		uP do	
40) YCDO	Lower value for tight closing	0.0 … 0.5 … 100%	Factory setting is “0.5”

All information herein is proprietary and confidential and may not be copied or reproduced without the expressed written consent of BRAY INTERNATIONAL, Inc.
The technical data herein is for general information only. Product suitability should be based solely upon customer’s detailed knowledge and experience with their application.

41) YCUP	Upper value for tight closing	0.0 … 99.5 … 100%		Used to set the value for tight “Tight closing below” and “Tight closing above”. Factory setting is “99.5”
42) BIN1 2)	Function of BE1	Normally Open	Normally Closed	Functions while in binary input mode.
		OFF		Factory setting.
		on	-on	Binary message from peripherals
		bloc1		Used to lock the configuration operation
		bloc2		
		uP	-uP	Actuator regulating to the valve specified by parameters “YA” and “YE”
		doWn	-doWn	
		StoP	-StoP	Piezo valves are blocked. Actuator remains at last position.
		PST	-PST	Used to trigger a partial stroke test
43) BIN2 2)	Function of BE2	Normally Open	Normally Closed	Functions while in binary input mode.
		OFF		Factory setting.
		on	-on	Binary message from peripherals
		uP	-uP	Actuator regulating to the valve specified by parameters “YA” and “YE”
		doWn	-doWn	
		StoP	-StoP	Piezo valves are blocked. Actuator remains at last position.
		PST	-PST	Used to trigger a partial stroke test
44) AFCT 3)	Alarm Function	Normal	Inverted	Used to determine the value at which going above or below a given offset or angle will result in a message.
		Off		
		nAnA	-AnA	
		nAnn	-Ann	
		AnAn	-AnA	
45) A1	Trigger threshold, alarm 1	0.0 … 10.0 … 100 %		Used to specify when an alarm should be displayed.
46) A2	Trigger threshold, alarm 2	0.0 … 90.0 …100%		
47) FCT 3)	Function for fault message output	Normal	Inverted	Cannot be switched off. Can be suppressed by switching to “No Automatic Mode”
		4	-4	
		4nA	-4nA	
		4nAb	-4nAb	
48) TIM	Monitoring time for setting of fault message	Auto / 0 … 100		Used to set the time in seconds that the positioner must have reached the regulated condition.
49) LIM	Response threshold for fault message	Auto / 0 … 100		Used to set a value for the permissible size of the regulation device to trigger a fault message.
50) PRST	Preset (factory setting)	no		Used to restore factory settings and reset initialization. Press increment button for 5 seconds.
		Strt		
		oCAY		
51) XDIAG	Activation of extended diagnostics	OFF		Used to activate extended diagnostics.
		On1		
		On2		
		On3		
52) FSTY	Safety Seating	FSVL		Actuator controlled using the parameterization safety point. Effective after a power failure.
		FSSP		Actuator controlled using the last effective set point
		FSAC		Valves move to location based on spring force. (Factory Defined)

All information herein is proprietary and confidential and may not be copied or reproduced without the expressed written consent of BRAY INTERNATIONAL, Inc.
The technical data herein is for general information only. Product suitability should be based solely upon customer’s detailed knowledge and experience with their application.

53) FSTI	Monitoring Period for setting the safety seating	0 … 100	(s). Once this set value expires the positioner switches to its safety position. (Factory defined at 0)
54) FSVL	Safety Setpoint	0.0 … 100.0	(%). Default value of the safety position. (Factory setting is 0%)
55) STNR	Station Number	0 … 126	Independent value for each station. (Default position is 126)
56) IDENT	Device operating mode (ID No.)	0	Profile Compliant. Can be replaced with other positioners complying with Profibus PA profile 3.0
		1	Compliant with Extensions (Factory Defined).

Parameter	Function	Parameter Values	Description
A. PST	Partial Stroke Test		Used to activate the partial stroke test for cyclic or manual test of up/down and servo solenoid valves.
A1.STPOS	Starting position	0.0 … 100.0	Start position in %. Factory setting is “100.0”
A2.STTOL	Starting tolerance	0.1 … 2.0 … 10.0	Start position tolerance in %. Factory setting is “2.0”
A3.STEP	Step height	0.1 ..10.0 ..100.0	Step height of partial stroke test in %
A4.STEPD	Step Direction	uP / do / uP do	Step direction of partial stroke test. Factory setting is “do”
A5.INTRV	Test Interval	OFF / 1 … 365	Interval time for cyclic partial stroke in days. “Off”
A6.PSTIN	Partial Stroke ref. step time	NOINI / (C) ###.# / Fdini / rEAL	Reference step time for partial stroke in s. “NOINI”
A7.FACT1	Factor 1	0.1 … 1.5 … 100.0	Factor for the formation of limit threshold 1. “1.5”
A8.FACT2	Factor 2	0.1 … 3.0 … 100.0	Factor for the formation of limit threshold 2. “3.0”
A9.FACT3	Factor 3	0.1 … 5.0 … 100.0	Factor for the formation of limit threshold 3. “5.0”
b. DEVI	General Control Valve Fault		Test for dynamic monitoring of control valve response.
b1.TIM	Time constant	Auto / 1 … 400	Defines the attenuation effect of the low-pass filter. “Auto”
b2.LIMIT	Limit	0.1 … 1.0 … 100.0	Sets a base limit in %. “1.0”
b3.FACT1	Factor 1	0.1 … 5.0 … 100.0	Factor for the formation of limit threshold 1. “5.0”
b4.FACT2	Factor 2	0.1 ..10.0..100.0	Factor for the formation of limit threshold 2. “10.0”
b5.FACT3	Factor 3	0.1..15.0..100.0	Factor for the formation of limit threshold 3. “15.0”
C. LEAK	Pneumatic leakage		Activates the pneumatic leakage test
C1.LIMIT	Limit	0.1 .. 30.0 .. 100.0	Sets the limit of the leakage indicator in %. “30.0”
C2.FACT1	Factor 1	0.1 … 1.0 … 100.0	Factor for the formation of limit threshold 1. “1.0”
C3.FACT2	Factor 2	0.1 … 1.5 … 100.0	Factor for the formation of limit threshold 2. “1.5”
C4.FACT3	Factor 3	0.1 … 2.0 … 100.0	Factor for the formation of limit threshold 3. “2.0”
d. STIC	Friction (slip-stick effect)		Monitors the current static friction of the final controlling element
d1.LIMIT	Limit	0.1 … 1.0 … 100.0	Sets the base limit for the slipstick detection in %. “1.0”
d2.FACT1	Factor 1	0.1 … 2.0 … 100.0	Factor for the formation of limit threshold 1. “2.0”
d3.FACT2	Factor 2	0.1 … 5.0 … 100.0	Factor for the formation of limit threshold 2. “5.0”
d4.FACT3	Factor 3	0.1 ..10.0..100.0	Factor for the formation of limit threshold 3. “10.0”
E. DEBA	Dead zone monitoring		Used to measure the automatic adjustment of the dead zones
e1.LEVEL3	Threshold	0.1 … 2.0 … 10.0	Sets the factor limit threshold to monitor the dead zone adjustment

All information herein is proprietary and confidential and may not be copied or reproduced without the expressed written consent of BRAY INTERNATIONAL, Inc.
The technical data herein is for general information only. Product suitability should be based solely upon customer’s detailed knowledge and experience with their application.

F. ZERO	Zero point monitoring		Activates the zero point displacement test
F1.LEVEL1	Threshold 1	0.1 … 1.0 … 100.0	Sets a threshold in % of the lower hard stop. “1.0”
F2.LEVEL2	Threshold 2	0.1 … 2.0 … 100.0	Sets a threshold in % of the lower hard stop “2.0”
F3.LEVEL3	Threshold 3	0.1 … 4.0 … 100.0	Sets a threshold in % of the lower hard stop “4.0”
G. OPEN	Displacement of the upper stop		Activates the test to monitor the displacement of the upper end stop.
G1.LEVEL1	Threshold 1	0.1 … 1.0 … 100.0	Sets a threshold in % of the upper hard stop. “1.0”
G2.LEVEL2	Threshold 2	0.1 … 2.0 … 100.0	Sets a threshold in % of the upper hard stop. “2.0”
G3.LEVEL3	Threshold 3	0.1 … 4.0 … 100.0	Sets a threshold in % of the upper hard stop. “4.0”
H. TMIN	Monitoring of the lower limit temperature		Activates the test to continuously monitor the lower limit temperature
H1.TUNIT	Temperature Unit		Sets the temp. parameter from “C” to “F”. “C”
H2.LEVEL1	Threshold 1	-40 … 194	Sets a threshold in degrees “C” or “F”. “-25 C”
H3.LEVEL2	Threshold 2	-40 … 194	Sets a threshold in degrees “C” or “F”. “-30 C”
H4.LEVEL3	Threshold 3	-40 … 194	Sets a threshold in degrees “C” or “F”. “-40 C”
J. TMAX	Monitoring of the upper limit temperature		Activates the test to continuously monitor the upper limit temperature
J1.TUNIT	Temperature Unit		Sets the temp. parameter from “C” to “F”. “C”
J2.LEVEL1	Threshold 1	-40 … 194	Sets a threshold in degrees “C” or “F”. “75 C”
J3.LEVEL2	Threshold 2	-40 … 194	Sets a threshold in degrees “C” or “F”. “80 C”
J4.LEVEL3	Threshold 3	-40 … 194	Sets a threshold in degrees “C” or “F”. “90 C”
L. STRK	Monitoring the path integral		Monitors the entire path covered by the final controlling element.
L1.LIMIT	Limit for the number of changes of direction	1 … 1E6 … 1E8	Sets the base limit for the number of strokes. “1.00 E6”
L2.FACT1	Factor 1	0.1 … 1.0 … 40.0	Factor for the formation of limit threshold 1. “1.0”
L3.FACT2	Factor 2	0.1 … 2.0 … 40.0	Factor for the formation of limit threshold 2. “2.0”
L4.FACT3	Factor 3	0.1 … 5.0 … 40.0	Factor for the formation of limit threshold 3. “5.0”
O. DCHG	Monitoring the changes in direction		Continuously monitors the number of changes of direction of the actuator caused in the dead zone.
O1.LIMIT	Limit for the number of changes of direction	1 … 1E6 … 1E8	Sets the base limit for the number of changes of direction. “1.00 E6”
O2.FACT1	Factor 1	0.1 … 1.0 … 40.0	Factor for the formation of limit threshold 1. “1.0”
O3.FACT2	Factor 2	0.1 … 2.0 … 40.0	Factor for the formation of limit threshold 2. “2.0”
O4.FACT3	Factor 3	0.1 … 5.0 … 40.0	Factor for the formation of limit threshold 3. “5.0”
P. PAVG	Position mean value calculation		Activates the test to calculate and monitor the position average
P1.TBASE	Time base of the mean value generation	.5h / 8h / 5d / 60d / 2.5y	Sets the time interval to calculate the position average
P2.STATE	State of the position mean value calculation	IdLE/ rEF / ###.# / Strt	Starting time for the calculation of position average. “IdLE”
P3.LEVEL1	Threshold 1	0.1 … 2.0 … 100.0	Sets a threshold for the maximum deviation of the current position average from the reference avg. “2.0”
P4.LEVEL2	Threshold 2	0.1 … 5.0 … 100.0	Sets a threshold for the maximum deviation of the current position average from the reference avg. “5.0”
P5.LEVEL3	Threshold 3	0.1 ..10.0..100.0	Sets a threshold for the maximum deviation of the current position average from the reference avg. “10.0”

All information herein is proprietary and confidential and may not be copied or reproduced without the expressed written consent of BRAY INTERNATIONAL, Inc.
The technical data herein is for general information only. Product suitability should be based solely upon customer’s detailed knowledge and experience with their application.

FACTORY OR FIELD INSTALLABLE OPTIONS

The S6A comes standard with guides beneath the motherboard so that optional modules can be added.

Tools Needed:

- T2O Torx 
- Phillips Screwdriver 

Step A

To install any of the optional modules proceed as follows:

1. Disconnect electrical power from the supply to the positioner
2. Remove pressure from the pneumatic supply lines to the positioner.
3. Remove the positioner cover by loosening the 4 screws using the Phillips screwdriver.
4. Remove the module cover by loosening the 2 screws using the T20 torx drive.

Note: Step A must be performed before installing any of the modules.

Installing the Feedback Module (Iy Module)

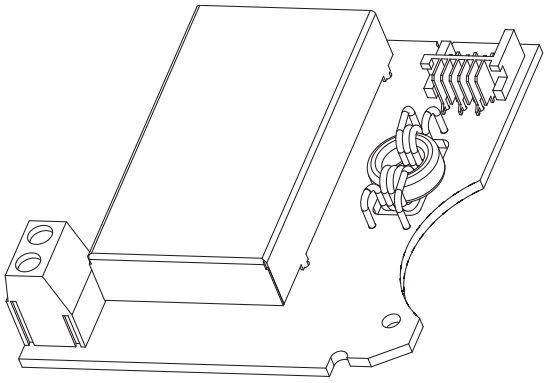

Feedback Module (Iy Module)

Function

The optional Iy module indicates the current actuator position as a dual line signal with Iy = 4 to 20 mA. The Iy module is potentially isolated from the standard controller. Due to the dynamic control, this module can report the arising operational faults automatically.

Device features

The Iy module is:

- Single channel
- Potentially isolated from the standard controller.

Note: The current actuator position is indicated only after a successful initialization of the positioner. [Refer to the "Calibration and Commissioning" section]

Proceed as follows to install the optional Iy module:

1. **Perform Step A to remove the module cover**
2. Slide the Iy module up to the end stop in the lower stack of the module rack.
3. Connect the module to the motherboard. For this purpose, use the 6-pole flat ribbon cable provided.
4. Refer to Figure 8 and Figure 9 to connect the Iy module in standard and intrinsically safe applications.

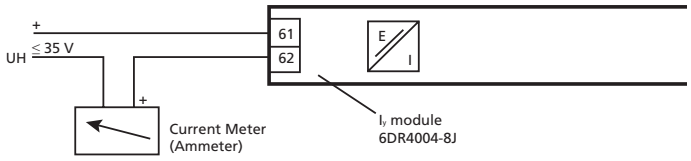

Figure 8.- Iy module 6DR4004-8J, not Ex

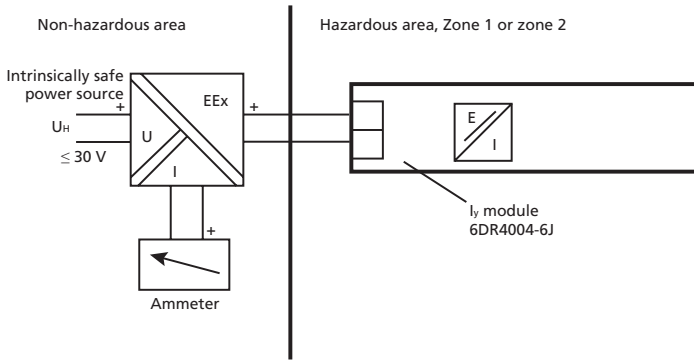

Figure 9. - Iy module 6DR4004-6J, EEx i

All information herein is proprietary and confidential and may not be copied or reproduced without the expressed written consent of BRAY INTERNATIONAL, Inc.
The technical data herein is for general information only. Product suitability should be based solely upon customer's detailed knowledge and experience with their application.

Installing the Mechanical Limit Switch Module

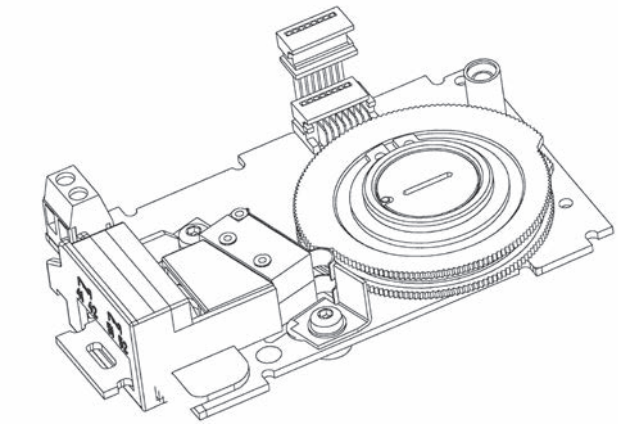

Mechanical Limit Switch Module

Function

This module is used to report two limits. These two limit switches are voltage free and rated for 4A at 24V DC or AC 250V.

Device features

The mechanical limit switch module consists of:

- One binary output to display a collective fault message. Compare with the device features of the alarm unit.
- Two switches to report two mechanically adjustable limits.

Both of these switches are electrically independent from the remaining electronic unit.

Note: Only qualified personnel should be allowed to install and connect the Mechanical Limit switch module

Proceed as follows to install the mechanical limit switch module:

1. **Perform Step A to remove the module cover**
2. Disengage the motherboard by carefully bending the four brackets.
3. Insert the mechanical limit switch module from the top up to the upper printed circuit board guide of the module rack.
4. Slide the mechanical limit switch module unit into the printed circuit board of the module rack approximately $^{1}/_{8}$" towards the right.
5. Screw in the special screw through the mechanical limit switch module into the positioner shaft. Tighten the special screw with a torque of 17.7 in-lbs.

NOTICE

A pin in the actuating disc bearing is pressed. Align this pin before it touches the special screw. You must rotate the actuating disc bearing and the special screw simultaneously so that the pin is inserted into the special screw.

An insulating cover is provided over the mechanical limit switch module. Place the insulating cover to one side under the mother-board seat on the container wall. The recesses of the insulating cover must fit in the corresponding webs of the container wall.

6. Place the insulating cover on the mechanical limit switch module by bending the container walls carefully.
7. Engage the motherboard into the four brackets.
8. Connect the motherboard and the optional modules to the ribbon cables provided.
9. Connect the motherboard and the potentiometer to the potentiometer cable.
10. Using both the screws, fasten the module cover provided.

Do not use the standard module cover.

11. Refer to Figures 10 and 11 to connect the Mechanical Limit switch module in standard and intrinsically safe applications.

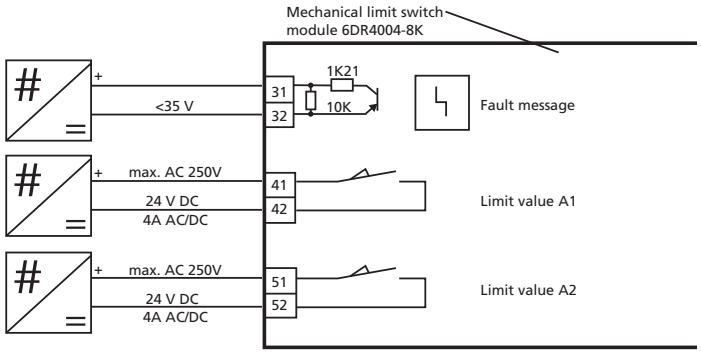

Figure 10. - Mechanical limit switch module 6DR4004-8K, not Ex

All information herein is proprietary and confidential and may not be copied or reproduced without the expressed written consent of BRAY INTERNATIONAL, Inc.
The technical data herein is for general information only. Product suitability should be based solely upon customer's detailed knowledge and experience with their application.

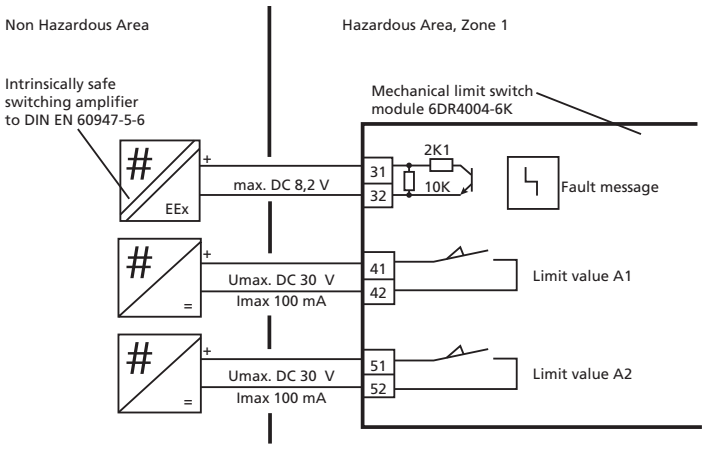

Figure 11. - Mechanical limit switch module 6DR4004-6K, EEx i

Connect the mechanical limit switch module as follows:

1. Loosen the screw on the transparent cover
2. Pull the transparent cover up to the front end stop.
3. Tighten every cable in the corresponding terminal.

NOTICE

Verify the electrical specifications for these terminals based on the wiring diagram. Do not use the non Ex board in a hazardous environment.

4. Slide the transparent cover up to the end stop of the motherboard.
5. Tighten the screw on the transparent cover
6. Connect the cables of each switch to the lug of the printed circuit board in pairs. Use the provided cable tie for this purpose.

Installing the Alarm Module

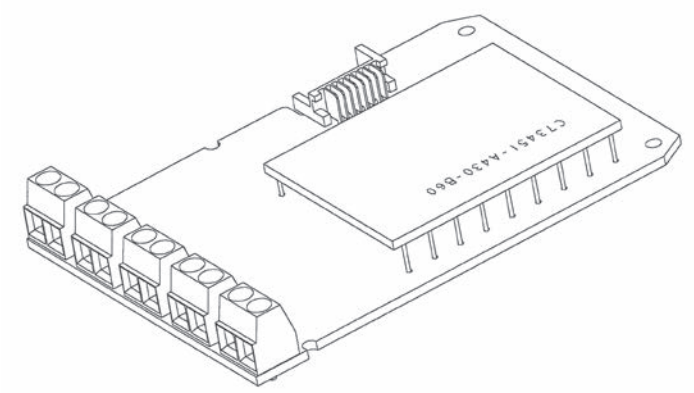

Alarm Unit

Function

The alarm unit triggers fault messages and alarms using binary outputs. The message function is based on the change in the signal status:

If the signal status is “HIGH”, there is no alarm message and the binary inputs are conductive.

If the signal status is “LOW”, the module reports an alarm by shutting down binary outputs using a high-resistance.

Due to the dynamic control, this module can report the arising operational faults automatically. Set parameters 44 to 51 to activate and parameterize the output of alarms and fault messages. Apart from binary outputs, the alarm unit has a double-acting binary input BE2. Depending on the selected parameters, it is used to block or to move the actuator it to its end position. Configure the suitable settings on parameter 43.

Device features

The alarm unit has the following features:

Available in two versions.

- Explosion-proof version for connecting to a switching amplifier in conformity with EN 60947-5-6.
- Non-explosion-proof version for connecting to power sources having a maximum of 35 V.

Three binary outputs. Binary inputs are potentially isolated from the standard controller and from each other. The binary input has dual functionality. Both inputs are implemented as logical OR combination.

- Isolated for voltage level
- Not isolated for dry contacts

All information herein is proprietary and confidential and may not be copied or reproduced without the expressed written consent of BRAY INTERNATIONAL, Inc.
The technical data herein is for general information only. Product suitability should be based solely upon customer’s detailed knowledge and experience with their application.

Proceed as follows to install the alarm unit:

1. **Perform Step A to remove the module cover**
2. Slide the alarm unit below the motherboard in the module rack. Ensure that you slide it up to the end stop.
3. Connect the module to the motherboard. For this purpose, use the 8-pole flat ribbon cable provided.
4. Refer to Figures 12 and 13 to connect the Alarm unit in standard and intrinsically safe applications

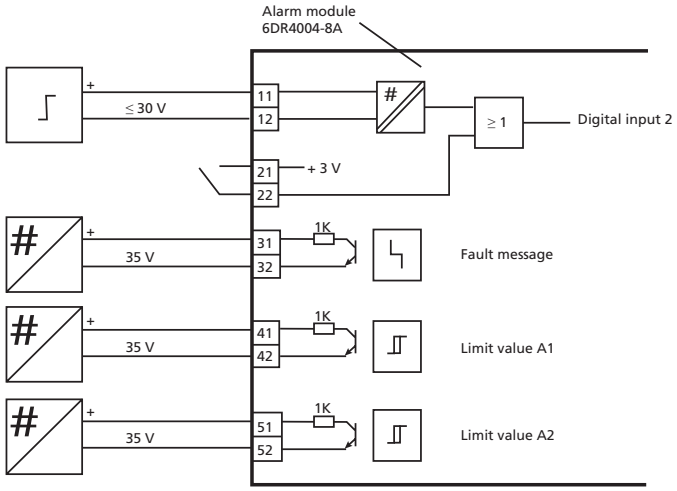

Figure 12. - Alarm unit 6DR4004-8A, not Ex

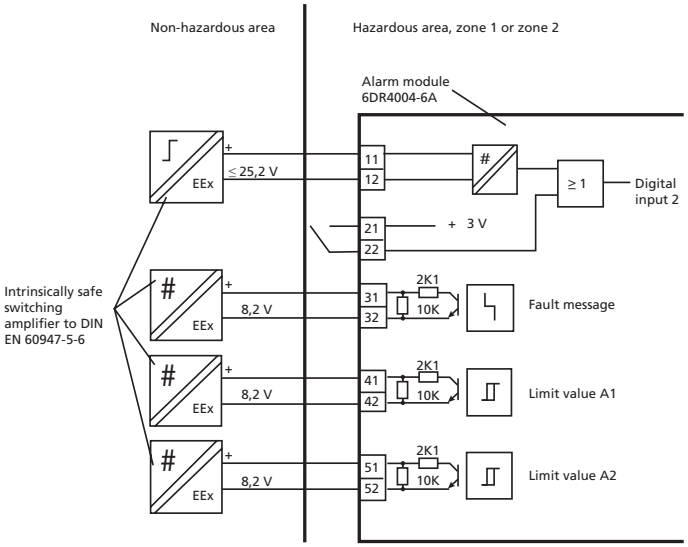

Figure 13. - Alarm unit 6DR4004-6A, EEx i

Installing the Slotted Initiator Alarm Unit

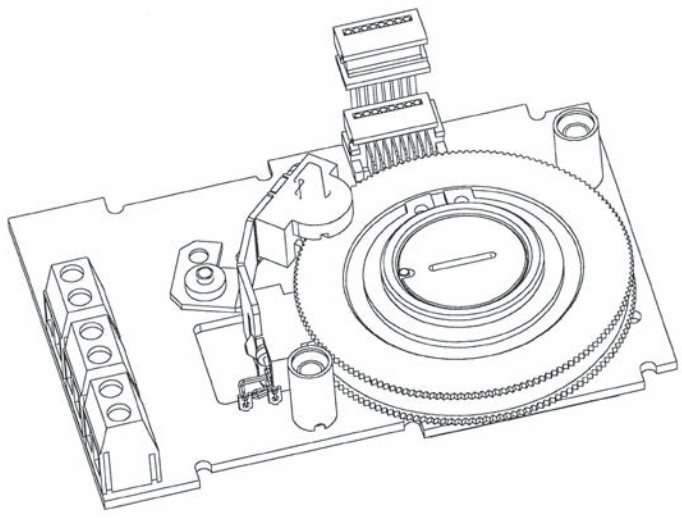

Slotted Initiator Alarm Unit

Function

If the standard controller requires electrically independent limit value messages, the slotted initiator alarm unit is used instead of the standard alarm unit.

A binary output is used to display a collective fault message. Compare with the function of the alarm unit. The floating binary output is implemented as an automatic fault indicating semiconductor output.

The other two binary outputs are used for the message of two limits L1 and L2 which can be adjusted mechanically using slotted initiators. Both these binary outputs are electrically independent from the remaining electronic unit.

Device features

The slotted initiator alarm unit, abbreviated as SIA unit consists of three binary outputs.

Proceed as follows to install the SIA unit:

1. **Perform Step A to remove the module cover**
2. Unscrew both the screws on the motherboard.
3. Disengage the motherboard by carefully bending the four brackets.
4. Insert the SIA unit from the top up to the upper printed circuit board guide of the module rack.
5. Slide the SIA unit in the printed circuit board of the module rack approximately $^{1}/_{8}$" to the right.
6. Screw in the special screw through the SIA unit into the positioner shaft. Tighten the special screw with a torque of 17.7 in-lbs.

All information herein is proprietary and confidential and may not be copied or reproduced without the expressed written consent of BRAY INTERNATIONAL, Inc.
The technical data herein is for general information only. Product suitability should be based solely upon customer's detailed knowledge and experience with their application.

NOTICE

A pin in the actuating disc bearing is pressed. Align this pin before it touches the special screw. You must rotate the actuating disc bearing and the special screw simultaneously so that the pin is inserted into the special screw.

7. An insulating cover is provided over the SIA unit. Place the insulating cover to one side under the motherboard seat on the container wall. The recesses of the insulating cover must fit in the corresponding webs of the container wall.
8. Place the insulating cover on the SIA unit by bending the container walls carefully.
9. Engage the motherboard into the four brackets.
10. Tighten the motherboard using the two screws.
11. Reestablish all electrical connections between the motherboard and the optional modules. Connect the motherboard and the optional modules to the ribbon cables provided. Connect the motherboard and the potentiometer to the potentiometer cable.
12. Using both the screws, fasten the module cover provided. **Do not use the standard module cover**.
13. Refer to Figures 14 and 15 to connect the SIA module in standard and intrinsically safe applications

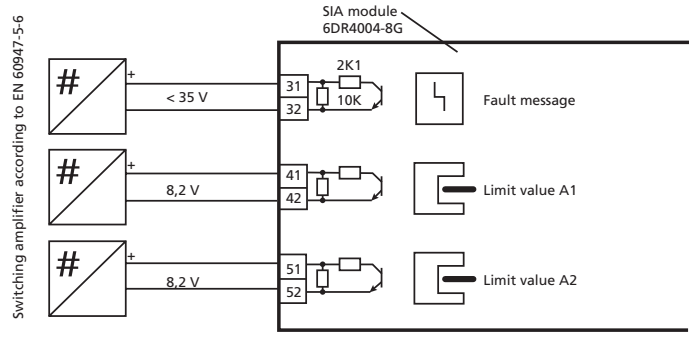

Figure 14. - SIA unit 6DR4004-8G, not Ex

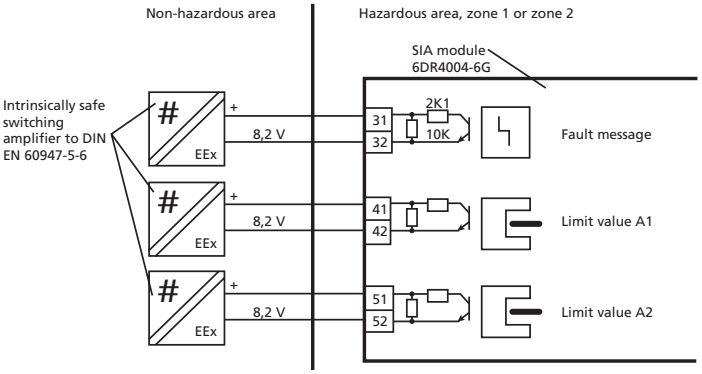

Figure 15. - SIA unit 6DR4004-6G, EEx i

Setting The Limits Of The Slotted Initiator Alarm Unit

You will require a suitable display device to determine the switch status. For example, use the initiator tester type 2 / Ex by Pepperl + Fuchs.

1. Connect the display device to the following terminals of the SIA unit:
   - 41 and 42
   - 51 and 52
2. Read the switch status of slotted initiators

Proceed as follows to set the limits:

1. Move the actuator to the first desired mechanical position.
2. Adjust the upper actuating disc manually until the output signal at terminals 41 and 42 changes. Set a high-low or a low-high switch over as follows:
   - Rotate the actuating disc beyond the switching point until you reach the next switching point.
3. Move the actuator to the second desired mechanical position.
4. Adjust the lower actuating disc manually until the output signal at terminals 51 and 52 changes. Set a high-low or a low-high switch over as follows:
   - Rotate the actuating disc beyond the switching point until you reach the next switching point.

Note: The actuating discs are relatively difficult to move. This design prevents their unintentional movement during operation. You can achieve an easier and finer adjustment by reducing friction temporarily. Move the actuator to and fro while simultaneously holding the actuating discs.

All information herein is proprietary and confidential and may not be copied or reproduced without the expressed written consent of BRAY INTERNATIONAL, Inc.
The technical data herein is for general information only. Product suitability should be based solely upon customer's detailed knowledge and experience with their application.

Installing the EMC Filter Module

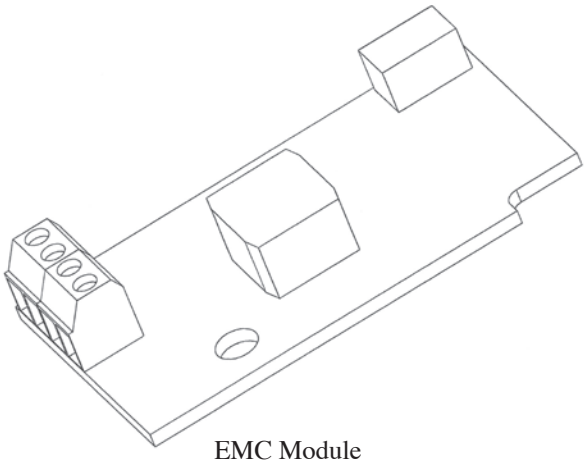

EMC Module

Function

You will require the EMC filter module if you use an external position sensor on the positioner, e.g. a potentiometer or a non-contacting position sensor. The EMC filter module forms the interface between external position sensors and the motherboard of the positioner. This module protects the positioner from electromagnetic effects.

Device features include:

- EMC protection
- Connection to motherboard
- Connecting terminals for an external potentiometer

Proceed as follows to install the EMC filter module:

1. **Perform Step A to remove the module cover**
2. Remove the module cover.
3. Dismantle all existing optional modules.
4. Unscrew the screws of the module rack that are opposite to the blanking plugs.
5. The EMC filter module has a fastening hole. Tighten the module on the module rack using the screws provided
6. Lay the ribbon cable of the EMC filter module towards left through the opening of the module rack.
7. Unplug the connector of the internal potentiometer from the motherboard.
8. Connect the ribbon cable of the EMC module to the motherboard.
9. Connect the external position sensor to the terminals of the EMC module.
10. Reinstall the other optional modules in the reverse order.
11. Refer to Figures 14 and 15 to reconnect the SIA module in standard and intrinsically safe applications
12. Install the module cover.

All information herein is proprietary and confidential and may not be copied or reproduced without the expressed written consent of BRAY INTERNATIONAL, Inc.
The technical data herein is for general information only. Product suitability should be based solely upon customer's detailed knowledge and experience with their application.

TROUBLESHOOTING

During operation of the positioner, a few important values and parameters are continually monitored. In configuration mode, you can configure that monitoring so that the fault message output will be activated if, for instance, a limit is exceeded. Information about what events can activate the fault message output can be found in Figure 16

Fault	See Table #:
In which mode does a fault occur?	
Initialization	1
Manual and automatic modes	2, 3, 4, 5
In which environment and under which boundary conditions does a fault occur?	
Wet environment (e.g. strong rain or constant condensation)	2
Vibrating (oscillating) control valves	2, 5
Impact or shock loads (e.g. vapor shocks or breakaway valves)	5
Moist (wet) compressed air	2
Dirty (contaminated with solid particles) compressed air	2, 3
When does a fault occur?	
Regularly (reproducible)	1, 2, 3, 4
Sporadically (not reproducible)	5
Mostly after a specific operation time	2, 3, 5

Figure 16. - Fault Messages

In automatic and manual mode, when the fault message output triggers the digital display shows what fault triggered the message. The two digits on the lower left show the corresponding error code. If multiple triggers occur at the same time, they are displayed one after the other cyclically. The device status, including all fault messages, can be called up using command "#48" over HART. For other protocols please refer to their specific guide on www.bray.com.

You can use the advance diagnostics parameters to display fault messages in one, two or three stages. The three stage method uses "traffic light signaling" symbolizing the type of fault occurring. The user will see either a green, yellow, or red wrench on their HMI in relation to the S6A. Green indicates a need for maintenance, yellow an urgent need for maintenance and red indicates imminent danger of unit failure or general failure. In addition to the fault message output, alarm outputs 1 and 2 are then used. For this purpose, set the "XDIAG" parameter as described in Figure 17.

Figure 17. XDIAG Parameters

Settings of XDIAG	Message due to
OFF	Advanced diagnostics not activated
On 1	Fault message output for threshold 3 fault messages (one-stage)
On 2	Fault message output for threshold 3 fault messages and alarm output 2 for threshold 2 fault messages (two-stage)
On 3	Fault message output for threshold 3 fault messages and alarm output 2 for threshold 2 fault messages and alarm output 1 for threshold 1 fault messages (three-stage)

When a fault occurs an error code will show up on the lower left hand corner of the screen. Remedial Measures Tables 1-5 respectively, show possible causes of the fault messages, events which activate the fault message output or alarm outputs, settings of parameters needed for event monitoring, and remedial measures to cancel a fault message.

All information herein is proprietary and confidential and may not be copied or reproduced without the expressed written consent of BRAY INTERNATIONAL, Inc.
The technical data herein is for general information only. Product suitability should be based solely upon customer's detailed knowledge and experience with their application.

Remedial Measures Table 1

Fault profile (symptoms)	Possible cause(s)	Remedial measures
Positioner remains in “RUN 1”.	Initialization started from the end position The response time of a maximum of 1 minute was not observed Network pressure not connected or it is too low	A waiting time of up to 1 minute is essential Do not start initialization from the end position Provide the network pressure
Positioner remains in “RUN 2”.	Transmission ratio selector and parameter 2 do not match the actuator type. Incorrectly set stroke on the lever Piezo valve does not activate	Check settings: see leaflet: “Device view (7)” picture as well as parameters 2 and 3 Check the stroke setting on the lever. See table 2
Positioner remains in “RUN 3”.	Actuator actuating time is too high	Open the restrictor completely and/or set the pressure PZ (1) to the highest permissible value Use a booster if required
Positioner remains “RUN 5”, does not go up to “FINISH” (waiting time > 5 min)	“Gap” (play) in the positioner - actuator - control valve system	Part-turn actuator: check for the firmness of the grub screw of the coupling wheel Linear actuator: check for the firmness of the lever on the positioning shaft Remove any play between the actuator and the control valve.

Remedial Measures Table 2

Fault profile (symptoms)	Possible cause(s)	Remedial measures
“CPU test” blinks on the digital display approximately every two seconds. Piezo valve does not activate.	Water in the pneumatic block (due to wet compressed air)	At an early stage, this fault can be rectified with a subsequent operations using dry air, if required, in a temperature cabinet at 50 to 70°C Otherwise: repair [1)]
In the manual and automatic modes, the actuator cannot be moved or can be moved only in one direction	Moisture in the pneumatic block	
Piezo valve does not activate (a gentle click sound is not audible when the “+” or “-” buttons are pressed in the manual mode.)	The screw between the shrouding cover and the pneumatic block has not been tightened firmly or the cover got stuck	Tighten the screw firmly; if required realign cover.
	Dirt (swarf, particles) in the pneumatic block	Repair or a new device; clean and/or replace the built-in fine screens
	Deposits on the contacts between the electronic printed circuit board and the pneumatic block may develop due to abrasion owing to continuous loads resulting from strong vibrations	Clean all contact surfaces with spirit; if required, bend the pneumatic block contact springs

Remedial Measures Table 3

Fault profile (symptoms)	Possible cause(s)	Remedial measures
Actuator does not move.	Compress air < 1.4 bar	Set the supply air pressure to >20 psi
Piezo valve does not activate (a gentle click sound is however audible when the “+” or “-” buttons are pressed in the manual mode.)	Restrictor valve turned off (screw at the right end stop)	Open the restrictor screw by turning it counter clockwise, see leaflet, “Device view (6)”
	Dirt in the pneumatic block	Repair[1)] or a new device: clean and/or replace the built-in fine screens
A piezo valve activates constantly in the stationary automatic mode (constant setpoint) and the manual mode.	Pneumatic leakage in the positioner - actuator system; start the leakage test in “RUN3” (initialization).	Rectify leakage in the actuator and/or feed line. In case of an intact actuator and tight feed line; repair[1)] or a new device
	Dirt in the pneumatic block, see above	

All information herein is proprietary and confidential and may not be copied or reproduced without the expressed written consent of BRAY INTERNATIONAL, Inc.
The technical data herein is for general information only. Product suitability should be based solely upon customer’s detailed knowledge and experience with their application.

Remedial Measures Table 4

Fault profile (symptoms)	Possible cause(s)	Remedial measures
In stationary automatic mode (constant setpoint) and in manual mode, both piezo valves continually switch alternately, and the actuator oscillates around a mean value.	Sticking friction of the packing gland from the control valve or actuator too large	Reduce friction or increase dead zone of positioner (parameter ”dEbA”) until the oscillation stops
	Looseness (play) in the positioner/actuator/control valve system	Part-turn actuator: Check for firm seating of set screw on coupling wheel
	Actuator is too fast	Linear actuator: Check for firm seating of lever on positioner shaft Correct any other play between the actuator and the control valve
Positioner doesn’t move control valve to the stop (at 20 mA)	Supply pressure too low. Load on the feeding controller or system output is too low	Increase supply pressure, insert ballast converter Select 3/4-wire mode

Remedial Measures Table 5

Fault profile (symptoms)	Possible cause(s)	Remedial measures
Zero point displaces sporadically (> 3%).	Impact or shock loads result in accelerations so high that the friction clutch moves, e.g. due to ”vapor shocks” in vapor lines	Rectify the causes for shock loads Re-initialize the positioner
The device function has completely failed: no view even on the digital display.	Electrical auxiliary power supply is not adequate	Check the electrical auxiliary power supply
	In case of very high continuous loads due to vibrations (oscillations): Screws of the electrical connecting terminals may be loose Electrical connecting terminals and/or electronic components may be knocked out	Tighten the screws firmly x Repair [1)] For prevention: install the positioner on the damping pads

All information herein is proprietary and confidential and may not be copied or reproduced without the expressed written consent of BRAY INTERNATIONAL, Inc.
The technical data herein is for general information only. Product suitability should be based solely upon customer’s detailed knowledge and experience with their application.

SERVICE AND MAINTENANCE

The S6A is maintenance-free to a large extent. Screens are installed in the pneumatic connections of the positioners to protect them from debris. If there are dirt particles in the pneumatic auxiliary power supply, they damage the screens and hamper the function of the positioner.

Perform the following steps when needing to clean the screens:

Cleaning the Screens

CAUTION

Danger Positioner in the plastic enclosure:

Risk of explosion due to electrostatic charge. Electrostatic charges develop when cleaning the positioner in the plastic enclosure with a dry cloth. It is imperative you avoid electrostatic charges in the hazardous environment.

1. Disconnect the pneumatic power supply.
2. Remove the lines.
3. Unscrew the cover.
4. Unscrew the three self-tapping screws on the pneumatic terminal strip.
5. Remove the screens and O-rings behind the terminal strip.
6. Clean the screens, e.g. using compressed air.

Installation of the Screens

CAUTION

Damage to the enclosure. The enclosure is damaged due to screwing in the self-tapping screws improperly. Ensure that the available thread pitches are used. Turn the screws counterclockwise until they engage noticeably in the thread pitch. Tighten the self-tapping screws only after they have engaged.

1. Insert the screens into the recesses of the plastic enclosure.
2. Place the O-rings on the screens.
3. Fit the pneumatic terminal strip on both studs so that it fits flushly.
4. Screw-on the three self-tapping screws.
5. Place the cover and tighten it.
6. Reconnect the pipelines and feed the pneumatic power supply

All information herein is proprietary and confidential and may not be copied or reproduced without the expressed written consent of BRAY INTERNATIONAL, Inc.
The technical data herein is for general information only. Product suitability should be based solely upon customer's detailed knowledge and experience with their application.

TECHNICAL DATA

1. Basic Units

Technical specifications

SIPART PS2	Basic device without Ex protection	Basic device with Ex d protection (flameproof enclosure)	Basic device with Ex ia/ib protection	Basic device with Ex n/ dust protection
3-/4-wire device (terminals 2/4 and 6/8) (6DR52.. and 6DR53..)				
• Power supply U_H	18 ... 35 V DC		18 ... 30 V DC	
• Current consumption I_H	$(U_H - 7.5\ V)/2{,}4\ k\Omega$ [mA]			
• Internal capacitance C_i	–		22 nF	22 nF (at "nL")
• Internal inductance L_i	–		0.12 mH	0.12 mH (at "nL")
• For connection to circuits with the following peak values	–		intrinsically safe U_i = 30 V DC I_i = 100 mA P_i = 1 W	at "nA" and "tD": U_n = 30 V DC I_n = 100 mA at "nL": U_i = 30 V DC I_i = 100 mA
Current input I_W				
Rated signal range	0/4 ... 20 mA			
Load voltage at 20 mA	≤ 0.2 V (corresponds to 10 Ω)		≤ 1 V (corresponds to 50 Ω)	
Internal capacitance Ci	–		22 nF	22 nF (at "nL")
Internal inductance Li	–		0.12 mH	0.12 mH (at "nL")
For connection to circuits with the following peak values	–		intrinsically safe U_i = 30 V DC I_i = 100 mA P_i = 1 W	at "nA" and "tD": U_n = 30 V DC I_n = 100 mA at "nL": U_i = 30 V DC I_i = 100 mA
Electrical isolation	between U_H and I_W		between U_H and I_W (2 intrinsically safe circuits)	between U_H and I_W
Test voltage	840 V DC, (1 s)			
Connections				
• Electrical	Screw terminals 2.5 AWG28-12 Cable gland M20x1.5 or ½-14 NPT	Screw terminals 2.5 AWG28-12 Ex d certified cable gland M20x1.5, ½-14 NPT or M25x1.5	Screw terminals 2.5 AWG28-12 Cable gland M20x1.5 or ½-14 NPT	
• Pneumatic	Female thread G1/4 EN ISO 228-1 or ¼ -18 NPT			
External position sensor (potentiometer or NCS; as option) with the following peak values				
• U_o	–		5 V	
• I_o (static)	–		75 mA	
• I_s (short-time)	–		160 mA	–
• P_o	–		120 mW	
Maximum permissible external capacitance C_o	–		1 µF	
Maximum permissible external inductance L_o	–		1 mH	

All information herein is proprietary and confidential and may not be copied or reproduced without the expressed written consent of BRAY INTERNATIONAL, Inc.
The technical data herein is for general information only. Product suitability should be based solely upon customer's detailed knowledge and experience with their application.

Technical specifications

SIPART PS2 PA	Basic device without Ex protection	Basic device with Ex d protection (flameproof enclosure)	Basic device with Ex ia/ib protection	Basic device with Ex n/ dust protection
Explosion protection as per ATEX	Without	Ex d II 2 G Ex d II C T4/T5/T6	Ex ia/ib II 2 G Ex ia/ib II C T6	Ex n II 3 G Ex nA nL[nL] IIC T6 Dust II 3 D Ex tD A22 IP66 T100°C
Mounting location		Zone 1		Zone 2/22
Permissible ambient temperature for operation	-30 ... +80 °C (-22 ... +176 °F)	T4: -30 ... +80 °C (-22 ... +176 °F)		T4: -20 ... +75 °C (-4 ... +167 °F)
At ≤ -10 °C (+14 °F) the display refresh rate of the digital display is limited.		T5: -30 ... +65 °C (-22 ... +149 °F)		T5: -20 ... +65 °C (-4 ... +149 °F)
(for basic devices with Ex protection the following applies: Only T4 is permissible when using I_y module.)		T6: -30 ... +50 °C (-22 ... +122 °F)		T6: -20 ... +50 °C (-4 ... +122 °F)
Electrical specifications				
Input				
Power supply (terminals 6/7)		Bus-supplied		
Bus voltage	9 ... 32 V		9 ... 24 V	9 ... 32 V
• Bus connection with supply unit	–		Intrinsically safe FISCO	at "nA" and "tD": Un = 32 V DC at "nL": FNICO
- Max. supply voltage U_o	–			17.5 V
- Max. short-circuit current I_o	–		380 mA	570 mA
- Max. power P_o	–		5.32 W	–
• Bus connection with barrier			intrinsically safe	at "nL"
- Max. supply voltage (Uo)	–		24 V	32 V
- Max. short-circuit current (Io)	–		250 mA	–
- Max. power P_o	–		1.2 W	–
Current consumption		11.5 mA ± 10 %		
Additional error signal		0 mA		
Effective internal inductance L_i	–		8 µH	8 µH (at "nL")
Effective Internal capacitance C_i	–		Negligible	
Safety shutdown can be activated with coding bridge (terminals 81/82; electrically isolated from the basic device)				
• Input resistance		> 20 kΩ		
• Signal status "0" (shutdown active)		0 ... 4.5 V or unused		
• Signal status "1" (shutdown not active)		13 ... 30 V		
• Effective Internal capacitance C_i	–		Negligible	
• Effective internal inductance L_i	–		Negligible	
• For connection to power supply with	–		intrinsically safe	At "nA", "nL" and "tD"
- Max. supply voltage U_i	–		30 V	30 V
- Max. short-circuit current I_i	–		100 mA	100 mA
- Maximum power P_i	–		1 W	–
Electrical isolation	Between basic device and the input for safety shutdown, as well as the outputs of the option modules		The basic device and the input to the safety shutdown, as well as the outputs of the option modules, are separate, intrinsically safe circuits	Between basic device and the input for safety shutdown, as well as the outputs of the option modules
Test voltage		840 V DC, 1 s		

All information herein is proprietary and confidential and may not be copied or reproduced without the expressed written consent of BRAY INTERNATIONAL, Inc.
The technical data herein is for general information only. Product suitability should be based solely upon customer's detailed knowledge and experience with their application.

Technical specifications

SIPART PS2 PA	Basic device without Ex protection	Basic device with Ex d protection (flameproof enclosure)	Basic device with Ex ia/ib protection	Basic device with Ex n/ dust protection
Communication	Layers 1 and +2 according to PROFIBUS PA, transmission technology according to IEC 1158-2; slave function; layer 7 (protocol layer) according to PROFIBUS DP, EN 50170 standard with the extended PROFIBUS functions (all data acyclic, manipulated variable, feedbacks and status also cyclic)			
C2 connections	Four connections to master class 2 are supported, automatic connection setup 60 s after break in communication			
Device profile	PROFIBUS PA profile B, version 3.0, more than 150 objects			
Response time to master message	Typically 10 ms			
Device address	126 (when delivered)			
PC parameterizing software	SIMATIC PDM, supports all device objects. The software is not included in the scope of delivery			
Connections				
• Electrical	Screw terminals 2.5 AWG28-12 Cable gland M20x1.5 or ½-14 NPT	Screw terminals 2.5 AWG28-12 Ex d certified cable gland M20x1.5, ½-14 NPT or M25x1.5	Screw terminals 2.5 AWG28-12 Cable gland M20x1.5 or ½-14 NPT	
• Pneumatic	Female thread G¼ EN ISO 228-1 (¼ -18 NPT)			
External position sensor (potentiometer or NCS; as option) with the following peak values				
• U_o	–		5 V	
• I_o (static)	–		75 mA	
• I_s (short-time)	–		160 mA	–
• P_o	–		120 mW	
• Maximum permissible external capacitance C_o	–		1 µF	
• Maximum permissible external inductance L_o	–		1 mH	

All information herein is proprietary and confidential and may not be copied or reproduced without the expressed written consent of BRAY INTERNATIONAL, Inc.
The technical data herein is for general information only. Product suitability should be based solely upon customer's detailed knowledge and experience with their application.

Technical specifications

SIPART PS2 FF	Basic device without Ex protection	Basic device with Ex d protection (flameproof enclosure)	Basic device with Ex ia/ib protection	Basic device with Ex n/ dust protection
Explosion protection as per ATEX	Without	Ex d II 2 G Ex d II C T4/T5/T6	Ex ia/ib II 2 G Ex ia/ib II C T6	Ex n II 3 G Ex nA nL[nL] IIC T6 Dust II 3 D Ex tD A22 IP66 T100°C
Mounting location		Zone 1		Zone 2/22
Permissible ambient temperature for operation	-30 ... +80 °C (-22 ... +176 °F)	T4: -30 ... +80 °C (-22 ... +176 °F) T5: -30 ... +65 °C (-22 ... +149 °F) T6: -30 ... +50 °C (-22 ... +122 °F)		T4: -20 ... +75 °C (-4 ... +167 °F)
At ≤ 10 °C (+14 °F) the display refresh rate of the indicator is limited (for basic devices with Ex protection the following applies: Only T4 is permissible when using I_y module.)				
Electrical specifications				
Input				
Power supply (terminals 6/7)		Bus-supplied		
Bus voltage	9 ... 32 V		9 ... 24 V	9 ... 32 V
• Bus connection with supply unit		–	Intrinsically safe FISCO	at "nA" and "tD": Un = 32 V DC at "nL": FNICO
- Max. supply voltage U_o		–		17.5 V
- Max. short-circuit current I_o		–	380 mA	570 mA
- Max. power P_o		–	5.32 W	–
• Bus connection with barrier			intrinsically safe	at "nL"
- Max. supply voltage (Uo)		–	24 V	32 V
- Max. short-circuit current (Io)		–	250 mA	–
- Max. power P_o		–	1.2 W	–
Electrical specifications				
Current consumption		10.5 mA ± 10 %		
Additional error signal		0 mA		
Effective internal inductance L_i		–	8 µH	8 µH (at "nL")
Effective Internal capacitance C_i		–		Negligible
Safety shutdown can be activated with coding bridge (terminals 81/82; electrically isolated from the basic device)				
• Input resistance		> 20 kΩ		
• Signal status "0" (shutdown active)		0 ... 4.5 V or unused		
• Signal status "1" (shutdown not active)		13 ... 30 V		
• Effective Internal capacitance C_i		–		Negligible
• Effective internal inductance L_i		–		Negligible
• For connection to power supply with		–	intrinsically safe	At "nA", "nL" and "tD"
- Max. supply voltage U_i		–		30 V
- Max. short-circuit current I_i		–		100 mA
- Maximum power P_i		–	1 W	–
Electrical isolation	Between basic device and the input for safety shutdown, as well as the outputs of the option modules		The basic device and the input to the safety shutdown, as well as the outputs of the option modules, are separate, intrinsically safe circuits	Between basic device and the input for safety shutdown, as well as the outputs of the option modules
Test voltage		840 V DC, 1 s		

All information herein is proprietary and confidential and may not be copied or reproduced without the expressed written consent of BRAY INTERNATIONAL, Inc.
The technical data herein is for general information only. Product suitability should be based solely upon customer's detailed knowledge and experience with their application.

Technical specifications

SIPART PS2 FF	Basic device without Ex protection	Basic device with Ex d protection (flameproof enclosure)	Basic device with Ex ia/ib protection	Basic device with Ex n/ dust protection
Communication				
Communications group and class	According to technical specification of the Fieldbus Foundation for H1 communication			
Function blocks	Group 3, Class 31PS (publisher, subscriber) 1 resource block (RB2) 1 analog output function block (AO) 1 PID function block (PID) 1 transducer block (standard advanced positioner valve)			
Execution times of the blocks	AO: 60 ms PID: 80 ms			
Physical layer profile	123, 511			
FF registration	Tested with ITK 5.0			
Device address	22 (when delivered)			
Connections				
• Electrical	Screw terminals 2.5 AWG28-12 Cable gland M20x1.5 or ½-14 NPT	Screw terminals 2.5 AWG28-12 Ex d certified cable gland M20x1.5, ½-14 NPT or M25x1.5	Screw terminals 2.5 AWG28-12 Cable gland M20x1.5 or ½-14 NPT	
• Pneumatic	Female thread G¼ EN ISO 228-1 (¼ -18 NPT)			
External position sensor (potentiometer or NCS; as option) with the following peak values				
• U_o		–		5 V
• I_o (static)		–		75 mA
• I_s (short-time)		–	160 mA	–
• P_o		–		120 mW
• Maximum permissible external capacitance C_o		–		1 µF
• Maximum permissible external inductance L_o		–		1 mH

All information herein is proprietary and confidential and may not be copied or reproduced without the expressed written consent of BRAY INTERNATIONAL, Inc.
The technical data herein is for general information only. Product suitability should be based solely upon customer's detailed knowledge and experience with their application.

Technical specifications

SIPART PS2 (all versions)	
General data	
Range of stroke (linear actuators)	3 ... 130 mm (0.12 ... 5.12 inch) (angle of positioner shaft 16 ... 90°)
Angle of rotation (part-turn actuators)	30 ... 100°
Assembly	
• On linear actuators	Using mounting kit 6DR4004-8V and where necessary with an additional lever arm 6DR4004-8L on actuators according to IEC 534-6 (NAMUR) with ribs, bars or flat face
• On part-turn actuators	Using mounting kit 6DR4004-8D on actuators with mounting plane according to VDI/VDE 3845 and DIN 3337: The required mounting console has to be provided on the actuator side; shaft with groove and female thread M6
Controller unit	
• Five-point switch	Self-adjusting
• Deadband	
- dEbA = Auto	Self-adjusting or can be set as fixed value
- dEbA = 0.1 ... 10 %	Self-adjusting or can be set as fixed value
A/D converter	
• Scan time	10 ms
• Resolution	≤ 0.05 %
• Transmission error	≤ 0.2 %
• Temperature influence effect	≤ 0.1 %/10 K (≤ 0.1 %/18 °F)
Cycle time	
• 20 mA/HART device	20 ms
• PA device	60 ms
• FF device	60 ms (min. loop time)
Binary input BE1 (terminals 9/10; electrically conn. to basic device)	Suitable only for floating contact; max. contact load < 5 µA with 3 V
Degree of protection	IP66 to EN 60 529/NEMA 4X
EMC requirements	EN 61326/A1 Appendix A.1 and NAMUR NE21 August 98
Material	
• Enclosure	
- 6DR5..0-... (plastic)	Glass-fiber-reinforced Macrolon
- 6DR5..1-... (aluminum)	GD AlSi12
- 6DR5..2-... (stainless steel)	Austenitic stainl. steel mat. No. 1.4581
- 6DR5..5-... (alum., press.-proof)	GK AlSi12
• Pressure gauge block	Aluminium AlMgSi, anodized
Vibration resistance	
• Harmonic oscillations (sine-wave) according to EN 60068-2-6/05.96	3.5 mm (0.14 inch), 2 ... 27 Hz 3 cycles/axis 98.1 m/s² (321.84 ft/s²), 27 ... 300 Hz, 3 cycles/axis
• Bumping (half-sine) to EN 60068-2-29/03.95	150 m/s² (492 ft/s²), 6 ms, 1000 shocks/axis
• Noise (digitally controlled) to EN 60068-2-64/08.95	10 ... 200 Hz; 1 (m/s²)²/Hz (3.28 (ft/s²)²/Hz) 200 ... 500 Hz; 0.3 (m/s²)²/Hz (0.98 (ft/s²)²/Hz) 4 hours/axis
• Recommended continuous duty range of the complete fitting	≤ 30 m/s² (≤ 98.4 ft/s²) without resonance sharpness

Weight, basic device	
• Glass-fiber-reinforced Makrolon enclosure	Approx. 0.9 kg (1.98 lb)
• Aluminum enclosure	Approx. 1,3 kg (2.86 lb)
• Stainless steel enclosure	Approx. 3.9 kg (8.58 lb)
• Pressure-proof alum. enclosure	Approx. 5.2 kg (11.46 lb)
Dimensions	See Dimensional drawings
Climatic class	According to DIN EN 60721-3-4
• Storage [1]	1K5, but -40 ... +80 °C (-40 ... +176 °F)
• Transport [1]	2K4, but -40 ... +80 °C (-40 ... +176 °F)
• Operation [2]	4K3, but -30 ... +80 °C [3] (-22 ... +176 °F)
Certificates and approvals	
Classification according to pressure equipment directive (PED 97/23/EC)	For gases of fluid group 1, complies with requirements of article 3, par. 3 (sound engineering practice SEP)
CE marking	You can find the appropriate guidelines and standards applied, including the relevant versions, in the EC Declaration of Conformity on the Internet
Pneumatic data	
Auxiliary power (air supply)	Compressed air, nitrogen or cleaned natural gas
• Pressure	1.4 ... 7 bar (20.3 ... 101.5 psi): Sufficiently greater than max. drive pressure (actuating pressure)
Air quality to ISO 8573-1	
• Solid particulate size and density	Class 2
• Pressure dew point	Class 2 (min. 20 K (36 °F) below ambient temperature)
• Oil content	Class 2
Unrestricted flow (DIN 1945)	
• Inlet air valve (ventilate actuator) [4]	
- 2 bar (29 psi)	4.1 Nm³/h (18.1 USgpm)
- 4 bar (58 psi)	7.1 Nm³/h (31.3 USgpm)
- 6 bar (87 psi)	9.8 Nm³/h (43.1 USgpm)
• Outlet air valve (vent actuator) [4]	
- 2 bar (29 psi)	8.2 Nm³/h (36.1 USgpm)
- 4 bar (58 psi)	13.7 Nm³/h (60.3 USgpm)
- 6 bar (87 psi)	19.2 Nm³/h (84.5 USgpm)
Valve leakage	$< 6 \cdot 10^{-4}$ Nm³/h (0.0026 USgpm)
Throttle ratio	Adjustable up to ∞ : 1
Auxiliary power consumption in the controlled state	$< 3{,}6 \cdot 10^{-2}$ Nm³/h (0.158 USgpm)
Device versions	
• In Makrolon enclosure	Single-acting and double-acting
• In aluminum enclosure	Single-acting
• In pressure-proof aluminum encl.	Single-acting and double-acting
• In stainless steel enclosure	Single-acting and double-acting

1) During commissioning at ≤ 0 °C (≤ 32 °F) make sure that the valves are flushed long enough with the dry medium.
2) At ≤ -10 °C (≤ 14 °F) the display refresh rate of the indicator is limited. Only T4 is permissible when using I_y module.
3) -20 ... +80 °C (-4 ... + 176 °F) for 6DR55..-0G..., 6DR56..-0G..., 6DR55..-0D... and 6DR56..-0D...
4) With the Ex d version (6DR5..5-...) the values are reduced by approx. 20 %

Gauge made of	Plastic	Steel	Stainl. Steel 316
Degree of protection	IP31	IP44	IP54
Vibration resistance	acc. to DIN EN 837-1		

All information herein is proprietary and confidential and may not be copied or reproduced without the expressed written consent of BRAY INTERNATIONAL, Inc.
The technical data herein is for general information only. Product suitability should be based solely upon customer's detailed knowledge and experience with their application.

Technical specifications

SIPART PS2	Basic device without Ex protection	Basic device with Ex d protection (flameproof enclosure)	Basic device with Ex ia/ib protection	Basic device with Ex n/ dust protection
Explosion protection ATEX	-	Ex d II 2 G Ex d II C T6	Ex ia/ib II 2 G Ex ia/ib II C T6	Ex n II 3 G Ex nA nL[nL] IIC T6 Dust II 3 D Ex tD A22 IP66 T100°C
Mounting location	-	Zone 1		Zone 2/22
Permissible ambient temperature for operation	-30 ... +80 °C (-22 ... +176 °F)	T4: -30 ... +80 °C (-22 ... +176 °F)		
At ≤ -10 °C (+14 °F) the display refresh rate of the indicator is limited.		T5: -30 ... +65 °C (-22 ... +149 °F)		
(for basic devices with EX ia/ib and Ex n protection the following applies: Only T4 is permissible when using I_y module)		T6: -30 ... +50 °C (-22 ... +122 °F)		
Electrical specifications				
Input				
2-wire connection (terminals 6/8)				
Rated signal range	4 ... 20 mA			
Current to maintain the auxiliary power supply	≥ 3.6 mA			
Required load voltage U_B (corresponds to Ω at 20 mA)				
• Without HART (6DR50..)				
- Typical	6.36 V (corresponds to 318 Ω)		7.8 V (corresponds to 390 Ω)	
- max.	6.48 V (corresponds to 324 Ω)		8.3 V (corresponds to 415 Ω)	
• Without HART (6DR53..)				
- Typical	7.9 V (corresponds to 395 Ω)		–	
- max.	8.4 V (corresponds to 420 Ω)		–	
• With HART (6DR51..)				
- Typical	6.6 V (corresponds to 330 Ω)		–	
- max.	–			
• With HART (6DR52..)				
- Typical	–		8.4 V (corresponds to 420 Ω)	
- max.	–		8.8 V (corresponds to 440 Ω)	
• Static destruction limit	± 40 mA		–	
Internal capacitance C_i				
• Without HART	–		22 nF	22 nF (at "nL")
• With HART	–		7 nF	7 nF (at "nL")
Internal inductance L_i				
• Without HART	–		0.12 mH	0.12 mH (at "nL")
• With HART	–		0.24 mH	0.24 mH (at "nL")
For connection to circuits with the following peak values	–		intrinsically safe U_i = 30 V DC I_i = 100 mA P_i = 1 W	at "nA" and "tD": U_n = 30 V DC I_n = 100 mA at "nL": U_i = 30 V DC I_i = 100 mA

All information herein is proprietary and confidential and may not be copied or reproduced without the expressed written consent of BRAY INTERNATIONAL, Inc.
The technical data herein is for general information only. Product suitability should be based solely upon customer's detailed knowledge and experience with their application.

2. Optional Models

Technical specifications

Add-on modules	Without Ex protection/ with Ex d protection	With Ex ia/ib protection	With Ex n/dust protection
Ex protection acc. to ATEX	–	II 2G Ex ia/ib II C T4/T5/T6[1)]	Ex n II 3 G Ex nA nL[nL] IIC T6 Dust II 3 D Ex tD A22 IP66 T100°C
Mounting location	–	Zone 1	Zone 2/22
Permissible ambient temperature for operation (For devices with Ex protection: Only in conjunction with the basic device 6DR5... -.E.... Only T4 permissible when using I_y module.)	-30 ... +80 °C (-22 ... +176 °F)	T4: -30 ... +80 °C (T4: -22 ... +176 °F) T5: -30 ... +65 °C (-22 ... +149 °F) T6: -30 ... +50 °C (-22 ... +122 °F)	
Alarm unit	6DR4004-8A		
Binary alarm outputs A1, A2 and alarm output			
• Signal status High (not responded) Signal status Low* (responded) (* Low is also the status when the basic device is faulty or has no electric power supply)	Conductive, R = 1 kΩ, +3/1 %* Disabled, I_R < 60 µA (* When used in the flameproof enclosure the current consumption must be limited to 10 mA per output.)	≥ 2.1 mA ≤ 1.2 mA (Switching threshold with supply to EN 60947-5-6: U_H = 8.2 V, R_i = 1 kΩ)	
• Internal capacitance C_i	–	5.2 nF	5.2 nF (at "nL")
• Internal inductance L_i	–	Negligible	
• Power supply U_H	≤ 35 V	–	
• Connecting to circuits with the following peak values	–	Intrinsically safe switching amplifier to EN 60947-5-6 U_i = 15.5 V DC I_i = 25 mA P_i = 64 mW	at "nA" and "tD": U_n = 15.5 V DC at "nL": U_i = 15.5 V DC I_i = 25 mA
Binary input BE2			
• Electrically connected to the basic device			
- Signal status 0		Floating contact, open	
- Signal status 1		Floating contact, closed	
- Contact load		3 V, 5 mA	
• Electrically isolated from the basic device		≤ 4.5 V or open	
- Signal status 0		≥ 13 V	
- Signal status 1		≥ 25 kΩ	
- Natural resistance			
• Static destruction limit	± 35 V	–	
• Internal inductance and capacitance	–	Negligible	
• Connecting to circuits with the following peak values	–	Intrinsically safe U_i = 25.2 V	at "nA" and "tD": U_n = 25.2 V DC at "nL": U_i = 25.2 V DC
Electrical isolation	The 3 outputs, the input BE2 and the basic device are electrically isolated from each other		
Test voltage	840 V DC, 1 s		

[1)] Only in conjunction with the basic device 6DR5...-.E.... Only T4 permissible when using with I_y module.

All information herein is proprietary and confidential and may not be copied or reproduced without the expressed written consent of BRAY INTERNATIONAL, Inc.
The technical data herein is for general information only. Product suitability should be based solely upon customer's detailed knowledge and experience with their application.

Technical specifications

Add-on modules	Without Ex protection/ with Ex d protection	With Ex ia/ib protection	With Ex n/dust protection
SIA module Limit transmitter with slot-type initiators and alarm output	6DR4004-8G (not for Ex d version)	6DR4004-6G	
Limit transmitter A1, A2		2-wire connection	
Ex protection	Without	II 2 G Ex ia/ib IIC T6	II 3 G Ex nA nL [nL] IIC T6
Connection	2-wire system to EN 60947-5-6 (NAMUR), for switching amplifier to be connected on load side		
2 slot-type initiators	Type SJ2-SN		
Function	NC (normally closed)		
Connecting to circuits with the following peak values	rated voltage 8 V Current consumption: ≥ 3 mA (limit value not responded) ≤ 1 mA (limit value responded)	Intrinsically safe switching amplifier EN 60947-5-6 U_i = 15.5 V DC I_i = 25 mA P_i = 64 mW	at "nA" and "tD": U_n = 15.5 V DC P_n = 64 mW at "nL": U_i = 15.5 V DC I_i = 25 mA
Internal capacitance C_i	–	41 nF	41 nF (at "nL")
Internal inductance L_i	–	100 µH	100 µH (at "nL")
Electrical isolation	The 3 outputs are electrically isolated from the basic device		
Test voltage	840 V DC, 1 s		
Alarm output			
Connection	To switching amplifier according to EN 60947-5-6 (NAMUR), U_H = 8.2 V, R_i = 1 kΩ		
Signal state High (not activated)	R = 1.1 kΩ	≥ 2.1 mA	
Signal state Low (activated)	Ri = 10 kΩ	≤ 1.2 mA	
Internal capacitance Ci	–	5.2 nF	5.2 nF (at "nL")
Internal inductance Li	–	Negligible	
Power supply UH	U_H ≤ 35 V DC I ≤ 20 mA	–	
Connecting to circuits with the following peak values	–	Intrinsically safe switching amplifier acc. to EN 60947-5-6 U_i = 15.5 V DC I_i = 25 mA P_i = 64 mW	at "nA" and "tD": U_n = 15.5 V DC at "nL": U_i = 15.5 V DC I_i = 25 mA
Limit value contact module Limit transmitter with mechanical ground contact and alarm output	6DR4004-8K (not for Ex d version)	6DR4004-6K	
Limit transmitter A1, A2			
Ex protection	Without	II 2 G Ex ia/ib IIC T6	II 3 G Ex nL [nL] IIC T6
Max. switching current AC/DC	4 A	Connection to intrinsically safe circuit with maximum values: U_i = 30 V, I_i = 100 mA, P_i = 750 mW	Connection to circuits with maximum values: at "nL": U_i = 30 V I_i = 100 mA,
Max. switching voltage AC/DC	250 V/24 V	30 V DC	30 V DC
Internal capacitance	–	Negligible	Negligible
Internal inductance	–	Negligible	Negligible
Electrical isolation	The 3 outputs are electrically isolated from the basic device		
Test voltage	3150 V DC, 2 s		
Alarm output			
Connection	To switching amplifier according to EN 60947-5-6 (NAMUR), U_H = 8.2 V, R_i = 1 kΩ		
Signal state High (not activated)	R = 1.1 kΩ	≥ 2.1 mA	
Signal state Low (activated)	Ri = 10 kΩ	≤ 1.2 mA	
Internal capacitance Ci	–	5.2 nF	5.2 nF (at "nL")
Internal inductance Li	–	Negligible	
Power supply UH	U_H ≤ 35 V DC I ≤ 20 mA	–	
Connecting to circuits with the following peak values	–	Intrinsically safe switching amplifier acc. to EN 60947-5-6 U_i = 15.5 V DC I_i = 25 mA P_i = 64 mW	at "nL": U_i = 15.5 V DC I_i = 25 mA

All information herein is proprietary and confidential and may not be copied or reproduced without the expressed written consent of BRAY INTERNATIONAL, Inc.
The technical data herein is for general information only. Product suitability should be based solely upon customer's detailed knowledge and experience with their application.

Technical specifications

Add-on modules	Without Ex protection/ with Ex d protection	With Ex ia/ib protection	With Ex n protection
I_y module	6DR4004-8J	6DR4004-6J	
DC output for position feedback	2-wire connection		
Rated signal range	4 ... 20 mA, short-circuit-proof		
Total operating range	3.6 ... 20.5 mA		
Power supply U_H	+12 ... +35 V	+12 ... +30 V	
External loads R_B [kΩ]	≤ (U_H [V] - 12 V) /i [mA]		
Transmission error	≤ 0,3 %		
Temperature influence effect	≤ 0.1 %/10 K (≤ 0.1 %/18 °F)		
Resolution	≤ 0,1 %		
Residual ripple	≤ 1 %		
Internal capacitance C_i	–	11 nF	11 nF (at "nL")
Internal inductance L_i	–	Negligible	
For connection to circuits with the following peak values		Intrinsically safe: U_i = 30 V DC I_i = 100 mA P_i = 1 W (only T4)	at "nA" and "tD": U_n = 30 V DC I_n = 100 mA P_n = 1 W (only T4) at "nL": U_i = 30 V DC I_i = 100 mA
Electrical isolation	Electrically isolated from the basic device		
Test voltage	840 V DC, 1 s		
NCS sensor	(not for Ex d version)		
Position range			
• Linear actuator	3 ... 130 mm (0.12 ... 5.12 inch), to 200 mm (7.87 inch) on request	3 ... 130 mm (0.12 ... 5.12 inch), to 200 mm (7.87 inch) on request	-
• Part-turn actuator	30° ... 100° (not for Ex d version)	30° ... 100°	-
Linearity (after correction by SIPART PS2)			
• Linear actuator	± 1 %	± 1 %	-
• Part-turn actuator	± 1 %	± 1 %	-
Hysteresis	± 0.2 %	± 0.2 %	-
Continuous working temperature	-40 °C ... +85 °C (-40 °F ... +185 °F), extended temperature range on request	-40 °C ... +85 °C (-40 °F ... +185 °F), extended temperature range on request	-
Vibration resistance Harmonic oscillations (sine-wave) according to EN 60062-2-6/05.96		7 mm (0.28 inch), 5 ... 54 Hz 500 m/s² (1640 ft/s²), 80 ... 200 Hz	
For connection to circuits with the following peak values		Intrinsically safe U_i = 5 V DC	at "nL": U_i = 5 V DC
Internal capacitance C_i	–	10 nF	10 nF (at "nL")
Internal inductance L_i	–	240 µH	240 µH (at "nL")
Degree of protection of enclosure	IP68/NEMA 4X		-

All information herein is proprietary and confidential and may not be copied or reproduced without the expressed written consent of BRAY INTERNATIONAL, Inc.
The technical data herein is for general information only. Product suitability should be based solely upon customer's detailed knowledge and experience with their application.

DIMENSIONAL DRAWINGS

Dimensional drawings

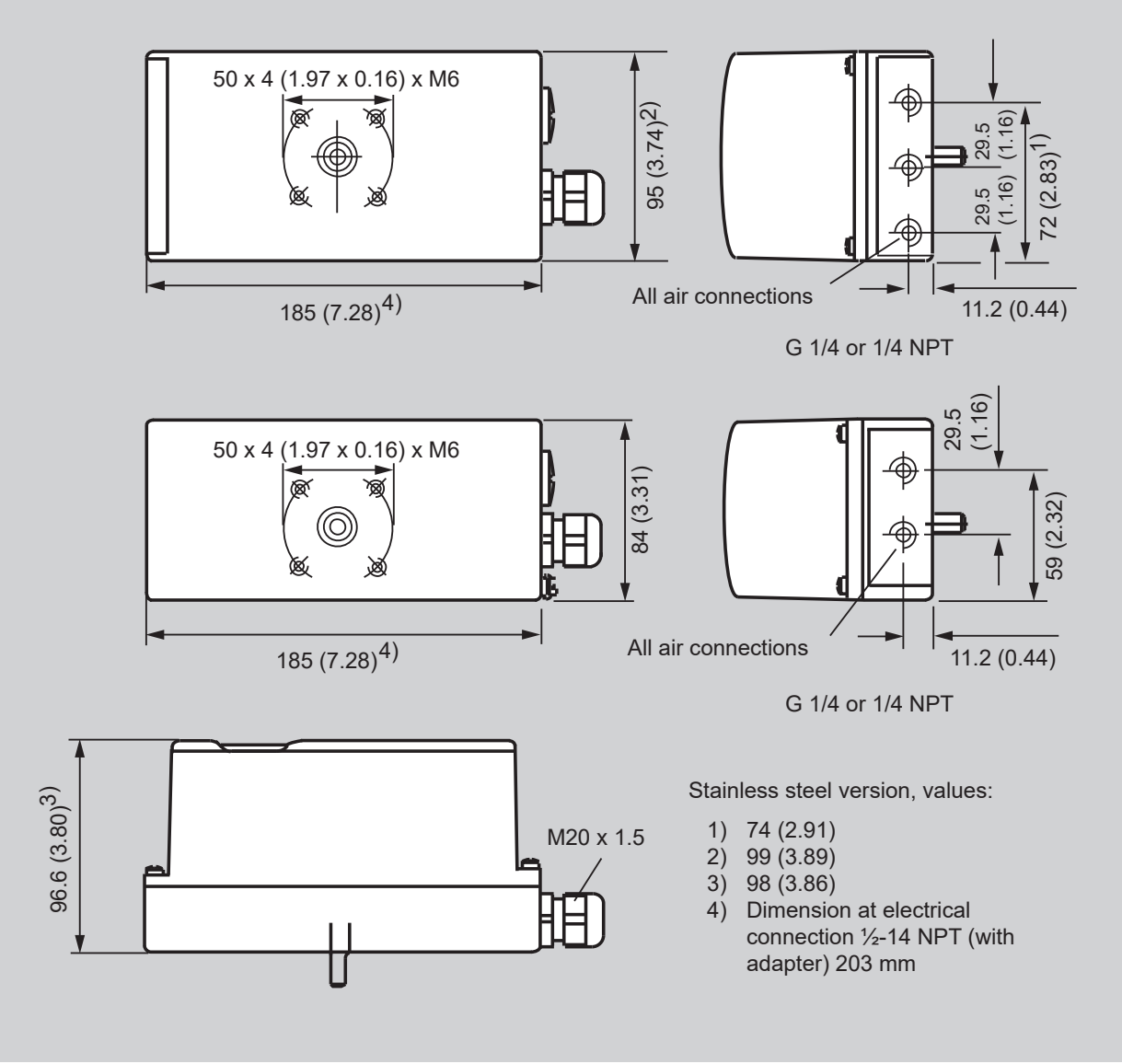

Makrolon and stainless steel enclosure double acting (top), aluminum enclosure single acting (center), Makrolon and aluminum enclosure (bottom), dimensions in mm (inch)

Note: Drawings are shown in first angle

All information herein is proprietary and confidential and may not be copied or reproduced without the expressed written consent of BRAY INTERNATIONAL, Inc.
The technical data herein is for general information only. Product suitability should be based solely upon customer's detailed knowledge and experience with their application.

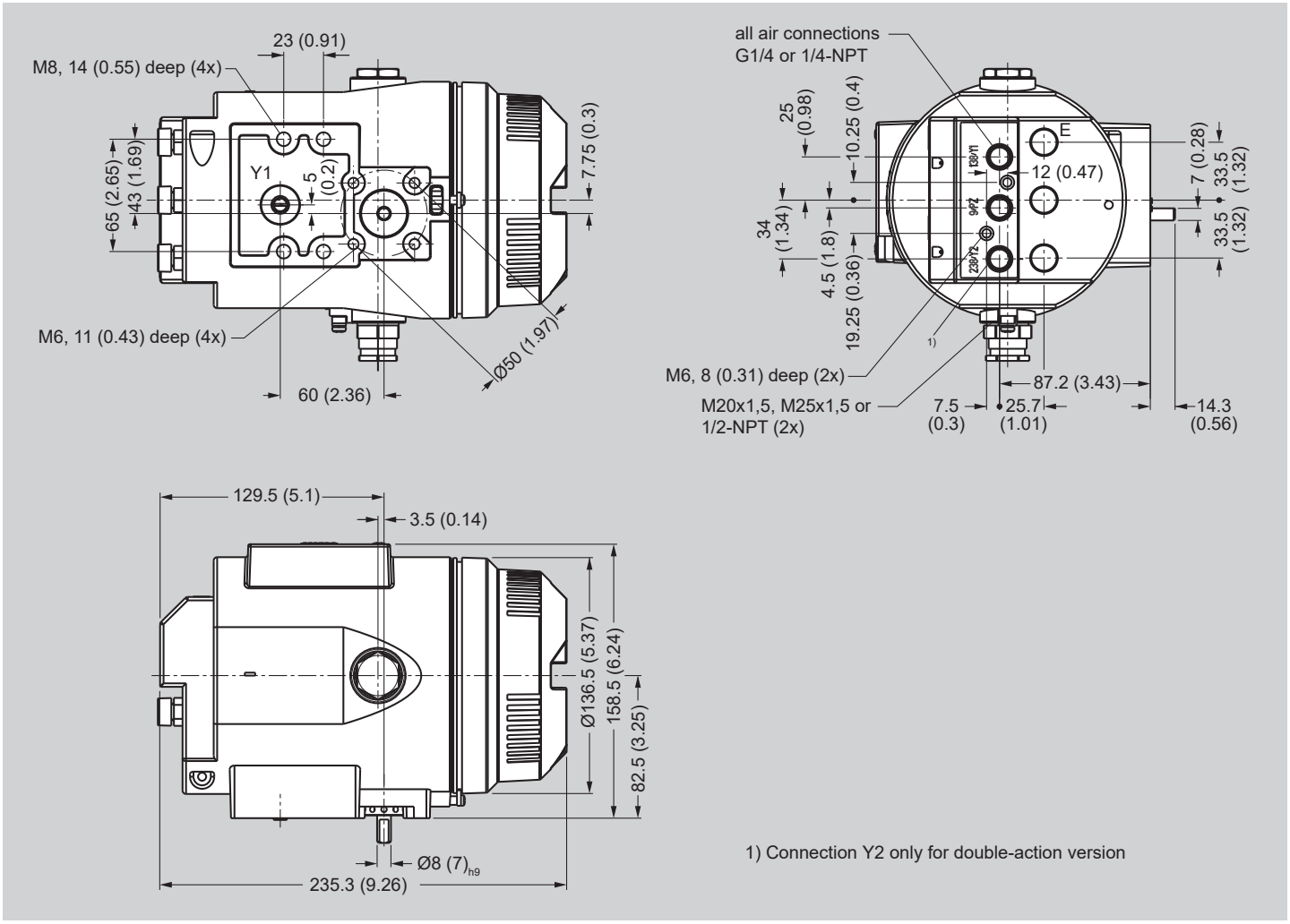

Flameproof enclosure dimensions in mm (inch)

Note: Drawings are shown in first angle

All information herein is proprietary and confidential and may not be copied or reproduced without the expressed written consent of BRAY INTERNATIONAL, Inc.
The technical data herein is for general information only. Product suitability should be based solely upon customer's detailed knowledge and experience with their application.









Bray® CONTROLS

A Division of BRAY INTERNATIONAL, Inc.
13333 Westland East Blvd. Houston, Texas 77041
281/894-5454 FAX 281/894-9499 www.bray.com

Bray® is a registered trademark of BRAY INTERNATIONAL, Inc.
© 2011 Bray International. All rights reserved. OM-6A-001 12_2011

BRAY

SERIES 70, ELECTRIC ACTUATOR

LEFT BLANK

SERIES 70

ELECTRIC ACTUATOR

Installation, Operation and Maintenance Manual

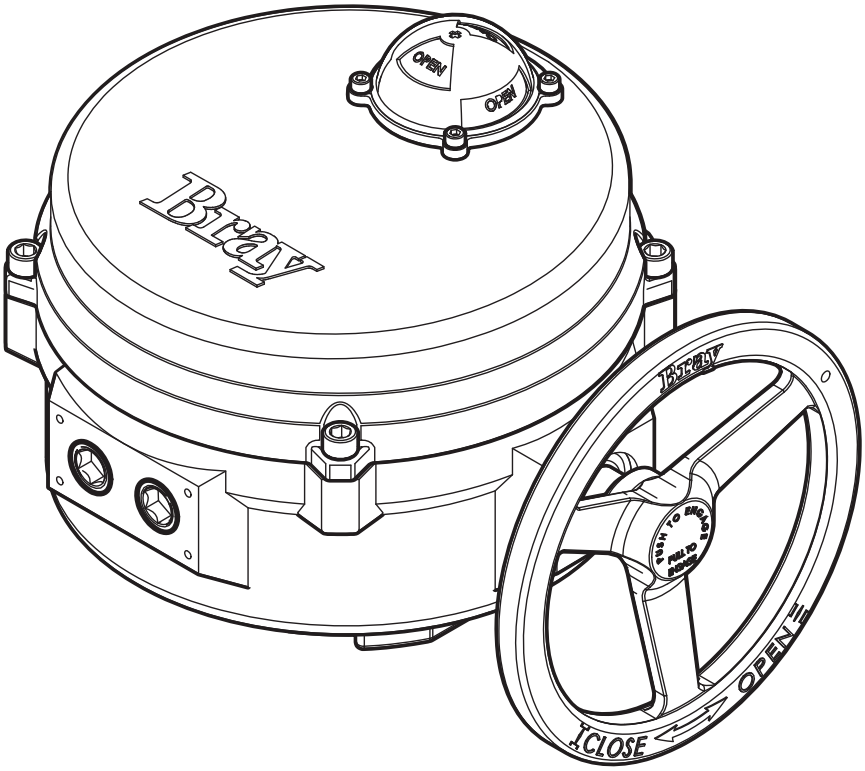

Bray

BRAY.COM

THE HIGH PERFORMANCE COMPANY

Bray International, Inc.
13333 Westland East Blvd. Tel: 281.894.5454
Houston, Texas 77041 www.bray.com

Declaration of Conformity

We,

Bray International, Inc.
13333 Westland East Blvd.
Houston, TX 77041
USA

Declare under our sole responsibility that the

Series 70 Electric Valve Actuators

and their derivatives are IP65 compliant and conform to the essential protection requirements of the

EMC Directive 2014/30/EU,

Machinery Directive 2006/42/EC, and

Low Voltage Directive 2014/35/EU.

Test Standards:

- EN 55011:2016/A1:2017
- EN 61326-1:2013
- EN 61000-3-2:2014
- EN 61000-3-3:2013
- EN 61000-4-2:2009
- EN 61000-4-3:2006+A2:2010
- EN 61000-4-4:2012
- EN 61000-4-5:2014
- EN 61000-4-6:2014+AC:2015
- EN 61000-4-8: 2010
- EN 61000-4-11:2004
- EN ISO 12100:2010
- EN 60034-1:2010
- EN 60204-1:2006+A1:2009
- EN 60529-2000

Issued in Houston **On** January 24, 2018

Signed for on behalf of Bray International, Inc.

Signed Brad A. Kirchhofer **Print Name** Brad A. Kirchhofer

Position Chief Operating Officer

Table of Contents

Safety Instructions - Definition of Terms 2
Hazard-Free Use 2
Qualified Personnel 2
Part Numbering System Reference Chart 3
Introduction 3
Principle of Operation 3
Electrical Operation 3
Mechanical Operation 3
Actuation 4
Manual Operation 4
Remote Operation 4
S70 On/Off Actuator with Interposing Relay Board (I.R.B.) 4
Servo NXT 5
Storage 6
Commissioning 6
Mounting the Actuator 6
Wiring the Actuator 7
Setting Travel Limit Switches 7
Setting Mechanical Travel Stops 8
Disassembly and Assembly 10
Field or Factory Installable Options 13
Auxiliary Switches 13
Heater 13
Torque Switches 14
Local Control Station 14
Control Station Kit 14
Battery Backup Unit 15
Indication of Remote Control 16
Spinner 16
Receptacles (Quick Connectors) 16
External Signal Feedback Potentiometer 17
Appendix A 18
Basic Tools 18
Appendix B 19
Actuator Troubleshooting Chart 19
Series 70 – Size 003, 006 – Electric Actuator Exploded View 20
Series 70 – Size 008, 012, 020 – Electric Actuator Exploded View 22
Series 70 – Size 030, 050, 065 – Electric Actuator Exploded View 24
Series 70 – Size 130, 180 – Electric Actuator Exploded View 26
Series 70 – Size 130, 180 – 3:1 Gear Box Exploded View 28

FOR MORE INFORMATION ON THIS PRODUCT AND OTHER BRAY PRODUCTS
PLEASE VISIT OUR WEBSITE – bray.com

Safety Instructions - Definition of Terms

READ AND FOLLOW THESE INSTRUCTIONS
SAVE THESE INSTRUCTIONS

⚠ **WARNING**	indicates a potentially hazardous situation which, if not avoided, **could** result in death or serious injury.
⚠ **CAUTION**	indicates a potentially hazardous situation which, if not avoided, may result in minor or moderate injury.
NOTICE	indicates a potential situation which, if not avoided, may result in an undesirable result or state, including property damage.

Hazard-Free Use

This device left the factory in proper condition to be safely installed and operated in a hazard-free manner. The notes and warnings in this document must be observed by the user to ensure hazard-free operation of this device.

All necessary precautions need to be taken to prevent damage due to rough handling, impact, or improper storage. Do not use abrasive compounds to clean the device, or scrape its surfaces with any objects.

Configuration and setup procedures for this device are described in this manual. Proper configuration and setup are required for the safe operation of this device.

The control system in which this device is installed must have proper safeguards to prevent injury to personnel, or damage to equipment, should a failure of system components occur.

⚠ **WARNING**

The device generates large mechanical force during normal operation.

Qualified Personnel

⚠ **WARNING**

The actuator must only be installed, commissioned, operated and repaired by qualified personnel.

Installation, commissioning, operation and maintenance must be performed under strict observation of all applicable codes, standards and safety regulations.

As per this document, a qualified person is one who is trained in:

- The operation and maintenance of electric equipment and systems in accordance with established safety practices.
- Procedures to energize, de-energize, ground, tag and lock electrical circuits and equipment in accordance with established safety practices.
- The proper use and care of personal protective equipment (PPE) in accordance with established safety practices.
- First aid.
- In cases where the device is installed in a potentially explosive (hazardous) location – is trained in the operation, commissioning, operation and maintenance of equipment in hazardous locations.

⚠ **WARNING**

Reference is specifically made here to observe all applicable safety regulations for actuators installed in potentially explosive (hazardous) locations.

Part Numbering System Reference Chart

Series	Torque Code	Speed	Product	Style	Voltage	Trim
70	AAA	X	113	Y	Z	TTT

Actuator Size	Part Number	Torque In.Lbs	Torque Nm	Speed, ¼ Turn Seconds	Supply Z Voltage
S70-003	70-003**X**-113**YZ-TTT**	300	34	30/15	0/2/4
S70-006	70-006**X**-113**YZ-TTT**	600	68	30	0/2/3/4
S70-008	70-008**X**-113**YZ-TTT**	800	90	30/15/6	0/2/4
S70-012	70-012**X**-113**YZ-TTT**	1200	136	30/15/6	0/2/4
S70-020	70-020**X**-113**YZ-TTT**	2000	226	30/15	0/2/3/4
S70-030	70-030**X**-113**YZ-TTT**	3000	339	30/18	0/2/4
S70-050	70-050**X**-113**YZ-TTT**	5000	565	30/18	0/2/3/4
S70-065	70-065**X**-113**YZ-TTT**	6500	734	30	0/4
S70-130	70-13**WX**-113**YZ-TTT**	13000	1469	110	0/4
S70-180	70-18**WX**-113**YZ-TTT**	18000	2034	110	0/4

Use this chart as a guide to interpret the S70 electric actuator part number.
Note: Not all combinations are possible.

YZ - STYLE / VOLTAGE:

Imp.	Metric	
DA	NA	120VAC Interposing Relay Board
DB	NB	220VAC Interposing Relay Board
DC	NC	24VAC On/Off with Controller
DD	ND	24VDC On/Off with Controller
AA	MA	120VAC Modulating with Servo Pro
AB	MB	220VAC Modulating with Servo Pro
AC	MC	24VAC Modulating with Servo Pro
AD	MD	24VDC Modulating with Servo Pro
G0	R0	120VAC Modulating with Servo NXT
G2	R2	24VDC Modulating with Servo NXT
G3	R3	24VAC Modulating with Servo NXT
G4	R4	220VAC Modulating with Servo NXT

NOTE: 220VAC units are 230VAC compatible

W - DESIGNATES THE OUTPUT BORE DIAMETER

0	2.5 Inches [63.5 mm]
1	1.97 Inches [50 mm]

X - DESIGNATES THE SPEED

X:	0	1	2	6
Sec:	60	30	15/18	110

Y - DESIGNATES STYLE

Imp.	Metric	
G	**R**	Servo NXT
D	**N**	I.R.B. On/Off
A	**M**	Servo Pro

Z - DESIGNATES THE VOLTAGE

Z:	0	2	3	4
	A	D	C	B
Voltage:	120VAC	24VDC	24VAC	220VAC

TTT - DESIGNATES THE PRODUCT TRIM

536	Standard Bray Red
5F5	Bray Seacorr Coating

Units of measure designation = Imperial [Metric]

Introduction

The Bray Series 70 is a quarter turn electric actuator with manual override for use on any quarter turn valve requiring up to 18000 in-lb [2034 Nm] of torque. Operating speeds vary between 15 to 110 seconds.

Principle of Operation

The Series 70 actuator is divided into two internal sections, the power center below the switch plate, and the control center above the switch plate. Below the switch plate, the gear motor, with its spur gear train, drives a non-backdriveable worm gear output. The override mechanism for manual operation is also housed here. Above the switch plate is where user required readily accessible components are placed. The indicator shaft assembly, limit switches, terminal strips, torque switches, heater, and electronic controllers are all placed here for easy access.

External to the unit are adjustable mechanical travel stops, a large and easy to read indicator, the unique manual override handwheel, and dual conduit entry ports. The external coating is a high-quality polyester powder coat which has exceptional UV protection and chemical resistance.

Electrical Operation

The gear motors used in the Bray Series 70 are of either permanent split capacitor (PSC) design (single phase AC power) or permanent magnet (PM) design (DC power). Travel limit switches are mechanical form (SPDT) with contacts rated at 10 Amp (0.8 PF), 1/2 HP 125/250 VAC.

In cases where the torque capacity of the unit is exceeded to the point where the motor stalls, a thermal protector switch, built into the PSC motor windings, will automatically disconnect the motor power and prevent overheating. Once the motor cools sufficiently, the thermal protector switch will reset automatically.

Optional torque switches are available in all units to prevent the possibility of stalling the motor, thus reducing the possibility of an inoperable thermal cool down period. Torque switches, installed by Bray, are factory adjusted to the output torque rating of the unit using electronic torque testing equipment.

Mechanical Operation

Mechanically, the ratio of the gear motor determines the speed of the unit. The gear motor utilizes high efficiency spur gears with various ratios for the different speeds. Initial gear reduction through the spur gears is then transferred to the worm shaft. The final gear reduction and output is through a non-backdriveable worm gear set. Positioning is determined by an indicator/cam shaft, which is linked to the output shaft. In the declutchable condition, the manual override drives the worm shaft when engaged.

Actuation

Manual Operation

The manual override operates similar to a watch adjusting knob. To engage the manual override, simply pull the handwheel to its outermost position. A yellow stripe is revealed to visually indicate manual override engagement as shown in Figure 1. The two handwheel positions, engaged and disengaged, are held in place with the use of spring plungers. The handwheel remains in position until physically moved.

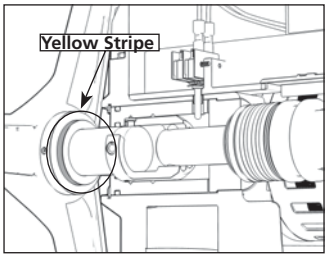

Figure 1 *- Handwheel is engaged, revealing the yellow stripe.*

Once the manual override is engaged, rotating the handwheel in the clockwise direction will rotate the output shaft in the clockwise (close) direction and vice-versa.

To disengage the manual override, the handwheel needs to be pushed towards the actuator until the 'yellow stripe' is hidden.

⚠ CAUTION

A label on the handwheel hub warns users not to exceed a specific 'rim pull' force, for each size of actuator.

If the 'rim pull' force is exceeded, the roll pin securing the handwheel onto the manual override shaft is designed to shear, thus preventing serious internal gearing damage.

Remote Operation

⚠ CAUTION

1. Verify that the main electric power supplied to the actuator is in compliance with the specifications on the actuator label.
2. Engaging the handwheel before or during the application of a supply voltage will prevent the actuator motor from operating.
3. If torque switches are installed in the actuator, an over-torque condition will prevent the actuator motor from operating in the direction of fault.

S70 On/Off Actuator with Interposing Relay Board (I.R.B.)

The back feeding of one actuator by another one wired in parallel is eliminated by using the I.R.B. If actuator is running Open and customer switches "instantaneously" to run Closed, the Open relay will take time to 'drop-out' and the Close relay will take time to 'pull-in' this time lapse is ~ 40ms. The time delay provided by the I.R.B. will protect the switches and gears from the controller's instantaneous command signal reversal. Current draws and field wirings are not affected by adding I.R.B.

S70 120VAC I.R.B., auxiliary switch, heater, and torque switch option are UL certified units

NOTE: The host controller should use a one second time delay for command signal reversal.

⚠ CAUTION

Apply voltage to only one direction terminal at a time.

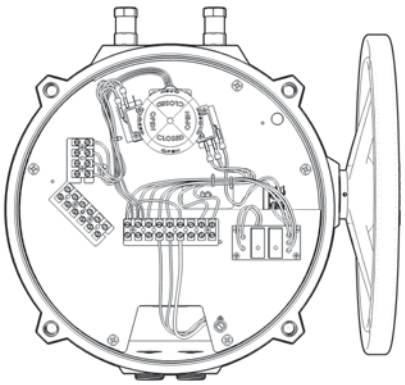

Figure 2 *- S70 with I.R.B.*

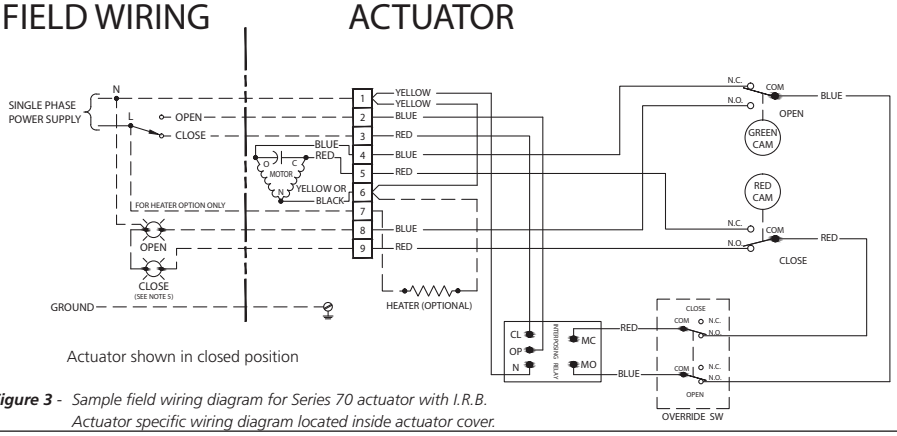

Figure 3 - *Sample field wiring diagram for Series 70 actuator with I.R.B. Actuator specific wiring diagram located inside actuator cover.*

Servo NXT

To control the actuator remotely from a process controller in a modulating application, user must apply the proper supply voltage and the configured control signal to the Servo NXT electronics package. The control signal may be applied locally from a hand-held signal generator or remotely from a process controller.

For more information, please refer to the S70 Servo NXT Manual. This manual is available on the company website (bray.com).

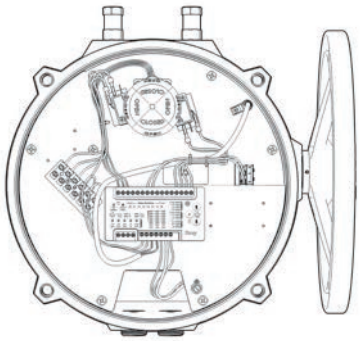

Figure 4 - *S70 with Servo NXT*

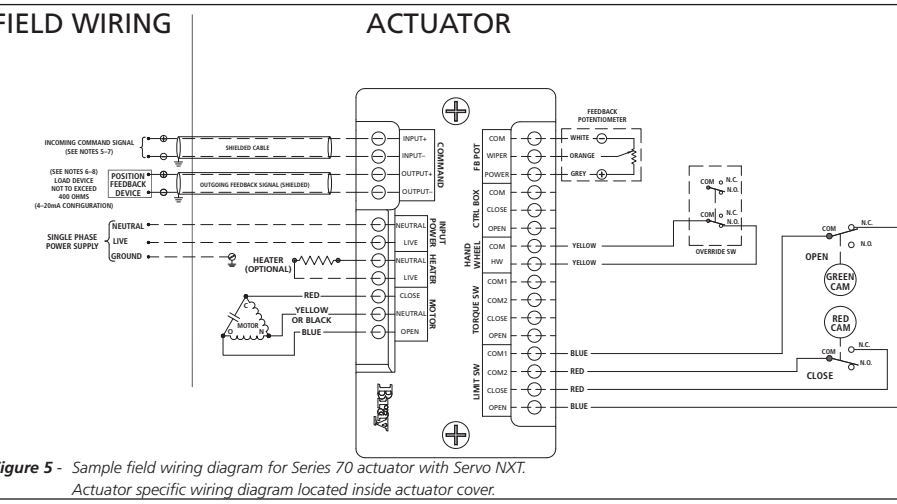

Figure 5 - *Sample field wiring diagram for Series 70 actuator with Servo NXT. Actuator specific wiring diagram located inside actuator cover.*

Storage

WARNING

Actuators are not weatherproof unless they are properly installed on the valve or prepared for storage. Bray cannot accept responsibility for deterioration caused on-site.

- Store units on a shelf or wooden pallet in order to protect against floor dampness.
- Cover the units to protect against dust and dirt.
- To prevent condensation from forming inside these units, maintain a near constant external temperature and store in a well-ventilated, clean, dry room away from vibration.
- For units with an internal heater, power should be supplied to the heater via conduit entry with an appropriate sealing gland.

Commissioning

Mounting the Actuator

All Bray Series 70 electric actuators are suitable for direct mounting on Bray butterfly valves. With proper mounting hardware, the S70 actuator can be installed onto other quarter-turn valves or devices.

NOTICE

The standard mounting position for the actuator orients the unit with its handwheel in a vertical plane and parallel to the pipeline.

If the actuator is mounted on a vertical pipe, it is recommended that the unit be positioned with the conduit entries on the bottom to prevent condensation from entering the actuator through its conduits.

In all cases, the conduit should be positioned to prevent drainage into the actuator and the handwheel should not be facing down.

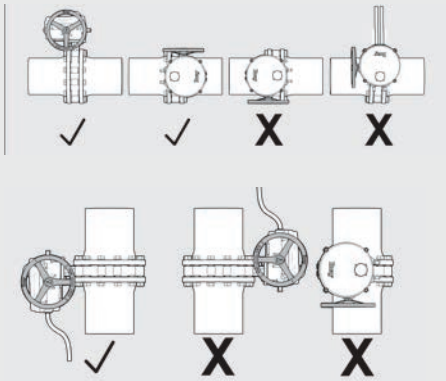

Follow the steps below to mount the actuator onto the valve.

1. Manually operate the actuator until the output shaft of the actuator is in line with the valve stem. If possible, select an intermediate position for both the valve and actuator.
2. If required, place the proper adapter onto the valve stem. It is recommended that a small amount of 'anti-seize' lubricant be applied to the adapter to ease assembly.
3. Mount the actuator onto the valve stem.
4. Install the furnished mounting studs by threading studs all the way into the actuator base. It may be necessary to manually operate the actuator to align the valve and actuator bolt patterns.
5. Fasten the mounting studs in place with furnished hex nuts and lock washers

Wiring the Actuator

WARNING

Turn off all power and lockout/tag out service panel before installing or modifying any electrical wiring.

1. Take the actuator cover off. The cover should be kept on hand for reference.
2. Wire the actuator as per the wiring diagram attached to the inside of the actuator cover.

NOTICE

Power and control wiring should use separate conduit entries.

NOTICE

A minimum of 18 AWG wire is recommended for all field wiring.

Terminals directly mounted on the actuator switch plate accept wire sizes ranging from 14 to 22 AWG.

Terminals of internally mounted electronics modules accept wire sizes ranging from 14 to 24 AWG.

NOTICE

The conduit connections must be properly sealed to maintain the weatherproof integrity of the actuator enclosure.

Setting Travel Limit Switches

NOTICE

If the unit came assembled to a valve, the switches have been factory-set and DO NOT need adjustment.

Bray uses its patented cam design along with two SPDT mechanical switches to set the 'Open' and 'Closed' position of the valve. The green cam actuates the 'open' switch when the actuator reaches the 'open' position. Similarly, the red cam actuates the 'closed' switch when the actuator reaches the 'closed' position.

Standard factory setting of the travel limit switches allows 90° travel between open and close positions. Cams for each switch are adjustable for applications where less than 90-degree travel is desired between the open and closed positions.

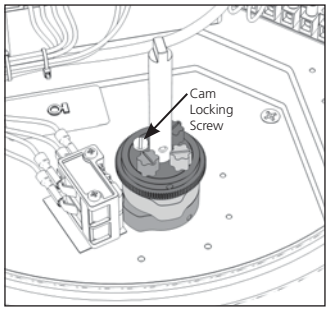

***Figure 6**. Two SPDT Travel Limit Switches*

Follow the steps below to adjust the travel limit cams.

NOTE: For Actuator Size 130, 180, ignore steps 1 and 10.

1. Remove the indicator rotor by pulling away from the indicator shaft as shown in Figure 7.

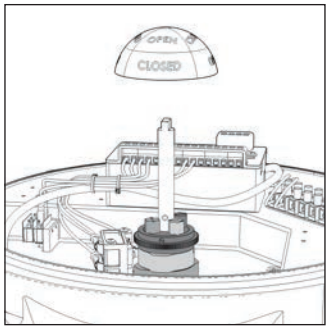

***Figure 7.** Indicator rotor pulled up from the indicator shaft.*

2. Manually operate the actuator clockwise until the valve reaches the desired 'closed' position.
3. Loosen the cam locking screw shown in Figure 6.

NOTICE

Cam locking screw must be slackened before cam adjustments and re-tightened after cam adjustments.

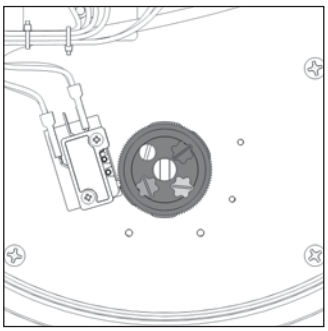

Figure 8. *Top view of the indicator shaft.*

NOTE: It is possible that the rotation of one cam will move the other cam. If this occurs, hold the other knobs or cams during adjustment.

4. Rotate the red cam adjustment knob by hand or with a flat head screwdriver until the red cam lobe just activates (depresses) the 'closed' switch from a clockwise direction.

NOTE: If fixed auxiliary switches are installed, the auxiliary cam will activate prior to the main cam.

5. Tighten the cam locking screw.
6. Manually operate the actuator counterclockwise until the valve reaches the desired 'open' position.
7. Loosen the cam locking screw.
8. Rotate the green cam adjustment knob until the green cam lobe activates (depresses) the 'open' switch from a counterclockwise direction.
9. Tighten the cam locking screw.
10. Place the indicator rotor back on the indicator shaft.

Setting Mechanical Travel Stops

NOTICE

If the unit came assembled to a valve, the stops have been factory-set and DO NOT need adjustment.

Mechanical travel stops are designed to prevent over travel while manually operating the actuator. They are not designed to stop the electric motor.

Mechanical travel stops are located outside of the actuator base for easy readjustment. Stainless steel lock nuts with O-ring seals hold the travel stops securely in place. Travel stop spacers are used to ensure that travel stop bolts are not engaged to where they could limit 0° to 90° electrical operation.

NOTE: Actuator Size 130, 180 does not use travel stop spacers.

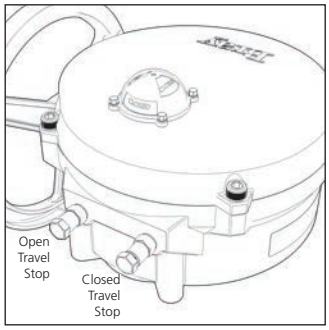

Figure 9. *Mechanical Travel Stops (CW Close).*

Follow the steps below to set the mechanical travels stops.

1. Manually drive the actuator to the 'closed' position.
2. Once the actuator is in the 'closed' position, rotate the handwheel clockwise:
   - ½ turn for Actuator Size 003, 006.
   - 1 turn for Actuator Size 008, 012, 020.
   - ½ turn for Actuator Size 030, 050, 065.
   - 2 turns for Actuator Size 130, 180.
3. Adjust the 'closed' travel stop bolt until the travel stop spacer is fully engaged or the travel stop bolt contacts the output segment gear.

4. Lock the travel stop bolt in position with the locknut.
5. Manually drive the actuator to the 'open' position.
6. Once the actuator is in the 'open' position, rotate the handwheel counterclockwise
    - ½ turn for Actuator Size 003, 006.
    - 1 turn for Actuator Size 008, 012, 020.
    - ½ turn for Actuator Size 030, 050, 065.
    - 2 turns for Actuator Size 130, 180.
7. Adjust the 'open' travel stop bolt until the travel stop spacer is fully engaged or the travel stop bolt contacts the output segment gear.
8. Lock the travel stop bolt in position with the locknut.

Disassembly and Assembly

> **⚠ WARNING**
>
> Turn off all power and lockout/tag out service panel before installing or modifying any electrical wiring.

1. Disconnect external wiring from terminals.
2. Disconnect motor wires from the main terminal strip (motor neutral, open, and close)

> **NOTICE**
>
> Removal of switch plate with torque switches will void warranty.

3. To remove the switch plate:
   a. Follow after disconnecting external wires and motor wires.
   b. Unscrew the seven Phillips head mounting screws.
   c. Lift the switch plate(s) out as an assembly with the indicator shaft attached.
   d. NOTE: Do not misplace shaft coupler, insert, or mounting screws.

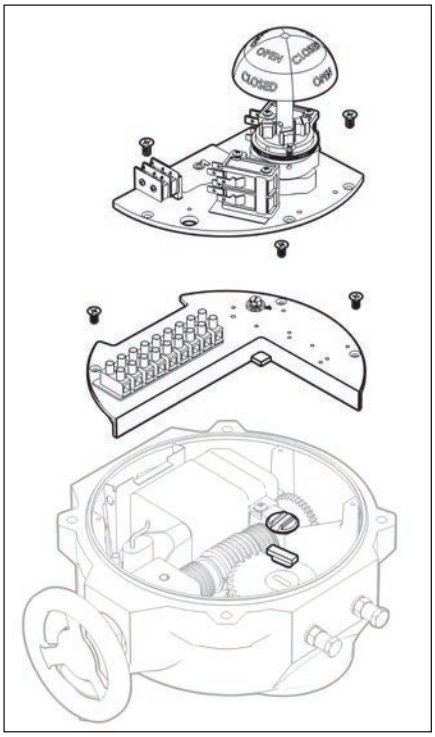

Figure 10. *S70, Actuator Size 003, 006 – switch plate removed.*

4. To replace the switch plate:
   a. Engage handwheel.
   b. Place insert into the worm segment.
   c. Place and center shaft coupler onto insert.
   d. Align indicator shaft with groove in coupler and gently place switch plate into position.
   e. Check alignment of override switch activation pin.
   f. Slowly turn handwheel to ensure that the indicator shaft is fully engaged in coupler.
   g. Secure the switch plate with seven Phillips head mounting screws in a "star" pattern.
   h. Disengage the handwheel.
5. To remove the indicator shaft from the switch plate:
   a. Follow after removing the switch plate.
   b. Remove the retaining ring from the shaft, located underneath switch plate.
   c. Press the shaft out, from the bottom of the switch plate.
   d. NOTE: Provide support to top of switch plate so that components on top of the switch plate are not damaged during this procedure.
6. To remove the bearing from the switch plate:
   a. Follow after the removing the indicator shaft.
   b. Press the bearing from the top of the switch plate to remove the bearing.
   c. To replace, press bearing (700000-72701534) into switch plate from the bottom of switch plate.
7. To replace the indicator shaft in the switch plate:
   a. Gently press the indicator shaft from the top of the switch plate until the cams are flush with the top surface of the switch plate. **NOTE:** Provide support for the press fit bearing during this step.
   b. Replace retaining ring (070375-74503534) on the shaft, located underneath switch plate.
   c. Gently press the indicator shaft from the bottom until the retaining ring is flush with bottom of the bearing.
   d. Test indicator shaft for tight fitment and ease of rotation.
8. Other switch plate components:
   a. Most components can be removed from the switch plate without removal of the switch plate.

NOTE: Override switch assemblies are typically only removable after the switch plate has been removed. A specialty (short or 90°) screwdriver could be used for disassembly when the switch plate is still attached to the actuator base.

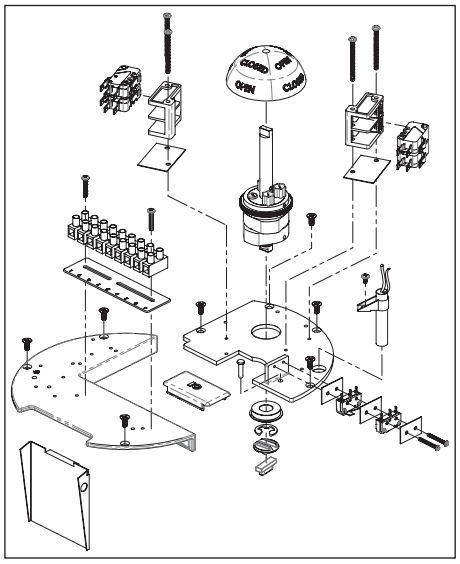

Figure 11. *S70, Actuator Size 003, 006 – switch plate exploded view.*

9. To remove the gear motor:
   a. Follow after removing the switch plate.
   b. Disconnect the motor leads which run to the capacitor (120/220VAC motors).
   c. For Actuator Size 003, 006, unscrew the mounting screws (two lower, one upper).
   d. For Actuator Size 008, 012, 020, unscrew the mounting screws (four lower, one upper).
   e. For Actuator Sizes 030 - 180, unscrew the mounting screws (five lower, one upper).
   f. Remove the motor vertically out of the unit. **NOTE:** Do not misplace the alignment pin(s), mounting screws or lockwashers.
10. To replace the gear motor:
   a. Replace alignment pin (070612-71904520).
   b. Place motor into housing and align motor with worm shaft spur gear.
   c. Secure the motor with mounting screws and lockwashers in a "star" pattern.
   d. Manually operate actuator to ensure proper alignment.
   e. Connect motor leads to capacitor (PSC motors only).

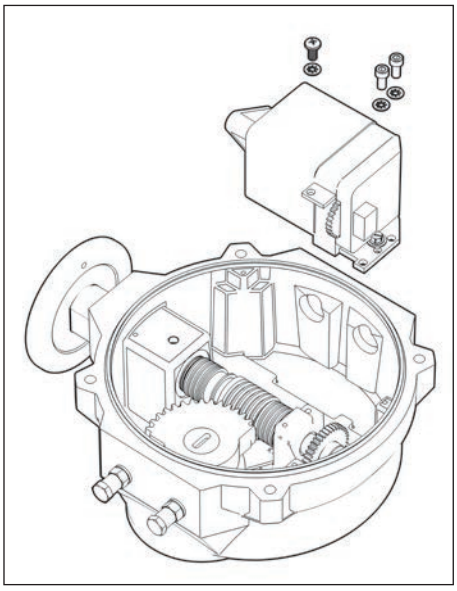

Figure 12. *S70, Actuator Size 003, 006 – motor removed.*

11. To remove the worm shaft spur gear:
   a. Follow after removing the gear motor.
   b. For Actuator Size 003, 006:
      i. Remove spring pin using a 3/32" [2.0 mm] punch.
      ii. Slide the gear off the end of the worm shaft.
   c. For Actuator Size 008, 012, 020:
      i. Remove spiral retaining ring
      ii. Remove dowel pin with 3/16" [4.5 mm] punch.
      iii. Slide the gear off the end of the worm shaft.
   d. For Actuator Sizes 030 - 180:
      i. Remove bowed E-clip retaining ring.
      ii. Slide the gear off the end of the worm shaft.
      iii. Remove key
12. To replace the worm shaft spur gear:
   a. Slide the gear onto the end of the worm shaft.
   b. For Actuator Size 003, 006:
      i. Slide the gear (700006-75511520) onto the end of the worm shaft.
      ii. Align the mounting hole on the gear and the shaft.
      iii. Use a 3/32" [2.0 mm] punch to replace the slot spring pin (070412-71900520).
   c. Actuator Size 008, 012, 020:
      i. Slide the gear (700012-75511520) onto

the end of the worm shaft.

ii. Align the mounting hole on the gear and shaft.

iii. Use a 3/16" [4.5 mm] punch to replace the dowel pin (070612-71804520).

iv. Replace the spiral retaining ring (070812-74518520).

d. Actuator Sizes 030 - 180:

i. Rotate the handwheel so that the keyway is visible and facing upwards.

ii. Replace key (700030-73100901).

iii. Slide the gear (700030-75503520) onto the worm shaft.

iv. Replace bowed E-clip retaining ring (070625-74511529).

13. To remove the output drive worm wheel:

a. Follow after removing the switch plate.

b. Back off both mechanical travel stops.

c. Remove the retaining ring and thrust washer from the bottom of the base.

d. Lift the output drive worm wheel out of its base.

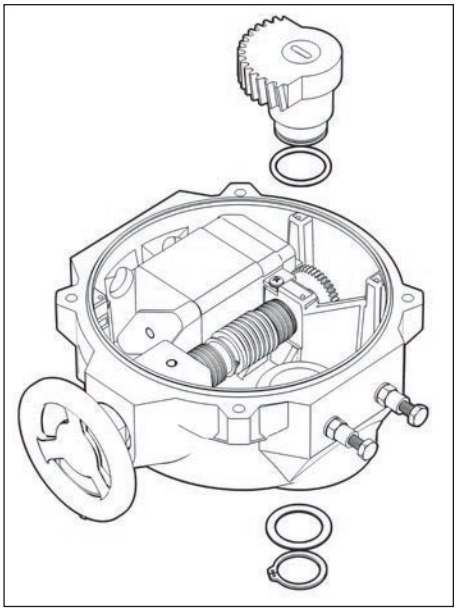

Figure 13. *S70, Actuator Size 003, 006 – output drive worm wheel and spur gear removed.*

14. To replace the output drive worm wheel:

a. Ensure worm wheel contains o-ring and is in good condition.

b. Ensure that o-ring and worm wheel teeth are lubricated with grease.

c. Place the worm wheel into the base, meshing teeth with worm gear.

d. Replace thrust washer and retaining ring.

e. Engage handwheel and manually drive worm wheel to ensure smooth operation.

f. Reset mechanical travel stops after switch plate has been replaced.

15. To remove the handwheel:

a. Engage the handwheel.

b. Use a punch to remove the slot spring pin.

i. Actuator Size 003, 006: 3/32" [2.0 mm] punch

ii. Actuator Size 008 - 180: 1/8" [3 mm] punch

c. Slide the handwheel off of the override shaft.

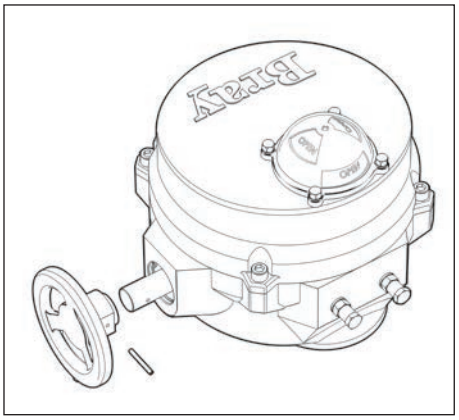

Figure 14. *S70 with handwheel removed.*

16. To replace the handwheel:

a. Engage the override shaft.

b. Slide the handwheel onto the override shaft and align mounting holes.

c. Use a punch to fit a replacement slot spring pin.

i. Actuator Size 003, 006 slot spring pin: 070316-71900529

ii. Actuator Size 008, 012, 020 slot spring pin: 070424-71900534

iii. Actuator Size 030, 050, 065-180 slot spring pin: 070428-71900534

d. Disengage the handwheel.

CAUTION

Further disassembly of the unit requires special tools and procedures, and thus will not be covered in this manual.

Field or Factory Installable Options

Auxiliary Switches

Auxiliary switch kits are a field or factory installable option for all Series 70 actuators. Switch kits are comprised of dry-contact (voltage free) SPDT mechanical switches which are used to indicate travel position. Switches are arranged into 2 stacks. For Actuator Size 003 - 065, stack 2 activates 3° prior to switches in stack 1. For Actuator Size 130, 180, the switch that activates 3° early depends on the direction of travel.

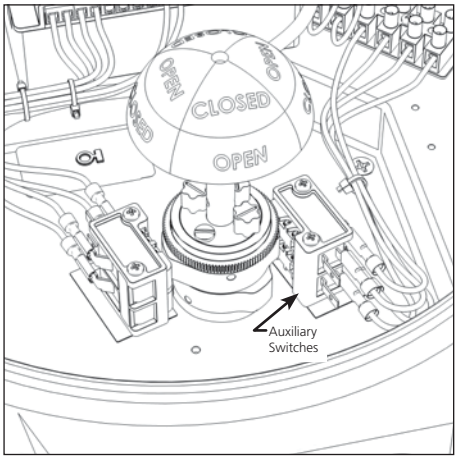

Figure 15. *Fixed auxiliary switches installed in a S70 actuator.*

All Series 70 actuators can be fit with one set of fixed auxiliary switches. These are a single set of switches which activate 3° before the travel limit switches. Adjustable auxiliary (Mid-Travel) switches can be fit as single independent switches or in sets. If fitted as a set, one of the switches in the set will activate 3° before the other. Each switch set is activated independently from other switch sets.

The maximum number and configuration of switches depends on Actuator size and application of the Series 70 actuator. Terminal block availability due to installation of other options may also limit the maximum number of switches.

Switch Config. for Modulating Application	Actuator Size 003, 006	Actuator Size 008 thru 065	Actuator Size 130, 180
2 Limit Switches	Standard	Standard	N/A
2 Limit, 2 Fixed	70A000-22901536	70A000-22901536	Standard
2 Limit, 2 Fixed, 1 Mid	70A006-22912536	70A012-22912536	70B180-22912536
2 Limit, 2 Fixed, 2 Mid	N/A	N/A	N/A
2 Limit, 2 Fixed, 1 Set Mid	N/A	70A012-22914536	70B180-22914536
2 Limit, 2 Fixed, 2 Set Mid	N/A	N/A	N/A

Switch Config. for On/Off Applications	Actuator Size 003, 006	Actuator Size 008 thru 065	Actuator Size 130, 180
2 Limit Switches	Standard	Standard	N/A
2 Limit, 2 Fixed	70A000-22901536	70A000-22901536	Standard
2 Limit, 2 Fixed, 1 Mid	70A006-22902536	70A012-22902536	70B180-22902536
2 Limit, 2 Fixed, 2 Mid	70A006-22903536	70A012-22903536	70B180-22903536
2 Limit, 2 Fixed, 1 Set Mid	70A006-22904536	70A012-22904536	70B180-22904536
2 Limit, 2 Fixed, 2 Set Mid	N/A	70A012-22905536	70B180-22905536

Heater

Bray offers an optional heater as a field or factory installable option for the Series 70 actuator to prevent condensation from forming inside the actuator. This PTC (Positive Temperature Coefficient) style heater has a unique temperature - resistance characteristic. The heater self-regulates by increasing its electrical resistance relative to its temperature. The heater does not require external thermostats or switches to control its heat output.

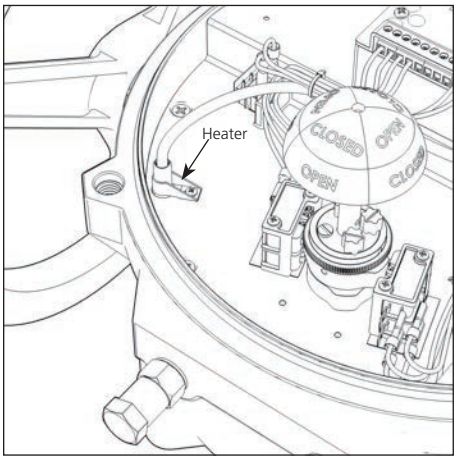

Figure 16. *Heater installed on a S70 switch plate.*

NOTICE

The heater must have a constant power supply to be effective

WARNING

The heater surface can reach temperatures in excess of 392°F [200°C].

Heater Kit:
- Heater with flying leads
- Mounting Bracket
- #10 Pan Head Screw, Phillips Drive

Tools Required:
- Screwdriver, 3/16" [5 mm] tip flat blade
- Screwdriver, No.1 Phillips

Installation Procedure:

WARNING

Turn off all power and lockout/tag out service panel before installing or modifying any electrical wiring.

The heater is mounted through a hole provided in the switch plate.

1. Place the heater snugly into its mounting bracket until approx. 1/2 to 1" [13mm to 25 mm] is left above the bracket.
2. Slip the heater into its mounting hole.
3. Align the fastening hole in the bracket with the threaded screw hole in the plate and fasten the heater to the switch plate.
4. Connect the heater wires to the terminal strip as indicated on the wiring diagram.

Torque Switches

Mechanical Torque switches are a factory installed and calibrated option available for all Series 70 actuators. Installation is simple, but due to the requirement for special calibration equipment, it is not available for field installation. Modifying the factory torque setting voids the actuator warranty. Removal of the switch plate invalidates factory calibration

The worm is pinned to the worm shaft, which is held in position with a stack of disc springs at both ends. The torque transmitted through the worm to the output worm gear acts directly against the disc springs, which compress proportionately. The worm and worm shaft shift axially as a result.

A specially designed drive lever and pin is incorporated into a groove on the worm, providing the profile for the torque switching mechanism. A drive lever & pin rides in the worm gear torque sensor groove, and in turn drives a cam. The cam then actuates its electrical switch, which interrupts the power to the motor winding when the torque exceeds the setting. The motor can still be powered to run in the opposite direction. When powered in the opposite direction, the tripped torque switch will release automatically.

NOTICE

Torque switches are not field adjustable. Adjustment of torque switches in the field will void warranty.

Removal of switch plate with torque switches in the field will void warranty.

Local Control Station

The local control station is a field or factory installable option that gives the operator the ability to locally drive the Series 70 actuator with electrical power; overriding the control signal from the process controller. The control station has a red (closed) and green (open) light to provide end-of-travel indication. It also has two 3-position switches as shown in Figure 17.

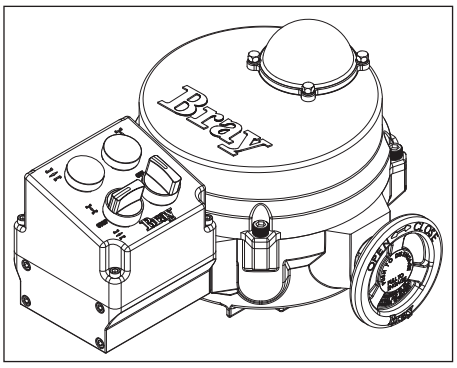

Figure 17. *S70 with Control Station.*

Switch 1 lets the operator choose between the following three modes of operation:

1. **Local:** In this mode, using switch 2 the operator can drive the actuator to open or close position, or stop the actuator; overriding any control signal from the process controller.
2. **Off:** In this mode, the actuator can only be operated manually.
3. **Remote:** In this mode, the actuator is controlled remotely from a process controller.

Control Station Kit
- Local Control Station Assembly
- #10-24UNC x 4.5" Socket Head Cap Screws (Qty:4)
- O-rings (Qty:4)
- Gasket
- Wiring Diagram

Tools Required:
- Screwdriver, 3/16"[5 mm] tip flat blade
- Screwdriver, No.1 Phillips
- Hex Key, 5/32"

Installation Procedure:

> **⚠ WARNING**
>
> Turn off all power and lockout/tag out service panel before installing or modifying any electrical wiring.

The local control station is mounted to the S70 against the conduit openings using 4 pre-drilled and tapped mounting holes.

1. Remove the S70 actuator cover and set aside in a safe location.
2. Remove all conduit plugs and external connections on the S70 that may already be in place.
3. Remove 4 short bolts and washers that were pre-installed on the exterior of the S70 base, surrounding the conduit entries.
4. Adhere the gasket to the control station base.
5. Slide o-rings onto the long mounting bolts until flush with bottom of bolt head.
6. Mount the control station to the actuator using the 4 mounting bolts.
7. Wire the control station to the actuator in accordance to the wiring diagram provided.

> **NOTICE**
>
> Power and control wiring should use separate conduit entries

NOTES:

- The local control station contains no terminal strips and all wiring is direct to the switches and lights via 2 x ¾" NPT or holes in bottom of housing.
- Ordering the control station with optional pin connector receptacles will eliminate the necessity of field wiring. Not all possible options are available with receptacles. Consult factory.
- Control station will be completely factory wired and tested.
- Factory will need wiring diagram drawing number of the existing unit if it is to be retrofit with a local control station. New wiring diagram will be provided based upon this information.
- Local control station can be ordered with key lockable switches.
- Local control station requires a dedicated set of auxiliary switches. These switches are required for turning on or off the lights on the control station to locally indicate actuator position.
- Alternative mounting kit can be ordered in case it is preferred to mount the control station nearby but not on the S70 actuator.

Battery Backup Unit

Bray offers a factory installable Battery Backup Unit (BBU) for the 24 V Series 70 electric actuator.

In the event of power failure, the BBU will switch the actuator to battery power to reach its fail position. After the actuator has reached its fail position, the BBU goes to 'Standby Mode' until external power is restored.

Once external power has been restored, the actuator returns to the position corresponding to the control signal present.

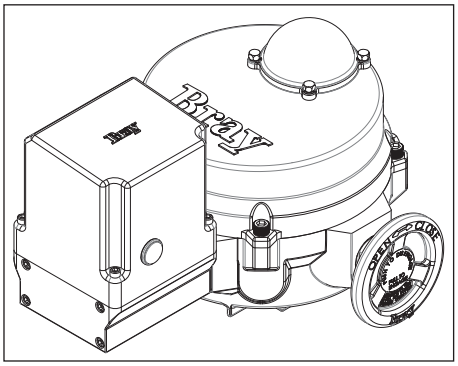

Figure 18. *S70 with Battery Backup Unit.*

Battery Backup Unit is available as a factory installable option. For more information, please refer to the S70 24V Actuator with BBU Manual. This manual is available on the company website (bray.com).

Indication of Remote Control

Bray offers two field or factory installable kits to indicate if a process controller has remote control of the Series 70 actuator. Remote control of the actuator can be interrupted if the actuator handwheel has been left engaged or if a local control station has been switched out of remote mode.

A dry contact (voltage free) mechanical switch provides indication if the handwheel is engaged. Alternatively, an additional dry contact (voltage free) mechanical switch can be placed in Local Control Station to provided indication if the local control station is switched out of remote mode. Both kits can be installed and wired in series to provide dual indication. Dual indication wiring is meant to indicate that remote control has been interrupted and does not distinguish between modes of interruption.

NOTE:

- Factory will need wiring diagram drawing number and model of the existing unit if it is to be retrofitted with a Remote Control Indication kit. New wiring diagram will be provided based upon this information.
- Some configurations may limit use of remote control indication kits receptacles due to number of wires entering through the conduit.

Spinner

A spinner is field or factory installable attachment to the actuator handwheel to ease and speed the manual operation of the Series 70 actuator. Actuator Size 003, 006 units mount the spinner on a lever which screws onto the back of the handwheel. Actuator Size 008 - 180 units mount the spinner on the rim of the handwheel.

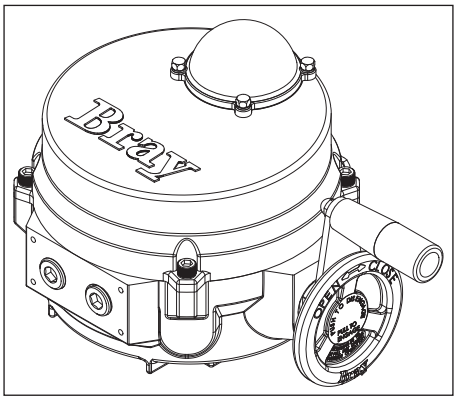

Figure 19. S70 with Handwheel Spinner Attached.

NOTICE
Care should be exercised in the use of a spinner equipped handwheel.
Rapid operation of the handwheel to close the valve may cause water hammer.
Rapid travel into a travel stop may cause damage.

Spinner Kit, Actuator Size 003, 006:

- Spinner and Lever Assembly
- #10-32UNF x 3/8" Flat Head Socket Cap.

Spinner Kit, Actuator Size 008 - 180:

- Spinner Handle
- ¼"-20UNC x ¾" Socket Head Shoulder Bolt

Tools Required:

- Hex Key, 1/8" (Actuator Size 003, 006)
- Hex Key, 3/16" (Actuator Sizes 008 - 180)

Installation Procedure:

- For Actuator Size 003, 006 – Position the lever onto the back of the handwheel then screw the flat head cap screw in to place from behind.
- For Actuator Size 008, 012, 020-180 – Place the socket head shoulder bolt through the spinner handle and screw it firmly into the handwheel rim.

Receptacles (Quick Connectors)

Bray offers plug-in receptacles as a field or factory option for quick and easy field wiring of Series 70 actuators. Cord sets to fit these connectors can also be ordered in several lengths.

Unless otherwise specified, power receptacles will be 5-pin mini style, standard duty with a black anodized aluminum finish. They conform to ANSI B93.55M except in wire color. Euro receptacles will be used for low power instrument and signal cable since they can be supplied shielded.

Wiring diagrams for plug-in receptacles for either the Bray Series 70 or the local control station will be provided as a separate diagram. Units ordered with pin connector receptacles factory installed are wired and tested

Receptacle Kit:

- Receptacle(s), male pin and male thread ½" NPT [M20], in the quantity, style, and number of pins ordered
- Reducing bushing ¾" to ½" NPT [M25 to M20] for installation in Actuator Sizes 008 - 180 and control stations
- Wiring Diagram

Tools Required:

- Screwdriver, 3/16" [5 mm] tip flat blade
- Wrench, 1" [25mm]

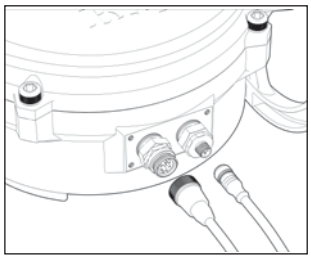

Figure 20. *S70 with 5-pin receptacle and corresponding cord set.*

Installation Procedure:

1. Screw the receptacle into the actuator conduit entry using Teflon tape or similar.
2. Wire to the terminal strip according to the wiring diagram or the field wiring requirements.

NOTES:

- Euro receptacles use 22 AWG wire rated at 250V, 4 Amp. Pin configuration interfaces with European standards.
- Mini Receptacles use 18 AWG wire rated at 300V, 9 Amp. Pin configuration conforms to ANSI B93.55M.
- Factory will need wiring diagram drawing number and model of the existing unit if it is to be retrofit with receptacles. New wiring diagram will be provided based upon this information.
- Some configurations may limit use of receptacles due to number of wires entering through the conduit.

External Signal Feedback Potentiometer

Potentiometers are a field or factory installable option for continuous duty actuators. Actuators which are not continuous duty do not have a pot gear fitted on their indicator shafts and must be fitted with a new indicator shaft in the factory. S70 actuators fitted with electronics for modulating applications already fit a potentiometer and cannot fit a second. In this case, retransmission of position is provided through the modulating electronics package.

Feedback Potentiometer Kit:

- Potentiometer Assembly
- #6 Cross Drive Pan Head Screws (Qty:2)
- #6 Internal Lockwashers (Qty:2)
- 4-pole Terminal Strip
- Terminal Strip Marker
- Wiring Diagram

Tools Required:

- Screwdriver, 3/16" [5 mm] tip flat blade
- Screwdriver, No.2 Phillips

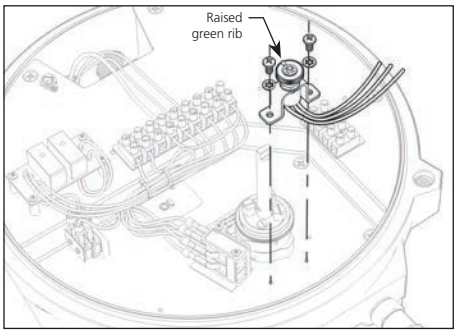

Figure 21. *S70 Potentiometer installation.*

1. Orient the actuator in the full open (counter clockwise) position.
2. Install the potentiometer next to the indicator shaft where two threaded holes are provided for installation.
3. Align the raised green rib on pot gear with the center line of the indicator shaft.
4. Push the assembly towards the cam to mesh the gears, then tighten the mounting screws.
5. Rotate the actuator handwheel so that the red cam lobe is facing the body of the potentiometer. Make sure that the cam is not touching the potentiometer assembly. Readjust the assembly position if necessary.
6. Cut the terminal marker to fit the 4-pole terminal strip.
7. Mount the 4-pole terminal strip and marker on the switch plate.
8. Wire the potentiometer to the terminal strip using the new wiring diagram.
9. Adhere the new wiring diagram sticker to the inside of the cover.

NOTE:

- Factory will need wiring diagram drawing number and model of the existing unit if it is to be retrofit with a potentiometer. New wiring diagram will be provided based upon this information.

Appendix A

Basic Tools

Common To All Units		
Terminal connections, cam adjustment	Screwdriver, ¼" [6 mm] flat tip blade	
All switches, terminal strip, torque switch plate	Screwdriver, No.1 Phillips	
Switch plate screws, capacitor	Screwdriver, No. 2 Phillips	
Actuator Size 003, 006		
Mounting nuts	Wrench, ½"	Wrench, M8
Cover captivated capscrews	Hex key, ¼"	Hex Key, M8
Travel stop adjusting bolts and jam nuts	Wrench, 7/16"	Wrench, M6
Motor mount socket flat head capscrew	Hex key, 3/32"	
Motor mount socket head capscrew	Hex key, 9/64"	
Conduit Entry Plug (½" NPT)	Hex key, ⅜"	Hex Key, M20
Actuator Size 008, 012, 020		
Mounting nuts (small pattern)	Wrench, ½"	Wrench, M8
Mounting nuts (large pattern)	Wrench, ¾"	Wrench, M12
Cover captivated capscrews	Hex key, 5/16"	Hex Key, M10
Travel stop adjusting bolts and jam nuts	Wrench, 9/16"	Wrench, M10
Motor mount socket head capscrew	Hex key, 5/32"	
Conduit Entry Plug (¾" NPT)	Hex key, 9/16"	Hex Key, M25
Actuator Size 030, 050, 065		
Mounting nuts (small pattern)	Wrench, ¾"	Wrench, M12
Mounting nuts (large pattern)	Wrench, 1⅛"	Wrench, M20
Cover captivated capscrews	Hex key, ⅜"	Hex Key, M20
Travel stop adjusting bolts and jam nuts	Wrench, ¾"	Wrench, M12
Motor mount socket head shoulder bolt	Hex key, 5/32"	Hex Key, M12
Motor mount socket head capscrews	Hex key, 3/16"	
Conduit Entry Plug (¾" NPT)	Hex key, 9/16"	Hex Key, M25
Actuator Size 130, 180		
Mounting nuts (small pattern)	Wrench, ¾"	Wrench, M12
Mounting nuts (large pattern)	Wrench, 1⅛"	Wrench, M20
Cover captivated capscrews	Hex key, ⅜"	Hex Key, M12
Travel stop adjusting bolts	Wrench, 5/16"	Wrench, M25
Motor mount socket head shoulder bolt	Hex key, 5/32"	
Motor mount socket head capcrews	Hex key, 3/16"	
Conduit Entry Plug (¾" NPT)	Hex key, 9/16"	Hex Key, M25

Appendix B

Actuator Troubleshooting Chart

Problem	Possible Cause	Solutions
Actuator does not operate	Override is engaged	Push handwheel in all the way
	Wiring is incorrect	Check wiring and power supply
	Actuator motor has reached its thermal shutdown temperature	Allow time to cool
Actuator operates in reverse directions	Field wiring is reversed	Rewire field wiring
Actuator does not fully close valve (or open valve)	Limit switches are depressed	Readjust travel limit switches
	Mechanical travel stop is stopping actuator	Adjust mechanical travel stops
	Valve torque requirement is higher than actuator output	Manually override out of seat, try angle seating or larger actuator
	Optional torque switches are activating	Valve torque exceeds actuator torque rating - consult factory
	Voltage power supply is low	Check power source.
Engaging override handwheel does not shut off motor	Override pin is corroded or damaged	Clean and check for smooth operation of the override switch pin
	Override switch is damaged	Replace switch
Disengaging override hand-wheel does not restart motor	Not completely disengaged	Push handwheel in as far as possible (no yellow showing)
	Override pin is damaged or and does not activate switch	Replace override pin
	Incorrect wiring of override switch	Check wiring
Motor runs but worm and gear segment do not	Worm gear segment is not meshing with worm	Remove switch plate and inspect, adjust travel stops to prevent gear disengaging
	Pin/Key on Worm/Motor drive gear sheared	Replace Pin/Key on drive gear
Corrosion inside unit	Condensation forming	Test heater wiring, should have constant power
	Water leaking in	Check all seals and possible water entry through conduit

Series 70 – Size 003, 006 – Electric Actuator Exploded View

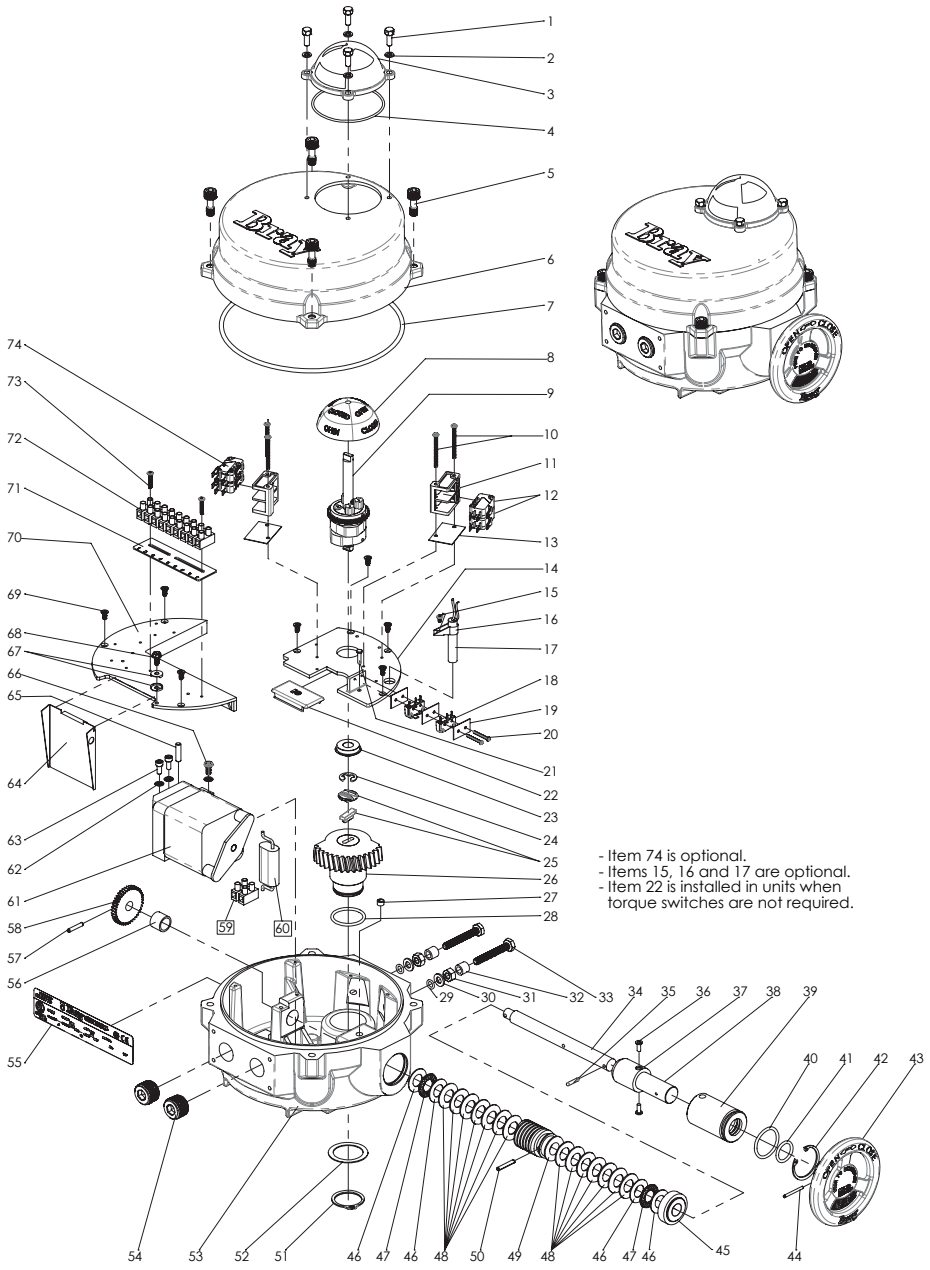

Item No.	Description
1	Indicator Cover Screws
2	Lockwasher
3	Position Indicator Cover
4	O-Ring
5	Cover Fastening Screws
6	Cover
7	O-Ring
8	Position Indicator
9	Cam Assembly
10	Limit Switch Screw
11	Limit Switch Bracket
12	Main Open/Closed Limit Switches
13	Limit Switch Insulator
14	Switch Plate, Fixed
15	Heater Bracket Screw
16	Heater Mounting Bracket
17	Heater
18	Override Switch
19	Override Switch Insulator
20	Override Switch Screw
21	Override Switch Trigger Pin
22	Torque Switch Cover
23	Switch Plate Ball Bearing
24	Retaining Ring
25	Coupler
26	Worm Wheel
27	Spring Pin
28	O-Ring
29	O-Ring
30	Nylon Flat Washer
31	Travel Stop Nut
32	Travel Stop Spacer
33	Travel Stop Bolt
34	Worm Shaft
35	Override Drive Pin
36	Spring Plunger
37	Manual Override Shaft Hub

Item No.	Description
38	Manual Override Shaft Stub
39	Manual Override Sleeve
40	O-Ring
41	O-Ring
42	Retaining Ring
43	Handwheel
44	Spring Pin
45	Manual Override Bushing
46	Thrust Washer
47	Thrust Roller Bearing
48	Disc Spring
49	Worm
50	Spring Pin
51	Retaining Ring
52	Thrust Washer
53	Base
54	Conduit Plug
55	Name Tag
56	Bushing
57	Drive Gear Pin
58	Drive Gear
59	Terminal Strip
60	Capacitor
61	Gearmotor
62	Lock Washer
63	Motor Cap Screw
64	Wire Entry Guard
65	Dowel Pin
66	Motor Screw
67	Ground Terminal Washer
68	Ground Terminal Screw
69	Switch Plate Mounting Screw
70	Removable Switch Plate
71	Terminal Strip Marker
72	Terminal Strip
73	Terminal Block Screw
74	Aux Open/Closed Limit Switches

Series 70 – Size 008, 012, 020 – Electric Actuator Exploded View

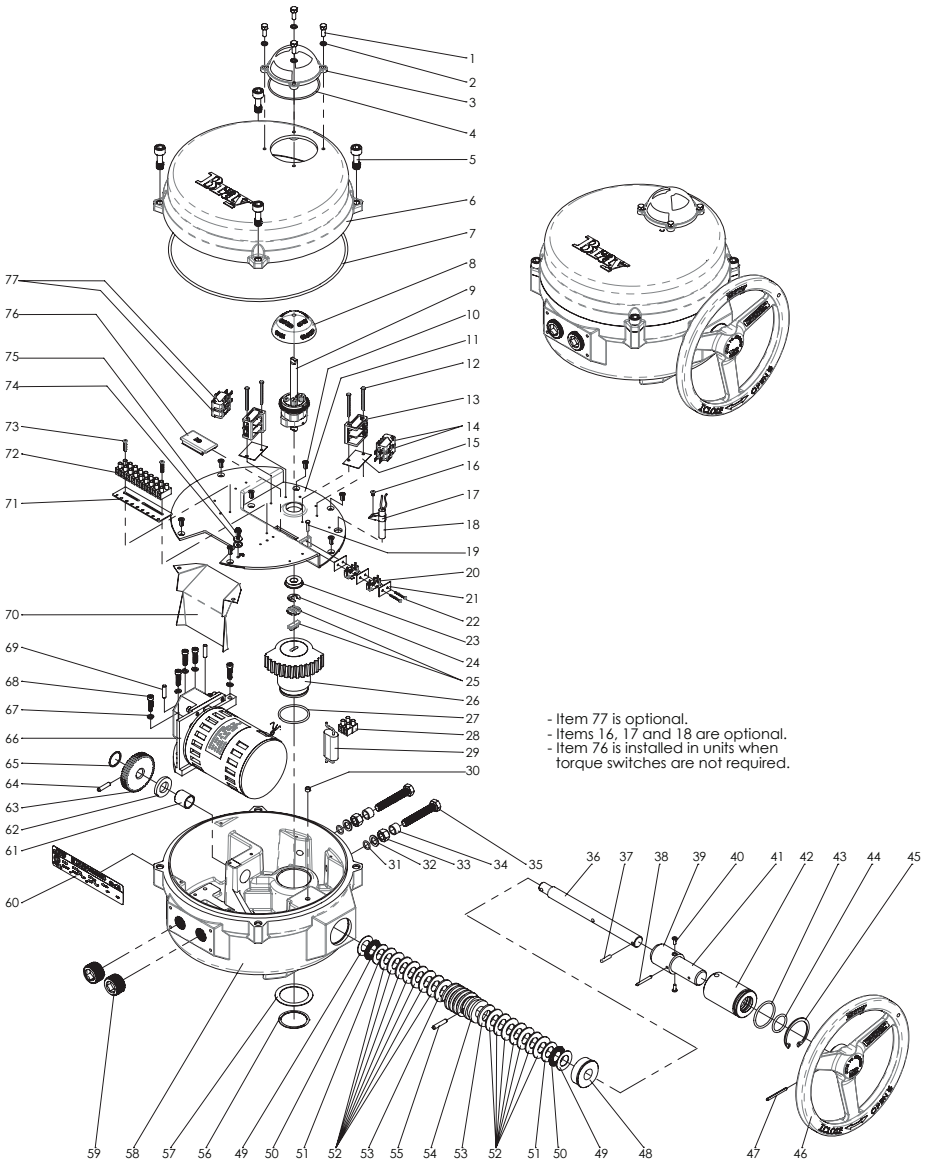

Item No.	Description
1	Indicator Cover Screws
2	Lockwasher
3	Position Indicator Cover
4	O-Ring
5	Cover Fastening Screw
6	Cover
7	O-Ring
8	Position Indicator
9	Cam Assembly
10	Switch Plate Mounting Screw
11	Switch Plate
12	Limit Switch Screw
13	Limit Switch Bracket
14	Main Open/Closed Limit Switches
15	Limit Switch Insulator
16	Heater Bracket Screw
17	Heater Mounting Bracket
18	Heater
19	Override Switch Trigger Pin
20	Override Switch
21	Override Switch Insulator
22	Override Switch Screw
23	Switch Plate Ball Bearing
24	Retaining Ring
25	Coupler
26	Worm Wheel
27	O-Ring
28	Terminal Strip
29	Capacitor
30	Spring Pin
31	O-Ring
32	Nylon Flat Washer
33	Travel Stop Nut
34	Travel Stop Spacer
35	Travel Stop Bolt
36	Worm Shaft
37	Override Drive Pin
38	Spring Pin

Item No.	Description
39	Manual Override Shaft Hub
40	Spring Plunger
41	Manual Override Shaft Stub
42	Manual Override Sleeve
43	O-Ring
44	O-Ring
45	Retaining Ring
46	Handwheel
47	Spring Pin
48	Manual Override Bushing
49	Thrust Washer
50	Thrust Roller Bearing
51	Thrust Washer
52	Disc Spring
53	Disc Spring
54	Worm
55	Spring Pin
56	Retaining Ring
57	Thrust Washer
58	Base
59	Conduit Plug
60	Name Tag
61	Bushing
62	Gear Spacer
63	Drive Gear
64	Spring Pin
65	Retaining Ring
66	Gearmotor
67	Lock Washer
68	Motor Cap Screw
69	Dowel Pin
70	Wire Entry Guard
71	Terminal Strip Marker
72	Terminal Strip
73	Terminal Block Screw
74	Ground Terminal Washer
75	Ground Terminal Screw
76	Torque Switch Cover
77	Aux Open/Closed Limit Switches

Series 70 – Size 030, 050, 065 – Electric Actuator Exploded View

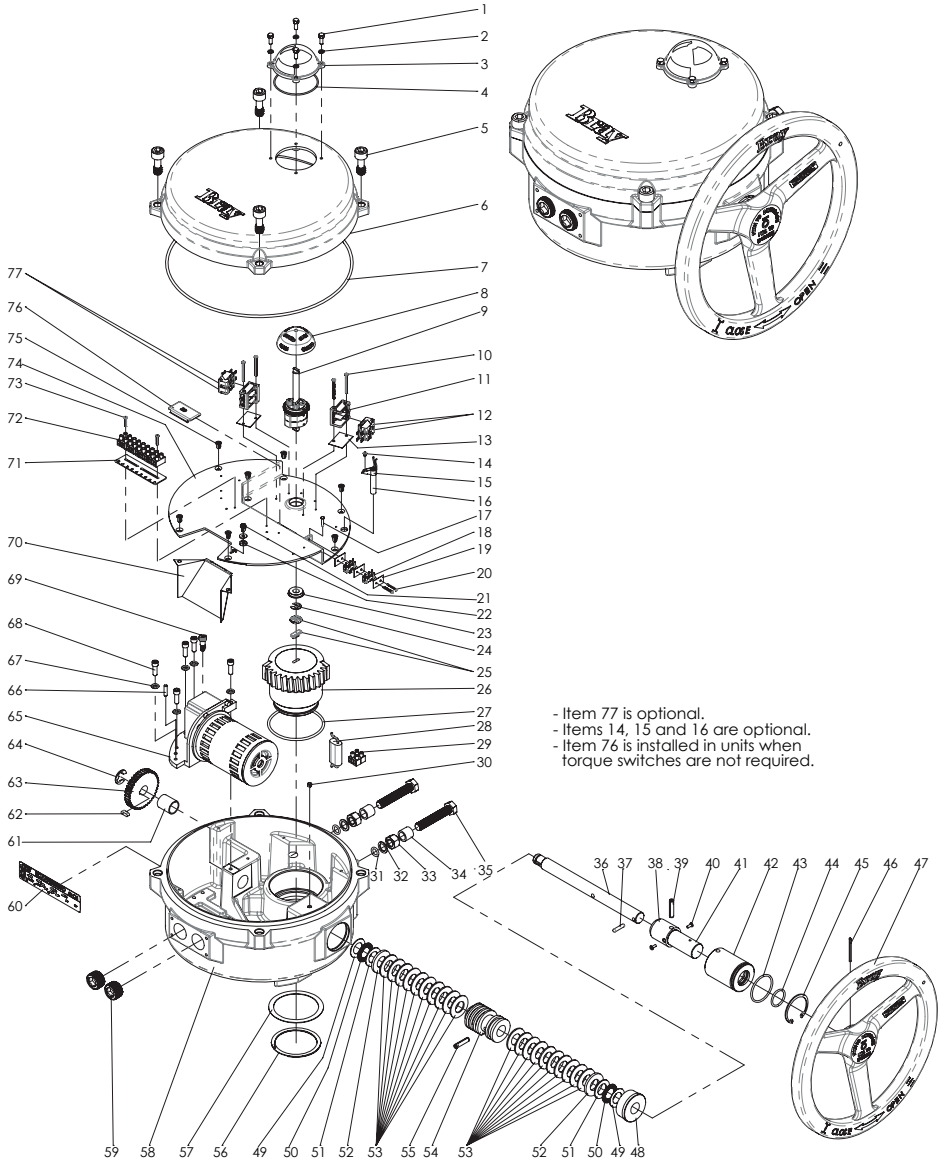

Item No.	Description
1	Indicator Cover Screws
2	Lockwasher
3	Position Indicator Cover
4	O-Ring
5	Cover Fastening Screw
6	Cover
7	O-Ring
8	Position Indicator
9	Cam Assembly
10	Limit Switch Screw
11	Limit Switch Bracket
12	Main Open/Closed Limit Switches
13	Limit Switch Insulator
14	Heater Bracket Screw
15	Heater Mounting Bracket
16	Heater
17	Override Switch Trigger Pin
18	Override Switch
19	Override Switch Insulator
20	Override Switch Screw
21	Ground Terminal Screw
22	Ground Terminal Washer
23	Switch Plate Ball Bearing
24	Retaining Ring
25	Coupler
26	Worm Wheel
27	O-Ring
28	Capacitor
29	Terminal Strip
30	Spring Pin
31	O-Ring
32	Nylon Flat Washer
33	Travel Stop Nut
34	Travel Stop Spacer
35	Travel Stop Bolt
36	Worm Shaft
37	Override Drive Pin
38	Manual Override Shaft Hub

Item No.	Description
39	Spring Pin
40	Spring Plunger
41	Manual Override Shaft
42	Manual Override Sleeve
43	O-Ring
44	O-Ring
45	Retaining Ring
46	Spring Pin
47	Handwheel
48	Manual Override Bushing
49	Thrust Washer
50	Thrust Roller Bearing
51	Thrust Washer
52	Spherical Washer
53	Disc Spring
54	Worm
55	Spring Pin
56	Retaining Ring
57	Thrust Washer
58	Base
59	Conduit Plug
60	Name Tag
61	Bushing
62	Drive Gear Key
63	Drive Gear
64	Retaining Ring
65	Gear Motor
66	Dowel Pin
67	Lock Washer
68	Motor Cap Screw
69	Motor Shoulder Screw
70	Wire Entry Guard
71	Terminal Strip Marker
72	Terminal Strip
73	Terminal Block Screw
74	Switch Plate
75	Switch Plate Mounting Screw
76	Torque Switch Cover
77	Aux Open/Closed Limit Switches

Series 70 – Size 130, 180 – Electric Actuator Exploded View

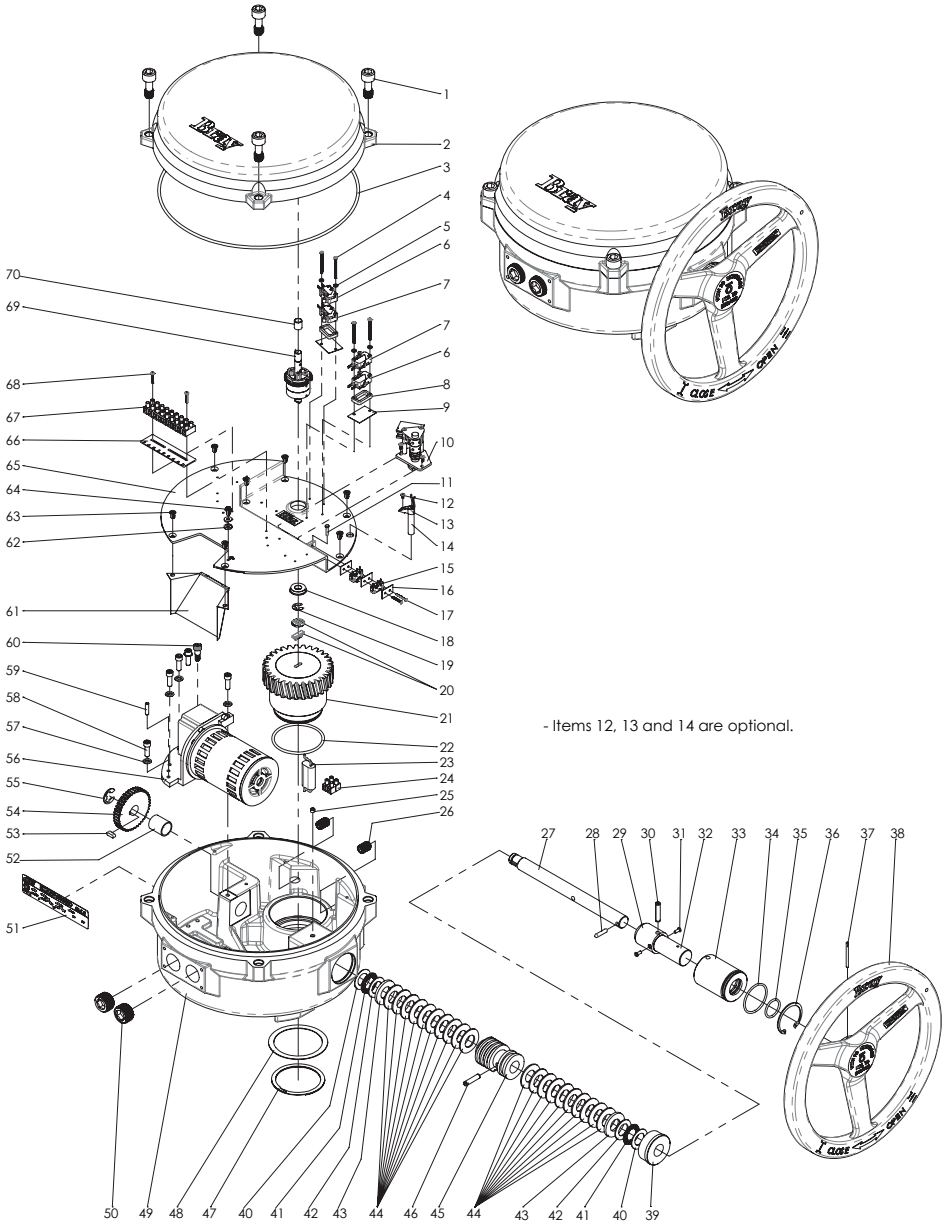

Item No.	Description
1	Cover Fastening Screw
2	Cover
3	O-Ring
4	Limit Switch Screw
5	Flat Insulation Washer
6	Main Open/Closed Limit Switches
7	Aux Open/Closed Limit Switches
8	Switch Spacer
9	Limit Switch Insulator
10	Torque Switch Assembly
11	Override Switch Trigger Pin
12	Heater Bracket Screw
13	Heater Mounting Bracket
14	Heater
15	Override Switch
16	Override Switch Insulator
17	Override Switch Screw
18	Switch Plate Ball Bearing
19	Retaining Ring
20	Coupler
21	Worm Wheel
22	O-Ring
23	Capacitor
24	Terminal Strip
25	Spring Pin
26	Set Screw
27	Worm Shaft
28	Override Drive Pin
29	Manual Override Shaft Hub
30	Spring Pin
31	Spring Plunger
32	Manual Override Shaft Stub
33	Manual Override Sleeve
34	O-Ring
35	O-Ring
36	Retaining Ring

Item No.	Description
37	Spring Pin
38	Handwheel
39	Manual Override Bushing
40	Thrust Washer
41	Thrust Roller Bearing
42	Thrust Washer
43	Spherical Washer
44	Disc Spring
45	Worm
46	Spring Pin
47	Retaining Ring
48	Thrust Washer
49	Base
50	Conduit Plug
51	Name Tag
52	Bushing
53	Drive Gear Key
54	Drive Gear
55	Retaining Ring
56	Gear Motor
57	Lock Washer
58	Motor Cap Screw
59	Dowel Pin
60	Motor Shoulder Screw
61	Wire Entry Guard
62	Ground Terminal Washer
63	Switch Plate Mounting Screw
64	Ground Terminal Screw
65	Switch Plate
66	Terminal Strip Marker
67	Terminal Strip
68	Terminal Block Screw
69	Cam Assembly
70	Bushing

Series 70 – Size 130, 180 – 3:1 Gear Box Exploded View

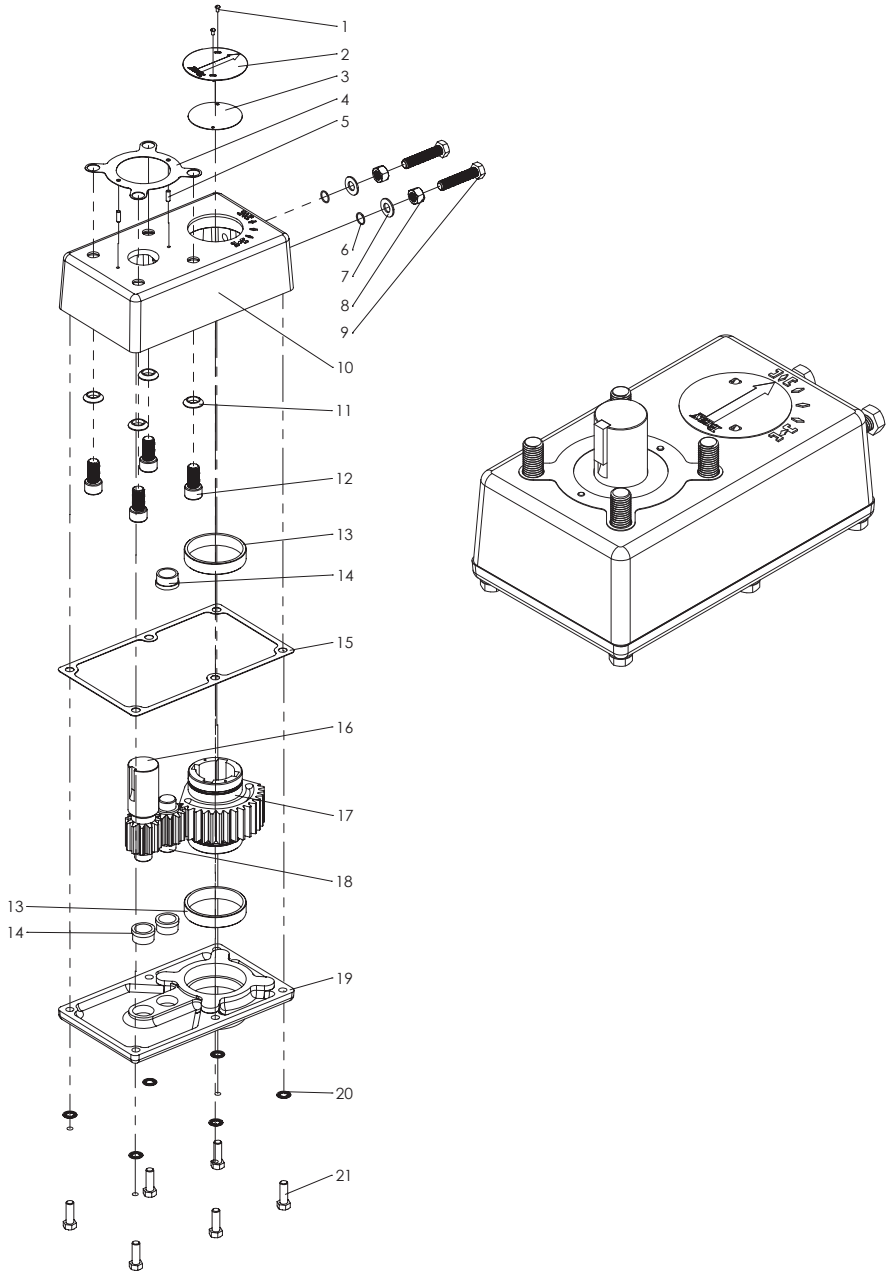

Item No.	Description
1	Fastening Screw
2	Position Indicator Plate
3	Position Indicator Gasket
4	Actuator/Gear Box Gasket
5	Dowel Pin
6	O-Ring
7	Washer,Flat,Nylon
8	Nut,Hex
9	Bolt,Hex Hd
10	Cover
11	Washer, Conical
12	Actuator/Gear Box Fastening Screw
13	Output Gear Bearing
14	Idler/Input Gear Bearing
15	Cover Gasket
16	Input Gear
17	Output Gear
18	Idler Gear
19	Cover
20	Lock Washer
21	Base Fastening Screw

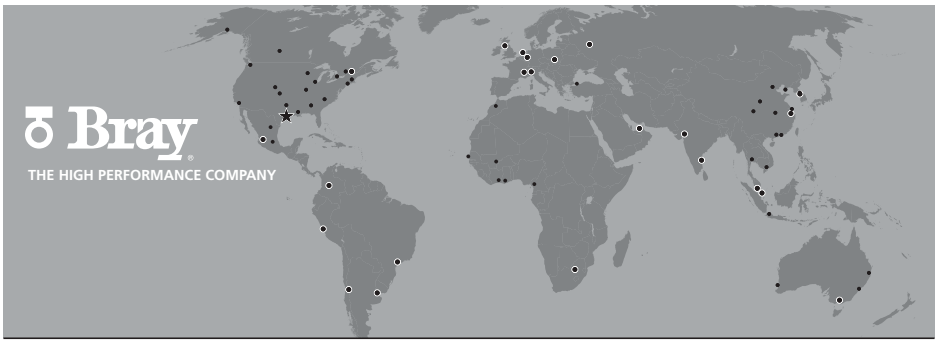

BRAY INTERNATIONAL
PRIMARY SALES AND SERVICE LOCATIONS

USA
Houston, Texas

AFRICA
Johannesburg

BENELUX
Heerhugowaard

BRAZIL
Paulinia, Sao Paulo

CANADA
Montreal

CHILE
Santiago

CHINA
Hangzhou, Zhejiang

COLOMBIA
Bogotá

FRANCE
Voiron

GERMANY
Krefeld

INDIA
Vadodara

ITALY
Milano

MEXICO
Zapopan, Jalisco

MIDDLE EAST
Dubai

PACIFIC
Melbourne, Australia

PERU
Lima

POLAND
Oświęcim

RUSSIA
Moscow

SINGAPORE
Ubi Techpark

SOUTH KOREA
Seoul

SOUTHEAST ASIA
Malaysia

UNITED KINGDOM
Glasgow

FLOW-TEK

USA
Houston, Texas

BRAZIL
Paulinia, Sao Paulo

CHINA
Hangzhou, Zhejiang

RITE CORPORATION

CANADA
Montreal

VALVTRONIC

ARGENTINA
Buenos Aires

AMRESIST

USA
Houston, Texas

BRAY/VAAS

INDIA
Chennai

KUGELHAHN MÜLLER

GERMANY
Krefeld

HEADQUARTERS

Bray International, Inc.
13333 Westland East Blvd.
Houston, Texas 77041
Tel: 281.894.5454
bray.com

All statements, technical information, and recommendations in this bulletin are for general use only. Consult Bray representatives or factory for the specific requirements and material selection for your intended application. The right to change or modify product design or product without prior notice is reserved. Patents issued and applied for worldwide.

Bray® is a registered trademark of BRAY INTERNATIONAL, Inc.
© 2017 Bray International. All rights reserved.
IOM-70 – 01_24_2018

BRAY

SERIES 63, SOLENOID VALVE

LEFT BLANK

Bray Series 63-N4/N7 Installation & Maintenance Instructions

General Purpose/Rain tight/Water tight and
Rain tight/Water tight/Explosion proof

For S63-N4 see O&M Instructions for information on: Operation, Positioning, Mounting, Cleaning, Preventive Maintenance, Causes of Improper Operation, Disassembly, and Reassembly of basic valve.

DESCRIPTION

S63 N4/N7 Solenoid coils are thermoplastic encapsulated pull-type for use with Bray solenoids. These solenoids have three lead wires with one wire for grounding and a ½ NPT male conduit connection. S63 N4 Solenoids are designed to meet Enclosure Type 1-General Purpose, Types 3 and 3S-Raintight, and Types 4 and 4X-Watertight. S63 N4/N7 Solenoids meet Enclosure Types 3 and 3S-Raintight, Types 4 and 4X-Watertight, Type 7 Explosion proof Class I, Division 1, Groups A, B, C, & D and Type 9 - Dust - Ignition proof Class II, Division 1, Groups E, F, & G.

OPERATION

When the solenoid is energized, the core assembly is drawn into the plugnut/core tube subassembly. When the solenoid is de-energized, spring force returns the core assembly to the original position.

Enclosure Types 7 and 9 Only

CAUTION

To prevent fire or explosion, do not install solenoid and/or valve where ignition temperature of hazardous atmosphere is less than 160° C. Open circuit before disassembling.

Positioning

Solenoid may be mounted in any position.

Valve Mounting

The solenoid is assembled onto an actuator and is rigidly supported using the actuator body mounting provisions.

CAUTION

Solenoid coil wiring must be carried out by trained personnel.

Wiring

Wiring must comply with local codes and the National Electrical Code. The solenoid is provided with lead wires and one grounding wire, which is green or green with a yellow stripe. To facilitate wiring, the solenoid may be rotated 360° in 90° increments. To rotate solenoid, remove the four mounting screws, reposition solenoid and replace screws. Torque screws evenly in a criss-cross manner to 12 in-lbs [1.3 Nm].
Solenoids have a ½-14 NPT male thread. For connection to rigid metal conduit, metal type NPT electrical fittings should be used.

WARNING

For the watertight and explosion proof solenoid, electrical fittings must be approved for use in hazardous locations.

All information herein is proprietary and confidential and may not be copied or reproduced without the expressed written consent of BRAY INTERNATIONAL, Inc.
The technical data herein is for general information only. Product suitability should be based solely upon customer's detailed knowledge and experience with their application.

CAUTION

Temperature of external casing of coil can burn skin.

Solenoid Temperature

Standard solenoids are designed for continuous duty service. When the solenoid is energized for a long period, the solenoid becomes hot and can be touched by hand only for an instant. This is a safe operating temperature.

MAINTENANCE

WARNING

To prevent the possibility of personal injury or property damage, turn off electrical power, depressurize valve, and vent medium to a safe area before servicing.

Cleaning

All solenoid valves should be cleaned periodically. The time between cleaning will vary depending on medium and service conditions. In general, if the voltage to the solenoid is correct, sluggish valve operation, excessive noise, or leakage will indicate that cleaning is required. In the extreme case, faulty valve operation will occur and the valve may fail to shift. Clean strainer or filter when cleaning the valve.

Preventive Maintenance

- Keep the medium flowing through the solenoid valve as free from dirt and foreign material as possible.
- While in service, the solenoid valve should be operated at least once a month to ensure proper opening and closing.
- Depending on the medium and service conditions, periodic inspection of internal valve parts for damage or excessive wear is recommended. Thoroughly clean all parts. Replace any worn or damaged parts.

Causes of Improper Operation

- **Faulty Control Circuit:** Check the electrical system by energizing the solenoid. A metallic click signifies that the solenoid is operating. Absence of the click indicates loss of power supply. Check for loose or blown fuses, open-circuited or grounded solenoid, broken lead wires or splice connections.
- **Burned-Out Solenoid:** Check for open-circuited solenoid. Check supply voltage; it must be the same as specified on nameplate and marked on the solenoid. Check ambient temperature and check that the core is not jammed. If necessary, replace pilot valve.
- **Low Voltage:** Check voltage across the solenoid leads. Voltage must be at least 85% of rated voltage.

ORDERING INFORMATION FOR REPLACEMENT PILOT VALVE WITH SOLENOID:

1. Specify valve Catalog Number
2. Solenoid Catalog Number
3. Serial Number
4. Voltage
5. Frequency

All information herein is proprietary and confidential and may not be copied or reproduced without the expressed written consent of BRAY INTERNATIONAL, Inc.
The technical data herein is for general information only. Product suitability should be based solely upon customer's detailed knowledge and experience with their application.

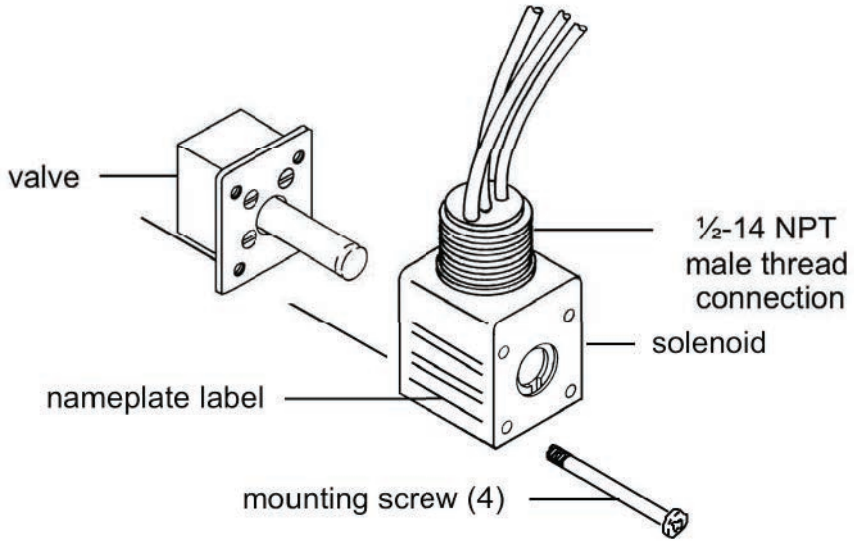

Figure 1. S63-N4 General Purpose/Raintight/Watertight Solenoid.

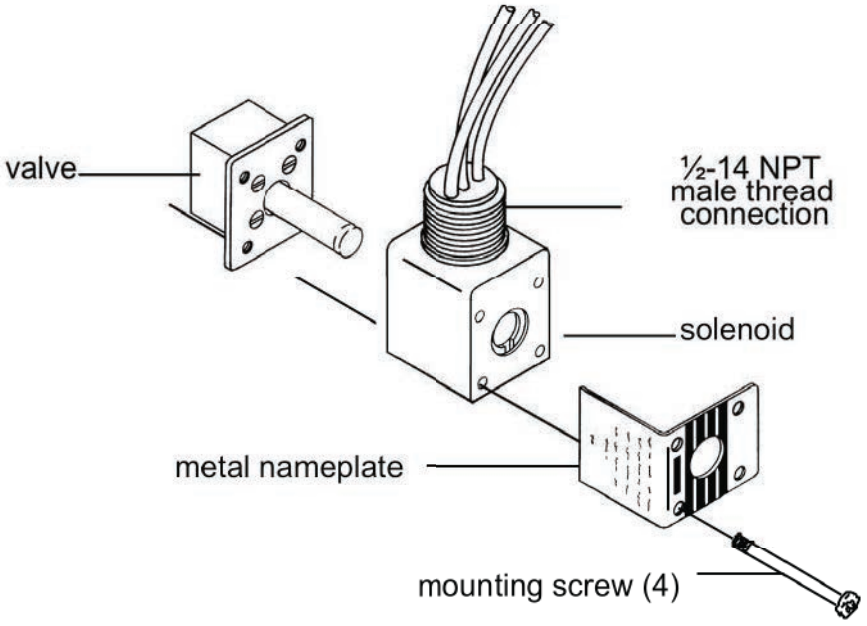

Figure 2. S63-N4/N7 Raintight/Watertight/Explosionproof Solenoid.

All information herein is proprietary and confidential and may not be copied or reproduced without the expressed written consent of BRAY INTERNATIONAL, Inc.
The technical data herein is for general information only. Product suitability should be based solely upon customer's detailed knowledge and experience with their application.

LEFT BLANK

BRAY

SERIES 50, VALVE STATUS MONITOR

LEFT BLANK

Bray®

Your Global Flow Control Partner

Series 50
Valve Status Monitor
Operation and Maintenance Manual



Table of Contents

1. Definition of Terms 2
2. Safety 2
3. Storage 3
4. Commissioning 3
4.1. Mounting your VSM 3
4.2. Wiring your VSM 3
4.3. Setting Cams 4
5. Switch Options 4
5.1. Mechanical Switches 4
5.2. 3-Wire DC Inductive Proximity Switches 5
5.3. 2-Wire AC Inductive Proximity Switches 5
5.4. Intrinsically Safe Proximity Switches 5
5.5. Reed Switches 6
5.6. GO™ Switches 6

Read and Follow These Instructions

Save These Instructions

1. Definition of Terms

WARNING	Indicates a potentially hazardous situation which, if not avoided, could result in death or serious injury.
CAUTION	Indicates a potentially hazardous situation which, if not avoided, may result in minor or moderate injury.
NOTICE	Used without the safety alert symbol indicates a potential situation which, if not avoided, may result in an undesirable result or state, including property damage.

2. Safety

This device left the factory in proper condition to be safely installed and operated in a hazard-free manner. The notes and warnings in this document must be observed by the user to ensure hazard-free operation of this device.

All necessary precautions need to be taken to prevent damage due to rough handling, impact, or improper storage. Do not use abrasive compounds to clean the device, or scrape its surfaces with any objects.

Configuration and setup procedures for this device are described in this manual. Proper configuration and setup are required for the safe operation of this device.

The control system in which this device is installed must have proper safeguards to prevent injury to personnel, or damage to equipment, should a failure of system components occur.

WARNING

Installation, commissioning, operation, and maintenance of the unit must be performed under strict observation of all applicable codes, standards and safety regulations.

The Valve Status Monitor must only be installed, commissioned, operated, and repaired by qualified personnel.

As per this document, a qualified person is one who is trained in:

1. The operation and maintenance of electrical equipment and systems in accordance with established safety practices.
2. Procedures to energize, de-energize, ground, tag, and lock electrical circuits and equipment in accordance with established safety practices.
3. The proper use and care of personal protective equipment (PPE) in accordance with established safety practices.

This document does not cover every detail about every version of the product described. It does not take into account every potential occurrence concerning the installation, operation, maintenance, and use of this device.

If situations transpire that are not documented in sufficient detail, please request the required information from the Bray Distributor or Representative responsible for your area.

3. Storage

Valve Status Monitors (VSM) are not weather-proof until properly installed on the valve or prepared for storage.

Bray cannot accept responsibility for deterioration caused on-site once the cover is removed.

Units are shipped with two metal screw-in plugs to prevent foreign matter from entering the unit. If the conduit entries are not used, these plugs should not be removed. Do not remove the screw-in plugs until it is time to wire into the unit.

To prevent condensation from forming inside these units, maintain a near constant external temperature and store in a well ventilated, clean, dry area away from vibration.

4. Commissioning

4.1. Mounting your VSM

NOTICE

a. Do not remove the screw-in conduit plugs until it is time to wire into the unit's terminal blocks.

b. Do not re-machine the conduit entry threads or create any new holes in the enclosure.

c. Do not tamper with or modify any exposed O-rings or gaskets.

Please ensure that you have all the necessary tools and equipment available to mount the Bray VSM before beginning installation. Locate the Bray mounting kit, containing mounting screws and gasket, if it was ordered with the VSM.

Follow the steps below to mount the VSM onto the actuator.

1. Attach the proper coupler or adapter to the actuator if necessary. It may be necessary to remove the factory-installed position indicator first.
2. Place a gasket on the actuator that matches the screw pattern.
3. Adjust the VSM cam shaft to align with the actuator shaft or coupling.
4. Mate the VSM with the actuator, and fully tighten the mounting screws to create a water-tight seal.

4.2. Wiring your VSM

⚠ WARNING

Turn off all power and lock out service panel before installing or modifying any electrical wiring.

NOTICE

a. A minimum of 18 AWG wire is recommended for all field wiring.

b. The terminals inside the VSM accept wire sizes ranging from 14 to 24 AWG.

c. The conduit connections must be properly sealed to maintain the weatherproof and explosion-proof integrity of the VSM enclosure.

1. Remove the cover of the VSM using an Allen hex wrench and place it in a safe location.
2. Remove the appropriate conduit plug(s) using an Allen hex wrench and place in a safe location.

Conduit Entries	
S50-04	2 x ½″ NPT or 2 x M20
S50-07	2 x ¾″ NPT or 2 x M25
Location	Side Wall

3. Install appropriate cable and conduit fittings required to meet application needs and VSM hazardous area classification requirements.
4. Terminate the field wiring according to the wiring diagram attached to the inside of the cover. Figure 1 shows a sample wiring diagram.

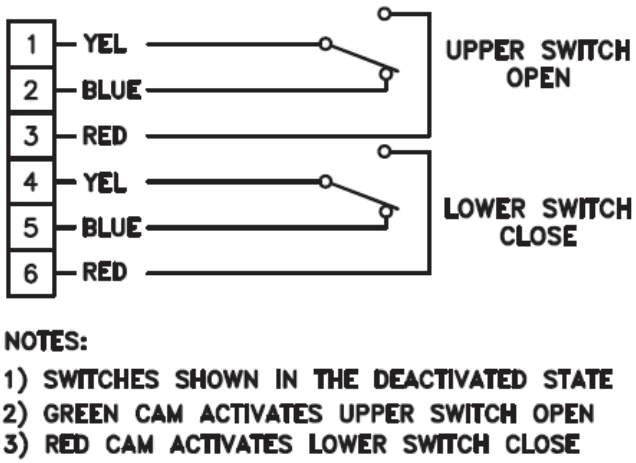

Figure 1. Wiring diagram for a Valve Status Monitor with 2 SPDT mechanical switches.

4.3. Setting Cams

A cam for each switch is mounted directly to the output shaft. Each cam is color coded – red adjustment screw matches red cam (valve closed indication), green screw matches green cam (valve open indication).

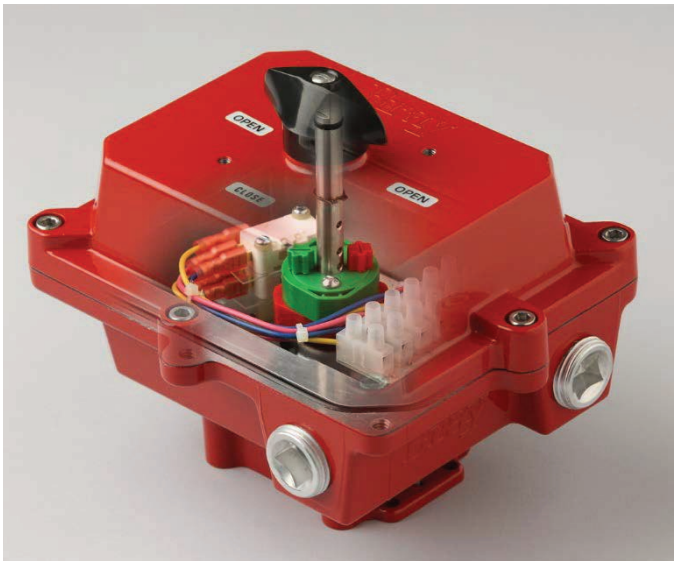

Figure 2. Series 50 cutaway showing the cams and switches.

The cams are infinitely and independently adjustable from the top by finger touch or regular screw driver with no special tools needed.

Follow the steps below to adjust the cams.

1. Manually operate the actuator until the valve reaches the desired ‘close’ position.
2. Loosen the cam locking screw as shown in figure below.

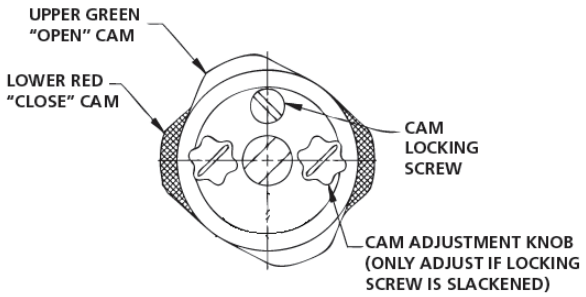

Figure 3. Top view of the cam shaft assembly.

3. Rotate the red cam adjustment knob by hand or with a flat head screwdriver until the red cam lobe activates (depresses) the ‘close’ switch from a clockwise direction.

   NOTE: It is possible that the rotation of one cam will move the other cam. If this occurs, hold the other knob or cam during adjustment.
4. Manually operate the actuator counterclockwise until the valve reaches the desired ‘open’ position.
5. Rotate the green cam adjustment knob until the green cam lobe activates (depresses) the ‘open’ switch from a counterclockwise direction.
6. After both cam adjustments have been completed, tighten the cam locking screw and reinstall the VSM cover. Make sure to fully tighten the cover screws to create a water-tight seal.

Notice

Do not use power tools to tighten the cover screws.

5. Switch Options

5.1. Mechanical Switches

For switching without the need for external power, nothing can beat the classic mechanical switch. Bray VSMs use V3 miniature snap action switches (also known by the trademarked name Micro Switches), an industry standard switch known for providing reliable operation.

Mechanical Switches	SPDT/SPST Standard	SPDT/SPST Gold Plated
Switch Ratings	125/250 VAC, 10A, 1/2 HP 125/250 VDC, 0.25A, Inductive 125/250 VDC, 0.5A, Resistive	125/250VAC, 0.1A
Max. Switches Available :		
50-04	SPDT: 2	SPDT: 2
50-07	SPDT:4,SPST:8	SPDT:4,SPST:8

5.2. 3-Wire DC Inductive Proximity Switches

For solid state switching, Bray VSMs use inductive proximity switches, which rely on the presence of metal targets. This is accomplished by using cams with metal targets inserted inside them.

These switches come in a 3-wire configuration, as they require external power to function. They are limited to DC applications, and are more sensitive to overvoltage and overcurrent than mechanical switches, so their listed ratings should be strictly followed.

Switch Ratings	PNP N.O.	NPN N.C.	PNP N.C.
Operating Voltage	10-30 VDC	10-30 VDC	10-30 VDC
Max. Load Current	100 mA	150 mA	200 mA
Current Consumption	15 mA	15 mA	15 mA
Leakage Current	10µA	10µA	10µA
Max. number of switches	4	4	4

5.3. 2-Wire AC Inductive Proximity Switches

The 3-wire inductive switches already covered are limited to applications using DC voltages. For AC voltages, Bray VSMs can be equipped with 2-wire AC inductive proximity switches, which have all the benefits of the DC proximity switches but are specifically designed to handle alternating current and voltage.

As with the DC proximity switches, these switches' ratings should be strictly adhered to if the full life of the switch is to be accomplished.

2-Wire Inductive Switches	120 VAC/VDC	220 VAC/VDC
Switch Ratings	20-140VAC 10-140VDC 5-200 mA	20-250VAC 10-300VDC 5-100 mA
Max. number of switches	4	4

5.4. Intrinsically Safe Proximity Switches

Bray VSMs are made to enter the most hazardous environments and continue functioning without endangering the personnel that rely on them. For environments where explosive gases and dusts are continually present, intrinsically safe switches are the only option available. These switches, when connected to an intrinsically safe rated barrier or isolator, limit the energy available for ignition.

2- Wire Namur/ Intrinsically Safe Switches	
Switch Ratings	5-25VDC, 15 mA max
Max. number of Switches	4

5.5. Reed Switches

These switches are similar to mechanical switches in that they break current flow by physically separating their contacts. However, like a proximity switch, they rely on a magnetic field to accomplish switching. Their contacts are on ferrous metal reeds, thin enough to react to nearby magnetic fields, enveloped in hermetically sealed glass. Reed switches found in Bray's VSMs are also potted and enclosed in a plastic housing for added protection of the glass envelope.

Switch Ratings	Reed Switches
Max. Load Current	.8A at 120VAC 3A at 28VDC
Max. Power Dissipation	100W
Max. number of Switches	2

5.6. GO™ Switches

GO™ Switches detect like a proximity switch and function like a limit switch. Sealed contacts, rugged housings, proximity detection, and snap action response make them viable replacements for traditional snap action switches.

Switch Ratings	GO™ Switches
Max. Load Current	4A at 120VAC 3A at 24VDC
Max. number of Switches	2

All statements, technical information, and recommendations in this bulletin are for general use only. Consult Bray representatives or factory for the specific requirements and material selection for your intended application. The right to change or modify product design or product without prior notice is reserved. Patents issued and applied for worldwide.

Bray® is a registered trademark of

Bray International, Inc.

© 2015 Bray International, Inc. All rights reserved.

OM_50_05_14_2015

YOUR GLOBAL FLOW CONTROL PARTNER

Bray Controls
A Division of Bray International, Inc.
13333 Westland East Blvd.
Houston, Texas 77041

Tel: 281.894.5454 • www.bray.com

BRAY

SERIES 1, MANUAL OPERATOR

LEFT BLANK

Series 01 Handle and Notch-Plate

Bray offers handle assemblies for standard Resilient Seated Valves from 1”-6” [25-152 mm] (Through 12” [305 mm] with undercut disc assemblies). These quarter turn handles have a locking spring and a directional pointer for valve disc position indication. Bolted notch plates with on-off stops to prevent over rotation of the valve disc complete the assembly.

WARNING: Do not use handle or notch plate to lift a valve assembly.

The following procedure is recommended when mounting a Series 01 handle and notch plate on a resilient seated valve:

NOTE: For readjustment of the handle and notch plate assembly in the field, remove the handle and notch plate from the valve and remount according to the procedures below.


Figure 1


Figure 2

Step 1: Mount the handle without the notch plate and use it to assure that the “Double D” flats on the valve stem are aligned parallel with the face of the valve ***(See Figure 1)***.

NOTE: When mounting the Series 01 handle with the valve out of the line it is more accurate to measure from the face of the valve to the disc face at the 90° and 270° positions using the handle to adjust the disc until the measurements are equal ***(See Figure 2)***.

Step 2: Once the Double D flats on the stem and the disc are centered, remove the handle and attached the notch plate to the mounting pad on the valve with two (2) fasteners ***(See Figure 3)***. Do not tighten the bolts.

Step 3: Carefully replace the handle and make sure the latch on the lever properly engages the first notch ***(See Figure 4)***.

Step 4: Tighten the notch plate fasteners.

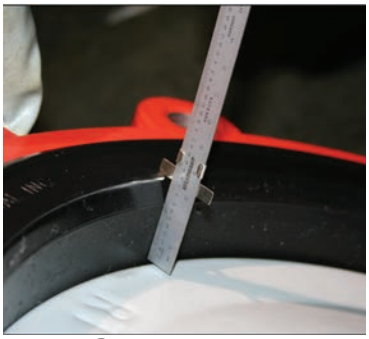
Figure 3


Figure 4

All information herein is proprietary and confidential and may not be copied or reproduced without the expressed written consent of BRAY INTERNATIONAL, Inc.

The technical data herein is for general information only. Product suitability should be based solely upon customer’s detailed knowledge and experience with their application.

LEFT BLANK

BRAY

SERIES 55, FILTER-REGULATOR

LEFT BLANK

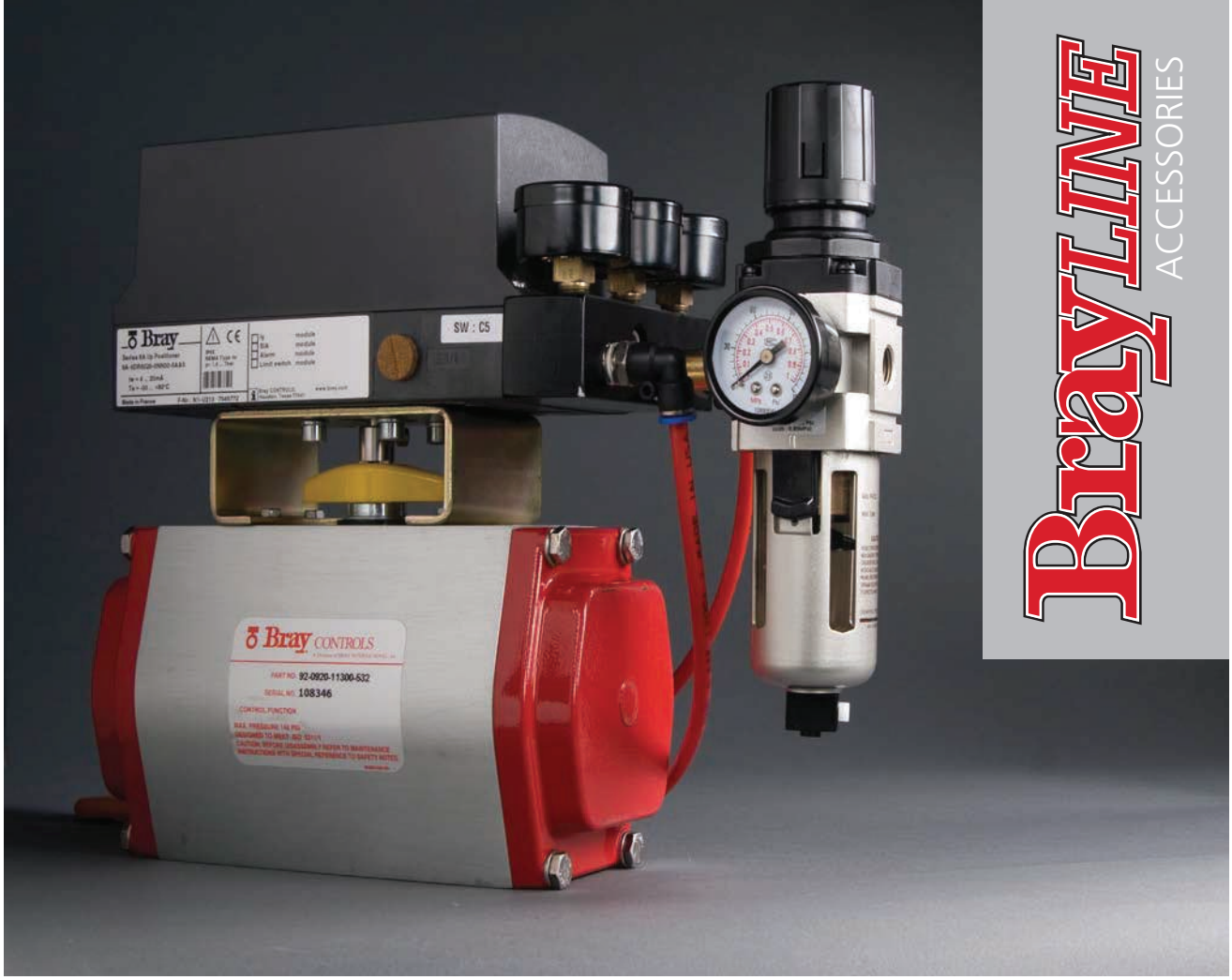

BRAYLINE ACCESSORIES

SERIES 55 COMPRESSED AIR SERVICE

FILTER REGULATORS

FEATURES & BENEFITS

The Bray Series 55 Filter Regulator is a 5 micron filter designed to provide nominal filtration removal of solids and liquids from the compressed air with accurate control to any pneumatic control device and are strongly recommended for use with the Bray Series 64 and 6A positioners.

The Series 55 Filter Regulator incorporates:

- **Locking Knob (A)** – allows for downstream pressure adjustment and locks the pressure setting in place.
- **Threaded Collar (B)** – permits easy attachment of bracket for panel mounting.
- **Bowl Quick Release (C)** – allows for easy removal of the bowl and guard for access to the filter element without the need for special tools.
- **Pressure Ports (D)** – 1/4" NPT or 1/4 G Metric Transparent Polycarbonate Bowl (E)- provides easy view of liquid levels.
- **Metal Bowl Guard (F)** – provides sturdy breakage protection from external environmental factors.
- **Pushbutton Drain (G)** - allows for easy removal of liquid from the bowl.

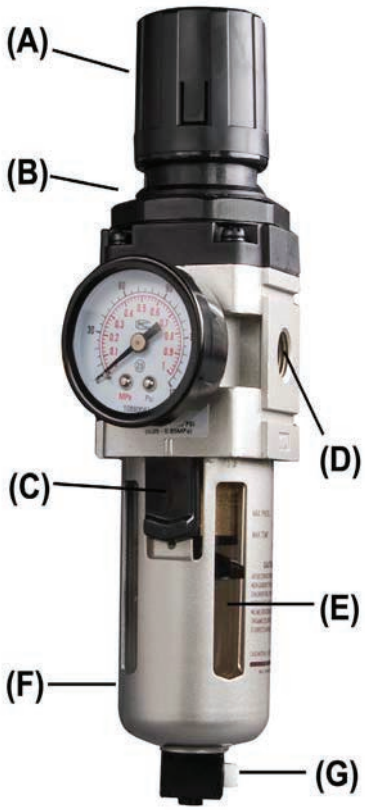

The High Performance Company

FILTER REGULATOR

Specifications:

Pressure Ports:	1/4" NPT or G 1/4
Gauge Ports:	G 1/8
Flow (SCFM) *	30
Set Pressure:	7 – 125 PSIG (0.05 - 0.85 MPa) (0.5 - 8.6 Bar)
Filter Regulator Body:	Zinc / Removable Non-Rising Knob
Bonnet:	Plastic
Springs:	Steel
Bowls (2 Ounce):	Transparent Polycarbonate w/Metal Guard Metal (Zinc) w/Sight Gauge
Filter Element:	5 Micron Standard – Plastic
Pressure Ratings **	0 – 250 PSIG (0 - 1.70 MPa) (0 – 17.2 bar)
Temperature Ratings:	32° - 175° (0° - 80° C)

* SCFM = Standard cubic feet per minute at 100 psig inlet, 90 psig no flow secondary setting and 10 psig pressure drop.

** Do not attach to pressurized gas bottles.

Dimensions (Inches [mm]):

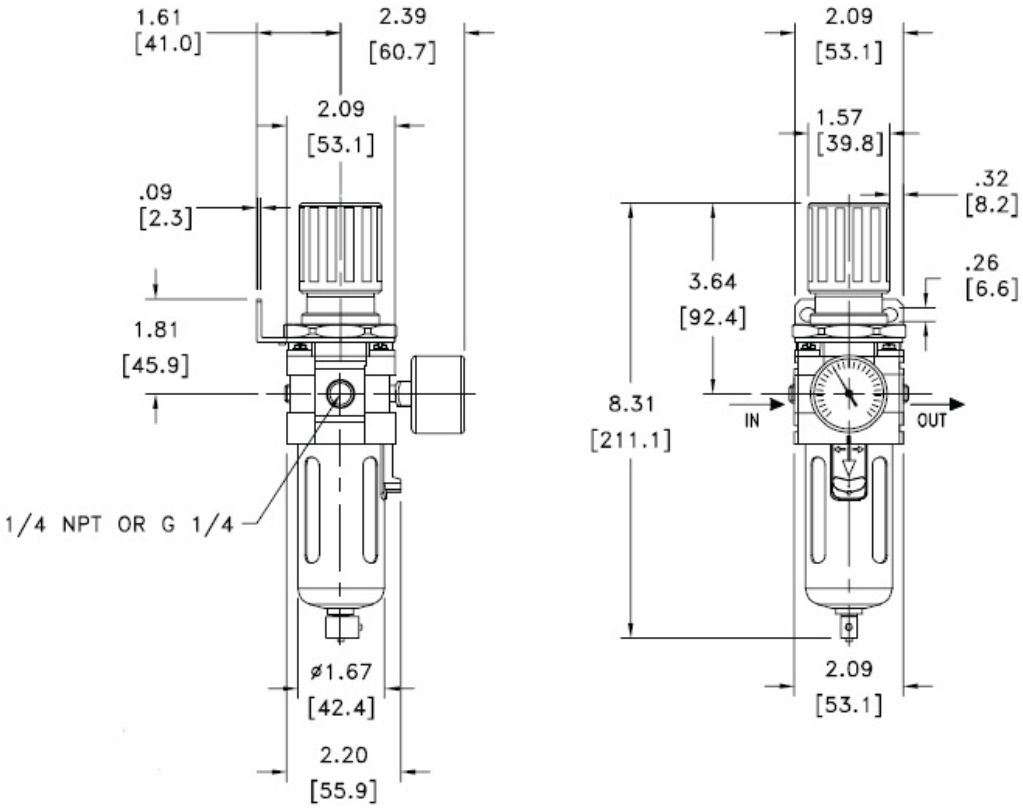

All statements, technical information, and recommendations in this bulletin are for general use only. Consult Bray representatives or factory for the specific requirements and material selection for your intended application. The right to change or modify product design or product without prior notice is reserved.
Bray Controls is certified to ISO 9001 standards.
Bray® is a registered trademark of BRAY INTERNATIONAL, Inc.

Bray® CONTROLS
A Division of BRAY INTERNATIONAL, Inc.
13333 Westland East Blvd. Houston, Texas 77041
281.894.5454 FAX 281.894.9499 www.bray.com

© 2008 Bray International. All rights reserved. B-1043-EN 07/08

CHEMLINE

TYPE 21, BALL VALVE

LEFT BLANK

CHEMLINE Plastics Limited

Your Pipeline To Quality Valves, Strainers, Flowmeters and Controls

55 Guardsman Road
Thornhill, Ontario
L3T 6L2
Canada
Tel: 905-889-7890
Fax: 905-889-8553

MAINTENANCE & INSTALLATION INSTRUCTIONS
For Chemline Type 21 True Union Ball Valve Size 1/2”- 4”

Installation:

1. Make sure all surfaces are clear and free of debris prior to installing valve in pipeline. Pipeline should be empty at connection site.

2. Valve should be set to the closed position.

3. When installing valves with socket connections, ensure that only PVC solvent cement is used. Excessive use of cement can cause sticking in the valve interior, therefore use caution when applying cement, especially on vertical piping.

4. For threaded connections we recommend the use of sealing tape and, with the use of a strap wrench, to tighten no more than 2 full turns past finger-tight. Use of a pipe wrench can deform the pipe or union nut and cause damage to the valve and/or connection(s).

5. Flanged connections should be torqued evenly and in a symmetrical pattern with a torque wrench and as per the figure and chart below:

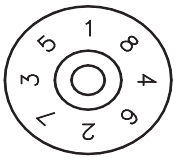

RECOMMENDED FLANGE BOLT TORQUES

VALVE SIZE	FLANGE	BOLT TORQUE	IN FT-LB	AXIAL MISALIGNMENT	PARALLELISM (INCH)
	PSI - 50	PSI - 100	PSI – 150		
1½	11	13	14	0.04	0.03
2	13	14	16	0.04	0.03
2½	13	14	16	0.04	0.03
3	18	20	22	0.04	0.03
4	20	20	22	0.04	0.04
5	22	15	29	0.04	0.04
6	25	15	32	0.04	0.04
8	25	32	40	0.06	0.04
10	25	32	40	0.06	0.04
12	29	36	43	0.06	0.04
14	32	36	43	0.06	0.04
16	36	[58-85 PSI]	58	0.06	0.04
18	36	[58-85 PSI]	-		
20	72	-	-		
24	72	-	-		

Maintenance Instructions Type 21 Ball Valve cont.

Maintenance:

Refer to **ASSEMBLY DRAWING T21V Rev. 0.** And proceed as follows:

1. Turn valve to the closed position.
2. Unscrew union nut (5) from both ends of valve.
3. Remove end connectors (4).
4. On solid mold end, remove face o-ring (9). This completely disassembles this end of valve.
5. Pull upward on handle (7) to remove.
6. On opposite end of valve, remove face o-ring (9) and use handle (7) as a spanner wrench to remove carrier (3).
7. Remove carrier o-ring (10).
8. Remove seat (6) and seat cushion (12) to expose ball (2).
9. Remove ball (2) by pushing from solid molded end of body.
10. Remove stem (6) by pushing it down into body (1).
11. Remove stem o-rings 11(A) and 11(B) from groves in stem.
12. Remove other seat (6) and seat cushion (12).
13. Inspect all parts for wear and replace as necessary.
14. Before re-assembling valve, lubricate all o-rings with Dow Corning III silicone compound or equivalent.
15. To re-assemble valve follow steps 1 through 10 in reverse order.

NOTE: If mounting actuator on mounting flange (13), make sure handle (7) is removed and stem (6) and actuator are aligned.

After replacing carrier (3), the face of the carrier should remain slightly projected from the end of the body. Make sure the ball rotates smoothly with only a touch of resistance.

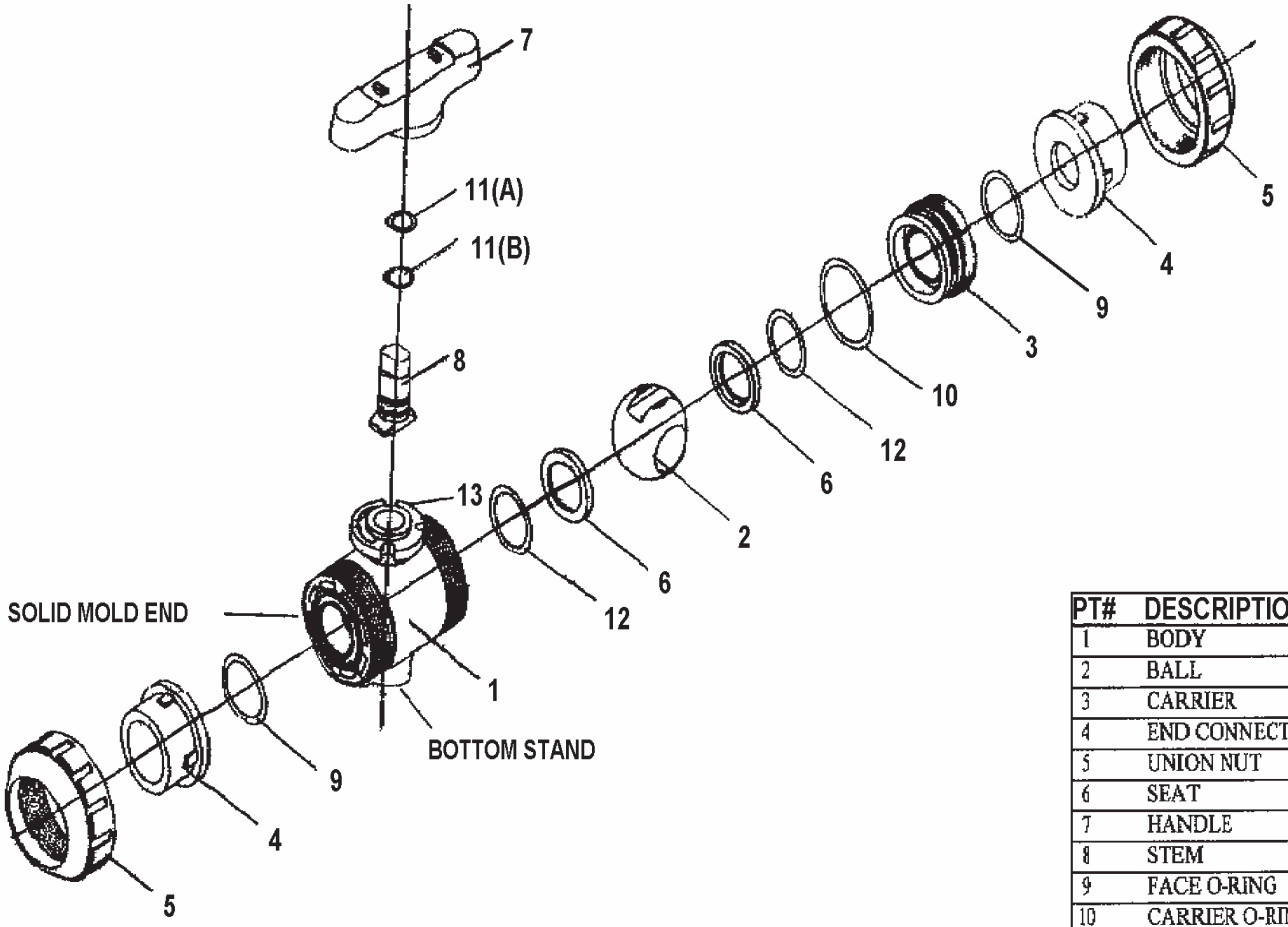

PT#	DESCRIPTION	QTY	MATERIALS
1	BODY	1	PVC/PP/PVDF/CPVC
2	BALL	1	PVC/PP/PVDF/CPVC
3	CARRIER	1	CPE/EPDM/VITON/HYP.
4	END CONNECTOR	2	PVC/PP/PVDF/CPVC
5	UNION NUT	2	PVC/PP/PVDF/CPVC
6	SEAT	1	CPE/EPDM/CITON/HYP.
7	HANDLE	1	PVC/PP/PVDF/CPVC
8	STEM	1	PVC/PP/PVDF/CPVC
9	FACE O-RING	2	CPE/EPDM/VITON/HYP.
10	CARRIER O-RING	1	CPE/EPDM/VITON/HYP.
11(A)	STEM O-RING (Upper)	1	CPE/EPDM/VITON/HYP.
11(B)	STEM O-RING (Lower)	1	CPE/EPDM/VITON/HYP.
12	SEAT CUSHION	2	CPE/EPDM/VITON/HYP
13	MOUNTING FLANGE	1	PVC/PP/PVDF/CPVC

TITLE CHEMLINE TYPE 21 TRUE UNION BALL VALVE	SCALE		DATE	CHEMLINE PLASTICS	
	DR. BY				
REFERENCE SIZES 1/2" - 4"	CHKD BY			DWG. NO. T21V	REV. 0
	APP. BY				

LEFT BLANK

CHEMLINE

TYPE 57, BUTTERFLY VALVE

LEFT BLANK

Serial No.	H-V036E-4

Butterfly Valves

Type 57 : 40mm(1 1/2") - 350mm(14")
Type 56 : 400mm(16")

User's Manual



Contents

(1) General Operating Instructions 1

(2) General Instructions for Transportation, Unpacking and Storage 1

(3) Names of Parts 2

(4) Comparison between Working Temperature and Pressure 4

(5) Installation Procedure 5

(6) Operating Procedure 8

(7) Disassembly and Assembly Procedure for Parts Replacement 10

(8) Installation Procedure for Handle 12

(9) Adjustment Procedure for Stopper on Gear Type 13

(10) Inspection Items 13

(11) Troubleshooting 14

(12) Handling of Residual and Waste Materials 14

(13) Inquires 15

ASAHI AV VALVES

(1) General Operating Instructions

Operate the valve within the pressure vs. temperature range.
The valve can be damaged by operating beyond the allowable range.
Select a valve material that is compatible with the media, refer to "CHEMLINE CHEMICAL RESISTANCE GUIDE".
Some chemicals may damage incompatible valve materials.
Do not use the valve on condition that fluid has crystallized.
(The valve will not operate properly.)
Do not step on the valve or apply excessive weight on valve. (It can be damaged.)
Do not exert excessive force in closing the valve.
Make sure to consult a waste treatment dealer to dispose of the valves.
(Poisonous gas is generated when the valve is burned improperly.)
Allow sufficient space for maintenance and inspection.
Keep the valve away from excessive heat or fire. (It can be deformed, or destroyed.)
Do not change or replace valve parts under line pressure.
The valve is not designed to bear any kind of external load. Never stand on or place anything heavy on the valve at anytime.
Using a positive-pressure gas with our plastic piping may pose dangerous condition due to the repellent force peculiar to compressed fluids, even when the gas is under the same pressure as water. Therefore, be sure to take the necessary safety precautions such as covering the piping protective material. For inquiries, please contact us.

(2) General Instructions for Transportation, Unpacking and Storage

Keep the valve in its original packaging until needed for installation.
Avoid contact with any coal tar creosote, insecticides, vermicides or paint.
The force of swelling may damage the valve.
The valve is not designed to handle any kind of impact. Avoid throwing or dropping the valve.
Avoid scratching the valve with any sharp object.

(3) Parts description

Type57: 40mm (1-1/2") – 350mm (14")

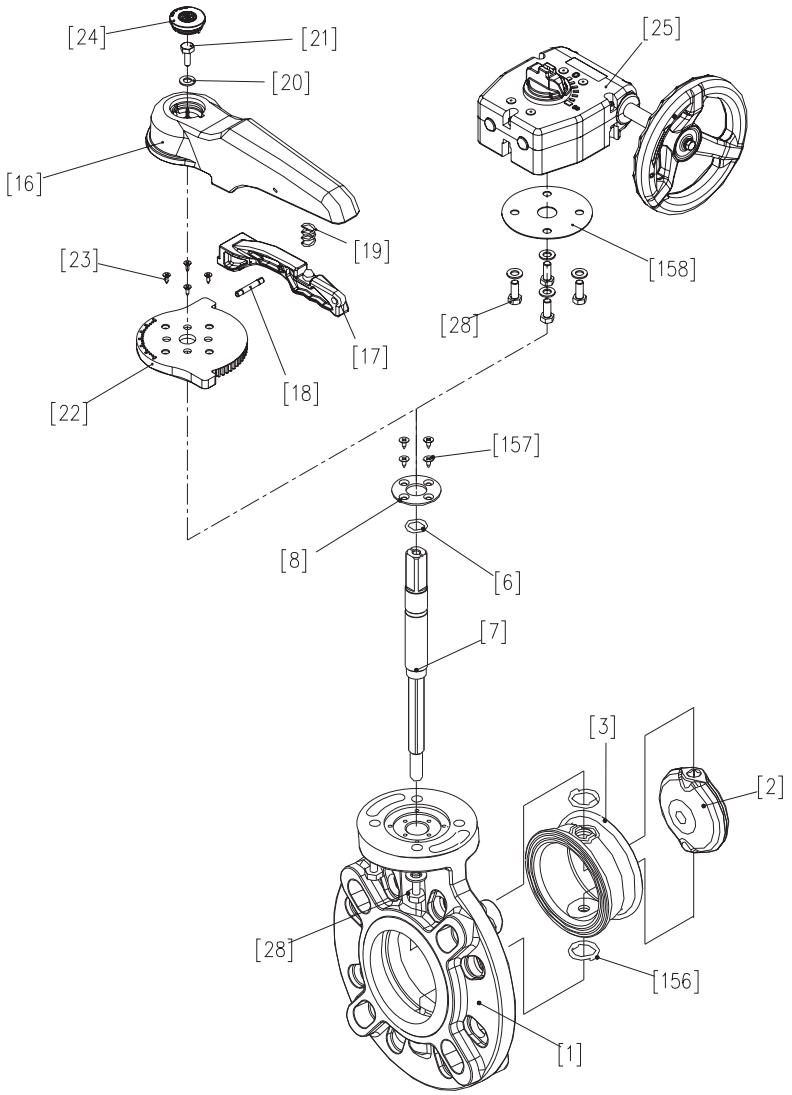

No.	Description	No.	Description	No.	Description
[1]	Body	[17]	Handle Lever	[24]	Cap (A)
[2]	Disc	[18]	Pin	[25]	Gear Box
[3]	Seat	[19]	Spring	[28]	Bolt (C)
[6]	O-Ring (C)	[20]	Washer (A)	[156]	Stabilization Ring
[7]	Stem	[21]	Bolt (A)	[157]	Screw (F)
[8]	Stem Holder (A)	[22]	Locking Plate	[158]	Gasket (L)
[16]	Handle (A)	[23]	Screw (B)		

Type56 (Gear Type): 400mm (16")

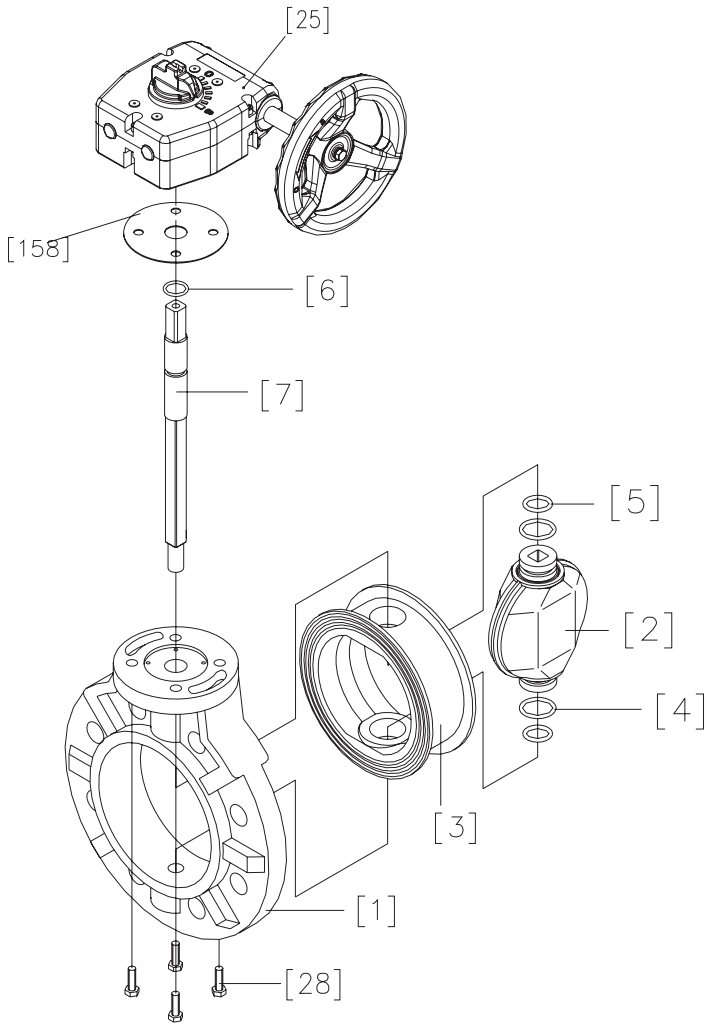

No.	Description	No.	Description	No.	Description
[1]	Body	[5]	O-Ring (B)	[28]	Bolt (C)
[2]	Disc	[6]	O-Ring (C)	[158]	Gasket (L)
[3]	Seat	[7]	Stem		
[4]	O-Ring (A)	[25]	Gear Box		

(4) Working Temperature vs. Pressure

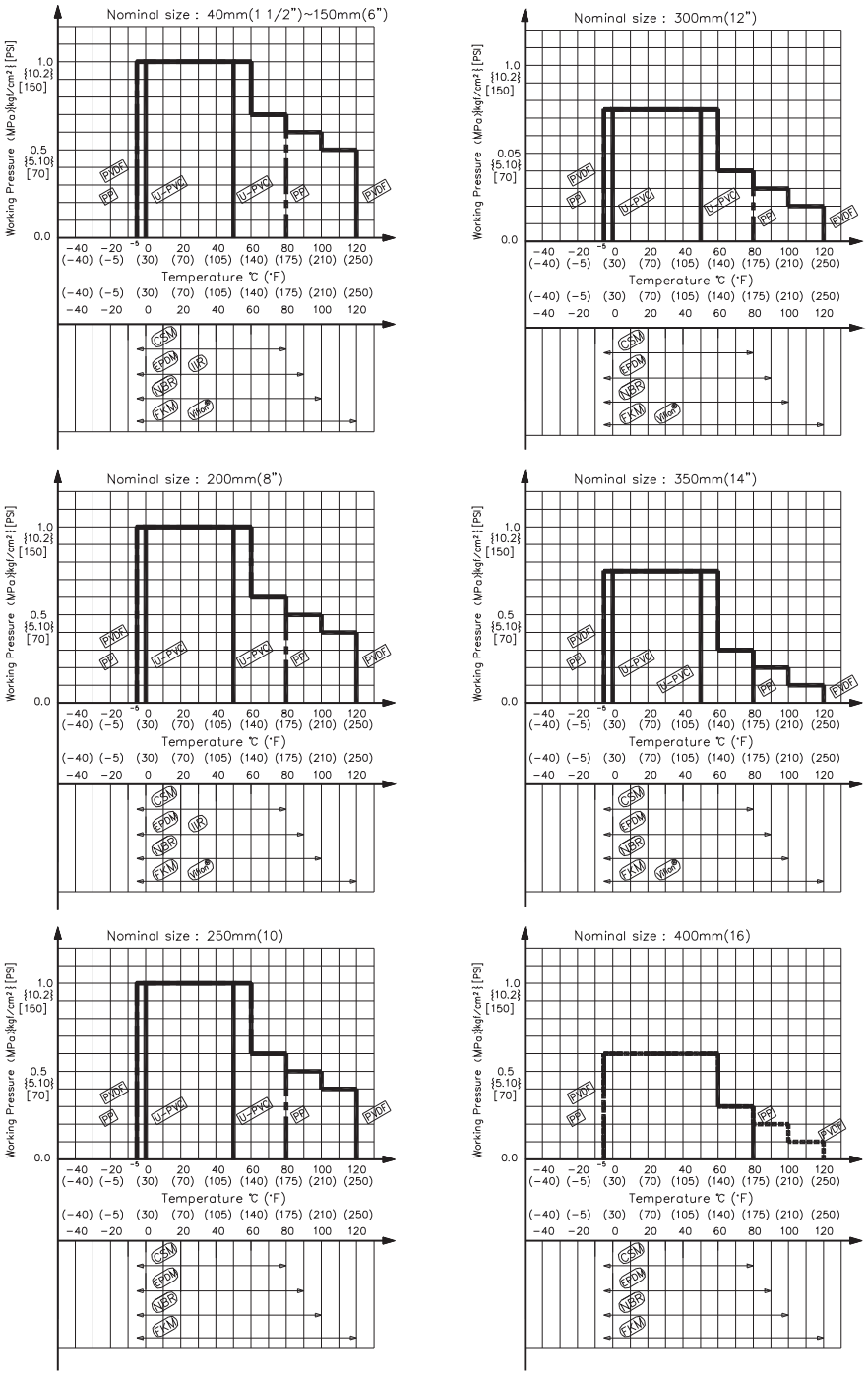

Caution

Do not operate the valve beyond the range of working temperature and pressure.
(The valve can be damaged.)

(5) Installation Procedure

Caution

1) The valve disc is sent in the position indicated by. solid lines in Fig. 5-1 prior to shipment from the factory. If the valve is opened or closed after unpacking, it must be reset in this position before installation. Failure to do so will result in damage to the surface of the valve seat during handling and installation.
2) The valve most not be dropped or thrown against other objects, since the sealing surface of the disc and the sealing surface of the valve seat may easily be damaged.
3) Care must be used during piping installation to ensure that the pipes or flanges are properly aligned so that the valve disc does not contact them in any setting. Misalignment as in Fig.5-2 will result in damage to the valve.
4) The installed valve must never be opened or closed when foreign matter such as sand is present in the pipeline.

Fig. 5-1

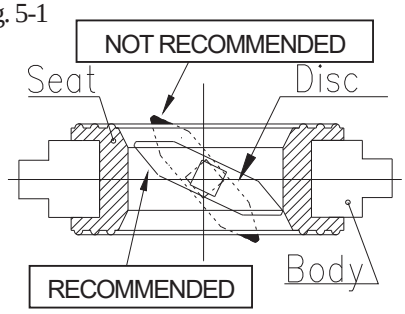

Fig. 5-2

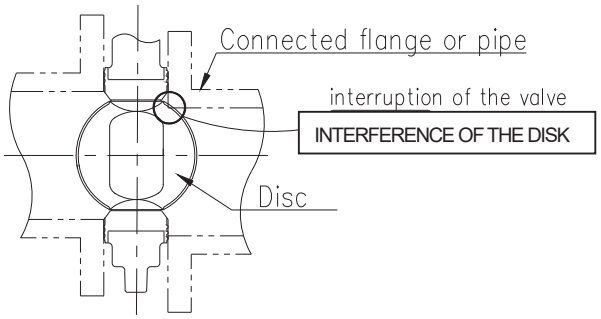

In case of the thick wall of the connection part (flange and pipe) is too thick, shave the flange or the pipe inside in order to avoid the contact of pipe and disc. If inside diameter of the connection part is larger than size D, shaving is not necessity.

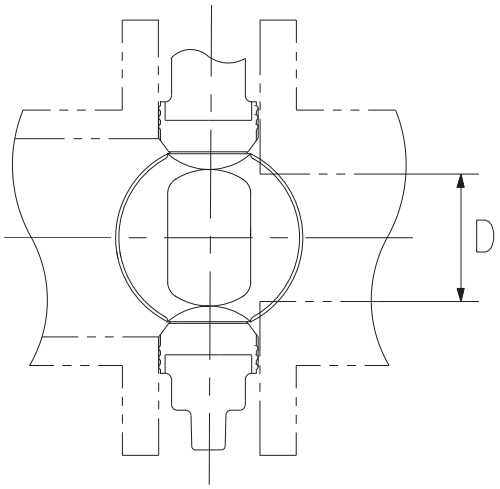

Nominal Size	Diameter D
40mm (1 1/2”)	30mm (1.18”)
50mm (2”)	44mm (1.73”)
65mm (2 1/2”)	67mm (2.64”)
80mm (3”)	71mm (2.80”)
100mm (4”)	90mm (3.54”)
125mm (5”)	115mm (4.53”)
150mm (6”)	136mm (5.35”)
200mm (8”)	179mm (7.05”)
250mm (10”)	237mm (9.33”)
300mm (12”)	289mm (11.38”)
350mm (14”)	340mm (13.39”)
400mm (16”)	370mm (14.57”)

Necessary items

- Torque Wrench
- Spanner Wrench

Procedure

Caution

The disk [2] is prevented from overflowing. (The disk [2] is damaged.)

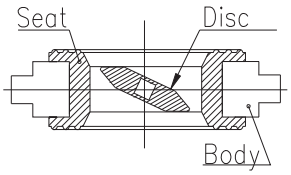

1) Install the valve between flanges and open the valve slightly.
2) Insert bolts, set nuts and washer and tighten the bolts and nuts temporarily by hand.

Caution

When you insert a valve between flanges, please insert after extending the fields of flanges fully.
(If you insert a valve by force without fully extending fields of flanges, a liner may be turned over and suffer a crack..)

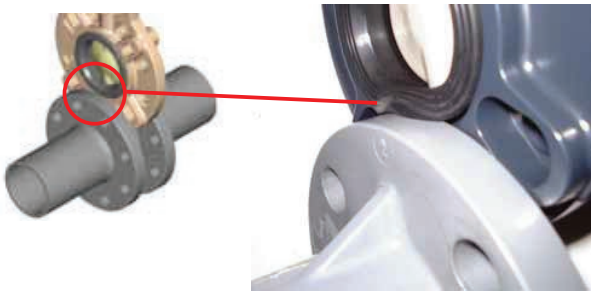

The parallelism and axial misalignment of the flange surface should be under the values shown in the following table to prevent damage the valve. (A failure to observe them can cause destruction due to stress application to the pipe)

Unit : mm (inch)

Nom. Size	Axial Misalignment	Parallelism (a – b)
40 - 80mm (1 1/2”-3”)	1.0 (0.04)	0.8 (0.03)
100-150mm (4”-6”)	1.0 (0.04)	1.0 (0.04)
200-400mm (8”-16”)	1.5 (0.06)	1.0 (0.04)

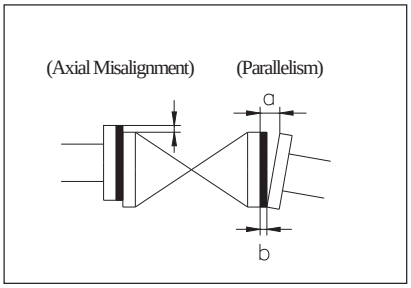

3) Tighten the bolts and nuts gradually with torque wrench to the specified torque in a diagonal manner. (Refer to Fig. 5-3)

Recommended torque value Unit N-m kgf-cm [lb-inch]

Nom. Size	40mm (1 1/2”)	50, 65mm (2”,2 1/2”)	80, 100 mm (3”,4”)
Torque value	20.0 {204} [177]	22.5 {230} [200]	30.0 {306} [266]

Fig. 5-3

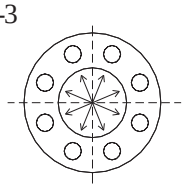

Nom. Size	125, 150 mm (5”,6”)	200, 250 mm (8”,10”)	300, 350 mm (12”,14”)	400 mm (16”)
Torque value	40.0 {408} [355]	55.0 {561} [488]	60.0 {612} [532]	80.0 {816} [710]

Caution : Avoid excessive tightening. (The valve can be damaged.)

<JIS Standard>

Dimension of Insert Bolt A

Nom. Size		Bolt (Minimum)			Nut	Washer
		d	L	S		
40mm	1 1/2”	M16	125mm (4.92”)	35mm (1.38”)	M16	16mm (0.63”)
50mm	2”		125mm (4.92”)			
65mm	2 1/2”		130mm (5.12”)			
80mm	3”		130mm (5.12”)			
100mm	4”		145mm (5.71”)			
125mm	5”	M20	165mm (6.50”)	40mm (1.57”)	M20	20mm (0.79”)
150mm	6”		175mm (6.89”)			
200mm	8”		190mm (7.48”)			
250mm	10”	M22	220mm (8.66”)		M22	22mm (0.87”)
300mm	12”		245mm (9.65”)			
350mm	14”		250mm (9.82”)			
400mm	16”	M24	300mm (11.81”)	45mm (1.77”)	M24	24mm (0.94”)

Dimension of Insert Bolt B

Nom. Size		Bolt (Minimum)				Nut	Washer
		$_1$	L_1	S_1	S_2		
400mm	16”	M24	120mm (4.72”)	45mm (1.77”)	27mm (1.06”)	M24	24mm (0.94”)

<ANSI Standard>

Dimension of Insert Bolt A

Nom. Size		Bolt (Minimum)			Nut	Washer
		d	L	S		
40mm	1 1/2”	5/8”-11	125mm (4.92”)	35mm (1.38”)	5/8” - 11	5/8” Flat (0.63”)
50mm	2”		125mm (4.92”)			
65mm	2 1/2”		130mm (5.12”)			
80mm	3”		130mm (5.12”)			
100mm	4”		145mm (5.71”)			
125mm	5”	3/4" - 10	165mm (6.50”)	40mm (1.57”)	3/4" - 10	3/4" Flat (0.79”)
150mm	6”		175mm (6.89”)			
200mm	8”		190mm (7.48”)			
250mm	10”	7/8” - 9	220mm (8.66”)		7/8” - 9	7/8” Flat (0.87”)
300mm	12”		245mm (9.65”)			
350mm	14”		250mm (9.82”)			
400mm	16”	1” - 8	300mm (11.81”)	45mm (1.77”)	1” - 8	1” Flat (0.94”)

Dimension of Insert Bolt B

Nom. Size		Bolt (Minimum)				Nut	Washer
		$_1$	L_1	S_1	S_2		
400mm	16”	1” - 8	120mm (4.72”)	45mm (1.77”)	27mm (1.06”)	1” - 8	1” Flat (0.94”)

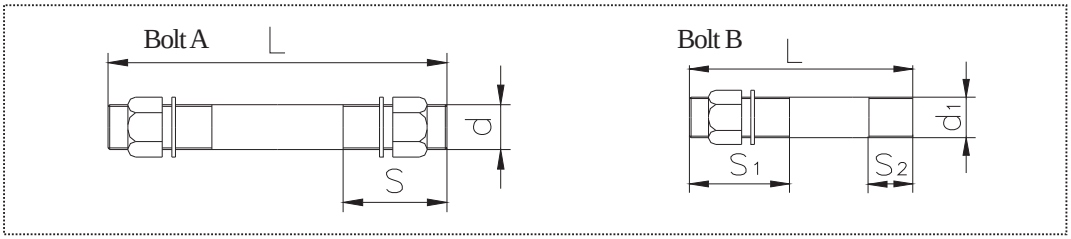

Caution

The gasket is unnecessary. (The seat [3] carries out the role of the gasket.)

(6) Operating Procedure

Caution

The lever operation and the steering wheel operation are done by the hand.

1) Open and close the valve by turning handle smoothly.
   Turn clockwise to close and counterclockwise to open.
2) In case of lever type (40-200 mm{1 1/2”-8”}), the direction of handle is same as the disc as shown in Fig. 6-1.
   For the full-shut (Close) position, the handle is perpendicular to the piping axis direction.
   For the full-opened position, the handle is parallel to the piping axis direction.

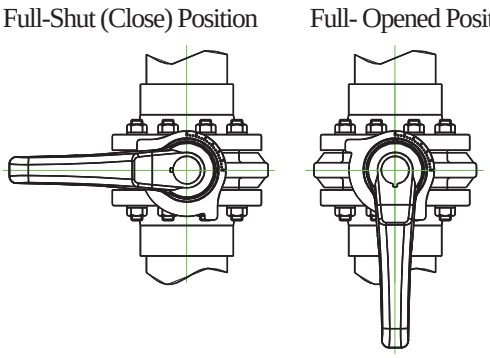

Fig. 6 – 1

3) In case of gear type (40-400 mm {1 1/2”-16”}), the indicator shows the position of the disc on the top of gear box. (Fig.6-2)
   For the full-shut (close) position, the indication shows Shut (S).
   For the full-opened position, the indication shows Open (O).

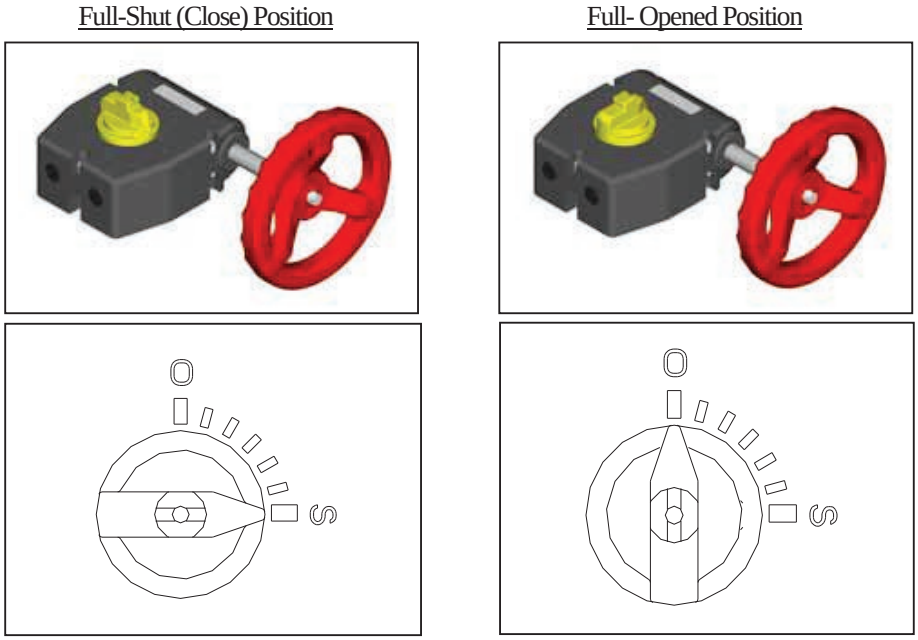

Fig. 6 – 2

Technical Data for Operation

Nom. Size	Stem Torque (N m)		Required Hand-Wheel Torque (N m)		Length of Lever and Diameter of Handle (mm)		Required Operating Force (N)	
	Peak	Seal	Peak	Seal	Lever	Gear	Lever	Gear
40mm (1 1/2")	5	5	0.4	0.4	220	80	23	5.0
50mm (2")	10	10	0.8	0.8	220	80	46	10
65mm (2 1/2")	15	15	1.2	1.2	220	80	68	15
80mm (3")	20	20	1.7	1.7	250	80	80	22
100mm (4")	30	30	2.5	2.5	250	80	120	32
125mm (5")	65	40	5.4	3.3	320	80	125	42
150mm (6")	85	65	7.0	5.4	320	80	205	68
200mm (8")	190	165	16	13	420	80	395	163
250mm (10")	300	250	25	21	-	80	-	263
300mm (12")	370	330	25	22	-	150	-	147
350mm (14")	420	400	28	27	-	150	-	180
400mm (16")	930	780	63	53	-	150	-	353

Note : Data mentioned in the table above is reference only.

These data are measured in standard condition and it slightly differs depending on conditions.

(7) Disassembly and Assembly Procedure for Parts Replacement

Necessary items

- Protective Gloves
- Goggles
- Spanner Wrench
- Vise
- Grease (Silicone)
- Square Lumber
- Circular Stick (Plastic or Wood)
- Pressing Machine
- Hammer
- Screw Driver (+)
- Screw Driver (–)

Caution

Wear protective gloves and goggles in case some dangerous fluid remains in the valve body.
(You might be injured by working without them.)
The handle part can be removed with line pressure present. The locking plate [22] can't be removed with line pressure present. If locking plate [22] needs to be removed, there can not be line pressure present.

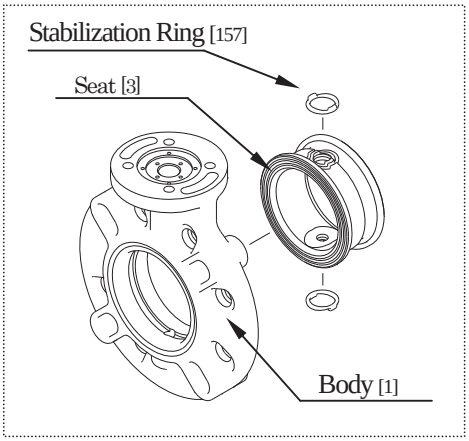

<< Disassembly >>

Procedure

1) Drain fluid completely from the pipeline.
2) Leave the valve slightly opened.
3) Loosen the connecting bolts and nuts.
4) Remove the valve from the pipeline.

Lever Type <Nominal size 40mm-200mm (1 1/2"-8")

5) To remove handle[16], first take off the cap [24] by using screw driver (–) and release bolt [21] by using socket wrench, then pull up the handle [16] while holding handle lever[17].
6) To take off locking plate [22], release 4 self-tapping screws [23] by using screw driver(+) and take off stem holder[8].

Gear Type <Nominal size 40mm-400mm (1 1/2"-16")

5) Loosen set bolt [28] for gear box [25] and pull off the gear box upward with gasket [158].
6) <Nominal size 40mm-350mm (1 1/2"-14") *It advances 400mm (16") as follows.>
To take off stem holder [8]. Release 4 tapping screws [157] by using screw driver (+).

Lever & Gear Type

7) Hold flat surface of Stem [7] with vise and pull off valve body[1].
8) (A) Set the valve body [1] on square lumbers at edges of valve body on the press and put a lumber on the disc[2].
Operate the press slowly and push disc [2] and seat [3] out if the valve body[1].
(B) Set the valve body [1] on square lumbers at edges of valve body and put a circular stick on the disc[2].
Strike the circular stick with a hammer and remove disc [2] and seat [3] out of the valve body[1].
9) Set the disc [2] parallel to the working desk to half opened position. Push the seat[3], and remove the disc[2].
10) <Nominal size 40mm-350mm (1 1/2"-14") *It advances 400mm (16") as follows.>
Remove the stabilization ring [156] and the O-ring(C) [6]from the stem[7].

<< Assembly >>

Procedure

1) Put the O-ring(C) [6]onto the stem[7].
2) Before starting assembly, grease (Silicone) should be spread on the top and bottom disc[2], the stem hole of the seat [3] and the stem O-ring(C)[6].
3) <Nominal size: 40mm-350mm(1 1/2”-14”) *It advances 400mm (16”) as follows.>
   Insert the stabilization ring [156] into the upper side slot of the seat [3]. The upper side slot of seat [3] has larger stem hole than lower side.

⚠ Caution

Make certain tabs are properly aligned. Both upper and lower stabilization ring [156] are identical.

4) Insert the stem [7] about 1/3 into the body [1]. Install the seat [3] into the body [1] by aligning upper seat stem hole with the stem [7].
5) Collapse the left or right side of seat [3] in towards opposing side exposing lower stem hole by screw driver (–).
   <Nominal size: 40mm-350mm (1 1/2”-14”) *It advances 400mm (16”) as follows.>
   Install the stabilization ring [156] into the body [1] aligning tabs of ring with center groove of the body [1]. Seat [3] tabs should line up when bottom of seat is reset into body of valve.
6) Remove the stem [7].
7) Reset the seat [3] into the body [1].

⚠ Caution

<Nominal size: 40mm-350mm(1 1/2”-14”) *It advances 400mm (16”) as follows.>
Make certain stabilization rings [156] sit flush inside of seat [3] with tabs properly aligned. If stabilization rings [156] are not installed correctly, the seat [3] will not sit in the body [1] properly. This is indicated by a visible gap between seat [1] and body [1], and disc [2] will not fit properly.

8) To install disc [2], make certain valve size on disc [2] is in upright direction. Install top of disc [2] into seat [3] aligning with upper stem hole.
9) Rotate disc [2] to 75% (Approx.) closed position and install stem [7] about 50% into the body [1].
10) Press in bottom of disc [2] to lower stem hole.

⚠ Caution

Look into valve body [1] to be certain full square in disc [2] is centered with upper valve [1] stem hole. If not, repeat step 8), 9), and 10).
Make certain line scribed on top of stem [7] indicates disc [2] position while installing stem [7].

11) Install the stem [7] into valve body [1] and disc [2]. If disc [2] is properly aligned, stem [7] should slide in smoothly. If stem [7] does not slide in smoothly, report from step 8) to properly align the disc [2] in the valve body [1].
12) <Nominal size: 40mm-350mm(1 1/2”-14”) *It advances 400mm (16”) as follows.>
    Install stem holder [8] onto valve body [1] with countersunk holes facing up using 4 screws [157].
13) To install lever or gear operator reverse disassembly procedure #5).
14) After assembly, make sure that the valve can be fully opened and closed smoothly.

(8) Installation procedure for handle

Necessary items

- ●Plastic Hammer
- ●Socket Wrench
- ●Screw Driver
- ●Goggles
- ●Protective Gloves

⚠ Caution

Do not give any unjust force to cap, in installing or removing the cap.
It can be damaged

Installation

Procedure

1) Install the handle on the stem. Set the direction of handle in the indication line at the top of stem.
2) Fix the handle at the top of stem with the attached bolts and washer by using socket wrench.
3) Set the convex part at the side of the cap and the concave of the handle, and set in the cap by striking lightly by using a plastic hammer.

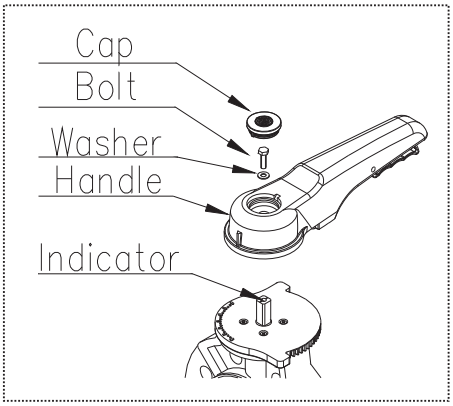

Nominal Size	40-100mm (1 1/2”-4”)	125-200mm (5”-8”)
Bolt Size	M6×15L	M8×15L
Socket Size	10	13

Remove

Procedure

1) To remove the cap, push up the side of the cap by using a screw driver
2) Loose the bolts and washer by using a socket wrench, then remove the handle.

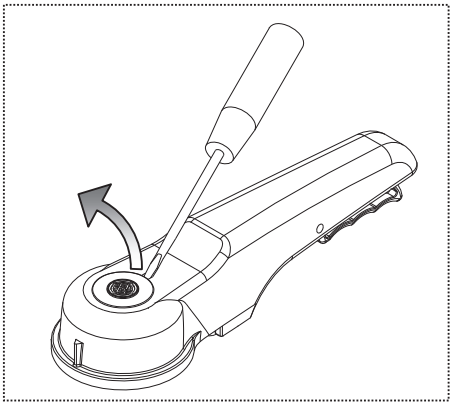

(9) Adjustment Procedure for Stopper Gear Type

Necessary Items

- Hexagon Wrench

The adjustments for full-opened and full-shut position are step-less, and it can be done with the stopper adjuster.

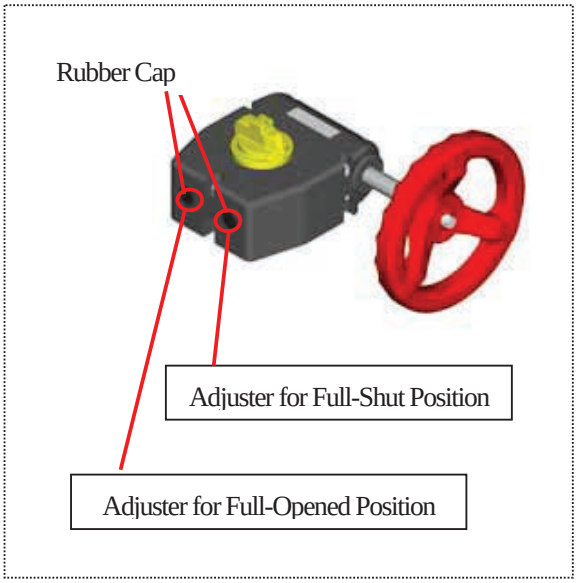

Adjustment for Full-shut (Full-opened) position

1) Remove the rubber cap of Full-closing (Full-opening) adjuster.
2) Loosen the first stopper hex-bolt completely by Hex. Wrench.
3) Adjust the disc of valve to required position.
4) Tighten the stopper hex-bolts.
5) Put the rubber cap of Full-closing (Full-opening) adjuster back on gearbox.

(10) Inspection Items

Inspect the following items.

(1)	Check for flaw, crack, or deformation on the valve.
(2)	Check for leaks to the outside.
(3)	Check for the deformation of seat due to improper installation of valve.
(4)	Check for the smoothness of handle operation..

(11) Troubleshooting

Phenomenon	Cause	Treatment
Fluid is not stopped in the full closed position at the seat.	1) The stopper is not set correctly. 2) The seat is damaged or worn. 3) Foreign materials are caught. 4) The disc is damaged or worn. 5) The connecting bolts are over tightened or tightened unevenly.	Adjust the stopper. Replace the seat. Clean it up. Replace the disc. Adjust and retighten.
Fluid leaks to the outside.	1) The seat is damaged or worn. 2) The connecting bolts are not tightened in proper torque or evenly.	Replace the seat. Adjust and retighten.
The handle does not work smoothly.	1) Foreign materials have adhered. 2) The gear box is damaged. 3) The connecting bolt is over tightened.	Clean it up. Repair or replace. Adjust and retighten.
Valve does not operate	1) The gear box is damaged 2) The stem is damaged.	Repair or replace. Replace the stem.

(12) Handling of Residual and Waste Materials

⚠ Caution

Make sure to consult waste treatment dealer to dispose valves.
(Poisonous gas is generated when the valve is burned improperly.)

LEFT BLANK

CHEMLINE

ER SERIES, ELECTRIC ACTUATOR

LEFT BLANK

+PLUS

CE

Système sécurité
FAIL SAFE
Security system

Positionnement
POSI
Positioning

3 Positions
GF3
3 Positions

10Nm
»
100Nm

Facteur de marche
50%
Duty rating

Indice de protection
IP66
Enclosure

Anti-condensation intégrée
Integrated anti-condensation



ER PLUS

ACTIONNEUR ÉLECTRIQUE
DOCUMENTATION TECHNIQUE
MISE EN SERVICE

ELECTRIC ACTUATOR
TECHNICAL LITERATURE
SET UP PROCEDURE

ELEKTRISCHE STELLANTRIEBE
TECHNISCHE UNTERLAGEN
BETRIEBSANLEITUNG

ACTUADOR ELÉCTRICO
DOCUMENTACIÓN TECNICA
PUESTA EN SERVICIO

100% CONTROL MADE IN EU 100% CONTROL

TABLE DES MATIÈRES

EN TABLE OF CONTENTS
D INHALTSVERZEICHNIS
ES INDICE DE MATERIAS

Instructions et consignes de sécurité

Instructions and security 4
Betriebsanleitung und Sicherheitshinweise 5
Instrucciones y seguridad ..... 6 — **3**

Indicateur de position

Position indicator 7
Stellungsanzeige 7
Indocador de posición ..... 7 — **7**

Encombrements

Dimensions 8
Dimensionen 8
dimenciones ..... 8 — **8**

Commande manuelle de secours

Emergency manual override 9
Handnotbetätigung 9
Mando manual de socorro ..... 9 — **9**

Branchements électriques

Electric wiring 10
Elektrische Verbindung 10
Conexiones eléctricas ..... 10 — **10**

Cartes électroniques

Electronic cards 14
Elektronische Karten 14
Tarjetas electrónicas ..... 14 — **14**

Modèles FAILSAFE

FAILSAFE models 16
FAILSAFE Modele 16
Modelos FAILSAFE ..... 16 — **16**

OPTION Système sécurité FAIL SAFE Security system

Modèles POSI

POSI models 19
POSI Modele 19
Modelos POSI ..... 19 — **19**

OPTION Positionnement POSI Positioning

Modèles GF3

GF3 models 28
GF3 Modele 28
Modelos GF3 ..... 28 — **28**

OPTION 3 Positions GF3 3 Positions

Données techniques

Thechnical datas 30
Technischen daten 30
Datos technicos ..... 30 — **30**

DESCRIPTION

Ces actionneurs électriques ont été conçus pour permettre le pilotage d'une vanne 1/4 tour. Pour tout autre application, nous consulter préalablement. Nous ne pouvons être tenus responsables en cas d'autre utilisation.

TRANSPORT ET STOCKAGE

- Les transporteurs étant responsables des avaries et des retards de livraison, les destinataires doivent émettre des réserves, le cas échéant, avant de prendre livraison des marchandises. Les envois directs d'usine sont soumis aux mêmes conditions.
- Le transport sur site est effectué dans un emballage rigide.
- Les produits doivent être stockés dans des endroits propres, secs et aérés, de préférence sur des palettes de manutention ou sur des étagères.

MAINTENANCE

- La maintenance est assurée par notre usine. Si le matériel ne fonctionne pas, vérifier le câblage suivant le schéma électrique et l'alimentation de l'actionneur électrique concerné.
- Pour toute question, prendre contact avec le service après-vente.
- Pour nettoyer l'extérieur de l'appareil, utiliser un chiffon (et de l'eau savonneuse).
  NEPAS UTILISER D'AGENT A BASE DE SOLVANT OU D'ALCOOL

GARANTIE

- 100% des actionneurs ont été testés et réglés en usine.
- Ces produits sont garantis 2 ans ou 50000 manœuvres contre tous vices de fabrication et de matière, à partir de la date de livraison (facteur de service et classe du modèle suivant la norme CEI34).
- Cette garantie n'est valable que dans le cas où le matériel aura été, entre temps, ni démonté, ni réparé. Cette garantie ne s'étend pas à l'usure provoquée par suite de chocs ou maladresse, ainsi que par l'utilisation du matériel dans les conditions qui ne seraient pas conforme à ses caractéristiques. Cette garantie est strictement limitée au remplacement de la ou des pièces d'origines reconnues défectueuses, par nos services, après expertise. Les frais de port aller et retour, ainsi que la main d'œuvre, restent à la charge du client. Aucune responsabilité ne serait nous incomber au sujet des accidents ou risques directs ou indirects découlant d'une défectuosité de nos matériels. La garantie ne couvre pas les conséquences d'immobilisation et exclut tout versement d'indemnité. Les accessoires et adaptations ne sont pas couverts par cette garantie. Au cas où le client n'aurait pas réalisé ponctuellement les paiements stipulés aux échéances convenues, notre garantie sera suspendue jusqu'au paiement des échéances en retard et sans que cette suspension puisse augmenter la durée de la garantie à la mise à disposition.

RETOUR DE MARCHANDISE

- L'acheteur est tenu de vérifier au moment de la livraison la conformité de la marchandise par rapport à sa définition.
- L'acceptation par l'acheteur de la marchandise dégage le fournisseur de toute responsabilité, si l'acheteur découvre une non-conformité postérieurement à la date d'acceptation. Dans un tel cas, les frais de mise en conformité seront à la charge de l'acheteur qui supportera également seul, les conséquences financières du dommage. Les retours des marchandises sont acceptés que si nous les avons préalablement autorisés : ils doivent nous parvenir franco de tous frais à domicile et ne comporter que des produits dans leur emballage d'origine. Les marchandises rendues sont portées au crédit de l'acheteur, déduction faite des 20% de reprise du matériel calculé sur la base du montant initial des marchandises retournées.

CONSIGNES DE SECURITE ⚠ A lire avant toute installation du produit

- L'alimentation électrique doit être coupée avant toute intervention sur l'actionneur électrique (avant de démonter le capot ou de manipuler la commande manuelle de secours).
- Toute intervention doit être effectuée par un électricien qualifié ou une personne formée aux règles d'ingénierie électrique, de sécurité et tout autre directive applicable.
- Respecter impérativement l'ordre des consignes de raccordement et de mise en service décrites dans le manuel sans quoi le bon fonctionnement n'est plus garanti. Vérifier les indications portées sur la plaque d'identification de l'actionneur : elles doivent correspondre à votre réseau électrique d'alimentation.

⚠

- Ne pas monter l'actionneur « tête en bas ».
Risques encourus :
Disfonctionnement du mécanisme de débrayage
Possible écoulement de graisse sur la partie électronique

- Ne pas monter l'actionneur à moins de 30 cm d'une source de perturbations électromagnétiques

INSTRUCTIONS AND SECURITY

DESCRIPTION

These electric actuators have been designed to perform the control of a valve with 90° rotation. Please consult us for any different application. We cannot be held responsible if the mentioned actuators are used in contradiction to this advice.

TRANSPORT AND STORAGE

- The forwarding agents being held as responsible for damages and delays of the delivered goods, the consignees are obliged to express if applicable their reserves, prior to accept the goods. The goods delivered directly ex works are subject to the same conditions.
- The transport to the place of destination is carried out by using rigid packing material.
- The products must be stored in clean, dry, and ventilated places preferably on appropriate palettes or shelves.

MAINTENANCE

- Maintenance is ensured by our factory. If the supplied unit does not work, please check the wiring according to the electric diagram as well as the power supply of the concerned electric actuator.
- For any question, please contact our after-sales service.
- To clean the outside of the actuator, use a lint and soapy water.
  DO NOT USE CLEANING PRODUCT WITH SOLVENT OR ALCOHOL

GUARANTEE

- 100% of the actuators are fully tested and set in the factory.
- These products are guaranteed two years from the delivery date or 50,000 operating cycles against all types of manufacturing and material faults (operating time and model class according to standard CEI34).
- This guarantee will only be valid if the unit has not been disassembled or self-repaired during its service life. It does not cover any wear and damage caused by shocks or faulty operation neither by the use of the unit under conditions not in accordance with its nominal characteristics. The guarantee is strictly limited to the replacement of original parts found defective on checking by our service personnel. The cost of shipping to our premises, the return of devices to the customer as well as the repair cost will be chargeable. We will not assume the responsibility for any direct or indirect accidents/risks originated by a failure of our products. The guarantee does not cover the consequences of breakdown and excludes any payments for indemnities. The accessories and adaptations are excluded from the guarantee. In the case where a customer has not proceeded to payments within the agreed period, our guarantee will be suspended until the delayed payments have been received and with the consequence that this suspension will not prolong the guarantee period in any case.

RETURN OF GOODS

- The customer is obliged to check the conformity of the goods with regard to their definition at the time of delivery.
- The acceptance of the goods by the purchaser disclaims the supplier of all responsibility if the purchaser discovers any non-conformity after the date of acceptance. In such case, the repair cost will be borne by the purchaser who will also exclusively bear all financial consequences of any resulting damage. Returned goods will only be accepted if our prior agreement has been given to this procedure : the goods must be sent free of all cost and being shipped solely and in their original packing. The returned goods will be credited to the purchaser with a reduction of 20% on the unit's price charged in accordance with the original invoice of the returned goods.

SAFETY INSTRUCTIONS  To be read prior to the installation of the product

- The electric power supply must be switched-off before any intervention on the electric actuator (i.e. prior demounting its cover or manipulating the manual override knob).
- Any intervention must only be carried out by a qualified electrician or other person instructed in accordance with the regulations of electric engineering, safety, and all other applicable directives.
- Strictly observe the wiring and set-up instructions as described in the manual: otherwise, the proper working of the actuator can not be guaranteed anymore. Verify that the indications given on the identification label of the actuator fully correspond to the characteristics of the electric supply.



- Do not mount the actuator « upside down ».
Risks:
Declutching mechanism failure
Possible flow of the grease on the electronic board

- Do not mount the actuator less than 30 cm of a electromagnetic disturbances source.

BESCHREIBUNG

Die elektrischen Stellantriebe wurden entwickelt, um Ventile mit Vierteldrehung zu steuern. Bitte ziehen Sie uns vor jeder anderen Verwendung zur Rate. Für jeglichen weitergehenden Einsatz können wir keine Verantwortung übernehmen.

TRANSPORT UND LAGERUNG

- Da die Spediteure für Schäden und Lieferverspätungen verantwortlich sind, müssen die Empfänger gegebenenfalls vor Annahme der Waren Vorbehalte äußern. Lieferungen direkt ab Werk unterliegen den gleichen Bedingungen.
- Der Transport vor Ort erfolgt in einer festen Verpackung.
- Die Lagerung muss an einem sauberen, gelüfteten und trockenen Ort erfolgen, bevorzugt auf Transportpaletten oder in Regalen.

WARTUNG

- Die Wartung wird in unserem Werk vorgenommen. Falls das Material nicht funktioniert, überprüfen Sie bitte die Kabelanschlüsse nach dem Schaltplan und die Stromzufuhr des betreffenden elektrischen Stellantriebes.
- Bei Fragen wenden Sie sich bitte an den Kundendienst.
- Verwenden Sie zur Außenreinigung des Antriebs ein Tuch und Seifenlösung.
  BITTE NIE LÖSUNGSMITTEL ODER ALKOHOLHALTIGE MITTEL ZUR REINIGUNG BENUTZEN.

GARANTIE

- 100% der Stellantriebe werden im Werk geprüft und eingestellt.
- Die Produkte unterliegen einer Garantie von zwei Jahren oder 50000 Bedienvorgängen bezüglich allen Herstellungs- und Materialfehlern, vom Datum der Auslieferung an (Einschaltdauer und Modellklasse nach Norm CEI34).
- Diese Garantie tritt nur in Kraft, wenn die Ware zwischenzeitlich weder repariert noch zerlegt worden ist. Sie bezieht sich weder auf Verschleiß durch Stöße oder Fehlbedienung noch auf den Einsatz des Materials unter nicht geeigneten Bedingungen. Diese Garantie ist eingeschränkt auf den Ersatz des oder der Originalteile, die von uns nach Begutachtung als defekt anerkannt wurden. Die Frachtkosten für Hin- und Rückweg sowie der Arbeitslohn obliegen dem Kunden. Wir übernehmen keinerlei Verantwortung bezüglich Unfällen oder direkten oder indirekten Risiken, die sich aus einem Defekt unserer Waren ergeben. Die Garantie deckt die Folgen eines Stillstandes nicht ab und schließt jede Entschädigungs-zahlung aus. Zubehör und Umbauten fallen nicht unter die Garantie. Für den Fall, daß der Kunde zeitweise nicht den Zahlungen zu den vereinbarten Fälligkeiten nachgekommen ist, wird die Garantie bis zur Zahlung der verspäteten Fälligkeiten ausgesetzt, ohne daß diese Unterbrechung die Dauer der gewährleisteten Garantie verlängert.

RÜCKSENDUNG VON WAREN

- Der Käufer ist gehalten, bei Erhalt der Ware die Übereinstimmung mit den Vorgaben zu überprüfen.
- Die Annahme der Ware durch den Käufer befreit den Lieferanten von jeglicher Verantwortung, falls der Käufer eine Reklamation nach dem Zeitpunkt der Annahme feststellt. In einem solchen Fall obliegen dem Käufer allein die Kosten für die Beseitigung sowie die Folgekosten des Schadens. Warenrücksendungen werden nur angenommen, wenn wir sie zuvor genehmigt haben: sie müssen frei Haus, ohne jegliche Gebühren, an unseren Firmensitz geliefert werden und dürfen ausschliesslich originalverpackte Ware enthalten. Die zurückgesendeten Waren werden dem Käufer gutgeschrieben, abzüglich 20% Warenrücksendungspauschale, veranschlagt auf Grundlage des ursprünglichen Rechnungsbetrags der zurückgesandten Waren.

ANLEITUNG UND SICHERHEITSHINWEISE

Vor jeglicher Installation des Produktes zu lesen

- Die Stromzufuhr muss vor jeglichem Eingriff am elektrischen Stellantrieb unterbrochen werden (bevor die Haube abgenommen oder die Handnotbetätigung bedient wird).
- Jeglicher Eingriff darf nur von qualifizierten Elektrikern oder von nach den Regeln der Elektrotechnik, der Sicherheit und allen anderen anwendbaren Normen geschultem Personal vorgenommen werden.
- Beachten Sie unbedingt die Reihenfolge der Anweisungen zum Anschliessen und zur Inbetriebnahme, welche im Handbuch beschrieben werden, ansonsten wird die einwandfreie Funktion nicht gewährleistet. Überprüfen Sie die Angaben auf dem Typenschild des Stellantriebes : sie müssen Ihrer Stromversorgung entsprechen.

- Antrieb nie uber Kopf einbauen

Risiken:

Störung der Kupplung des Antriebes

Mögliche Fettleckage auf die elektronische Karte

- Immer einen Mindestabstand von 30cm zu einer elektromagnetischens Störquelle einhalten .

INSTRUCCIONES Y SEGURIDAD

DESCRIPCIÓN

Estos actuadores eléctricos han sido concebidos para permitir el pilotaje de válvulas 1/4 de vuelta. Para otra aplicación, consultarnos. No podemos valorar responsabilidad en caso de otra utilización.

TRANSPORTE Y ALMACENAMIENTO

Al ser responsables los transportistas de averías y retrasos de entrega, los destinatarios deben emitir reservas, si llega el caso, antes de tomar entrega de las mercancías. Los envíos directos de fábrica están sometidos en las mismas condiciones.

- El transporte sobre sitio es efectuado en un embalaje rígido.
- Los productos deben ser almacenados en lugares limpios, secos y airados, preferentemente sobre paletas de manutención o sobre estanterías.

MANTENIMIENTO

- El mantenimiento es asegurado por nuestra fábrica. Si el material no funciona, verificar que el cableado, sigue el esquema eléctrico y la alimentación del actuador eléctrico concernido.
- Para toda pregunta, entrar en contacto con servicio posventa.
- Para limpiar el exterior del actuador, utilizar un trapo, y del agua jabonosa.
  NO UTILIZAR PRODUCTO DE LIMPIEZA CON DISOLVENTE O ALCOHOL

GARANTÍA

- El 100% de los actuadores están sometidos a un testigo y vienen ajustados de fábrica.
- Este producto es garantizado 2 años o 50000 maniobras contra todo vicio de fabricación y de materia, a partir de la fecha de entrega (factor de servicio y clase del modelo, sigue la norma CEI34).
- Esta garantía es valida tan solo en caso de que el material habrá sido, entre tanto, ni desmontado, ni reparado. Esta garantía no se extiende al desgaste provocado por choques o torpeza, así como por la utilización del material en las condiciones que serian conformes a sus características. Esta garantía es estrictamente limitada a la sustitución de una o varias piezas de orígenes reconocidas defectuosas por nuestros servicios, después de sometirlos a un control de expertos. Los gastos de transportes ida y vuelta así como la mano de obra, se quedan al cargo del cliente. Ninguna responsabilidad debe incumbirnos respeto a los accidentes o los riesgos directos o indirectos que emanarían de una defectuosidad de nuestros materiales. La garantía no cubre las consecuencias de inmovilización y excluye todo pago de indemnidad. Los accesorios y las adaptaciones no son cubiertos por esta garantía. En caso de que el cliente no habría realizado puntualmente los pagos estipulados a los vencimientos convencionales, nuestra garantía será suspendida hasta el pago de los vencimientos tardes y sin que esta suspensión pueda aumentar la duración de la garantía a la disposición.

DEVOLUCIÓN DE LA MERCANCÍA

- El comprador debe verificar al momento de la entrega la conformidad de la mercancía en relación a su definición.
- La aceptación por el comprador de la mercancía suelta al proveedor de toda responsabilidad; igual que si el comprador descubre una non conformidad posteriormente a la fecha de aceptación. En tal caso, los gastos de devolución para conformidad están a cargo del comprador que soportara también las consecuencias financieras del daño. Las devoluciones de las mercancías son aceptadas que si previamente las autorizamos: deben llegar sin cargo a nuestro domicilio y comportar solamente productos dentro sus embalajes de origen. Las mercancías devueltas son abonadas a cuenta del comprador, deducción hecha de 20% por devolución del material, calculado sobre el importe inicial de las mercancías devueltas.

CONSEJOS DE SEGURIDAD  A leer antes de toda instalación del producto.

- La alimentación eléctrica debe ser cortada antes de toda intervención sobre el actuador eléctrico (antes de desmontar la tapa o de manipular el mando de socorro).
- Toda intervención debe ser efectuada por un electricista cualificado o una otra persona formada a las reglas de seguridad y otras directivas aplicables.
- Respetar obligatoriamente el orden de las consignas de conexión y de las puestas en marcha descritas en el manual al fin de garantizar el buen funcionamiento. Verificar las indicaciones puestas sobre la placa de identificación del actuador : deben corresponder a su red eléctrico de alimentación.



- No montar el actuador "cabeza de bajo"
Riesgos incurridos :
Avería del mecanismo de desembrague
derrame Posible de grasa sobre la tarjeta electrónica

- No montar el actuador por menos de 30 cm de una fuente de perturbaciones electromagnéticas

INDICATEUR DE POSITION

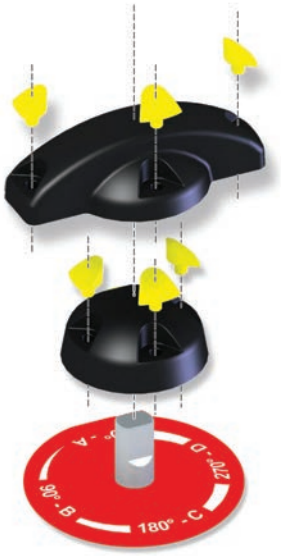

Indicateur modulable, livré avec 5 repères de signalisation (3 jaunes + 2 noirs), à positionner en fonction du type de vanne à piloter.

Modular position indicator with three removable position markers **(3 yellow + 2 black)**, *adjustable according the type of valve to be actuated.*

Stellungsanzeige mit 5 einstellbaren Markierungsknöpfen (3 gelbe + 2 schwarze), die je nach Armaturtyp zu positionnieren sind

Indicador modulable, entregado con 5 marcas de señalización (3 amarillos y 2 negros), a colocar con arreglo al tipo de válvula a maniobrar



poignée avec indicateur de position pour ER10/20
Handle with position indicator for ER10/20
Hebel mit intergrierter Stellungsanzeige für ER10/20
puñado con indicador de posición para ER10/20

Indicateur de position pour ER35-60-100
Position indicator for ER35-60-100
Stellungsanzeige fur ER35-60-100
Indicador de posición para ER35-60-100





Vanne 2 voies en position fermée
2 ways valve in closed position
2 Wege Armatur in Zu Stellung
Válvulas de 2 vias en position cerrada





Vanne 3 voies de type L
3 ways L type valve
3 Wege Ventil Typ „L“
Válvulas de 3 vias de tipo L





Vanne 3 voies de type T
3 ways T type valve
3 Wege Ventil Typ „T“
Válvulas de 3 vias de tipo T

ENCOMBREMENTS

EN **DIMENSIONS**
D **DIMENSIONEN**
ES **DIMENCIONES**

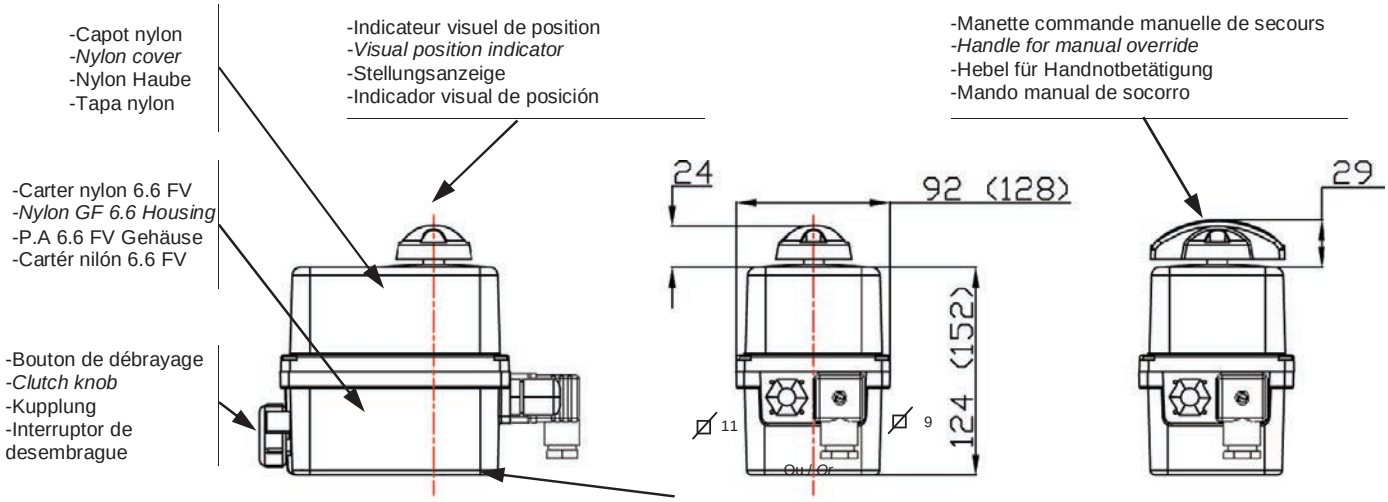

ER10/20

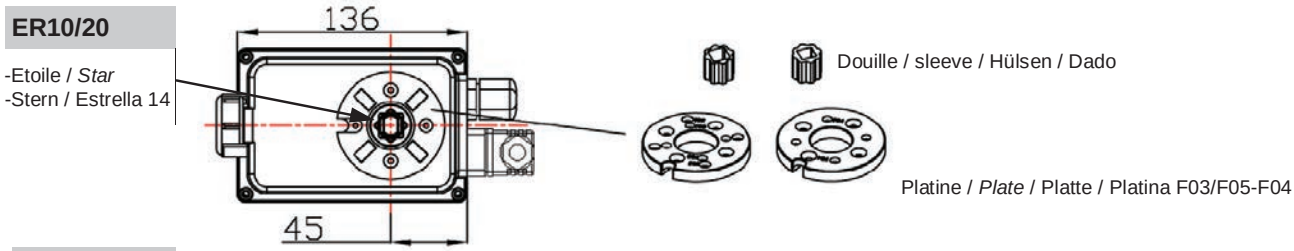

ER35/60/100

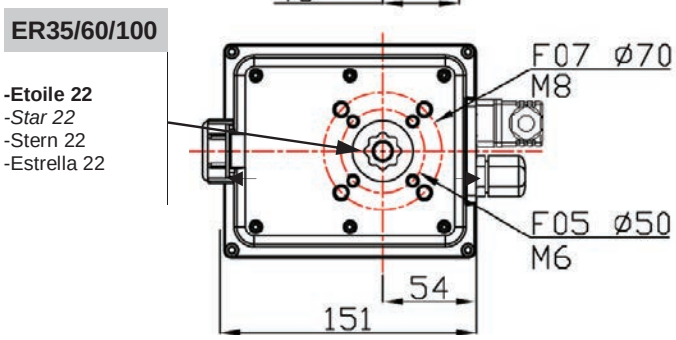

Carré / Etoile	Profondeur
Square / Star drive nut	*Depth*
Vierkant / Stern	Tiefe
Cuadrado / Estrella	Profundidad
14	16
17	19
22	24

Fixation ISO F	Diamètre	Taraudé M	Profondeur	Nombre de vis
ISO F flange	*Diameter*	*M threaded*	*Depth*	*Screws quantity*
ISO F Anschluss	Diameter	M Gewinde	Tiefe	Anzahl der Schrauben
Fijación ISO F	Diámetro	Aterrajado M	Profundidad	Número de tornillos
F03	36	M5	14.2	4
F04	42	M5	14.2	4
F05	50	M6	14.2 / 16.4	4
F07	70	M8	16.4	4

COMMANDE MANUELLE DE SECOURS

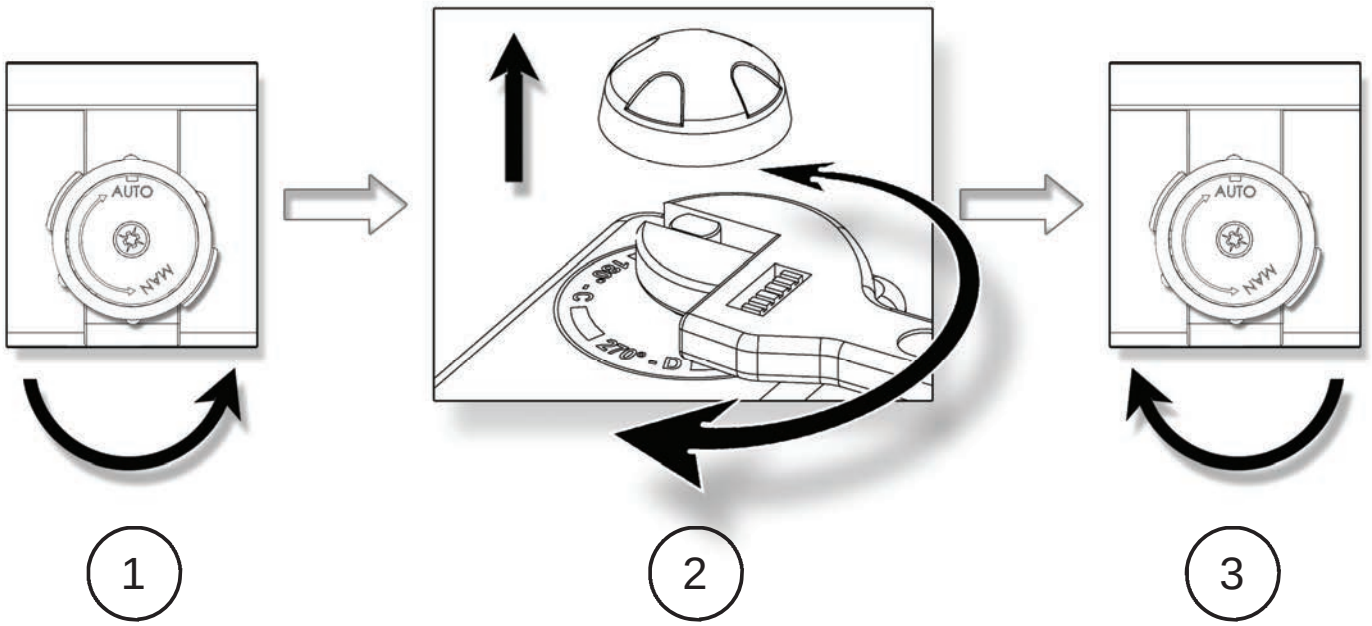

1 2 3

FR

L'actionneur fonctionne en priorité électrique. S'assurer que l'alimentation est coupée avant de le manœuvrer manuellement.

1. Tourner le bouton de débrayage vers la position MAN (sens antihoraire) et le maintenir dans cette position.
2. Tourner l'axe sortant de l'actionneur à l'aide d'une clé à molette.
3. Pour revenir en position automatique, relâcher le bouton de débrayage (rappel par ressort).

GB

The priority functionning mode of this actuator is electric. Be sure than the power supply is switched off before using the manual override.

1. Turn the knob to position MAN (counter-clockwise) and hold it in position.
2. Turn the outgoing drive shaft of the actuator with the help of an adjusting spanner.
3. In order to re-engage the reduction, release the knob (spring return).

D

Die Priorität der Funktion des Antriebs ist Automatikbetrieb. Bitte prüfen, dass die Stromversorgung abgeschaltet ist bevor der Antrieb von Hand betätigt wird .

1. Stellen Sie den Schalter auf MAN (gegen den Uhrzeigersinn) um und halten Sie ihn in dieser Position.
2. Drehen Sie die Achse des Stellantriebes mit Hilfe eines Rollgabelschlüssels.
3. Um den Kraftschluss wiederherzustellen, lassen Sie den Kupplungsschalter los (federrückstellend).

ES

El actuador funciona en prioridad eléctrico. Asegurarse que la alimentación es cortada antes de maniobrarlo manualmente.

1. Girar el interruptor de desembrague hacia la posición MAN y mantenerlo en esta posición.
2. Girar el eje saliente del actuador con la ayuda de una llave inglesa.
3. Para reenganchar la reducción, relajar el interruptor de desembrague (retorno por mueles)

BRANCHEMENTS ÉLECTRIQUES

EN ELECTRIC WIRING
D ELEKTRISCHE VERBINDUNG
ES CONEXIONES ELÉCTRICAS

FR **BRANCHEMENTS ÉLECTRIQUES - INSTRUCTIONS** 11
GB ELECTRIC WIRING - INSTRUCTIONS 11
D ELEKTRISCHE VERBINDUNG - INSTRUKTIONEN 12
ES CONEXIONES ELÉCTRICAS - INSTRUCCIONES 12

FR **SCHÉMA ÉLECTRIQUE** 13
GB ELECTRIC WIRING 13
D SCHALTPLAN 13
ES ESQUEMA ELÉCTRICO 13

Symboles utilisés :



Danger : risque de choc électrique

Terre de protection

Tension continue

Tension alternative

- Le branchement à une prise de Terre est obligatoire au-delà de 42V suivant la norme en vigueur.
- L'actionneur étant branché en permanence, il doit être raccordé à un dispositif de sectionnement (interrupteur, disjoncteur), assurant la coupure d'alimentation de l'appareil.
- La température du bornier peut atteindre 90°C
- Pour une utilisation avec de grandes longueurs de câbles, le courant induit généré par les câbles ne doit pas dépasser 1mA
- Afin d'optimiser la sécurité des installations, le câblage du report défaut (D1 et D2) est fortement conseillé.

Used symbols :



Danger : risk of electric shock

Earth protection

Direct voltage

Alternating voltage

- As stipulated in the applicable regulation, the connection to earth contact is compulsory for devices with working voltages exceeding 42 V.
- The actuator is always powered, so it must be connected to a disconnection system (switch, circuit breaker) to ensure the actuator power cut.
- The terminal temperature can reach 90°C
- For a use with a long power supply wiring, the induction current generated by the wires musn't be higher than 1mA
- To optimize the installation security, please connect the failure feedback signal (D1 and D2).

Verwendete Symbole :



Gefahr : Gefahr eines elektrischen Schlages

Schutzerdung

Gleichspannung

Wechselspannung

- Die Erdung ist nach der geltenden Norm bei über 42V vorgeschrieben.
- Der Antrieb ist dauerhaft unter Spannung, daher muß beim Anschluß ein Abschaltsystem (Leistungsschalter) vorgesehen werden um die Unterbrechung der Stromzufuhr zu gewährleisten.
- Die Terminal-Temperatur kann bis zu 90°C erreichen.
- Bei Verwendung einer langen Zuleitung für die Spannungsversorgung darf die Induktionsspannung der Leitung nicht größer als 1mA sein.
- Um die Sicherheit der Anlagen zu optimieren empfehlen wir die Verkablung der Fehlermeldung (D1/D2 Stecker)

Símbolos utilizados:



Peligro: riesgo de choque eléctrico

Tierra de protección

Tensión continua

Tensión alternativa

- El enchufe a una toma de tierra es obligatorio más allá de 42V según la norma corriente.
- El actuador esta siempre conectado, debe ser empalmado a un dispositivo de seccionamiento (interruptor, disyuntor), asegurando la cortadura de alimentación del aparato.
- La temperatura del Terminal de conexión puede alcanzar 90°C
- Para una utilización con los grandes largo de cables, la corriente induce engendrado por los cables no debe adelantar 1mA
- Para optimizar la seguridad de las instalaciones, el cableado del señal de retorno de la información de defecto (D1 y D2) es aconsejado

RESPECTER LES CONSIGNES DE SECURITE

Nos presse-étoupe acceptent un câble de diamètre compris entre 7mm et 12mm.

- Retirer l'indicateur visuel, dévisser les 4 vis et retirer le capot.

CABLAGE DE L'ALIMENTATION ET DE LA COMMANDE

- Vérifier sur l'actionneur que la tension indiquée sur l'étiquette correspond à la tension du réseau.
- Connecter les fils sur le connecteur suivant le mode de pilotage souhaité. (Voir schémas p.13 ou p.22 pour les modèles POSI)
- Pour garantir le bon fonctionnement de la résistance anti-condensation, l'actionneur doit être alimenté en permanence

CABLAGE DE LA RECOPIE (Sauf POSI : p.21)

Nos actionneurs sont par défaut équipés de 2 contacts fins de course auxiliaires secs, soit normalement ouverts, soit normalement fermés (voir schéma électrique DSBL0436). Par défaut, la came blanche est utilisée pour détecter l'ouverture (FC1) et la came noire pour détecter la fermeture (FC2).
Les fins de courses auxiliaires doivent être connectés avec des câbles rigides. Si la tension appliquée est supérieure à 42V, l'utilisateur doit prévoir un fusible dans la ligne d'alimentation.

- Dévisser le presse-étoupe droit et passer le câble.
- Enlever 25mm de gaine et dénuder chaque fil de 8mm.
- Connecter les fils sur le bornier suivant le schéma p.13 (ou p.22 pour les modèles POSI) .
- Revisser le presse-étoupe (s'assurer du bon remontage de celui-ci afin de garantir une bonne étanchéité).

REGLAGE DES CONTACTS FINS DE COURSE

L'actionneur est préréglé en usine. Ne pas toucher les 2 cames inférieures sous peine de perturber le fonctionnement de l'actionneur voire d'endommager ce dernier.

- Pour ajuster la position des contacts auxiliaires, faire pivoter les 2 cames supérieures en utilisant la clé appropriée.
- Remonter le capot, visser les 4 vis et monter l'indicateur visuel.

RESPECT SAFETY INSTRUCTIONS

Our cable glands are designed for cables with a diameter between 7mm and 12mm.

- Remove the position indicator, unscrew the four screws and take off the cover.

SUPPLY AND CONTROL WIRING

- Ensure that the voltage indicated on the actuator ID label corresponds to the voltage supply.
- Connect the wires to the connector in accordance with the required control mode. (see diagram p.13 or p.22 for POSI models)
- To ensure the correct functioning of the anti condensation heater, the actuator must be always supplied

WIRING OF THE FEEDBACK SIGNAL (Except POSI: p.21)

Our actuators are equipped with two simple limit switch contacts normally set either in open position, either in closed position (see wiring diagram DSBA0436). As per factory setting, the white cam is used to detect the open position (FC1) and the black cam is used to detect the closed position (FC2).
The auxiliary limit switches must be connect with rigid wires. If the applied voltage is higher than 42V, the user must foresee a fuse in the power supply line.

- Unscrew the right cable gland and insert the cable.
- Remove 25mm of the cable sheath and strip each wire by 8mm.
- Connect the wires to the terminal strip in accordance with the diagram 13 (or p.22 for POSI models).
- Tighten the cable gland (Ensure that it's well mounted to guaranty the proofness).

SETTING OF END LIMIT SWITCHES

The actuator is pre-set in our factory. Do not touch the two lower cams in order to avoid any malfunctioning or even damage to the actuator.

- To adjust the position of the auxiliary contacts, make rotate the two superior cams by using the appropriate wrench.
- Re-mount the cover, fasten the four screws and attach the position indicator.

BEACHTEN SIE UNBEDINGT DIE SICHERHEIT ANWEISUNGEN

Unsere Kabelverschraubungen sind zulässig für Kabel mit einem Durchmesser zwischen 7mm und 12mm.

- Den Stellanzeiger abziehen, die vier Schrauben lösen und die Haube abnehmen.

VERKABELUNG DER STROMZUFUHR UND DER STEUERUNG

- Überprüfen Sie am Stellantrieb, daß die angegebene Spannung auf dem Typenschild der Spannung des Netzes entspricht.
- Schließen Sie die Drähte an der Verbindung an, je nach gewünschter Steuerungsart. (bitte siehe Schaltplan S.13 oder 23 für POSI)
- Die richtige Funktion der Heizwiderstände zu gewährleisten, muss der Antrieb immer mit Strom versorgt sein

VERKABELUNG DER RÜCKMELDUNG (außer den Modellen POSI: S.21)

Unsere Stellantriebe sind serienmäßig mit 2 einfachen Endschalterkontakten versehen, welche normalerweise geöffnet sind (NO). Gemäß Voreinstellung dient die weiße Nocke dazu, die Öffnung zu erfassen (FC1) und die schwarze Nocke, um das Schliessen zu erfassen (FC2).

- Die Klemmen "Kunde" müssen mit biegesteif Anschlusskabel verkabelt werden. Sollte die Spannung 42v überschritten, so muss vom Anwender eine Sicherung in der Stromzufuhr vorgesehen werden.

- Lösen Sie die Kabelverschraubung und führen Sie das Kabel durch.
- Entfernen Sie 25mm der Ummantelung und legen Sie jeden Draht auf 8mm frei.
- Schließen Sie die Drähte gemäß dem nebenstehenden Schaltplan an der Klemmleiste an. (siehe Schaltplan S.13 oder S.23 für POSI)
- Die Kabelverschraubung wieder festziehen.

EINSTELLUNG DER ENDSCHALTERKONTAKTE

Der Stellantrieb wird im Werk voreingestellt. Berühren Sie die beiden unteren Nocken nicht, da sonst die Funktion des Stellantriebes gestört oder letzterer sogar beschädigt werden kann.

- Um die Position der Hilfskontakte einzustellen, drehen Sie die beiden oberen Nocken unter Zuhilfenahme eines geeigneten Schlüssels.
- Die Haube wieder anbringen, die vier Schrauben anziehen und den Stellanzeiger aufstecken.

RESPETAR LAS CONSIGNAS DE SEGURIDAD

Nuestros prensas a estopa aceptan un cable de diámetro entre 7mm y 12mm.

- Quitar el indicador visual, destornillar los 4 tornillos y quitar la tapa.

CABLEADO DE LA ALIMENTACIÓN

- Verificar sobre el actuador que el voltaje indicado sobre la etiqueta corresponde al voltaje de la red.
- Conectar los cables sobre el conector siguiente el modo de pilotaje deseado. (ver esquema p.13 o p.23 para los actuadores POSI)
- Para un buen funcionamiento de la resistencia anti-condensación, el actuador debe ser alimentado en permanencia

CABLEADO DE LA RECOPIA (salvo los modelos POSI : P.21)

Nuestros actuadores son equipados por defecto de 2 contactos de finales de carrera auxiliares secos normalmente abiertos o normalmente cerrados (Ver el esquema eléctrico DSBL0436). Por defecto, la leva blanca es utilizada para detectar la apertura (FC1) y la leva negra para detectar el cierre (FC2).

Los finales de carrera deben ser conectados con cables rígidos. Si la tensión aplicada es superiora a 42V, el usuario debe prever un fusible en la alimentación.

- Destornillar la prensa a estopa de derecho y pasar el cable .
- Quitar 25mm de tubo y desnudar cada cable de 8mm .
- Conectar los cables sobre el terminal según el esquema p.13 (o p.23 para los actuadotes POSI)..
- Reatornillar la prensa-estopa correctamente para garantizar una buena hermeticidad

REGLAJE DE LOS CONTACTOS DE FINALES DE CARRERA

El actuador es preajustado en fábrica. No tocar las 2 levas inferiores so pena de perturbar el funcionamiento del actuador incluso de dañarlo .

- Para ajustar la posición de los contactos auxiliares, hacer girar las 2 levas superioras utilizando la llave apropiada.
- Volver a montar la tapa, atornillar los 4 tornillos y montar el indicador visual .

SCHÉMA ÉLECTRIQUE

CABLAGE CLIENT SUGGERE / *SUGGESTED CUSTOMER WIRING*
EMPFOHLENE VERDRAHTUNG / CABLEADO SUGERIDO CLIENTE

Mode 3 points modulants
3-points modulating mode
3-Punkt-Modus
Modo 3 puntos modulantes

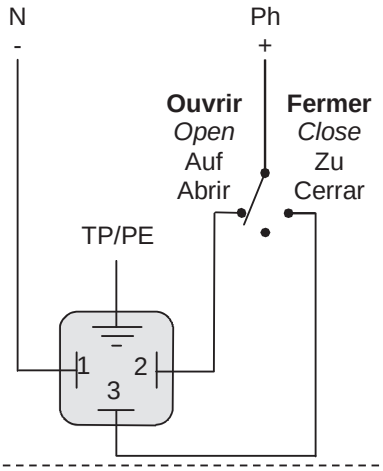

Mode Tout ou rien (ON/OFF)
On-Off mode
Auf-Zu Modus
Modo Todo o nada (ON-OFF),

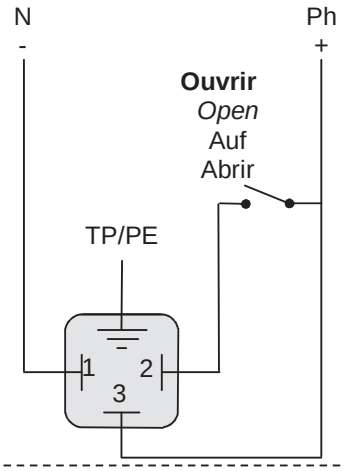

REP	**DESIGNATION /** BESCHREIBUNG DESIGNACIÓN
FC0	**Fin de course ouverture** *Open limit switch* Endschalter AUF Final de carrera apertura
FCF	**Fin de course fermeture** *Close limit switch* Endschalter ZU Final de carrera cierre
FC1	**Fin de course auxiliaire 1** *Auxiliary limit switch 1* Zusätzlicher Endschalter 1 Final de carrera auxiliar 1
FC2	**Fin de course auxiliaire 2** *Auxiliary limit switch 2* Zusätzlicher Endschalter 2 Final de carrera auxiliar 2
D1/D2	**Bornier report défaut (24V DC / 3A max)** *Failure report Terminal strip (24V DC / 3A max)* Fehlermeldung Klemmleiste (24V DC / 3A max) Terminal retorno de defecto (24V DC / 3A max)

RECOPIE / *FEEDBACK*
RÜCKMELDUNG

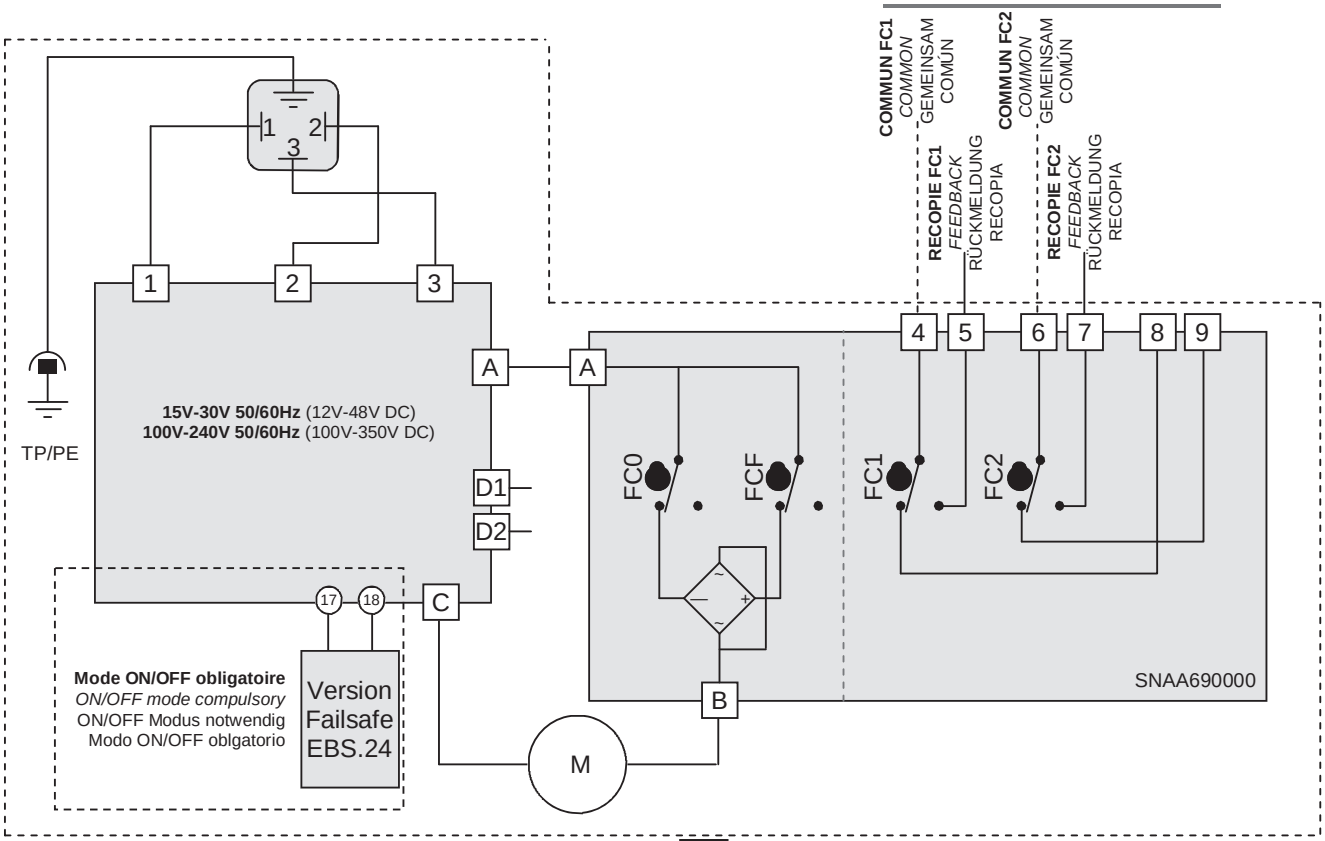

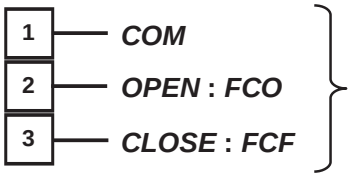

ALIMENTATION
POWER SUPPLY
SPANNUNGSVER-SORGUNG
ALIMENTACIÓN

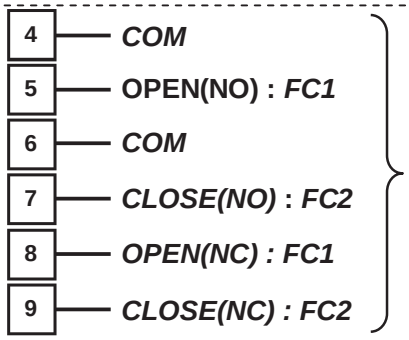

FINS DE COURSE
LIMIT SWITCH OUTPUT
RÜCKMELDUNG
RECOPIA

DSBL0436

La température du bornier peut atteindre 90°C
The terminal temperature can reach 90°C
Die Terminal-Temperatur kann bis zu 90°C erreichen.
La temperatura del Terminal de conexión puede alcanzar 90°C

Cartes d'alimentation et commande pour ER 10-20-35 / *Pilot and power supply cards for ER 10-20-35*
Steuerung und Stromversorgung Karten fur ER 10-20-35 / Tarjetas de alimentación y mando para ER 10-20-35

SNAA720100
15V-30V 50/60Hz (12V-48V DC)

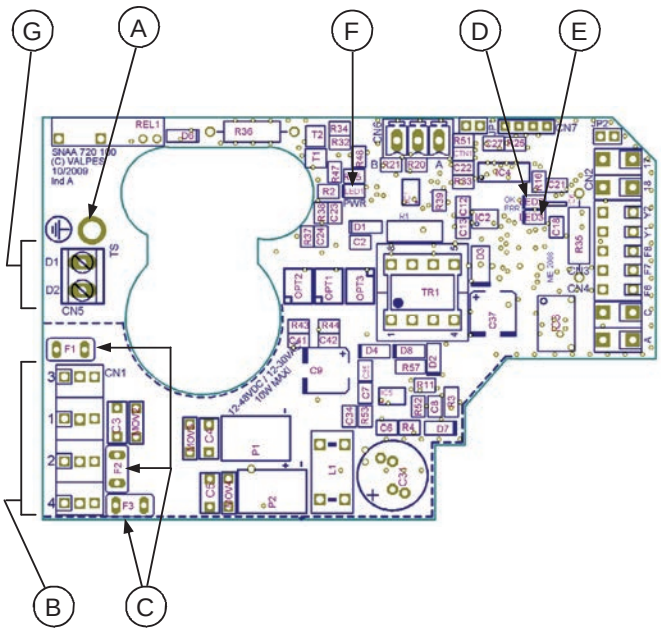

SNAA720000
100V-240V 50/60Hz (100V-350V DC)

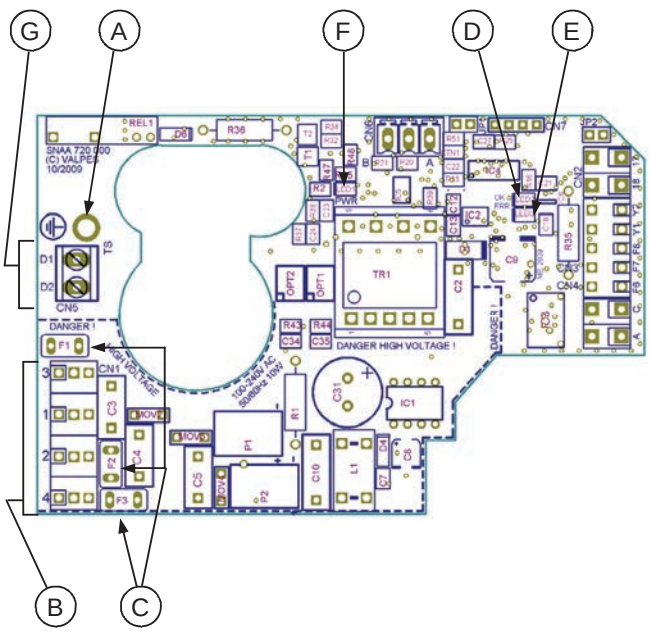

Rep.	Désignation	*Designation*	Bezeichnung	Designación
A	**Vis de terre**	*Earth screw*	Erde Schraube	Tornillo de tierra
B	**Bornier alimentation et commande**	*Pilot and power supply terminal strip*	Steuerung und Stromversorgung Verbindung	Terminal de alimentación y mando
C*	**Fusibles protection carte**	*Card protection fuses*	Karte Sicherung	Fusibles de protección de la tarjeta
D	**LED 2 : microprocesseur ok**	*LED 2 : microprocessor ok*	LED 2 : Mikroprozessor ok	Diodo 2 : microprocesador ok
E**	**LED 3 : défaut détecté**	*LED 3 : detected failure*	LED 3 : Aufgespürter Fehler	Diodo 3 : Defecto detectado
F	**LED 1 : présence tension**	*LED 1 : power presence*	LED 1 : Spannungsanwesenheit	Diodo 1: Presencia de tensión
G	**Bornier report défaut (24V DC - 3A max)**	*Failure reportTerminal strip (24V* DC - 3A max*)*	Fehlermeldung Klemmleiste (24V DC - 3A max)	Terminal retorno de defecto (24V DC - 3A max)

* **Fusibles pour carte multi-tensions** / *Fuses for multivolt card* / Sicherung für Multispannung Karte :
- **Carte** / *Card* / Karte **SNAA720100** : 2A / T 250V (Multicomp MST 2A 250V)
- **Carte** / *Card* / Karte **SNAA720000** : 500mA / T 250V (Multicomp MST500MA 250V)

** **Défauts possibles : limitation de courant, limitation thermique ou erreur programme**
=> vérifier que le couple de la vanne n'est pas supérieur au couple maximum fourni par l'actionneur
=> vérifier que l'actionneur ne dépasse pas la durée sous tension donnée (surchauffe possible)
Pour redémarrer l'actionneur, inverser le sens de marche ou l'éteindre et le remettre sous tension.

Possible defects : limitation of current, thermic limitation or program error
=> check that the valve torque is not superior to the maximum torque stand by the actuator
=> check that the actuator do not exceed the duty cycle indicated (possible overheat)
To re-start the actuator, reverse the sense of rotation or switch the power off and on.

Mögliche Fehler : Strombegrenzung, thermische Begrenzung oder Programmsfehler
=> Überprüfen sie das Drehmoment von dem Ventil
=> Überprüfen sie das die Einschaltdauer nicht grober als spezifisiert in die technischen Daten von den Antrieb ist
Um die Antrieb neue zu starten, muss man den Drehrichtung auswechseln oder die Spannung Auf/Zu Umschalten.

Defectos posibles : limitación de corriente, limitación térmica o error del programa
=> comprobar que el par de la valvula no es superior al par máxima soportado por el actuador
=> comprobar que el actuador no adelanta el tiempo bajo tensión dado (recalentamiento posible)
Para arrancar de nuevo el actuador, invertir la dirección del functionamiento o apagarlo y ponerlo bajo tensión.

Cartes d'alimentation et commande pour ER 35-60-100 / *Pilot and power supply cards for ER 35-60-100*
Steuerung und Stromversorgung Karten fur ER 35-60-100 / Tarjetas de alimentación y mando para ER 35-60-100

SNAA730100
15V-30V 50/60Hz (12V-48V DC)

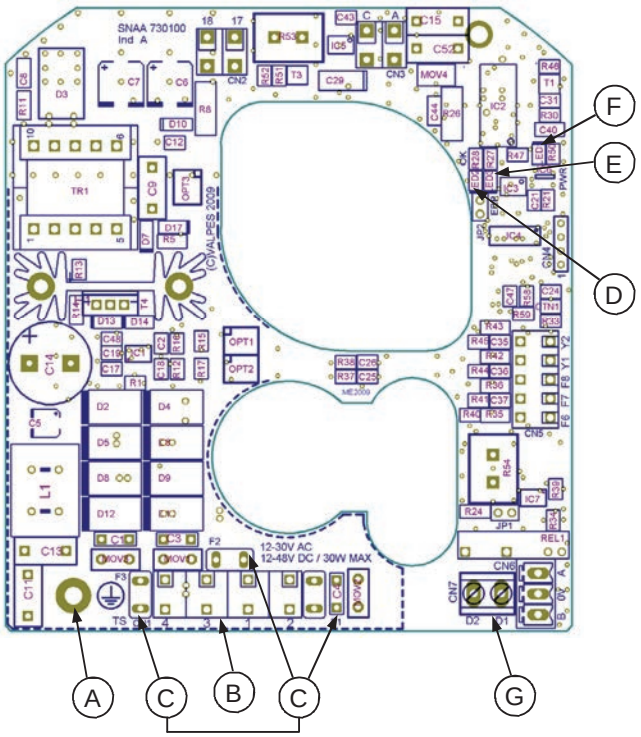

SNAA730000
100V-240V 50/60Hz (100V-350V DC)

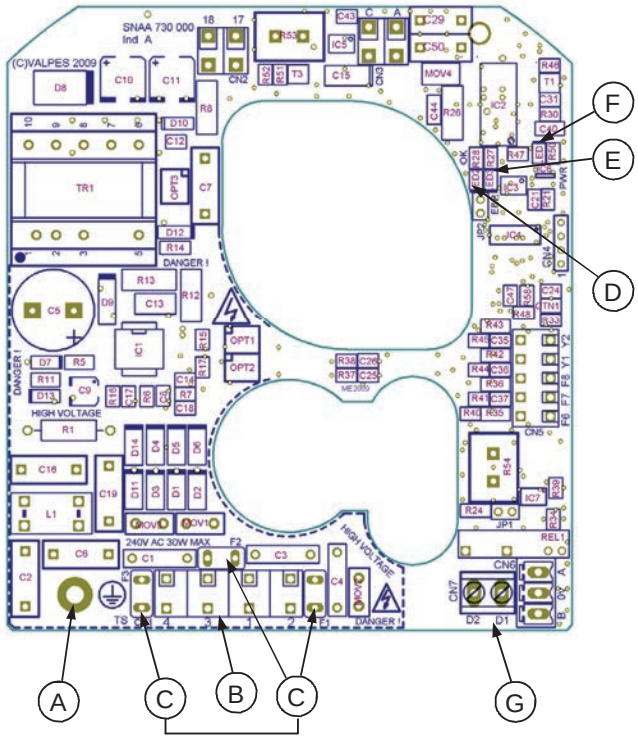

Rep.	Désignation	*Designation*	Bezeichnung	Designación
A	**Vis de terre**	*Earth screw*	Erde Schraube	Tornillo de tierra
B	**Bornier alimentation et commande**	*Pilot and power supply terminal strip*	Steuerung und Stromversorgung Verbindung	Terminal de alimentación y mando
C*	**Fusibles protection carte**	*Card protection fuses*	Karte Sicherung	Fusibles de protección de la tarjeta
D	**LED 2 : microprocesseur ok**	*LED 2 : microprocessor ok*	LED 2 : Mikroprozessor ok	Diodo 2 : microprocesador ok
E**	**LED 3 : défaut détecté**	*LED 3 : detected failure*	LED 3 : Aufgespürter Fehler	Diodo 3 : Defecto detectado
F	**LED 1 : présence tension**	*LED 1 : power presence*	LED 1 : Spannungsanwesenheit	Diodo 1: Presencia de tensión
G	**Bornier report défaut (24V DC - 3A max)**	*Failure reportTerminal strip (24V* DC - 3A max*)*	Fehlermeldung Klemmleiste (24V DC - 3A max)	Terminal retorno de defecto (24V DC - 3A max)

* **Fusibles pour carte multi-tensions** / *Fuses for multivolt card* / Sicherung für Multispannung Karte :
- **Carte** / *Card* / Karte **SNAA730100** : 5A / T 125V (Littelfuse 39615000000)
- **Carte** / *Card* / Karte **SNAA730000** : 3,15A / T 250V (Multicomp MST 3,15A 250V)

**** Défauts possibles : limitation de courant, limitation thermique ou erreur programme**
=> vérifier que le couple de la vanne n'est pas supérieur au couple maximum fourni par l'actionneur
=> vérifier que l'actionneur ne dépasse pas la durée sous tension donnée (surchauffe possible)
Pour redémarrer l'actionneur, inverser le sens de marche ou l'éteindre et le remettre sous tension.

Possible defects : limitation of current, thermic limitation or program error
=> check that the valve torque is not superior to the maximum torque stand by the actuator
=> check that the actuator do not exceed the duty cycle indicated (possible overheat)
To re-start the actuator, reverse the sense of rotation or switch the power off and on.

Mögliche Fehler : Strombegrenzung, thermische Begrenzung oder Programmsfehler
=> Überprüfen sie das Drehmoment von dem Ventil
=> Überprüfen sie das die Einschaltdauer nicht grober als spezifisiert in die technischen Daten von den Antrieb ist
Um die Antrieb neue zu starten, muss man den Drehrichtung auswechseln oder die Spannung Auf/Zu Umschalten.

Defectos posibles : limitación de corriente, limitación térmica o error del programa
=> comprobar que el par de la valvula no es superior al par máxima soportado por el actuador
=> comprobar que el actuador no adelanta el tiempo bajo tensión dado (recalentamiento posible)
Para arrancar de nuevo el actuador, invertir la dirección del functionamiento o apagarlo y ponerlo bajo tensión.

FAILSAFE - Description et caractéristiques

FAILSAFE - Description and spécifications **15**
FAILSAFE - Beschreibung und Eigenschaften **15**
FAILSAFE - Descripción y características **15**

15

FAILSAFE - Schéma électrique

FAILSAFE - Electric wiring **16**
FAILSAFE - Schaltplan **16**
FAILSAFE - Esquema eléctrico **16**

16

Actionneurs avec système de sécurité intégré (mode Tout ou Rien obligatoire)
Actuator with failsafe integrated security system (ON/OFF mode compulsory)
Stellantriebe mit Sicherheitsblock (AUF/ZU Modus notwendig)
Actuadores con systéma de seguridad (Modo ON/OFF obligatorío)

Le modèle failsafe intègre un bloc batterie de secours piloté par une carte électronique. Sa fonction est de prendre le relais en cas de coupure d'alimentation aux bornes 1, 2 et 3 de l'actionneur. Le modèle failsafe peut être configuré en normalement ouvert (NO) ou normalement Fermé (NF) selon l'application client.
La carte pilotant la batterie gère le cycle de charge et vérifie l'état de la batterie. Si un défaut est détecté au niveau de la batterie, un contact sec entre les bornes 65 et 66 s'ouvre. Si ce contact est relayé par le client il a ainsi la possibilité de détecter un défaut sans ouvrir l'actionneur et de prévoir le remplacement de la batterie.
Le modèle failsafe fonctionne en câblage ON/OFF.
Un autre schéma de câblage est possible en utilisant les bornes 1,2, 3 et 65, 66 , l'avantage de ce câblage est que le pilotage moteur n'est autorisé que lorsque le contact entre 65 et 66 est fermé et donc le bloc batterie en état de marche.

Failsafe option integrate battery pack monitored by electronic board in the actuator. Its function is to relay in case of power supply failure on terminal PIN 1,2 and 3 of the actuator. The fail safe option could be set on different position like normally open (NO) or normally close (NC) depends on customer application.
The electronic board monitors the battery pack and check the status of battery (cycle load and failure)
If a battery failure is detected , a contact on PIN 66 and 66 switch off .If customer use this contact he could be aware that there is a failure on battery in the actuator without remove cover and plan the replacement.
Fail safe option requiered ON/OFF mode.
An another wiring diagram is also available using terminal PIN 1, 2, 3 and 65, 66. The advantage of it is actuator could not ne derive if failure battery pack is detected

---

FAILSAFE-Modelle beinhalten einen Batteriesatz, der von der elektronischen Karte im Antrieb gesteuert wird. Seine Aufgabe ist, einen Spannungsausfall an Klemme 1,2 und 3 zu überbrücken. Die FAILSAFE-Position kann zwischen ÖFFNER (NC) oder SCHLIESSER (NO) abhängig vom Verwendungszweck frei gewählt werden.
Die elektronische Karte prüft stets den Batteriesatz (Ladezustand bzw. Ausfall). Wenn ein Batterieausfall erkannt wird, kann dieser über einen an Klemme 65 und 66 angelegten Schaltkreis signalisiert werden. Somit kann der Anwender den Zustand der Batterie überwachen, ohne den Antriebsdeckel entfernen zu müssen.
Die FAILSAFE-Option ist sowohl im AUF/ZU-Modus als auch im 3-Punkt-Modulier-Modus verwendbar.
Durch Spannungsversorgung an Klemme 1, 2, 3 über Klemme 65 und 66 kann sichergestellt werden, daß der Antrieb bei schlechtem Batteriezustand nicht mehr die Sicherheitsposition verlässt.

El modelo failsafe integra un bloque de baterías de seguridad, pilotado por una tarjeta electrónica. Su función es de tomar el relevo en caso de apagón a los conectadores 1, 2 y 3 del actuador. El modelo failsafe puede ser configurado en normalmente abierto (NO) o normalmente cerrado (NF), según la utilización del cliente.
La tarjeta comprueba el ciclo de carga y el estado de la batería. Si un defecto es detectado al nivel de la batería, un contacto seco entre los conectadores 65 y 66 se abre. Si este contacto es utilizado, el cliente tiene la posibilidad de detectar un defecto sin abrir el actuador y así prever el reemplazo de la batería.
El modelo failsafe funciona con el modo ON/OFF.
Un otro tipo de cableado es posible utilizando los conectadores 1, 2, 3 y 65, 66, la ventaja de este cableado es que el pilotaje del motor es autorizado solamente cuando el contacto entre 65 y 66 es cerrado, luego, que el bloque de baterías en estado de funcionamiento.

Tension / *Voltage* / Spannung / Voltaje	18V DC
Courant nominal / *Nominal current* / Nennstrom / Corriente nominal	0,8A
Courant maximal / *Maximal current* / Max. Strom / Corriente máximo	2,4A
Durée initiale de charge / *Initial loading time* / Ladezeit / Duración de cargada	14h max
Relais de report d'état de la charge / *Load state feedback relay* Rückmelderelais für Ladezustand /	24V DC - 1A max
Température / *Temperature* / Temperatur / Temperatura	-10°C à/*to*/bis/a 40°C

CARTE ELECTRONIQUE CHARGEUR / *LOADING ELECTRONIC CARD*
LOADER ELECTRONISCHE KARTE / TARJETA ELÉCTRONICA CARGADORA

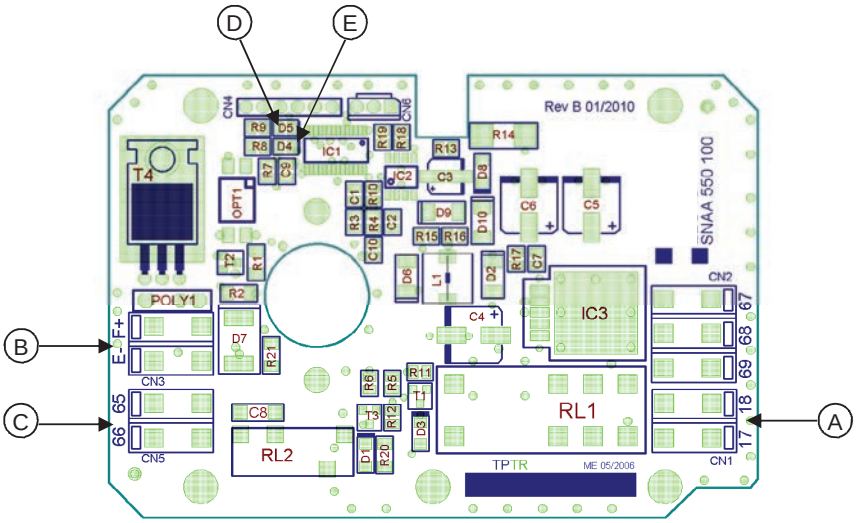

Rep.	Désignation	*Designation*	Bezeichnung	Designación
A	**Connecteur 18V DC**	*18V DC terminal strip*	18V DC Verbindung	Conectador 18V DC
B	**Connecteur bloc batterie**	*Block battery terminal strip*	Batterie Block Verbindung	Conectador de las baterías
C	**Connecteur report d'état (défaut de charge/batterie)**	*State feedback terminal strip (load or battery failure)*	Verbindung für Rückmeldung (Ladezustand bzw. Ausfall)	Conectador del retorno de information (
D*	**LED verte**	*Green LED*	Grüne LED	LED verde
E**	**LED rouge**	*Red LED*	Rote LED	LED rojo

* **LED verte allumée : fonctionnement sur réseau / LED verte clignotante : fonctionnement sur batteries (max. 3min)**
Green *LED lighting : functioning on network / Green LED twinkling : functioning on battery (max. 3min)*
Grüne LED leuchtet auf : Betrieb auf Netz / Grüne LED blinkt auf : Betrieb auf Batterie (max. 3min)
LED verde enciendo : funcionamento conectado sobre el red eléctrico / LED verde parpadeo : funcionamento con baterías (max. 3min)

** **LED rouge éteinte : batteries chargées / LED rouge clignotante : batteries en charge (max. 14h)**
Red LED switched off : loaded battery / Red LED twinkling : battery loading (max. 14h)
Rote LED leuchtet auf : beladene Batterie / Rote LED blinkt auf : Batterie beladet (max. 14h)
LED rojo apagado : baterías cargadas / LED rojo parpadeo : baterías se cargan (max. 14h)

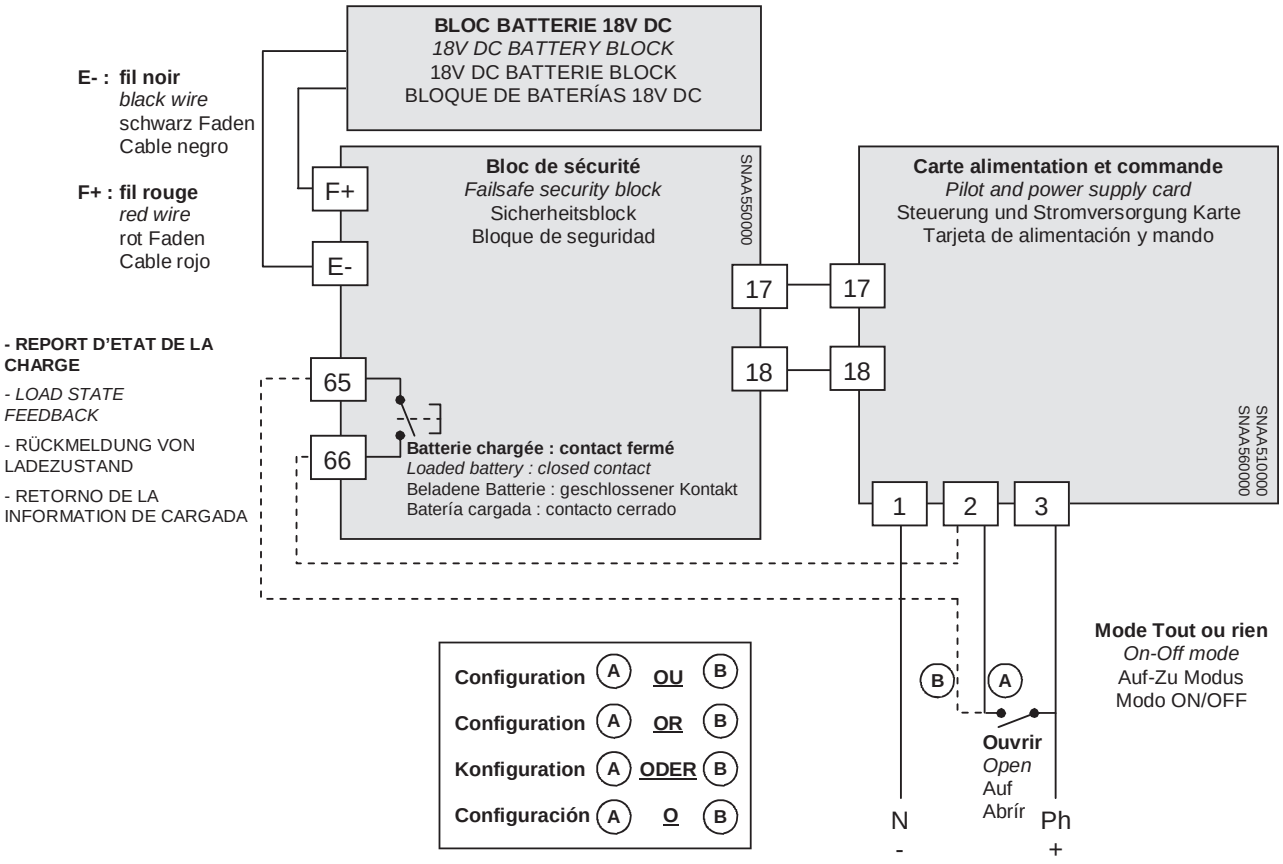

<u>Fermé par défaut</u> / *Pre-set to closed* / Voreinstellung geschlossen / Cerado por defecto

<u>Configuration A ou B :</u>

A- Mode standard : en cas de pilotage de l'actionneur avec un automate, le report d'état de la charge peut être connecté à celui-ci pour plus de sécurité.

B- Mode de sécurité totale (en utilisant le relais de report d'état, bornes 65 et 66) : l'actionneur n'ouvrira la vanne que si le bloc de sécurité est opérationnel (charge suffisante, carte initialisée).

<u>Configuration A or B :</u>

A- Standard mode : *when piloting the actuator with an automat (PLC), the load state feedback can be connected to it for more safety.*

B- Total security mode *(using the feedback relay, terminals 65 and 66) : the actuator will open only if the security block is operational (sufficient loading, initialized card).*

<u>Konfiguration A oder B :</u>

A- Standard Modus : Im Fälle der Steuerung des Antrieb mit einer Automat kann der Rückmeldung des Batteriesladung an diesen hier für Sicherheit angeschlossen sein.

B- Total Sicherheit Modus (mit benutzung des Rückmeldungsrelais, Klemmen 65 und 66) : der Antrieb wird den Hahn nur öffnen wenn das Sicherheitsblock geladen ist (gemïgenede Ladung, initializierte Karte).

<u>Configuración A o B :</u>

A - Modo estándar : en caso de un pilotaje del actuador con un autómata, el retorno de la información de carga puede ser conectado a éste para más de seguridad.

B - Moda de seguridad total (utilizando el relé de retorno de estado, conectadores 65 y 66): el actuador abrirá la válvula solazmente si el bloque de seguridad es operativo (carga suficiente, tarjeta inicializada).

POSI - Carte électronique

POSI - Electronic card 18
POSI - Elektronische Karte 18
POSI - Tarjeta electricónica 18

18

POSI - Branchements électriques

POSI - Electric connections 19
POSI - Elektrische Verbindung 19
POSI - Conexiones eléctricas 19

19

POSI - Schéma électrique

POSI - Electric wiring 20
POSI - Schaltplan 21
POSI - Esquema eléctrico 21

20

POSI - Séquence de paramétrage

POSI - Parameter selection sequence 23
POSI - Parametrisierungsschritte 24
POSI - Secuencia de reglaje 25

22

Différents types de consigne (pilotage carte Bornier N°15 et N°16)
Nos cartes sont paramétrables en usine sur demande. Le signal de commande (consigne) et signal de recopie peuvent être de nature différente (courant ou tension). **Sans aucune information du client les cartes sont paramétrées en courant 4-20mA (consigne+recopie client)**

Pilotage en 0-10V et 0-20mA :
Lors d'un événement extérieur, absence de consigne (coupure accidentelle câble par ex) mais en présence de l'alimentation carte.
La convention veut que l'actionneur se retrouve en une position définie (vanne ouverte ou fermée). En standard nos actionneurs se fermeront en absence de consigne, mais d'autres états sont possibles sur demande

Pilotage en 4-20mA.
La convention veut que l'actionneur reste dans sa position lors de la coupure de la consigne (coupure accidentelle câble par ex) mais en présence de l'alimentation carte.
Lors du rétablissement de la consigne l'actionneur se repositionne automatiquement selon la valeur de la consigne

---

Various control types (control signal on terminals N°15 and N°16)
On request, our cards can be set in factory. The consign and the feedback signal can have different forms (current or voltage).
Without any information from the customer, the cards are set for current 4-20mA (control + feedback signal)

Control in modes 0-10V and 0-20mA
In case of outside event, absence of control signal (accidental wires cut for example) but in presence of power, the actuator will travel to defined position (open or closed valve).
In standard our actuators will close themselves in absence of control signal but there are other possibilities on request.

Control in mode 4-20mA
In case of outside event, absence of control signal (accidental wires cut for example) but in presence of power, the actuator will stay in its position.
In the both cases, when the control signal is restored, the actuator reach automatically the position corresponding to control signal value.

Verschiedene Steuersignale (über Anschlüsse 15 und 16)

Unsere Karten können nach Bedarf parametriert werden. Ein– und Ausgangssignal können dabei unabhängig voreinander gewählt werden (Strom– oder Spannungssignal). **Standardmäßige Voreinstellung ist 4-20mA für Ein– und Ausgangssignal.**

Ansteuerung mit 0-10V oder 0-20mA:
Bei Ausfall des Steuersignals (z.B. Kabelbruch) aber Aufrechterhaltung der Spannungsversorgung fährt der Antrieb in die voreingestellte Sicherheitsposition (Auf oder Zu). **Standardmäßige Voreinstellung ist « Schliesser ».**

Ansteuerung mit 4-20mA:
Bei Ausfall des Steuersignals (z.B. Kabelbruch) aber Aufrechterhaltung der Spannungsversorgung verharrt der Antrieb in seiner letzten Position.
In beiden Fällen fährt der Antrieb automatisch in die dem Steuersignal entsprechende Position, sobald es wieder anliegt.

Diferentes tipos de mando – Bornes N°15 y N°16)
Nuestras tarjetas, a petición, pueden ser parametrizadas en fábrica. El señal de mando y el señal de recopia pueden ser de tipos diferentes, corriente o tensión. **Sin ninguna información del cliente las tarjetas son parametrizadas en el modo corriente 4-20mA (mando + recopia cliente)**

Pilotaje en 0-10V y 0-20mA :
En el caso de un acontecimiento exterior, ausencia de mando (corte accidental del cableado por ejemplo) pero en presencia de la alimentación de la tarjeta, el actuador coloca la válvula en una posición definida (válvula abierta o cerrada).
Por defecto, nuestros actuador se cerrarán en ausencia de mando pero otras posibilidades son posibles a petición.

Pilotaje en 4-20mA.
En el caso de un acontecimiento exterior, ausencia de mando (corte accidental del cableado por ejemplo) pero en presencia de la alimentación de la tarjeta, el actuador se queda en la misma posición.
Cuando se restablece el mando, el actuador se reposiciona automáticamente según el valor del mando

Carte de positionnement P6 (0-20mA / 4-20mA / 0-10V)
P6 positioning card (0-20mA / 4-20mA / 0-10V)
P6 Regelkarte (0-20mA / 4-20mA / 0-10V)
Tarjeta de posicionamiento P6 (0-20mA / 4-20mA / 0-10V)

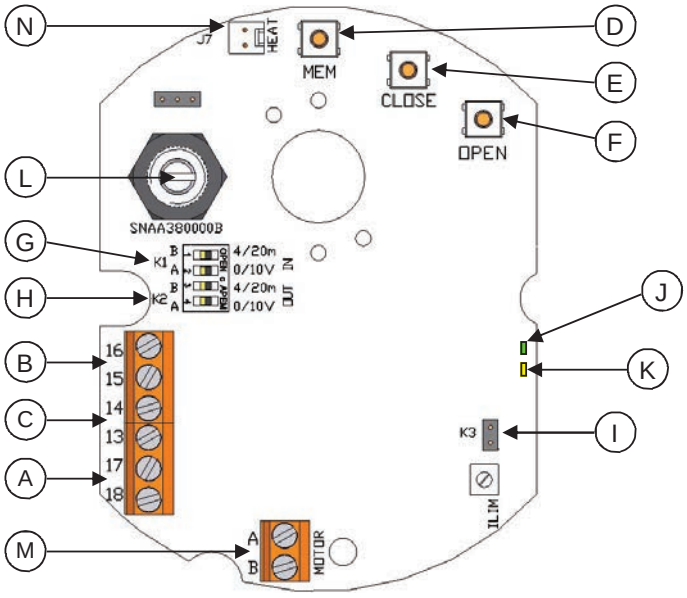

Rep.	Désignation	*Designation*
A	**Bornier d'alimentation 24V AC/DC**	*24V AC/DC power supply terminal trip*
B	**Bornier de consigne**	*Instruction terminal trip*
C	**Bornier de recopie**	*Feed back terminal trip*
D	**Bouton de réglage MEM**	*Adjustment button MEM*
E	**Bouton de réglage CLOSE**	*Adjustment button CLOSE*
F	**Bouton de réglage OPEN**	*Adjustment button OPEN*
G	**Cavalier K1**	*K1 shunt*
H	**Cavalier K2**	*K2 shunt*
I	**Cavalier K3**	*K3 shunt*
J	**LEDs verte et rouge**	*Green and red LEDs*
K	**LED jaune : présence tension**	*Yellow LED : power supply indication*
L	**Potentiomètre**	*Potentiometer*
M	**Connexion moteur**	*Motor connexion*
N	**Connecteur résistance de réchauffage**	*Heating resistor connector*

Rep.	Bezeichnung	Designación
A	24V AC/DC Spannungsversorgung	Terminal de alimentación 24V AC/DC
B	Anschlussklemmen des Signalgebers	Terminal de mando
C	Anschlussklemmen der Rückmeldung	Terminal de recopia
D	Einstellknopf MEM	Pulsador de reglaje MEM
E	Einstellknopf CLOSE	Pulsador de reglaje CLOSE
F	Einstellknopf OPEN	Pulsador de reglaje OPEN
G	K1 Steckbrücke	Grapa K1
H	K2 Steckbrücke	Grapa K2
I	K3 Steckbrücke	Grapa K3
J	Grüne und rote LEDs	LEDs verdes y rojos
K	Gelb LED : Stromversorgung Anzeige	LED amarillo : Presencia de tención
L	Potentiometer	Potenciómetro
M	Motor Zusammenhang	Conexión del motor
N	Heizwiderstandsverbindung	Conector de la resistencia de calefacción

ACTIONNEUR DEJA PRE-REGLE EN USINE

CABLAGE CONSIGNE ET RECOPIE DE LA CARTE P6

Afin de limiter les perturbations électromagnétiques, l'utilisation de câbles blindés est obligatoire (câbles supérieurs à 3m).

- Dévisser le presse-étoupe droit et passer le câble.
- Connecter la consigne entre les bornes 15 et 16 (annexe p.20 rep.B).
  La borne 15 est la polarité négative (-) et la borne 16 la polarité positive (+).
- Connecter la recopie entre les bornes 13 et 14 (annexe p.20 rep.C).
  La borne 13 est la polarité positive (+) et la borne 14 la polarité négative (-).
- Revisser le presse-étoupe (s'assurer du bon remontage de celui-ci afin de garantir une bonne étanchéité).

Montage départ usine : par défaut, consigne et recopie en 4-20mA, sens normal.
Pour reparamétrer la carte : voir page 24, « Séquence de paramétrage ».
Pour vérifier le bon fonctionnement de la carte : voir page 24, « Mode de fonctionnement normal ».

ACTUATOR PRE-SET IN FACTORY

POSITIONING CARD WIRING (OUTPUT AND INPUT SIGNAL)

In order to avoid electromagnetic perturbations, it is compulsory to use shielded cables (cables longer than 3m).

- Unscrew the right gland and pass the cable.
- Connect the input signal between terminals 15 and 16 (attached p.20 mark.B)..
  Terminal 15 is the negative polarity (-) and terminal 16 is the positive polarity (+).
- Connect the output signal between terminals 13 and 14.(attached p.20 mark.B)..
  Terminal 13 is the positive polarity (+) and terminal 14 is the negative polarity (-).
- Tighten the cable gland (Ensure that it's well mounted to guaranty the proofness).

The feedback must be connect with rigid wires. If the applied voltage is higher than 42V, the user must foresee a fuse in the power supply line.
Factory setting : by default, 4-20mA input and output signals with normal rotation sense.
To proceed to a new setting of the card : please see page 25, "Parameter selection sequence".
To check the proper operation of the card : please see page 25, "Normal operating mode".

STELLANTRIEB IST SCHON IM WERK VOREINGESTELLT

REGELUNGKARTE VERKABELUNG (SIGNALMELDUNG UND RUCKMELDUNG)

Um elektromagnetische Störungen zu vermeiden, müssen abgeschirmte Kabel benutzt werden (Kabel länger als 3m).

- Lösen Sie die Kabelverschraubung und führen Sie das Kabel durch.
- Verkabeln Sie den Signalgeber zwischen den Klemmen 15 und 16.
  Die Klemme 15 ist negativ gepolt (-) und die Klemme 16 positiv (+).
- Verkabeln Sie den Positionrückmelder zwischen den Klemmen 13 und 14.
  Die Klemme 13 ist positiv gepolt (+) und die Klemme 14 negativ (-).
- Die Kabelverschraubung wieder befestigen.

Aufbau ab Werk : Voreingestellt, Signalgeber und Rückmeldung 4-20mA, im normal Drehrichtung.
Um die Karte wieder zu programmieren : siehe Seite 26, « Parametrisierungsschritte ».
Um die richtige Arbeitsweise zu prüfen : siehe Seite 26, « Normalbetrieb ».

ACTUADOR YA PREREGLADO EN FÁBRICA

CABLEADO, MANDO Y RECOPIA DE LA TARJETA P6

Al fin de limitar las perturbación electromagnéticas, la utilización de cables blindados es obligatoria (cables de longitud más que 3m).

- Destornillar la prensa a estopa de derecho y pasar el cable .
- Conectar el mando entre los bornes 15 y 16. (anexo p.20 Ref. B)
  El borne 15 es la polaridad negativa (-) y el borne 16 la polaridad positiva (+).
- Conectar la recopia entre los bornes 13 y 14. (anexo p.20 Ref. C).
  El borne 13 es la polaridad positiva (+) y el borne 14 la polaridad negativa (-).
- Reatornillar la prensa-estopa correctamente para garantizar una buena hermeticidad

Montaje a la salida de fábrica : Por defecto, mando y recopia en 4-20mA, dirección normal.
Para ajustar de nuevo la tarjeta : ver página 27, « Secuencia de reglaje ».
Para verificar el buen funcionamiento de la tarjeta : ver página 27, « Modo de funcionamiento normal ».

POSI - SHÉMA ÉLECTRIQUE

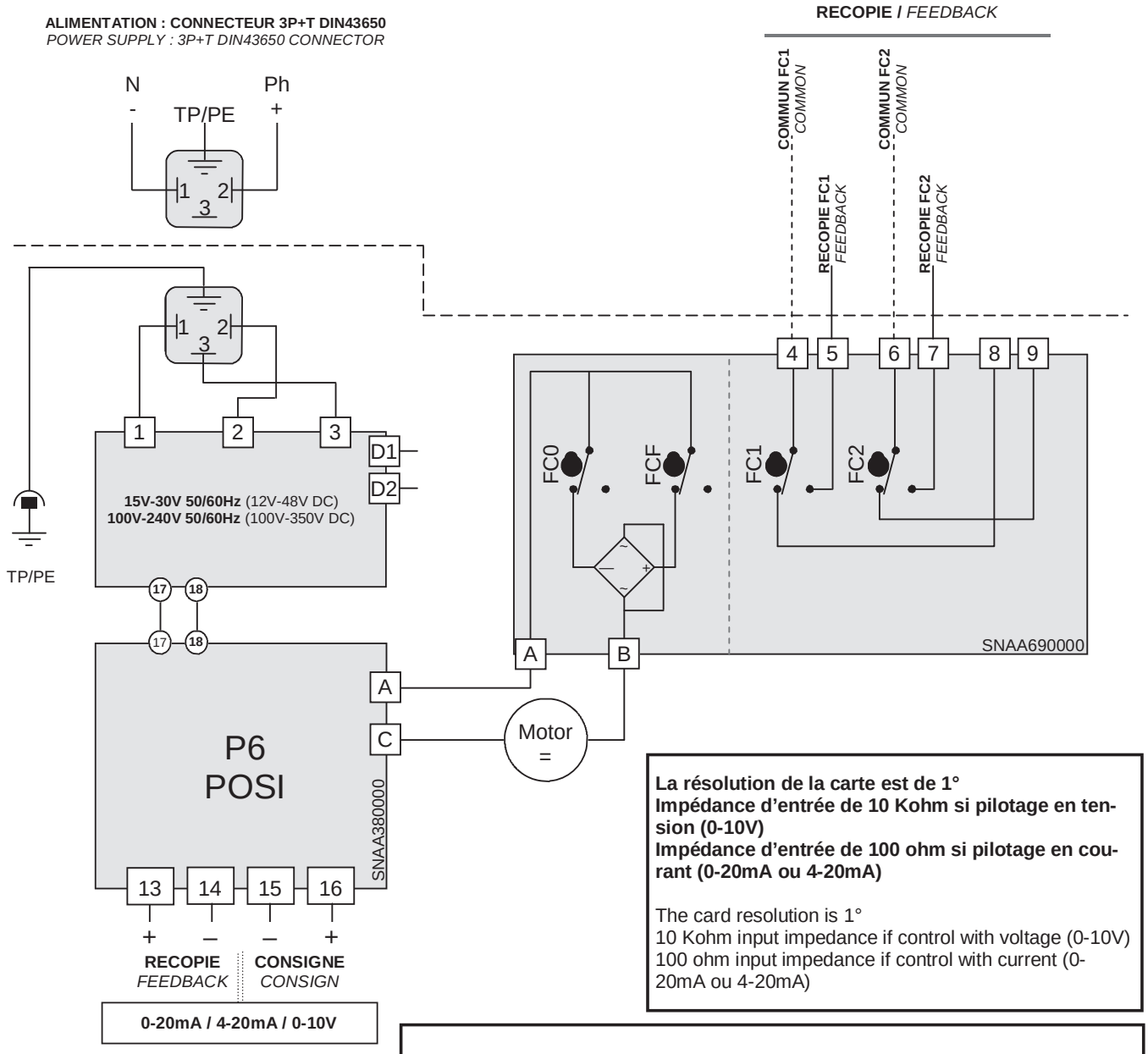

La résolution de la carte est de 1°
Impédance d'entrée de 10 Kohm si pilotage en tension (0-10V)
Impédance d'entrée de 100 ohm si pilotage en courant (0-20mA ou 4-20mA)

The card resolution is 1°
10 Kohm input impedance if control with voltage (0-10V)
100 ohm input impedance if control with current (0-20mA ou 4-20mA)

REP	DESIGNATION
FC0	**Fin de course ouverture** *Open limit switch*
FCF	**Fin de course fermeture** *Close limit switch*
FC1	**Fin de course auxiliaire 1** *Auxiliary limit switch 1*
FC2	**Fin de course auxiliaire 2** *Auxiliary limit switch 2*
D1/D2	**Bornier report défaut (24V DC / 3A max)** *Failure report Terminal strip (24V DC / 3A max)*

La tension de pilotage doit être de type T.B.T.S. (Très Basse Tension de Sécurité)
The control voltage must be .S.E.L.V. (Safety Extra Low Voltage)

La température du bornier peut atteindre 90°C
The terminal temperature can reach 90°C

La recopie doit être connecté avec des câbles rigides. Si la tension appliquée est supérieure à 42V, l'utilisateur doit prévoir un fusible dans la ligne d'alimentation.
The feedback must be connect with rigid wires. If the applied voltage is higher than 42V, the user must foresee a fuse in the power supply line.

Pour une utilisation avec de grandes longueurs de câbles, le courant induit généré par les câbles ne doit pas dépasser 1mA
For a use with a long power supply wiring, the induction current generated by the wires musn't be higher than 1mA

Les câbles utilisés doivent être rigides (tensions pour la recopie : 4 à 250V AC/DC)
The used wires must be rigid (feedback voltages : 4 to 250V AC

SPANNUNGSVERSORGUNG : 3P+T DIN43650 VERBINDUNG
ALIMENTACIÓN : CONECTOR 3P+T DIN43650

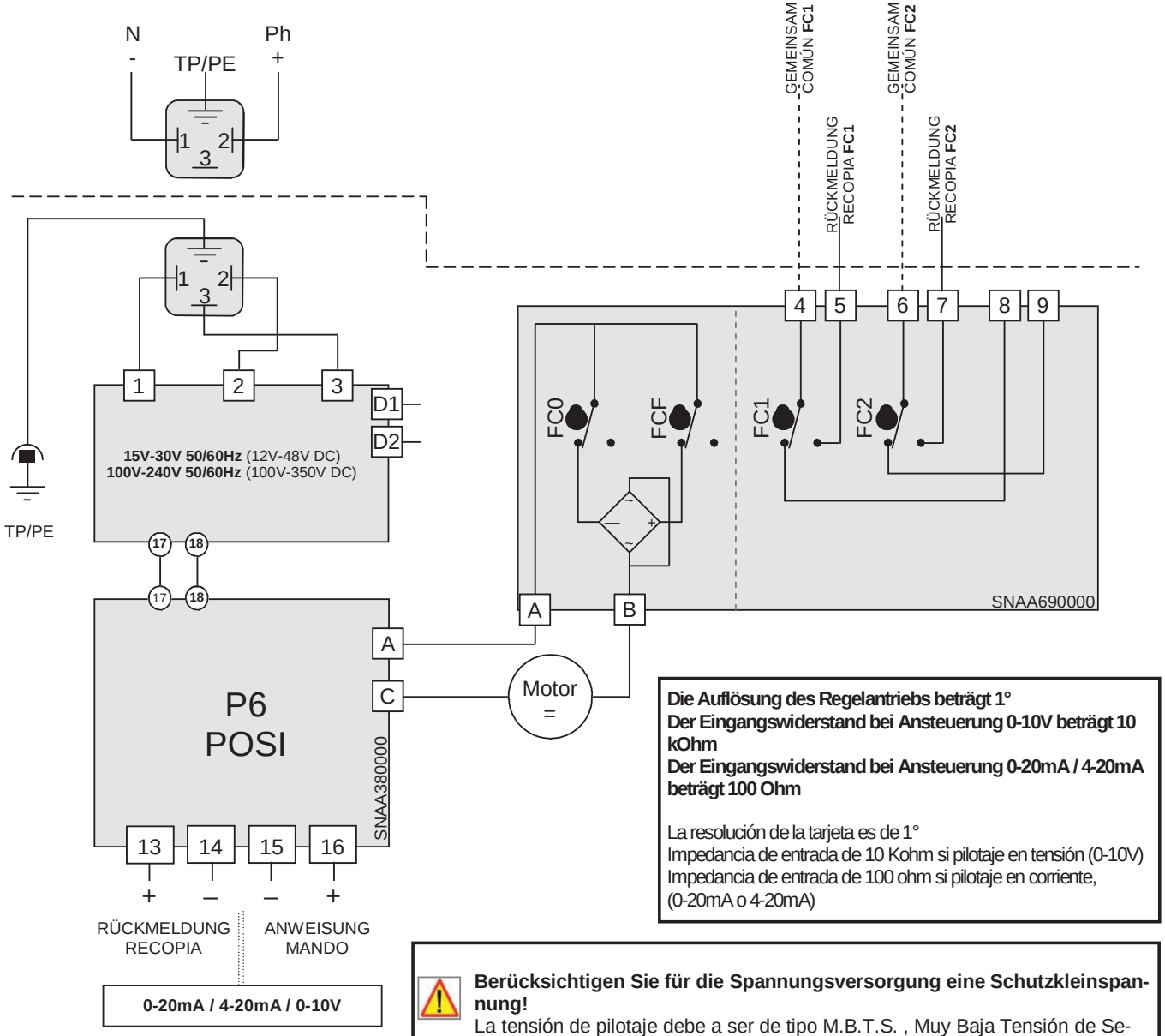

Die Auflösung des Regelantriebs beträgt 1°
Der Eingangswiderstand bei Ansteuerung 0-10V beträgt 10 kOhm
Der Eingangswiderstand bei Ansteuerung 0-20mA / 4-20mA beträgt 100 Ohm

La resolución de la tarjeta es de 1°
Impedancia de entrada de 10 Kohm si pilotaje en tensión (0-10V)
Impedancia de entrada de 100 ohm si pilotaje en corriente, (0-20mA o 4-20mA)

REP	BESCHREIBUNG DESIGNACIÓN
FC0	Endschalter AUF Final de carrera apertura
FCF	Endschalter ZU Final de carrera cierre
FC1	Zusätzlicher Endschalter 1 Final de carrera auxiliar 1
FC2	Zusätzlicher Endschalter 2 Final de carrera auxiliar 2
D1/D2	Fehlermeldung Klemmleiste (24V DC / 3A max) Terminal retorno de defecto (24V DC / 3A max)

Berücksichtigen Sie für die Spannungsversorgung eine Schutzkleinspannung!
La tensión de pilotaje debe a ser de tipo M.B.T.S. , Muy Baja Tensión de Seguridad,

Die Terminal-Temperatur kann bis zu 90°C erreichen
La temperatura del Terminal de conexión puede alcanzar 90°C

Die Klemmen "Kunde" müssen mit biegesteif Anschlusskabel verkabelt werden. Sollte die Spannung 42v überschritten, so muss vom Anwender eine Sicherung in der Stromzufuhr vorgesehen werden.
La recopia debe ser conectada con cables rígidos. Si la tensión aplicada es superiora a 42V, el usuario debe prever un fusible en la alimentación.

Bei Verwendung einer langen Zuleitung für die Spannungsversorgung darf die Induktionsspannung der Leitung nicht größer als 1mA sein.
Para una utilización con los grandes largo de cables, la corriente induce engendrado por los cables no debe adelantar 1mA

Die Anschlusskabel müssen biegesteif sein (Rückmeldespannungen 4 bis 250V AC/DC)
Los cables eléctricos utilizados deben ser rígidos (tención para el señal de retorno : 4 hasta 250V AC/DC)

SEQUENCES DE PARAMETRAGE

1 Positionnement des cavaliers K1, K2 et K3

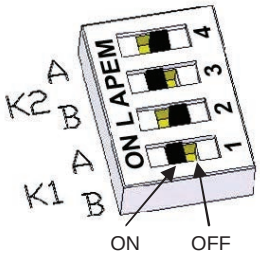

- Positionner les cavaliers d'après le tableau suivant (avant chaque modification, mettre la carte hors tension) :

Consigne	Recopie	Cavalier K1		Cavalier K2		Cavalier K3
		A	B	A	B	
0-10V	**0-10V**	ON	OFF	ON	OFF	OFF
0-10V	**0-20mA**	ON	OFF	OFF	ON	OFF
0-10V	**4-20mA**	ON	OFF	OFF	ON	ON
0-20mA	**0-10V**	OFF	ON	ON	OFF	OFF
0-20mA	**0-20mA**	OFF	ON	OFF	ON	OFF
0-20mA	**4-20mA**	OFF	ON	OFF	ON	ON
4-20mA	**0-10v**	OFF	ON	ON	OFF	OFF
4-20mA	**0-20mA**	OFF	ON	OFF	ON	OFF
4-20mA	**4-20mA**	OFF	ON	OFF	ON	ON

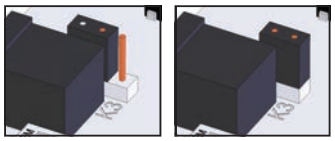

K3 OFF K3 ON

2 Choix du sens de la vanne



2.1 Sens normal (par défaut)
- Appuyer sur **OPEN** et mettre la carte sous tension en maintenant le bouton enfoncé.
- La **LED verte s'allume**. Relâcher le bouton **OPEN.**
- Débrancher la carte.



2.2 Sens inverse
- Appuyer sur **CLOSE** et mettre la carte sous tension en maintenant le bouton enfoncé.
- La **LED rouge s'allume**. Relâcher le bouton **CLOSE.**
- Débrancher la carte.

3 Choix du type de consigne



3.1 Consigne en tension 0-10V
- Appuyer sur **MEM** et mettre la carte sous tension en maintenant le bouton enfoncé.
- La **LED rouge clignote 3 fois**. Relâcher le bouton.
- Débrancher la carte.



3.2 Consigne en courant 0-20mA
- Appuyer sur **MEM** et **OPEN** et mettre la carte sous tension en maintenant les boutons enfoncés.
- La **LED rouge clignote 3 fois**. Relâcher les boutons.
- Débrancher la carte.



3.3 Consigne en courant 4-20mA (par défaut)
- Appuyer sur **MEM** et **CLOSE** et mettre la carte sous tension en maintenant les boutons enfoncés.
- La **LED rouge clignote 3 fois**. Relâcher les boutons.
- Débrancher la carte.

4 Mode apprentissage

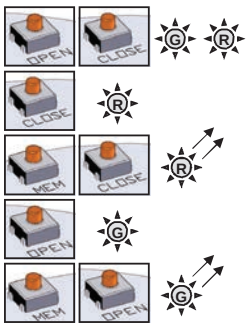

- Appuyer sur **OPEN** et **CLOSE** et mettre la carte sous tension en maintenant les boutons enfoncés.
- Les **2 LEDs s'allument**. Relâcher les boutons, les 2 LEDs s'éteignent. Le mode apprentissage est sélectionné.

- Appuyer sur **CLOSE** pour faire venir la vanne en position fermée. La **LED rouge s'allume**.
- Mémoriser la position fermée par **MEM + CLOSE,** la **LED rouge clignote 2 fois** pour acquitter.

- Appuyer sur **OPEN** pour faire venir la vanne en position ouverte. La **LED verte s'allume**.
- Mémoriser la position ouverte par **MEM + OPEN,** la **LED verte clignote 2 fois** pour acquitter.

- Les positions sont mémorisées, débrancher la carte.

MODE DE FONCTIONNEMENT NORMAL



- Mettre la carte sous tension. La **LED verte clignote 3 fois**.
- Lors du fonctionnement normal, la LED verte s'allume lorsque le moteur ouvre la vanne, et la LED rouge lorsque le moteur ferme la vanne.
- Lorsque les 2 LEDs sont éteintes, le moteur n'est pas sollicité.



- En cas de couple trop important, les **2 LEDs s'allument** pour indiquer la limitation et l'actionneur s'arrête. Pour le redémarrer, il faut soit inverser le sens de marche, soit éteindre et remettre sous tension la carte.

PARAMETER SELECTION SEQUENCE

1 Shunts positioning K1, K2 and K3

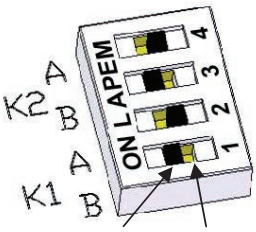

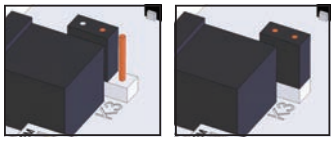

K3 OFF K3 ON

- Position the shunts as follows (before modification, switch off the card) :

Input signal	Output signal	Schunt K1		Schunt K2		Schunt K3
		A	B	A	B	
0-10V	**0-10V**	ON	OFF	ON	OFF	OFF
0-10V	**0-20mA**	ON	OFF	OFF	ON	OFF
0-10V	**4-20mA**	ON	OFF	OFF	ON	ON
0-20mA	**0-10V**	OFF	ON	ON	OFF	OFF
0-20mA	**0-20mA**	OFF	ON	OFF	ON	OFF
0-20mA	**4-20mA**	OFF	ON	OFF	ON	ON
4-20mA	**0-10v**	OFF	ON	ON	OFF	OFF
4-20mA	**0-20mA**	OFF	ON	OFF	ON	OFF
4-20mA	**4-20mA**	OFF	ON	OFF	ON	ON

2 Selection of the flow direction of the valve



2.1 Normal flow direction (by default)
- Press the **OPEN** button and apply the operating voltage to the card while keeping this button depressed.
- The **green LED lights up**. Release the **OPEN** button.
- Disconnect the card.



2.2 Inverse flow direction
- Press the **CLOSE** button and apply the operating voltage to the card while keeping this button depressed.
- The **red LED lights up**. Release the **CLOSE** button.
- Disconnect the card.

3 Selection of the type of set value



3.1 Voltage set value 0-10V
- Press the **MEM** button and apply the operating voltage to the card while keeping this button depressed.
- The **red LED will light up 3 times**. Release this button.
- Disconnect the card.



3.2 Current set value 0-20mA
- Press the **MEM** and **OPEN** buttons and apply the operating voltage to the card while keeping these buttons depressed.
- The **red LED will light up 3 times**. Release these buttons.
- Disconnect the card.



3.3 Current set value 4-20mA (by default)
- Press the **MEM** and **CLOSE** buttons and apply the operating voltage to the card while keeping these buttons depressed.
- The **red LED will light up 3 times**. Release these buttons.
- Disconnect the card.

4 Learning mode

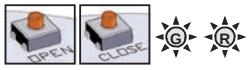

- Press the **OPEN** and **CLOSE** buttons and apply the operating voltage to the card while keeping these buttons depressed.
- The **2 LEDs will light up**. Release these buttons and the 2 LEDs will extinguish. The card is now in the learning mode.

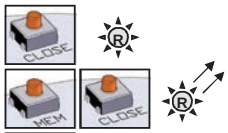

- Press the **CLOSE** button to put the valve in its closed position. The **red LED will light up**.
- Store this selected closed position by pushing **MEM + CLOSE,** the **red LED will light up 2 times** as a confirmation of acknowledgement.

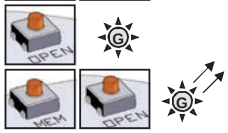

- Press the **OPEN** button to put the valve in its open position. The **green LED will light up**.
- Store this selected open position by pushing **MEM + OPEN,** the **green LED will light up 2 times** as a confirmation of acknowledgement.

- Now, the positions selected have been stored. Disconnect the card.

NORMAL OPERATING MODE



- Apply the operating voltage to the card. The **green LED will light up 3 times**.
- Under normal operating conditions, the green LED will light up when the drive motor opens the valve, and the red LED will light up when the drive motor closes it.
- If both LEDs remain extinguished, it means that the drive motor has not been triggered.



- In the case of an over torque, the motor stops and the **2 LEDS lights** then together to indicate the action of the torque limiter. To re-start it, you must either reverse the sense of rotation, either switch the power off and on.

PARAMETRISIERUNGSSCHRITTE

1 Position der Steckbrücke K1, K2 und K3

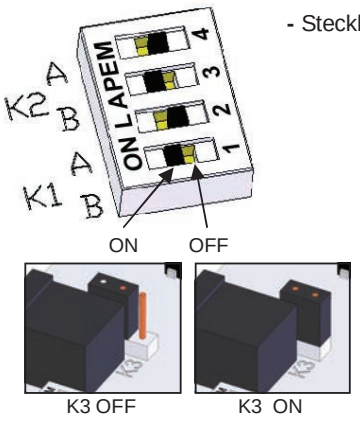

- Steckbrücken Positionierung (Vor jeder Änderung, die Karte spannungsfrei machen) :

Signalgeber	Rückmeldung	Steckbrücke K1		Steckbrücke K2		Steckbrücke K3
		A	B	A	B	
0-10V	**0-10V**	ON	OFF	ON	OFF	OFF
0-10V	**0-20mA**	ON	OFF	OFF	ON	OFF
0-10V	**4-20mA**	ON	OFF	OFF	ON	ON
0-20mA	**0-10V**	OFF	ON	ON	OFF	OFF
0-20mA	**0-20mA**	OFF	ON	OFF	ON	OFF
0-20mA	**4-20mA**	OFF	ON	OFF	ON	ON
4-20mA	**0-10v**	OFF	ON	ON	OFF	OFF
4-20mA	**0-20mA**	OFF	ON	OFF	ON	OFF
4-20mA	**4-20mA**	OFF	ON	OFF	ON	ON

2 Festlegung der Drehrichtung des Absperrventils

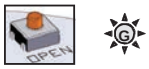

2.1 Normale Drehrichtung (Voreingestellt)
- Auf **OPEN** drücken und die Karte einschalten, dabei den Knopf gedrückt halten.
- Die **GRÜNE LED leuchtet auf**. Den Knopf **OPEN** loslassen.
- Die Karte spannungsfrei machen.



2.2 Umgekehrte Drehrichtung
- Auf **CLOSE** drücken und die Karte einschalten, dabei den Knopf gedrückt halten.
- Die **ROTE LED leuchtet auf**. Den Knopf **CLOSE** loslassen.
- Die Karte spannungsfrei machen.

3 Einstellung des Eingang Signal



3.1 Eingang Signal bei Spannung 0-10V
- auf **MEM** drücken und die Karte einschalten, dabei den Knopf gedrückt halten.
- die **rote LED leuchtet dreimal auf**. Den Knopf loslassen.
- Die Karte spannungsfrei schalten.



3.2 Eingang Signal bei Strom 0-20mA
- auf **MEM** und **OPEN** drücken und die Karte einschalten, dabei die Knöpfe gedrückt halten.
- die **rote LED leuchtet dreimal auf**. Die Knöpfe loslassen.
- Die spannungsfrei schalten.



3.3 Eingang Signal bei Strom 4-20mA (Ab Werk voreingestellt)
- auf **MEM** und **CLOSE** drücken und die Karte einschalten, dabei die Knöpfe gedrückt halten.
- die **rote LED leuchtet dreimal auf**. Die Knöpfe loslassen.
- Die spannungsfrei schalten.

4 Lernmodus



- auf **OPEN** und **CLOSE** drücken und die Karte einschalten, dabei die Knöpfe gedrückt halten.
- Die **beiden LEDs leuchten auf**. Die Knöpfe loslassen, die **beiden LEDs erlöschen**. Der Lernmodus ist gewählt.



- auf **CLOSE** drücken, um das Absperrventil in die geschlossene Position zu bringen. **Die rote LED leuchtet auf**.



- Die geschlossene Position durch **MEM + CLOSE** speichern, die **rote LED leuchtet 2 zur Bestätigung auf**.



- auf **OPEN** drücken, um das Absperrventil in die geöffnete Position zu bringen. **Die grüne LED leuchtet auf**.



- Die geöffnete Position durch **MEM + OPEN** speichern, die **grüne LED leuchtet 2 zur Bestätigung auf**.
- Die Positionen sind gespeichert, die Karte spannungsfrei machen.

NORMALBETRIEB



- Die Karte einschalten. Die **grüne LED leuchtet dreimal auf**, um anzuzeigen, dass der Startvorgang korrekt ausgeführt wird**.**
- Im Normalbetrieb leuchtet die grüne LED auf, wenn der Antrieb das Absperrventil öffnet, und die rote LED, wenn der Antrieb das Absperrventil schliesst.
- Wenn keine der beiden LEDs aufleuchtet, wird der Antrieb nicht angesteuert.



- Im zu hoch Drehmoment Fall, **leuchten die beiden LEDs an** und stoppt der Antrieb. Um der Antrieb wieder zu starten, muss man den Drehrichtung auswechseln oder die Spannung Auf/Zu Umschalten.

SECUENCIA DE REGLAJE

1 Posicionamiento de las grapas K1, K2 y K3

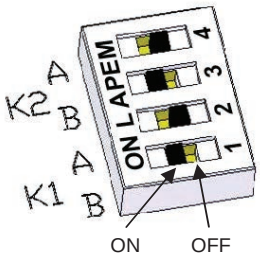

- Colocar las grapas según la tabla siguiente (antes de cada modificación, Desconectar la tarjeta) :

Mando	Recopia	Grapa K1		Grapa K2		grapa K3
		A	B	A	B	
0-10V	**0-10V**	ON	OFF	ON	OFF	OFF
0-10V	**0-20mA**	ON	OFF	OFF	ON	OFF
0-10V	**4-20mA**	ON	OFF	OFF	ON	ON
0-20mA	**0-10V**	OFF	ON	ON	OFF	OFF
0-20mA	**0-20mA**	OFF	ON	OFF	ON	OFF
0-20mA	**4-20mA**	OFF	ON	OFF	ON	ON
4-20mA	**0-10v**	OFF	ON	ON	OFF	OFF
4-20mA	**0-20mA**	OFF	ON	OFF	ON	OFF
4-20mA	**4-20mA**	OFF	ON	OFF	ON	ON

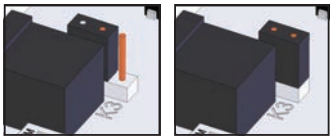

2 Elección de la dirección de la válvula



2.1 Dirección normal (por defecto)
- apoyar sobre **OPEN** y poner la tarjeta bajo tensión manteniendo el pulsador hundido.
- **El LED verde se enciende**. Relajar el pulsador **OPEN**.
- Desconectar la tarjeta.



2.2 Dirección inversa
- apoyar sobre **CLOSE** y poner la tarjeta bajo tensión manteniendo el pulsador hundido.
- **El LED rojo se enciende**. Relajar el pulsador **CLOSE**.
- Desconectar la tarjeta.

3 Elección del tipo de mando



3.1 Mando bajo tensión 0-10V
- apoyar sobre **MEM** y poner la tarjeta bajo tensión manteniendo el pulsador hundido.
- **El LED rojo parpadea 3 veces**. Relajar el pulsador.
- Desconectar la tarjeta.



3.2 Mando bajo tensión 0-20mA
- apoyar sobre **MEM** y **OPEN** y poner la tarjeta bajo tensión manteniendo los pulsadores hundidos.
- **El LED rojo parpadea 3 veces**. Relajar el pulsador.
- Desconectar la tarjeta.



3.3 Mando bajo tensión 4-20mA (por defecto)
- apoyar sobre **MEM** y **CLOSE** y poner la tarjeta bajo tensión manteniendo los pulsadores hundidos.
- **El LED rojo parpadea 3 veces**. Relajar el pulsador.
- Desconectar la tarjeta.

4 Modo aprendizaje

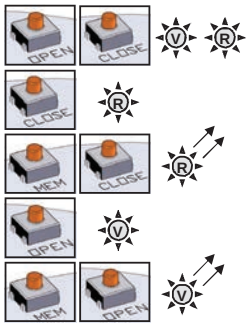

- apoyar sobre **OPEN** y **CLOSE** y poner la tarjeta bajo tensión manteniendo los pulsadores hundidos.
- **Los 2 LED se encienden**. Relajar los pulsadores , Los 2 LED se apagan. El Modo aprendizaje es seleccionado.

- apoyar sobre **CLOSE** , Para hacer venir la válvula en posición cerrada. **El LED rojo se enciende**.
- Memorizar la posición cerrada apoyando sobre **MEM + CLOSE**, El **LED rojo parpadea 2 veces** para confirmar.

- apoyar sobre **OPEN** , Para hacer venir la válvula en posición abierta. **El LED verde se enciende**.
- Memorizar la posición abierta apoyando sobre **MEM + OPEN**, El **LED verde parpadea 2 veces** para confirmar.

- Las posiciones memorizadas, Desconectar la tarjeta.

MODO FUNCIONAMIENTO NORMAL



- Poner la tarjeta bajo tensión, El **LED verde parpadea 3 veces.**
- Durante el funcionamiento normal, el LED verde se enciende cuando el motor abre la válvula y el LED rojo cuando el motor cierre la válvula.
- Cuando los 2 LED son apagados, el motor no es solicitado.



- En caso de par demasiado importante, los **2 LED se encienden** para indicar la limitación y el actuador cesa de funcionar. Para arrancarlo de nuevo, hay que o invertir la dirección de funcionamiento, o desconectar y poner de nuevo la tarjeta bajo tensión.

Actionneurs avec possibilité d'une troisième position
Actuator with a third position
Stellantrieb mit einer dritten Position
Actuadores con una tercera posición

L'option GF3 permet à l'actionneur d'être piloté en 3 positions. Les trois positions peuvent être comprises entre 0° et 180°. En standard les actionneurs sont réglés en usine à 0° 90° 180°, ce qui correspond à une vanne 3 voies standard. D'autres configurations sont possibles mais cela doit être précisé par le client lors de la commande.
Les 3 positions sont pilotées par 4 contacts (FCO,FCF,FCIO,FCIF) et 3 contacts de recopie (FC1,FC2,FC3)
Les contacts FC1,FC2 sont des contacts NO (fermeture du circuit en position extrême) et FC3 est un contact NF. (ouverture du circuit en position intermédiaire).

GF3 option allow actuator to be drive and stop in 3 positions.
These 3 positions could be between 0° to 180°.In standard actuators are setting in our workshop at 0° 90° 180° that's fit with standard 3 ways ball valve .
Others positions still available but customer have to price on the order witch position is request.
These 3 positions are controlled by 4 switches (FCO,FCF,FCIO and FCIF) and 3 switches for feed back signal
Switches FC1,FC2 are NO contact (close the circuit in extreme position) and FC3 is a NC contact (open the circuit in intermediate position)

Die GF3-Ausführung erlaubt dem Anwender, den Antrieb in 3 vordefinierte Stellungen zu verfahren.
Diese 3 Positionen können in einem Schwenkbereich zwischen 0° bis 180° liegen. In der Standardausführung werden sie passend zu 3-Wege-Standardventilen auf 0°, 90° und 180° voreingestellt.
Andere Voreinstellungen sind möglich und müssen im Bedarfsfall durch den Kunden im Auftrag vermerkt sein.
Das Anfahren der 3 Positionen wird durch 4 Mikroschalter (FCO,FCF,FCIO and FCIF) und die Positionsrückmeldung durch 3 weitere Mikroschalter realisiert. Die Schalter FC1 und FC2 haben "Öffner"-Funktion (schliessen den Stromkreis am jeweiligen Ende des Schwenkbereichs) und der Schalter FC3 hat "Schliesser"-Funktion (öffnet den Stromkreis in der Zwischenstellung).

La opción GF3 permite que el actuador es pilotado en 3 posiciones. Las tres posiciones pueden ser comprendidas entre 0° y 180°. En estándar, los actuadores son reglados en fábrica a 0° 90° 180°, lo que corresponde a una válvula 3 vías estándares. Otras configuraciones son posibles pero el cliente debe precisarlo cuando hace el pedido.
Las 3 posiciones son pilotadas por 4 contactos, FCO,FCF,FCIO,FCIF, y 3 contactos de recopía, (FC1,FC2,FC3)
Los contactos FC1,FC2 son contactos normalmente abiertos (circuito cerrado en posición extrema) y FC3 es un contacto cerrado abierto (circuito abierto en posición intermediaria).

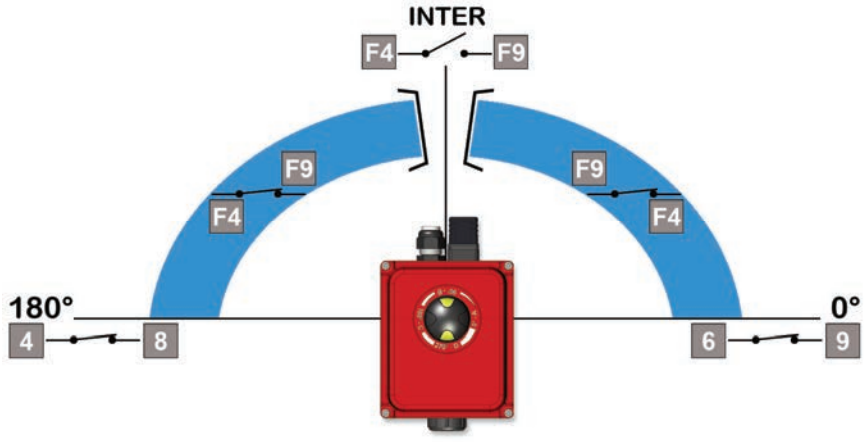

	Borne / Terminal		
	6 & 9	4 & 8	F4 & F9
0°	**Fermé** / Closed / Zu / Cerrado	**Ouvert** / Open / Auf / abierto	**Fermé** / Closed / Zu / Cerrado
inter	**Ouvert** / Open / Auf / abierto	**Ouvert** / Open / Auf / abierto	**Ouvert** / Open / Auf / abierto
180°	**Ouvert** / Open / Auf / abierto	**Fermé** / Closed / Zu / Cerrado	**Fermé** / Closed / Zu / Cerrado

La température du bornier peut atteindre 90°C
The terminal temperature can reach 90°C
Die Terminal-Temperatur kann bis zu 90°C erreichen.
La temperatura del Terminal de conexión puede alcanzar 90°C

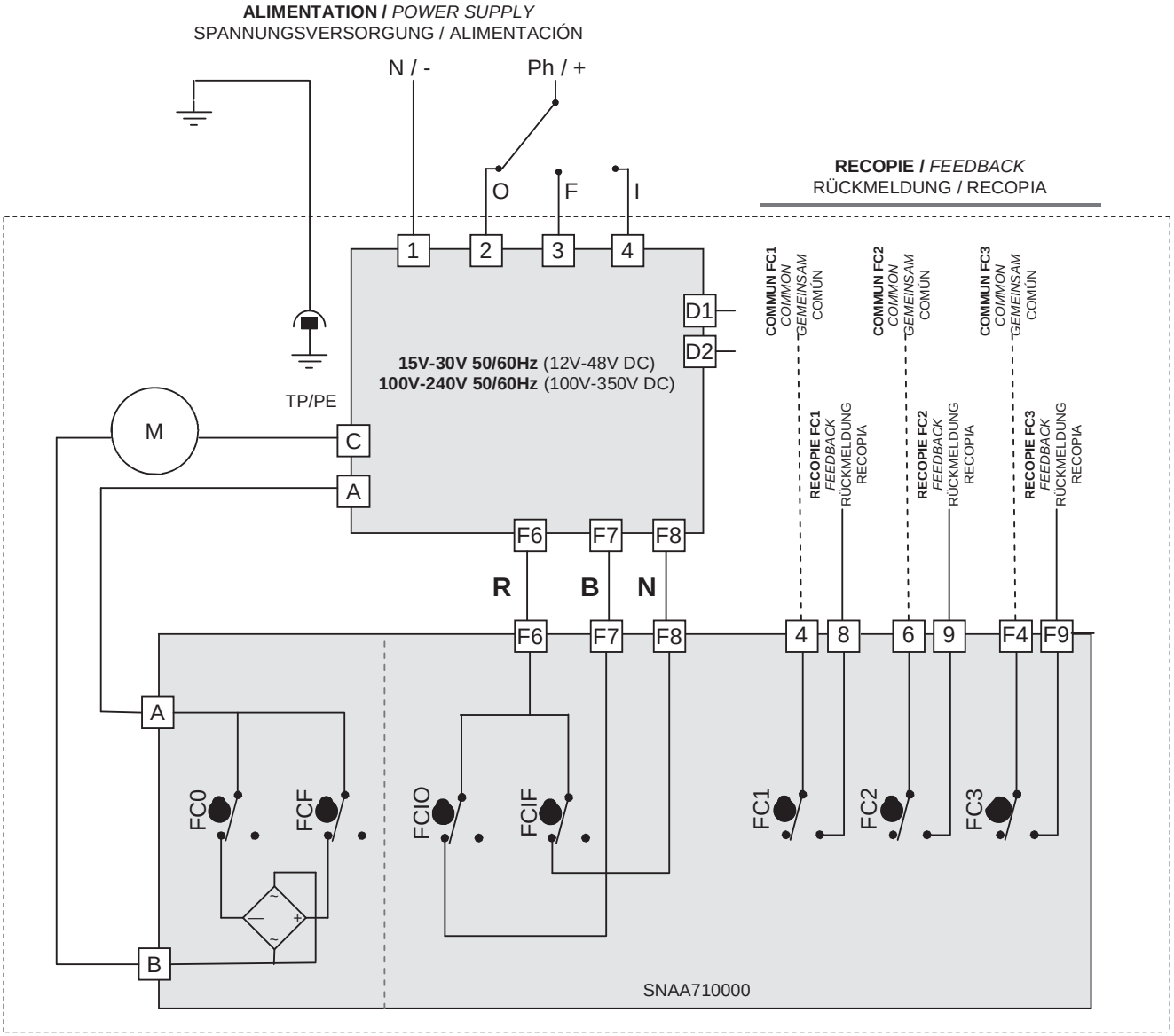

REP	DESIGNATION / BESCHREIBUNG / DESIGNACIÓN	REP	DESIGNATION / BESCHREIBUNG / DESIGNACIÓN
FCO	**Fin de course ouverture** *Open limit switch* Endschalter AUF Final de carrera apertura	FC1	**Fin de course auxiliaire 1** *Auxiliary limit switch 1* Zusätzlicher Endschalter 1 Final de carrera auxiliar 1
FCF	**Fin de course fermeture** *Close limit switch* Endschalter ZU Final de carrera cierre	FC2	**Fin de course auxiliaire 2** *Auxiliary limit switch 2* Zusätzlicher Endschalter 2 Final de carrera auxiliar 2
FCIO	**Fin de course intermédiaire ouverture** *Intermediate open limit switch* Zwischenendschalter AUF Final de carrera intermedia apertura	FC3	**Fin de course auxiliaire 3** *Auxiliary limit switch 3* Zusätzlicher Endschalter 3 Final de carrera auxiliar 3
FCIF	**Fin de course intermédiaire fermeture** *Intermediate close limit switch* Zwischenendschalter ZU Final de carrera intermedia cierre	D1/D2	**Bornier report défaut (24V DC / 3A max)** *Failure reportTerminal strip (24V DC / 3A max)* Fehlermeldung Klemmleiste (24V DC / 3A max) Terminal retorno de defecto (24V DC / 3A max)

DONNÉES TECHNIQUES

DONNEES TECHNIQUES / *TECHNICAL DATA*						
Type (actionneur électrique 1/4 tour) / Type (1/4 turn electric actuator)	ER10	ER20	ER35	ER35	ER60	ER100
Protection IP / *IP protection (EN60529)*	IP66 (étanche aux poussières, jet d'eaux « débit <12.5 L/min » dusttight, water spraying « flow <12.5 L/min »)					
Résistance à la corrosion (utilisation en intérieur et extérieur) / *Corrosion resistance (outdoor and indoor use)*	Plastique / *plastic : PA6.6 FV 25% V0 et / and Nylon* *Toutes pièces métalliques :INOX 304L ou Acier + traitement Zn* *Raw material : 304L Stainless Steel or Steel + Zn treatment*					
Température / *Temperature*	-10°C à/*to +55°C (FAILSAFE : -10°C à/to +40°C)*					
Hydrométrie / *Hydrometry*	< 81% à 31°C (88°F) avec décroissance linéaire jusqu'à 50% à 40°C(selon EN61010-1) < 81% to 31°C (88°F) with lineary decrease down to 50% at 40°C (according EN61010-1)					
Degré de pollution / *Pollution degree*	Classe 2 / *Class 2*					
Altitude / *Altitude*	0 à/*to 2000m*					
Poids / *Weight*	1 Kg			2.1 Kg		
DONNEES MECANIQUES / *MECHANICAL DATA*						
Couple nominal / *Nominal torque*	10Nm	20Nm	35Nm	35Nm	60Nm	100Nm
Temps de manœuvre 90° (ER rapide) *1/4 turn travel time (Fast ER)*	11s	11s	25s	7s	12s	23s
Temps de manœuvre 90° (ER lent) *1/4 turn travel time (slow ER)*				41s	79s	119s
Temps de manœuvre 90° (ER POSI) *1/4 turn travel time (ER POSI)*		25s		41s	79s	119s
Embase de fixation / *Mounting actuator base (ISO5211)*	Etoile/*Star 14* *F03-F04-F05*			Etoile/*Star 22* *F05-F07*		
Angle de rotation / *Swing angle*	90° (autres sur demande / *others on request)*					
Butées mécaniques / *Mechanical end stops*	90° +/- 5°					
Commande manuelle / *Manual override*	Axe sortant / *Out axle*					
Sens de rotation / *Direction of rotation*	Sens antihoraire pour ouvrir / *Anticlockwise to open*					
DONNEES ELECTRIQUES / *ELECTRICAL DATA*						
Tension / *Voltage ±10%*	15V à/to 30V AC (12V à/to 48V DC) ou/*or 100V à/to 240V AC (100V à/to 350V DC)*					
Fréquence / *Frequency*	50/60Hz					
Puissance consommée *Power consumption*	15W (0.08A) cos φ = 0.75			45W (0.15A) cos φ = 0.75		
Catégorie surtension / *Overvoltage category*	Catégorie II / *Category II*					
Limiteur de couple / *Torque limiter*	Électrique / *electric*					
Durée sous tension / *Duty cycle (CEI34)*	50%					
Tension maximale contacts fins de course / *Limit switches maximal voltage*	4V à/to 250V AC/DC (Surtension catégorie II / Overvoltage category II)					
Courant maximal contacts fins de course / *Limit switches maximal current*	10mA à/to 5A max					
Raccordement électrique / *Electrical wiring*	1 Presse étoupe ISO M20 / *1 ISO M20 gland* *1 connecteur 3P+T DIN43650 / 1 DIN43650 3P+T connector*					
Courrant de démarrage *Inrush current*	35A					

TECHNISCHEN DATEN / DATOS TECNICOS						
Typ (90° elektrisches Stellantrieb) / Tipo (actuador eléctrico 1/4 vuelta)	ER10	ER20	ER35	ER35	ER60	ER100
IP Schutzart / Protección IP (EN60529)	IP66 (Staub schutzt, Spritz wasserdicht « Durchfluss <12.5 L/min » / Estanco a los polvos, chorros de agua « caudal <12.5 L/min »)					
Rostschutz (Innen und Außeneinsatz) Resistencia a la corrosión (utilización Interior y exterior)	Plastik / plástico : PA6.6 FV 25% und / y Nylon Alle Metall Teile :INOX 304L oder Stahlguss + Härtung Zn Todas las piezas metálicas : inox 304 o acero + tratamiento Zn					
Temperatur / Temperatura	-10°C bis/hasta *+55°C (FAILSAFE: -10°C bis/hasta +40°C)*					
Hydrometrie / Hidrometría	< 81% a 31°C (88°F) con un decrecimiento lineal hasta 50% a 40°C(según EN61010-1) < 81% bis 31°C (88°F) mit linearer Abnahme bis zu 50% bei 40°C (gemäß EN61010-1)					
Verschmutzungsgrad / Grado de polución	Klasse 2 / *Class 2*					
Höhe / Altitud	0 bis/hasta *2000m*					
Gewicht / Peso	1 Kg			2.1 Kg		
MECHANISCHE DATEN / DATOS MECÁNICOS						
Drehmoment / Par nominal	10Nm	20Nm	35Nm	35Nm	60Nm	100Nm
Stellzeit (Standard) / Tiempo de maniobra 1/4 (ER rápido)	11s	11s	25s	7s	12s	23s
Stellzeit (langsam) / Tiempo de maniobra 1/4 (ER lento)				41s	79s	119s
Stellzeit () / Tiempo de maniobra 1/4 (ER POSI)		25s		41s	79s	119s
Befestigungssockel / Platina de fijación (ISO5211)	Stern/*Estrella 14* *F03-F04-F05*			Stern/*Estrella 22* *F05-F07*		
Drehwinkel / Ángulo de rotación	90° (andere auf Anfrage / *otros bajo demanda)*					
Mechanische Endlagenbegrenzung / Topes mecánicos	90° +/- 5°					
Handbetätigung / Mando manual	Rusgehende Achse / *eje saliente*					
Drehrichtung / Dirección de rotación	Gegen uhr Richtung zu öffnen / *Dirección anti-horario para abrir*					
ELEKTRISCHE TEILEN / DATOS ELÉCTRICOS						
Spannung / *Voltaje* *±10%*	15V bis/hasta 30V AC (12V bis/hasta 48V DC) oder/*o 100V bis/hasta 240V AC (100V bis/hasta 350V DC)*					
Frequenz / Frecuencia	50/60Hz					
Gesamte Leistungsaufnahme / Potencia consumida	15W (0.08A) cos φ = 0.75			45W (0.15A) cos φ = 0.75		
Überspannungskategorie / Categoría sobretensión	Kategorie II / *Categoría II*					
Drehmoment Begrenzer / Limitador de par	Elektrisch / *Eléctrico*					
Einschalt-Dauer / Tiempo bajo tensión (CEI34)	50%					
Maximale Spannung der elektrischen Endschalter / Tensión máxima contactos finales de carrera	4V *bis/hasta 250V AC/DC* (Überspannung kategorie II / categoría sobretensión II)					
Maximaler Strom der elektrischen Endschalter / Intensidad máxima contactos finales de carrera	10mA *bis/hasta 5A max*					
Elektrischer Anschluss / *Conexión eléctrica*	1 Kabel Verschraubung ISO M20 / prensaestopas *1 ISO M20* *1 Konnektor 3P+T DIN43650 / 1 DIN43650 3P+T conectador*					
Einschaltstromspitze *Corriente de arranque*	35A					

ACTIONNEUR ÉLECTRIQUE
ELECTRIC ACTUATOR
ELEKTRISCHE STELLANTRIEBE
ACTUADOR ELÉCTRICO

DSBA3200 rév.20/12/2010

CHEMLINE

BT-BC-FT-FV SERIES, BALL CHECK AND FOOT VALVE

LEFT BLANK

CHEMLINE Plastics Limited

Your Pipeline To Quality Valves, Strainers, Flowmeters and Controls

55 Guardsman Road
Thornhill, Ontario
L3T 6L2
Canada
Tel: 905-889-7890
Fax: 905-889-8553

MAINTENANCE INSTRUCTIONS
For Chemline Ball Check Valves and Ball Foot Valves Sizes 1/2" to 4"

Maintenance

Refer to dwg. **APR-050** or **ASSEMBLY DRAWING BC-003 rev.0** and proceed as follows:

1. Loosen union nut (5) and remove valve from line.
   (Note: make sure there is no pressure in line prior to removing valve.)

2. **Important** Hold seat/seal (3) in place while removing valve, as the seat, stop ring (6) and ball (2) may fall out.

3. Remove seat (3), stop ring (6) and ball (2). Inspect for excessive wear. The ball should not show signs of wear or deformation.

4. When re-installing ball (2), stop ring (6) and seat (3), check inside body for any foreign debris that may have become lodged in the valve.

5. Replace union nut (5) and tighten.

6. For Foot Valves with strainer baskets, remove basket (7) and clean thoroughly.

FLANGE END

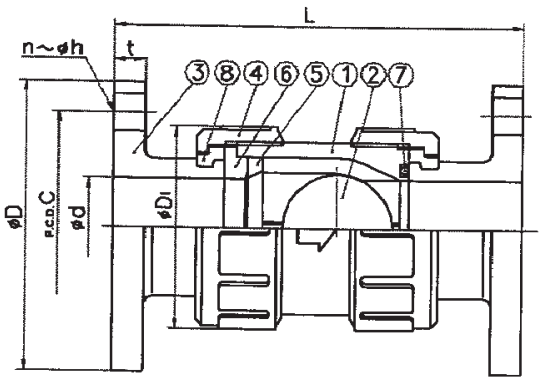

THREAD CONNECTION

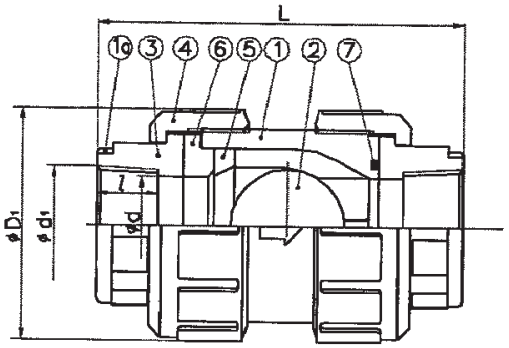

SOCKET CONNECTION

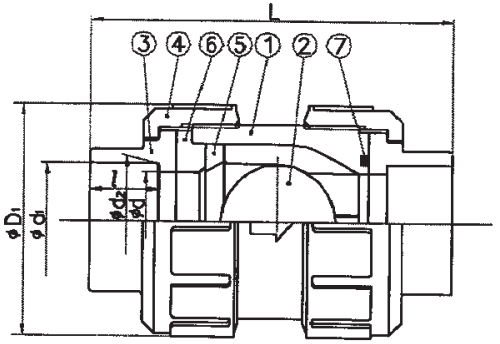

DIMENSIONS TABLE

NOMINAL SIZE		FLANGE □ ANSI 150LBS □ ANSI 125LBS						□ THREAD				
		D	C	n	h	L	t	d_1	l	L	d	D_1
½"	15 mm	3.50	2.38	4	0.63	5.12	0.47	½– 14 NPT	0.59	3.39	0.59	1.89
¾	20	3.86	2.76	4	0.63	6.10	0.55	¾– 14 NPT	0.67	4.06	0.79	2.36
1	25	4.25	3.13	4	0.63	6.50	0.55	1 – 11½NPT	0.79	4.45	0.98	2.76
1¼	30	—	—	—	—	—	—	1¼– 11½NPT	0.87	5.00	1.22	3.78
1½	40	5.00	3.88	4	0.63	7.56	0.63	1½– 11½NPT	0.98	5.94	1.57	3.78
2	50	5.98	4.74	4	0.75	8.43	0.63	2 – 11½NPT	1.10	6.97	2.01	4.17

Part No. _____
Body Material _____
Elastomer Material _____
End Connection _____

UNIT : inch

NOMINAL SIZE		SOCKET															
		PVC . C–PVC								PVDF				PVDF,PP			
		□ ANSI SCH 40				□ ANSI SCH 80				□ ANSI				□ IPS			
		d_1	d_2	l	L	d_1	d_2	l	L	d_1	d_2	l	L	d_1	d_2	l	L
½"	15 mm	0.848	0.836	0.688	3.43	0.848	0.836	0.875	3.80	0.825	—	0.890	3.83	0.831	—	0.625	3.31
¾	20	1.058	1.046	0.719	3.86	1.058	1.046	1.000	4.41	1.030	—	1.015	4.49	1.041	—	1.000	4.43
1	25	1.325	1.310	0.875	4.37	1.325	1.310	1.125	4.88	1.300	—	1.140	4.98	1.305	—	0.815	4.35
1¼	30	1.670	1.655	0.938	4.92	1.670	1.655	1.250	5.55	1.650	—	1.265	5.58	—	—	—	—
1½	40	1.912	1.894	1.094	5.94	1.912	1.894	1.375	6.50	1.890	—	1.390	6.57	1.889	—	1.250	5.57
2	50	2.387	2.369	1.156	6.77	2.387	2.369	1.500	7.44	2.360	—	1.515	7.57	2.364	—	1.250	6.49

NOTE. The shape and appearance of assembly differ a little with nominal size compared to this drawing.

Customer _____
Customer PO# _____
Chemline PS# _____

No.	DESCRIPTION	No.REQ'D	MATERIAL	REMARKS
1a	RING	2	STAINLESS STEEL (SUS304)	C-PVC body/thread connection : used for ½"~1"
8	STOP RING (B)	2	PVDF	used for Flange end
7	O–RING	1	□EPDM, □FPM	
6	SEAT RING	1	□others( )	
5	STOP RING (A)	1	□ PVC	
4	UNION NUT	2	□ C–PVC	
3	END CONNECTOR	2	□ PP	
2	BALL	1	□ PVDF	
1	BODY	1		

TRUE UNION BALL CHECK VALVE ASS'LY
□FLANGE END, □SOCKET CONNECTION, □THREAD CONNECTION
ANSI : ½ ~ 2"

DRAWN	LC	DATE	SCALE
CHECKED		09/28/99	~
APPROVED		DRAWING No. APR–050	△

CHEMLINE PLASTICS LTD.

CHEMLINE

FC-FS SERIES, VARIABLE AREA FLOWMETER

LEFT BLANK

CHEMLINE Plastics Limited

Your Pipeline To Quality Valves, Strainers, Flowmeters and Controls

55 Guardsman Road
Thornhill, Ontario
L3T 6L2
Canada
Tel: 905-889-7890
Fax: 905-889-8553

INSTALLATION & MAINTENANCE INSTRUCTIONS
For Chemline FC/FS Series Variable Area Flowmeter Sizes 5” and 7”

Installation & Maintenance:

Refer to **ASSEMBLY DRAWING SFM1 REV 0**. And proceed as follows:

1. Install in line (where flow readings are required).
2. Unscrew union nuts (5).
3. Remove end connectors (6).
4. Tube (1) will slide out when end connectors (6) are removed.
5. Upper and lower float stops will come out with the end connectors (6).
6. Remove and clean or replace o-rings (7).
7. Remove float (2) from tube (1) and clean.
8. Remove range indicator (8) from tube and clean or replace.
9. It is recommended that spare o-rings (7) and range indicators (8) be kept.

Maximum Working Pressures and Temperature Ranges

Construction				
Tube	**Union Nuts**	**Ends**	**Pressure**	**Temperature**
PVC	PVC	PVC	150 psi	0 to 60° C
Polyamide (PA)	PVC	PVC	150 psi	0 to 60° C
Polyamide (PA	PPG	PP or CPVC	150 psi	0 to 80° C
Polysulfone (PSU)	PPG	PP or CPVC	150 psi	0 to 90° C
Polysulfone (PSU)	PVDF	PVDF	150 psi	0 to 120° C
PVDF	PVDF	PVDF	150 psi	-40 to 120° C

Ranges, Conversion Charts, Sizing, Scale Correction Factors etc. are available on the Chemline Data Page and also available from the Chemline Technical Department.

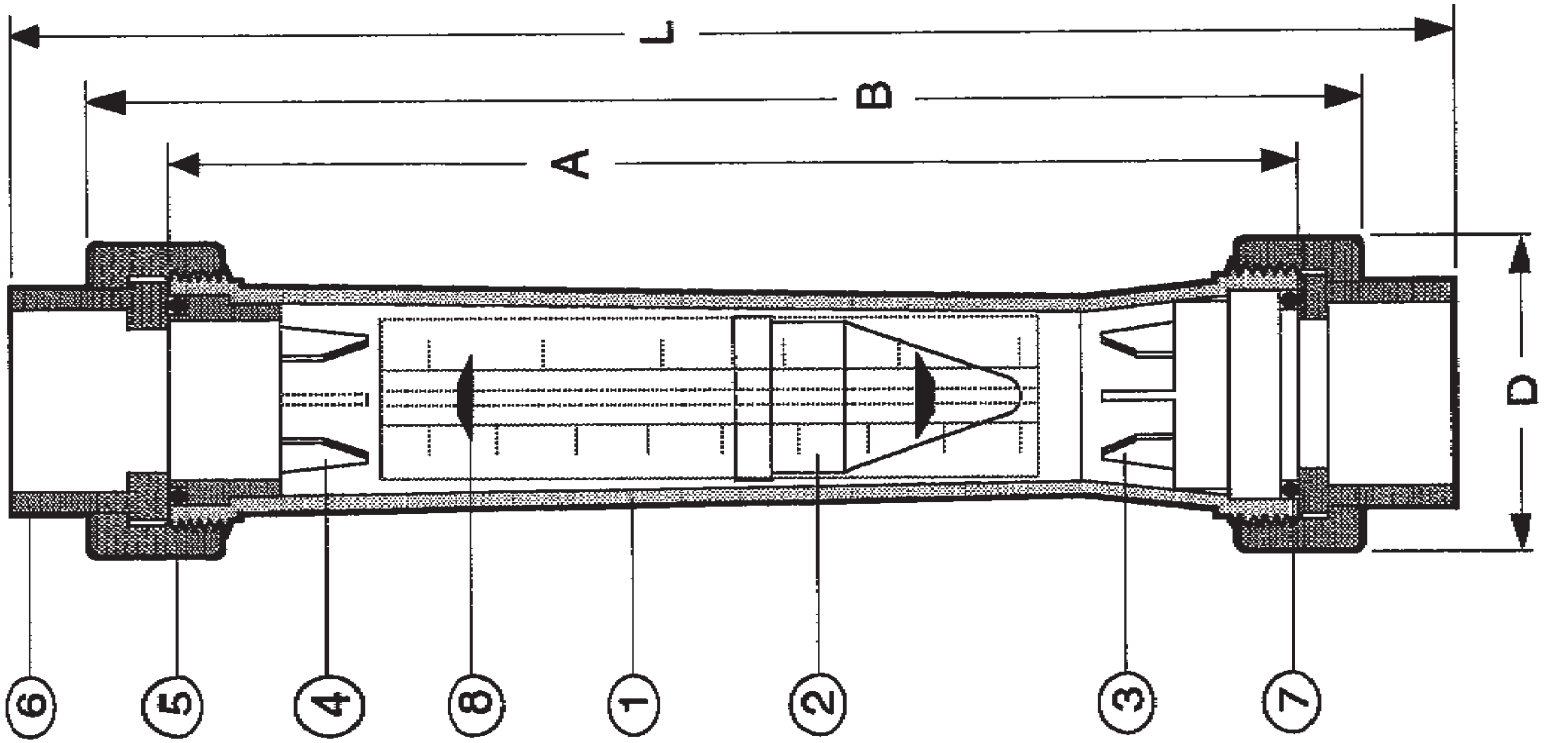

TITLE	SCALE	NTS	DATE	REFERENCE	
FS / FC VARIABLE-AREA FLOWMETERS	DR. BY	DB	02/22/91		
CHEMLINE PLASTICS LIMITED 55 GUARDSMAN ROAD, THORNHILL, ONTARIO L3T 6L2 TEL: (905) 889-7890 - FAX (905) 889-8553	CHK BY			DWG. NO.	REV.
	APP BY			SFM1	0

LEFT BLANK

CHEMLINE

SB 12 SERIES, BACK PRESSURE AND PRESSURE RELIEF VALVE

LEFT BLANK

CHEMLINE Plastics Limited

Your Pipeline To Quality Valves, Strainers, Flowmeters and Controls

55 Guardsman Road
Thornhill, Ontario
L3T 6L2
Canada
Tel: 905-889-7890
Fax: 905-889-8553

MAINTENANCE INSTRUCTIONS
For Chemline 3/8" - 1-1/2" SB Series Pressure Relief Valves

Installation:

1. Always mount a filter or strainer in the line immediately before the valve to avoid damage to the valve from dirt or particles. Valve is spring operated, therefore can be installed in any orientation.

2. **To adjust pressure use the adjustment screw (8) and a pressure gauge**.
   - the valve will be closed at the set pressure and will start to open when the operating pressure rises above the set pressure.
   - connect the compressed air supply to the inlet of the valve. Adjust the flow of the air to the desired set pressure by turning clockwise to increase the set pressure, counterclockwise to decrease it.
   - with the valve being closed, adjust the screw (8) until the valve starts to open. Fix the adjusting screw in place with the locking nut (9).

3. For installation in an application where the temperature is 0° C or less. Check with Chemline Engineering
   Technical staff prior to installation.

Maintenance

Refer to **ASSEMBLY DRAWING SB10/11 rev 0.** And proceed as follows.

1. Loosen and remove cap (10).

2. Loosen counter nut (9) and remove adjustment screw (8).

3. Remove body cap (12a), body bolt (12b), body nut (12c) and washer (12d).

4. Lift up and remove bonnet (2).

5. Remove pressure plate (7a) and ball bearing (7b) to reach relief spring (3).

6. Loosen piston screw (11), remove spring plate (6) and draw piston assembly (5) downward and out of body (1).
   Note: Piston assembly (5) is all parts (5a) outer piston assembly
   (5b) inner piston assembly
   (5c) seat
   (5d) piston o-ring

Piston assembly is removed from body as a unit. It can then be further disassembled into the component parts listed above.

7 Remove diaphragm (4).

8. Remove seal (14) at intermediate flange (13).

9. Inspect all parts for wear and abrasion, replace seals, diaphragm etc. if necessary.

10. To re-assemble valve follow steps 1 through 9 in reverse order.

TROUBLESHOOTING

FAILURE		REASON	REPAIR
VALVE LEAKS AT DIAPHGRAM (4)		CLAMPING PRESSURE FOR DIAPHRAGM (4) TOO LOW.	TIGHTEN SCREWS (12)
PRESSURE RISES ABOVE SET PRESSURE	{A)	VALVE SEAT (5c) & SEALS (14) & (5d) ARE	CHECK SEALS OF PISTON (5) BODY (14) - REPLACE
	(B)	DEFECTIVE DIAPHRAGM (4) LEAKING	REPLACE.
	(C)	PISTON (5) BORE AT BODY (1) DIRTY	DISMANTLE PISTON (5) AND CLEAN BORE
VALVE CLOSED (DOES NOT OPEN)		VALVE MOUNTED IN WRONG DIRECTION.	TURN VALVE IN DIRECTION OF ARROWS
FLUIDS PENETRATE ADJUSTING SCREW (8)		DIAPHRAGM (4) DEFECTIVE.	REPLACE DIAPHRAGM (4)
LEAKING AT PLUG AT VALVE BODY		O-RING SEAL LEAKING	DISMANTLE PLUG AND REPLACE SEAL

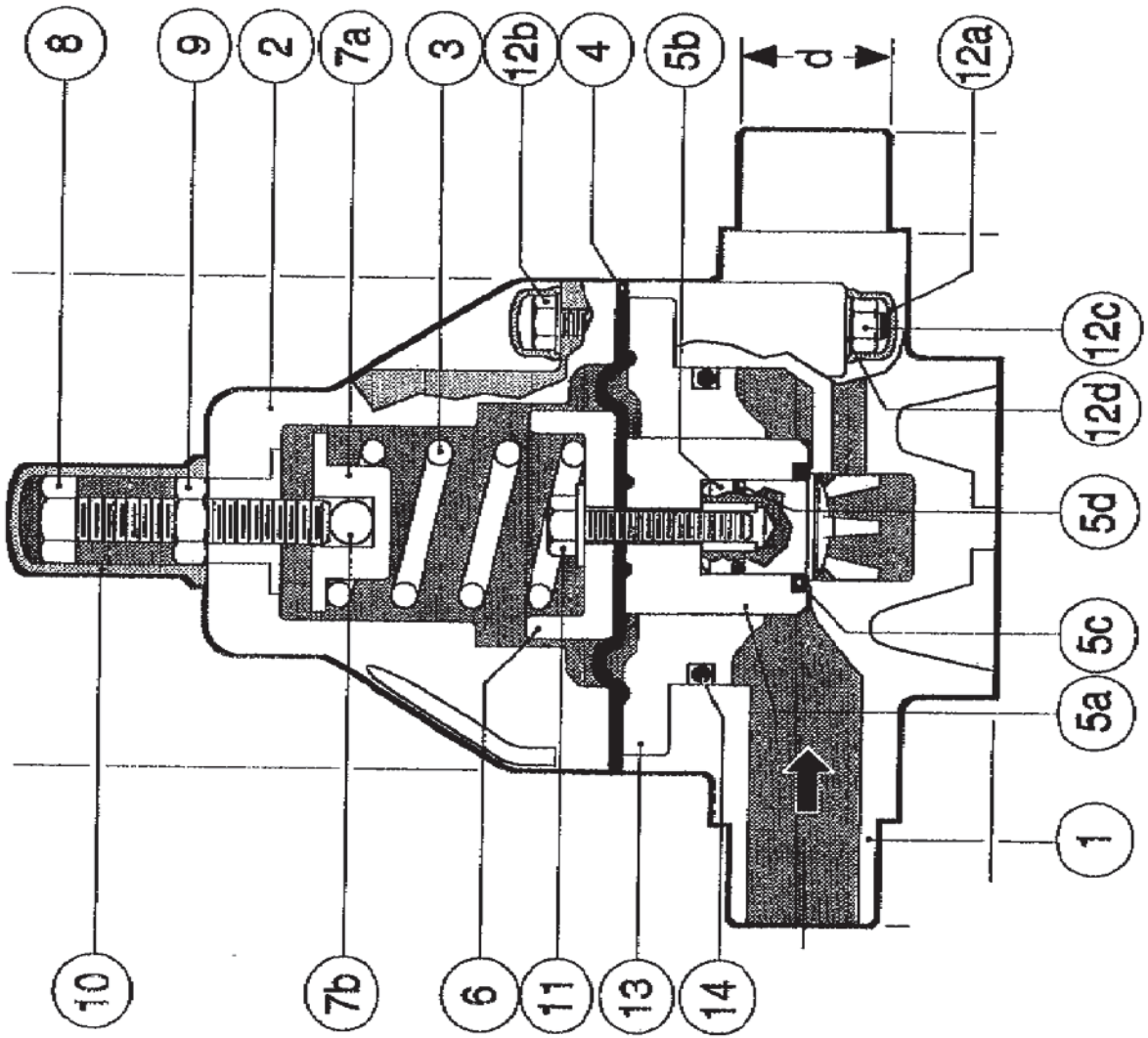

Part	Description	Pcs
1	BODY	1
2	BONNET	1
3	RELIEF SPRING	1
4	DIAPHRAGM	1
5(a)	OUTER PISTON	1
	(PART OF ASSY)	
5(b)	INNER PISTON	1
	(PART OF ASSY)	
5(c)	SEAT	2
	(PART OF ASSY)	
5(d)	PISTON O-RING	2
	(PART OF ASSY)	
6	SPRING PLATE	1
7(a)	PRESS. PLATE	1
7(b)	BALL BEARING	1
8	ADJ. SCREW	1
9	COUNTER NUT	1
10	CAP	1
11	PISTON SCREW	1
12 (a)	BODY CAP	4/6
12 (b)	BODY BOLT	4/6
12 (c)	BODY NUT	4/6
12 (d)	BODY WASHER	4/6
13	INT. FLANGE	2
14	SEAL	2

TITLE: CHEMLINE SB PRESSURE RELIEF VALVES	SCALE		DATE	CHEMLINE PLASTICS
	DR. BY			
REFERENCE: 3/8" - 1-1/2"	CHKD. BY			DWG. NO. SB1011 — REV. 0
	APP. BY			

LEFT BLANK

MANUFACTURER INSTALLATION OPERATION AND MAINTENANCE MANUAL

IQALUIT – WWTP UPGRADE – NUNAVUT

VEOLIA PROJECT: 5000 218 036

CHEMLINE

SG SERIES, GAUGE ISOLATOR

LEFT BLANK

CHEMLINE Plastics Limited

Your Pipeline To Quality Valves, Strainers, Flowmeters and Controls

55 Guardsman Road
Thornhill, Ontario
L3T 6L2
Canada
Tel: 905-889-7890
Fax: 905-889-8553

MAINTENANCE INSTRUCTIONS
For Chemline SG Series Gauge Isolator 1/4”and 1/2”

Maintenance:

Refer to drawing on page 2 of the **SG Gauge Isolator Data Page**

1. Gauge isolators can be mounted and filled with glycerine at Chemline prior to delivery, or isolators can be mounted and filled on site.
2. Remove isolator from valve.
3. To disassemble isolator remove gauge (6) from upper chamber/bonnet (3).
4. Separate bonnet (3) from body (1).
5. Drain glycerin (or other fluid) from both chambers (1 & 3), prior to removing diaphragm (2).
6. Check teflon diaphragm (2) for wear and replace if necessary.
7. Refill upper chamber (3) and replace diaphragm (2).
8. To reassemble diaphragm follow steps 1 through 4 in reverse, to hand-tight plus ¼ turn (approx. 30 in-lb).

LEFT BLANK

PDF Published June 23, 2014

Gauge Isolators

CHEMLINE PLASTICS
SUPERIOR FLOW SOLUTIONS

PVC PP PVDF

CRN Registered Consult Chemline

NSF[4] Certified to NSF/ANSI 61

SERIES: SG

INLET CONNECTION: 1/4" or 1/2" Threaded[1]

INSTRUMENT CONNECTION: 1/4" or 1/2" Threaded

DIAPHRAGM: PTFE



[1] Other available inlet connections are 1/2" socket or 1/2" to 1" flanged.
[2] Other fluids are available for special applications such as chlorine service.
[3] Glass reinforced polypropylene.
[4] PVC isolators are certified under NSF/ANSI Standard 61 for contact with drinking water.

Chemline SG Series Gauge Isolators allow inexpensive pressure gauges, or any other pressure instrument to be used in corrosive services. The upper chamber (gauge side) is filled with a stable fluid such as glycol or glycerine[2]. A diaphragm separates it from the lower chamber which receives the media under pressure.

The 1/2" gauge connection allows use of the popular 4" and 4-1/2" diameter gauges. Pressure switches or transmitters may also be installed. Customers can easily fill isolators and install their own gauges.

features

Easy to Mount Gauges

- It is easy to fill an isolator and field mount a gauge. No special equipment is required.
- Will accept popular 4" and 4-1/2" diameter gauges

Provision for Fill Port

- Housing may be drilled and tapped by Chemline or customer for a threaded fill port. This is used for filling isolator using a vacuum filling station

High Chemical Resistance

- Choice of body materials for a wide range of applications
- PTFE bonded EPDM dished diaphragm for high chemical resistance and sensitivity

Heavy Duty Design for Safety

- PPG[3] top chamber
- Heavy wall connection ports

CRN Registration number by province

- Ontario: OH16085.5

Optional Gauges

- Isolators are available alone or with gauge mounted and prefilled with glycol[2]

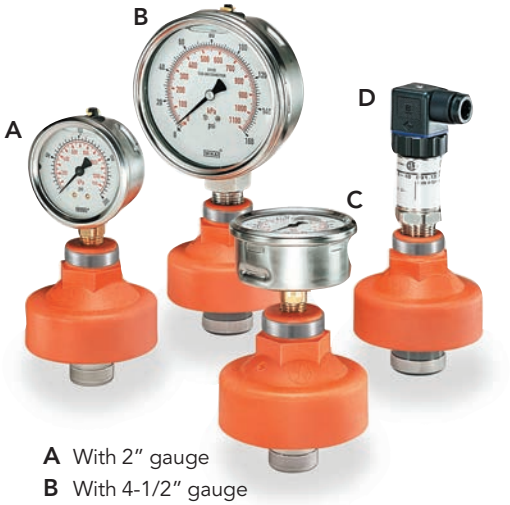

A With 2" gauge
B With 4-1/2" gauge
C With 2" back mount gauge
D With pressure transmitter

06/14 ©Chemline Plastics Limited 2014
Chemline is a registered trade mark of Chemline Plastics Limited

Gauge Isolators

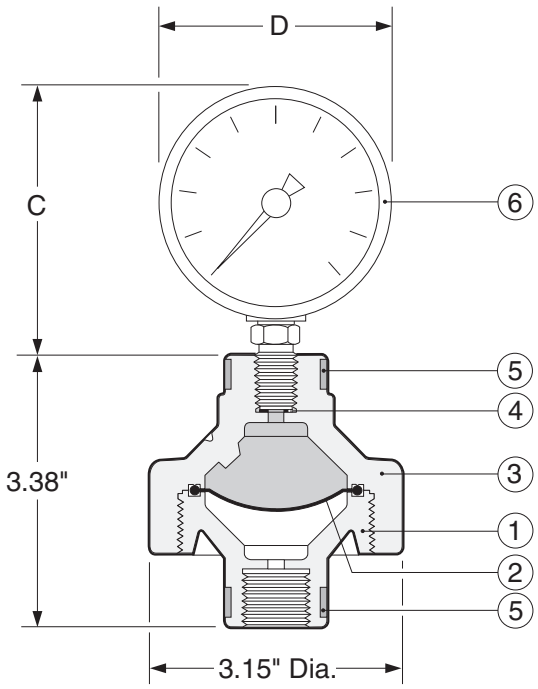

PARTS

No.	Part	Pcs.	Materials
1	Body	1	PVC, PP, PVDF
2	Diaphragm	1	PTFE
3	Bonnet	1	PPG[1]
4	Gasket	1	EPDM
5	Stainless Steel Bands	2	304 SS
6	Optional Gauge	1	See below

[1]PPG = Glass reinforced polypropylene

OPTIONAL GAUGES

- Chemline offers the gauges listed below mounted to isolator and prefilled with glycol, glycerine or special fluid for chlorine applications. These gauges have dials and cases filled with either glycol (standard), glycerine or silicon for corrosion resistance and dampening.
- Chemline SG gauge isolators are not recommended for vacuum applications. They will not affect the gauge accuracy as low as approximately 3 psi. The accuracy depends on the process conditions and the gauge installed on it.

OTHER OPTIONS

- **Flanged** inlet connections
- **Threaded Fill Port** – drilled, tapped and plugged
- Chemline will mount any pressure instrument supplied free issue by customer

DIMENSIONS (Gauge Isolator with optional gauge installed) INCHES

Optional Gauge Ordering No.	Gauge Diameter	Gauge Connection	Housing	Bourdon Tube	Window	Accuracy	Dimensions C	Dimensions D(max.)
P025-xx	2-1/2"	1/4"	316 SS	Brass	Polycarbonate	±1.5% of span	3.1	2.5
P025-xx-SS	2-1/2"	1/4"	316 SS	316 SS	Polycarbonate	±1.5% of span	3.1	2.5
P025-xx-SS/BM	2-1/2" Back Mount	1/4"	316 SS	316 SS	Polycarbonate	±1.5% of span	1.6	2.5
P025-xx-BM	2-1/2" Back Mount	1/4"	316 SS	Brass	Polycarbonate	±1.5% of span	1.6	2.5
P040-xx-SS	4"	1/2"	316 SS	316 SS	Safety Glass	±1% of span	4.5	4.0
P045-xx-SS	4-1/2"	1/2"	PBTP Plastic[2]	316 SS	Acrylic	±0.5% of span	6.3	5.8

xx denotes the maximum gauge pressure i.e., 30, 60, 100, 160 or 200 psi. See data page for recommended working pressures.
[2] PBTP = glass filled polyester.

WORKING PRESSURES PSI

WEIGHTS

Material	10 – 20°C 50 – 68°F	30°C 86°F	40°C 104°F	50°C 122°F	60°C 140°F	70°C 158°F	80°C 176°F	90°C 194°F	100°C 212°F	120°C 248°F	Net Weights Pounds[3]
PVC	150	100	80	45	15	–	–	–	–	–	1.0
PP	150	125	100	80	65	45	–	–	–	–	0.7
PVDF	150	150	150	125	105	85	70	60	45	30	1.3

Temperature Ranges: PVC 0 to 60°C (32 to 140°F), **PP** 10 to 80°C (50 to 176°F), **PVDF** –30 to 120°C (–22 to 248°F).
NR = Not Recommended. [3] Weights are for unfilled 1/2" x 1/2" isolators without gauges. 1/2" x 1/4" isolators are 20% lighter.

ORDERING EXAMPLE

Chemline Gauge Isolators SG			A	005-	002	P	G
Body Material	**A** – PVC	**B** – PP	**K** – PVDF				
Inlet Size	**002** – 1/4"	**005** – 1/2"(Standard)					
Instrument Connection	**002** – 1/4"	**005** – 1/2"					
Diaphragm	**P** – PTFE bonded EPDM						
Filling & Mounting	**G** –Add only if isolator is supplied filled with glycol and gauge or pressure instrument is mounted by Chemline. Separate gauge item numbers are listed above.						

Example: Chemline SG Series Gauge Isolator, PVC, 1/2" x 1/4" FNPT inlet x instrument connections, PTFE diaphragm.

CHEMLINE PLASTICS
SUPERIOR FLOW SOLUTIONS
55 Guardsman Road, Thornhill, ON, L3T 6L2, Canada | ISO 9001:2008 Certified
tel.905.889.7890 | fax.905.889.8553 | request@chemline.com | chemline.com

MANUFACTURER INSTALLATION OPERATION AND MAINTENANCE MANUAL

IQALUIT – WWTP UPGRADE – NUNAVUT

VEOLIA PROJECT: 5000 218 036

CHEMLINE

SM-SM2 SERIES, METERING VALVE

LEFT BLANK

PDF Published March 1, 2013

Metering Ball Valves

CHEMLINE PLASTICS
SUPERIOR FLOW SOLUTIONS

Chemline SM Series Metering Ball Valve is designed for fine linear flow control of chemicals or clean fluids. The ball is solid with graduated V-groove cut on the outside surface. Precise linear flow control is accomplished through 180° rotation of the handle. With a positioning electric actuator, this becomes an inexpensive control valve. If higher C_V values are required, refer to SP Series Proportional ball valves.

PVC PP

SERIES:	SM
SIZES:	1/2" – 2"
ENDS:	Threaded, Socket, Butt[1] or ChemFlare™ [2]
SEATS:	PTFE
O-RINGS:	EPDM, FPM (Viton®)



features

Precise Linear Flow Control
- Provided by a special V-groove ball and wide handle travel (0° to 180°)

Full Size Range
- 6 valves sizes 1/2" to 2" offers a large selection of C_V values

High End Ball Valve Features
- Full Blocking design
- Double Stem O-Rings for safety
- PTFE seats with elastomer cushion
  - Automatically compensates for seat wear or expansion
- 230 psi pressure rated (PVC)

Low Stem Torques
- Due to floating ball design and cushioned PTFE seats

Bidirectional
- Works with flow in either direction



Integral 180° Scale with 5° Increments
- Fine linear flow control and settable flow rates

[1]Butt ends for fusion to Chemline metric PP or PVDF piping.
[2]For ChemFlare™ end connectors, consult Chemline.

03/13 ©Chemline Plastics Limited 2013
Chemline is a registered trade mark of Chemline Plastics Limited

Metering Ball Valves

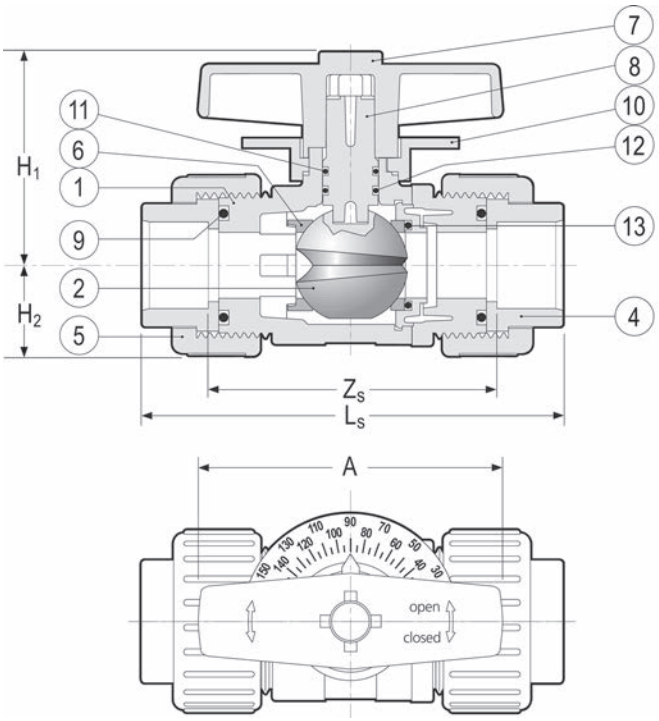

PARTS

No.	Part[1]	Pcs.	Materials
1	Body	1	PVC, PP
2	Ball	1	PVC, PP
4	End Connector	1	PVC, PP
5	Union Nut	1	PVC, PP
6	Ball Seat	1	PTFE
7	Handle	2	PVC
8	Stem	1	PVC, PP
9	Face O-Ring	2	EPDM, FPM(Viton®)
10	Position Indicator Scale	2	PVC, PP
11	Upper Stem O-Ring	2	EPDM, FPM(Viton®)
12	Lower Stem O-Ring	2	EPDM, FPM(Viton®)
13	Seat Cushion	2	EPDM, FPM(Viton®)

[1]Parts are for identification only and cannot be replaced.

DIMENSIONS INCHES

	PVC						PP					
Size	A	Z_S	L_S	H	H_1	H_2	A	Z_S	L_S	H	H_1	H_2
1/2″	2.60	2.76	4.02	1.97	2.05	0.81	2.60	2.71	3.86	1.97	2.05	0.90
3/4″	3.07	3.23	4.72	2.36	2.44	1.00	3.07	3.19	4.45	2.36	2.44	1.10
1″	3.46	3.43	5.16	2.60	2.80	1.14	3.46	3.35	4.76	2.60	2.80	1.30
1-1/4″	3.86	3.86	5.91	2.91	3.23	1.42	3.86	3.82	5.43	2.91	3.23	1.55
1-1/2″	4.25	3.98	6.42	3.76	3.54	1.57	4.25	3.98	5.83	3.76	3.54	1.71
2″	4.64	4.76	7.75	4.90	4.33	1.97	4.64	4.76	6.93	4.90	4.33	2.11

E Series Electric Actuator on a SM Series Ball Valve

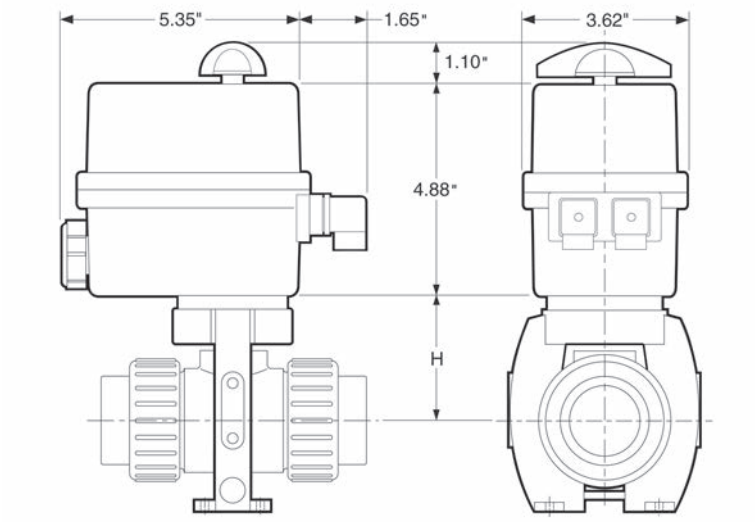

Side View **End View**



ELECTRICALLY ACTUATED

The metering ball valve becomes a proportional control valve with the addition of an E Series electric actuator with on-board positioner

- Thermoplastic housing and mounting bracket
- Manual override
- Position indication
- Mechanical travel stops
- Two external DIN plugs (one for power and one for signal) are **pre-wired to the terminal strip. The actuator may be wired up without opening the lid.**
- Different voltages are available

Metering Ball Valves

WORKING PRESSURES PSI

NET WEIGHTS LB. Cv VALUES

Size	PVC 20°C 68°F	PVC 40°C 104°F	PVC 60°C 140°F	PP 20°C 68°F	PP 40°C 104°F	PP 60°C 140°F	PP 80°C 176°F	PVC	PP	USGPM Flow at 1 psi △P
1/2″	230	130	30	150	100	65	20	0.35	0.29	1.4
3/4″	230	130	30	150	100	65	20	0.60	0.44	1.9
1″	230	130	30	150	100	65	20	0.84	0.64	2.3
1-1/4″	230	130	30	150	100	65	20	1.50	1.04	3.4
1-1/2″	230	130	30	150	100	65	20	2.10	1.63	4.5
2″	230	130	30	150	100	65	20	3.70	2.60	7.4

Temperature Ranges: PVC 0 to 60°C (32 to 140°F), PP 0 to 95°C (32 to 203°F)

Cv VALUE vs. VALVE OPENING

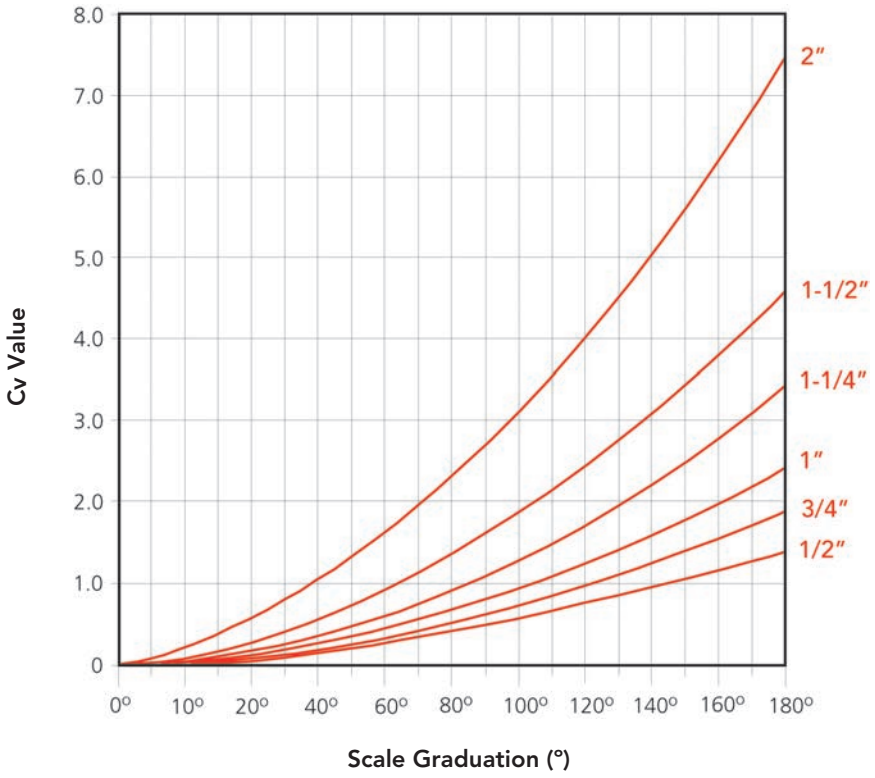

SAMPLE SPECIFICATION

1. All low flow control valves, 1/2″ to 2″, will be Chemline SM Series metering ball valves.
2. Body material will be PVC or PP, and o-rings will be EPDM or FPM (Viton®).
3. Body will be full blocking design with double stem o-rings for safety, rated at 230 psi maximum working pressure for PVC and 150 psi for PP material.
4. Ball will be floating design, molded solid with a V-groove for linear flow control over a 180° range of handle rotation.
5. Seats will be PTFE with elastomer cushions for positive closure with minimum stem torques and automatic compensation for seat wear and expansion.
6. Position indicating scale will be 0° to 180° with 5° increments for fine flow control and settable flow rates.
7. End connections will be 1/2″ to 2″ ANSI socket or FNPT threaded or 150 lb flanged or butt fusion for Chemline metric PP, PVDF or ECTFE (Halar®) pipe or ChemFlare™ for PFA tubing.

ORDERING EXAMPLE

Chemline Metering Ball Valves	SM	A	010	E	S
Valve Material	**A** – PVC	**B** – PP			
Size	**005** – 1/2″	**007** – 3/4″	**010** – 1″		
	012 – 1-1/4″	**015** – 1-1/2″	**020** – 2″		
Seals	**E** – EPDM	**V** – FPM (Viton®)			
Ends	**S** – Socket	**T** – Threaded	**B** – Butt[1]	**CF** – ChemFlare™	

Example: SM Series Ball Valve, PVC, 1″, EPDM seals, socket ends.

[1] PP and PVDF metric butt fusion ends (1/2″ to 2″) connect to Chemline PP and PVDF piping systems.

VACUUM RATING

- 29.9 inches mercury

OPTIONS & ACCESSORIES

- **Reduced Ends**
- **Electric Actuator with Positioner**
  – Operates as a linear control valve

CHEMLINE PLASTICS
SUPERIOR FLOW SOLUTIONS

55 Guardsman Road, Thornhill, ON, L3T 6L2, Canada | ISO 9001:2008 Certified
tel.905.889.7890 | fax.905.889.8553 | request@chemline.com | chemline.com

LEFT BLANK

PDF Published October 18, 2017

Metering Ball Valves

CHEMLINE PLASTICS
SUPERIOR FLOW SOLUTIONS

Chemline SM Series Metering Ball Valve is designed for fine linear flow control of chemicals or clean fluids. The ball is solid with graduated V-groove cut on the outside surface. Precise linear flow control is accomplished through 180° rotation of the handle. With a positioning electric actuator, this becomes an inexpensive control valve. If higher C_V values are required, refer to SP Series Proportional ball valves.

PVC PP

SERIES: SM2
SIZES: 1/2" – 1"
ENDS: Threaded, Socket, Butt[1] or ChemFlare™ [2]
SEATS: PTFE
O-RINGS: EPDM, FPM (Viton®)





Integral 180° Scale with 5° Increments
- Linear flow control and settable flow rates

features

Precise Linear Flow Control
- Provided by a special V-groove ball and wide handle travel (0° to 180°)

Full Size Range
- 6 valves sizes 1/2" to 2" offers a large selection of C_V values

High End Ball Valve Features
- Full Blocking design
- Double Stem O-Rings for safety
- PTFE seats with elastomer cushion
  – Automatically compensates for seat wear or expansion
- 230 psi pressure rated (PVC)

Low Stem Torques
- Due to floating ball design and cushioned PTFE seats

Bidirectional
- Works with flow in either direction

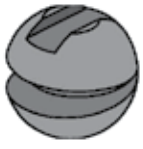

Ball Detail



[1]Butt ends for fusion to Chemline metric PP piping.
[2]For ChemFlare™ end connectors, consult Chemline.

10/17 ©Chemline Plastics Limited 2017
Chemline is a registered trade mark of Chemline Plastics Limited

Metering Ball Valves

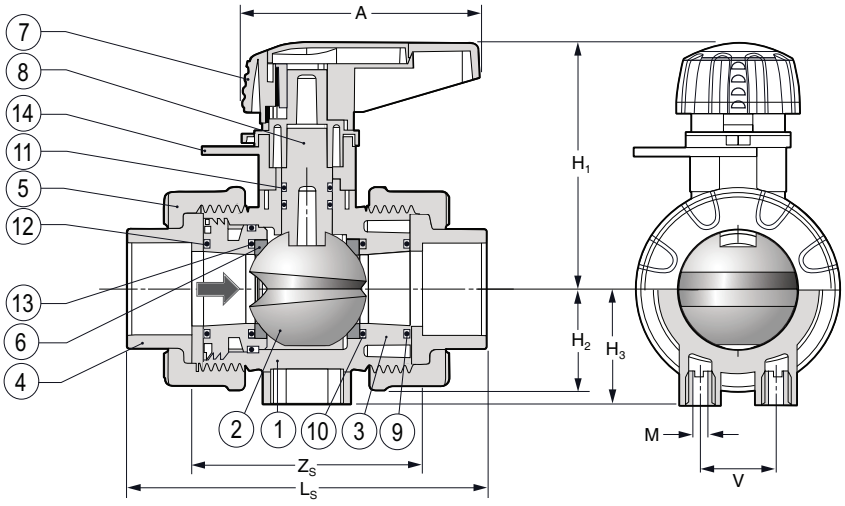

PARTS

No.	Part	Pcs.	Materials
1	Body	1	PVC, PP, PVDF
2	Ball	1	PVC, PP, PVDF
3	Carrier	1	PVC, PP, PVDF
4	End Connector	2	PVC, PP, PVDF
5	Union Nut	5	PVC, PP, PVDF
6	Ball Seat	2	PTFE
7	Handle	1	PVC
8	Stem	1	PVC, PP, PVDF
9	Carrier Face O-Ring	1	EPDM, FPM(Viton®)
10	Carrier O-Ring	1	EPDM, FPM(Viton®)
11	Stem O-Ring[1]	2	EPDM, FPM(Viton®)
12	Face O-Ring	1	EPDM, FPM(Viton®)
13	Seat Cushion[1]	2	EPDM, FPM(Viton®)
14	Position Indicator Scale	1	PVC

DIMENSIONS INCHES

							PVC			PP		
Size	A	H_1	H_3	H	M	V	Z_s	L_s	H_2	Z_s	L_s	H_2
1/2"	2.62	2.48	1.10	2.50	M5	0.98	2.48	3.74	0.99	2.64	3.74	1.06
3/4"	3.21	3.03	1.20	2.70	M5	0.98	2.83	4.33	1.16	3.03	4.29	1.18
1"	3.21	3.39	1.60	3.00	M6	1.02	3.11	4.84	1.39	3.27	4.69	1.57

ELECTRICALLY OR PNEUMATICALLY ACTUATED

The metering ball valve becomes a proportional control valve with the addition of a Q or E Series electric or P Series pneumatic actuator with 4-20 mA positioner

- Thermoplastic housing and mounting bracket
- Manual override
- Position indication
- Mechanical travel stops
- Different voltages are available



Q Series Electric



E Series Electric



P Series Pneumatic

E Series Electric Actuator on a SM2 Valve

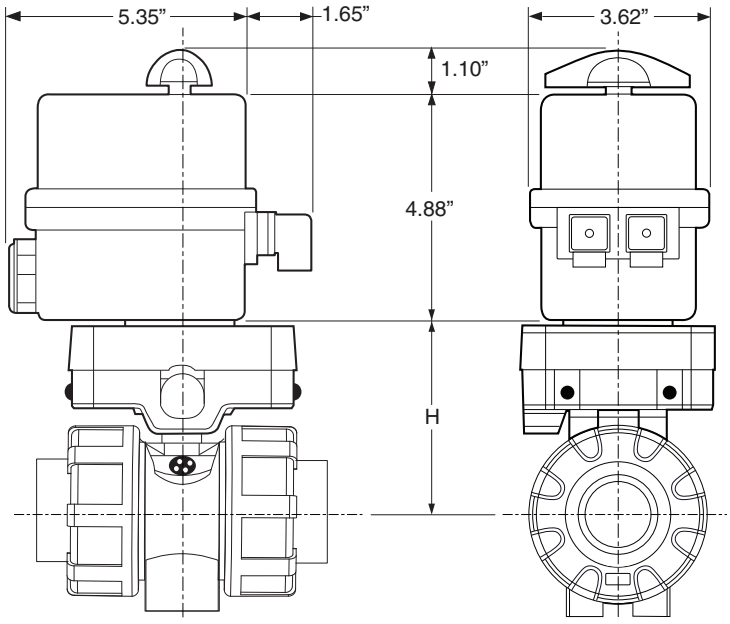

Side View

Port View

Metering Ball Valves

WORKING PRESSURES PSI

NET WEIGHTS LB. Cv VALUES

Size	PVC 20°C 68°F	PVC 40°C 104°F	PVC 60°C 140°F	PP 20°C 68°F	PP 40°C 104°F	PP 60°C 140°F	PP 80°C 176°F	PVC	PP	USGPM Flow at 1 psi △P
1/2″	230	130	30	150	100	65	20	0.35	0.29	1.4
3/4″	230	130	30	150	100	65	20	0.60	0.44	1.9
1″	230	130	30	150	100	65	20	0.84	0.64	2.3

Temperature Ranges: PVC 0 to 60°C (32 to 140°F), PP 0 to 95°C (32 to 203°F)

Cv VALUE vs. VALVE OPENING

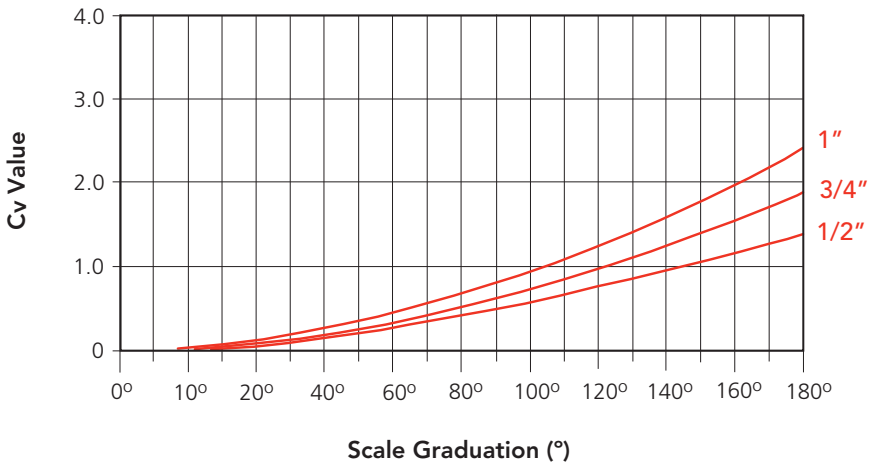

SAMPLE SPECIFICATION

1. All low flow control valves, 1/2″ to 1″, will be Chemline SM Series metering ball valves.
2. Body material will be PVC or PP, and o-rings will be EPDM or FPM (Viton®).
3. Body will be full blocking design with double stem o-rings for safety, rated at 230 psi maximum working pressure for PVC and 150 psi for PP material.
4. Ball will be floating design, molded solid with a V-groove for linear flow control over a 180° range of handle rotation.
5. Seats will be PTFE with elastomer cushions for positive closure with minimum stem torques and automatic compensation for seat wear and expansion.
6. Position indicating scale will be 0° to 180° with 5° increments for fine flow control and settable flow rates.
7. End connections will be 1/2″ to 1″ ANSI socket or FNPT threaded or 150 lb flanged or butt fusion for Chemline metric PP pipe or ChemFlare™ for PFA tubing.

ORDERING EXAMPLE

Chemline Metering Ball Valves	SM2	A	010	E	S
Valve Material	**A** – PVC	**B** – PP			
Size	**005** – 1/2″	**007** – 3/4″	**010** – 1″		
Seals	**E** – EPDM	**V** – FPM (Viton®)			
Ends	**S** – Socket	**T** – Threaded	**B** – Butt[1]	**CF** – ChemFlare™	

Example: SM2 Series Ball Valve, PVC, 1″, EPDM seals, socket ends.

[1] PP metric butt fusion ends (1/2″ to 2″) connect to Chemline PP piping systems.

VACUUM RATING

- 29.9 inches mercury

OPTIONS & ACCESSORIES

- **Reduced Ends**
- **Electric or Pneumatic Actuator with Positioner**
  – Operates as a linear control valve

CHEMLINE PLASTICS
SUPERIOR FLOW SOLUTIONS

55 Guardsman Road, Thornhill, ON, L3T 6L2, Canada | ISO 9001:2008 Certified
1.800.930.2436 (CHEM) | fax.905.889.8553 | request@chemline.com | chemline.com

LEFT BLANK

CROMPTON GREAVES

MODEL EMOTRON M20, SHAFT POWER MONITOR

LEFT BLANK

Emotron M20
Shaft Power Monitor



Instruction manual
English

emotron®
DEDICATED DRIVE

Contents

1 Inside the Box 3

2 Safety 4

3 Description 5

4 Getting Started 7

4.1 Please note 7
4.2 Connection and set-up before first start 7
4.3 First start 8
4.4 Manual setting of alarm levels, alternative A 9
4.5 Manual setting of alarm levels, alternative B 10
4.6 Manual setting of alarm levels, alternative C 10

5 Wiring 11

5.1 Alternative example for single-phase connection 13
5.2 Example - digital input 14

6 Selection of Current Transformer 14

6.1 Motors less than 100 A 14
6.2 Motors greater than 100 A 17

7 Operation 19

7.1 Overview 19
7.2 Window menu 20
7.3 How to change a value 21

8 Programming 22

8.1 Set measurement unit, kW or HP 22
8.2 Setting rated motor power and current (window 41 and 42) 24
8.3 Setting number of phases (window 43) 25
8.4 Monitor function (window 05) 25
8.5 Setting the Start Delay (window 31) 27

8.6 Setting alarm levels with Auto set 28
8.7 Setting the Response Delay (windows 32 and 34) 29

9 Advanced Features 31

9.1 Setting alarm levels manually (windows 11-14) 31

10 Troubleshooting 41

11 Technical Data 43

12 Parameter List 47

13 Service 50

1 Inside the Box

Please check the delivery. Despite the fact that all products from Emotron are carefully inspected and packed, transport damage may occur:

- Your shipment should contain the Emotron M20 shaft power monitor, a current transformer, 2x terminal covers (option*) and this instruction manual.
- Check carefully that the equipment ordered complies with the motor's input voltage and that the current transformer rating is as stated on the delivery packaging.
- Check that the contents have not been damaged during shipping.
- If something is missing, or has been damaged, contact the supplier as well as the forwarding agent within 48 hours of receipt.

NOTE: If in doubt contact your supplier before installing or commissioning the product.

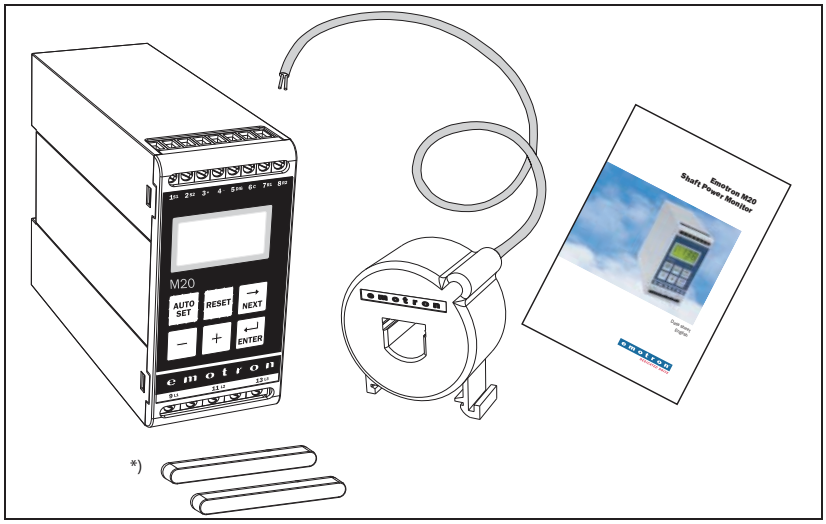

2 Safety

- Study this manual thoroughly before installing and using the monitor.
- The monitor must be installed by qualified personnel.
- Always disconnect supply circuits prior to installing.
- The installation must comply with standard and local regulations.
- Pay special attention to the information in this chapter and the parts marked CAUTION in the Operation and Programming chapters.
- Check that the monitor and the equipment are correctly connected before it is taken into use.
- Should questions or uncertainties arise, please contact your local sales outlet or see chapter 13, Service.
- Faults that arise due to faulty installation or operation are not covered by the warranty.

NOTE: Removing or tampering with the seal on the housing will invalidate the warranty.

3 Description

This instruction manual describes the installation and commissioning of the Emotron M20 shaft power monitor. The Emotron M20 supervises induction motor driven equipment and provides warnings when abnormal conditions are detected. It protects for example, pumps and other equipment. The M20's ability to provide reliable monitoring and protection ensures that production equipment is optimized and expensive breakdowns and interruptions are minimized.

The Emotron M20 uses the motor as its own sensor and no external sensors or extra cabling are required. Due to the special method of subtracting motor power losses, the monitor is able to accurately measure the shaft power supplied by the motor to the application. This advanced technique allows the M20 to monitor only the "application" load rather than the "total" motor load, which includes the varying motor losses.

The shaft power is calculated by measuring motor input power, and subtracting the motor power loss calculated using a unique principle. The shaft power output is indicated on the monitor display in kW or HP, or as a percentage of rated power. Calculating shaft power gives more reliable supervision than non-linear techniques, such as current and phase angle measurements. Current measurement is only sufficient at high motor loads and phase angle only at low loads. Input power is sometimes called true or real power. Input power is linear, but ignores motor power loss.

The M20's analogue output and two relay outputs allow the combination of direct and indirect control. The unit offers high accuracy in the event of very small load variations. The analogue output signal can be used to scale the machine load to represent the actual working range.

The monitor is very easy to install and set up and should be mounted on a standard DIN rail. It is also very easy to use. The "Auto set" function makes it possible to adjust the monitor automatically by pressing just one key.

The M20 provides complete flexibility in terms of the type of protection required for your application. You may select either overload and underload protection or simply overload with pre-alarm or underload with pre-alarm. Independent response delays can be selected for both overload and underload protection. Additional flexibility is provided in the form of programmable output relays, number of start attempts, number of reversing attempts etc.

The Emotron M20 shaft power monitor offers advanced multi-function monitoring and a display for load indication and parameter setting. It is ideal for protecting many different applications including pumps in general, centrifugal pumps, magnetic pumps, screw and impeller pumps, mixers, scrapers, crushers, conveyor systems, etc.

For further information, please see www.emotron.com.

4 Getting Started

4.1 Please note

1. Pay special attention to the safety section in this manual and parts marked CAUTION.
2. Check that motor/supply voltage corresponds to values on the monitor product label at the side of the unit.
3. Make a note of the motor's rated power and full load amps from its name-plate. Confirm that the current transformer supplied is of the correct size according to tables 1 and 2 in chapter 6 of this manual.

4.2 Connection and set-up before first start

1. Connect the Emotron M20 according to chapter 5 and Fig. 1.
2. Make sure all safety measures have been taken and switch on the supply voltage.
3. Use the NEXT key to scroll through the menu. Press and hold the ENTER key and press the NEXT key to scroll back.
4. Set rated motor power and current in windows 41 and 42. Additional settings to be programmed are discussed in chapter 8.
5. Set monitor function in window 05, overload and underload or only underload or only overload. See chapter 12, Parameter list, for range and default values.
6. Set start delay and response delay in window 31 and 32/34.
7. Compare all set values with the parameter list in chapter 12 to confirm that all relevant values are set. Advanced features will be found in chapter 9.

4.3 First start

CAUTION: Make sure that all safety measures have been taken before switching on the supply voltage and starting the motor/machine in order to avoid personal injury.

1. Start the motor/machine and let it run at normal load, until the Start Delay has expired.
2. Press AUTO SET for 3 seconds.

Hint!

Short-circuit the output relays during the set-up; this prevents the equipment from stopping unintentionally.

More Hints!

The monitor can be set in three different ways:

1. **Automatically** by pressing the Auto set key as described above. The Auto set function performs a measurement (momentarily) of the actual load and sets relevant alarm levels for this actual load plus/minus the "margins" (Default; Max +16% and Min -16%).
2. If Auto set is used as above, the **margins can be re-adjusted** manually (windows 21-24). When the margin values are changed a new Auto set must always be performed to activate the changes and the new margins. More information is provided in chapter 9, Advanced Features.
3. **Manual setting** of alarm levels (windows 11-14). The alarm levels can be set manually, without using the Auto set. See sections Manual setting of alarm levels, alternative A, B and C.

NOTE: If any window parameter is manually adjusted, the display will flash the new value to indicate that a change has been made. The Enter key must be pressed for the M20 to accept this new value.

4.4 Manual setting of alarm levels, alternative A

Running and setting at normal load

- Start the motor/machine or pump and let it run at normal load, until the Start Delay (window 31) has expired.
- Read off the load on the monitor display, e.g. 65%, window 01 (or kW/HP).
- Set the max. main alarm level to something between e.g. 70-85% in window 11. This must be set to the actual application requirements, maximum load for machine/process.
- Set the min. main alarm level to something between e.g. 60-45% in window 14. This must also be set to the actual application requirements.

See also Fig. 7 in section 8.4, Over- and underload monitor.

4.5 Manual setting of alarm levels, alternative B

Running and setting at maximum load as well as at minimum load

- Start the motor/machine or pump and let it run at maximum load, until the Start Delay has expired. E.g. fill the conveyor with maximum allowed goods.
- Read off the load on the monitor display, e.g. 85% (window 01).
- Set the max. main alarm level to something between e.g. 90-95% in window 11. This must be set to the actual application requirements, maximum load for both machine and processes.
- Then run the motor/machine and let it run at minimum load, e.g. idling, until the Start Delay has expired.
- Read off the load on the monitor display, e.g. 30%.
- Set the min. main alarm level to something between e.g 25-20% in window 14. This must also be set to the actual application requirements.

See also Fig. 7 in section 8.4, Over- and underload monitor.

4.6 Manual setting of alarm levels, alternative C

It is also possible to approximately calculate or estimate the alarm levels. If e.g. the motor used is 22 kW, 22 must be set in window 41. This means that each percentage point corresponds to 220 W (22 kW/100 = 220 W), and the alarm limits in window 11- 14 can be set in steps of 220 W. If the max. alarm level is set to 80% in this example, the monitor will emit an alarm and stop the machine at approx. max. 17.6 kW shaft output power.

NOTE: If the pre-alarm is not used, the values for Min. pre-alarm and Max. pre-alarm can be set to 0 (window 13) and 125% (window 12) respectively. This will eliminate pre-alarm warning indications in the monitor display when not in use.

See also Setting alarm levels manually in chapter 9, Advanced Features.

5 Wiring

The following wiring diagram provides an example of how the M20 can be connected to control the start/stop circuit of a three-phase motor, Fig. 1. Connections to a single-phase motor are described later in this manual (Fig. 2) as are the programming changes necessary for such applications. The default setting for the M20 is 3-phase.

1. The current transformer CTMxxx must be placed in the same phase that is connected to terminal 9, phase L1, see Fig. 1. Failure to follow this requirement will result in the monitor failing to function.
2. For single-phase connection see fig 2.

When using DC voltage, terminal 6 should be connected to negative polarity (ground) and terminal 5 to positive polarity (max. 48 VDC). See also Alternative auxiliary circuit (Fig. 16) in chapter 9.

Note: The current transformer (CTMxxx) must be placed in the same phase that is connected to terminal 9, phase L1, see Fig. 1.

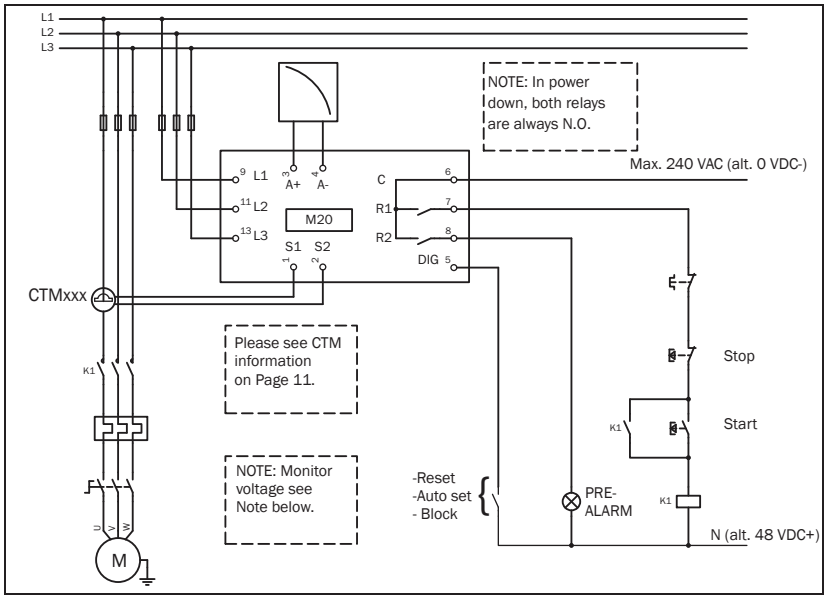

Fig. 1 Connection example

NOTE: If the START/STOP is connected as per Fig. 1, it is recommended that terminals 6 and 7 be bypassed during programming. After the programming is completed the bypass must be taken out. Make sure that the monitor voltage range e.g. 3x380-500 VAC matches the connected motor/line voltage, e.g. 3x 400 V.

Please use the enclosed plastic (rubber) insert (if ordered, optional) to cover the monitor terminals.

5.1 Alternative example for single-phase connection

This wiring example shows the connections required for single-phase applications. Refer to Fig. 1 for the remaining wiring.

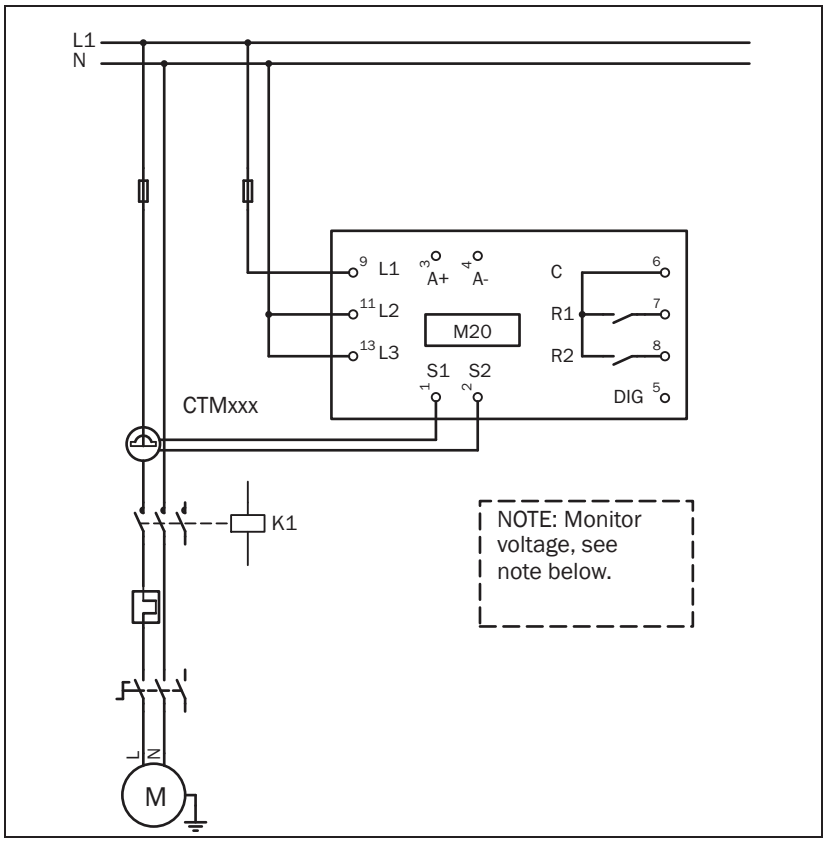

Fig. 2 Single-phase connection example.

NOTE: In Fig. 2 make sure that the monitor voltage range e.g. 1x100-240 VAC matches the connected motor/"line – neutral" voltage, e.g. 1x 230 V.

5.2 Example - digital input

The digital input uses terminals 5 (DIG) and 6 (C - reference). Either a VAC or a VDC signal may be used. Connect + to terminal 5 (DIG) and - to terminal 6 for VDC signal. Please note the polarity when DC voltage is used. See also Fig1 and terminal 6: Max. 240 VAC (or 0 VDC-) and on terminal 5: N (or 48 VDC+). See also chapter 9, Advanced Features.

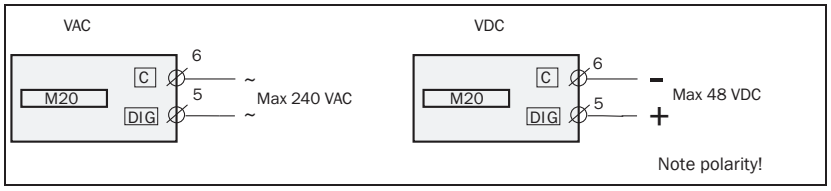

Fig. 3 Wiring example for digital input.

6 Selection of Current Transformer

6.1 Motors less than 100 A

1. Check the rated motor current on the motor plate.
2. Compare this value with the current in Table 1.
3. From Table 1, select the current transformer and the appropriate number of windings.

Fig. 5 shows the different types of current transformer (CT) windings. In Fig. 5:1 the motor wire is just drawn through the CT, in the text and tables below this is described as 1 (one) winding. Fig. 5:2 shows a CT with 2 windings and Fig. 5:3, 3 windings. In other words the number windings is equal to the number of times the motor wire “L1” is drawn through the hole of the current transformer.

NOTE: Maximum length of the CTM cable is 1 m (39 inches).

Example

- Rated motor current = 12 A.
- Select 10.1-12.5 A from the first column in Table 1.
- This gives:
  CTM025 with 2 windings (the motor wire is drawn through the CT's hole twice).

Table 1 Motors and CT less than 100 A

RATED MOTOR CURRENT [A]	CURRENT TRANSFORMER TYPE and NUMBER OF WINDINGS			
	CTM 010	CTM 025	CTM 050	CTM 100
0.4 – 1.0	10			
1.01 – 2.0	5			
2.01 – 3.0	3			
3.1 – 5.0	2			
5.1 – 10.0	1			
10.1 – 12.5		2		
12.6 –25.0		1		
26.0 – 50.0			1	
51.0 – 100.0				1

In order to ensure an accurate calibration of the M20, it is essential that you use the correct CTM and apply the exact number of windings in accordance with the above table.

NOTE: Normally the appropriate Current Transformer will have been ordered and shipped with the M20. Check that this is the case; contact the supplier if in doubt.

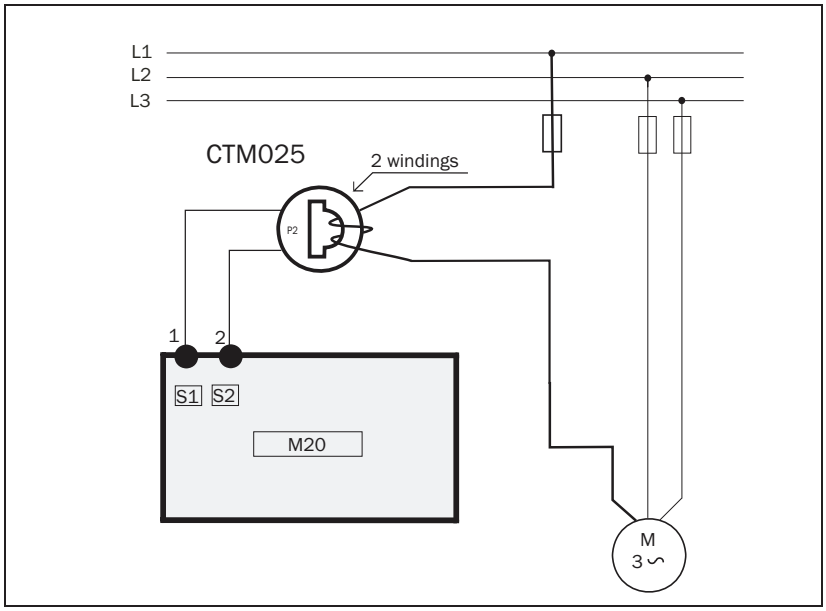

Fig. 4 Example CTM 025 with 2 windings for a 12 A motor

NOTE: The current transformer connection and orientation are not polarity sensitive, but must be connected to the same phase that is being referenced for terminal 9 of the M20.

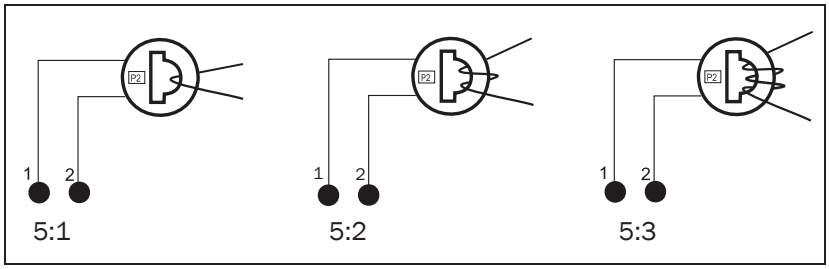

Fig. 5 Example 1, 2 and 3 windings.

6.2 Motors greater than 100 A

1. Check the rated motor current on the motor plate.
2. Compare this value with the current in Table 2.
3. Select the primary and secondary current transformer and the appropriate number of windings from the columns in Table 2.

Please note that the ratio of the primary transformer must be exactly as provided in the table below, otherwise the monitor power calculations will be inaccurate. This will affect power readings, settings etc.

Example

- Rated motor current = 260 A.
- Select 251-500 A from the first column in Table 2.
- This gives:
  - Primary transformer 500:5, 1 winding. (The motor wire is drawn through the primary transformer once).
  - CTM010 with 2 windings. (The wire from the primary transformer is drawn through the hole in the CT, "CTM10", twice).

Table 2 CT greater than 100 A.

RATED MOTOR CURRENT [A]	CURRENT TRANSFORMER TYPE and NUMBER OF PRIMARY WINDINGS
101 – 150	150:5 + CTM 010 1 + 2
151 – 250	250:5 + CTM 010 1 + 2
251 – 500	500:5 + CTM 010 1 + 2
501 – 999	1000:5 + CTM 010 1 + 2

NOTE: Check that the appropriate Current Transformers has been ordered and shipped with the M20. Contact the supplier if in doubt.

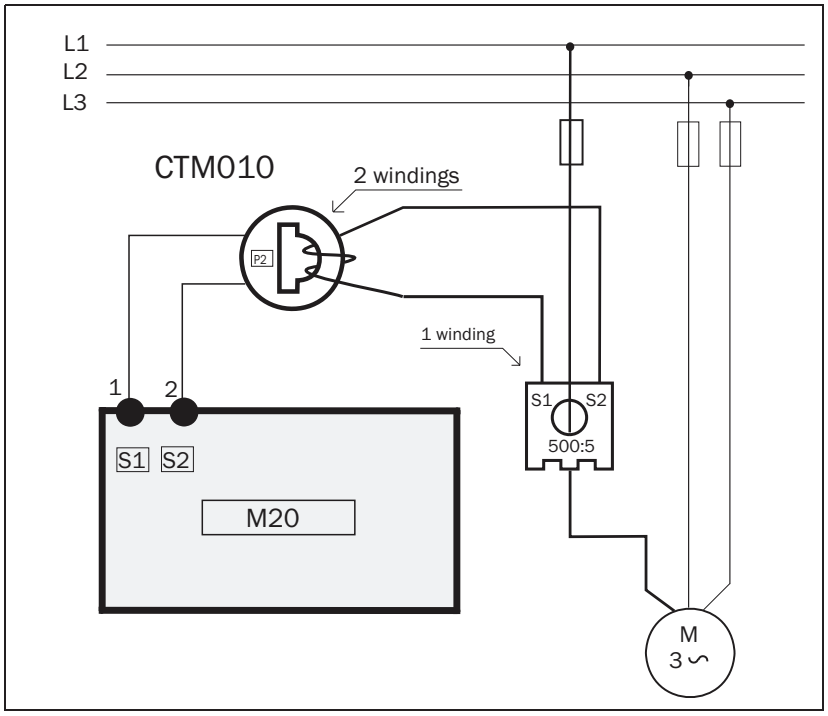

Fig. 6 Example of a CTM 010 with 2 windings and a primary transformer 500:5 with 1 winding for a 260 A motor.

NOTE: The transformer connection and orientation are not polarity sensitive, but must be connected to the same phase that is being referenced for terminal 9 of the M20.

7 Operation

Make sure the enclosed plastic (rubber) insert (if ordered, optional) covers the monitor terminals before you start programming.

7.1 Overview



Control Terminals

1	S1	Current transformer input
2	S2	Current transformer input
3	+	Analogue output
4	-	Analogue output
5	DIG	External RESET or AUTO SET or Block Pre-Alarm
6	C	Common: RELAY, DIG
7	R1	Main Alarm Relay 1*
8	R2	Pre-Alarm Relay 2

Display

- 12 Function (window) number
- 123 Function Value
- ⚠ Warning signal
- Start, response delay or block timer active
- Parameter locked
- V Voltage indicator
- A Current indicator
- mA Milliampere indicator
- kW Kilowatt indicator
- S Second indicator
- % Per cent indicator

AUTO SET Key

Press for 3 seconds during normal and stable load to apply the automatic setting of the alarm levels. Not available if Parameter Locked.

NEXT Key

Proceeds to next window. If no key is pressed for 1 minute the display returns to window 01 automatically. Scroll back by pressing and holding ENTER at the same time as the NEXT key is pressed.

ENTER Key

Confirm (save) changes.

After Power up window 01 appears, the actual load value is shown.

Default view (example shows 54% load):



Use the NEXT key to scroll through the function menu.

RESET Key

To reset ALARM

+/- Keys

For increasing and decreasing value

Monitor Supply Terminals

9	L1 Motor phase
11	L2 Motor phase
13	L3 Motor phase

* For alternative relay function, see Special functions in chapter 9.

7.2 Window menu

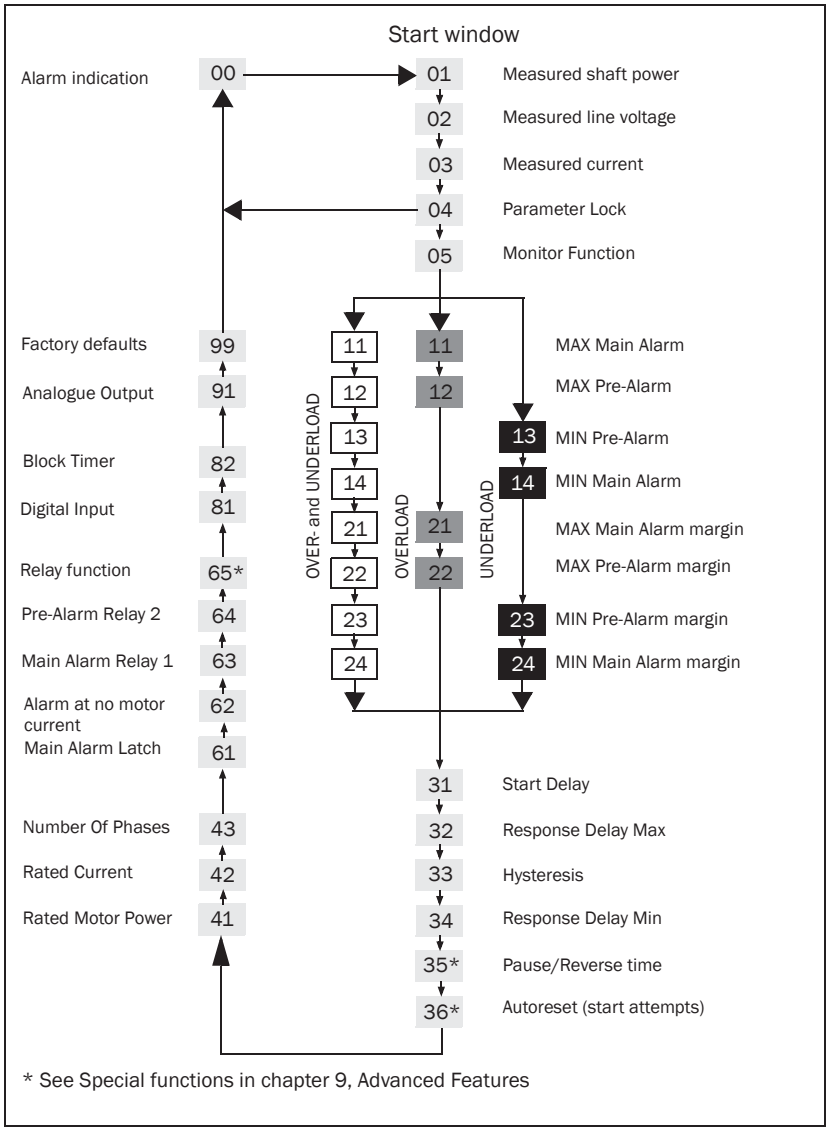

* See Special functions in chapter 9, Advanced Features

- The Alarm window 00 only appears if an Alarm output is active.
- The Actual Load window 01 appears after power up.
- Use the NEXT key to scroll through the menu. Scroll back by pressing and holding ENTER at the same time as the NEXT key is pressed.
- The Actual Load window (or alternative alarm window) will appear automatically if no keys are pressed for longer than 1 minute.
- If the Parameter Lock is on, only windows 00 (if alarm active) 01 02 03 04 are visible.
- Window 05 selects the monitor function, see section 8.4.

7.3 How to change a value

Example: setting the rated motor current in window 42.

1. Press NEXT until the window number 42 appears.



2. Press + or − until the desired value is reached (e.g. 23 A), value flashes.



3. Press ENTER to confirm and save the change, value stops flashing.

NOTE: If the value is NOT to be changed, press the NEXT key.

CAUTION: In order to avoid personal injury, make sure that all safety measures have been taken before switching on the supply voltage and starting the motor/machine.

8 Programming

8.1 Set measurement unit, kW or HP

8.1.1 Selecting the unit of measurement

The unit of measurement can be set to kilowatts or horsepower both as absolute or relative values. This setting is valid for the alarm levels, rated motor power and the actual load read-out in window 01.

Measurement unit	Read-out load window 01	Rated power window 41	Alarm levels windows 11, 12, 13, 14
Kilowatt relative value (def.)*	%	kW	%
Horsepower absolute value	HP	HP	HP
Horsepower relative value*	%	HP	%
Kilowatt absolute value	kW	kW	kW

* Measured shaft power as % of rated power.

CAUTION: In order to avoid personal injury, make sure that all safety measures have been taken before switching on the supply voltage and starting the motor/machine.

Programming

1. Go to window 01.
2. Press and hold RESET and + simultaneously for 3 seconds.
3. The next unit of measurement is set and appears for 2 sec (see examples).

Repeat to select the desired measurement unit according to the table.

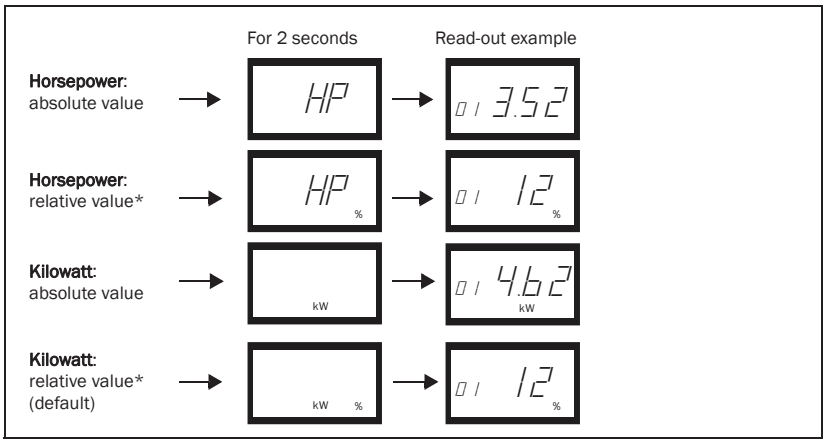

* Measured shaft power as % of rated power.

8.2 Setting rated motor power and current (window 41 and 42)

The rated motor power and the rated motor current must be set in windows 41 and 42.

Example motor plate:

TYPE: T56BN/4		NR: 948287		Prot. IP: 54	
Serv: S1		Cos φ: 0.78		Is. Cl:F	
V:Y/Δ	Hz	HP	kW	RPM	A:Y/Δ
240/415	50	3	2.2	1400	5.6/9.4
260/440	60	3	2.2	1680	5.8/9.1
ASYNCHRONOUS THREE-PHASE MOTORS					

8.2.1 Programming

1. Go to window 41 (default = 2.2 kW).
2. Press − or + to set the rated motor power as indicated on the motor plate (see example).
3. Press ENTER to confirm the change.
4. Go to window 42 (default = 5.6 A).
5. Press − or + to set the rated motor current as indicated on the motor plate (see example).
6. Press ENTER to confirm the change.

8.3 Setting number of phases (window 43)

The number of phases must be set according to the number of motor phases. Default is 3 phases, see also chapter 5, Wiring.

8.3.1 Programming

1. Go to window 43 (default = 3PH).



2. Press − or + to set the number of phases to 1 if a single-phase motor is used.

3. Press ↵ ENTER to confirm the change.



8.4 Monitor function (window 05)

Monitor (Protection)	Indication in window 05	Alarm	Output Relay (default)
OVER- and UNDER-LOAD (default)	—	MAX Main Alarm	Relay 1 (NC): 6-7
	—	MAX Pre-Alarm	Relay 2 (NO): 6-8
		MIN Pre-Alarm	Relay 2 (NO): 6-8
		MIN Main Alarm	Relay 1 (NC): 6-7
OVERLOAD	—	MAX Main Alarm	Relay 1 (NC): 6-7
		MAX Pre-Alarm	Relay 2 (NO): 6-8
UNDERLOAD	—	MIN Pre-Alarm	Relay 2 (NO): 6-8
		MIN Main Alarm	Relay 1 (NC): 6-7

If separate output relays are required for overload and underload alarms, please refer to chapter 9 and chapter 12.

Overload and underload Monitor

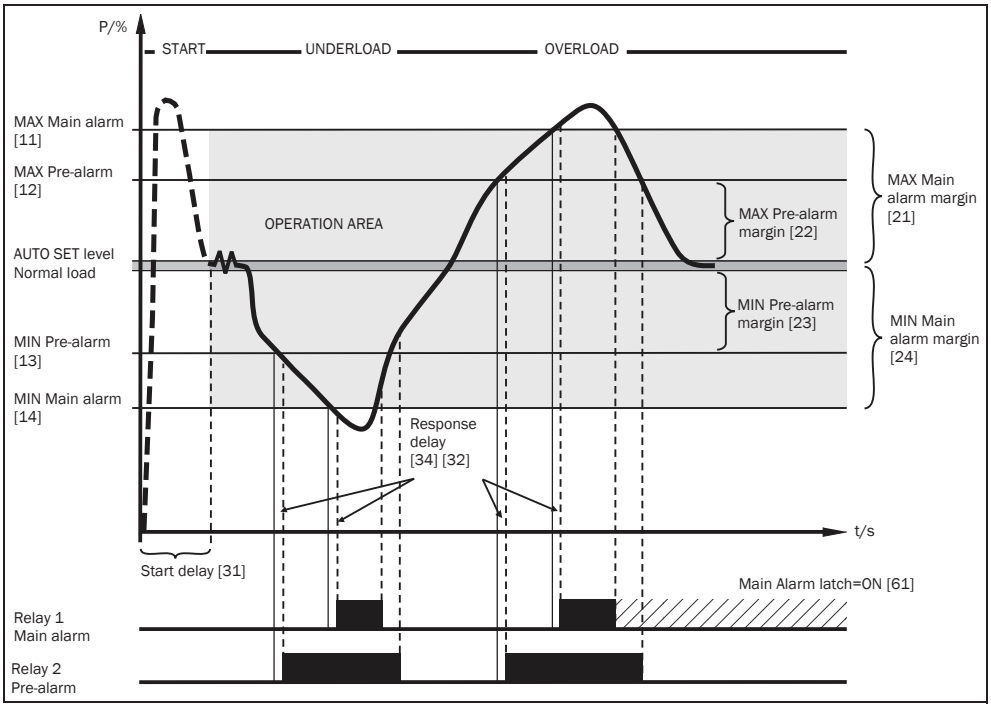

Fig. 7 Overload and underload monitor.

Programming

1. Go to window 05. The default selection is Overload and Underload monitor.
2. Press **−** or **+** to select underload or overload monitor.



3. Press **ENTER** to confirm the change.

8.5 Setting the Start Delay (window 31)

To avoid false alarms during start up a Start Delay must be set to allow the motor and machine to speed up and to allow the power in-rush currents.

Programming

1. Determine in seconds how long it takes for the motor and machine to reach speed and for the power in-rush to pass. This will be the Start Delay.
2. Go to window 31 (default = 2.0 s).
3. Press − or + to set the determined Start Delay time in seconds.
4. Press ↵ ENTER to confirm the change.

If the monitor is being used on a self-priming pump, it may also be necessary to set the Start Delay long enough to allow the pump to become fully primed.

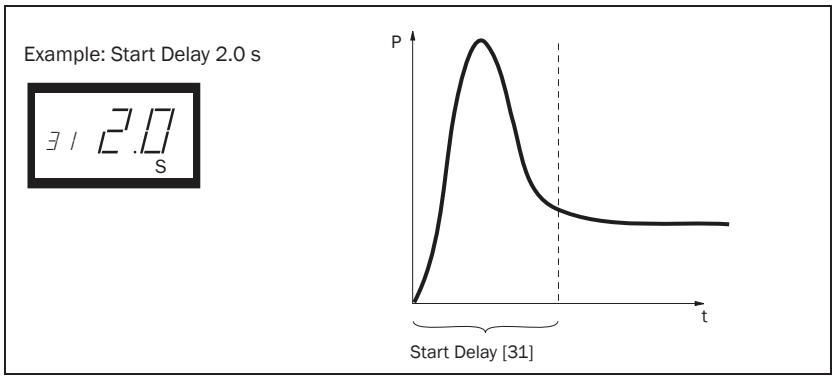

Fig. 8 Start Delay.

8.6 Setting alarm levels with Auto set

The Auto set command performs a measurement (momentarily) of the actual motor load and automatically sets the relevant alarm levels depending on the selected monitor function.

Protection (Monitor function window 05)	Alarm	Margin Value (Default margins)	Margins (Windows)	Alarm Level at Auto set
OVER- and UNDERLOAD (Default)	MAX Main Alarm	16%	21: MAX Main Alarm margin	Normal machine load + Window 21
	MAX Pre-Alarm	8%	22: MAX Pre-Alarm margin	Normal machine load + Window 22
	MIN Pre-Alarm	8%	23: MIN Pre-Alarm margin	Normal machine load - Window 23
	MIN Main Alarm	16%	24: MIN Main Alarm margin	Normal machine load - Window 24
OVERLOAD	MAX Main Alarm	16%	21: MAX Main Alarm margin	Normal machine load + Window 21
	MAX Pre-Alarm	8%	22: MAX Pre-Alarm margin	Normal machine load + Window 22
UNDERLOAD	MIN Pre-Alarm	8%	23: MIN Pre-Alarm margin	Normal machine load - Window 23
	MIN Main Alarm	16%	24: MIN Main Alarm margin	Normal machine load - Window 24

Programming

1. Start the motor and let it run at the normal machine load until the Start Delay has expired.
2. Press AUTO SET for 3 seconds. This can be done in any window.

3. The display shows “SEt”, to confirm that the Auto set level has been measured and the alarm levels have been set. The display reverts to window 01.



4. If the alarm levels are too high or too low, readjust the appropriate MARGINS (see table) and perform a new Auto set. Alternatively, alarm levels can be set manually, see chapter 9.

8.7 Setting the Response Delay (windows 32 and 34)

A Response Delay allows the machine to remain in an over- or underload condition for a specific time before the alarm relays are activated. Set the response delay for the overload condition in window 32 (max.), and set the response delay for the underload condition in window 34 (min.). The default value for both windows are 0.5 s. The valves may be adjusted upwards to avoid triggering a “false alarm”.

Programming

1. Determine in seconds the response delay required for both overload and underload conditions. This is normally determined by the unique properties and behaviour of each application.
2. Go to window 32 (overload, default = 0.5 s).
3. Press − or + to set the determined Response Delay time in seconds.
4. Press ENTER to confirm the change.

The response delay for the underload condition (min.) is set in window 34 in a similar way.

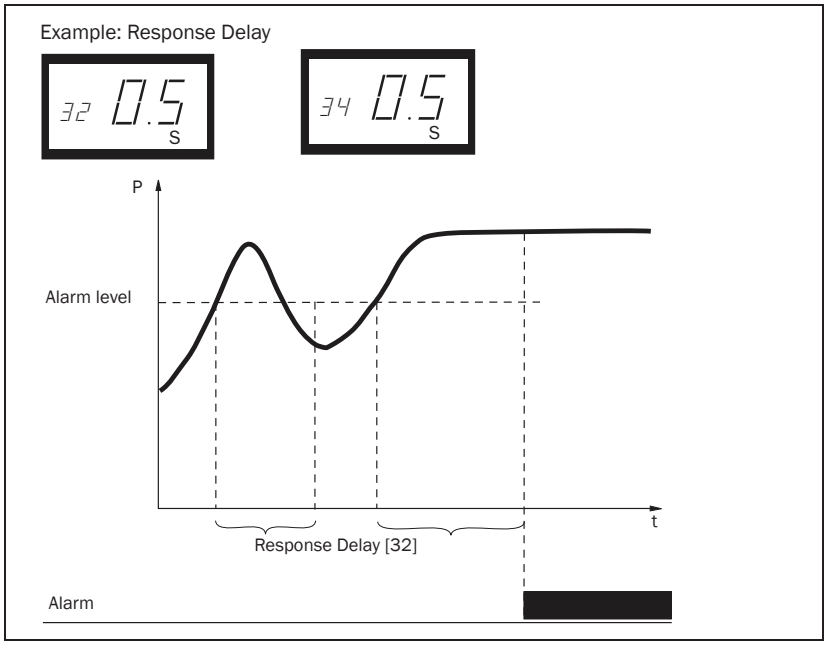

Fig. 9 Response Delay.

9 Advanced Features

9.1 Setting alarm levels manually (windows 11-14)

The alarm levels can be set manually, without using the Auto set. These levels can also be readjusted, e.g. for fine-turning, after an Auto set has been performed. See also section 4.3 to 4.6.

Protection (Monitor function window 05)	Alarm levels (Window)	Default
OVER- and UNDERLOAD (Default)	11: MAX Main Alarm	100%
	12: MAX Pre-Alarm	100%
	13: MIN Pre-Alarm	0%
	14: MIN Main Alarm	0%
OVERLOAD	11: MAX Main Alarm	100%
	12: MAX Pre-Alarm	100%
UNDERLOAD	13: MIN Pre-Alarm	0%
	14: MIN Main Alarm	0%

Setting margins (windows 21-24)

The margins for the Auto set can be changed manually. After the adjustment, the Auto set action must be performed again.

Protection (Monitor function window 05)	Window	Default
OVER- and UNDERLOAD (Default)	21: MAX Main Alarm margin	16%
	22: MAX Pre-Alarm margin	8%
	23: MIN Pre-Alarm margin	8%
	24: MIN Main Alarm margin	16%
OVERLOAD	21: MAX Main Alarm margin	16%
	22: MAX Pre-Alarm margin	8%
UNDERLOAD	23: MIN Pre-Alarm margin	8%
	24: MIN Main Alarm margin	16%

Setting hysteresis (window 33)

The hysteresis of an alarm level prevents the alarm relay "chattering" if the load fluctuates even in a normal "stable" condition. This also applies to a pre-alarm. This feature is normally only used if the main alarm latch (window 61) is set to Off. Default = 0%.

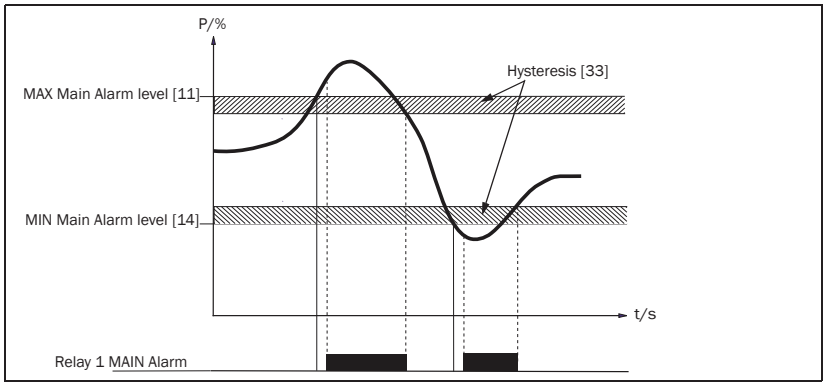

Fig. 10 Hysteresis

Setting main alarm latch (window 61)

The main alarm latch keeps the main alarm output active, even if the alarm condition has been removed. A latched alarm output can be reset by:

- The reset key
- External reset via digital input (see window 81).
- Switching off the power to the monitor (see also Wiring).

Default = Off.

Setting alarm at no motor current (window 62)

The alarm at no motor current gives an alarm if the motor current goes down to zero (62 = on). Default = Off (No alarm at no motor current).

Setting relay output (window 63 and 64 alt. 65)

The relay outputs R1 and R2 can be set to NO or NC contacts.

NOTE: If the power to the load monitor is switched off, the relay contacts are always in position NO.

If separate output relays are required for overload (max., relay R1) and underload (min., relay R2), see Special functions in chapter 9 and chapter 12.

Setting digital input (window 81)

The digital input can be set for:

RES: External RESET (Default)	To reset an alarm.
AU: External Auto set	To perform an Auto set with an external signal.
bLo: Block Pre-Alarm	To block the Pre-Alarm function and start the Block timer. If the input is high a Pre-Alarm is blocked, i.e. it is neglected. See also window 82.

Setting block timer (Window 82)

To set the timer for the blocking time after the Block command is released (see also window 81). Default = 0.0 sec.

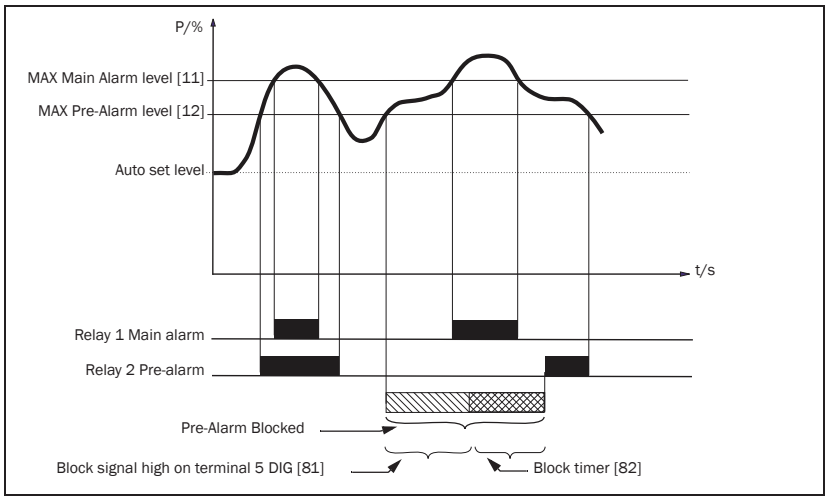

Fig. 11 Block timer

Setting analogue output (window 91)

The analogue output provides an analogue signal of either 0-20 mA or 4-20 mA which represents the motor shaft power. The signal can be inverted (20-0 or 20-4 mA). Full scale: rated motor power, see Fig. 12. To set P-span/scaling (full scale) see Fig. 13.

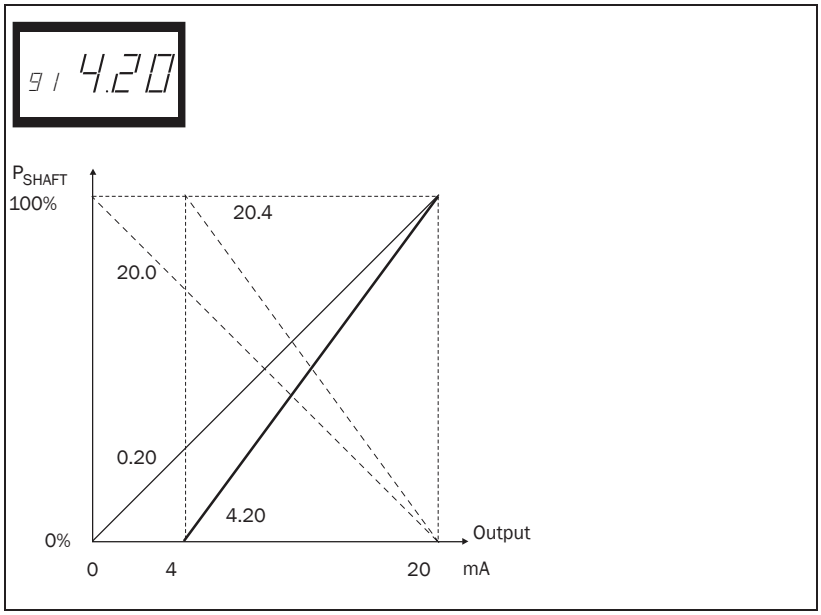

Fig. 12

Setting analogue output load range: P-span (window 92-93)

With windows 92 and 93 the full scale of the analogue output can be set according to the minimum and maximum load (P-span).

1. In window 91, press RESET and + for two seconds until “on” shows. Windows 92 and 93 are now active.

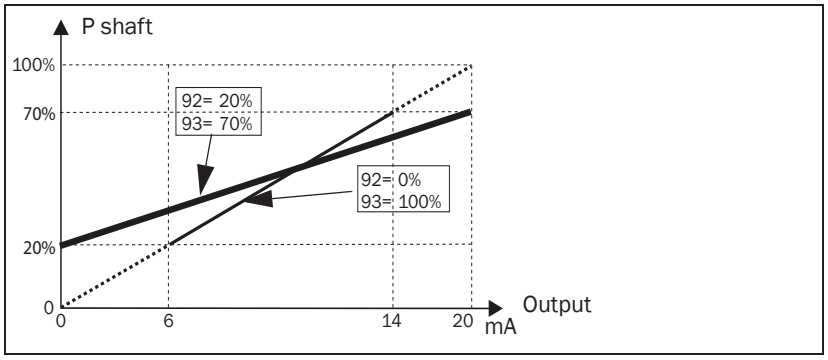

Fig. 13

2. Set the lowest load value in window 92 (e.g. 20%)
3. Set the highest load value in window 93 (e.g. 70%)

The full scale of the analogue output is now set between 20% and 70% load. See Fig. 13. To deactivate: Press RESET and + for two seconds until “Off” shows in window 91.Windows 92 and 93 are now inactive.

Locking parameters (window 04)

To avoid the parameter settings being changed unintentionally, the programming can be locked by entering the code “369” in window 04. Now only Load [01], Voltage [02] and Current [03] can be checked. Follow the same procedure to unlock the monitor. The Auto set key is disabled when parameters are locked. Auto set via digital input is always active if window 81 is set to AU (Auto set).



NOTE: The symbol appears in all windows.

Resetting to factory defaults (window 99)

The factory defaults are reset by entering “dEF” in window 99. If window 99 shows “USr” it indicates that the settings have been changed to user specific settings.

View alarm message (window 00)

In an alarm condition, the window 00 appears automatically. The window indicates the following alarm conditions. Window 00 flashes at all times.

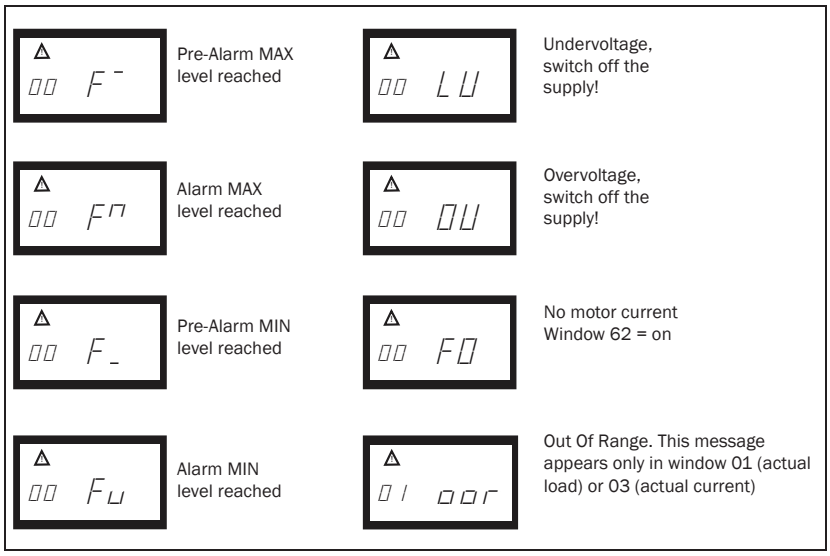

When the monitor is switched on (power up), the voltage on phases L1, L2 and L3 is checked. If the wrong voltage is detected, an LU (undervoltage) or OU (overvoltage) alarm is generated. No relay alarm will be indicated or activated.

Special functions (windows 35, 36 and 65)

Special functions are separate relays for overload and underload alarm/stop, start attempts and a reverse function with start attempts:

- Window 65 = 0, Normal M20
- Window 65 = 1, Separate relays for overload and underload alarm (DLM)
- Window 65 = 2, Reverse function

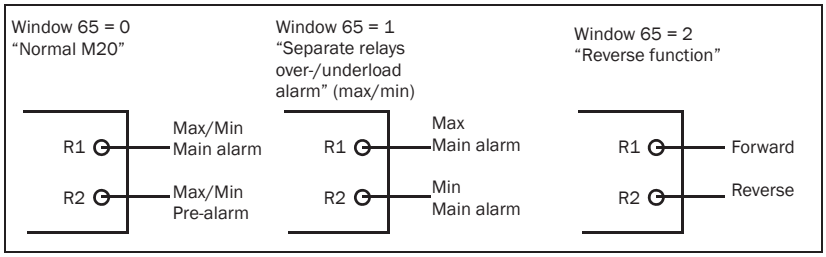

Fig. 14 Window 65 and relay functions

In all three cases the number of start attempts after a main alarm may be set in window 36. The pause time between start attempts may be set in window 35. This time is also used as the time to run the motor in the reverse direction when window 65=2. If a "jam" occurs on the reverse direction the M20 will stop the motor immediately and no more start attempts will be made until the alarm is reset.

The reverse function can be used to reverse e.g. a screw conveyor or pump when a "jum" occurs. Reversing the motor may remove the blockage. Should one reverse cycle not be enough to release the material, the M20 will repeat this operation up to a maximum of 5 cycles (window 36, 0-5 start attempts). Relay R1 = forward, relay R2 = reverse.

NOTE: For special handling of analogue output in reverse mode, see below.

The analogue output will go to its maximum e.g. 20 mA when the number of allowed start attempts has elapsed. Or if an overload condition occurs in reverse direction (window 65 = 2).

Resetting an alarm

A reset will cause the start attempt counter to be reset (new start attempts may be performed).

NOTE: In order to accomplish the above result, it will be necessary for a forward and reversing motor starter to be installed. See Fig. 15 Example of connection with a forward and reversing motor starter (contactor).

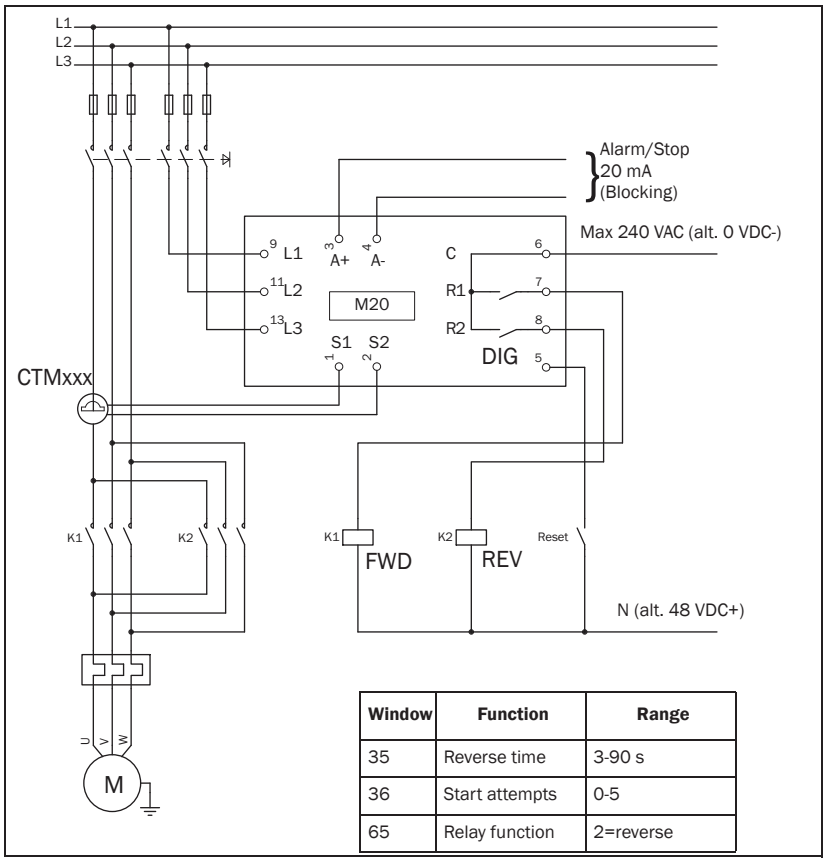

Window	Function	Range
35	Reverse time	3-90 s
36	Start attempts	0-5
65	Relay function	2=reverse

Fig. 15 Example of connection with a forward and reversing motor starter (contactor).

NOTE: In Fig. 15, R1 and R2 (K1 and K2) must not be energized/on at the same time as this will generate a short circuit. Therefore it is important that window 65 = 2 before the relays are connected to the contactors.

Alternative auxiliary circuit

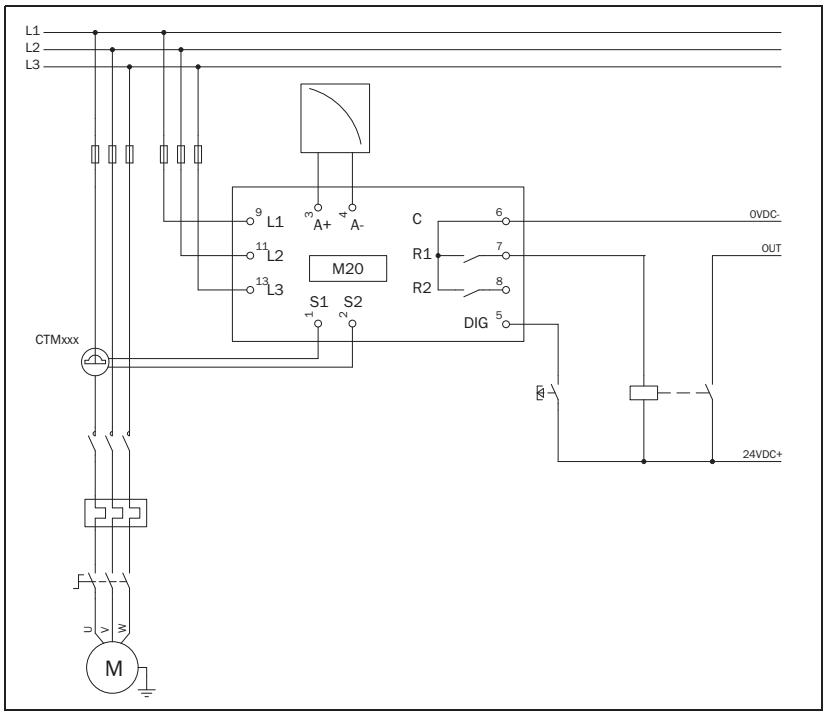

Fig. 16 Example of auxiliary circuit when VDC is used.

The example above can be used when a high VDC signal output is required.

10 Troubleshooting

Ensure that the installation has been correctly carried out, e.g. check the terminals and that the cables are properly stripped. The monitor is maintenance-free. However, you should regularly check wirings and terminals etc.

Problem	Solution
Window 01 always shows zero load, even if the motor is running	- Check the connection of the current transformer(s). - Check that the value of the rated motor power in window 41 is the same as the rated motor power on the motor plate. - Check that window 03 shows a phase current value that agrees with with the rated motor current.
Window 01 shows an improper power value when the motor is running	- Check that the motor is not oversized for its application, check power transmission and gear ratio. - Check that there is a load on the motor during normal operation. - Check that the change in motor load is greater than about 3% (window 01). - Check that the current transformer is connected in phase L1.
Window 03 shows an improper value for the phase current	- Check that the current transformer has been selected as per Tables 1 and 2. - Check that the number of windings is as per Tables 1 and 2. - Check that the value of the motor current in window 42 is the same as the value of the motor current on the motor plate.
The monitor never gives an alarm	- Check that window 01 shows a value greater than zero. - Check the alarm levels in windows 11 to 14. If incorrect readjust the levels or perform an Auto set.

Problem	Solution
The monitor always gives an alarm	- Check the alarm levels in windows 11 to 14. If incorrect readjust the levels or perform an Auto set. - Check if the monitor is programmed for “latched alarm” (window 61=on). If so reset the monitor by pressing the reset key.
Window 00 shows “LU” or “OU”. Under- or over-voltage alarm.	Switch off the supply: - Check that the supply voltage agrees with the voltage range on the monitor type plate.
Window 01 shows “oor”. “Out Of Range” alarm.	- The measured shaft power is higher than 125% of the rated motor power programmed in window 41.
Window 03 shows “oor”. “Out Of Range” alarm.	- The measured motor current is higher than 125% of the rated motor current programmed in window 42.
Over and undervoltage is not detected	This is only detected at monitor power up and not during continued operation. The relays will not trip, only indication in the display.
The alarm relays are not switching	- Check that the wire links between terminals 6 and 7 are removed as per “Wiring”.
Not all windows are shown	When the special functions are used (windows 35, 65 etc.) blocked windows for settings are not shown.

11 Technical Data

Dimensions (WxHxD)	45x90x115 mm (1.77" x 3.54" x 4.53") 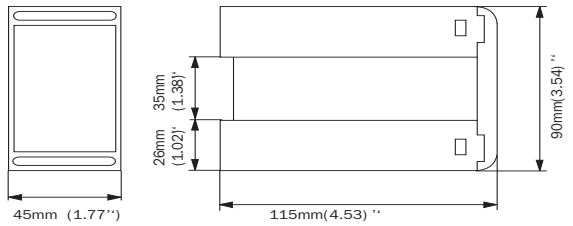
Mounting	35 mm DIN rail 46277
Weight	0.30 kg (10.5 oz)
Supply voltage (±10%)	1x100-240 VAC, 3x100-240 VAC, 3x380-500 VAC 3x525-690 VAC
Frequency	50 or 60 Hz
Current input	Current transformer; CTM 010, 025, 050 and 100. Input 0-55 mA. (>100 A extra transformer needed)
Power consumption	Max. 6 VA
Start-up delay	1-999 s
Hysteresis	0-50% of rated motor power
Response delay max	0.1-500 s
Response delay min	0.1-500 s
Relay output	5 A/240 VAC Resistive, 1.5 A/240 VAC Pilot duty/AC12
Analogue output	Max. load 500 ohm
Digital input	Max. 240 VAC or 48 VDC. High: ≥24 VAC/DC, Low: <1 VAC/DC. Reset >50 ms
Fuse	Max. 10 A
Terminal wire size	Use 75°C copper (CU) wire only. 0.2-4.0 mm^2 single core (AWG12). 0.2-2.5 mm^2 flexible core (AWG14), stripped length 8 mm (0.32")

Terminal tightening torque	0.56-0.79 Nm (5-7 lb-in)
Accuracy	±2%, ±1 unit cos phi>0.5; excl. current transformer; +20°C (+68°F)
Repeatability	±1 unit 24h; +20°C (+68°F)
Temperature tolerance	max 0.1%/°C
Operating temperature	-20 to +50°C (-4°F to +122°F)
Storage temperature	-30 to +80°C (-22°F to +176°F)
Protection class	IP20
Approved to	CE (up to 690VAC), UL and cUL (up to 600 VAC)

Article number	Designation
01-2520-20	Emotron M20 1x100-240/3x100-240 VAC
01-2520-40	Emotron M20 3x380-500 VAC
01-2520-50	Emotron M20 3x525-690 VAC

Technical Data for Current Transformer (CT)

Type	Dimensions (WxØ)	Weight*	Mounting
CTM 010	27 (35) x Ø48 mm	0.20 kg	35mm DIN rail 46277
CTM 025	27 (35) x Ø48 mm	0.20 kg	35mm DIN rail 46277
CTM 050	27 (35) x Ø48 mm	0.20 kg	35mm DIN rail 46277
CTM 100	45 (58) x Ø78 mm	0.50 kg	35mm DIN rail 46277

* Weight including 1m (39 inch) cable. Please note that max. length of the CTM cable is 1 m and this cable cannot be extended.

Accessories and documentation

Article number	Designation
01-2471-10	Current Transformer (CT) CTM010, max. 10 A
01-2471-20	Current Transformer (CT) CTM025, max. 25 A
01-2471-30	Current Transformer (CT) CTM050, max. 50 A
01-2471-40	Current Transformer (CT) CTM100, max. 100 A
01-2368-00	Front Panel Kit 1 (2x terminal covers included)
01-4136-01	2x Terminal covers
01-2551-00	Instruction manual (Swedish)
01-2551-01	Instruction manual (English)
01-2551-02	Instruction manual (German)
01-2551-03	Instruction manual (Dutch)
01-2551-04	Instruction manual (Spanish)
01-2551-08	Instruction manual (French)
01-2551-09	Instruction manual (Russian)

Dismantling and disposal

As an example, the housing is made of recyclable plastic, PC/ABS. When disposing of parts they must be handled and recycled in accordance with local regulations.

EU (European Union) specifications

EMC	EN 50081-1, EN 50081-2, EN 50082-1, EN 61000-6-2
Electrical safety	IEC 947-5-1
Rated insulated voltage	690 V
Rated impulse withstand voltage	4000 V
Pollution degree	2

Terminals 3, 4, 5, 6, 7 and 8 are basic insulated from the line.
Terminals 3 and 4 are basic insulated from terminals 5, 6, 7 and 8.

US specifications

FCC (Federal Communications Commission). This equipment has been tested and found to comply with the limits for a Class A digital device pursuant to Part 15 of the FCC Rules. These limits are designed to provide reasonable protection against harmful interference when the equipment is operated in a commercial environment. This equipment generates, uses and can radiate radio frequency energy and, if not installed and used in accordance with the instruction manual, may cause harmful interference, in which case the user will be required to correct the interference at their own expense.

Canadian specifications

DOC (Department of Communications). This digital apparatus does not exceed the Class A limits for radio noise emissions from digital apparatus as set out in the Canadian Interference-Causing Equipment Regulations. Le présent appareil numérique n'ément pas de bruits radio-électriques dépassant les limites applicables aux appareils numériques de la Classe A prestite dans le Régelement sur le brouillage radioélectrique édicté du Canada.

12 Parameter List

Window	Function	Range	Default	Custom	Symbol
00	Alarm indication				
01	Measured shaft power in % of rated power	0-125			%
	Measured shaft power in kW	0-745			kW
	Measured shaft power in % of rated power	0-125			%
	Measured shaft power in HP	0-999			
02	Measured line voltage	90-760 V			V
03	Measured current	0.00-999 A			A
04	Parameter lock	0-999			
05	Monitor function	OVER- and UNDERLOAD, OVERLOAD, UNDERLOAD	OVERLOAD and UNDER-LOAD		
11	MAX Main Alarm (relay R1)	0-125	100		%
		0-745	2.2		kW
		0-125	100		%
		0-999	3		
12	MAX Pre-Alarm (relay R2)	0-125	100		%
		0-745	2.2		kW
		0-125	100		%
		0-999	3		

Window	Function	Range	Default	Custom	Symbol
13	MIN Pre-Alarm (relay R2)	0-125	0		%
		0-745	0		kW
		0-125	0		%
		0-999	0		
14	MIN Main Alarm (relay R1)	0-125	0		%
		0-745	0		kW
		0-125	0		%
		0-999	0		
21	MAX Main Alarm margin	0-100	16		%
22	MAX Pre-Alarm margin	0-100	8		%
23	MIN Pre-Alarm margin	0-100	8		%
24	MIN Main Alarm margin	0-100	16		%
31	Start delay	1-999	2		s
32	Response delay max.	0.1-500 s	0.5		s
33	Hysteresis	0-50	0		%
34	Response delay min.	0.1-500s	0.5		s
35*	Pause/Reverse time	3-90	5		s
36*	Autoreset (start attempts)	0-5	0		
41	Rated motor power	0.10-745	2.2		kW
		0.13-999	3		
42	Rated current	0.01-999	5.6		A
43	Number of phases	1PH/3PH	3PH		
61	Main alarm latch	on/OFF	OFF		
62	Alarm at no motor current	on/OFF	OFF		

Window	Function	Range	Default	Custom	Symbol
63	Main Alarm relay R1	nc/no	nc		
64	Pre-Alarm relay R2	nc/no	no		
65*	Relay function	0 = M20 1 = DLM 2 = Reverse	0		
81	Digital input	rES/AU/bLo	rES		
82	Block timer	0.0-90	0.0		s
91	Analogue output	0.20/4.20/ 20.0/20.4	0.20		
92**	Analogue output low value	0-100			
93**	Analogue output high value	0-125			
99	Factory defaults	dEF/USr	dEF		

* See Special functions in chapter 9.

** See Set analogue output range in chapter 9.

13 Service

This manual is valid for the following model:

Emotron M20 (from software version R3a)

Document number:	01-2551-01
Document version:	r3
Date of release:	2007-06-15

Emotron AB reserves the right to alter product specifications without prior notification. No part of this document may be reproduced without permission from Emotron AB.

For more information contact your local sales outlet or visit us at:
www.emotron.com

Protected by utility patents SE 9703952-3, EP 1027759 and US 6879260

emotron®

DEDICATED DRIVE

Emotron AB, Mörsaregatan 12, SE-250 24 Helsingborg, Sweden
Tel: +46 42 16 99 00, Fax: +46 42 16 99 49
E-mail: info@emotron.se
Internet: www.emotron.com

Emotron AB 01-2151-01r3 2007-07-25

EDUR

MODEL LBUX602C 160L, PUMP

LEFT BLANK

Operating Instruction

for Segmental Type Pumps

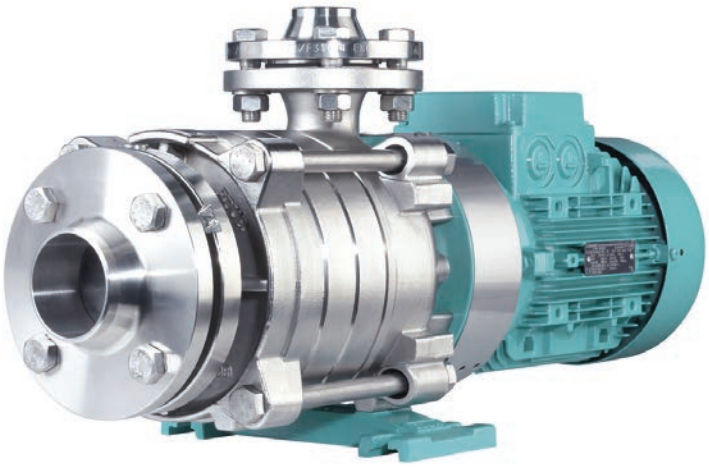

Please keep your Operating Instruction in a safe place! Translation of the original operating instructions!

EDUR-Pumpenfabrik Eduard Redlien GmbH & Co. KG • Edisonstraße 33 • D-24145 Kiel
Tel. +49 431 6898-68 • Fax +49 431 6898-800 • info@edur.de • www.edur.com

Contents

1	General information	3
1.1	Design	3
1.2	Intended Use	3
1.3	Place of Operation	4
2	Security	4
2.1	Identification of Safety Instructions in the Operating Manual	4
2.2	Qualification and Training of Operating Personnel	4
2.3	Hazards in the Event of Non-Compliance with the Safety Instructions	4
2.4	Compliance with Regulations Pertaining to Safety at Work	5
2.5	Safety Instructions relevant for Operation	5
2.6	Safety Instructions relevant for Maintenance, Inspection and Assembly Work	5
2.7	Unauthorized Alterations and Production of Spare Parts	5
2.8	Unauthorized Modes of Operation	5
3	Transport and Intermediate Storage	6
3.1	Transport	6
3.2	Intermediate Storage	7
3.2.1	Internal Preservation	7
3.2.2	Preservation Control	7
3.2.3	Removal of Preservation	7
4	Mounting	7
4.1	Installation	7
4.2	Connected Loads	8
4.3	Direction	8
4.4	Coupling Protection / Protective equipment	8
4.5	Piping	9
4.5.1	General Remarks	9
4.5.2	Permitted loads and torques	9
4.5.3	Suction Pipeline	9
4.5.4	Pressure Pipeline	10
4.5.5	Additional Connections	10
4.6	Low-Noise Installation	10
5	Starting Operation/ Stopping Operation	10
5.1	Preparations for Initial Starting	10
5.2	Initial Starting	10
5.3	Restarting	10
5.4	Stopping Operation	11
6	Service/Maintenance	11
6.1	Supervision of Operation	11
6.1.1	Shaft Bearing	11
6.1.2	Mechanical Seal	12
6.1.3	Gland Packing	12
6.2	Maintenance	12
6.2.1	Preparation	12
6.2.2	Dismounting	12
6.2.2.1	Pump	13
6.2.2.2	Dismounting of Mechanical Seal	13
6.2.2.3	Motor	13
6.2.3	Mounting	13
6.2.3.1	General Remarks	13
6.2.3.2	Mounting of the Motor	13
6.2.3.3	Replacing the Gland Packing	13
6.2.3.4	Mounting of Mechanical Seal	14
7	Disturbance	15
8	Pump View and List of Spare Parts	16
8.1	LBU	16
8.2	VBU	17

Translation
When shipping to EEA Countries, the operating instructions are to be translated into the respective language of the country where the device is to be used. In the event that discrepancies arise in the translated text, the original operating instructions (German) are to be consulted or the manufacturer is to be contacted in order to clarify the discrepancy.

Copyright
The forwarding and reproduction of this document, the use and disclosure of the contents of this document is forbidden unless explicitly permitted. Failure to comply with this will result in liability for damages.

All rights reserved.

1 General information

The most important operating data can be found on the identification plate. **It must be ensured that the pump type and all technical data correspond to the system / machine project data.** It must be observed that the electric motor is provided with its own identification plate complete with additional technical data. The motor data must also correspond with the system / machine project data.

The separately enclosed operating instructions are also to be observed when dealing with pumps in accordance with EC Directive 94/9/EC (ATEX). These instructions contain additional instructions and requirements with regards to the correct and proper use of pumps in potentially explosive areas.

The pumps may not be commissioned until the following points have been observed / ensured:

- Inappropriate physical and mental strain placed upon the operation staff must be reduced to an absolute minimum level by taking ergonomic principles in to account.
- A safe working environment must be guaranteed. Controls are to be designed and constructed in such a manner that no hazardous situations can occur. Furthermore, such situations may not occur even in the event of faults / breakdown of the control. In particular, the pump may not be unintentionally started. It must also be the case that the supply / discharge lines to and from the pump can also be closed.
- It must be guaranteed that the pump can be safety stopped. Irrespective of the type of operation, the EMERGENCY STOP function must be available and ready for operation at all times. In doing so, it must be taken into consideration that equipment connected to the pump can also be stopped in the event that a hazard can occur if such equipment continues to be operated.
- The supply / discharge lines must be able to withstand the possible internal and external pressure loads
- By implementing suitable precautions, it must be the ensured that no injuries can occur by touching the pumps, e.g. with regards to extreme temperatures.
- When conveying materials that pose a hazard to health / environment, it must be ensured that these materials can also be collected and taken away safely. Any risk with regards to inhalation, ingestion as well as contact with the eyes, skin and mucus membranes must be prevented.

1.1 Design

Horizontal and vertical, single-stage or multi-stage ring section pumps, with or without an electric drive unit, on a common bed-plate or unit-construction pumps, available in different construction materials, sizes and with different shaft sealings.
Self-priming pumps are provided with an inlet bend fitted at the suction branch.

1.2 Intended Use

Temperature:

LBU, LBE, VBU, VBE, NU, NHT, NHP, ZU, NU100:	-40°C up to120°C (140°C)
E, SUB, S:	-25°C (-40°C) up to 90°C
ZP:	-40°C up to 110°C
ZT:	-40°C up to 160°C

Operating Pressure:

LBU, LBE, VBU, VBE, NU, NHT, NHP, ZU:	25 bar (30bar)
SUB, NU100:	10 bar
E:	15 bar
S:	16 bar

Viscosity:	≤ 115 mm^2/s
E, SUB, S:	≤ 30 mm^2/s

Ambient Temperature: -20°C up to 40 °C

Power adjustment
The power of the motors is to be reduced in accordance with the guidelines provided by the motor supplier in the event that the motors are positioned in ambient temperatures of above 40°C or in a location that is more than 1000m above sea-level.



The conveying of liquids that may chemically corrode the pump material or that contain abrasive components will destroy the pumps. The conveyed material must be suitable for use with the pump material.

The power consumption of the pump proportionally changes based upon the density of the conveyed material. The densities must correspond to the order data in order to avoid excess strain being placed upon the pump and motor.

1.3 Place of Operation

The pump unit must be freely accessible for the purpose of supervision, servicing, maintenance, mounting and dismounting.
Avoid using it in corrosive and very dusty surroundings.
The limiting values of the electric drive unit with regard to the insulation material class and the types of protection must be observed.
For other drive units supplied, see the enclosed separate operating instructions.

The most important operational data are mentioned on the type label. The sound pressure L_{pA} following VDI-guidelines 3743 sheet 1 depending on the nominal pump power input P will be seen

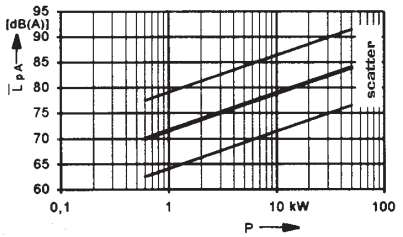

from the diagram underneath.

Fig. Noise emission

The actual sound level ascertained at place of installation will possibly differ considerably from these values due to the operating conditions and the conditions of installation.

Increased noise emissions may be caused by cavitation, faulty / worn bearings or vibrations. Installation, maintenance and service instructions are to be observed.

2 Security

This operating manual gives basic instructions which are to be observed during installation, operation and maintenance of the pump. it is therefore imperative that this manual be read by the responsible personnel/operator prior to assembly and commissioning. It is always to be kept available at the installation site.

It is not only the general safety instructions contained under this main heading safety that are to be observed but also the specific information provided under the other main headings.

2.1 Identification of Safety Instructions in the Operating Manual

Safety instructions given in this manual non-compliance with which would affect safety are identified by the following symbol:



see DIN 4844-W9
or where electrical safety is involved, with



see DIN 4844-W8

Instructions non-compliance with which would give rise to malfunctioning of the machinery are identify by the word

CAUTION

It is imperative that signs affixed to the machine, e. g.

- arrow indicating the direction of rotation
- symbols indicating fluid connections

be observed and kept legible.

2.2 Qualification and Training of Operating Personnel

The personnel responsible for operation, maintenance, inspection and assembly must be adequately qualified. Scope of responsibility and supervision of the personnel must be exactly defined by the plant operator. If the staff does not have the necessary knowledge, they must be trained and instructed, which may be performed by the machine manufacturer or supplier on behalf of the plant operator. Moreover the plant operator is to make sure that the contents of the operating manual are fully understood by the personnel.

2.3 Hazards in the Event of Non-Compliance with the Safety Instructions

Non-compliance with the safety instructions may produce a risk to the personnel as well as to the environment and the machine and results in a loss of any right to claim damages.

For example, non-compliance may involve the following hazards:

- Failure of important functions of the machine/plant
- Failure of specified procedures of maintenance and repair
- Exposure of people to electrical, mechanical and chemical hazards
- Endangering the environment owing to hazardous substances being released



Injuries to hands can occur during maintenance and repair works. Ensure that all safety instructions are observed.

Danger areas on the pump

During maintenance and cleaning work, an area measuring approximately 1 m around the pump will serve as a danger area. This area may also be increased in size in the event of faults. The operating area is only located at the operation elements.

2.4 Compliance with Regulations Pertaining to Safety at Work

When operating the pump, the safety instructions contained in this manual, the relevant national accident prevention regulations and any other service and safety instructions issued by the plant operator are to be observed.

2.5 Safety Instructions relevant for Operation

- If hot or cold machine components involve hazards, they must be guarded against accidental contact.
- Guards for moving parts (e.g. coupling) must not be removed from the machine while in operation.
- Any leakage of hazardous (e.g. explosive, toxic, hot) fluids (e.g. from the shaft seal) must be drained away so as to prevent any risk occurring to persons or the environment. Statutory regulations are to be complied with.
- Hazards resulting from electricity are to be precluded (see, for example, the VDE Specifications and the bye-laws of the local power supply utilities).

2.6 Safety Instructions relevant for Maintenance, Inspection and Assembly Work

It shall be the plant operator's responsibility to ensure that all maintenance, inspection and assembly work is performed by authorized and qualified personnel who have adequately familiarized themselves with the subject matter by studying this manual in detail.

Any work on the machine shall only be performed when it is at a standstill, it being imperative that the procedure for shutting down the machine described in this manual be followed.

Pumps and pumps units which convey hazardous media must be decontaminated.

Replacement parts that have not been supplied by the manufacturer are not tested and not approved for use. The installation and usage of such replacement parts can have a negative impact upon the pump characteristics.

The manufacturer is not liable for any damages caused by the usage of non-original parts.

On completion of work all safety and protective facilities must be re-installed and made operative again.

Prior to restarting the machine, the instructions listed under Initial commissioning are to be observed.

2.7 Unauthorized Alterations and Production of Spare Parts

Any modifications may be made to the machine only after consultation with the manufacturer. Using spare parts and accessories authorised by the manufacturer is in the interest of safety. Use of other parts may exempt the manufacturer from any liability.

2.8 Unauthorized Modes of Operation

The reliability of the machine delivered will be only guaranteed if it is used in the manner intended, in accordance with our order documentation, especially with the order confirmation.
The limit values specified in the data sheet must under no circumstances be exceeded. The pump may only be operated in the authorised curve range.

3 Transport and Intermediate Storage

3.1 Transport

The pump unit must be transported in a level or horizontal manner.

When transporting the complete pump unit by crane, mount the ropes as shown in the figure.

CAUTION The crane facility and the ropes must be of sufficient capacity. The ring loop of the motor must not be used for transport of the complete pump unit.



A pump that is insufficiently secured can lead to persons being seriously injured.

Hoisting equipment and slinging belts are to be sufficiently measured for the entire weight of the pump. If necessary, ensure that the pump is secured during transport with the use of appropriate slinging equipment. The pump is only to be positioned on a surface that is sufficiently solid and is level in all directions.

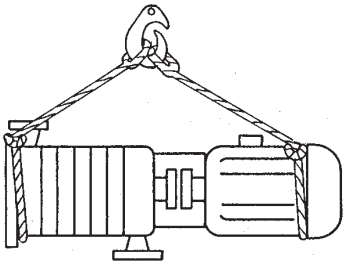

Fig. 2.1a Pumps of structural form V

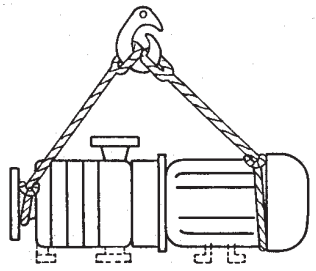

Fig. 2.1b Pumps of structural form L

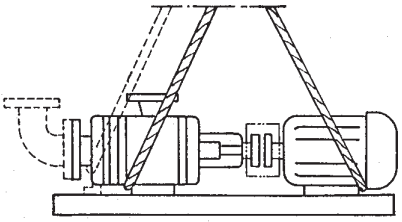

Fig. 2.1c Pumps of structural forms N, S and N1-N9

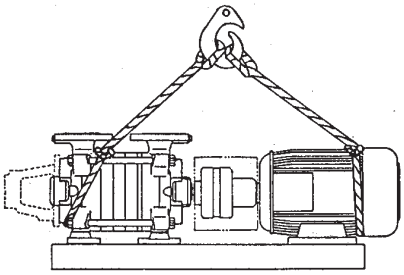

Fig. 2.1d Pumps of structural form Z

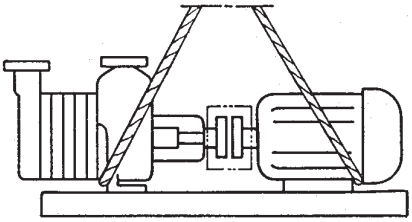

Fig. 2.1e Pumps of structural forms V1-V6, E1-E6, E11-E16

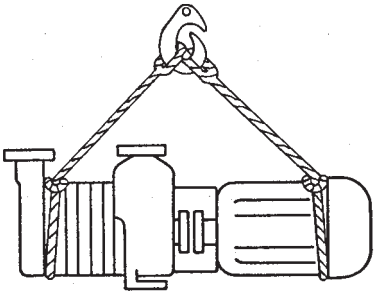

Fig. 2.1f Pumps of structural forms NVB(K)1-NVB(K)9, V1-V6, E1-E6, E11-E16, NuV25

CAUTION For transport only the screws between foot of suction casing and base plate are tightened at our works. Please take care that before setting into operation the screws have to be released by all means resp. in case of a transport again have to be tightened.
In this regard also see section 4.1

3.2 Intermediate Storage

On delivery, all pumps are preserved. Thus, they can be stored for 6-12 months. If the storage time is longer or the pumps are not in operation, they must receive additional preservation on the inside. The preservation means (please consult us) depends on the used materials and conditions of operation.
The storage room must be roofed and well ventilated. Avoid temperatures below zero and high humidity.

3.2.1 Internal Preservation

Close the suction branch securely. Fill the pump with the preservation means and slowly turn the rotor manually. Close the pressure branch securely.



A rotating impeller can cut or crush hands and arms. Do not reach into the pressure or suction sockets of the pump housing.

3.2.2 Preservation Control

Check the filling level of the pump and turn the rotor by hand at regular intervals of 3 months. Refill preservation means, if necessary.

3.2.3 Removal of Preservation

Prior to operation, the pump must be rinsed thoroughly. In the case of additional preservation, the preservation means on the inside must at first be removed.

4 Mounting

4.1 Installation

The complete pump unit is generally mounted on a pedestal. The pedestal must be even and must have fasteners and a sufficient load capacity. Instead of the pump being secured by means of fasteners, the bed-plate of horizontal pumps or the suction casing of vertical pumps can be sealed in the pedestal by a depth of about 20 mm. The complete pump unit must be adjusted by means of a spirit level when it is being mounted on the pedestal. The levelling plates are to be installed between the bed-plate or suction casing and the pedestal as well as close to any existing fasteners. All levelling plates must be well set. The fasteners must be tightened steadily after the complete pump unit has been adjusted.
In the case of self-priming pumps, the pipe bend must not be removed or distorted.



Physical injury can occur during the pump installation phase.
Safety regulations and the generally recognised engineering regulations are to be observed.

The operator is to ensure a direct and barrier-free access to the pump and must also guarantee good visibility conditions. The operator is to protect the pump against environmental impacts (wind, rain, frost, sand, etc.).

CAUTION Even if the pump unit is delivered completely mounted on the bed-plate, the coupling must be checked thoroughly after the piping has been connected and the bed-plate secured. If necessary, pump and motor must be readjusted.

When checking the coupling and adjusting the unit, first loosen the pump footings and then retighten them but without stresses.

CAUTION If the pump has two pump footings, the pump footing below the suction casing must never be screwed to the bed-plate in order to avoid axial distortion.

Pump and motor are correctly adjusted if the distance between a straight-edge which is placed on the coupling halves and the relevant shaft is the same for the entire circumference of the shaft. The coupling rubber must have free motion of 1 to 2 mm between the coupling halves for the entire circumference on both sides (Fig. 4.1a).

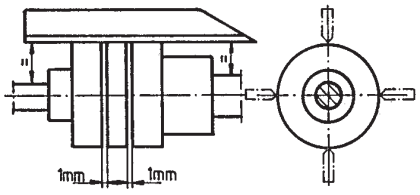

Fig. 4.1a Adjustment of the Coupling

The permissible axial and radial deviation measured at the front end and the circumference of the coupling is 0.1 mm. If this is not the case, the pump unit of the motor must be readjusted. Subsequently, the motor footing must also be tightened without stresses and the adjustment of the coupling must be checked once again.

CAUTION Errors in adjustment can increase the load on the bearing, shaft and shaft sealings.

4.2 Connected Loads



Work must only be executed when electricity is switched off. Make sure that the system cannot be powered on accidentally.

CAUTION An overload protection system (e.g. motor protection switch, etc.) must be in place in order to protect the pump and the motor.

The separately enclosed motor safety guidelines and instructions are to be observed.

When using motors that are equipped with frequency converters (FC), the safety guidelines and instructions contained in the separately enclosed FC operating instructions are to be observed. An appropriate risk analysis is to be carried out by the system operator due to the fact faults and malfunctions of the frequency converter cannot be completely prevented as a result of electromagnetic radiation.

Prior to connecting the pump to the power system, fill it with pumped liquid. The pump must by no means be operated without liquid!

The pump must be connected according to international national requirements as well as according to the requirements of the local mains system. Voltage and frequency must correspond to the winding of the electric drive. For details of the respective winding, see the type label.
The motor must not be operated without motor protection facility.
For motors with explosion protection, the range of temperature of the motor indicated on the type label must correspond to the range of the fuel gas.



Overheating damages the three-phase alternating current motor.
Ensure that a sufficient supply of cool air is in place during operation.



Electrical power can lead to death.
Ensure that a potential equalisation connection is in place between the pump housing and the building earthing.



Incorrect electrical switching modes will lead to the breakdown of the three-phase alternating current motor. Observe the switching mode.

4.3 Direction

Switch on the motor briefly in order to check the direction of rotation. The motor must not reach its operational speed. The direction of rotation must correspond to the arrow indicating the direction of rotation on top of the pump. If the direction of rotation is not correct, perform the relevant modifications at the phase-sequence.

CAUTION The switching on / operation of opened pumps (outside of the pipe line network) is forbidden.



A rotating impeller can cut or crush hands and arms. Do not reach into the pressure or suction sockets of the pump housing. Secure the pump appropriately when carrying out a rotational direction check.



The dry operation of the pump destroys / damages the mechanical seal and leads to leakage and the discharge of the conveyed material. Ensure that the pump is switched off again immediately after the warm-up phase.



The incorrect rotational direction of the pump destroys / damages the mechanical seal and leads to leakage and the discharge of the conveyed material.

4.4 Coupling Protection / Protective equipment



The pump must not be operated if coupling protection is not fitted. If this coupling protection is not supplied by the manufacturer, the operator of the pump must supply it himself.

CAUTION In the event that hot or cold pump parts lead to hazards, appropriate protective measures (contact protection) are to be installed on-site. Operation without affixed protective equipment is forbidden.

4.5 Piping

4.5.1 General Remarks

Pressure lines are to be laid in accordance with the respectively valid guidelines as well as the relevant accident prevention regulations. Pipe lines and pumps are to be secured against tripping. If required, a safety area is to be provided against tripping.
The flange covers located on the suction and pressure sockets on the pump are to be removed before installing into the pipe line. The containers, pipe lines and connections must be thoroughly cleaned and rinsed before commissioning. It is often the case that welding beads, scale and further contaminants only disengage after some time. These contaminants are to be kept away from the pump by implementing appropriate measures, e.g. using a filter in the suction line.

CAUTION Observe the conveying and connection direction (suction / pressure flange) of the pump. An incorrect conveying direction of the pump can lead to system faults.

The nominal widths of the pipes must be at least as wide as those of the pump connection joints.
For adapters, use extension angles of 8°, if possible.
The pipes must be gathered and secured right in front of the pump so that their weight does not affect the pump. The negative effects of variations in temperature and occurring oscillation may be reduced by installing a suitable bellow expansion joint (see section 4.6).
Measuring equipment for supervision of the pump operation is required.
Prior to operation, all parts in contact with liquids must be thoroughly cleaned.

CAUTION

Under no circumstances may the pump be used as a fixed point for the pipe line. No loads or torques arising from the pipe line system, e.g. as a result of twisting, heat expansion, etc. may have an impact on the pump.



Hot and discharged conveyed materials pose a risk to life.
Do not exceed the permitted pipe line forces.

4.5.2 Permitted loads and torques

Maximum permitted loads and torques Data based upon DIN EN ISO 5199					
sockets	loads [N]				torques [Nm]
ø DN	Fy	Fz	Fx	∑F*	∑M*
40	300	375	330	585	490
65	510	630	555	990	595
80	615	750	675	1185	648
100	810	1005	900	1575	735
125	960	1185	1065	1860	893

*∑F and ∑M represent the vector sums of the loads and torques

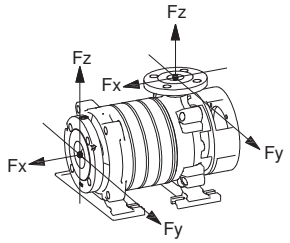

CAUTION The data concerning the loads and torques are only valid for static pipe line strains. All values given for loads and torques are related to the standard cast iron material (0.6025).

4.5.3 Suction Pipeline

The suction pipeline must be as short as possible. Variations in diameter and additional piping must be kept to a minimum. The suction pipeline towards the pump must be rising, the inlet must be descending to prevent an air pocket from being formed. For non-self-priming pumps, installation of a foot valve into the suction pipeline is compulsory in order to avoid that, in case of a standstill, the pump and the suction pipeline run out of liquid during suction operation.
Contamination of the pumped liquid is to be avoided by using a suction hose or a filter. By no means must air penetrate through the liquid level via the suction hose or dirt be whirled up from the liquid pool. Clean the suction hose and filter regularly.
To close the suction pipeline in the case of mounting or maintenance work, a stop valve must be provided near the pump. The stop valve must not be used for adjustment and must be completely open during operation.

4.5.4 Pressure Pipeline

For adjustment, repair and mounting of the pump, a stop valve is to be provided near the pressure joint.

4.5.5 Additional Connections

For the position and dimension of required additional connections as e.g. for rinse, stop and quench liquid, refer to the labels supplied with the pump or to the drawings in the operating instructions. The rinse, stop and quench liquids must be checked at regular intervals.
Connections for ventilation and release of the leakage liquid are also described in the drawings.

4.6 Low-Noise Installation

A reduction in noise (Fig. 4.6a) can be achieved by isolating the pedestal (1) from the ground by means of an appropriate insulation board (2) and by using suitable bellow expansion joints between the piping and the pump. The pedestal (1) must not be secured to the ground or to the walls.

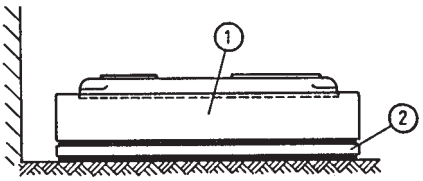

Fig. 4.6a Low-Noise Installation

Another possibility to reduce the noise is the use of oscillation absorbers. In this case, you need to install a frame under the base of the pump.

Bellow expansion joints must be checked regularly for brittle and cracks.

5 Starting Operation/ Stopping Operation

5.1 Preparations for Initial Starting

Prior to the start, the pump and the suction pipeline must be drained of air and be completely filled with the pumped liquid. The stop valve in the suction or inlet pipeline must be completely open, if there is one. For self-priming pumps, the pump must only be completely drained of air and filled with the pumped liquid.

CAUTION A pump / pipe line that is not deaerated leads to the destruction / damage of the mechanical seal. Conveyed material may be discharged.

Before commissioning, it must be ensured that the pump and pipe lines have been connected / assembled in accordance with the guidelines and in a fixed manner. The pump may only be operated provided that protective equipment (coupling protection / fan guard) is in place. The pump must be operated with contact protection when dealing with hot conveyed material.

CAUTION Do not block the motor fan with foreign articles. Blockage will lead to the ejection of foreign articles and overheating / breakdown of the motor.

5.2 Initial Starting

The pump must not be started until the outlet stop valve is closed so as to avoid overload of the motor. Immediately after reaching the operational speed, slowly open the stop valve of the pressure pipeline and adjust the operating point.
Until the liquid starts moving against atmospheric pressure, the hydrostatic pressure for self-priming pumps must not exceed 1 bar with reference to the difference in height between suction and outlet liquid level and to the density of the pumped liquid.

The pump must never be operated for a longer period if the outlet stop valve is closed. The pump unit will be damaged if the pumped liquid exceeds the permitted temperature.

5.3 Restarting

Do not restart the pump until the pump shaft stands still.

CAUTION Backflow of liquid must not result in a change of direction of rotation of the pump. If this is the case, mechanical seals dependent on direction of rotation may be damaged.

CAUTION Before re-starting the pump, it must be ensured that the pump has not incurred any damage during the downtime and that all safety and protective equipment is affixed.

5.4 Stopping Operation

Close stop valve of the pressure pipeline. If there is a backflow stop and sufficient counter pressure in the pipeline, the stop valve can remain open. Switch off the motor and observe that it slows down smoothly. Close stop valve of the pressure pipeline.
If the pumped liquid reaches temperatures below zero and/or if longer periods of standstill occur, the pump must be drained completely and be preserved (see section 3.2.1).

6 Service/Maintenance

6.1 Supervision of Operation

CAUTION The pump is to be secured against being unintentionally switched on during maintenance and cleaning work. Work may only be carried out provided that the system / pump is in a pressure-free condition.

Maintenance and cleaning work may only be carried out by expert staff members. The expert staff members must be provided with personal protective equipment.
Ensure that the pump is cleaned and maintained at regular intervals in order to be able to ensure a trouble-free operation.

CAUTION Conveyed material that poses a hazard to health can place a person's health at risk. The operator is to equip the system with collection equipment or other appropriate protective measures.
Personal protective equipment such as gloves and protective goggles must always be worn.

Ensure that the pump runs free of vibration and smoothly. Ensure that the pump runs in a quiet and vibration-free manner. Inspect the pump for loose connections at regular intervals (an interval of 4 months is recommended). Regularly remove deposits of dust as well as contaminations.



Physical injury can occur when carrying out maintenance and cleaning work on the pump.
Safety regulations and the generally recognised engineering regulations are to be observed.

The pump must by no means be operated without liquid.
There is only a minimal or invisible loss of leakage (steam) if the mechanical seals function correctly. Gland packings should drip slightly.
Do not operate the pump for a longer period with a closed stop valve.
The maximum permitted environmental temperature is 40°C. The storing temperature measured at the motor or pump casing may exceed the environmental temperature by 50°C. It must not exceed 90°C. Only operate the pump at a higher temperature with the manufacturer's approval.

We have to point out that an increased wear may occur in case of transport of abrasive / corrosive media.

In case of corrosive / abrasive media to be pumped pressurized components have to be checked regularly in order to detect wear in time - before a damage occurs. The intervals have to comply with the liquids to be pumped and initially have to be carried out more frequently, until perceptions about the progress of wear are attained.

Installed pumps must be powered on and off briefly once a week in order to guarantee that they are ready for operation.



Insufficient rotary motion of the motor shaft will lead to the impeller becoming stuck and the mechanical seal breaking down. This can lead the discharge of the conveyed material.

6.1.1 Shaft Bearing

CAUTION Under normal operation conditions, replace the motor bearings after 20.000 hours of operation or at the latest after 2,5 years. In the case of bad operation conditions, as e.g. a high environmental temperature or a corrosive and dusty environment, the motor bearings must be checked at an earlier date and, if necessary, be replaced.
Pump bearings with a lubrication device must be checked every 5000 hours of operation. Dirty bearings must be cleaned and filled with new lubricant. The free space in the bearing and casing should be filled by 30-50% with lubricant. Do not use resinous or acid lubricants. Its consistencies (NLGI grade) should correspond to a worked penetration of 265 to 295 mm/10. Lithium-base soap lubricants with a drop point of more than 185°C are to be used for pumped liquids which have a maximum temperature of 110°C. For pumped liquid with a higher temperature, use silicon lubricants with a lithium-base soap and with a drop point of more than 215°C.
If necessary, the bearings can also be lubricated with lubricants of a different soap base. For this based on different soaps must not be mixed. The required re-lubrication periods must then be adapted to the type of lubricant used.
Faulty / worn bearings lead to subsequent damage and can result in increased noise emission.

6.1.2 Mechanical Seal

The mechanical seals are maintenance-free. If leakages occur after a longer period of operation, replace the complete seal.

CAUTION When dealing with conveyed materials that pose a hazard to health and to the environment, the operator is to equip the system with collection equipment or other appropriate protective measures. Personal protective equipment such as gloves and protective goggles must always be worn.

6.1.3 Gland Packing

Gland packings are low-maintenance parts and must leak slightly during operation. Do not tighten a gland packing after its first operation. Considerable leakage at the beginning disappears by itself. If greater leakages occur during operation, the gland lid or insert must be slightly tightened, however it must never be tightened at a slant.
It must be possible to rotate the slide slightly after having tightened the lid or insert. If tightening of the gland lid or insert results in the pump being heated excessively or if it is not possible to tighten the gland lid or insert any further, the gland packing must be replaced completely.

CAUTION If the gland lid or insert is tightened too much the shaft will be damaged.

6.2 Maintenance

6.2.1 Preparation



In order to make sure that the pump cannot be started, separate the power cable from the motor. Secure the unit against accidental switch-on.

The stop valves located in the pressure and suction line are to be closed and secured against unauthorised opening. The pump casing must have reached the environmental temperature and be drained of liquid and pressure. In the case of pumps in unit-construction with mounting flange, the container must be drained completely.



Leaking conveyed material can injure hands and arms. Ensure that the pump housing is in a pressure-free condition. Only then may the pump be emptied.



When dealing with pumps that have been used to convey materials that pose a hazard to health / to the environment, ensure that no danger to persons and the environment can occur when emptying the pump. Wear appropriate protective clothing and, if required, protective mask.

The rinsing liquid used and the remaining liquid located in the pump must be professionally collected and disposed of without posing any hazards to persons or to the environment.

6.2.2 Dismounting

By no means use force while dismounting the pump.



Pumps that are used to convey material that is hazardous to health and to the environment must be decontaminated. When releasing the material, ensure that no danger to persons and the environment can occur when emptying the pump. Legal requirements are to be observed and adhered to.



The pump must always be secured against tipping over. There is a risk of tipping over when loosening the pump from the outside of the pipe line network. Persons can be seriously injured if the pump tips over.
During the transport phase, ensure that the pump is secured using appropriate slinging equipment. The pump is only to be positioned on a surface that is sufficiently solid and is level in all directions.

CAUTION The pump may only be dismantled when in a pressure-free, empty, de-contaminated (if required) and secured condition. Protective clothing and protective mask must be worn if required.

Unit-construction pumps:
- Separate the pump from the piping and any additional connections
- Loosen the fasteners

Pumps with a motor on a common bed-plate:
- Separate the pump from the piping and any additional connections
- Remove the coupling protection
- Loosen the pump from the bed-plate and remove it from the motor

For fixed parts of the casings, impellers and couplings, use appropriate dismounting facilities.
Impellers, which cannot easily be removed from the shaft, can be pushed back from the shaft by means of two hexagon screws.

6.2.2.1 Pump

CAUTION The pump is always dismounted on the suction side and with the shaft in a horizontal position. Refer to enclosed drawings on page 13 to 14 (only pumps of structural forms LBU and VBU) or in the supplementary sheet for the dismounting sequence.
For unit-construction pumps, the pump and motor must not be separated for the axial fixing of the pump shaft.
To prevent the partially mounted pump or the complete pump unit from tilting, put blocks as a mounting aid under the step casing and, if necessary, under the drive unit.
Mark the position and sequence of the pump parts for later mounting.

6.2.2.2 Dismounting of Mechanical Seal

In order to replace the mechanical seal, the pump must be dismounted (see Fig. 6.2.2) first. After that the pump must be dismantled before the seal can be removed. Dismantle the pump in the sequence shown in the exploded view diagrams, pages 13 or 14. Remove impeller (230), casing (108,117), key (940.1) and the circlip (932), pull the delivery casing (107) off the shaft with the mechanical seal (433).

6.2.2.3 Motor

For vertical pumps and unit-construction pumps, it is not necessary to dismount the pump unit. The pump can remain in the piping. First, remove the coupling protection and loosen the hexagon screws of the coupling. After having loosened the hexagon screws at the motor flange, remove the motor from the pump.
For pumps with a motor on a common bed-plate, first remove the coupling protection. Then, loosen the mounting screws of the motor and separate the motor from the pump.

6.2.3 Mounting

6.2.3.1 General Remarks

Prior to mounting, all parts must be cleaned thoroughly. Remove remaining parts of the seals. Slight scratches and grooves on the shaft near the shaft seal and on other sealing surfaces of the casings are to be polished with linen.
If this is not possible, replace the parts. Gaskets must always be renewed. Check O-rings for damage and replace them, if necessary.

Mounting is effected in the reverse order of dismounting. Heat up the coupling joints of rigid couplings to approximately 250 °C prior to mounting them onto the shaft.

In the case of flexible couplings, the coupling half on the pump shaft must be tightened thoroughly by means of the shaft nut and/or the hexagon nut. If this is not observed, the bearings will be damaged.

The starting torques for the tie bolts and locking screws non lubricated condition are displayed in fig. 6.2.3.1a.

thread	M 10	M 12	M 14	M16	M20
torque Nm	30	40	50	110 70*	120

* for pumps with more than 4 tie bolts
Abb. 6.2.3.1a Starting torque

6.2.3.2 Mounting of the Motor

For initial mounting of motor and pumps with rigid coupling, first of all, remove the transport safeguards of the lantern or of the intermediate flange, then remove the motorside coupling half. Subsequently, put this part onto the motor shaft. This coupling half must be next to the motor shaft collar. Tighten screws, join motor and pump centrically without tilting them. Tighten screws between motor and lantern or intermediate flange and then coupling screws.

CAUTION The inner parts of the pump will be damaged if motor and pump are connected and the motorside or pumpside coupling half has been installed incorrectly or not at all.

6.2.3.3 Replacing the Gland Packing

Remove gland lid or insert and remove the old packing rings. Clean gland packing compartment of any remaining packing material. Insert new gland packing, ring by ring with staggered open butt joint, see Fig. 6.2.3.3a and slightly tighten it with gland lid or insert. No lubricant must touch the gland packing.

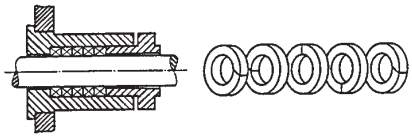

Fig. 6.2.3.3a Gland packing

During the first hours of operation, watch out for any considerable increase in heat or leakage.

6.2.3.4 Mounting of Mechanical Seal

CAUTION When mounting the mechanical seals, you must proceed very carefully and with precision.

Do not touch the surfaces of the seal. Do not damage the sealing parts. To facilitate the mounting, moisten elastomer with low-surface tension water.

Mechanical seals and sealingparts with elastomer made of EP rubber must by no means come in contact with oil or grease.

The shape of spare mechanical seals may differ from those of the installed mechanical seal. However, the dimensions of the spare mechanical seal are the same and for that reason it can be replaced.

To avoid distortion of the counter-ring, mechanical seals with doubled PTFE-wrapped sealing O rings are additionally secured by a leading pin inside the casing. The pin must be removed when replacing the type of mechanical seals and when using a type with different O-ring material.

For details of the individual types of mechanical seals observe the following procedures.

CAUTION Observe the enclosed, separate mounting instructions for those types of mechanical seals which are not listed.

1. Stressed mechanical seal independent of direction of rotation with elastomer bellows (fig. 6.2.3.4a)

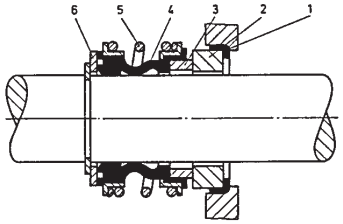

Fig. 6.2.3.4a

Carefully press angle collar (1) together with counter ring (2) into the counter ring fit. Twist the rotating unit (3,4,5) onto the shaft as far as the counter ring. Put on supporting ring and mount circlip (932*) and/or, push shaft sleeve for mechanical seal (516*) onto the shaft.
For suction-side mechanical seals (only pumps of type Z), mount circlip (932.1*). Push rotating unit (5,4,3) on to the shaft up to the circlip (932.1*).

2. Loaded, rotational direction-dependent mechanical seal with conical spring (fig. 6.2.3.4b)

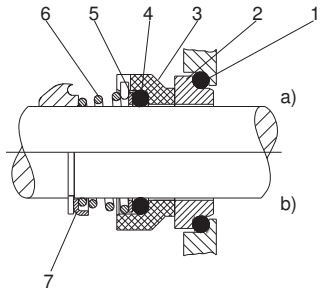

Fig. 6.2.3.4b

Insert O-ring (1) into counter ring fit and carefully press counter ring (2) into it.
Push mechanical seal (3) onto the shaft as far as the counter ring. Press O-ring (4) into the mechanical seal by means of the supporting ring. The pivot of the pressure spring (6) must be situated in the groove of the mechanical seal ring.

a) Put on impeller (230)* (only pumps of type CB..., ECD..., SU...) or

b) Put on locking ring (7). Mount circlip (932)* and/or shaft sleeve for mechanical seal (516)*

*see drawing in the operating instruction

CAUTION Prior to start pump again, the pump must be filled with liquid to be pumped.

7 Disturbance

CAUTION To eliminate disturbance, the pump must have reached the environmental temperature and must be drained of air and pressure.

The chart shows a list of potential errors and their possible causes. For errors which are not listed here or which have other reasons, please consult us.

Pump is blocked	Coupling fault	Heads too low	Rates of flow too low	Bearing temperature too high	Pump operates badly	Leakages at the casing	Overload of the drive	Shaft seal leaks badly	Motor protection activated	Pump is becoming too hot	**Cause**	**Elimination**
		●	●								Pump and/or suction pipeline is not completely drained of air/filled	Drain of air and fill
		●	●		●					●	Suction level too high, NPSH value of the unit too high	Completely open stop slide in the suction pipeline, check suction bag/footing valve, if necessary, increase liquid level, if necessary
		●	●							●	Air inclusion in the pumped liquid too high	Seal suction pipeline once again, check suction bag, increase liquid level, if necessary
		●	●		●					●	Formation of air bag in suction pipeline	Change suction pipeline/attach drain valve
		●	●								Direction of rotation incorrect	Check and change phase sequence, if necessary
										●	Rates of flow too low	Readjust operating point
		●	●								Wear of inner parts	Replace inner parts
					●		●		●		Pump operates out of tolerance	Readjust operating point
								●			Shaft seal damaged	Replace shaft seal
								●			Stuffing box gland jammed or tightened too heavily	Correct
		●	●		●			●			Air entry through shaft sealing on suction side	Check liquid sealing or replace packing
		●	●								Speed too low	Increase speed[1]
							●		●		Speed too high	Reduce speed[1]
						●					Connecting screws, seals	Tighten connecting screws, replace seals
	●			●							Pump/motor not adjusted	Replace defective parts, adjust pump/motor
	●			●	●						Problems via piping	Check pipe connections/pump fasteners/bearing distance of pipe clips, installation with oscillation absorbers
				●							Insufficient, excessive or wrong lubrication grease	Add, remove or change grease[2]
	●										Incorrect coupling gap	Readjust motor
●											Defective bearing	Replace bearing
		●	●				●		●		Density/viscosity of pumped liquid higher than indicated in the order	[1]
									●		Motor protection unit set incorrectly or defective	Check motor protection unit, replace it, if necessary
●											Impeller blocked	Clean interior parts from particles and impurities

[1] Please consult us
[2] Only pumps with lubricator

8 Pump View and List of Spare Parts

8.1 LBU

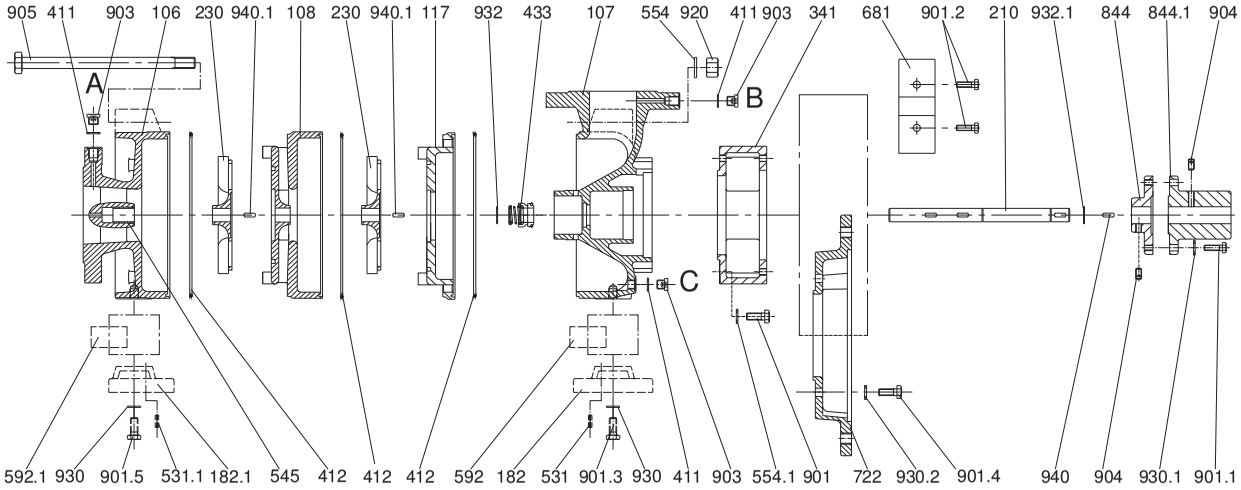

part no.	designation
106	suction casing
107	delivery casing
108	stage casing
117	endstage casing
182/.1	foot
210	shaft

part no.	designation
230	impeller
341	lantern
411	joint ring
412	o-ring
433	mechanical seal
531/.1	locking sleeve

part no.	designation
554/.1	washer
592/.1	base
681	coupling guard
722	intermediate flange
844/.1	disc type coupling
901/.1-.5	hexagon screw

part no.	designation
903	screwed plug
904	hexagon socket set screw
905	tie bolt
920	nut
930/.1-.2	tooth lock washer
932/.1	circlip
940/.1	key

A: Screwed plug G¼ for vent connection and pressure gauge connection
B: Screwed plug G¼ for vent connection and pressure gauge connection
C: Screwed plug G¼ for drain

When ordering spare parts, please indicate serial no., type no. and parts no. by all means.

EDUR®

8.2 VBU

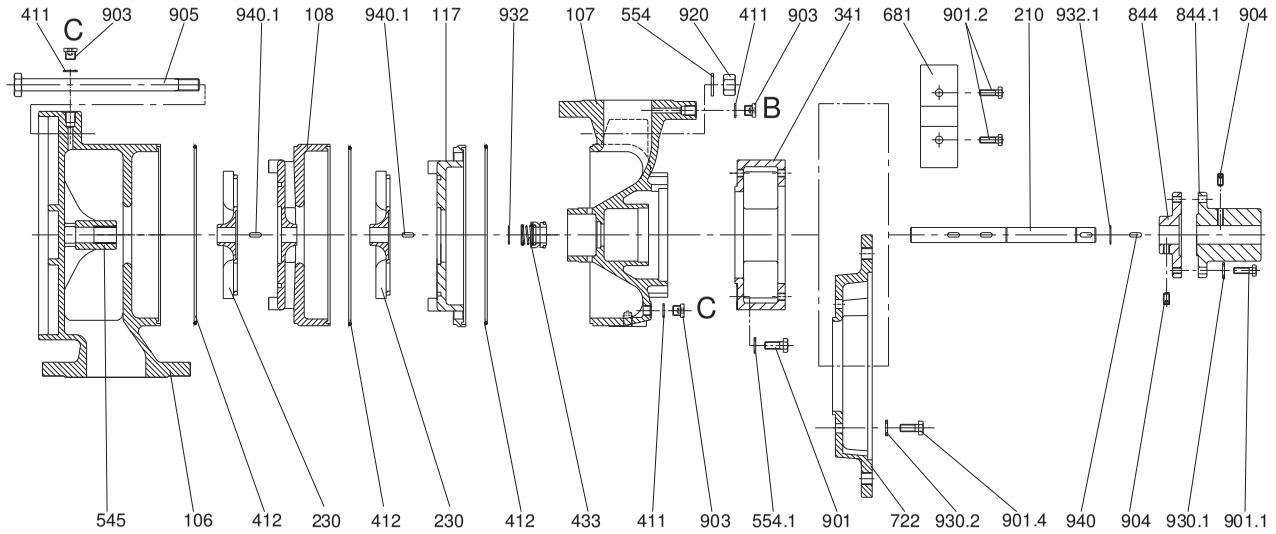

part no.	designation
106	suction casing
107	delivery casing
108	stage casing
117	endstage casing
210	shaft
230	impeller

part no.	designation
341	lantern
411	joint ring
412	o-ring
433	mechanical seal
554/.1	washer
681	coupling guard

part no.	designation
722	intermediate flange
844/.1	disc type coupling
901/.1-.3	hexagon screw
903	screwed plug
904	hexagon socket set screw
905	tie bolt
920	nut

part no.	designation
930/.1	tooth lock washer
932/.1	circlip
940/.1	key

B: Screwed plug G¼ for vent connection and pressure gauge connection
C: Screwed plug G¼ for drain

When ordering spare parts, please indicate serial no., type no. and parts no. by all means.

EG Declaration of Conformity
In accordance with EC Machinery Directive 2006/42 EC, Appendix II, 1 A

We, EDUR Pumpenfabrik Eduard Redlien GmbH & Co. KG
Edisonstraße 33
D-24145 Kiel

hereby declare that the compact design rotary pump – see cover sheet for information regarding pump model,

conforms to all of the relevant regulations of EC Machinery Directive 2006/42/EC. The protection objectives of the low voltage directive were observed in accordance with Appendix I, No. 1.5.1 of the machinery directive. The following harmonised standards applied:

DIN EN ISO 12100 DIN EN 809

Person responsible for the documentation: Mr. A. Weiss

Declaration of Incorporation
In accordance with EC Machinery Directive 2006/42/EC, Appendix II, 1 B

We, EDUR Pumpenfabrik Eduard Redlien GmbH & Co. KG
Edisonstraße 33
D-24145 Kiel

hereby declare that the incomplete compact design rotary pump – see cover sheet for information regarding pump model – supplied without motor conforms to the following essential requirements of EC Machinery Directive 2006/42/EC, Appendix I: 1.1.1.; 1.1.2.; 1.1.3.; 1.1.5.

The following harmonised standards applied:

DIN EN ISO 12100 DIN EN 809

This incomplete machine may only be put into operation after it has been determined that the machine into which this incomplete machine is to be installed, conforms to the regulations of the machinery directive.

Person responsible for the documentation: Mr. A. Weiss

ENDRESS + HAUSER

PROLINE PROMAG W 400, ELECTROMAGNETIC FLOWMETER

LEFT BLANK

BA01063D/06/EN/07.19
71424586
2019-02-01

Valid as of version
02.00.zz (Device firmware)

Operating Instructions
Proline Promag W 400 HART

Electromagnetic flowmeter

HART COMMUNICATION PROTOCOL

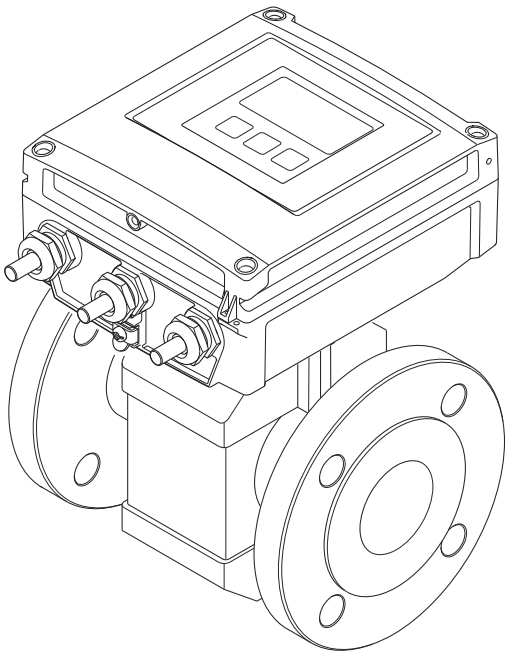

Endress+Hauser
People for Process Automation

- Make sure the document is stored in a safe place such that it is always available when working on or with the device.
- To avoid danger to individuals or the facility, read the "Basic safety instructions" section carefully, as well as all other safety instructions in the document that are specific to working procedures.
- The manufacturer reserves the right to modify technical data without prior notice. Your Endress+Hauser Sales Center will supply you with current information and updates to these instructions.

Table of contents

1 About this document 6
1.1 Document function 6
1.2 Symbols used 6
1.2.1 Safety symbols 6
1.2.2 Electrical symbols 6
1.2.3 Communication symbols 6
1.2.4 Tool symbols 7
1.2.5 Symbols for certain types of information 7
1.2.6 Symbols in graphics 7
1.3 Documentation 8
1.3.1 Standard documentation 8
1.3.2 Supplementary device-dependent documentation 8
1.4 Registered trademarks 9

2 Basic safety instructions 10
2.1 Requirements for the personnel 10
2.2 Designated use 10
2.3 Workplace safety 11
2.4 Operational safety 11
2.5 Product safety 11
2.6 IT security 12
2.7 Device-specific IT security 12
2.7.1 Protecting access via hardware write protection 12
2.7.2 Protecting access via a password 12
2.7.3 Access via Web server 13

3 Product description 14
3.1 Product design 14

4 Incoming acceptance and product identification 15
4.1 Incoming acceptance 15
4.2 Product identification 15
4.2.1 Transmitter nameplate 16
4.2.2 Sensor nameplate 17
4.2.3 Symbols on measuring device 18

5 Storage and transport 19
5.1 Storage conditions 19
5.2 Transporting the product 19
5.2.1 Measuring devices without lifting lugs 19
5.2.2 Measuring devices with lifting lugs . . 20
5.2.3 Transporting with a fork lift 20
5.3 Packaging disposal 20

6 Installation 21
6.1 Installation conditions 21
6.1.1 Mounting position 21
6.1.2 Environment and process requirements 24
6.1.3 Special mounting instructions 26
6.2 Mounting the measuring device 27
6.2.1 Required tools 27
6.2.2 Preparing the measuring device 27
6.2.3 Mounting the sensor 27
6.2.4 Mounting the transmitter of the remote version 34
6.2.5 Turning the transmitter housing 35
6.2.6 Turning the display module 37
6.3 Post-installation check 38

7 Electrical connection 39
7.1 Connection conditions 39
7.1.1 Requirements for connecting cable . . . 39
7.1.2 Required tools 41
7.1.3 Terminal assignment 41
7.1.4 Shielding and grounding 42
7.1.5 Requirements for the supply unit 42
7.1.6 Preparing the measuring device 42
7.1.7 Preparing the connecting cable for the remote version 43
7.2 Connecting the measuring device 44
7.2.1 Connecting the remote version 44
7.2.2 Connecting the transmitter 46
7.2.3 Ensuring potential equalization 47
7.3 Special connection instructions 50
7.3.1 Connection examples 50
7.4 Ensuring the degree of protection 51
7.4.1 Degree of protection IP66/67, Type 4X enclosure 51
7.4.2 Degree of protection IP68, Type 6P enclosure, with "Cust-potted" option . . 52
7.5 Post-connection check 52

8 Operation options 53
8.1 Overview of operation options 53
8.2 Structure and function of the operating menu 54
8.2.1 Structure of the operating menu 54
8.2.2 Operating philosophy 55
8.3 Access to the operating menu via the local display 56
8.3.1 Operational display 56
8.3.2 Navigation view 58
8.3.3 Editing view 60
8.3.4 Operating elements 61
8.3.5 Opening the context menu 62
8.3.6 Navigating and selecting from list . . . 64
8.3.7 Calling the parameter directly 64

8.3.8 Calling up help text 65
8.3.9 Changing the parameters 66
8.3.10 User roles and related access authorization 67
8.3.11 Disabling write protection via access code 67
8.3.12 Enabling and disabling the keypad lock 68
8.4 Access to the operating menu via the Web browser 68
8.4.1 Function range 68
8.4.2 Prerequisites 69
8.4.3 Establishing a connection 70
8.4.4 Logging on 72
8.4.5 User interface 73
8.4.6 Disabling the Web server 74
8.4.7 Logging out 74
8.5 Access to the operating menu via the operating tool 74
8.5.1 Connecting the operating tool 75
8.5.2 Field Xpert SFX350, SFX370 77
8.5.3 FieldCare 77
8.5.4 DeviceCare 79
8.5.5 AMS Device Manager 79
8.5.6 SIMATIC PDM 79
8.5.7 Field Communicator 475 79

9 System integration 80
9.1 Overview of device description files 80
9.1.1 Current version data for the device . . . 80
9.1.2 Operating tools 80
9.2 Measured variables via HART protocol 80
9.3 Other settings 82

10 Commissioning 84
10.1 Function check 84
10.2 Switching on the measuring device 84
10.3 Setting the operating language 84
10.4 Configuring the measuring device 84
10.4.1 Defining the tag name 85
10.4.2 Setting the system units 86
10.4.3 Configuring the status input 87
10.4.4 Configuring the current output 89
10.4.5 Configuring the pulse/frequency/switch output 90
10.4.6 Configuring the local display 95
10.4.7 Configuring the output conditioning 96
10.4.8 Configuring the low flow cut off 98
10.4.9 Configuring empty pipe detection . . 100
10.5 Advanced settings 101
10.5.1 Carrying out a sensor adjustment . . . 102
10.5.2 Configuring the totalizer 102
10.5.3 Carrying out additional display configurations 104
10.5.4 Performing electrode cleaning 106
10.5.5 WLAN configuration 107
10.5.6 Using parameters for device administration 108
10.6 Simulation 110
10.7 Protecting settings from unauthorized access 112
10.7.1 Write protection via access code . . . 112
10.7.2 Write protection via write protection switch 113

11 Operation 115
11.1 Reading the device locking status 115
11.2 Adjusting the operating language 115
11.3 Configuring the display 115
11.4 Reading measured values 115
11.4.1 Process variables 116
11.4.2 "Totalizer" submenu 117
11.4.3 Input values 117
11.4.4 Output values 118
11.5 Adapting the measuring device to the process conditions 118
11.6 Performing a totalizer reset 119
11.6.1 Function scope of the "Control Totalizer" parameter 119
11.6.2 Function scope of the "Reset all totalizers" parameter 120
11.7 Showing data logging 120

12 Diagnostics and troubleshooting . . 123
12.1 General troubleshooting 123
12.2 Diagnostic information via light emitting diodes 125
12.2.1 Transmitter 125
12.3 Diagnostic information on local display 126
12.3.1 Diagnostic message 126
12.3.2 Calling up remedial measures 128
12.4 Diagnostic information in the Web browser . 128
12.4.1 Diagnostic options 128
12.4.2 Calling up remedy information 129
12.5 Diagnostic information in FieldCare or DeviceCare 130
12.5.1 Diagnostic options 130
12.5.2 Calling up remedy information 131
12.6 Adapting the diagnostic information 131
12.6.1 Adapting the diagnostic behavior . . . 131
12.6.2 Adapting the status signal 131
12.7 Overview of diagnostic information 132
12.8 Pending diagnostic events 135
12.9 Diagnostic list 136
12.10 Event logbook 136
12.10.1 Reading out the event logbook 136
12.10.2 Filtering the event logbook 137
12.10.3 Overview of information events 137
12.11 Resetting the measuring device 139
12.11.1 Function scope of the "Device reset" parameter 139
12.12 Device information 139
12.13 Firmware history 141

13 Maintenance 142

13.1 Maintenance tasks 142
13.1.1 Exterior cleaning 142
13.1.2 Interior cleaning 142
13.1.3 Replacing seals 142
13.2 Measuring and test equipment 142
13.3 Endress+Hauser services 142

14 Repair 143

14.1 General notes 143
14.1.1 Repair and conversion concept 143
14.1.2 Notes for repair and conversion 143
14.2 Spare parts 143
14.3 Endress+Hauser services 143
14.4 Return 143
14.5 Disposal 144
14.5.1 Removing the measuring device 144
14.5.2 Disposing of the measuring device . . 144

15 Accessories 145

15.1 Device-specific accessories 145
15.1.1 For the transmitter 145
15.1.2 For the sensor 145
15.2 Communication-specific accessories 145
15.3 Service-specific accessories 146
15.4 System components 147

16 Technical data 148

16.1 Application 148
16.2 Function and system design 148
16.3 Input 148
16.4 Output 153
16.5 Power supply 156
16.6 Performance characteristics 157
16.7 Installation 159
16.8 Environment 159
16.9 Process 160
16.10 Mechanical construction 163
16.11 Operability 172
16.12 Certificates and approvals 176
16.13 Application packages 177
16.14 Accessories 178
16.15 Supplementary documentation 178

Index 180

1 About this document

1.1 Document function

These Operating Instructions contain all the information that is required in various phases of the life cycle of the device: from product identification, incoming acceptance and storage, to mounting, connection, operation and commissioning through to troubleshooting, maintenance and disposal.

1.2 Symbols used

1.2.1 Safety symbols

Symbol	Meaning
DANGER	**DANGER!** This symbol alerts you to a dangerous situation. Failure to avoid this situation will result in serious or fatal injury.
WARNING	**WARNING!** This symbol alerts you to a dangerous situation. Failure to avoid this situation can result in serious or fatal injury.
CAUTION	**CAUTION!** This symbol alerts you to a dangerous situation. Failure to avoid this situation can result in minor or medium injury.
NOTICE	**NOTE!** This symbol contains information on procedures and other facts which do not result in personal injury.

1.2.2 Electrical symbols

Symbol	Meaning
⎓	Direct current
~	Alternating current
⎓ ~	Direct current and alternating current
⏚	**Ground connection** A grounded terminal which, as far as the operator is concerned, is grounded via a grounding system.
⊕	**Protective Earth (PE)** A terminal which must be connected to ground prior to establishing any other connections. The ground terminals are situated inside and outside the device: ▪ Inner ground terminal: Connects the protectiv earth to the mains supply. ▪ Outer ground terminal: Connects the device to the plant grounding system.

1.2.3 Communication symbols

Symbol	Meaning
	Wireless Local Area Network (WLAN) Communication via a wireless, local network.
	Bluetooth Wireless data transmission between devices over a short distance.

Symbol	Meaning
	**LED** Light emitting diode is off.
	**LED** Light emitting diode is on.
	**LED** Light emitting diode is flashing.

1.2.4 Tool symbols

Symbol	Meaning
	Torx screwdriver
	Phillips head screwdriver
	Open-ended wrench

1.2.5 Symbols for certain types of information

Symbol	Meaning
	**Permitted** Procedures, processes or actions that are permitted.
	**Preferred** Procedures, processes or actions that are preferred.
	**Forbidden** Procedures, processes or actions that are forbidden.
	**Tip** Indicates additional information.
	Reference to documentation.
	Reference to page.
	Reference to graphic.
	Notice or individual step to be observed.
1., 2., 3...	Series of steps.
	Result of a step.
	Help in the event of a problem.
	Visual inspection.

1.2.6 Symbols in graphics

Symbol	Meaning
1, 2, 3, ...	Item numbers
1., 2., 3., ...	Series of steps
A, B, C, ...	Views
A-A, B-B, C-C, ...	Sections

Symbol	Meaning
	Hazardous area
	Safe area (non-hazardous area)
	Flow direction

1.3 Documentation

For an overview of the scope of the associated Technical Documentation, refer to the following:
- *W@M Device Viewer* (www.endress.com/deviceviewer): Enter the serial number from nameplate
- *Endress+Hauser Operations App*: Enter the serial number from the nameplate or scan the 2D matrix code (QR code) on the nameplate

Detailed list of the individual documents along with the documentation code
→ 178

1.3.1 Standard documentation

Document type	Purpose and content of the document
Technical Information	**Planning aid for your device** The document contains all the technical data on the device and provides an overview of the accessories and other products that can be ordered for the device.
Sensor Brief Operating Instructions	**Guides you quickly to the 1st measured value - Part 1** The Sensor Brief Operating Instructions are aimed at specialists with responsibility for installing the measuring device. ▪ Incoming acceptance and product identification ▪ Storage and transport ▪ Installation
Transmitter Brief Operating Instructions	**Guides you quickly to the 1st measured value - Part 2** The Transmitter Brief Operating Instructions are aimed at specialists with responsibility for commissioning, configuring and parameterizing the measuring device (until the first measured value). ▪ Product description ▪ Installation ▪ Electrical connection ▪ Operation options ▪ System integration ▪ Commissioning ▪ Diagnostic information
Description of Device Parameters	**Reference for your parameters** The document provides a detailed explanation of each individual parameter in the Expert operating menu. The description is aimed at those who work with the device over the entire life cycle and perform specific configurations.

1.3.2 Supplementary device-dependent documentation

Additional documents are supplied depending on the device version ordered: Always comply strictly with the instructions in the supplementary documentation. The supplementary documentation is an integral part of the device documentation.

1.4 Registered trademarks

HART®
Registered trademark of the FieldComm Group, Austin, Texas, USA

Microsoft®
Registered trademark of the Microsoft Corporation, Redmond, Washington, USA

2 Basic safety instructions

2.1 Requirements for the personnel

The personnel for installation, commissioning, diagnostics and maintenance must fulfill the following requirements:
- Trained, qualified specialists must have a relevant qualification for this specific function and task.
- Are authorized by the plant owner/operator.
- Are familiar with federal/national regulations.
- Before starting work, read and understand the instructions in the manual and supplementary documentation as well as the certificates (depending on the application).
- Follow instructions and comply with basic conditions.

The operating personnel must fulfill the following requirements:
- Are instructed and authorized according to the requirements of the task by the facility's owner-operator.
- Follow the instructions in this manual.

2.2 Designated use

Application and media
The measuring device described in these Brief Operating Instructions is intended only for flow measurement of liquids with a minimum conductivity of 5 µS/cm.

Depending on the version ordered, the measuring device can also measure potentially explosive, flammable, poisonous and oxidizing media.

Measuring devices for use in hazardous areas, in hygienic applications or where there is an increased risk due to process pressure, are labeled accordingly on the nameplate.

To ensure that the measuring device remains in proper condition for the operation time:
- Keep within the specified pressure and temperature range.
- Only use the measuring device in full compliance with the data on the nameplate and the general conditions listed in the Operating Instructions and supplementary documentation.
- Based on the nameplate, check whether the ordered device is permitted for the intended use in the hazardous area (e.g. explosion protection, pressure vessel safety).
- Use the measuring device only for media to which the process-wetted materials are sufficiently resistant.
- If the ambient temperature of the measuring device is outside the atmospheric temperature, it is absolutely essential to comply with the relevant basic conditions as specified in the device documentation. → 📄 8
- Protect the measuring device permanently against corrosion from environmental influences.

The measuring device is optionally tested in accordance with OIML R49: 2006 and has an EC type-examination certificate according to Measuring Instruments Directive 2004/22/EC (MID) for service subject to legal metrological control ("custody transfer") for cold water (Annex MI-001).

The permitted fluid temperature in these applications is 0 to +50 °C (+32 to +122 °F).

Incorrect use
Non-designated use can compromise safety. The manufacturer is not liable for damage caused by improper or non-designated use.

⚠ WARNING

Danger of breakage due to corrosive or abrasive fluids and ambient conditions!

- ▶ Verify the compatibility of the process fluid with the sensor material.
- ▶ Ensure the resistance of all fluid-wetted materials in the process.
- ▶ Keep within the specified pressure and temperature range.

NOTICE

Verification for borderline cases:

- ▶ For special fluids and fluids for cleaning, Endress+Hauser is glad to provide assistance in verifying the corrosion resistance of fluid-wetted materials, but does not accept any warranty or liability as minute changes in the temperature, concentration or level of contamination in the process can alter the corrosion resistance properties.

Residual risks

⚠ WARNING

The electronics and the medium may cause the surfaces to heat up. This presents a burn hazard!

- ▶ For elevated fluid temperatures, ensure protection against contact to prevent burns.

2.3 Workplace safety

For work on and with the device:

- ▶ Wear the required personal protective equipment according to federal/national regulations.

For welding work on the piping:

- ▶ Do not ground the welding unit via the measuring device.

If working on and with the device with wet hands:

- ▶ Due to the increased risk of electric shock, gloves must be worn.

2.4 Operational safety

Risk of injury.

- ▶ Operate the device in proper technical condition and fail-safe condition only.
- ▶ The operator is responsible for interference-free operation of the device.

Conversions to the device

Unauthorized modifications to the device are not permitted and can lead to unforeseeable dangers.

- ▶ If, despite this, modifications are required, consult with Endress+Hauser.

Repair

To ensure continued operational safety and reliability,

- ▶ Carry out repairs on the device only if they are expressly permitted.
- ▶ Observe federal/national regulations pertaining to repair of an electrical device.
- ▶ Use original spare parts and accessories from Endress+Hauser only.

2.5 Product safety

This measuring device is designed in accordance with good engineering practice to meet state-of-the-art safety requirements, has been tested, and left the factory in a condition in which it is safe to operate.

It meets general safety standards and legal requirements. It also complies with the EU directives listed in the device-specific EU Declaration of Conformity. Endress+Hauser confirms this by affixing the CE mark to the device.

2.6 IT security

Our warranty is valid only if the device is installed and used as described in the Operating Instructions. The device is equipped with security mechanisms to protect it against any inadvertent changes to the settings.

IT security measures, which provide additional protection for the device and associated data transfer, must be implemented by the operators themselves in line with their security standards.

2.7 Device-specific IT security

The device offers a range of specific functions to support protective measures on the operator's side. These functions can be configured by the user and guarantee greater in-operation safety if used correctly. An overview of the most important functions is provided in the following section.

2.7.1 Protecting access via hardware write protection

Write access to the device parameters via the local display or operating tool (e.g. FieldCare, DeviceCare) can be disabled via a write protection switch (DIP switch on the motherboard). When hardware write protection is enabled, only read access to the parameters is possible.

2.7.2 Protecting access via a password

Different passwords are available to protect write access to the device parameters or access to the device via the WLAN interface.

- User-specific access code
  Protect write access to the device parameters via the local display, Web browser or operating tool (e.g. FieldCare, DeviceCare). Access authorization is clearly regulated through the use of a user-specific access code.
- WLAN passphrase
  The network key protects a connection between an operating unit (e.g. notebook or tablet) and the device via the WLAN interface which can be ordered as an option.
- Infrastructure mode
  When the device is operated in infrastructure mode, the WLAN passphrase corresponds to the WLAN passphrase configured on the operator side.

User-specific access code

Write access to the device parameters via the local display or operating tool (e.g. FieldCare, DeviceCare) can be protected by the modifiable, user-specific access code (→ 🖹 112).

When the device is delivered, the device does not have an access code and is equivalent to *0000* (open).

WLAN passphrase: Operation as WLAN access point

A connection between an operating unit (e.g. notebook or tablet) and the device via the WLAN interface (→ 🖹 75), which can be ordered as an optional extra, is protected by the network key. The WLAN authentication of the network key complies with the IEEE 802.11 standard.

When the device is delivered, the network key is pre-defined depending on the device. It can be changed via the **WLAN settings** submenu in the **WLAN passphrase** parameter (→ 108).

Infrastructure mode

A connection between the device and WLAN access point is protected by means of an SSID and passphrase on the system side. Please contact the relevant system administrator for access.

General notes on the use of passwords

- The access code and network key supplied with the device should be changed during commissioning.
- Follow the general rules for generating a secure password when defining and managing the access code or network key.
- The user is responsible for the management and careful handling of the access code and network key.
- For information on configuring the access code or on what to do if you lose the password, see the "Write protection via access code" section → 112

2.7.3 Access via Web server

The device can be operated and configured via a Web browser with the integrated Web server (→ 68). The connection is via the service interface (CDI-RJ45) or the WLAN interface.

The Web server is enabled when the device is delivered. The Web server can be disabled if necessary (e.g. after commissioning) via the **Web server functionality** parameter.

The device and status information can be hidden on the login page. This prevents unauthorized access to the information.

For detailed information on device parameters, see:
The "Description of Device Parameters" document → 178.

3 Product description

The device consists of a transmitter and a sensor.

Two device versions are available:
- Compact version – transmitter and sensor form a mechanical unit.
- Remote version - transmitter and sensor are mounted in separate locations.

3.1 Product design

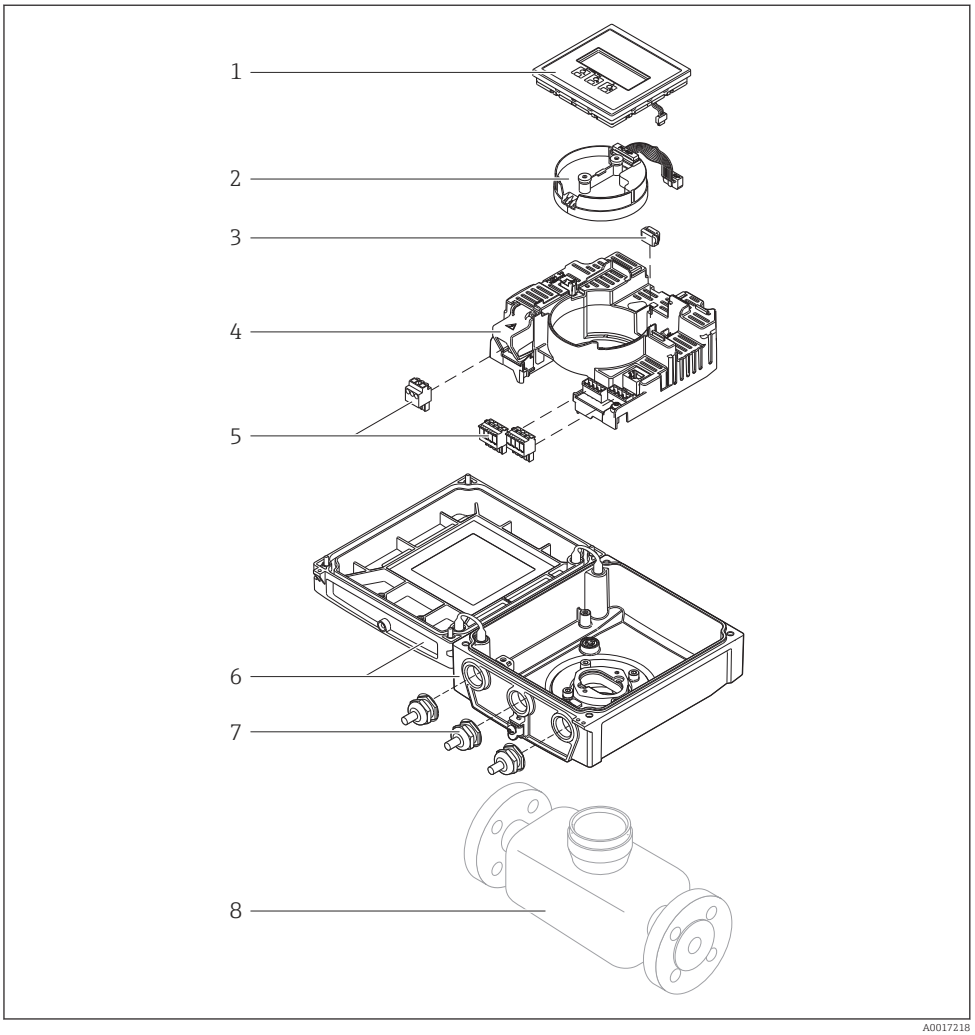

1 Important components of the compact version

1 Display module
2 Smart sensor electronics module
3 HistoROM DAT (plug-in memory)
4 Main electronics module
5 Terminals (screw terminals, some available as plug-in terminals) or fieldbus connectors
6 Transmitter housing, compact version
7 Cable glands
8 Sensor, compact version

4 Incoming acceptance and product identification

4.1 Incoming acceptance

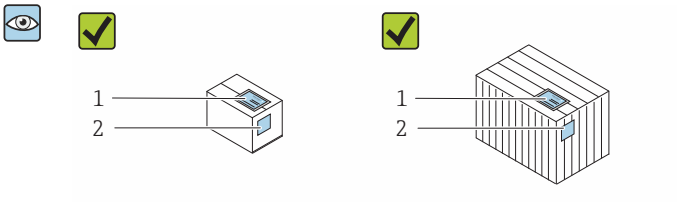

Are the order codes on the delivery note (1) and the product sticker (2) identical?

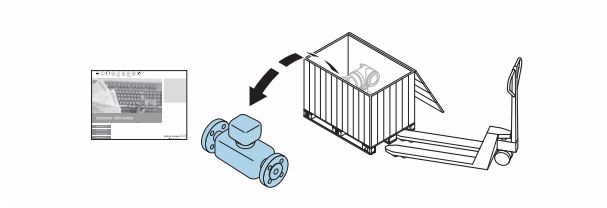



Are the goods undamaged?

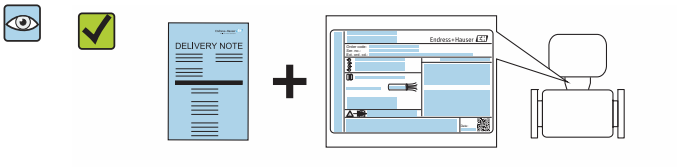

Do the nameplate data match the ordering information on the delivery note?

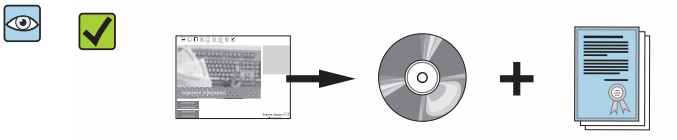

Is the document folder present with accompanying documents?
Is the optional CD-ROM with the Technical Documentation present?

- If one of the conditions is not satisfied, contact your Endress+Hauser Sales Center.
- Depending on the device version, the CD-ROM might not be part of the delivery! The Technical Documentation is available via the Internet or via the *Endress+Hauser Operations App*, see the "Product identification" section → 16.

4.2 Product identification

The following options are available for identification of the device:
- Nameplate specifications
- Order code with breakdown of the device features on the delivery note
- Enter serial numbers from nameplates in the *W@M Device Viewer* (www.endress.com/deviceviewer): All information about the device is displayed.
- Enter the serial number from nameplates in the *Endress+Hauser Operations App* or scan the 2-D matrix code (QR code) on the nameplate using the *Endress+Hauser Operations App*: All information about the device is displayed.

For an overview of the scope of the associated Technical Documentation, refer to the following:
- The "Additional standard documentation on the device"→ 📄 8 and "Supplementary device-dependent documentation"→ 📄 8 sections
- The *W@M Device Viewer*: enter the serial number from the nameplate (www.endress.com/deviceviewer)
- The *Endress+Hauser Operations App*: Enter the serial number from the nameplate or scan the 2-D matrix code (QR code) on the nameplate.

4.2.1 Transmitter nameplate

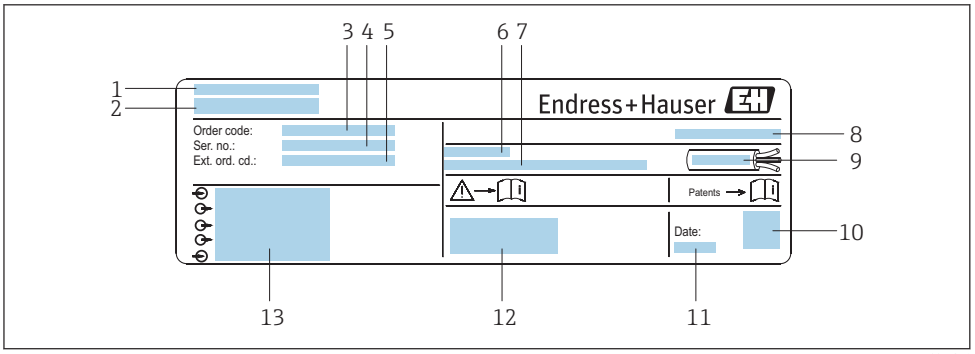

2 *Example of a transmitter nameplate*

1 *Manufacturing location*
2 *Name of the transmitter*
3 *Order code*
4 *Serial number (ser. no.)*
5 *Extended order code (Ext. ord. cd.)*
6 *Permitted ambient temperature (T_a)*
7 *Firmware version (FW) and device revision (Dev.Rev.) from the factory*
8 *Degree of protection*
9 *Permitted temperature range for cable*
10 *2-D matrix code*
11 *Manufacturing date: year-month*
12 *CE mark, C-Tick*
13 *Electrical connection data, e.g. available inputs and outputs, supply voltage*

4.2.2 Sensor nameplate

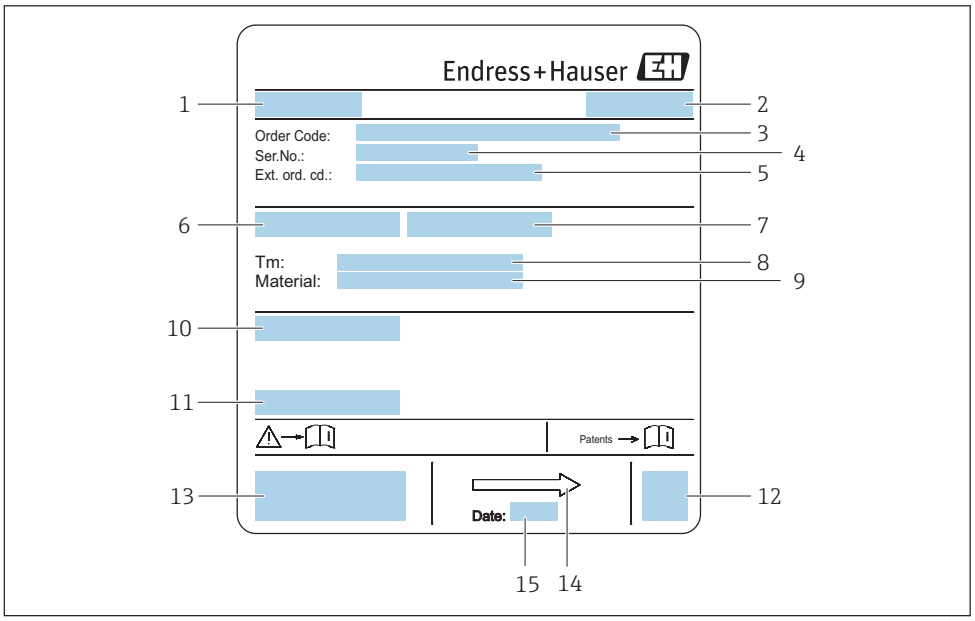

3 *Example of sensor nameplate*

1 *Name of the sensor*
2 *Manufacturing location*
3 *Order code*
4 *Serial number (ser. no.)*
5 *Extended order code (Ext. ord. cd.)*
6 *Nominal diameter of sensor*
7 *Test pressure of the sensor*
8 *Medium temperature range*
9 *Material of lining and electrodes*
10 *Degree of protection: e.g. IP, NEMA*
11 *Permitted ambient temperature (T_a)*
12 *2-D matrix code*
13 *CE mark, C-Tick*
14 *Flow direction*
15 *Manufacturing date: year-month*

Order code

The measuring device is reordered using the order code.

Extended order code

- The device type (product root) and basic specifications (mandatory features) are always listed.
- Of the optional specifications (optional features), only the safety and approval-related specifications are listed (e.g. LA). If other optional specifications are also ordered, these are indicated collectively using the # placeholder symbol (e.g. #LA#).
- If the ordered optional specifications do not include any safety and approval-related specifications, they are indicated by the + placeholder symbol (e.g. XXXXXX-ABCDE +).

4.2.3 Symbols on measuring device

Symbol	Meaning
	**WARNING!** This symbol alerts you to a dangerous situation. Failure to avoid this situation can result in serious or fatal injury.
	**Reference to documentation** Refers to the corresponding device documentation.
	**Protective ground connection** A terminal which must be connected to ground prior to establishing any other connections.

5 Storage and transport

5.1 Storage conditions

Observe the following notes for storage:
- Store in the original packaging to ensure protection from shock.
- Do not remove protective covers or protective caps installed on process connections. They prevent mechanical damage to the sealing surfaces and contamination in the measuring tube.
- Protect from direct sunlight to avoid unacceptably high surface temperatures.
- Select a storage location where moisture cannot collect in the measuring device as fungus and bacteria infestation can damage the lining.
- Store in a dry and dust-free place.
- Do not store outdoors.

Storage temperature→ 159

5.2 Transporting the product

Transport the measuring device to the measuring point in the original packaging.

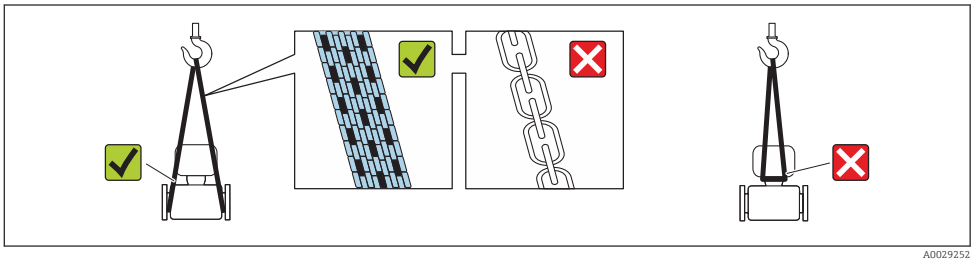

A0029252

Do not remove protective covers or caps installed on process connections. They prevent mechanical damage to the sealing surfaces and contamination in the measuring tube.

5.2.1 Measuring devices without lifting lugs

WARNING

Center of gravity of the measuring device is higher than the suspension points of the webbing slings.

Risk of injury if the measuring device slips.
- Secure the measuring device against slipping or turning.
- Observe the weight specified on the packaging (stick-on label).

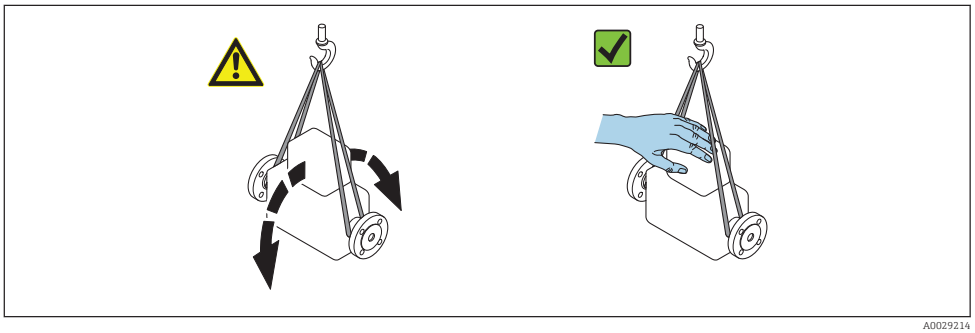

A0029214

5.2.2 Measuring devices with lifting lugs

⚠ CAUTION

Special transportation instructions for devices with lifting lugs

- ▶ Only use the lifting lugs fitted on the device or flanges to transport the device.
- ▶ The device must always be secured at two lifting lugs at least.

5.2.3 Transporting with a fork lift

If transporting in wood crates, the floor structure enables the crates to be lifted lengthwise or at both sides using a forklift.

⚠ CAUTION

Risk of damaging the magnetic coil

- ▶ If transporting by forklift, do not lift the sensor by the metal casing.
- ▶ This would buckle the casing and damage the internal magnetic coils.

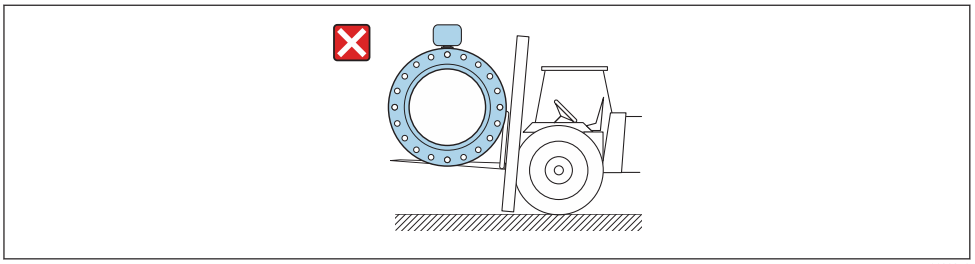

A0029319

5.3 Packaging disposal

All packaging materials are environmentally friendly and 100 % recyclable:

- Outer packaging of device
  Polymer stretch wrap that complies with EU Directive 2002/95/EC (RoHS)
- Packaging
  - Wooden crate treated in accordance with ISPM 15 standard, confirmed by IPPC logo
  - Cardboard box in accordance with European packaging guideline 94/62EC, recyclability confirmed by Resy symbol
- Carrying and securing materials
  - Disposable plastic pallet
  - Plastic straps
  - Plastic adhesive strips
- Filler material
  Paper pads

6 Installation

6.1 Installation conditions

6.1.1 Mounting position

Mounting location

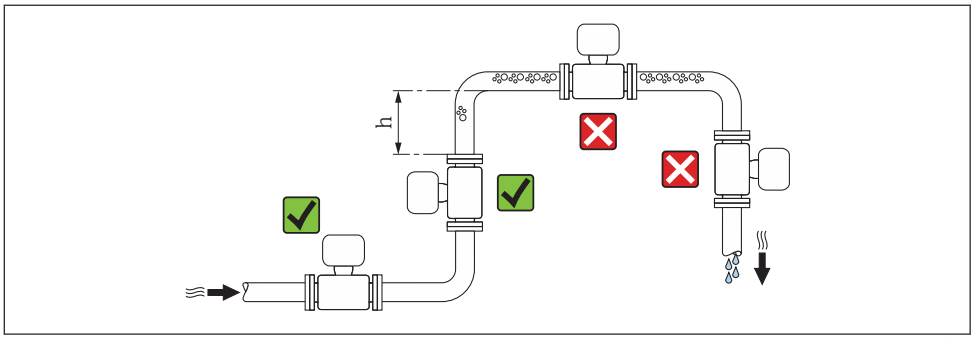

Preferably install the sensor in an ascending pipe, and ensure a sufficient distance to the next pipe elbow: h ≥ 2 × DN

Not necessary for the order code for "Design", option C

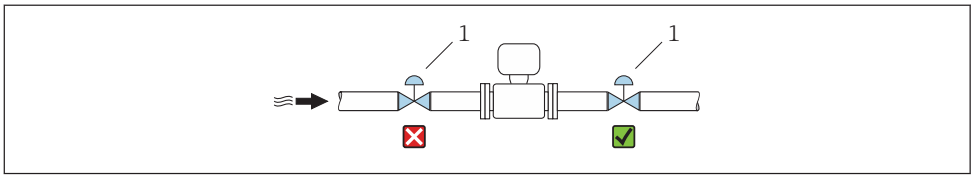

4 *Installation of the sensor after a control valve is not recommended*

1 Control valve

Installation in down pipes

Install a siphon with a vent valve downstream of the sensor in down pipes whose length h ≥ 5 m (16.4 ft). This precaution is to avoid low pressure and the consequent risk of damage to the measuring tube. This measure also prevents the system losing prime.

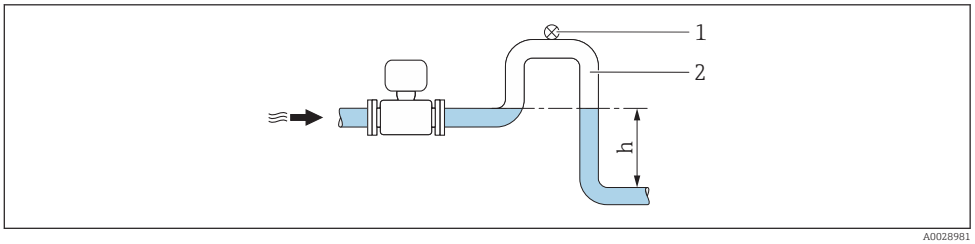

5 *Installation in a down pipe*

1 Vent valve
2 Pipe siphon
h Length of down pipe

Installation in partially filled pipes

A partially filled pipe with a gradient necessitates a drain-type configuration.

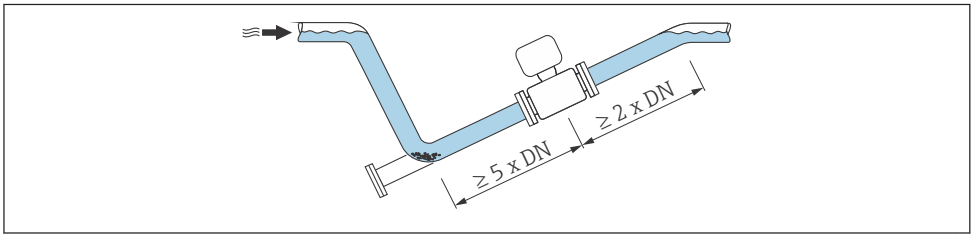

A0029257

For heavy sensors DN ≥ 350 (14")

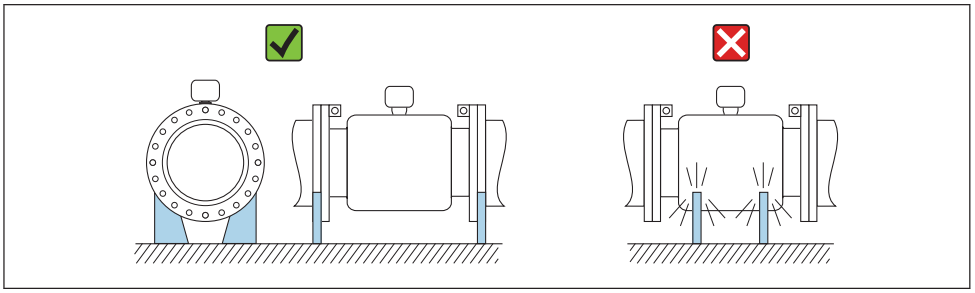

A0016276

Orientation

The direction of the arrow on the sensor nameplate helps you to install the sensor according to the flow direction (direction of medium flow through the piping).

Orientation			Recommendation
A	Vertical orientation	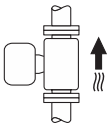 A0015591	✓✓
B	Horizontal orientation, transmitter at top	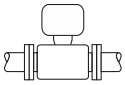 A0015589	✓✓ 1)
C	Horizontal orientation, transmitter at bottom	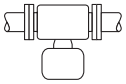 A0015590	✓✓ 2) 3) ✗ 4)
D	Horizontal orientation, transmitter at side	 A0015592	✗

1) Applications with low process temperatures may decrease the ambient temperature. To maintain the minimum ambient temperature for the transmitter, this orientation is recommended.
2) Applications with high process temperatures may increase the ambient temperature. To maintain the maximum ambient temperature for the transmitter, this orientation is recommended.
3) To prevent the electronics module from overheating in the case of a sharp rise in temperature (e.g. CIP or SIP processes), install the device with the transmitter component pointing downwards.
4) With the empty pipe detection function switched on: empty pipe detection only works if the transmitter housing is pointing upwards.

Horizontal

- Ideally, the measuring electrode plane should be horizontal. This prevents brief insulation of the two measuring electrodes by entrained air bubbles.
- Empty pipe detection only works if the transmitter housing is pointing upwards as otherwise there is no guarantee that the empty pipe detection function will actually respond to a partially filled or empty measuring tube.

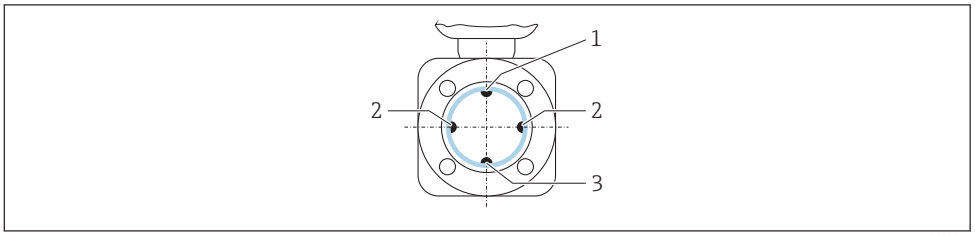

1 EPD electrode for empty pipe detection
2 Measuring electrodes for signal detection
3 Reference electrode for potential equalization

Inlet and outlet runs

If possible, install the sensor upstream from fittings such as valves, T-pieces or elbows.

Observe the following inlet and outlet runs to comply with accuracy specifications:

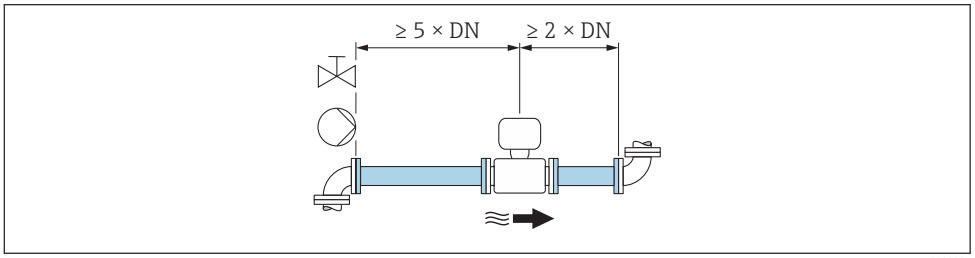

For sensors with the order code for "Design", option C "fixed flange", no inlet and outlet runs must be taken into account.

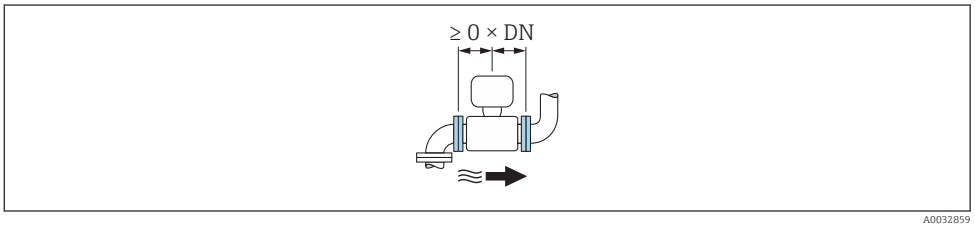

To keep within the in-service maximum permissible errors for custody transfer no additional requirements apply with regard to the graphic illustrated above.

Installation dimensions

For the dimensions and installation lengths of the device, see the "Technical Information" document, "Mechanical construction" section.

6.1.2 Environment and process requirements

Ambient temperature range

Transmitter	−40 to +60 °C (−40 to +140 °F)
Local display	−20 to +60 °C (−4 to +140 °F), the readability of the display may be impaired at temperatures outside the temperature range.
Sensor	▪ Process connection material, carbon steel: −10 to +60 °C (+14 to +140 °F) ▪ Process connection material, stainless steel: −40 to +60 °C (−40 to +140 °F)
Liner	Do not exceed or fall below the permitted temperature range of the liner .

If operating outdoors:
- Install the measuring device in a shady location.
- Avoid direct sunlight, particularly in warm climatic regions.
- Avoid direct exposure to weather conditions.
- If the compact version of the device is insulated at low temperatures, the insulation must also include the device neck.
- Protect the display against impact.
- Protect the display from abrasion by sand in desert areas.

Display guard available as an accessory → 145.

Temperature tables

Observe the interdependencies between the permitted ambient and fluid temperatures when operating the device in hazardous areas.

For detailed information on the temperature tables, see the separate document entitled "Safety Instructions" (XA) for the device.

System pressure

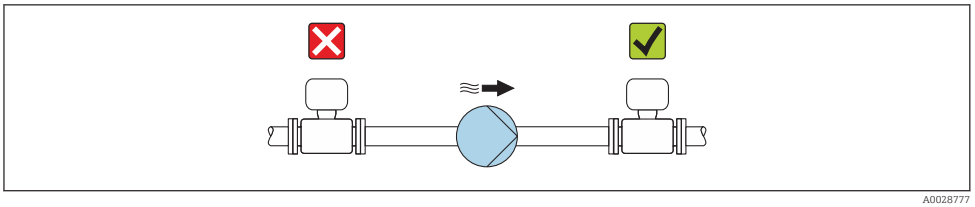

A0028777

Never install the sensor on the pump suction side in order to avoid the risk of low pressure, and thus damage to the liner.

Furthermore, install pulse dampers if reciprocating, diaphragm or peristaltic pumps are used.

- Information on the liner's resistance to partial vacuum → 161
- Information on the shock resistance of the measuring system → 160
- Information on the vibration resistance of the measuring system → 160

Vibrations

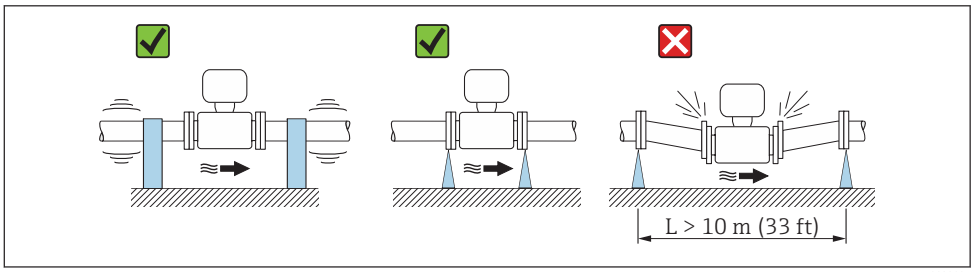

6 *Measures to prevent vibration of the device*

In the event of very strong vibrations, the pipe and sensor must be supported and fixed.

It is also advisable to mount the sensor and transmitter separately.

- Information on the shock resistance of the measuring system → 160
- Information on the vibration resistance of the measuring system → 160

Adapters

Suitable adapters to DIN EN 545 (double-flange reducers) can be used to install the sensor in larger-diameter pipes. The resultant increase in the rate of flow improves measuring accuracy with very slow-moving fluids. The nomogram shown here can be used to calculate the pressure loss caused by reducers and expanders.

The nomogram only applies to liquids with a viscosity similar to that of water.

1. Calculate the ratio of the diameters d/D.
2. From the nomogram read off the pressure loss as a function of flow velocity (downstream from the reduction) and the d/D ratio.

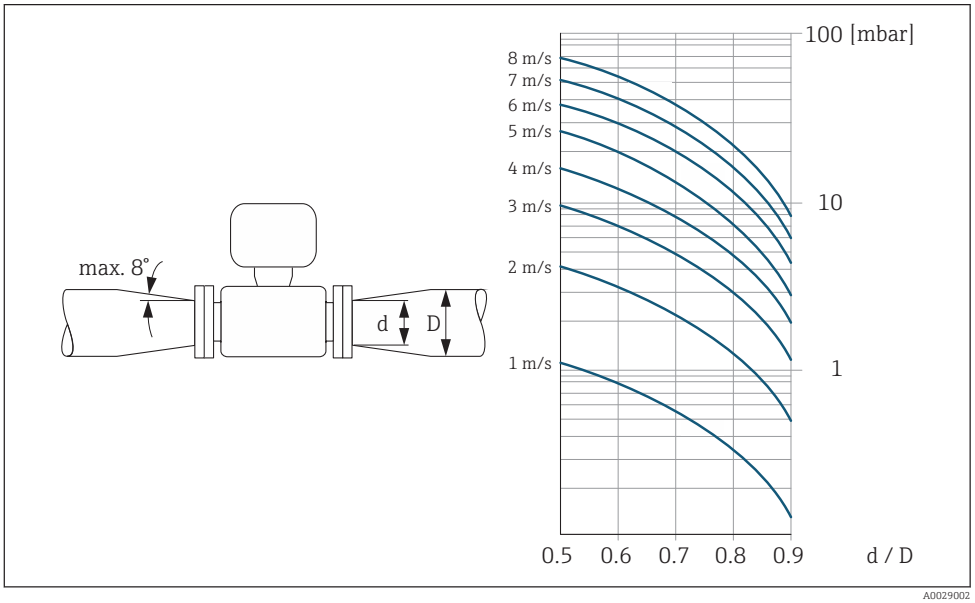

Length of connecting cable

To obtain correct measurement results, observe the permitted connecting cable length of L_{max}. This length is determined by the conductivity of the fluid. If measuring liquids in general: 5 µS/cm

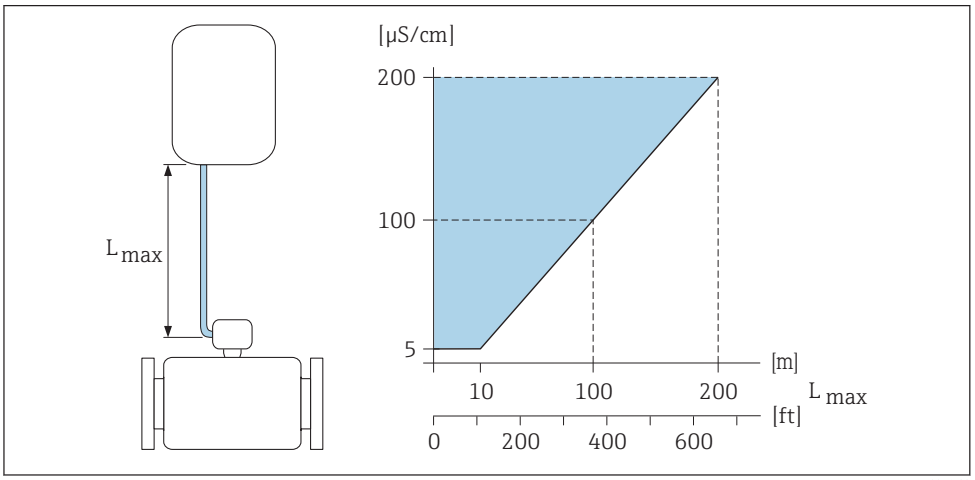

7 *Permitted length of connecting cable*

Colored area = permitted range
L_{max} = length of connecting cable in [m] ([ft])
[µS/cm] = fluid conductivity

6.1.3 Special mounting instructions

Display guard

- To ensure that the optional display guard can be easily opened, maintain the following minimum head clearance: 350 mm (13.8 in)

Permanent immersion in water

A fully welded remote version with IP68 protection is optionally available for permanent immersion in water ≤ 3 m (10 ft) or in exceptional cases for use for up to 48 hours at ≤ 10 m (30 ft). The measuring device meets the requirements of corrosion categories C5-M and Im1/Im2/Im3. The fully welded design along with the connection compartment sealing system ensure that moisture cannot enter the measuring device.

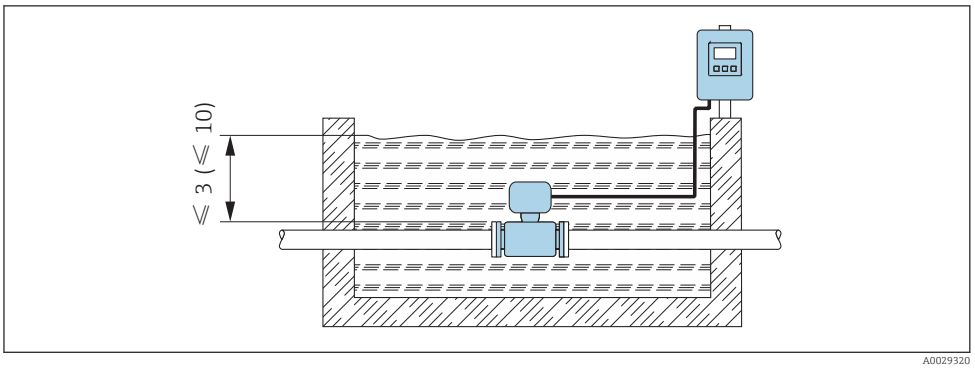

8 *Engineering unit in m(ft)*

Replacement of cable gland on connection housing

Buried applications

A remote version with IP68 protection is optionally available for buried applications. The measuring device satisfies the certified corrosion protection Im1/Im2/Im3 in accordance with EN ISO 12944. It can be used directly underground without the need for additional

protective measures. The device is mounted in accordance with the usual regional installation regulations (e.g. EN DIN 1610).

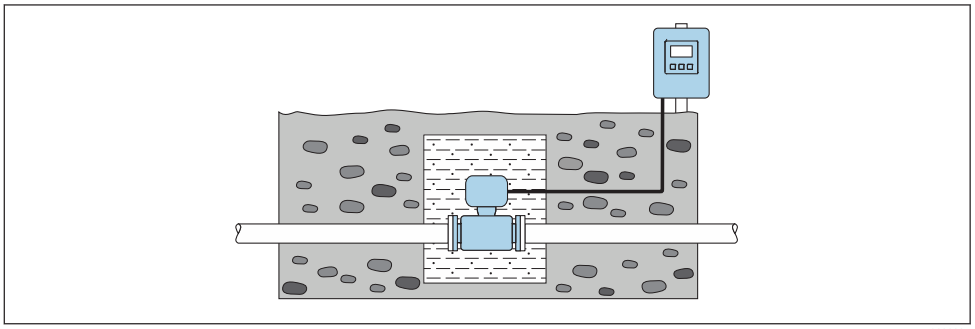

A0029321

6.2 Mounting the measuring device

6.2.1 Required tools

For transmitter

- Torque wrench
- For wall mounting:
  Open-ended wrench for hexagonal screw max. M5
- For pipe mounting:
  - Open-ended wrench AF 8
  - Phillips head screwdriver PH 2
- For turning the transmitter housing (compact version):
  - Phillips head screwdriver PH 2
  - Torx screwdriver TX 20
  - Open-ended wrench AF 7

For sensor

For flanges and other process connections: Corresponding mounting tools

6.2.2 Preparing the measuring device

1. Remove all remaining transport packaging.
2. Remove any protective covers or protective caps present from the sensor.
3. Remove stick-on label on the electronics compartment cover.

6.2.3 Mounting the sensor

⚠ WARNING

Danger due to improper process sealing!

- ▶ Ensure that the inside diameters of the gaskets are greater than or equal to that of the process connections and piping.
- ▶ Ensure that the gaskets are clean and undamaged.
- ▶ Install the gaskets correctly.

1. Ensure that the direction of the arrow on the sensor matches the flow direction of the medium.
2. To ensure compliance with device specifications, install the measuring device between the pipe flanges in a way that it is centered in the measurement section.

3. If using ground disks, comply with the Installation Instructions provided.
4. Observe required screw tightening torques .
5. Install the measuring device or turn the transmitter housing so that the cable entries do not point upwards.

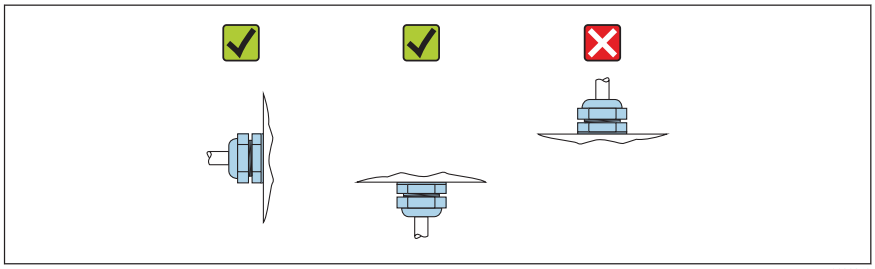

Mounting the seals

CAUTION

An electrically conductive layer could form on the inside of the measuring tube!
Risk of measuring signal short circuit.
► Do not use electrically conductive sealing compounds such as graphite.

Comply with the following instructions when installing seals:

1. Make sure that the seals do not protrude into the piping cross-section.
2. For DIN flanges: only use seals according to DIN EN 1514-1.
3. For "hard rubber" liner: additional seals are **always** required.
4. For "polyurethane" liner: generally additional seals are **not** required.

Mounting the ground cable/ground disks

Comply with the information on potential equalization and detailed mounting instructions for the use of ground cables/ground disks .

Screw tightening torques

Please note the following:
- The screw tightening torques listed below apply only to lubricated threads and to pipes not subjected to tensile stress.
- Tighten the screws uniformly and in diagonally opposite sequence.
- Overtightening the screws will deform the sealing faces or damage the seals.

Maximum screw tightening torques for EN 1092-1 (DIN 2501)

Nominal diameter		Pressure rating	Screws	Flange thickness	Max. screw tightening torque [Nm]		
[mm]	[in]	[bar]	[mm]	[mm]	HG	PUR	PTFE
25	1	PN 40	4 × M12	18	–	15	26
32	–	PN 40	4 × M16	18	–	24	41
40	1 ½	PN 40	4 × M16	18	–	31	52
50	2	PN 40	4 × M16	20	48	40	65
65 [1)]	–	PN 16	8 × M16	18	32	27	44
65	–	PN 40	8 × M16	22	32	27	44
80	3	PN 16	8 × M16	20	40	34	53
		PN 40	8 × M16	24	40	34	53

Nominal diameter		Pressure rating	Screws	Flange thickness	Max. screw tightening torque [Nm]		
[mm]	[in]	[bar]	[mm]	[mm]	HG	PUR	PTFE
100	4	PN 16	8 × M16	20	43	36	57
		PN 40	8 × M20	24	59	50	79
125	–	PN 16	8 × M16	22	56	48	75
		PN 40	8 × M24	26	83	71	112
150	6	PN 16	8 × M20	22	74	63	99
		PN 40	8 × M24	28	104	88	137
200	8	PN 10	8 × M20	24	106	91	141
		PN 16	12 × M20	24	70	61	94
		PN 25	12 × M24	30	104	92	139
250	10	PN 10	12 × M20	26	82	71	110
		PN 16	12 × M24	26	98	85	132
		PN 25	12 × M27	32	150	134	201
300	12	PN 10	12 × M20	26	94	81	126
		PN 16	12 × M24	28	134	118	179
		PN 25	16 × M27	34	153	138	204

1) Sizing as per EN 1092-1 (not DIN 2501)

Nominal screw tightening torques for EN 1092-1 (DIN 2501); calculated according to EN 1591-1:2014 for flanges according to EN 1092-1:2013

Nominal diameter		Pressure rating	Screws	Flange thickness	Nom. screw tightening torque [Nm]		
[mm]	[in]	[bar]	[mm]	[mm]	HG	PUR	PTFE
350	14	PN 6	12 × M20	22	60	75	–
		PN 10	16 × M20	26	70	80	–
		PN 16	16 × M24	30	125	135	–
		PN 25	16 × M30	38	230	235	–
400	16	PN 6	16 × M20	22	65	70	–
		PN 10	16 × M24	26	100	120	–
		PN 16	16 × M27	32	175	190	–
		PN 25	16 × M33	40	315	325	–
450	18	PN 6	16 × M20	22	70	90	–
		PN 10	20 × M24	28	100	110	–
		PN 16	20 × M27	34	175	190	–
		PN 25	20 × M33	46	300	310	–
500	20	PN 6	20 × M20	24	65	70	–
		PN 10	20 × M24	28	110	120	–
		PN 16	20 × M30	36	225	235	–
		PN 25	20 × M33	48	370	370	–
600	24	PN 6	20 × M24	30	105	105	–
		PN 10	20 × M27	30	165	160	–
600 [1)]	24	PN 16	20 × M33	40	340	340	–

Nominal diameter		Pressure rating	Screws	Flange thickness	Nom. screw tightening torque [Nm]		
[mm]	[in]	[bar]	[mm]	[mm]	HG	PUR	PTFE
600	24	PN 25	20 × M36	48	540	540	–
700	28	PN 6	24 × M24	30	110	110	–
		PN 10	24 × M27	35	190	190	–
		PN 16	24 × M33	40	340	340	–
		PN 25	24 × M39	50	615	595	–
800	32	PN 6	24 × M27	30	145	145	–
		PN 10	24 × M30	38	260	260	–
		PN 16	24 × M36	41	465	455	–
		PN 25	24 × M45	53	885	880	–
900	36	PN 6	24 × M27	34	170	180	–
		PN 10	28 × M30	38	265	275	–
		PN 16	28 × M36	48	475	475	–
		PN 25	28 × M45	57	930	915	–
1000	40	PN 6	28 × M27	38	175	185	–
		PN 10	28 × M33	44	350	360	–
		PN 16	28 × M39	59	630	620	–
		PN 25	28 × M52	63	1300	1290	–
1200	48	PN 6	32 × M30	42	235	250	–
		PN 10	32 × M36	55	470	480	–
		PN 16	32 × M45	78	890	900	–
1400	–	PN 6	36 × M33	56	300	–	–
		PN 10	36 × M39	65	600	–	–
		PN 16	36 × M45	84	1050	–	–
1600	–	PN 6	40 × M33	63	340	–	–
		PN 10	40 × M45	75	810	–	–
		PN 16	40 × M52	102	1420	–	–
1800	72	PN 6	44 × M36	69	430	–	–
		PN 10	44 × M45	85	920	–	–
		PN 16	44 × M52	110	1600	–	–
2000	–	PN 6	48 × M39	74	530	–	–
		PN 10	48 × M45	90	1040	–	–
		PN 16	48 × M56	124	1900	–	–
2200	–	PN 6	52 × M39	81	580	–	–
		PN 10	52 × M52	100	1290	–	–
2400	–	PN 6	56 × M39	87	650	–	–
		PN 10	56 × M52	110	1410	–	–

1) Sizing as per EN 1092-1 (not DIN 2501)

Maximum screw tightening torques for ASME B16.5

Nominal diameter		Pressure rating	Screws	Max. screw tightening torque			
				HG		PUR	
[mm]	[in]	[psi]	[in]	[Nm]	[lbf · ft]	[Nm]	[lbf · ft]
25	1	Class 150	4 × ½	–	–	7	5
25	1	Class 300	4 × 5/8	–	–	8	6
40	1 ½	Class 150	4 × ½	–	–	10	7
40	1 ½	Class 300	4 × ¾	–	–	15	11
50	2	Class 150	4 × 5/8	35	26	22	16
50	2	Class 300	8 × 5/8	18	13	11	8
80	3	Class 150	4 × 5/8	60	44	43	32
80	3	Class 300	8 × ¾	38	28	26	19
100	4	Class 150	8 × 5/8	42	31	31	23
100	4	Class 300	8 × ¾	58	43	40	30
150	6	Class 150	8 × ¾	79	58	59	44
150	6	Class 300	12 × ¾	70	52	51	38
200	8	Class 150	8 × ¾	107	79	80	59
250	10	Class 150	12 × 7/8	101	74	75	55
300	12	Class 150	12 × 7/8	133	98	103	76
350	14	Class 150	12 × 1	135	100	158	117
400	16	Class 150	16 × 1	128	94	150	111
450	18	Class 150	16 × 1 1/8	204	150	234	173
500	20	Class 150	20 × 1 1/8	183	135	217	160
600	24	Class 150	20 × 1 ¼	268	198	307	226

Maximum screw tightening torques for JIS B2220

Nominal diameter	Pressure rating	Screws	Max. screw tightening torque [Nm]	
[mm]	[bar]	[mm]	HG	PUR
25	10K	4 × M16	–	19
25	20K	4 × M16	–	19
32	10K	4 × M16	–	22
32	20K	4 × M16	–	22
40	10K	4 × M16	–	24
40	20K	4 × M16	–	24
50	10K	4 × M16	40	33
50	20K	8 × M16	20	17
65	10K	4 × M16	55	45
65	20K	8 × M16	28	23
80	10K	8 × M16	29	23
80	20K	8 × M20	42	35
100	10K	8 × M16	35	29
100	20K	8 × M20	56	48
125	10K	8 × M20	60	51

Nominal diameter [mm]	Pressure rating [bar]	Screws [mm]	Max. screw tightening torque [Nm]	
			HG	PUR
125	20K	8 × M22	91	79
150	10K	8 × M20	75	63
150	20K	12 × M22	81	72
200	10K	12 × M20	61	52
200	20K	12 × M22	91	80
250	10K	12 × M22	100	87
250	20K	12 × M24	159	144
300	10K	16 × M22	74	63
300	20K	16 × M24	138	124

Nominal screw tightening torques for JIS B2220

Nominal diameter [mm]	Pressure rating [bar]	Screws [mm]	Nom. screw tightening torque [Nm]	
			HG	PUR
350	10K	16 × M22	109	109
	20K	16 × M30×3	217	217
400	10K	16 × M24	163	163
	20K	16 × M30×3	258	258
450	10K	16 × M24	155	155
	20K	16 × M30×3	272	272
500	10K	16 × M24	183	183
	20K	16 × M30×3	315	315
600	10K	16 × M30	235	235
	20K	16 × M36×3	381	381
700	10K	16 × M30	300	300
750	10K	16 × M30	339	339

Maximum screw tightening torques for AWWA C207, Class D

Nominal diameter		Screws	Max. screw tightening torque			
[mm]	[in]	[in]	HG		PUR	
			[Nm]	[lbf · ft]	[Nm]	[lbf · ft]
700	28	28 × 1 ¼	247	182	292	215
750	30	28 × 1 ¼	287	212	302	223
800	32	28 × 1 ½	394	291	422	311
900	36	32 × 1 ½	419	309	430	317
1000	40	36 × 1 ½	420	310	477	352
–	42	36 × 1 ½	528	389	518	382
–	48	44 × 1 ½	552	407	531	392
–	54	44 × 1 ¾	730	538	–	–
–	60	52 × 1 ¾	758	559	–	–
–	66	52 × 1 ¾	946	698	–	–

Nominal diameter		Screws	Max. screw tightening torque			
[mm]	[in]	[in]	HG		PUR	
			[Nm]	[lbf · ft]	[Nm]	[lbf · ft]
–	72	60 × 1 ¾	975	719	–	–
–	78	64 × 2	853	629	–	–
–	84	64 x 2	931	687	–	–
–	90	64 x 2 ¼	1048	773	–	–

Maximum screw tightening torques for AS 2129, Table E

Nominal diameter	Screws	Max. screw tightening torque [Nm]	
[mm]	[mm]	HG	PUR
50	4 × M16	32	–
80	4 × M16	49	–
100	8 × M16	38	–
150	8 × M20	64	–
200	8 × M20	96	–
250	12 × M20	98	–
300	12 × M24	123	–
350	12 × M24	203	–
400	12 × M24	226	–
450	16 × M24	226	–
500	16 × M24	271	–
600	16 × M30	439	–
700	20 × M30	355	–
750	20 × M30	559	–
800	20 × M30	631	–
900	24 × M30	627	–
1000	24 × M30	634	–
1200	32 × M30	727	–

Maximum screw tightening torques for AS 4087, PN 16

Nominal diameter	Screws	Max. screw tightening torque [Nm]	
[mm]	[mm]	HG	PUR
50	4 × M16	32	–
80	4 × M16	49	–
100	4 × M16	76	–
150	8 × M20	52	–
200	8 × M20	77	–
250	8 × M20	147	–
300	12 × M24	103	–
350	12 × M24	203	–
375	12 × M24	137	–

Nominal diameter [mm]	Screws [mm]	Max. screw tightening torque [Nm]	
		HG	PUR
400	12 × M24	226	–
450	12 × M24	301	–
500	16 × M24	271	–
600	16 × M27	393	–
700	20 × M27	330	–
750	20 × M30	529	–
800	20 × M33	631	–
900	24 × M33	627	–
1000	24 × M33	595	–
1200	32 × M33	703	–

6.2.4 Mounting the transmitter of the remote version

⚠ CAUTION

Ambient temperature too high!

Danger of electronics overheating and housing deformation.

- ▶ Do not exceed the permitted maximum ambient temperature .
- ▶ If operating outdoors: Avoid direct sunlight and exposure to weathering, particularly in warm climatic regions.

⚠ CAUTION

Excessive force can damage the housing!

- ▶ Avoid excessive mechanical stress.

The transmitter of the remote version can be mounted in the following ways:

- Wall mounting
- Pipe mounting

Wall mounting

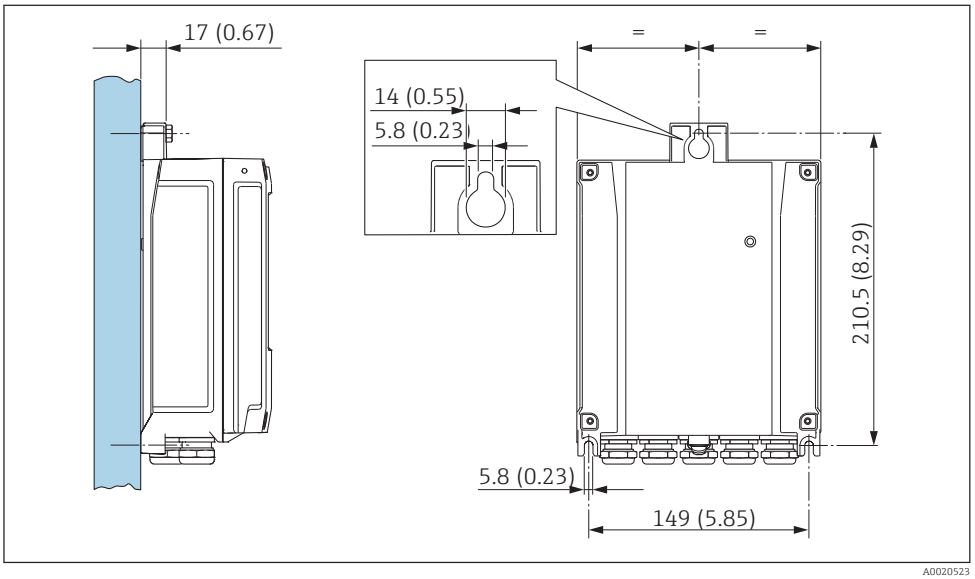

9 *Engineering unit mm (in)*

1. Drill the holes.
2. Insert wall plugs into the drilled holes.
3. Screw in the securing screws slightly at first.
4. Fit the transmitter housing over the securing screws and mount in place.
5. Tighten the securing screws.

Post mounting

WARNING

Excessive tightening torque applied to the fixing screws!
Risk of damaging the plastic transmitter.
▶ Tighten the fixing screws as per the tightening torque:

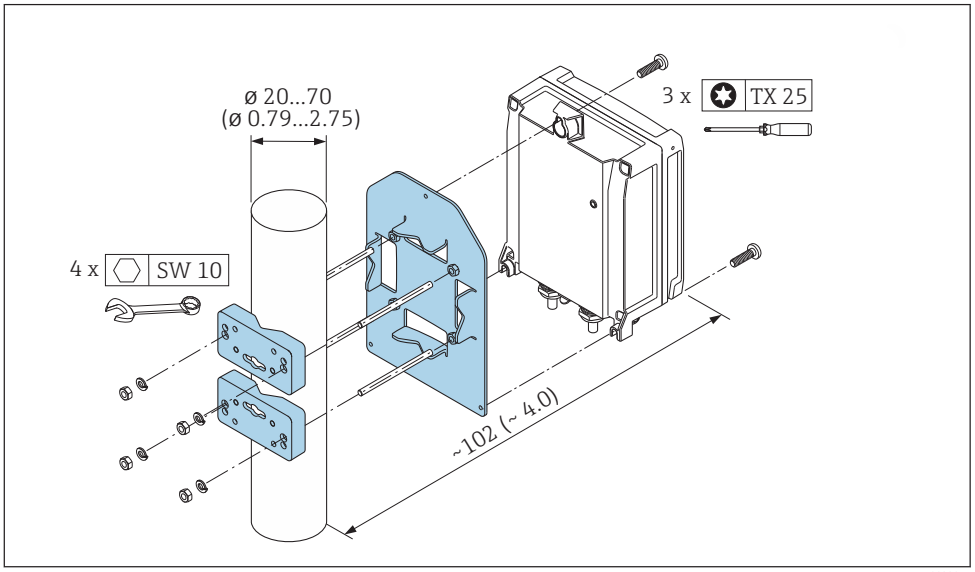

10 *Engineering unit mm (in)*

6.2.5 Turning the transmitter housing

To provide easier access to the connection compartment or display module, the transmitter housing can be turned.

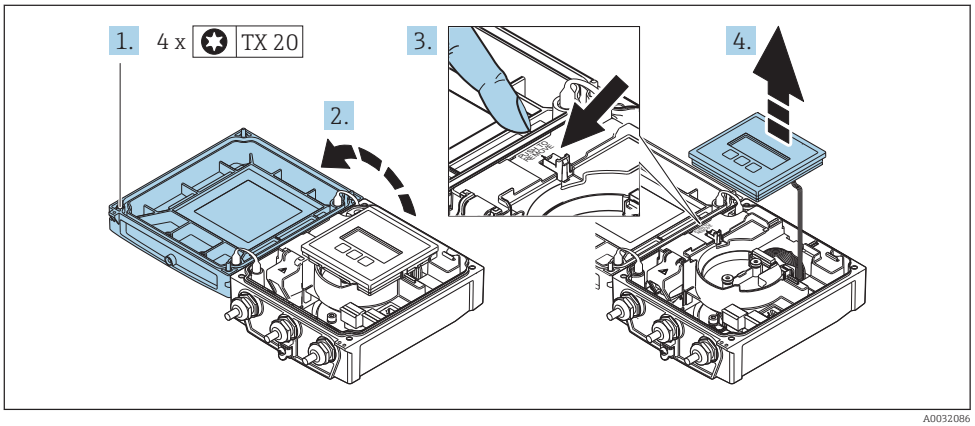

1. Loosen the fixing screws of the housing cover (when reassembling, pay attention to the tightening torque → 37).
2. Open the housing cover.

3. Unlock the display module.
4. Remove the display module.

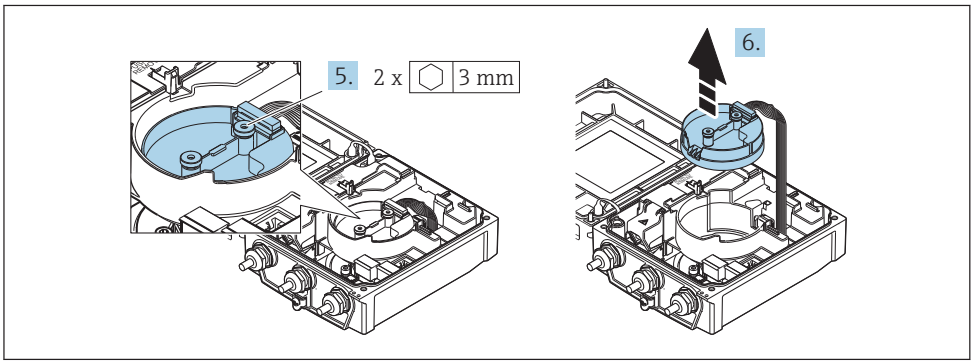

5. Loosen the fixing screws of the smart sensor electronics module (when reassembling, pay attention to the tightening torque → 37).
6. Remove the smart sensor electronics module (when reassembling, pay attention to the coding of the plug → 37).

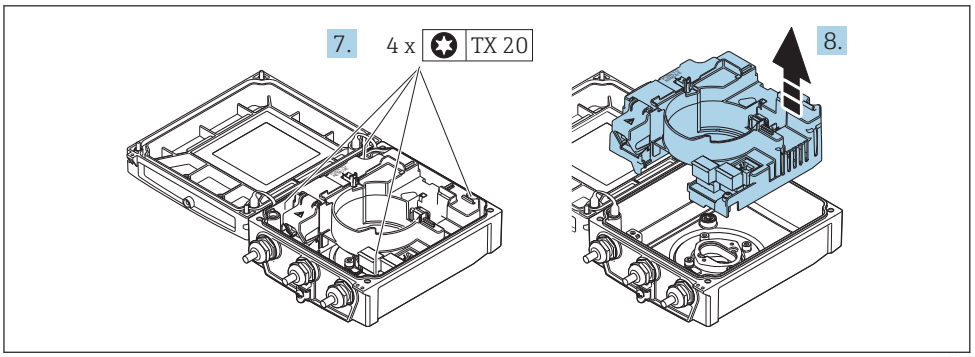

7. Loosen the fixing screws of the main electronics module (when reassembling, pay attention to the tightening torque → 37).
8. Remove the main electronics module.

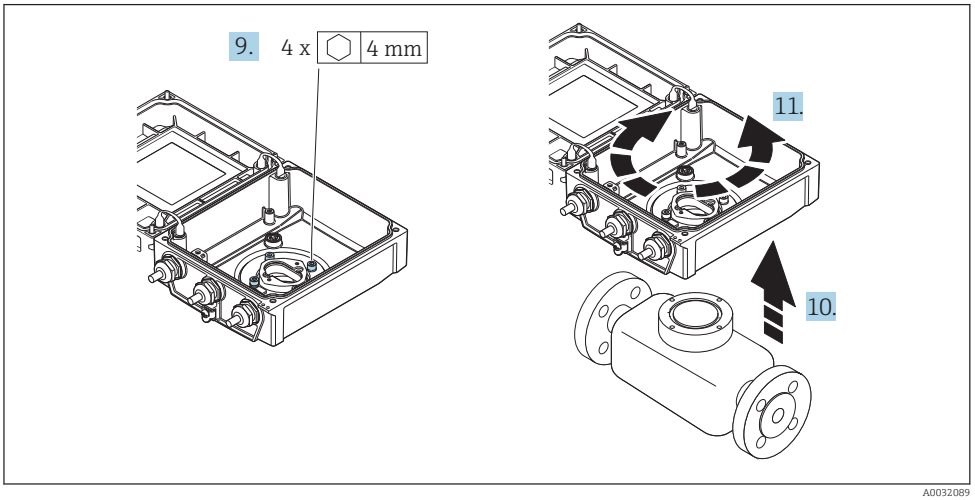

9. Loosen the fixing screws of the transmitter housing (when reassembling, pay attention to the tightening torque → 37).
10. Lift the transmitter housing.

11. Turn the housing to the desired position in increments of 90°.

Reassembling the transmitter housing

WARNING

Excessive tightening torque applied to the fixing screws!
Risk of damaging the plastic transmitter.
▶ Tighten the fixing screws as per the tightening torque:

Step → 🖹 35	Fixing screw	Tightening torques for housing made of:	
		Aluminum	Plastic
1	Housing cover	2.5 Nm (1.8 lbf ft)	1 Nm (0.7 lbf ft)
5	Smart sensor electronics module	0.6 Nm (0.4 lbf ft)	
7	Main electronics module	1.5 Nm (1.1 lbf ft)	
9/10	Transmitter housing	5.5 Nm (4.1 lbf ft)	

NOTICE

Plug of the smart sensor electronics module connected incorrectly!
No measuring signal is output.
▶ Plug in the plug of the smart sensor electronics module as per the coding.

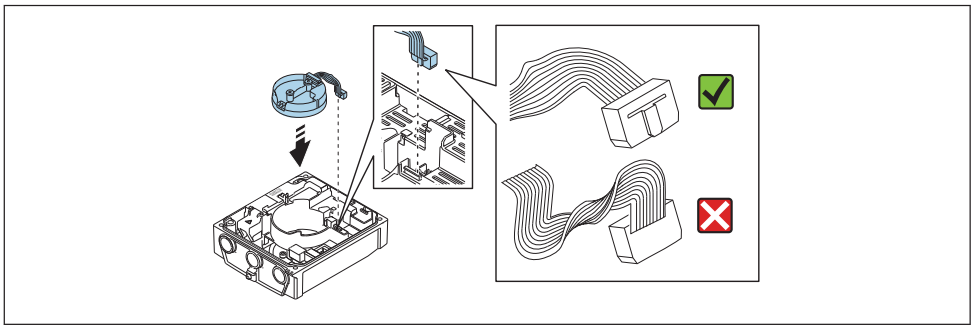

A0021585

▶ Reverse the procedure to reassemble the measuring device.

6.2.6 Turning the display module

The display module can be turned to optimize display readability and operability.

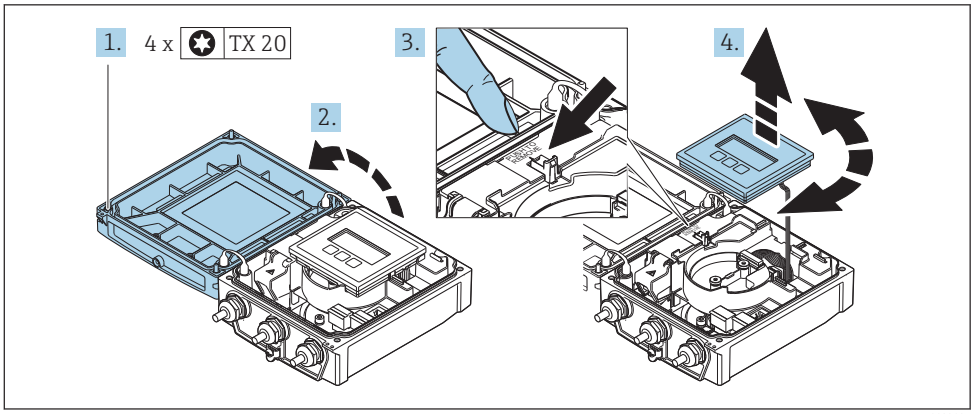

A0032091

1. Loosen the fixing screws of the housing cover (when reassembling, pay attention to the tightening torque → 🖹 38).

2. Open the housing cover.
3. Unlock the display module.
4. Pull out the display module and turn it to the desired position in increments of 90°.

Reassembling the transmitter housing

⚠ WARNING

Excessive tightening torque applied to the fixing screws!
Risk of damaging the plastic transmitter.

► Tighten the fixing screws as per the tightening torque:

Step (see graphic)	Fixing screw	Tightening torque for housing made of:	
		Aluminum	Plastic
1	Housing cover	2.5 Nm (1.8 lbf ft)	1 Nm (0.7 lbf ft)

► Reverse the procedure to reassemble the measuring device.

6.3 Post-installation check

Is the device undamaged (visual inspection)?	❑
Does the measuring device conform to the measuring point specifications? For example: ▪ Process temperature ▪ Process pressure (refer to the section on "Pressure-temperature ratings" in the "Technical Information" document) ▪ Ambient temperature ▪ Measuring range	❑
Has the correct orientation for the sensor been selected ? ▪ According to sensor type ▪ According to medium temperature ▪ According to medium properties (outgassing, with entrained solids)	❑
Does the arrow on the sensor nameplate match the direction of flow of the fluid through the piping ?	❑
Are the measuring point identification and labeling correct (visual inspection)?	❑
Is the device adequately protected from precipitation and direct sunlight?	❑
Have the fixing screws been tightened with the correct tightening torque?	❑

7 Electrical connection

NOTICE

The measuring device does not have an internal circuit breaker.

- ▶ For this reason, assign the measuring device a switch or power-circuit breaker so that the power supply line can be easily disconnected from the mains.
- ▶ Although the measuring device is equipped with a fuse, additional overcurrent protection (maximum 16 A) should be integrated into the system installation.

7.1 Connection conditions

7.1.1 Requirements for connecting cable

The connecting cables provided by the customer must fulfill the following requirements.

Electrical safety

In accordance with applicable federal/national regulations.

Permitted temperature range

- The installation guidelines that apply in the country of installation must be observed.
- The cables must be suitable for the minimum and maximum temperatures to be expected.

Power supply cable

Standard installation cable is sufficient.

Signal cable

Current output 0/4 to 20 mA

Standard installation cable is sufficient.

Current output 4 to 20 mA HART

A shielded cable is recommended. Observe grounding concept of the plant.

Pulse/frequency/switch output

Standard installation cable is sufficient.

Status input

Standard installation cable is sufficient.

Connecting cable for remote version

Electrode cable

Standard cable	3 ×0.38 mm² (20 AWG) with common, braided copper shield (⌀ ~9.5 mm (0.37 in)) and individual shielded cores
Cable for empty pipe detection (EPD)	4 ×0.38 mm² (20 AWG) with common, braided copper shield (⌀ ~9.5 mm (0.37 in)) and individual shielded cores
Conductor resistance	≤50 Ω/km (0.015 Ω/ft)
Capacitance: core/shield	≤420 pF/m (128 pF/ft)
Operating temperature	–20 to +80 °C (–68 to +176 °F)

Coil current cable

Standard cable	3 ×0.75 mm² (18 AWG) with common, braided copper shield (ϕ ~9 mm (0.35 in))
Conductor resistance	≤37 Ω/km (0.011 Ω/ft)
Capacitance: core/core, shield grounded	≤120 pF/m (37 pF/ft)
Operating temperature	−20 to +80 °C (−68 to +176 °F)
Test voltage for cable insulation	≤ AC 1433 V r.m.s. 50/60 Hz or ≥ DC 2026 V

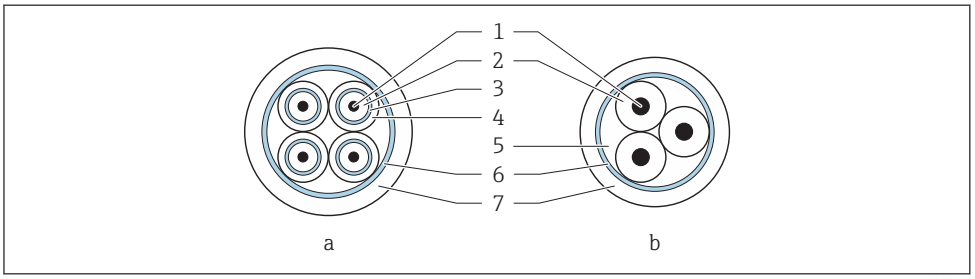

11 *Cable cross-section*

a Electrode cable
b Coil current cable
1 Core
2 Core insulation
3 Core shield
4 Core jacket
5 Core reinforcement
6 Cable shield
7 Outer jacket

Reinforced connecting cables

Reinforced connecting cables with an additional, reinforcing metal braid should be used for:
- When laying the cable directly in the ground
- Where there is a risk of damage from rodents
- If using the device below IP68 degree of protection

Operation in zones of severe electrical interference

The measuring system meets the general safety requirements → 176 and EMC specifications → 160.

Grounding is by means of the ground terminal provided for the purpose inside the connection housing. The stripped and twisted lengths of cable shield to the ground terminal must be as short as possible.

Cable diameter

- Cable glands supplied:
  - For standard cable: M20 × 1.5 with cable ϕ6 to 12 mm (0.24 to 0.47 in)
  - For reinforced cable: M20 × 1.5 with cable ϕ9.5 to 16 mm (0.37 to 0.63 in)
- (Plug-in) spring terminals for wire cross-sections 0.5 to 2.5 mm² (20 to 14 AWG)

7.1.2 Required tools

- Torque wrench
- For cable entries: Use corresponding tools
- Wire stripper
- When using stranded cables: Crimper for wire end ferrule

7.1.3 Terminal assignment

Transmitter

The sensor can be ordered with terminals.

Connection methods available		Possible options for order code "Electrical connection"
Outputs	**Power supply**	
Terminals	Terminals	▪ Option **A**: coupling M20x1 ▪ Option **B**: thread M20x1 ▪ Option **C**: thread G ½" ▪ Option **D**: thread NPT ½"

Supply voltage

Order code "Power supply"	Terminal numbers	terminal voltage		Frequency range
Option **L** (wide range power unit)	1 (L+/L), 2 (L-/N)	DC 24 V	±25%	–
		AC 24 V	±25%	50/60 Hz, ±4 Hz
		AC 100 to 240 V	−15 to +10%	50/60 Hz, ±4 Hz

Signal transmission 0-20 mA/4-20 mA HART and additional outputs and inputs

Order code for "Output" and "Input"	Terminal numbers							
	Output 1		Output 2		Output 3		Input	
	26 (+)	27 (-)	24 (+)	25 (-)	22 (+)	23 (-)	20 (+)	21 (-)
Option **H**	▪ 4-20 mA HART (active) ▪ 0-20 mA (active)		Pulse/frequency output (passive)		Switch output (passive)		-	
Option **I**	▪ 4-20 mA HART (active) ▪ 0-20 mA (active)		Pulse/frequency/ switch output (passive)		Pulse/frequency/ switch output (passive)		Status input	
Option **J**	▪ 4-20 mA HART (active) ▪ 0-20 mA (active)		Permanently assigned: Pulse output adjusted (passive)		Pulse/frequency/ switch output (passive)		Status input	

Remote version

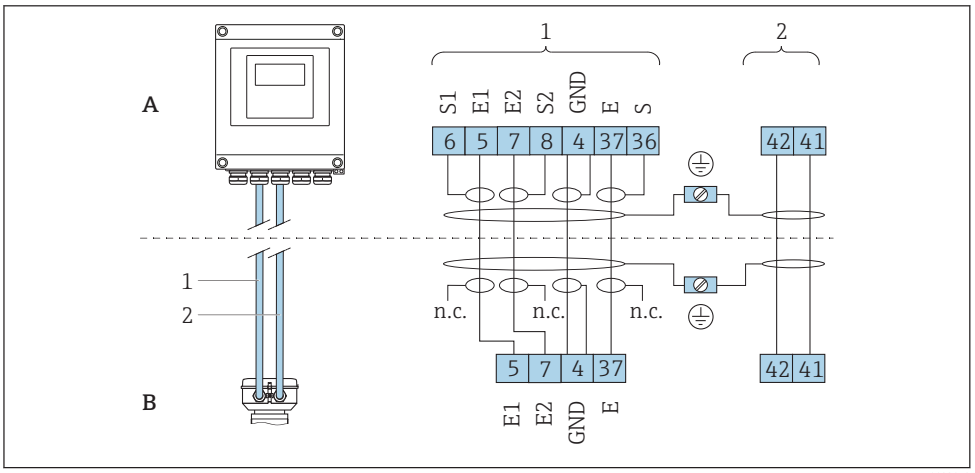

12 *Remote version terminal assignment*

A Transmitter wall-mount housing
B Sensor connection housing
1 Electrode cable
2 Coil current cable
n.c. Not connected, insulated cable shields

Terminal No. and cable colors: 6/5 = brown; 7/8 = white; 4 = green; 36/37 = yellow

7.1.4 Shielding and grounding

7.1.5 Requirements for the supply unit

Supply voltage

Transmitter

Order code for "Power supply"	terminal voltage		Frequency range
Option **L**	DC 24 V	±25%	–
	AC 24 V	±25%	50/60 Hz, ±4 Hz
	AC 100 to 240 V	–15 to +10%	50/60 Hz, ±4 Hz

7.1.6 Preparing the measuring device

Carry out the steps in the following order:

1. Mount the sensor and transmitter.
2. Connection housing, sensor: Connect connecting cable.
3. Transmitter: Connect connecting cable.
4. Transmitter: Connect signal cable and cable for supply voltage.

NOTICE

Insufficient sealing of the housing!

Operational reliability of the measuring device could be compromised.

► Use suitable cable glands corresponding to the degree of protection.

1. Remove dummy plug if present.

2. If the measuring device is supplied without cable glands:
   Provide suitable cable gland for corresponding connecting cable.
3. If the measuring device is supplied with cable glands:
   Observe requirements for connecting cables → 39.

7.1.7 Preparing the connecting cable for the remote version

When terminating the connecting cable, pay attention to the following points:

1. In the case of the electrode cable:
   Make sure that the ferrules do not touch the core shields on the sensor side.
   Minimum distance = 1 mm (exception: green "GND" cable)
2. In the case of the coil current cable:
   Insulate one core of the three-core cable at the level of the core reinforcement. You only require two cores for the connection.
3. For cables with fine-wire cores (stranded cables):
   Fit the cores with ferrules.

Transmitter

Electrode cable	Coil current cable
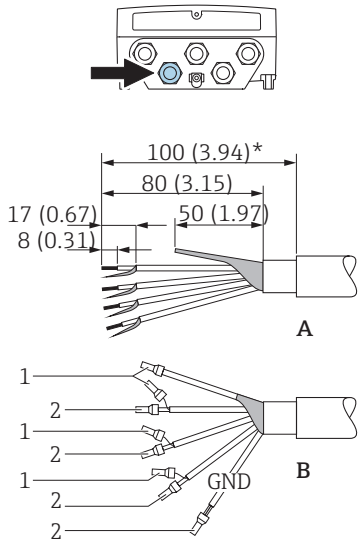 13 *Engineering unit mm (in)*	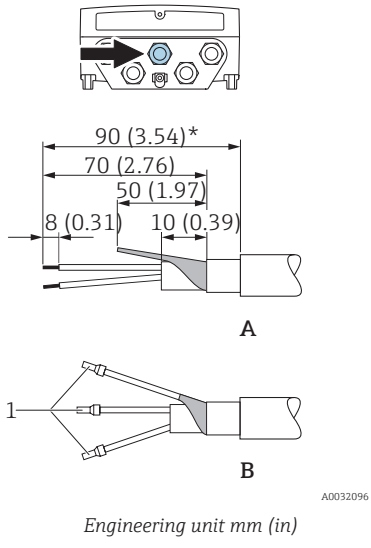 14 *Engineering unit mm (in)*

A = Termination of the cables
B = Termination of the fine-wire cores with ferrules
1 = Red ferrules, Φ 1.0 mm (0.04 in)
2 = White ferrules, Φ 0.5 mm (0.02 in)
* = Stripping only for reinforced cables

Sensor

Electrode cable	Coil current cable
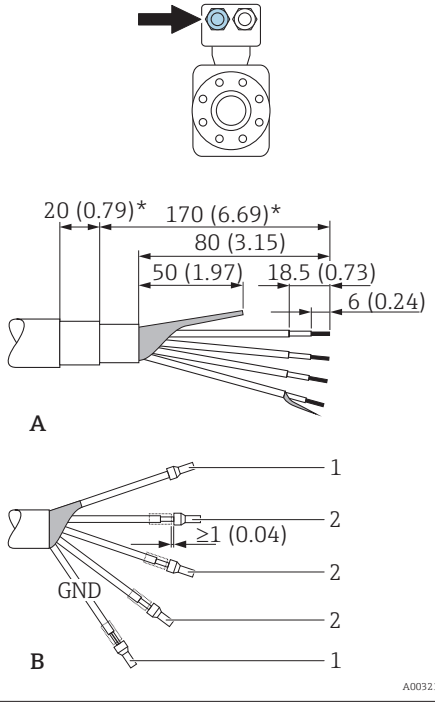	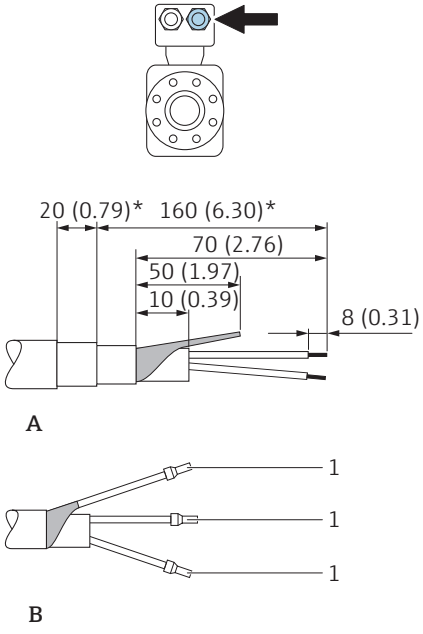

A = Termination of the cables
B = Termination of the fine-wire cores with ferrules
1 = Red ferrules, Φ 1.0 mm (0.04 in)
2 = White ferrules, Φ 0.5 mm (0.02 in)
* = Stripping only for reinforced cables

7.2 Connecting the measuring device

⚠ WARNING

Risk of electric shock! Components carry dangerous voltages!

- ▶ Have electrical connection work carried out by correspondingly trained specialists only.
- ▶ Observe applicable federal/national installation codes and regulations.
- ▶ Comply with local workplace safety regulations.
- ▶ Observe grounding concept of the plant.
- ▶ Never mount or wire the measuring device while it is connected to the supply voltage.
- ▶ Before the supply voltage is applied, connect the protective ground to the measuring device.

7.2.1 Connecting the remote version

⚠ WARNING

Risk of damaging the electronic components!

- ▶ Connect the sensor and transmitter to the same potential equalization.
- ▶ Only connect the sensor to a transmitter with the same serial number.
- ▶ Ground the connection housing of the sensor via the external screw terminal.

The following procedure (in the action sequence given) is recommended for the remote version:

1. Mount the sensor and transmitter.
2. Connect the connecting cable for the remote version.

3. Connect the transmitter.

Connecting the connecting cable to the sensor connection housing

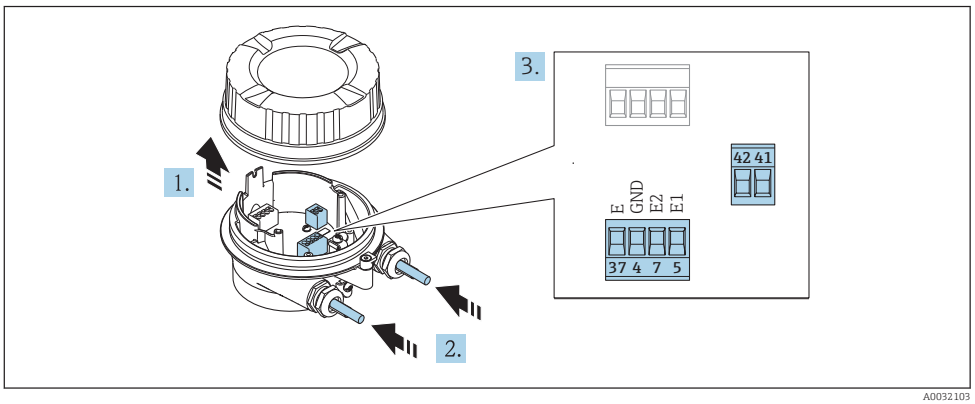

15 *Sensor: connection module*

1. Loosen the securing clamp of the housing cover.
2. Unscrew and lift off the housing cover.
3. NOTICE

   For conduit extensions:
   - ▶ Fit O-ring on cable and push it back sufficiently. When inserting the cable, the O-ring must be located outside the conduit extension.

   Push the cable through the cable entry. To ensure tight sealing, do not remove the sealing ring from the cable entry.
4. Strip the cable and cable ends. In the case of stranded cables, also fit ferrules → 43.
5. Connect the cable in accordance with the terminal assignment → 42.
6. Firmly tighten the cable glands.
7. ⚠ WARNING

   Housing degree of protection may be voided due to insufficient sealing of the housing.
   - ▶ Screw in the screw without using any lubricant. The threads on the cover are coated with a dry lubricant.

   Reverse the procedure to reassemble the sensor.

Connecting the connecting cable to the transmitter

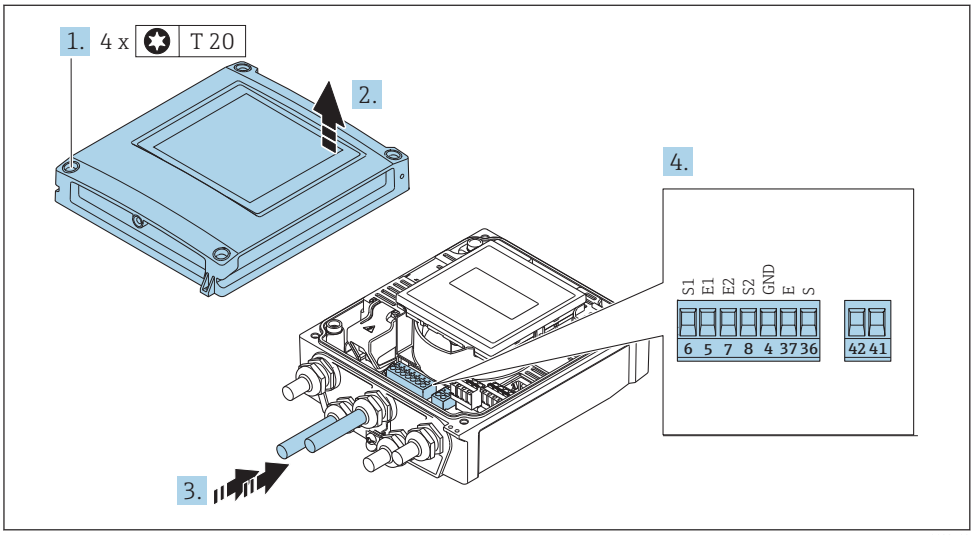

16 *Transmitter: main electronics module with terminals*

1. Loosen the 4 fixing screws on the housing cover.
2. Open the housing cover.
3. Push the cable through the cable entry. To ensure tight sealing, do not remove the sealing ring from the cable entry.
4. Strip the cable and cable ends. In the case of stranded cables, also fit ferrules → 43.
5. Connect the cable in accordance with the terminal assignment → 42.
6. Firmly tighten the cable glands.
7. **WARNING**

   Housing degree of protection may be voided due to insufficient sealing of the housing.
   ▶ Screw in the screw without using any lubricant.

   Reverse the removal procedure to reassemble the transmitter.

7.2.2 Connecting the transmitter

WARNING

Housing degree of protection may be voided due to insufficient sealing of the housing.
▶ Screw in the screw without using any lubricant. The threads on the cover are coated with a dry lubricant.

Tightening torques for plastic housing

Housing cover fixing screw	1.3 Nm
Cable entry	4.5 to 5 Nm
Ground terminal	2.5 Nm

For HART communication: when connecting the cable shielding to the ground terminal, observe the grounding concept of the facility.

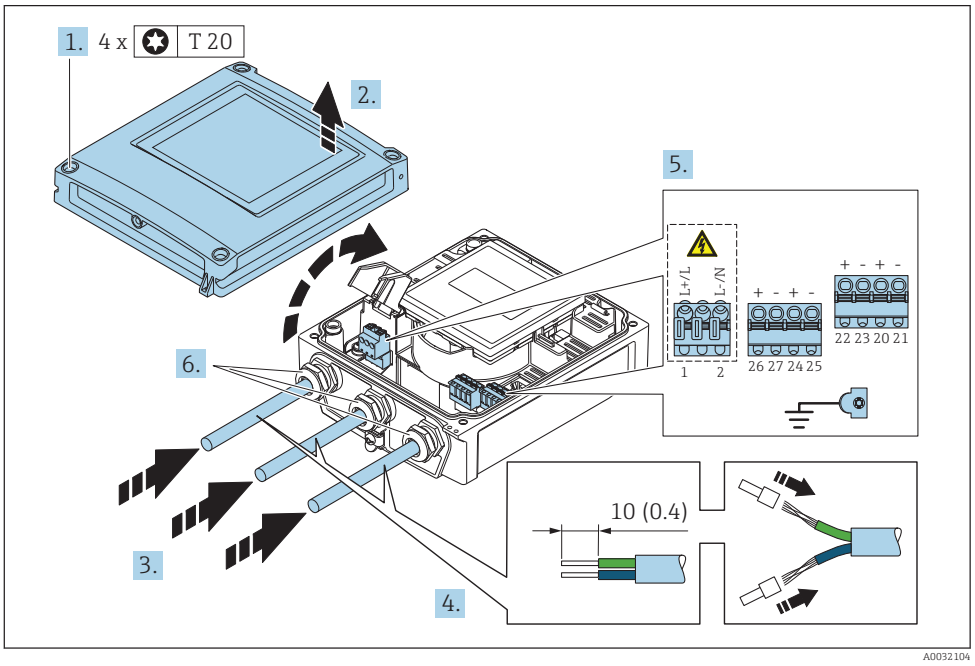

17 *Connecting the supply voltage and 0-20 mA/4-20 mA HART with additional outputs and inputs*

1. Loosen the 4 fixing screws on the housing cover.
2. Open the housing cover.
3. Push the cable through the cable entry. To ensure tight sealing, do not remove the sealing ring from the cable entry.
4. Strip the cable and cable ends. In the case of stranded cables, also fit ferrules.
5. Connect the cable in accordance with the terminal assignment → 41 . For supply voltage: open the shock protection cover.
6. Firmly tighten the cable glands.

Reassembling the transmitter

1. Close the shock protection cover.
2. Close the housing cover.
3. **WARNING**

   Housing degree of protection may be voided due to insufficient sealing of the housing.
   - Screw in the screw without using any lubricant.

   Tighten the 4 fixing screws on the housing cover.

7.2.3 Ensuring potential equalization

Requirements

CAUTION

Electrode damage can result in the complete failure of the device!
- Same electrical potential for the fluid and sensor
- Remote version: same electrical potential for the sensor and transmitter
- Company-internal grounding concepts
- Pipe material and grounding

Connection example, standard scenario

Metal, grounded pipe

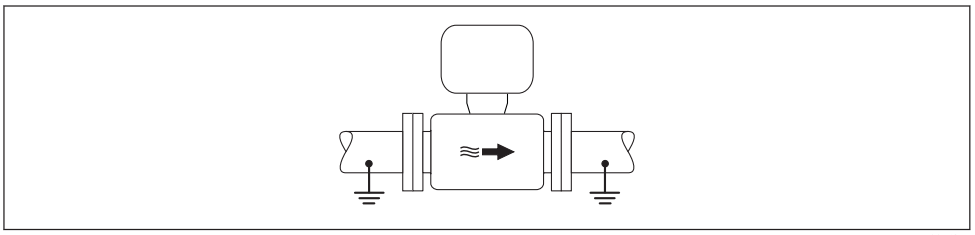

A0016315

18 *Potential equalization via measuring tube*

Connection example in special situations

Unlined and ungrounded metal pipe

This connection method also applies in situations where:
- The customary potential equalization is not used
- Equalizing currents are present

Ground cable	Copper wire, at least 6 mm² (0.0093 in²)

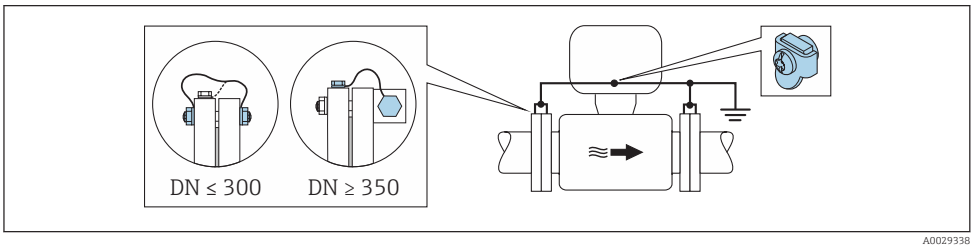

A0029338

19 *Potential equalization via ground terminal and pipe flanges*

1. Connect both sensor flanges to the pipe flange via a ground cable and ground them.
2. If DN ≤ 300 (12"): Mount the ground cable directly on the conductive flange coating of the sensor with the flange screws.
3. If DN ≥ 350 (14"): Mount the ground cable directly on the metal transport bracket. Observe screw tightening torques: see the Sensor Brief Operating Instructions.
4. Connect the connection housing of the transmitter or sensor to ground potential by means of the ground terminal provided for the purpose.

For remote device versions, the ground terminal in the example always refers to the sensor and **not** to the transmitter.

Plastic pipe or pipe with insulating liner

This connection method also applies in situations where:
- The customary potential equalization is not used
- Equalizing currents are present

Ground cable	Copper wire, at least 6 mm² (0.0093 in²)

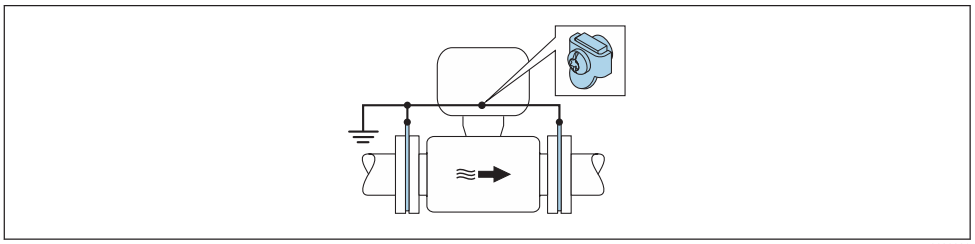

A0029339

20 *Potential equalization via ground terminal and ground disks*

1. Connect the ground disks to the ground terminal via the ground cable.
2. Connect the ground disks to ground potential.

For remote device versions, the ground terminal in the example always refers to the sensor and **not** to the transmitter.

Pipe with a cathodic protection unit

This connection method is only used if the following two conditions are met:
- Metal pipe without liner or pipe with electrically conductive liner
- Cathodic protection is integrated in the personal protection equipment

Ground cable	Copper wire, at least 6 mm^2 (0.0093 in^2)

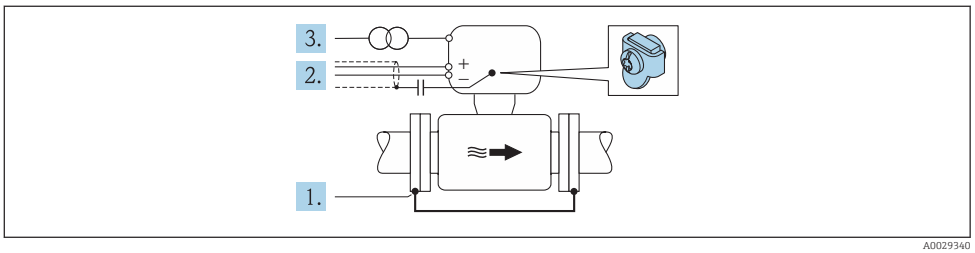

A0029340

Prerequisite: The sensor is installed in the pipe in a way that provides electrical insulation.

1. Connect the two flanges of the pipe to one another via a ground cable.
2. Guide the shield of the signal lines through a capacitor.
3. Connect the measuring device to the power supply such that it is floating in relation to the protective ground (isolation transformer).

For remote device versions, the ground terminal in the example always refers to the sensor and **not** to the transmitter.

7.3 Special connection instructions

7.3.1 Connection examples

Current output 4 to 20 mA HART

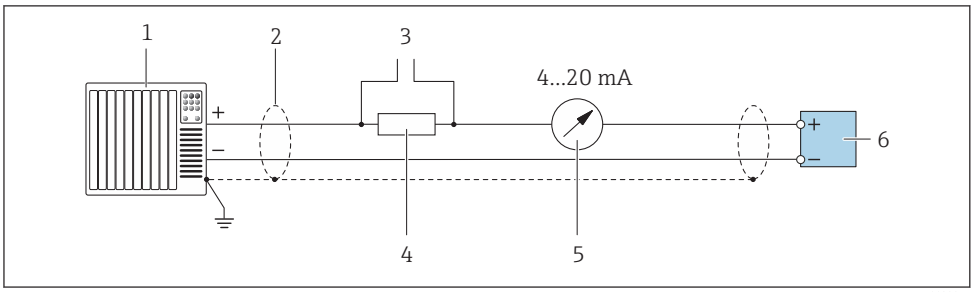

21 Connection example for 4 to 20 mA HART current output (active)

1 *Automation system with current input (e.g. PLC)*
2 *Cable shield: the cable shield must be grounded at both ends to comply with EMC requirements; observe cable specifications*
3 *Connection for HART operating devices → 75*
4 *Resistor for HART communication (≥ 250 Ω): observe maximum load → 153*
5 *Analog display unit: observe maximum load → 153*
6 *Transmitter*

Pulse/frequency output

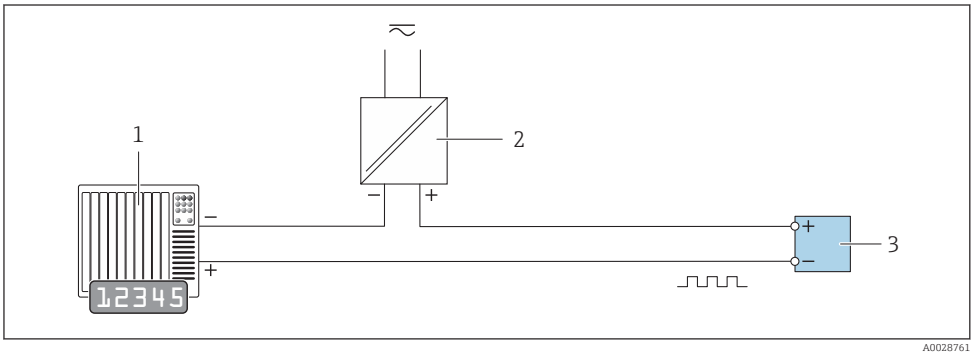

22 Connection example for pulse/frequency output (passive)

1 *Automation system with pulse/frequency input (e.g. PLC)*
2 *Power supply*
3 *Transmitter: Observe input values → 153*

Switch output

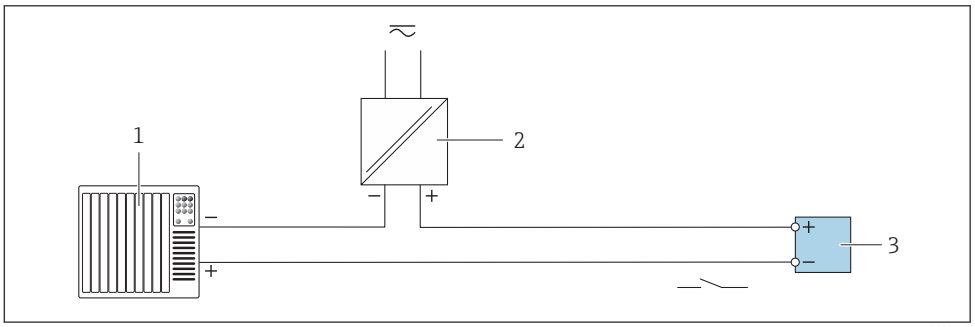

23 Connection example for switch output (passive)

1 Automation system with switch input (e.g. PLC)
2 Power supply
3 Transmitter: Observe input values → 153

Status input

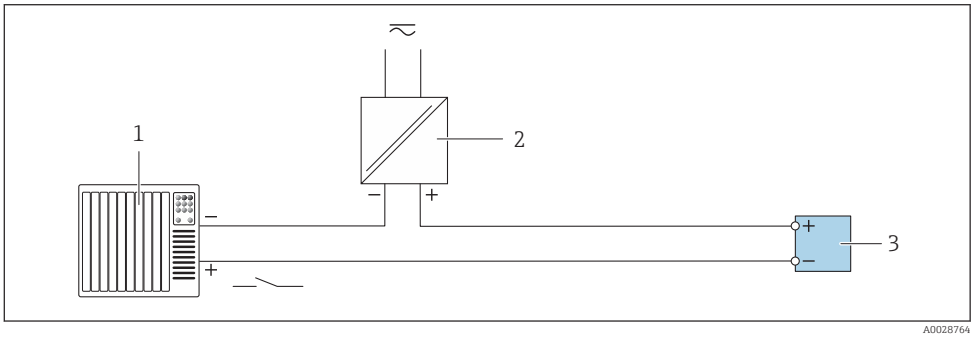

24 Connection example for status input

1 Automation system with status output (e.g. PLC)
2 Power supply
3 Transmitter

7.4 Ensuring the degree of protection

7.4.1 Degree of protection IP66/67, Type 4X enclosure

The measuring device fulfills all the requirements for the IP66/67 degree of protection, Type 4X enclosure.

To guarantee IP66/67 degree of protection, Type 4X enclosure, carry out the following steps after the electrical connection:

1. Check that the housing seals are clean and fitted correctly. Dry, clean or replace the seals if necessary.
2. Tighten all housing screws and screw covers.
3. Firmly tighten the cable glands.

4. To ensure that moisture does not enter the cable entry, route the cable so that it loops down before the cable entry ("water trap").

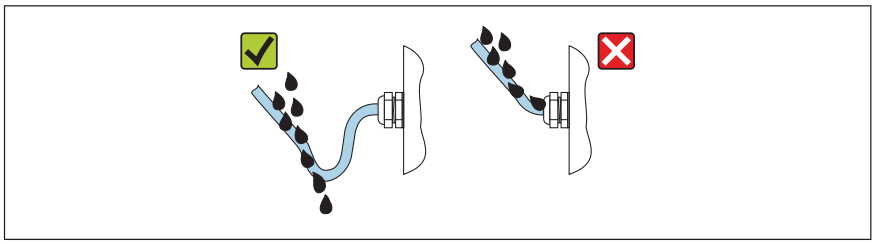

5. Insert dummy plugs into unused cable entries.

7.4.2 Degree of protection IP68, Type 6P enclosure, with "Cust-potted" option

Depending on the version, the sensor fulfills all the requirements for the IP68 degree of protection, Type 6P enclosure and can be used as a remote version → 🖹 26.

The degree of protection of the transmitter is always only IP66/67, Type 4X enclosure and the transmitter must therefore be treated accordingly → 🖹 51.

To guarantee IP68 degree of protection, Type 6P enclosure for the "Cust-potted" options, carry out the following steps after the electrical connection:

1. Firmly tighten the cable glands (torque: 2 to 3.5 Nm) until there is no gap between the bottom of the cover and the housing support surface.
2. Firmly tighten the union nut of the cable glands.
3. Pot the field housing with a potting compound.
4. Check that the housing seals are clean and fitted correctly. Dry, clean or replace the seals if necessary.
5. Tighten all housing screws and screw covers (torque: 20 to 30 Nm).

7.5 Post-connection check

Are cables or the device undamaged (visual inspection)?	❑
Do the cables used meet the requirements→ 🖹 39?	❑
Do the cables have adequate strain relief?	❑
Are all the cable glands installed, firmly tightened and leak-tight? Cable run with "water trap" → 🖹 51?	❑
Only for remote version: is the sensor connected to the right transmitter? Check the serial number on the nameplate of the sensor and transmitter.	❑
Does the supply voltage match the specifications on the transmitter nameplate → 🖹 42?	❑
Is the terminal assignment correct → 🖹 41?	❑
If supply voltage is present, do values appear on the display module?	❑
Is the potential equalization established correctly ?	❑
Are all housing covers installed and the screws tightened with the correct tightening torque?	❑

8 Operation options

8.1 Overview of operation options

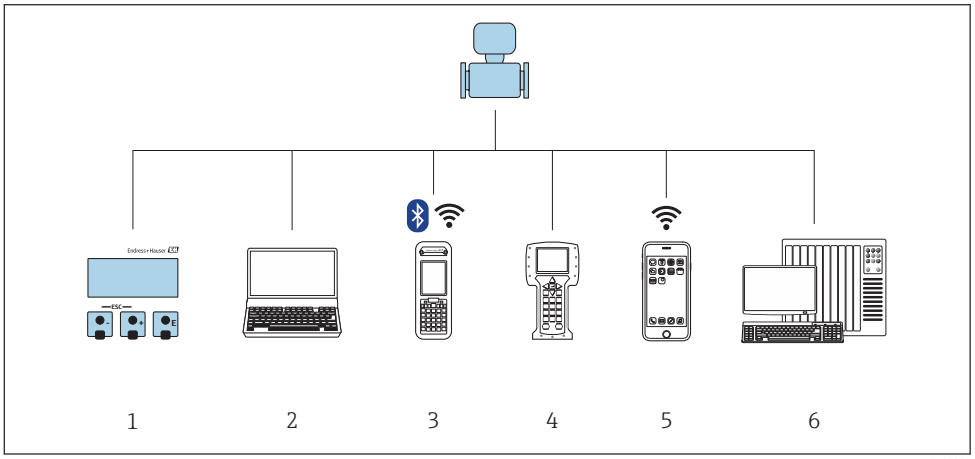

1 *Local operation via display module*
2 *Computer with Web browser (e.g. Internet Explorer) or with operating tool (e.g. FieldCare, DeviceCare, AMS Device Manager, SIMATIC PDM)*
3 *Field Xpert SFX350 or SFX370*
4 *Field Communicator 475*
5 *Mobile handheld terminal*
6 *Control system (e.g. PLC)*

For custody transfer, once the device has been put into circulation or sealed, its operation is restricted.

8.2 Structure and function of the operating menu

8.2.1 Structure of the operating menu

For an overview of the operating menu for experts: "Description of Device Parameters" document supplied with the device→ 178

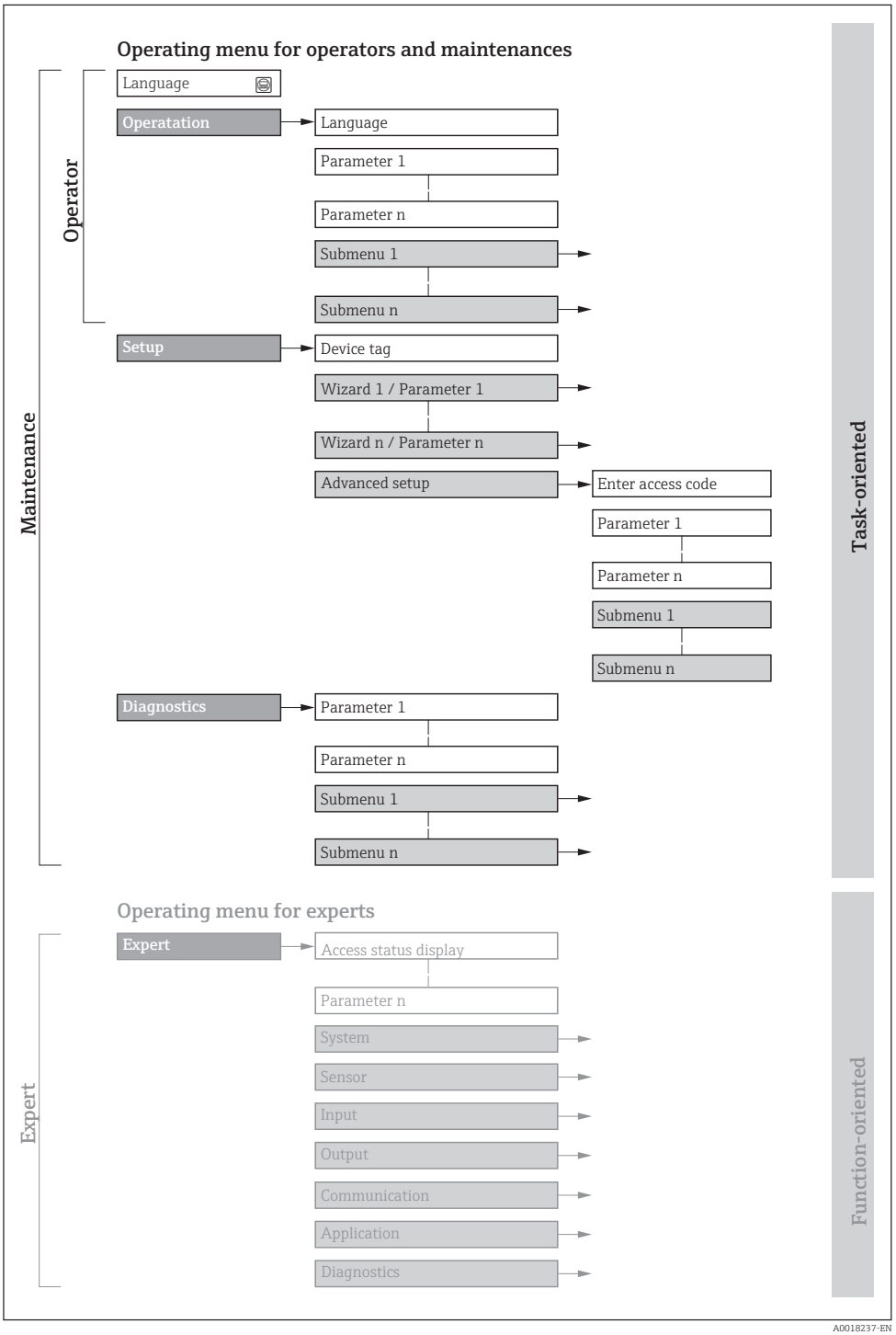

25 *Schematic structure of the operating menu*

8.2.2 Operating philosophy

The individual parts of the operating menu are assigned to certain user roles (operator, maintenance etc.). Each user role contains typical tasks within the device lifecycle.

For custody transfer, once the device has been put into circulation or sealed, its operation is restricted.

Menu/parameter		User role and tasks	Content/meaning
Language	task-oriented	**Role "Operator", "Maintenance"** Tasks during operation: ▪ Configuring the operational display ▪ Reading measured values	▪ Defining the operating language ▪ Defining the Web server operating language ▪ Resetting and controlling totalizers
Operation			▪ Configuring the operational display (e.g. display format, display contrast) ▪ Resetting and controlling totalizers
Setup		**"Maintenance" role** Commissioning: ▪ Configuration of the measurement ▪ Configuration of the outputs	Wizards for fast commissioning: ▪ Set the system units ▪ Set the input ▪ Configure the outputs ▪ Configuring the operational display ▪ Define the output conditioning ▪ Set the low flow cut off ▪ Configure empty pipe detection Advanced setup ▪ For more customized configuration of the measurement (adaptation to special measuring conditions) ▪ Configuration of totalizers ▪ Configuration of electrode cleaning (optional) ▪ Configure the WLAN settings ▪ Administration (define access code, reset measuring device)
Diagnostics		**"Maintenance" role** Fault elimination: ▪ Diagnostics and elimination of process and device errors ▪ Measured value simulation	Contains all parameters for error detection and analyzing process and device errors: ▪ Diagnostic list Contains up to 5 currently pending diagnostic messages. ▪ Event logbook Contains event messages that have occurred. ▪ Device information Contains information for identifying the device. ▪ Measured values Contains all current measured values. ▪ **Data logging** submenu with "Extended HistoROM" order option Storage and visualization of measured values ▪ Heartbeat The functionality of the device is checked on demand and the verification results are documented. ▪ Simulation Is used to simulate measured values or output values.

Menu/parameter		User role and tasks	Content/meaning
Expert	function-oriented	Tasks that require detailed knowledge of the function of the device: ▪ Commissioning measurements under difficult conditions ▪ Optimal adaptation of the measurement to difficult conditions ▪ Detailed configuration of the communication interface ▪ Error diagnostics in difficult cases	Contains all the parameters of the device and makes it possible to access these parameters directly using an access code. The structure of this menu is based on the function blocks of the device: ▪ System Contains all higher-order device parameters which do not concern the measurement or the communication interface. ▪ Sensor Configuration of the measurement. ▪ Input Configuring the status input. ▪ Output Configuring of the analog current outputs as well as the pulse/frequency and switch output. ▪ Communication Configuration of the digital communication interface and the Web server. ▪ Application Configure the functions that go beyond the actual measurement (e.g. totalizer). ▪ Diagnostics Error detection and analysis of process and device errors and for device simulation and Heartbeat Technology.

8.3 Access to the operating menu via the local display

8.3.1 Operational display

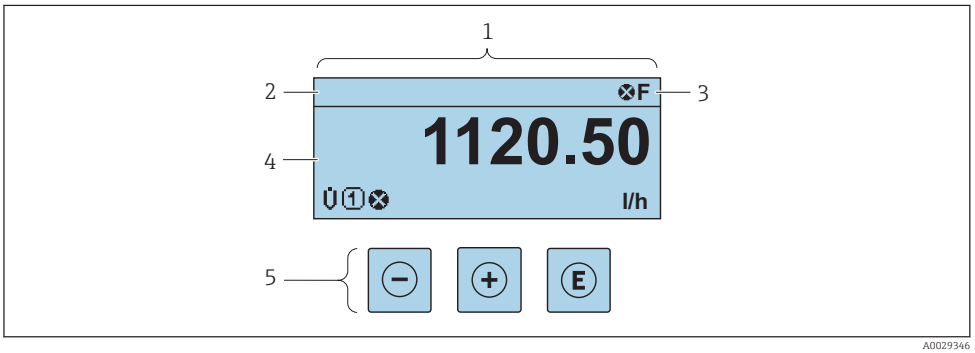

1 *Operational display*
2 *Device tag→ 🖹 85*
3 *Status area*
4 *Display area for measured values (4-line)*
5 *Operating elements→ 🖹 61*

Status area

The following symbols appear in the status area of the operational display at the top right:
- Status signals→ 🖹 126
  - **F**: Failure
  - **C**: Function check
  - **S**: Out of specification
  - **M**: Maintenance required
- Diagnostic behavior→ 🖹 127
  - ⊗: Alarm
  - ⚠: Warning
- 🔒: Locking (the device is locked via the hardware)
- ⇆: Communication (communication via remote operation is active)

Display area

In the display area, each measured value is prefaced by certain symbol types for further description:

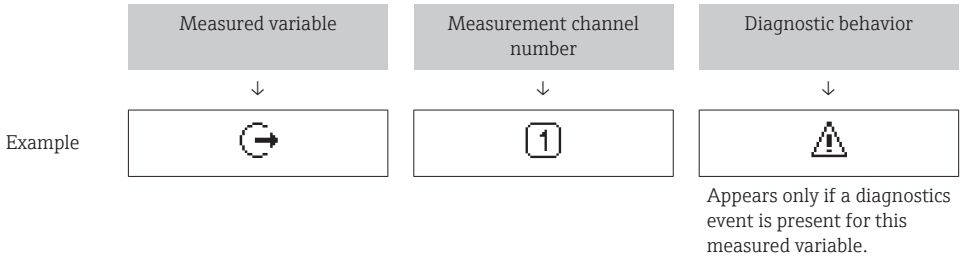

Measured values

Symbol	Meaning
	Volume flow
	Conductivity
	Mass flow
	Totalizer The measurement channel number indicates which of the three totalizers is displayed.
	Output The measurement channel number indicates which of the outputs is displayed.
	Status input

Measurement channel numbers

Symbol	Meaning
1 ... 4	Measurement channel 1 to 4
The measurement channel number is displayed only if more than one channel is present for the same measured variable type (e.g. Totalizer 1 to 3).	

Diagnostic behavior

The diagnostic behavior pertains to a diagnostic event that is relevant to the displayed measured variable. For information on the symbols → 127

The number and display format of the measured values can be configured via the **Format display** parameter (→ 96).

8.3.2 Navigation view

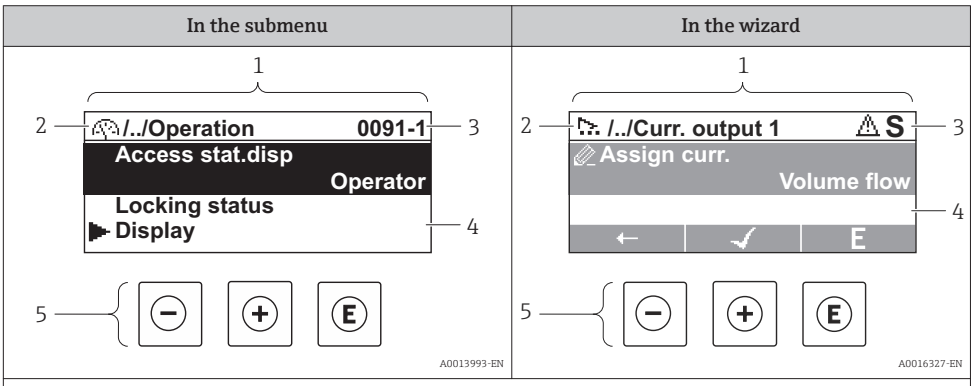

1 Navigation view
2 Navigation path to current position
3 Status area
4 Display area for navigation
5 Operating elements → 61

Navigation path

The navigation path - displayed at the top left in the navigation view - consists of the following elements:

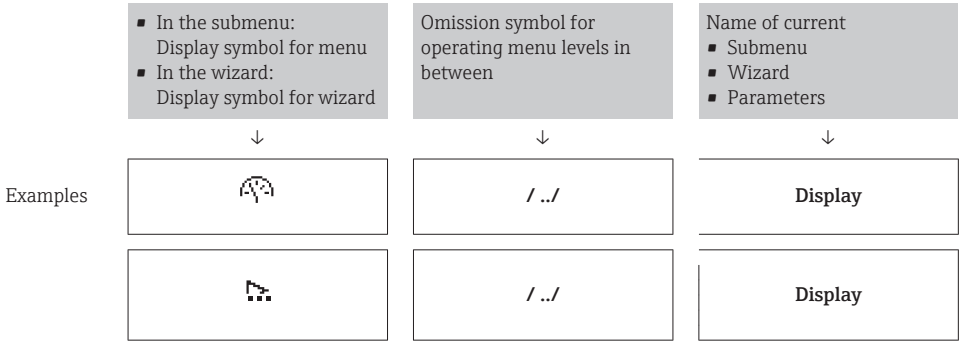

For more information about the icons in the menu, refer to the "Display area" section → 59

Status area

The following appears in the status area of the navigation view in the top right corner:
- In the submenu
  - The direct access code for the parameter you are navigating to (e.g. 0022-1)
  - If a diagnostic event is present, the diagnostic behavior and status signal
- In the wizard
  If a diagnostic event is present, the diagnostic behavior and status signal

- For information on the diagnostic behavior and status signal → 126
- For information on the function and entry of the direct access code → 64

Display area

Menus

Symbol	Meaning
	Operation Appears: ▪ In the menu next to the "Operation" selection ▪ At the left in the navigation path in the **Operation** menu
	Setup Appears: ▪ In the menu next to the "Setup" selection ▪ At the left in the navigation path in the **Setup** menu
	Diagnostics Appears: ▪ In the menu next to the "Diagnostics" selection ▪ At the left in the navigation path in the **Diagnostics** menu
	Expert Appears: ▪ In the menu next to the "Expert" selection ▪ At the left in the navigation path in the **Expert** menu

Submenus, wizards, parameters

Symbol	Meaning
	Submenu
	Wizard
	Parameters within a wizard No display symbol exists for parameters in submenus.

Locking

Symbol	Meaning
	Parameter locked When displayed in front of a parameter name, indicates that the parameter is locked. ▪ By a user-specific access code ▪ By the hardware write protection switch

Wizard operation

Symbol	Meaning
	Switches to the previous parameter.
	Confirms the parameter value and switches to the next parameter.
E	Opens the editing view of the parameter.

8.3.3 Editing view

Numeric editor	Text editor
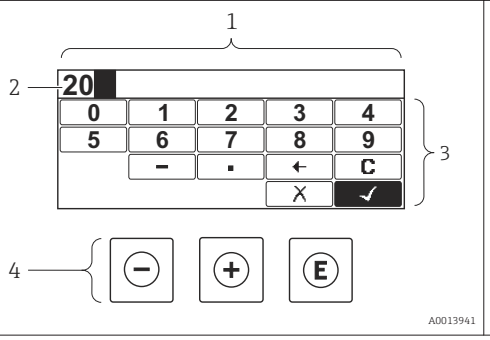	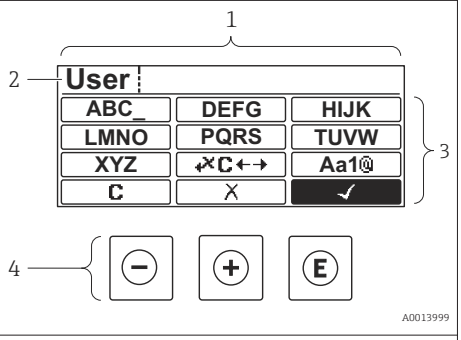

1 Editing view
2 Display area of the entered values
3 Input mask
4 Operating elements → 61

Input mask

The following input symbols are available in the input mask of the numeric and text editor:

Numeric editor

Symbol	Meaning
0 … 9	Selection of numbers from 0 to 9.
.	Inserts decimal separator at the input position.
–	Inserts minus sign at the input position.
✓	Confirms selection.
←	Moves the input position one position to the left.
✗	Exits the input without applying the changes.
C	Clears all entered characters.

Text editor

Symbol	Meaning
Aa1@	Toggle ▪ Between upper-case and lower-case letters ▪ For entering numbers ▪ For entering special characters
ABC_ … XYZ	Selection of letters from A to Z.

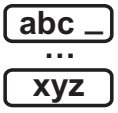	Selection of letters from a to z.
	Selection of special characters.
	Confirms selection.
	Switches to the selection of the correction tools.
	Exits the input without applying the changes.
	Clears all entered characters.

Correction symbols under 

Symbol	Meaning
	Clears all entered characters.
	Moves the input position one position to the right.
	Moves the input position one position to the left.
	Deletes one character immediately to the left of the input position.

8.3.4 Operating elements

Operating key(s)	Meaning
	**Minus key** *In a menu, submenu* Moves the selection bar upwards in a picklist. *With a Wizard* Confirms the parameter value and goes to the previous parameter. *With a text and numeric editor* In the input screen, moves the selection bar to the left (backwards).
	**Plus key** *In a menu, submenu* Moves the selection bar downwards in a picklist. *With a Wizard* Confirms the parameter value and goes to the next parameter. *With a text and numeric editor* Moves the selection bar to the right (forwards) in an input screen.

Operating key(s)	Meaning
E	**Enter key** *For operational display* Pressing the key for 2 s opens the context menu including the option for activating the keypad lock. *In a menu, submenu* ▪ Pressing the key briefly: – Opens the selected menu, submenu or parameter. – Starts the wizard. – If help text is open, closes the help text of the parameter. ▪ Pressing the key for 2 s for parameter: If present, opens the help text for the function of the parameter. *With a Wizard* Opens the editing view of the parameter. *With a text and numeric editor* ▪ Pressing the key briefly: – Opens the selected group. – Carries out the selected action. ▪ Pressing the key for 2 s confirms the edited parameter value.
− + +	**Escape key combination (press keys simultaneously)** *In a menu, submenu* ▪ Pressing the key briefly: – Exits the current menu level and takes you to the next higher level. – If help text is open, closes the help text of the parameter. ▪ Pressing the key for 2 s returns you to the operational display ("home position"). *With a Wizard* Exits the wizard and takes you to the next higher level. *With a text and numeric editor* Closes the text or numeric editor without applying changes.
− + + E	**Minus/Plus/Enter key combination (press the keys simultaneously)** *For operational display* Enables or disables the keypad lock (only SD02 display module).

8.3.5 Opening the context menu

Using the context menu, the user can call up the following menus quickly and directly from the operational display:

- Setup
- Simulation

Calling up and closing the context menu

The user is in the operational display.

1. Press the − and E keys for longer than 3 seconds.
   ↳ The context menu opens.

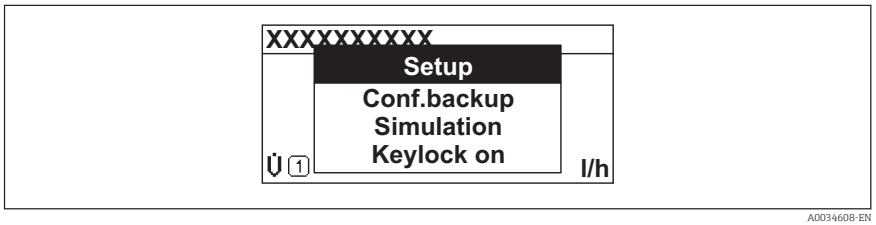

A0034608-EN

2. Press − + + simultaneously.
   ↳ The context menu is closed and the operational display appears.

Calling up the menu via the context menu

1. Open the context menu.

2. Press ⊞ to navigate to the desired menu.
3. Press Ⓔ to confirm the selection.
   ↳ The selected menu opens.

8.3.6 Navigating and selecting from list

Different operating elements are used to navigate through the operating menu. The navigation path is displayed on the left in the header. Icons are displayed in front of the individual menus. These icons are also shown in the header during navigation.

For an explanation of the navigation view with symbols and operating elements
→ 58

Example: Setting the number of displayed measured values to "2 values"

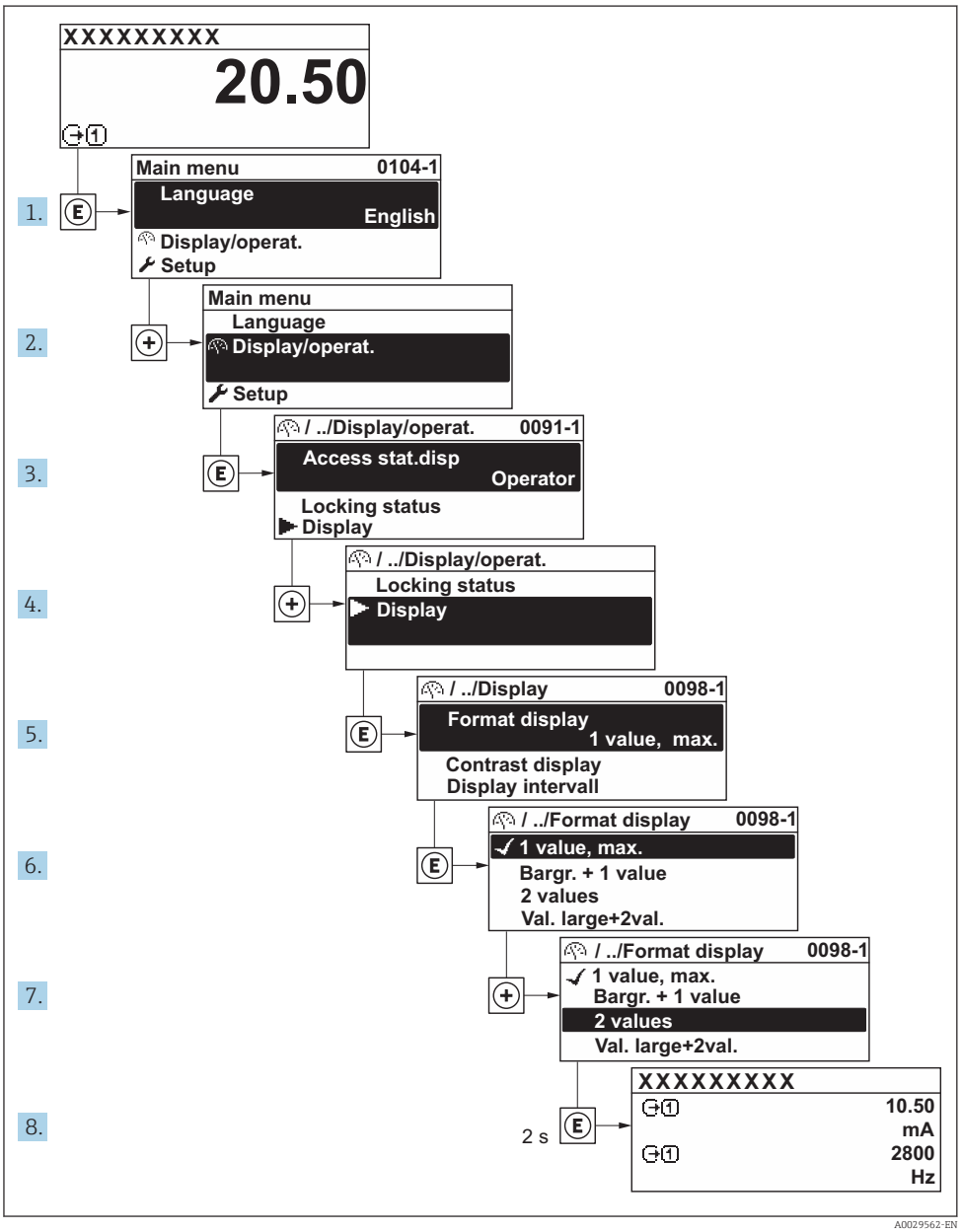

8.3.7 Calling the parameter directly

A parameter number is assigned to every parameter to be able to access a parameter directly via the onsite display. Entering this access code in the **Direct access** parameter calls up the desired parameter directly.

Navigation path
Expert → Direct access

The direct access code consists of a 5-digit number (at maximum) and the channel number, which identifies the channel of a process variable: e.g. 00914-2. In the navigation view, this appears on the right-hand side in the header of the selected parameter.

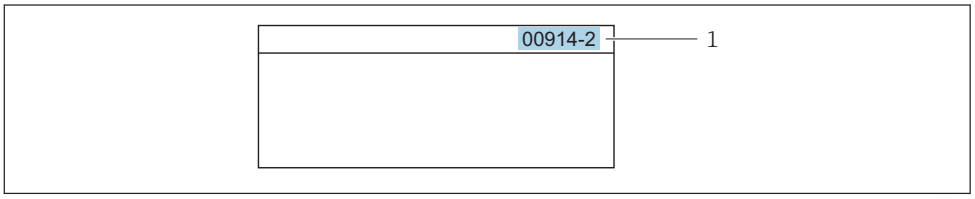

1 Direct access code

Note the following when entering the direct access code:
- The leading zeros in the direct access code do not have to be entered.
  Example: Enter **"914"** instead of **"00914"**
- If no channel number is entered, channel 1 is accessed automatically.
  Example: Enter **00914** → **Assign process variable** parameter
- If a different channel is accessed: Enter the direct access code with the corresponding channel number.
  Example: Enter **00914-2** → **Assign process variable** parameter

For the direct access codes of the individual parameters, see the "Description of Device Parameters" document for the device

8.3.8 Calling up help text

Help text is available for some parameters and can be called up from the navigation view. The help text provides a brief explanation of the parameter function and thereby supports swift and safe commissioning.

Calling up and closing the help text

The user is in the navigation view and the selection bar is on a parameter.

1. Press E for 2 s.
   ↳ The help text for the selected parameter opens.

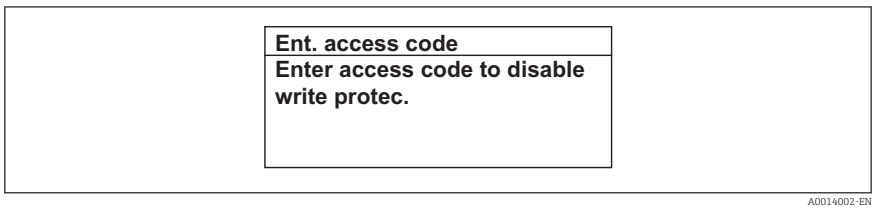

26 Example: Help text for parameter "Enter access code"

2. Press − + + simultaneously.
   ↳ The help text is closed.

8.3.9 Changing the parameters

For a description of the editing view - consisting of the text editor and numeric editor - with symbols → 60, for a description of the operating elements → 61

Example: Changing the tag name in the "Tag description" parameter from 001-FT-101 to 001-FT-102

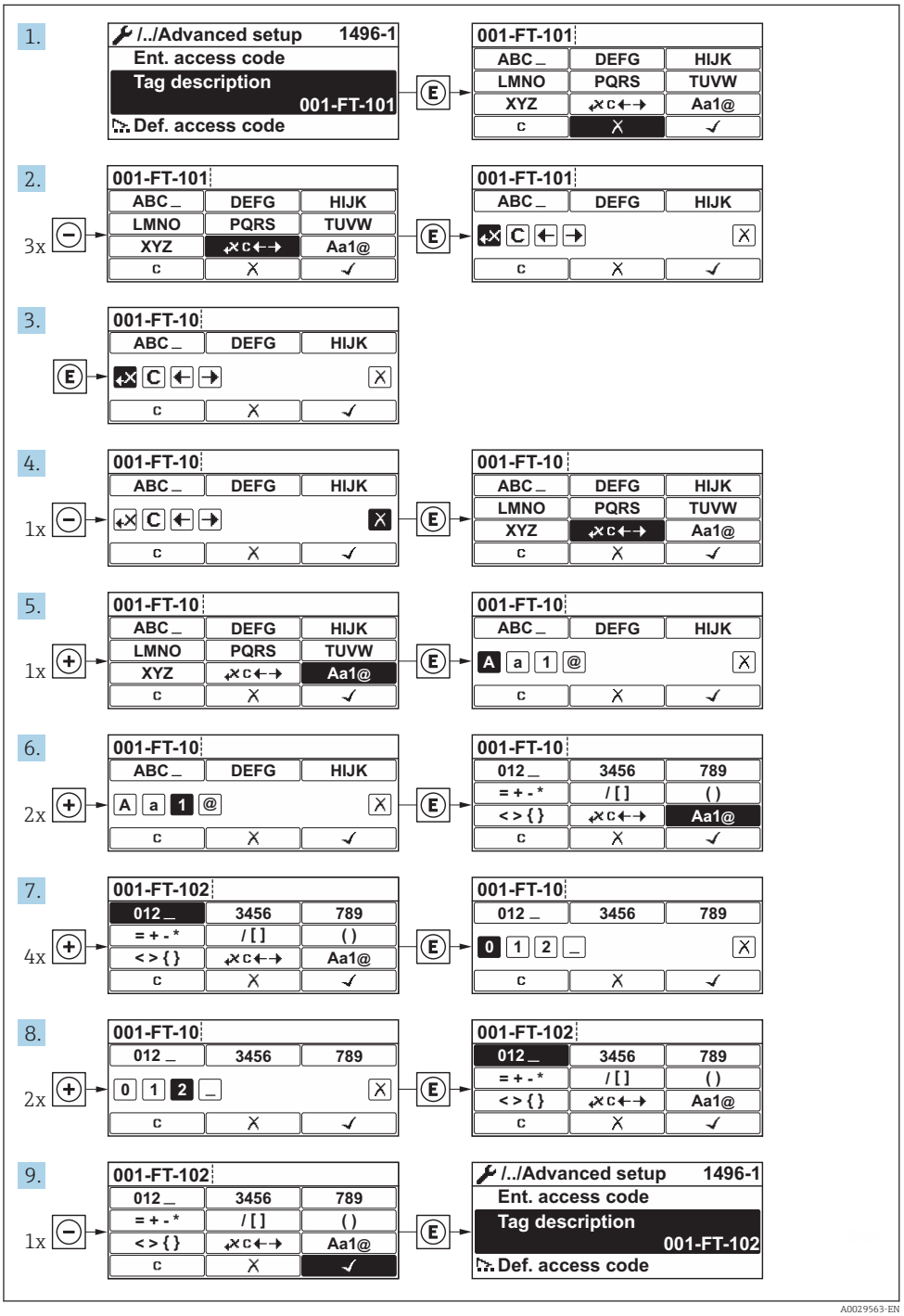

A message is displayed if the value entered is outside the permitted value range.

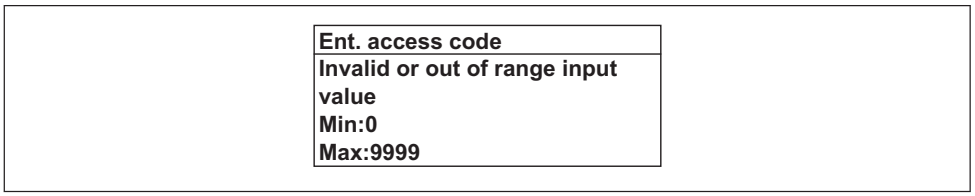

A0014049-EN

8.3.10 User roles and related access authorization

The two user roles "Operator" and "Maintenance" have different write access to the parameters if the customer defines a user-specific access code. This protects the device configuration via the local display from unauthorized access → 112.

Defining access authorization for user roles

An access code is not yet defined when the device is delivered from the factory. Access authorization (read and write access) to the device is not restricted and corresponds to the "Maintenance" user role.

- Define the access code.
  - The "Operator" user role is redefined in addition to the "Maintenance" user role. Access authorization differs for the two user roles.

Access authorization to parameters: "Maintenance" user role

Access code status	Read access	Write access
An access code has not yet been defined (factory setting).	✔	✔
After an access code has been defined.	✔	✔ 1)

1) The user only has write access after entering the access code.

Access authorization to parameters: "Operator" user role

Access code status	Read access	Write access
After an access code has been defined.	✔	-- 1)

1) Despite the defined access code, certain parameters can always be modified and thus are excepted from the write protection, as they do not affect the measurement. Refer to the "Write protection via access code" section

The user role with which the user is currently logged on is indicated by the **Access status display** parameter. Navigation path: Operation → Access status display

8.3.11 Disabling write protection via access code

If the -symbol appears on the local display in front of a parameter, the parameter is write-protected by a user-specific access code and its value cannot be changed at the moment using local operation → 112.

Parameter write protection via local operation can be disabled by entering the user-specific access code in the **Enter access code** parameter via the respective access option.

1. After you press E, the input prompt for the access code appears.
2. Enter the access code.
   - The -symbol in front of the parameters disappears; all previously write-protected parameters are now re-enabled.

8.3.12 Enabling and disabling the keypad lock

The keypad lock makes it possible to block access to the entire operating menu via local operation. As a result, it is no longer possible to navigate through the operating menu or change the values of individual parameters. Users can only read the measured values on the operational display.

The keypad lock is switched on and off via the context menu.

Switching on the keypad lock

The keypad lock is switched on automatically:
- If the device has not been operated via the display for > 1 minute.
- Each time the device is restarted.

To activate the keylock manually:

1. The device is in the measured value display.
   Press the ⊟ and Ⓔ keys for 3 seconds.
   ↳ A context menu appears.
2. In the context menu select the **Keylock on** option.
   ↳ The keypad lock is switched on.

If the user attempts to access the operating menu while the keypad lock is active, the **Keylock on** message appears.

Switching off the keypad lock

▶ The keypad lock is switched on.
Press the ⊟ and Ⓔ keys for 3 seconds.
↳ The keypad lock is switched off.

8.4 Access to the operating menu via the Web browser

8.4.1 Function range

Thanks to the integrated Web server, the device can be operated and configured via a Web browser and via a service interface (CDI-RJ45) or via a WLAN interface. The structure of the operating menu is the same as for the local display. In addition to the measured values, status information on the device is also displayed and allows the user to monitor the status of the device. Furthermore the device data can be managed and the network parameters can be configured.

A device that has a WLAN interface (can be ordered as an option) is required for the WLAN connection: order code for "Display", option BA "WLAN": 4-line, illuminated; touch control + WLAN. The device acts as an Access Point and enables communication by computer or a mobile handheld terminal.

For additional information on the Web server, refer to the Special Documentation for the device → 179

8.4.2 Prerequisites

Computer hardware

Hardware	Interface	
	CDI-RJ45	**WLAN**
Interface	The computer must have an RJ45 interface.	The operating unit must have a WLAN interface.
Connection	Standard Ethernet cable with RJ45 connector.	Connection via Wireless LAN.
Screen	Recommended size: ≥12" (depends on the screen resolution)	

Computer software

Software	Interface	
	CDI-RJ45	**WLAN**
Recommended operating systems	▪ Microsoft Windows 7 or higher. ▪ Mobile operating systems: – iOS – Android Microsoft Windows XP is supported.	
Web browsers supported	▪ Microsoft Internet Explorer 8 or higher ▪ Microsoft Edge ▪ Mozilla Firefox ▪ Google Chrome ▪ Safari	

Computer settings

Settings	Interface	
	CDI-RJ45	**WLAN**
User rights	Appropriate user rights (e.g. administrator rights) for TCP/IP and proxy server settings are necessary (for adjusting the IP address, subnet mask etc.).	
Proxy server settings of the Web browser	The Web browser setting *Use a Proxy Server for Your LAN* must be **deselected** .	
JavaScript	JavaScript must be enabled. If JavaScript cannot be enabled: enter http://192.168.1.212/basic.html in the address line of the Web browser. A fully functional but simplified version of the operating menu structure starts in the Web browser. When installing a new firmware version: To enable correct data display, clear the temporary memory (cache) of the Web browser under **Internet options**.	
Network connections	Only the active network connections to the measuring device should be used.	
	Switch off all other network connections such as WLAN.	Switch off all other network connections.

In the event of connection problems: → 124

Measuring device: Via CDI-RJ45 service interface

Device	CDI-RJ45 service interface
Measuring device	The measuring device has an RJ45 interface.
Web server	Web server must be enabled; factory setting: ON For information on enabling the Web server → 74

Measuring device: via WLAN interface

Device	WLAN interface
Measuring device	The measuring device has a WLAN antenna: Transmitter with integrated WLAN antenna
Web server	Web server and WLAN must be enabled; factory setting: ON For information on enabling the Web server → 74

8.4.3 Establishing a connection

Via service interface (CDI-RJ45)

Preparing the measuring device

Configuring the Internet protocol of the computer

The following information refers to the default Ethernet settings of the device.

IP address of the device: 192.168.1.212 (factory setting)

1. Switch on the measuring device.
2. Connect to the computer using a cable .
3. If a 2nd network card is not used, close all the applications on the notebook.
   ↳ Applications requiring Internet or a network, such as e-mail, SAP applications, Internet or Windows Explorer.
4. Close any open Internet browsers.
5. Configure the properties of the Internet protocol (TCP/IP) as defined in the table:

IP address	192.168.1.XXX; for XXX all numerical sequences except: 0, 212 and 255 → e.g. 192.168.1.213
Subnet mask	255.255.255.0
Default gateway	192.168.1.212 or leave cells empty

Via WLAN interface

Configuring the Internet protocol of the mobile terminal

NOTICE

If the WLAN connection is lost during the configuration, settings made may be lost.

► Make sure that the WLAN connection is not disconnected while configuring the device.

NOTICE

In principle, avoid simultaneous access to the measuring device via the service interface (CDI-RJ45) and the WLAN interface from the same mobile terminal. This could cause a network conflict.

- ▶ Only activate one service interface (CDI-RJ45 service interface or WLAN interface).
- ▶ If simultaneous communication is necessary: configure different IP address ranges, e.g. 192.168.0.1 (WLAN interface) and 192.168.1.212 (CDI-RJ45 service interface).

Preparing the mobile terminal

- ▶ Enable WLAN reception on the mobile terminal.

Establishing a connection from the mobile terminal to the measuring device

1. In the WLAN settings of the mobile terminal:
   Select the measuring device using the SSID (e.g. EH_Promag__A802000).
2. If necessary, select the WPA2 encryption method.
3. Enter the password: serial number of the measuring device ex-works (e.g. L100A802000).
   ↳ LED on display module flashes: it is now possible to operate the measuring device with the Web browser, FieldCare or DeviceCare.

The serial number can be found on the nameplate.

To ensure the safe and swift assignment of the WLAN network to the measuring point, it is advisable to change the SSID name. It should be possible to clearly assign the new SSID name to the measuring point (e.g. tag name) because it is displayed as the WLAN network.

Disconnecting

- ▶ After configuring the device:
  Terminate the WLAN connection between the operating unit and measuring device.

Starting the Web browser

1. Start the Web browser on the computer.

2. Enter the IP address of the Web server in the address line of the Web browser: 192.168.1.212
   ↳ The login page appears.

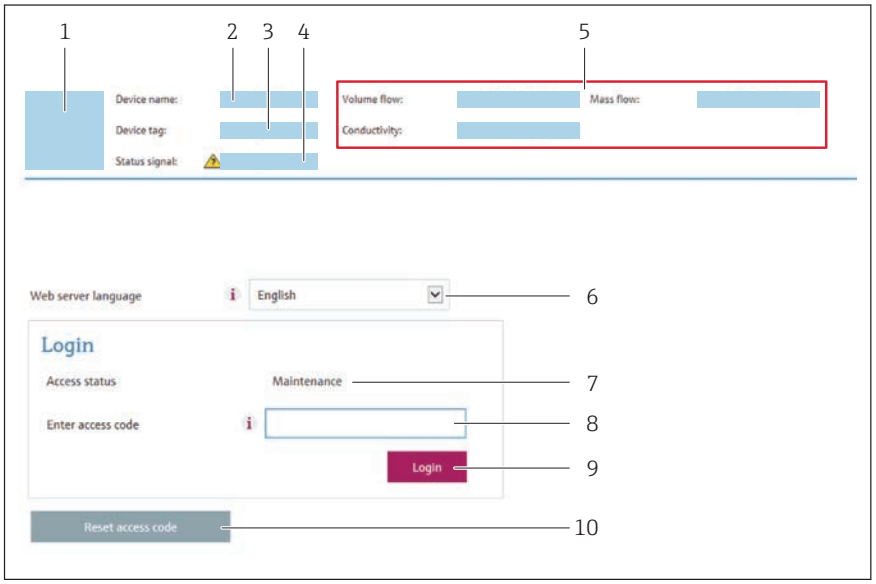

1 *Picture of device*
2 *Device name*
3 *Device tag (→ 86)*
4 *Status signal*
5 *Current measured values*
6 *Operating language*
7 *User role*
8 *Access code*
9 *Login*
10 *Reset access code (→ 109)*

If a login page does not appear, or if the page is incomplete → 124

8.4.4 Logging on

1. Select the preferred operating language for the Web browser.
2. Enter the user-specific access code.
3. Press **OK** to confirm your entry.

Access code	0000 (factory setting); can be changed by customer

If no action is performed for 10 minutes, the Web browser automatically returns to the login page.

8.4.5 User interface

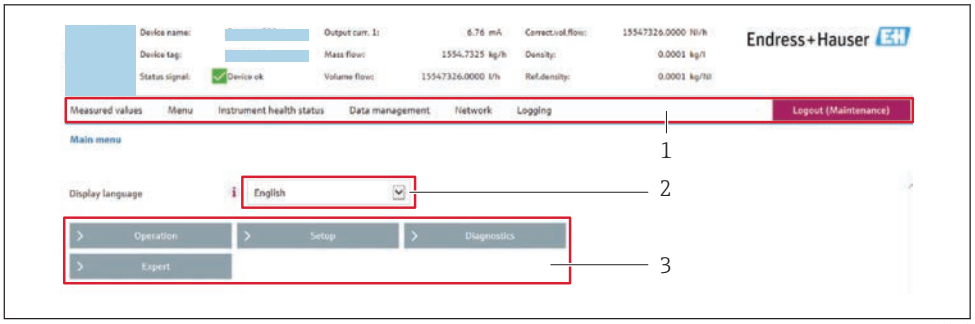

1 Function row
2 Local display language
3 Navigation area

Header

The following information appears in the header:
- Device name
- Device tag
- Device status with status signal → 129
- Current measured values

Function row

Functions	Meaning
Measured values	Displays the measured values of the measuring device
Menu	▪ Access to the operating menu from the measuring device ▪ The structure of the operating menu is the same as for the local display For detailed information on the structure of the operating menu, see the Operating Instructions for the measuring device
Device status	Displays the diagnostic messages currently pending, listed in order of priority
Data management	Data exchange between PC and measuring device: ▪ Device configuration: – Load settings from the device (XML format, save configuration) – Save settings to the device (XML format, restore configuration) ▪ Logbook - Export Event logbook (.csv file) ▪ Documents - Export documents: – Export backup data record (.csv file, create documentation of the measuring point configuration) – Verification report (PDF file, only available with the "Heartbeat Verification" application package)
Network configuration	Configuration and checking of all the parameters required for establishing the connection to the measuring device: ▪ Network settings (e.g. IP address, MAC address) ▪ Device information (e.g. serial number, firmware version)
Logout	End the operation and call up the login page

Navigation area

If a function is selected in the function bar, the submenus of the function open in the navigation area. The user can now navigate through the menu structure.

Working area

Depending on the selected function and the related submenus, various actions can be performed in this area:
- Configuring parameters
- Reading measured values
- Calling up help text
- Starting an upload/download

8.4.6 Disabling the Web server

The Web server of the measuring device can be switched on and off as required using the **Web server functionality** parameter.

Navigation
"Expert" menu → Communication → Web server

Parameter overview with brief description

Parameter	Description	Selection	Factory setting
Web server functionality	Switch the Web server on and off.	▪ Off ▪ On	On

Function scope of the "Web server functionality" parameter

Option	Description
Off	▪ The web server is completely disabled. ▪ Port 80 is locked.
On	▪ The complete functionality of the web server is available. ▪ JavaScript is used. ▪ The password is transferred in an encrypted state. ▪ Any change to the password is also transferred in an encrypted state.

Enabling the Web server

If the Web server is disabled it can only be re-enabled with the **Web server functionality** parameter via the following operating options:
- Via local display
- Via Bedientool "FieldCare"
- Via "DeviceCare" operating tool

8.4.7 Logging out

Before logging out, perform a data backup via the **Data management** function (upload configuration from device) if necessary.

1. Select the **Logout** entry in the function row.
   ↳ The home page with the Login box appears.
2. Close the Web browser.
3. If no longer needed:
   Reset modified properties of the Internet protocol (TCP/IP) → 70.

8.5 Access to the operating menu via the operating tool

The structure of the operating menu in the operating tools is the same as for operation via the local display.

8.5.1 Connecting the operating tool

Via HART protocol

This communication interface is available in device versions with a HART output.

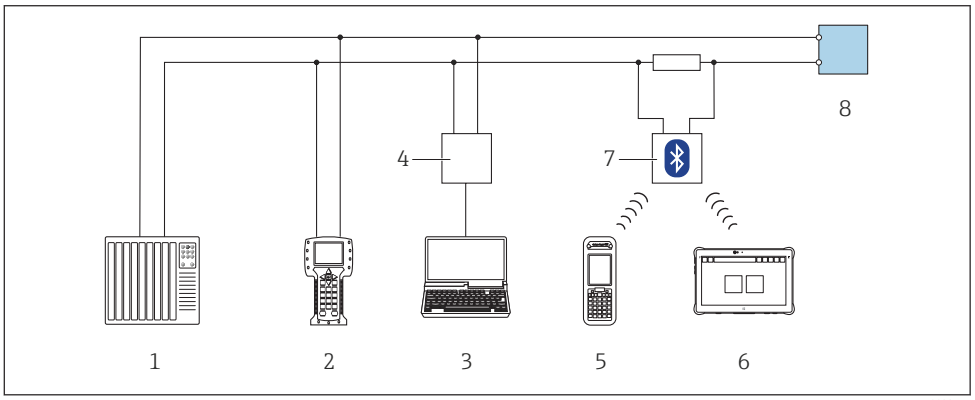

27 *Options for remote operation via HART protocol*

1 *Control system (e.g. PLC)*
2 *Field Communicator 475*
3 *Computer with operating tool (e.g. FieldCare, AMS Device Manager, SIMATIC PDM)*
4 *Commubox FXA195 (USB)*
5 *Field Xpert SFX350 or SFX370*
6 *Field Xpert SMT70*
7 *VIATOR Bluetooth modem with connecting cable*
8 *Transmitter*

Via service interface (CDI-RJ45)

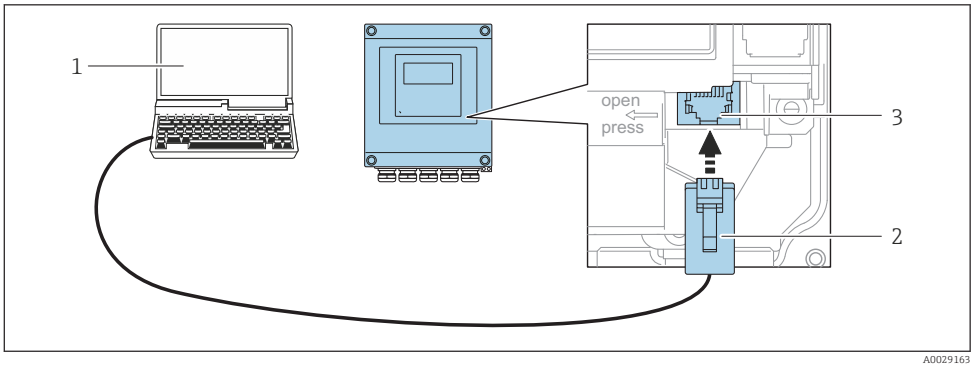

28 *Connection via service interface (CDI-RJ45)*

1 *Computer with Web browser (e.g. Microsoft Internet Explorer, Microsoft Edge) for accessing the integrated device Web server or with "FieldCare", "DeviceCare" operating tool with COM DTM "CDI Communication TCP/IP"*
2 *Standard Ethernet connecting cable with RJ45 plug*
3 *Service interface (CDI-RJ45) of the measuring device with access to the integrated Web server*

Via WLAN interface

The optional WLAN interface is available on the following device version:
Order code for "Display", option BA "WLAN":
4-line, illuminated, graphic display; touch control + WLAN

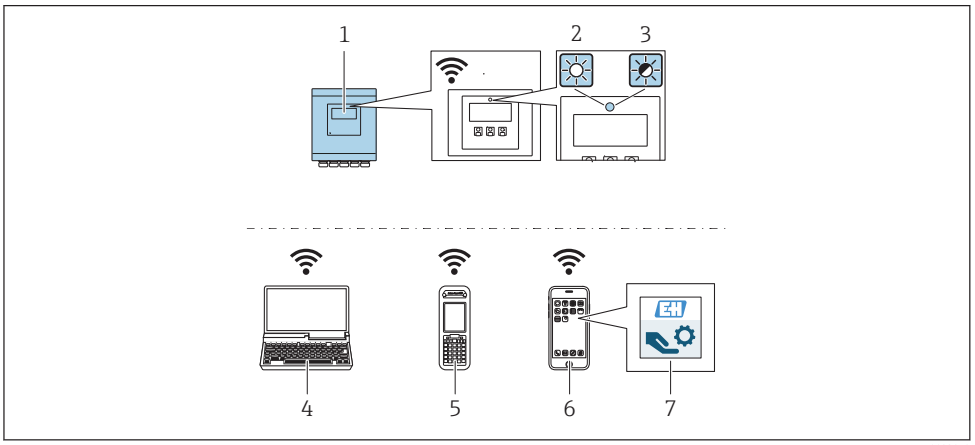

1 *Transmitter with integrated WLAN antenna*
2 *LED lit constantly: WLAN reception is enabled on measuring device*
3 *LED flashing: WLAN connection established between operating unit and measuring device*
4 *Computer with WLAN interface and Web browser (e.g. Microsoft Internet Explorer, Microsoft Edge) for accessing the integrated device Web server or with operating tool (e.g. FieldCare, DeviceCare)*
5 *Mobile handheld terminal with WLAN interface and Web browser (e.g. Microsoft Internet Explorer, Microsoft Edge) for accessing the integrated device Web server or operating tool (e.g. FieldCare, DeviceCare)*
6 *Smart phone or tablet (e.g. Field Xpert SMT70)*
7 *SmartBlue App*

Function	WLAN: IEEE 802.11 b/g (2.4 GHz)
Encryption	WPA2-PSK AES-128 (in accordance with IEEE 802.11i)
Configurable WLAN channels	1 to 11
Degree of protection	IP67
Available antennas	▪ Internal antenna ▪ External antenna (optional) In the event of poor transmission/reception conditions at the place of installation. Only one antenna active in each case!
Range	▪ Internal antenna: typically 10 m (32 ft) ▪ External antenna: typically 50 m (164 ft)
Materials (external antenna)	▪ Antenna: ASA plastic (acrylic ester-styrene-acrylonitrile) and nickel-plated brass ▪ Adapter: Stainless steel and nickel-plated brass ▪ Cable: Polyethylene ▪ Connector: Nickel-plated brass ▪ Angle bracket: Stainless steel

Configuring the Internet protocol of the mobile terminal

NOTICE

If the WLAN connection is lost during the configuration, settings made may be lost.

► Make sure that the WLAN connection is not disconnected while configuring the device.

NOTICE

In principle, avoid simultaneous access to the measuring device via the service interface (CDI-RJ45) and the WLAN interface from the same mobile terminal. This could cause a network conflict.

► Only activate one service interface (CDI-RJ45 service interface or WLAN interface).
► If simultaneous communication is necessary: configure different IP address ranges, e.g. 192.168.0.1 (WLAN interface) and 192.168.1.212 (CDI-RJ45 service interface).

Preparing the mobile terminal

▶ Enable WLAN reception on the mobile terminal.

Establishing a connection from the mobile terminal to the measuring device

1. In the WLAN settings of the mobile terminal:
   Select the measuring device using the SSID (e.g. EH_Promag__A802000).
2. If necessary, select the WPA2 encryption method.
3. Enter the password: serial number of the measuring device ex-works (e.g. L100A802000).
   ↳ LED on display module flashes: it is now possible to operate the measuring device with the Web browser, FieldCare or DeviceCare.

The serial number can be found on the nameplate.

To ensure the safe and swift assignment of the WLAN network to the measuring point, it is advisable to change the SSID name. It should be possible to clearly assign the new SSID name to the measuring point (e.g. tag name) because it is displayed as the WLAN network.

Disconnecting

▶ After configuring the device:
Terminate the WLAN connection between the operating unit and measuring device.

8.5.2 Field Xpert SFX350, SFX370

Function range

Field Xpert SFX350 and Field Xpert SFX370 are mobile computers for commissioning and maintenance. They enable efficient device configuration and diagnostics for HART and FOUNDATION Fieldbus devices in the **non-hazardous area** (SFX350, SFX370) and **hazardous area** (SFX370).

For details, see Operating Instructions BA01202S

Source for device description files

See information → 80

8.5.3 FieldCare

Function scope

FDT-based plant asset management tool from Endress+Hauser. It can configure all smart field devices in a system and helps you manage them. By using the status information, it is also a simple but effective way of checking their status and condition.

Access is via:
- HART protocol
- CDI-RJ45 service interface

Typical functions:
- Configuring parameters of transmitters
- Loading and saving device data (upload/download)
- Documentation of the measuring point
- Visualization of the measured value memory (line recorder) and event logbook

For additional information about FieldCare, see Operating Instructions BA00027S and BA00059S

Source for device description files

See information → 80

Establishing a connection

1. Start FieldCare and launch the project.
2. In the network: Add a device.
   ↳ The **Add device** window opens.
3. Select the **CDI Communication TCP/IP** option from the list and press **OK** to confirm.
4. Right-click **CDI Communication TCP/IP** and select the **Add device** option in the context menu that opens.
5. Select the desired device from the list and press **OK** to confirm.
   ↳ The **CDI Communication TCP/IP (Configuration)** window opens.
6. Enter the device address in the **IP address** field: 192.168.1.212 and press **Enter** to confirm.
7. Establish the online connection to the device.

For additional information, see Operating Instructions BA00027S and BA00059S

User interface

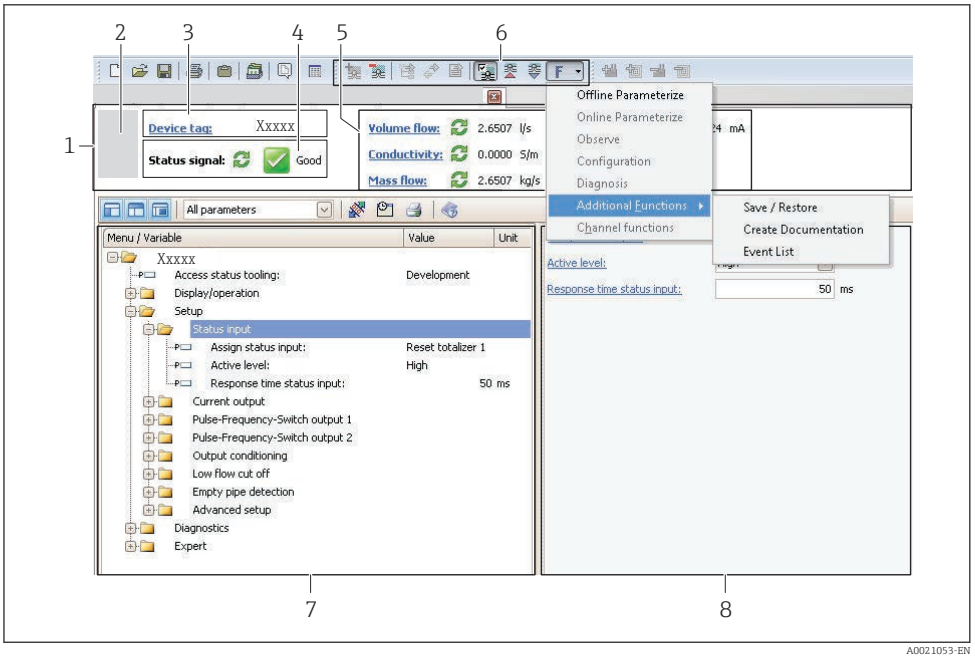

1 Header
2 Picture of device
3 Device tag
4 Status area with status signal→ 129
6 Display area for current measured values
5 Edit toolbar with additional functions such as save/restore, event list and create documentation
7 Navigation area with operating menu structure
8 Working area

8.5.4 DeviceCare

Function scope

Tool to connect and configure Endress+Hauser field devices.

The fastest way to configure Endress+Hauser field devices is with the dedicated "DeviceCare" tool. Together with the device type managers (DTMs) it presents a convenient, comprehensive solution.

For details, see Innovation Brochure IN01047S

Source for device description files

See information → 80

8.5.5 AMS Device Manager

Function scope

Program from Emerson Process Management for operating and configuring measuring devices via HART protocol.

Source for device description files

See data → 80

8.5.6 SIMATIC PDM

Function scope

SIMATIC PDM is a standardized, manufacturer-independent program from Siemens for the operation, configuration, maintenance and diagnosis of intelligent field devices via HART protocol.

Source for device description files

See data → 80

8.5.7 Field Communicator 475

Function scope

Industrial handheld terminal from Emerson Process Management for remote configuration and measured value display via HART protocol.

Source for device description files

See data → 80

9 System integration

9.1 Overview of device description files

9.1.1 Current version data for the device

Firmware version	02.00.zz	▪ On the title page of the Operating instructions ▪ On the transmitter nameplate ▪ Firmware version Diagnostics → Device information → Firmware version
Release date of firmware version	11.2016	---
Manufacturer ID	0x11	Manufacturer ID Diagnostics → Device information → Manufacturer ID
Device type ID	0x69	Device type Diagnostics → Device information → Device type
HART protocol revision	7	---
Device revision	8	▪ On the transmitter nameplate ▪ Device revision Diagnostics → Device information → Device revision

For an overview of the different firmware versions for the device → 141

9.1.2 Operating tools

The suitable device description file for the individual operating tools is listed in the table below, along with information on where the file can be acquired.

Operating tool via HART protocol	Sources for obtaining device descriptions
FieldCare	▪ www.endress.com → Download Area ▪ CD-ROM (contact Endress+Hauser) ▪ DVD (contact Endress+Hauser)
DeviceCare	▪ www.endress.com → Download Area ▪ CD-ROM (contact Endress+Hauser) ▪ DVD (contact Endress+Hauser)
▪ Field Xpert SFX350 ▪ Field Xpert SFX370	Use update function of handheld terminal
AMS Device Manager (Emerson Process Management)	www.endress.com → Download Area
SIMATIC PDM (Siemens)	www.endress.com → Download Area
Field Communicator 475 (Emerson Process Management)	Use update function of handheld terminal

9.2 Measured variables via HART protocol

The following measured variables (HART device variables) are assigned to the dynamic variables at the factory:

Dynamic variables	Measured values (HART device variables)
Primary dynamic variable (PV)	Volume flow
Secondary dynamic variable (SV)	Totalizer 1
Tertiary dynamic variable (TV)	Totalizer 2
Quaternary dynamic variable (QV)	Totalizer 3

The assignment of the measured variables to the dynamic variables can be modified and assigned as desired via local operation and the operating tool using the following parameters:

- Expert → Communication → HART output → Output → Assign PV
- Expert → Communication → HART output → Output → Assign SV
- Expert → Communication → HART output → Output → Assign TV
- Expert → Communication → HART output → Output → Assign QV

The following measured variables can be assigned to the dynamic variables:

Measured variables for PV (primary dynamic variable)
- Off
- Volume flow
- Mass flow
- Flow velocity
- Conductivity [1)]
- Corrected conductivity [1)]
- Electronic temperature

Measured variables for SV, TV, QV (secondary, tertiary and quaternary dynamic variable)
- Volume flow
- Mass flow
- Conductivity [2)]
- Corrected conductivity [2)]
- Electronic temperature
- Totalizer 1
- Totalizer 2
- Totalizer 3

Device variables
The device variables are permanently assigned. A maximum of 8 device variables can be transmitted:
- 0 = volume flow
- 1 = mass flow
- 2 = corrected volume flow
- 3 = flow velocity
- 4 = conductivity
- 5 = corrected conductivity
- 6 = temperature
- 7 = electronic temperature
- 9 = totalizer 1
- 10 = totalizer 2
- 11 = totalizer 3

1) Visibility depends on order options or device settings
2) Visibility depends on order options or device settings

9.3 Other settings

Burst mode functionality in accordance with HART 7 Specification:

Navigation
"Expert" menu → Communication → HART output → Burst configuration → Burst configuration 1 to n

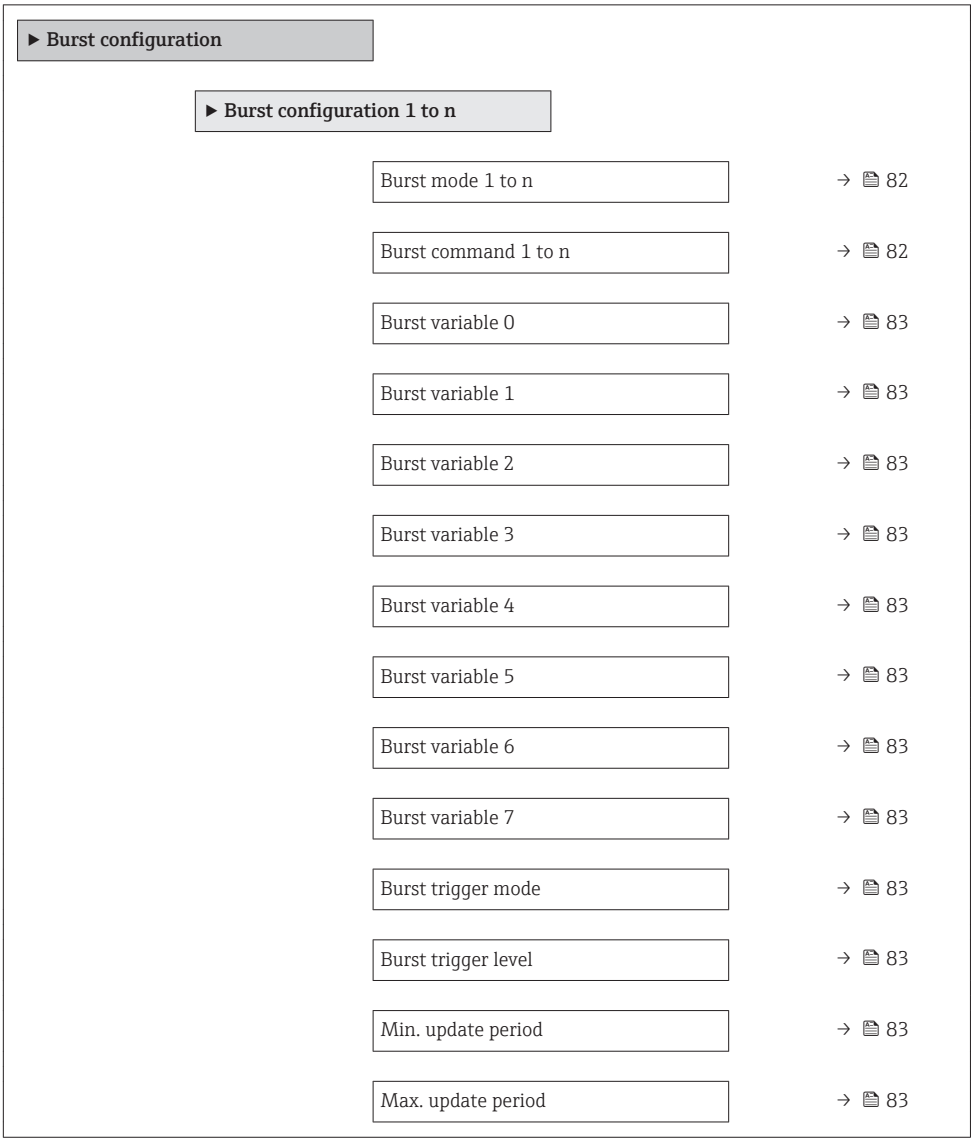

Parameter overview with brief description

Parameter	Description	Selection / User entry	Factory setting
Burst mode 1 to n	Activate the HART burst mode for burst message X.	▪ Off ▪ On	Off
Burst command 1 to n	Select the HART command that is sent to the HART master.	▪ Command 1 ▪ Command 2 ▪ Command 3 ▪ Command 9 ▪ Command 33 ▪ Command 48	Command 2

Parameter	Description	Selection / User entry	Factory setting
Burst variable 0	For HART command 9 and 33: select the HART device variable or the process variable.	▪ Volume flow ▪ Mass flow ▪ Corrected volume flow ▪ Flow velocity ▪ Conductivity * ▪ Corrected conductivity * ▪ Electronic temperature ▪ Totalizer 1 ▪ Totalizer 2 ▪ Totalizer 3 ▪ Density ▪ HART input ▪ Percent of range ▪ Measured current ▪ Primary variable (PV) ▪ Secondary variable (SV) ▪ Tertiary variable (TV) ▪ Quaternary variable (QV) ▪ Not used	Volume flow
Burst variable 1	For HART command 9 and 33: select the HART device variable or the process variable.	See the **Burst variable 0** parameter.	Not used
Burst variable 2	For HART command 9 and 33: select the HART device variable or the process variable.	See the **Burst variable 0** parameter.	Not used
Burst variable 3	For HART command 9 and 33: select the HART device variable or the process variable.	See the **Burst variable 0** parameter.	Not used
Burst variable 4	For HART command 9: select the HART device variable or the process variable.	See the **Burst variable 0** parameter.	Not used
Burst variable 5	For HART command 9: select the HART device variable or the process variable.	See the **Burst variable 0** parameter.	Not used
Burst variable 6	For HART command 9: select the HART device variable or the process variable.	See the **Burst variable 0** parameter.	Not used
Burst variable 7	For HART command 9: select the HART device variable or the process variable.	See the **Burst variable 0** parameter.	Not used
Burst trigger mode	Select the event that triggers burst message X.	▪ Continuous ▪ Window ▪ Rising ▪ Falling ▪ On change	Continuous
Burst trigger level	Enter the burst trigger value. Together with the option selected in the **Burst trigger mode** parameter the burst trigger value determines the time of burst message X.	Signed floating-point number	–
Min. update period	Enter the minimum time span between two burst commands of burst message X.	Positive integer	1 000 ms
Max. update period	Enter the maximum time span between two burst commands of burst message X.	Positive integer	2 000 ms

* Visibility depends on order options or device settings

10 Commissioning

10.1 Function check

Before commissioning the measuring device:

▶ Make sure that the post-installation and post-connection checks have been performed.

- "Post-installation check" checklist→ 38
- "Post-connection check" checklist → 52

10.2 Switching on the measuring device

▶ After a successful function check, switch on the measuring device.
  ↳ After a successful startup, the local display switches automatically from the startup display to the operational display.

If nothing appears on the local display or a diagnostic message is displayed, refer to the section on "Diagnostics and troubleshooting" → 123.

10.3 Setting the operating language

Factory setting: English or ordered local language

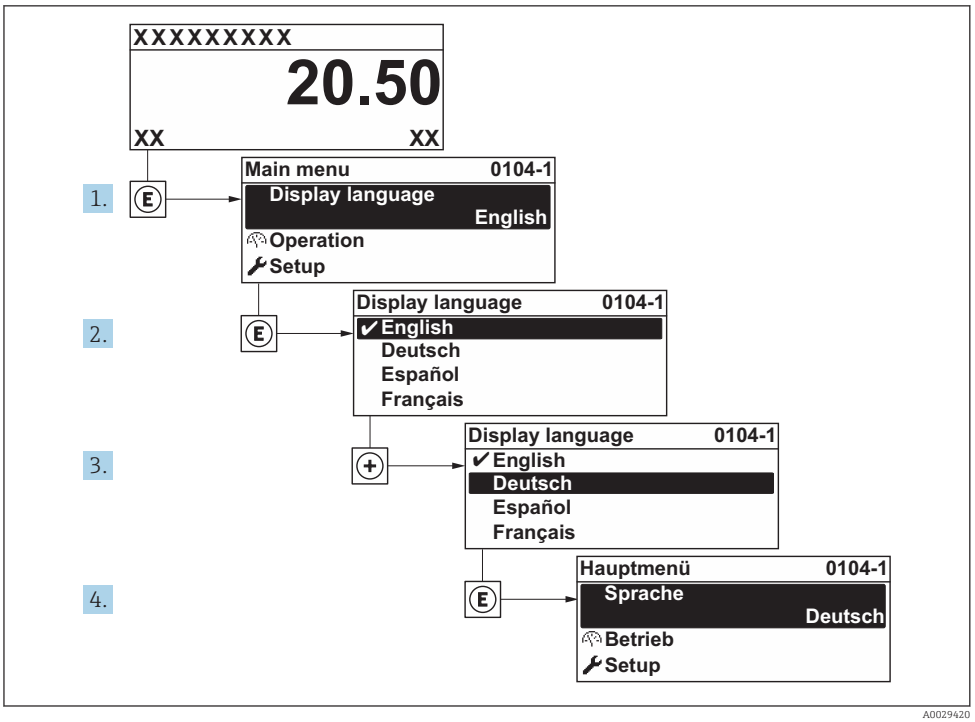

29 *Taking the example of the local display*

10.4 Configuring the measuring device

- The **Setup** menu with its guided wizards contains all the parameters needed for standard operation.
- Navigation to the **Setup** menu

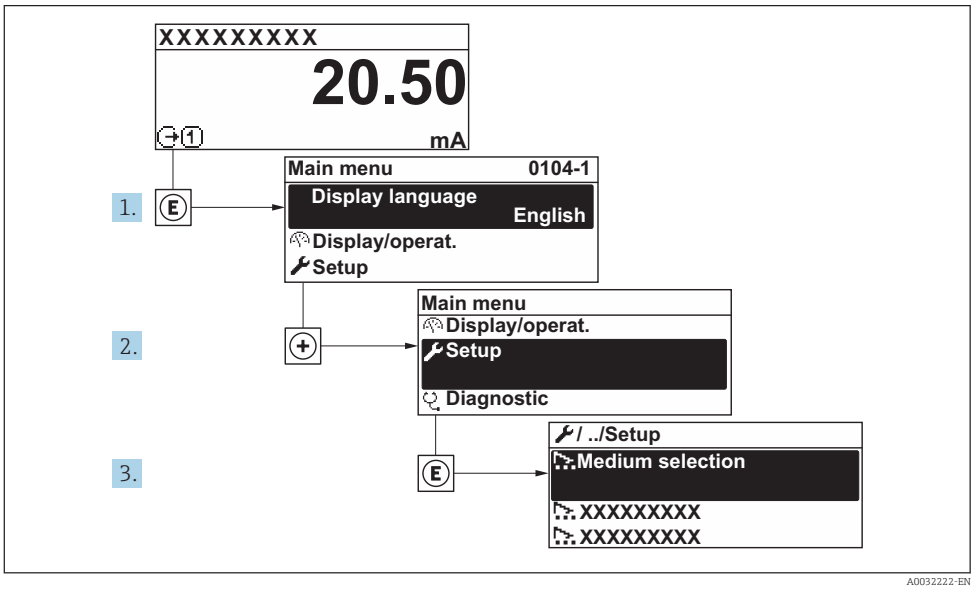

30 *Taking the example of the local display*

Navigation
"Setup" menu

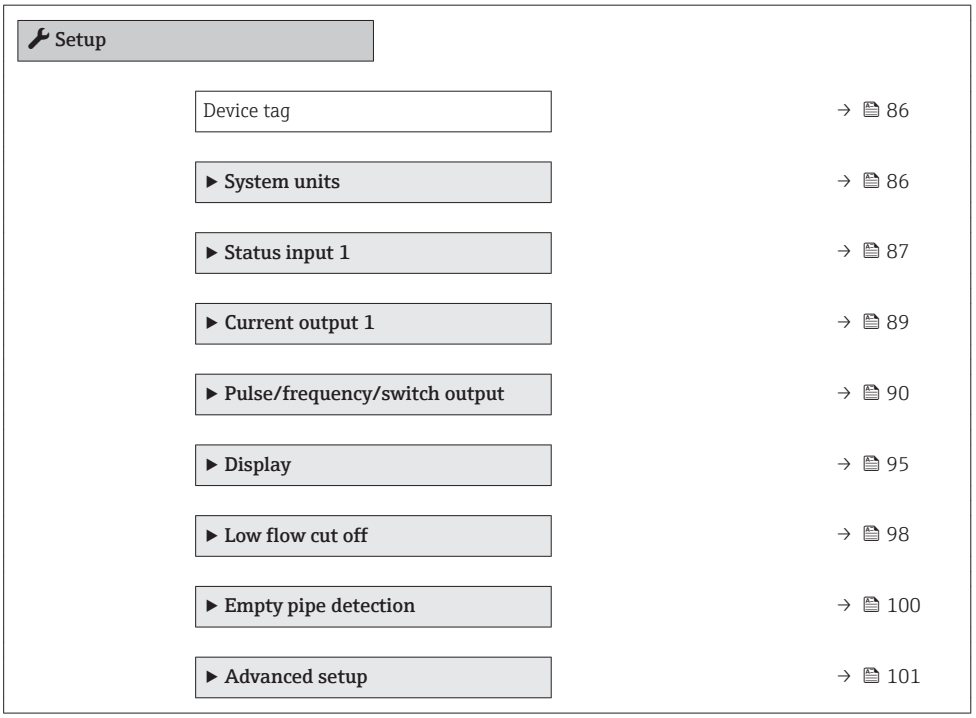

10.4.1 Defining the tag name

To enable fast identification of the measuring point within the system, you can enter a unique designation using the **Device tag** parameter and thus change the factory setting.

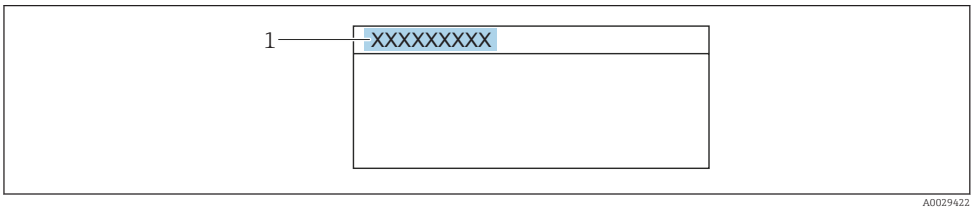

31 Header of the operational display with tag name

1 Tag name

Enter the tag name in the "FieldCare" operating tool → 78

Navigation
"Setup" menu → Device tag

Parameter overview with brief description

Parameter	Description	User entry	Factory setting
Device tag	Enter the name for the measuring point.	Max. 32 characters, such as letters, numbers or special characters (e.g. @, %, /).	Promag

10.4.2 Setting the system units

In the **System units** submenu the units of all the measured values can be set.

Depending on the device version, not all submenus and parameters are available in every device. The selection can vary depending on the order code.

Navigation
"Setup" menu → System units

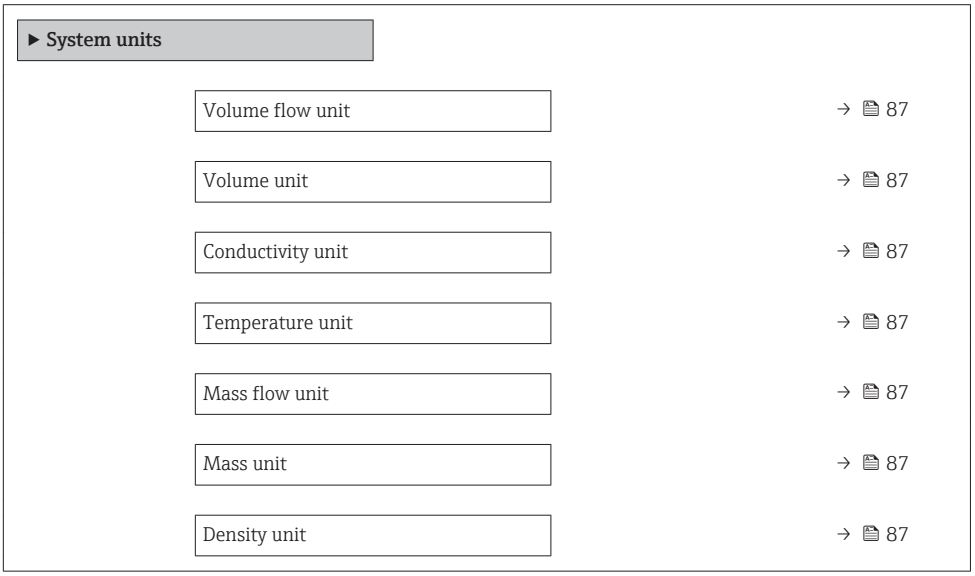

Parameter overview with brief description

Parameter	Prerequisite	Description	Selection	Factory setting
Volume flow unit	–	Select volume flow unit. *Result* The selected unit applies for: ▪ Output ▪ Low flow cut off ▪ Simulation process variable	Unit choose list	Country-specific: ▪ l/h ▪ gal/min (us)
Volume unit	–	Select volume unit.	Unit choose list	Country-specific: ▪ m^3 ▪ gal (us)
Conductivity unit	The **On** option is selected in the **Conductivity measurement** parameter parameter.	Select conductivity unit. *Effect* The selected unit applies for: ▪ Current output ▪ Frequency output ▪ Switch output ▪ Simulation process variable	Unit choose list	µS/cm
Temperature unit	–	Select temperature unit. *Result* The selected unit applies for: ▪ **Maximum value** parameter ▪ **Minimum value** parameter	Unit choose list	Country-specific: ▪ °C ▪ °F
Mass flow unit	–	Select mass flow unit. *Result* The selected unit applies for: ▪ Output ▪ Low flow cut off ▪ Simulation process variable	Unit choose list	Country-specific: ▪ kg/h ▪ lb/min
Mass unit	–	Select mass unit.	Unit choose list	Country-specific: ▪ kg ▪ lb
Density unit	–	Select density unit. *Result* The selected unit applies for: ▪ Output ▪ Simulation process variable	Unit choose list	Country-specific: ▪ kg/l ▪ lb/ft^3

10.4.3 Configuring the status input

The **Status input** submenu guides the user systematically through all the parameters that have to be set for configuring the status input.

The submenu appears only if the device was ordered with a status input .

Navigation

"Setup" menu → Status input

Structure of the submenu

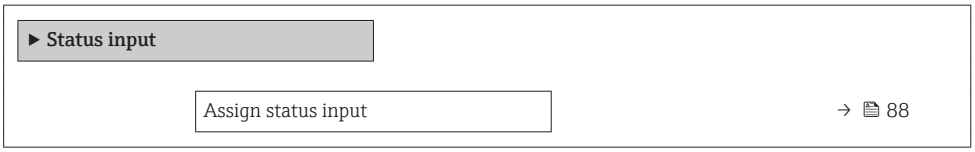

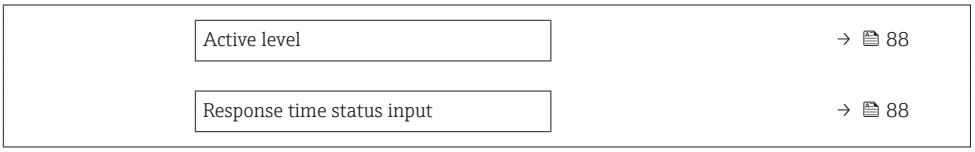

Parameter overview with brief description

Parameter	Description	Selection / User entry	Factory setting
Assign status input	Select function for the status input.	▪ Off ▪ Reset totalizer 1 ▪ Reset totalizer 2 ▪ Reset totalizer 3 ▪ Reset all totalizers ▪ Flow override	Off
Active level	Define input signal level at which the assigned function is triggered.	▪ High ▪ Low	High
Response time status input	Define the minimum amount of time the input signal level must be present before the selected function is triggered.	5 to 200 ms	50 ms

10.4.4 Configuring the current output

The **Current output** wizard guides you systematically through all the parameters that have to be set for configuring the current output.

Navigation
"Setup" menu → Current output 1

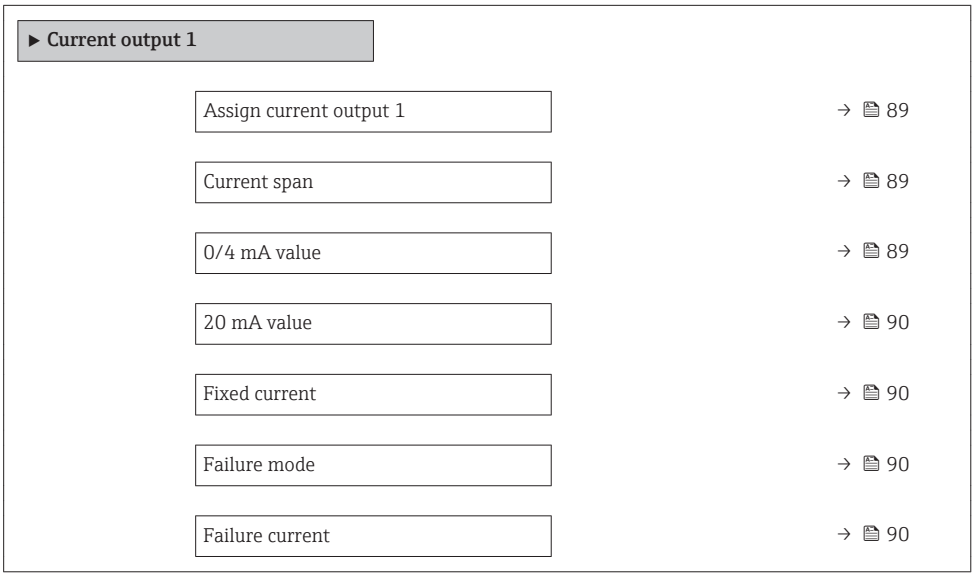

Parameter overview with brief description

Parameter	Prerequisite	Description	Selection / User entry	Factory setting
Assign current output	–	Select process variable for current output.	▪ Volume flow ▪ Mass flow ▪ Corrected volume flow ▪ Flow velocity ▪ Conductivity * ▪ Corrected conductivity * ▪ Temperature ▪ Electronic temperature	Volume flow
Current span	–	Select current range for process value output and upper/lower level for alarm signal.	▪ 4...20 mA NAMUR ▪ 4...20 mA US ▪ 4...20 mA ▪ 0...20 mA ▪ Fixed current	Country-specific: ▪ 4...20 mA NAMUR ▪ 4...20 mA US
0/4 mA value	One of the following options is selected in the **Current span** parameter (→ 89): ▪ 4...20 mA NAMUR ▪ 4...20 mA US ▪ 4...20 mA ▪ 0...20 mA	Enter 4 mA value.	Signed floating-point number	Country-specific: ▪ 0 l/h ▪ 0 gal/min (us)

Parameter	Prerequisite	Description	Selection / User entry	Factory setting
20 mA value	One of the following options is selected in the **Current span** parameter (→ 🖹 89): ▪ 4...20 mA NAMUR ▪ 4...20 mA US ▪ 4...20 mA ▪ 0...20 mA	Enter 20 mA value.	Signed floating-point number	Depends on country and nominal diameter
Fixed current	The **Fixed current** option is selected in the **Current span** parameter (→ 🖹 89).	Defines the fixed output current..	0 to 22.5 mA	22.5 mA
Failure mode	A process variable is selected in the **Assign current output** parameter (→ 🖹 89) and one of the following options is selected in the **Current span** parameter (→ 🖹 89): ▪ 4...20 mA NAMUR ▪ 4...20 mA US ▪ 4...20 mA ▪ 0...20 mA	Define output behavior in alarm condition.	▪ Min. ▪ Max. ▪ Last valid value ▪ Actual value ▪ Defined value	Max.
Failure current	The **Defined value** option is selected in the **Failure mode** parameter.	Enter current output value in alarm condition.	0 to 22.5 mA	22.5 mA

* Visibility depends on order options or device settings

10.4.5 Configuring the pulse/frequency/switch output

The **Pulse/frequency/switch output** wizard guides you systematically through all the parameters that can be set for configuring the selected output type.

Configuring the pulse output

Navigation

"Setup" menu → Pulse/frequency/switch output 1 to n

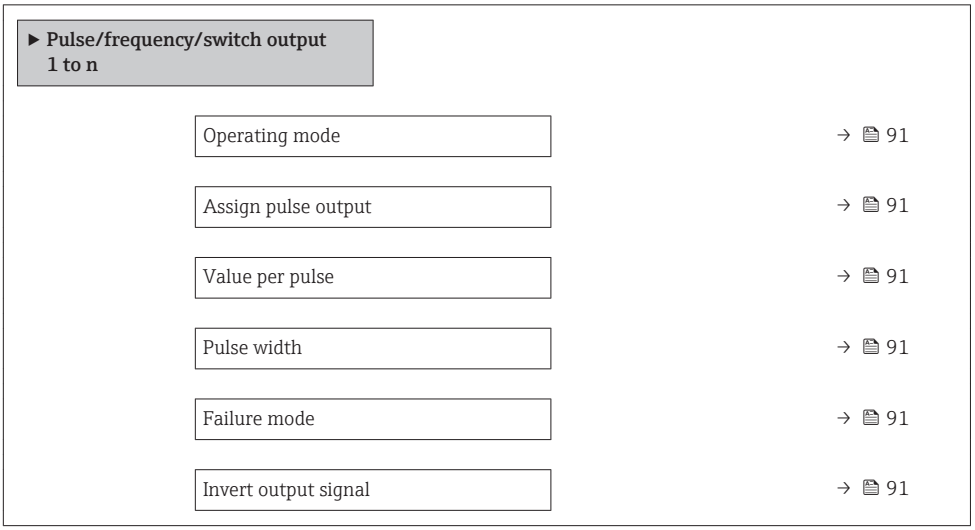

Parameter overview with brief description

Parameter	Prerequisite	Description	Selection / User entry	Factory setting
Operating mode	–	Define the output as a pulse, frequency or switch output.	▪ Pulse ▪ Frequency ▪ Switch	Pulse
Assign pulse output	The **Pulse** option is selected in the **Operating mode** parameter parameter.	Select process variable for pulse output.	▪ Off ▪ Volume flow ▪ Mass flow ▪ Corrected volume flow	Off
Value per pulse	The **Pulse** option is selected in the **Operating mode** parameter (→ 🖹 91) and a process variable is selected in the **Assign pulse output** parameter (→ 🖹 91).	Enter measured value at which a pulse is output.	Signed floating-point number	Depends on country and nominal diameter
Pulse width	The **Pulse** option is selected in the **Operating mode** parameter (→ 🖹 91) and a process variable is selected in the **Assign pulse output** parameter (→ 🖹 91).	Define time width of the output pulse.	0.05 to 2 000 ms	100 ms
Failure mode	The **Pulse** option is selected in the **Operating mode** parameter (→ 🖹 91) and a process variable is selected in the **Assign pulse output** parameter (→ 🖹 91).	Define output behavior in alarm condition.	▪ Actual value ▪ No pulses	No pulses
Invert output signal	–	Invert the output signal.	▪ No ▪ Yes	No

Configuring the frequency output

Navigation

"Setup" menu → Pulse/frequency/switch output 1 to n

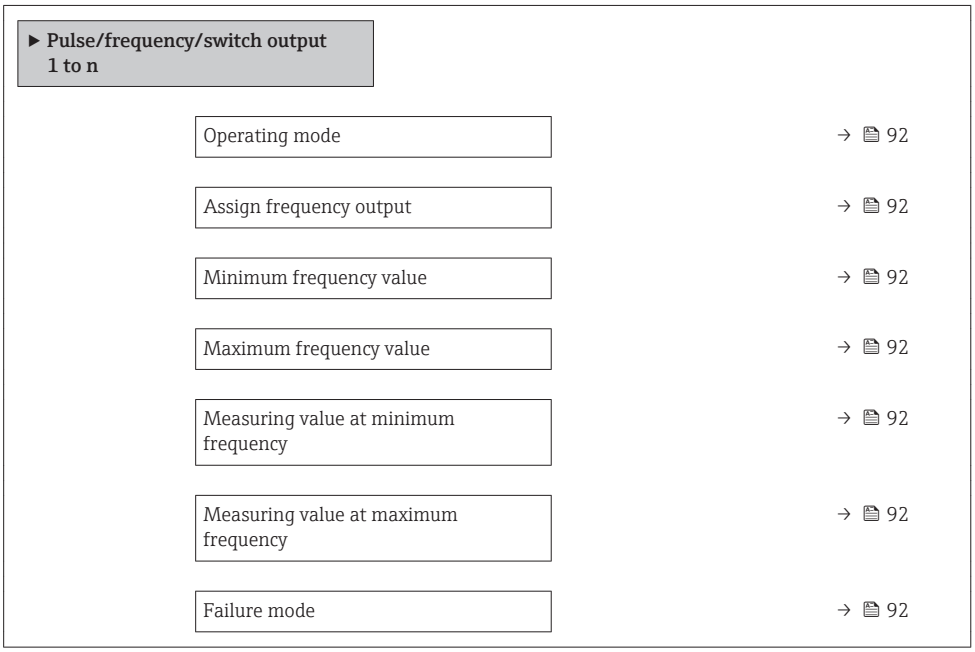

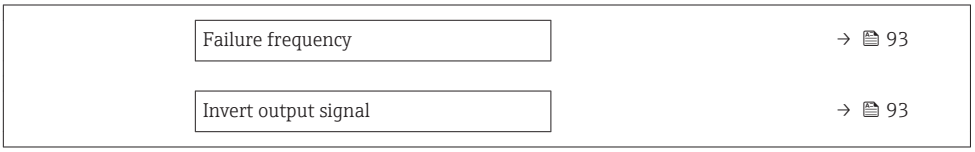

Parameter overview with brief description

Parameter	Prerequisite	Description	Selection / User entry	Factory setting
Operating mode	–	Define the output as a pulse, frequency or switch output.	▪ Pulse ▪ Frequency ▪ Switch	Pulse
Assign frequency output	The **Frequency** option is selected in the **Operating mode** parameter (→ 91) parameter.	Select process variable for frequency output.	▪ Off ▪ Volume flow ▪ Mass flow ▪ Corrected volume flow ▪ Flow velocity ▪ Conductivity * ▪ Corrected conductivity * ▪ Temperature ▪ Electronic temperature	Off
Minimum frequency value	The **Frequency** option is selected in the **Operating mode** parameter (→ 91) and a process variable is selected in the **Assign frequency output** parameter (→ 92).	Enter minimum frequency.	0.0 to 12 500.0 Hz	0.0 Hz
Maximum frequency value	The **Frequency** option is selected in the **Operating mode** parameter (→ 91) and a process variable is selected in the **Assign frequency output** parameter (→ 92).	Enter maximum frequency.	0.0 to 12 500.0 Hz	12 500.0 Hz
Measuring value at minimum frequency	The **Frequency** option is selected in the **Operating mode** parameter (→ 91) and a process variable is selected in the **Assign frequency output** parameter (→ 92).	Enter measured value for minmum frequency.	Signed floating-point number	Depends on country and nominal diameter
Measuring value at maximum frequency	The **Frequency** option is selected in the **Operating mode** parameter (→ 91) and a process variable is selected in the **Assign frequency output** parameter (→ 92).	Enter measured value for maximum frequency.	Signed floating-point number	Depends on country and nominal diameter
Failure mode	The **Frequency** option is selected in the **Operating mode** parameter (→ 91) and a process variable is selected in the **Assign frequency output** parameter (→ 92).	Define output behavior in alarm condition.	▪ Actual value ▪ Defined value ▪ 0 Hz	0 Hz

Parameter	Prerequisite	Description	Selection / User entry	Factory setting
Failure frequency	The **Frequency** option is selected in the **Operating mode** parameter (→ 91) and a process variable is selected in the **Assign frequency output** parameter (→ 92).	Enter frequency output value in alarm condition.	0.0 to 12 500.0 Hz	0.0 Hz
Invert output signal	–	Invert the output signal.	▪ No ▪ Yes	No

* Visibility depends on order options or device settings

Configuring the switch output

Navigation

"Setup" menu → Pulse/frequency/switch output 1 to n

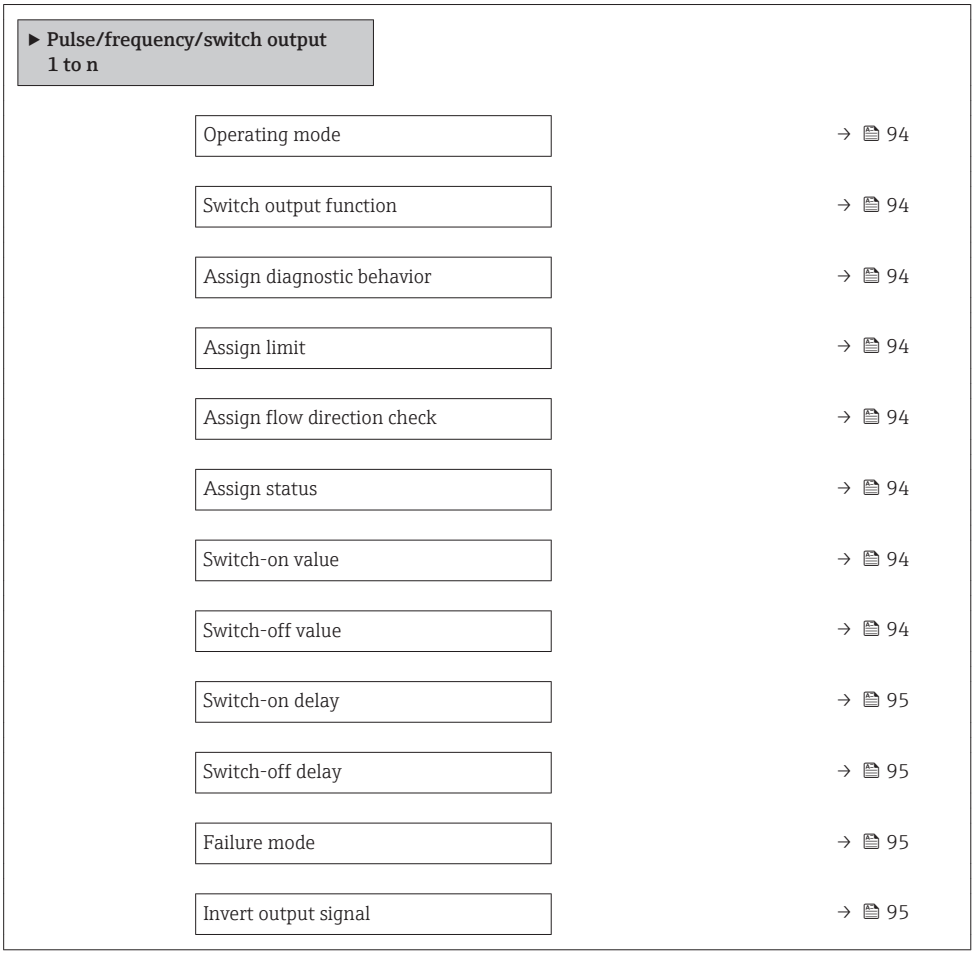

Parameter overview with brief description

Parameter	Prerequisite	Description	Selection / User entry	Factory setting
Operating mode	–	Define the output as a pulse, frequency or switch output.	▪ Pulse ▪ Frequency ▪ Switch	Pulse
Switch output function	The **Switch** option is selected in the **Operating mode** parameter.	Select function for switch output.	▪ Off ▪ On ▪ Diagnostic behavior ▪ Limit ▪ Flow direction check ▪ Status	Off
Assign diagnostic behavior	▪ In the **Operating mode** parameter, the **Switch** option is selected. ▪ In the **Switch output function** parameter, the **Diagnostic behavior** option is selected.	Select diagnostic behavior for switch output.	▪ Alarm ▪ Alarm or warning ▪ Warning	Alarm
Assign limit	▪ The **Switch** option is selected in the **Operating mode** parameter parameter. ▪ The **Limit** option is selected in the **Switch output function** parameter parameter.	Select process variable for limit function.	▪ Off ▪ Volume flow ▪ Mass flow ▪ Corrected volume flow ▪ Flow velocity ▪ Conductivity * ▪ Corrected conductivity * ▪ Totalizer 1 ▪ Totalizer 2 ▪ Totalizer 3 ▪ Temperature ▪ Electronic temperature	Volume flow
Assign flow direction check	▪ The **Switch** option is selected in the **Operating mode** parameter. ▪ The **Flow direction check** option is selected in the **Switch output function** parameter.	Select process variable for flow direction monitoring.	▪ Off ▪ Volume flow ▪ Mass flow ▪ Corrected volume flow	Volume flow
Assign status	▪ The **Switch** option is selected in the **Operating mode** parameter. ▪ The **Status** option is selected in the **Switch output function** parameter.	Select device status for switch output.	▪ Empty pipe detection ▪ Low flow cut off	Empty pipe detection
Switch-on value	▪ In the **Operating mode** parameter, the **Switch** option is selected. ▪ In the **Switch output function** parameter, the **Limit** option is selected.	Enter measured value for the switch-on point.	Signed floating-point number	Country-specific: ▪ 0 l/h ▪ 0 gal/min (us)
Switch-off value	▪ In the **Operating mode** parameter, the **Switch** option is selected. ▪ In the **Switch output function** parameter, the **Limit** option is selected.	Enter measured value for the switch-off point.	Signed floating-point number	Country-specific: ▪ 0 l/h ▪ 0 gal/min (us)

Parameter	Prerequisite	Description	Selection / User entry	Factory setting
Switch-on delay	▪ The **Switch** option is selected in the **Operating mode** parameter. ▪ The **Limit** option is selected in the **Switch output function** parameter.	Define delay for the switch-on of status output.	0.0 to 100.0 s	0.0 s
Switch-off delay	▪ The **Switch** option is selected in the **Operating mode** parameter. ▪ The **Limit** option is selected in the **Switch output function** parameter.	Define delay for the switch-off of status output.	0.0 to 100.0 s	0.0 s
Failure mode	–	Define output behavior in alarm condition.	▪ Actual status ▪ Open ▪ Closed	Open
Invert output signal	–	Invert the output signal.	▪ No ▪ Yes	No

* Visibility depends on order options or device settings

10.4.6 Configuring the local display

The **Display** wizard guides you systematically through all the parameters that can configured for configuring the local display.

Navigation
"Setup" menu → Display

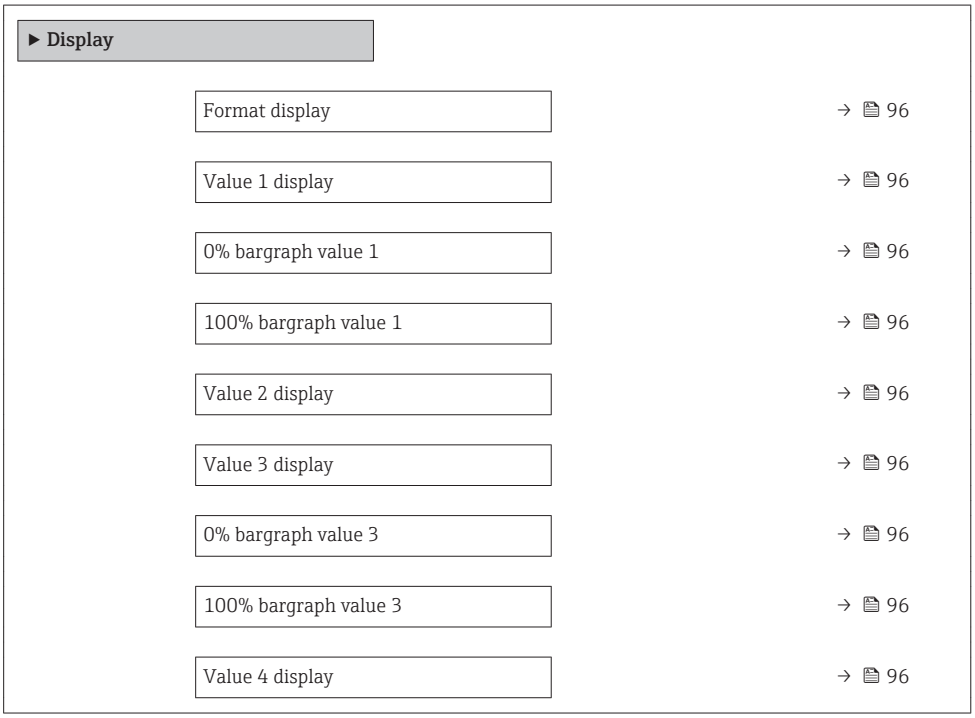

Parameter overview with brief description

Parameter	Prerequisite	Description	Selection / User entry	Factory setting
Format display	A local display is provided.	Select how measured values are shown on the display.	▪ 1 value, max. size ▪ 1 bargraph + 1 value ▪ 2 values ▪ 1 value large + 2 values ▪ 4 values	1 value, max. size
Value 1 display	A local display is provided.	Select the measured value that is shown on the local display.	▪ Volume flow ▪ Mass flow ▪ Corrected volume flow ▪ Flow velocity ▪ Conductivity ▪ Corrected conductivity ▪ Electronic temperature ▪ Totalizer 1 ▪ Totalizer 2 ▪ Totalizer 3 ▪ Current output 1 *	Volume flow
0% bargraph value 1	A local display is provided.	Enter 0% value for bar graph display.	Signed floating-point number	Country-specific: ▪ 0 l/h ▪ 0 gal/min (us)
100% bargraph value 1	A local display is provided.	Enter 100% value for bar graph display.	Signed floating-point number	Depends on country and nominal diameter
Value 2 display	A local display is provided.	Select the measured value that is shown on the local display.	For the picklist, see the **Value 2 display** parameter (→ 🖹 96)	None
Value 3 display	A local display is provided.	Select the measured value that is shown on the local display.	For the picklist, see the **Value 2 display** parameter (→ 🖹 96)	None
0% bargraph value 3	A selection was made in the **Value 3 display** parameter.	Enter 0% value for bar graph display.	Signed floating-point number	Country-specific: ▪ 0 l/h ▪ 0 gal/min (us)
100% bargraph value 3	A selection was made in the **Value 3 display** parameter.	Enter 100% value for bar graph display.	Signed floating-point number	0
Value 4 display	A local display is provided.	Select the measured value that is shown on the local display.	For the picklist, see the **Value 2 display** parameter (→ 🖹 96)	None

* Visibility depends on order options or device settings

10.4.7 Configuring the output conditioning

The **Output conditioning** wizard guides you systematically through all the parameters that have to be set for configuring the output conditioning.

Navigation
"Setup" menu → Output conditioning

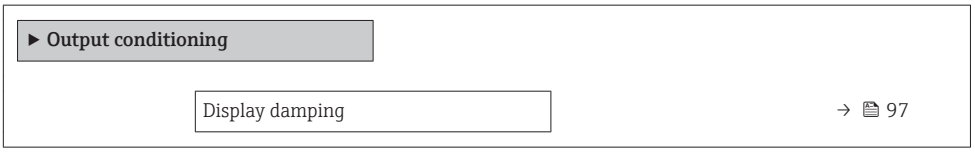

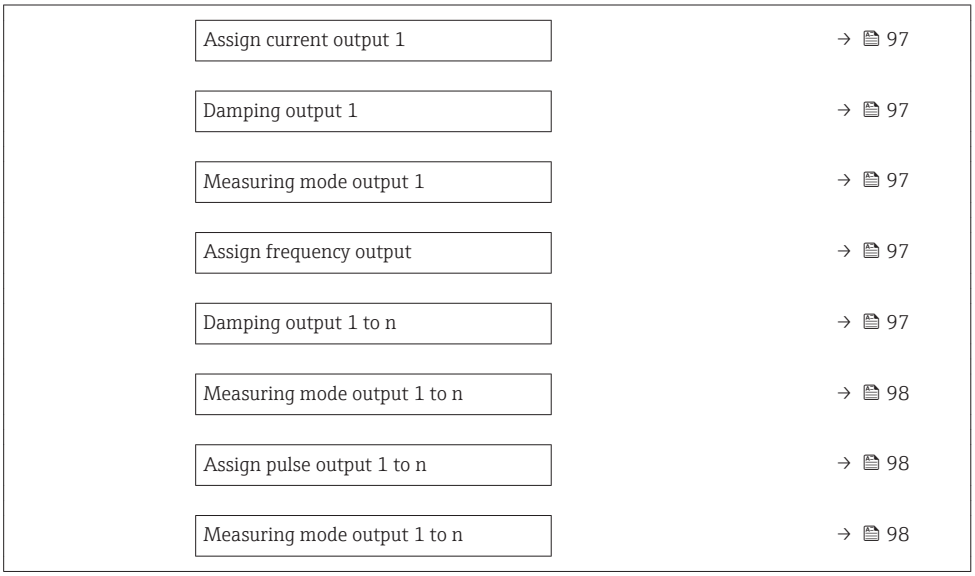

Parameter overview with brief description

Parameter	Prerequisite	Description	User entry / Selection	Factory setting
Display damping	–	Set display reaction time to fluctuations in the measured value.	0.0 to 999.9 s	0.0 s
Assign current output	–	Select process variable for current output.	▪ Volume flow ▪ Mass flow ▪ Corrected volume flow ▪ Flow velocity ▪ Conductivity * ▪ Corrected conductivity * ▪ Temperature ▪ Electronic temperature	Volume flow
Damping output 1	–	Set reaction time for output signal to fluctuations in the measured value.	0 to 999.9 s	1 s
Measuring mode output 1	–	Select measuring mode for output.	▪ Forward flow ▪ Forward/Reverse flow ▪ Reverse flow compensation	Forward flow
Assign frequency output	The **Frequency** option is selected in the **Operating mode** parameter (→ 91) parameter.	Select process variable for frequency output.	▪ Off ▪ Volume flow ▪ Mass flow ▪ Corrected volume flow ▪ Flow velocity ▪ Conductivity * ▪ Corrected conductivity * ▪ Temperature ▪ Electronic temperature	Off
Damping output 1 to n	–	Set reaction time for output signal to fluctuations in the measured value.	0 to 999.9 s	1 s

Parameter	Prerequisite	Description	User entry / Selection	Factory setting
Measuring mode output 1 to n	–	Select measuring mode for output.	▪ Forward flow ▪ Forward/Reverse flow ▪ Reverse flow ▪ Reverse flow compensation	Forward flow
Assign pulse output	The **Pulse** option is selected in the **Operating mode** parameter parameter.	Select process variable for pulse output.	▪ Off ▪ Volume flow ▪ Mass flow ▪ Corrected volume flow	Off
Measuring mode output 1 to n	–	Select measuring mode for output.	▪ Forward flow ▪ Forward/Reverse flow ▪ Reverse flow ▪ Reverse flow compensation	Forward flow

* Visibility depends on order options or device settings

10.4.8 Configuring the low flow cut off

The **Low flow cut off** wizard systematically guides the user through all the parameters that must be set to configure low flow cut off.

Navigation

"Setup" menu → Low flow cut off

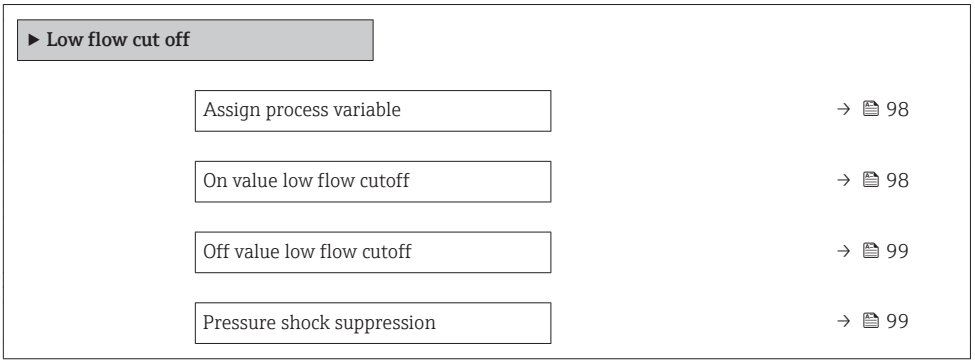

Parameter overview with brief description

Parameter	Prerequisite	Description	Selection / User entry	Factory setting
Assign process variable	–	Select process variable for low flow cut off.	▪ Off ▪ Volume flow ▪ Mass flow ▪ Corrected volume flow	Volume flow
On value low flow cutoff	A process variable is selected in the **Assign process variable** parameter (→ 98).	Enter on value for low flow cut off.	Positive floating-point number	Depends on country and nominal diameter

Parameter	Prerequisite	Description	Selection / User entry	Factory setting
Off value low flow cutoff	A process variable is selected in the **Assign process variable** parameter (→ 🖹 98).	Enter off value for low flow cut off.	0 to 100.0 %	50 %
Pressure shock suppression	A process variable is selected in the **Assign process variable** parameter (→ 🖹 98).	Enter time frame for signal suppression (= active pressure shock suppression).	0 to 100 s	0 s

10.4.9 Configuring empty pipe detection

The **Empty pipe detection** wizard guides you systematically through all the parameters that have to be set for configuring empty pipe detection.

Navigation
"Setup" menu → Empty pipe detection

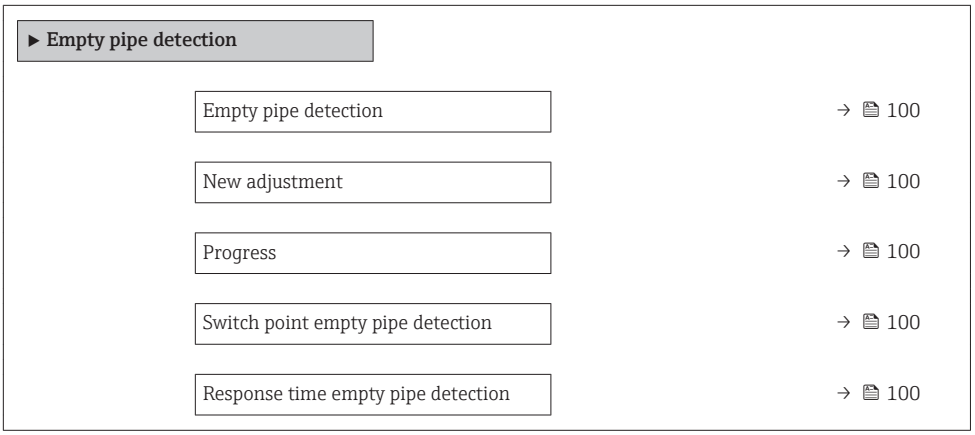

Parameter overview with brief description

Parameter	Prerequisite	Description	Selection / User interface / User entry	Factory setting
Empty pipe detection	–	Switch empty pipe detection on and off.	▪ Off ▪ On	Off
New adjustment	The **On** option is selected in the **Empty pipe detection** parameter.	Select type of adjustment.	▪ Cancel ▪ Empty pipe adjust ▪ Full pipe adjust	Cancel
Progress	The **On** option is selected in the **Empty pipe detection** parameter.	Shows the progress.	▪ Ok ▪ Busy ▪ Not ok	–
Switch point empty pipe detection	The **On** option is selected in the **Empty pipe detection** parameter.	Enter hysteresis in %, below this value the measuring tube will detected as empty.	0 to 100 %	50 %
Response time empty pipe detection	A process variable is selected in the **Assign process variable** parameter (→ 100).	Enter the time before diagnostic message S862 "Pipe empty" is displayed for empty pipe detection.	0 to 100 s	1 s

10.5 Advanced settings

The **Advanced setup** submenu together with its submenus contains parameters for specific settings.

Navigation to the "Advanced setup" submenu

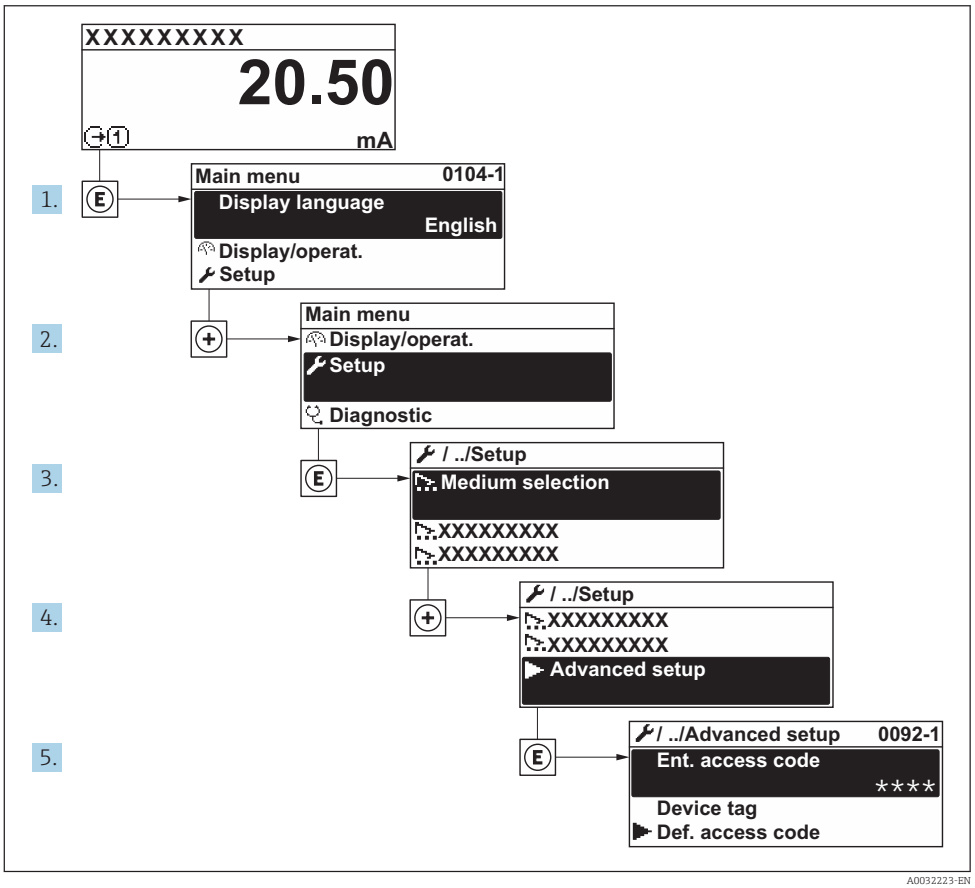

The number of submenus and parameters can vary depending on the device version. Certain submenus and parameters in these submenus are not described in the Operation Instructions. Instead a description is provided in the Special Documentation for the device (→ "Supplementary documentation" section).

Navigation

"Setup" menu → Advanced setup

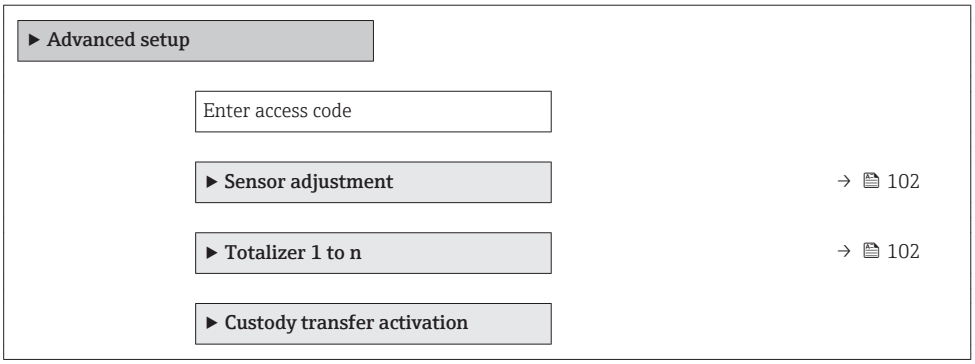

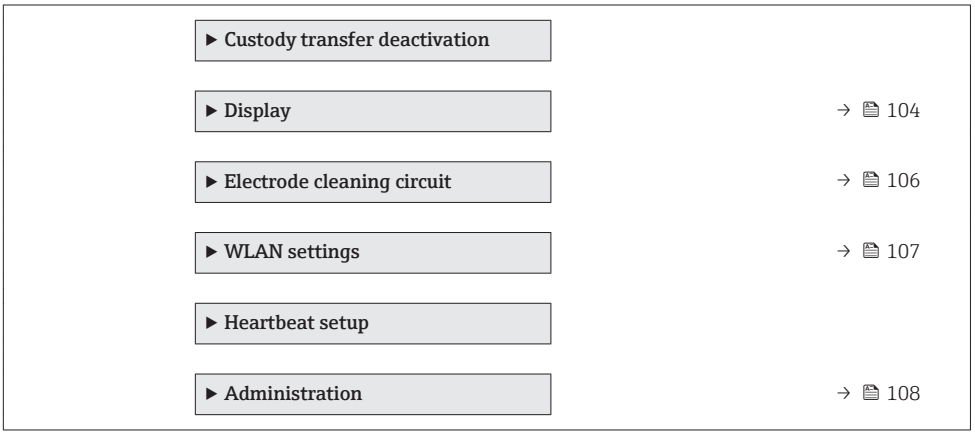

10.5.1 Carrying out a sensor adjustment

The **Sensor adjustment** submenu contains parameters that pertain to the functionality of the sensor.

Navigation
"Setup" menu → Advanced setup → Sensor adjustment

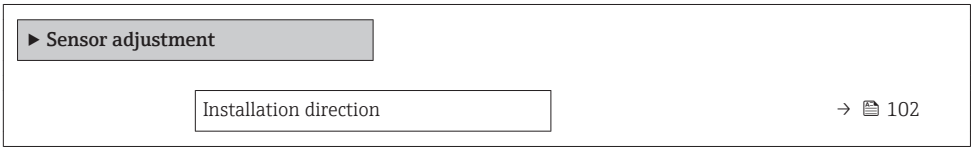

Parameter overview with brief description

Parameter	Description	Selection	Factory setting
Installation direction	Set sign of flow direction to match the direction of the arrow on the sensor.	▪ Flow in arrow direction ▪ Flow against arrow direction	Flow in arrow direction

10.5.2 Configuring the totalizer

In the **"Totalizer 1 to n" submenu** the individual totalizer can be configured.

Navigation
"Setup" menu → Advanced setup → Totalizer 1 to n

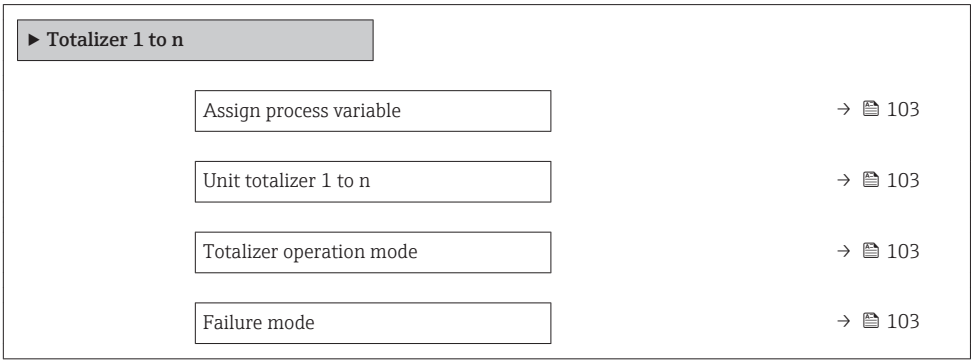

Parameter overview with brief description

Parameter	Prerequisite	Description	Selection	Factory setting
Assign process variable	–	Select process variable for totalizer.	▪ Off ▪ Volume flow ▪ Mass flow ▪ Corrected volume flow	Volume flow
Unit totalizer 1 to n	A process variable is selected in the **Assign process variable** parameter (→ 🖹 103) of the **Totalizer 1 to n** submenu.	Select process variable totalizer unit.	Unit choose list	Country-specific: ▪ l ▪ gal (us)
Totalizer operation mode	A process variable is selected in the **Assign process variable** parameter (→ 🖹 103) of the **Totalizer 1 to n** submenu.	Select totalizer calculation mode.	▪ Net flow total ▪ Forward flow total ▪ Reverse flow total	Net flow total
Failure mode	A process variable is selected in the **Assign process variable** parameter (→ 🖹 103) of the **Totalizer 1 to n** submenu.	Define totalizer behavior in alarm condition.	▪ Stop ▪ Actual value ▪ Last valid value	Stop

10.5.3 Carrying out additional display configurations

In the **Display** submenu you can set all the parameters associated with the configuration of the local display.

Navigation
"Setup" menu → Advanced setup → Display

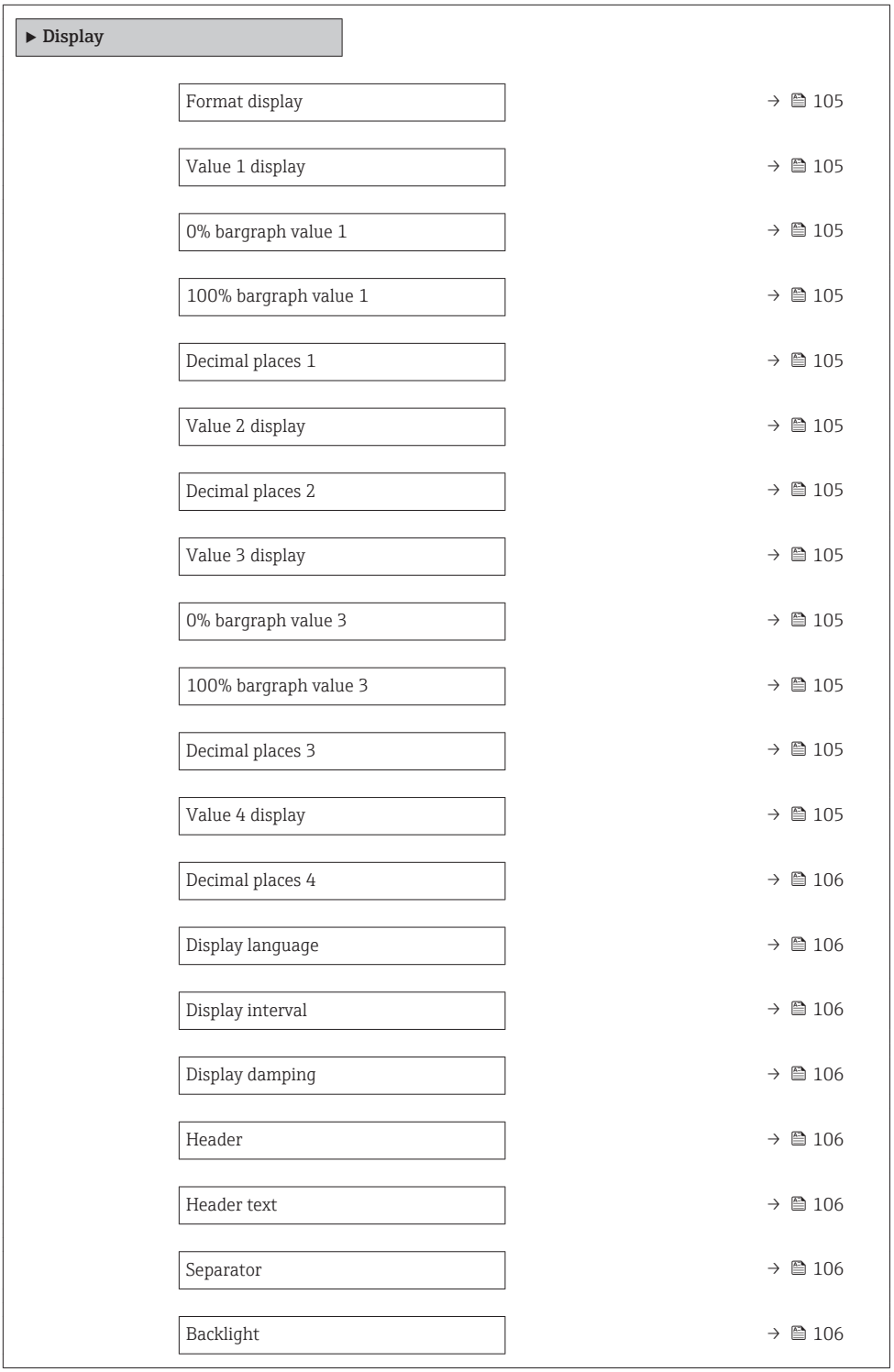

Parameter overview with brief description

Parameter	Prerequisite	Description	Selection / User entry	Factory setting
Format display	A local display is provided.	Select how measured values are shown on the display.	▪ 1 value, max. size ▪ 1 bargraph + 1 value ▪ 2 values ▪ 1 value large + 2 values ▪ 4 values	1 value, max. size
Value 1 display	A local display is provided.	Select the measured value that is shown on the local display.	▪ Volume flow ▪ Mass flow ▪ Corrected volume flow ▪ Flow velocity ▪ Conductivity ▪ Corrected conductivity ▪ Electronic temperature ▪ Totalizer 1 ▪ Totalizer 2 ▪ Totalizer 3 ▪ Current output 1 *	Volume flow
0% bargraph value 1	A local display is provided.	Enter 0% value for bar graph display.	Signed floating-point number	Country-specific: ▪ 0 l/h ▪ 0 gal/min (us)
100% bargraph value 1	A local display is provided.	Enter 100% value for bar graph display.	Signed floating-point number	Depends on country and nominal diameter
Decimal places 1	A measured value is specified in the **Value 1 display** parameter.	Select the number of decimal places for the display value.	▪ x ▪ x.x ▪ x.xx ▪ x.xxx ▪ x.xxxx	x.xx
Value 2 display	A local display is provided.	Select the measured value that is shown on the local display.	For the picklist, see the **Value 2 display** parameter (→ 🖹 96)	None
Decimal places 2	A measured value is specified in the **Value 2 display** parameter.	Select the number of decimal places for the display value.	▪ x ▪ x.x ▪ x.xx ▪ x.xxx ▪ x.xxxx	x.xx
Value 3 display	A local display is provided.	Select the measured value that is shown on the local display.	For the picklist, see the **Value 2 display** parameter (→ 🖹 96)	None
0% bargraph value 3	A selection was made in the **Value 3 display** parameter.	Enter 0% value for bar graph display.	Signed floating-point number	Country-specific: ▪ 0 l/h ▪ 0 gal/min (us)
100% bargraph value 3	A selection was made in the **Value 3 display** parameter.	Enter 100% value for bar graph display.	Signed floating-point number	0
Decimal places 3	A measured value is specified in the **Value 3 display** parameter.	Select the number of decimal places for the display value.	▪ x ▪ x.x ▪ x.xx ▪ x.xxx ▪ x.xxxx	x.xx
Value 4 display	A local display is provided.	Select the measured value that is shown on the local display.	For the picklist, see the **Value 2 display** parameter (→ 🖹 96)	None

Parameter	Prerequisite	Description	Selection / User entry	Factory setting
Decimal places 4	A measured value is specified in the **Value 4 display** parameter.	Select the number of decimal places for the display value.	▪ x ▪ x.x ▪ x.xx ▪ x.xxx ▪ x.xxxx	x.xx
Display language	A local display is provided.	Set display language.	▪ English ▪ Deutsch * ▪ Français * ▪ Español * ▪ Italiano * ▪ Nederlands * ▪ Portuguesa * ▪ Polski * ▪ русский язык (Russian) * ▪ Svenska * ▪ Türkçe * ▪ 中文 (Chinese) * ▪ 日本語 (Japanese) * ▪ 한국어 (Korean) * ▪ العَرَبيّة (Arabic) * ▪ Bahasa Indonesia * ▪ ภาษาไทย (Thai) * ▪ tiếng Việt (Vietnamese) * ▪ čeština (Czech) *	English (alternatively, the ordered language is preset in the device)
Display interval	A local display is provided.	Set time measured values are shown on display if display alternates between values.	1 to 10 s	5 s
Display damping	A local display is provided.	Set display reaction time to fluctuations in the measured value.	0.0 to 999.9 s	0.0 s
Header	A local display is provided.	Select header contents on local display.	▪ Device tag ▪ Free text	Device tag
Header text	In the **Header** parameter, the **Free text** option is selected.	Enter display header text.	Max. 12 characters such as letters, numbers or special characters (e.g. @, %, /)	----------
Separator	A local display is provided.	Select decimal separator for displaying numerical values.	▪ . (point) ▪ , (comma)	. (point)
Backlight	A local display is provided.	Switch the local display backlight on and off.	▪ Disable ▪ Enable	Enable

* Visibility depends on order options or device settings

10.5.4 Performing electrode cleaning

The **Electrode cleaning circuit** wizard guides the user systematically through all the parameters that have to be set for configuring electrode cleaning.

The wizard only appears if the device was ordered with an electrode cleaning circuit.

Navigation
"Setup" menu → Advanced setup → Electrode cleaning circuit

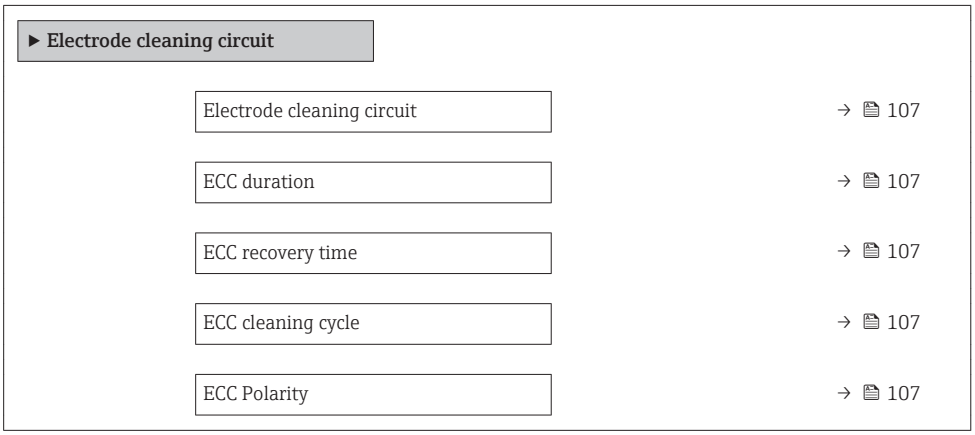

Parameter overview with brief description

Parameter	Prerequisite	Description	Selection / User entry / User interface	Factory setting
Electrode cleaning circuit	For the following order code: "Application package", option **EC** "ECC electrode cleaning"	Enable the cyclic electrode cleaning circuit.	▪ Off ▪ On	Off
ECC duration	For the following order code: "Application package", option **EC** "ECC electrode cleaning"	Enter the duration of electrode cleaning in seconds.	0.01 to 30 s	2 s
ECC recovery time	For the following order code: "Application package", option **EC** "ECC electrode cleaning"	Define recovery time after electrode cleaning. During this time the current output values will be held at last valid value.	1 to 600 s	5 s
ECC cleaning cycle	For the following order code: "Application package", option **EC** "ECC electrode cleaning"	Enter the pause duration between electrode cleaning cycles.	0.5 to 168 h	0.66 h
ECC Polarity	For the following order code: "Application package", option **EC** "ECC electrode cleaning"	Select the polarity of the electrode cleaning circuit.	▪ Positive ▪ Negative	Depends on the electrode material: ▪ Platinum: **Negative** option ▪ Tantalum, Alloy C22, stainless steel: **Positive** option

10.5.5 WLAN configuration

The **WLAN Settings** submenu guides the user systematically through all the parameters that have to be set for the WLAN configuration.

Navigation
"Setup" menu → Advanced setup → WLAN Settings

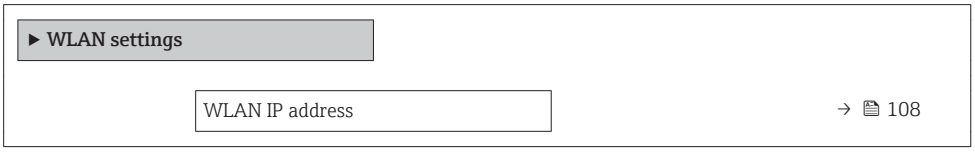

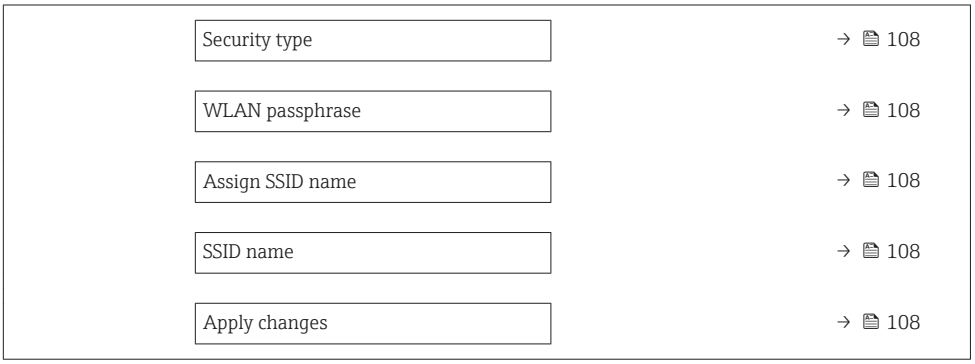

Parameter overview with brief description

Parameter	Prerequisite	Description	User entry / Selection	Factory setting
WLAN IP address	–	Enter IP address of the device WLAN interface.	4 octet: 0 to 255 (in the particular octet)	192.168.1.212
Security type	–	Select the security type of the WLAN interface.	▪ Unsecured ▪ WPA2-PSK	WPA2-PSK
WLAN passphrase	The **WPA2-PSK** option is selected in the **Security type** parameter.	Enter the network key (8 to 32 characters). The network key supplied with the device should be changed during commissioning for security reasons.	8 to 32-digit character string comprising numbers, letters and special characters	Serial number of the measuring device (e.g. L100A802000)
Assign SSID name	–	Select which name will be used for SSID: device tag or user-defined name.	▪ Device tag ▪ User-defined	User-defined
SSID name	▪ The **User-defined** option is selected in the **Assign SSID name** parameter parameter. ▪ The **WLAN access point** option is selected in the **WLAN mode** parameter parameter.	Enter the user-defined SSID name (max. 32 characters). The user-defined SSID name may only be assigned once. If the SSID name is assigned more than once, the devices can interfere with one another.	Max. 32-digit character string comprising numbers, letters and special characters	
Apply changes	–	Use changed WLAN settings.	▪ Cancel ▪ Ok	Cancel

10.5.6 Using parameters for device administration

The **Administration** submenu systematically guides the user through all the parameters that can be used for device administration purposes.

Navigation

"Setup" menu → Advanced setup → Administration

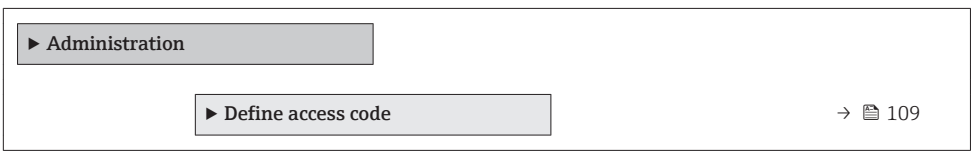

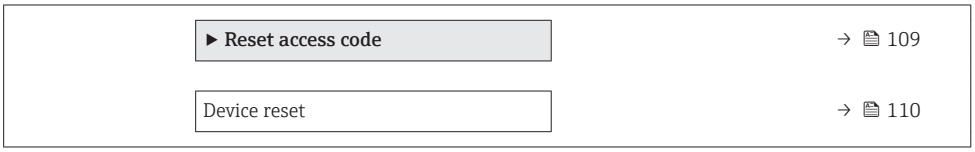

Using the parameter to define the access code

Navigation
"Setup" menu → Advanced setup → Administration → Define access code

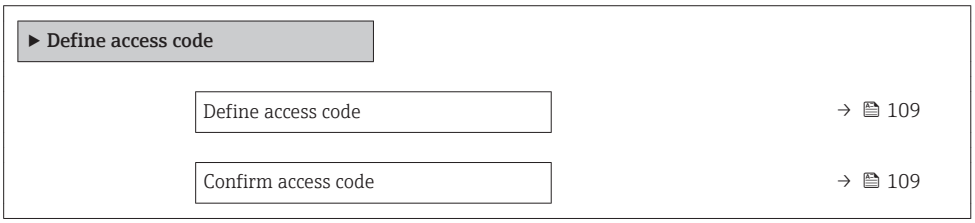

Parameter overview with brief description

Parameter	Description	User entry
Define access code	Restrict write-access to parameters to protect the configuration of the device against unintentional changes.	Max. 16-digit character string comprising numbers, letters and special characters
Confirm access code	Confirm the entered access code.	Max. 16-digit character string comprising numbers, letters and special characters

Using the parameter to reset the access code

Navigation
"Setup" menu → Advanced setup → Administration → Reset access code

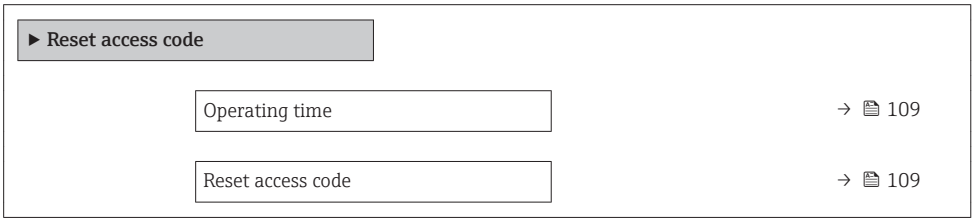

Parameter overview with brief description

Parameter	Description	User interface / User entry	Factory setting
Operating time	Indicates how long the device has been in operation.	Days (d), hours (h), minutes (m) and seconds (s)	–
Reset access code	Reset access code to factory settings. For a reset code, contact your Endress+Hauser service organization. The reset code can only be entered via: ▪ Web browser ▪ DeviceCare, FieldCare (via service interface CDI-RJ45) ▪ Fieldbus	Character string comprising numbers, letters and special characters	0x00

Using the parameter to reset the device

Navigation
"Setup" menu → Advanced setup → Administration

Parameter overview with brief description

Parameter	Description	Selection	Factory setting
Device reset	Reset the device configuration - either entirely or in part - to a defined state.	▪ Cancel ▪ To delivery settings ▪ Restart device ▪ Restore S-DAT backup	Cancel

10.6 Simulation

The **Simulation** submenu enables you to simulate, without a real flow situation, various process variables in the process and the device alarm mode and to verify downstream signal chains (switching valves or closed-control loops).

The parameters displayed depend on:
- The selected device order
- The set operating mode of the pulse/frequency/switch outputs

Navigation
"Diagnostics" menu → Simulation

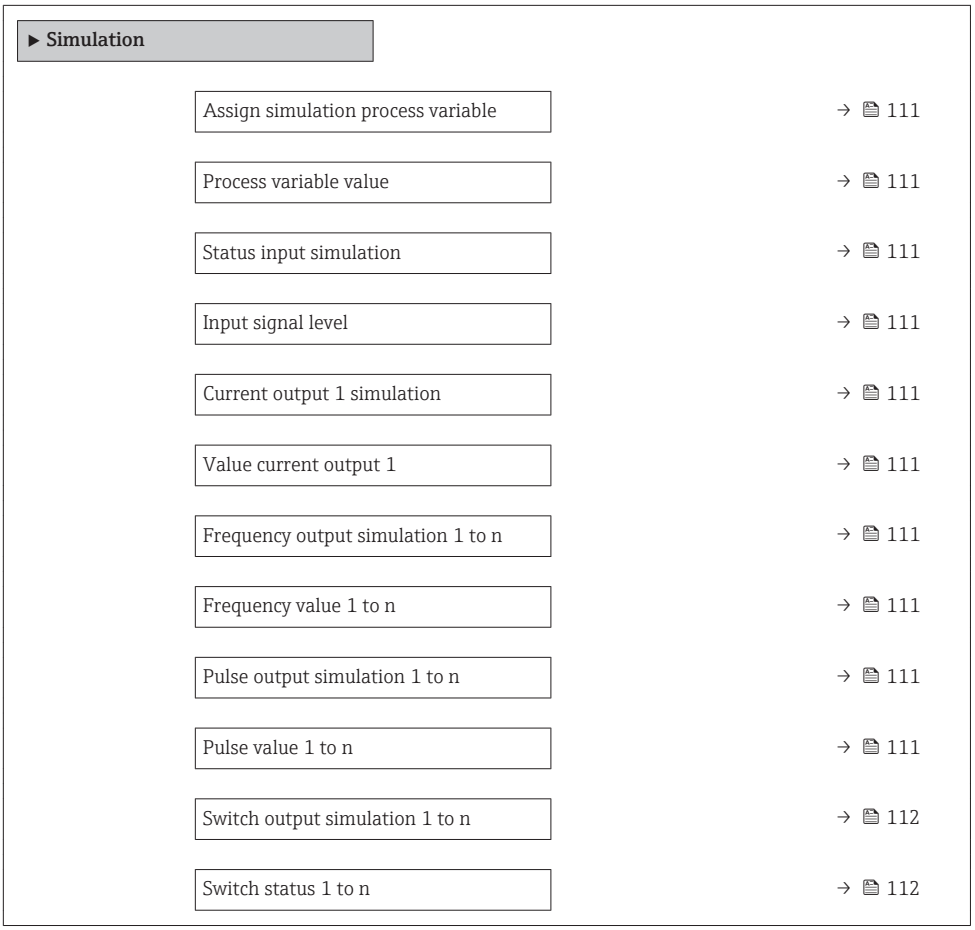

Device alarm simulation	→ 112
Diagnostic event category	→ 112
Diagnostic event simulation	→ 112

Parameter overview with brief description

Parameter	Prerequisite	Description	Selection / User entry	Factory setting
Assign simulation process variable	–	Select a process variable for the simulation process that is activated.	▪ Off ▪ Mass flow ▪ Volume flow ▪ Corrected volume flow ▪ Flow velocity ▪ Conductivity * ▪ Corrected conductivity * ▪ Temperature	Off
Process variable value	A process variable is selected in the **Assign simulation process variable** parameter (→ 111).	Enter the simulation value for the selected process variable.	Depends on the process variable selected	0
Status input simulation	For the following order code: ▪ "Output; input", option I "4-20mA HART, 2x pul./ freq./switch output; status input" ▪ "Output; input", option J "4-20mA HART, certified pulse output, switch output; status input"	Switch simulation of the status input on and off.	▪ Off ▪ On	Off
Input signal level	In the **Status input simulation** parameter, the **On** option is selected.	Select the signal level for the simulation of the status input.	▪ High ▪ Low	High
Current output 1 simulation	–	Switch the simulation of the current output on and off.	▪ Off ▪ On	Off
Value current output 1	In the **Current output simulation** parameter, the **On** option is selected.	Enter the current value for simulation.	3.59 to 22.5 mA	3.59 mA
Frequency output simulation 1 to n	In the **Operating mode** parameter, the **Frequency** option is selected.	Switch the simulation of the frequency output on and off.	▪ Off ▪ On	Off
Frequency value 1 to n	In the **Frequency output simulation 1 to n** parameter, the **On** option is selected.	Enter the frequency value for the simulation.	0.0 to 12 500.0 Hz	0.0 Hz
Pulse output simulation 1 to n	In the **Operating mode** parameter, the **Pulse** option is selected.	Set and switch off the pulse output simulation. For **Fixed value** option: **Pulse width** parameter (→ 91) defines the pulse width of the pulses output.	▪ Off ▪ Fixed value ▪ Down-counting value	Off
Pulse value 1 to n	In the **Pulse output simulation 1 to n** parameter, the **Down-counting value** option is selected.	Enter the number of pulses for simulation.	0 to 65 535	0

Parameter	Prerequisite	Description	Selection / User entry	Factory setting
Switch output simulation 1 to n	In the **Operating mode** parameter, the **Switch** option is selected.	Switch the simulation of the switch output on and off.	▪ Off ▪ On	Off
Switch status 1 to n	–	Select the status of the status output for the simulation.	▪ Open ▪ Closed	Open
Device alarm simulation	–	Switch the device alarm on and off.	▪ Off ▪ On	Off
Diagnostic event category	–	Select a diagnostic event category.	▪ Sensor ▪ Electronics ▪ Configuration ▪ Process	Process
Diagnostic event simulation	–	Select a diagnostic event to simulate this event.	▪ Off ▪ Diagnostic event picklist (depends on the category selected)	Off

* Visibility depends on order options or device settings

10.7 Protecting settings from unauthorized access

The following options exist for protecting the configuration of the measuring device from unintentional modification after commissioning:
- Write protection via access code for the local display and Web browser
- Write protection via write protection switch
- Write protection via keypad lock

10.7.1 Write protection via access code

The effects of the user-specific access code are as follows:
- Via local operation, the parameters for the measuring device configuration are write-protected and their values can no longer be changed.
- Device access is protected via the Web browser, as are the parameters for the measuring device configuration.

Defining the access code via local display

1. Navigate to the **Define access code** parameter (→ 109).
2. Define a max. 16-digit character string comprising numbers, letters and special characters as the access code.
3. Enter the access code again in the to confirm the code.
   ↳ The -symbol appears in front of all write-protected parameters.

The device automatically locks the write-protected parameters again if a key is not pressed for 10 minutes in the navigation and editing view. The device locks the write-protected parameters automatically after 60 s if the user skips back to the operational display mode from the navigation and editing view.

- If parameter write protection is activated via an access code, it can also only be deactivated via this access code → 67.
- The user role with which the user is currently logged on via the local display is indicated by the → 67 **Access status display** parameter. Navigation path: Operation → Access status display

Parameters which can always be modified via the local display

Certain parameters that do not affect the measurement are excepted from parameter write protection via the local display. Despite the user-specific access code, they can always be modified, even if the other parameters are locked.

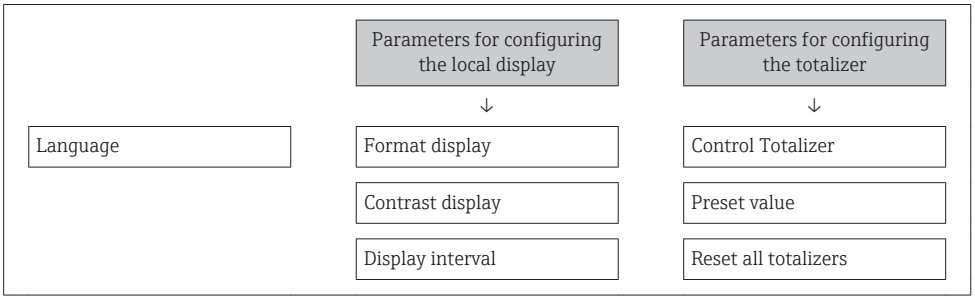

Defining the access code via the Web browser

1. Navigate to the **Define access code** parameter (→ 🖹 109).
2. Define a max. 16-digit numeric code as an access code.
3. Enter the access code again in the to confirm the code.
   ↳ The Web browser switches to the login page.

If no action is performed for 10 minutes, the Web browser automatically returns to the login page.

- If parameter write protection is activated via an access code, it can also only be deactivated via this access code → 🖹 67.
- The user role with which the user is currently logged on via Web browser is indicated by the **Access status tooling** parameter. Navigation path: Operation → Access status tooling

10.7.2 Write protection via write protection switch

Unlike parameter write protection via a user-specific access code, this allows write access to the entire operating menu - except for the **"Contrast display" parameter** - to be locked.

The parameter values are now read only and cannot be edited any more (exception **"Contrast display" parameter**):
- Via local display
- Via service interface (CDI-RJ45)
- Via HART protocol

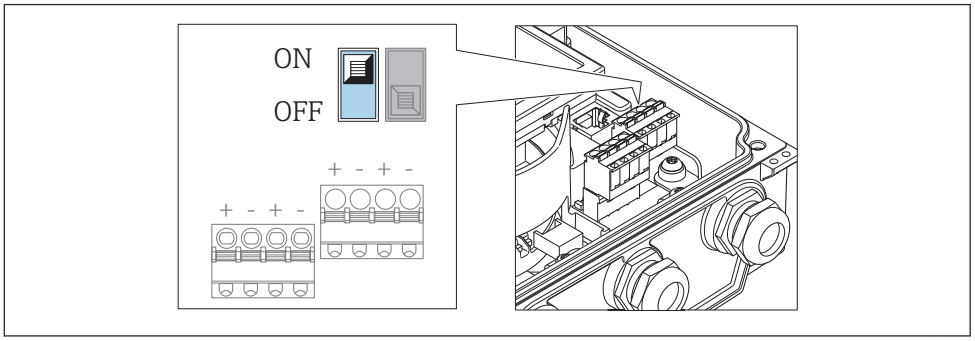

1. Loosen the 4 fixing screws on the housing cover and open the housing cover.

2. Setting the write protection switch (WP) on the main electronics module to the **ON** position enables the hardware write protection. Setting the write protection switch (WP) on the main electronics module to the **OFF** position (factory setting) disables the hardware write protection.
   ↳ If the hardware write protection is enabled: The **Hardware locked** option is displayed in the **Locking status** parameter . In addition, on the local display the 🔒-symbol appears in front of the parameters in the header of the operational display and in the navigation view.

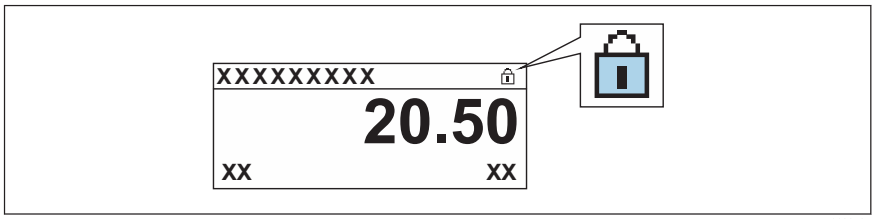

A0029425

   If the hardware write protection is disabled: No option is displayed in the **Locking status** parameter . On the local display, the 🔒-symbol disappears from in front of the parameters in the header of the operational display and in the navigation view.

3. **⚠ WARNING**

Excessive tightening torque applied to the fixing screws!
Risk of damaging the plastic transmitter.
► Tighten the fixing screws as per the tightening torque .

Reverse the removal procedure to reassemble the transmitter.

11 Operation

11.1 Reading the device locking status

Device active write protection: **Locking status** parameter

Operation → Locking status

Function scope of the "Locking status" parameter

Options	Description
None	The access status displayed in the **Access status display** parameter applies → 67. Only appears on local display.
Hardware locked	The DIP switch for hardware locking is activated on the main electronics module. This locks write access to the parameters (e.g. via local display or operating tool) .
CT active - defined parameters	Only available for Promag W. The DIP switch for custody transfer mode is activated on the I/O module. This locks write access to defined parameters (e.g. via local display or operating tool). For detailed information on custody transfer mode, see the Special Documentation for the device
CT active - all parameters	Only available for Promag W. The DIP switch for custody transfer mode is activated on the I/O module. This locks write access to all the parameters (e.g. via local display or operating tool). For detailed information on custody transfer mode, see the Special Documentation for the device
Temporarily locked	Write access to the parameters is temporarily locked on account of internal processes running in the device (e.g. data upload/download, reset etc.). Once the internal processing has been completed, the parameters can be changed once again.

11.2 Adjusting the operating language

Detailed information:
- To configure the operating language → 84
- For information on the operating languages supported by the measuring device → 172

11.3 Configuring the display

Detailed information:
- On the basic settings for the local display → 95
- On the advanced settings for the local display → 104

11.4 Reading measured values

With the **Measured values** submenu, it is possible to read all the measured values.

Navigation
"Diagnostics" menu → Measured values → Output values

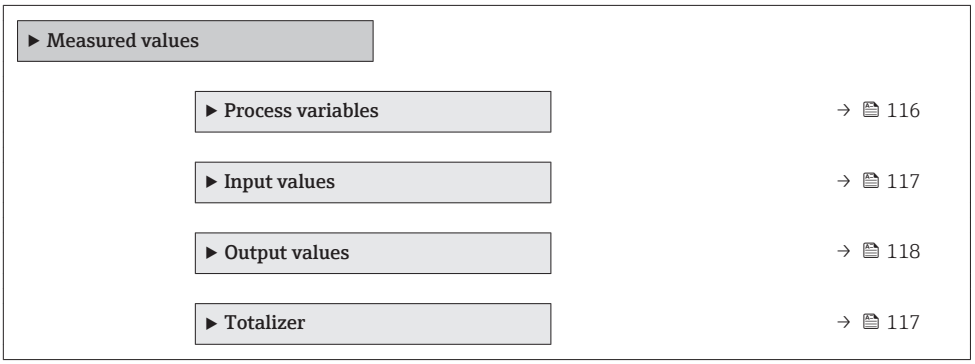

11.4.1 Process variables

The **Process variables** submenu contains all the parameters needed to display the current measured values for each process variable.

Navigation
"Diagnostics" menu → Measured values → Process variables

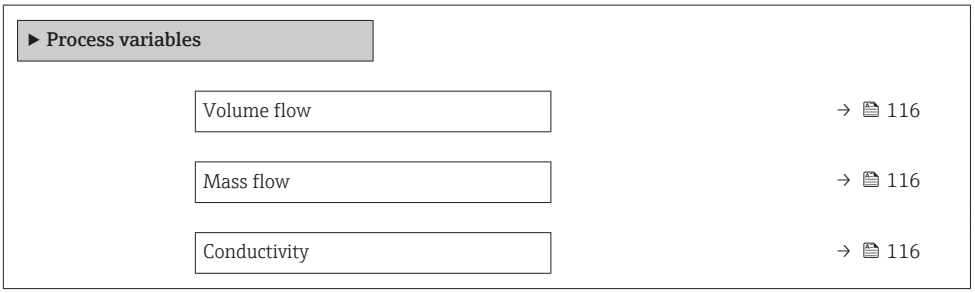

Parameter overview with brief description

Parameter	Prerequisite	Description	User interface
Volume flow	–	Displays the volume flow currently measured. *Dependency* The unit is taken from the **Volume flow unit** parameter (→ 87).	Signed floating-point number
Mass flow	–	Displays the mass flow currently calculated. *Dependency* The unit is taken from the **Mass flow unit** parameter (→ 87).	Signed floating-point number
Conductivity	The **On** option is selected in the **Conductivity measurement** parameter parameter.	Displays the conductivity currently measured. *Dependency* The unit is taken from the **Conductivity unit** parameter (→ 87).	Signed floating-point number

11.4.2 "Totalizer" submenu

The **Totalizer** submenu contains all the parameters needed to display the current measured values for every totalizer.

Navigation
"Diagnostics" menu → Measured values → Totalizer

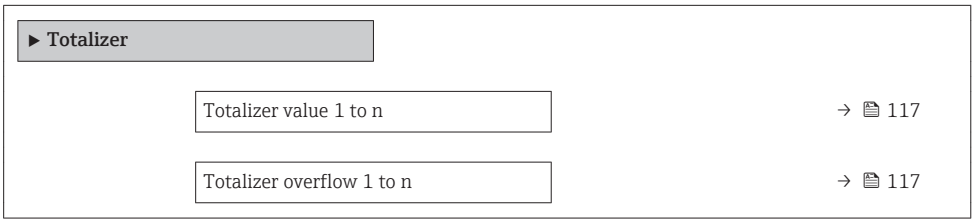

Parameter overview with brief description

Parameter	Prerequisite	Description	User interface
Totalizer value 1 to n	One of the following options is selected in the **Assign process variable** parameter (→ 103) of the **Totalizer 1 to n** submenu: ▪ Volume flow ▪ Mass flow	Displays the current totalizer counter value.	Signed floating-point number
Totalizer overflow 1 to n	One of the following options is selected in the **Assign process variable** parameter (→ 103) of the **Totalizer 1 to n** submenu: ▪ Volume flow ▪ Mass flow	Displays the current totalizer overflow.	Integer with sign

11.4.3 Input values

The **Input values** submenu guides you systematically to the individual input values.

The submenu appears only if the device was ordered with a status input → 41.

Navigation
"Diagnostics" menu → Measured values → Input values

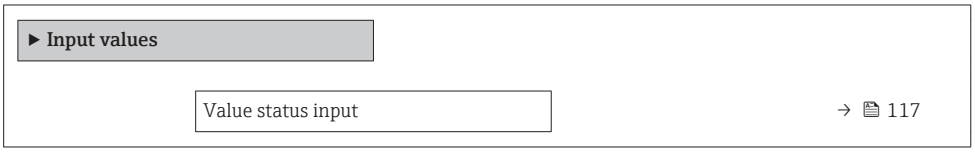

Parameter overview with brief description

Parameter	Prerequisite	Description	User interface
Value status input	For the following order code: ▪ "Output; input", option **I** "4-20mA HART, 2x pul./freq./switch output; status input" ▪ "Output; input", option **J** "4-20mA HART, certified pulse output, switch output; status input"	Shows the current input signal level.	▪ High ▪ Low

11.4.4 Output values

The **Output values** submenu contains all the parameters needed to display the current measured values for every output.

The parameters displayed depend on:
- The selected device order
- The set operating mode of the pulse/frequency/switch outputs

Navigation
"Diagnostics" menu → Measured values → Output values

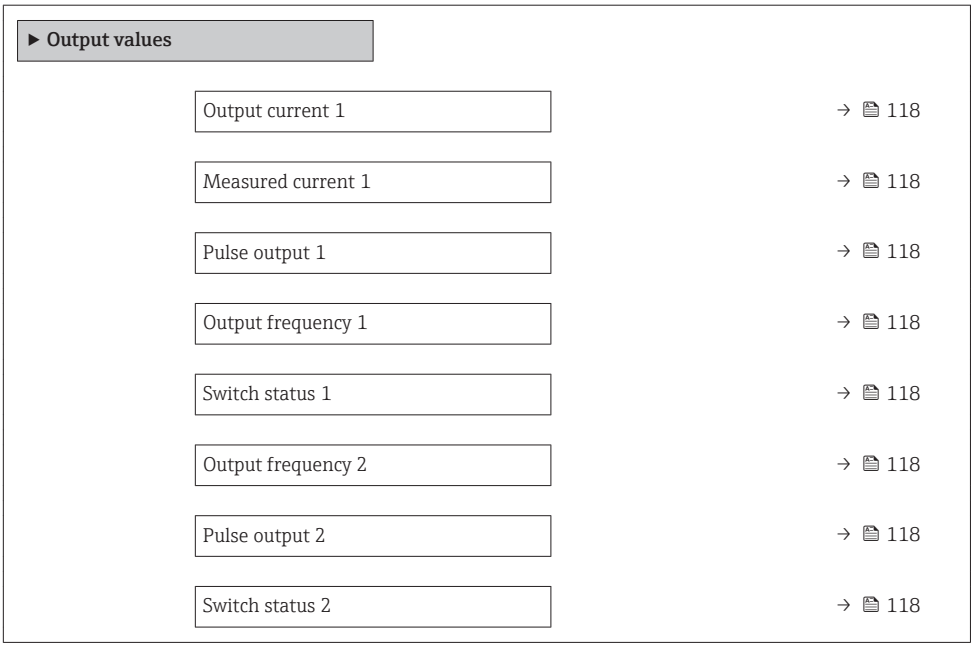

Parameter overview with brief description

Parameter	Prerequisite	Description	User interface
Output current 1	–	Displays the current value currently calculated for the current output.	3.59 to 22.5 mA
Measured current 1	–	Displays the current value currently measured for the current output.	0 to 30 mA
Pulse output 1 to n	The **Pulse** option is selected in the **Operating mode** parameter parameter.	Displays the pulse frequency currently output.	Positive floating-point number
Output frequency 1 to n	In the **Operating mode** parameter, the **Frequency** option is selected.	Displays the value currently measured for the frequency output.	0.0 to 12 500.0 Hz
Switch status 1 to n	In the **Operating mode** parameter, the **Switch** option is selected.	Displays the current switch output status.	▪ Open ▪ Closed

11.5 Adapting the measuring device to the process conditions

The following are available for this purpose:
- Basic settings using the**Setup** menu (→ 84)
- Advanced settings using the**Advanced setup** submenu (→ 101)

11.6 Performing a totalizer reset

The totalizers are reset in the **Operation** submenu:
- Control Totalizer
- Reset all totalizers

Navigation

"Operation" menu → Totalizer handling

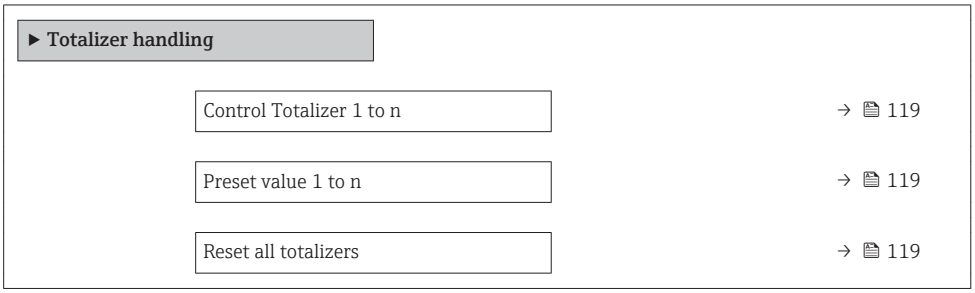

Parameter overview with brief description

Parameter	Prerequisite	Description	Selection / User entry	Factory setting
Control Totalizer 1 to n	A process variable is selected in the **Assign process variable** parameter (→ 103) of the **Totalizer 1 to n** submenu.	Control totalizer value.	▪ Totalize ▪ Reset + hold ▪ Preset + hold ▪ Reset + totalize ▪ Preset + totalize ▪ Hold	Totalize
Preset value 1 to n	A process variable is selected in the **Assign process variable** parameter (→ 103) of the **Totalizer 1 to n** submenu.	Specify start value for totalizer. *Dependency* The unit of the selected process variable is specified for the totalizer in the **Unit totalizer** parameter (→ 103).	Signed floating-point number	0 l
Reset all totalizers	–	Reset all totalizers to 0 and start.	▪ Cancel ▪ Reset + totalize	Cancel

11.6.1 Function scope of the "Control Totalizer" parameter

Options	Description
Totalize	The totalizer is started or continues running.
Reset + hold	The totaling process is stopped and the totalizer is reset to 0.
Preset + hold	The totaling process is stopped and the totalizer is set to its defined start value from the **Preset value** parameter.
Reset + totalize	The totalizer is reset to 0 and the totaling process is restarted.
Preset + totalize	The totalizer is set to the defined start value from the **Preset value** parameter and the totaling process is restarted.

11.6.2 Function scope of the "Reset all totalizers" parameter

Options	Description
Cancel	No action is executed and the user exits the parameter.
Reset + totalize	Resets all totalizers to 0 and restarts the totaling process. This deletes all the flow values previously totalized.

11.7 Showing data logging

The **Extended HistoROM** application package must be enabled in the device (order option) for the **Data logging** submenu to appear. This contains all the parameters for the measured value history.

Data logging is also available via:
- Plant Asset Management Tool FieldCare → 77.
- Web browser

Function range
- A total of 1000 measured values can be stored
- 4 logging channels
- Adjustable logging interval for data logging
- Display of the measured value trend for each logging channel in the form of a chart

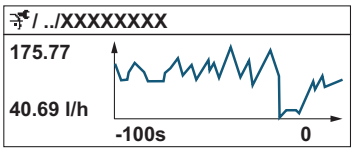

A0034352

- x-axis: depending on the number of channels selected displays 250 to 1000 measured values of a process variable.
- y-axis: displays the approximate measured value span and constantly adapts this to the ongoing measurement.

If the length of the logging interval or the assignment of the process variables to the channels is changed, the content of the data logging is deleted.

Navigation
"Diagnostics" menu → Data logging

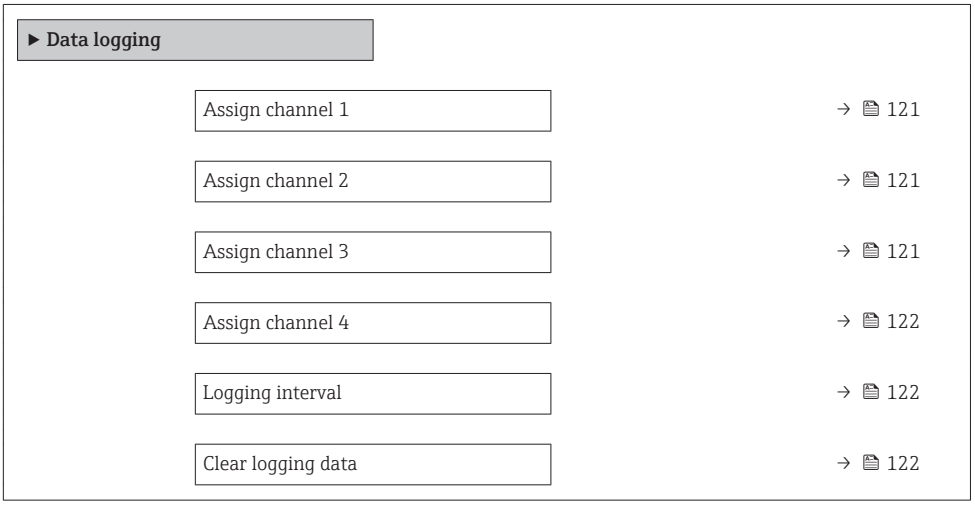

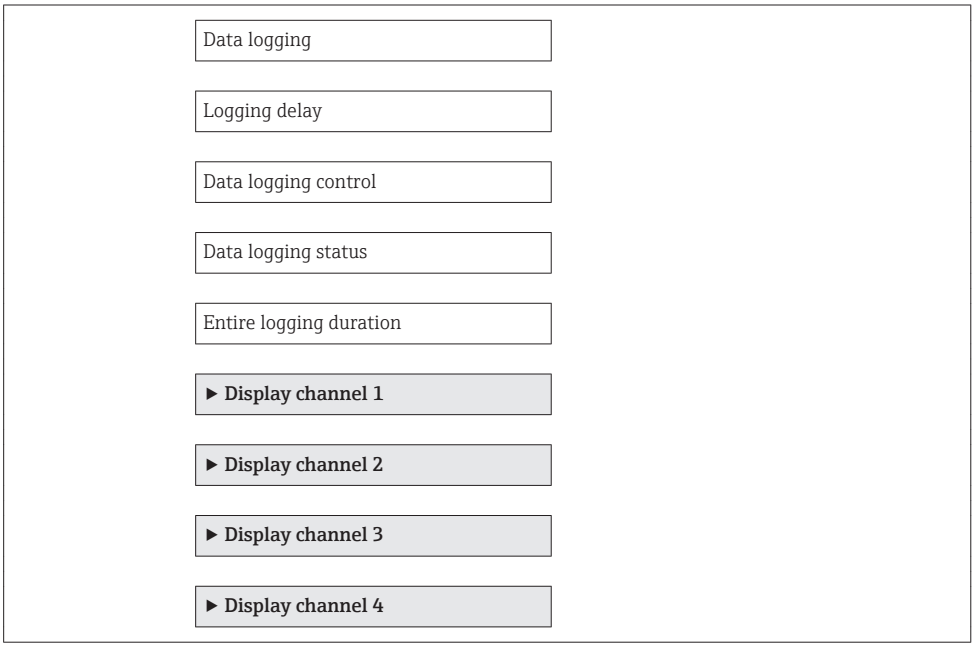

Parameter overview with brief description

Parameter	Prerequisite	Description	Selection / User entry	Factory setting
Assign channel 1	The **Extended HistoROM** application package is available.	Assign process variable to logging channel.	▪ Off ▪ Volume flow ▪ Mass flow ▪ Corrected volume flow ▪ Flow velocity ▪ Conductivity * ▪ Corrected conductivity * ▪ Temperature ▪ Electronic temperature ▪ Current output 1 *	Off
Assign channel 2	The **Extended HistoROM** application package is available. The software options currently enabled are displayed in the **Software option overview** parameter.	Assign process variable to logging channel.	Picklist, see **Assign channel 1** parameter (→ 121)	Off
Assign channel 3	The **Extended HistoROM** application package is available. The software options currently enabled are displayed in the **Software option overview** parameter.	Assign process variable to logging channel.	Picklist, see **Assign channel 1** parameter (→ 121)	Off

Parameter	Prerequisite	Description	Selection / User entry	Factory setting
Assign channel 4	The **Extended HistoROM** application package is available. The software options currently enabled are displayed in the **Software option overview** parameter.	Assign process variable to logging channel.	Picklist, see **Assign channel 1** parameter (→ 121)	Off
Logging interval	The **Extended HistoROM** application package is available.	Define the logging interval for data logging. This value defines the time interval between the individual data points in the memory.	0.1 to 999.0 s	1.0 s
Clear logging data	The **Extended HistoROM** application package is available.	Clear the entire logging data.	▪ Cancel ▪ Clear data	Cancel

* Visibility depends on order options or device settings

12 Diagnostics and troubleshooting

12.1 General troubleshooting

For local display

Error	Possible causes	Solution
Local display dark and no output signals	Supply voltage does not match the value indicated on the nameplate.	Apply the correct supply voltage → 46→ 46.
Local display dark and no output signals	No contact between connecting cables and terminals.	Check the connection of the cables and correct if necessary.
Local display dark and no output signals	Terminals are not plugged into the main electronics module correctly.	Check terminals.
Local display dark and no output signals	Main electronics module is defective.	Order spare part → 143.
Local display dark and no output signals	The connector between the main electronics module and display module is not plugged in correctly.	Check the connection and correct if necessary.
Local display dark and no output signals	The connecting cable is not plugged in correctly.	1. Check the connection of the electrode cable and correct if necessary. 2. Check the connection of the coil current cable and correct if necessary.
Local display is dark, but signal output is within the valid range	Display is set too bright or too dark.	▪ Set the display brighter by simultaneously pressing ⊞ + Ⓔ. ▪ Set the display darker by simultaneously pressing ⊟ + Ⓔ.
Local display is dark, but signal output is within the valid range	Display module is defective.	Order spare part → 143.
Backlighting of local display is red	Diagnostic event with "Alarm" diagnostic behavior has occurred.	Take remedial measures
Text on local display appears in a foreign language and cannot be understood.	Incorrect operating language is configured.	1. Press ⊟ + ⊞ for 2 s ("home position"). 2. Press Ⓔ. 3. Set the desired language in the **Display language** parameter (→ 106).
Message on local display: "Communication Error" "Check Electronics"	Communication between the display module and the electronics is interrupted.	▪ Check the cable and the connector between the main electronics module and display module. ▪ Order spare part → 143.

For output signals

Error	Possible causes	Solution
Signal output outside the valid range	Main electronics module is defective.	Order spare part → 143.
Device shows correct value on local display, but signal output is incorrect, though in the valid range.	Configuration error	Check and correct the parameter configuration.
Device measures incorrectly.	Configuration error or device is operated outside the application.	1. Check and correct parameter configuration. 2. Observe limit values specified in the "Technical Data".

For access

Error	Possible causes	Solution
No write access to parameters	Hardware write protection enabled	Set the write protection switch on main electronics module to the **OFF** position → 🖹 113.
No write access to parameters	Current user role has limited access authorization	1. Check user role → 🖹 67. 2. Enter correct customer-specific access code → 🖹 67.
No connection via HART protocol	Communication resistor missing or incorrectly installed.	Install the communication resistor (250 Ω) correctly. Observe the maximum load → 🖹 153.
No connection via HART protocol	Commubox ▪ Connected incorrectly ▪ Configured incorrectly ▪ Drivers not installed correctly ▪ USB interface on computer configured incorrectly	Observe the documentation for the Commubox. 📖 FXA195 HART: Document "Technical Information" TI00404F
Not connecting to Web server	Web server disabled	Using the "FieldCare" or "DeviceCare" operating tool, check whether the Web server of the measuring device is enabled, and enable it if necessary→ 🖹 74.
	Incorrect setting for the Ethernet interface of the computer	1. Check the properties of the Internet protocol (TCP/IP) → 🖹 70. 2. Check the network settings with the IT manager.
Not connecting to Web server	Incorrect IP address	Check the IP address: 192.168.1.212 → 🖹 70
Not connecting to Web server	Incorrect WLAN access data	▪ Check WLAN network status. ▪ Log on to the device again using WLAN access data. ▪ Verify that WLAN is enabled on the measuring device and operating device .
	WLAN communication disabled	–
Not connecting to Web server, FieldCare or DeviceCare	No WLAN network available	▪ Check if WLAN reception is present: LED on display module is lit blue ▪ Check if WLAN connection is enabled: LED on display module flashes blue ▪ Switch on instrument function.
Network connection not present or unstable	WLAN network is weak.	Operating device is outside of reception range: Check network status on operating device.
	Parallel WLAN and Ethernet communication	▪ Check network settings. ▪ Temporarily enable only the WLAN as an interface.
Web browser frozen and operation no longer possible	Data transfer active	Wait until data transfer or current action is finished.
	Connection lost	1. Check cable connection and power supply. 2. Refresh the Web browser and restart if necessary.
Content of Web browser incomplete or difficult to read	Not using optimum version of Web server.	1. Use the correct Web browser version . 2. Clear the Web browser cache and restart the Web browser.
	Unsuitable view settings.	Change the font size/display ratio of the Web browser.

Error	Possible causes	Solution
No or incomplete display of contents in the Web browser	▪ JavaScript not enabled ▪ JavaScript cannot be enabled	1. Enable JavaScript. 2. Enter http://192.168.1.212/basic.html as the IP address.
Operation with FieldCare or DeviceCare via CDI-RJ45 service interface (port 8000)	Firewall of computer or network is preventing communication	Depending on the settings of the firewall used on the computer or in the network, the firewall must be adapted or disabled to allow FieldCare/DeviceCare access.
Flashing of firmware with FieldCare or DeviceCare via CDI-RJ45 service interface (via port 8000 or TFTP ports)	Firewall of computer or network is preventing communication	Depending on the settings of the firewall used on the computer or in the network, the firewall must be adapted or disabled to allow FieldCare/DeviceCare access.

12.2 Diagnostic information via light emitting diodes

12.2.1 Transmitter

Different LEDs in the transmitter provide information on the device status.

LED	Color	Meaning
Supply voltage	Off	Supply voltage is off or too low
	Green	Supply voltage is ok
Link/Activity	Orange	Link available but no activity
	Flashing orange	Activity present
Communication	Flashing white	HART communication is active.
Alarm	Green	Measuring device is ok
	Flashing green	Measuring device not configured
	Off	Firmware error
	Red	Main error
	Flashing red	Error
	Flashing red/green	Start measuring device

12.3 Diagnostic information on local display

12.3.1 Diagnostic message

Faults detected by the self-monitoring system of the measuring device are displayed as a diagnostic message in alternation with the operational display.

Operational display in alarm condition	Diagnostic message

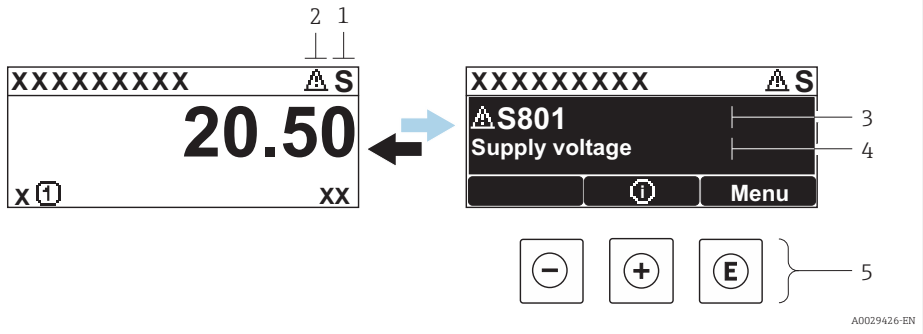

1 *Status signal*
2 *Diagnostic behavior*
3 *Diagnostic behavior with diagnostic code*
4 *Short text*
5 *Operating elements*

If two or more diagnostic events are pending simultaneously, only the message of the diagnostic event with the highest priority is shown.

Other diagnostic events that have occurred can be displayed in the **Diagnostics** menu:
- Via parameter
- Via submenus → 136

Status signals

The status signals provide information on the state and reliability of the device by categorizing the cause of the diagnostic information (diagnostic event).

The status signals are categorized according to VDI/VDE 2650 and NAMUR Recommendation NE 107: F = Failure, C = Function Check, S = Out of Specification, M = Maintenance Required

Symbol	Meaning
F	**Failure** A device error has occurred. The measured value is no longer valid.
C	**Function check** The device is in service mode (e.g. during a simulation).
S	**Out of specification** The device is operated: ▪ Outside its technical specification limits (e.g. outside the process temperature range) ▪ Outside of the configuration carried out by the user (e.g. maximum flow in parameter **20 mA value**)
M	**Maintenance required** Maintenance is required. The measured value remains valid.

Diagnostic behavior

Symbol	Meaning
	**Alarm** ▪ Measurement is interrupted. ▪ Signal outputs and totalizers assume the defined alarm condition. ▪ A diagnostic message is generated. ▪ The background lighting changes to red.
	**Warning** Measurement is resumed. The signal outputs and totalizers are not affected. A diagnostic message is generated.

Diagnostic information

The fault can be identified using the diagnostic information. The short text helps you by providing information about the fault. In addition, the corresponding symbol for the diagnostic behavior is displayed in front of the diagnostic information on the local display.

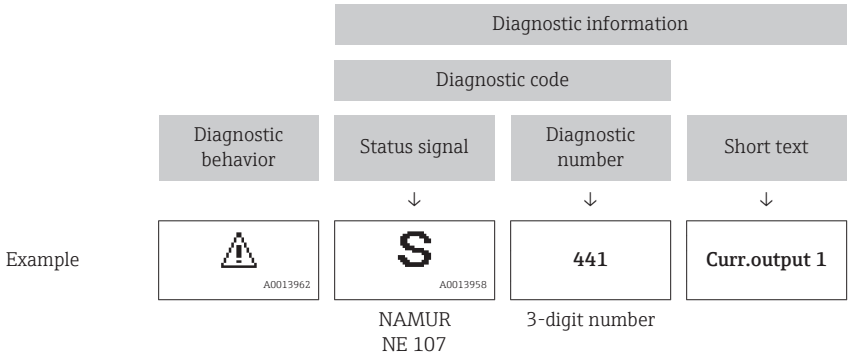

Operating elements

Key	Meaning
	**Plus key** *In a menu, submenu* Opens the message about remedy information.
	**Enter key** *In a menu, submenu* Opens the operating menu.

12.3.2 Calling up remedial measures

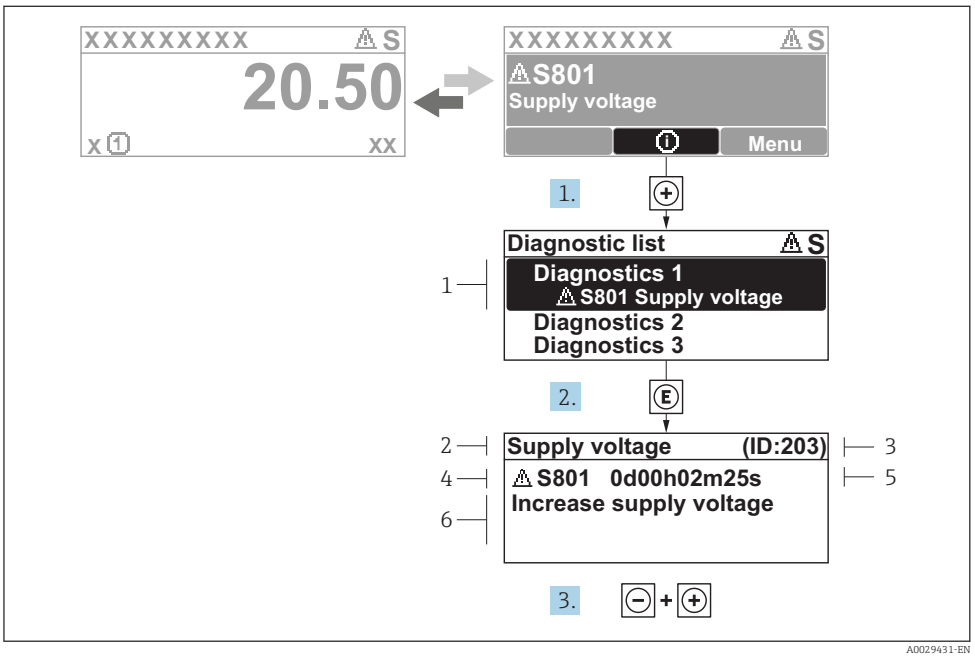

32 *Message about remedial measures*

1 *Diagnostic information*
2 *Short text*
3 *Service ID*
4 *Diagnostic behavior with diagnostic code*
5 *Operation time of occurrence*
6 *Remedial measures*

1. The user is in the diagnostic message.
   Press ⊞ (ⓘ symbol).
   ↳ The **Diagnostic list** submenu opens.
2. Select the desired diagnostic event with ⊞ or ⊟ and press Ⓔ .
   ↳ The message about the remedial measures opens.
3. Press ⊟ + ⊞ simultaneously.
   ↳ The message about the remedial measures closes.

The user is in the **Diagnostics** menu at an entry for a diagnostics event, e.g. in the **Diagnostic list** submenu or **Previous diagnostics** parameter.

1. Press Ⓔ.
   ↳ The message for the remedial measures for the selected diagnostic event opens.
2. Press ⊟ + ⊞ simultaneously.
   ↳ The message for the remedial measures closes.

12.4 Diagnostic information in the Web browser

12.4.1 Diagnostic options

Any faults detected by the measuring device are displayed in the Web browser on the home page once the user has logged on.

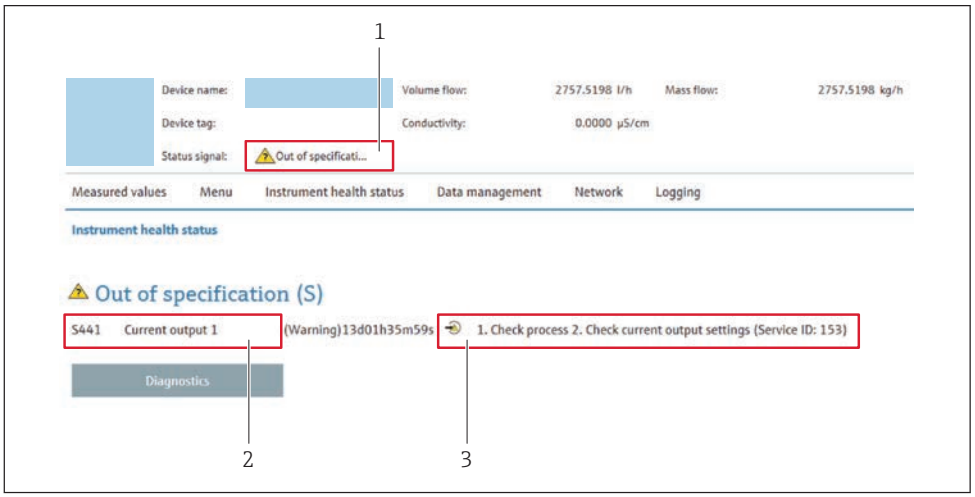

1 Status area with status signal
2 Diagnostic information→ 127
3 Remedy information with Service ID

In addition, diagnostic events which have occurred can be shown in the **Diagnostics** menu:
- Via parameter
- Via submenu → 136

Status signals

The status signals provide information on the state and reliability of the device by categorizing the cause of the diagnostic information (diagnostic event).

Symbol	Meaning
	Failure A device error has occurred. The measured value is no longer valid.
	Function check The device is in service mode (e.g. during a simulation).
	Out of specification The device is operated: ▪ Outside its technical specification limits (e.g. outside the process temperature range) ▪ Outside of the configuration carried out by the user (e.g. maximum flow in parameter **20 mA value**)
	Maintenance required Maintenance is required. The measured value is still valid.

The status signals are categorized in accordance with VDI/VDE 2650 and NAMUR Recommendation NE 107.

12.4.2 Calling up remedy information

Remedy information is provided for every diagnostic event to ensure that problems can be rectified quickly. These measures are displayed in red along with the diagnostic event and the related diagnostic information.

12.5 Diagnostic information in FieldCare or DeviceCare

12.5.1 Diagnostic options

Any faults detected by the measuring device are displayed on the home page of the operating tool once the connection has been established.

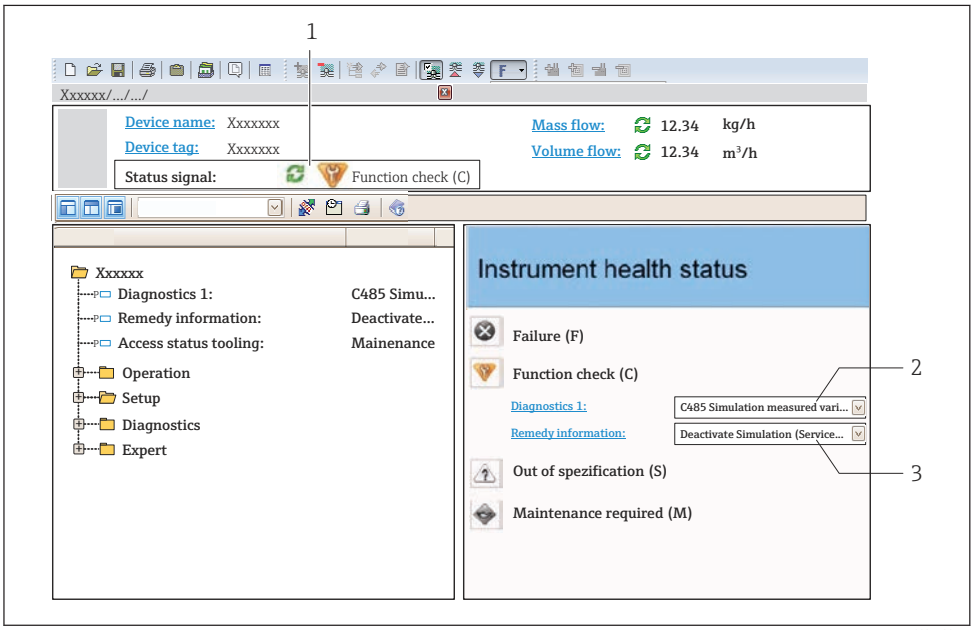

1 *Status area with status signal* → 🖹 *126*
2 *Diagnostic information* → 🖹 *127*
3 *Remedy information with Service ID*

In addition, diagnostic events which have occurred can be shown in the **Diagnostics** menu:
- Via parameter
- Via submenu → 🖹 136

Diagnostic information

The fault can be identified using the diagnostic information. The short text helps you by providing information about the fault. In addition, the corresponding symbol for the diagnostic behavior is displayed in front of the diagnostic information on the local display.

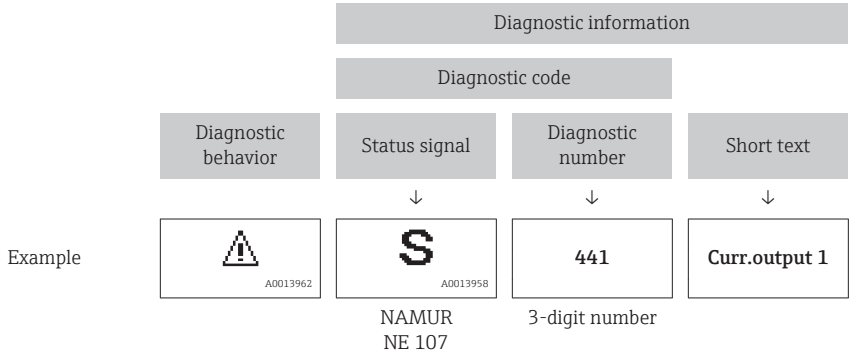

12.5.2 Calling up remedy information

Remedy information is provided for every diagnostic event to ensure that problems can be rectified quickly:
- On the home page
  Remedy information is displayed in a separate field below the diagnostics information.
- In the **Diagnostics** menu
  Remedy information can be called up in the working area of the user interface.

The user is in the **Diagnostics** menu.

1. Call up the desired parameter.
2. On the right in the working area, mouse over the parameter.
   ↳ A tool tip with remedy information for the diagnostic event appears.

12.6 Adapting the diagnostic information

12.6.1 Adapting the diagnostic behavior

Each item of diagnostic information is assigned a specific diagnostic behavior at the factory. The user can change this assignment for specific diagnostic information in the **Diagnostic behavior** submenu.

Expert → System → Diagnostic handling → Diagnostic behavior

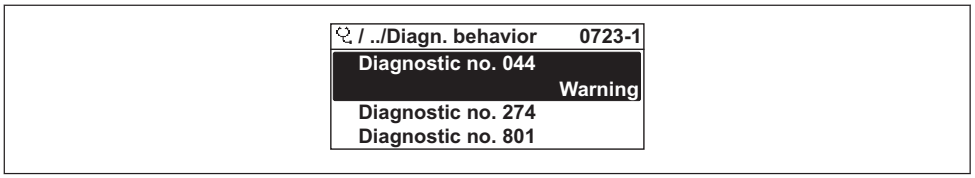

33 Taking the example of the local display

You can assign the following options to the diagnostic number as the diagnostic behavior:

Options	Description
Alarm	The device stops measurement. The signal outputs and totalizers assume the defined alarm condition. A diagnostic message is generated. The background lighting changes to red.
Warning	The device continues to measure. The signal outputs and totalizers are not affected. A diagnostic message is generated.
Logbook entry only	The device continues to measure. The diagnostic message is displayed only in the **Event logbook** submenu (**Event list** submenu) and is not displayed in alternation with the operational display.
Off	The diagnostic event is ignored, and no diagnostic message is generated or entered.

12.6.2 Adapting the status signal

Each item of diagnostic information is assigned a specific status signal at the factory. The user can change this assignment for specific diagnostic information in the **Diagnostic event category** submenu.

Expert → Communication → Diagnostic event category

Available status signals

Configuration as per HART 7 Specification (Condensed Status), in accordance with NAMUR NE107.

Symbol	Meaning
F A0013956	**Failure** A device error is present. The measured value is no longer valid.
C A0013959	**Function check** The device is in service mode (e.g. during a simulation).
S A0013958	**Out of specification** The device is being operated: ▪ Outside its technical specification limits (e.g. outside the process temperature range) ▪ Outside of the configuration carried out by the user (e.g. maximum flow in parameter **20 mA value**)
M A0013957	**Maintenance required** Maintenance is required. The measured value is still valid.
N A0023076	Has no effect on the condensed status.

12.7 Overview of diagnostic information

The amount of diagnostic information and the number of measured variables affected increase if the measuring device has one or more application packages.

In the case of some items of diagnostic information, the status signal and the diagnostic behavior can be changed. Change the diagnostic information → 131

Diagnostic number	Short text	Remedy instructions	Status signal [from the factory]	Diagnostic behavior [from the factory]
Diagnostic of sensor				
043	Sensor short circuit	1. Check sensor cable and sensor 2. Execute Heartbeat Verification 3. Replace sensor cable or sensor	S	Warning [1]
082	Data storage	1. Check module connections 2. Contact service	F	Alarm
083	Memory content	1. Restart device 2. Restore HistoROM S-DAT backup ('Device reset' parameter) 3. Replace HistoROM S-DAT	F	Alarm
170	Coil resistance	Check ambient and process temperature	F	Alarm
180	Temperature sensor defective	1. Check sensor connections 2. Replace sensor cable or sensor 3. Turn off temperature measurement	F	Warning
181	Sensor connection	1. Check sensor cable and sensor 2. Execute Heartbeat Verification 3. Replace sensor cable or sensor	F	Alarm
Diagnostic of electronic				
201	Device failure	1. Restart device 2. Contact service	F	Alarm

Diagnostic number	Short text	Remedy instructions	Status signal [from the factory]	Diagnostic behavior [from the factory]
242	Software incompatible	1. Check software 2. Flash or change main electronics module	F	Alarm
252	Modules incompatible	1. Check electronic modules 2. Change electronic modules	F	Alarm
261	Electronic modules	1. Restart device 2. Check electronic modules 3. Change I/O Modul or main electronics	F	Alarm
262	Sensor electronic connection faulty	1. Check or replace connection cable between sensor electronic module (ISEM) and main electronics 2. Check or replace ISEM or main electronics	F	Alarm
270	Main electronic failure	Change main electronic module	F	Alarm
271	Main electronic failure	1. Restart device 2. Change main electronic module	F	Alarm
272	Main electronic failure	1. Restart device 2. Contact service	F	Alarm
273	Main electronic failure	Change electronic	F	Alarm
275	I/O module defective	Change I/O module	F	Alarm
276	I/O module faulty	1. Restart device 2. Change I/O module	F	Alarm
283	Memory content	1. Reset device 2. Contact service	F	Alarm
302	Device verification active	Device verification active, please wait.	C	Warning
311	Electronic failure	1. Do not reset device 2. Contact service	M	Warning
372	Sensor electronic (ISEM) faulty	1. Restart device 2. Check if failure recurs 3. Replace sensor electronic module (ISEM)	F	Alarm
373	Sensor electronic (ISEM) faulty	1. Transfer data or reset device 2. Contact service	F	Alarm
375	I/O- communication failed	1. Restart device 2. Check if failure recurs 3. Replace module rack inclusive electronic modules	F	Alarm
376	Sensor electronic (ISEM) faulty	1. Replace sensor electronic module (ISEM) 2. Turn off diagnostic message	F	Warning [1)]
377	Sensor electronic (ISEM) faulty	1. Check sensor cable and sensor 2. Perform Heartbeat Verification 3. Replace sensor cable or sensor	F	Warning [1)]
382	Data storage	1. Insert T-DAT 2. Replace T-DAT	F	Alarm
383	Memory content	1. Restart device 2. Delete T-DAT via 'Reset device' parameter 3. Replace T-DAT	F	Alarm
512	Sensor electronic (ISEM) faulty	1. Check ECC recovery time 2. Turn off ECC	F	Alarm

Diagnostic number	Short text	Remedy instructions	Status signal [from the factory]	Diagnostic behavior [from the factory]
Diagnostic of configuration				
410	Data transfer	1. Check connection 2. Retry data transfer	F	Alarm
412	Processing download	Download active, please wait	C	Warning
431	Trim 1	Carry out trim	C	Warning
437	Configuration incompatible	1. Restart device 2. Contact service	F	Alarm
438	Dataset	1. Check data set file 2. Check device configuration 3. Up- and download new configuration	M	Warning
441	Current output	1. Check process 2. Check current output settings	S	Warning [1)]
442	Frequency output 1 to n	1. Check process 2. Check frequency output settings	S	Warning [1)]
443	Pulse output 1 to n	1. Check process 2. Check pulse output settings	S	Warning [1)]
453	Flow override	Deactivate flow override	C	Warning
484	Failure mode simulation	Deactivate simulation	C	Alarm
485	Measured variable simulation	Deactivate simulation	C	Warning
491	Current output 1 simulation	Deactivate simulation	C	Warning
492	Simulation frequency output 1 to n	Deactivate simulation frequency output	C	Warning
493	Simulation pulse output 1 to n	Deactivate simulation pulse output	C	Warning
494	Switch output simulation 1 to n	Deactivate simulation switch output	C	Warning
495	Diagnostic event simulation	Deactivate simulation	C	Warning
496	Status input simulation	Deactivate simulation status input	C	Warning
502	CT activation/ deactivation failed	Follow the sequence of the custody transfer activation/deactivation: First authorized user login, then set the DIP switch on the main electonic module	C	Warning
511	Sensor electronic (ISEM) faulty	1. Check measuring period and integration time 2. Check sensor properties	C	Alarm
530	Electrode cleaning is running	Turn off ECC	C	Warning
531	Empty pipe detection	Execute EPD adjustment	S	Warning [1)]
537	Configuration	1. Check IP addresses in network 2. Change IP address	F	Warning
540	Custody transfer mode failed	1. Deactivate custody transfer mode 2. Reactivate custody transfer mode	F	Alarm
599	Custody transfer logbook full	1. Deactivate custody transfer mode 2. Clear custody transfer logbook (all 30 entries) 3. Activate custody transfer mode	F	Warning

Diagnostic number	Short text	Remedy instructions	Status signal [from the factory]	Diagnostic behavior [from the factory]
Diagnostic of process				
803	Current loop	1. Check wiring 2. Change I/O module	F	Alarm
832	Electronic temperature too high	Reduce ambient temperature	S	Warning [1]
833	Electronic temperature too low	Increase ambient temperature	S	Warning [1]
834	Process temperature too high	Reduce process temperature	S	Warning [1]
835	Process temperature too low	Increase process temperature	S	Warning [1]
842	Process limit	Low flow cut off active! 1. Check low flow cut off configuration	S	Warning
882	Input signal	1. Check input configuration 2. Check external device or process conditions	F	Alarm
937	EMC interference	1. Eliminate external magnetic field near sensor 2. Turn off diagnostic message	S	Warning [1]
938	EMC interference	1. Check ambient conditions regarding EMC influence 2. Turn off diagnostic message	F	Alarm [1]
962	Empty pipe	1. Perform full pipe adjustment 2. Perform empty pipe adjustment 3. Turn off empty pipe detection	S	Warning [1]

1) Diagnostic behavior can be changed.

12.8 Pending diagnostic events

The **Diagnostics** menu allows the user to view the current diagnostic event and the previous diagnostic event separately.

To call up the measures to rectify a diagnostic event:
- Via local display → 128
- Via Web browser → 129
- Via "FieldCare" operating tool → 131
- Via "DeviceCare" operating tool → 131

Other pending diagnostic events can be displayed in the **Diagnostic list** submenu → 136

Navigation
"Diagnostics" menu

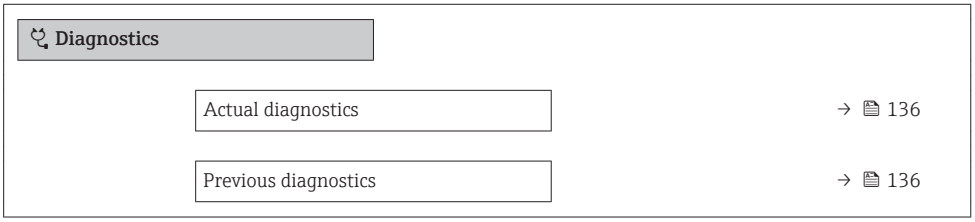

Operating time from restart	→ 136
Operating time	→ 136

Parameter overview with brief description

Parameter	Prerequisite	Description	User interface
Actual diagnostics	A diagnostic event has occurred.	Shows the current occured diagnostic event along with its diagnostic information. If two or more messages occur simultaneously, the message with the highest priority is shown on the display.	Symbol for diagnostic behavior, diagnostic code and short message.
Previous diagnostics	Two diagnostic events have already occurred.	Shows the diagnostic event that occurred prior to the current diagnostic event along with its diagnostic information.	Symbol for diagnostic behavior, diagnostic code and short message.
Operating time from restart	–	Shows the time the device has been in operation since the last device restart.	Days (d), hours (h), minutes (m) and seconds (s)
Operating time	–	Indicates how long the device has been in operation.	Days (d), hours (h), minutes (m) and seconds (s)

12.9 Diagnostic list

Up to 5 currently pending diagnostic events can be displayed in the **Diagnostic list** submenu along with the associated diagnostic information. If more than 5 diagnostic events are pending, the events with the highest priority are shown on the display.

Navigation path
Diagnostics → Diagnostic list

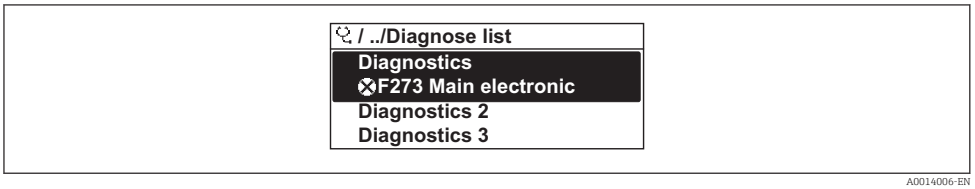

34 *Taking the example of the local display*

To call up the measures to rectify a diagnostic event:
- Via local display → 128
- Via Web browser → 129
- Via "FieldCare" operating tool → 131
- Via "DeviceCare" operating tool → 131

12.10 Event logbook

12.10.1 Reading out the event logbook

A chronological overview of the event messages that have occurred is provided in the **Events list** submenu.

Navigation path
Diagnostics menu → **Event logbook** submenu → Event list

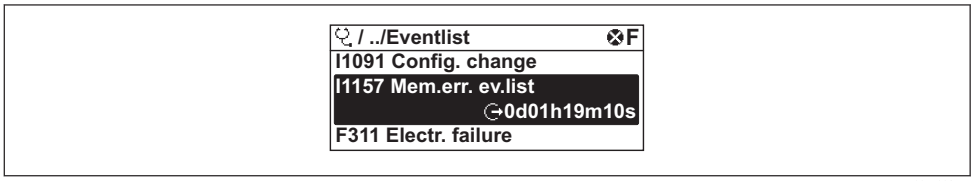

35 *Taking the example of the local display*

- A maximum of 20 event messages can be displayed in chronological order.
- If the **Extended HistoROM** application package (order option) is enabled in the device, the event list can contain up to 100 entries .

The event history includes entries for:
- Diagnostic events → 132
- Information events → 137

In addition to the operation time of its occurrence, each event is also assigned a symbol that indicates whether the event has occurred or is ended:
- Diagnostic event
  - : Occurrence of the event
  - : End of the event
- Information event
  : Occurrence of the event

To call up the measures to rectify a diagnostic event:
- Via local display → 128
- Via Web browser → 129
- Via "FieldCare" operating tool → 131
- Via "DeviceCare" operating tool → 131

For filtering the displayed event messages → 137

12.10.2 Filtering the event logbook

Using the **Filter options** parameter you can define which category of event message is displayed in the **Events list** submenu.

Navigation path
Diagnostics → Event logbook → Filter options

Filter categories
- All
- Failure (F)
- Function check (C)
- Out of specification (S)
- Maintenance required (M)
- Information (I)

12.10.3 Overview of information events

Unlike a diagnostic event, an information event is displayed in the event logbook only and not in the diagnostic list.

Info number	Info name
I1000	--------(Device ok)
I1079	Sensor changed

Info number	Info name
I1089	Power on
I1090	Configuration reset
I1091	Configuration changed
I1092	Embedded HistoROM deleted
I1137	Electronic changed
I1151	History reset
I1155	Reset electronic temperature
I1156	Memory error trend
I1157	Memory error event list
I1184	Display connected
I1256	Display: access status changed
I1278	I/O module reset detected
I1335	Firmware changed
I1351	Empty pipe detection adjustment failure
I1353	Empty pipe detection adjustment ok
I1361	Web server login failed
I1397	Fieldbus: access status changed
I1398	CDI: access status changed
I1443	Coating thickness not determined
I1444	Device verification passed
I1445	Device verification failed
I1457	Measured error verification failed
I1459	I/O module verification failed
I1461	Sensor verification failed
I1462	Sensor electronic module verific. failed
I1512	Download started
I1513	Download finished
I1514	Upload started
I1515	Upload finished
I1517	Custody transfer active
I1518	Custody transfer inactive
I1622	Calibration changed
I1624	Reset all totalizers
I1625	Write protection activated
I1626	Write protection deactivated
I1627	Web server login successful
I1628	Display login successful
I1629	CDI login successful
I1631	Web server access changed
I1632	Display login failed
I1633	CDI login failed
I1634	Parameter factory reset
I1635	Parameter delivery reset

Info number	Info name
I1643	Custody transfer logbook cleared
I1649	Hardware write protection activated
I1650	Hardware write protection deactivated
I1651	Custody transfer parameter changed
I1725	Sensor electronic module (ISEM) changed

12.11 Resetting the measuring device

Using the**Device reset** parameter (→ 110) it is possible to reset the entire device configuration or some of the configuration to a defined state.

12.11.1 Function scope of the "Device reset" parameter

Options	Description
Cancel	No action is executed and the user exits the parameter.
To delivery settings	Every parameter for which a customer-specific default setting was ordered is reset to this customer-specific value. All other parameters are reset to the factory setting.
Restart device	The restart resets every parameter whose data are in the volatile memory (RAM) to the factory setting (e.g. measured value data). The device configuration remains unchanged.

12.12 Device information

The **Device information** submenu contains all parameters that display different information for device identification.

Navigation
"Diagnostics" menu → Device information

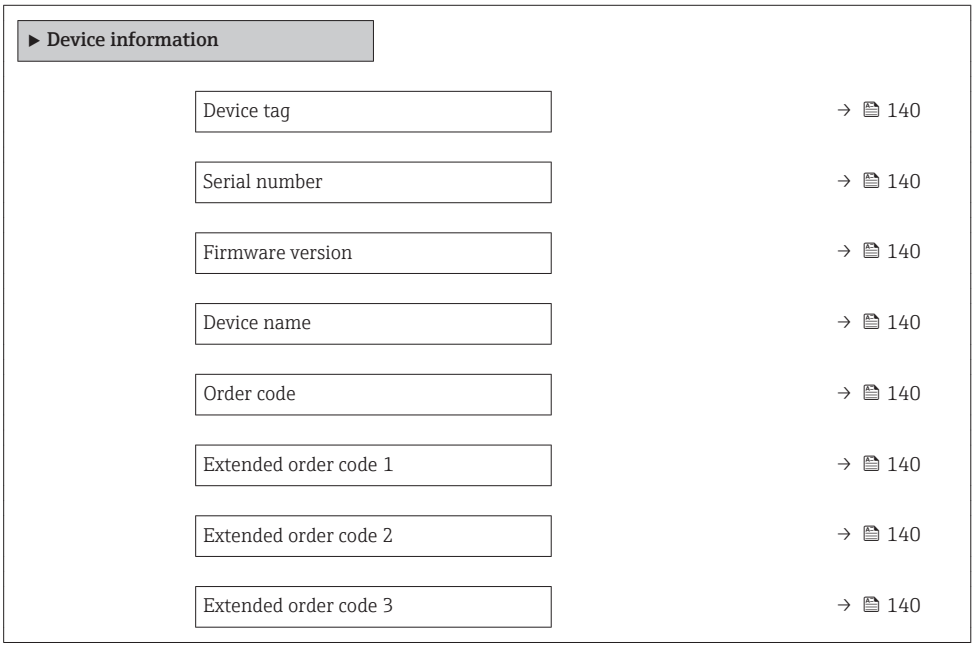

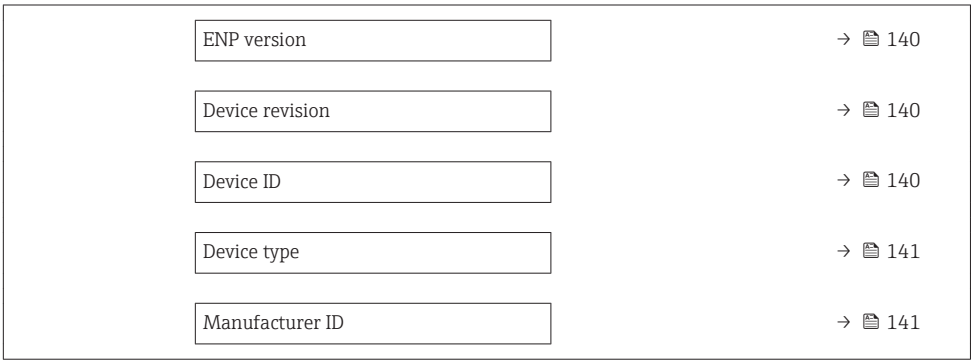

Parameter overview with brief description

Parameter	Description	User interface	Factory setting
Device tag	Shows name of measuring point.	Max. 32 characters, such as letters, numbers or special characters (e.g. @, %, /).	Promag 400
Serial number	Shows the serial number of the measuring device.	Max. 11-digit character string comprising letters and numbers.	–
Firmware version	Shows the device firmware version installed.	Character string in the format xx.yy.zz	–
Device name	Shows the name of the transmitter. The name can be found on the nameplate of the transmitter.	Max. 32 characters such as letters or numbers.	Promag 400
Order code	Shows the device order code. The order code can be found on the nameplate of the sensor and transmitter in the "Order code" field.	Character string composed of letters, numbers and certain punctuation marks (e.g. /).	–
Extended order code 1	Shows the 1st part of the extended order code. The extended order code can also be found on the nameplate of the sensor and transmitter in the "Ext. ord. cd." field.	Character string	–
Extended order code 2	Shows the 2nd part of the extended order code. The extended order code can also be found on the nameplate of the sensor and transmitter in the "Ext. ord. cd." field.	Character string	–
Extended order code 3	Shows the 3rd part of the extended order code. The extended order code can also be found on the nameplate of the sensor and transmitter in the "Ext. ord. cd." field.	Character string	–
ENP version	Shows the version of the electronic nameplate (ENP).	Character string	2.02.00
Device revision	Shows the device revision with which the device is registered with the HART Communication Foundation.	2-digit hexadecimal number	8
Device ID	Shows the device ID for identifying the device in a HART network.	6-digit hexadecimal number	–

Parameter	Description	User interface	Factory setting
Device type	Shows the device type with which the measuring device is registered with the HART Communication Foundation.	2-digit hexadecimal number	0x69 (for Promag 400)
Manufacturer ID	Shows the manufacturer ID device is registered with the HART Communication Foundation.	2-digit hexadecimal number	0x11 (for Endress+Hauser)

12.13 Firmware history

Release date	Firmware version	Order code for "Firmware version"	Firmware changes	Documentation type	Documentation
10.2013	01.04.00	Option **76**	Original firmware	Operating Instructions	BA01063D/06/EN/02.13
05.2014	01.05.00	Option **73**	▪ In accordance with HART 7 Specification ▪ Integrated HART input ▪ SD03 keypad lock ▪ Modification of SIL functionality ▪ HistoROM data logging in FieldCare "HistoROM" module ▪ Simulation of diagnostic events ▪ Ability to access Heartbeat Technology application package	Operating Instructions	BA01063D/06/EN/03.14
11.2016	02.00.00	Option **71**	Device type ID: 0x69 ▪ Web server: current version ▪ Logbook: current concept, including parameter change ▪ Upload/download: current concept ▪ Heartbeat Technology: new hardware, diagnostics, events ▪ Security concept: encrypted password transmission ▪ WLAN ▪ Custody transfer mode	Operating Instructions	BA01063D/06/EN/05.16

It is possible to flash the firmware to the current version or the previous version using the service interface.

For the compatibility of the firmware version with the previous version, the installed device description files and operating tools, observe the information about the device in the "Manufacturer's information" document.

The manufacturer's information is available:
- In the Download Area of the Endress+Hauser web site: www.endress.com → Downloads
- Specify the following details:
  - Text search: Manufacturer's information
  - Media type: Documentation – Technical Documentation

13 Maintenance

13.1 Maintenance tasks

No special maintenance work is required.

13.1.1 Exterior cleaning

When cleaning the exterior of measuring devices, always use cleaning agents that do not attack the surface of the housing or the seals.

⚠ WARNING

Cleaning agents can damage the plastic transmitter housing!

- ▶ Do not use high-pressure steam.
- ▶ Only use the permitted cleaning agents specified.

Permitted cleaning agents for the plastic transmitter housing

- Commercially available household cleaners
- Methyl alcohol or isopropyl alcohol
- Mild soap solutions

13.1.2 Interior cleaning

No interior cleaning is planned for the device.

13.1.3 Replacing seals

The sensor's seals (particularly aseptic molded seals) must be replaced periodically.

The interval between changes depends on the frequency of the cleaning cycles, the cleaning temperature and the medium temperature.

Replacement seals (accessory part) → 178

13.2 Measuring and test equipment

Endress+Hauser offers a wide variety of measuring and test equipment, such as W@M or device tests.

Your Endress+Hauser Sales Center can provide detailed information on the services.

List of some of the measuring and testing equipment: → 145

13.3 Endress+Hauser services

Endress+Hauser offers a wide variety of services for maintenance such as recalibration, maintenance service or device tests.

Your Endress+Hauser Sales Center can provide detailed information on the services.

14 Repair

14.1 General notes

14.1.1 Repair and conversion concept

The Endress+Hauser repair and conversion concept provides for the following:
- The measuring devices have a modular design.
- Spare parts are grouped into logical kits with the associated Installation Instructions.
- Repairs are carried out by Endress+Hauser Service or by appropriately trained customers.
- Certified devices can only be converted to other certified devices by Endress+Hauser Service or at the factory.

14.1.2 Notes for repair and conversion

For repair and modification of a measuring device, observe the following notes:
- ▶ Use only original Endress+Hauser spare parts.
- ▶ Carry out the repair according to the Installation Instructions.
- ▶ Observe the applicable standards, federal/national regulations, Ex documentation (XA) and certificates.
- ▶ Document every repair and each conversion and enter them into the *W@M* life cycle management database.

14.2 Spare parts

W@M Device Viewer (www.endress.com/deviceviewer):
All the spare parts for the measuring device, along with the order code, are listed here and can be ordered. If available, users can also download the associated Installation Instructions.

Measuring device serial number:
- Is located on the nameplate of the device.
- Can be read out via the **Serial number** parameter (→ 140) in the **Device information** submenu.

14.3 Endress+Hauser services

Endress+Hauser offers a wide range of services.

Your Endress+Hauser Sales Center can provide detailed information on the services.

14.4 Return

The requirements for safe device return can vary depending on the device type and national legislation.

1. Refer to the website for more information:
   http://www.endress.com/support/return-material
2. Return the device if repairs or a factory calibration are required, or if the wrong device was ordered or delivered.

14.5 Disposal

14.5.1 Removing the measuring device

1. Switch off the device.

⚠ WARNING

Danger to persons from process conditions.

- Beware of hazardous process conditions such as pressure in the measuring device, high temperatures or aggressive fluids.

2. Carry out the mounting and connection steps from the "Mounting the measuring device" and "Connecting the measuring device" sections in reverse order. Observe the safety instructions.

14.5.2 Disposing of the measuring device

⚠ WARNING

Danger to personnel and environment from fluids that are hazardous to health.

- Ensure that the measuring device and all cavities are free of fluid residues that are hazardous to health or the environment, e.g. substances that have permeated into crevices or diffused through plastic.

Observe the following notes during disposal:

- Observe valid federal/national regulations.
- Ensure proper separation and reuse of the device components.

15 Accessories

Various accessories, which can be ordered with the device or subsequently from Endress +Hauser, are available for the device. Detailed information on the order code in question is available from your local Endress+Hauser sales center or on the product page of the Endress+Hauser website: www.endress.com.

15.1 Device-specific accessories

15.1.1 For the transmitter

Accessories	Description
Promag 400 transmitter	Transmitter for replacement or storage. Use the order code to define the following specifications: ▪ Approvals ▪ Output / input ▪ Display/operation ▪ Housing ▪ Software For details, see Installation Instructions EA00104D
Display guard	Is used to protect the display against impact or scoring from sand in desert areas. Order number: 71228792 Installation Instructions EA01093D
Connecting cable for remote version	Coil current and electrode cables, various lengths, reinforced cables available on request.
Ground cable	Set, consisting of two ground cables for potential equalization.
Post mounting kit	Post mounting kit for transmitter.
Compact → Remote conversion kit	For converting a compact device version to a remote device version.
Conversion kit Promag 50/53 → Promag 400	For converting a Promag with transmitter 50/53 to a Promag 400.

15.1.2 For the sensor

Accessories	Description
Ground disks	Are used to ground the medium in lined measuring tubes to ensure proper measurement. For details, see Installation Instructions EA00070D

15.2 Communication-specific accessories

Accessories	Description
Commubox FXA195 HART	For intrinsically safe HART communication with FieldCare via the USB interface. Technical Information TI00404F
Commubox FXA291	Connects Endress+Hauser field devices with a CDI interface (= Endress+Hauser Common Data Interface) and the USB port of a computer or laptop. Technical Information TI405C/07

HART Loop Converter HMX50	Is used to evaluate and convert dynamic HART process variables to analog current signals or limit values. ▪ Technical Information TI00429F ▪ Operating Instructions BA00371F
Wireless HART adapter SWA70	Is used for the wireless connection of field devices. The WirelessHART adapter can be easily integrated into field devices and existing infrastructures, offers data protection and transmission safety and can be operated in parallel with other wireless networks with minimum cabling complexity. Operating Instructions BA00061S
Fieldgate FXA320	Gateway for the remote monitoring of connected 4-20 mA measuring devices via a Web browser. Technical Information TI00025S Operating Instructions BA00053S
Fieldgate FXA520	Gateway for the remote diagnostics and remote configuration of connected HART measuring devices via a Web browser. Technical Information TI00025S Operating Instructions BA00051S
Field Xpert SFX350	Field Xpert SFX350 is a mobile computer for commissioning and maintenance. It enables efficient device configuration and diagnostics for HART devices and can be used in non-hazardous areas. Operating Instructions BA01202S
Field Xpert SFX370	Field Xpert SFX370 is a mobile computer for commissioning and maintenance. It enables efficient device configuration and diagnostics for HART devices and can be used in the non-hazardous area and in the hazardous area. Operating Instructions BA01202S

15.3 Service-specific accessories

Accessories	Description
Applicator	Software for selecting and sizing Endress+Hauser measuring devices: ▪ Choice of measuring devices for industrial requirements ▪ Calculation of all the necessary data for identifying the optimum flowmeter: e.g. nominal diameter, pressure loss, flow velocity and accuracy. ▪ Graphic illustration of the calculation results ▪ Determination of the partial order code, administration, documentation and access to all project-related data and parameters over the entire life cycle of a project. Applicator is available: ▪ Via the Internet: https://portal.endress.com/webapp/applicator ▪ As a downloadable DVD for local PC installation.
W@M	W@M Life Cycle Management Improved productivity with information at your fingertips. Data relevant to a plant and its components is generated from the first stages of planning and during the asset's complete life cycle. W@M Life Cycle Management is an open and flexible information platform with online and on-site tools. Instant access for your staff to current, in-depth data shortens your plant's engineering time, speeds up procurement processes and increases plant uptime. Combined with the right services, W@M Life Cycle Management boosts productivity in every phase. For more information, visit www.endress.com/lifecyclemanagement

Accessories	Description
FieldCare	FDT-based plant asset management tool from Endress+Hauser. It can configure all smart field units in your system and helps you manage them. By using the status information, it is also a simple but effective way of checking their status and condition. Operating Instructions BA00027S and BA00059S
DeviceCare	Tool to connect and configure Endress+Hauser field devices. Innovation brochure IN01047S

15.4 System components

Accessories	Description
Memograph M graphic data manager	The Memograph M graphic data manager provides information on all the relevant measured variables. Measured values are recorded correctly, limit values are monitored and measuring points analyzed. The data are stored in the 256 MB internal memory and also on a SD card or USB stick. ▪ Technical Information TI00133R ▪ Operating Instructions BA00247R

16 Technical data

16.1 Application

The measuring device is only suitable for flow measurement of liquids with a minimum conductivity of 5 µS/cm.

Depending on the version ordered, the measuring device can also measure potentially explosive, flammable, poisonous and oxidizing media.

To ensure that the device remains in proper operating condition for its service life, use the measuring device only for media against which the process-wetted materials are sufficiently resistant.

16.2 Function and system design

Measuring principle

Electromagnetic flow measurement on the basis of *Faraday's law of magnetic induction*.

Measuring system

The device consists of a transmitter and a sensor.

Two device versions are available:
- Compact version – transmitter and sensor form a mechanical unit.
- Remote version - transmitter and sensor are mounted in separate locations.

For information on the structure of the device

16.3 Input

Measured variable

Direct measured variables

- Volume flow (proportional to induced voltage)
- Electrical conductivity

In custody transfer: only volume flow

Calculated measured variables

Mass flow

Measuring range

Typically v = 0.01 to 10 m/s (0.03 to 33 ft/s) with the specified accuracy

Electrical conductivity: ≥ 5 µS/cm for liquids in general

Flow characteristic values in SI units: DN 25 to 125 (1 to 4")

Nominal diameter		Recommended flow	Factory settings		
		min./max. full scale value (v ~ 0.3/10 m/s)	Full scale value current output (v ~ 2.5 m/s)	Pulse value (~ 2 pulse/s)	Low flow cut off (v ~ 0.04 m/s)
[mm]	[in]	[dm³/min]	[dm³/min]	[dm³]	[dm³/min]
25	1	9 to 300	75	0.5	1
32	–	15 to 500	125	1	2
40	1 ½	25 to 700	200	1.5	3

Nominal diameter		Recommended flow	Factory settings		
		min./max. full scale value (v ~ 0.3/10 m/s)	Full scale value current output (v ~ 2.5 m/s)	Pulse value (~ 2 pulse/s)	Low flow cut off (v ~ 0.04 m/s)
[mm]	[in]	[dm³/min]	[dm³/min]	[dm³]	[dm³/min]
50	2	35 to 1 100	300	2.5	5
65	–	60 to 2 000	500	5	8
80	3	90 to 3 000	750	5	12
100	4	145 to 4 700	1200	10	20
125	–	220 to 7 500	1850	15	30

Flow characteristic values in SI units: DN 150 to 2400 (6 to 90")

Nominal diameter		Recommended flow	Factory settings		
		min./max. full scale value (v ~ 0.3/10 m/s)	Full scale value current output (v ~ 2.5 m/s)	Pulse value (~ 2 pulse/s)	Low flow cut off (v ~ 0.04 m/s)
[mm]	[in]	[m³/h]	[m³/h]	[m³]	[m³/h]
150	6	20 to 600	150	0.025	2.5
200	8	35 to 1 100	300	0.05	5
250	10	55 to 1 700	500	0.05	7.5
300	12	80 to 2 400	750	0.1	10
350	14	110 to 3 300	1000	0.1	15
375	15	140 to 4 200	1200	0.15	20
400	16	140 to 4 200	1200	0.15	20
450	18	180 to 5 400	1500	0.25	25
500	20	220 to 6 600	2000	0.25	30
600	24	310 to 9 600	2500	0.3	40
700	28	420 to 13 500	3500	0.5	50
750	30	480 to 15 000	4000	0.5	60
800	32	550 to 18 000	4500	0.75	75
900	36	690 to 22 500	6000	0.75	100
1000	40	850 to 28 000	7000	1	125
–	42	950 to 30 000	8000	1	125
1200	48	1 250 to 40 000	10000	1.5	150
–	54	1 550 to 50 000	13000	1.5	200
1400	–	1 700 to 55 000	14000	2	225
–	60	1 950 to 60 000	16000	2	250
1600	–	2 200 to 70 000	18000	2.5	300
–	66	2 500 to 80 000	20500	2.5	325
1800	72	2 800 to 90 000	23000	3	350
–	78	3 300 to 100 000	28500	3.5	450
2000	–	3 400 to 110 000	28500	3.5	450
–	84	3 700 to 125 000	31000	4.5	500

Nominal diameter		Recommended flow	Factory settings		
		min./max. full scale value (v ~ 0.3/10 m/s)	Full scale value current output (v ~ 2.5 m/s)	Pulse value (~ 2 pulse/s)	Low flow cut off (v ~ 0.04 m/s)
[mm]	[in]	[m³/h]	[m³/h]	[m³]	[m³/h]
2200	–	4100 to 136000	34000	4.5	540
–	90	4300 to 143000	36000	5	570
2400	–	4800 to 162000	40000	5.5	650

Flow characteristic values in SI units: DN 50 to 300 (2 to 12") for order code for "Design", option C "Fixed flange, without inlet/outlet runs"

Nominal diameter		Recommended flow	Factory settings		
		min./max. full scale value (v ~ 0.12/5 m/s)	Full scale value current output (v ~ 2.5 m/s)	Pulse value (~ 4 pulse/s)	Low flow cut off (v ~ 0.01 m/s)
[mm]	[in]	[m³/h]	[m³/h]	[m³]	[m³/h]
50	2	15 to 600 dm³/min	300 dm³/min	1.25 dm³	1.25 dm³/min
65	–	25 to 1000 dm³/min	500 dm³/min	2 dm³	2 dm³/min
80	3	35 to 1500 dm³/min	750 dm³/min	3 dm³	3.25 dm³/min
100	4	60 to 2400 dm³/min	1200 dm³/min	5 dm³	4.75 dm³/min
125	–	90 to 3700 dm³/min	1850 dm³/min	8 dm³	7.5 dm³/min
150	6	145 to 5400 dm³/min	2500 dm³/min	10 dm³	11 dm³/min
200	8	220 to 9400 dm³/min	5000 dm³/min	20 dm³	19 dm³/min
250	10	20 to 850	500	0.03	1.75
300	12	35 to 1300	750	0.05	2.75

Flow characteristic values in US units: 1 to 48" (DN 25 to 1200)

Nominal diameter		Recommended flow	Factory settings		
		min./max. full scale value (v ~ 0.3/10 m/s)	Full scale value current output (v ~ 2.5 m/s)	Pulse value (~ 2 pulse/s)	Low flow cut off (v ~ 0.04 m/s)
[in]	[mm]	[gal/min]	[gal/min]	[gal]	[gal/min]
1	25	2.5 to 80	18	0.2	0.25
–	32	4 to 130	30	0.2	0.5
1 ½	40	7 to 185	50	0.5	0.75
2	50	10 to 300	75	0.5	1.25
–	65	16 to 500	130	1	2
3	80	24 to 800	200	2	2.5
4	100	40 to 1250	300	2	4
–	125	60 to 1950	450	5	7
6	150	90 to 2650	600	5	12
8	200	155 to 4850	1200	10	15
10	250	250 to 7500	1500	15	30

Nominal diameter		Recommended flow	Factory settings		
		min./max. full scale value (v ~ 0.3/10 m/s)	Full scale value current output (v ~ 2.5 m/s)	Pulse value (~ 2 pulse/s)	Low flow cut off (v ~ 0.04 m/s)
[in]	[mm]	[gal/min]	[gal/min]	[gal]	[gal/min]
12	300	350 to 10 600	2400	25	45
14	350	500 to 15 000	3600	30	60
15	375	600 to 19 000	4800	50	60
16	400	600 to 19 000	4800	50	60
18	450	800 to 24 000	6000	50	90
20	500	1 000 to 30 000	7500	75	120
24	600	1 400 to 44 000	10500	100	180
28	700	1 900 to 60 000	13500	125	210
30	750	2 150 to 67 000	16500	150	270
32	800	2 450 to 80 000	19500	200	300
36	900	3 100 to 100 000	24000	225	360
40	1000	3 800 to 125 000	30000	250	480
42	–	4 200 to 135 000	33000	250	600
48	1200	5 500 to 175 000	42000	400	600

Flow characteristic values in US units: 54 to 90" (DN 1400 to 2400)

Nominal diameter		Recommended flow	Factory settings		
		min./max. full scale value (v ~ 0.3/10 m/s)	Full scale value current output (v ~ 2.5 m/s)	Pulse value (~ 2 pulse/s)	Low flow cut off (v ~ 0.04 m/s)
[in]	[mm]	[Mgal/d]	[Mgal/d]	[Mgal]	[Mgal/d]
54	–	9 to 300	75	0.0005	1.3
–	1400	10 to 340	85	0.0005	1.3
60	–	12 to 380	95	0.0005	1.3
–	1600	13 to 450	110	0.0008	1.7
66	–	14 to 500	120	0.0008	2.2
72	1800	16 to 570	140	0.0008	2.6
78	–	18 to 650	175	0.0010	3.0
–	2000	20 to 700	175	0.0010	2.9
84	–	24 to 800	190	0.0011	3.2
–	2200	26 to 870	210	0.0012	3.4
90	–	27 to 910	220	0.0013	3.6
–	2400	31 to 1 030	245	0.0014	4.1

Flow characteristic values in US units: 2 to 12" (DN 50 to 300) for order code for "Design", option C "Fixed flange, without inlet/outlet runs"

Nominal diameter		Recommended flow	Factory settings		
		min./max. full scale value (v ~ 0.12/5 m/s)	Full scale value current output (v ~ 2.5 m/s)	Pulse value (~ 4 pulse/s)	Low flow cut off (v ~ 0.01 m/s)
[in]	[mm]	[gal/min]	[gal/min]	[gal]	[gal/min]
2	50	4 to 160	75	0.3	0.35
–	65	7 to 260	130	0.5	0.6
3	80	10 to 400	200	0.8	0.8
4	100	16 to 650	300	1.2	1.25
–	125	24 to 1000	450	1.8	2
6	150	40 to 1400	600	2.5	3
8	200	60 to 2500	1200	5	5
10	250	90 to 3700	1500	6	8
12	300	155 to 5700	2400	9	12

Recommended measuring range

Flow limit → 162

For custody transfer, the applicable approval determines the permitted measuring range, the pulse value and the low flow cut off.

Operable flow range

Over 1000 : 1

For custody transfer, the operable flow range is 100 : 1 to 630 : 1, depending on the nominal diameter. Further details are specified by the applicable approval.

Input signal

External measured values

Various pressure transmitters and temperature measuring devices can be ordered from Endress+Hauser: see "Accessories" section → 147

It is recommended to read in external measured values to calculate the following measured variables:
Mass flow

HART protocol

The measured values are written from the automation system to the measuring device via the HART protocol. The pressure transmitter must support the following protocol-specific functions:
- HART protocol
- Burst mode

Status input

Maximum input values	▪ DC 30 V ▪ 6 mA
Response time	Adjustable: 5 to 200 ms

Input signal level	▪ Low signal: DC –3 to +5 V ▪ High signal: DC 12 to 30 V
Assignable functions	▪ Off ▪ Reset totalizers 1-3 separately ▪ Reset all totalizers ▪ Flow override

16.4 Output

Output signal

Current output

Current output	Can be set as: ▪ 4-20 mA NAMUR ▪ 4-20 mA US ▪ 4-20 mA HART ▪ 0-20 mA
Maximum output values	▪ DC 24 V (no flow) ▪ 22.5 mA
Load	0 to 700 Ω
Resolution	0.5 µA
Damping	Adjustable: 0.07 to 999 s
Assignable measured variables	▪ Volume flow ▪ Mass flow ▪ Flow velocity ▪ Conductivity ▪ Electronic temperature

Pulse/frequency/switch output

Function	▪ With the order code for "Output; Input", option **H**: output 2 can be set as a pulse or frequency output ▪ With the order code for "Output; Input", option **I**: output 2 and 3 can be set as a pulse, frequency or switch output ▪ With the order code for "Output; Input", option **J**: output 2 firmly assigned as certified pulse output
Version	Passive, open collector
Maximum input values	▪ DC 30 V ▪ 250 mA
Voltage drop	For 25 mA: ≤ DC 2 V
Pulse output	
Pulse width	Adjustable: 0.05 to 2 000 ms
Maximum pulse rate	10 000 Impulse/s
Pulse value	Adjustable
Assignable measured variables	▪ Volume flow ▪ Mass flow
Frequency output	
Output frequency	Adjustable: 0 to 12 500 Hz
Damping	Adjustable: 0 to 999 s
Pulse/pause ratio	1:1

Assignable measured variables	▪ Volume flow ▪ Mass flow ▪ Conductivity ▪ Flow velocity ▪ Electronic temperature
Switch output	
Switching behavior	Binary, conductive or non-conductive
Switching delay	Adjustable: 0 to 100 s
Number of switching cycles	Unlimited
Assignable functions	▪ Off ▪ On ▪ Diagnostic behavior ▪ Limit value: – Off – Volume flow – Mass flow – Conductivity – Flow velocity – Totalizer 1-3 – Electronic temperature ▪ Flow direction monitoring ▪ Status – Empty pipe detection – Low flow cut off

Signal on alarm

Depending on the interface, failure information is displayed as follows:

Current output 4 to 20 mA

4 to 20 mA

Failure mode	Choose from: ▪ 4 to 20 mA in accordance with NAMUR recommendation NE 43 ▪ 4 to 20 mA in accordance with US ▪ Min. value: 3.59 mA ▪ Max. value: 22.5 mA ▪ Freely definable value between: 3.59 to 22.5 mA ▪ Actual value ▪ Last valid value

0 to 20 mA

Failure mode	Choose from: ▪ Maximum alarm: 22 mA ▪ Freely definable value between: 0 to 22.5 mA

HART current output

Device diagnostics	Device condition can be read out via HART Command 48

Pulse/frequency/switch output

Pulse output	
Failure mode	Choose from: ▪ Actual value ▪ No pulses
Frequency output	

Failure mode	Choose from: ▪ Actual value ▪ 0 Hz ▪ Defined value: 0 to 12 500 Hz
Switch output	
Failure mode	Choose from: ▪ Current status ▪ Open ▪ Closed

Local display

Plain text display	With information on cause and remedial measures
Backlight	Red backlighting indicates a device error.

Status signal as per NAMUR recommendation NE 107

Interface/protocol

- Via digital communication:
  HART protocol
- Via service interface
  - CDI-RJ45 service interface
  - WLAN interface

Plain text display	With information on cause and remedial measures

Web server

Plain text display	With information on cause and remedial measures

Light emitting diodes (LED)

Status information	Status indicated by various light emitting diodes The following information is displayed depending on the device version: ▪ Supply voltage active ▪ Data transmission active ▪ Device alarm/error has occurred Diagnostic information via light emitting diodes

Low flow cut off

The switch points for low flow cut off are user-selectable.

Galvanic isolation

The following connections are galvanically isolated from each other:
- Inputs
- Outputs
- Power supply

Protocol-specific data

HART

- For information on the device description files
- For information on the dynamic variables and measured variables (HART device variables) → 80

16.5 Power supply

Terminal assignment

→ 41

Supply voltage

Transmitter

Order code for "Power supply"	terminal voltage		Frequency range
Option **L**	DC 24 V	±25%	–
	AC 24 V	±25%	50/60 Hz, ±4 Hz
	AC 100 to 240 V	−15 to +10%	50/60 Hz, ±4 Hz

Power consumption

Order code for "Output"	Maximum power consumption
Option **H**: 4-20mA HART, pulse/frequency/switch output, switch output	30 VA/8 W
Option **I**: 4-20mA HART, 2 x pulse/frequency/switch output, status input	30 VA/8 W
Option **J**: 4-20mA HART, certified pulse output, pulse/frequency/switch output, status input	30 VA/8 W

Current consumption

Transmitter

Order code for "Power supply"	Maximum Current consumption	Maximum switch-on current
Option **L**: AC 100 to 240 V	145 mA	25 A (< 5 ms)
Option **L**: AC/DC 24 V	350 mA	27 A (< 5 ms)

Power supply failure

- Totalizers stop at the last value measured.
- Depending on the device version, the configuration is retained in the device memoryor in the pluggable data memory (HistoROM DAT).
- Error messages (incl. total operated hours) are stored.

Electrical connection

→ 44

Potential equalization

→ 47

terminals

Transmitter

- Supply voltage cable: plug-in spring terminals for wire cross-sections 0.5 to 2.5 mm² (20 to 14 AWG)
- Signal cable: plug-in spring terminals for wire cross-sections 0.5 to 2.5 mm² (20 to 14 AWG)
- Electrode cable: spring terminals for wire cross-sections 0.5 to 2.5 mm² (20 to 14 AWG)
- Coil current cable: spring terminals for wire cross-sections 0.5 to 2.5 mm² (20 to 14 AWG)

Sensor connection housing

Spring terminals for wire cross-sections0.5 to 2.5 mm² (20 to 14 AWG)

Cable entries

Cable entry thread
- M20 x 1.5
- Via adapter:
  - NPT ½"
  - G ½"

Cable gland
- For standard cable: M20 × 1.5 with cable ϕ6 to 12 mm (0.24 to 0.47 in)
- For reinforced cable: M20 × 1.5 with cable ϕ9.5 to 16 mm (0.37 to 0.63 in)

If metal cable entries are used, use a grounding plate.

Cable specification

→ 39

16.6 Performance characteristics

Reference operating conditions

- Error limits following DIN EN 29104, in future ISO 20456
- Water, typically +15 to +45 °C (+59 to +113 °F); 0.5 to 7 bar (73 to 101 psi)
- Data as indicated in the calibration protocol
- Accuracy based on accredited calibration rigs according to ISO 17025

Maximum measured error

Error limits under reference operating conditions

o.r. = of reading

Volume flow
- ±0.5 % o.r. ± 1 mm/s (0.04 in/s)
- Optional: ±0.2 % o.r. ± 2 mm/s (0.08 in/s)

Fluctuations in the supply voltage do not have any effect within the specified range.

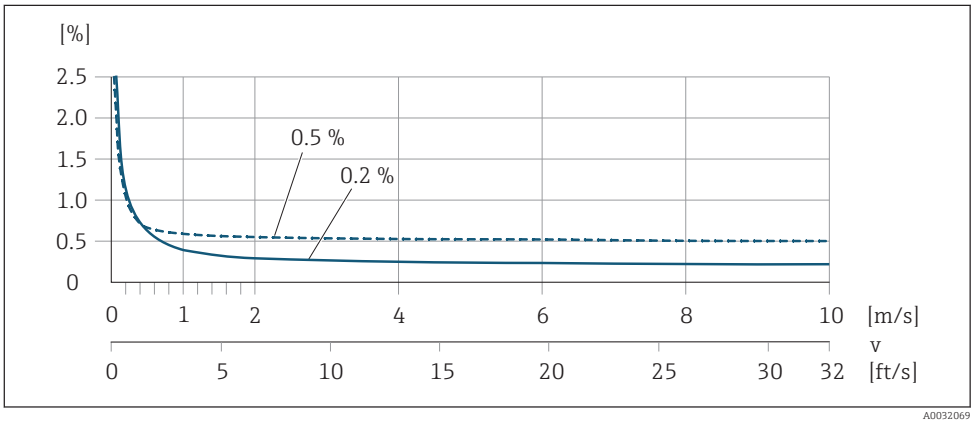

36 *Maximum measured error in % o.r.*

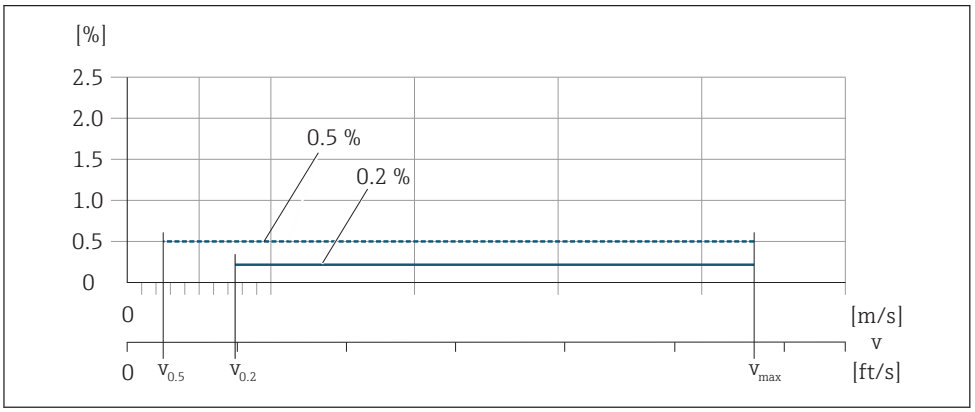

37 *Flat Spec in % o.r.*

For Flat Spec 0.5 %, the measured error is constant as of a flow velocity of $v_{0.5}$.

Flat Spec flow values0.5 %

Nominal diameter		$v_{0.5}$		v_{max}	
[mm]	[in]	[m/s]	[ft/s]	[m/s]	[ft/s]
25 to 600	1 to 24	0.5	1.64	10	32
50 to 300 [1)]	2 to 12	0.25	0.82	5	16

1) Order code for "Design", option C "Fixed flange, without inlet/outlet runs"

For Flat Spec 0.2 %, the measured error is constant as of a flow velocity of $v_{0.2}$.

Flat Spec flow values0.2 %

Nominal diameter		$v_{0.2}$		v_{max}	
[mm]	[in]	[m/s]	[ft/s]	[m/s]	[ft/s]
25 to 600	1 to 24	1.5	4.92	10	32
50 to 300 [1)]	2 to 12	0.6	1.97	4	13

1) Order code for "Design", option C "Fixed flange, without inlet/outlet runs"

Electrical conductivity

Max. measured error not specified.

Accuracy of outputs

The outputs have the following base accuracy specifications.

Current output

Accuracy	Max. ±5 µA

Pulse/frequency output

o.r. = of reading

Accuracy	Max. ±50 ppm o.r. (over the entire ambient temperature range)

Repeatability

o.r. = of reading

Volume flow
max. ±0.1 % o.r. ± 0.5 mm/s (0.02 in/s)

Electrical conductivity
Max. ±5 % o.r.

Influence of ambient temperature

Current output

o.r. = of reading

Temperature coefficient	Max. ±0.005 % o.r./°C

Pulse/frequency output

Temperature coefficient	No additional effect. Included in accuracy.

16.7 Installation

"Mounting requirements"

16.8 Environment

Ambient temperature range

→ 24

Storage temperature

The storage temperature corresponds to the operating temperature range of the transmitter and the sensor → 24.

- Protect the measuring device against direct sunlight during storage in order to avoid unacceptably high surface temperatures.
- Select a storage location where moisture cannot collect in the measuring device as fungus or bacteria infestation can damage the liner.
- If protection caps or protective covers are mounted these should never be removed before installing the measuring device.

Atmosphere

If a plastic transmitter housing is permanently exposed to certain steam and air mixtures, this can damage the housing.

In cases of doubt, please contact the Sales Center.

Degree of protection

Transmitter
- As standard: IP66/67, type 4X enclosure
- When housing is open: IP20, type 1 enclosure

Sensor
- As standard: IP66/67, type 4X enclosure
- Optionally available for remote version:
  - IP66/67, type 4X enclosure; fully welded, with protective varnish EN ISO 12944 C5-M. Suitable for use in corrosive atmospheres.
  - IP68, type 6P enclosure; fully welded, with protective varnish as per EN ISO 12944 C5-M. Suitable for permanent immersion in water ≤ 3 m (10 ft) or up to 48 hours at depths ≤ 10 m (30 ft).
  - IP68, type 6P enclosure; fully welded, with protective varnish as per EN ISO 12944 Im1/Im2/Im3. Suitable for permanent immersion in saline water ≤ 3 m (10 ft) or up to 48 hours at depths ≤ 10 m (30 ft) or in buried applications.

Vibration resistance

Compact version
- Oscillation, sinusoidal, following IEC 60068-2-6
  - 2 to 8.4 Hz, 3.5 mm peak
  - 8.4 to 2 000 Hz, 1 g peak
- Oscillation, broadband noise following IEC 60068-2-64
  - 10 to 200 Hz, 0.003 g^2/Hz
  - 200 to 2 000 Hz, 0.001 g^2/Hz
  - Total: 1.54 g rms

Remote version
- Vibration, sinusoidal according to IEC 60068-2-6
  - 2 to 8.4 Hz, 7.5 mm peak
  - 8.4 to 2 000 Hz, 2 g peak
- Vibration broad-band random, according to IEC 60068-2-64
  - 10 to 200 Hz, 0.01 g^2/Hz
  - 200 to 2 000 Hz, 0.003 g^2/Hz
  - Total: 2.70 g rms

Shock resistance

Shock, half-sine according to IEC 60068-2-27
6 ms 50 g

Shock resistance

Shock due to rough handling following IEC 60068-2-31

Mechanical load

- Protect the transmitter housing against mechanical effects, such as shock or impact; the use of the remote version is sometimes preferable.
- Never use the transmitter housing as a ladder or climbing aid.

Electromagnetic compatibility (EMC)

- As per IEC/EN 61326 and NAMUR Recommendation 21 (NE 21)
- Complies with emission limits for industry as per EN 55011 (Class A)

Details are provided in the Declaration of Conformity.

16.9 Process

Medium temperature range

- 0 to +80 °C (+32 to +176 °F) for hard rubber, DN 50 to 2400 (2 to 90")
- –20 to +50 °C (–4 to +122 °F) for polyurethane, DN 25 to 1200 (1 to 48")
- –20 to +90 °C (–4 to +194 °F) for PTFE, DN 25 to 300 (1 to 12")

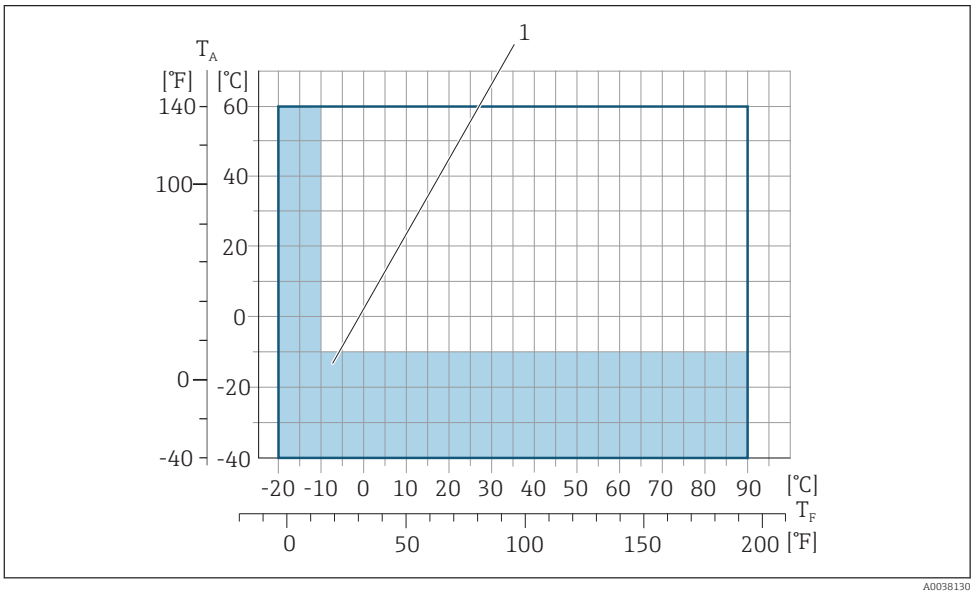

T_A *Ambient temperature range*
T_F *Fluid temperature*
1 *Colored area: the ambient temperature range of −10 to −40 °C (+14 to −40 °F) and the fluid temperature range of −10 to −20 °C (+14 to −4 °F) applies to stainless flanges only*

The permitted fluid temperature in custody transfer is 0 to +50 °C (+32 to +122 °F).

Conductivity

≥ 5 µS/cm for liquids in general.

Stronger filter damping is required for very low conductivity values.

Remote version
The necessary minimum conductivity also depends on the cable length
→ 25→ 25.

Pressure-temperature ratings

An overview of the pressure-temperature ratings for the process connections is provided in the "Technical Information" document

Pressure tightness

Liner: hard rubber

Nominal diameter		Limit values for absolute pressure in [mbar] ([psi]) for medium temperatures:		
[mm]	[in]	+25 °C (+77 °F)	+50 °C (+122 °F)	+80 °C (+176 °F)
50 … 2400	2 … 90	0 (0)	0 (0)	0 (0)

Liner: polyurethane

Nominal diameter		Limit values for absolute pressure in [mbar] ([psi]) for medium temperatures:	
[mm]	[in]	+25 °C (+77 °F)	+50 °C (+122 °F)
25 … 1200	1 … 48	0 (0)	0 (0)

Liner: PTFE

Nominal diameter		Limit values for absolute pressure in [mbar] ([psi]) for medium temperatures:	
[mm]	[in]	+25 °C (+77 °F)	+90 °C (+194 °F)
25	1	0 (0)	0 (0)
40	2	0 (0)	0 (0)
50	2	0 (0)	0 (0)
65	2 ½	0 (0)	40 (0.58)
80	3	0 (0)	40 (0.58)
100	4	0 (0)	135 (2.0)
125	5	135 (2.0)	240 (3.5)
150	6	135 (2.0)	240 (3.5)
200	8	200 (2.9)	290 (4.2)
250	10	330 (4.8)	400 (5.8)
300	12	400 (5.8)	500 (7.3)

Flow limit

The diameter of the pipe and the flow rate determine the nominal diameter of the sensor. The optimum velocity of flow is between 2 to 3 m/s (6.56 to 9.84 ft/s). Also match the velocity of flow (v) to the physical properties of the fluid:

- v < 2 m/s (6.56 ft/s): for abrasive fluids (e.g. potter's clay, lime milk, ore slurry)
- v > 2 m/s (6.56 ft/s): for fluids producing buildup (e.g. wastewater sludge)

A necessary increase in the flow velocity can be achieved by reducing the sensor nominal diameter.

For an overview of the full scale values for the measuring range, see the "Measuring range" section → 148

For custody transfer, the applicable approval determines the permitted measuring range.

Pressure loss

- No pressure loss occurs if the sensor is installed in a pipe with the same nominal diameter.
- Pressure losses for configurations incorporating adapters according to DIN EN 545 → 25

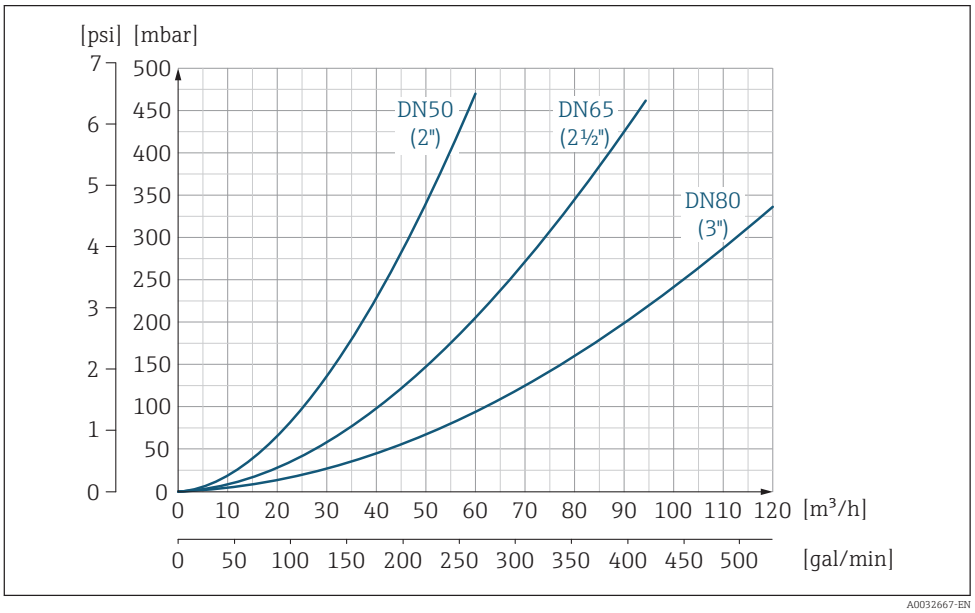

38 *Pressure loss DN 50 to 80 (2 to 3") for order code for "Design", option C "fixed flange, without inlet/outlet runs"*

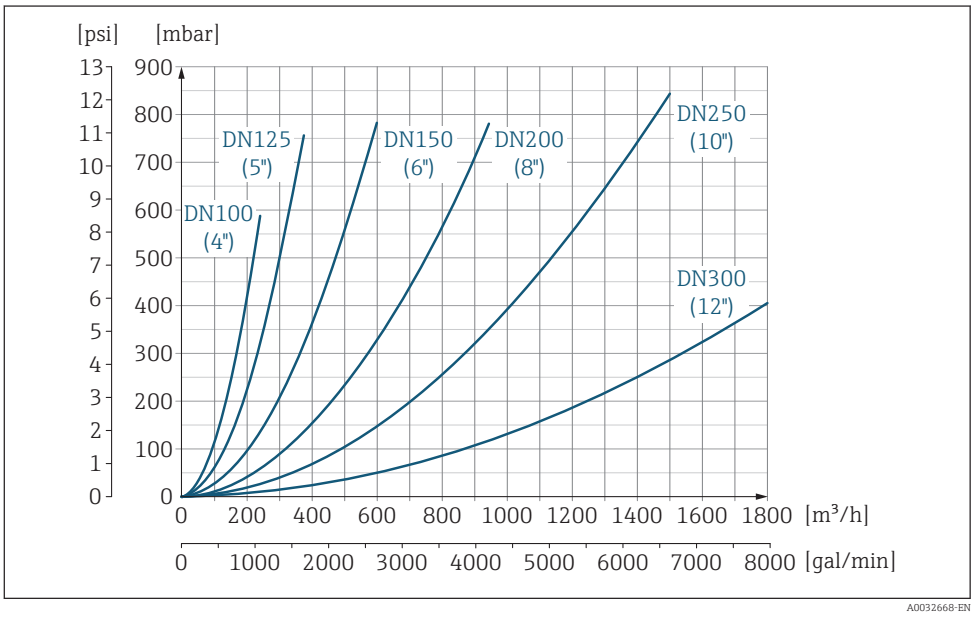

39 *Pressure loss DN 100 to 300 (4 to 12") for order code for "Design", option C "fixed flange, without inlet/outlet runs"*

System pressure → 24

Vibrations → 25

16.10 Mechanical construction

Design, dimensions For the dimensions and installation lengths of the device, see the "Technical Information" document, "Mechanical construction" section.

Weight

All values (weight exclusive of packaging material) refer to devices with flanges of the standard pressure rating.
The weight may be lower than indicated depending on the pressure rating and design.

Weight in SI units

Order code for "Design", options A, B, C, D, E DN 25 to 400, DN 1" to 16"				
Nominal diameter		Reference values		
		EN (DIN), AS, JIS		ASME (Class 150)
[mm]	[in]	Pressure rating	[kg]	[kg]
25	1	PN 40	10	5
32	–	PN 40	11	–
40	1 ½	PN 40	12	7
50	2	PN 40	13	9
65	–	PN 16	13	–
80	3	PN 16	15	14
100	4	PN 16	18	19
125	–	PN 16	25	–
150	6	PN 16	31	33
200	8	PN 10	52	52
250	10	PN 10	81	90
300	12	PN 10	95	129
350	14	PN 6	106	172
375	15	PN 6	121	–
400	16	PN 6	121	203

Order code for "Design", options A, F ≥ DN 450 (18")				
Nominal diameter		Reference values		
		EN (DIN) (PN16)	AS (PN 16)	ASME (Class 150), AWWA (Class D)
[mm]	[in]	[kg]	[kg]	[kg]
450	18	142	138	191
500	20	182	186	228
600	24	227	266	302
700	28	291	369	266
–	30	–	447	318
800	32	353	524	383
900	36	444	704	470
1000	40	566	785	587
–	42	–	–	670
1200	48	843	1229	901
–	54	–	–	1273
1400	–	1204	–	–
–	60	–	–	1594

Order code for "Design", options A, F ≥ DN 450 (18")				
Nominal diameter		Reference values		
		EN (DIN) (PN16)	AS (PN 16)	ASME (Class 150), AWWA (Class D)
[mm]	[in]	[kg]	[kg]	[kg]
1600	–	1845	–	–
–	66	–	–	2131
1800	72	2357	–	2568
–	78	2929	–	3113
2000	–	2929	–	3113
–	84	–	–	3755
2200	–	3422	–	–
–	90	–	–	4797
2400	–	4094	–	–

Order code for "Design", options B, G ≥ DN 450 (18")			
Nominal diameter		Reference values	
		EN (DIN) (PN 6)	ASME (Class 150), AWWA (Class D)
[mm]	[in]	[kg]	[kg]
450	18	161	255
500	20	156	285
600	24	208	405
700	28	304	400
–	30	–	460
800	32	357	550
900	36	485	800
1000	40	589	900
–	42	–	1100
1200	48	850	1400
–	54	850	2200
1400	–	1300	–
–	60	–	2700
1600	–	1845	–
–	66	–	3700
1800	72	2357	4100
–	78	2929	4600
2000	–	2929	–

Weight in US units

Order code for "Design", options A, B, C, D, E DN 25 to 400, DN 1" to 16"		
Nominal diameter		Reference values ASME (Class 150)
[mm]	[in]	[lb]
25	1	11
32	–	–
40	1 ½	15
50	2	20
65	–	–
80	3	31
100	4	42
125	–	–
150	6	73
200	8	115
250	10	198
300	12	284
350	14	379
375	15	–
400	16	448

Order code for "Design", options A, F ≥ DN 450 (18")		
Nominal diameter		Reference values ASME (Class 150), AWWA (Class D)
[mm]	[in]	[lb]
450	18	421
500	20	503
600	24	666
700	28	587
–	30	701
800	32	845
900	36	1036
1000	40	1294
–	42	1477
1200	48	1987
–	54	2807
1400	–	–
–	60	3515
1600	–	–
–	66	4699
1800	72	5662
–	78	6864

Order code for "Design", options A, F ≥ DN 450 (18")		
Nominal diameter		Reference values ASME (Class 150), AWWA (Class D)
[mm]	[in]	[lb]
2000	–	6864
–	84	8280
2200	–	–
–	90	10577
2400	–	–

Order code for "Design", options B, G ≥ DN 450 (18")		
Nominal diameter		Reference values ASME (Class 150), AWWA (Class D)
[mm]	[in]	[lb]
450	18	562
500	20	628
600	24	893
700	28	882
–	30	1014
800	32	1213
900	36	1764
1000	40	1984
–	42	2426
1200	48	3087
–	54	4851
1400	–	–
–	60	5954
1600	–	–
–	66	8158
1800	72	9040
–	78	10143
2000	–	–

Measuring tube specification

Nominal diameter		Pressure rating				Measuring tube internal diameter					
		EN (DIN)	ASME AWWA	AS 2129 AS 4087	JIS	Hard rubber		Polyurethane		PTFE	
[mm]	[in]					[mm]	[in]	[mm]	[in]	[mm]	[in]
25	1	PN 40	Class 150	–	20K	–	–	24	0.94	25	0.98
32	–	PN 40	–	–	20K	–	–	32	1.26	34	1.34
40	1 ½	PN 40	Class 150	–	20K	–	–	38	1.50	40	1.57
50	2	PN 40	Class 150	Table E, PN 16	10K	50	1.97	50	1.97	52	2.05

Nominal diameter		Pressure rating				Measuring tube internal diameter					
		EN (DIN)	ASME AWWA	AS 2129 AS 4087	JIS	Hard rubber		Polyurethane		PTFE	
[mm]	[in]					[mm]	[in]	[mm]	[in]	[mm]	[in]
50 [1]	2	PN 40	Class 150	Table E, PN 16	10K	32	1.26	–	–	–	–
65	–	PN 16	–	–	10K	66	2.60	66	2.60	68	2.68
65 [1]	–	PN 16	–	–	10K	38	1.50	–	–	–	–
80	3	PN 16	Class 150	Table E, PN 16	10K	79	3.11	79	3.11	80	3.15
80 [1]	3	PN 16	Class 150	Table E, PN 16	10K	50	1.97	–	–	–	–
100	4	PN 16	Class 150	Table E, PN 16	10K	102	4.02	102	4.02	104	4.09
100 [1]	4	PN 16	Class 150	Table E, PN 16	10K	66	2.60	–	–	–	–
125	–	PN 16	–	–	10K	127	5.00	127	5.00	130	5.12
125 [1]	–	PN 16	–	–	10K	79	3.11	–	–	–	–
150	6	PN 16	Class 150	Table E, PN 16	10K	156	6.14	156	6.14	156	6.14
150 [1]	6	PN 16	Class 150	Table E, PN 16	10K	102	4.02	–	–	–	–
200	8	PN 10	Class 150	Table E, PN 16	10K	204	8.03	204	8.03	202	7.95
200 [1]	8	PN 16	Class 150	Table E, PN 16	10K	127	5.00	–	–	–	–
250	10	PN 10	Class 150	Table E, PN 16	10K	258	10.2	258	10.2	256	10.08
250 [1]	10	PN 16	Class 150	Table E, PN 16	10K	156	6.14	–	–	–	–
300	12	PN 10	Class 150	Table E, PN 16	10K	309	12.2	309	12.2	306	12.05
300 [1]	12	PN 16	Class 150	Table E, PN 16	10K	204	8.03	–	–	–	–
350	14	PN 6	Class 150	Table E, PN 16	10K	337	13.3	342	13.5	–	–
375	15	–	–	PN 16	10K	389	15.3	–	–	–	–
400	16	PN 6	Class 150	Table E, PN 16	10K	387	15.2	392	15.4	–	–
450	18	PN 6	Class 150	–	10K	436	17.1	437	17.2	–	–
500	20	PN 6	Class 150	Table E, PN 16	10K	487	19.1	492	19.4	–	–
600	24	PN 6	Class 150	Table E, PN 16	10K	589	23.0	594	23.4	–	–
700	28	PN 6	Class D	Table E, PN 16	10K	688	27.1	692	27.2	–	–
750	30	–	Class D	Table E, PN 16	10K	737	29.1	742	29.2	–	–
800	32	PN 6	Class D	Table E, PN 16	–	788	31.0	794	31.3	–	–
900	36	PN 6	Class D	Table E, PN 16	–	889	35.0	891	35.1	–	–
1000	40	PN 6	Class D	Table E, PN 16	–	991	39.0	994	39.1	–	–
–	42	–	Class D	–	–	1043	41.1	1043	41.1	–	–
1200	48	PN 6	Class D	Table E, PN 16	–	1191	46.9	1197	47.1	–	–
–	54	–	Class D	–	–	1339	52.7	–	–	–	–
1400	–	PN 6	–	–	–	1402	55.2	–	–	–	–
–	60	–	Class D	–	–	1492	58.7	–	–	–	–
1600	–	PN 6	–	–	–	1600	63.0	–	–	–	–
–	66	–	Class D	–	–	1638	64.5	–	–	–	–
1800	72	PN 6	–	–	–	1786	70.3	–	–	–	–
–	78	–	Class D	–	–	1989	78.3	–	–	–	–
2000	–	PN 6	–	–	–	1989	78.3	–	–	–	–
–	84	–	Class D	–	–	2099	84.0	–	–	–	–
2200	–	PN 6	–	–	–	2194	87.8	–	–	–	–

Nominal diameter		Pressure rating				Measuring tube internal diameter					
		EN (DIN)	ASME AWWA	AS 2129 AS 4087	JIS	Hard rubber		Polyurethane		PTFE	
[mm]	[in]					[mm]	[in]	[mm]	[in]	[mm]	[in]
–	90	–	Class D	–	–	2 246	89.8	–	–	–	–
2400	–	PN 6	–	–	–	2 391	94.1	–	–	–	–

1) Order code for "Design", option C

Materials

Transmitter housing

Compact version

- Order code for "Housing", option **A** "Compact, alu, coated": Aluminum, AlSi10Mg, coated
- Order code for "Housing", option **M**: polycarbonate plastic
- Window material:
  - For order code for "Housing", option **A**: glass
  - For order code for "Housing", option **M**: plastic

Remote version (wall-mount housing)

- Order code for "Housing", option **P** "Remote, alu, coated": Aluminum, AlSi10Mg, coated
- Order code for "Housing", option **N**: polycarbonate plastic
- Window material:
  - For order code for "Housing", option **P**: glass
  - For order code for "Housing", option **N**: plastic

Sensor connection housing

- Order code for "Housing", option **P** "Remote, alu, coated": Aluminum, AlSi10Mg, coated
- Order code for "Housing", option **N**: polycarbonate plastic

Cable entries/cable glands

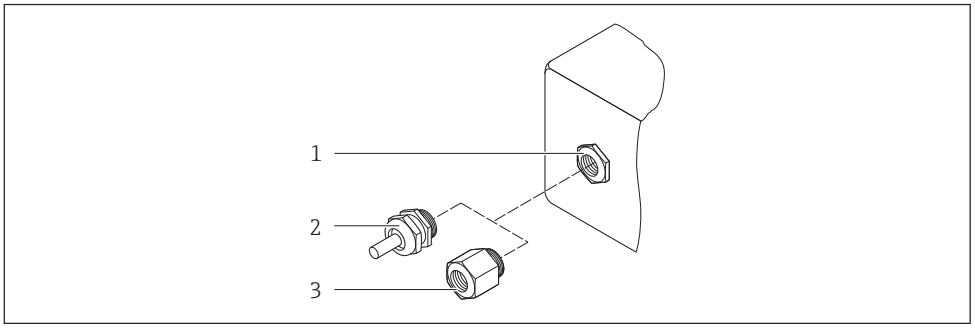

40 Possible cable entries/cable glands

1 Female thread M20 × 1.5
2 Cable gland M20 × 1.5
3 Adapter for cable entry with internal thread G ½" or NPT ½"

Compact and remote versions and sensor connection housing

Cable entry/cable gland	Material
Cable gland M20 × 1.5	Plastic
Remote version: cable gland M20 × 1.5 Option of reinforced connecting cable	▪ Sensor connection housing: Nickel-plated brass ▪ Transmitter wall-mount housing: Plastic
Adapter for cable entry with internal thread G ½" or NPT ½"	Nickel-plated brass

Connecting cable for remote version

Electrode and coil current cable
- Standard cable: PVC cable with copper shield
- Reinforced cable: PVC cable with copper shield and additional steel wire braided jacket

Sensor housing

- DN 25 to 300 (1 to 12")
  - Aluminum half-shell housing, aluminum, AlSi10Mg, coated
  - Fully welded carbon steel housing with protective varnish
- DN 350 to 2400 (14 to 90")
  Fully welded carbon steel housing with protective varnish

Measuring tubes

- DN 25 to 600 (1 to 24")
  Stainless steel: 1.4301, 1.4306, 304, 304L
- DN 700 to 2400 (28 to 90")
  Stainless steel: 1.4301, 304

Liner

- DN 25 to 300 (1 to 12"): PTFE
- DN 25 to 1200 (1 to 48"): polyurethane
- DN 50 to 2400 (2 to 90"): hard rubber

Electrodes

- Stainless steel, 1.4435 (316L)
- Alloy C22, 2.4602 (UNS N06022)
- Tantalum

Process connections

For flanges made of carbon steel:
- DN ≤ 300 (12"): with Al/Zn protective coating or protective varnish
- DN ≥ 350 (14"): protective varnish

All carbon steel lap joint flanges are supplied with a hot-dip galvanized finish.

EN 1092-1 (DIN 2501)

Fixed flange
- Carbon steel:
  - DN ≤ 300: S235JRG2, S235JR+N, P245GH, A105, E250C
  - DN 350 to 2400: P245GH, S235JRG2, A105, E250C
- Stainless steel:
  - DN ≤ 300: 1.4404, 1.4571, F316L
  - DN 350 to 600: 1.4571, F316L, 1.4404
  - DN 700 to 1000: 1.4404, F316L

Lap joint flange
- Carbon steel DN ≤ 300: S235JRG2, A105, E250C
- Stainless steel DN ≤ 300: 1.4306,1.4404, 1.4571, F316L

Lap joint flange, stamped plate
- Carbon steel DN ≤ 300: S235JRG2 similar to S235JR+AR or 1.0038
- Stainless steel DN ≤ 300: 1.4301 similar to 304

ASME B16.5

Fixed flange, lap joint flange
- Carbon steel: A105
- Stainless steel: F316L

JIS B2220

- Carbon steel: A105, A350 LF2
- Stainless steel: F316L

AWWA C207

Carbon steel: A105, P265GH, A181 Class 70, E250C, S275JR

AS 2129

Carbon steel: A105, E250C, P235GH, P265GH, S235JRG2

AS 4087

Carbon steel: A105, P265GH, S275JR

Seals

As per DIN EN 1514-1, form IBC

Accessories

Display guard

Stainless steel, 1.4301 (304L)

Ground disks

- Stainless steel, 1.4435 (316L)
- Alloy C22, 2.4602 (UNS N06022)
- Tantalum

Fitted electrodes

Measurement, reference and empty pipe detection electrodes available as standard with:
- 1.4435 (316L)
- Alloy C22, 2.4602 (UNS N06022)
- Tantalum

Process connections

- EN 1092-1 (DIN 2501)
  - DN ≤ 300: fixed flange (PN 10/16/25/40) = Form A, lap joint flange (PN 10/16), lap joint flange, stamped plate (PN 10) = Form A
  - DN ≥ 350: fixed flange (PN 6/10/16/25) = flat face (Form B)
  - DN 450 to 2400: fixed flange (PN 6/10/16) = flat face (Form B)
- ASME B16.5
  - DN 350 to 2400 (14 to 90"): fixed flange (Class 150)
  - DN 25 to 600 (1 to 24"): lap joint flange (Class 150)
  - DN 25 to 150 (1 to 6"): fixed flange (Class 300)
- JIS B2220
  - DN 50 to 750: fixed flange (10K)
  - DN 25 to 600: fixed flange (20K)
- AWWA C207
  - DN 48 to 72": fixed flange (Class D)
  - DN 48 to 90": fixed flange (Class D)
- AS 2129
  - DN 50 to 1200: fixed flange (Table E)
  - DN 350 to 1200: fixed flange (Table E)
- AS 4087
  - DN 50 to 1200): fixed flange (PN 16)
  - DN 350 to 1200: fixed flange (PN 16)

For information on the different materials used in the process connections → 170

Surface roughness

Electrodes with 1.4435 (316L); Alloy C22, 2.4602 (UNS N06022); tantalum:
≤ 0.3 to 0.5 µm (11.8 to 19.7 µin)
(All data relate to parts in contact with fluid)

16.11 Operability

Languages

Can be operated in the following languages:

- Via local operation:
  English, German, French, Spanish, Italian, Dutch, Portuguese, Polish, Russian, Turkish, Chinese, Japanese, Bahasa (Indonesian), Vietnamese, Czech, Swedish
- Via "FieldCare", "DeviceCare" operating tool:
  English, German, French, Spanish, Italian, Chinese, Japanese
- Via Web browser
  English, German, French, Spanish, Italian, Dutch, Portuguese, Polish, Russian, Turkish, Chinese, Japanese, Bahasa (Indonesian), Vietnamese, Czech, Swedish

Local display

Via display module

Features:

- Standard features 4-line, illuminated, graphic display; touch control
- Order code for "Display; operation", option BA "WLAN" = standard features plus access via Web browser

Information about WLAN interface → 75

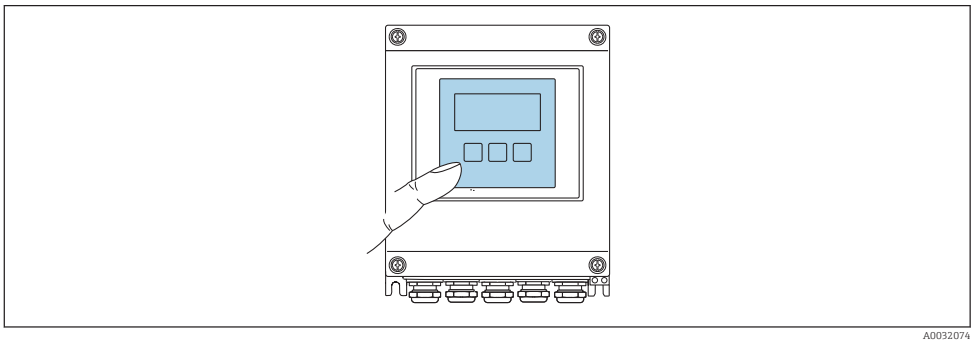

41 *Operation with touch control*

Display elements

- 4-line, illuminated, graphic display
- White background lighting; switches to red in event of device errors
- Format for displaying measured variables and status variables can be individually configured
- Permitted ambient temperature for the display: –20 to +60 °C (–4 to +140 °F)
  The readability of the display may be impaired at temperatures outside the temperature range.

Operating elements

- External operation via touch control (3 optical keys) without opening the housing: ⊞, ⊟, Ⓔ
- Operating elements also accessible in the various zones of the hazardous area

Remote operation

→ 🖹 75

Service interface

→ 🖹 75

Supported operating tools

Different operating tools can be used for local or remote access to the measuring device. Depending on the operating tool used, access is possible with different operating units and via a variety of interfaces.

Supported operating tools	Operating unit	Interface	Additional information
Web browser	Notebook, PC or tablet with Web browser	▪ CDI-RJ45 service interface ▪ WLAN interface	Special Documentation for device
DeviceCare SFE100	Notebook, PC or tablet with Microsoft Windows system	▪ CDI-RJ45 service interface ▪ WLAN interface ▪ Fieldbus protocol	→ 🖹 146

Supported operating tools	Operating unit	Interface	Additional information
FieldCare SFE500	Notebook, PC or tablet with Microsoft Windows system	▪ CDI-RJ45 service interface ▪ WLAN interface ▪ Fieldbus protocol	→ 📄 146
Device Xpert	Field Xpert SFX 100/350/370	HART and FOUNDATION Fieldbus fieldbus protocol	Operating Instructions BA01202S Device description files: Use update function of handheld terminal

Other operating tools based on FDT technology with a device driver such as DTM/iDTM or DD/EDD can be used for device operation. These operating tools are available from the individual manufacturers. Integration into the following operating tools, among others, is supported:

- FactoryTalk AssetCentre (FTAC) by Rockwell Automation → www.rockwellautomation.com
- Process Device Manager (PDM) by Siemens → www.siemens.com
- Asset Management Solutions (AMS) by Emerson → www.emersonprocess.com
- FieldCommunicator 375/475 by Emerson → www.emersonprocess.com
- Field Device Manager (FDM) by Honeywell → www.honeywellprocess.com
- FieldMate by Yokogawa → www.yokogawa.com
- PACTWare → www.pactware.com

The associated device description files are available at: www.endress.com → Downloads

Web server

Thanks to the integrated Web server, the device can be operated and configured via a Web browser and via a service interface (CDI-RJ45) or via a WLAN interface. The structure of the operating menu is the same as for the local display. In addition to the measured values, status information on the device is also displayed and allows the user to monitor the status of the device. Furthermore the device data can be managed and the network parameters can be configured.

A device that has a WLAN interface (can be ordered as an option) is required for the WLAN connection: order code for "Display", option BA "WLAN": 4-line, illuminated; touch control + WLAN. The device acts as an Access Point and enables communication by computer or a mobile handheld terminal.

Supported functions
Data exchange between the operating unit (such as a notebook for example) and the measuring device:
- Upload the configuration from the measuring device (XML format, configuration backup)
- Save the configuration to the measuring device (XML format, restore configuration)
- Export event list (.csv file)
- Export parameter settings (.csv file or PDF file, document the measuring point configuration)
- Export the Heartbeat verification log (PDF file, only available with the "Heartbeat Verification" application package)
- Flash firmware version for device firmware upgrade, for instance
- Download driver for system integration
- Visualize up to 1000 saved measured values (only available with the **Extended HistoROM** application package → 📄 177)

Web server special documentation → 📄 179

HistoROM data management

The measuring device features HistoROM data management. HistoROM data management comprises both the storage and import/export of key device and process data, making operation and servicing far more reliable, secure and efficient.

Additional information on the data storage concept

There are different types of data storage units in which device data are stored and used by the device:

	Device memory	T-DAT	S-DAT
Available data	Device firmware package	▪ Event history, such as diagnostic events ▪ Measured value memory ("Extended HistoROM" order option) ▪ Current parameter data record (used by firmware at run time) ▪ Maximum indicators (min/max values) ▪ Totalizer values	▪ Sensor data: diameter etc. ▪ Serial number ▪ User-specific access code (to use the "Maintenance" user role) ▪ Calibration data ▪ Device configuration (e.g. SW options, fixed I/O or multi I/O)
Storage location	Fixed on the user interface board in the connection compartment	Can be plugged into the user interface board in the connection compartment	In the sensor plug in the transmitter neck part

Data backup

Automatic
- The most important device data (sensor and transmitter) are automatically saved in the DAT modules
- If the transmitter or measuring device is replaced: once the T-DAT containing the previous device data has been exchanged, the new measuring device is ready for operation again immediately without any errors
- If the sensor is replaced: once the sensor has been replaced, new sensor data are transferred from the S-DAT in the measuring device and the measuring device is ready for operation again immediately without any errors

Data transfer

Manual
Transfer of a device configuration to another device using the export function of the specific operating tool, e.g. with FieldCare, DeviceCare or Web server: to duplicate the configuration or to store in an archive (e.g. for backup purposes)

Event list

Automatic
- Chronological display of up to 20 event messages in the events list
- If the **Extended HistoROM** application package (order option) is enabled: up to 100 event messages are displayed in the events list along with a time stamp, plain text description and remedial measures
- The events list can be exported and displayed via a variety of interfaces and operating tools e.g. DeviceCare, FieldCare or Web server

Data logging

Manual
If the **Extended HistoROM** application package (order option) is enabled:
- Record up to 1000 measured values via 1 to 4 channels
- User configurable recording interval
- Record up to 250 measured values via each of the 4 memory channels
- Export the measured value log via a variety of interfaces and operating tools e.g. FieldCare, DeviceCare or web server

16.12 Certificates and approvals

Currently available certificates and approvals can be called up via the product configurator.

CE mark	The device meets the legal requirements of the applicable EU Directives. These are listed in the corresponding EU Declaration of Conformity along with the standards applied. Endress+Hauser confirms successful testing of the device by affixing to it the CE mark.
RCM-Tick mark	The measuring system meets the EMC requirements of the "Australian Communications and Media Authority (ACMA)".
Ex approval	The devices are certified for use in hazardous areas and the relevant safety instructions are provided in the separate "Control Drawing" document. Reference is made to this document on the nameplate.
Drinking water approval	▪ ACS ▪ KTW/W270 ▪ NSF 61 ▪ WRAS BS 6920
HART certification	**HART interface** The measuring device is certified and registered by the FieldComm Group. The measuring system meets all the requirements of the following specifications: ▪ Certified according to HART 7 ▪ The device can also be operated with certified devices of other manufacturers (interoperability)
Radio approval	The measuring device has radio approval. For detailed information regarding radio approval, see Special Documentation → 179
Measuring instrument approval	The measuring device is (optionally) approved as a cold water meter (MI-001) for volume measurement in service subject to legal metrological control in accordance with the European Measuring Instruments Directive 2014/32/EU (MID). The measuring device is qualified to OIML R49: 2013 and has an OIML Certificate of Conformity (optional).
Other standards and guidelines	▪ EN 60529 Degrees of protection provided by enclosures (IP code) ▪ EN 61010-1 Safety requirements for electrical equipment for measurement, control and laboratory use - general requirements ▪ IEC/EN 61326 Emission in accordance with Class A requirements. Electromagnetic compatibility (EMC requirements). ▪ ANSI/ISA-61010-1 (82.02.01): 2004 Safety Requirements for Electrical Equipment for Measurement, Control and Laboratory Use - Part 1 General Requirements

- CAN/CSA-C22.2 No. 61010-1-04
  Safety Requirements for Electrical Equipment for Measurement, Control and Laboratory Use - Part 1 General Requirements
- NAMUR NE 21
  Electromagnetic compatibility (EMC) of industrial process and laboratory control equipment
- NAMUR NE 32
  Data retention in the event of a power failure in field and control instruments with microprocessors
- NAMUR NE 43
  Standardization of the signal level for the breakdown information of digital transmitters with analog output signal.
- NAMUR NE 53
  Software of field devices and signal-processing devices with digital electronics
- NAMUR NE 105
  Specifications for integrating fieldbus devices in engineering tools for field devices
- NAMUR NE 107
  Self-monitoring and diagnosis of field devices
- NAMUR NE 131
  Requirements for field devices for standard applications

16.13 Application packages

Many different application packages are available to enhance the functionality of the device. Such packages might be needed to address safety aspects or specific application requirements.

The application packages can be ordered with the device or subsequently from Endress+Hauser. Detailed information on the order code in question is available from your local Endress+Hauser sales center or on the product page of the Endress+Hauser website: www.endress.com.

Cleaning

Package	Description
Electrode cleaning circuit (ECC)	The electrode cleaning circuit (ECC) function has been developed to have a solution for applications where magnetite (Fe_3O_4) deposits frequently occur (e.g. hot water). Since magnetite is highly conductive this build up leads to measuring errors and ultimately to the loss of signal. The application package is designed to AVOID build up of highly conductive matter and thin layers (typical of magnetite).

Diagnostics functions

Package	Description
Extended HistoROM	Comprises extended functions concerning the event log and the activation of the measured value memory. Event log: Memory volume is extended from 20 message entries (standard version) to up to 100 entries. Data logging (line recorder): ▪ Memory capacity for up to 1000 measured values is activated. ▪ 250 measured values can be output via each of the 4 memory channels. The recording interval can be defined and configured by the user. ▪ Measured value logs can be accessed via the local display or operating tool e.g. FieldCare, DeviceCare or Web server.

Heartbeat Technology

Package	Description
Heartbeat Verification +Monitoring	**Heartbeat Verification** Meets the requirement for traceable verification to DIN ISO 9001:2008 Chapter 7.6 a) "Control of monitoring and measuring equipment". ▪ Functional testing in the installed state without interrupting the process. ▪ Traceable verification results on request, including a report. ▪ Simple testing process via local operation or other operating interfaces. ▪ Clear measuring point assessment (pass/fail) with high test coverage within the framework of manufacturer specifications. ▪ Extension of calibration intervals according to operator's risk assessment. **Heartbeat Monitoring** Continuously supplies data, which are characteristic of the measuring principle, to an external condition monitoring system for the purpose of preventive maintenance or process analysis. These data enable the operator to: ▪ Draw conclusions - using these data and other information - about the impact process influences (such as corrosion, abrasion, buildup etc.) have on the measuring performance over time. ▪ Schedule servicing in time. ▪ Monitor the process or product quality, e.g. gas pockets.

16.14 Accessories

Overview of accessories available for order → 145

16.15 Supplementary documentation

For an overview of the scope of the associated Technical Documentation, refer to the following:
- *W@M Device Viewer* (www.endress.com/deviceviewer): Enter the serial number from nameplate
- *Endress+Hauser Operations App*: Enter the serial number from the nameplate or scan the 2D matrix code (QR code) on the nameplate

Standard documentation

Technical Information

Measuring device	Documentation code
Promag W 400	TI01046D

Brief Operating Instructions

Brief Operating Instructions for the sensor

Measuring device	Documentation code
Proline Promag W	KA01266D

Measuring device	Documentation code
Promag 400	KA01263D

Description of device parameters

Measuring device	Documentation code
Promag 400	GP01043D

Supplementary device-dependent documentation

Special Documentation

Content	Documentation code
Web server	SD01811D
Heartbeat Technology	SD01847D
Display modules A309/A310	SD01793D
Information on Custody Transfer Measurement	SD02038D

Installation Instructions

Contents	Comment
Installation instructions for spare part sets and accessories	▪ Access the overview of all the available spare part sets via *W@M Device Viewer* → 143 ▪ Accessories available for order with Installation Instructions → 145

Index

A

About this document 6
Access authorization to parameters
  Read access 67
  Write access 67
Access code 67
  Incorrect input 67
Adapters 25
Adapting the diagnostic behavior 131
Adapting the status signal 131
Ambient temperature
  Influence 159
Ambient temperature range 24
AMS Device Manager 79
  Function 79
Application 148
Applicator 148
Approvals 176

B

Buried applications 26
Burst Mode 82

C

Cable entries
  Technical data 157
Cable entry
  Degree of protection 51
CE mark 11, 176
Certificates 176
Checklist
  Post-connection check 52
  Post-installation check 38
Cleaning
  Exterior cleaning 142
  Interior cleaning 142
Commissioning 84
  Advanced settings 101
  Configuring the measuring device 84
Communication-specific data 80
Conductivity 161
Connecting cable 39
Connecting the measuring device 44
Connection
  see Electrical connection
Connection examples, potential equalization 48
Connection preparations 42
Connection tools 41
Context menu
  Calling up 62
  Closing 62
  Explanation 62
Current consumption 156

D

Declaration of Conformity 11
Define access code 112, 113
Degree of protection 51, 159
Design
  Measuring device 14
Designated use 10
Device components 14
Device description files 80
Device documentation
  Supplementary documentation 8
Device locking, status 115
Device name
  Sensor 17
  Transmitter 16
Device repair 143
Device revision 80
Device type ID 80
DeviceCare 79
  Device description file 80
Diagnostic behavior
  Explanation 127
  Symbols 127
Diagnostic information
  Design, description 127, 130
  DeviceCare 130
  FieldCare 130
  Light emitting diodes 125
  Local display 126
  Overview 132
  Remedial measures 132
  Web browser 128
Diagnostic list 136
Diagnostic message 126
Diagnostics
  Symbols 126
DIP switch
  see Write protection switch
Direct access 64
Direct access code 58
Disabling write protection 112
Display
  see Local display
Display area
  For operational display 57
  In the navigation view 59
Display values
  For locking status 115
Disposal 144
Document
  Function 6
  Symbols used 6
Document function 6
Down pipe 21
Drinking water approval 176

E

ECC 106

Electrical connection
Commubox FXA195 (USB) . . . 75
Degree of protection . . . 51
Field Communicator 475 . . . 75
Field Xpert SFX350/SFX370 . . . 75
Measuring device . . . 39
Operating tool (e.g. FieldCare, AMS Device Manager, SIMATIC PDM) . . . 75
Operating tools
Via HART protocol . . . 75
Via service interface (CDI-RJ45) . . . 75
Via WLAN interface . . . 75
VIATOR Bluetooth modem . . . 75
Web server . . . 75
WLAN interface . . . 75
Electromagnetic compatibility . . . 160
Enabling write protection . . . 112
Enabling/disabling the keypad lock . . . 68
Endress+Hauser services
Maintenance . . . 142
Repair . . . 143
Environment
Ambient temperature range . . . 24
Mechanical load . . . 160
Shock resistance . . . 160
Storage temperature . . . 159
Vibration resistance . . . 160
Error messages
see Diagnostic messages
Event list . . . 136
Event logbook . . . 136
Ex approval . . . 176
Extended order code
Sensor . . . 17
Transmitter . . . 16
Exterior cleaning . . . 142

F
Field Communicator
Function . . . 79
Field Communicator 475 . . . 79
Field of application
Residual risks . . . 11
Field Xpert
Function . . . 77
Field Xpert SFX350 . . . 77
FieldCare . . . 77
Device description file . . . 80
Establishing a connection . . . 78
Function . . . 77
User interface . . . 78
Filtering the event logbook . . . 137
Firmware
Release date . . . 80
Version . . . 80
Firmware history . . . 141
Fitted electrodes . . . 171
Flow direction . . . 22
Flow limit . . . 162
Function check . . . 84
Function range
Field Xpert . . . 77
Function scope
AMS Device Manager . . . 79
Field Communicator . . . 79
Field Communicator 475 . . . 79
SIMATIC PDM . . . 79
Functions
see Parameter

G
Galvanic isolation . . . 155

H
Hardware write protection . . . 113
HART certification . . . 176
HART protocol
Device variables . . . 80
Measured values . . . 80
Heavy sensors . . . 22
Help text
Calling up . . . 65
Closing . . . 65
Explanation . . . 65

I
I/O electronics module . . . 14, 46
Identifying the measuring device . . . 15
Immersion in water . . . 26
Incoming acceptance . . . 15
Influence
Ambient temperature . . . 159
Inlet runs . . . 23
Input . . . 148
Input mask . . . 60
Inspection
Installation . . . 38
Received goods . . . 15
Inspection check
Connection . . . 52
Installation . . . 21
Installation conditions
Adapters . . . 25
Buried applications . . . 26
Down pipe . . . 21
Heavy sensors . . . 22
Immersion in water . . . 26
Inlet and outlet runs . . . 23
Installation dimensions . . . 23
Length of connecting cable . . . 25
Mounting location . . . 21
Orientation . . . 22
Partially filled pipe . . . 22
System pressure . . . 24
Vibrations . . . 25
Installation dimensions . . . 23
Interior cleaning . . . 142

L

Languages, operation options 172
Length of connecting cable 25
Line recorder 120
Local display 172
  Editing view 60
  Navigation view 58
  see Diagnostic message
  see In alarm condition
  see Operational display
Low flow cut off 155

M

Main electronics module 14
Maintenance tasks 142
  Replacing seals 142
Manufacturer ID 80
Manufacturing date 16, 17
Materials 169
Maximum measured error 157
Measured variables
  Calculated 148
  Measured 148
  see Process variables
Measuring and test equipment 142
Measuring device
  Configuration 84
  Conversion 143
  Design 14
  Disposal 144
  Integrating via communication protocol 80
  Mounting the sensor 27
    Mounting the ground cable/ground disks 28
    Mounting the seals 28
    Screw tightening torques 28
  Preparing for electrical connection 42
  Preparing for mounting 27
  Removing 144
  Repairs 143
  Switch-on 84
Measuring instrument approval 176
Measuring principle 148
Measuring range 148
Measuring system 148
Measuring tube specification 167
Mechanical load 160
Medium temperature range 160
Menu
  Diagnostics 135
  Setup 84, 85
Menus
  For measuring device configuration 84
  For specific settings 101
Mounting dimensions
  see Installation dimensions
Mounting location 21
Mounting preparations 27
Mounting tools 27

N

Nameplate
  Sensor 17
  Transmitter 16
Navigation path (navigation view) 58
Navigation view
  In the submenu 58
  In the wizard 58
Numeric editor 60

O

Operable flow range 152
Operating elements 61, 127
Operating keys
  see Operating elements
Operating menu
  Menus, submenus 54
  Structure 54
  Submenus and user roles 55
Operating philosophy 55
Operation 115
Operation options 53
Operational display 56
Operational safety 11
Order code 16, 17
Orientation (vertical, horizontal) 22
Outlet runs 23
Output 153
Output signal 153

P

Packaging disposal 20
Parameter
  Changing 66
  Entering a value 66
Parameter settings
  Administration (Submenu) 110
  Burst configuration 1 to n (Submenu) 82
  Current output 1 (Wizard) 89
  Data logging (Submenu) 120
  Define access code (Wizard) 109
  Device information (Submenu) 139
  Diagnostics (Menu) 135
  Display (Submenu) 104
  Display (Wizard) 95
  Electrode cleaning circuit (Submenu) 106
  Empty pipe detection (Wizard) 100
  For the status input 87
  Input values (Submenu) 117
  Low flow cut off (Wizard) 98
  Output conditioning (Wizard) 96
  Output values (Submenu) 118
  Process variables (Submenu) 116
  Pulse/frequency/switch output 1 to n (Wizard) 90, 91, 93
  Reset access code (Submenu) 109
  Sensor adjustment (Submenu) 102
  Setup (Menu) 85
  Simulation (Submenu) 110

Status input (Submenu) 87
System units (Submenu) 86
Totalizer (Submenu) 117
Totalizer 1 to n (Submenu) 102
Totalizer handling (Submenu) 119
Web server (Submenu) 74
WLAN Settings (Submenu) 107
Partially filled pipe 22
Performance characteristics 157
Post-connection check (checklist) 52
Post-installation check 84
Post-installation check (checklist) 38
Potential equalization 47
Power consumption 156
Power supply failure 156
Pressure loss 162
Pressure tightness 161
Pressure-temperature ratings 161
Process conditions
Conductivity 161
Flow limit 162
Fluid temperature 160
Pressure loss 162
Pressure tightness 161
Process connections 172
Product safety 11
Protecting parameter settings 112

R

Radio approval 176
RCM-Tick mark 176
Read access 67
Reading measured values 115
Recalibration 142
Reference operating conditions 157
Registered trademarks 9
Remedial measures
Calling up 128
Closing 128
Remote operation 173
Remote version
Connecting the signal cables 44
Repair 143
Repair of a device 143
Repairs
Notes 143
Repeatability 159
Replacement
Device components 143
Replacing seals 142
Requirements for personnel 10
Return 143

S

Safety 10
Screw tightening torques 28
Sensor
Mounting 27
Serial number 16, 17
Setting the operating language 84
Settings
Adapting the measuring device to the process conditions 118
Administration 108
Advanced display configurations 104
Current output 89
Device reset 139
Device tag 85
Electrode cleaning circuit (ECC) 106
Empty pipe detection (EPD) 100
Local display 95
Low flow cut off 98
Operating language 84
Output conditioning 96
Pulse output 90
Pulse/frequency/switch output 90, 91
Resetting the totalizer 119
Sensor adjustment 102
Simulation 110
Status input 87
Switch output 93
System units 86
Totalizer 102
Totalizer reset 119
WLAN 107
Shock resistance 160
Showing data logging 120
Signal on alarm 154
SIMATIC PDM 79
Function 79
Software release 80
Spare part 143
Spare parts 143
Special connection instructions 50
Standards and guidelines 176
Status area
For operational display 56
In the navigation view 58
Status signals 126, 129
Storage conditions 19
Storage temperature 19
Storage temperature range 159
Structure
Operating menu 54
Submenu
Administration 108, 110
Advanced setup 101
Burst configuration 1 to n 82
Data logging 120
Device information 139
Display 104
Electrode cleaning circuit 106
Event list 136
Input values 117
Output values 115, 118
Overview 55
Process variables 116
Reset access code 109

Sensor adjustment 102
Simulation 110
Status input 87
System units 86
Totalizer 117
Totalizer 1 to n 102
Totalizer handling 119
Web server 74
WLAN Settings 107
Supplementary documentation 178
Supply unit
Requirements 42
Supply voltage 42, 156
Surface roughness 172
Symbols
For communication 56
For correction 60
For diagnostic behavior 56
For locking 56
For measured variable 57
For measurement channel number 57
For menus 59
For parameters 59
For status signal 56
For submenu 59
For wizard 59
In the status area of the local display 56
In the text and numeric editor 60
System design
Measuring system 148
see Measuring device design
System integration 80
System pressure 24

T
Technical data, overview 148
Temperature range
Ambient temperature range for display 172
Storage temperature 19
Terminal assignment 41, 44, 46
terminals 156
Text editor 60
Tool tip
see Help text
Tools
Electrical connection 41
For mounting 27
Transport 19
Totalizer
Configuration 102
Transmitter
Connecting the signal cables 46
Turning the display module 37
Turning the housing 35
Transporting the measuring device 19
Troubleshooting
General 123
Turning the display module 37
Turning the electronics housing
see Turning the transmitter housing
Turning the transmitter housing 35

U
Use of the measuring device
Borderline cases 10
Incorrect use 10
see Designated use
User interface
Current diagnostic event 135
Previous diagnostic event 135
User roles 55

V
Version data for the device 80
Vibration resistance 160
Vibrations 25

W
W@M 142, 143
W@M Device Viewer 15, 143
Weight
Transport (notes) 19
Wizard
Current output 1 89
Define access code 109
Display 95
Empty pipe detection 100
Low flow cut off 98
Output conditioning 96
Pulse/frequency/switch output 1 to n 90, 91, 93
WLAN settings 107
Workplace safety 11
Write access 67
Write protection
Via access code 112
Via write protection switch 113
Write protection switch 113

www.addresses.endress.com

Endress+Hauser

People for Process Automation

LEFT BLANK

ENDRESS + HAUSER

CERABAR PMC21, PRESSURE TRANSDUCER

LEFT BLANK

Operating Instructions
Cerabar PMC11, PMC21, PMP11, PMP21, PMP23

Process pressure measurement
Pressure transducer for safe measurement and monitoring of absolute and gauge pressure

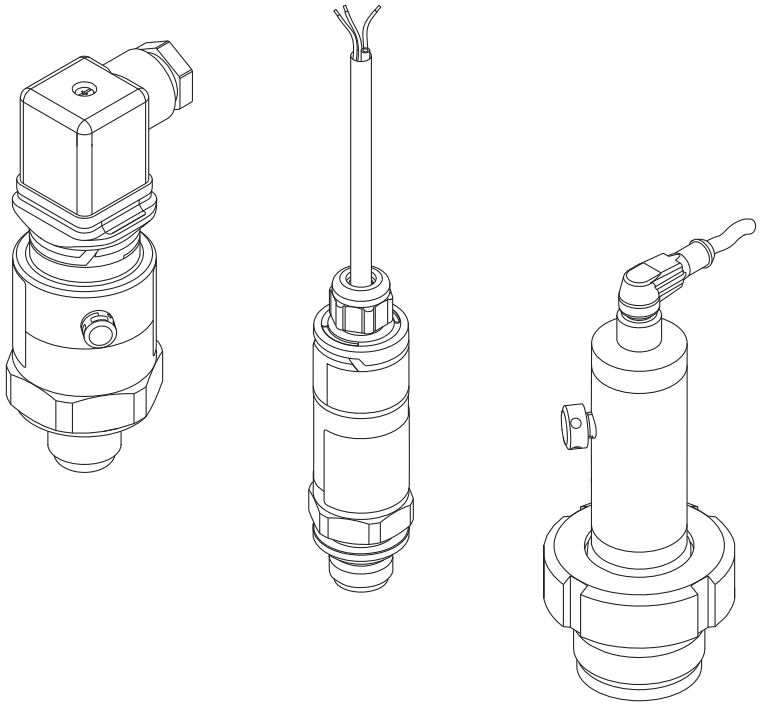

Endress+Hauser
People for Process Automation

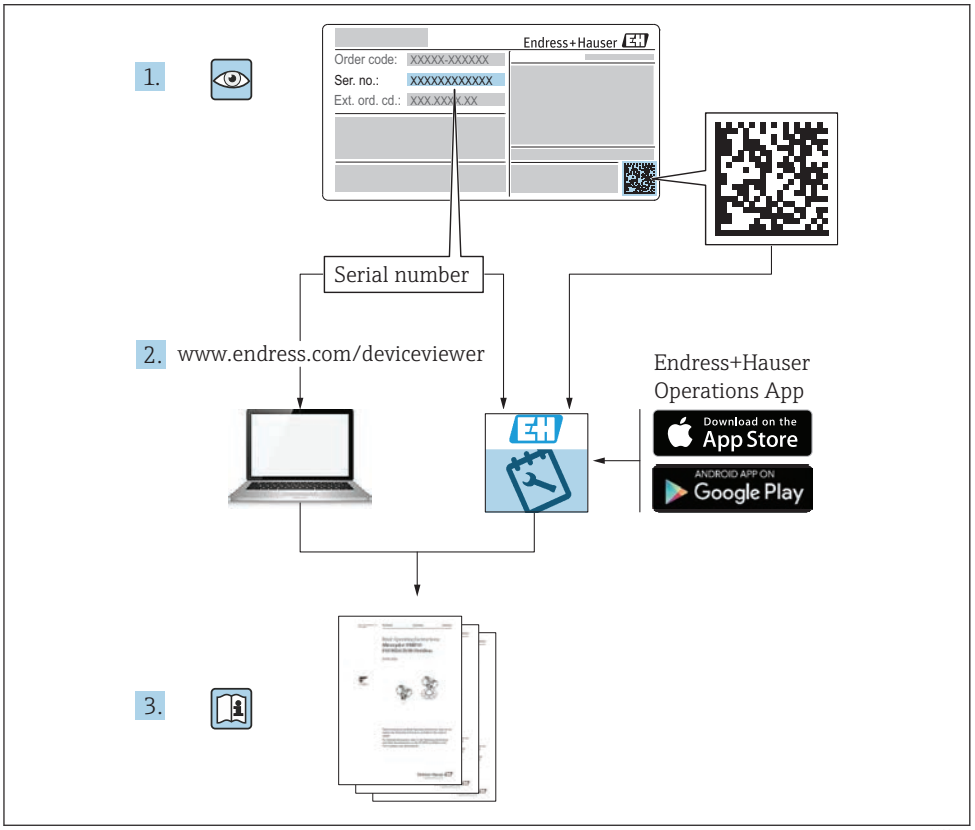

- Make sure the document is stored in a safe place such that it is always available when working on or with the device.
- To avoid danger to individuals or the facility, read the "Basic safety instructions" section carefully, as well as all other safety instructions in the document that are specific to working procedures.
- The manufacturer reserves the right to modify technical data without prior notice. Your Endress+Hauser distributor will supply you with current information and updates to these Instructions.

Table of contents

1 Document information 4
1.1 Document function 4
1.2 Symbols used 4
1.3 Documentation 5
1.4 Terms and abbreviations 7
1.5 Turn down calculation 8

2 Basic safety instructions 9
2.1 Requirements concerning the staff 9
2.2 Designated use 9
2.3 Workplace safety 10
2.4 Operational safety 10
2.5 Product safety 10

3 Product description 11
3.1 Product design 11
3.2 Function 12

4 Incoming acceptance and product identification 13
4.1 Incoming acceptance 13
4.2 Product identification 14
4.3 Storage and transport 15

5 Installation 16
5.1 Mounting dimensions 16
5.2 Installation conditions 16
5.3 Influence of the installation position 16
5.4 Mounting location 17
5.5 Mounting of the profile seal for universal process mounting adapter 18
5.6 Mounting instructions for oxygen applications 18
5.7 Post-installation check 19

6 Electrical connection 20
6.1 Connecting the measuring unit 20
6.2 Switching capacity 21
6.3 Connection conditions 22
6.4 Connection data 22
6.5 Post-connection check 22

7 Operation options 23
7.1 Plug-on display PHX20 (optional) 23

8 Diagnostics and troubleshooting . . . 26
8.1 Troubleshooting 26
8.2 Response of output to errors 26
8.3 Disposal 26

9 Maintenance 26
9.1 Exterior cleaning 27

10 Repairs 28
10.1 General notes 28
10.2 Return 28
10.3 Disposal 28

11 Accessories 29
11.1 Weld-in adapter 29
11.2 Process adapter M24 29
11.3 Plug-on display PHX20 30
11.4 M12 plug connectors 30

12 Technical data 32
12.1 Input 32
12.2 Output 36
12.3 Performance characteristics of ceramic process isolating diaphragm 38
12.4 Performance characteristics of metal process isolating diaphragm 40
12.5 Environment 42
12.6 Process 44

Index 46

1 Document information

1.1 Document function

These Operating Instructions contain all the information that is required in various phases of the life cycle of the device: from product identification, incoming acceptance and storage, to mounting, connection, operation and commissioning through to troubleshooting, maintenance and disposal.

1.2 Symbols used

1.2.1 Safety symbols

Symbol	Meaning
DANGER	**DANGER!** This symbol alerts you to a dangerous situation. Failure to avoid this situation will result in serious or fatal injury.
WARNING	**WARNING!** This symbol alerts you to a dangerous situation. Failure to avoid this situation can result in serious or fatal injury.
CAUTION	**CAUTION!** This symbol alerts you to a dangerous situation. Failure to avoid this situation can result in minor or medium injury.
NOTICE	**NOTICE!** This symbol contains information on procedures and other facts which do not result in personal injury.

1.2.2 Electrical symbols

Symbol	Meaning	Symbol	Meaning
	**Protective ground connection** A terminal which must be connected to ground prior to establishing any other connections.		**Ground connection** A grounded terminal which, as far as the operator is concerned, is grounded via a grounding system.

1.2.3 Tool symbols

Symbol	Meaning
 A0011222	Open-ended wrench

1.2.4 Symbols for certain types of information

Symbol	Meaning
	**Permitted** Procedures, processes or actions that are permitted.
	**Forbidden** Procedures, processes or actions that are forbidden.
	**Tip** Indicates additional information.

Symbol	Meaning
	Reference to documentation
	Reference to page
	Reference to graphic
1. , 2. , 3. …	Series of steps
	Result of a step
	Visual inspection

1.2.5 Symbols in graphics

Symbol	Meaning
1, 2, 3 …	Item numbers
1. , 2. , 3. …	Series of steps
A, B, C, …	Views

1.3 Documentation

The document types listed are available:
In the Download Area of the Endress+Hauser Internet site: www.endress.com → Download

1.3.1 Technical Information (TI): planning aid for your device

PMC11: TI01133P

PMP11: TI01133P

PMC21: TI01133P

PMP21: TI01133P

PMP23: TI01203P

The document contains all the technical data on the device and provides an overview of the accessories and other products that can be ordered for the device.

1.3.2 Brief Operating Instructions (KA): getting the 1st measured value quickly

KA01164P:

These instructions contain all the essential information from incoming acceptance to initial commissioning.

1.3.3 Safety Instructions (XA)

Depending on the approval, the following Safety Instructions (XA) are supplied with the device. They are an integral part of the Operating Instructions.

Device	Directive	Documentation	Option [1]
PMP21 PMP23	ATEX II 1/2G Ex ia IIC T4 Ga/Gb	XA01271P	BA
PMC21	ATEX II 2G Ex ia IIC T4 Gb	XA01271P	BB
PMC21 PMP21	ATEX II 3G Ex ec IIC T4 Gc	XA01533P	BC
PMC21 PMP21 PMP23	FM IS Cl. I, Div.1 Gr. A-D T4	XA01321P	FA
PMC21 PMP21 PMP23	CSA C/US IS Cl. I Div. 1 Gr. A-D	XA01322P	CB
PMC21 PMP21 PMP23	EAC Ex ia IIC T4 Ga/Gb	XA01540P	GA
PMC21 PMP21 PMP23	IEC Ex ia IIC T4 Ga/Gb	XA01271P	IA
PMC21 PMP21 PMP23	NEPSI Ex ia IIC T4	XA01363P	NA
PMC21 PMP21 PMP23	TIIS Ex ia IIC T4	In preparation	TA

1) Product Configurator order code for "Approval"

The nameplate indicates the Safety Instructions (XA) that are relevant to the device.

1.4 Terms and abbreviations

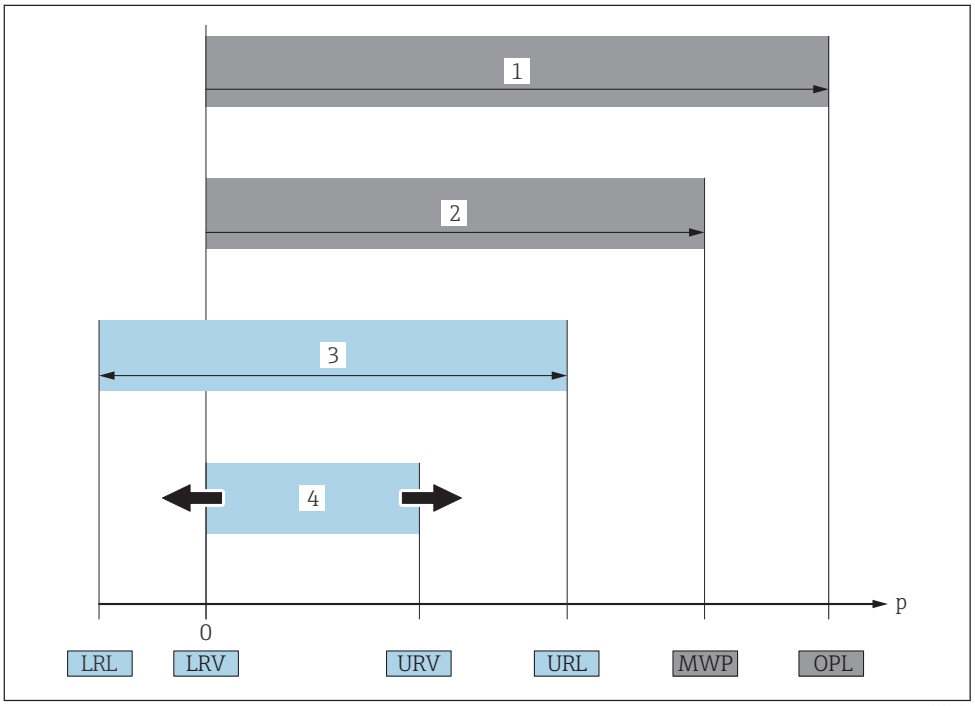

Item	Term/ abbreviation	Explanation
1	OPL	The OPL (over pressure limit = sensor overload limit) for the measuring device depends on the lowest-rated element, with regard to pressure, of the selected components, i.e. the process connection has to be taken into consideration in addition to the measuring cell. Also observe pressure-temperature dependency. For the relevant standards and additional notes, see the "Pressure specifications" section → 🖹 45 . The OPL may only be applied for a limited period of time.
2	MWP	The MWP (maximum working pressure) for the sensors depends on the lowest-rated element, with regard to pressure, of the selected components, i.e. the process connection has to be taken into consideration in addition to the measuring cell. Also observe pressure-temperature dependency. For the relevant standards and additional notes, see the "Pressure specifications" section → 🖹 45 . The MWP may be applied at the device for an unlimited period. The MWP can also be found on the nameplate.
3	Maximum sensor measuring range	Span between LRL and URL This sensor measuring range is equivalent to the maximum calibratable/adjustable span.
4	Calibrated/ adjusted span	Span between LRV and URV Factory setting: 0 to URL Other calibrated spans can be ordered as customized spans.
p	-	Pressure
-	LRL	Lower range limit
-	URL	Upper range limit
-	LRV	Lower range value
-	URV	Upper range value
-	TD (turn down)	Turn down The turn down is preset at the factory and cannot be changed. Example - see the following section.

1.5 Turn down calculation

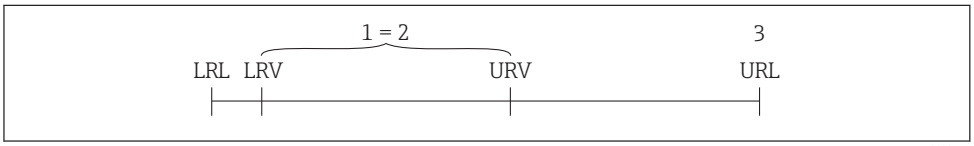

1 *Calibrated/adjusted span*
2 *Zero point-based span*
3 *URL sensor*

Example

- Sensor:10 bar (150 psi)
- Upper range value (URL) = 10 bar (150 psi)

Turn down (TD):

- Calibrated/adjusted span: 0 to 5 bar (0 to 75 psi)
- Lower range value (LRV) = 0 bar (0 psi)
- Upper range value (URV) = 5 bar (75 psi)

$$TD = \frac{URL}{|URV - LRV|}$$

$$TD = \frac{10\ \text{bar (150 psi)}}{|5\ \text{bar (75 psi)} - 0\ \text{bar (0 psi)}|} = 2$$

In this example, the TD is 2:1.
This span is based on the zero point.

2 Basic safety instructions

2.1 Requirements concerning the staff

The personnel for installation, commissioning, diagnostics and maintenance must fulfill the following requirements:
- ▶ Trained, qualified specialists: must have a relevant qualification for this specific function and task
- ▶ Are authorized by the plant owner/operator
- ▶ Are familiar with federal/national regulations
- ▶ Before beginning work, the specialist staff must have read and understood the instructions in the Operating Instructions and supplementary documentation as well as in the certificates (depending on the application)
- ▶ Following instructions and basic conditions

The operating personnel must fulfill the following requirements:
- ▶ Being instructed and authorized according to the requirements of the task by the facility's owner-operator
- ▶ Following the instructions in these Operating Instructions

2.2 Designated use

2.2.1 Application and media

The Cerabar is used to measure absolute and gauge pressure in gases, vapors and liquids. The process-wetted materials of the measuring device must have an adequate level of resistance to the media.

The measuring device may be used for the following measurements (process variables)
- in compliance with the limit values specified under "Technical data"
- in compliance with the conditions that are listed in additional documentation such as the XA and this manual.

Measured process variable

- PMC11: Gauge pressure
- PMP11: Gauge pressure
- PMC21: Gauge pressure or absolute pressure
- PMP21: Gauge pressure or absolute pressure
- PMP23: Gauge pressure or absolute pressure

Calculated process variable

Pressure

2.2.2 Incorrect use

The manufacturer is not liable for damage caused by improper or non-designated use.

Verification for borderline cases:
- ▶ For special fluids and fluids for cleaning, Endress+Hauser is glad to provide assistance in verifying the corrosion resistance of process-wetted materials, but does not accept any warranty or liability.

2.2.3 Residual risks

When in operation, the housing may reach a temperature close to the process temperature.

Danger of burns from contact with surfaces!
- ▶ For elevated process temperatures, ensure protection against contact to prevent burns.

2.3 Workplace safety

For work on and with the device:
- ▶ Wear the required personal protective equipment according to federal/national regulations.
- ▶ Switch off the supply voltage before connecting the device.

2.4 Operational safety

Risk of injury!
- ▶ Operate the device in proper technical condition and fail-safe condition only.
- ▶ The operator is responsible for interference-free operation of the device.

Conversions to the device

Unauthorized modifications to the device are not permitted and can lead to unforeseeable dangers.
- ▶ If, despite this, modifications are required, consult with Endress+Hauser.

Hazardous area

To eliminate the risk of danger to persons or the facility when the device is used in the approval-related area (e.g. explosion protection, pressure equipment safety):
- ▶ Check the nameplate to verify if the device ordered can be put to its intended use in the approval-related area.
- ▶ Observe the specifications in the separate supplementary documentation, such as the XA or SD, which is an integral part of these Instructions.

2.5 Product safety

This measuring device is designed in accordance with good engineering practice to meet state-of-the-art safety requirements, has been tested, and left the factory in a condition in which it is safe to operate.

It meets general safety standards and legal requirements. It also complies with the EU directives listed in the device-specific EU Declaration of Conformity. Endress+Hauser confirms this by affixing the CE mark to the device.

3 Product description

3.1 Product design

Overview	Position	Description
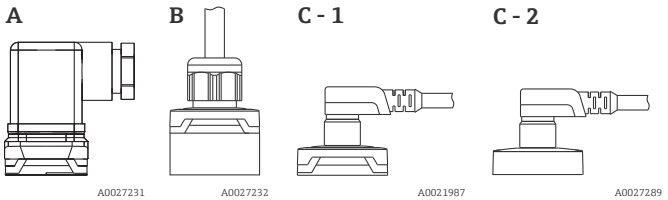 A0027231 A0027232 A0021987 A0027289	A	Valve plug
	B	Cable
	C- 1	M12 plug Housing cap made of plastic
	C- 2	M12 plug For Ex ec and IP69: metal housing cap Metal housing cap can also be ordered as an option.
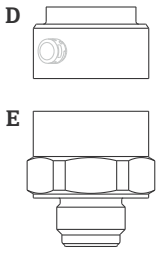 A0027226 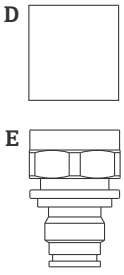 A0027215 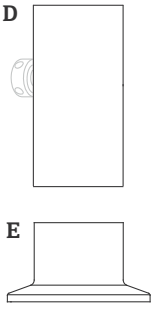 A0027227	D E	Housing Process connection (sample illustration)

3.2 Function

3.2.1 Calculating the pressure

Devices with ceramic process isolating diaphragm (Ceraphire®)

The ceramic sensor is an oil-free sensor, i.e. the process pressure acts directly on the robust ceramic process isolating diaphragm and causes it to deflect. A pressure-dependent change in capacitance is measured at the electrodes of the ceramic substrate and the process isolating diaphragm. The measuring range is determined by the thickness of the ceramic process isolating diaphragm.

Devices with metallic process isolating diaphragm

The process pressure deflects the metal process isolating diaphragm of the sensor and a fill fluid transfers the pressure to a Wheatstone bridge (semiconductor technology). The pressure-dependent change in the bridge output voltage is measured and evaluated.

4 Incoming acceptance and product identification

4.1 Incoming acceptance

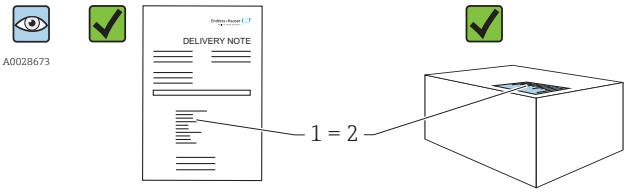

Is the order code on the delivery note (1) identical to the order code on the product sticker (2)?

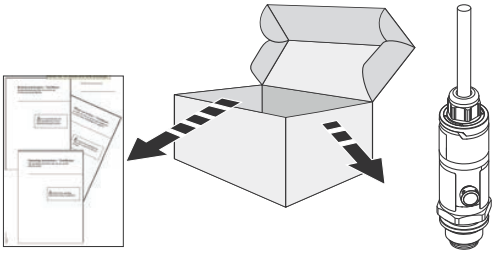

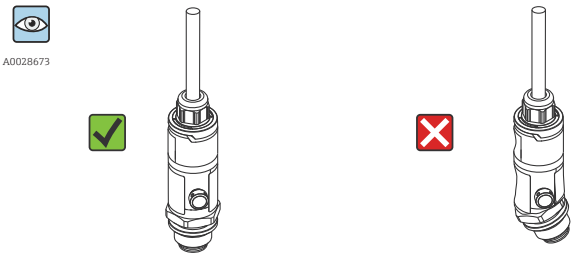

Are the goods undamaged?

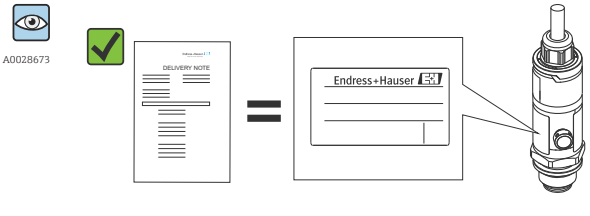

Do the data on the nameplate correspond to the order specifications and the delivery note?

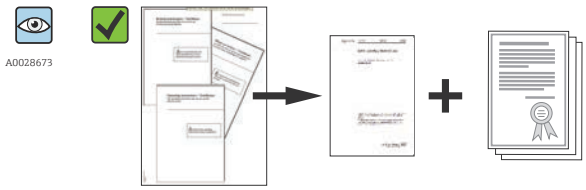

A0022106

Is the documentation available?
If required (see nameplate): Are the safety instructions (XA) provided?

If one of these conditions does not apply, please contact your Endress+Hauser sales office.

4.2 Product identification

The following options are available for the identification of the measuring device:
- Nameplate specifications
- Order code with a breakdown of the device features on the delivery note
- Enter the serial numbers from the nameplates in *W@M Device Viewer* (www.endress.com/deviceviewer): All the information about the measuring device is displayed.

For an overview of the technical documentation provided, enter the serial number from the nameplates in *W@M Device Viewer* (www.endress.com/deviceviewer)

4.2.1 Manufacturer address

Endress+Hauser SE+Co. KG
Hauptstraße 1
79689 Maulburg, Germany

Address of the manufacturing plant: See nameplate.

4.2.2 Nameplate

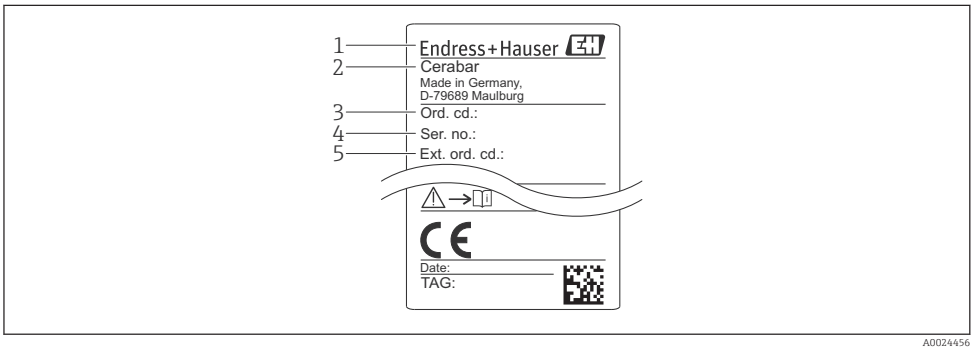

A0024456

1 *Manufacturer's address*
2 *Device name*
3 *Order number*
4 *Serial number*
5 *Extended order number*

4.3 Storage and transport

4.3.1 Storage conditions

Use original packaging.

Store the measuring device in clean and dry conditions and protect from damage caused by shocks (EN 837-2).

Storage temperature range

–40 to +85 °C (–40 to +185 °F)

4.3.2 Transporting the product to the measuring point

⚠ WARNING

Incorrect transport!

Housing and diaphragm may become damaged, and there is a risk of injury!

- ▶ Transport the measuring device to the measuring point in its original packaging or by the process connection.

5 Installation

5.1 Mounting dimensions

For dimensions, see the "Mechanical construction" section in the Technical Information.

5.2 Installation conditions

- Moisture must not penetrate the housing when mounting the device, establishing the electrical connection and during operation.
- For M12 plug made of metal: Do not remove the protection cap (only in IP69 and Ex ec version) of M12 plug connection until shortly before electrical connection.
- Do not clean or touch process isolating diaphragms with hard and/or pointed objects.
- Do not remove process isolating diaphragm protection until shortly before installation.
- Always tighten the cable entry firmly.
- Point the cable and connector downwards where possible to prevent moisture from entering (e.g. rain or condensation water).
- Protect housing against impact.
- For devices with gauge pressure sensor and M12 or valve plug, the following applies:

NOTICE

If a heated device is cooled in the course of a cleaning process (by cold water, for example), a vacuum develops for a short time causing moisture to penetrate the sensor via the pressure compensation element (1).

Device could be destroyed!

► In the event of this happening, mount the device in such a way that the pressure compensation element (1) is pointing downwards at an angle or to the side, if possible.

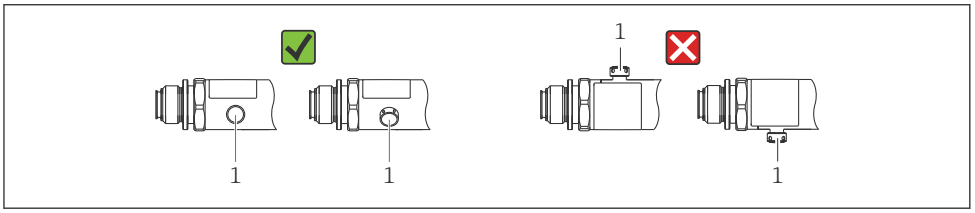

A0022252

5.3 Influence of the installation position

Any orientation is possible. However, the orientation may cause a zero point shift i.e. the measured value does not show zero when the vessel is empty or partially full.

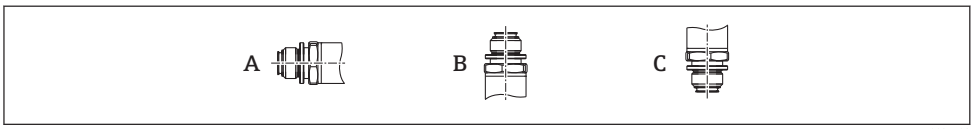

A0024708

Type	Process isolating diaphragm axis is horizontal (A)	Process isolating diaphragm pointing upwards (B)	Process isolating diaphragm pointing downwards (C)
PMP11 PMP21 PMP23	Calibration position, no effect	Up to +4 mbar (+0.058 psi)	Up to −4 mbar (−0.058 psi)
PMC11, PMC21 < 1 bar (15 psi)	Calibration position, no effect	Up to +0.3 mbar (+0.0044 psi)	Up to −0.3 mbar (−0.0044 psi)
PMC11, PMC21 ≥1 bar (15 psi)	Calibration position, no effect	Up to +3 mbar (+0.0435 psi)	Up to −3 mbar (−0.0435 psi)

5.4 Mounting location

5.4.1 Pressure measurement

Pressure measurement in gases

Mount the device with shutoff device above the tapping point so that any condensate can flow into the process.

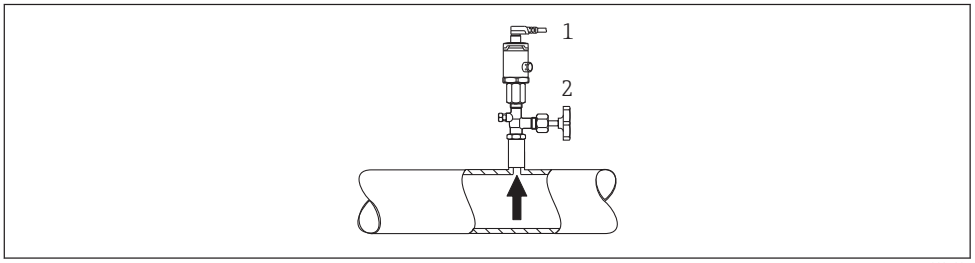

A0021904

1 Device
2 Shutoff device

Pressure measurement in vapors

For pressure measurement in vapors, use a siphon. The siphon reduces the temperature to almost ambient temperature. Mount the device with a shutoff device at the same height as the tapping point.

Advantage:
only minor/negligible heat effects on the device.

Note the max. permitted ambient temperature of the transmitter!

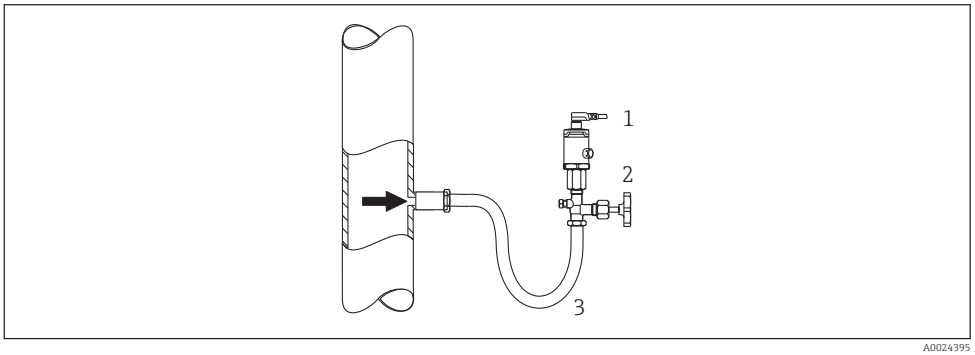

A0024395

1 Device
2 Shutoff device
3 Siphon

Pressure measurement in liquids

Mount the device with a shutoff device at the same height as the tapping point.

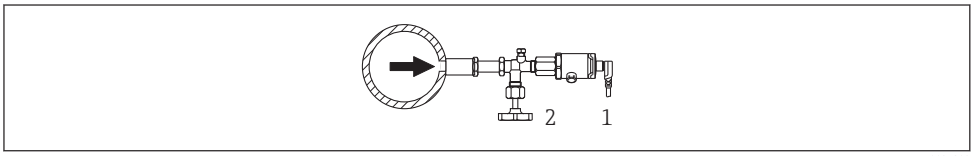

A0024399

1 Device
2 Shutoff device

5.4.2 Level measurement

- Always install the device below the lowest measuring point.
- Do not install the device at the following positions:
  - In the filling curtain
  - In the tank outlet
  - in the suction area of a pump
  - Or at a point in the tank which could be affected by pressure pulses from the agitator.

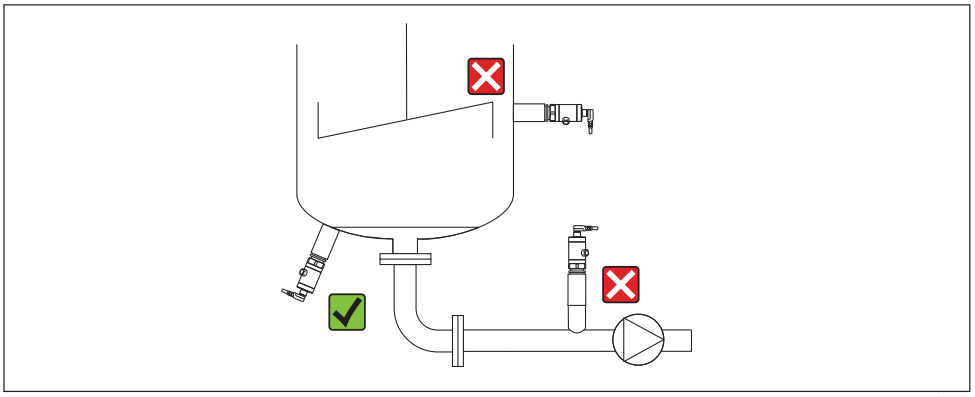

A0024405

5.5 Mounting of the profile seal for universal process mounting adapter

For details on mounting, see KA00096F/00/A3.

5.6 Mounting instructions for oxygen applications

Oxygen and other gases can react explosively to oils, grease and plastics, such that, among other things, the following precautions must be taken:

- All components of the system, such as measuring devices, must be cleaned in accordance with the BAM requirements.
- Dependent on the materials used, a certain maximum temperature and a maximum pressure for oxygen applications must not be exceeded.
- The following table lists devices (devices only, not accessories or enclosed accessories), which are suitable for gaseous oxygen applications.

Device	p_{max} for oxygen applications	T_{max} for oxygen applications	Option [1]
PMC21	40 bar (600 psi)	−10 to +60 °C (+14 to +140 °F)	HB

1) Product Configurator, order code for "Service"

5.7 Post-installation check

❑	Is the device undamaged (visual inspection)?
❑	Does the device comply with the measuring point specifications? For example: ▪ Process temperature ▪ Process pressure ▪ Ambient temperature range ▪ Measuring range
❑	Are the measuring point identification and labeling correct (visual inspection)?
❑	Is the device adequately protected against precipitation and direct sunlight?
❑	Are the securing screws tightened securely?
❑	Is the pressure compensation element pointing downwards at an angle or to the side?
❑	To prevent moisture from penetrating, ensure that the connecting cables/plugs are pointing downwards.

6 Electrical connection

6.1 Connecting the measuring unit

6.1.1 Terminal assignment

⚠ WARNING

Risk of injury from the uncontrolled activation of processes!

- ▶ Switch off the supply voltage before connecting the device.
- ▶ Make sure that downstream processes are not started unintentionally.

⚠ WARNING

Supply voltage might be connected!

Risk of explosion!

- ▶ Make sure that no supply voltage is applied when connecting.
- ▶ Switch off the supply voltage before connecting the device.

⚠ WARNING

Limitation of electrical safety due to incorrect connection!

- ▶ In accordance with IEC/EN61010 a separate circuit breaker must be provided for the device .
- ▶ The device must be operated with a 500 mA fine-wire fuse (slow-blow).
- ▶ When using the measuring device in hazardous areas, installation must comply with the corresponding national standards and regulations and the Safety Instructions or Installation or Control Drawings.
- ▶ All explosion protection data are given in separate documentation which is available upon request. The Ex documentation is supplied as standard with all devices approved for use in explosion hazardous areas.
- ▶ Protective circuits against reverse polarity are integrated.

Connect the device in the following order:

1. Check that the supply voltage corresponds to the supply voltage indicated on the nameplate.
2. Connect the device in accordance with the following diagram.

Switch on the supply voltage.

For devices with a cable connection: do not close reference air hose (see (a) in the following drawings)! Protect reference air hose against penetration by water/condensate.

4 to 20 mA output

Device	M12 plug	Valve plug	Cable
PMC11 PMP11 PMC21 PMP21 PMP23	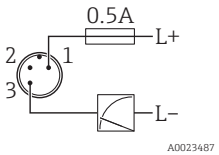 A0023487	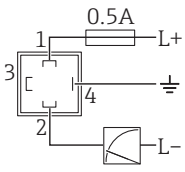 A0022823	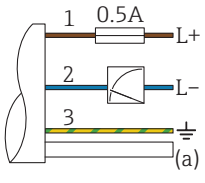 A0023783 *1 brown = L+* *2 blue = L-* *3 green/yellow = ground connection* *(a) reference air hose*

0 to 10 V output

Device	M12 plug	Valve plug	Cable
PMC11 PMP11	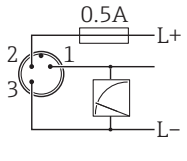	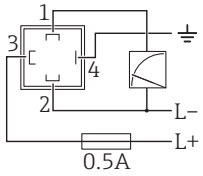	-

6.1.2 Supply voltage

⚠ WARNING

Supply voltage might be connected!

Risk of explosion!

- When using the measuring device in hazardous areas, installation must comply with the corresponding national standards and regulations as well as the Safety Instructions.
- All explosion protection data are given in separate documentation which is available upon request. The Ex documentation is supplied as standard with all devices approved for use in explosion hazardous areas.

Electronic version	Device	Supply voltage
4 to 20 mA output	PMC11 PMP11 PMC21 PMP21 PMP23	10 to 30 V DC
0 to 10 V output	PMC11 PMP11	12 to 30 V DC

6.1.3 Current consumption and alarm signal

Number of wires	Device	Normal operation	Alarm signal [1]
2	PMC11 PMP11 PMC21 PMP21 PMP23	≤ 26 mA	> 21 mA
3	PMC11 PMP11	< 12 mA	11 V

1) For MAX alarm (factory setting)

6.2 Switching capacity

- Switch cycles: >10,000,000
- Voltage drop PNP: ≤2 V
- Overload protection: Automatic load testing of switching current;
  - Max. capacitive load: 14 µF at max. supply voltage (without resistive load)
  - Max. cycle duration: 0.5 s; min. t_{on}: 4 ms
  - Periodic disconnection from protective circuit in the event of overcurrent (f = 2 Hz) and "F804" displayed

6.3 Connection conditions

6.3.1 Cable specification

For valve plug: < 1.5 mm² (16 AWG) and Ø4.5 to 10 mm (0.18 to 0.39 in)

6.4 Connection data

6.4.1 Load (for 4 to 20 mA devices)

In order to guarantee sufficient terminal voltage in two-wire devices, a maximum load resistance R_L (including line resistance) must not be exceeded depending on the supply voltage U_B of the supply unit.

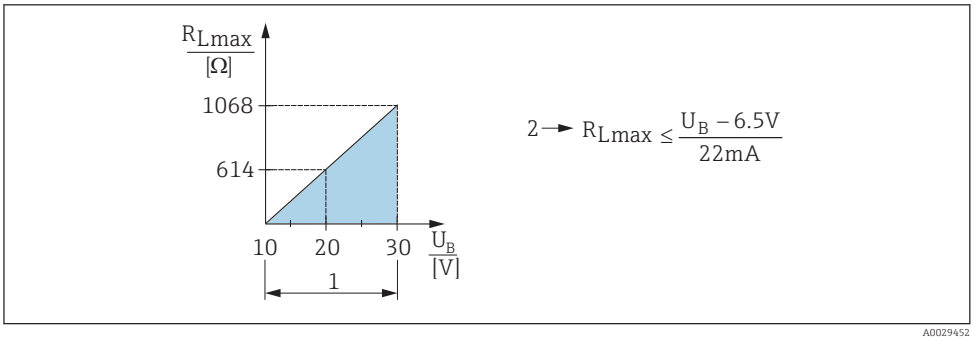

1 Power supply 10 to 30 V DC
2 R_{Lmax} Maximum load resistance
U_B Supply voltage

6.4.2 Load resistance (for 0 to 10 V devices)

The load resistance must be ≥ 5 [kΩ].

6.5 Post-connection check

❑	Is the device or cable undamaged (visual check)?
❑	Do the cables comply with the requirements?
❑	Do the mounted cables have adequate strain relief?
❑	Are all the cable glands installed, firmly tightened and leak-tight?
❑	Does the supply voltage match the specifications on the nameplate?
❑	Is the terminal assignment correct ?
❑	If required: has protective ground connection been established?

7 Operation options

7.1 Plug-on display PHX20 (optional)

Devices with valve plug can be fitted with the optional local display PHX20.

A 1-line liquid crystal display (LCD) is used. The local display shows measured values, fault messages and information messages. The device display can be turned in 90° steps. Depending on the orientation of the device, it is therefore easy to read the measured values.

7.1.1 Storage conditions

- Use original packaging.
- Storage temperature range:–30 to +80 °C (–22 to +176 °F)

7.1.2 Installation

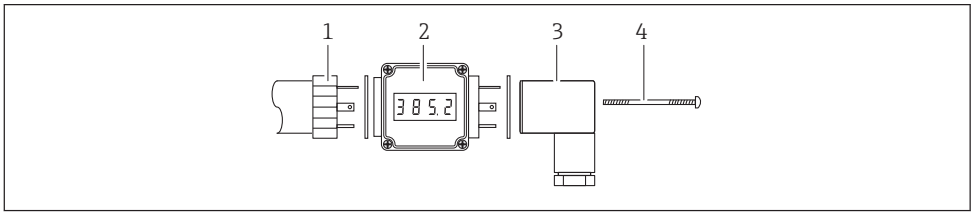

A0022208

1. Place seals between the sensor and plug-on display and between the plug-on display and plug.
2. Insert plug-on display (2) between plug (3) and plug socket (1) of sensor.
3. Replace securing screw (4) with the extended screw that is included in the scope of delivery.
4. An adhesive label specifying the technical unit, which is included in the scope of delivery, can be applied below the LED display.

Mounting dimensions

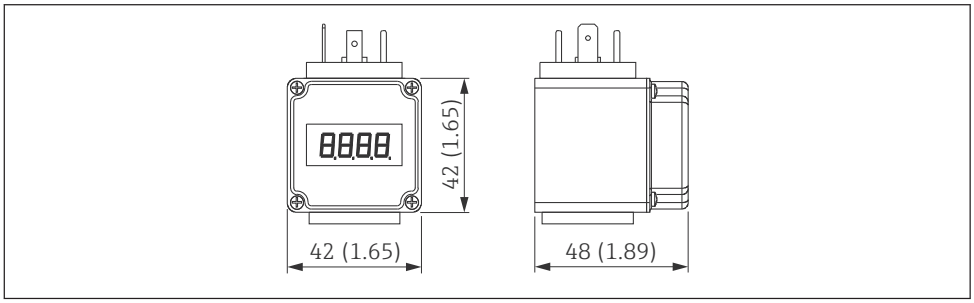

A0022210

7.1.3 Technical data

Display:	4-digit, red LED display
Digit height:	7.62 mm; programmable decimal point setting
Display range:	-1999...9999
Accuracy:	0.2% of span ±1 digit

Electrical connection:	to transmitter with 4 to 20 mA output and elbow plug DIN 43 650, with reverse polarity protection
Power supply for display:	not required, self-powered by the current loop
Voltage drop:	≤ 5 V (corresponds to load: max. 250 Ω)
Conversion rate:	3 measurements per second
Damping:	0.3 to 20 s (configurable)
Data backup:	non-volatile EEPROM
Error message:	▪ HI: Overranging ▪ LO: Underranging
Programming:	via 2 buttons, menu-guided, scaling of display range, decimal point, damping, error message
Degree of protection:	IP 65
Effect of temperature on display:	0.1% / 10 K
Electromagnetic compatibility (EMC):	Interference emission as per EN 50081, interference immunity as per EN 50082
Permitted current load:	max. 60 mA
Ambient temperature:	0 to +60 °C (+32 to +140 °F)
Housing material:	Plastic Pa6 GF30, blue Front screen made of PMMA, red
Order number:	52022914

7.1.4 Electrical connection

Pin assignment

⚠ WARNING

Is the supply voltage switched off?

Risk of electric shock!

► Switch off the supply voltage before connecting the device.

- PIN 1: L+ (supply voltage U_B)
- PIN 2: L- (0 V)
- PIN 3: not used

Supply voltage

The supply voltage (usually 24 V DC) must be greater than the sum of the voltage drop U_s at the sensor, voltage drop 5 V at the display and other voltage losses U_a (such as additional analysis and line losses).

The following therefore applies: $U_b = U_s + 5\ V + U_a$

Post-connection check

❑	Is the device or cable undamaged (visual check)?
❑	Are all cable glands installed, securely tightened and leak-tight?
❑	If supply voltage is present, is the device ready for operation and do values appear on the display module?

7.1.5 Commissioning

⚠ WARNING

Risk of injury from the uncontrolled activation of processes!

► Ensure that no uncontrolled processes are activated in the system.

Configuring menu items

To configure, release the four Phillips screws (1) on the display and remove the cover.

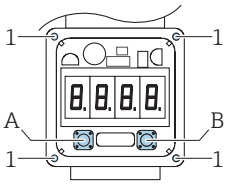

A0022209

A Scroll downwards in menu and select menu items
B Scroll upwards in menu and select menu items
A+B Select menu item to make or confirm the setting

Setting the decimal point

Press button B until "dP" is displayed.	d P
Press A+B to set decimal point:	- - -. -
Press B or A to go up or down:	- -. - -
Press A+B to quit the setting function and to go to the "dP" menu item.	d P

Setting the range overshoot

Message, if signal below 4 mA or above 20 mA:
- "HI" message = range overshoot
- "LO" message = range undershoot

Press button B until "HILO" is displayed.	H I L O
Press A+B to set (message not active):	o F F
Press B or A to go up or down (message active):	o n
Press A+B to quit the setting function and to go to the "HILO" menu item.	H I L O

Please note: If "HILO" message is not active, error "Er06" is displayed if the display range is exceeded (-1999 to +9999).

Switching to measuring mode

Depending on the menu item selected, press button A or B one to eight times.

8 Diagnostics and troubleshooting

8.1 Troubleshooting

If an inadmissible configuration exists in the device, the device switches to error mode.

General errors

Error	Possible cause	Solution
Device is not responding.	Supply voltage does not match that specified on the nameplate.	Apply correct voltage.
	Supply voltage has incorrect polarity.	Reverse polarity of supply voltage.
	Connecting cables are not in contact with the terminals.	Check the contacting of the cables and correct it if necessary.
Output current ≤ 3.6 mA	Signal cable is not wired correctly.	Check wiring.

8.2 Response of output to errors

The response of the output to error is regulated in accordance with NAMUR NE43.

Factory setting MAX alarm: >21 mA

8.2.1 alarm current

Device	Description	Option
PMC21 PMP21 PMP23	Adjusted min. alarm current	IA [1)]

1) Product Configurator order code for "Service"

8.3 Disposal

When disposing, separate and recycle the device components based on the materials.

9 Maintenance

No special maintenance work is required.

Keep the pressure compensation element (1) free from contamination.

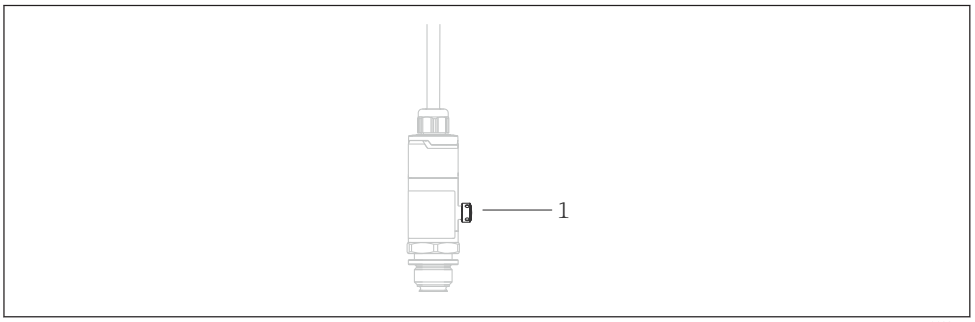

A0022141

9.1 Exterior cleaning

Please note the following points when cleaning the device:
- The cleaning agents used should not corrode the surface and the seals.
- Mechanical damage to the process isolating diaphragm, e.g. due to sharp objects, must be avoided.
- Observe the degree of protection of the device. See the nameplate if necessary → 14.

10 Repairs

10.1 General notes

10.1.1 Repair concept

Repairs are not possible.

10.2 Return

The measuring device must be returned if the wrong device has been ordered or delivered.

As an ISO-certified company and also due to legal regulations, Endress+Hauser is obliged to follow certain procedures when handling any returned products that have been in contact with medium. To ensure swift, safe and professional device returns, please read the return procedures and conditions on the Endress+Hauser website at www.services.endress.com/return-material

10.3 Disposal

When disposing, separate and recycle the device components based on the materials.

11 Accessories

11.1 Weld-in adapter

Various weld-in adapters are available for installation in vessels or pipes.

Device	Description	Option [1]	Order number
PMP23	Weld-in adapter M24, d=65, 316L	PM	71041381
PMP23	Weld-in adapter M24, d=65, 316L 3.1 EN10204-3.1 material, inspection certificate	PN	71041383
PMP21	Weld-in adapter G½, 316L	QA	52002643
PMP21	Weld-in adapter G½, 316L 3.1 EN10204-3.1 material, inspection certificate	QB	52010172
PMP21	Weld-in tool adapter G½, brass	QC	52005082
PMP21	Weld-in adapter G1/2, 316L, for G1/2 A DIN 3852	QM	71389241
PMP21	Weld-in adapter G1/2, 316L, 3.1, for G1/2 A DIN 3852, EN10204-3.1 material, inspection certificate	QN	71389243
PMP23	Weld-in adapter G1, 316L, conical metal joint	QE	52005087
PMP23	Weld-in adapter G1, 316L, 3.1, conical metal joint, EN10204-3.1 material, inspection certificate	QF	52010171
PMP23	Weld-in tool adapter G1, brass	QG	52005272
PMP23	Weld-in adapter G1, 316L, silicone O-ring seal	QJ	52001051
PMP23	Weld-in adapter G1, 316L, 3.1, silicone O-ring seal, EN10204-3.1 material, inspection certificate	QK	52011896
PMP23	Weld-in adapter Uni D65, 316L	QL	214880-0002
PMP23	Weld-in adapter Uni D65, 316L 3.1 EN10204-3.1 material, inspection certificate	QM	52010174
PMP23	Weld-in tool adapter Uni D65/D85, brass	QN	71114210
PMP23	Weld-in adapter Uni D85, 316L	QP	52006262
PMP23	Weld-in adapter Uni D85, 316L 3.1 EN10204-3.1 material, inspection certificate	QR	52010173

1) Product Configurator, order code for "Enclosed accessories"

If installed horizontally and weld-in adapters with a leakage hole are used, ensure that the leakage hole is pointing down. This allows leaks to be detected as quickly as possible.

11.2 Process adapter M24

The following process adapters can be ordered for the process connections with order option X2J and X3J:

Device	Description	Order number	Order number with inspection certificate 3.1 EN10204
PMP23	Varivent F DN32 PN40	52023996	52024003
PMP23	Varivent N DN50 PN40	52023997	52024004
PMP23	DIN11851 DN40	52023999	52024006
PMP23	DIN11851 DN50	52023998	52024005
PMP23	SMS 1½"	52026997	52026999

Device	Description	Order number	Order number with inspection certificate 3.1 EN10204
PMP23	Clamp 1½"	52023994	52024001
PMP23	Clamp 2"	52023995	52024002

11.3 Plug-on display PHX20

→ 23

11.4 M12 plug connectors

Connector	Degree of protection	Material	Option [1]	Order number
M12 (self-terminated connection at M12 plug) 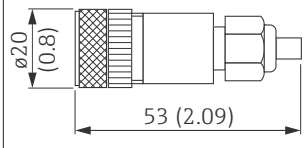	IP67	▪ Union nut: Cu Sn/Ni ▪ Body: PBT ▪ Seal: NBR	R1	52006263
M12 90 degrees with 5m (16 ft) cable 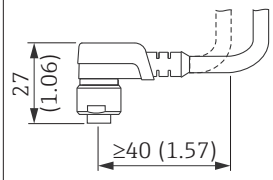	IP67	▪ Union nut: GD Zn/Ni ▪ Body: PUR ▪ Cable: PVC Cable colors ▪ 1 = BN = brown ▪ 2 = WT = white ▪ 3 = BU = blue ▪ 4 = BK = black	RZ	52010285

Connector	Degree of protection	Material	Option [1]	Order number
M12 90 degrees (self-terminated connection at M12 plug) 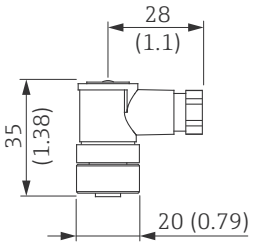	IP67	▪ Union nut: GD Zn/Ni ▪ Body: PBT ▪ Seal: NBR	RM	71114212
M12 90 degrees with 5m (16 ft) cable (terminated at one end) 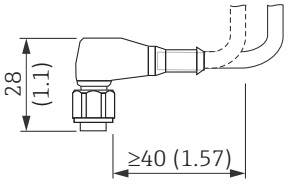	IP69 [2]	▪ Union nut: 316L (1.4435) ▪ Body and cable: PVC and PUR	RW	52024216

1) Product Configurator, order code for "Enclosed accessories"
2) Designation of the IP protection class according to DIN EN 60529. Previous designation "IP69K" according to DIN 40050 Part 9 is no longer valid (standard withdrawn on November 1, 2012). The tests required by both standards are identical.

12 Technical data

12.1 Input

12.1.1 Measured variable

Measured process variable

- PMC11: Gauge pressure
- PMP11: Gauge pressure
- PMC21: Gauge pressure or absolute pressure
- PMP21: Gauge pressure or absolute pressure
- PMP23: Gauge pressure or absolute pressure

Calculated process variable

Pressure

12.1.2 Measuring range

Ceramic process isolating diaphragm

Sensor	Device	Maximum Sensor measuring range		Lowest calibratable span [1]	MWP	OPL	Factory settings [2]	Option [3]
		lower (LRL)	upper (URL)					
		[bar (psi)]	[bar (psi)]	[bar (psi)]	[bar (psi)]	[bar (psi)]		
Devices for gauge pressure measurement								
100 mbar (1.5 psi) [4]	PMC21	−0.1 (−1.5)	+0.1 (+1.5)	0.02 (0.3)	2.7 (40.5)	4 (60)	0 to 100 mbar (0 to 1.5 psi)	1C
250 mbar (4 psi) [5]	PMC21	−0.25 (−4)	+0.25 (+4)	0.05 (1)	3.3 (49.5)	5 (75)	0 to 250 mbar (0 to 4 psi)	1E
400 mbar (6 psi) [6]	PMC11 PMC21	−0.4 (−6)	+0.4 (+6)	0.08 (1.2)	5.3 (79.5)	8 (120)	0 to 400 mbar (0 to 6 psi)	1F
1 bar (15 psi) [6]	PMC11 PMC21	−1 (−15)	+1 (+15)	0.2 (3)	6.7 (100.5)	10 (150)	0 to 1 bar (0 to 15 psi)	1H
2 bar (30 psi) [6]	PMC11 PMC21	−1 (−15)	+2 (+30)	0.4 (6)	12 (180)	18 (270)	0 to 2 bar (0 to 30 psi)	1K
4 bar (60 psi) [6]	PMC11 PMC21	−1 (−15)	+4 (+60)	0.8 (12)	16.7 (250.5)	25 (375)	0 to 4 bar (0 to 60 psi)	1M
6 bar (90 psi) [6]	PMC11 PMC21	−1 (−15)	+6 (+90)	2.4 (36)	26.7 (400.5)	40 (600)	0 to 6 bar (0 to 90 psi)	1N
10 bar (150 psi) [6]	PMC11 PMC21	−1 (−15)	+10 (+150)	2 (30)	26.7 (400.5)	40 (600)	0 to 10 bar (0 to 150 psi)	1P
16 bar (240 psi) [6]	PMC11 PMC21	−1 (−15)	+16 (+240)	6.4 (96)	40 (600)	60 (900)	0 to 16 bar (0 to 240 psi)	1Q
25 bar (375 psi) [6]	PMC11 PMC21	−1 (−15)	+25 (+375)	10 (150)	40 (600)	60 (900)	0 to 25 bar (0 to 375 psi)	1R
40 bar (600 psi) [6]	PMC11 PMC21	−1 (−15)	+40 (+600)	8 (120)	40 (600)	60 (900)	0 to 40 bar (0 to 600 psi)	1S

Sensor	Device	Maximum Sensor measuring range		Lowest calibratable span [1]	MWP	OPL	Factory settings [2]	Option [3]
		lower (LRL)	upper (URL)					
		[bar (psi)]	[bar (psi)]	[bar (psi)]	[bar (psi)]	[bar (psi)]		
Devices for absolute pressure measurement								
100 mbar (1.5 psi) [6]	PMC21	0	+0.1 (+1.5)	0.1 (1.5)	2.7 (40.5)	4 (60)	0 to 100 mbar (0 to 1.5 psi)	2C
250 mbar (4 psi) [6]	PMC21	0	+0.25 (+4)	0.25 (4)	3.3 (49.5)	5 (75)	0 to 250 mbar (0 to 4 psi)	2E
400 mbar (6 psi) [6]	PMC21	0	+0.4 (+6)	0.4 (6)	5.3 (79.5)	8 (120)	0 to 400 mbar (0 to 6 psi)	2F
1 bar (15 psi) [6]	PMC21	0	+1 (+15)	0.4 (6)	6.7 (100.5)	10 (150)	0 to 1 bar (0 to 15 psi)	2H
2 bar (30 psi) [6]	PMC21	0	+2 (+30)	0.4 (6)	12 (180)	18 (270)	0 to 2 bar (0 to 30 psi)	2K
4 bar (60 psi) [6]	PMC21	0	+4 (+60)	0.8 (12)	16.7 (250.5)	25 (375)	0 to 4 bar (0 to 60 psi)	2M
10 bar (150 psi) [6]	PMC21	0	+10 (+150)	2 (30)	26.7 (400.5)	40 (600)	0 to 10 bar (0 to 150 psi)	2P
40 bar (600 psi) [6]	PMC21	0	+40 (+600)	8 (120)	40 (600)	60 (900)	0 to 40 bar (0 to 600 psi)	2S

1) Highest turn down that can be set at the factory: 5:1. The turn down is preset and cannot be changed.
2) Other measuring ranges (e.g. −1 to +5 bar (−15 to 75 psi)) can be ordered with customer-specific settings (see the Product Configurator, order code for "Calibration; Unit" option "J"). It is possible to invert the output signal (LRV = 20 mA; URV = 4 mA). Prerequisite: URV < LRV
3) Product Configurator, order code for "Sensor range"
4) Vacuum resistance: 0.7 bar (10.5 psi) abs
5) Vacuum resistance: 0.5 bar (7.5 psi) abs
6) Vacuum resistance: 0 bar (0 psi) abs

Maximum turn down which can be ordered for absolute pressure and gauge pressure sensors

Devices for gauge pressure measurement
- 6 bar (90 psi), 16 bar (240 psi), 25 bar (375 psi): TD 1:1 to TD 2.5:1
- All other measuring ranges: TD 1:1 to TD 5:1

Devices for absolute pressure measurement
- 100 mbar (1.5 psi), 250 mbar (4 psi), 400 mbar (6 psi): TD 1:1
- 1 bar (15 psi): TD 1:1 to TD 2.5:1
- All other measuring ranges: TD 1:1 to TD 5:1

Metal process isolating diaphragm

Sensor	Device	Maximum Sensor measuring range		Lowest calibratable span [1]	MWP	OPL	Factory settings [2]	Option [3]
		lower (LRL)	upper (URL)					
		[bar (psi)]	[bar (psi)]	[bar (psi)]	[bar (psi)]	[bar (psi)]		
Devices for gauge pressure measurement								
400 mbar (6 psi) [4]	PMP11 PMP21 PMP23	−0.4 (−6)	+0.4 (+6)	0.4 (6)	1 (15)	1.6 (24)	0 to 400 mbar (0 to 6 psi)	1F
1 bar (15 psi) [4]	PMP11 PMP21 PMP23	−1 (−15)	+1 (+15)	0.4 (6)	2.7 (40.5)	4 (60)	0 to 1 bar (0 to 15 psi)	1H
2 bar (30 psi) [4]	PMP11 PMP21 PMP23	−1 (−15)	+2 (+30)	0.4 (6)	6.7 (100.5)	10 (150)	0 to 2 bar (0 to 30 psi)	1K
4 bar (60 psi) [4]	PMP11 PMP21 PMP23	−1 (−15)	+4 (+60)	0.8 (12)	10.7 (160.5)	16 (240)	0 to 4 bar (0 to 60 psi)	1M
6 bar (90 psi) [4]	PMP11 PMP21 PMP23	−1 (−15)	+6 (+90)	2.4 (36)	16 (240)	24 (360)	0 to 6 bar (0 to 90 psi)	1N
10 bar (150 psi) [4]	PMP11 PMP21 PMP23	−1 (−15)	+10 (+150)	2 (30)	25 (375)	40 (600)	0 to 10 bar (0 to 150 psi)	1P
16 bar (240 psi) [4]	PMP11 PMP21 PMP23	−1 (−15)	+16 (+240)	5 (75)	25 (375)	64 (960)	0 to 16 bar (0 to 240 psi)	1Q
25 bar (375 psi) [4]	PMP11 PMP21 PMP23	−1 (−15)	+25 (+375)	5 (75)	25 (375)	100 (1500)	0 to 25 bar (0 to 375 psi)	1R
40 bar (600 psi) [4]	PMP11 PMP21 PMP23	−1 (−15)	+40 (+600)	8 (120)	100 (1500)	160 (2400)	0 to 40 bar (0 to 600 psi)	1S
100 bar (1 500 psi) [4]	PMP21	−1 (−15)	+100 (+1500)	20 (300)	100 (1500)	160 (2400)	0 to 100 bar (0 to 1 500 psi)	1U
400 bar (6 000 psi) [4]	PMP21	−1 (−15)	+400 (+6000)	80 (1200)	400 (6000)	600 (9000)	0 to 400 bar (0 to 6 000 psi)	1W

Sensor	Device	Maximum Sensor measuring range		Lowest calibratable span [1]	MWP	OPL	Factory settings [2]	Option [3]
		lower (LRL)	upper (URL)					
		[bar (psi)]	[bar (psi)]	[bar (psi)]	[bar (psi)]	[bar (psi)]		
Devices for absolute pressure measurement								
400 mbar (6 psi) [4]	PMP21 PMP23	0 (0)	0.4 (+6)	0.4 (6)	1 (15)	1.6 (24)	0 to 400 mbar (0 to 6 psi)	2F
1 bar (15 psi) [4]	PMP21 PMP23	0 (0)	1 (+15)	0.4 (6)	2.7 (40.5)	4 (60)	0 to 1 bar (0 to 15 psi)	2H
2 bar (30 psi) [4]	PMP21 PMP23	0 (0)	2 (+30)	0.4 (6)	6.7 (100.5)	10 (150)	0 to 2 bar (0 to 30 psi)	2K
4 bar (60 psi) [4]	PMP21 PMP23	0 (0)	4 (+60)	0.8 (12)	10.7 (160.5)	16 (240)	0 to 4 bar (0 to 60 psi)	2M
10 bar (150 psi) [4]	PMP21 PMP23	0 (0)	10 (+150)	2 (30)	25 (375)	40 (600)	0 to 10 bar (0 to 150 psi)	2P
40 bar (600 psi) [4]	PMP21 PMP23	0 (0)	+40 (+600)	8 (120)	100 (1500)	160 (2400)	0 to 40 bar (0 to 600 psi)	2S
100 bar (1 500 psi) [4]	PMP21	0 (0)	+100 (+1500)	20 (300)	100 (1500)	160 (2400)	0 to 100 bar (0 to 1 500 psi)	2U
400 bar (6 000 psi) [4]	PMP21	0 (0)	+400 (+6000)	80 (1200)	400 (6000)	600 (9000)	0 to 400 bar (0 to 6 000 psi)	2W

1) Highest turn down that can be set at the factory: 5:1. The turn down is preset and cannot be changed.
2) Other measuring ranges (e.g. −1 to +5 bar (−15 to 75 psi)) can be ordered with customer-specific settings (see the Product Configurator, order code for "Calibration; Unit" option "J"). It is possible to invert the output signal (LRV = 20 mA; URV = 4 mA). Prerequisite: URV < LRV
3) Product Configurator, order code for "Sensor range"
4) Vacuum resistance: 0.01 bar (0.145 psi) abs

Maximum turn down which can be ordered for absolute pressure and gauge pressure sensors

Device	Range	400 mbar (6 psi)	1 bar (15 psi) 6 bar (90 psi) 16 bar (240 psi)	2 bar (30 psi) 4 bar (60 psi) 10 bar (150 psi) 25 to 400 bar (375 to 6 000 psi) 25 to 40 bar (375 to 600 psi)
PMP11	0.5%	TD 1:1	TD 1:1 to TD 2.5:1	TD 1:1 to TD 5:1
PMP21	0.3%	TD 1:1	TD 1:1 to TD 2.5:1	TD 1:1 to TD 5:1
PMP23	0.3%	TD 1:1	TD 1:1 to TD 2.5:1	TD 1:1 to TD 5:1

12.2 Output

12.2.1 Output signal

Designation	Option [1]
4 to 20 mA (2-wire)	1
PMC11: 0 to 10 V output (3-wire) PMP11: 0 to 10 V output (3-wire)	2

1) Product Configurator, order code for "Output"

12.2.2 Switching capacity

- Switch cycles: >10,000,000
- Voltage drop PNP: ≤2 V
- Overload protection: Automatic load testing of switching current;
  - Max. capacitive load: 14 µF at max. supply voltage (without resistive load)
  - Max. cycle duration: 0.5 s; min. t_{on}: 4 ms
  - Periodic disconnection from protective circuit in the event of overcurrent (f = 2 Hz) and "F804" displayed

12.2.3 Signal range 4 to 20 mA

3.8 mA to 20.5 mA

12.2.4 Load (for 4 to 20 mA devices)

In order to guarantee sufficient terminal voltage in two-wire devices, a maximum load resistance R_L (including line resistance) must not be exceeded depending on the supply voltage U_B of the supply unit.

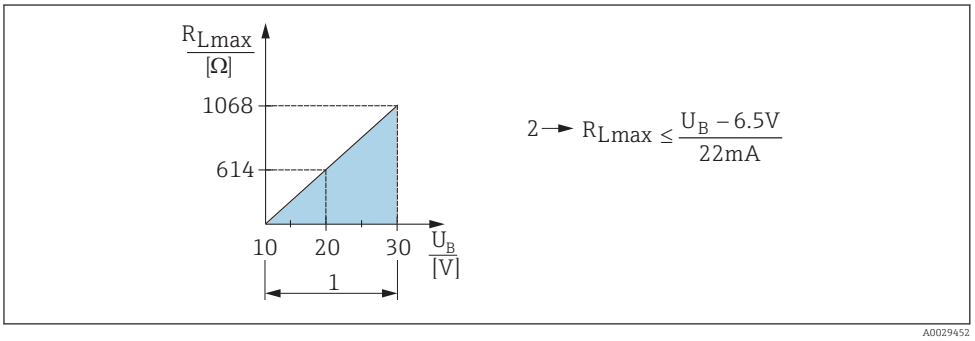

1 Power supply 10 to 30 V DC
2 R_{Lmax} Maximum load resistance
U_B Supply voltage

12.2.5 Load resistance (for 0 to 10 V devices)

The load resistance must be ≥ 5 [kΩ].

12.2.6 Signal on alarm 4 to 20 mA

The response of the output to error is regulated in accordance with NAMUR NE43.

Factory setting MAX alarm: >21 mA

alarm current

Device	Description	Option
PMC21 PMP21 PMP23	Adjusted min. alarm current	IA [1]

1) Product Configurator order code for "Service"

12.2.7 Dead time, time constant

Presentation of the dead time and the time constant:

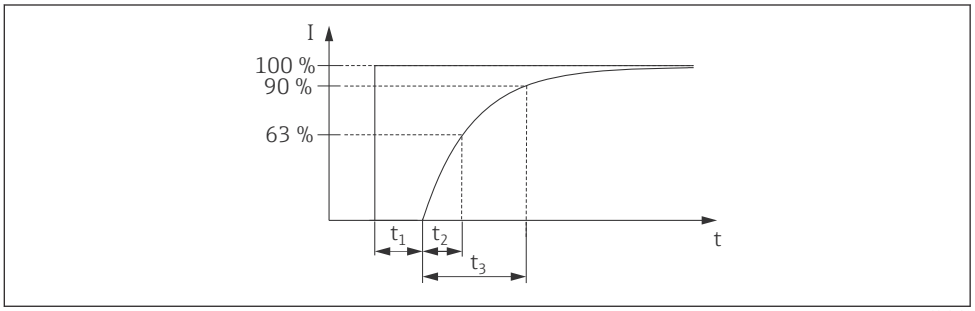

A0019786

12.2.8 Dynamic behavior

Dead time (t_1) [ms]	Time constant (T63), t_2 [ms]	Time constant (T90), t_3 [ms]
6 ms	10 ms	15 ms

12.3 Performance characteristics of ceramic process isolating diaphragm

12.3.1 Reference operating conditions

- As per IEC 60770
- Ambient temperature T_A = constant, in the range of:+21 to +33 °C (+70 to +91 °F)
- Humidity φ = constant, in the range of 5 to 80 % rH
- Ambient pressure p_A = constant, in the range of:860 to 1 060 mbar (12.47 to 15.37 psi)
- Position of measuring cell = constant, in range: horizontal ±1° (see also "Influence of the installation position" section → 16)
- Zero based span
- Material of process isolating diaphragm: Al_2O_3 (aluminum-oxide ceramic, Ceraphire®)
- Supply voltage: 24 V DC ±3 V DC
- Load: 320 Ω (at 4 to 20 mA output)

12.3.2 Measuring uncertainty for small absolute pressure measuring ranges

The smallest extended uncertainty of measurement that can delivered by our standards is:

- in range 1 to 30 mbar (0.0145 to 0.435 psi): 0.4 % of reading
- in range < 1 mbar (0.0145 psi): 1 % of reading.

12.3.3 Influence of the installation position

→ 16

12.3.4 Resolution

Current output: min. 1.6 µA

12.3.5 Reference accuracy

The reference accuracy contains the non-linearity [DIN EN 61298-2 3.11] including the pressure hysteresis [DIN EN 61298-23.13] and non-repeatability [DIN EN 61298-2 3.11] in accordance with the limit point method as per [DIN EN 60770].

Device	% of the calibrated span to the maximum turn down		
	Reference accuracy	Non-linearity [1]	Non-repeatability
PMC11 [2]	±0.5	±0.1	±0.1
PMC21	±0.3	±0.1	±0.1

1) The non-linearity for the 40 bar (600 psi) sensor can be up to ± 0.15% of the calibrated span up to the maximum turn down.
2) For devices with 0 to 10 V output, a non-linearity of up to max. 0.3 V can occur for signal values below 0.03 V.

Overview of the turn down ranges → 33

Measuring ranges	Turn down	Device	% of URL
100 mbar (1.5 psi)to 40 bar (600 psi)	1:1 to TD 5:1	PMC11	±0.5
		PMC21	±0.3 [1]

1) For the 100 mbar (1.5 psi) and 250 mbar (4 psi) measuring ranges, the following applies: In the event of heat effects on the initial reference conditions, an additional deviation of max. 0.3 mbar (4.5 psi) from the zero point or the output span is possible.

12.3.6 Thermal change of the zero output and the output span

Measuring cell	–20 to +85 °C (–4 to +185 °F)	–40 to –20 °C (–40 to –4 °F) +85 to +100 °C (+185 to +212 °F)
	% of URL for TD 1:1	
<1 bar (15 psi)	<1	<1.2
≥ 1 bar (15 psi)	<0.8	<1

12.3.7 Long-term stability

1 year	5 years	8 years
% of URL		
±0.2	±0.4	±0.45

12.3.8 Switch-on time

≤2 s (For small measuring ranges, pay attention to the thermal compensation effects.)

12.4 Performance characteristics of metal process isolating diaphragm

12.4.1 Reference operating conditions

- As per IEC 60770
- Ambient temperature T_A = constant, in the range of:+21 to +33 °C (+70 to +91 °F)
- Humidity φ = constant, in the range of 5 to 80 % rH
- Ambient pressure p_A = constant, in the range of:860 to 1 060 mbar (12.47 to 15.37 psi)
- Position of measuring cell = constant, in range: horizontal ±1° (see also "Influence of the installation position" section → 16)
- Zero based span
- Process isolating diaphragm material: AISI 316L (1.4435)
- Filling oil: synthetic oil polyalphaolefin FDA 21 CFR 178.3620, NSF H1
- Supply voltage: 24 V DC ±3 V DC
- Load: 320 Ω (at 4 to 20 mA output)

12.4.2 Measuring uncertainty for small absolute pressure measuring ranges

The smallest extended uncertainty of measurement that can delivered by our standards is:
- in the range 1 to 30 mbar (0.0145 to 0.435 psi): 0.4 % of reading
- in the range < 1 mbar (0.0145 psi): 1 % of reading.

12.4.3 Influence of the installation position

→ 16

12.4.4 Resolution

Current output: min. 1.6 µA

12.4.5 Reference accuracy

The reference accuracy contains the non-linearity [DIN EN 61298-2 3.11] including the pressure hysteresis [DIN EN 61298-23.13] and non-repeatability [DIN EN 61298-2 3.11] in accordance with the limit point method as per [DIN EN 60770].

Device	% of the calibrated span to the maximum turn down		
	Reference accuracy	Non-linearity	Non-repeatability
PMP11 [1)]	±0.5	±0.1	±0.1
PMP21	±0.3	±0.1	±0.1
PMP23	±0.3	±0.1	±0.1

1) For devices with 0 to 10 V output, a non-linearity of up to max. 0.3 V can occur for signal values below 0.015 V.

Overview of the turn down ranges → 35

12.4.6 Thermal change of the zero output and the output span

PMP11, PMP21

Measuring cell	−20 to +85 °C (−4 to +185 °F)	−20 to −40 °C (−4 to −40 °F) +85 to +100 °C (+185 to +212 °F)
	% of the calibrated span for TD 1:1	
<1 bar (15 psi)	<1	<1.2
≥ 1 bar (15 psi)	<0.8	<1

PMP23

Measuring cell	−10 to +85 °C (+14 to +185 °F)	+85 to +100 °C (+185 to +212 °F)
	% of the calibrated span for TD 1:1	
<1 bar (15 psi)	<1	<1.2
≥ 1 bar (15 psi)	<0.8	<1

12.4.7 Long-term stability

Device	1 year	5 years	8 years
	% of URL		
PMP11 PMP21 PMP23	±0.2	±0.4	±0.45

12.4.8 Switch-on time

≤2 s

12.5 Environment

12.5.1 Ambient temperature range

Device	Ambient temperature range [1]
PMC11 PMP11	−40 to +70 °C (−40 to +158 °F)
PMC21 PMP21 PMP23	−40 to +85 °C (−40 to +185 °F)
PMC21 PMP21 PMP23	Devices for hazardous areas: −40 to +70 °C (−40 to +158 °F)

1) Exception: the following cable is designed for an ambient temperature range of −25 to +70 °C (−13 to +158 °F): Product Configurator order code for "Enclosed accessories" option "RZ".

12.5.2 Storage temperature range

−40 to +85 °C (−40 to +185 °F)

12.5.3 Climate class

Device	Climate class	Note
PMP23	Class 4K4H	Air temperature: −20 to +55 °C (−4 to +131 °F), relative humidity: 4 to 100 % satisfied according to DIN EN 60721-3-4 (condensation is possible)
PMC11 PMP11 PMC21 PMP21	Class 3K5	Air temperature: −5 to +45 °C (+23 to +113 °F), relative humidity: 4 to 95 % satisfied according to IEC 721-3-3 (condensation not possible)

12.5.4 Degree of protection

Device	Connection	Degree of protection	Option [1]
PMP21 PMP21 PMP23	Cable5 m (16 ft)	IP66/68 [2] NEMA type 4X/6P enclosure	A
PMP21 PMP21 PMP23	Cable10 m (33 ft)	IP66/68 [2] NEMA type 4X/6P enclosure	B
PMP21 PMP21 PMP23	Cable25 m (82 ft)	IP66/68 [2] NEMA type 4X/6P enclosure	C
PMC11 PMP11	M12 plug	IP65 NEMA type 4X enclosure	L
PMC21 PMP21 PMP23	M12 plug	IP65/67 NEMA type 4X enclosure	M
PMP23	M12 plug made of metal	IP66/69 [3] NEMA type 4X enclosure	N

Device	Connection	Degree of protection	Option [1]
PMC11 PMP11 PMC21 PMP21 PMP23	Valve plug ISO4400 M16	IP65 NEMA type 4X enclosure	U
PMC11 PMP11 PMC21 PMP21 PMP23	Valve plug ISO4400 NPT ½	IP65 NEMA type 4X enclosure	V

1) Product Configurator order code for "Electrical connection"
2) IP 68 (1.83m H2O for 24 h)
3) Designation of the IP protection class according to DIN EN 60529. Previous designation "IP69K" according to DIN 40050 Part 9 is no longer valid (standard withdrawn on November 1, 2012). The tests required by both standards are identical.

12.5.5 Vibration resistance

Test standard	Vibration resistance
IEC 60068-2-64:2008	Guaranteed for 5 to 2000Hz: 0.05g^2/Hz

12.5.6 Electromagnetic compatibility

- Interference emission as per EN 61326-1 equipment B
- Interference immunity as per EN 61326-1 (industrial environment)
- Maximum deviation: 1.5% with TD 1:1

For more details please refer to the Declaration of Conformity.

12.6 Process

12.6.1 Process temperature range for devices with ceramic process isolating diaphragm

Device	Process temperature range
PMC11	−25 to +85 °C (−13 to +185 °F)
PMC21	−25 to +100 °C (−13 to +212 °F)
PMC21 for oxygen applications	−10 to +60 °C (+14 to +140 °F)

- For saturated steam applications, use a device with a metal process isolating diaphragm, or provide a siphon for temperature isolation when installing.
- Pay attention to the process temperature range of the seal. See also the following table.

Seal	Notes	Process temperature range	Option
FKM	-	−20 to +100 °C (−4 to +212 °F)	A [1]
FKM	Cleaned for oxygen service	−10 to +60 °C (+14 to +140 °F)	A [1] and HB [2]
EPDM 70	-	−25 to +100 °C (−13 to +212 °F)	J [1]

1) Product Configurator, order code for "Seal"
2) Product Configurator, order code for "Service"

Applications with changes in temperature

Frequent extreme changes in temperatures can temporarily cause measuring errors. Temperature compensation takes place after a few minutes. Internal temperature compensation is faster the smaller the change in temperature and the longer the time interval.

For further information please contact your local Endress+Hauser Sales Center.

12.6.2 Process temperature range for devices with metallic process isolating diaphragm

Device	Process temperature range
PMP11	−25 to +85 °C (−13 to +185 °F)
PMP21	−40 to +100 °C (−40 to +212 °F)
PMP23	−10 to +100 °C (+14 to +212 °F)
PMP23 Sterilization in place (SIP)	At +135°C (+275 °F) for a maximum of one hour (device in operation but not within measuring specification)

Applications with changes in temperature

Frequent extreme changes in temperatures can temporarily cause measuring errors. Internal temperature compensation is faster the smaller the change in temperature and the longer the time interval.

For further information please contact your local Endress+Hauser Sales Center.

12.6.3 Pressure specifications

⚠ WARNING

The maximum pressure for the measuring device depends on the lowest-rated element with regard to pressure.

- For pressure specifications, see the "Measuring range" section and "Mechanical construction" section in the Technical Information.
- The Pressure Equipment Directive (2014/68/EU) uses the abbreviation "PS". The abbreviation "PS" corresponds to the MWP (maximum working pressure) of the measuring device.
- MWP (maximum working pressure): The MWP (maximum working pressure) is specified on the nameplate. This value is based on a reference temperature of +20 °C (+68 °F) and may be applied to the device for an unlimited period of time. Observe the temperature dependency of the MWP.
- OPL (over pressure limit): The test pressure corresponds to the over pressure limit of the sensor and may only be applied temporarily to ensure that the measurement is within the specifications and no permanent damage develops. In the case of sensor range and process connections where the over pressure limit (OPL) of the process connection is smaller than the nominal value of the sensor, the device is set at the factory, at the very maximum, to the OPL value of the process connection. If you want to use the entire sensor range, select a process connection with a higher OPL value.
- Oxygen applications: In oxygen applications, the values for "p_{max} and T_{max} for oxygen applications may not be exceeded .
- Devices with ceramic process isolating diaphragm: avoid steam hammering! Steam hammering can cause zero point drifts. Recommendation: Residue (water droplets or condensation) may remain on the process isolating diaphragm following CIP cleaning and can result in local steam hammering the next time steam cleaning takes place. In practice, drying the process isolating diaphragm (e.g. by blowing) has proved to prevent steam hammering.

Index

A
Application 9

C
CE mark (declaration of conformity) 10
Cleaning 27

D
Declaration of Conformity 10
Designated use 9
Disposal 26, 28

E
Exterior cleaning 27

F
Field of application
  Residual risks 9

M
Maintenance 26
Media 9

N
Nameplate 14

O
Operational safety 10

P
Product safety 10

R
Repair concept 28

S
Safety instructions
  Basic 9
Safety Instructions (XA) 6
Staff
  Requirements 9

T
Troubleshooting 26

U
Using measuring device
  Borderline cases 9
  Incorrect use 9
  see Designated use

W
Workplace safety 10



www.addresses.endress.com

Endress+Hauser

People for Process Automation

LEFT BLANK

ENDRESS + HAUSER

CERABAR M PMC51, PRESSURE TRANSMITTER

LEFT BLANK

BA00382P/00/EN/20.16
71316868

Valid from software version:
01.00.zz

Operating Instructions
Cerabar M
Deltabar M
Deltapilot M

Process pressure / Differential pressure, Flow / Hydrostatic

HART COMMUNICATION PROTOCOL

Cerabar M

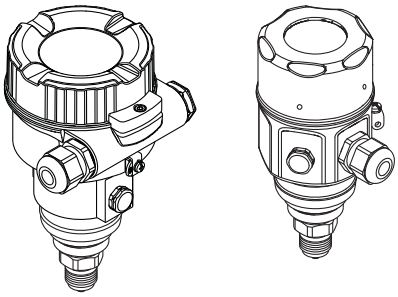

Deltabar M

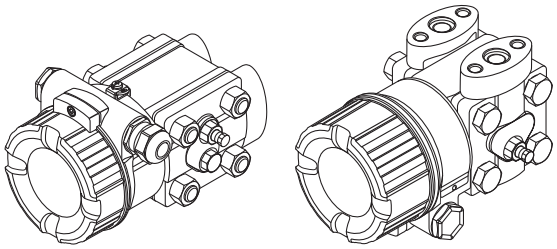

Deltapilot M

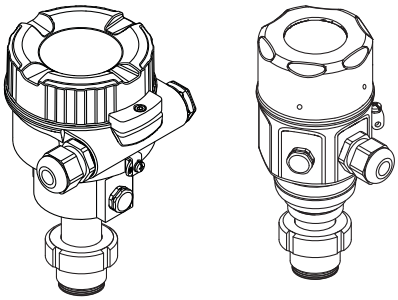

Endress+Hauser
People for Process Automation

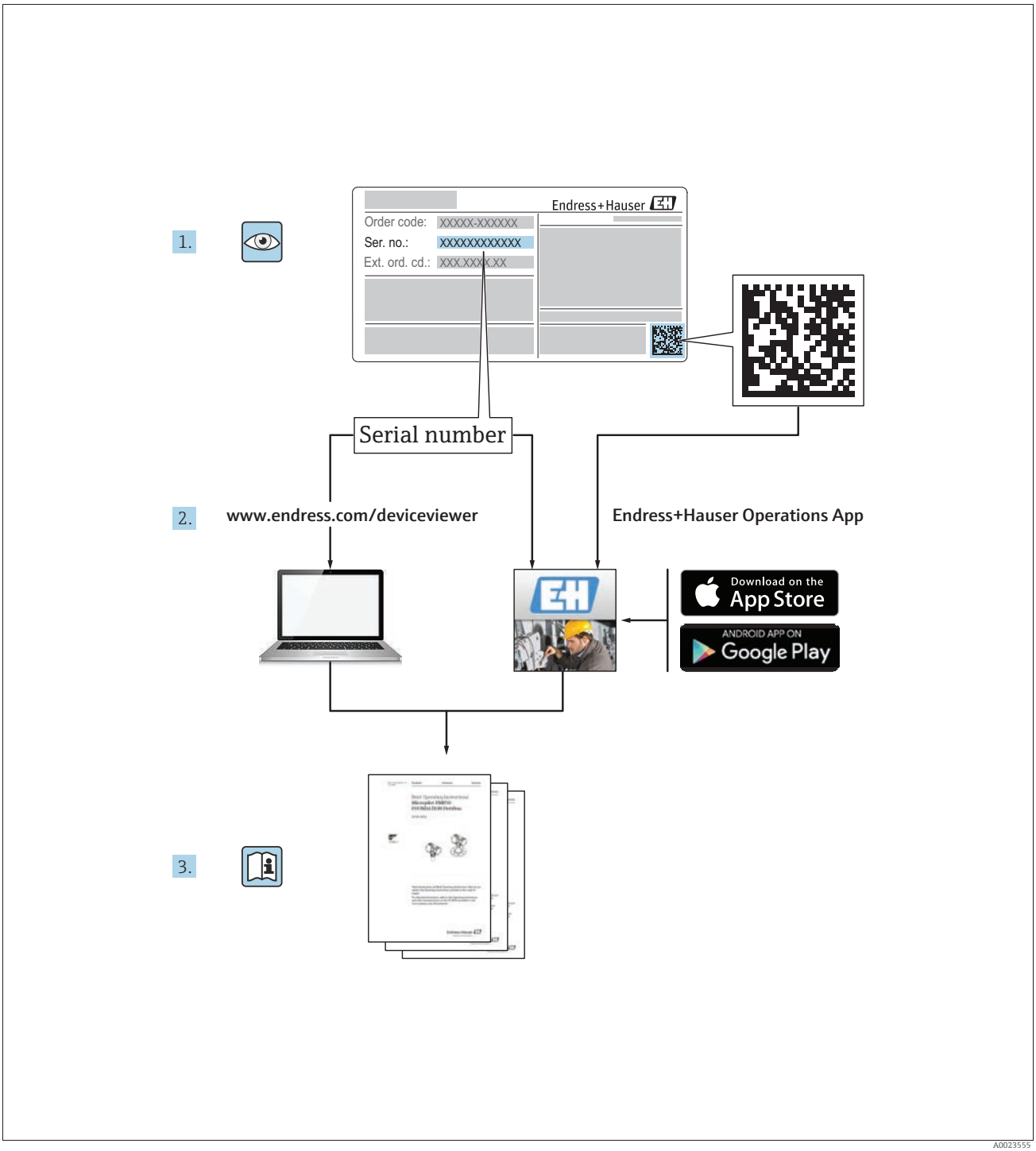

Make sure the document is stored in a safe place such that it is always available when working on or with the device.
To avoid danger to individuals or the facility, read the "Basic safety instructions" section carefully, as well as all other safety instructions in the document that are specific to working procedures.
The manufacturer reserves the right to modify technical data without prior notice. Your Endress+Hauser distributor will supply you with current information and updates to these Instructions.

Table of contents

1 Document information 4
1.1 Document function 4
1.2 Symbols used 4

2 Basic safety instructions 6
2.1 Requirements concerning the staff 6
2.2 Designated use 6
2.3 Workplace safety 6
2.4 Operational safety 6
2.5 Hazardous area 7
2.6 Product safety 7
2.7 Functional Safety SIL (optional) 7

3 Identification 8
3.1 Product identification 8
3.2 Device designation 8
3.3 Scope of delivery 11
3.4 CE mark, Declaration of Conformity 11

4 Installation 12
4.1 Incoming acceptance 12
4.2 Storage and transport 12
4.3 Installation conditions 12
4.4 General installation instructions 13
4.5 Installing Cerabar M 14
4.6 Installing Deltabar M 24
4.7 Installing Deltapilot M 32
4.8 Mounting of the profile seal for universal process mounting adapter 37
4.9 Closing the housing cover 37
4.10 Post-installation check 37

5 Electrical connection 38
5.1 Connecting the device 38
5.2 Connecting the measuring unit 40
5.3 Overvoltage protection (optional) 42
5.4 Post-connection check 44

6 Operation 45
6.1 Operating options 45
6.2 Operation without operating menu 46
6.3 Operation with an operating menu 48

7 Integrating transmitter using HART® protocol 57
7.1 HART process variables and measured values . 57
7.2 Device variables and measured values 58

8 Commissioning 59
8.1 Function check 59
8.2 Commissioning without an operating menu . . . 60
8.3 Commissioning with an operating menu 63
8.4 Position zero adjustment 64
8.5 Level measurement (Cerabar M and Deltapilot M) 65
8.6 Linearization 75
8.7 Pressure measurement 79
8.8 Electrical differential pressure measurement with gauge pressure sensors (Cerabar M or Deltapilot M) 81
8.9 Differential pressure measurement (Deltabar M) . 83
8.10 Flow measurement (Deltabar M) 85
8.11 Level measurement (Deltabar M) 88
8.12 Backup or duplicate device data 99

9 Maintenance 100
9.1 Cleaning instructions 100
9.2 Exterior cleaning 100

10 Troubleshooting 101
10.1 Messages 101
10.2 Response of output to errors 103
10.3 Repair 103
10.4 Repair of Ex-certified devices 103
10.5 Spare Parts 104
10.6 Return 104
10.7 Disposal 104
10.8 Software history 105

11 Technical data 107

12 Appendix 108
12.1 Overview of operating menu 108
12.2 Description of parameters 116

Index 140

1 Document information

1.1 Document function

These Operating Instructions contain all the information that is required in various phases of the life cycle of the device: from product identification, incoming acceptance and storage, to mounting, connection, operation and commissioning through to troubleshooting, maintenance and disposal.

1.2 Symbols used

1.2.1 Safety symbols

Symbol	Meaning
DANGER A0011189-DE	**DANGER!** This symbol alerts you to a dangerous situation. Failure to avoid this situation will result in seriousor fatal injury.
WARNING A0011190-DE	**WARNING!** This symbol alerts you to a dangerous situation. Failure to avoid this situation can result in seriousor fatal injury.
CAUTION A0011191-DE	**CAUTION!** This symbol alerts you to a dangerous situation. Failure to avoid this situation can result in minoror medium injury.
NOTICE A0011192-DE	**NOTICE!** This symbol contains information on procedures and other facts which do not result in personalinjury.

1.2.2 Electrical symbols

Symbol	Meaning	Symbol	Meaning
⎓	Direct current	~	Alternating current
⎓ ~	Direct current and alternating current	⏚	**Ground connection** A grounded terminal which, as far as the operator is concerned, is grounded via a grounding system.
⏚	**Protective ground connection** A terminal which must be connected to ground prior to establishing any other connections.	⏚	**Equipotential connection** A connection that has to be connected to the plant grounding system: This may be a potential equalization line or a star grounding system depending on national or company codes of practice.

1.2.3 Tool symbols

Symbol	Meaning
 A0011221	Allen key
 A0011222	Hexagon wrench

1.2.4 Symbols for certain types of information

Symbol	Meaning
 A0011182	**Permitted** Indicates procedures, processes or actions that are permitted.
 A0011184	**Forbidden** Indicates procedures, processes or actions that are forbidden.
 A0011193	**Tip** Indicates additional information.
 A0015482	Reference to documentation
 A0015484	Reference to page
 A0015487	Reference to graphic
1. , 2. , ...	Series of steps
A0018343	Result of a sequence of actions
 A0015502	Visual inspection

1.2.5 Symbols in graphics

Symbol	Meaning
1, 2, 3, 4, ...	Item numbers
1. , 2. , ...	Series of steps
A, **B**, **C**, **D**, ...	Views

1.2.6 Symbols at the device

Symbol	Meaning
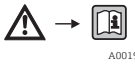 A0019159	**Safety instructions** Observe the safety instructions contained in the associated Operating Instructions.
	**Connecting cable immunity to temperature change** Indicates that the connecting cables have to withstand a temperature of 85°C at least.

1.2.7 Registered trademarks

KALREZ®, VITON®, TEFLON®
Registered label of E.I. Du Pont de Nemours & Co., Wilmington, USA

TRI-CLAMP®
Registered label of Ladish & Co., Inc., Kenosha, USA

HART®
Registered trademark of the FieldComm Group, Austin, USA

GORE-TEX®
Registered label of W.L. Gore & Associates, Inc., USA

2 Basic safety instructions

2.1 Requirements concerning the staff

The personnel for installation, commissioning, diagnostics and maintenance must fulfill the following requirements:
- Trained, qualified specialists: must have a relevant qualification for this specific function and task
- Are authorized by the plant owner/operator
- Are familiar with federal/national regulations
- Before beginning work, the specialist staff must have read and understood the instructions in the Operating Instructions and supplementary documentation as well as in the certificates (depending on the application)
- Following instructions and basic conditions

The operating personnel must fulfill the following requirements:
- Being instructed and authorized according to the requirements of the task by the facility's owner-operator
- Following the instructions in these Operating Instructions

2.2 Designated use

The **Cerabar M** is a pressure transmitter for measuring level and pressure.
The **Deltabar M** is a differential pressure transmitter for measuring differential pressure, flow and level.
The **Deltapilot M** is a hydrostatic pressure sensor for measuring level and pressure.

2.2.1 Incorrect use

The manufacturer is not liable for damage caused by improper or non-designated use.
Verification for borderline cases:
For special fluids and fluids for cleaning, Endress+Hauser is glad to provide assistance in verifying the corrosion resistance of fluid-wetted materials, but does not accept any warranty or liability.

2.3 Workplace safety

For work on and with the device:
- Wear the required personal protective equipment according to federal/national regulations.
- Switch off the supply voltage before connecting the device.

2.4 Operational safety

Risk of injury!
- ▶ Operate the device in proper technical condition and fail-safe condition only.
- ▶ The operator is responsible for interference-free operation of the device.
- ▶ Only disassemble the device in pressurless condition!

Conversions to the device
Unauthorized modifications to the device are not permitted and can lead to unforeseeable dangers:
- ▶ If, despite this, modifications are required, consult with Endress+Hauser.

Repair
To ensure continued operational safety and reliability,

- ▶ Carry out repairs on the device only if they are expressly permitted.
- ▶ Observe federal/national regulations pertaining to repair of an electrical device.
- ▶ Use original spare parts and accessories from Endress+Hauser only.

2.5 Hazardous area

To eliminate a danger for persons or for the facility when the device is used in the hazardous area (e.g. explosion protection, pressure vessel safety):

- Based on the nameplate, check whether the ordered device is permitted for the intended use in the hazardous area.
- Observe the specifications in the separate supplementary documentation that is an integral part of these Instructions.

2.6 Product safety

This measuring device is designed in accordance with good engineering practice to meet state-of-the- art safety requirements, has been tested, and left the factory in a condition in which they are safe to operate. It fulfills general safety requirements and legal requirements. It also conforms to the EC directives listed in the device-specific EC declaration of conformity. Endress+Hauser confirms this fact by applying the CE mark.

2.7 Functional Safety SIL (optional)

If using devices for applications with safety integrity, the Functional Safety Manual (SD00347P/00/EN) must be observed thoroughly.

3 Identification

3.1 Product identification

The following options are available for identification of the measuring device:
- Nameplate specifications
- Order code with breakdown of the device features on the delivery note
- Enter serial numbers from nameplates in W@M Device Viewer (www.endress.com/deviceviewer): All information about the measuring device is displayed.

For an overview of the technical documentation provided, enter the serial number from the nameplates in the W@M Device Viewer (www.endress.com/deviceviewer).

3.2 Device designation

3.2.1 Device identification via the nameplate

- The MWP (maximum working pressure) is specified on the nameplate. This value refers to a reference temperature of 20°C (68°F) or 100°F (38 °C) for ANSI flanges.
- The pressure values permitted at higher temperatures can be found in the following standards:
  - EN 1092-1: 2001 Tab. 18 [1)]
  - ASME B 16.5a – 1998 Tab. 2-2.2 F316
  - ASME B 16.5a – 1998 Tab. 2.3.8 N10276
  - JIS B 2220
- The test pressure corresponds to the over pressure limit (OPL) of the device = MWP x 1.5 [2)].
- The Pressure Equipment Directive (EC Directive 97/23/EC) uses the abbreviation "PS". The abbreviation "PS" corresponds to the MWP (maximum working pressure) of the measuring device.

1) With regard to their stability-temperature property, the materials 1.4435 and 1.4404 are grouped together under 13EO in EN 1092-1 Tab. 18. The chemical composition of the two materials can be identical.
2) The equation does not apply for PMP51 and PMP55 with a 40 bar (600 psi) or a 100 bar (1500 psi) measuring cell.

Aluminum housing

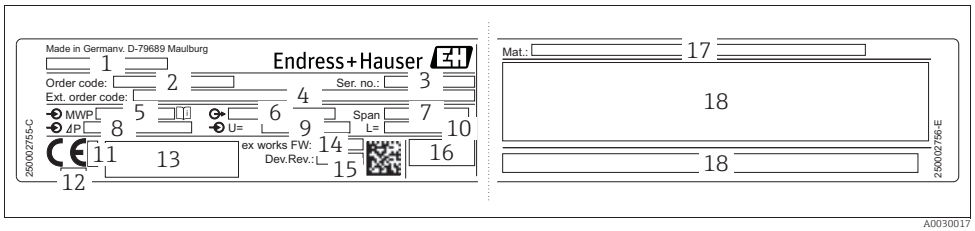

Fig. 1: Nameplate

1 Device name
2 Order code (for re-orders)
3 Serial number (for identification)
4 Extended order code (complete)
5 MWP (maximum working pressure)
6 Electronic version (output signal)
7 Min./max. span
8 Nominal measuring range
9 Supply voltage
10 Unit of length
11 ID number of notified body with regard to ATEX (optional)
12 ID number of notified body with regard to Pressure Equipment Directive (optional)
13 Approvals
14 Device version
15 Software version
16 Degree of protection
17 Wetted materials
18 Approval-specific information

Devices suitable for oxygen applications are fitted with an additional nameplate.

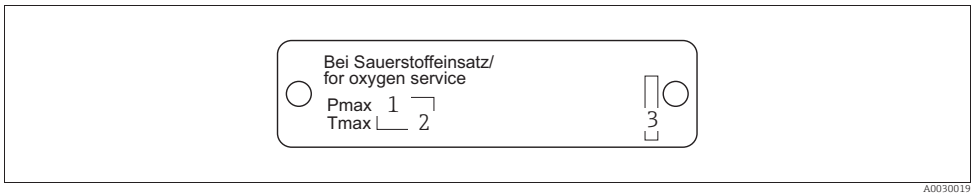

Fig. 2: Additional nameplate for devices suitable for oxygen applications

1 Maximum pressure for oxygen applications
2 Maximum temperature for oxygen applications
3 Layout identification of the nameplate

Stainless steel housing, hygienic

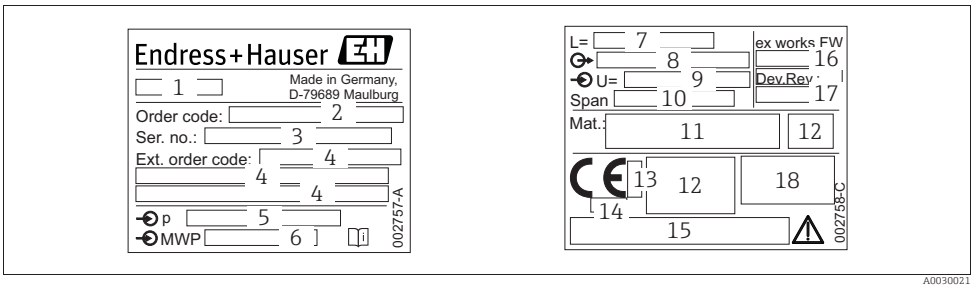

Fig. 3: Nameplate for Cerabar M and Deltapilot M

1 Device name
2 Order code (for re-orders)
3 Serial number (for identification)
4 Extended order code (complete)
5 Nominal measuring range
6 MWP (maximum working pressure)
7 Length data
8 Electronic version (output signal)
9 Supply voltage
10 Min./max. span
11 Wetted materials
12 Approval-specific information
13 ID number of notified body with regard to ATEX (optional)
14 ID number of notified body with regard to Pressure Equipment Directive (optional)
15 Approvals
16 Software version
17 Device version
18 Degree of protection

Devices with certificates are fitted with an additional plate.

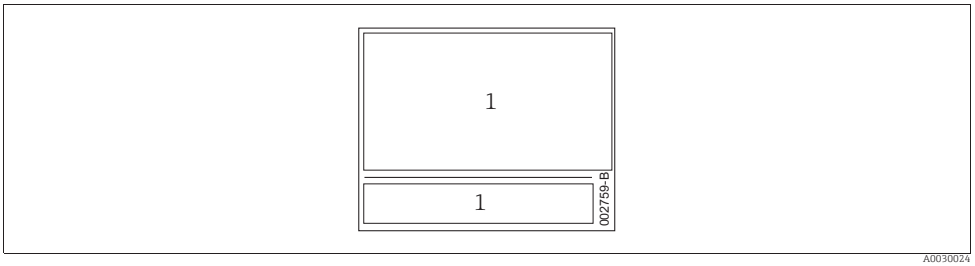

Fig. 4: Additional nameplate for devices with certificates

1 Approval-specific information

3.2.2 Identifying the sensor type

In the case of gauge pressure sensors, the "Pos. zero adjust" parameter appears in the operating menu ("Setup" -> "Pos. zero adjust").
In the case of absolute pressure sensors, the "Calib. offset" parameter appears in the operating menu ("Setup" -> "Calib. offset").

3.3 Scope of delivery

The scope of delivery comprises:
- Device
- Optional accessories

Documentation supplied:
- Operating Instruction BA00382P is available on the Internet.
  → See: www.endress.com → Download
- Brief Operating Instruction: KA01030P Cerabar M / KA01027P Deltabar M / KA01033P Deltapilot M
- Final inspection report
- Additional Safety Instructions for ATEX, IECEx and NEPSI devices
- Optional: factory calibration form, test certificates

3.4 CE mark, Declaration of Conformity

The devices are designed to meet state-of-the-art safety requirements, have been tested and left the factory in a condition in which they are safe to operate. The devices comply with the applicable standards and regulations as listed in the EC Declaration of Conformity and thus comply with the statutory requirements of the EC Directives. Endress+Hauser confirms the conformity of the device by affixing to it the CE mark.

4 Installation

4.1 Incoming acceptance

- Check the packaging and the contents for damage.
- Check the shipment, make sure nothing is missing and that the scope of supply matches your order.

4.2 Storage and transport

4.2.1 Storage

The device must be stored in a dry, clean area and protected against damage from impact (EN 837-2).
Storage temperature range:
See Technical Information for Cerabar M TI00436P / Deltabar M TI00434P / Deltapilot M TI00437P.

4.2.2 Transport

⚠ WARNING
Incorrect transportation
Housing, diaphragm and capillaries may become damaged, and there is a risk of injury!
- ▶ Transport the measuring device to the measuring point in its original packaging or by the process connection.
- ▶ Follow the safety instructions and transport conditions for devices weighing more than 18 kg (39.6 lbs).
- ▶ Do not use capillaries as a carrying aid for the diaphragm seals.

4.3 Installation conditions

4.3.1 Dimensions

→ For dimensions, please refer to the Technical Information for Cerabar M TI00436P / Deltabar M TI00434P / Deltapilot M TI00437P, "Mechanical construction" section.

4.4 General installation instructions

- Devices with a G 1 1/2 thread:
  When screwing the device into the tank, the flat seal has to be positioned on the sealing surface
  of the process connection. To avoid additional strain on the process isolating diaphragm, the thread should never be sealed with hemp or similar materials.
- Devices with NPT threads:
  - Wrap Teflon tape around the thread to seal it.
  - Tighten the device at the hexagonal bolt only. Do not turn at the housing.
  - Do not overtighten the thread when screwing. Max. torque: 20 to 30 Nm (14.75 to 22.13 lbf ft)

4.4.1 Mounting sensor modules with PVDF thread

⚠ WARNING

Risk of damage to process connection!

Risk of injury!

▶ Sensor modules with PVDF process connections with threaded connection must be installed with the mounting bracket provided!

⚠ WARNING

Material fatigue from pressure and temperature!

Risk of injury if parts burst! The thread can become loose if exposed to high pressure and temperatures.

▶ The integrity of the thread must be checked regularly and the thread may need to be re-tightened with the maximum tightening torque of 7 Nm (5.16 lbf ft). Teflon tape is recommended for sealing the ½" NPT thread.

4.5 Installing Cerabar M

- Due to the orientation of the Cerabar M, there may be a shift in the zero point, i.e. when the container is empty or partially full, the measured value does not display zero. You can correct this zero point shift → 47, Section "Function of the operating elements" or → 64, Section 8.4 "Position zero adjustment".
- For PMP55, please refer to Section 4.5.2 "Installation instructions for devices with diaphragm seals – PMP55", → 17.
- Endress+Hauser offers a mounting bracket for installing on pipes or walls. → 21, Section 4.5.5 "Wall and pipe mounting (optional)".

4.5.1 Installation instructions for devices without diaphragm seals – PMP51, PMC51

NOTICE

Damage to the device!

If a heated Cerabar M is cooled during the cleaning process (e.g. by cold water), a vacuum develops for a short time, whereby moisture can penetrate the sensor through the pressure compensation (1).

▶ If this is the case, mount the Cerabar M with the pressure compensation (1) pointing downwards.

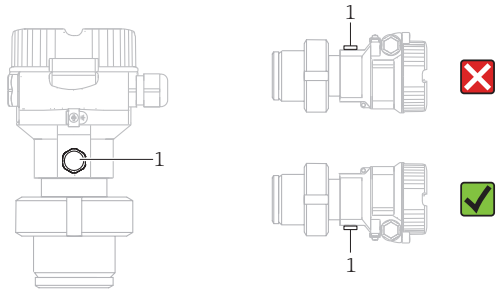

- Keep the pressure compensation and GORE-TEX® filter (1) free from contamination.
- Cerabar M transmitters without diaphragm seals are mounted as per the norms for a manometer (DIN EN 837-2). We recommend the use of shutoff devices and siphons. The orientation depends on the measuring application.
- Do not clean or touch process isolating diaphragms with hard or pointed objects.
- The device must be installed as follows in order to comply with the cleanability requirements of the ASME-BPE (Part SD Cleanability):

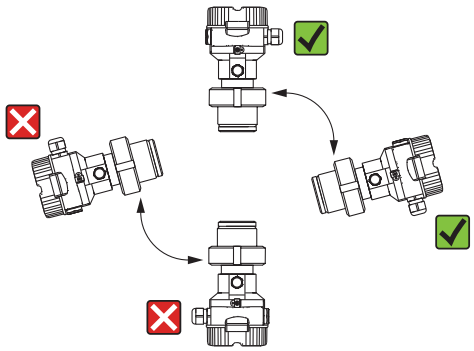

Pressure measurement in gases

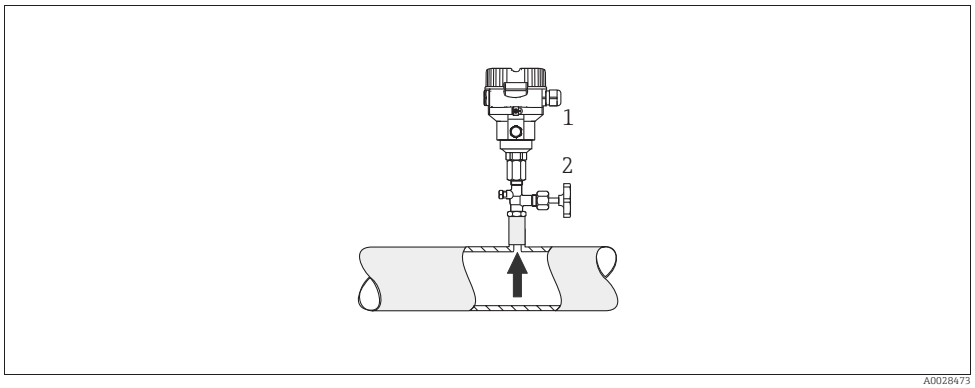

Fig. 5: Measuring arrangement for pressure measurement in gases

1 Cerabar M
2 Shutoff device

Mount the Cerabar M with the shutoff device above the tapping point so that any condensate can flow into the process.

Pressure measurement in steams

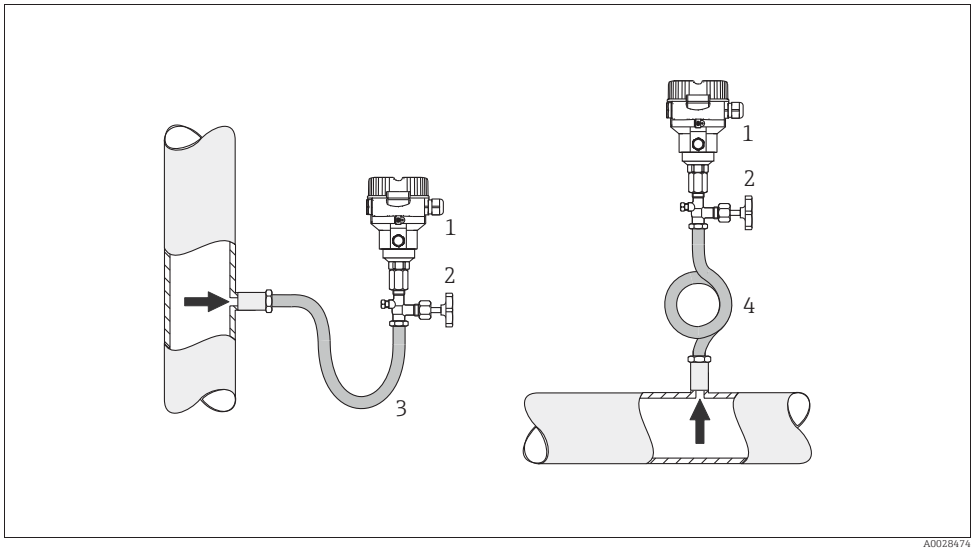

Fig. 6: Measuring arrangement for pressure measurement in steams

1 Cerabar M
2 Shutoff device
3 U-shaped siphon
4 Circular siphon

- Mount Cerabar M with siphon above the tapping point.
- Fill the siphon with liquid before commissioning.
  The siphon reduces the temperature to almost the ambient temperature.

Pressure measurement in liquids

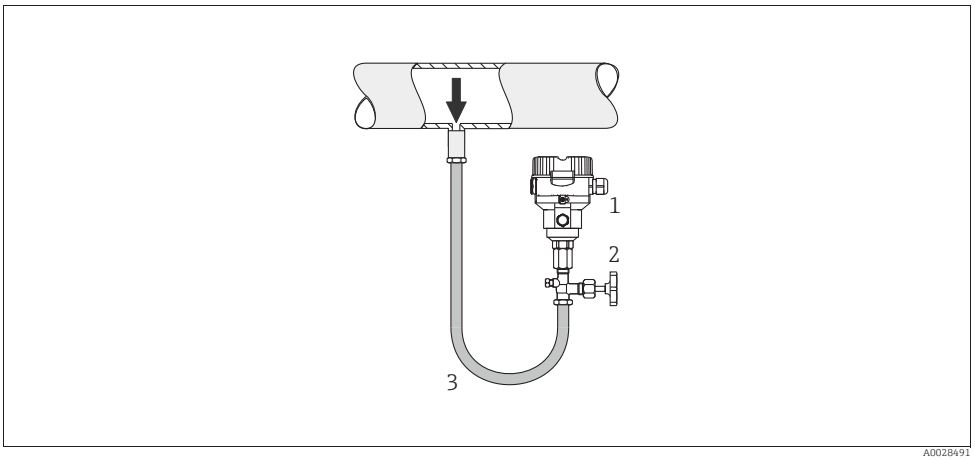

Fig. 7: Measuring arrangement for pressure measurement in liquids

1 Cerabar M
2 Shutoff device

- Mount Cerabar M with shutoff device below or at the same level as the tapping point.

Level measurement

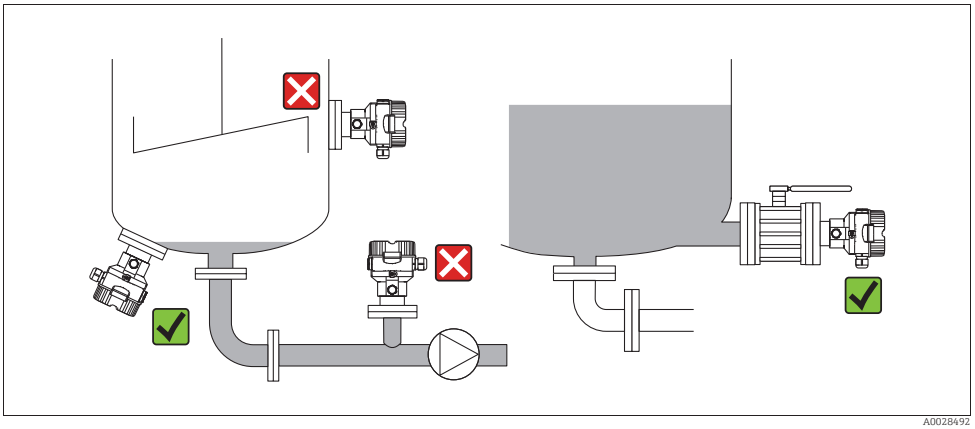

Fig. 8: Measuring arrangement for level

- Always install the Cerabar M below the lowest measuring point.
- Do not mount the device in the filling curtain or at a point in the tank which could be affected by pressure pulses from an agitator.
- Do not mount the device in the suction area of a pump.
- The calibration and functional test can be carried out more easily if you mount the device downstream of a shutoff device.

4.5.2 Installation instructions for devices with diaphragm seals – PMP55

- Cerabar M devices with diaphragm seals are screwed in, flanged or clamped, depending on the type of diaphragm seal.
- Please note that the hydrostatic pressure of the liquid columns in the capillaries can cause zero point shift. The zero point shift can be corrected.
- Do not clean or touch the process isolating diaphragm of the diaphragm seal with hard or pointed objects.
- Do not remove process isolating diaphragm protection until shortly before installation.

NOTICE

Improper handling!

Damage to the device!

- ▶ A diaphragm seal and the pressure transmitter together form a closed, oil-filled calibrated system. The fill fluid hole is sealed and may not be opened.
- ▶ When using a mounting bracket, sufficient strain relief must be ensured for the capillaries in order to prevent the capillary bending down (bending radius ≥ 100 (3.94 in)).
- ▶ Please observe the application limits of the diaphragm seal filling oil as detailed in the Technical Information for Cerabar M TI00436P, "Planning instructions for diaphragm seal systems" section.

NOTICE

In order to obtain more precise measurement results and to avoid a defect in the device, mount the capillaries as follows:

- ▶ Vibration-free (in order to avoid additional pressure fluctuations)
- ▶ Not in the vicinity of heating or cooling lines
- ▶ Insulate if the ambient temperature is below or above the reference temperature
- ▶ With a bending radius of ≥ 100 mm (3.94 in).
- ▶ Do not use the capillaries as a carrying aid for the diaphragm seals!

Vacuum application

For applications under vacuum, Endress+Hauser recommends mounting the pressure transmitter below the diaphragm seal. This prevents vacuum loading of the diaphragm seal caused by the presence of fill fluid in the capillary.

When the pressure transmitter is mounted above the diaphragm seal, the maximum height difference H1 in accordance with the illustrations below must not be exceeded.

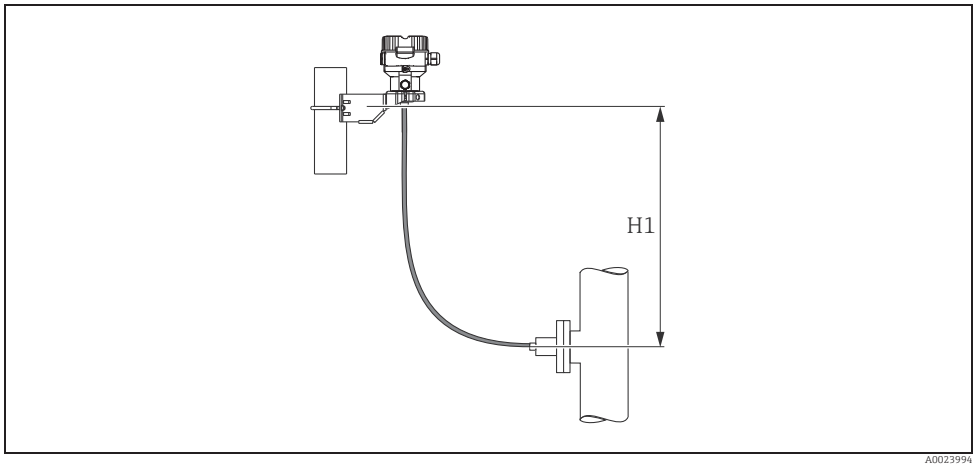

Fig. 9: Installation above the lower diaphragm seal

The maximum height difference depends on the density of the filling oil and the smallest ever pressure that is permitted to occur at the diaphragm seal (empty vessel), see illustration below:

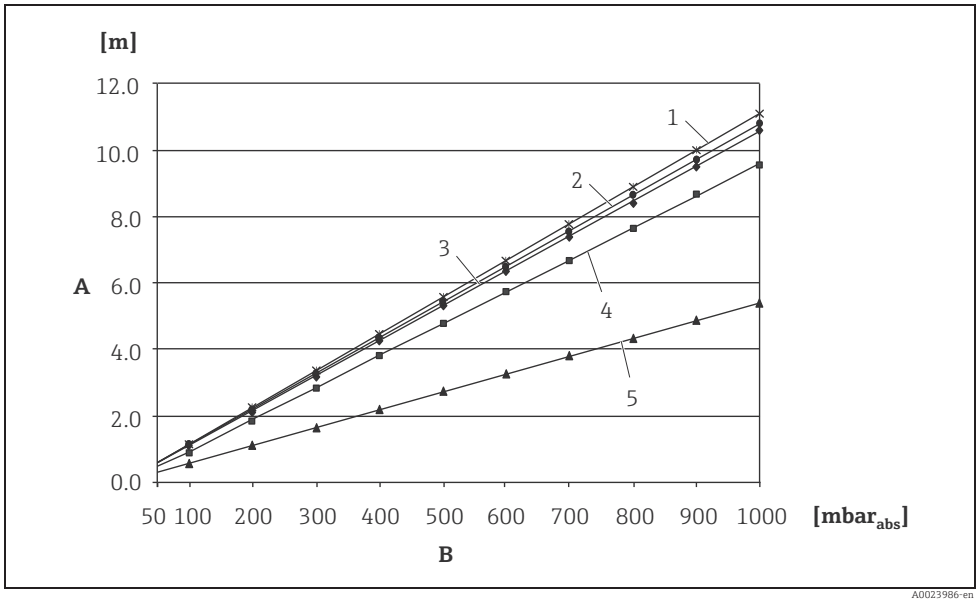

Fig. 10: Diagram of maximum installation height above the lower diaphragm seal for vacuum applications depending on the pressure at the diaphragm seal on the positive side

A Height difference H1
B Pressure at diaphragm seal
1 Low temperature oil
2 Vegetable oil
3 Silicone oil
4 High-temperature oil
5 Inert oil

Mounting with temperature isolator

Endress+Hauser recommends the use of temperature isolators in the event of constant extreme medium temperatures which lead to the maximum permissible electronics temperature of +85 °C (+185°F) being exceeded.
Depending on the filling oil used, diaphragm seal systems with temperature isolators can be used for maximum temperatures of up to 400 °C (+752 °F). → For the temperature application limits, see technical Information, "Diaphragm seal filling oils" section.
To minimize the influence of rising heat, Endress+Hauser recommends the device be mounted horizontally or with the housing pointing downwards. The additional installation height also brings about a maximum zero point shift of 21 mbar (0.315 psi) due to the hydrostatic column in the temperature isolator. You can correct this zero point shift at the device.
The temperature restrictions are lowest with an insulation height of 30 mm (1.18 inch). Full insulation exhibits virtually the same behavior as no insulation!
The temperature limits with an insulation height of 30 mm (1.18 inch) are illustrated in the following graphic.

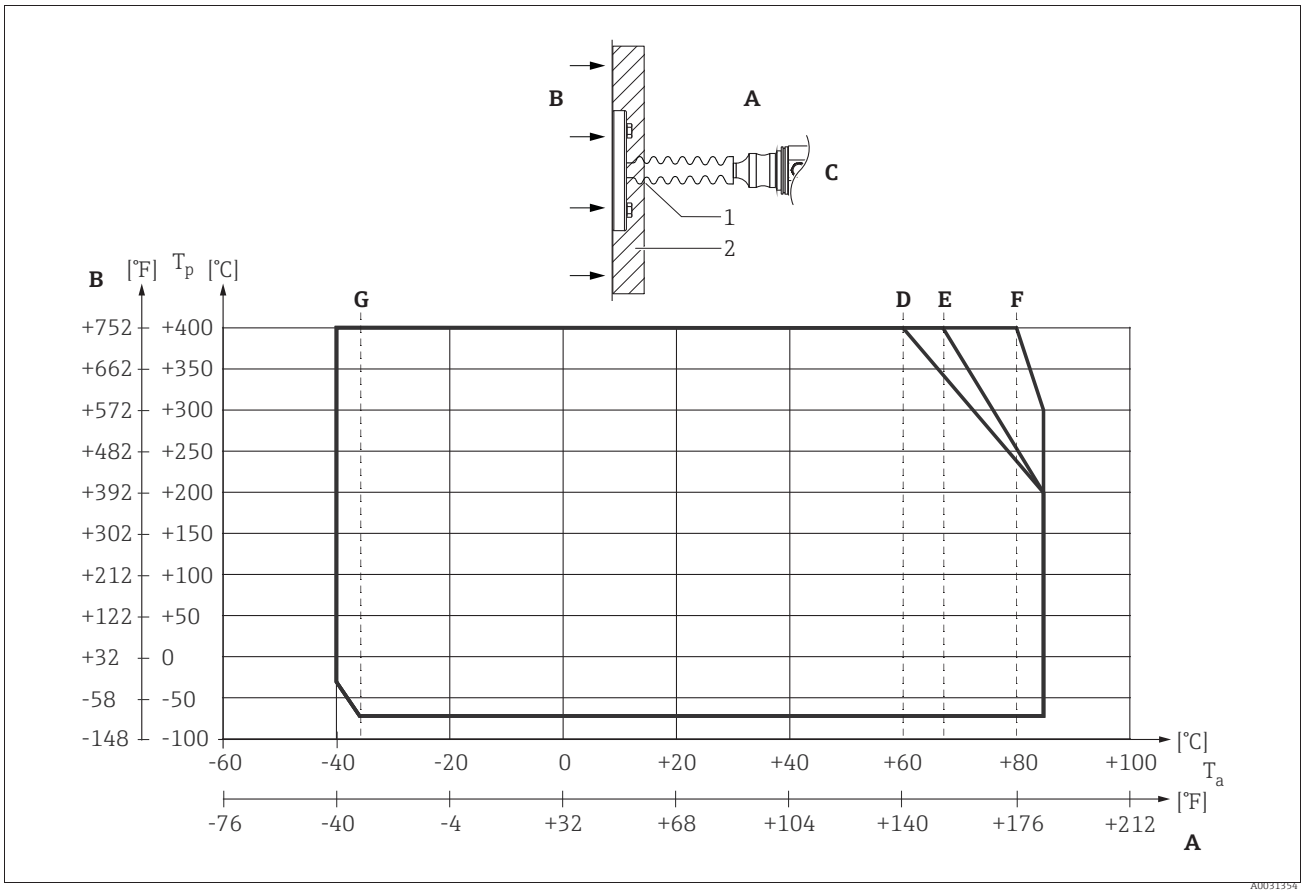

Fig. 11:

A Ambient temperature: ≤ 85 °C (185 °F)
B Process temperature: max. 400 °C (752 °F), depending on the filling oil used
C Device with temperature isolator, material 316L (1.4404)
D Without isolation
E Maximum isolation
F 30 mm (1.18. inch) isolation
G Without isolation, maximum isolation, 30 mm (1.18. inch) isolation
1 Isolation heigth 30 mm (1.18. inch)
2 Isolation material

4.5.3 Seal for flange mounting

NOTICE

Corrupted measurement results.

The seal is not allowed to press against the process isolating diaphragm as this could affect the measurement result.

▶ Ensure that the seal is not touching the process isolating diaphragm.

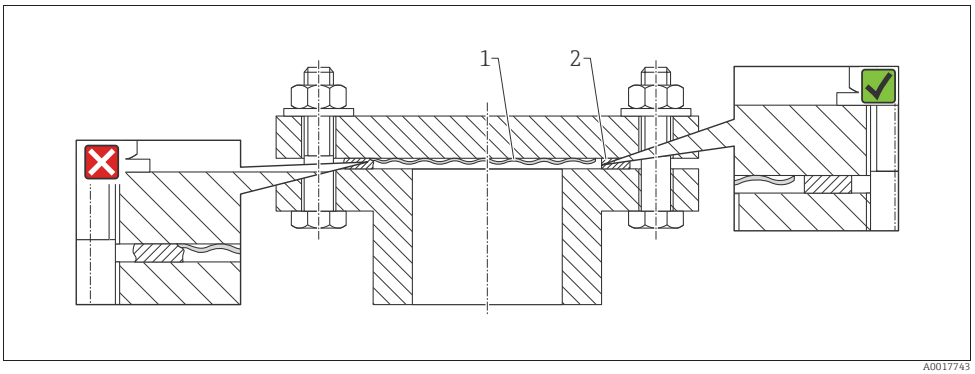

Fig. 12:
1 Process isolating diaphragm
2 Seal

4.5.4 Thermal insulation – PMP55

The PMP55 may only be insulated up to a certain height. The maximum permitted insulation height is indicated on the devices and applies to an insulation material with a heat conductivity ≤ 0.04 W/(m x K) and to the maximum permitted ambient and process temperature. The data were determined under the most critical application "quiescent air".

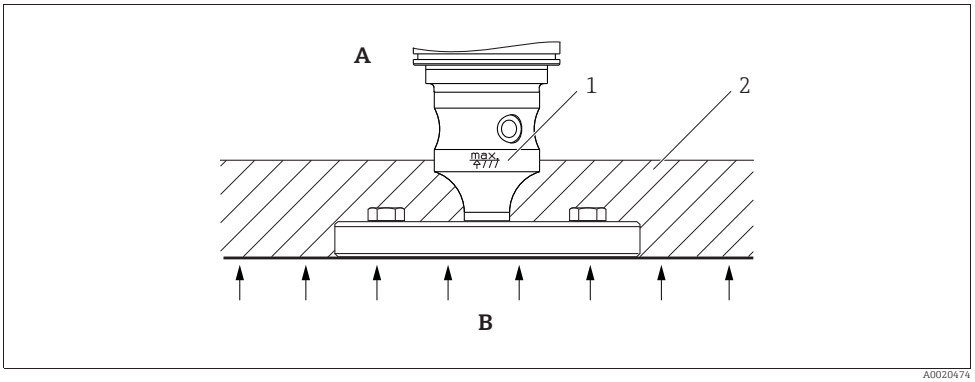

Fig. 13: Maximum permitted insulation height, here indicated on a PMP55 with a flange

A Ambient temperature: ≤ 70 °C (158°F)
B Process temperature: max. 400 °C (752°F), depending on the diaphragm seal filling oil used
1 Maximum permitted insulation height
2 Insulation material

4.5.5 Wall and pipe mounting (optional)

Endress+Hauser offers a mounting bracket for installation on pipes or walls (for pipe diameters from 1 ¼" to 2").

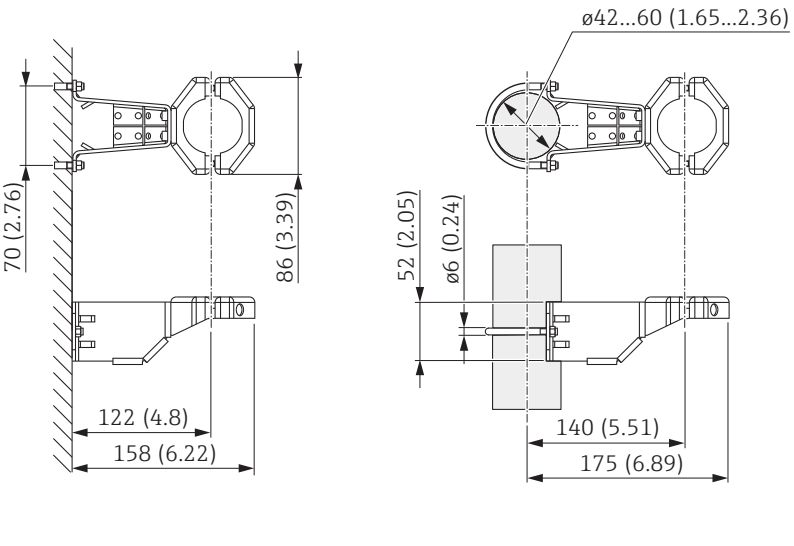

Engineering unit mm (in)

Please note the following when mounting:
- Devices with capillary tubes: mount capillaries with a bending radius ≥ 100 mm (3.94 in).
- When mounting on a pipe, tighten the nuts on the bracket uniformly with a torque of at least 5 Nm (3.69 lbs ft).

4.5.6 Assembling and mounting the "separate housing" version

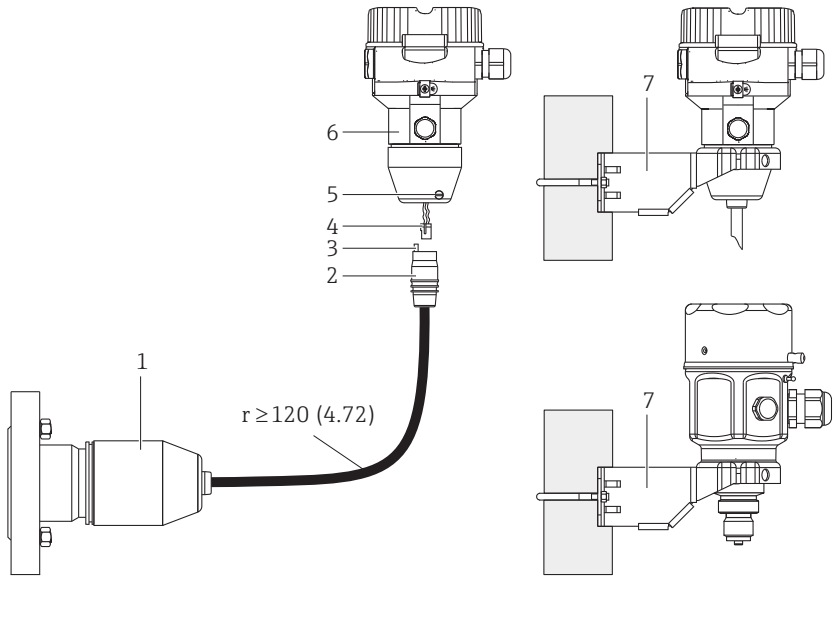

Fig. 14: "Separate housing" version

1 In the case of the "separate housing" version, the sensor is delivered with the process connection and cable ready mounted.
2 Cable with connection jack
3 Pressure compensation
4 Connector
5 Locking screw
6 Housing mounted with housing adapter, included
7 Mounting bracket provided, suitable for pipe and wall mounting (for pipe diameters from 1 ¼" up to 2")

Engineering unit mm (in)

Assembly and mounting

1. Insert the connector (item 4) into the corresponding connection jack of the cable (item 2).
2. Plug the cable into the housing adapter (item 6).
3. Tighten the locking screw (item 5).
4. Mount the housing on a wall or pipe using the mounting bracket (item 7).
   When mounting on a pipe, tighten the nuts on the bracket uniformly with a torque of at least 5 Nm (3.69 lbs ft).
   Mount the cable with a bending radius (r) ≥ 120 mm (4.72 in).

Routing the cable (e.g. through a pipe)

You require the cable shortening kit.
Order number: 71093286
For details on mounting, see SD00553P/00/A6.

4.5.7 PMP51, version prepared for diaphragm seal mount – welding recommendation

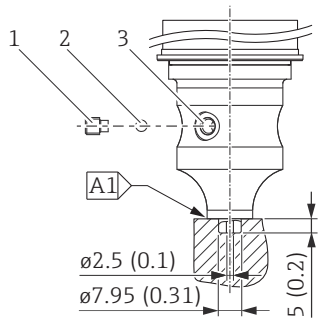

Fig. 15: Version XSJ: prepared for diaphragm seal mount

1 Hole for fill fluid
2 Bearing
3 Setscrew
A1 See the "Welding recommendation" table below

Engineering unit mm (in)

Endress+Hauser recommends welding on the diaphragm seal as follows for the "XSJ - Prepared for diaphragm seal mount" version in feature 110 "Process connections" in the order code up to, and including, 40 bar (600 psi) sensors: the total welding depth of the fillet weld is 1 mm (0.04 in) with an outer diameter of 16 mm (0.63 in). Welding is performed according to the WIG method.

Consecutive seam no.	Sketch/welding groove shape, dimension as per DIN 8551	Base material matching	Welding method DIN EN ISO 24063	Welding position	Inert gas, additives
A1 for sensors ≤ 40 bar (600 psi)	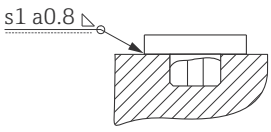	Adapter made of AISI 316L (1.4435) to be welded to diaphragm seal made of AISI 316L (1.4435 or 1.4404)	141	PB	Inert gas Ar/H 95/5 Additive: ER 316L Si (1.4430)

Information on filling

The diaphragm seal must be filled as soon as it has been welded on.

- After welded into the process connection, the sensor assembly must be properly filled with a filling oil and sealed gas-tight with a sealing ball and lock screw.
  Once the diaphragm seal has been filled, at the zero point the device display should not exceed 10% of the full scale value of the cell measuring range. The internal pressure of the diaphragm seal must be corrected accordingly.
- Adjustment / calibration:
  – The device is operational once it has been fully assembled.
  – Perform a reset. The device must then be calibrated to the process measuring range as described in the Operating Instructions.

4.6 Installing Deltabar M

NOTICE

Incorrect handling!

Damage of the device!

▶ Disassembly of the screws with item number (1) is not permissible under any circumstances and will result in loss of warranty.

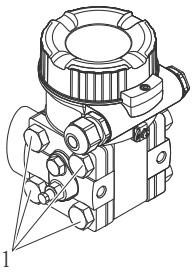

4.6.1 Installation position

- Due to the orientation of the Deltabar M, there may be a shift in the measured value, i.e. when the container is empty, the measured value does not display zero. You may correct this zero point shift by a position adjustment in one of the following ways:
  - via the operation keys on the electronics module (→ 47, "Function of the operating elements")
  - via the operating menu (→ 64, "Position zero adjustment")
- General recommendations for routing the impulse piping can be found in DIN 19210 "Methods for measurement of fluid flow; differential piping for flow measurement devices" or the corresponding national or international standards.
- Using a three-valve or five-valve manifold allows for easy commissioning, installation and maintenance without interrupting the process.
- When routing the impulse piping outdoors, ensure that sufficient anti-freeze protection is used, e.g. by using pipe heat tracing.
- Install the impulse piping with a monotonic gradient of at least 10%.
- Endress+Hauser offers a mounting bracket for installing on pipes or walls (→ 29, "Wall and pipe-mounting (option)").

Installation position for flow measurement

For more information about differential pressure flow measurement refer to following documents:

- Differential pressure flow measurements with orifices: Technical Information TI00422P
- Differential pressure flow measurement with Pitot tubes: Technical Information TI00425P

Flow measurement in gases

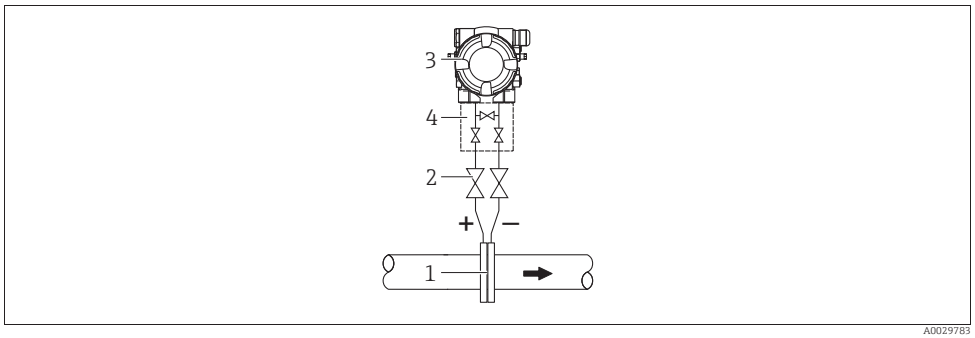

Measuring layout for flow measurement in gases

1 Orifice plate or pitot tube
2 Shut-off valves
3 Deltabar M
4 Three-valve manifold

- Mount the Deltabar M above the measuring point so that the condensate which may be present, can run off into the process piping.

Flow measurement in steam

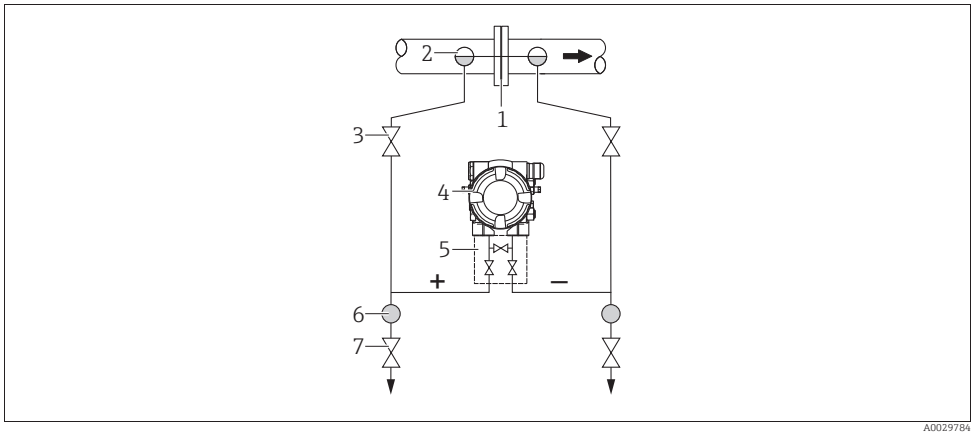

Measuring layout for flow measurement in steam

1 Orifice plate or pitot tube
2 Condensate traps
3 Shut-off valves
4 Deltabar M
5 Three-valve manifold
6 Separator
7 Drain valves

- Mount the Deltabar M below the measuring point.
- Mount the condensate traps at the same level as the tapping points and at the same distance to the Deltabar M.
- Prior to commissioning, fill the impulse piping to the height of the condensate traps.

Flow measurement in liquids

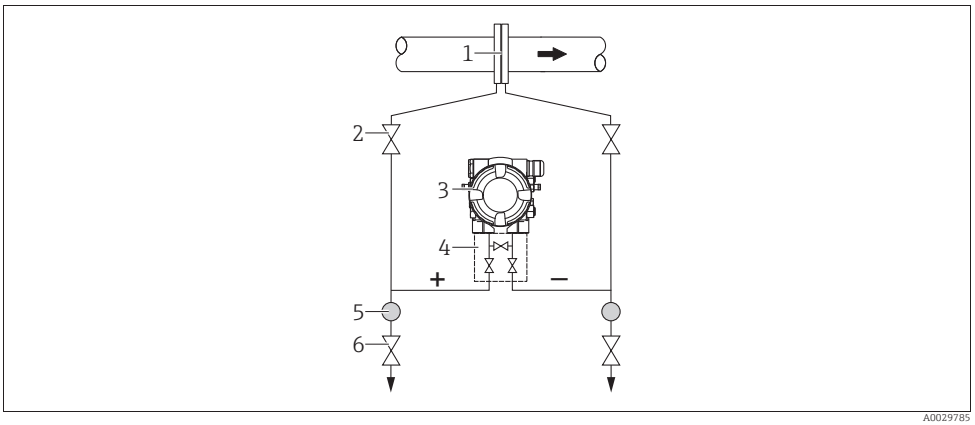

A0029785

Measuring layout for flow measurement in liquids

1 Orifice plate or pitot tube
2 Shut-off valves
3 Deltabar M
4 Three-valve manifold
5 Separator
6 Drain valves

- Mount the Deltabar M below the measuring point so that the impulse piping is always filled with liquid and gas bubbles can run back into the process piping.
- When measuring in media with solid parts, such as dirty liquids, installing separators and drain valves is useful for capturing and removing sediment.

Installation position for level measurement

Level measurement in an open container

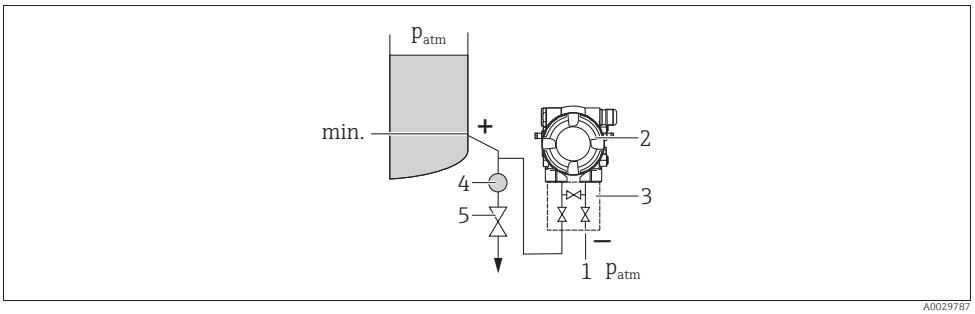

A0029787

Measuring layout for level measurement in open containers

1 The low-pressure side is open to atmospheric pressure
2 Deltabar M
3 Three-valve manifold
4 Separator
5 Drain valve

- Mount the Deltabar M below the lower measuring connection so that the impulse piping is always filled with liquid.
- The low-pressure side is open to atmospheric pressure.
- When measuring in media with solid parts, such as dirty liquids, installing separators and drain valves is useful for capturing and removing sediment.

Level measurement in a closed container

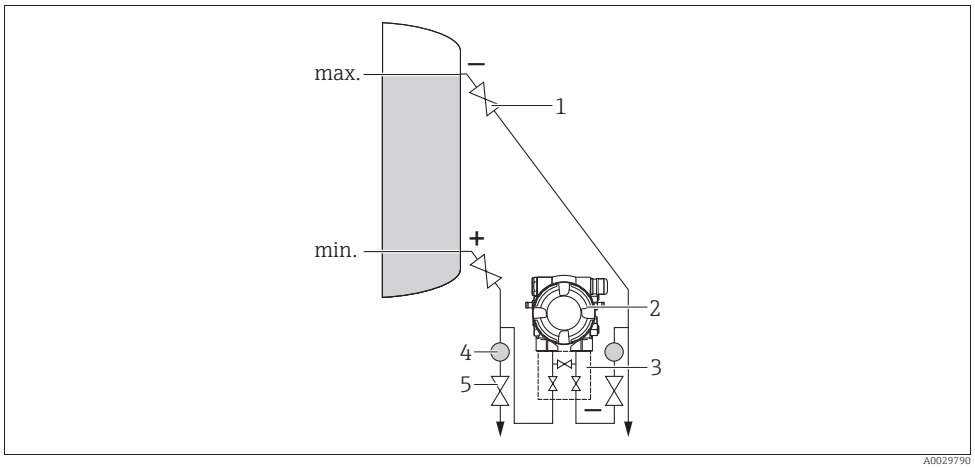

Measuring layout for level measurement in a closed container

1 Shut-off valves
2 Deltabar M
3 Three-valve manifold
4 Separator
5 Drain valves

- Mount the Deltabar M below the lower measuring connection so that the impulse piping is always filled with liquid.
- Always connect the low-pressure side above the maximum level.
- When measuring in media with solid parts, such as dirty liquids, installing separators and drain valves is useful for capturing and removing sediment.

Level measurement in a closed container with superimposed steam

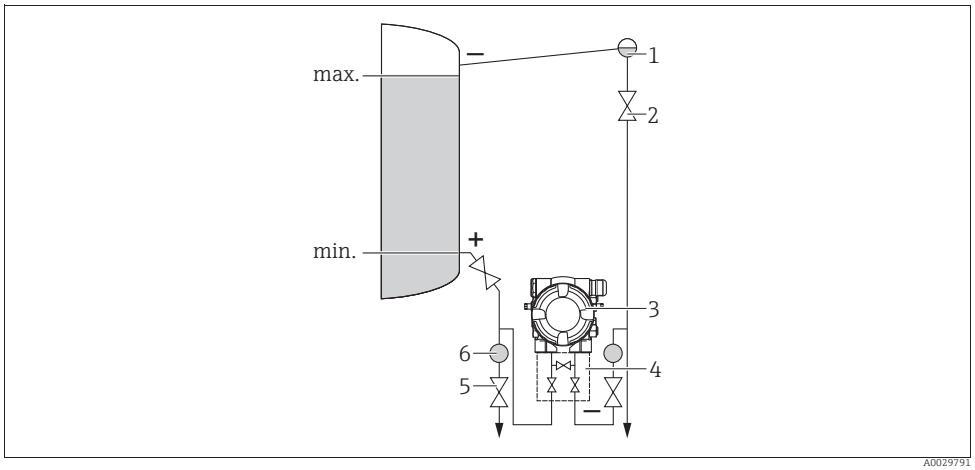

Measuring layout for level measurement in a container with superimposed steam

1 Condensate trap
2 Shut-off valves
3 Deltabar M
4 Three-valve manifold
5 Separator
6 Drain valves

- Mount the Deltabar M below the lower measuring connection so that the impulse piping is always filled with liquid.
- Always connect the low-pressure side above the maximum level.
- A condensate trap ensures constant pressure on the low-pressure side.

- When measuring in media with solid parts, such as dirty liquids, installing separators and drain valves is useful for capturing and removing sediment.

Installation position for differential pressure measurement

Differential pressure measurement in gases and steam

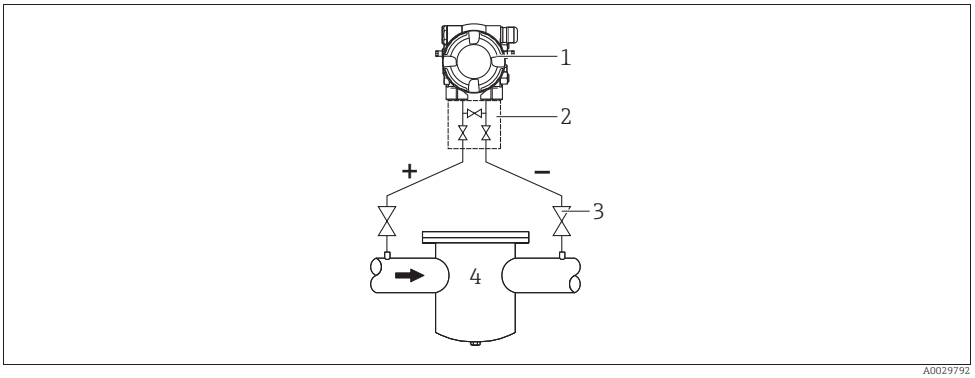

Measuring layout for differential pressure measurement in gases and steam

1 *Deltabar M*
2 *Three-valve manifold*
3 *Shut-off valves*
4 *e.g. filter*

- Mount the Deltabar M above the measuring point so that the condensate which may be present, can run off into the process piping.

Differential pressure measurement in liquids

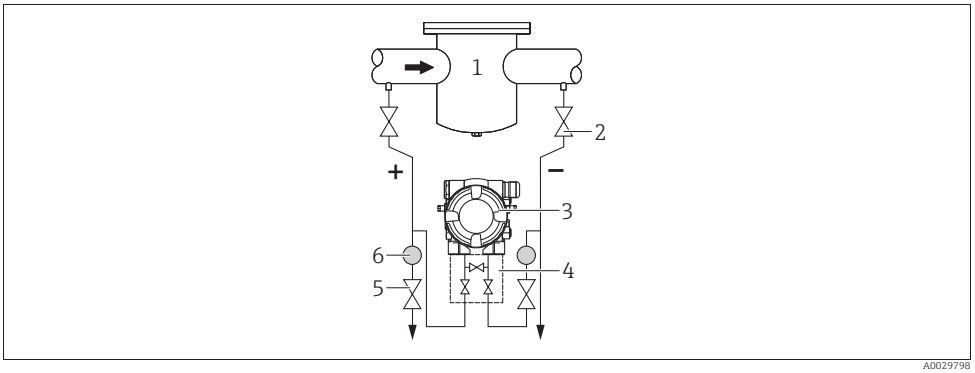

Measuring layout for differential pressure measurement in liquids

1 *e.g. filter*
2 *Shut-off valves*
3 *Deltabar M*
4 *Three-valve manifold*
5 *Separator*
6 *Drain valves*

- Mount the Deltabar M below the measuring point so that the impulse piping is always filled with liquid and gas bubbles can run back into the process piping.
- When measuring in media with solid parts, such as dirty liquids, installing separators and drain valves is useful for capturing and removing sediment.

4.6.2 Wall and pipe-mounting (option)

Endress+Hauser offers the following mounting brackets for installing the device on pipes or walls:

Standard design	Heavy duty design
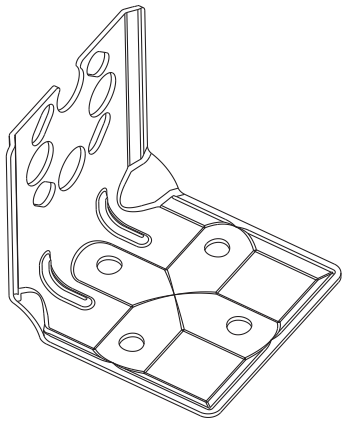 A0031326	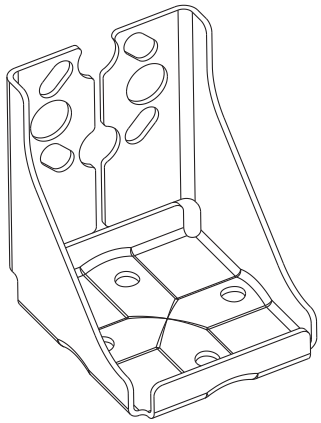 A0031327

When using a valve block, the block's dimensions must be taken into account.
Bracket for wall and pipe mounting including retaining bracket for pipe mounting and two nuts.
material of the screws used to secure the device depend on the order code.
Technical data (e.g. dimensions or order numbers for screws) see accessory document SD01553P/00/EN.

Please note the following when mounting:
- To prevent the mounting screws from scoring, lubricate them with a multi-purpose grease prior to mounting.
- In the case of pipe mounting, the nuts on the bracket must be tightened uniformly with a torque of at least 30 Nm (22.13 lbf ft).
- For installation purposes, only use the screws with item number (2) (see the following diagram).

NOTICE

Incorrect handling!

Damage of the device!

- Disassembly of the screws with item number (1) is not permissible under any circumstances and will result in loss of warranty.

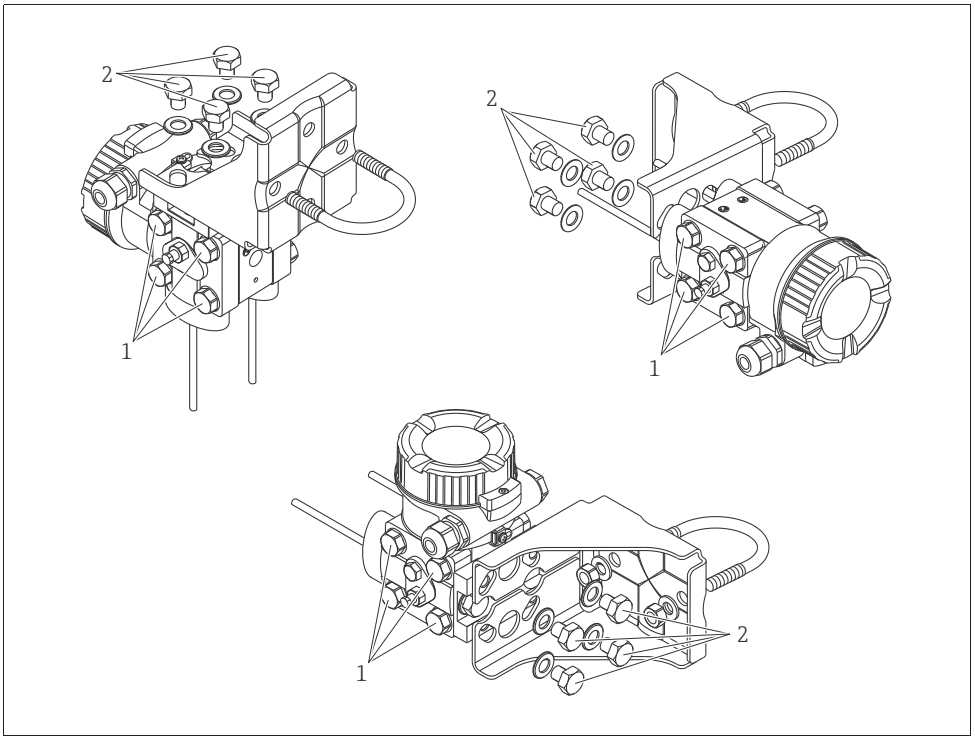

A0024167.eps

Typical installation arrangements

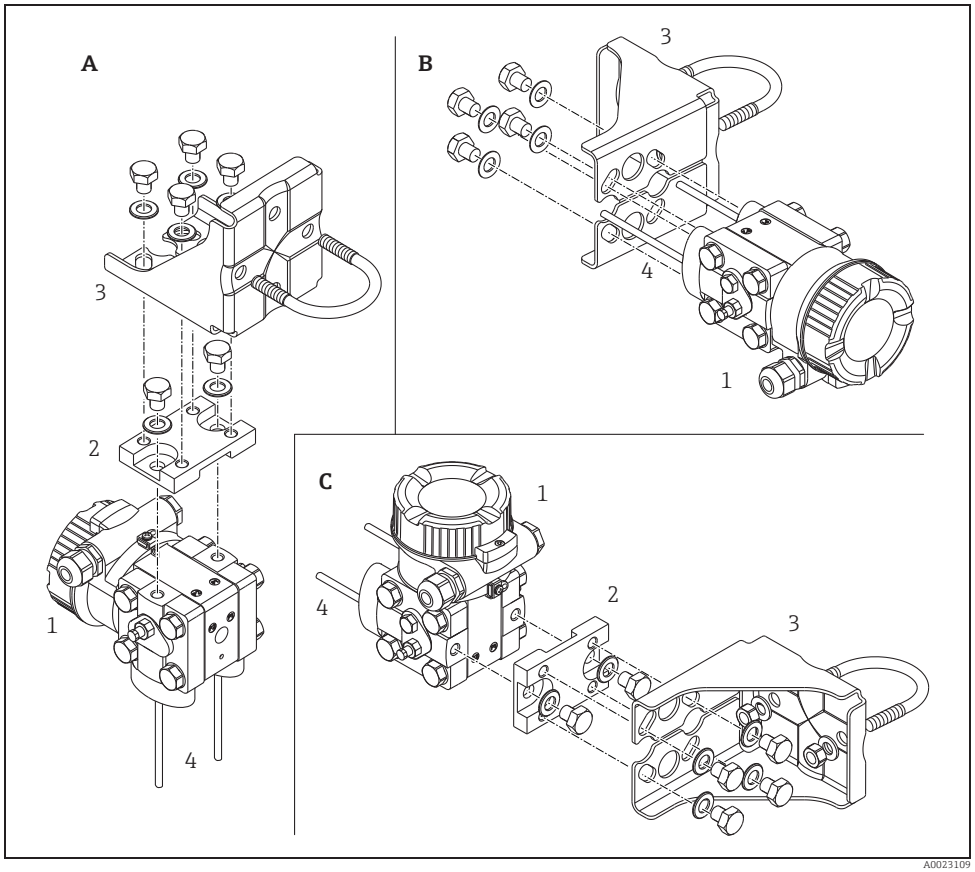

Abb. 16:

A Impulse line vertical, version V1, alignment 90°
B Impulse line horizontal, version H1, alignment 180°
C Impulse line horizontal, version H2, alignment 90°
1 Deltabar M
2 Adapter plate
3 Mounting bracket
4 Pressure line

4.7 Installing Deltapilot M

- Due to the orientation of the Deltapilot M, there may be a shift in the zero point, i.e. when the container is empty or partially full, the measured value does not display zero. You can correct this zero point shift → 47, Section "Function of the operating elements" or → 64, Section 8.4 "Position zero adjustment".
- The local display can be rotated in 90° stages.
- Endress+Hauser offers a mounting bracket for installing on pipes or walls. → 21, Section 4.5.5 "Wall and pipe mounting (optional)".

4.7.1 General installation instructions

- Do not clean or touch process isolating diaphragms with hard or pointed objects.
- The process isolating diaphragm in the rod and cable version is protected against mechanical damage by a plastic cap.
- If a heated Deltapilot M is cooled during the cleaning process (e.g. by cold water), a vacuum develops for a short time, whereby moisture can penetrate the sensor through the pressure compensation (1). If this is the case, mount the Deltapilot M with the pressure compensation (1) pointing downwards.

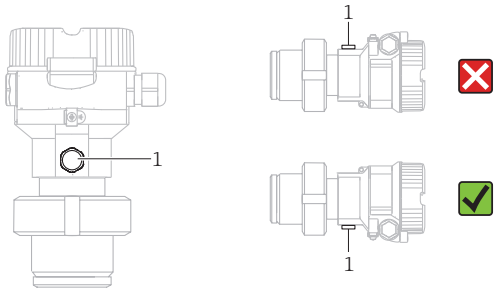

- Keep the pressure compensation and GORE-TEX® filter (1) free from contamination.
- The device must be installed as follows in order to comply with the cleanability requirements of the ASME-BPE (Part SD Cleanibility).:

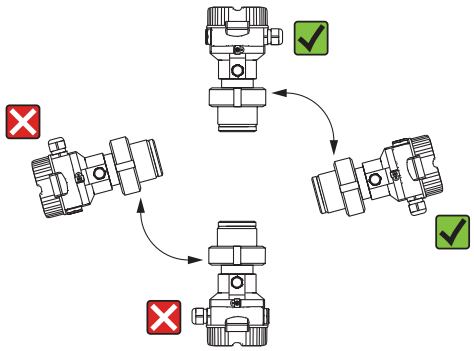

4.7.2 FMB50

Level measurement

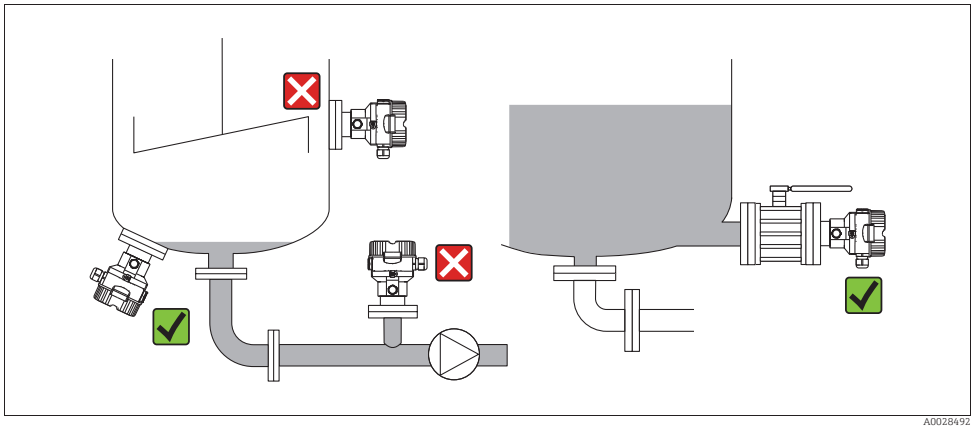

Fig. 17: Measuring arrangement for level

- Always install the device below the lowest measuring point.
- Do not install the device at the following positions:
  - in the filling curtain
  - in the tank outflow
  - in the suction area of a pump
  - or at a point in the tank that can be affected by pressure pulses from the agitator
- The calibration and functional test can be carried out more easily if you mount the device downstream of a shutoff device.
- Deltapilot M must be included in the insulation for media that can harden when cold.

Pressure measurement in gases

- Mount Deltapilot M with shutoff device above the tapping point so that any condensate can flow into the process.

Pressure measurement in steams

- Mount Deltapilot M with siphon above the tapping point.
- Fill the siphon with liquid before commissioning.
  The siphon reduces the temperature to almost the ambient temperature.

Pressure measurement in liquids

- Mount Deltapilot M with the shutoff device below or at the same level as the tapping point.

4.7.3 FMB51/FMB52/FMB53

- When mounting rod and cable versions, make sure that the probe head is located at a point as free as possible from flow. To protect the probe from impact resulting from lateral movement, mount the probe in a guide tube (preferably made of plastic) or secure it with a clamping fixture.
- In the case of devices for hazardous areas, comply strictly with the safety instructions when the housing cover is open.
- The length of the extension cable or the probe rod is based on the planned level zero point. The height of the protective cap must be taken into consideration when designing the layout of the measuring point. The level zero point (E) corresponds to the position of the process isolating diaphragm.
  Level zero point = E; top of the probe = L.

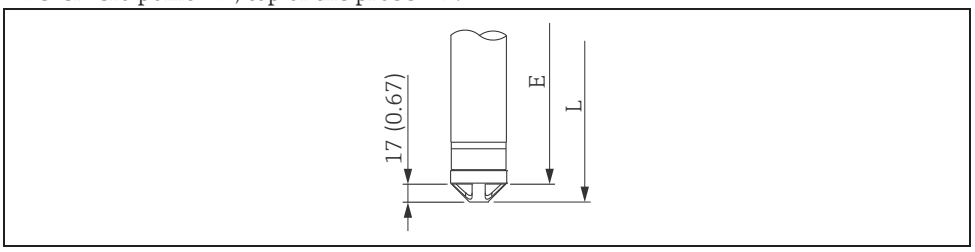

4.7.4 Mounting the FMB53 with a suspension clamp

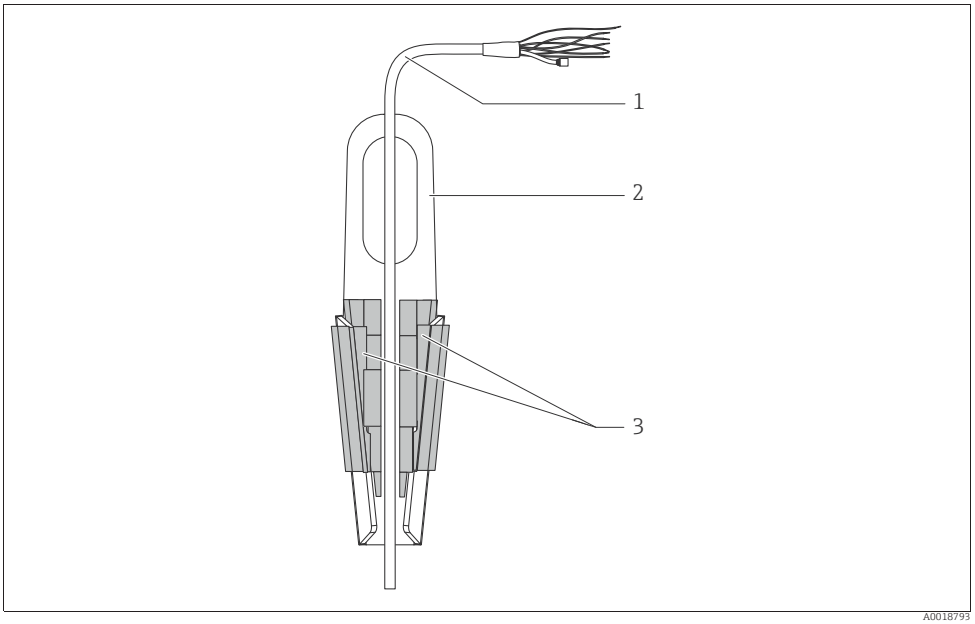

Fig. 18: Mounting with a suspension clamp

1 Extension cable
2 Suspension clamp
3 Clamping jaws

Mounting the suspension clamp:

1. Mount the suspension clamp (item 2). When selecting the place to fix the unit, take the weight of the extension cable (item 1) and the device into account.
2. Raise the clamping jaws (item 3). Position the extension cable (item 1) between the clamping jaws as illustrated in Figure.
3. Hold the extension cable in position (item 1) and push the clamping jaws (item 3) back down.
   Tap the clamping jaws gently from above to fix them in place.

4.7.5 Seal for flange mounting

NOTICE

Distorted measurement results.

The seal is not allowed to press on the process isolating diaphragm as this could affect the measurement result.

▶ Ensure that the seal is not touching the process isolating diaphragm.

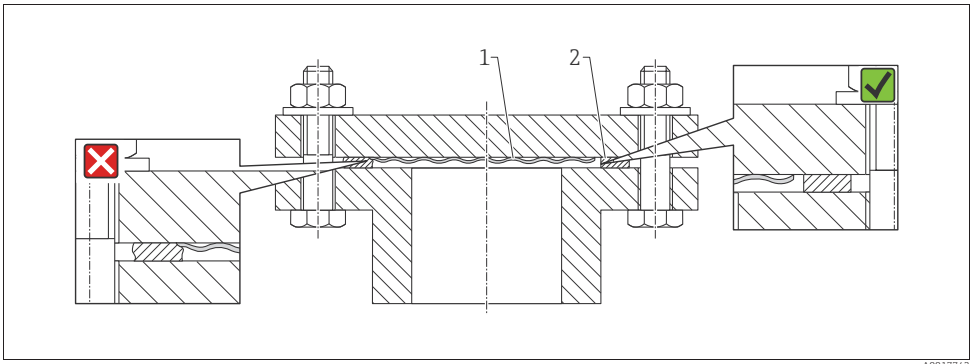

Fig. 19:
1 Process isolating diaphragm
2 Seal

4.7.6 Wall and pipe mounting (optional)

Mounting bracket

Endress+Hauser offers a mounting bracket for installing on pipes or walls (for pipes from 1 1/4" up to 2" diameter).

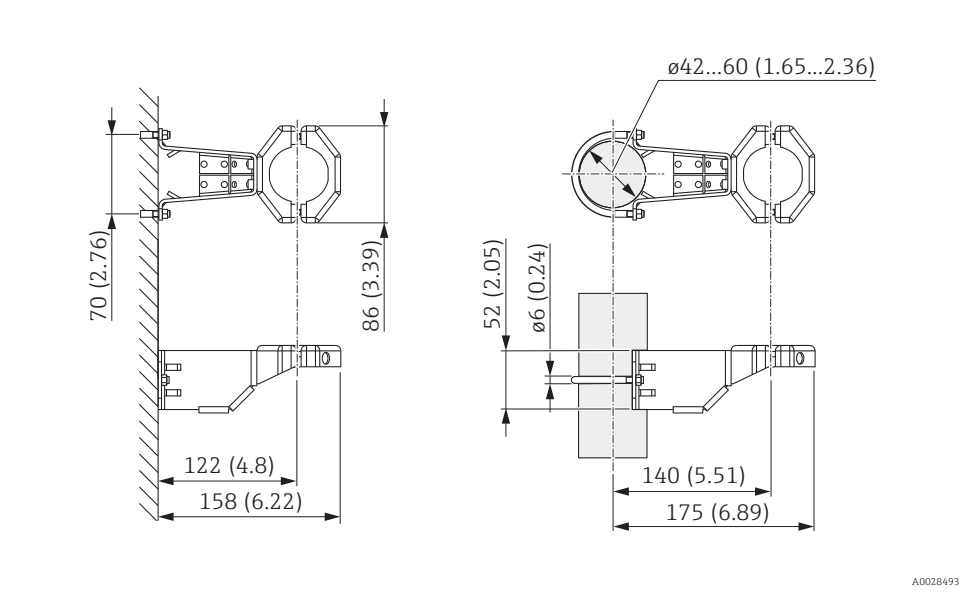

Maßeinheit mm (in)

In the case of pipe mounting, the nuts on the bracket must be tightened uniformly with a torque of at least 5 Nm (3.69 lbf ft).

4.7.7 Assembling and mounting the "separate housing" version

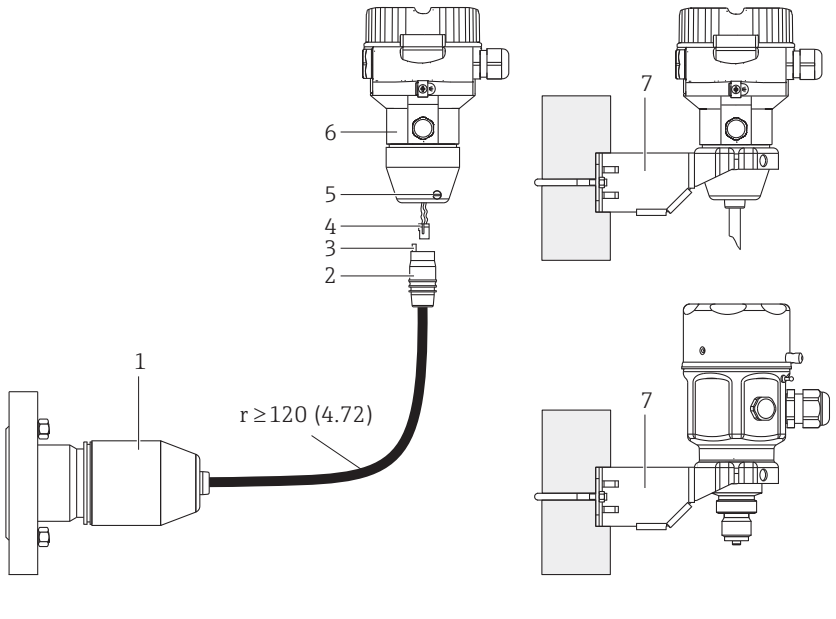

Fig. 20: "Separate housing" version

1 In the case of the "separate housing" version, the sensor is delivered with the process connection and cable ready mounted.
2 Cable with connection jack
3 Pressure compensation
4 Connector
5 Locking screw
6 Housing mounted with housing adapter, included
7 Mounting bracket provided, suitable for pipe and wall mounting (for pipes from 1 1/4" up to 2" diameter)

Maßeinheit mm (in)

Assembly and mounting

1. Insert the connector (item 4) into the corresponding connection jack of the cable (item 2).
2. Plug the cable into the housing adapter (item 6).
3. Tighten the locking screw (item 5).
4. Mount the housing on a wall or pipe using the mounting bracket (item 7).
   When mounting on a pipe, tighten the nuts on the bracket uniformly with a torque of at least 5 Nm (3.69 lbf ft).
   Mount the cable with a bending radius (r) ≥ 120 mm (4.72 in).

Routing the cable (e.g. through a pipe)

You require the cable shortening kit.
Order number: 71093286
For details on mounting, see SD00553P/00/A6.

4.7.8 Supplementary installation instructions

Sealing the probe housing

- Moisture must not penetrate the housing when mounting the device, establishing the electrical connection and during operation.
- Always firmly tighten the housing cover and the cable entries.

4.8 Mounting of the profile seal for universal process mounting adapter

For details on mounting, see KA00096F/00/A3.

4.9 Closing the housing cover

NOTICE

Devices with EPDM cover seal - transmitter leakiness!

Mineral-based, animal-based or vegetable-based lubricants cause the EPDM cover seal to swell and the transmitter to become leaky.

▶ The thread is coated at the factory and therefore does not require any lubrication.

NOTICE

The housing cover can no longer be closed.

Damaged thread!

▶ When closing the housing cover, please ensure that the thread of the cover and housing are free from dirt, e.g. sand.If you feel any resistance when closing the cover, check the thread on both again to ensure that they are free from dirt.

4.9.1 Closing the cover on the stainless steel housing

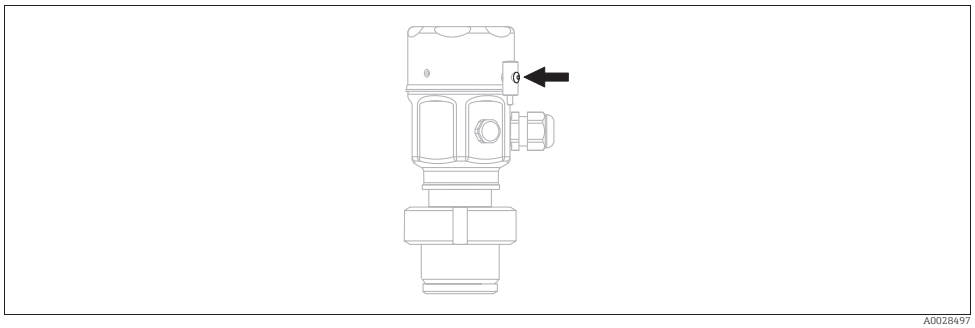

A0028497

Fig. 21: Closing the cover

The cover for the electronics compartment is tightened by hand at the housing until the stop. The screw serves as DustEx protection (only available for devices with DustEx approval).

4.10 Post-installation check

O	Is the device undamaged (visual inspection)?
O	Does the device comply with the measuring point specifications? For example: ▪ Process temperature ▪ Process pressure ▪ Ambient temperature range ▪ Measuring range
O	Are the measuring point identification and labeling correct (visual inspection)?
O	Is the device adequately protected against precipitation and direct sunlight?
O	Are the securing screw and securing clamp tightened securely?

5 Electrical connection

5.1 Connecting the device

⚠ WARNING

Supply voltage might be connected!

Risk of electric shock and/or explosion!

- Ensure that no uncontrolles processes are activated in the system.
- Switch off the supply voltage before connecting the device.
- When using the measuring device in hazardous areas, installation must comply with the corresponding national standards and regulations and the Safety Instructions or Installation or Control Drawings.
- A suitable circuit breaker must be provided for the device in accordance with IEC/EN61010.
- Devices with integrated overvoltage protection must be grounded.
- Protective circuits against reverse polarity, HF influences and overvoltage peaks are integrated.

Connect the device in the following order:

1. Check that the supply voltage corresponds to the supply voltage indicated on the nameplate.
2. Switch off the supply voltage before connecting the device.
3. Remove housing cover.
4. Guide the cable through the gland. Preferably use a twisted, shielded two-wire cable.
5. Connect the device in accordance with the following diagram.
6. Screw down the housing cover.
7. Switch on the supply voltage.

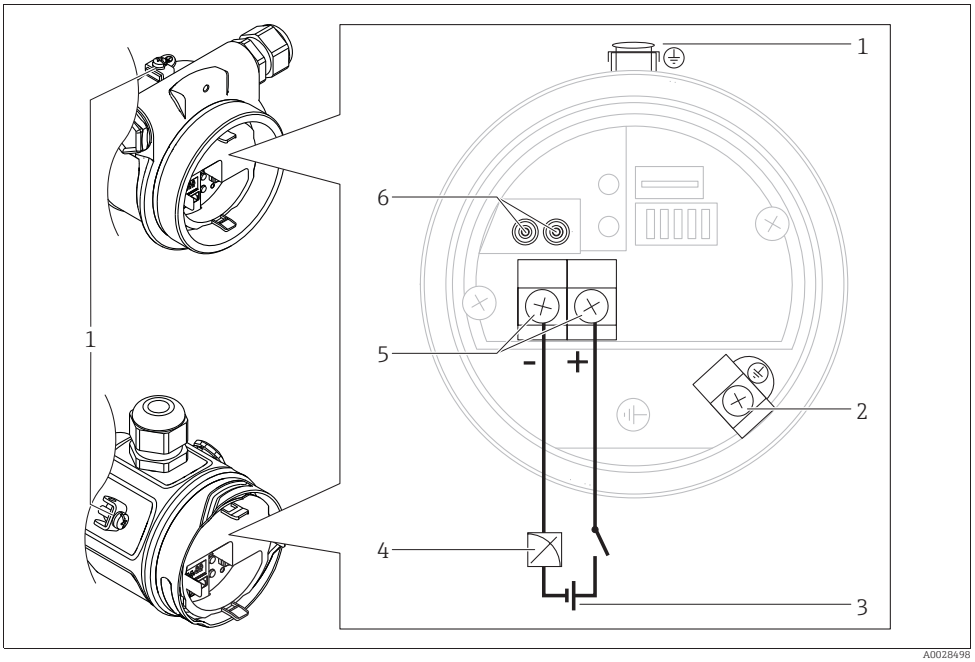

Electrical connection 4...20 mA HART

1 External ground terminal
2 Grounding terminal
3 Supply voltage: 11,5 ... 45 VDC (versions with plug connectors: 35 V DC)
4 4 to 20 mA
5 Terminals for supply voltage and signal
6 Test terminals

5.1.1 Connecting devices with a Harting connector Han7D

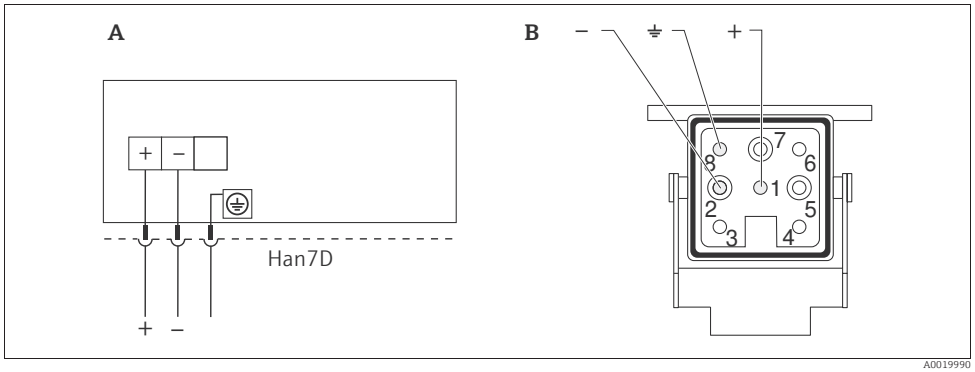

Fig. 22:

A Electrical connection for devices with Harting plug Han7D
B View of the connection on the device

Material: CuZn, gold-plated contacts of plug-in jack and connector

5.1.2 Connecting devices with an M12 connector

PIN assignment for M12 connector

PIN assignment for M12 connector	PIN	Meaning
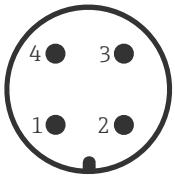	1	Signal +
	2	Not assigned
	3	Signal –
	4	Earth

5.1.3 Devices with valve connector

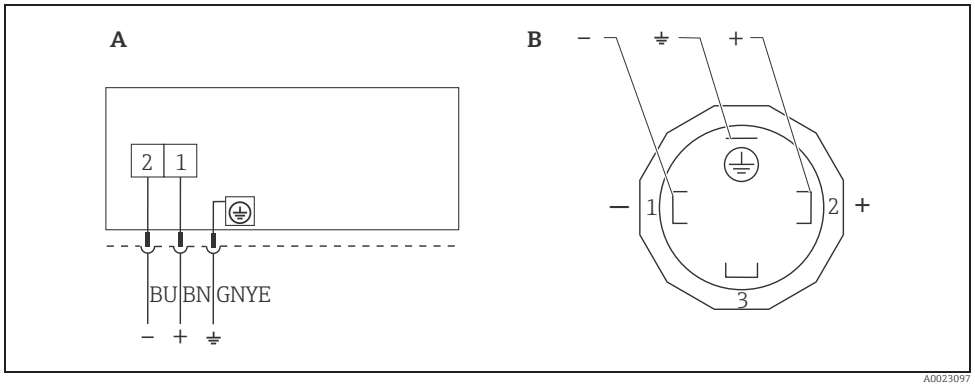

Fig. 23: BN = brown, BU = blue, GNYE = green/yellow

A Electrical connection for devices with valve connector
B View of the connection on the device

Material: PA 6.6

5.2 Connecting the measuring unit

5.2.1 Supply voltage

Electronic version	
4 to 20 mA HART, for non-hazardous areas	11.5 to 45 V DC (versions with plug-in connector 35 V DC)

Taking 4 to 20 mA test signal

A 4 to 20 mA test signal may be measured via the test terminals without interrupting the measurement. To keep the corresponding measured error below 0.1%, the current measuring device should exhibit an internal resistance of < 0.7 Ω.

5.2.2 Terminals

- Supply voltage and internal ground terminal: 0.5 to 2.5 mm^2 (20 to 14 AWG)
- External ground terminal: 0.5 to 4 mm^2 (20 to 12 AWG)

5.2.3 Cable specification

- Endress+Hauser recommends using twisted, shielded two-wire cables.
- Cable outer diameter: 5 to 9 mm (0.2 to 0.35 in) depends on the used cable gland (see technical information)

5.2.4 Load

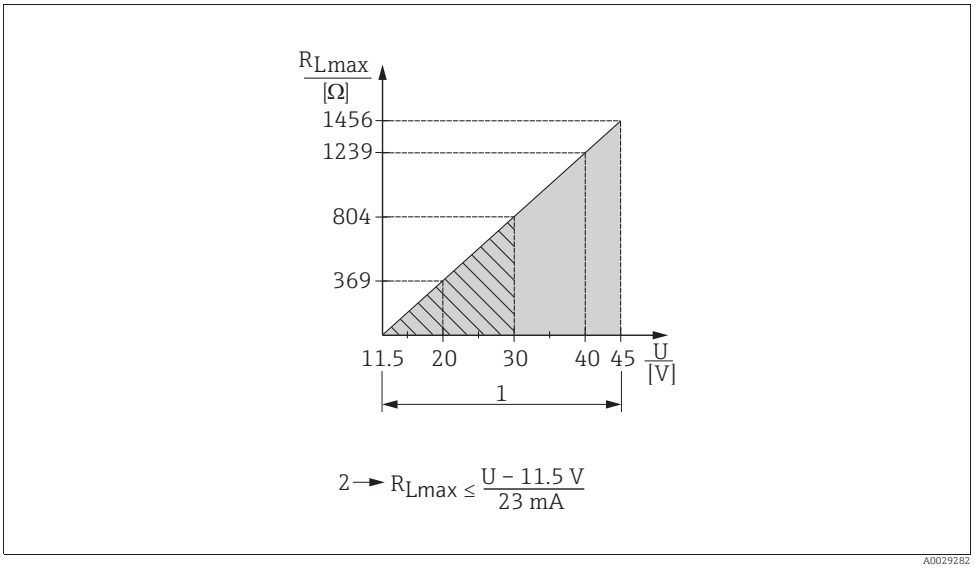

Fig. 24: Load diagram

1 Supply voltage 11.5 to 45 V DC (versions with plug-in connector 35 V DC) for other types of protection and for uncertified device versions
2 R_{Lmax} Maximum load resistance
U Supply voltage

When operating via a handheld terminal or via a PC with an operating program, a minimum communication resistance of 250 Ω must be taken into account.

5.2.5 Shielding/potential equalization

- A normal device cable suffices if only the analog signal is used. A shielded cable is recommended if using the HART protocol. Observe grounding concept of the plant.
- When using in hazardous areas, you must observe the applicable regulations. Separate Ex documentation with additional technical data and instructions is included with all Ex systems as standard. Connect all devices to the local potential equalization.

5.2.6 Connecting Field Xpert SFX100

Compact, flexible and robust industry handheld terminal for remote parametrization and measured value inspection via the HART current output (4 to 20mA).
For details refer to Operating Instructions BA00060S/04/EN.

5.2.7 Connecting Commubox FXA195

The Commubox FXA195 connects intrinsically safe transmitters with the HART protocol to a computer's USB port. This allows remote operation of the transmitter using Endress+Hauser's FieldCare operating program. Power is supplied to the Commubox through the USB port. The Commubox is also suitable for connection to intrinsically safe circuits. → See Technical Information TI00404F for further information.

5.3 Overvoltage protection (optional)

Devices showing version "NA" in feature 610 "Accessory mounted" in the order code are equipped with a surge arrester (see Technical Information "Ordering information" section). The surge arrester is mounted at the factory on the housing thread for the cable gland and is approx. 70 mm (2.76 in) in length (take additional length into account when installing). The device is connected as specified in the following graphic. For details refer to TI001013KEN, XA01003KA3 and BA00304KA2.

5.3.1 Wiring

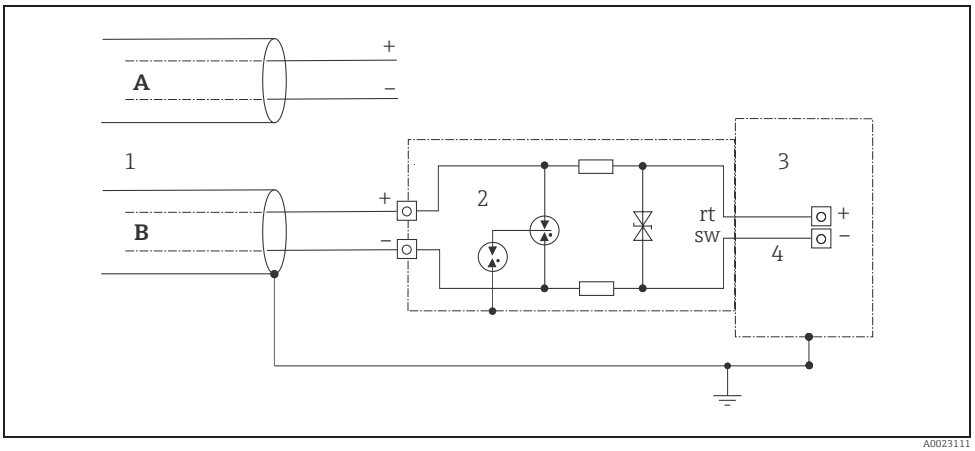

Fig. 25:

A Without direct shield grounding
B With direct shield grounding
1 Incoming connection cable
2 HAW569-DA2B
3 Unit to be protected
4 Connection cable

5.3.2 Installation

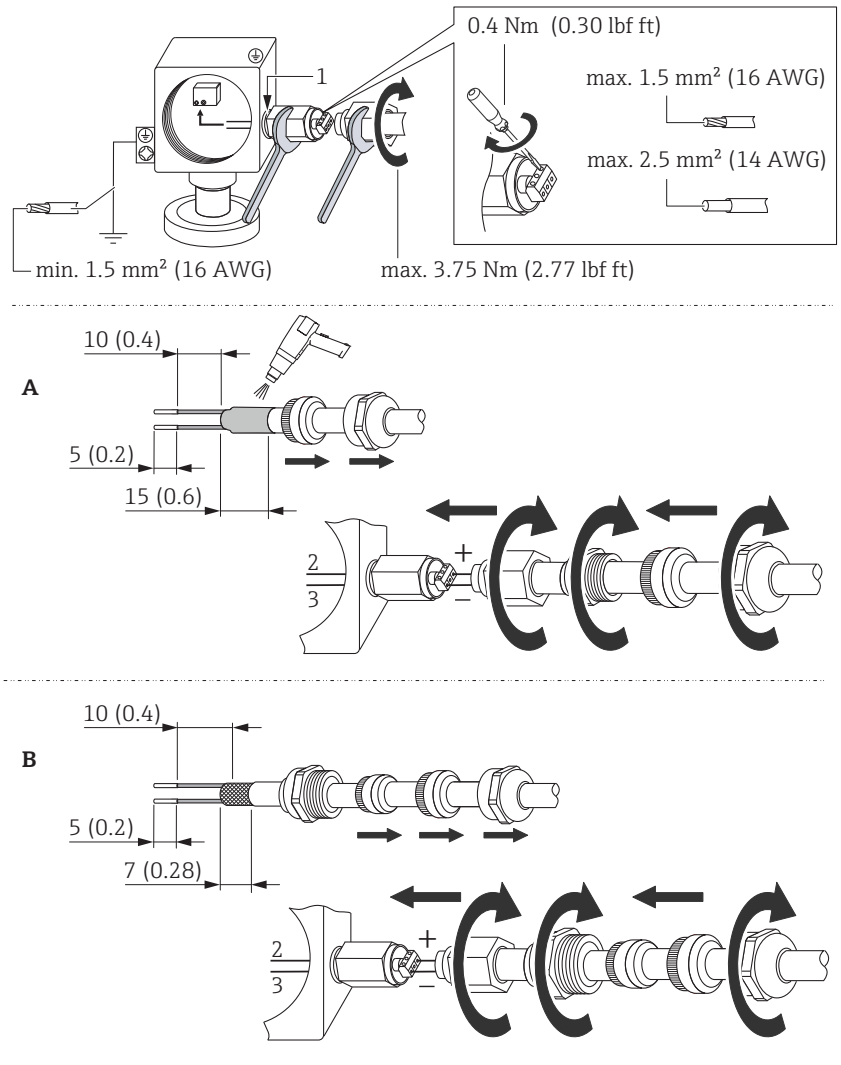

Fig. 26:

A	*Without shield grounding*
B	*With shield grounding*
1	*See NOTICE below*
2	*Red*
3	*Black*

Engineering unit mm (in)

NOTICE

Screw connection glued at factory!

Damage to the device and/or surge arrester!

- When releasing/tightening the union nut use a wrench to hold the screw steady so it does not turn.

5.4 Post-connection check

Perform the following checks after completing electrical installation of the device:
- Does the supply voltage match the specifications on the nameplate?
- Is the device properly connected?
- Are all screws firmly tightened?
- Are the housing covers screwed down tight?

As soon as voltage is applied to the device, the green LED on the electronic insert lights up for a few seconds or the connected local display lights up.

6 Operation

6.1 Operating options

6.1.1 Operation without operating menu

Operating options	Explanation	Graphic illustration	Description
Local operation without device display	The device is operated using the operating keys and DIP switches on the electronic insert.	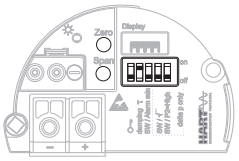	→ 46

6.1.2 Operation with operating menu

Operation with an operating menu is based on an operation concept with "user roles" → 48.

Operating options	Explanation	Graphic illustration	Description
Local operation with device display	The device is operated using the operating keys on the device display.	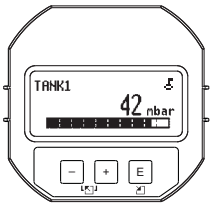	→ 50
Remote operation via HART handheld terminal	The device is operated using the HART handheld terminal (e.g. SFX100).		→ 54
Remote operation via FieldCare	The device is operated using the FieldCare operating tool.	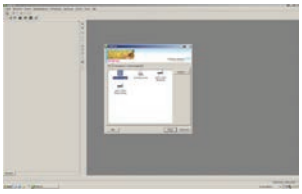	→ 54

6.2 Operation without operating menu

6.2.1 Position of operating elements

The operating keys and DIP switches are located on the electronic insert in the device.

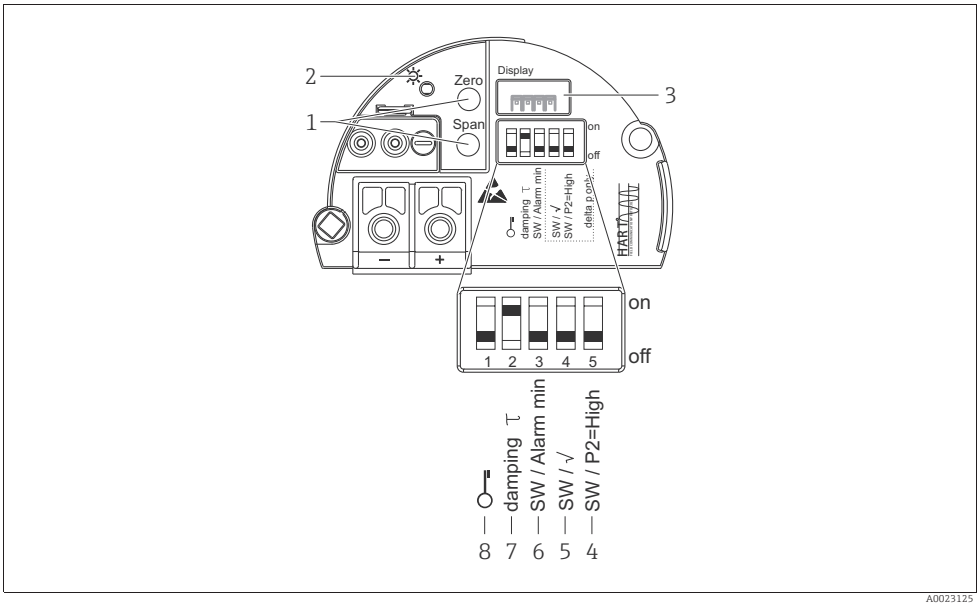

Fig. 27: HART electronic insert

1 Operating keys for lower range value (zero) and upper range value (span)
2 Green LED to indicate successful operation
3 Slot for optional local display
4+5 DIP switch only for Deltabar M
Switch 5: "SW/Square root"; used to control the output characteristics
Switch 4: "SW/P2-High"; used to determine the high-pressure side
6 DIP switch for alarm current SW / Alarm Min (3.6 mA)
7 DIP switch for switching damping on/off
8 DIP switch for locking/unlocking parameters relevant to the measured value

Function of the DIP switches

Switches	Symbol/ labeling	Switch position	
		"off"	"on"
1		The device is unlocked. Parameters relevant to the measured value can be modified.	The device is locked. Parameters relevant to the measured value cannot be modified.
2	damping τ	Damping is switched off. The output signal follows measured value changes without any delay.	Damping is switched on. The output signal follows measured value changes with the delay time τ.[1)]
3	SW/Alarm min	The alarm current is defined by the setting in the operating menu. ("Setup" -> "Extended setup" -> "Curr. output" -> "Output fail mode")	The alarm current is 3.6 mA regardless of the setting in the operating menu.
The following switches only for Deltabar M:			
4	SW/√	The output characteristics is defined by the setting in the operating menu. ▪ "Setup" -> "Measuring mode" ▪ "Setup" -> "Extended Setup" -> "Current output" -> "Linear/Sqroot"	The measuring mode is "flow" and the output characterisitcs is "Square root" regardless of the settings in the operating menu.

Switches	Symbol/ labeling	Switch position	
		"off"	"on"
5	SW/P2= High	The high-pressure side is defined by the setting in the operating menu. ("Setup" -> "High Press. Side")	The high-pressure side is allocated to the P2 pressure connection regardless of the setting in the operating menu.

1) The value for the delay time can be configured via the operating menu ("Setup" -> "Damping"). Factory setting: τ = 2 s or as per order specifications.

Function of the operating elements

Operating key(s)	Meaning
"Zero" pressed for at least 3 seconds	**Get LRV** ▪ **"Pressure" measuring mode** The pressure present is accepted as the lower range value (LRV). ▪ **"Level" measuring mode, "In pressure" level selection, "Wet" calibration mode** The pressure present is assigned to the lower level value ("Empty calibration"). No function is assigned to the key if level selection = "In height" and/or calibration mode = "Dry" ▪ **"Flow" measuring mode** There is no function allocated to the "Zero" key.
"Span" pressed for at least 3 seconds	**Get URV** ▪ **"Pressure" measuring mode** The pressure present is accepted as the upper range value (URV). ▪ **"Level" measuring mode, "In pressure" level selection, "Wet" calibration mode** The pressure present is assigned to the upper level value ("Full calibration"). No function is assigned to the key if level selection = "In height" and/or calibration mode = "Dry" ▪ **"Flow" measuring mode** The pressure present is accepted as the maximum pressure ("Max. pressure flow") and allocated to the maximum flow ("max. flow").
"Zero" and **"Span"** pressed simultaneously for at least 3 seconds	**Position adjustment** The sensor characteristic curve is shifted such that the pressure present becomes the zero value.
"Zero" and **"Span"** pressed simultaneously for at least 12 seconds	**Reset** All parameters are reset to the order configuration.

6.2.2 Locking/unlocking operation

Once you have entered all the parameters, you can lock your entries against unauthorized and undesired access.

If operation is locked by means of the DIP switch, you can only unlock operation again by means of the DIP switch. If operation is locked by means of the operating menu, you can only unlock operation again using the operating menu.

Locking/unlocking via DIP switches

DIP switch 1 on the electronic insert is used to lock/unlock operation.
→ 46, "Function of the DIP switches".

6.3 Operation with an operating menu

6.3.1 Operation concept

The operation concept makes a distinction between the following user roles:

User role	Meaning
Operator	Operators are responsible for the devices during normal "operation". This is usually limited to reading process values either directly at the device or in a control room. If the work with the devices extends beyond value read-off tasks, the tasks involve simple, application-specific functions that are used in operation. Should an error occur, these users simple forward the information on the errors but do not intervene themselves.
Service engineer/ technician	Service engineers usually work with the devices in the phases following device commissioning. They are primarily involved in maintenance and troubleshooting activities for which simple settings have to be made at the device. Technicians work with the devices over the entire life cycle of the product. Thus, commissioning and advanced settings and configurations are some of the tasks they have to carry out.
Expert	Experts work with the devices over the entire product life cycle, but their device requirements are often extremely high. Individual parameters/functions from the overall functionality of the devices are required for this purpose time and again. In addition to technical, process-oriented tasks, experts can also perform administrative tasks (e.g. user administration). "Experts" can avail of the entire parameter set.

6.3.2 Structure of the operating menu

User role	Submenu	Meaning/use
Operator	Language	Only consists of the "Language" parameter (000) where the operating language for the device is specified. The language can always be changed even if the device is locked.
Operator	Display/operat.	Contains parameters that are needed to configure the measured value display (selecting the values displayed, display format, display contrast, etc.). With this submenu, users can change the measured value display without affecting the actual measurement.
Service engineer/ technician	Setup	Contains all the parameters that are needed to commission measuring operations. This submenu has the following structure: ▪ **Standard setup parameters** A wide range of parameters, which can be used to configure a typical application, is available at the start. The measuring mode selected determines which parameters are available. After making settings for all these parameters, the measuring operation should be completely configured in the majority of cases. ▪ **"Extended setup" submenu** The "Setup" submenu contains additional parameters for more in-depth configuration of the measurement operation to convert the measured value and to scale the output signal. This menu is split into additional submenus depending on the measuring mode selected.

User role	Submenu	Meaning/use
Service engineer/ technician	Diagnosis	Contains all the parameters that are needed to detect and analyze operating errors. This submenu has the following structure: ▪ **Diagnostic list** Contains up to 10 error messages currently pending. ▪ **Event logbook** Contains the last 10 error messages (no longer pending). ▪ **Instrument info** Contains information on the device identification. ▪ **Measured values** Contains all the current measured values ▪ **Simulation** Is used to simulate pressure, level, flow, current and alarm/warning. ▪ **Reset**
Expert	Expert	Contains all the parameters of the device (including those in one of the submenus). The "Expert" submenu is structured by the function blocks of the device. It thus contains the following submenus: ▪ **System** Contains all the device parameters that neither affect measurement nor integration into a distributed control system. ▪ **Measurement** Contains all the parameters for configuring the measurement. ▪ **Output** Contains all the parameters for configuring the current output. ▪ **Communication** Contains all the parameters for configuring the HART interface. ▪ **Application** Contains all the parameters for configuring the functions that go beyond the actual measurement (e.g. totalizer). ▪ **Diagnosis** Contains all the parameters that are needed to detect and analyze operating errors.



For an overview of the entire operating menu: → 108 ff.

Direct access to parameters

The parameters can only be accessed directly via the "Expert" user role.

Parameter name	Description
Direct access (119) Entry Menu path: Expert → Direct access	Enter the direct access code to go directly to a parameter. **Options:** ▪ Enter the desired parameter code. **Factory setting:** 0 **Note:** For direct access, it is not necessary to enter leading zeros.

6.3.3 Operation with a device display (optional)

A 4-line liquid crystal display (LCD) is used for display and operation. The local display shows measured values, dialog texts, fault messages and notice messages.
For easy operation the display can be taken out of the housing (see figure steps 1 to 3). It is connected to the device through a 90 mm (3.54 in) cable.
The display of the device can be turned in 90° stages (see figure steps 4 to 6).
Depending on the orientation of the device, this makes it easy to operate the device and read the measured values.

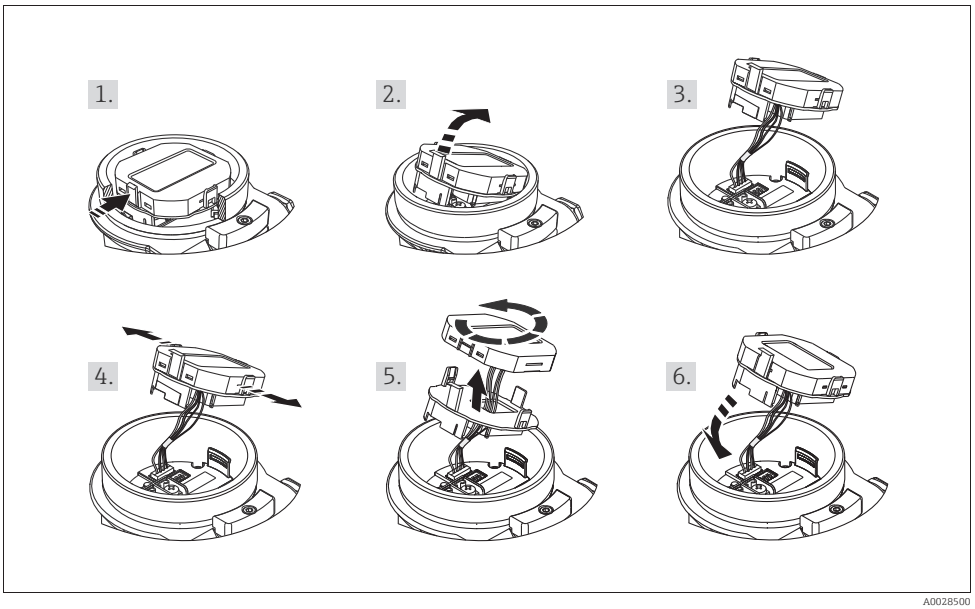

A0028500

Functions:
- 8-digit measured value display including sign and decimal point, bargraph for 4 to 20 mA HART as current display
- Three keys for operation
- Simple and complete menu guidance as parameters are split into several levels and groups
- Each parameter is given a 3-digit parameter code for easy navigation
- Possibility of configuring the display to suit individual requirements and preferences, such as language, alternating display, contrast setting, display of other measured values such as sensor temperature etc.
- Comprehensive diagnostic functions (fault and warning message etc.)

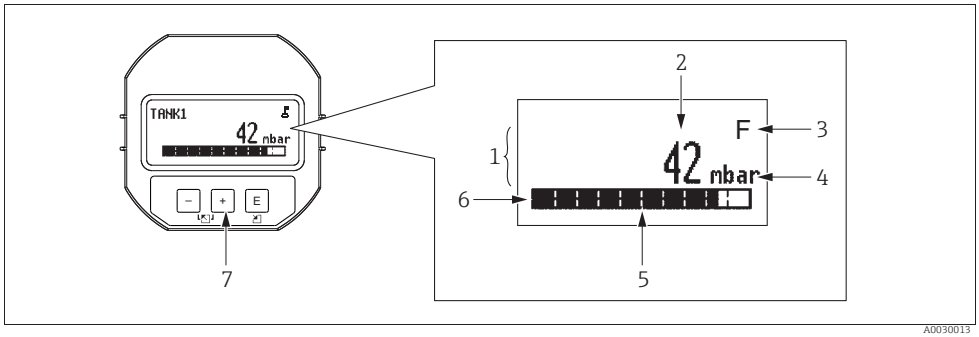

Fig. 28: Display

1 Main line
2 Value
3 Symbol
4 Unit
5 Bar graph
6 Information line
7 Operating keys

The following table illustrates the symbols that can appear on the local display. Four symbols can occur at one time.

Symbol	Meaning
	Lock symbol The operation of the device is locked. To unlock the device, → 55, Locking/ unlocking operation.
	Communication symbol Data transfer via communication
	Square root symbol Active measuring mode "Flow measurement" The root flow signal is used for the current output.
S	**Error message "Out of specification"** The device is being operated outside its technical specifications (e.g. during warmup or cleaning processes).
C	**Error message "Service mode"** The device is in the service mode (during a simulation, for example).
M	**Error message "Maintenance required"** Maintenance is required. The measured value remains valid.
F	**Error message "Failure detected"** An operating error has occurred. The measured value is no longer valid.

Operating keys on the display and operating module

Operating key(s)	Meaning
+	– Navigate downwards in the picklist – Edit the numerical values and characters within a function
−	– Navigate upwards in the picklist – Edit the numerical values and characters within a function
E	– Confirm entry – Jump to the next item – Selection of a menu item and activation of the editing mode
+ and E	Contrast setting of local display: darker
− and E	Contrast setting of local display: brighter
+ and −	ESC functions: – Exit the edit mode for a parameter without saving the changed value. – You are in a menu at a selection level. Each time you press the keys simultaneously, you go up a level in the menu.

Operating example: Parameters with a picklist

Example: selecting "Deutsch" as the language of the menu.

	Language 000	Operation
1	✔ English Deutsch	"English" is set as the menu language (default value). A ✔ in front of the menu text indicates the active option.
2	Deutsch ✔ English	Select "Deutsch" with ⊞ or ⊟.
3	✔ Deutsch English	1. Confirm your choice with Ⓔ. A ✔ in front of the menu text indicates the active option ("Deutsch" is now selected as the menu language). 2. Exit the edit mode for the parameter with Ⓔ.

Operating example: User-definable parameters

Example: setting "Set URV" parameter from 100 mbar (1.5 psi) to 50 mbar (0.75 psi).

	Set URV 014	Operation
1	1 0 0 . 0 0 0 0 mbar	The local display shows the parameter to be changed. The value highlighted in black can be changed. The "mbar" unit is specified in another parameter and cannot be modified here.
2	**1** 0 0 . 0 0 0 0 mbar	1. Press ⊞ or ⊟ to get to the editing mode. 2. The first digit is highlighted in black.
3	**5** 0 0 . 0 0 0 0 mbar	1. Use ⊞ to change "1" to "5". 2. Confirm "5" with Ⓔ. The cursor jumps to the next position (highlighted in black). 3. Confirm "0" with Ⓔ (second position).
4	5 0 **0** . 0 0 0 0 mbar	The third position is highlighted in black and can now be edited.
5	5 0 ↵ . 0 0 0 0 mbar	1. Switch to the "↵" symbol with the ⊟ key. 2. Use Ⓔ to save the new value and exit the editing mode. → See next graphic.
6	5 0 . 0 0 0 0 mbar	The new value for the upper range value is 50.0 mbar (0.75 psi). – You exit the edit mode for the parameter with Ⓔ. – You can get back to the editing mode with ⊞ or ⊟.

Operating example: Accepting the pressure present

Example: setting position adjustment

	Pos. zero adjust 007	Operation
1	✔ Abort Confirm	The pressure for position adjustment is present at the device.
2	Confirm ✔ Abort	Use ⊞ or ⊟ to switch to the "Confirm" option. The active option is highlighted in black.
3	Compensation accepted!	Accept the pressure present as position adjustment with the Ⓔ key. The device confirms the adjustment and goes back to the "Pos. zero adjust" parameter.
4	✔ Abort Confirm	Exit the edit mode for the parameter with Ⓔ.

6.3.4 Operation via SFX100

Compact, flexible and robust industry handheld terminal for remote parametrization and measured value inspection via the HART current output (4 to 20mA).
For details refer to Operating Instructions BA00060S/04/EN.

6.3.5 Operation via FieldCare

FieldCare is an Endress+Hauser asset management tool based on FDT technology. With FieldCare, you can configure all Endress+Hauser devices as well as devices from other manufacturers that support the FDT standard. Hardware and software requirements you can find on the internet: www.endress.com → select your country → Search: FieldCare → FieldCare → Technical Data.

FieldCare supports the following functions:
- Configuration of transmitters in online/offline mode
- Loading and saving device data (upload/download)
- Documentation of the measuring point
- Offline parametrization of transmitters

Connection options:
- HART via Commubox FXA195 and the USB port of a computer
- HART via Fieldgate FXA520



- → 41, Section 5.2.7 "Connecting Commubox FXA195".
- In "Level expert" measuring mode, the configuration data which were generated by FDT upload cannot be saved back again (FDT download); they are used solely to document the configuration.
- Further information on FieldCare can be found on the Internet (http://www.endress.com, Download → Search for: FieldCare).
- As not all internal device dependencies can be mapped in offline operation, the consistency of the parameters must be checked before the parameters are transmitted to the device.

6.3.6 Locking/unlocking operation

Once you have entered all the parameters, you can lock your entries against unauthorized and undesired access.
Locked operation is indicated as follows:
- By the symbol on the onsite display
- The parameters are grayed out in FieldCare and the HART handheld terminal, which means they cannot be edited. Indicated in the corresponding "Locking" parameter.

Parameters which refer to how the display appears, e.g. "Language" and "Display contrast", can still be altered.

If operation is locked by means of the DIP switch, you can only unlock operation again by means of the DIP switch. If operation is locked by means of the operating menu, you can only unlock operation again using the operating menu.

The "Operator code" parameter is used to lock and unlock the device.

Parameter name	Description
Operator code (021) Entry Menu path: Setup → Extended setup → Operator code	Use this function to enter a code to lock or unlock operation. **User input:** ▪ To lock: Enter a number ≠ the release code (value range: 1 to 9999). ▪ To unlock: Enter the release code. The release code is "0" in the order configuration. Another release code can be defined in the "Code definition" parameter. If the user has forgotten the release code, the release code can be visible by entering the number "5864". **Factory setting:** 0

The release code is defined in the "Code definition" parameter.

Parameter name	Description
Code definition (023) Entry Menu path: Setup → Extended setup → Code definition	Use this function to enter a release code with which the device can be unlocked. **User input:** ▪ A number between 0 and 999 **Factory setting:** 0

6.3.7 Resetting to factory settings (reset)

By entering a certain code, you can completely, or partially, reset the entries for the parameters to the factory settings[1]. Enter the code by means of the "Enter reset code" parameter (menu path: "Diagnosis" → "Reset" → "Enter reset code").
There are various reset codes for the device. The following table illustrates which parameters are reset by the particular reset codes. Operation must be unlocked to reset parameters (→ 55).

Any customer-specific configuration carried out at the factory is not affected by a reset (customer-specific configuration remains). If you want to change the customer-specific configuration carried out at the factory, please contact Endress+Hauser Service.
As no separate service level is provided, the order code and serial number may be changed without a specific unblocking code (e.g. after replacing the electronics).

Reset code[1]	Description and effect
62	**PowerUp reset (warm start)** ▶ The device is restarted. ▶ Data are read back anew from the EEPROM (processor is initialized again). ▶ Any simulation which may be running is ended.
333	**User reset** ▶ This code resets all the parameters apart from: – Device tag (022) – Linearization table – Operating hours (162) – Event logbook – Current trim 4mA (135) – Current trim 20mA (136) – Lo trim sensor (131) – Hi trim sensor (132) ▶ Any simulation which may be running is ended. ▶ The device is restarted.
7864	**Total reset** ▶ This code resets all the parameters apart from: – Operating hours (162) – Event logbook – Lo trim sensor (131) – Hi trim sensor (132) ▶ Any simulation which may be running is ended. ▶ The device is restarted.

1) To be entered in "Diagnosis" → "Reset" → "Enter reset code" (124)

After a "Total reset" in FieldCare you have to press the "refresh" button in order to ensure that the measuring units are also reset.

1) The default value for the individual parameters is indicated in the parameter description (→ 116 ff)

7 Integrating transmitter using HART® protocol

Version data for the device

Firmware version	01.00.zz	▪ On the title page of the Operating instructions ▪ On nameplate ▪ **Firmware Version** parameter Diagnostics → Instrument info → Firmware-Version
Manufacturer ID	17 (0x11)	Parameter **Manufacturer Id** Diagnostics → Instrument info → Manufacturer ID
Device type ID	Cerabar M: 25 (0x19) Deltabar M: 33 (0x21) Deltapilot M: 35 (0x23)	Parameter **Device ID** Diagnostics → Instrument info → Device ID
HART protocol revision	6.0	---
Device revision	1	▪ On transmitter nameplate ▪ **Device revision** parameter Diagnostics → Instrument info → Device revision

The suitable device description file (DD) for the individual operating tools is listed in the table below, along with information on where the file can be acquired.

Operating tools

Operating tool	Reference sources for device descriptions (DD and DTM)
FieldCare	▪ www.endress.com → Download-Area ▪ CD-ROM (contact Endress+Hauser) ▪ DVD (contact Endress+Hauser)
AMS Device Manager (Emerson Process Management)	www.endress.com → Download-Area
SIMATIC PDM (Siemens)	www.endress.com → Download-Area
Field Communicator 375, 475 (Emerson Process Management)	Use update function of handheld terminal

7.1 HART process variables and measured values

The following numbers are assigned to the process variables in the factory:

Process variable	Pressure	Flow (Deltabar only)		Level	
		Linear	Square root	Linear	Table active
First process variable (Primary Variable)	0 - Measured pressure	0 - Measured pressure	5 - Flow	8 - Level before linearization	9- Tank content
Second process variable (Secondary Variable)	2 - Druck n. Lagekor	5 - Flow	0 - Measured pressure	0 - Measured pressure	8 - Level before linearization
Third process variable (Tertiary Variable)	3 - Sensor pressure	6 - Totalizer 1	6 - Totalizer 1	2 - Corrected press.	0 - Measured pressure
Fourth process variable (Quaternary Variable)	Deltabar M: 251 - None Apart from Deltabar M: Sensor temp.				

The assignment of the device variables to the process variable is displayed in the **Expert → Communication → HART output** menu.
The assignment of the device variables to the process variable can be changed using HART command 51. An overview of the possible device variables can be found in the following section.

7.2 Device variables and measured values

The following measured values are assigned to the individual device variables:

Device-Variable Code	Device variable	Measured value	Operating mode	Devices
0	PRESSURE_1_FINAL_VALUE	Meas. pressure	all	all
1	PRESSURE_1_AFTER_DAMPING	Pressure af. damp	all	all
2	PRESSURE_1_AFTER_CALIBRATION	Corrected press.	all	all
3	PRESSURE_1_AFTER_SENSOR	Sensor pressure	all	all
4	MEASURED_TEMPERATURE_1	Sensor temp.	all	Not Deltabar M
5	FLOW_AFTER_SUPPRESSION	Flow	Flow only	Not Deltabar M
6	TOTALIZER_1_FLOAT	Totalizer 1	Flow only	Not Deltabar M
7	TOTALIZER_2_FLOAT	Totalizer 2	Flow only	Not Deltabar M
8	MEASURED_LEVEL_AFTER_ SIMULATION	Level before Lin.	Level only	all [1]
9	MEASURED_TANK_CONTENT_AFTER_ SIMULATION	Tank content	Level only	all [1]
10	CORRECTED_MEASUREMENT_ DENSITY	Process density	Level only	all [1]
11	MEASURED_TEMPERATURE_3	Electronics Temp	all	Not Deltabar M
12	HART_INPUT_VALUE	HART Input Value	Not selectable as output	
251	None (no device variable is mapped)		all (but only allowed for Quaternary)	

1) Cerabar M: with Level measurement option

The device variables can be queried from a HART® master using HART® command 9 or 33.

8 Commissioning

The device is configured at the factory for the Pressure measuring mode (Cerabar, Deltabar) or Level measuring mode (Deltapilot). The measuring range and the unit in which the measured value is transmitted correspond to the specifications on the nameplate.

⚠ WARNING

Exceeding the maximum allowable working pressure!

Risk of injury due to bursting of parts! Warning messages are generated if pressure is too high.

- If a pressure smaller than the minimum permitted pressure or greater than the maximum permitted pressure is present at the device, the following messages are output in succession (depending on the setting in the "Alarm behavior" (050) parameter):
  "S140 Working range P" or "F140 Working range P"
  "S841 Sensor range" or "F841 Sensor range"
  "S971 Adjustment"
  Use the device only within the sensor range limits.

NOTICE

Shortfall of the allowable working pressure!

Output of messages if pressure is too low.

- If a pressure smaller than the minimum permitted pressure or greater than the maximum permitted pressure is present at the device, the following messages are output in succession (depending on the setting in the "Alarm behavior" (050) parameter):
  "S140 Working range P" or "F140 Working range P"
  "S841 Sensor range" or "F841 Sensor range"
  "S971 Adjustment"
  Use the device only within the sensor range limits.

8.1 Function check

Carry out a post-installation and a post-connection check as per the checklist before commissioning the device.

- "Post-installation check" checklist → Chap. 4.10
- "Post-connection check" checklist → Chap. 5.4

8.2 Commissioning without an operating menu

8.2.1 Pressure measuring mode

If no local display is connected, the following functions are possible by means of the keys on the electronic insert:
- Position adjustment (zero point correction)
- Setting lower range value and upper range value
- Device reset → 47

- Operation must be unlocked. → 55, "Locking/unlocking operation"
- The device is configured for the "Pressure" measuring mode as standard. You can switch measuring modes by means of the "Measuring mode" parameter. → 63, "Measuring mode selection"
- The pressure applied must be within the nominal pressure limits of the sensor. See information on the nameplate.

WARNING

Changing the measuring mode affects the span (URV)!

This situation can result in product overflow.

▶ If the measuring mode is changed, the span setting (URV) must be verified and, if necessary, reconfigured!

Carrying out position adjustment.[1]	
Pressure is present at device.	
↓	
Press the "Zero" and "Span" keys simultaneously for at least 3 s.	
↓	
Does the LED on the electronic insert light up briefly?	
Yes	No
↓	↓
Applied pressure for position adjustment has been accepted.	Applied pressure for position adjustment has not been accepted. Observe the input limits.

Setting lower range value.	
Desired pressure for lower range value is present at device.	
↓	
Press the "Zero" key for at least 3 s.	
↓	
Does the LED on the electronic insert light up briefly?	
Yes	No
↓	↓
Applied pressure for lower range value has been accepted.	Applied pressure for lower range value has not been accepted. Observe the input limits.

Setting upper range value.	
Desired pressure for upper range value is present at device.	
↓	
Press the "Span" key for at least 3 s.	
↓	
Does the LED on the electronic insert light up briefly?	
Yes	No
↓	↓
Applied pressure for upper range value has been accepted.	Applied pressure for upper range value has not been accepted. Observe the input limits.

1) Observe warning on commissioning (→ 59)

8.2.2 Level measuring mode

The following functions are possible by means of the keys on the electronic insert:
- Position adjustment (zero point correction)
- Setting the lower and upper pressure value and assigning to the lower and upper level value
- Device reset → 47

- The "Zero" and "Span" keys only have a function with the following setting:
  – "Level selection" = "In pressure", "Calibration mode" = "Wet"
  The keys have no function in other settings.
- The device is configured for the "Pressure" measuring mode as standard. You can switch measuring modes by means of the "Measuring mode" parameter. → 63, "Measuring mode selection"
  The following parameters are set to the following values at the factory:
  – "Level selection" = "In pressure"
  – "Calibration mode": wet
  – "Unit before lin": %
  – "Empty calib.": 0.0
  – "Full calib.": 100.0
  – "Set LRV": 0.0 (corresponds to 4 mA value)
  – "Set URV": 100.0 (corresponds to 20 mA value)
- Operation must be unlocked. → 55, "Locking/unlocking operation".
- The pressure applied must be within the nominal pressure limits of the sensor. See information on the nameplate.

⚠ WARNING

Changing the measuring mode affects the span (URV)!

This situation can result in product overflow.

▶ If the measuring mode is changed, the span setting (URV) must be verified and, if necessary, reconfigured!

Carrying out position adjustment.[1]	
Pressure is present at device.	
↓	
Press the "Zero" and "Span" keys simultaneously for at least 3 s.	
↓	
Does the LED on the electronic insert light up briefly?	
Yes	No
↓	↓
Applied pressure for position adjustment has been accepted.	Applied pressure for position adjustment has not been accepted. Observe the input limits.

Setting lower pressure value.	
Desired pressure for lower pressure value ("empty pressure") is present at device.	
↓	
Press the "Zero" key for at least 3 s.	
↓	
Does the LED on the electronic insert light up briefly?	
Yes	No
↓	↓
The pressure present was saved as the lower pressure value ("empty pressure") and assigned to the lower level value ("empty calibration").	The pressure present was not saved as the lower pressure value. Observe the input limits.

Setting upper pressure value.	
Desired pressure for upper pressure value ("full pressure") is present at device.	
↓	
Press the "Span" key for at least 3 s.	
↓	
Does the LED on the electronic insert light up briefly?	
Yes	No
↓	↓
The pressure present was saved as the upper pressure value ("full pressure") and assigned to the upper level value ("full calibration").	The pressure present was not saved as the upper pressure value. Observe the input limits.

1) Observe warning on commissioning (→ 59)

8.2.3 Flow measuring mode (Deltabar M only)

The following functions are possible by means of the keys on the electronic insert:
- Position adjustment (zero point correction)
- Set the maximum pressure value and assign it to the maximum flow value
- Device reset → 47

- The operation must be unlocked. → 47, "Locking/unlocking operation".
- The device is configured for the "Pressure" measuring mode as standard. You can switch measuring modes by means of the "Measuring mode" parameter. → 63, "Selecting the language, measuring mode and pressure unit".
- DIP switch 4 (SW/√) on the electronics insert can be used to switch to the "Flow" measuring mode. In this case, the "Measuring mode" parameter is adjusted automatically.
- The "Zero"- key does not have any function in the "Flow" measuring mode.
- The pressure applied must be within the nominal pressure limits of the sensor. See information on the nameplate.

⚠ WARNING

Changing the measuring mode affects the span (URV)!

This situation can result in product overflow.

▶ If the measuring mode is changed, the span setting (URV) must be verified and, if necessary, reconfigured!

Carry out position adjustment.[1)]	
Pressure is present at device.	
↓	
Press the "Zero" and "Span" keys simultaneously for at least 3 s.	
↓	
Does the LED on the electronic insert light up briefly?	
Yes	No
↓	↓
Applied pressure for position adjustment has been accepted.	Applied pressure for position adjustment has not been accepted. Observe the input limits.

Setting maximum pressure value.	
Desired pressure for the maximum pressure value ("Max. Press. Flow") is present at device.	
↓	
Press the "Span" key for at least 3 s.	
↓	
Does the LED on the electronic insert light up briefly?	
Yes	No
↓	↓
The pressure present was saved as the maximum pressure value ("Max. Press. Flow") and assigned to the maximum flow value ("Max. Flow").	The pressure present was not saved as the maximum pressure value. Observe the input limits.

1) Observe warning concerning the commissioning (page → 59).

8.3 Commissioning with an operating menu

Commissioning comprises the following steps:
1. Function check (→ 59)
2. Selecting the language, measuring mode and pressure unit (→ 63)
3. Position adjustment (→ 64)
4. Configuring measurement:
   - Pressure measurement (→ 79 ff)
   - Level measurement (→ 65 ff)
   - Flow measurement (→ 65 ff)

8.3.1 Selecting the language, measuring mode and pressure unit

Language selection

Parameter name	Description
Language (000) Selection Menu path: Main menu → Language	Select the menu language for the local display. **Options:** ▪ English ▪ Another language (as selected when ordering the device) ▪ Possibly a third language (language of the manufacturing plant) **Factory setting**: English

Measuring mode selection

Parameter name	Description
Measuring mode (005) Selection Menu path: Setup → Measuring mode	Select the measuring mode. The operating menu is structured differently depending on the measuring mode selected. **⚠ WARNING** **Changing the measuring mode affects the span (URV)!** This situation can result in product overflow. ▶ If the measuring mode is changed, the span setting (URV) must be verified and, if necessary, reconfigured! **Options:** ▪ Pressure ▪ Level ▪ Flow **Factory setting:** Pressure

Pressure unit selection

Parameter name	Description
Press. eng. unit (125) Selection Menu path: Setup → Press. eng. unit	Select the pressure unit. If a new pressure unit is selected, all pressure-specific parameters are converted and displayed with the new unit. **Options:** ▪ mbar, bar ▪ mmH2O, mH2O, inH2O ▪ ftH2O ▪ Pa, kPa, MPa ▪ psi ▪ mmHg, inHg ▪ kgf/cm^2 **Factory setting:** mbar or bar depending on the sensor nominal measuring range, or as per order specifications

8.4 Position zero adjustment

The pressure resulting from the orientation of the device can be corrected here.

Parameter name	Description
Corrected press. (172) Display Menu path: Setup → Corrected press.	Displays the measured pressure after sensor trim and position adjustment. If this value is not equal to "0", it can be corrected to "0" by the position adjustment.
Pos. zero adjust (007) (Deltabar M and gauge pressure sensor) Selection Menu path: Setup → Pos. zero adjust	Position zero adjustment – the pressure difference between zero (set point) and the measured pressure need not be known. **Example:** – Measured value = 2.2 mbar (0.033 psi) – You correct the measured value via the "Pos. zero adjust" parameter with the "Confirm" option. This means that you assign the value 0.0 to the pressure present. – Measured value (after pos. zero adjust) = 0.0 mbar – The current value is also corrected. **Options** ▪ Confirm ▪ Abort **Factory setting:** Abort
Calib. offset (192) / (008) (absolute pressure sensor) Entry	Position adjustment – the pressure difference between set point and the measured pressure must be known. **Example:** – Measured value = 982.2 mbar (14.73 psi) – You correct the measured value with the value entered (e.g. 2.2 mbar (0.033 psi)) via the "Calib. offset" parameter. This means that you are assigning the value 980.0 (14.7 psi) to the pressure present. – Measured value (after calib. offset) = 980.0 mbar (14.7 psi) – The current value is also corrected. **Factory setting:** 0.0

8.5 Level measurement (Cerabar M and Deltapilot M)

8.5.1 Information on level measurement

- The limit values are not checked, i.e. the values entered must be appropriate for the sensor and the measuring task for the device to be able to measure correctly.
- Customer-specific units are not possible.
- There is no unit conversion.
- The values entered for "Empty calib./Full calib.", "Empty pressure/Full pressure", "Empty height/Full height" and "Set LRV/Set URV" must be at least 1% apart. The value will be rejected, and a warning message displayed, if the values are too close together.

You have a choice of two methods for calculating the level: "In pressure" and "In height". The table in the "Overview of level measurement" section that follows provides you with an overview of these two measuring tasks.

8.5.2 Overview of level measurement

Measuring task	Level selection	Measured variable selection	Description	Measured value display
Calibration is performed by entering two pressure-level value pairs.	"In pressure"	Via the "Unit before lin" parameter: %, level, volume or mass units.	– Calibration with reference pressure (wet calibration), see → 66 – Calibration without reference pressure (dry calibration), see → 68	The measured value display and the "Level before lin" parameter display the measured value.
Calibration is performed by entering the density and two height-level value pairs.	"In height"		– Calibration with reference pressure (wet calibration), see → 70 – Calibration without reference pressure (dry calibration), see → 72	

8.5.3 "In pressure" level selection Calibration with reference pressure (wet calibration)

Example:
In this example, the level in a tank should be measured in "m". The maximum level is 3 m (9.8 ft). The pressure range is set to 0 to 300 mbar (4.5 psi).

Prerequisite:
- The measured variable is in direct proportion to the pressure.
- The tank can be filled and emptied.

The values entered for "Empty calib./Full calib." and" Set LRV/Set URV" and the pressures present at the device must be at least 1% apart. The value will be rejected, and a warning message displayed, if the values are too close together. Further limit values are not checked, i.e. the values entered must be appropriate for the sensor and the measuring task for the measuring device to be able to measure correctly.

	Description
1	Perform "position adjustment".→ 64
2	Select the "Level" measuring mode via the "**Measuring mode (005)**" parameter. Menu path: Setup → Measuring mode
3	Select the "In pressure" level mode via the "Level selection" parameter. Menu path: Setup → Extended setup → Level → Level selection.
4	Select a pressure unit via the "Press eng. unit" parameter, here "mbar" for example. Menu path: Setup → Press. eng. unit

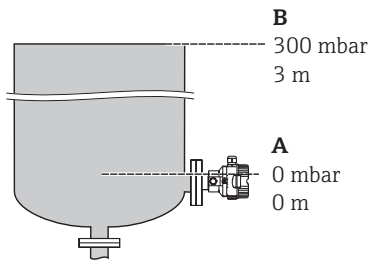

Fig. 29: Calibration with reference pressure – wet calibration

A See Table, Step 8.
B See Table, Step 9.

	Description
5	Select a level unit via the "Unit before lin" parameter, here "m" for example. Menu path: Setup → Extended setup → Level → Unit before lin
6	Select the "Wet" option via the "Calibration mode" parameter. Menu path: Setup → Extended setup → Level → Calibration mode
7	If calibration is performed with a medium other than the process medium, enter the density of the calibration medium in the "Adjust density" parameter. Menu path: Setup → Extended setup → Level → Adjust density
8	The pressure for the lower calibration point is present at the device, here 0 mbar for example.
	Select the "Empty calib." parameter. Menu path: Setup → Extended setup → Level → Empty calib.
	Enter the level value, here 0 m for example. The pressure value present is assigned to the lower level value by confirming the value.
9	The pressure for the upper calibration point is present at the device, here 300 mbar (4.5 psi) for example.
	Select the "Full calib." parameter. Menu path: Setup → Extended setup → Level → Full calib.
	Enter the level value, here 3 m (9.8 ft) for example. The pressure value present is assigned to the upper level value by confirming the value.
10	Set the level value for the lower current value (4 mA) by means of "Set LRV". Menu path: Setup → Extended setup → Current output → Set LRV
11	Set the level value for the upper current value (20 mA) by means of "Set URV". Menu path: Setup → Extended setup → Current output → Set URV
12	If calibration was performed with a medium other than the process medium, specify the density of the process medium in the "Process density" parameter. Menu path: Setup → Extended setup → Level → Process density
13	Result: The measuring range is set for 0 to 3 m (9.8 ft).

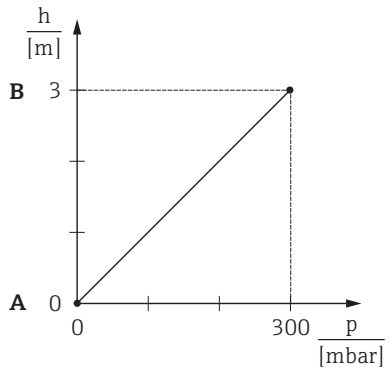

A0017658

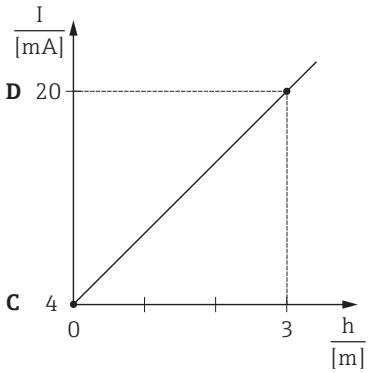

A0031063

Fig. 30: Calibration with reference pressure – wet calibration

A See Table, Step 8.
B See Table, Step 9.
C See Table, Step 10.
D See Table, Step 11.

The measured variables %, level, volume and mass are available for this level mode. See → 123 "**Unit before lin (025)**".

8.5.4 "In pressure" level selection Calibration without reference pressure (dry calibration)

Example:
In this example, the volume in a tank should be measured in liters. The maximum volume of 1000 liters (264 US gal) corresponds to a pressure of 450 mbar (6.75 psi). The minimum volume of 0 liters corresponds to a pressure of 50 mbar (0.75 psi) since the device is mounted below the start of the level measuring range.

Prerequisite:
- The measured variable is in direct proportion to the pressure.
- This is a theoretical calibration i.e. the pressure and volume values for the lower and upper calibration point must be known.



- The values entered for "Empty calib./Full calib.", "Empty pressure/Full pressure" and "Set LRV/Set URV" must be at least 1% apart. The value will be rejected, and a warning message displayed, if the values are too close together. Further limit values are not checked, i.e. the values entered must be appropriate for the sensor and the measuring task for the measuring device to be able to measure correctly.
- Due to the orientation of the device, there may be pressure shifts in the measured value, i.e. when the container is empty or partly filled, the measured value is not zero. For information on how to perform position adjustment, see → 64, "Position zero adjustment".

	Description
1	Select the "Level" measuring mode via the "Measuring mode" parameter. Menu path: Setup → Measuring mode
2	Select the "In pressure" level mode via the "Level selection" parameter. Menu path: Setup → Extended setup → Level → Level selection
3	Select a pressure unit via the "Press eng. unit" parameter, here "mbar" for example. Menu path: Setup → Press. eng. unit
4	Select a level unit via the "Unit before lin" parameter, here "l" (liters) for example. Menu path: Setup → Extended setup → Level → Unit before lin

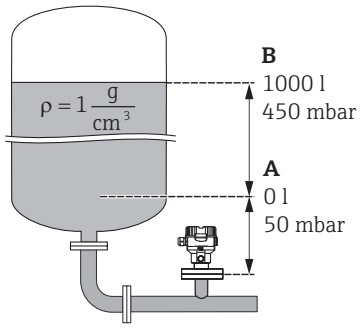

Fig. 31: Calibration without reference pressure – dry calibration

A See Table, Steps 6 and 7.
B See Table, Steps 8 and 9.

	Description
5	Select the "Dry" option via the "Calibration mode" parameter. Menu path: Setup → Extended setup → Level → Calibration mode
6	Enter the volume value for the lower calibration point via the "Empty calib." parameter, here 0 liters for example. Menu path: Setup → Extended setup → Level → Empty calib.
7	Enter the pressure value for the lower calibration point via the "Empty pressure" parameter, here 50 mbar (0.75 psi) for example. Menu path: Setup → Extended setup → Level → Empty pressure
8	Enter the volume value for the upper calibration point via the "Full calib." parameter, here 1000 liters (264 US gal) for example. Menu path: Setup → Extended setup → Level → Full calib.
9	Enter the pressure value for the upper calibration point via the "Full pressure" parameter, here 450 mbar (6,75 psi) for example. Menu path: Setup → Extended setup → Level → Full pressure
10	"Adjust density" contains the factory setting 1.0 but this value can be changed if required. The value pairs subsequently entered must correspond to this density. Menu path: Setup → Extended setup → Level → Adjust density
11	Set the volume value for the lower current value (4 mA) via the "Set LRV" parameter. Menu path: Setup → Extended setup → Current output → Set LRV
12	Set the volume value for the upper current value (20 mA) via the "Set URV" parameter. Menu path: Setup → Extended setup → Current output → Set URV
13	If calibration was performed with a medium other than the process medium, specify the density of the process medium in the "Process density" parameter. Menu path: Setup → Extended setup → Level → Process density
14	Result: The measuring range is set for 0 to 1000 l (264 US gal).

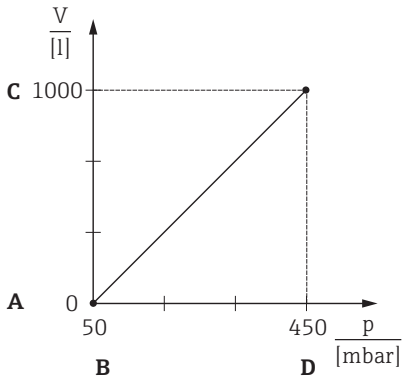

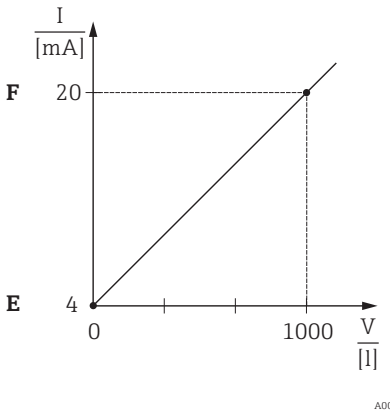

Fig. 32: Calibration with reference pressure – wet calibration

A See Table, Step 6.
B See Table, Step 7.
C See Table, Step 8.
D See Table, Step 9.
E See Table, Step 11.
F See Table, Step 12.

The measured variables %, level, volume and mass are available for this level mode. See → 123 "**Unit before lin (025)**".

8.5.5 "In height" level selection Calibration with reference pressure (wet calibration)

Example:
In this example, the volume in a tank should be measured in liters. The maximum volume of 1000 liters (264 US gal) corresponds to a level of 4.5 m (15 ft). The minimum volume of 0 liters corresponds to a level of 0.5 m (1.6 ft) since the device is mounted below the start of the level measuring range.
The density of the medium is 1 g/cm^3 (1 SGU).

Prerequisite:
- The measured variable is in direct proportion to the pressure.
- The tank can be filled and emptied.

The values entered for "Empty calib./Full calib.", "Set LRV/Set URV" and the pressures present at the device must be at least 1% apart. The value will be rejected, and a warning message displayed, if the values are too close together. Other limit values are not checked, i.e. the values entered must be appropriate for the sensor and the measuring task for the device to be able to measure correctly.

	Description
1	Perform position adjustment. See → 64.
2	Select the "Level" measuring mode via the "Measuring mode" parameter. Menu path: Setup → Measuring mode
3	Select the "In height" level mode via the "Level selection" parameter. Menu path: Setup → Extended setup → Level → Level selection
4	Select a pressure unit via the "Press eng. unit" parameter, here mbar for example. Menu path: Setup → Press. eng. unit
5	Select a level unit via the "Unit before lin" parameter, here "l" (liters) for example. Menu path: Setup → Extended setup → Level → Unit before lin

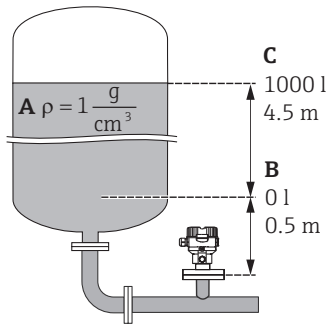

Fig. 33: Calibration with reference pressure – wet calibration

A See Table, Step 10.
B See Table, Step 8.
C See Table, Step 9.

	Description
6	Select a level unit via the "Height unit" parameter, here "m" for example. Menu path: Setup → Extended setup → Level → Height unit
7	Select the "Wet" option via the "Calibration mode" parameter. Menu path: Setup → Extended setup → Level → Calibration mode
8	The pressure for the lower calibration point is present at the device, here "50 mbar" (0.75 psi) for example.
	Enter the volume value for the lower calibration point via the "Empty calib." parameter, here 0 liters for example. (The pressure currently measured is displayed as the height, here 0.5 m (1.6 ft) for example.) Menu path: Setup → Extended setup → Level → Empty calib.
9	The pressure for the upper calibration point is present at the device, here "450 mbar" (6.75 psi) for example.
	Enter the volume value for the upper calibration point via the "Full calib." parameter, here "1000 liters" (264 US gal) for example. The pressure currently measured is displayed as the height, here "4.5 m" (15 ft) for example. Menu path: Setup → Extended setup → Level → Full calib.
8	If calibration is performed with a medium other than the process medium, enter the density of the calibration medium in the "Adjust density" parameter, here "1 g/cm³" (1 SGU) for example. Menu path: Setup → Extended setup → Level → Adjust density
11	Set the volume value for the lower current value (4 mA) via the "Set LRV" parameter. Menu path: Setup → Extended setup → Current output → Set LRV
12	Set the volume value for the upper current value (20 mA) via the "Set URV" parameter. Menu path: Setup → Extended setup → Current output → Set URV
13	If calibration was performed with a medium other than the process medium, specify the density of the process medium in the "Process density" parameter. Menu path: Setup → Extended setup → Level → Process density
14	Result: The measuring range is set for 0 to 1000 l (264 US gal).

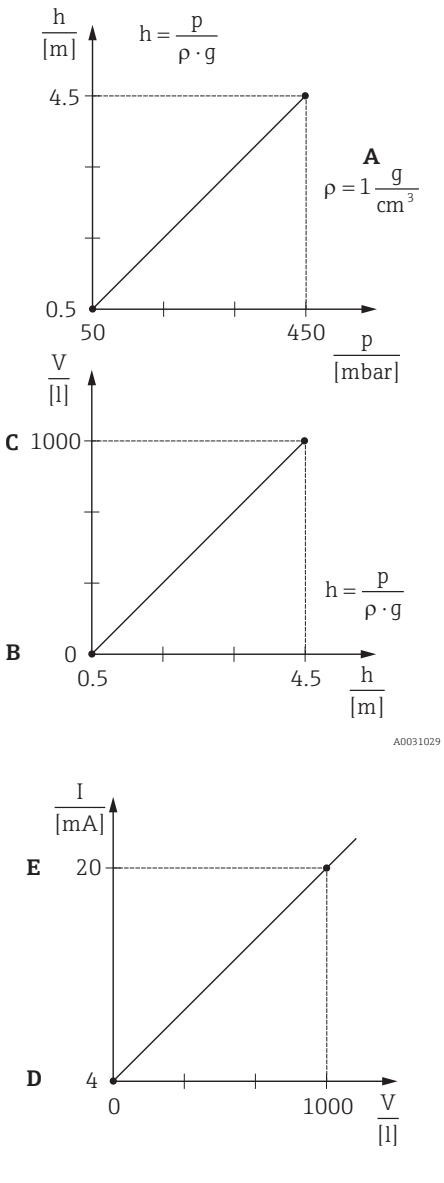

Fig. 34: Calibration with reference pressure – wet calibration

E See Table, Step 10.
F See Table, Step 8.
G See Table, Step 9.
H See Table, Step 11
I See Table, Step 12.

The measured variables %, level, volume and mass are available for this level mode → 123 "**Unit before lin (025)**".

8.5.6 "In height" level selection Calibration without reference pressure (dry calibration)

Example:
In this example, the volume in a tank should be measured in liters. The maximum volume of 1000 liters (264 US gal) corresponds to a level of 4.5 m (15 ft). The minimum volume of 0 liters corresponds to a level of 0.5 m (1.6 ft) since the device is mounted below the start of the level measuring range.

Prerequisite:
- The measured variable is in direct proportion to the pressure.
- This is a theoretical calibration i.e. the height and volume values for the lower and upper calibration point must be known.

- The values for "Empty calib./Full calib.", "Empty height/Full height" and" Set LRV/Set URV" must be at least 1% apart. The value will be rejected, and a warning message displayed, if the values are too close together. Further limit values are not checked, i.e. the values entered must be appropriate for the sensor and the measuring task for the measuring device to be able to measure correctly.
- Due to the orientation of the device, there may be pressure shifts in the measured value, i.e. when the container is empty or partly filled, the measured value is not zero. For information on how to perform position adjustment, see → 64, "Position zero adjustment".

	Description
1	Select the "Level" measuring mode via the "Measuring mode" parameter. Menu path: Setup → Measuring mode
2	Select a pressure unit via the "Press eng. unit" parameter, here "mbar" for example. Menu path: Setup → Press. eng. unit
3	Select the "In height" level mode via the "Level selection" parameter. Menu path: Setup → Extended setup → Level → Level selection
4	Select a level unit via the "Unit before lin" parameter, here "l" (liters) for example. Menu path: Setup → Extended setup → Level → Unit before lin
5	Select a level unit via the "Height unit" parameter, here "m" for example. Menu path: Setup → Extended setup → Level → Height unit
6	Select the "Dry" option via the "Calibration mode" parameter. Menu path: Setup → Extended setup → Level → Calibration mode

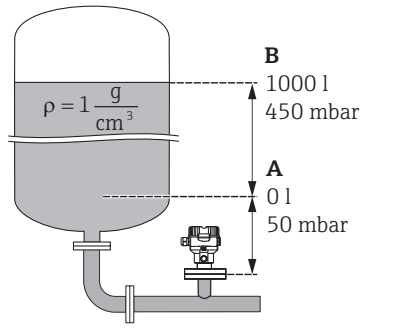

Fig. 35: Calibration without reference pressure – dry calibration

A See Table, Step 11.
B See Table, Steps 7 and 8.
D See Table, Steps 9 and 10.

	Description
7	Enter the volume value for the lower calibration point via the "Empty calib." parameter, here 0 liters for example. Menu path: Setup → Extended setup → Level → Empty calib.
8	Enter the height value for the lower calibration point via the "Empty height" parameter, here 0.5 m (1.6 ft) for example. Menu path: Setup → Extended setup → Level → Empty height
9	Enter the volume value for the upper calibration point via the "Full calib." parameter, here 1000 liters (264 US gal) for example. Menu path: Setup → Extended setup → Level → Full calib.
10	Enter the height value for the upper calibration point via the "Full height" parameter, here 4.5 m (15 ft) for example. Menu path: Setup → Extended setup → Level → Full height
11	Enter the density of the medium via the "Adjust density" parameter, here "1 g/cm³" (1 SGU) for example. Menu path: Setup → Extended setup → Level → Adjust density
12	Set the volume value for the lower current value (4 mA) via the "Set LRV" parameter. Menu path: Setup → Extended setup → Current output → Set LRV
13	Set the volume value for the upper current value (20 mA) via the "Set URV" parameter. Menu path: Setup → Extended setup → Current output → Set URV
14	If the process uses a medium other than that on which the calibration was based, the new density has to be specified in the "Process density" parameter. Menu path: Setup → Extended setup → Level → Process density
15	Result: The measuring range is set for 0 to 1000 l (264 US gal).

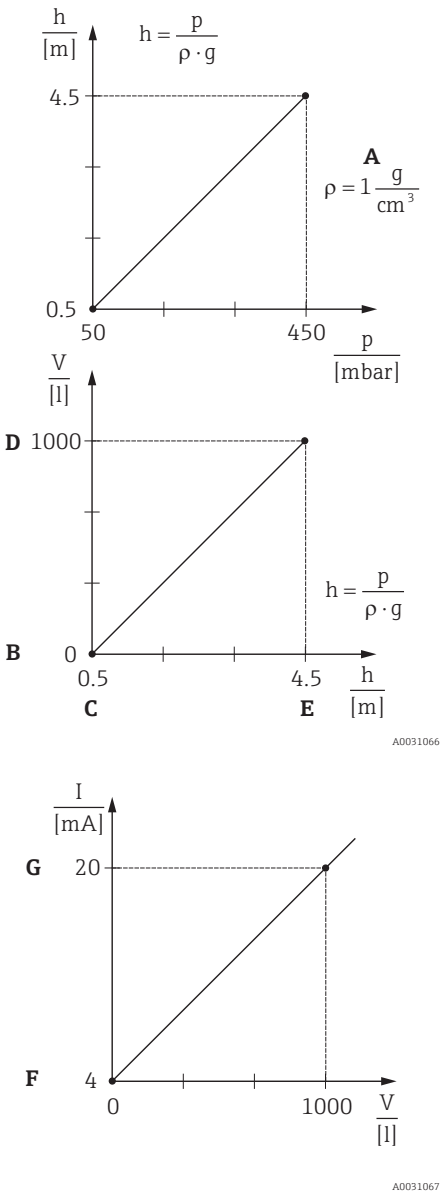

Fig. 36: Calibration with reference pressure – wet calibration

A See Table, Step 11.
B See Table, Step 7.
C See Table, Step 8.
D See Table, Step 9.
E See Table, Step 10.
F See Table, Step 12.
G See Table, Step 13.

The measured variables %, level, volume and mass are available for this level mode → 123 "**Unit before lin (025)**".

8.5.7 Calibration with partially-filled tank (wet calibration)

Example:
In this example a wet calibration is shown when it is not possible to empty the vessel and then fill it up to 100%. Here a 20% filling is used as “Empty” and a “25%” filling is used as “Full” calibration point. The calibration is then extended to 0% … 100% and LRV / URV are adjusted accordingly.

Prerequisite:
The default value in the level mode for calibration mode is “Wet”.
However, it can be changed via: Setup → Extended Setup → Level → Calibration mode

	Description
1	Select the "Level" measuring mode via the "**Measuring mode (005)**" parameter. Menu path: Setup → **Measuring mode (005)**
2	Set value for "Empty calib." with acting pressure for Level e.g. 20%. Menu path: Setup → Extended Setup → Level → Empty calibration
3	Set value for "Full calib." with acting pressure for Level e.g. 25%. Menu path: Setup → Extended Setup → Level → Full calibration
4	The values for full and empty pressure are measured automatically at adjustment. As the transmitter automatically sets the pressure values that suit to empty and full calibration to min and max pressure that cause the output current, it is necessary to set the right upper range value (URV) and lower range value (LRV).

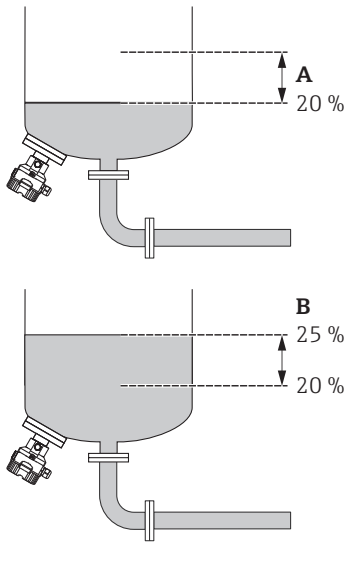

Abb. 37: Calibration with partially-filled tank

A See Table, Step 2
B See Table, Step 3

It is also possible to use different liquids (e.g. water) for the adjustment. In this case you have to enter the different densities at following menu path:
- Setup → Ext. Setup → Level → **Adjust density (034)** (e.g. 1.0 kg/l for water)
- Setup → Ext. Setup → Level → **Process density (035)** (e.g. 0.8 kg/l for oil)

8.6 Linearization

8.6.1 Manual entry of the linearization table

Example:
In this example, the volume in a tank with a conical outlet should be measured in m^3.

Prerequisite:

- This is a theoretical calibration, i.e. the points for the linearization table are known.
- A level calibration has been performed.

For a description of the parameters mentioned, → Chap. 12.2 "Description of parameters".

	Description	
1	Select the "Manual entry" option via the "Lin. mode" parameter. Menu path: Setup → Extended setup → Linearization → Lin. mode	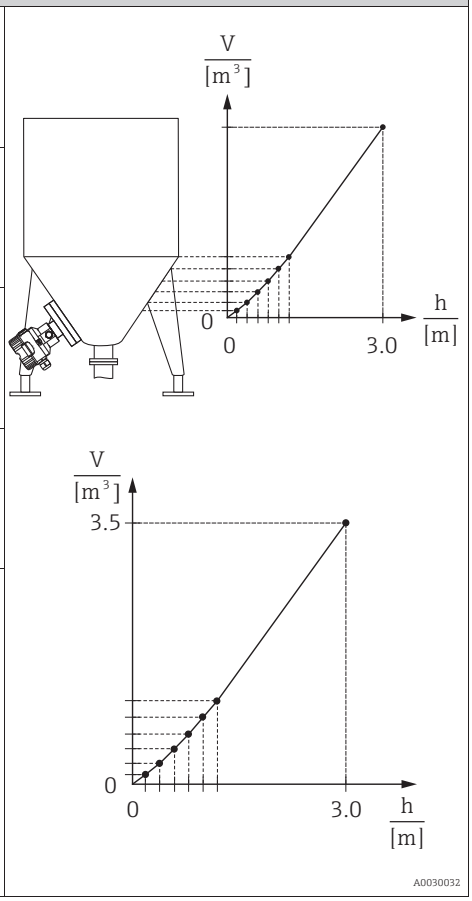
2	Select the volume/mass unit via the "Unit after lin." parameter, e.g. m^3. Menu path: Setup → Extended setup → Linearization → Unit after lin.	
3	Enter the number of the point in the table via the "Line-numb." parameter. Menu path: Setup → Extended setup → Linearization → Line-numb	
	The level (e.g. 0 m) is entered via the "X-value" parameter. Confirm your entry. Menu path: Setup → Extended setup → Linearization → X-value	
	Using the "Y-value" parameter, enter the associated volume value, here 0 m^3 for example, and confirm the value. Menu path: Setup → Extended setup → Linearization → Y-value	

	Description	
4	To enter another point in the table, select the "Next point" option via the "Edit table" parameter. Enter the next point as explained in Step 3. Menu path: Setup → Extended setup → Linearization → Edit table	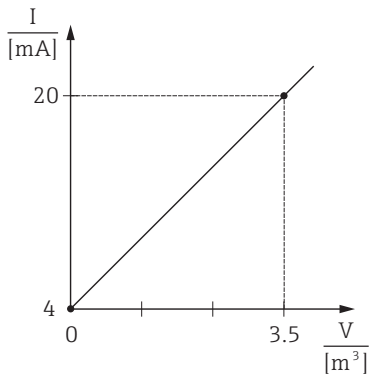
5	Once all the points have been entered in the table, select the "Activate table" option via the "Lin. mode" parameter. Menu path: Setup → Extended setup → Linearization → Lin. mode	
6	Result: The measured value after linearization is displayed.	

Fig. 38: Manual entry of the linearization table

1. Error message F510 "Linearization" and alarm current as long as the table is being entered and until the table is activated.
2. The 0% value (= 4 mA) is defined by the smallest point in the table.
   The 100% value (= 20 mA) is defined by the biggest point in the table.
3. You can change the allocation of the volume or mass values to the current values using the "Set LRV" and "Set URV" parameters.

8.6.2 Manual entry of the linearization table via the operating tool

With an operating tool based on FDT technology (e.g. FieldCare), it is possible to enter linearization via a module that has been specially designed for this. In doing so, you gain an overview of the selected linearization even while making the entry. Additionally, it is possible to call up pre-programmed tank shapes.

The linearization table can also be entered manually point for point in the menu of the operating tool (see → Chap. 8.6.1 "Manual entry of the linearization table".

8.6.3 Semi-automatic entry of the linearization table

Example:
In this example, the volume in a tank with a conical outlet should be measured in m^3.

Prerequisite:

- The tank can be filled or emptied. The linearization characteristic must rise continuously.
- A level calibration has been performed.

For a description of the parameters mentioned → Chap. 12.2 "Description of parameters".

	Description
1	Select the "Semi-auto. entry" option via the "Lin. mode" parameter. Menu path: Setup → Extended setup → Linearization → Lin. mode
2	Select the volume unit/mass unit via the "Unit after lin." parameter, e.g. m^3. Menu path: Setup → Extended setup → Linearization → Unit after lin.
3	Fill the tank to the height of the 1st point.

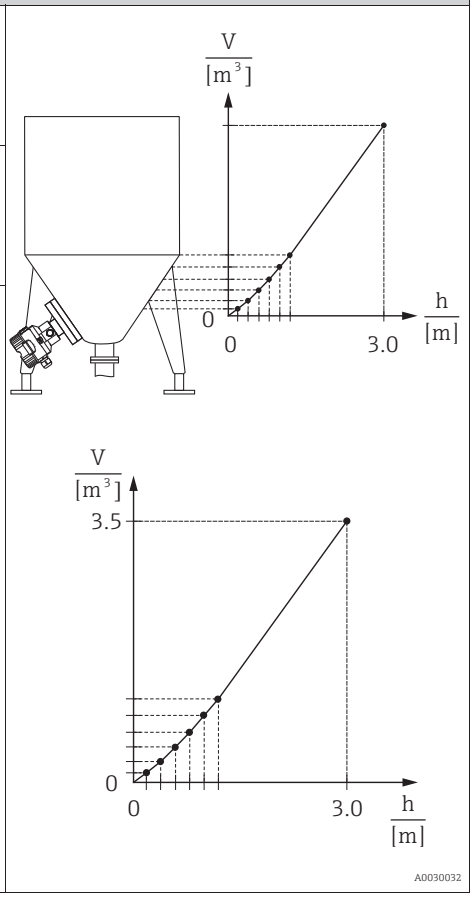

	Description	
4	Enter the number of the point in the table via the "Line-numb." parameter. Menu path: Setup → Extended setup → Linearization → Line-numb	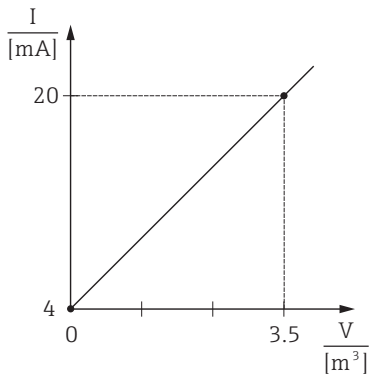 A0031031 *Fig. 39: Semi-automatic entry of the linearization table*
	The actual level is displayed via the "X-value" parameter. Menu path: Setup → Extended setup → Linearization → X-value	
	Using the "Y-value" parameter, enter the associated volume value, here 0 m^3 for example, and confirm the value. Menu path: Setup → Extended setup → Linearization → Y-value	
5	To enter another point in the table, select the "Next point" option via the "Edit table" parameter. Enter the next point as explained in Step 4. Menu path: Setup → Extended setup → Linearization → Edit table	
6	Once all the points have been entered in the table, select the "Activate table" option via the "Lin. mode" parameter. Menu path: Setup → Extended setup → Linearization → Lin. mode	
7	Result: The measured value after linearization is displayed.	

1. Error message F510 "Linearization" and alarm current as long as the table is being entered and until the table is activated.
2. The 0% value (= 4 mA) is defined by the smallest point in the table.
   The 100% value (= 20 mA) is defined by the biggest point in the table.
3. You can change the allocation of the volume or mass values to the current values using the "Set LRV" and "Set URV" parameters.

8.7 Pressure measurement

8.7.1 Calibration without reference pressure (dry calibration)

Example:
In this example, a device with a 400 mbar (6 psi) sensor is configured for the 0 to +300 mbar (4.5 psi) measuring range, i.e. 0 mbar is assigned to the 4 mA value and 300 mbar (4.5 psi) to the 20 mA value.

Prerequisite:
This is a theoretical calibration, i.e. the pressure values for the lower and upper range are known.

Due to the orientation of the device, there may be pressure shifts in the measured value, i.e. the measured value is not zero in a pressureless condition. For information on how to perform position adjustment, see → 64.

	Description
1	Select the "Pressure" measuring mode via the "Measuring mode" parameter. Menu path: Setup → Measuring mode
2	Select a pressure unit via the "Press eng. unit" parameter, here "mbar" for example. Menu path: Setup → Press. eng. unit
3	Select the "Set LRV" parameter. Menu path: Setup → Set LRV
	Enter the value for the "Set LRV" parameter (here 0 mbar) and confirm. This pressure value is assigned to the lower current value (4 mA).
4	Select the "Set URV" parameter. Menu path: Setup → Set URV
	Enter the value for the "Set URV" parameter (here 300 mbar (4.5 psi)) and confirm. This pressure value is assigned to the upper current value (20 mA).
5	Result: The measuring range is configured for 0 to +300 mbar (4.5 psi).

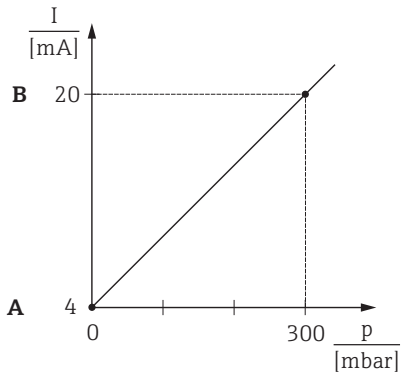

Fig. 40: Calibration without reference pressure

A See Table, Step 3.
B See Table, Step 4.

8.7.2 Calibration with reference pressure (wet calibration)

Example:
In this example, a device with a 400 mbar (6 psi) sensor is configured for the 0 to +300 mbar (4.5 psi) measuring range, i.e. 0 mbar is assigned to the 4 mA value and 300 mbar (4.5 psi) to the 20 mA value.

Prerequisite:
The pressure values 0 mbar and 300 mbar (4.5 psi) can be specified. The device is already mounted, for example.

For a description of the parameters mentioned, see Section 12.2 "Description of parameters".

	Description
1	Perform position adjustment → 64.
2	Select the "Pressure" measuring mode via the "Measuring mode" parameter. Menu path: Setup → Measuring mode
3	Select a pressure unit via the "Press eng. unit" parameter, here "mbar" for example. Menu path: Setup → Press. eng. unit
4	The pressure for the lower-range value (4 mA value) is present at the device, here 0 mbar for example.
	Select the "Get LRV" parameter. Menu path: Setup → Extended setup → Current output → Get LRV.
	Confirm the value present by selecting "Confirm". The pressure value present is assigned to the lower current value (4 mA).
5	The pressure for the upper-range value (20 mA value) is present at the device, here 300 mbar (4.5 psi) for example.
	Select the "Get URV" parameter. Menu path: Setup → Extended setup → Current output → Get URV.
	Confirm the value present by selecting "Confirm". The pressure value present is assigned to the upper current value (20 mA).
6	Result: The measuring range is configured for 0 to +300 mbar (4.5 psi).

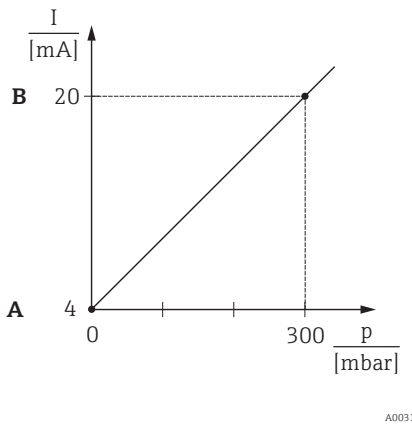

Fig. 41: Calibration with reference pressure

A See Table, Step 4.
B See Table, Step 5.

8.8 Electrical differential pressure measurement with gauge pressure sensors (Cerabar M or Deltapilot M)

Example:
In the example given, two Cerabar M or Deltapilot M devices (each with a gauge pressure sensor) are interconnected. The pressure difference can thus be measured using two independent Cerabar M or Deltapilot M devices.

For a description of the parameters mentioned → Chap. 12.2 "Description of parameters".

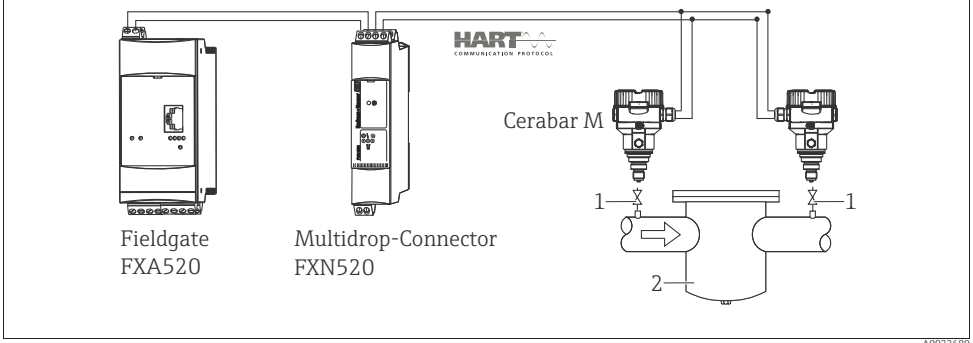

Fig. 42:
1 Shut-off valves
2 e.g. filter

	Description **Adjustment of the Cerabar M/Deltapilot M on the high pressure side**
1	Select the "Pressure" measuring mode via the "Measuring mode" parameter. **⚠ WARNING** **Changing the measuring mode affects the span (URV)!** This situation can result in product overflow. ▶ If the measuring mode is changed, the span setting (URV) must be verified and, if necessary, reconfigured! Menu path: Setup → Measuring mode
2	Select a pressure unit via the "Press eng. unit" parameter, here "mbar" for example. Menu path: Setup → Press. eng. unit
3	The Cerabar M/Deltapilot M is unpressurized, perform position adjustment, see → 64.
4	Switch on burst mode via the "Burst mode" parameter Menu path: Expert → Communication → HART Config.
5	Set the output current to "Fixed" 4.0 mA via the "Current mode" parameter. Menu path: Expert → Communication → HART Config
6	Configure an address ≠ 0 via the "Bus address" parameter, e.g. bus address = 1 (HART 5.0 master: Range 0 to 15, where address = 0 calls up the "Signaling" setting; HART 6.0 master: range 0 to 63) Menu path: Expert → Communication → HART Config.

	Description **Adjustment of the Cerabar M/Deltapilot M on the low pressure side (the differential is generated in this device)**
1	Select the "Pressure" measuring mode via the "Measuring mode" parameter. **⚠ WARNING** **Changing the measuring mode affects the span (URV)!** This situation can result in product overflow. ▶ If the measuring mode is changed, the span setting (URV) must be verified and, if necessary, reconfigured! Menu path: Setup → Measuring mode
2	Select a pressure unit via the "Press eng. unit" parameter, here "mbar" for example. Menu path: Setup → Press. eng. unit
3	The Cerabar M/Deltapilot M is unpressurized, perform position adjustment , see → 64.
4	Set the output current to "Fixed" 4.0mA via the "Current mode" parameter. Menu path: Expert → Communication → HART Config.
5	Configure an address <> 0 via the "Bus address" parameter, e.g. bus address = 2 (HART 5.0 master: Range 0 to 15, where address = 0 calls up the "Signaling" setting; HART 6.0 master: range 0 to 63) Menu path: Expert → Communication → HART Config.
6	Activate the reading of a value sent externally in burst mode via the "Electr. Delta P" parameter. Menu path: Expert → Application
7	Result: The measured value output by the Cerabar M/Deltapilot M on the low pressure side equals the differential: high pressure - low pressure, and can be read out by means of a HART request of the address of the Cerabar M/Deltapilot M on the low pressure side.

⚠ WARNING

Settings can result in non-permitted use of the "Electr. Delta P" function.

The measured value of the transmitting device (via burst) must always be greater than the measured value of the receiving device (via the "Electr. Delta P" function).
Adjustments that result in an offset of the pressure values (e.g. position adjustment, trim) must always be performed in accordance with the individual sensor and its orientation, irrespective of the "Electr. Delta P" application. Other settings result in non-permitted use of the "Electr. Delta P" function and can lead to incorrect measured values.

▶ It is not permitted to reverse the assignment of the measuring points to the direction of communication.

8.9 Differential pressure measurement (Deltabar M)

8.9.1 Preparatory steps

Before calibrating the device, the impulse piping must be cleaned and filled with fluid. → See the following table.

	Valves	Meaning	Preferred installation
1	Close 3.		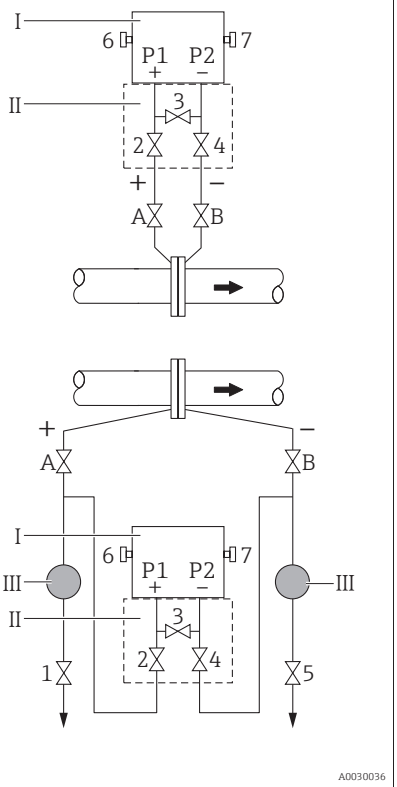
2	Fill measuring system with fluid.		
	Open A, B, 2, 4.	Fluid flows in.	
3	Clean impulse piping if necessary:[1)] – by blowing out with compressed air in the case of gases – by rinsing out in the case of liquids.		
	Close 2 and 4.	Block off device.	
	Open 1 and 5.[1]	Blow out/rinse out impulse piping.	
	Close 1 and 5.[1]	Close valves after cleaning.	
4	Vent device.		
	Open 2 and 4.	Introduce fluid.	
	Close 4.	Close low-pressure side.	
	Open 3.	Balance positive and low-pressure side.	
	Open 6 and 7 briefly, then close them again.	Fill device completely with fluid and remove air.	
5	Set measuring point in operation.		
	Close 3.	Shut off high-pressure side from low-pressure side.	
	Open 4.	Connect low-pressure side.	
	Now – 1[1], 3, 5[1], 6 and 7 are closed. – 2 and 4 are open. – A and B open (if present).		
6	Carry out calibration if necessary. → See also page 84, section 6.6.2.		

Above: preferred installation for gases
Below: preferred installation for liquids

I Deltabar M
II Three-valve manifold
III Separator
1, 5 Drain valves
2, 4 Inlet valves
3 Equalising valve
6, 7 Vent valves on Deltabar M
A, B Shut-off valve

1) for arrangement with 5 valves

8.9.2 Setup menu for Pressure measuring mode

Parameter name	Description	see page
Measuring mode (005) Selection	Select the "Pressure" measuring mode.	118
Switch P1/P2 (163) Display	Indicates whether the "SW/P2High" DIP switch (DIP switch 5) is switched on.	120
High pressure side (006) (183) Selection/Display	Determines, which pressure input corresponds to the high-pressure side.  This setting is only valid if the "SW/P2High" DIP switch is in the OFF position (see the "Pressure side switch" (163) parameter). Otherwise P2 corresponds to the high-pressure side in any case.	120
Press. eng. unit (125) Selection	Select the pressure unit. If a new pressure unit is selected, all pressure-specific parameters are converted and displayed with the new unit.	119
Corrected press. (172) Display	Displays the measured pressure after sensor trim and position adjustment.	122
Pos. zero adjust (007) Selection	Position adjustment – the pressure difference between zero (set point) and the measured pressure need not be known. **Example:** – Measured value = 2.2 mbar (0.033 psi) – You correct the measured value via the "Pos. zero adjust" parameter with the "Confirm" option. This means that you assign the value 0.0 to the pressure present. – Measured value (after pos. zero adjust) = 0.0 mbar – The current value is also corrected.	119
Set LRV (056) Entry	Set the pressure value for the lower current value (4 mA).	130
Set URV (057) Entry	Set the pressure value for the upper current value (20 mA).	130
Damping switch (164) Display	Displays the status of DIP switch 2 ("damping τ"), which is used to switch the damping of the output signal on and off.	119
Damping value (017) Entry/Display	Enter damping time (time constant τ). The damping affects the speed at which the measured value reacts to changes in pressure.  The damping is only active if DIP switch 2 ("damping τ") is in the ON position.	119
Pressure after damping (111) Display	Displays the measured pressure after sensor trim, position adjustment and damping.	122

8.10 Flow measurement (Deltabar M)

8.10.1 Information on flow measurement

In the "Flow" measuring mode, the device determines a volume or mass flow value from the differential pressure measured. The differential pressure is generated by means of primary elements such as pitot tubes or orifice plates and depends on the volume or mass flow. Four flow types are available: volume flow, norm volume flow (European norm conditions), standard volume flow (American standard conditions), mass flow and flow in %.

In addition, the Deltabar M software is equipped with two totalizers as standard. The totalizers add up the volume or the mass flow. The counting function and the unit can be set separately for both totalizers. The first totalizer (totalizer 1) can be reset to zero at any time while the second (totalizer 2) totalises the flow from commissioning onwards and cannot be reset.



The totalizers are not available for the "Flow in %" flow type.

8.10.2 Preparatory steps

Before calibrating the Deltabar M, the impulse piping must be cleaned and filled with fluid.
→ See the following table.

	Valves	Meaning	Preferred installation
1	Close 3.		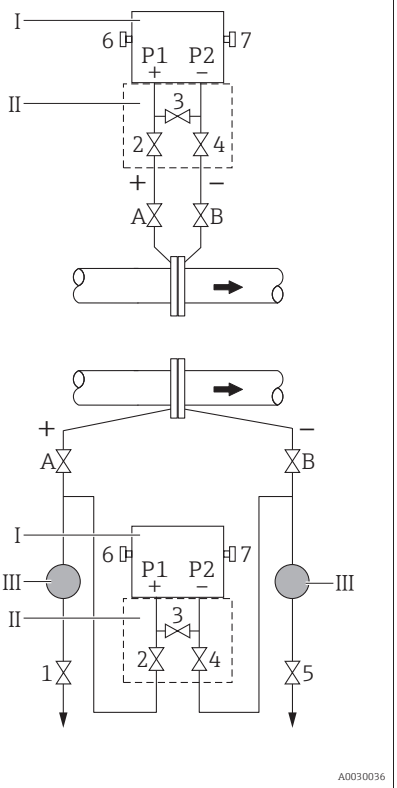
2	Fill measuring system with fluid.		
	Open A, B, 2, 4.	Fluid flows in.	
3	Clean impulse piping if necessary[1)]: – by blowing out with compressed air in the case of gases – by rinsing out in the case of liquids.		
	Close 2 and 4.	Block off device.	
	Open 1 and 5.[1]	Blow out/rinse out impulse piping.	
	Close 1 and 5.[1]	Close valves after cleaning.	
4	Vent device.		
	Open 2 and 4.	Introduce fluid.	
	Close 4.	Close low-pressure side.	
	Open 3.	Balance positive and low-pressure side.	
	Open 6 and 7 briefly, then close them again.	Fill device completely with fluid and remove air.	
5	Carry out position zero adjustment (→ 64) if the following conditions are met. If the conditions are not met, then do not carry out the pos. zero adjustment until after step 6. Conditions: – The process cannot be blocked off. – The tapping points (A and B) are at the same geodetic height.		
6	Set measuring point in operation.		
	Close 3.	Shut off high-pressure side from low-pressure side.	
	Open 4.	Connect low-pressure side.	
	Now – 1[1], 3, 5[1], 6 and 7 are closed. – 2 and 4 are open. – A and B open (if present).		
7	Carry out position zero adjustment (→ 64) if the flow can be blocked off. In this case, step 5 is not applicable.		
8	Carry out calibration. → See page 87, → Chap. 8.10.3.		

Above: preferred installation for gases
Below: preferred installation for liquids

I Deltabar M
II Three-valve manifold
III Separator
1, 5 Drain valves
2, 4 Inlet valves
3 Equalising valve
6, 7 Vent valves on Deltabar M
A, B Shut-off valves

1) for arrangement with 5 valves

8.10.3 Setup menu for the "Flow" measuring mode

Parameter name	Description	see page
Lin./SQRT switch (133) Display	Displays the status of DIP switch 4 on the electronic insert, which is used to define the output characteristics of the current output.	130
Measuring mode (005) Selection	Select the "Flow" measuring mode.	118
Pressure side switch (163) Display	Indicates whether the "SW/P2High" DIP switch (DIP switch 5) is switched on.	120
High pressure side (006) (183) Selection	Determines, which pressure input corresponds to the high-pressure side.  This setting is only valid if the "SW/P2High" DIP switch is in the OFF position (see the "Pressure side switch" (163) parameter). Otherwise P2 corresponds to the high-pressure side in any case.	120
Press. eng. unit (125) Selection	Select the pressure unit. If a new pressure unit is selected, all pressure-specific parameters are converted and displayed with the new unit.	119
Corrected press. (172) Display	Displays the measured pressure after sensor trim and position adjustment.	122
Pos. zero adjust (007) Selection	Position adjustment – the pressure difference between zero (set point) and the measured pressure need not be known. **Example:** – Measured value = 2.2 mbar (0.033 psi) – You correct the measured value via the "Pos. zero adjust" parameter with the "Confirm" option. This means that you assign the value 0.0 to the pressure present. – Measured value (after pos. zero adjust) = 0.0 mbar – The current value is also corrected.	119
Max. flow (009) Entry	Enter maximum flow of primary element. See also layout sheet of primary element. The maximum flow is assigned to the maximum pressure which you enter via the "Max. pressure flow" (010) parameter.	128
Max. pressure flow (010) Entry	Enter maximum pressure of primry element. → See layout sheet of primary element. This pressure is assigned to the flow defined in the "Max. flow" (009) parameter.	128
Damping switch (164) Display	Displays the status of DIP switch 2 "damping τ", which is used to switch the damping of the output signal on and off.	119
Damping value (017) Entry/Display	Enter damping time (time constant τ). The damping affects the speed at which the measured value reacts to changes in pressure.  The damping is only active if DIP switch 2 "damping τ" is in the ON position.	119
Flow (018) Display	Displays the present flow value.	128
Pressure after damping (111) Display	Displays the measured pressure after sensor trim, position adjustment and damping.	122

8.11 Level measurement (Deltabar M)

8.11.1 Preparatory steps

Open container

Before calibrating the device, the impulse piping must be cleaned and filled with fluid. → See the following table.

	Valves	Meaning	Installation
1	Fill container to a level above the lower tap.		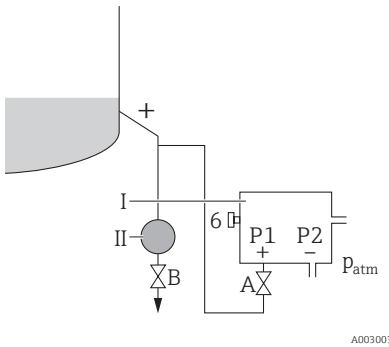 A0030038 *Open container* *I* *Deltabar M* *II* *Separator* *6* *Vent valves on Deltabar M* *A* *Shut-off valve* *B* *Drain valve*
2	Fill measuring system with fluid.		
	Open A.	Open shut-off valve.	
3	Vent device.		
	Open 6 briefly, then close it again.	Fill device completely with fluid and remove air.	
4	Set measuring point in operation.		
	Now – B and 6 are closed. – A is open.		
5	Carry out calibration according to one of the following methods: ▪ "in pressure" - with reference pressure (→ 92) ▪ "in pressure" - without reference pressure (→ 66) ▪ "in heigth" - with reference pressure (→ 98) ▪ "in height" - without reference pressure (→ 98)		

Closed container

Before calibrating the device, the impulse piping must be cleaned and filled with fluid. → See the following table.

	Valves	Meaning	Installation
1	Fill container to a level above the lower tap.		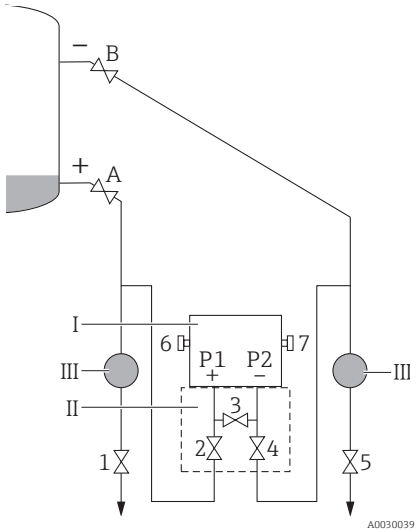
2	Fill measuring system with fluid.		
	Close 3.	Shut off high-pressure side from low-pressure side.	
	Open A and B.	Open shut-off valves.	
3	Vent high-pressure side (empty low-pressure side if necessary).		
	Open 2 and 4.	Introduce fluid on high-pressure side.	
	Open 6 and 7 briefly, then close them again.	Fill high-pressure side completely with fluid and remove air.	
4	Set measuring point in operation.		
	Now – 3, 6 and 7 are closed. – 2, 4, A and B are open.		
5	Carry out calibration according to one of the following methods: ▪ "in pressure" - with reference pressure (→ 92) ▪ "in pressure" - without reference pressure (→ 68) ▪ "in heigth" - with reference pressure (→ 98) ▪ "in height" - without reference pressure (→ 98)		

Closed container

I	*Deltabar M*
II	*Three-valve manifold*
III	*Separator*
1, 2	*Drain valves*
2, 4	*Inlet valves*
3	*Equalizing valve*
6, 7	*Vent valve on Deltabar M*
A, B	*Shut-off valve*

Closed container with superimposed steam

Before calibrating the device, the impulse piping must be cleaned and filled with fluid. → See the following table.

	Valves	Meaning	Installation
1	Fill container to a level above the lower tap.		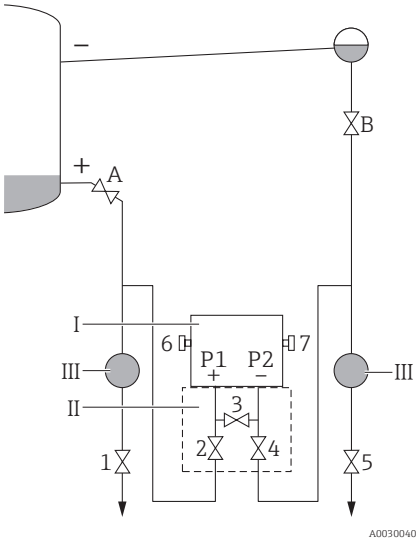
2	Fill measuring system with fluid.		
	Open A and B.	Open shut-off valves.	
	Fill the negative impulse piping to the level of the condensate trap.		
3	Vent device.		
	Open 2 and 4.	Introduce fluid.	
	Close 4.	Close low-pressure side.	
	Open 3.	Balance positive and low-pressure side.	
	Open 6 and 7 briefly, then close them again.	Fill device completely with fluid and remove air.	
4	Set measuring point in operation.		
	Close 3.	Shut off high-pressure side from low-pressure side.	
	Open 4.	Connect low-pressure side.	
	Now – 3, 6 and 7 are closed. – 2, 4, A and B are open.		
5	Carry out calibration according to one of the following methods: ▪ "in pressure" - with reference pressure (→ 92) ▪ "in pressure" - without reference pressure (→ 68) ▪ "in heigth" - with reference pressure (→ 98) ▪ "in height" - without reference pressure (→ 98)		

Closed container with superimposed steam

I *Deltabar M*
II *Three-valve manifold*
III *Separator*
1, 5 *Drain valves*
2, 4 *Inlet valves*
3 *Equalising valve*
6, 7 *Vent valves on Deltabar M*
A, B *Shut-off valves*

8.11.2 Information on level measurement

You have a choice of two methods for calculating the level: "In pressure" and "In height". The table in the "Overview of level measurement" section that follows provides you with an overview of these two measuring tasks.

- The limit values are not checked, i.e. the values entered must be appropriate for the sensor and the measuring task for the device to be able to measure correctly.
- Customer-specific units are not possible.
- The values entered for "Empty calib./Full calib.", "Empty pressure/Full pressure", "Empty height/Full height" and "Set LRV/Set URV" must be at least 1% apart. The value will be rejected, and a message output, if the values are too close together.

8.11.3 Overview of level measurement

Measuring task	Level selection	Measured variable options	Description	Measured value display
Calibration takes place by entering two pressure/level value pairs.	"In pressure"	Via the "Unit before lin" parameter: %, level, volume or mass units.	▪ Calibration with reference pressure (wet calibration), → 92 ▪ Calibration without reference pressure (dry calibration) → 68	The measured value display and the "Level before lin" parameter display the measured value.
Calibration takes place by entering the density and two height/level value pairs.	"In height"		▪ Calibration with reference pressure (wet calibration), → 98 ▪ Calibration without reference pressure (dry calibration) → 96	

8.11.4 Level selection "in pressure" Calibration with reference pressure (wet calibration)

Example:
In this example, the level in a tank should be measured in "m". The maximum level is 3 m (9.8 ft). The pressure range is set to 0 to 300 mbar (4.5 psi).

Prerequisite:
- The measured variable is in direct proportion to the pressure.
- The tank can be filled and emptied.

The values entered for "Empty calib./Full calib." and" Set LRV/Set URV" must be at least 1% apart. The value will be rejected, and a message output, if the values are too close together. Other limit values are not checked, i.e. the values entered must be appropriate for the sensor and the measuring task for the device to be able to measure correctly.

	Description	
1	Perform "position zero adjustment" → 64.	
2	Select the "Level" measuring mode via the "**Measuring mode (005)**" parameter (→ 63). Menu path: Setup → Measuring mode	
3	Select a pressure unit via the "Press eng. unit" parameter (→ 87), here "mbar" for example. Menu path: Setup → Press. eng. unit	
4	Select the "In pressure" level mode via the "Level selection" parameter (→ 123). Menu path: Setup → Extended setup → Level → Level selection	
5	Select a level unit via the "Unit before lin" parameter (→ 123), here "m" for example. Menu path: Setup → Extended setup → Level → Unit before lin	
6	Select the "Wet" option via the "Calibration mode" parameter (→ 123). Menu path: Setup → Extended setup → Level → Calibration mode	

	Description	
7	a. The pressure for the lower calibration point is present at the device, here "0 mbar" for example. b. Select the "Empty calib." parameter (→ 124). c. Enter the level value, here "0 m" for example. Confirming the value means you assign the pressure value present to the lower level value. Menu path: Setup → Extended setup → Level → Empty calib.	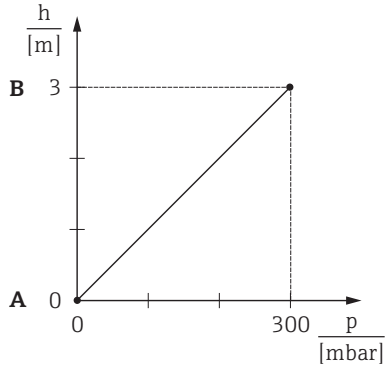 A0017658 *Calibration with reference pressure (wet calibration)* *A See Table, Step 7* *B See Table, Step 8*
8	a. The pressure for the upper calibration point is present at the device, here "300 mbar" (4.5 psi) for example. b. Select the "Full calib." parameter (→ 124). c. Enter the level value, here "3 m" for example. Confirming the value means you assign the pressure value present to the upper level value. Menu path: Setup → Extended setup → Level → Full calib.	
9	Result: The measuring range is set for 0 to 3 m (9.8 ft). 0 m corresponds to an output current of 4 mA. 3 m (9.8 ft) corresponds to an output current of 20 mA.	

8.11.5 Level selection "in pressure" Calibration without reference pressure (dry calibration)

Example:
In this example, the volume in a tank should be measured in liters. The maximum volume of 1000 liters (264 US gal) corresponds to a pressure of 400 mbar (6 psi). The minimum volume of 0 liters corresponds to a pressure of 0 mbar.

Prerequisite:
- The measured variable is in direct proportion to the pressure.
- This is a theoretical calibration i.e. the pressure and volume values for the lower and upper calibration point must be known.



The values entered for "Empty calib./Full calib." and" Set LRV/Set URV" must be at least 1% apart. The value will be rejected, and a message output, if the values are too close together. Other limit values are not checked, i.e. the values entered must be appropriate for the sensor and the measuring task for the device to be able to measure correctly.

	Description	
1	Perform "position zero adjustment" → 64.	
2	Select the "Level" measuring mode via the "**Measuring mode (005)**" parameter (→ 63). Menu path: Setup → Measuring mode	
3	Select a pressure unit via the "Press eng. unit" parameter (→ 64), here "mbar" for example. Menu path: Setup → Press. eng. unit	
4	Select the "In pressure" level mode via the "Level selection" parameter (→ 123). Menu path: Setup → Extended setup → Level → Level selection	
5	Select a level unit via the "Unit before lin" parameter (→ 123), here "l" for example. Menu path: Setup → Extended setup → Level → Unit before lin	
6	Select the "Dry" option via the "Calibration mode" parameter (→ 123). Menu path: Setup → Extended setup → Level → Calibration mode	

	Description
7	Enter the volume value for the lower calibration point via the "Empty calib." parameter (→ 124), here "0 liter" for example. Menu path: Setup → Extended setup → Level → Empty calib.
8	Enter the pressure value for the lower calibration point via the "Empty pressure" parameter (→ 124), here "0 mbar" for example. Menu path: Setup → Extended setup → Level → Empty pressure
9	Enter the volume value for the upper calibration point via the "Full calib." parameter (→ 124), here "1000 liter" (264 US gal) for example. Menu path: Setup → Extended setup → Level → Full calib.
10	Enter the pressure value for the upper calibration point via the "Full pressure" parameter (→ 124), here "400 mbar" (6 psi) for example. Menu path: Setup → Extended setup → Level → Full pressure
11	Result: The measuring range is set for 0 to 1000 l (264 US gal). 0 l corresponds to an output current of 4 mA. 1000 l (264 US gal) corresponds to an output current of 20 mA.

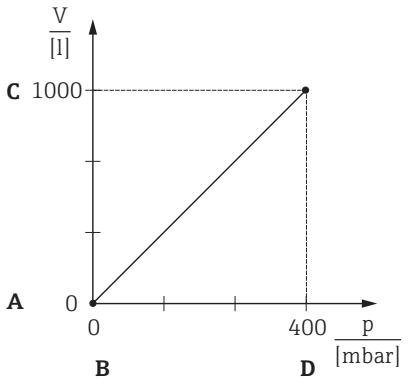

Calibration without reference pressure (dry calibration)

A See Table, Step 7.
B See Table, Step 8.
C See Table, Step 9.
D See Table, Step 10.

8.11.6 Level selection "in height" Calibration without reference pressure (dry calibration)

Example:
In this example, the volume in a tank should be measured in liters. The maximum volume of 1000 liters (264 US gal) corresponds to a level of 4 m (13 ft). The minimum volume of 0 liters corresponds to a level of 0 m. The density of the medium is 1 g/cm³ (1 SGU).

Prerequisite:
- The measured variable is in direct proportion to the pressure.
- This is a theoretical calibration i.e. the pressure and volume values for the lower and upper calibration point must be known.

The values entered for "Empty calib./Full calib." and " Set LRV/Set URV" must be at least 1% apart. The value will be rejected, and a message output, if the values are too close together. Other limit values are not checked, i.e. the values entered must be appropriate for the sensor and the measuring task for the device to be able to measure correctly.

	Description	
1	Perform "position zero adjustment" → 64.	
2	Select the "Level" measuring mode via the "**Measuring mode (005)**" parameter (→ 63). Menu path: Setup → Measuring mode	
3	Select a pressure unit via the "Press eng. unit" parameter (→ 64), here "mbar" for example. Menu path: Setup → Press. eng. unit	
4	Select the "In height" level mode via the "Level selection" parameter (→ 123). Menu path: Setup → Extended setup → Level → Level selection	
5	Select a level unit via the "Unit before lin" parameter (→ 123), here "l" for example. Menu path: Setup → Extended setup → Level → Unit before lin	
6	Select a level unit via the "Height unit" parameter (→ 123), here "m" for example. Menu path: Setup → Extended setup → Level → Height unit	
7	Select the "Wet" option via the "Calibration mode" parameter (→ 123). Menu path: Setup → Extended setup → Level → Calibration mode	

	Description
8	Enter the height value for the lower calibration point via the "Empty height" parameter (→ 124), here "0 m" for example. Menu path: Setup → Extended setup → Level → Empty height
9	Enter the volume value for the upper calibration point via the "Full calib." parameter (→ 124), here "1000 liter" (264 US gal) for example. Menu path: Setup → Extended setup → Level → Full calib.
10	Enter the volume value for the lower calibration point via the "Empty calib." parameter (→ 124), here "0 liter" for example. Menu path: Setup → Extended setup → Level → Empty calib.
11	Enter the height value for the upper calibration point via the "Full height" parameter (→ 124), here "4 m" (13 ft) for example. Menu path: Setup → Extended setup → Level → Full height
12	Enter the density of the medium, using the "Adjust density" parameter (→ 125), here 1 g/cm³ (1 SGU) for example. Menu path: Setup → Extended setup → Level → Adjust density
13	Result: The measuring range is set for 0 to 1000 l (264 US gal). 0 l corresponds to an output current of 4 mA. 1000 l (264 US gal) corresponds to an output current of 20 mA.

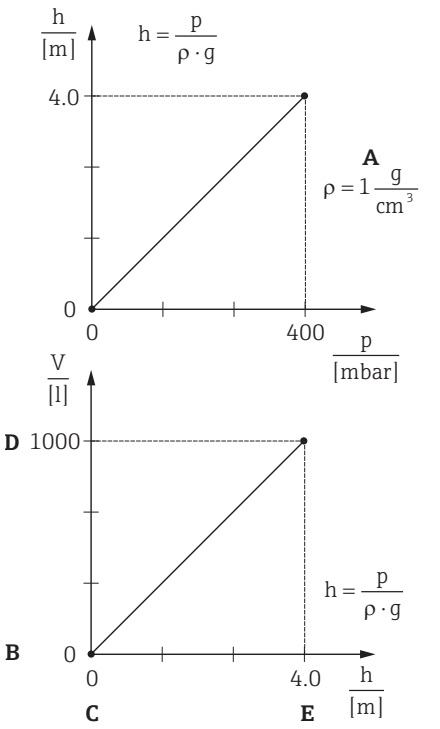

Calibration without reference pressure (dry calibration)

A See table, Step 12.
B See table, Step 8.
C See table, Step 9.
D See table, Step 10.
E See table, Step 11.

8.11.7 Level selection "in height" Calibration with reference pressure (wet calibration)

Example:
In this example, the volume in a tank should be measured in liters. The maximum volume of 1000 liters (264 US gal) corresponds to a level of 4 m (13 ft). The minimum volume of 0 liters corresponds to a level of 0 m. The density of the medium is 1 g/cm³ (1 SGU).

Prerequisite:
- The measured variable is in direct proportion to the pressure.
- The tank can be filled and emptied.

The values entered for "Empty calib./Full calib." and" Set LRV/Set URV" must be at least 1% apart. The value will be rejected, and a message output, if the values are too close together. Other limit values are not checked, i.e. the values entered must be appropriate for the sensor and the measuring task for the device to be able to measure correctly.

	Description	
1	Perform "position zero adjustment" → 📄 64.	
2	Select the "Level" measuring mode via the "**Measuring mode (005)**" parameter (→ 📄 63). Menu path: Setup → Measuring mode	
3	Select a pressure unit via the "Press eng. unit" parameter (→ 📄 64), here "mbar" for example. Menu path: Setup → Press. eng. unit	
4	Select the "In height" level mode via the "Level selection" parameter (→ 📄 123). Menu path: Setup → Extended setup → Level → Level selection	
5	Select a level unit via the "Unit before lin" parameter (→ 📄 123), here "l" for example. Menu path: Setup → Extended setup → Level → Unit before lin	
6	Select a level unit via the "Height unit" parameter (→ 📄 123), here "m" for example. Menu path: Setup → Extended setup → Level → Height unit	
7	Select the "Wet" option via the "Calibration mode" parameter (→ 📄 123). Menu path: Setup → Extended setup → Level → Calibration mode	

	Description
8	a. The pressure for the lower calibration point is present at the device, here "0 mbar" for example. b. Select the "Empty calib." parameter (→ 124). c. Enter the volume value, here "0 l" for example. Menu path: Setup → Extended setup → Level → Empty calib.
9	a. The pressure for the upper calibration point is present at the device, here "400 mbar" (6 psi) for example. b. Select the "Full calib." parameter (→ 124). c. Enter the volume value, here "1000 l" (264 US gal) for example. Menu path: Setup → Extended setup → Level → Full calib.
10	Enter the density of the medium, using the "Adjust density" parameter (→ 125), here 1 g/cm³ (1 SGU) for example. Menu path: Setup → Extended setup → Level → Adjust density
11	If the process uses a medium other than the medium on which the calibration was based, the new density must be specified in the "Process density" parameter (→ 125). Menu path: Setup → Extended Setup → Level → Density process
12	Result: The measuring range is set for 0 to 1000 l (264 US gal). 0 l corresponds to an output current of 4 mA. 1000 l (264 US gal) corresponds to an output current of 20 mA.

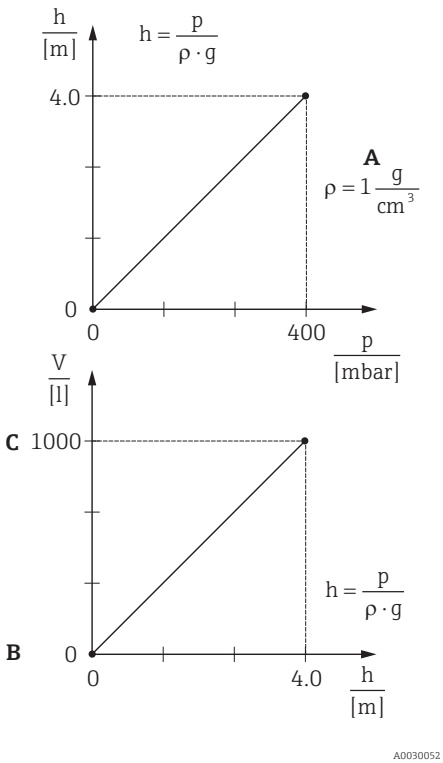

Calibration with reference pressure (wet calibration)

A See table, Step 8.
B See table, Step 9.

8.12 Backup or duplicate device data

The device has no memory module. With an operating tool based on FDT technology (e.g. FieldCare), you have the following options:
- Saving/rescuing configuration data
- Duplicating instrument configurations
- Transferring all relevant parameters when replacing electronic inserts.

9 Maintenance

Deltabar M requires no maintenance.
For Cerabar M and Deltapilot M keep the pressure compensation and GORE-TEX® filter (1) free from contamination.

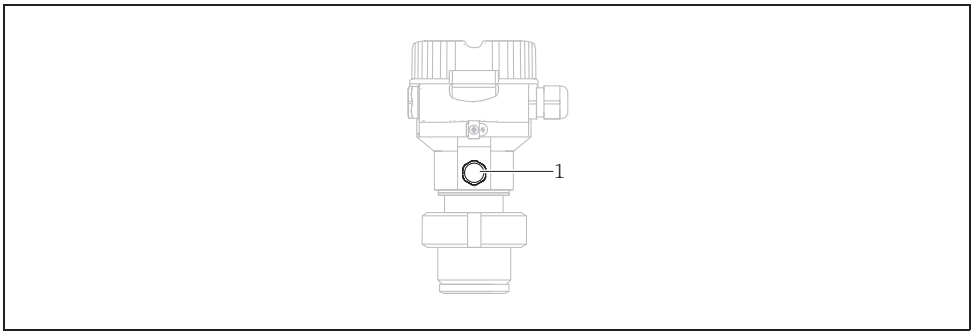

A0028502

9.1 Cleaning instructions

Endress+Hauser offer flushing rings as accessories to clean process isolating diaphragms without taking the transmitters out of the process.
For further information please contact your local Endress+Hauser Sales Center.

9.1.1 Cerabar M PMP55

We recommend you perform CIP (cleaning in place (hot water)) before SIP (sterilization in place (steam)) for pipe diaphragm seals. A frequent use of sterilization in place (SIP) will increase the stress on the process isolating diaphragm. Under unfavorable circumstances in the long term view we cannot exclude that a frequent temperature change could lead to a material fatigue of the process isolating diaphragm and possibly to a leakage.

9.2 Exterior cleaning

Please note the following points when cleaning the device:
- The cleaning agents used should not corrode the surface and the seals.
- Mechanical damage to the process isolating diaphragm, e.g. due to pointed objects, must be avoided.
- Observe the degree of protection of the device. See the nameplate if necessary (→ 8 ff).

10 Troubleshooting

10.1 Messages

The following table lists the messages that can occur. The Diagnostic code parameter shows the message with the highest priority. The device has four different status information codes according to NAMUR NE107:

- F = failure
- M (warning) = maintenance required
- C (warning) = function check
- S (warning) = out of specification (deviations from the permitted ambient or process conditions determined by the device with the self-monitoring function, or errors in the device itself indicate that the measuring uncertainty is greater than what would be expected under normal operating conditions).

Diagnostic code	Error message	Cause	Measure
0	No error	–	–
C412	Backup in prog.	Downloading.	1. Wait for download to complete
C482	Current simul.	Current output simulation is switched on, i.e. the device is not measuring at present.	1. End the simulation
C484	Error simul.	Fault state simulation is switched on, i.e. the device is not measuring at present.	1. End the simulation
C485	Measure simul.	Simulation is switched on, i.e. the device is not measuring at present.	1. End the simulation
C824	Process pressure	– Overpressure or low pressure present. This message normally only appears briefly. – Electromagnetic effects are greater than specifications in the technical data.	1. Check the pressure value 2. Restart the device 3. Perform a reset
F002	Sens. unknown	Sensor does not suit the device (electronic sensor nameplate).	1. Contact Endress+Hauser Service
F062	Sensor conn.	– Cable connection between sensor and main electronics disconnected. – Sensor defective. – Electromagnetic effects are greater than specifications in the technical data. This message normally only appears briefly.	1. Check sensor cable 2. Replace electr. 3. Contact Endress+Hauser Service 4. Replace sensor (snap-on Version)
F081	Initialization	– Cable connection between sensor and main electronics disconnected. – Sensor defective. – Electromagnetic effects are greater than specifications in the technical data. This message normally only appears briefly.	1. Perform a reset 2. Check sensor cable 3. Contact Endress+Hauser Service
F083	Permanent mem.	– Sensor defective. – Electromagnetic effects are greater than specifications in the technical data. This message normally only appears briefly.	1. Restart the device 2. Contact Endress+Hauser Service
F140	Working range P	– Overpressure or low pressure present. – Electromagnetic effects are greater than specified in the technical data. – Sensor defective.	1. Check the process pressure 2. Check the sensor range
F261	Electronics	– Main electronics defective. – Fault in the main electronics.	1. Restart the device 2. Replace electr.
F282	Data memory	– Fault in the main electronics. – Main electronics defective.	1. Restart the device 2. Replace electr.

Diagnostic code	Error message	Cause	Measure
F283	Permanent mem.	– Main electronics defective. – Electromagnetic effects are greater than specifications in the technical data. – The supply voltage is disconnected when writing. – An error occurred when writing.	1. Perform a reset 2. Replace electr.
F411	Up-/download	– The file is defective. – During the download, the data are not correctly transmitted to the processor, e.g. because of open cable connections, voltage peaks (ripple) on the supply voltage or electromagnetic effects.	1. Download again 2. Use another file 3. Perform a reset
F510	Linearization	– The linearization table is being edited.	1. Conclude entries 2. Select "linear"
F511	Linearization	– The linearization table consists of less than 2 points.	1. Table too small 2. Corr. table 3. Accept the table
F512	Linearization	– The linearization table is not monotonic increasing or decreasing.	1. Tab. not monotonic 2. Corr. table 3. Accept the table
F841	Sensor range	– Overpressure or low pressure present. – Sensor defective.	1. Check the pressure value 2. Contact Endress+Hauser Service
F882	Input signal	– External measured value is not received or displays a failure status.	1. Check the bus 2. Check source device 3. Check setting
M002	Sens. unknown	– Sensor does not suit the device (electronic sensor nameplate). Device continues measuring.	1. Contact Endress+Hauser Service
M283	Permanent mem.	– Cause as indicated for F283. – Correct measurement can continue as long as you do not need the peakhold indicator function.	1. Perform a reset 2. Replace electr.
M431	Adjustment	– The pressure applied is outside the set measuring range (but within the sensor range). – The calibration carried out would result in the sensor nominal operating range being undershot or overshot.	1. Check the measuring range 2. Check position adjustment 3. Check the setting
M434	Scaling	– Values for calibration (e.g. lower range value and upper range value) are too close together. – Lower range value and/or upper range value undershoot or overshoot the sensor range limits. – The sensor was replaced and the customer-specific configuration does not suit the sensor. – Unsuitable download carried out.	1. Check the measuring range 2. Check the setting 3. Contact Endress+Hauser Service
M438	Data record	– The supply voltage is disconnected when writing. – An error occurred when writing.	1. Check setting 2. Restart the device 3. Replace electr.
M515	Configuration Flow	– Max. flow out of nominal range of sensor	1. Recalibrate the device 2. Restart the device
M882	Input signal	External measured value displays a warning status.	1. Check the bus 2. Check source device 3. Check setting
S110	Working range T	– Electromagnetic effects are greater than specifications in the technical data. – Sensor defective. – Overtemperature or low temperature present.	1. Check proc. temp. 2. Check temperature range
S140	Working range P	– Electromagnetic effects are greater than specifications in the technical data. – Sensor defective. – Overpressure or low pressure present.	1. Check proc. pressure 2. Check sensor range

Diagnostic code	Error message	Cause	Measure
S822	Process temp.	– The temperature measured in the sensor is greater than the upper nominal temperature of the sensor. – The temperature measured in the sensor is lower than the lower nominal temperature of the sensor. – Loose connection at the sensor cable.	1. Check the temperature 2. Check the setting
S841	Sensor range	– Overpressure or low pressure present. – Sensor defective.	1. Check the pressure value 2. Contact Endress+Hauser Service
S971	Adjustment	– The current is outside the permitted range 3.8 to 20.5 mA. – The pressure applied is outside the set measuring range (but within the sensor range).	1. Check the pressure value 2. Check the measuring range 3. Check the setting

10.2 Response of output to errors

The response of the current output to errors is defined in the following parameters:
- "Alarm behavior" (050) → 129
- "Output fail mode (190) → 129
- "High alarm current" (052) → 129

10.3 Repair

The Endress+Hauser repair concept provides for measuring devices to have a modular design and that the customer can also carry out repairs (see → 104, → Chap. 10.5 "Spare Parts").

- For certified devices, please see the "Repair of Ex-certified devices" section.
- For more information on service and spare parts, contact Endress+Hauser Service. → See www.endress.com/worldwide.

10.4 Repair of Ex-certified devices

⚠ WARNING

Limitation of electrical safety due to incorrect connection!
Risk of explosion!

When repairing Ex-certified devices, please note the following:
- Only specialist personnel or Endress+Hauser may repair certified devices.
- Relevant standards, national hazardous area regulations and safety instructions and certificates must be observed.
- Only genuine Endress+Hauser spare parts may be used.
- When ordering spare parts, please check the device designation on the nameplate. Identical parts may only be used as replacements.
- Electronic inserts or sensors already in use in a standard device may not be used as spare parts for a certified device.
- Carry out repairs according to the instructions. Following a repair, the device must fulfill the requirements of the specified individual tests.
- A certified device may only be converted to another certified device version by Endress+Hauser.
- All repairs and modifications must be documented.

10.5 Spare Parts

- Some replaceable measuring device components are identified by means of a spare part nameplate. This contains information about the spare part.
- All the spare parts for the measuring device along with the order code are listed In the W@M Device Viewer (www.endress.com/deviceviewer) and can be ordered. If available, users can also download the associated Installation Instructions.



Measuring device serial number:
- Located on the device and spare part nameplate.
- Can be read out via the "Serial number" parameter in the "Instrument info" submenu.

10.6 Return

The measuring device must be returned if repairs or a factory calibration are required, or if the wrong measuring device has been ordered or delivered. According to legal regulations, Endress+Hauser, as a ISO-certified company, is required to follow certain procedures when handling returned products that are in contact with process fluids.
To ensure swift, safe and professional device returns, please read the return procedures and conditions on the Endress+Hauser website at www.services.endress.com/return-material.

10.7 Disposal

When disposing, separate and recycle the device components based on the materials.

10.8 Software history

Device	Date	Softwareversion	Software modifications	Operating Instruction
Cerabar	09.2009	01.00.zz	Original software. Compatible with: – FieldCare from version 2.02.00 – Field Communicator DXR375 with Device Rev.: 1, DD Rev.: 1	BA382P/00/EN/08.09 71089556
				BA382P/00/EN/10.09 71104504
				BA00382P/00/EN/13.10 71123275
				BA00382P/00/EN/14.11 71134588
				BA00382P/00/EN/15.11 71134880
				BA00382P/00/EN/16.12 71157182
				BA00382P/00/EN/17.12 71191304
				BA00382P/00/EN/18.14 71241501
				BA00382P/00/EN/19.14 71270330
				BA00382P/00/EN/20.16 71316868

Device	Date	Softwareversion	Software modifications	Operating Instruction
Deltabar	08.2009	01.00.zz	Original software. Compatible with: – FieldCare from version 2.02.00 – Field Communicator DXR375 with Device Rev.: 1, DD Rev.: 1	BA382P/00/EN/08.09 71089556
				BA382P/00/EN/10.09 71104504
				BA00382P/00/EN/13.10 71123275
				BA00382P/00/EN/14.11 71134588
				BA00382P/00/EN/15.11 71134880
				BA00382P/00/EN/16.12 71157182
				BA00382P/00/EN/17.12 71191304
				BA00382P/00/EN/18.14 71241501
				BA00382P/00/EN/19.14 71270330
				BA00382P/00/EN/20.16 71316868

Device	Date	Softwareversion	Software modifications	Operating Instruction
Deltapilot	10.2009	01.00.zz	Original software. Compatible with: – FieldCare from version 2.02.00 – Field Communicator DXR375 with Device Rev.: 1, DD Rev.: 1	BA382P/00/EN/10.09 71104504
				BA00382P/00/EN/13.10 71123275
				BA00382P/00/EN/14.11 71134588
				BA00382P/00/EN/15.11 71134880
				BA00382P/00/EN/16.12 71157182
				BA00382P/00/EN/17.12 71191304
				BA00382P/00/EN/18.14 71241501
				BA00382P/00/EN/19.14 71270330
				BA00382P/00/EN/20.16 71316868

11 Technical data

For the technical data, please refer to the Technical Information for Cerabar M TI436P / Deltabar M TI434P / Deltapilot M TI437P.

12 Appendix

12.1 Overview of operating menu

All the parameters are listed in the following table. The page number refers to where a description of the parameter can be found.

Level 1	Level 2	Level 3	Level 4	Direct access	Page
Parameters in italics are read-only parameters and cannot be edited. Specific settings, such as the measuring mode, dry or wet calibration, or hardware locking, determine whether these parameters are displayed.					
Language				000	117
Display/operat.	Display mode			001	117
	Add. disp. value			002	117
	Format 1st value			004	118
Setup	Lin./SQRT switch (Deltabar)			133	118
	Measuring mode *Measuring mode (read only)*			005 *182*	118
	Switch P1/P2 (Deltabar)			163	120
	High pressure side (Deltabar) *High pressure side (read only)*			006 *183*	120
	Press. eng. unit			125	119
	Corrected press.			172	122
	Pos. zero adjust (Deltabar M and gauge pressure sensors) Calib. offset (absolute pressure sensor)			007 192	119 119
	Max. flow ("Flow" measuring mode) (Deltabar)			009	128
	Max. pressure flow ("Flow" measuring mode) (Deltabar)			010	128
	Empty calib. (Level measuring mode and "Calibration mode" = wet)			011	124
	Full calib. (Level measuring mode and "Calibration mode" = wet)			012	124
	Set LRV (Pressure measuring mode and flow linear)			013	130
	Set URV (Pressure measuring mode and flow linear)			014	130
	Damping switch (read only)			164	119
	Damping *Damping (read only)*			017 *184*	119
	Flow ("Flow" measuring mode) (Deltabar)			018	128
	Level before lin (Level measuring mode)			019	125
	Pressure af. damp			111	122
	Extended setup	Code definition		023	116
		Device tag		022	117
		Operator code		021	116
		Level (Level measuring mode)	Level selection	024	123
			Unit before lin	025	123
			Height unit	026	123
			Calibration mode	027	123

Level 1	Level 2	Level 3	Level 4	Direct access	Page
...	...	...	Empty calib. *Empty calib.*	028 011	124
... Setup	**... Extended setup**	**... Level** (Level measuring mode)	Empty pressure *Empty pressure (read only)*	029 *185*	124
			Empty height *Empty height (read only)*	030 *186*	124
			Full calib. *Full calib.*	031 012	124
			Full pressure *Full pressure (read only)*	032 *187*	124
			Full height *Full height (read only)*	033 *188*	124
			Adjust density	034	125
			Process density	035	125
			Level before lin	019	125
		Linearization	Lin. mode	037	125
			Unit after lin.	038	125
			Line-numb.:	039	125
			X-value:	040	126
			Y-value:	041	126
			Edit table	042	126
			Tank description	173	126
			Tank content	043	126
		Flow ("Flow" measuring mode) (Deltabar)	Flow type	044	126
			Mass flow unit	045	127
			Norm. flow unit	046	127
			Std. flow unit	047	127
			Flow unit	048	127
			Max. flow	009	128
			Max. pressure flow	010	128
			Set low-flow cut-off	049	128
			Flow	018	128
		Current output	Alarm behavior P	050	129
			Alarm cur. switch	165	129
			Output fail mode	190	129
			High alarm curr.	052	129
			Set min. current	053	130
			Output current	054	129
			Linear/Sqroot (Deltabar) *Linear/Sqroot (read only)*	055 *191*	130
			Get LRV (Pressure measuring mode)	015	130
			Set LRV	013	130
			Get URV (pressure)	016	130
			Set URV	014	130

Level 1	Level 2	Level 3	Level 4	Direct access	Page
...	...	**Totalizer 1** (Deltabar)	Eng. unit totalizer 1	058 059 060 061	135
... Setup	**... Extended setup**	**... Totalizer 1** (Deltabar)	Totalizer 1 mode	175	135
			Totalizer 1 failsafe	176	135
			Reset totalizer 1	062	135
			Totalizer 1	063	135
			Totalizer 1 overflow	064	135
		Totalizer 2 (Deltabar)	Eng. unit totalizer 2	065 066 067 068	136
			Totalizer 2 mode	177	136
			Totalizer 2 failsafe	178	136
			Totalizer 2	069	136
			Totalizer 2 overflow	070	136
Diagnosis	Diagnostic code			071	137
	Last diag. code			072	137
	Min. meas. press.			073	137
	Max. meas. press.			074	137
	Diagnostic list	Diagnostic 1		075	137
		Diagnostic 2		076	137
		Diagnostic 3		077	137
		Diagnostic 4		078	137
		Diagnostic 5		079	137
		Diagnostic 6		080	137
		Diagnostic 7		081	137
		Diagnostic 8		082	137
		Diagnostic 9		083	137
		Diagnostic 10		084	137
	Event logbook	Last diag. 1		085	138
		Last diag. 2		086	138
		Last diag. 3		087	138
		Last diag. 4		088	138
		Last diag. 5		089	138
		Last diag. 6		090	138
		Last diag. 7		091	138
		Last diag. 8		092	138
		Last diag. 9		093	138
		Last diag. 10		094	138
	Instrument info	Firmware version		095	117
		Serial number		096	117
		Ext. order code		097	117
		Order identifier		098	117

Level 1	Level 2	Level 3	Level 4	Direct access	Page
		Cust. tag number		254	117
		Device tag		022	117
...	...	ENP version		099	117
... Diagnosis	... Instrument Info	Config. counter		100	137
		LRL sensor		101	128
		URL sensor		102	128
		Manufacturer ID		103	132
		Device type code		105	132
		Device revision		108	132
	Measured values	Flow (Deltabar)		018	128
		Level before lin		019	125
		Tank content		043	125
		Meas. pressure		020	121
		Sensor pressure		109	122
		Corrected press.		172	122
		Sensor temp. (Cerabar/Deltapilot)		110	120
		Pressure af. damp		111	122
	Simulation	Simulation mode		112	138
		Sim. pressure		113	139
		Sim. flow (Deltabar)		114	139
		Sim. level		115	139
		Sim. tank cont.		116	139
		Sim. current		117	139
		Sim. error no.		118	139
	Reset	Enter reset code		124	118
Expert	Direct access			119	116
	System	Code definition		023	116
		Lock switch		120	116
		Operator code		021	116
		Instrument info	Cust. tag number	254	116
			Device tag	022	117
			Serial number	096	117
			Firmware version	095	117
			Ext. order code	097	117
			Order identifier	098	117
			ENP version	099	117
			Electr. serial no.	121	117
			Sensor serial no.	122	117
		Display	Language	000	117
			Display mode	001	117
			Add. disp. value	002	117
			Format 1st value	004	118
		Management	Enter reset code	124	118

Level 1	Level 2	Level 3	Level 4	Direct access	Page
	Measurement	Lin./SQRT switch (Deltabar)		133	118
		Measuring mode *Measuring mode (read only)*		005 *182*	118
...	**...**				
... Expert	**... Measurement**	**Basic setup**	Pos. zero adjust (Deltabar and gauge pressure sensors) Calib. offset (absolute pressure sensor)	007 008	119
			Damping switch (read only)	164	119
			Damping *Damping (read only)*	017 *184*	119
			Press. eng. unit	125	119
			Temp. eng. unit (Cerabar/ Deltapilot)	126	120
			Sensor temp. (Cerabar/Deltapilot)	110	120
		Pressure	Switch P1/P2 (Deltabar)	163	120
			High pressure side (Deltabar) *High pressure side (read only)*	006 *183*	120
			Set LRV	013	120
			Set URV	014	120
			Meas. pressure	020	121
			Sensor pressure	109	122
			Corrected press.	172	122
			Pressure af. damp	111	122
		Level	Level selection	024	123
			Unit before lin	025	123
			Height unit	026	123
			Calibration mode	027	123
			Empty calib. *Empty calib.*	028 011	124
			Empty pressure *Empty pressure (read only)*	029 *185*	124
			Empty height *Empty height (read only)*	030 *186*	124
			Full calib. *Full calib.*	031 012	124
			Full pressure *Full pressure (read only)*	032 *187*	124
			Full height *Full height (read only)*	033 *188*	124
			Density unit	127	124
			Adjust density *Adjust density (read only)*	034 *189*	125
			Process density *Process density (read only)*	035 *181*	125
			Level before lin	019	125
		Linearization	Lin. mode	037	125
			Unit after lin.	038	125
			Line-numb.:	039	125

Level 1	Level 2	Level 3	Level 4	Direct access	Page
			X-value:	040	126
			Y-value:	041	126
			Edit table	042	126
...	...	...	Tank description	173	126
... Expert	... Measurement	... Linearization	Tank content	043	126
		Flow (Deltabar)	Flow type	044	126
			Mass flow unit	045	127
			Norm. flow unit	046	127
			Std. flow unit	047	127
			Flow unit	048	127
			Max. flow	009	128
			Max. pressure flow	010	128
			Set low-flow cut-off	049	128
			Flow	018	128
		Sensor limits	LRL sensor	101	128
			URL sensor	102	128
		Sensor trim	Lo trim measured	129	129
			Hi trim measured	130	129
			Lo trim sensor	131	129
			Hi trim sensor	132	129
	Output	**Current output**	Output current (read only)	054	129
			Alarm behavior P	050	129
			Alarm cur. switch (read only)	165	129
			Output fail mode *Output fail mode (read only)*	190 *051*	129
			High alarm curr.	052	129
			Set min. current	053	130
			Lin./SQRT switch (Deltabar)	133	130
			Linear/Sqroot (Deltabar)	055	130
			Get LRV (Pressure measuring mode)	015	130
			Set LRV	056 013 166 168	130
			Get URV (Pressure measuring mode)	016	130
			Set URV	057 014 067 169	130
			Start current	134	130
			Curr. trim 4mA	135	131
			Curr. trim 20mA	136	131
			Offset trim 4mA	137	131
			Offset trim 20 mA	138	131

Level 1	Level 2	Level 3	Level 4	Direct access	Page
	Communication	**HART config**	Burst mode	142	132
			Burst option	143	132
			Current mode	144	132
			Bus address	145	132
...	...		Preamble number	146	132
... Expert	**... Communication**	HART info	Device type code	105	132
			Device revision	108	132
			Manufacturer ID	103	132
			Hart version	180	132
			Descriptor	139	132
			HART message	140	132
			HART date	141	133
		HART output	Primary value is	147	133
			Primary value	148	133
			Secondary val. is	149	133
			Secondary value	150	133
			Third value is	151	133
			Third value	152	133
			4th value is	153	133
			4th value	154	133
		HART input	HART input value	155	133
			HART input stat.	179	133
			HART input unit	156	134
			HART input form.	157	134
	Application	Electr. delta P (Cerabar/Deltapilot)		158	134
		Fixed ext. value (Cerabar/Deltapilot)		174	134
		Totalizer 1 (Deltabar)	Eng. unit totalizer 1	058 059 060 061	135
			Totalizer 1 mode	175	135
			Totalizer 1 failsafe	176	135
			Reset totalizer 1	062	135
			Totalizer 1	063	135
			Totalizer 1 overflow	064	135
		Totalizer 2 (Deltabar)	Eng. unit totalizer 2	065 066 067 068	136
			Totalizer 2 mode	177	136
			Totalizer 2 failsafe	178	136
			Totalizer 2	069	136
			Totalizer 2 overflow	070	136
	Diagnosis	Diagnostic code		071	137
		Last diag. code		072	137

Level 1	Level 2	Level 3	Level 4	Direct access	Page
		Reset logbook		159	137
		Min. meas. press.		073	137
		Max. meas. press.		074	137
		Reset peakhold		161	137
...	...	Operating hours		162	137
... Expert	**... Diagnosis**	Config. counter		100	137
		Diagnostic list	Diagnostic 1	075	137
			Diagnostic 2	076	137
			Diagnostic 3	077	137
			Diagnostic 4	078	137
			Diagnostic 5	079	137
			Diagnostic 6	080	137
			Diagnostic 7	081	137
			Diagnostic 8	082	137
			Diagnostic 9	083	137
			Diagnostic 10	084	137
		Event logbook	Last diag. 1	085	138
			Last diag. 2	086	138
			Last diag. 3	087	138
			Last diag. 4	088	138
			Last diag. 5	089	138
			Last diag. 6	090	138
			Last diag. 7	091	138
			Last diag. 8	092	138
			Last diag. 9	093	138
			Last diag. 10	094	138
		Simulation	Simulation mode	112	138
			Sim. pressure	113	139
			Sim. flow (Deltabar)	114	139
			Sim. level	115	139
			Sim. tank cont.	116	139
			Sim. current	117	139
			Sim. error no.	118	139

12.2 Description of parameters

This section describes the parameters in the order they are arranged in the "Expert" operating menu. Parameters (or parameter numbers) in italics are read-only parameters and cannot be edited. Specific settings, such as the measuring mode, dry or wet calibration, or hardware locking, determine whether these parameters are displayed.

Expert

Parameter name	Description
Direct access (119) Entry	Enter the direct access code to go directly to a parameter. **Options:** ▪ A number between 0 and 999 (only valid entries are recognized) **Factory setting:** 0 **Note:** For direct access, it is not necessary to enter leading zeros.

12.2.1 System

Expert → System

Parameter name	Description
Code definition (023) Entry	Use this function to enter a release code with which the device can be unlocked. **Options:** ▪ A number between 0 and 9999 **Factory setting:** 0
Lock switch (120) Display	Displays the status of DIP switch 1 on the electronic insert. You can lock or unlock parameters relevant to the measured value with DIP switch 1. If operation is locked by means of the **"Operator code" (021)** parameter, you can only unlock operation again by means of this parameter. **Display:** ▪ On (locking switched on) ▪ Off (locking switched off) **Factory setting:** Off (locking switched off)
Operator code (021) Entry	Use this function to enter a code to lock or unlock operation. **Options:** ▪ To lock operation: enter a number between 1 and 9999 provided the release code = 0; then a number ≠ release code. ▪ To unlock operation: enter the number 0. The release code is "0" in the order configuration. Another release code can be defined in the "Code definition" parameter. If the user has forgotten the release code, it can be made visible again by entering the number sequence "5864". **Factory setting:** 0

Expert → System → Instrument info

Parameter name	Description
Cust. tag number (254) Entry	Enter device tag e.g. TAG number (max. 8 alphanumeric characters). **Factory setting:** no entry or as per order specifications
Device tag (022) Entry	Enter device tag e.g. TAG number (max. 32 alphanumeric characters). **Factory setting:** no entry or as per order specifications
Serial number (096) Display	Displays the serial number of the device (11 alphanumeric characters).
Firmware version (095) Display	Displays the firmware version.
Ext. order code (097) Display	Enter the extended order code. **Factory setting:** As per order specifications
Order identifier (098) Entry	Enter the order identifier. **Factory setting:** As per order specifications
ENP version (099) Display	Displays the ENP version (ENP = electronic nameplate)
Electr. serial no. (121) Display	Displays the serial number of the main electronics (11 alphanumeric characters).
Sensor serial no. (122) Display	Displays the serial number of the sensor (11 alphanumeric characters).

Expert → System → Display

Parameter name	Description
Language (000) Selection	Select the menu language for the local display. **Options:** ▪ English ▪ Optionally one further language (as selected when ordering the device) ▪ One further language (language of the producing factory) **Factory setting**: English
Display mode (001) Selection	Specify the contents for the first line of the local display in the measuring mode. **Options:** ▪ Primary value (PV) ▪ External value ▪ All alternating **Factory setting:** Primary value (PV)
Add. disp. value (002) Selection	Specify the contents for the second line of the local display in the measuring mode. **Options:** ▪ No value ▪ Pressure ▪ Main value (%) ▪ Current ▪ Temperature ▪ Totalizer 1 ▪ Totalizer 2 The options depend on the measuring mode chosen. **Factory setting:** No value

Parameter name	Description
Format 1st value (004) Selection	Specify the number of places after the decimal point for the value displayed in the main line. **Options:** ▪ Auto ▪ x ▪ x.x ▪ x.xx ▪ x.xxx ▪ x.xxxx ▪ x.xxxxx **Factory setting:** Auto

Expert → System → Management

Parameter name	Description
Enter reset code (124) Entry	Reset parameters completely or partially to the factory values or order configuration, → Page 56, "Resetting to factory settings (reset)". **Factory setting:** 0

12.2.2 Measurement

Expert → Measurement

Parameter name	Description
Lin./SQRT switch (133) Display	Displays the status of DIP switch 4 on the electronic insert, which is used to define the output characteristics of the current output. **Display:** ▪ SW setting The output characteristics is defined by the "Linear/Sqroot" (055) parameter. ▪ Square root The square root signal is used, independent of the setting in the "Linear/Sqroot" (055) parameter. **Factory setting** SW setting
Measuring mode (005) Selection	Select the measuring mode. The operating menu is structured differently depending on the measuring mode selected. **⚠ WARNING** **Changing the measuring mode affects the span (URV)!** This situation can result in product overflow. ▶ If the measuring mode is changed, the span setting (URV) must be verified and, if necessary, reconfigured! **Options:** ▪ Pressure ▪ Level ▪ Flow (Deltabar M only) **Factory setting** Pressure or as per order specifications

Expert → Measurement → Basic setup

Parameter name	Description
Pos. zero adjust (007) (Deltabar M and gauge pressure sensor) Selection	Position adjustment – the pressure difference between zero (set point) and the measured pressure need not be known. **Example:** – Measured value = 2.2 mbar (0.033 psi) – You correct the measured value via the "Pos. zero adjust" parameter with the "Confirm" option. This means that you are assigning the value 0.0 to the pressure present. – Measured value (after pos. zero adjust) = 0.0 mbar – The current value is also corrected. **Factory setting:** Abort
Calib. offset (192) / (008) (absolute pressure sensor) Selection	Position adjustment – the pressure difference between the set point and the measured pressure must be known. **Example:** – Measured value = 982.2 mbar (14.73 psi) – You correct the measured value with the value entered (e.g. 2.2 mbar (0.033 psi)) via the "Calib. offset" parameter. This means that you are assigning the value 980.0 (14.7 psi) to the pressure present. – Measured value (after pos. zero adjust) = 980.0 mbar (14.7 psi) – The current value is also corrected. **Factory setting:** 0.0
Damping switch (164) Display	Displays the switch position of DIP switch 4 which is used to switch the damping of the output signal on and off. **Display:** ▪ Off The output signal is not damped. ▪ On The output signal is damped. The attenuation constant is specified in the "Damping value" parameter (017) (184) **Factory setting** On
Damping value (017) Entry	Enter the damping time (time constant τ). The damping affects the speed at which the measured value reacts to changes in pressure. **Input range:** 0.0 to 999.0 s **Factory setting:** 2.0 or as per order specifications
Press. eng. unit (125) Selection	Select the pressure unit. If a new pressure unit is selected, all pressure-specific parameters are converted and displayed with the new unit. **Options:** ▪ mbar, bar ▪ mmH2O, mH2O, inH2O ▪ ftH2O ▪ Pa, kPa, MPa ▪ psi ▪ mmHg, inHg ▪ kgf/cm^2 **Factory setting:** mbar or bar depending on the sensor nominal measuring range, or as per order specifications

Parameter name	Description
Temp. eng. unit (126) (only for Cerabar M and Deltapilot M) Selection	Select the unit for the temperature measured values. The setting affects the unit for the "Sensor temp." parameter. **Options:** ▪ °C ▪ °F ▪ K **Factory setting:** °C
Sensor temp. (110) (only for Cerabar M and Deltapilot M) Display	Displays the temperature currently measured in the sensor. This can deviate from the process temperature.

Expert → Measurement → Pressure

Parameter name	Description
Switch P1/P2 (163) Display	Indicates whether the "SW/P2High" DIP switch (DIP switch 5) is switched on. The "SW/P2High" DIP switch determines which pressure input corresponds to the high-pressure side. **Display:** ▪ SW setting "SW/P2 High" is switche off: The "High pressure side" (006) parameter determines which pressure input corresponds to the high-pressure side. ▪ P2 High "SW/P2 High" is switched on: Pressure input P2 corresponds to the high-pressure side, independent of the setting in the "High pressure side" (006) parameter. **Factory setting:** SW setting
High pressure side (006) (183) Selection	Determines, which pressure input corresponds to the high-pressure side. This setting is only valid if the "SW/P2High" DIP switch is in the OFF position (see the "Pressure side switch" (163) parameter). Otherwise P2 corresponds to the high-pressure side in any case. **Selection:** ▪ P1 High Pressure input P1 is the high-pressure side. ▪ P2 High Pressure input P2 is the high-pressure side. **Factory setting** P1 High
Set LRV (013) Display	Set the lower-range value – without reference pressure. Enter the pressure value for the lower current value (4 mA). **Factory setting:** 0.0 or as per order specifications
Set URV (014) Display	Set the upper-range value – without reference pressure. Enter the pressure value for the upper current value (20 mA). **Factory setting:** Upper range limit sensor or as per order specifications.

Parameter name	Description
Meas. pressure (020) Display	Displays the measured pressure after sensor recalibration, position adjustment and damping.

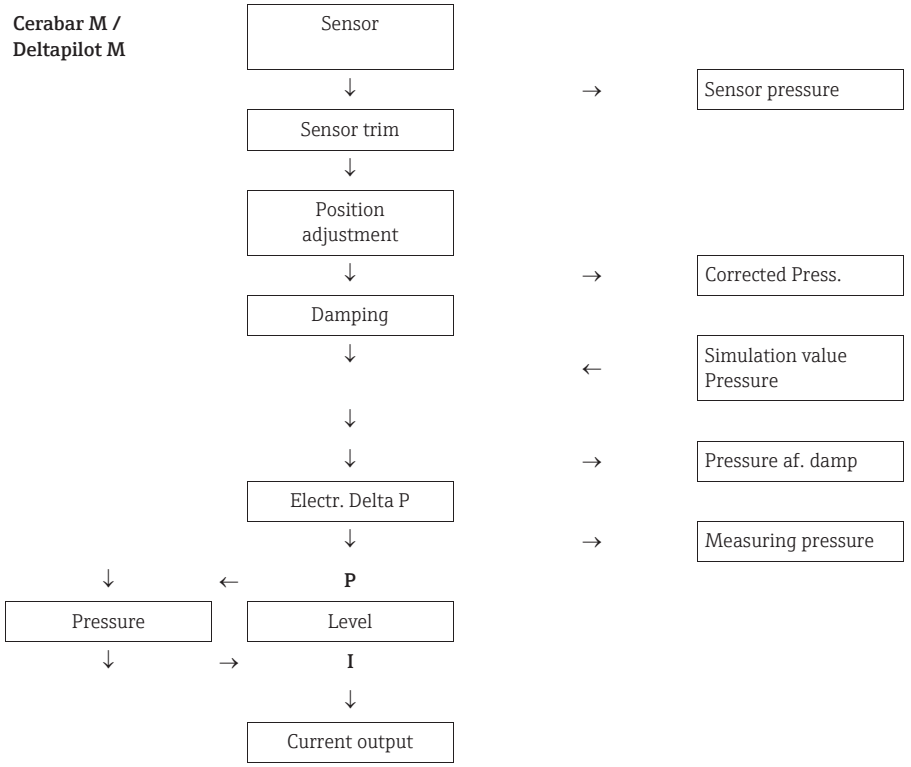

Deltabar M

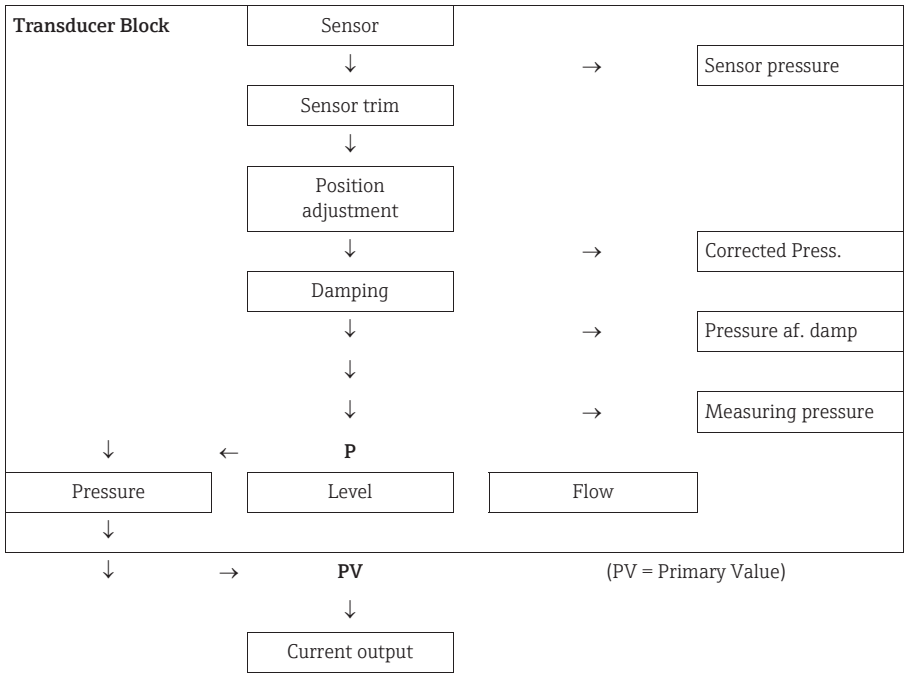

Parameter name	Description
Sensor pressure (109) Display	Displays the measured pressure before the sensor trim and position adjustment.
Corrected press. (172) Display	Displays the measured pressure after sensor trim and position adjustment.
Pressure af. damp (111) Display	Displays the measured pressure after sensor trim, position adjustment and damping.

Expert → Measurement → Level

Parameter name	Description
Level selection (024) Selection	Select the method for calculating the level **Options:** ▪ In pressure If this option is selected, specify two pressure/level value pairs. The level value is displayed directly in the unit that you select via the "Unit before lin" parameter. ▪ In height If this option is selected, specify two height/level value pairs. From the measured pressure, the device first calculates the height using the density. This information is then used to calculate the level in the "Unit before lin" selected using the two value pairs specified. **Factory setting:** In pressure
Unit before lin (025) Selection	Select the unit for the measured value display for the level before linearization.  The unit selected is only used to describe the measured value. This means that the measured value is not converted when a new output unit is selected. Example: ▪ Current measured value: 0.3 ft ▪ New output unit: m ▪ New measured value: 0.3 m **Options** ▪ % ▪ mm, cm, dm, m ▪ ft, inch ▪ m^3, in^3 ▪ l, hl ▪ ft^3 ▪ gal, Igal ▪ kg, t ▪ lb **Factory setting:** %
Height unit (026) Selection	Select the height unit. The measured pressure is converted to the selected height unit using the "Adjust density" parameter. **Prerequisite** "Level selection" = "In height" **Options** ▪ mm ▪ m ▪ inch ▪ ft **Factory setting:** m
Calibration mode (027) Selection	Select the calibration mode. **Options:** ▪ Wet Wet calibration takes place by filling and emptying the container. With two different levels, the level, volume, mass or percentage value entered is assigned to the pressure measured at this point in time ("Empty calibration" and "Full calibration" parameters). ▪ Dry Dry calibration is a theoretical calibration. For this calibration, you specify two pressure/level value pairs via the following parameters: "Empty calib.", "Empty pressure", "Full calib.", "Full pressure". **Factory setting:** Wet

Parameter name	Description
Empty calib. (028) **Empty calib. (011)** Entry	Enter the output value for the lower calibration point (container empty). The unit defined in "Unit before lin" must be used.  ▪ In the case of wet calibration, the level (container empty) must actually be available. The associated pressure is then automatically recorded by the device. ▪ In the case of dry calibration, the level (container empty) does not have to be available. The associated pressure has to be entered in the "**Empty pressure (029)**" parameter for the "In pressure" level selection. The associated height has to be entered in the "Empty height (030)" parameter for the "In height" level selection. **Factory setting:** 0.0
Empty pressure (029) Entry/display	Enter the pressure value for the lower calibration point (container empty). → See also "**Empty calib. (028)**". **Prerequisite** ▪ "Level selection" = In pressure "Calibration mode" = Wet (display only), Dry (entry) **Factory setting:** 0.0
Empty height (030) Entry/display	Enter the height value for the lower calibration point (container empty). Select the unit via the "**Height unit (026)**" parameter. **Prerequisite:** ▪ "Level selection" = in height and "Calibration mode" = wet (display only) , Dry (entry) **Factory setting:** 0.0
Full calib. (031) **Full calib. (012)** Entry	Enter the output value for the upper calibration point (container full). The unit defined in "Unit before lin" must be used.  ▪ In the case of wet calibration, the level (container full) must actually be available. The associated pressure is then automatically recorded by the device. ▪ In the case of dry calibration, the level (container full) does not have to be available. The associated pressure has to be entered in the "Full pressure (030)" parameter for the "In pressure" level mode. The associated height has to be entered in the "Empty height" parameter for the "In height" level selection. **Factory setting:** 100.0
Full pressure (032) Entry/display	Enter the pressure value for the upper calibration point (container full). → See also "Full calib.". **Prerequisite** ▪ "Level selection" = in pressure and "Calibration mode" = wet (display only), Dry (entry) **Factory setting:** Upper-range limit (URL) of the sensor
Full height (033) Entry/display	Enter the height value for the upper calibration point (container full). You select the unit via the "Height unit" parameter. **Prerequisite:** ▪ "Level selection" = in height and "Calibration mode" = wet (display only), Dry (entry) **Factory setting:** Upper-range limit (URL) is converted to a height unit
Density unit (127) Display	Displays the density unit. The measured pressure is converted to a height using the "Height unit", "Density unit" and "Adjust density" parameters. **Factory setting:** ▪ g/cm^3

Parameter name	Description
Adjust density (034) Entry	Enter the density of the medium. The measured pressure is converted to a height using the "Height unit" and "Adjust density" parameters. **Factory setting:** 1.0
Process density (035) Entry	Enter a new density value for density correction. The calibration was carried out with water as the medium, for example. Now the container is to be used for another medium with another density. The calibration is corrected appropriately by entering the new density value in the "Process density" parameter.  If you change to dry calibration after a wet calibration using the "Calibration mode" parameter, the density for the "Adjust density" and "Process density" parameters must be entered correctly before changing the calibration mode. If the pressure falls with increasing levels, such as in the case of residual volume measurement, a negative value must be entered for this parameter. **Factory setting:** 1.0
Level before lin. (019) Display	Displays the level value prior to linearization.

Expert → Measurement → Linearization

Parameter name	Description
Lin. mode (037) Selection	Select the linearization mode. **Options:** ▪ Linear The level is output without being converted beforehand. "Level before lin." is output. ▪ Erase table The existing linearization table is deleted. ▪ Manual entry (sets the table to the edit mode, an alarm is output): The value pairs of the table (X-value and Y-value) are entered manually. ▪ Semiautomatic entry (sets the table to the edit mode, an alarm is output): The container is emptied or filled in stages in this entry mode. The device automatically records the level value (X-value). The associated volume, mass or %-value is entered manually (Y-value). ▪ Activate table The table entered is activated and checked with this option. The device shows the level after linearization. **Factory setting:** Linear
Unit after lin. (038) Selection	Select the volume unit (unit of the Y-value). **Options:** ▪ % ▪ cm, dm, m, mm ▪ hl ▪ in^3, ft^3, m^3 ▪ l ▪ in, ft ▪ kg, t ▪ lb ▪ gal ▪ Igal **Factory setting:** %
Line numb. (039) Entry	Enter the number of the current point in the table. The subsequent entries for "X-value" and "Y-value" refer to this point. **Input range:** ▪ 1 to 32

Parameter name	Description
X-value (193/040) Display/Entry	Enter the level value for the specific point in the table and confirm.  ▪ If "Lin. mode" = "Manual", the level value has to be entered. ▪ If "Lin. mode" = "Semiautomatic", the level value is displayed and has to be confirmed by entering the associated Y-value.
Y-value (041) Entry	Enter the output value for the specific point in the table. The unit is determined by "Unit after lin.".  The linearization table must be monotonic (increasing or decreasing).
Edit table (042) Selection	Select the function for entering the table. **Options:** ▪ Next point: enter the next point. ▪ Current point: stay on the current point to correct a mistake for example. ▪ Previous point: skip back to the previous point to correct a mistake for example. ▪ Insert point: insert an additional point (see example below). ▪ Delete point: delete the current point (see example below). **Example:** Add a point - in this case between the 4th and 5th point for example – Select point 5 via the "Line-numb." parameter. – Select the "Insert point" option via the "Edit table" parameter. – Point 5 is displayed for the "Line-numb" parameter. Enter new values for the "X-value" and "Y-value" parameters. **Example:** Delete a point - in this case the 5th point for example – Select point 5 via the "Line-numb." parameter. – Select the "Delete point" option via the "Edit table" parameter. – The 5th point is deleted. All of the subsequent points are moved up one number i.e. following deletion, the 6th point becomes Point 5. **Factory setting:** Current point
Tank description (173) Entry	Enter the tank description (max. 32 alphanumeric characters)
Tank content (043) Display	Displays the level value after linearization.

Expert → Measurement → Flow (Deltabar M)

Parameter name	Description
Flow type (044) Selection	Select the flow type. **Options:** ▪ Volume process cond. (volume under operating conditions) ▪ Volume norm. cond. (norm volume under norm conditions in Europe: 1013,25 mbar and 273,15 K (0 °C)) ▪ Volume std. cond. (standard volume under standard conditions in the USA: 1013,25 mbar (14,7 psi) and 288,15 K (15 °C/59 °F)) ▪ Mass (mass under operating conditions) ▪ Flow in % **Factory setting:** Flow in %

Parameter name	Description
Mass flow unit (045) Selection	Select mass flow unit. When a new flow unit is selected, all flow-specific parameters are converted and displayed with the new unit within a flow type. When the flow type is changed, conversion is not possible. **Prerequisite:** ▪ "Flow type" (044) = Mass **Options:** ▪ g/s, kg/s, kg/min, kg/h ▪ t/s, t/min, t/h, t/d ▪ oz/s, oz/min ▪ lb/s, lb/min, lb/h ▪ ton/s, ton/min, ton/h, ton/d **Factory setting:** kg/s
Norm. flow unit (046) Selection	Select norm flow unit. When a new flow unit is selected, all flow-specific parameters are converted and displayed with the new unit within a flow type. When the flow type is changed, conversion is not possible. **Prerequisite:** ▪ "Flow type" (044) = Volume norm. cond. **Options:** ▪ Nm3/s, Nm3/min, Nm3/h, Nm3/d **Factory setting:** Nm^3/s
Std. flow unit (047) Selection	Select standard flow unit. When a new flow unit is selected, all flow-specific parameters are converted and displayed with the new unit within a flow type. When the flow type is changed, conversion is not possible. **Prerequiste:** ▪ "Flwo type" (044) = Volume std. cond. **Options:** ▪ Sm3/s, Sm3/min, Sm3/h, Sm3/d ▪ SCFS, SCFM, SCFH, SCFD **Factory setting:** Sm^3/s
Flow unit (048) Selection	Select volume flow unit. When a new flow unit is selected, all flow-specific parameters are converted and displayed with the new unit within a flow type. When the flow type is changed, conversion is not possible. **Prerequisite:** ▪ "Flow type" (044) = Volume process cond. **Options:** ▪ dm3/s, dm3/min, dm3/h ▪ m3/s, m3/min, m3/h, m3/d ▪ l/s, l/min, l/h ▪ hl/s, hl/min, hl/d ▪ ft3/s, ft3/min, ft3/h, ft3/d ▪ ACFS, ACFM, ACFH, ACFD ▪ ozf/s, ozf/min ▪ Gal/s, Gal/min, Gal/h, Gal/day, MGal/d ▪ I. Gal/s, I. Gal/min, I. Gal/h ▪ bbl/s, bbl/min, bbl/h, bbl/d **Factory setting:** m^3/s

Parameter name	Description
Max. flow (009) Entry	Enter maximum flow of primary element. See also layout sheet of primary element. The maximum flow is assigned to the maximum pressure which you enter via the "Max. pressure flow" (010) parameter. Use the "**Linear/Sqroot**" **(055)** parameter to specify the current signal for the "Flow" measuring mode. The following applies for the "square root" setting: If you enter a new value for "**Max. flow**" **(009)**, the value for "**Set URV**" **(057)** is also changed. Use the "**Set URV**" **(057)** parameter to assign a flow to the upper current value. If you want to assign the upper current value a value other than that for "**Max. flow**" **(009)**, you must enter the desired value for "**Set URV**" **(057)**. **Factory setting:** 100.0
Max. pressure flow (010) Entry	Enter maximum pressure of primry element. → See layout sheet of primary element. This pressure is assigned to the flow defined in the "**Max. flow**" **(009)** parameter. Use the "**Lienar/Sqroot**" **(055)** parameter to specify the current signal for the "Flow" measuring mode. The following applies for the "linear" setting: If you enter a new value for "**Max. pressure flow**" **(010)**, the value for "**Set URV**" **(014)** is also changed. Use the "**Set URV**" **(014)** parameter to assign a presure value to the upper current value. If you want to assign the upper current value a value other than that for "Max. press. flow" (010), you must enter the desired value for "**Set URV**" **(014)**. **Factory setting:** Upper range limit (URL) of the sensor
Set low-flow cut-off (049) Entry	Enter switch-on point of the flow-flow cut-off. Thje hysteresis between the switch-on point and the switch-off point is always 1 % of the maximum flow value. **Input range:** 0...50 % of the end flow value t (**"Max. flow" (009)**). 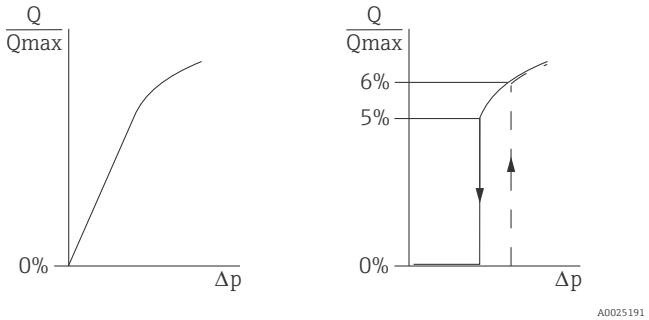 **Factory setting:** 5 % (of the maximum flow value)
Flow (018) Display	Displays the present flow value.

Expert → Measurement → Sensor limits

Parameter name	Description
LRL sensor (101) Display	Displays the lower-range limit of the sensor.
URL sensor (102) Display	Displays the upper-range limit of the sensor.

Expert → Measurement → Sensor trim

Parameter name	Description
Lo trim measured (129) Display	Displays the reference pressure present to be accepted for the lower calibration point.
Hi trim measured (130) Display	Displays the reference pressure present to be accepted for the upper calibration point.
Lo trim sensor (131) Display	Sensor recalibration by entering a target pressure while simultaneously and automatically accepting a reference pressure present for the lower calibration point.
Hi trim sensor (132) Display	Sensor recalibration by entering a target pressure while simultaneously and automatically accepting a reference pressure present for the upper calibration point.

12.2.3 Output

Expert → Output → Current output

Parameter name	Description
Output current (054) Display	Displays the current value of the current.
Alarm behav. P (050) Selection	Configure the current output for when the sensor limits are undershot or overshot. **Options:** ▪ Warning The device continues measuring. An error message is displayed. ▪ Alarm The output signal assumes a value that can be specified by the "Output fail mode" function. ▪ NAMUR – Lower sensor limit undershot: Current output = 3.6 mA – Upper sensor limit overshot: Current output assumes value of 21 to 23 mA, depending on the setting of the "**High alarm curr.**" **(052) parameter**. **Factory setting:** Warning
Alarm cur. switch (165)	Displays the switch status of DIP switch 3 "SW/alarm min." **Display** ▪ AF The alarm current has the value defined in the **"Output fail mode" (190)**. ▪ Alarm min. The alarm current is 3.6 mA regardless of the software setting.
Output fail mode (190) Selection	Select the output fail mode. In the event of an alarm, the current assumes the current value specified with this parameter. **Options:** ▪ Max. (110%): can be set from 21 to 23 mA Max: can be set from 21 to 23 mA → see also "**High alarm curr. (052)**" ▪ Hold: last measured value is held ▪ Min. (−10%): 3.6 mA **Factory setting:** Max. alarm 110% (22 mA)
High alarm curr. (052) Entry	Enter the current value for the high alarm current. → See also "Output fail mode". **Input range:** 21 to 23 mA **Factory setting:** 22 mA

Parameter name	Description
Set min. current (053) Entry	Enter the lower current limiting value. Some switching units do not accept current values lower than 4.0 mA. **Options:** ▪ 3.8 mA ▪ 4.0 mA **Factory setting:** 3.8 mA
Lin./SQRT switch (133) Display	Displays the state of DIP switch 4 "SW/SQRT". **Display** ▪ SW The output characteristics is defined in the "Linear/Sqroot" (055) parameter ▪ Square root The output characteristics follows a square root function, independent of the software setting. This characteristics is needed for differential pressure flow measurement.
Linear/Sqroot (055) Selection	Specify current signal for the "Flow" measuring mode. See also: "Set LRV" (056) and "Set URV" (057). **Prerequisite:** ▪ "Measuring mode" (005) = Flow **Options:** ▪ Linear The linear pressure signal is used for the current output. The flow must be calculated in the evaluation unit. ▪ Flow (square root) The root flow signal is used for the current output. The "Flow (square root)" current signal is indicated on the on-site display with a root symbol. **Factory setting:** Square root
Get LRV (015) Entry (only in pressure measuring mode)	Set the lower-range value – reference pressure is present at the device. The pressure for the lower current value (4 mA) is present at the device. With the "Confirm" option, you assign the lower current value to the pressure value present. **Options:** ▪ Abort ▪ Confirm
Set LRV (056, 013, 166, 168) Entry	Set the pressure value for the lower current value (4 mA). **Factory setting:** 0.0 % in the level measuring mode; 0.0 or in accordance with ordering specifications in the pressure measuring mode 0.0 m^3/h in the flow measureing mode
Get URV (016) Entry (only in pressure measuring mode)	Set the upper-range value – reference pressure is present at the device. The pressure for the upper current value (20 mA) is present at the device. With the "Confirm" option, you assign the upper current value to the pressure value present. **Options:** ▪ Abort ▪ Confirm
Set URV (057, 014, 167, 169) Entry	Set the pressure value for the upper current value (20 mA). **Factory setting:** 100.0 % in the level measuring mode; URL sensor or in accordance with ordering information in the pressure measuring mode; 3600 m^3/h in the flow measuring mode
Startcurrent (134) Entry	Use this function to enter the start current. This setting is also effective in the HART multidrop mode. **Options:** ▪ 12 mA ▪ Max Alarm (22 mA, non-adjustable) **Factory setting:** 12 mA

Parameter name	Description
Curr. trim 4mA (135) Entry	Enter the current value for the lower point (4 mA) of the current linear regression line. You can adapt the current output to the transmission conditions with this parameter and "Curr. trim 20mA". Perform the current trim for the lower point as follows: 1. Select the "Current" option in the "Simulation mode" parameter. 2. Set the 4mA value in the "Sim. current" parameter. 3. Enter the current value measured with the switching unit in the "Curr. trim 4mA" parameter. **Input range:** Measured current ±0.2 mA **Factory setting:** 4 mA
Curr. trim 20mA (136) Entry	Enter the current value for the upper point (20 mA) of the current linear regression line. You can adapt the current output to the transmission conditions with this parameter and "Curr. trim 4mA". Perform the current trim for the lower point as follows: 1. Select the "Current" option in the "Simulation mode" parameter. 2. Enter the "20 mA" value in the "Sim. current" parameter. 3. Enter the current value measured with the switching unit in the "Curr. trim 20mA" parameter. **Input range:** Measured current ±0.2 mA **Factory setting:** 20 mA
Offset trim 4mA (137) Display	Displays the difference between 4 mA and the value entered for the "Curr. trim 4mA" parameter. **Factory setting:** 0
Offset trim 20mA (138) Display	Displays the difference between 20 mA and the value entered for the "Curr. trim 20mA" parameter. **Factory setting:** 0

12.2.4 Communication

Expert → Communication → HART config

Parameter name	Description
Burst mode (142) Selection	Switch the burst mode on and off. **Options:** ▪ On ▪ Off
Burst option (143) Entry	Use this parameter to specify what HART command is sent to the master. **Options:** ▪ 1 (HART command 1) ▪ 2 (HART command 2) ▪ 3 (HART command 3) ▪ 9 (HART command 9) ▪ 33 (HART command 33) **Factory setting:** 1 (HART command 1)
Current mode (144) Selection	Configure the current mode for HART communication. **Options:** ▪ Signaling Measured value transmitted by the current value ▪ Fixed Fixed current 4.0 mA (multidrop mode) (measured value only transmitted via HART digital communication) **Factory setting** Signaling
Bus address (145) Entry	Enter the address for exchanging data via the HART protocol. (HART 5.0 master: Range 0 to 15, where address = 0 calls up the "Signaling" setting; HART 6.0 master: range 0 to 63) **Factory setting:** 0
Preamble number (146) Entry	Enter the number of preambles in the HART protocol. (Synchronization of the modem modules along a transmission path, each modem module could "swallow" one byte; at least 2 bytes must be preambles.) **Input range:** 2 to 20 **Factory setting:** 5

Expert → Communication → HART info

Parameter name	Description
Device type code (105) Display	Displays the numeric ID of the device. For Deltabar M: 33 For Deltapilot: 35 For Cerabar: 25
Device revision (108) Display	Displays the device revision. e.g.: 1
Manufacturer ID (103) Display	Displays the manufacturer number in decimal numerical format. Here: 17 Endress+Hauser
HART revision (180) Display	Displays the HART revision. Here: 6
Descriptor (139) Entry	Enter the tag description (max. 16 alphanumeric characters).
HART message (140) Entry	Enter a message (max. 32 alphanumeric characters). This message is sent via the HART protocol at the request of the master.

Parameter name	Description
HART date (141) Entry	Enter the date of the last change in configuration. **Factory setting:** DD/MM/YY (date of the final test)

Expert → Communication → HART output

Parameter name	Description
Primary value is (147) Display	Indicates which measured variable is transmitted as the primary process value via the HART protocol. The variable displayed depends on the "measuring mode" selected: – "Pressure" measuring mode: "Meas. pressure" – "Level" measuring mode, "Linear" lin. mode: "Level before lin." – "Level" measuring mode, "Activate table" lin. mode: "Tank content"
Primary value (148) Display	Displays the primary process value. → See also "Primary value is"
Secondary val. is (149) Display	Secondary value. Displays the assignment. The following process values can be displayed depending on the measuring mode selected: – "Meas. pressure" – "Sensor pressure" – "Corrected press." – "Pressure af. damp" – "Sensor temp." – "Level before lin." – "Tank content" – "Flow" – Totalizer 1 – Totalizer 2
Secondary value (150) Display	Displays the secondary process value. → See also "Secondary val. is"
Third value is (151) Display	Third process value. Displays the assignment. → See also "Secondary val. is"
Third value (152) Display	Displays the third process value. → See also "Third val. is"
4th value is (153) Display	4th process value. Displays the assignment. → See also "Secondary val. is"
4th value (154) Display	Displays the 4th process value. → See also "4th value is"

Expert → Communication → HART input

Parameter name	Description
HART input value (155) Display	Displays the HART input value.
HART input stat. (179) Display	Displays the HART input status Bad / Uncertain / Good

Parameter name	Description
HART input unit (156) Selection	Select the HART input value. **Options:** ▪ Unknown ▪ mbar, bar ▪ mmH2O, ftH2O, inH2O ▪ Pa, hPa, kPa, MPa ▪ psi ▪ mmHg, inHg ▪ Torr ▪ g/cm^2, kg/cm^2 ▪ lb/ft^2 ▪ atm ▪ °C, °F, K, R **Factory setting:** Unknown
HART input form. (157) Selection	Specify the format for displaying the HART input value. **Options:** ▪ x.x (default) ▪ x.xx ▪ x.xxx ▪ x.xxxx ▪ x.xxxxx **Factory setting:** x.x

12.2.5 Application

Expert → Application (Cerabar M and Deltapilot M)

Parameter name	Description
Electr. delta P (158) Entry	For switching the electr. delta P application on or off with an external or constant value. **Options:** Off External value Constant **Factory setting:** Off
Fixed ext. value (174) Entry	Use this function to enter the constant value. The value refers to "HART input unit". **Factory setting:** 0.0

Expert → Application → Totalizer 1 (Deltabar M)

With the "Flow in %" flow type setting, the totalizer is not avaialble and is not displayed at this position.

Parameter name	Description
Eng. unit totalizer 1 (058) (059) (060) (061) Selection	Select unit for totalizer 1. **Options** Depending on the settinbg in the "Flow meas. type" (044) parameter this parameter offers a list of volume, norm volume, standard volume and mass units. When a new volume or mass unit is selected, totalizuer-specific parameters are converted and displayed with the new unit within a unit group. When the flow mode is change, the totalizer value is not converted. The Direct Access Code depends on the selection in the "Flow meas. type" (044) parameter: – (058): Flow. meas. type "Mass" – (059): Flow. meas. type "Volume norm. cond." – (060): Flow. meas. type "Volume std. cond." – (061): Flow. meas. type "Volume process cond." **Factory setting:** m^3
Totalizer 1 mode (175)	Define the behavior of the totalizer. **Options:** ▪ Balanced: Integration of all measured flows (positive and negative) ▪ Pos. flow only: only positive flows are integrated. ▪ Neg. flow only: only negative flows are integrated. ▪ Hold: No flow is integrated. The totalizer keeps its current value. **Factory setting:** Pos. flow only
Totalizer 1 failsafe (176)	Define the behavior of the totalizer in the case of an error. **Options:** ▪ Run: Totalizing is continued. ▪ Hold: The totalizer is stopped and keeps its current value.
Reset Totalizer 1 (062) Selection	You reset totalizer 1 to zero with this parameter. **Selection:** ▪ Abort (do not reset) ▪ Reset **Factory setting:** Abort
Totalizer 1 (063) Display	Displays the total flow value of totalizer 1. You can reset the value with the "Reset totalizer 1" (062) parameter. The "Totalizer 1 overflow" (064) parameter displays the overflow. **Example:** The value123456789 m^3 is indicated as follows: – Totalizer 1: 3456789 m^3 – Totalizer 1 overflow: 12 E7 m^3
Totalizer 1 overflow (064) Display	Displays the overflow value of totalizer 1. → See also **"Totalizer 1" (063)**.

Expert → Application → Totalizer 2 (Deltabar M)

With the "Flow in %" flow type setting, the totalizer is not avaialble and is not displayed at this position.

Parameter name	Description
Eng. unit totalizer 2 (065) (066) (067) (068) Selection	Select the unit for totalizer 2. → See also "Eng. unit totalizer 1". The Direct Access Code depends on the selection in the "Flow meas. type" (044) parameter: – (065): Flow. meas. type "Mass" – (066): Flow. meas. type "Gas norm. cond." – (067): Flow. meas. type "Gas. std. cond." – (068): Flow. meas. type "Volume process cond." **Factory setting:** m^3
Totalizer 2 mode (177)	Define the behavior of the totalizer. **Options:** ▪ Balanced: Integration of all measured flows (positive and negative) ▪ Pos. flow only: only positive flows are integrated. ▪ Neg. flow only: only negative flows are integrated. ▪ Hold: No flow is integrated. The totalizer keeps its current value. **Factory setting:** Pos. flow only
Totalizer 2 failsafe (178)	Define the behavior of the totalizer in the case of an error. **Options:** ▪ Run: Totalizing is continued. ▪ Hold: The totalizer is stopped and keeps its current value.
Totalizer 2 (069) Display	Displays the total flow value of totalizer 2. The "Totalizer 2overflow" (070) parameter displays the overflow. See the example for "Totalizer 1"
Totalizer 2 overflow (070) Display	Displays the overflow value of totalizer 2. See the example for "Totalizer 1".

12.2.6 Diagnosis

Expert → Diagnosis

Parameter name	Description
Diagnostic code (071) Display	Displays the diagnostic message with the highest priority currently present.
Last diag. code (072) Display	Displays the last diagnostic message that occurred and was rectified.  ▪ Digital communication: the last message is displayed. ▪ The messages listed in the "Last diag. code" parameter can be deleted via the "Reset logbook" parameter.
Reset logbook (159) Selection	With this parameter, you reset all the messages of the "Last diag. code" parameter and the "Last diag. 1" to "Last diag. 10" event log. **Options:** ▪ Abort ▪ Confirm **Factory setting:** Abort
Min. meas. press. (073) Display	Displays the lowest pressure value measured (peakhold indicator). You can reset this indicator by means of the "Reset peakhold" parameter.
Max. meas. press. (074) Display	Displays the highest pressure value measured (peakhold indicator). You can reset this indicator by means of the "Reset peakhold" parameter.
Reset peakhold (161) Selection	You can reset the "Min. meas. press." and "Max. meas. press." indicators with this parameter. **Options:** ▪ Abort ▪ Confirm **Factory setting:** Abort
Operating hours (162) Display	Displays the hours of operation. This parameter cannot be reset.
Config. counter (100) Display	Displays the configuration counter. This counter is increased by one every time a parameter or group is changed. The counter counts up to 65535 and then starts again at zero.

Expert → Diagnosis → Diagnostic list

Parameter name	Description
Diagnostic 1 (075) Diagnostic 2 (076) Diagnostic 3 (077) Diagnostic 4 (078) Diagnostic 5 (079) Diagnostic 6 (080) Diagnostic 7 (081) Diagnostic 8 (082) Diagnostic 9 (083) Diagnostic 10 (084)	These parameters contain up to ten diagnosis messages that are currently pending, arranged in order of priority.

Expert → Diagnosis → Event logbook

Parameter name	Description
Last diag. 1 (085) Last diag. 2 (086) Last diag. 3 (087) Last diag. 4 (088) Last diag. 5 (089) Last diag. 6 (090) Last diag. 7 (091) Last diag. 8 (092) Last diag. 9 (093) Last diag. 10 (094)	These parameters contain the last 10 diagnosis messages to occur and be rectified. They can be reset with the "Reset logbook" parameter. Errors which have occurred multiple times are displayed once only.

Expert → Diagnosis → Simulation

Parameter name	Description
Simulation mode (112) Selection	Switch on simulation and select the simulation mode. Any simulation running is switched off if the measuring mode or level type (Lin. mode (037)) is changed. **Options**: ▪ None ▪ Pressure, → see also this table, "Sim. pressure" parameter ▪ Level, → see this table, "Sim. level" parameter ▪ Flow, → see this table, "Sim. flow" parameter ▪ Tank content, → see this table, "Sim. tank cont." parameter ▪ Current, → see this table, "Sim. current" parameter ▪ Alarm/warning, → see this table, "Sim. error no." parameter **Factory setting:** None

Cerabar M /
Deltapilot M

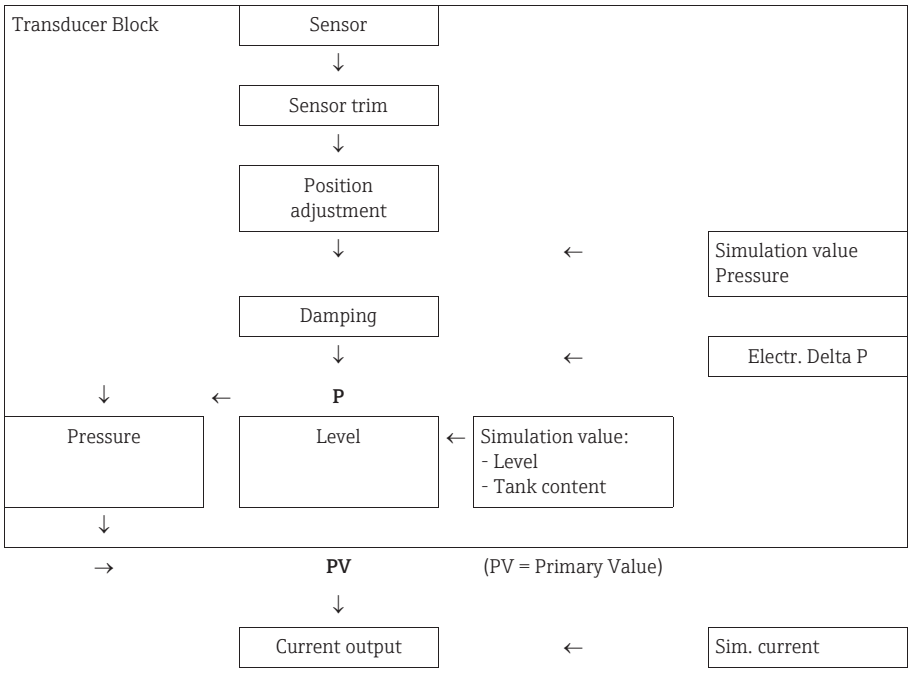

Parameter name	Description
Deltabar M 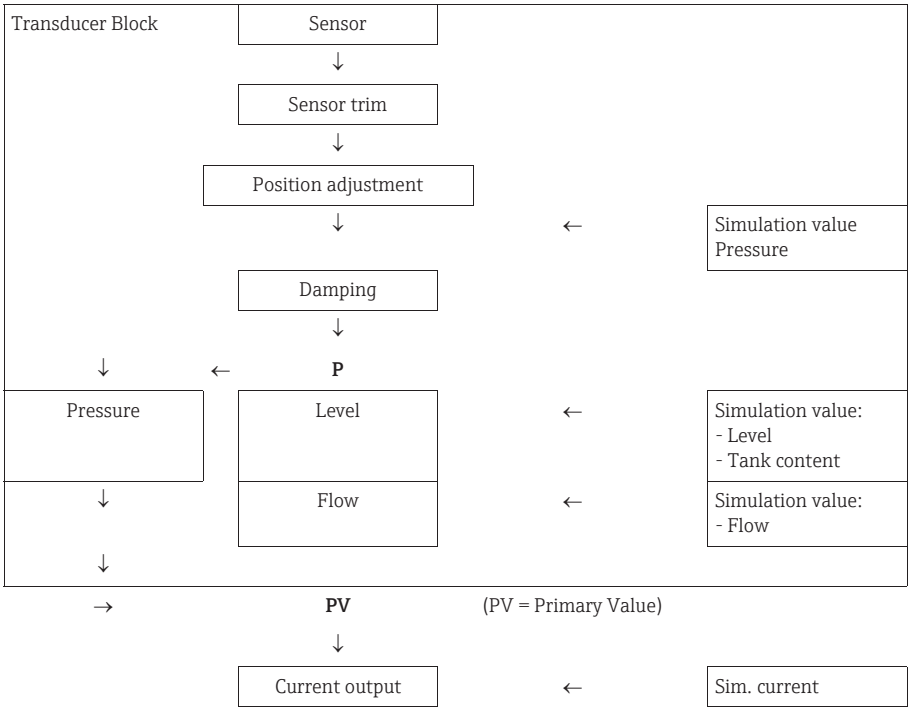 	
Sim. pressure (113) Entry	Enter the simulation value. → See also "Simulation mode". **Prerequisite:** ▪ "Simulation mode" = Pressure **Switch on value:** Current pressure measured value
Sim. flow (114) Entry	Enter the simulation value. → See also "**Simulation mode (112)**". **Prerequisite:** ▪ "Meas. mode" = Flow and "Simulation Mode" = Flow
Sim. level (115) Entry	Enter the simulation value. → See also "Simulation mode". **Prerequisite:** ▪ "Measuring mode" = Level and "Simulation mode" = Level
Sim. tank cont. (116) Entry	Enter the simulation value. → See also "Simulation mode". **Prerequisites:** ▪ "Measuring mode" = Level, "Activate table" lin. mode and "Simulation mode" = Tank content.
Sim. current (117) Entry	Enter the simulation value. → See also "Simulation mode". **Prerequisite:** ▪ "Simulation mode"= Current value **Factory setting:** Current value of the current
Sim. error no. (118) Entry	Enter the diagnostic message number. → See also "Simulation mode". **Prerequisite:** ▪ "Simulation mode"= Alarm/warning **Switch on value:** 484 (simulation active)

Index

B
Basic safety instructions 6

C
Cable specification 40
Commubox FXA195 anschließen 41

D
Designated use 6
Diaphragm seals, installation instructions 17
Diaphragm seals, vacuum application 18
Differential pressure measurement 83
Differential pressure measurement, installation 28
Differential pressure measurement, preparatory steps 83
Differential pressure measurement, Setup menu 84
Display 50

E
Electrical connection 38
Error messages 101

F
Factory setting 56
FieldCare 54
Flow measurement 85
Flow measurement, installation 24
Flow measurement, Ouick Setup menu 87
Flow measurement, preparatory steps 86

G
General structure of the operating menu 48

H
Hazardous area 7

I
Installation instructions 32
Installation instructions for devices with diaphragm seals 17
Installation instructions for devices without diaphragm seals 14

K
Keys, local, function 47, 52
Keys, local, level measuring mode 61
Keys, local, pressure measuring mode 60

L
Language, selection 63
Level measurement 16, 65, 91
Level measurement, installation 26
Level measurement, preparatory steps 88
Linearization 75
Local display 50
Locking operation 47, 55

M
Measuring arrangement for pressure measurement . 15–16
Measuring layout for flow measurement 25
Measuring layout for level measurement 26
Measuring layout for pressure measurement 28
Measuring mode, selection 63
Mounting, suspension clamp 34

N
Nameplate 8

O
Operating elements, function 47, 52
Operating elements, position 46
Operating keys, on-site, Flow measuring mode 62
Operating keys, position 46
Operational safety 6
Overvoltage protection 42

P
Pipe mounting 21, 29, 35
Position adjustment 64
Potential equalization 41
Pressure measurement, Setup menu 84
Pressure measuring mode 84
Product safety 7

R
Repair 103
Repair of Ex-certified devices 103
Reset 56
Returning devices 104

S
Scope of delivery 11
Separate housing, assembly and mounting 22, 36
Setup menu flow 87
Setup menu pressure 84
Shielding 41
SIL 7
Software history 105
Spare Parts 104
Storage 12
Supply voltage 40

T
Temperature isolator, installation instructions 19

U
Unlocking operation 47, 55

W
Wall and pipe-mounting 29
Wall mounting 21, 35
Welding recommendation 23
Workplace safety 6



www.addresses.endress.com

Endress+Hauser

People for Process Automation

ENDRESS + HAUSER

SOLISWITCH FTE31, LEVEL SWITCH

LEFT BLANK

KA 094R/09/a3/01.09
No.: 510 00917

FTE 31

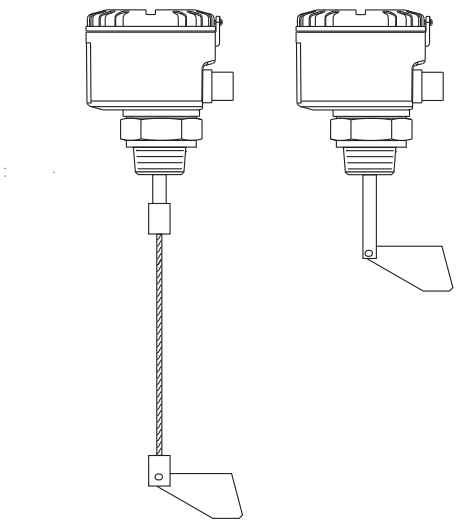

d Füllstandgrenzschalter
e Level Limit Switch
f Détecteur de niveau

Endress+Hauser
The Power of Know How

d **Inhalt** **Seite**

Sicherheitshinweise	3
Einbaubeispiele	4
Funktion	7
Anschluss	8
Wartung	10
Technische Daten	11
Abmessungen und Werkstoffe	13
Geräteidentifikation	14
Ergänzende Dokumentation	16

e **Contents** **Page**

Notes on safety	3
Mounting examples	4
Function	7
Connection	8
Maintenance	10
Technical data	11
Dimensions and materials	13
Device identification	14
Supplementary documentation	16

f **Sommaire** **Page**

Conseils de sécurité	3
Exemples d'implantation	4
Fonction	7
Raccordement	8
Entretien	10
Caractéristiques techniques	11
Dimensions et matériaux	13
Dénomination	14
Documentation complémentaire	16

d **Sicherheitshinweise**

Der FTE 31 darf nur als Füllstandsgrenzschalter für spezifizierte Schüttgüter eingesetzt werden. Bei unsachgemäßem Gebrauch können Gefahren von ihm ausgehen.

Das Gerät darf nur von **qualifiziertem und autorisiertem Fachpersonal unter besonderer Beachtung dieser Betriebsanleitung**, der gesetzlichen Vorschriften und der Zertifikate (je nach Anwendung) eingebaut, angeschlossen, in Betrieb genommen und gewartet werden.



Achtung!
= verboten - führt zu fehlerhaftem Betrieb oder Zerstörung.

e **Notes on safety**

The FTE 31 paddle switch is a level limit switch, designed for use in fine-grained bulk solids in non-hazardous areas.
If used incorrectly it is possible that application-related dangers may arise.
The FTE 31 paddle switch may be installed, connected, commissioned, operated and maintained **by qualified and authorised personnel only,** under strict observance of these operating instructions, any relevant standards, legal requirements, and, where appropriate, the certificate.



Caution!
= forbidden - leads to incorrect operation or destruction.

f **Conseils de sécurité**

Le FTE 31 est un détecteur de niveau à palette rotative pour produits solides en vrac de faible granulométrie, utilisable en zones non explosibles. Il peut être source de danger en cas d´utilisation non conforme aux prescriptions. L´appareil ne doit être installé, raccordé, mis en service et maintenu **que par un personnel qualifié et autorisé,** qui tiendra compte des indications contenues dans la présente mise en service, des normes en vigueur et des certificats disponibles (selon l´application).



Attention!
= interdit - peut provoquer des dysfonctionnements ou la destruction.

d **Einbaubeispiele**
* Schutzdach

e **Mounting examples**
* Protective roof

f **Exemples d´implantation**
* Déflecteur

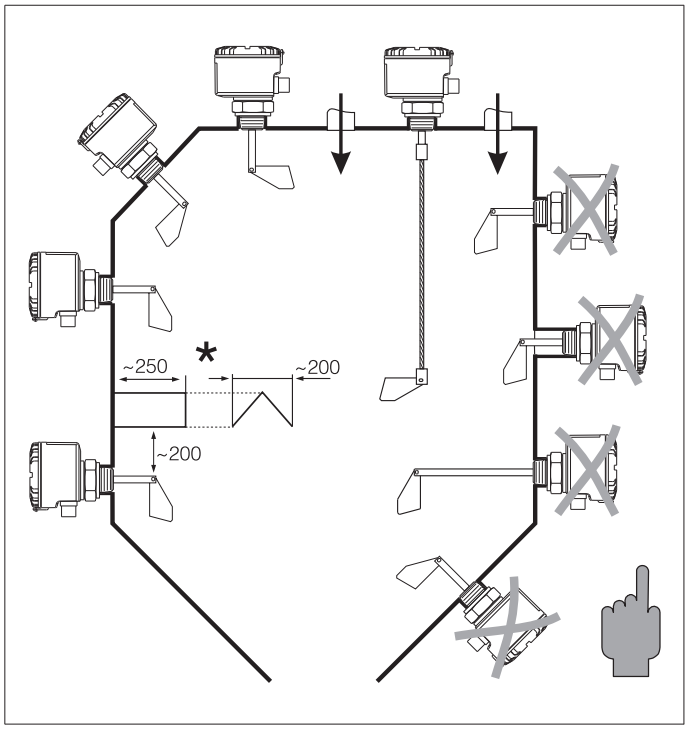

d Füllstandgrenzschalter FTE 31 einschrauben
Nicht am Gehäuse drehen!

e Screw the FTE 31 paddle switch into the process connection
Don´t use housing to turn!

f Visser le détecteur à palette rotative FTE 31
Ne pas se servir du boîtier!

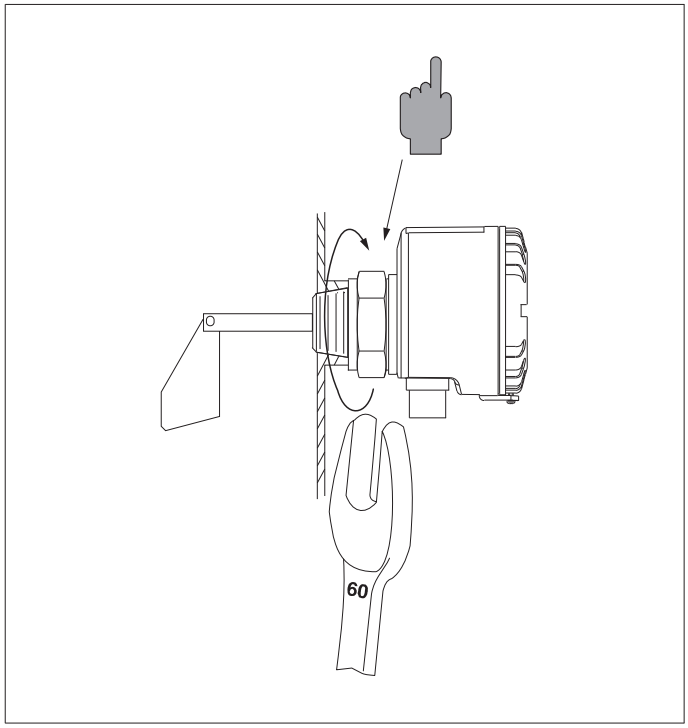

d Gehäuse in richtige Position drehen.

e Screw the housing to the correct position.

f Positionner le boîtier.

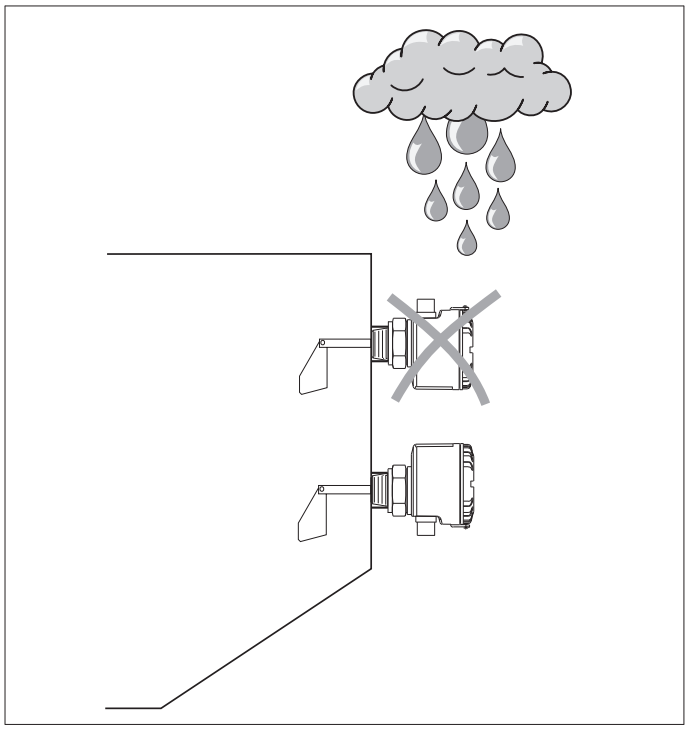

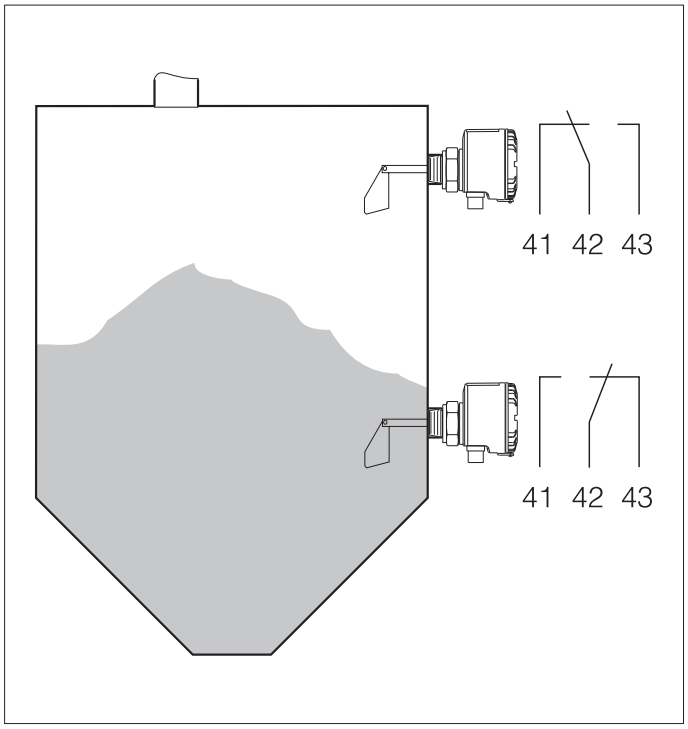

d **Funktion**

e **Function**

f **Fonction**

d **Anschluss FTE 31**

e **Connection FTE 31**

f **Raccordement FTE 31**

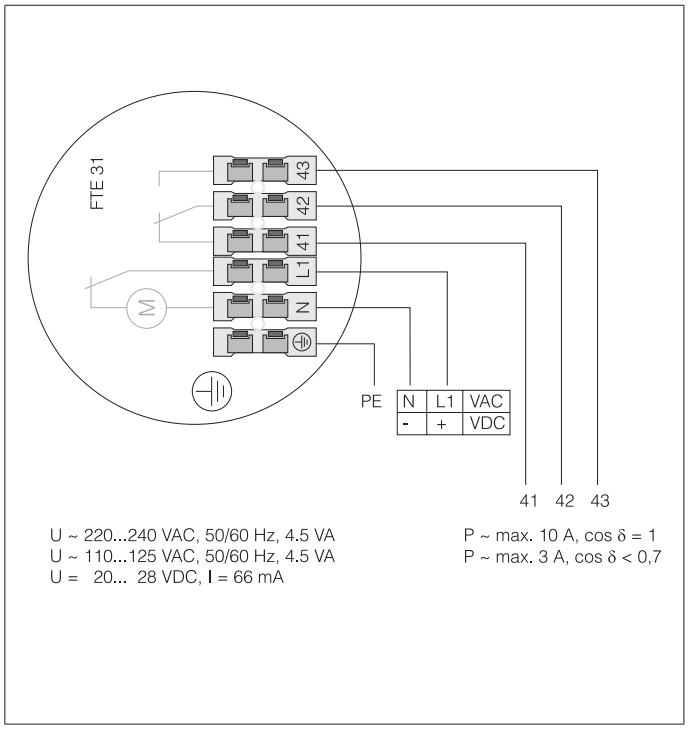

U ~ 220...240 VAC, 50/60 Hz, 4.5 VA
U ~ 110...125 VAC, 50/60 Hz, 4.5 VA
U = 20... 28 VDC, I = 66 mA

P ~ max. 10 A, cos δ = 1
P ~ max. 3 A, cos δ < 0,7

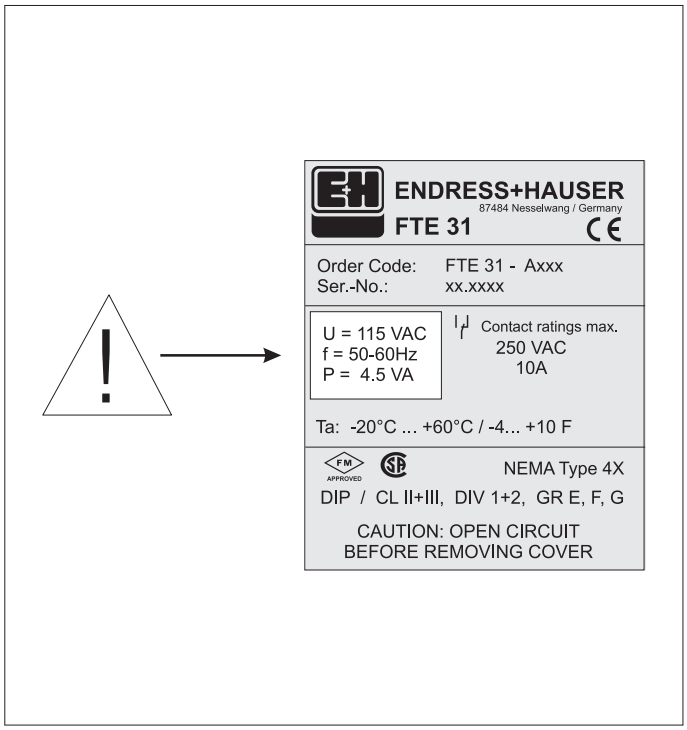

d Beachten Sie die Anschluss-spannung auf dem Typen-schild

e Take note of the power supply indicated on the legend plate

f Tenir complete de la tension indiquée sur la plaque signalétique

d **Wartung**
Anbackungen entfernen

e **Maintenance**
Build up removal

f **Entretien**
Enlever les incrustations

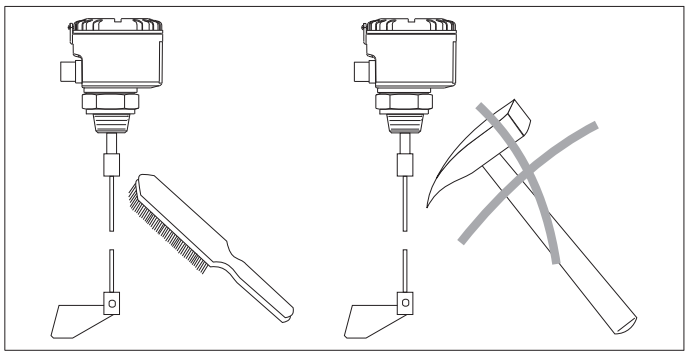

d **Nicht** besteigen!

e **Don´t** use as a step!

f **Ne pas** marcher sur les lames vibrantes!

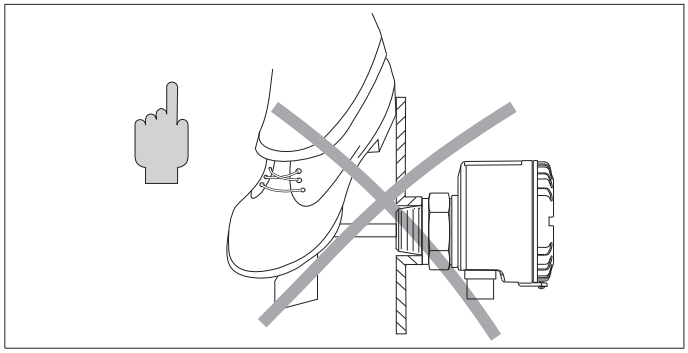

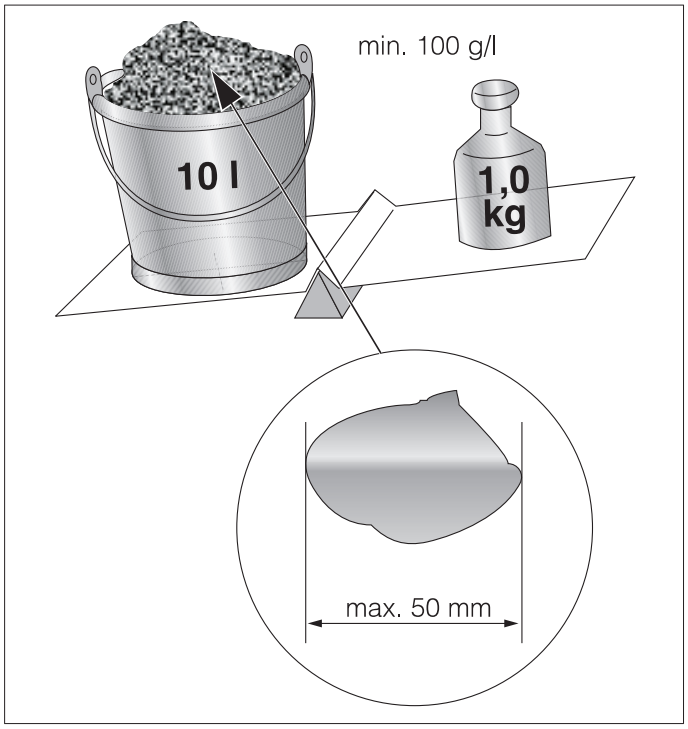

d **Technische Daten**
Schüttgröße und
Korngewicht

e **Technical data**
Solids density
and grain size in mm.

f **Caractéristiques techniques**
Densité apparente
et granulométrie en mm.

d Umgebungstemperatur T_a
Betriebstemperatur T_M
Betriebsdruck p_e

e Ambient temperature T_a
Operating temperature T_M
Operating pressure p_e

f Température ambiante T_a
Température de service T_M
Pression de service p_e

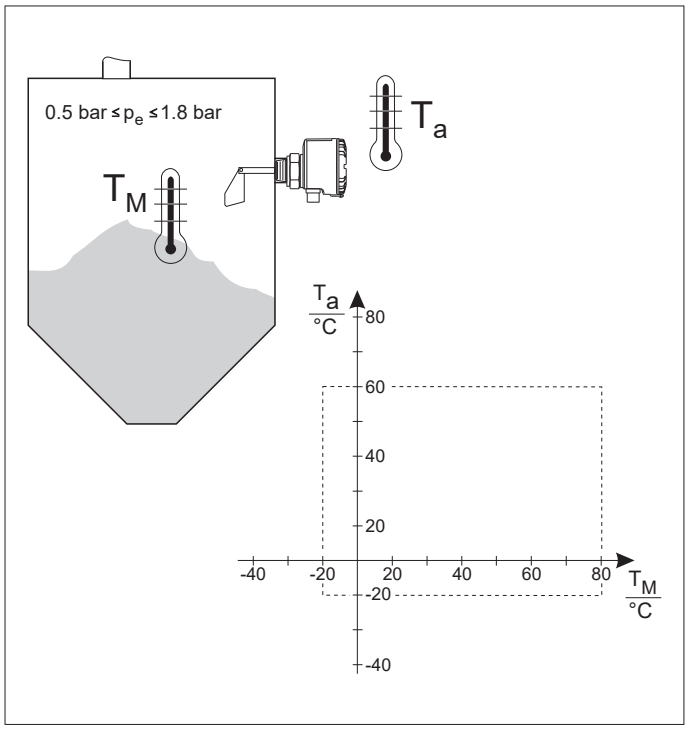

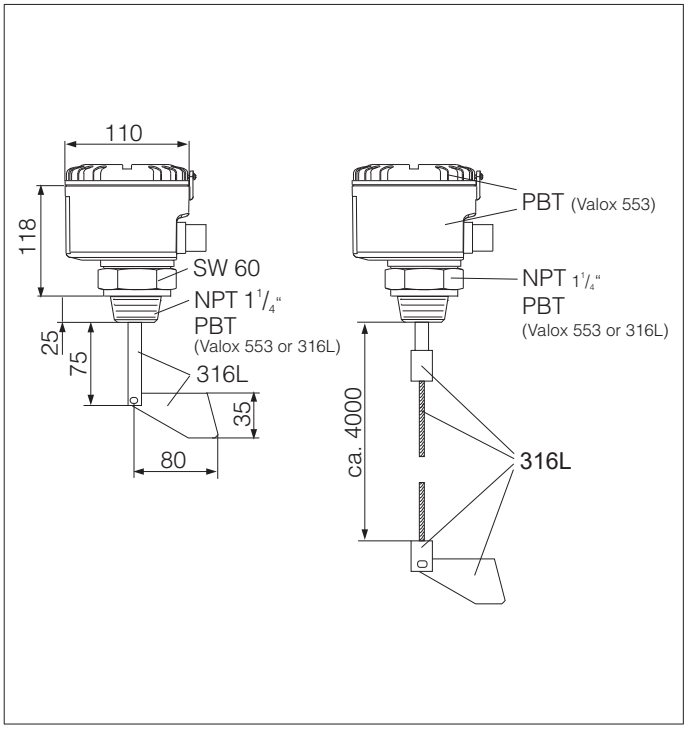

d **Abmessungen in mm und Werkstoffe**

e **Dimensions in mm and materials**

f **Dimensions en mm et matériaux**

d **Geräte Identifikation**

e **Device identification**

f **Dénomination**

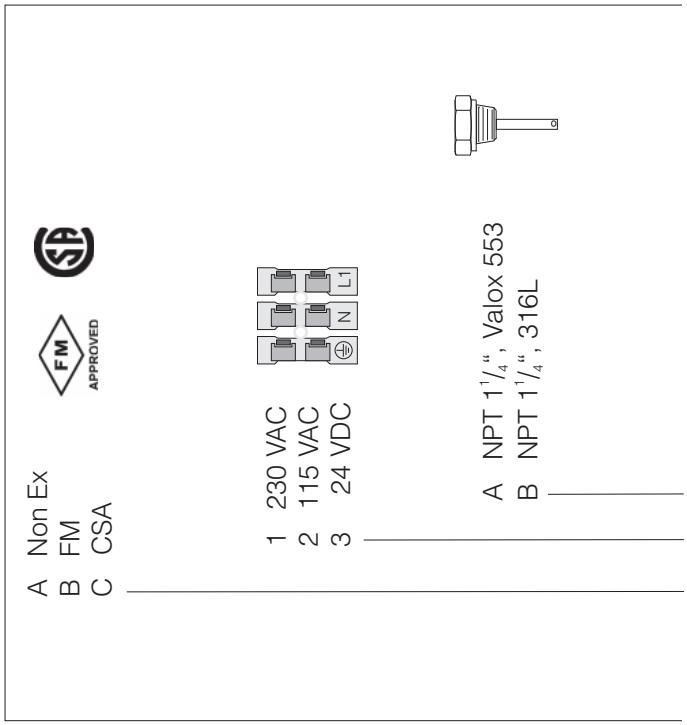

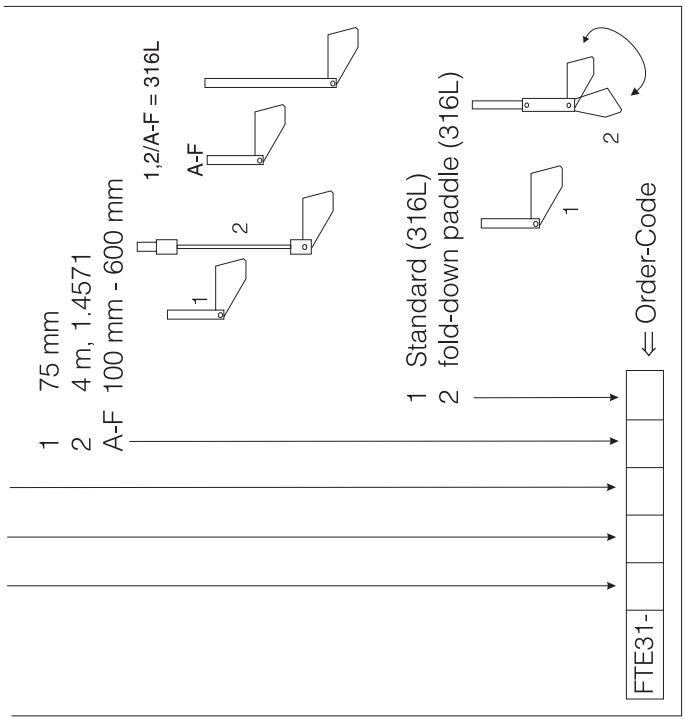
1 75 mm
2 4 m, 1.4571
A-F 100 mm - 600 mm
1,2/A-F = 316L
A-F
1
2
1 Standard (316L)
2 fold-down paddle (316L)
1
2
FTE31-
⇐ Order-Code

d	**Ergänzende Dokumentation**	TI 068R/09/de	Technische Information Füllstandgrenzschalter FTE 31
e	**Supplementary documentation**	TI 068R/09/en	Technical information Paddle limit switch FTE 31
f	**Documentation complémentaire**		

d **Notizen:**

e **Notes:**

f **Notes:**

d	✎ **Hinweis!**	Mechanische Lebensdauer: min. 500 000 Schaltzyklen
e	✎ **Note!**	Mechanical life time: min. 500 000 switch cycles
f	✎ **Remarque !**	Durée de vie mécanique : min. 500 000 cycles de commutation
es	✎ **¡Nota!**	Vida estimada: mínimo 500 000 usos
i	✎ **Nota !**	Tempo di vita delle parti meccaniche: min. 500 000 cicli di commutazione
nl	✎ **Opmerking!**	Mechanische levensduur: min. 500 000 schakelcycli

d	**Reparatur**	Bei Austausch von Teilen nur original E+H Ersatzteile verwenden!
e	**Repairs**	When exchanging only use original E+H spare parts.
f	**Réparation**	Lors du remplacement de pièces, n'utiliser que des pièces de rechange d'origine E+H.
es	**Repuestos**	Cuando realice sustituciones utilice sólo recambios originales E+H.
i	**Riparazioni**	In caso di riparazione utilizzare solo ricambi originali E+H.
nl	**Reparatie**	Bij wisseling van onderdelen uitsluitend originele E+H service onderdelen toepassen

Austria
Endress+Hauser Ges.m.b.H.
Wien
Tel. (0222) 88056-0, Fax (0222) 88056-35

Belgium, Luxembourg
Endress+Hauser S.A./N.V.
Brussels
Tel. (02) 2480600, Fax (02) 2480553

Canada
Endress+Hauser Ltd.
Burlington, Ontario
Tel. (905) 6819292, Fax (905) 6819444

Denmark
Endress+Hauser A/S
Søborg
Tel. 70 13 11 32, Fax 70 13 21 33

Finland
Endress+Hauser Oy
Espoo
Tel. (90) 8596155, Fax (90) 8596055

France
Endress+Hauser
Huningue
Tel. 89696768, Fax 89694802

Germany
Endress+Hauser Messtechnik GmbH+Co.
Weil am Rhein
Tel. (07621) 97501, Fax (07621) 975555

Great Britain
Endress+Hauser Ltd.
Manchester
Tel. (0161) 2865000, Fax (0161) 9981841

Hong Kong
Endress+Hauser (H.K.) Ltd.
Hong Kong
Tel. 25283120, Fax 28654171

Italy
Endress+Hauser Italia S.p.A.
Cernusco s/N Milano
Tel. (02) 92106421, Fax (02) 92107153

Japan
Sakura Endress Co., Ltd.
Tokyo
Tel. (0422) 540611, Fax (0422) 550275

Malaysia
Endress+Hauser (M) Sdn. Bhd.
Petaling Jaya, Selangor Darul Ehsan
Tel. (03) 7334848, Fax (03) 7338800

Netherlands
Endress+Hauser B.V.
Naarden
Tel. (035) 6958611, Fax (035) 6958825

Norway
Endress+Hauser A/S
Lierskogen
Tel. (032) 8598 50, Fax (032) 8598 51

Singapore
Endress+Hauser (S.E.A.) Pte., Ltd.
Singapore
Tel. 5 66 82 22, Fax 5 66 68 48

South Africa
Endress+Hauser Pty. Ltd.
Sandton
Tel. (011) 4441386, Fax (011) 4441977

Spain
Endress+Hauser S.A.
Barcelona
Tel. (93) 4 80 33 66, Fax (93) 4 73 38 39

Sweden
Endress+Hauser AB
Sollentuna
Tel. (08) 626 16 00, Fax (08) 626 94 77

Switzerland
Endress+Hauser AG
Reinach/BL 1
Tel. (061) 715 75 75, Fax (061) 711 16 50

Thailand
Endress+Hauser Ltd.
Bangkok
Tel. (2) 9 96 78 11 -20, Fax (2) 9 96 78 10

USA
Endress+Hauser Inc.
Greenwood, Indiana
Tel. (317) 535-7138, Fax (317) 535-1489

International
Endress+Hauser GmbH+Co.
Instruments International
Weil am Rhein
Tel. (07621) 97502, Fax (07621) 975345

http://www.endress.com

Endress+Hauser
The Power of Know How

KA 094R/09/a3/01.09 Mat-Nr.: 510 00917 SS/CV5

ENVIREQUIP

SERIES EVG, MIXERS

LEFT BLANK

Envirequip (Division of 6445772 Canada Inc.)
MIX-TECH DYNAMIC MIXERS
710 Cotton Mill Street, Suite 512, Cornwall, ON K6H 7L3
Mobile: 514-386-1043 Email: envirequip@cogeco.ca
Internet: http://www.envirequip.com

Instruction & Operating Manual
Envirequip Mixers

(See section for agitator/gear reducer design at end of Manual)

EVG Parallel Shafts with hollow output shafts & tapered roller bearings

EVGX Parallel shafts with hollow output shafts & high capacity upper cylindrical & lower (2)-row Spherical roller bearings

EHG Worm drives for small top entry & portable mixers with hollow output shafts

EHGB Helical/bevel gearing with hollow output shafts & tapered roller bearings

EVGFS Helical in-line gears with solid output shaft tapered roller or spherical roller bearings
Refer to Nord Installation & Operation Manual

NOTE: For units with solid output shafts, refer to the Nord Manual

ENVIREQUIP MIXERS – INDEX I.O.M.

MIX-TECH MIXERS – INSTALLATION & OPERATION MANUAL (Rev 0)

For mixers installed in OPEN TANKS
See section for mechanical seals & packing (stuffing boxes) at end of IOM Pg (S)

SECTION	SUBJECT	PAGE NO.
1	Inspection	1
2	Installation	1-2-3
3	Mixer Assembly	4
4	Motors: 5 HP WEG Motor Supplied	5
5	Pedestals: Shaft & Gear Reducer Removal – EVG Series	6-7-8
6	Shafts, Impellers & Couplings	9
7	Gear Drive Maintenance	10-11
8	Bolts	11-12
9	Operation	12
10	Motor Removal & Installation	13
11	Trouble Shooting / Mixer Performance	13-14
12	Warranty	15
13	Maintenance Log	16

Envirequip (Division of 6445772 Canada Inc.)
MIX-TECH DYNAMIC MIXERS
710 Cotton Mill Street, Suite 512, Cornwall, ON K6H 7L3
Mobile: 514-386-1043 Email: envirequip@cogeco.ca
Internet: http://www.envirequip.com

INSTALLATION & OPERATION MANUAL

ENVIREQUIP MIXERS

SECTION 1 – INSPECTION

- Make sure that all mixer parts have been removed from the crate(s) before discarding.
- Each mixer should be carefully checked for any possible shipping damage. Any shipping damage should be reported immediately to the TRANSPORT COMPANY.
- Check the paint and make any necessary touch-ups.

SECTION 2 – INSTALLATION

- Most mixer problems can be avoided by following proper installation and operation instructions. The following is a list of hints to help insure proper installation and therefore satisfactory mixer service.
- Please read all appropriate instruction manuals prior to proceeding with the mixer installation.
- For shipment, the gear-case is **drained of oil** (except for Nord drives) so **be sure to fill** the gear case with the proper lubricant to the proper level. DO NOT OVERFILL – note: if the reducer is already filled, (as is the case with NORD drives.
- Install breather(s) – if you forget to install the breather(s) the seals may fail.

CAUTIONS:

- Lock out the motor starter if any person is in the tank.
- Remove wick form the breather vent plug.
- Do NOT paint breather or the vent plug.

MOST COMMON PROBLEMS:

- Mixer shaft(s) not vertical.
- Impeller going through liquid level.
- Make sure the impeller blades have been installed onto the hubs in the proper position with regards to Rotation and Direction of flow.
- Please also note the impeller blades are installed with the hub ears always backing the blade into the flow.

- Also be sure that the leading edge and NOT the trailing edge is presented into the flow and that the angle at the impeller tip (angle of attack) from the horizontal is closer to 15” rather than to 75”

CAUTIONS:

- If the angle of attack at the impeller tip is closer to 75”, either an incorrect hub in combination with the correct impeller blade (or vice versa) has been incorrectly assembled to make an incorrect matching of possible hub and blade combinations. For help in determining what the correct combination should, please refer to the mixer nameplate that will have the Rotation and the Direction of thrust written on it. Once you know the combination, refer to the pictorial guide of impeller/hub installation positions of A, B, C or D.
- Depending on whether the concave or the convex surface is facing the fluid, if the angle of attack at the impeller is closer to 75”, the HP drawn will be 2 to 3 times greater than what it should be. This can result in OVERLOADING the motor and damaging the mixer.
- Make sure that the impeller blades are installed in the correct position for the required rotation e.g. if the impeller blades are installed up-side-down, the pumping capacity will be reduced by about 65%. Check the mixer nameplate for the flow direction and install the impeller blades to suit.

POTENTIALLY DAMAGING SITUATIONS FOR MIXERS – CAUTIONS:

- Prolonged operation of the mixer (impeller) at the liquid interface causes increased stress on the shaft and impeller for which the system was NOT DESIGNED to accommodate.
- Installations where there is a large hydraulic flow (or Velocity) in the mixer reservoir: Make sure that if such a flow is present, that the flow is BAFFLED or dispersed over a larger area (as opposed to directed flow via a pipe), or that the flow be re-directed away from the impeller/shaft assembly, or is introduced evenly e.g. via a weir.
- If this cannot be done, this external hydraulic flow will exert additional un-designed-for stress loads and deflection on the mixer shaft and impeller which can result in component failure.
- Sparging-in air or other gasses: If a mixer has not been selected to handle gassing, there is every probability that damage will occur due to the un-designed-for enormous unbalanced loads generated by the gasses rising.
- Do not attempt to install a mixer all assembled as a unit as this will cause extra undersigned-for stresses – Failure to abide by the above constraints may CAUSE DAMAGE NOT UNDER WARRANTY.
- Before permanently wiring the motor, check for the correct rotation of the low speed shaft. Normal is Clock-wise looking down from the top of the tank, although the reverse may also be required. Please check mixer NAMEPLATE for other instructions (eg Letters A,B,C or D)

- Read and follow the instructions of all tags and nameplates before operating.
- Check the mixer full load motor amperage and voltage before operating any mixer.
- It is recommended that the mixer impeller be rotated by hand in order to check for smooth operation. NB: For crown & worm drives, remove the fan cover and rotate the fan manually.
- Always operate the mixer in a fluid which has a specific gravity and viscosity less than or equal to the design specific gravity and viscosity.
- Do not dump the contents of large bags of chemicals directly onto the rotating mixer impeller(s); but add the contents into the reservoir gradually. This will also promote better mixing.
- Before starting the mixer, make sure the impeller is not buried in solids or a "set-up" fluid. NB: If solids have settled-out, then dilute or jog the mixer clockwise then counter-clockwise.
- Please check that there is no directed flow from an external source at the impeller or shaft unless the mixer was specifically designed to accommodate these additional stress loads, as mixers could be damaged.
- During START-UP, please listen for unusual noises and check for excessive vibration.
- Check the temperature of the motor and gear reducer. The temperature should not exceed 180°F (82°C). If they are too hot, please STOP THE OPERATION of the mixer and contact ENVIREQUIP immediately.
- Measure the motor amperage. The measured amperage must be less than the nameplate rating value. If the amps are over, please check the rotational speed of the great reducer/mixer output shaft. Place a piece of tape onto the shaft (or use an RPM counter if available, and count the number of revolutions for a period of e.g. 10 seconds using your watch second hand. Multiply the result by (6) for 60 Hz operation and this will provide you with the rotational speed of the mixer. Check rotation and impeller blade installation to be sure they are correct. If the power draw remains high, please check with ENVIREQUIP.

  NOTE: Record the full load motor amperage (FLA) and measure them every (3) months. Some motor amperage readings are poor indicators at low loads.

CAUTION:

- **DO NOT STAY IN THE TANK DURING MIXER ROTATION**
- Never use the mixer impeller as a foot stand or support for body weight – as such actions could damage the mixer as well as result in serious bodily injury.
- As with any rotating equipment, in order to avoid injury, extreme care should be taken to avoid contacting the rotating parts including not connecting the motors to the electrical power source until the mixer is completely assembled. Then, vacate the tank prior to operating the mixer.
- Before making field changes of motor horsepower, mixer speed, shaft length, impeller diameter or width, etc. Be sure to consult with ENVIREQUIP.
- After any plant electrical work has been done, check that the mixer(s) rotation(s) are correct as power lines may be been reversed.

SECTION 3 – MIXER ASSEMBLY – Closed tanks are Flange Mounted

- Open tank models usually are mounted on a steel structure. Level the drive as closely as possible. This assures that the shaft will turn in a true vertical position. Incorrect mounting is often a cause of mechanical difficulty with a mixer. Unless specified on the mixer assembly drawing, the mixer extension shaft is designed to run in a true vertical position. NEVER angle or side mount the mixers.
- While operating, there is a random fluid motion in the vessel that exerts great forces on the extension shaft of the mixer. The mixer accommodates these forces since they are transmitted directly to the support mounting(s). Therefore, the mounting system must be RIGID. It must support that static mixer weight as well as live mixer reactions that result from Torque and Bending Moment. It is not enough to design the support system for acceptable levels of stress. It must be rigid enough to take care of Start-up Torque Load (**2.5** times the Torque) and preclude large deflections that may result in mixer vibration.
- When designing the support structure to accommodate bending moments, be sure that the structure is sufficiently rigid so that the mixer extension shaft will not move more than 1/32" per 10 feet (0.8m per 3.05 meters) of shaft length due to deflection of the support structure.
- After the great drive (with the motor already flange-mounted onto the drive) has been properly installed, the mixer extension shaft should be installed into the gear drive's hollow output shaft (quill shaft) and fastened in the quill shaft with the thrust plate and secured in position with the threaded bolt provided – use Locktite Blue (or equivalent) or in the case of an output shaft coupling, bolt the mating flanges together.
- Mixer blades over 20" in diameter are generally bolted to a welded hub. **Check the welds** on the hub on your **yearly** overall inspection.

SECTION 4 – MOTORS – 5 HP WEG MOTORS SUPPLIED

- These mixers are supplied with the finest electric motors available. They are manufactured by a nationally known manufacturer (e.g. Nord, WEG, Brook etc). Under normal operation conditions, within specified temperatures, proper installation and maintenance, these motors are guaranteed to deliver rated output.
- In order to get top performance from any electric motor, be sure that there is plenty of air circulation and a minimum of obstructions. On fan cooled motors, be sure not to choke off the suction inlets, also be sure to check the allowable temperature that's indicated on the motor nameplate. Don't decrease the service life of a motor by operating it at excessively high ambient temperatures.
- In order to avoid damage to the motor during temporary overloads, jams, etc., be sure that correctly sized overload protection is provided. Starter overload heater elements can be sized from the full load current of the motor as shown on the motor nameplate. It is advisable to consult a supplier of motor control equipment when selecting thermal overload heaters.
- Before the motor is permanently wired, check to be sure that the output shaft rotation is correct. (Normally clockwise looking down from the mixer drive, but sometimes counter-clockwise depending on the process requirements).

CAUTION

- Make sure to check rotation of the mixer before it is operated. **To reverse the rotation** of standard 3 phrase electric motors, simply switch any 2 power leads.

SECTION 5 – PEDESTALS: SHAFT & GEARBOX REMOVAL – EVG SERIES

Series EVG standard design of the dry-well pedestal and shaft catcher is one where the flinger (for the dry well) and the shaft catcher are one-in-the-same part serving both purposes.

Shaft Removal and/or to Remove the Gear Reducer – see assembly drawing

1. Lock-out electrical power to the electric motor
2. If the electrical wiring is not long enough to allow removal of the gear reducer, disconnect the motor wiring.
3. Remove the safety cover located on top of the gear reducer exposing the bolt (#3) and top plate (#4) which holds the shaft (#12).
4. Slowly remove the top bolt (#3).
5. As the bolt is loosened, the shaft and impeller assembly will be lowered a distance of about 0.125" (3.175mm).
6. After the bolt has been loosened sufficiently, the flinger (#8) will come into contact with the Pedestal to the inner support pipe (#11) and stop there.
7. Remove the bolts holding together the Adaptor Plate Reducer to Pedestal top plate (#7).
8. Inside of the pedestal ($10), you can now see the flinger (#8) which rests on the collar / clamp (2) bolts / shaft catcher (#9).
9. Prior to undoing the set screws on the collar / clamp, make preparation to handle the shaft which will now fall through the dry well (#11) and into the tank.
10. Once the shaft is secured, loosen the set screws on the flinger assembly or clamp bolts (#9).
11. **To reinstall the shaft** (et al) follow the above procedure in Reverse.

NOTE: In order designs, the flinger was welded onto the shaft. In that case, the shaft can only be removed vertically through the top of the Pedestal.

CAUTION:

- Prior to loosening the (3) set screws on the flinger / shaft catcher, please ensure that there is some means of holding the shaft in place (if no clamp is supplied, use 2 pieces of wood 4" x 4" or 6" x 6" with tightening bolts to hold the shaft in place via friction.) **IF NOT, THE SHAFT WILL DROP INTO THE TANK**, possibly causing damage to the equipment or vessel and bodily injury. Shafts are often of sufficient weight to cause serious bodily injury **or even death** were it not properly secured.
- You may want to install a plastic hose in the pedestal so that you can monitor if the gear reducer is losing oil and collecting in the dry-well pedestal.

- **A split collar is used to prevent the shaft from accidentally falling from the gear reducer.**

NOTE: On older EVG series, there may not be a split ring but rather a flinger that rests on the dry well seal to hold the shaft in place.

1. Insert eye-bolt in top center of the impeller shaft.
2. Slowly lift up the complete impeller shaft assembly a distance of 6mm (0.25”).
3. Remove the split collar that rests against the top of the quill shaft of the gearbox.
4. Slowly lower the complete shaft / impeller assembly a distance of 10 to 12mm (0.375” to 0.50”).
5. At this point, the flinger / clamp assembly will come into contact with the pedestal top inner support pipe / dry well.
6. Remove bolts.
7. Lift off the complete gear reducer until the gearbox clears the shaft and eye-bolt.
8. Then reinstall the gear drive, follow the above procedure in reverse.

Shaft Straightness:

- When shipped, the mixer extension shaft was straight to within 0.003” per foot (0.25mm per meter) of shaft length for mixers equipped with centre-less ground shafts (special order – uncommonly used). If the shaft does not appear to be damaged, but the run-out is **greater than** the above standard, the shafting supplied may have been “smooth-turn” (more commonly used), which might not be dimensionally the same over the entire length of the shaft. This is probably still acceptable. In such cases, or where it might be difficult to obtain an accurate shaft run-out value, we may apply another rule: 0.25 to 0.50% of the impeller diameter = the maximum shaft run-out at the bottom of the shaft. E.g.:
- 50” diameter impeller 0.14 to 0.28”
- 100” diameter impeller 0.26 to 0.53”
- 150” diameter impeller 0.40 to 0.67”
- Flanges are used as shaft couplings when shaft extensions exceed approximately 12”-0” (3.65mm). Ensure that the bolts are **tightened** and that a product like Never Seize (or equivalent) is used. Refer to the table in this manual for torque tightening values.
- Recheck bolt tightness after 1500 hours (or 3 months) OR <u>tack weld the nuts to prevent this</u>. These couplings are welded onto the shafts with (4 to 6) gussets and are not removable.

CAUTION:

- Handle the shaft carefully to be sure that it is not bent
- After the shaft has been installed, check it for straightness. Storage and handling may have resulted in a bend. To check it, an indicator is placed at the end of the shaft, and the high speed shaft is then rotated by hand. Run-out of the total shaft should not be greater than the above referenced values. If the run-out is greater than the above values, the shaft can be re-straightened in the field.

- **To re-straighten the shaft**, follow this procedure:
- Where the maximum positive readout is found, place the indicator on that side of the shaft.
- Heat the shaft at a point of 180^0 from the indicator, (and just below the 1st in-tank coupling if applicable), apply heat just below the mounting nozzle.
- The shaft will grow toward the indicator as heat is applied to it. However, **DO NOT permit the surface temperature to go over 500^0F (260^oC).** Use Tempilstics or equivalent.
- The shaft will straighten since it will draw more than it grows.
- After each heating process, rotate the shaft and recheck until the straightness is within tolerance to meet the allowable tolerance.
- **To install any impeller**, simply slide the impeller hub onto the extension shaft above the shaft keyway. Install Hook type (Gib) key into the keyway making sure that the pin is inserted into the correct hole for proper impeller location. Lower the hub (with or without blades bolted on) down onto the key. Tighten set screw. Bolt on blades if not already done.

NOTE:

All MIX-TECH Portable mixers operate at least 35% below the 1st Critical Speed or harmonic frequency – there is no danger of "hitting-on" or approaching the 1st Critical Speed – (unless specifically mentioned otherwise)

Please refer to the specific manufacturer's installation and operating manual.

Correct lubrication practices are essential to long life and satisfactory performance of a gear drive. Be sure to use the right lubricants as recommended. With proper lubrication maintenance, the gear drive will carry its rated design load and provide years of satisfactory operation.

SECTION 6 – SHAFTS, IMPELLERS & COUPLINGS

IMPELLERS:

- Make sure that the impeller blades have been installed onto the hubs in the proper position with regard to Rotation and Direction of Flow. Please also note that the impeller blades are installed with the hub's ears ALWAYS BACKING the blade INTO the flow. Also be sure that the leading edge and NOT the trailing edge is presented into the flow, and that the angle at the impeller tip (angle of attack) from the horizontal is closer to 15^0 rather than to 75^0.

CAUTION:

- If the angle of attack at the impeller tip is closer to 75^0, either an incorrect hub in combination with the correct impeller blade (OR VICE VERSA) has been incorrectly assembled to make an incorrect matching of possible hub and blade combinations. For help in determining what the correct combination should be, please refer to the mixer nameplate that will have the Rotation and Direction of Thrust written on it. Once you know the combination, refer to the pictorial guide of impeller / hug installation positions A,B,C, or D.
- Depending on whether the concave or the convex surface is facing the fluid, if the angle of attack at the impeller is closer to 75^0, the HP drawn will be 2-3 times greater than what it should be. This could result in OVERLOADING THE MOTOR and damaging the mixer.
- Make sure that the impeller blades are installed in the correct position for the required rotation: e.g. if the impeller blades are installed up-side-down, the pumping capacity will be reduced by about 65%. Check the mixer nameplate for the flow direction and install the blades to suit.

SECTION 7 – GEAR DRIVE MAINTENANCE

CAUTION:

- By following instructions, many premature gear and bearing failures can be avoided.
- Keeping a maintenance log is highly recommended.
- Lubricant used in the gear case must be free of dirt, metal particles and other contaminants. Use only NEW OIL. Strain the oil if there is any possibility that it contains contaminants.
- To equalize pressure inside and outside the gear case, a breather is installed on top of the unit. This breather normally requires no maintenance, and must NOT be blocked. Check hole for free breathing.

PORTABLE MIXERS:

- Lubricant for PORTABLE MIXERS (Series EHG), the Crown and worm gear reducers are filled FOR LIFE (20,000 hours or 4 years) with synthetic oil.

CAUTION:

- For shipment the gear case is drained of oil (except for NORD drives). Be sure to fill the gear case with the proper lubricant to the proper leve. Install breather. **DO NOT OVERFILL.** N.B. if the reducer is already filled (as is the case with NORD drives), do not forget to install the breather(s) **or the seals may fail.**

RECOMMENDED LUBRICANTS FOR NORD HELICAL GEARING:

- These Nord Gear reducers are factory-filled with Shell Omala 220 mineral oil or with Chevron ISO FM 220 food grade oil (if required) or equivalent, or with Shell Omala 220 regular mineral oil fill <u>when the mixer is provided with a dry well seal unless otherwise specified.</u>

Note:
- A reducer previously filled with Shell Omala 220 mineral oil can be drained (as much as practical to achieve) and Chevron ISO FM 220 substituted without any harmful chemical reactions or reduction to the lubricating quality of the new (or old) oil.
- Please note that the gear reducers for MIX-TECH'S "EVG" SERIES ARE Nord Parallel shaft drives. The top output bearing is grease-packed although there is no grease nipple. Please remove the seal and **re-pack** the bearing with grease (refer to Nord Instructions on the WEB by putting in the Nord Unit Serial Number. The output shaft seals are "Quadrilip" having 2 discrete grease-filled pockets.

GEAR DRIVE MAINTENANCE FOR SERIES EVG & EVGX PARALLEL SHAFT DESIGN GEAR REDUCERS:

- Recommended oil change intervals in Nord IOM:
- Synthetic lubricants should be changed every 20,000 service hours or every 4 years

- Mineral oils should be changed every 10,000 service hours or after 2 years. See gear reducer service manual (IOM)

CAUTION:

Units should be checked out periodically for increased noise, surface temperature, vibration, shaft movement and amperage draw. Units with inspection covers should not be operated with the inspection covers removed.

PROCEDURE FOR RE-GREASING THE UPPER OUTPUT BEARING equipped with Tapered roller bearing option:

1. Remove upper output shaft seal(s).
2. Inspect bearing cavity for presence of grease. The bearing cavity should be packed to approximately 1/3 full with grease.
3. If required, inject grease into the taper roller bearing until the cavity is filled to 1/3. A Needle Nozzle is generally required on the grease gun, because the shim(s) partially cover the access to the bearing cavity.
4. Install new upper output seals.

NOTE:

The other bearings in these gear boxes are open and are submerged in oil.

The recommended interval for changing the gearbox oil is every 10,000 hours of operation.

- The standard ambient temperature selected is 15 to 125°F (9 to 52^{0}C) for the gear reducer.
- Some gear reducers are equipped with bulls-eye oil level indicators, **others have a plug**.

SECTION 8 – BOLTS

- Impeller blades and other in-tank fasteners are supplied as standard with lock-washers.

NOTE:

For bolting locations that are not easily accessible, you might want to consider tack welding the nuts to prevent nuts from loosening.

CAUTION:

- Extreme care should be taken to see that locking devices are properly installed and to be sure that the bolts / studs are properly tightened and lubricated.

It is recommended that all in-tank fasteners (and all other bolts) be rechecked for tightness **after the first 1500 hours of operation** and subsequently at each scheduled shut-down and that a suitable lubricant be used e.g. Never seize or equivalent.

NOTE:

Once the nuts are tightened, it is a good idea to tack weld them to prevent the need for re-tightening them every 3 months.

RECOMMENDED BOLT TORQUE VALUES:

BOLT SIZE			**TIGHTENING TORQUE**					
			Ft.lbs.	**Nm**			**Ft.lbs.**	**Nm.**
a.	0.25”	-20	5	7	0.875”	-9	320	434
b.	0.3125”	-18	10	14	1.0”	-8	490	664
c.	0.375”	-16	20	27	1.125”	-8	560	760
d.	0.50”	-13	60	81	1.25”	-7	710	963
e.	0.625”	-11	120	163				
f.	0.75”	-10	200	271				

NOTE:

Tighten all bolts as specified. Lubricate all fasteners with an anti-seize product. If no lubrication is used when tightening the bolts as specified, multiply the table values by 1.3

GEAR REDUCER & MOUNTING PLATE BOLTS:

These bolts are also subject to high loads and should be properly torque to prevent bolt stretch and/or reducer wobble. For situations with large reducers or long shafts with large reducers, use additional care to make sure that these bolts are installed and torque properly.

This "Turn of the nut Method" can be summed up n one sentence:
"Turn the Nut ½ to 2/3 turns beyond the snug tight position, this applies to any bolt of any size. However, fasteners should be clean, rust-free and lightly oiled.

In cases where the nut is not accessible, the bolt may be turned ½ to ¾ turn beyond snug tight.

LEVER ARM SYSTEM:

Bolt Size	**Lever Arm**
¼" - 3/8"	6" handle
7/16" – 5/8"	12" handle
¾" – 1.125"	24" handle
1.25" And over	36" handle

NOTE:

This lever arm system should be used with or without lock washers. If lock washers show signs of splitting or fatigue, they must be replaced.

SECTION 9 – OPERATION

- The mixers that you have purchased have been designed to accommodate all the loads that will be encountered in the normal course of operation.

CAUTION:

- Care must be taken to avoid prolonged operation of the mixer impeller(s) at liquid interface. These mixers were not designed to operate under those severe conditions and could become damaged.

SECTION 10 – MOTOR REMOVAL & INSTALLATION OF MOTORS

- **For Nema "C" Flanged Motors** (NOT integral motors): The motors supplied have been installed onto the reducers. In the event of motor maintenance, remove the bolts which hold the gear reducer's Nema "C" flange adaptor to the motor's "C" face. Remove the coupling half and service the standard NEMA motor as required.
- **Installation:** reverse the procedure.
- Please refer to "COUPLING ENCLOSED" cross sectional drawing which shows the mounting distance 1 13/16" (46.03mm). Note that the coupling is keyed onto the motor shaft (key provided).
- In the case of NORD integral motors: The motor can then be removed exposing the high speed pinion gear mounted on the motor shaft. The motor can then be serviced as required.

SECTION 11 – TROUBLE-SHOOTING / MIXER PERFORMANCE

PERFORMANCE:

- If you find that the mixer is not performing according to your expectations, one of the things that directly affects mixer performance are the BAFFLES (or lack thereof).
- Also check that the impeller blades are in the correct configuration A,B,C or D, that the correct blades are matched to the correct hubs and that the rotation is correct. (Please refer to Section 6 Pages 7, 8 & 9 for more information.

NOTE:

Baffles always help any mixer application by providing the means to convert rotational motion into top-to-bottom pumping / mixing.

- If the viscosity of the fluid is over 25,000 cp. Then baffles are not necessary.
- If the vessel is rectangular in shape, baffles may not be necessary.
- In circular or square vessels, the use of baffles is MANDATORY.

OTHER METHODS: Of achieving top-to-bottom motion without using baffles:

- Off-centering the mixer by 20% (uses the vessel as a baffle)
- Angle mounting (into a quadrant) – often seen on Portable Mixers. If you want to angle-mount a larger mixer, please check to be sure that the shaft was designed to accept these additional stress loads.

NOTE:
OIL LEAK(S) FOR Series EVG supplied with a flinger / shaft catcher & dry well seal.

FOR SERIES EVGX:
There is an oil overflow plastic pipe indicating oil leaks.

- If one of the 2 output oil seals were to fail (very rare), then the oil would migrate down the output shaft and be pumped by the flinger into the moat surrounding the dry well pipe. Any such leak would be contained by our sealed pedestal – access to it is by a plug.
- Any other oil leak will be visible on the outside of the gear reducer.

SYMPTOM	**REASON(S)**	**SOLUTION**
Oil leak on the reducer	Vent plug not installed or Vent plug painted over or Vent plug failure.	Clean up oil and remove the vent plug. If this stops the leak, change vent plug.
Oil leak on top of reducer	Motor and/or top bolts not tightened.	Use Teflon tape and tighten bolts
Oil leak on end plate	Bolts loose	Tighten bolts
Oil leak on top of reducer	Gasket between motor & the reducer failed	Replace gasket & silicone sealant
Sign of oil on baseplate	Drain pipe & valve damaged	Use Teflon tape/sealant to reseal
Oil leak on reducers with C Flanged motor(s)	If the vent was not installed plugged or faulty, the oil pressure in the reducer might have exceeded 2 psi causing the input oil seal to "blow-out" / reverse	Change the input oil seal

NOISE: Under normal circumstances, Envirequip mixers operate quietly and without vibration. If there is a metal-on-metal noise, check to see if the top bolt #3 is properly tightened to the shaft. If the bolt is not, the shaft will be lower than it should be and the flinger / shaft catcher may be touching the dry well pipe.

HEAT: Check the temperature of the reducer and motor. If hot, ($>140^0$F) that is **too hot** - check the oil level.

NOTE: On Series EVG & EVGX, an oil expansion chamber is supplied to minimize problems with over-filling of oil into the gear case. Care should be taken NOT to overfill the gear reducer with oil.

SECTION 12 – WARRANTY

- These mixers should provide long and satisfactory service. Only the finest materials were employed in their manufacture. However, if any defects in materials or workmanship occur, the defective part(s) must be returned to ENVIREQUIP (Division of 6445772 Canada Inc.) freight prepaid. ENVIREQUIP reserves the right to repair or replace, at its discretion, any part that proves to have been defective in materials or workmanship.
- ENVIREQUIP is not responsible for the warranties on components purchased, e.g. motors, but will endeavour to help to obtain resolution of any problem(s) with any of our sub-supplier(s) as regards their warranties.
- In any warranty claim involving any of our sub-suppliers, their warranty rules and Terms & Conditions will also rule.
- For a warranty, even if for a valid claim, to be acted upon, the original invoice must be paid. If the equipment is not paid, there is no warranty expressed or implied.
- ENVIREQUIP specifically excludes any liability as to loss of production, improper use of the equipment, abuse, any other liability expressed or implied that exceed the limited warranty given as applies to the equipment being free of defects in materials and/or workmanship.
- ENVIREQUIP's warranty is for (1) year against defects in materials or workmanship and also includes a Process warranty.
- The Process warranty only applies to the conditions that were specified at the time of bidding.
- Please refer to the terms and conditions as well as to the warranty for complete details.
- **The maximum liability on any given order cannot exceed the value of the amount of the original order.**

Call: 1-514-386-1043

SECTION 13 – MAINTENANCE LOG

We highly recommend you make a log for these items complete with the date checked and your signature, which is information required for warranty claims.

SUGGESTED ITEMS TO LOG:

CHECK OIL

CHANGE OIL

CHECK PEDESTAL FOR OIL LEAKAGE

CHECK FOR HEAT

CHECK FOR NOISE

CHECK FOR VIBRATION

CHECK BOLT TIGHTNESS:

- Top bolt & pedestal bolts
- Base bolts
- Clamp
- Coupling
- Hub & blades
- Reducer end cover bolts

CHECK MOTOR AMPERAGE

CHECK ROTATION AFTER ELECTRICAL WORK

OTHER

LEFT BLANK

FLOW CONTROL COMPONENTS

FIGURE 90B-200NPT, CHECK VALVE

LEFT BLANK

CAST 316 STAINLESS STEEL VALVES

PRESSURE TEMPERATURE RATING 200 WOG/120 WSP @ 350°F

FIG. 90B–200 N.P.T. or FIG. 90BSW Socket Weld

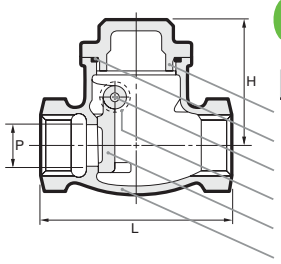

PARTS / MATERIAL
1. Cap / CF8M
2. Gasket / PTFE
3. Hinge Pin / 316
4. Plug / 316
5. Disc / CF8M
6. Body / CF8M

DIMENSIONS								
Valve	1/2	3/4	1	1 1/4	1 1/2	2	2 1/2	3
in/mm	15	20	25	32	40	50	65	75
L	2.60	3.18	3.58	4.19	4.75	5.50	7.06	7.89
in/mm	66	81	91	106.5	121	141	160	190
H	1.81	2.13	2.36	2.76	2.95	3.23	3.58	3.94
in/mm	46	54	60	70	75	82	91	100
P	0.59	0.79	0.98	1.22	1.46	1.89	2.48	2.95
in/mm	15	20	25	31	37	48	63	75
lbs/kg	0.66	1.06	1.65	2.53	3.40	5.60	8.38	13.01
	0.30	0.48	0.75	1.15	1.54	2.54	3.80	5.90

FIG. 91B–200 N.P.T. Only (Non-Rising Stem)

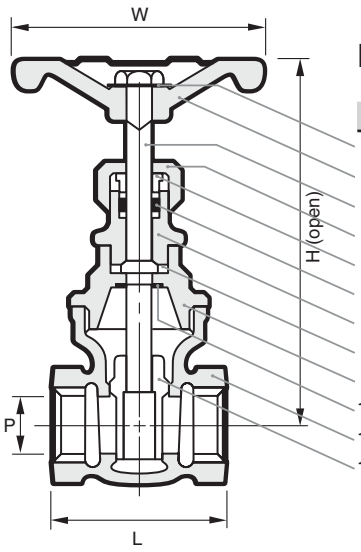

PARTS / MATERIAL
1. Name Plate / Aluminum
2. Handwheel / FCD
3. Stem / 316
4. Packing Nut / CF8
5. Gland / CF8M
6. Gland Packing / PTFE
7. Packing Box / 316
8. Stem Washer / 316
9. Bonnet / CF8M
10. Snap Ring / 316
11. Body / CF8M
12. Disc / CF8M

DIMENSIONS						
Valve	1/2	3/4	1	1 1/4	1 1/2	2
in/mm	15	20	25	32	40	50
L	2.24	2.38	2.64	2.99	3.43	3.70
in/mm	57	60.5	67	76	87	94
H	3.98	4.25	4.65	5.08	6.81	7.40
in/mm	101	108	118	129	173	186
W	2.44	2.44	2.87	2.87	3.74	4.61
in/mm	62	62	73	73	95	117
P	0.63	0.80	0.98	1.25	1.48	1.90
in/mm	16.1	20.3	25.0	31.8	37.5	48.3
lbs/kg	1.15	1.39	1.79	2.60	4.41	6.22
	0.52	0.63	0.81	1.18	2.00	2.82

FIG. 92B–200 N.P.T. Only (Rising Stem)

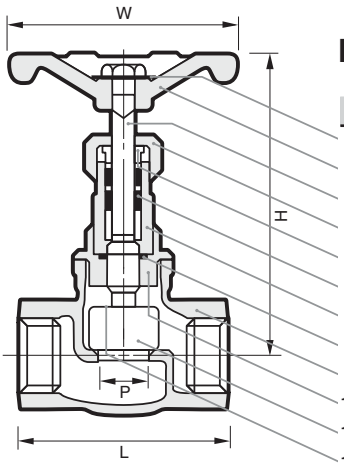

NAME / MATERIAL
1. Name Plate / Aluminum
2. Handwheel / FCD
3. Stem / 316
4. Packing Nut / CF8M
5. Gland / CF8M
6. Gland Packing / PTFE
7. Packing Box / 316
8. Stem Washer / 316
9. Body / CF8M
10. Bonnet / CF8M
11. Disc / 316
12. Snap Ring / 316

DIMENSIONS						
Valve	1/2	3/4	1	1 1/4	1 1/2	2
in/mm	15	20	25	32	40	50
L	2.60	2.70	3.08	3.39	3.86	4.35
in/mm	66	68.5	78.3	86	98	110.5
H open	4.02	3.98	4.09	4.72	5.59	6.18
in/mm	102	101	104	120	142	157
H close	3.78	3.66	3.74	4.41	4.88	5.43
in/mm	96	93	95	112	124	138
W	2.44	2.44	2.87	3.74	3.74	4.61
in/mm	62	62	73	95	95	117
P	0.59	0.63	0.75	0.94	1.26	1.50
in/mm	15	16	19	24	32	38
lbs/kg	0.88	0.99	1.37	2.31	3.09	4.63
	0.40	0.45	0.62	1.05	1.40	2.10

M. A. Stewart & Sons Ltd.
VALVES AND FITTINGS

SURREY, BC
P: 604.594.8431
F: 604.594.4335
surrey@mastewart.com

EDMONTON, AB
P: 780.436.9051
F: 780.435.0463
edmonton@mastewart.com

AJAX, ON
P: 905.683.7303
F: 905.683.9108
ajax@mastewart.com

MONTREAL, QC
P: 514.421.6311
F: 514.421.6323
montreal@mastewart.com

2/16/11-90.2

LEFT BLANK

FLOW-TEK

SERIES 7000, BALL VALVE

LEFT BLANK

8323 N. Eldridge Pkwy, #100, Houston, Texas 77041
Tel: 832-912-2300; Fax: 832-912-2301
Website: http://www.flow-tek.com

A Subsidiary of Bray International, Inc.

7000/8000 SERIES BALL VALVES
INSTALLATION - MAINTENANCE MANUAL

DESIGN
The design features of this valve include three piece construction and a "free floating" ball allowing ease of maintenance without special tools. The ball is not fixed, but is free to move with the line pressure. As a result of this feature, these valves are capable of tight shut-off with flow in either direction regardless of the position of the valve in the line. The downstream seat, opposite the pressurized side of a closed valve, must carry the load exerted by the line pressure on the ball, while the upstream seat is subject to little load or wear. For this reason, it is sometimes possible to increase useful seat life by turning the valve end-for-end in the pipeline.

1. USE:
The valve should be maintained as part of a preventative maintenance program and in accordance with Flow-Tek's recommended pressure, temperature and corrosion limits to ensure a long service life. During shipment, storage, and in operation, the valve should be fully open or fully closed ("open" is preferred for shipping and storage). Do not use in throttling service without investigating flow and pressure conditions.

WARNING: Before installing this equipment, confirm that it is suitable for the intended service.
The identifications tags describe the maximum allowable service conditions for this product.
Be sure that the installation is protected by appropriate pressure control and safety devices to ensure that acceptable limits are not exceeded.

2. OPERATION:
Operation of the valve is done by turning the handle a 1/4 turn (90 degree turn). CW to close, CCW to open.

A. VALVE OPEN POSITlON
The handle is parallel with the pipeline.

B. VALVE IN CLOSED POSITION
The handle is perpendicular to the pipeline.

Valves with actuators should be checked for actuator -valve alignment. Misalignment will result in high operational torque and damage to valve stem and seals.

STEM SEAL ADJUSTMENT:
Stem seal leakage may be corrected without disassembly by tightening the packing gland nut until such leakage stops. If the leakage continues or valve operating torque becomes excessive, the seals are worn and replacement will be necessary.

1. For 1/2"- 2", if slight leakage is noted at stem, straighten lock washer tab, tighten stem nut to flatten Bellville Washers, back stem nut off 1/4 turn, secure lock washer tab.
2. For sizes larger than 2", simply tighten the gland bolts evenly until leak stops. Do not over tighten.

8323 N. Eldridge Pkwy, #100, Houston, Texas 77041
Tel: 832-912-2300; Fax: 832-912-2301
Website: http://www.flow-tek.com

A Subsidiary of Bray International, Inc.

3. GENERAL INFORMATION FOR ON-SITE INSTALLATION:

Before installing the valves, the pipes must be flushed clean of dirt, burrs, and welding residues, or the seats and ball surface will be damaged.
The valve may be installed in any position on the pipeline.

The pipe must be correctly aligned and spaced as to not induce stresses in the valve.
As shipped from the factory, Valves may contain silicone based lubricant. This is for break-in and may be removed by disassembly and solvent washing, if it is objectionable for a particular application.

INSTALLATION OF THREADED END VALVES:

1. The use of a thread sealant is recommended; Use conventional sealant, such as hemp core, Teflon, etc;
2. Apply wrench only on the hex/octagon nearest the valve end being tightened. Do not tighten by applying torque to the opposite end cap or other valve component. Tightening by using the valve body, handle or the opposite end cap can seriously damage the valve; Use a wrench on both the near end cap and pipe to avoid applying torque to the body through the bolting.
3. In some applications, threaded end valves may be back-welded on site. Use caution. Do not overheat the valve body. Confirm that the end cap bolt holes are aligned with the body screw holes on both ends and that the end caps are parallel and correctly spaced to fit the valve body before re-assembly or back welding. Make up both of the threaded connections normally and then remove the body assembly as described below for weld-end connections before back welding the threaded connection.
4. Do not use the body screws to pull the pipe ends together or into alignment.

INSTALLATION OF WELD-END VALVES
(7200, 7300, 8200 & 8300 Series)

Insure that weld procedures are implemented that are compatible with the materials used.

1. Tack weld the valve to the pipe at four points on both end caps.
2. With the valve in open position, (the valve is in the open position when the handle is parallel to the axis of the valve and pipe), loosen all body bolts, take the body out.
3. Turn the handle in the half open position. Remove the seats and body gaskets.
4. Turn handle in closed position and remove ball.
5. Place all removed parts in a clean and secure place.
6. Replace the body and all bolts and tighten them slightly. This operation is very important, so that the body and end caps remain perfectly parallel, thus preventing any leakage at the body joint after welding.
7. Finish welding both end caps onto the pipe.
8. When cool, remove the body, clean end caps, and reassemble per instructions below.
9. Place body between the two end connections; then replace all bolts and cross tighten.
10. (See table 1. Tightening torques for end cap screws).

INSTALLATION OF EXTENDED WELD END VALVE

Insure that weld procedures are implemented that are compatible with the materials used.

1. Butt weld valves with 3 inch or longer extended weld ends do not require disassembly for installation welding.
2. Ensure that ball is in the full open position, and perform normal welding procedures, using care that the valve body does not reach a temperature above 200F. Use temperature measuring crayons to monitor body temperature if needed.

8323 N. Eldridge Pkwy, #100, Houston, Texas 77041
Tel: 832-912-2300; Fax: 832-912-2301
Website: http://www.flow-tek.com

A Subsidiary of Bray International, Inc.

4. DISASSEMBLY & CLEANING PROCEDURES:

CAUTION: ***Line must be depressurized before disassembly. Valve should be cycled after draining the system to relieve any pressure trapped in valve cavity. Ball valves can trap pressurized media when closed. Flush line with valve 1/2 open to remove hazardous media.*** **If the valve has been used to control hazardous media, it must be decontaminated before disassembly.**

Warning: ***DO NOT attempt to remove packing components or any other valve parts while line is under pressure!***
CAUTION: Properly support the valve before removing or loosening any body bolts. The larger sizes are heavy and may cause injury if allowed to swing or fall freely.
Remove actuation air and power connections and confirm that there is no stored energy in the actuation such as compressed springs or trapped air before beginning. Stored energy devices can cause serious injury if the energy is released without warning.

DISASSEMBLY FOR STEM AND SEAL SERVICE:

1. It is not necessary to remove the flanges from the pipeline. Removing any actuation and controls may make service easier.
2. Remove one of the upper body bolts (all but one set of screws for 6" thru 12") and loosen the remaining bolts. The center body will swing out for service, leaving the end caps in place on the pipe ends.
3. To completely remove the valve from the pipeline, remove the remaining upper body bolt and the body will lift free. Gently support the body in a vise to complete the remainder of the disassembly. To avoid damage to the seal surfaces, hold the body horizontally across its diameter, not across the end faces.
4. Remove the seats and end seals.
5. **1/2" thru 2-1/2" sizes**; Remove the handle nut and handle. Straighten the tab on the tab washer and remove the lock nut. Remove the tab washer, Belleville washers and gland sleeve.
6. **3" and 4" sizes**; Loosen the handle set screw and remove the handle. Remove the snap ring, travel stop, housing bolts and housing. Remove the packing gland bolts, gland, gland sleeve and washers.
7. **6" thru 12" sizes**; Loosen the handle junction head set screw and remove the handle assembly. Remove the snap ring, travel stop, housing bolts and housing. Remove the packing gland bolts, gland, gland sleeve and washers.
8. To remove the ball, rotate the stem so the ball is fully closed. Lift the ball from body, using a strap and lift device if necessary. NOTE: Extreme caution should be taken to avoid damage to the ball.
9. The stem must be removed from inside the body - a tap on the top of the stem should loosen it. The thrust washer should come out with the stem. Then remove the stem packing.

Disassembly for servicing seats and stem seals may be performed without removing the end flanges from the pipeline.
This feature allows the removal of the valve from service without disturbing piping connections.

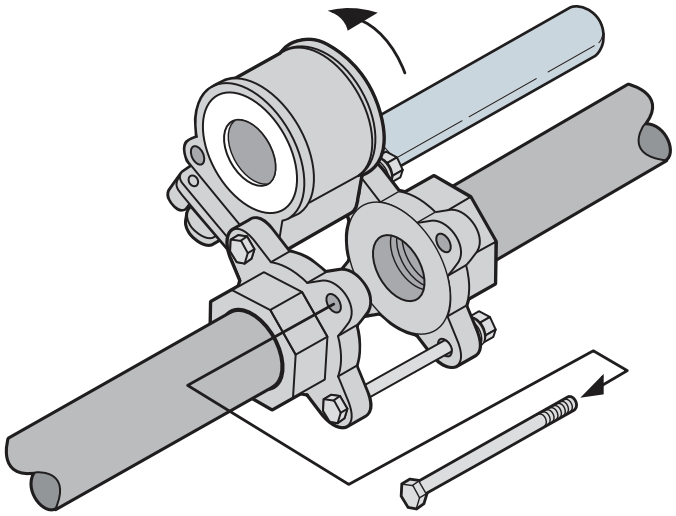

8323 N. Eldridge Pkwy, #100, Houston, Texas 77041
Tel: 832-912-2300; Fax: 832-912-2301
Website: http://www.flow-tek.com

A Subsidiary of Bray International, Inc.

5. VISUAL INSPECTION:

Clean and inspect metal parts. It is not necessary to replace the ball and stem unless the seating surfaces have been damaged by abrasion or corrosion. Replacement of all soft parts is strongly recommended whenever the valve is disassembled for reconditioning. This is the surest protection against subsequent leakage after valve assembly. The replacement parts can he ordered in kit form.

NOTE: The valve may be assembled and operated dry where no lubricants are allowed in the system; however, a light lubrication of mating parts will aid in assembly and reduce initial operating torque. Lubricant used must be compatible with the intended line fluid.

6. RE-ASSEMBLY:

½"-2" VALVE RE-ASSEMBLY PROCEDURES: (refer to page 6)

1. Hold the body horizontally in a vise firmly enough that it will not move but do not crush it.
2. Put washer protector (11A) and thrust washer (12) on valve stem (5) and slide the stem into the stem hole from inside valve body (1);
3. Slide the stem packing components (14) onto the stem until they are bottomed in the stem hole;
4. Put packing protector (11B) and packing gland sleeve (15) onto the stem on top of the packing set.
5. Install the Belleville washers, tab washer and nut onto the stem hand tight.
6. Turn the stem until the upper stem flat is perpendicular to the valve centerline (closed, so that the ball can fit onto the stem):
7. Iinstall the ball (3) inside the valve body. The lower stem flats will fit into the slot on top of the ball;
8. Turn the stem so that the ball is in the open position (the ball will not fall out of the valve);
9. Install the seats (4) and body seals into the body ends. Make sure the spherical curvature side of the seat will face the ball;
10. Lift the valve into position between the flanges in the pipeline.
11. Install the end cap bolts (9), lock washers (7) and nuts (8). Cross tighten all nuts to the values indicated in Table 1.
12. (Note: The use of a bore alignment tool, about 1.0 mm (0.04 inch) less than the internal diameter of the end cap and ball, inserted through the end cap and ball will prevent the ball from turning as the stem gland nut is lightened on the stem.
13. The bore alignment tool should be made from a material softer than 300 Series S.S. so that it will not inadvertently scratch the valve end cap or ball. Suggested materials: aluminum T6061. Acetal or other suitable hard polymer/plastic material.)
14. Secure the tab washer with one ear bending up; Place the handle (25) onto the stem, on top of the stem gland nut (26);
15. Secure the handle (25) with the remaining stem lock nut (26).
16. Cycle the valve slowly several times. By cycling slowly, the seats will align with and conform to the ball. A fast turning motion initially may damage the seats before they have a chance to form the proper seal:

3"&4" VALVE RE-ASSEMBLY PROCEDURES: (refer to page 7)

1. Hold the body horizontally in a vise firmly enough so it will not move but do not crush it.
2. Install bearing sleeve (13), washer protector (11A) and thrust washer (12) on valve stem (5) and slide the stem into the stem hole In valve body (1):
3. Slide the stem packing (14) onto the stem until it is seated in the bottom of the stem hole;
4. Put packing protector (1lB), then packing gland sleeve (15) on top of the stem packing;
5. Install packing gland (16) and bolts (17). Lightly tighten to secure packing gland.
6. Install stop housing (20) and housing bolts (21) hand tight. Install travel stop (22) and snap ring (30):
7. Rotate the stem to the closed position (the upper stem flat is perpendicular to the port centerline) and install the ball (3) inside the valve body. The lower stem flats will fit into the slot on top of the ball;
8. Turn the stem so that the ball is in the open position the upper stem flat is parallel to the bore centerline. The ball will not fall out of the valve;

9. Install the seats (4) and body seals (6) into the body ends. Make sure the spherical curvature side of the seat will face the ball;
10. Lift the valve into position between the flanges in the pipeline.
11. Install the end cap bolts (9), lock washers (7) and nuts (8). Cross tighten all nuts to the values indicated in Table 1.
12. Secure the handle (25A) with the handle bolt (27).
13. Cycle the valve slowly several times. By cycling slowly, the seats will align with and conform to the ball. A fast turning motion initially may damage the seats before they have a chance to form the proper seal:

6”-12” VALVE RE-ASSEMBLY PROCEDURES: (refer to page 8)

1. Hold the body horizontally in a vise firmly enough so it will not move but do not crush it.
2. Install bearing sleeve (13), washer protector (11A) and thrust washer (12) on valve stem (5) and slide the stem into the stem hole on valve body (1):
3. Slide the stem packing (14) onto the stem until it is seated against the bottom of the stem hole;
4. Put packing protector (1lB), then packing gland sleeve (15) onto the stem, on top of the stem packing;
5. Install packing gland (16) and bolts (17). Lightly tighten to secure packing gland.
6. Install stop housing (20) and housing bolts (21) hand tight. Install travel stop (22) and snap ring (30):
7. Rotate the stem to the closed position (the upper stem flat is perpendicular to the port centerline) and install the ball (3) inside the valve body. The lower stem flats will fit into the slot on top of the ball;
8. Turn the stem so that the ball is in the open position the upper stem flat is parallel to the bore centerline. The ball will not fall out of the valve.
9. Install the seats (4A), seat support rings (4B) and body seals (6) into the body ends. Make sure the spherical curvature side of the seat faces the ball;
10. Lift the valve into position between the flanges in the pipeline.
11. Install the end cap screws (9) and lock washers (7). Cross tighten the screws to the values indicated in Table 1.
12. Install the handle junction head (25B) onto the valve stem. Secure in place with one of the setscrews provided (27A).
13. Secure the handle (25) with the remaining setscrew (27).
14. Cycle the valve slowly several times. The seats will align with and conform to the ball. A fast turning motion initially may damage the seats before they have a chance to form the proper seal:

Refer to the instructions given in section 2, above, to re-commission the valve after installation.
For automated installations, follow the instructions provided with actuation instrumentation to correctly set up and recalibrate the installation.

Table 1; Recommended tightening torques for end cap screws

VALVE SIZE	1/2"	3/4"	1"	1 -1/4"	1-1/2"	2"	3”	4”	6”	8”	10”	12”
Nut Torque (lb-in)	130	130	130	200	200	200	530					
(Lb-ft)							44	83	83	83	150	240

A Subsidiary of Bray International, Inc.

8323 N. Eldridge Pkwy, #100, Houston, Texas 77041
Tel: 832-912-2300; Fax: 832-912-2301
Website: http://www.flow-tek.com

ITEM	PART NAME
1	BODY
2	END CAP
3	BALL
4	SEAT
5	STEM
6A*	BODY GASKET
6B*	BODY GASKET
9	BODY SCREW
10	ANT-STATIC
11A*	PACKING PROTECTOR
11B*	WASHER PROTECTOR
12	THRUST WASHER
14*	STEM PACKING
15	PACKING GLAND SLEEVE
18	BELLEVILLE WASHER
19	LOCK WASHER
23	STOP SET SLEEVE
24	STOP BOLT
25	LEVER
26	LEVER NUT
28	PLASTIC COVER
29	LOCK MECHANISM

* Items contained in repair kit.

1/2” thru 2” VALVES



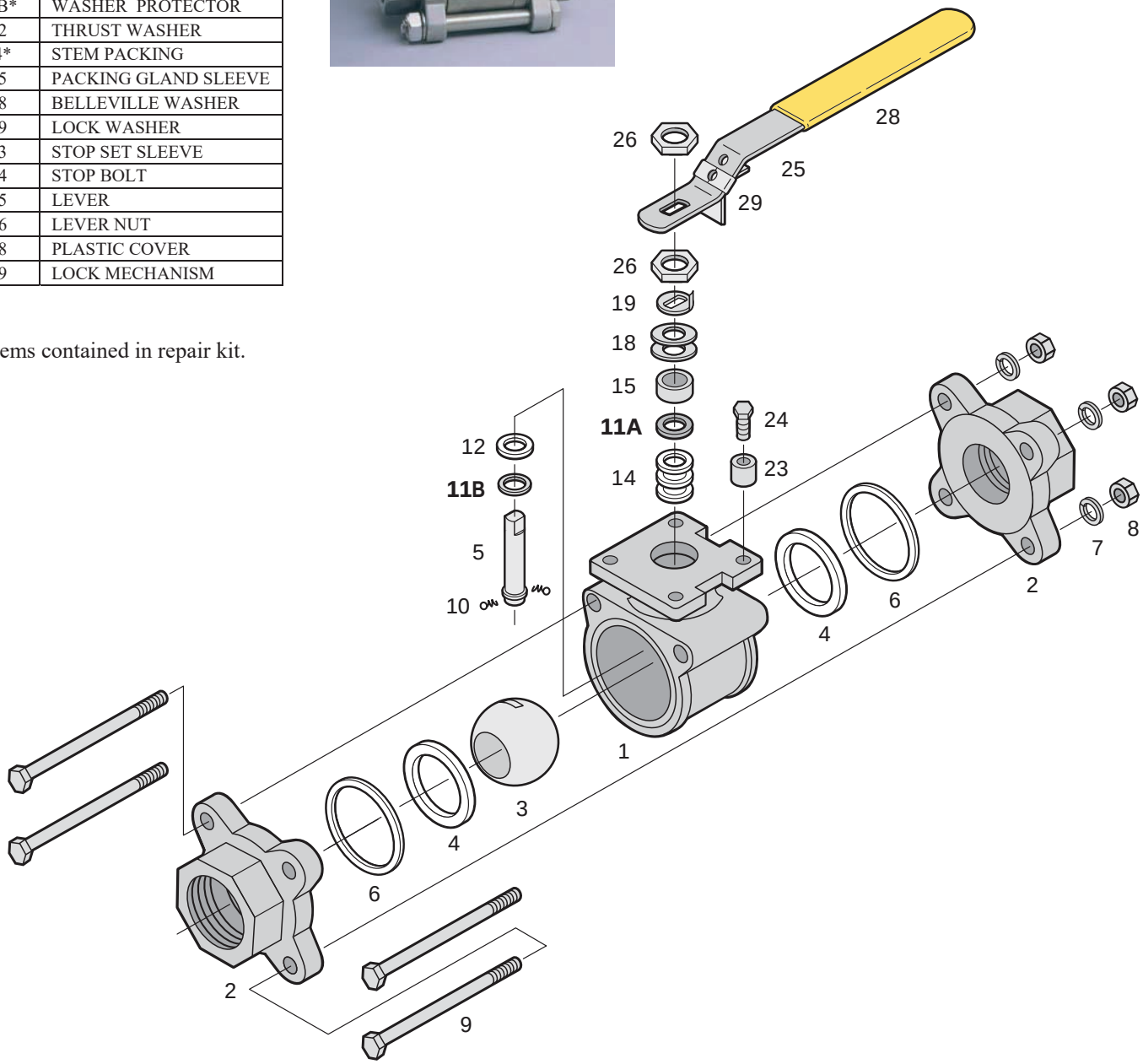

8323 N. Eldridge Pkwy, #100, Houston, Texas 77041
Tel: 832-912-2300; Fax: 832-912-2301
Website: http://www.flow-tek.com

A Subsidiary of Bray International, Inc.

3” and 4” VALVES

ITEM	PART NAME
1	BODY
2	END CAP
3	BALL
4	SEAT
5	STEM
6*	BODY GASKET
7	LOCKWASHER
8	NUT
9	BODY SCREW
10	ANT-STATIC
11A*	WASHER PROTECTOR
11B*	PACKING PROTECTOR
12	THRUST WASHER
13	BEARING SLEEVE
14*	STEM PACKING
15	PACKING GLAND SLEEVE
16	PACKING GLAND
17	GLAND BOLT
20	STOP HOUSING
21	HOUSING BOLT
22	TRAVEL STOP
25A	LEVER
27	HANDLE BOLT
30	SNAP RING



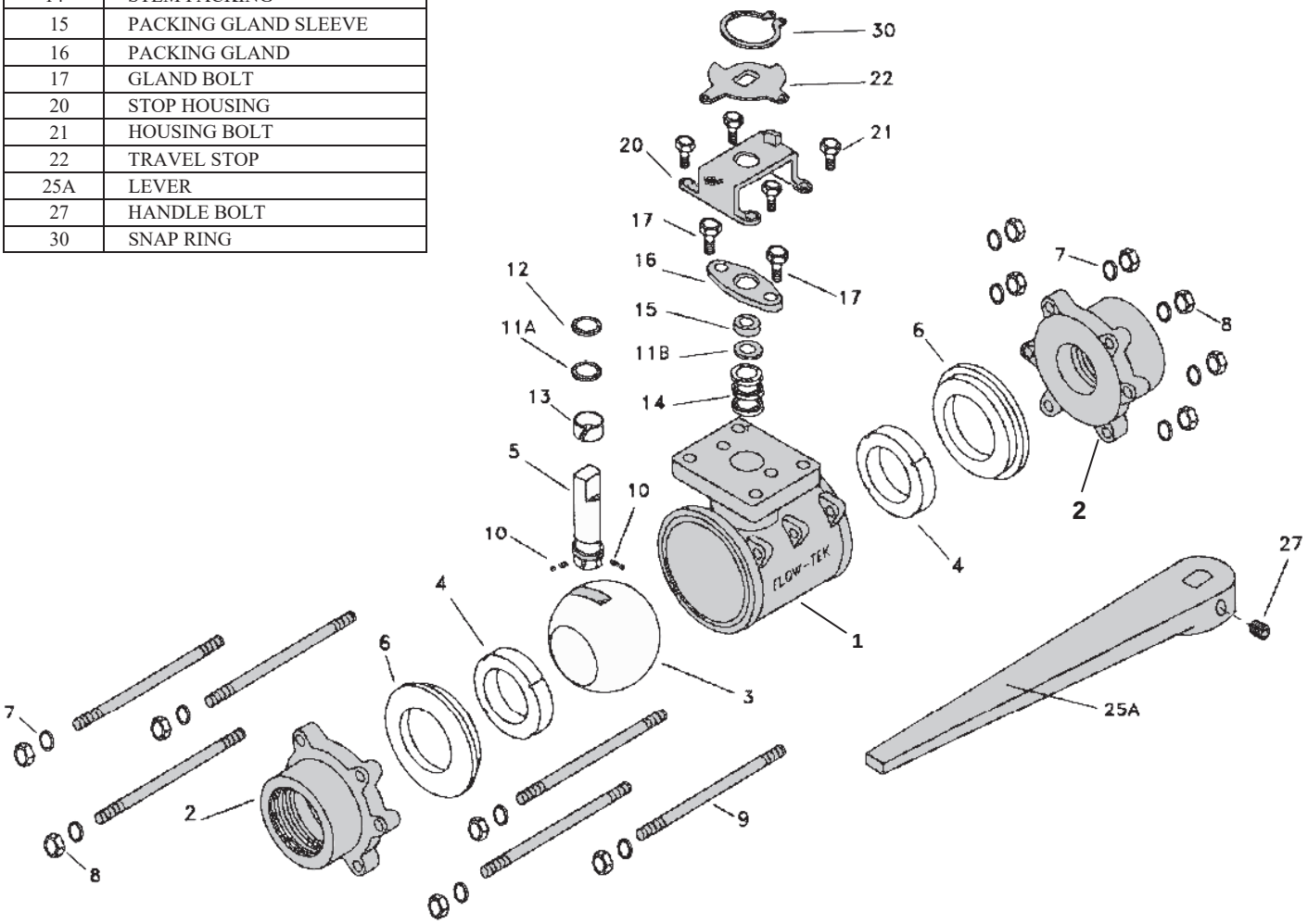

8323 N. Eldridge Pkwy, #100, Houston, Texas 77041
Tel: 832-912-2300; Fax: 832-912-2301
Website: http://www.flow-tek.com

A Subsidiary of Bray International, Inc.

ITEM	PART NAME
1	BODY
2	END CAP
3	BALL
4A	SEAT
4B	SEAT SUPPORT
5	STEM
6*	BODY GASKET
9	BODY SCREW
10	ANT-STATIC
11A*	WASHER PROTECTOR
11B*	PACKING PROTECTOR
12	THRUST WASHER
13	BEARING SLEEVE *
14*	STEM PACKING
15	PACKING GLAND SLEEVE
16	PACKING GLAND
17	GLAND BOLTS
20	HOUSING
21	HOUSING SCREWS
22	TRAVEL STOP
25A	LEVER
25B	HANDLE JUCTION HEAD
27	HANDLE BOLT
30	SNAP RING

6” thru 12” VALVES



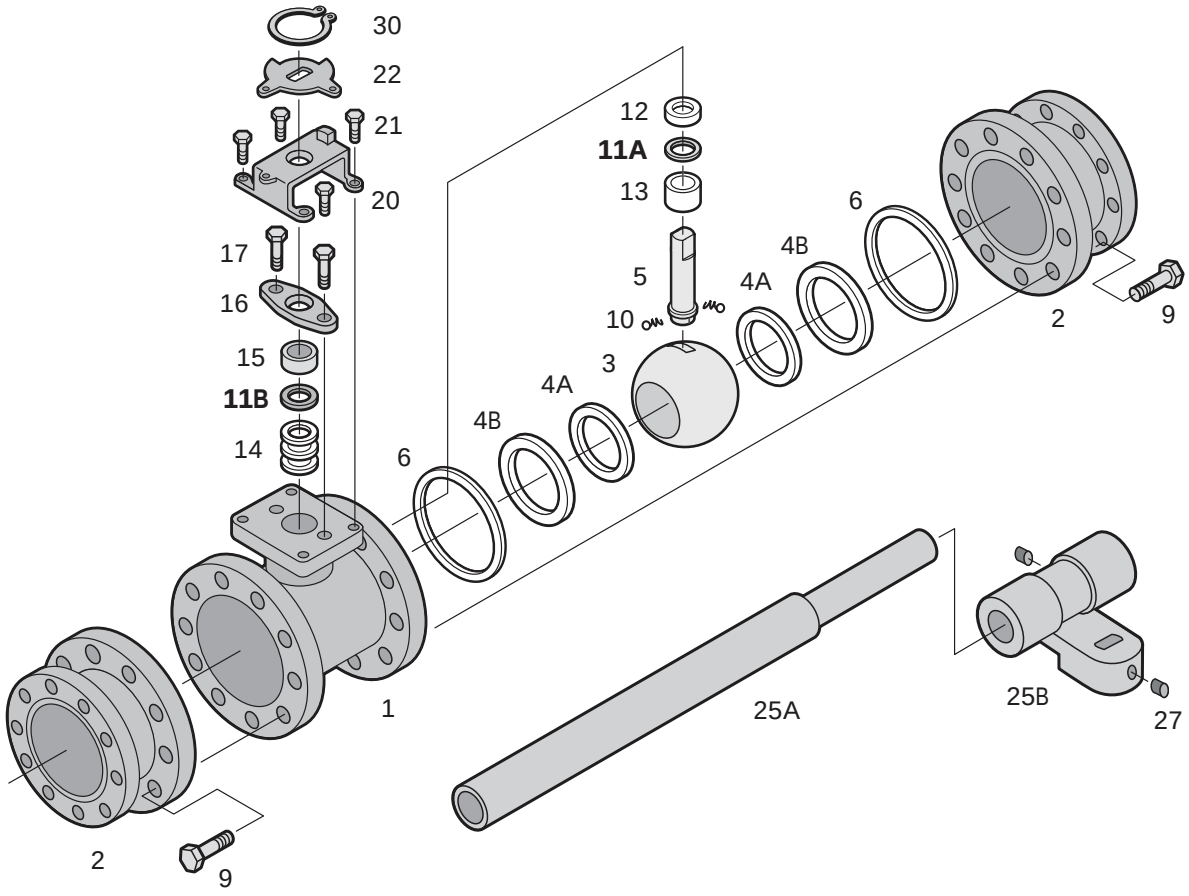

8. Short and Long Term Storage:

Short term:

1. Short term storage is defined as storage of products and equipment to be used in the construction of a project for periods of one to three months.
2. Ball valves should remain in the original shipping containers be placed on pallets of wood or other suitable materials. End protectors should remain on the valve ends to prevent the entrance of dirt.
3. Valves should be stored in the open position to protect the ball and seats.
4. Storage of ball valves can be in an open uncovered area provided provisions are made for inclement weather such as tarps or sheeting. Valves with electric actuators shall be stored under cover until ready for installation.

Long term:

1. Long term storage is storage of products and/or equipment for periods of three months or more.
2. Valves should be stored in the open position to protect the ball and seats.
3. Ball valves should remain in the original shipping containers placed on pallets of wood or other suitable materials and stored indoors. End protectors should remain on the valve ends to prevent the entrance of dirt. The storage environment should be dry and not have severe swings in temperature and humidity.

9. Safety Summary

1. Read completely and understand all instructions provided prior to beginning installation or maintenance.
2. Follow all instructions as described using the correct tools for the job.
3. Before installing this equipment, confirm that it is suitable for the intended service.
   The identifications tags describe the maximum allowable service conditions for this product.
4. Be sure that the installation is protected by appropriate pressure control and safety devices to ensure that acceptable limits are not exceeded.
5. Remove actuation air and power connections and confirm that there is no stored energy in the actuation such as compressed springs or trapped air before beginning. Stored energy devices can cause serious injury if the energy is released without warning.
6. Confirm that line pressure has been removed and that there is no pressure trapped within the valve prior to beginning service. Do not attempt to remove any packing components or other fittings before confirming that pressure has been completely removed!
7. Do not begin service work without proper tools and protective safety measures.
8. The work area should be clear of obstructions and other safety hazards.

LEFT BLANK

FLOW-TEK

SERIES F15, BALL VALVE

LEFT BLANK

INSTALLATION - MAINTENANCE MANUAL
F15 and F30 Series
150 and 300 Lb. Flanged Full Port Ball Valves

DESIGN

The design features of this valve include a split body, two piece construction, allowing ease of maintenance without special tools. These valves feature a "free floating" ball. The ball is not fixed, but is free to move with the line pressure.

As a result of this feature, these valves are capable of tight shut-off with flow in either direction or dead-ended, regardless of the position of the valve in the line.

The downstream seat, opposite the pressurized side of a closed valve, must carry the load exerted by the line pressure on the ball, while the upstream seat is subject to little load or wear. For this reason, it is sometimes possible to increase useful seat life by turning the valve end-for-end in the pipeline.

1. USE:

The valve should be maintained as part of a preventative maintenance program and in accordance with Flow-Tek's recommended pressure, temperature and corrosion limits to insure a long service life. During shipment, storage, and in operation, the valve should be fully open or fully closed ("open" is preferred for shipping and storage). Do not use in throttling service without investigating flow and pressure conditions.

WARNING: Before installing this equipment, confirm that it is suitable for the intended service.

The identifications tags describe the maximum allowable service conditions for this product.

Be sure that the installation is protected by appropriate pressure control and safety devices to insure that acceptable limits are not exceeded.

2. OPERATION:

Operation of the valve is done by turning the handle a 1/4 turn (90 degree turn). CW to close, CCW to open.

A. VALVE OPEN POSITION

The handle is parallel with the pipeline.

B. VALVE IN CLOSED POSITION

The handle is perpendicular to the pipeline.

Valves with actuators should be checked for actuator -valve alignment. Misalignment will result in high operational torque and damage to valve stem and seals.

3. STEM SEAL ADJUSTMENT

1. For 1/2"- 2", if slight leakage is noted at stem, straighten lock washer tab, tighten stem nut to flatten Bellville Washers, back stem nut off 1/4 turn, secure lock washer tab.

2. For sizes larger than 2", simply tighten gland bolts evenly until leak stops. Do not over tighten.

4. GENERAL INFORMATION FOR ON-SITE INSTALLATION:

The valve may be fitted in any position on the pipeline.

Before installing the valves, the pipes must be flushed clean of dirt, burrs, and welding residues, or the seats and ball surface will be damaged.

5. DISASSEMBLY AND CLEANING PROCEDURE:

CAUTION: Line must be depressurized before disassembly. Valve should be cycled to assure there is no pressure is trapped in valve cavity. Ball valves can trap pressurized media when closed. Flush line with valve 1/2 open to remove hazardous media.

WARNING: DO NOT remove packing gland or any other valve parts while line is under pressure!

Stem seal leakage may be corrected without disassembly by tightening the packing gland nut until such leakage stops. If the leakage continues or valve operating torque becomes excessive, the seals are worn and replacement will be necessary.

If the valve has been used to control hazardous media, it must be decontaminated before disassembly.

It is recommended that the following steps be taken for safe removal and assembly.

FLOW-TEK, Inc.
8323 N. Eldridge Pkwy #100
Houston, Texas 77041

Tel: 832.912.2300
Fax: 832.912.2301
www.flow-tek.com

© 2011 Flow-Tek, Inc.

As shipped from the factory, Valves contain Silicone based lubricant. This is for break-in and may be removed by disassembly and solvent washing, if it is objectionable for a particular application,

6. DISASSEMBLY FOR STEM AND SEAL REMOVAL:

1. Remove flange bolts and nuts and lift valve from line for servicing.

   NOTE: Care should be taken to avoid scratching or damaging serrated flange face. These valves are heavy!

   They should be adequately supported before removal from the line is begun.

2. Loosen handle set screw and remove handle and stop plate. Next, remove gland nuts, gland flange and gland.

3. Remove body end nuts, using proper wrench size. Lift off body end. One seat should come out with body end.

4. Remove body seal.

5. To take out the ball, rotate stem so ball is in fully closed position. Lift ball from body, using a strap and lift device, if necessary. NOTE: Extreme caution should be taken to avoid damage to the ball.

6. Take out other seat.

7. Stem must be removed from inside the body - a tap on the top of the stem should loosen it. The thrust washer should come out with the stem. Then remove the stem packing.

7. VISUAL INSPECTION:

Clean and inspect metal parts. It is not necessary to replace the hall and stem unless the seating surfaces have been damaged by abrasion or corrosion. we strongly recommend replacement of all soft parts whenever the valve is disassembled for reconditioning.

This is the surest protection against subsequent leakage after valve assembly. The replacement parts can he ordered in kit form.

NOTE: The valve may be assembled and operated dry where no lubricants are allowed in the system; however, a light

lubrication of mating parts will aid in assembly and reduce initial operating torque. Lubricant used must be compatible with the intended line fluid.

8. ASSEMBLY:

1. Install one seat in the body seat cavity with the spherical curvature facing the ball.

2. Install thrust washer on stem and slide the stem up through the body. Install packing and packing gland with packing gland bolt.

3. Install stop plate, handle and handle retainer nut.

4. Turn the handle CW to the CLOSED position. Line up the ball slot with the stem tang and slide the ball into position. Turn the handle CCW to the OPEN position to hold the ball in place.

5. Install the remaining seat into end cap seat pocket

6. Put body seal gasket into shoulder counter bore at flange in valve body.

7. Put end cap back into body and line up end flange. Because the body flange bolt pattern is different from the line flange bolt pattern, it is possible to assemble the valve which the bolt holes in the line flanges don't line up. Be certain to align end flanges bolt holes to straddle valve center lines.

   NOTE: Be careful not to damage body seal when assembling end into body.

8. Install body end nuts and tighten in a crossing pattern to the torque specified in Table 1.

9. **WARNING: Extreme care must be exercised during adjustment of body stud nuts to make sure that body studs are fully engaged. There should be at least one stud thread exposed beyond the flange on the body side and beyond the nut on the cap side.**

© 2011 Flow-Tek, Inc.

10. Cycle the valve slowly, with a gentle back and forth motion, to build gradually to the full quarter turn. By cycling slowly, the seat lips will assume a permanent seal shape against the ball. A fast turning motion, at this point, may cut the seats before they have a chance to form the proper seal.

11. Test valve, if possible, prior to placing valve hack into line position. **WARNING: If not properly secured, the valve can separate from the pressure source, resulting in possible injury. Always join the valve to companion.**

12. flanges of same pressure rating as valve and secure with a full set of flange bolts.

Table 1

BODY BOLT TORQUE		
VALVE SIZE	F15 (lb.in.)	F30 (lb.in.)
1/2″	140	140
3/4″	140	140
1″	210	210
11/4″	210	210
1-1/2″	550	550
2	550	550
2-1/2″	550	550
3″	550	1000
4″	550	1000
6″	1000	1000
8″	1000	1450
10″	1450	2400
12″	1450	3600

TEST AS FOLLOWS

1. Secure valve to a test future by means of a mating flange with full bolting and a suitable gasket. Orient valve so seat to he tested is facing up.

2. Introduce 50 to 100 psig air. Partially cycle the valve, under pressure, and then slowly close to make sure the cavity is pressurized (use hearing protection). Pour water into the upper port to cover the ball and visually check for bubbles. If bubbles appear, pour the water out, cycle the valve several times and recheck. To check for leakage in the other port, reverse the valve and introduce air pressure to the port just checked.

3. Check stem seal at this time by coating the gland area with a soapy water solution. If leakage occurs, tighten stem seal just until leakage stops.

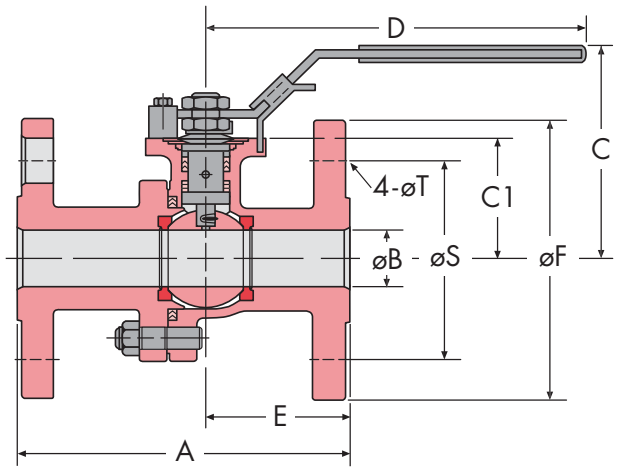

SECTION VIEW ½″ - 2″ VALVES
Dimensions may be found in product literature

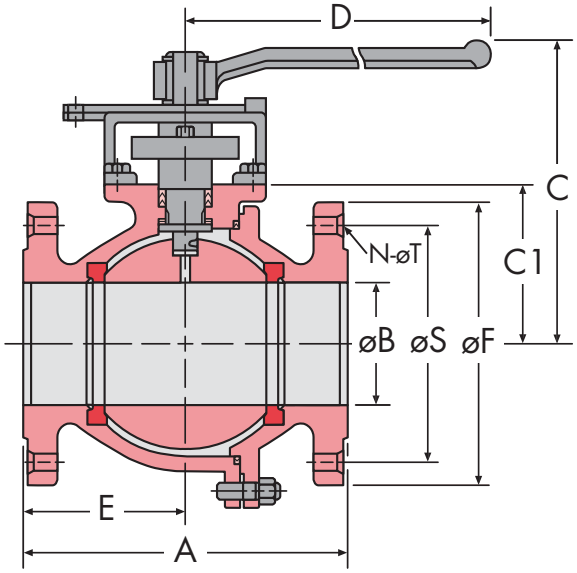

SECTION VIEW 2-1/2″ - 12″ VALVES

© 2011 Flow-Tek, Inc.

Item	Name
1	Body
2	End Cap
3	Ball
4	Seat
5	Stem
6	Body Seal
8	Body Nut
9	Body Stud
10	Anti-Static Device
11 A	Packing Protector
11 B	Thrust Washer Protector
12	Thrust Washer
13	Stem Bearing
14	Stem Packing
15	Packing Gland
16	Packing Follower
17	Gland Bolt
18	Belleville Washer
19	Tab Lock Washer
20	Travel Stop Housing
21	Housing Bolt
22	Travel Stop
23	Travel Stop Sleeve
24	Travel Stop Bolt
25	Handle
26	Lock Nut
27	Handle Bolt
28	Handle Sleeve
29	Locking Device
30	Snap Ring

2 1/2" – 12" Valves

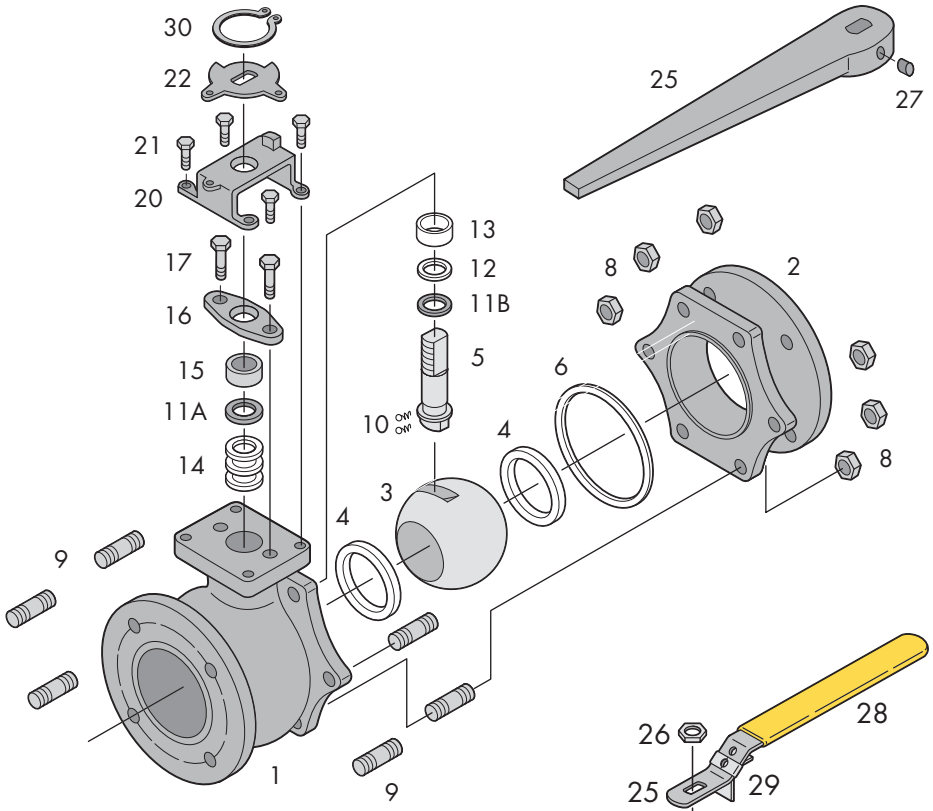

1/2" – 2" Valves

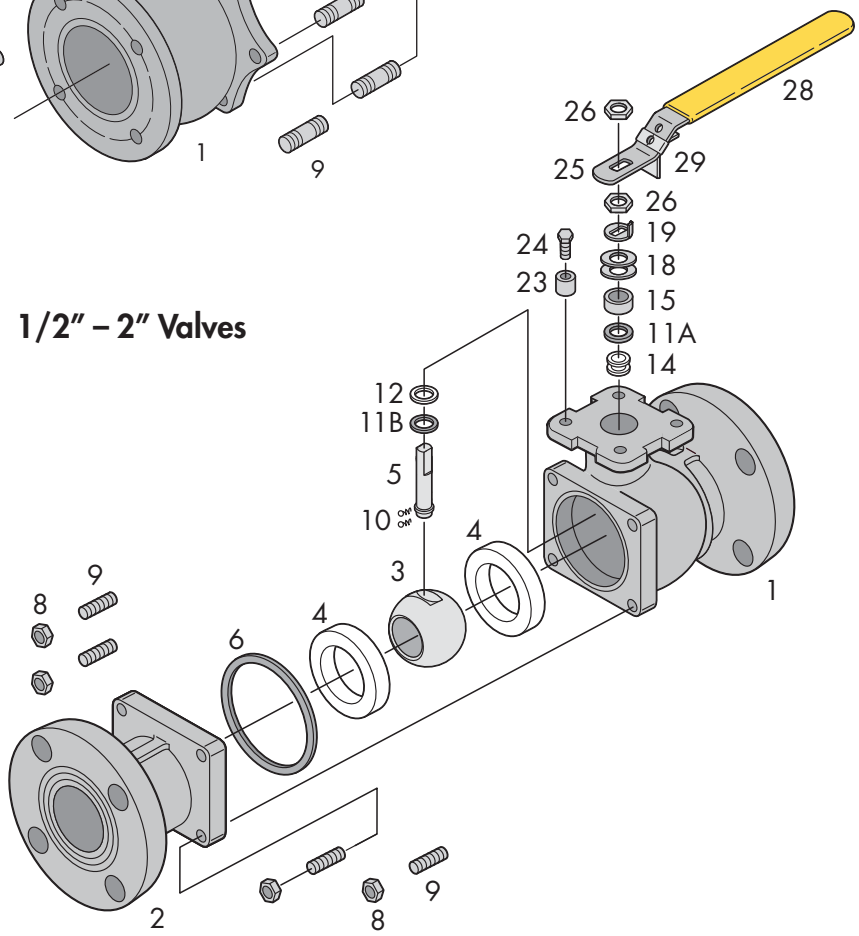

FLOW-TEK, Inc.
8323 N. Eldridge Pkwy #100
Houston, Texas 77041

Tel: 832.912.2300
Fax: 832.912.2301
www.flow-tek.com

© 2011 Flow-Tek, Inc.

9. SHORT AND LONG TERM STORAGE:

SHORT TERM:

1. Short term storage is defined as storage of products and equipment to be used in the construction of a project for periods of one to three months.
2. Ball valves should remain in the original shipping containers be placed on pallets of wood or other suitable materials. End protectors should remain on the valve ends to prevent the entrance of dirt.
3. Valves should be stored in the open position to protect the ball and seats.
4. Storage of ball valves can be in an open uncovered area provided provisions are made for inclement weather such as tarps or sheeting. Valves with electric actuators shall be stored under cover until ready for installation.

LONG TERM:

1. Long term storage is storage of products and/or equipment for periods of three months or more.

1. Valves should be stored in the open position to protect the ball and seats.
2. Ball valves should remain in the original shipping containers placed on pallets of wood or other suitable materials and stored indoors. End protectors should remain on the valve ends to prevent the entrance of dirt. The storage environment should be dry and not have severe swings in temperature and humidity.

10. SAETY TIPS AND WARNINGS

1. Before installation confirm that valve is suitable for the intended service.
2. Make sure that line is depressurized and drains are open/monitored during installation
3. Before working on valve being in service make sure that service media has been flushed and line is safe. Make sure that all applicable MSDS sheets are available. Follow all safety related procedures.
4. Before disassembly valve shall be cycled several times to assure there is no pressure trapped in body cavity.
5. During assembly make sure that all threaded connections are safe and have proper engagement.
6. During the pressure test of reassembled valve follow all safety precautions to avoid possible injury. (Use of proper test equipment, correct parts assemblies, follow test procedures)
7. While line is under pressure DO NOT remove packing gland or any other valve parts.

FLOW-TEK, Inc.
8323 N. Eldridge Pkwy #100
Houston, Texas 77041

Tel: 832.912.2300
Fax: 832.912.2301
www.flow-tek.com

© 2011 Flow-Tek, Inc.

LEFT BLANK

FLYGT

MODEL ENM-10, LEVEL SWITCH

LEFT BLANK

Installation, Operation
and Maintenace Manual



ENM 10

FLYGT
a xylem brand

Table of Contents

Introduction and Safety....2
Introduction....2
Safety....2
Safety terminology and symbols....2
User safety and health....3
Product warranty....3

Product Description....5
Introduction....5
Process description....5
Material....6
Cable lengths....6
Electrical data....6
Electrical data for Ex-approved installation....7
Approvals....7
Ex-approvals....7

Mechanical Installation....8
Precautions....8
General....8

Electrical Installation....9
Precautions....9
Wiring diagrams....9
Connection for audible or visible alarm....10
Ex-installation....11

Maintenance....12
General....12

Introduction and Safety

Introduction



CAUTION:

- Read this manual carefully before installing and using the product. Improper use of the product can cause personal injury and damage to property, and may void the warranty.
- Observe accident prevention regulations in force.
- Save this manual for future reference, and keep it readily available at the location of the unit.

Purpose of this manual

The purpose of this manual is to provide the necessary information for:

- Installation
- Operation
- Maintenance

Safety

Precautions



WARNING:

- The operator must be aware of safety precautions to prevent physical injury.
- You must observe the instructions contained in this manual. Failure to do so could result in physical injury, damage, or delays.
- Before starting work on the unit, make sure that the unit and the control panel are isolated from the power supply and cannot be energized. This applies to the control circuit as well.[R]
- A certified electrician must supervise all electrical work. Comply with all local codes and regulations. [R]

Safety terminology and symbols

About safety messages

It is extremely important that you read, understand, and follow the safety messages and regulations carefully before handling the product. They are published to help prevent these hazards:

- Personal accidents and health problems
- Damage to the product
- Product malfunction

Hazard levels

Hazard level	Indication
 DANGER:	A hazardous situation which, if not avoided, will result in death or serious injury

Hazard level	Indication
WARNING:	A hazardous situation which, if not avoided, could result in death or serious injury
CAUTION:	A hazardous situation which, if not avoided, could result in minor or moderate injury
NOTICE:	• A potential situation which, if not avoided, could result in undesirable conditions • A practice not related to personal injury

Electrical hazards

Electrical hazards are indicated by the following specific symbol. This symbol warns for presence of a dangerous voltage.



Electrical Hazard:

User safety and health

Introduction

All government regulations, local health and safety directives must be observed.

Prevent danger due to electricity

All danger due to electricity must be avoided. Electrical connections must always be carried out in compliance with the following:

- The standard connections shown in the product documentation that is delivered together with the product
- All international, national, state, and local regulations. (For details, consult the regulations of your local electricity supplier.)

For more information about requirements, see sections dealing specifically with electrical connections.

Product warranty

Coverage

Xylem undertakes to remedy faults in products from Xylem under these conditions:

- The fault is due to defects in design, materials, or workmanship.
- The fault is reported to a Xylem representative within the warranty period.
- The product is used only under the conditions described in this manual.
- All service and repair work is done by qualified and authorized personnel. All modifications must be done by qualified technicians.
- Genuine Xylem parts are used.

Limitations

The warranty does not cover faults caused by these situations:

- Deficient maintenance
- Improper installation
- Modifications or changes to the product and installation made without consulting Xylem

- Incorrectly executed repair work
- Normal wear and tear

Xylem assumes no liability for these situations:

- Bodily injury
- Material damage
- Economic loss

Warranty claim

Xylem products are high quality products with expected reliable operation and long life. However, should the need arise for a warranty claim, then contact your Xylem representative.

Qualification of personnel

All work on the product should be carried out by certified electricians or Xylem authorized mechanics.

Xylem disclaims all responsibility for work done by untrained, unauthorized personnel.

Support

Xylem only supports products that have been tested and approved. Xylem does not support unapproved equipment.

Product Description

Introduction

Product description

The ENM-10 is the simplest possible method for level control. A mechanical switch in a plastic casing, freely suspended at the desired height from its own cable. When the liquid level reaches the regulator, the casing will tilt and the mechanical switch will close or break the circuit, thereby starting or stopping a pump or actuating an alarm device. No wear, no maintenance. In sewage pumping stations, for ground water and drainage pumping – in fact, for most level control applications – the ENM-10 is the ideal solution.

Liquid density

The product is available in different versions for different liquid densities.

Temperature limit

The regulator can withstand up to 60°C (140°F).

Manual coverage

This manual is applicable to the following versions:

- Standard version Blue casing of ENM-10
- EX-version Black casing of ENM-10.

Available languages

For manuals in other languages, visit *tpi.xyleminc.com*

Process description

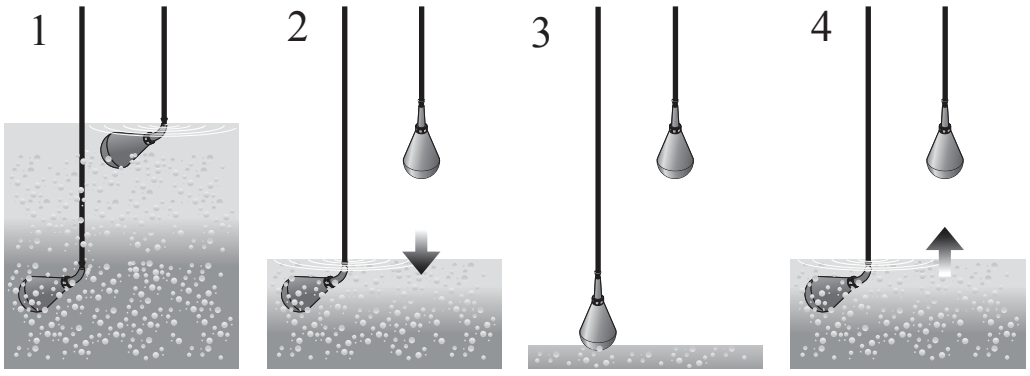

WS004996A

1. When the pumped media reaches a predetermined level, the upper level regulator tips over to horizontal position and the pump starts to drain the basin.
2. The basin is drained of fluid.
3. The pump stops when the lower level regulator returns to the vertical position.
4. The basin fills up again. The process restarts.

Material

Standard version

Part	Material
Regulator casing	Polypropylene
Cable sheath	PVC or Nitrile/PVC rubber compound

The plastic components are welded and screwed together. Adhesive is never used. Impurities and deposits will not adhere to the smooth casing.

EX-version

The version for Ex-applications has a black casing, made conductive by adding carbon to the polypropylene.

Cable lengths

For liquids with specific density between 0.95 and 1.10 g/cm^3, the following cables are available:

Version	Lengths m (ft)
Standard	• 6 m (20 ft) • 13 (42) • 20 (65) • 30 (100) • 50 (167)
Ex-version	• 6 m (20 ft) • 13 (42) • 20 (65) Nitrile/PVC rubber cable

Electrical data

Country	Electrical data
Canada	5 A, 250 V, DC 10 A, 250 V, AC
Denmark	10 A, 250 V, AC
Switzerland	6 A, 250 V, AC
Sweden	10 A, 230 V, AC Resistive load 3 A, 250 V, AC Inductive load 5 A, 30 V, DC Resistive load *1 mA, 5 V, DC, Gold Contact

* Part no: 594 79 19 and 594 79 20

Micro switch

The level regulator contains a micro switch, max rated 250 VAC/10 A.

Low-voltage supply

In many cases, local codes require that the regulator is connected to a low-voltage supply, even though it is approved for a higher voltage.

It is recommended that the regulator is connected to a low-voltage supply, 48 V or 24 V, and a protective transformer.

Electrical data for Ex-approved installation

Description	Data
Maximum input voltage, U_i	30 V
Maximum input current, I_i	100 mA
Maximum input power, P_i	1.2 W
Depth of immersion	Max 20 m

For cable

Description	Data
Maximum internal capacitance, C_i:	1.8 nF
Maximum internal inductance, L_i:	10 µH

Installation

There are special rules that apply to installation in an explosive atmosphere. Intrinsically safe circuits are normally required: Ex i. Use a EX-safety barrier, for example, Prod. No. 84 01 07.

Approvals

CE, CSA, SEMKO, NEMKO, DEMKO, EX

LVD approval according to EN61058

CSA approval: Cert No. 1330172

Cl.I Zone 0, Gr. IIC;

CL.I Div.1 Gr A, B, C and D

Cl.II Gr. E, F and G

Cl.III when installed to the certified Intrinsically Safe relay, Ex ia, rated for the locations per submitter control drawing and installation manual.

Ex-approvals

IECEx ia IIC T4 Ga: -20°C<Ta<60°C

IECEx NEMKO 09.008

ATEX II 1G ia IIC T4

NEMKO 10ATEX 1082

Applied standards

- EN 60079-0:2009/IEC 60079-0:2007
- EN 60079-11:2007/IEC 60079-0:2006
- EN 60079-26:2007/IEC 60079-26:2006

Intrinsically safe circuits are required for the automatic control system.

Use a Ex-safety barrier: For example, Prod. No. 84 01 07

0080

Mechanical Installation

Precautions



CAUTION:

- Read this manual carefully before installing and using the product. Improper use of the product can cause personal injury and damage to property, and may void the warranty.
- The operator must be aware of safety precautions to prevent physical injury.

General

To conform to local regulations, the regulators are normally connected through a transformer to a low-tension control circuit.

Make sure that two regulators are used, one for starting and one for stopping.

If an alarm is required at a given level, then connect a third regulator.

Identical regulators can be used for all functions.

Make sure that the cables do not become tangled during the installation.

The regulator cables must hang freely from each other.

Electrical Installation

Precautions

WARNING:

- Before starting work on the unit, make sure that the unit and the control panel are isolated from the power supply and cannot be energized. This applies to the control circuit as well.[R]
- There is a risk of electrical shock or explosion if the electrical connections are not correctly carried out or if there is fault or damage on the product. [R]
- A certified electrician must supervise all electrical work. Comply with all local codes and regulations. [R]
- All electrical equipment must be grounded (earthed). Make sure that the ground (earth) lead is correctly connected by testing it. [R]
- Make sure that all unused conductors are insulated. [R]

Wiring diagrams

Empty the sump

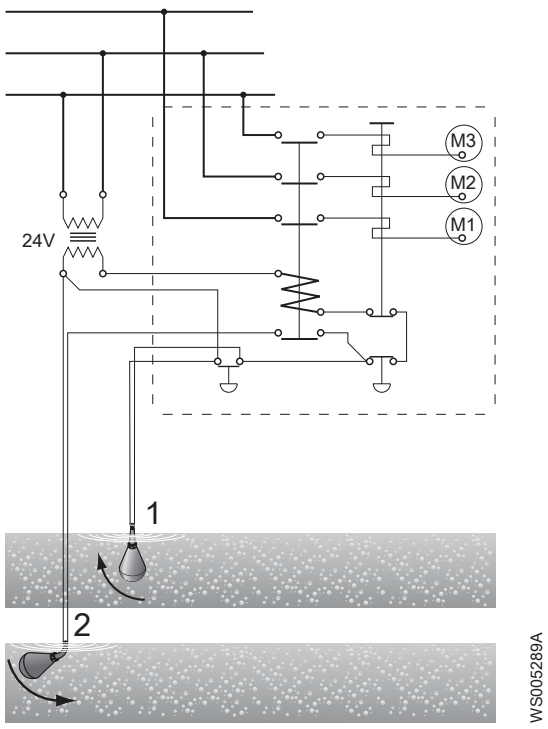

1. Start
2. Stop

Fill the tank

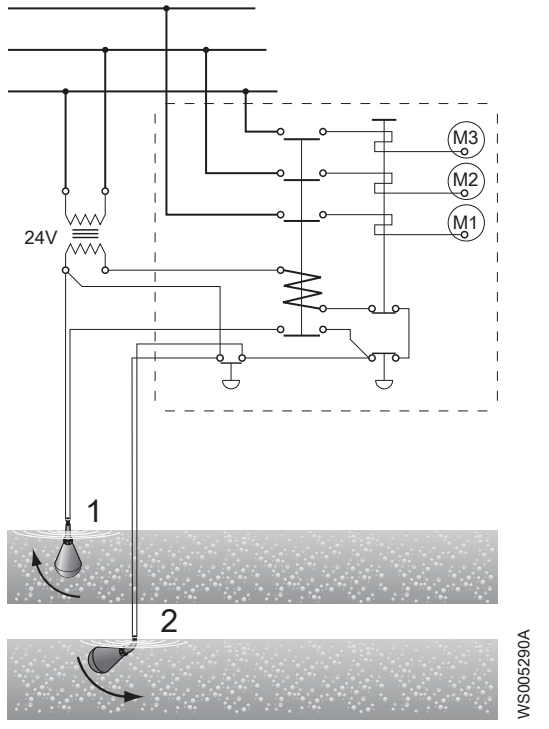

1. Stop
2. Start

Connection table

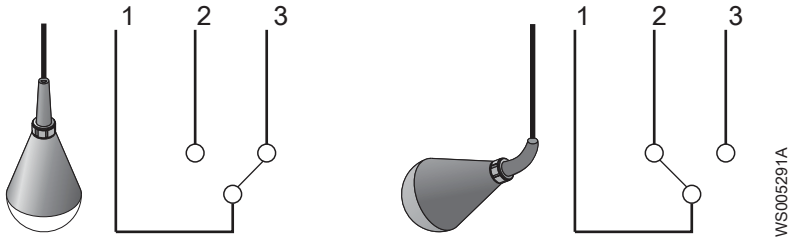

Cable	Connections to empty a sump	Connections to fill a tank
1	X	X
2	X	Insulate
3	Insulate	X

Color code

Cable	1	2	3
Color	EU: Grey US: Red	Black	EU: Brown US: White

Connection for audible or visible alarm

Wiring diagrams

Alarm low level	Alarm high level
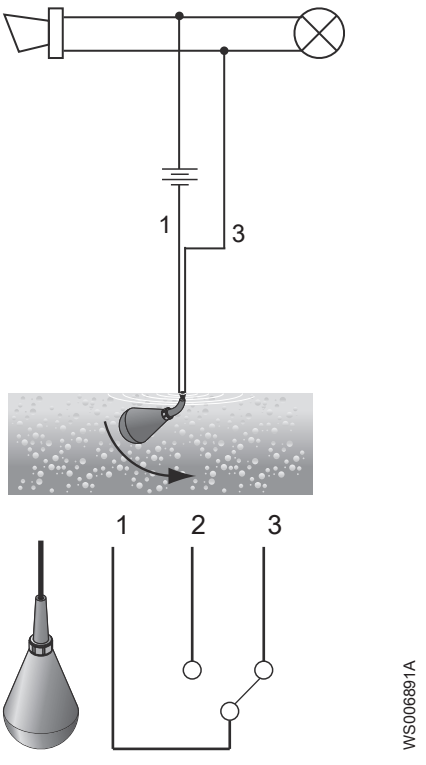	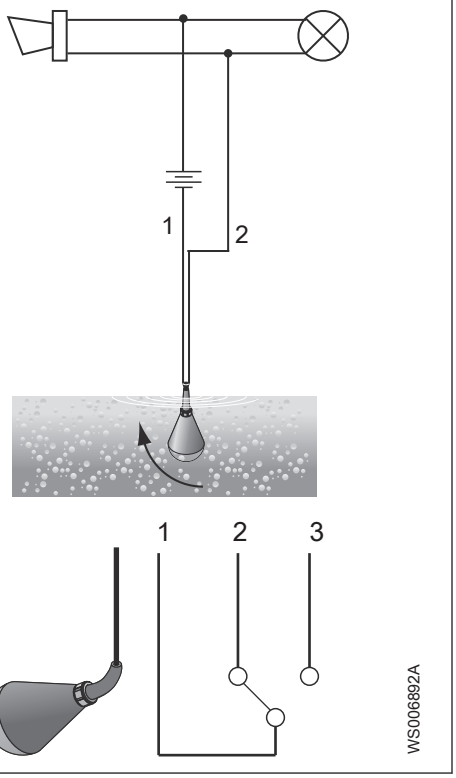

Description of position

Cable	1	2	3
Alarm high level	X	X	Insulate
Alarm low level	X	Insulate	X

Color code

Cable	1	2	3
Color	EU: Grey US: Red	Black	EU: Brown US: White

Ex-installation

EX-safety barrier

Intrinsically safe circuits are required for the automatic control system. EX-safety barrier (Prod. No. 84 01 07) must be installed.

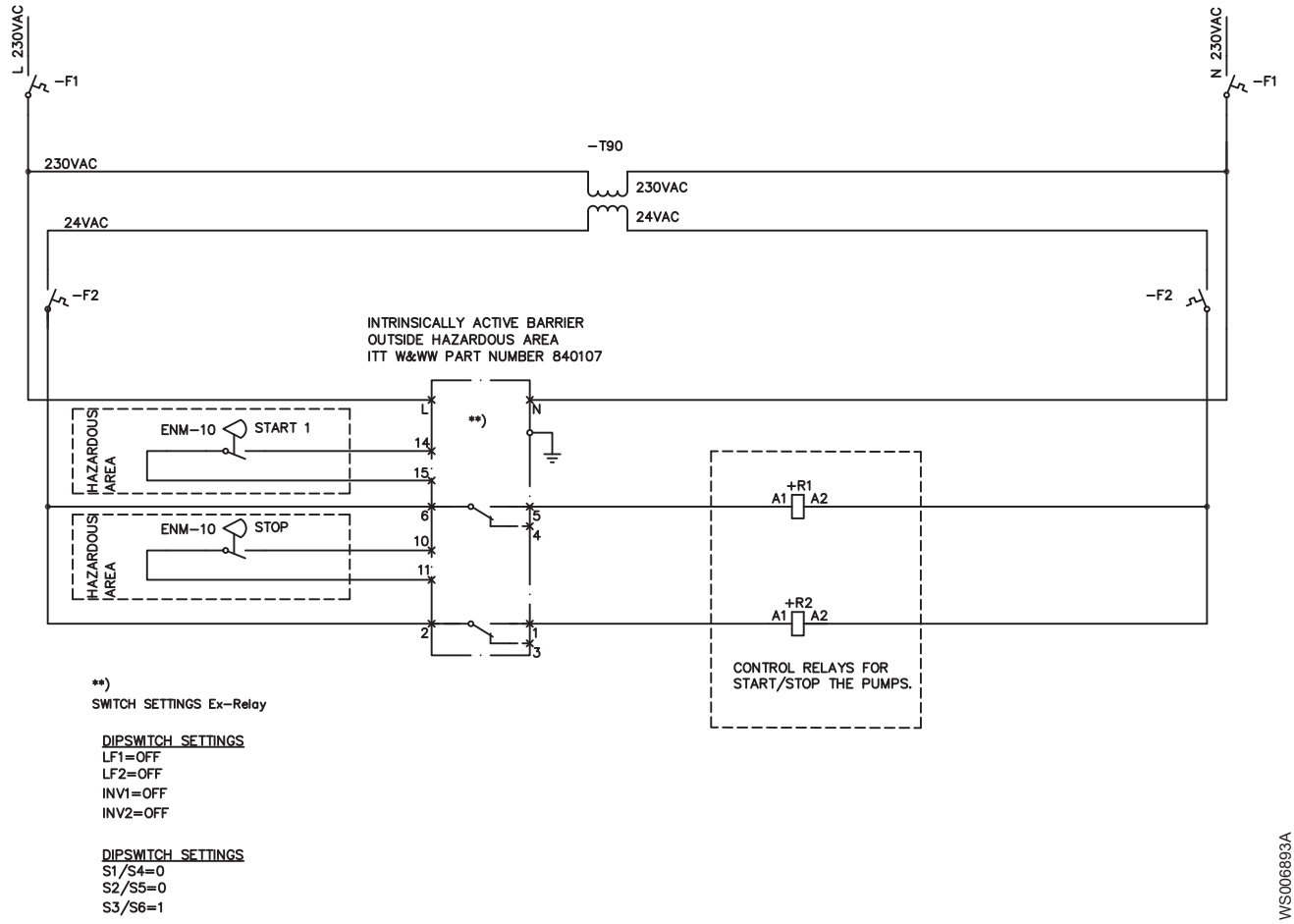

Maintenance

General

To ensure its continual operation:

- Clean the product, especially when fat/grease covers the plastic surface
- Make an occular inspection of the regulator. Make sure neither cable, protective sleeve or plastic casing show any signs of damage.
- A damaged regulator cannot be repaired in any way, due to the hermetic encapsulation. If the product is found to be damaged, replace it with a new one

EX-istallations

Make absolutely sure that the Ex-barrier is operating correctly.

- The LED changes when the switch is toggled.

Xylem |'zīləm|

1) The tissue in plants that brings water upward from the roots
2) A leading global water technology company

We're 12,500 people unified in a common purpose: creating innovative solutions to meet our world's water needs. Developing new technologies that will improve the way water is used, conserved, and re-used in the future is central to our work. We move, treat, analyze, and return water to the environment, and we help people use water efficiently, in their homes, buildings, factories and farms. In more than 150 countries, we have strong, long-standing relationships with customers who know us for our powerful combination of leading product brands and applications expertise, backed by a legacy of innovation.

For more information on how Xylem can help you, go to xyleminc.com

Refer to www.xylemwatersolutions.com/contacts/ for contact details of your local sales and service representative.

xylem
Let's Solve Water

Xylem Water Solutions
Manufacturing AB
361 80 Emmaboda
Sweden
Tel: +46 471 24 70 00
Fax: +46 471 24 74 01
http://tpi.xyleminc.com

Visit our Web site for the latest version of this document and more information

The original instruction is in English. All non-English instructions are translations of the original instruction.

© 2013 Xylem Inc

899751_4.0_en.US_2014-05_IOM.ENM10

GEMS

SERIES 27, CONTROLLER

LEFT BLANK

Form 270
Bulletin No 100274-1
Rev. K

Gems™ Sensors & Controls

Warrick® Series 27 Controls

Installation and Operation Bulletin

This bulletin should be used by experienced personnel as a guide to the installation of series 27. Selection or installation of equipment should always be accompanied by competent technical assistance. We encourage you to contact Gems Sensors or its representative if further information is required.

Important!

Before proceeding to install and wire the control, Read and thoroughly understand these instructions.

*** WARNING: To prevent ignition of flammable or combustible atmospheres, disconnect power before servicing.

When installing according to these instructions, the sensing circuit is intrinsically safe for Class I, Groups A, B, C and D; Class II, Groups E, F and G; Class III:

Electrical equipment connected to associated apparatus should not exceed maximum voltage marked on product.

Location: The control must be situated in a non-hazardous area where an explosive atmosphere will not exist at any time.

Wiring:

1. Intrinsically safe wiring must be kept separate from non-intrinsically safe wiring.
2. Intrinsically safe and non-intrinsically safe wiring may occupy the same enclosure or raceway if they are at least 2 inches (50mm) apart and separately tied down. Inside panels, field wiring terminals for intrinsically safe circuits must be separated by at least 2 inches (50 mm) from non-intrinsically safe terminals.
3. Wire the control device (s) to the Series 27 relay as shown in the specific application wiring diagram in this bulletin. A separate rigid metallic conduit should be used to enclose the conductors of the intrinsically safe control circuit.
4. An approved seal should be used at the point where the intrinsically safe control circuit wiring enters the hazardous area.

For intrinsically safe output wiring, use #14 or #16 AWG type MTW or THHN wire. By using these wire types in conjunction with the following distance recommendations, you will not exceed the maximum capacitance for field wiring. Use the following chart as a guide for maximum wire runs for differential level service (3wire) field wiring.

Model	Max. Sensitivity (K Ohms)	Distance (FT.)
27XXD0	3	4,000
27XXE0	10	900
27XXH0	24	800
27XXG0	100	75

One of the two grounding terminals provided on the intrinsically safe output terminal strip must be connected as reference to the same conductive media presented to terminals "H" and "L" ***(See applicable wiring diagram in this bulletin)*** Terminal G ***on the supply line***/load side terminal strip is a redundant system ground terminal and should be connected to the earth ground buss of the control's AC supply line feeder.

Note:

1. Intrinsically safe terminals can be connected to any non-energy generating or storing switch device such as a pushbutton, limit or float type switch or any Warrick electrode and fitting assembly.
2. To prevent electrical shock from supply line/load side powered connections, Series 27 should be mounted in a tool accessible enclosure of proper NEMA rated integrity.
3. For additional guidance on "Hazardous Location Installation" and "Intrinsically Safe Devices", consult ANSI/ISA standard RP 12-6 or NEC articles 500-516.

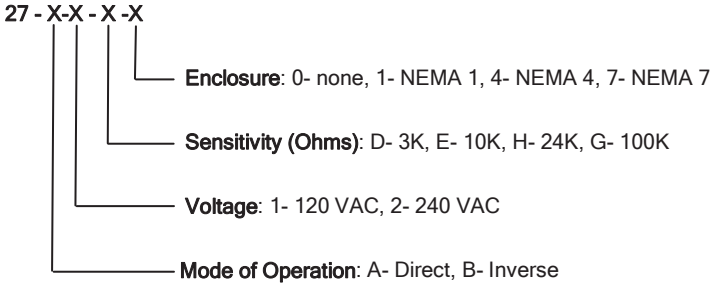

Grounding: Both mounting tabs of the Series 27 provide an electrical connection for earth grounding between the control's internal solid state circuitry and the enclosure chassis. To insure proper grounding, use only metal screws and lock washers when mounting this control.

Contact Design
SPDT (1 form C): One normally open (N.O.) and one normally closed (N.C.), non-powered contacts

Contact Ratings: 8A @ 240 VAC resistive, 8Amps @ 30 VDC resistive

Contact Life
Mechanical: 10 million operations.
Electrical: 100,000 operations minimum at rated load

Electronic Module
Solid state components epoxy encapsulated in a black nylon shell

Supply Voltage
120 or 240 VAC models ±10%, 50/60 Hz.

Supply Current
Relays energized - 1.7 VA.

Secondary Circuit
11 VAC RMS voltage on probes, 2.3 milli-amp current

Sensitivity
Models operate from 0-100,000 ohms maximum specific resistance (factory set)

Temperature
-40° to 150° F ambient

Terminals
Size 6 pan head screws with captivated wire clamping plate

Listings
U.L. Intrinsically Safe (UL 913)

Wiring diagram
Single Level Service
-Conductance Actuated

1. Connect (both terminals AC, AC) and G to appropriate VAC supply line.
2. Install metallic jumper between terminal H and L.
3. Connect terminal L to the electrode.

Terminal G must be grounded to the tank if metallic. When the tank is non-metallic, terminal G must be connected to an additional electrode of length equal to the longest electrode.

4. Wire contacts (C-NO) normally open and (C-NC) normally closed into load circuit as required.

Note: Jumper must be installed as shown to insure proper Operation.

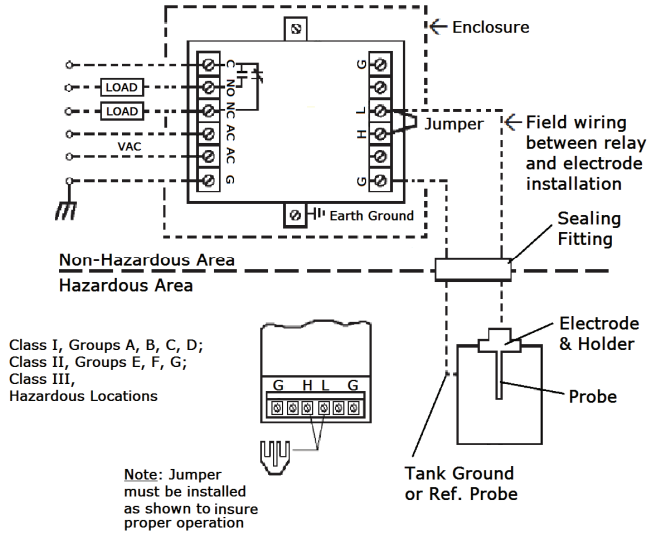

Wiring diagram
Differential Level Service
-Conductance Actuated

1. Connect (both terminals AC, AC) and G to appropriate VAC supply line.
2. Connect terminal H to the electrode and terminal L to low electrode.

Terminal G must be grounded to the tank if metallic. When the tank is non-metallic, terminal G must be connected to an additional electrode of length equal to the longest electrode.

3. Wire contacts (C-NO) normally open and (C-NC) normally closed into load circuit as required.

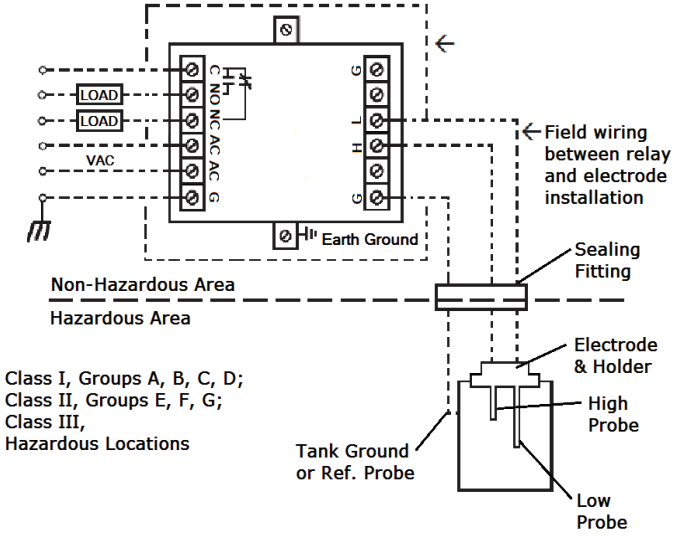

Wiring diagram
Single Input (Non Latching)
-Pilot Contact Actuated

1. Connect (both terminals AC, AC) and G to appropriate VAC supply line.
2. Install metallic jumper between terminal H and L.
3. Wire contacts (C-NO) normally open and (C-NC) normally closed into load circuit as required.
4. Connect the pilot contact to terminals G and L.

Note: Jumper must be installed as shown to insure proper Operation.

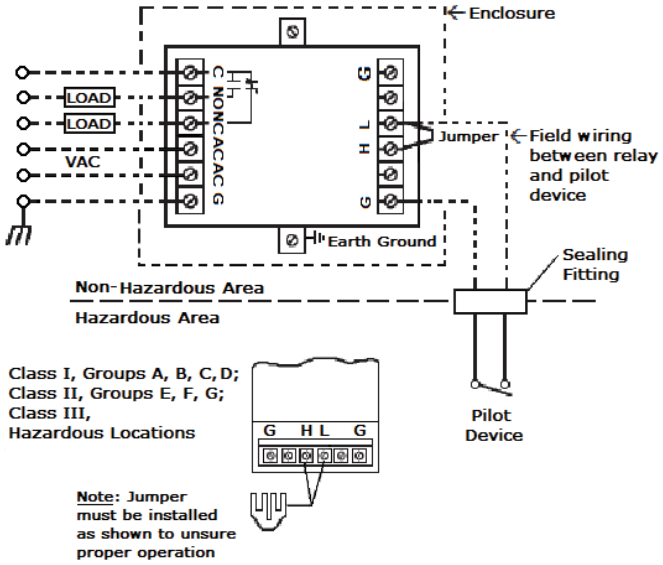

Wiring diagram
Dual Input Latching
-Pilot Contact Actuated

1. Connect (both terminals AC, AC) and G to appropriate VAC supply line.
2. Wire contacts (C-NO) normally open and (C-NC) normally closed into load circuit as required.
3. Connect the latch pilot contact to terminals G and H and the unlatch Pilot contact to terminal G and L

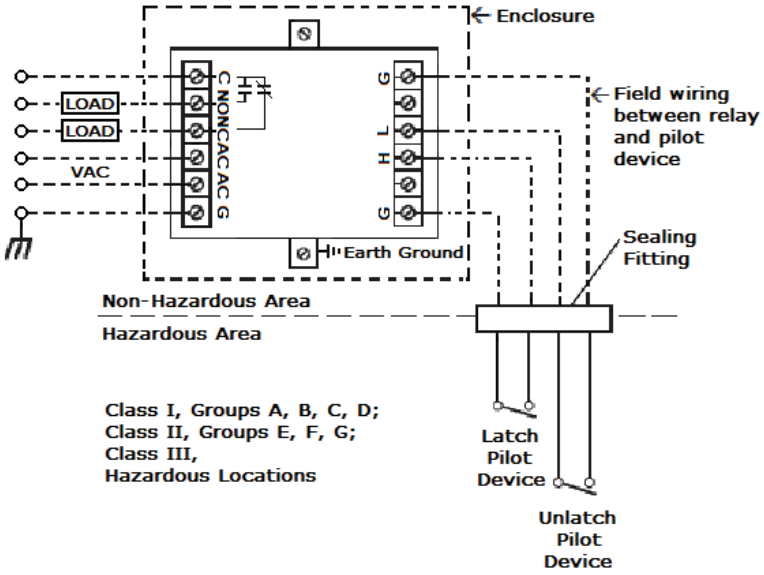

Form 173
Sheet P/N 100303-1
Rev. D

Recommended Grounding Methods for Warrick® Electrode Fittings

GENERAL:

1) Always follow good N.E.C. (C.E.C.) grounding and bonding wiring procedures. 2) Use 'approved' insulated ring terminals for all wiring connections. 3) Use # 14 or # 16 AWG, type MTW or THHN copper wire only.. 4) Wiring must be rated higher than nominal voltage and temperature values anticipated in installation.

INSTALLATION: 1) During installation orient the fitting so the tapped hub on the terminal housing faces the most favorable direction for receiving the conduit from the control box. 2) After conduit has been installed and conductors pulled through same, fasten the incoming ground conductor(s) as shown below; the ground connection should be facilitated by securing that end of the system ground wire to one of the four screws provided which hold the terminal housing to the body of the electrode fitting or to the ground screw when provided.

For Metallic Vessel

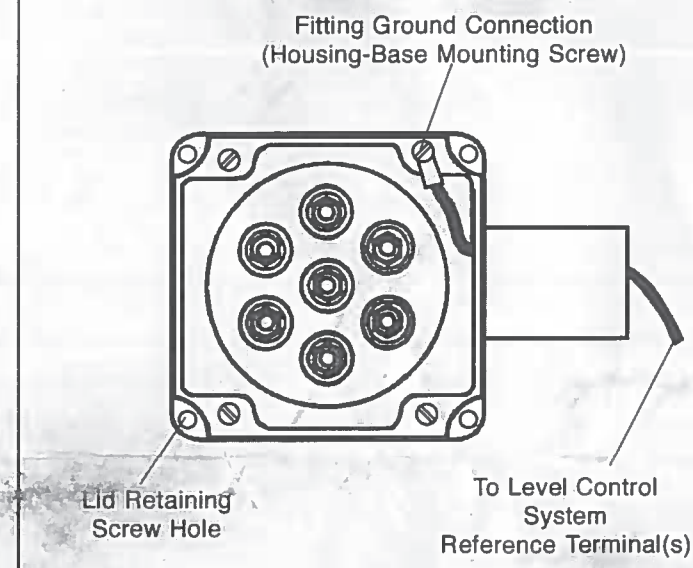

For Non-Metallic Vessel

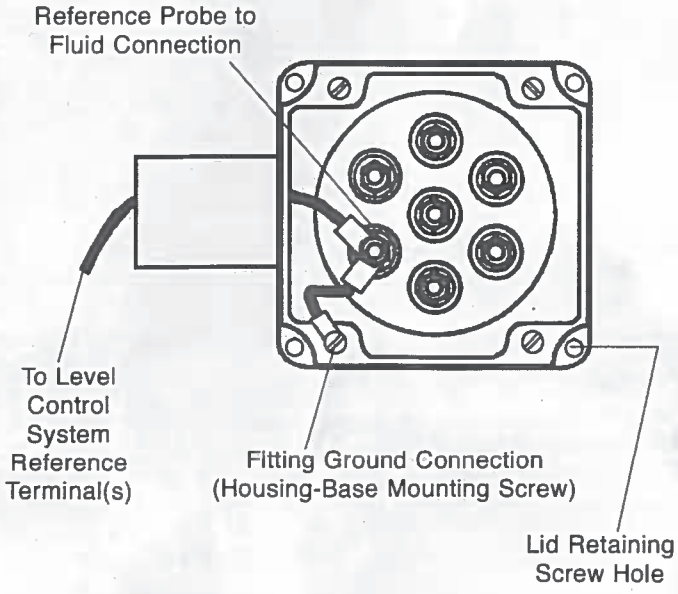

Gems Sensors Inc.
One Cowles Road
Plainville, CT 06062-1198
Tel: 860-793-4579
Fax: 860-793-4580

GUILMONT

MODEL GF 8431-2125, FLOWMETER

LEFT BLANK

V MEDIUM RANGE PTFE FLOW METERS

Incorporating traditional variable area precision glass technology, these rugged PTFE flow meters offer accurate and economical solutions to medium flow range measurements. **V meters** are designed with unique rotatable scales of dual air-water direct reading graduations showing SCFM and SLPM (air), as well as GPM and LPM (water) markings.

LEAK INTEGRITY

Flow meters are individually tested on a Mass Spectrometer Leak Detector and certified to a leak integrity rating of 1 X 10^{-7} sccs Helium or better.

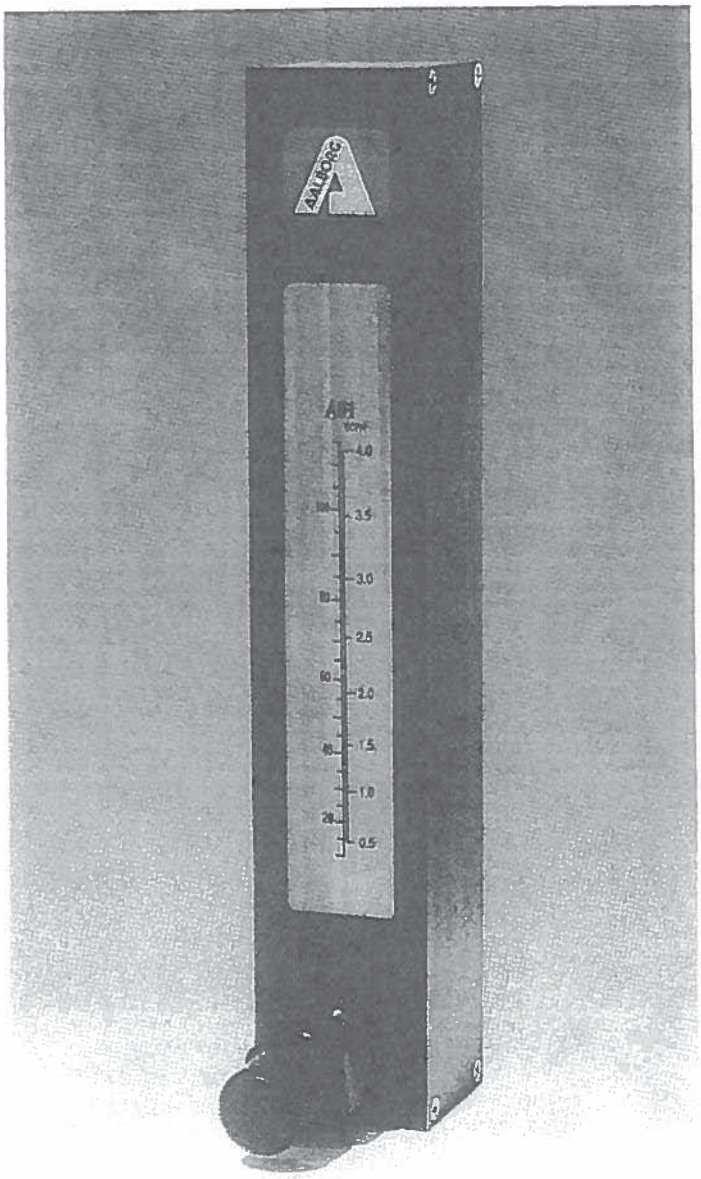

SPECIFICATIONS

SCALES	Rotatable, direct reading air, (SCFM-SLPM) and water (GPM-LPM). Scale length is 127mm (nominal).
ACCURACY	±5% of full scale.
MAXIMUM TEMPERATURE	150°F (65°C.)
MAXIMUM PRESSURE	100 psig (6.7) bars.
CONNECTIONS	3/8" NPT female in line or horizontal rear.
LEAK INTEGRITY	Individually leak tested and certified.

MATERIALS OF CONSTRUCTION

TUBE SHIELDS	Polycarbonate.
FLOW TUBES	Heavy walled precision formed borosilicate glass.
FLOATS	PTFE.
WETTED PARTS	PTFE, PCTFE.
SEALS	PTFE.

DIMENSIONS (PANEL MOUNT MODEL)

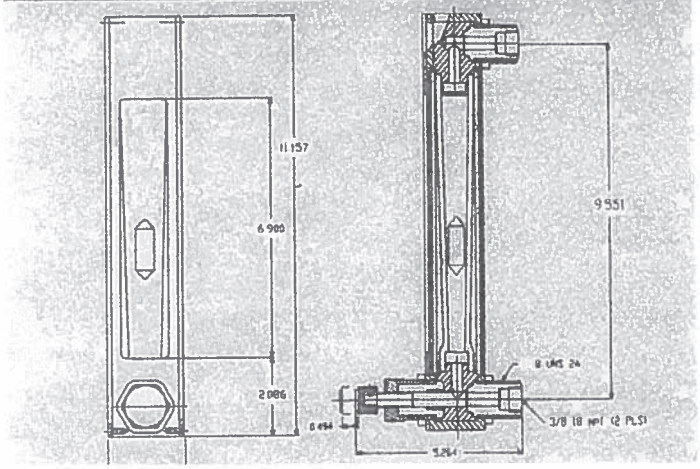

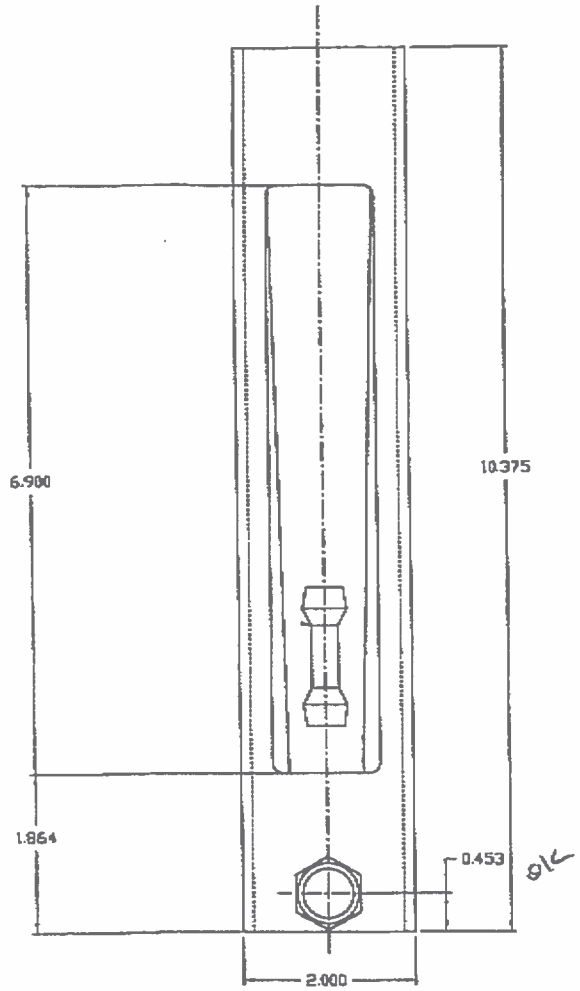

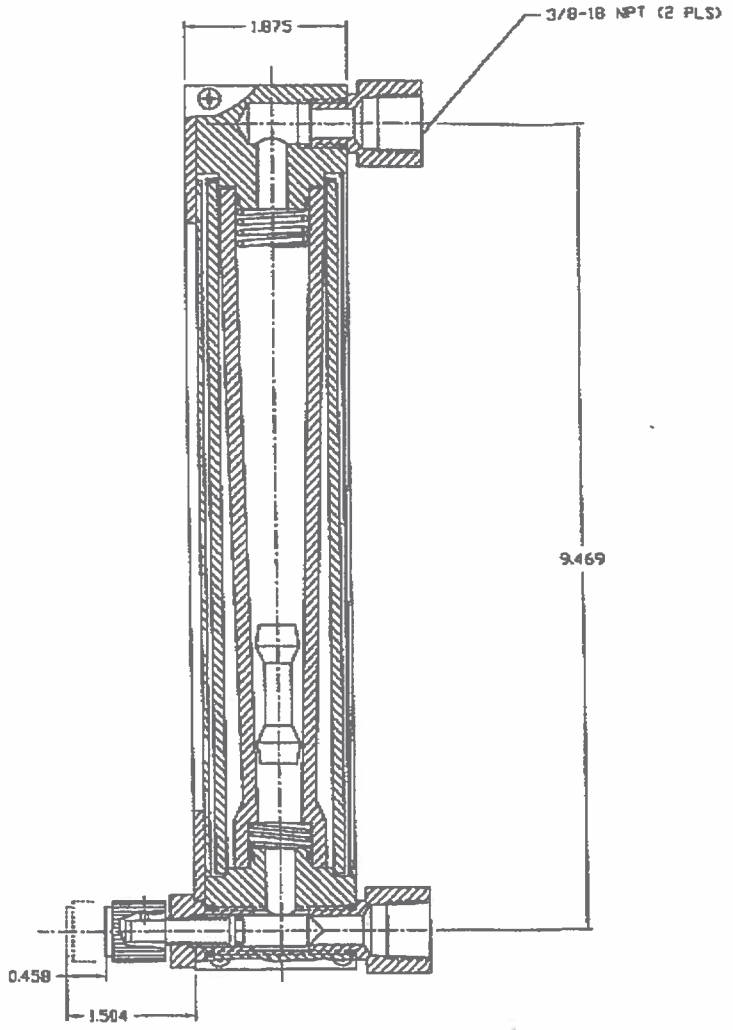

TOLERANCES (UNLESS OTHERWISE SPECIFIED) DECIMAL: ±0.005 IN FRACTION: ±1/64 IN ANGULAR: ±1/2°	AALBORG ORANGEBURG NEW YORK	
SCALE FULL COMPUTER SYMBOL	TITLE PANEL V FLOWMETER VALVE OPTION	
SUPERSEDES		
DRAWN DATE		
CHECKED	DWG. SIZE D	DWG.NO. REV.
APPROVED		

TOTAL P.01

FLOW METER INSTRUCTIONS

GENERAL INFORMATION

Inspect instrument for possible visible damage resulting from shipping. Notify UPS or other carrier as well as the distributor where the flow meter was purchased of any claims.

Flow meters always must be installed in a vertical position, any significant deviation from vertical will affect the readings.

Valves should be closed before installation and opened gradually after all connections are carefully inspected. A leak test is highly recommended especialy when hazardous fluids are involved.

CAUTION: Excessive tightening of valves may damage the orifice.

It is important that all lines to be connected to the flow meter are purged of any dust or other residual contamination prior to installing the meter. All P and S style flow meters are equipped with a filter in the inlet port. In some applications an additional filter should be installed at the inlet of the flow meter.

STICKING FLOATS

Before installing open the valve of the flow meter and check to make sure that the float or floats are moving freely in the flow tube. This is best done by slowly tilting the flow meter from horizontal to vertical while observing if the float is rolling freely.

All meters are thoroughly inspected at the factory prior to shipping and are sealed in polyethylene bags to prevent dirt from entering into the flow passages. Certain small bore flow tubes have a clearance between the float and the inside walls of the flow tube of only a few ten thousandths of an inch. In some cases these flow tubes are found to have floats that are sluggish of not moving due to condensation resulting from temperature changes during shipping.

It is advisable to blow a dry clean gas through the meter to free float.

SAFETY INFORMATION

P and S style flow meters are designed to be operated at pressures not exceeding 200 psig (13.6 bars), or temperatures not exceeding 250 degrees F (121deg.C).

T style flow meters are designed to be operated at pressures not exceeding 100 psig (6.8 bars), or temperatures not exceeding 150 degrees F (65.5deg.C).

NOTE: When using a T style PTFE flow meter, at a pressure and/or temperature greater than standard the leak integrity approaches 1x10. Standard conditions are considered to be 14.7 psia (1 bar) and 70 degrees F (21deg.C).

All meters are factory tested for leakage prior to shipping. For hazardous fluids the flow meter must be re-tested at the time of installation in the system, prior to usage. It is also important that a leak integrity test is performed periodically to maintain safe operating conditions.

Flow meters must be protected from breakage due to external conditions such as objects bumping into or hitting the instrument, extreme vibrations, or attack by corrosive materials. It is the responsibility of the customer to acquaint the operator(s) of this flow meter with all appropriate safety information.

VALVE ALIGNMENT

The built-in needle valve may be positioned at either the inlet or the outlet of the flow meter. Valves are factory installed at the inlet of the flow meter unless otherwise requested.

APPLICATION	VALVE POSITION
Exhaust pressure at Atmospheric conditions	Valve at Inlet
Exhaust pressure other that Atmospheric conditions *	Valve at Outlet
Vacuum	Valve at Outlet
Liquid flow	Valve at Inlet or Outlet

*When using a flow meter with exhaust pressure greater than atmospheric conditions the standard calibrations can not be used. A calibration for the operating pressure must be obtained.

OPERATING INSTRUCTIONS

Close valve (if applicable) before initial use, then pressurize the system.

Slowly open the valve until the float is at the desired flow rate. The flow rate is read at the center of the float.

FLOW TUBE INSTALLATION OR REMOVAL

Remove the Front Shield and Back Plate. **Do not** remove the side panels from the flow meter.

To remove the flow tube:

P style meters: insert a 5/32" hex wrench into the Pressure Nut at the top of the flow meter. While holding the flow tube between your thumb and forefinger, turn the wrench counter clockwise to release the flow tube. Carefully remove the flow tube as not to damage it.

S and T style meters: insert a 3/32" diameter rod in the holes of the Lock Nut at the top of the flow tube. While holding the flow tube between your thumb and forefinger, turn the tool clockwise to release the flow tube. It may be necessary to push the Tube Adapter into the upper block to remove the flow tube.

To reinstall the flow tube reverse the above procedure. Take care to assure that the flow tube is centered, in the meter, at the top and bottom before tightening.

T style meters require additional tightening to insure proper sealing at the flow tube ends. The flow meter should be tightened again 24 hours after the initial tightening.

A leak integrity test is recommended after disassembling any flow meter.

FLOW TUBE CLEANING

If necessary, remove the flow tube from the frame as explained above, and clean as follows:

Insert a plastic rod that will fit into the flow tube with no obstruction, into the bottom of the flow tube and push the retaining plugs and float out of the flow tube. Use tweezers to handle the float and store the float and the plugs in a lint free container. Before removing note the position of the plugs for reference when reassembling.

Using a suitable solvent clean all the parts including the flow tube, dry them by means of a clean stream of air or gas.

To reassemble the flow tube use the push rod to first install the lower plug, next insert the float and then the upper plug.

Test by slowly tilting the flow tube from horizontal to vertical to assure that the float is moving freely. If the float is free follow the instructions above to reinstall the flow tube in the frame.

MAINTENANCE

Under normal operating conditions no special maintenance is required. Dirt or contamination may create problems within the flow tube by causing a restriction in the flow passage. Such conditions can be diagnosed by examining the flow tube. The most obvious indication of obstruction is the float being stuck in the flow tube. If the existence of the contamination is determined the condition may be rectified in a number of ways. The easiest being (if possible), to disconnect the inlet and the outlet of the flow meter and purge the instrument by using a clean and dry stream of gas. The action of the float within the bore of the flow tube very often causes particles to be dislodged through the outlet of the flow meter.

LEFT BLANK

HACH

MODEL sc200, UNIVERSAL CONTROLLER

LEFT BLANK

DOC023.53.80040

SC200 Controller

05/2018, Edition 9

User Manual

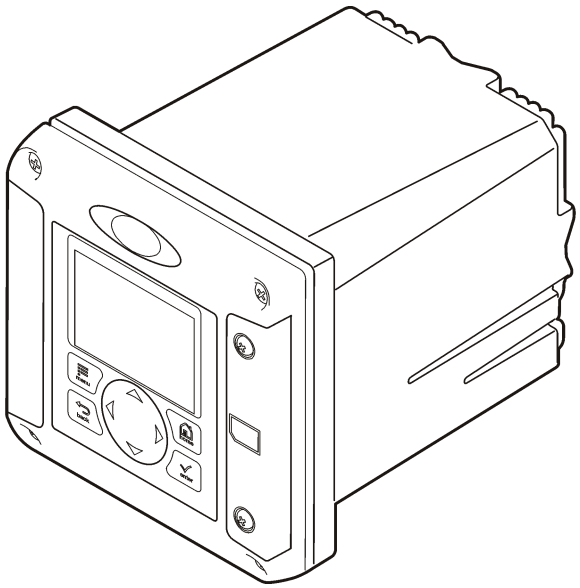

Table of Contents

Specifications 3

General information 3

- Safety information 4
  - Use of hazard information 4
  - Precautionary labels 4
  - Certification 4
- Product overview 5
  - Sensors and sensor modules 6
  - Relays outputs and signals 6
  - Device scans 6
  - Controller enclosure 6
  - Controller mounting options 6

Installation 7

- Mounting components and dimensions 7
- Controller mounting 8
- High-voltage barrier 11
- Electrostatic discharge (ESD) considerations 11
- Wiring overview 12
- Wiring for power 12
- Alarms and relays 15
- Wiring relays 15
- Analog output connections 17
- Discrete input wiring connections 18
- Connect a digital sc sensor 20
- Connect the optional digital communication output 21
- Install a Secure Digital (SD) memory card 21

User interface and navigation 21

- User interface 21
- Display 22
  - Additional display formats 23
  - Graphical display 23

System startup 24

- Set the language, date and time for the first time 24
- Controller configuration information 24

Advanced operation 25

- Security setup 25
  - Enable or disable the passcode 25
  - Edit the passcode 25
  - Protect features 26
- Configure a 4-20 mA input module 26
- Configure a 4-20 mA output module 27
- Configure the controller analog outputs 27
  - Logarithmic output mode 29
  - Bilinear output mode 29
- Configure relays 30

Table of Contents

Display setup 39
Update the date and time 40
Set the datalog mode and interval 40
Set up a calculation 40
Set up the discrete inputs 41
Update the display language 42
Using the secure digital memory (SD) card 42
Updating software 42
Saving data and event logs with SD cards 43
Access data and event log files on the SD card 43
Firmware updates with SD cards 44
Backup settings to an SD card 44
Restore settings to the controller 44
Transfer settings to another device 45
Using the service port 45
Using DataCom 45

Maintenance 46
Cleaning the controller 46
Fuse replacement 46
Battery replacement 46

Troubleshooting 46
Test and Maintenance menu 48
Warning and error conditions 49

Device scan information 50

Replacement parts and accessories 50

Specifications

Specifications are subject to change without notice.

Specification	Details
Component description	Microprocessor-controlled and menu-driven controller that operates the sensor and displays measured values.
Operating temperature	-20 to 60 ºC (-4 to 140 ºF); 95% relative humidity, non-condensing with sensor load <7 W; -20 to 50 ºC (-4 to 104 ºF) with sensor load <28 W
Storage temperature	-20 to 70 ºC (-4 to 158 ºF); 95% relative humidity, non-condensing
Enclosure[1]	NEMA 4X/IP66 metal enclosure with a corrosion-resistant finish
Power requirements	**AC powered controller:** 100-240 VAC ±10%, 50/60 Hz; Power 50 VA with 7 W sensor/network module load, 100 VA with 28 W sensor/network module load (optional Modbus, RS232/RS485, Profibus DPV1 or HART network connection).
	24 VDC powered controller: 24 VDC—15%, + 20%; Power 15 W with 7 W sensor/network module load, 40 W with 28 W sensor/network module load (optional Modbus, RS232/RS485, Profibus DPV1 or HART network connection).
Altitude requirements	Standard 2000 m (6562 ft) ASL (Above Sea Level)
Pollution degree/Installation category	Polution Degree 2; Installation Category II
Outputs	Two analog (0-20 mA or 4-20 mA) outputs. Each analog output can be assigned to represent a measured parameter such as pH, temperature, flow or calculated values. Optional module supplies three additional analog outputs (5 total).
Relays	Four SPDT, user-configured contacts, rated 250 VAC, 5 Amp resistive maximum for the AC powered controller and 24 VDC, 5A resistive maximum for the DC powered controller. Relays are designed for connection to AC Mains circuits (i.e., whenever the controller is operated with 115 - 240 VAC power) or DC circuits (i.e., whenever the controller is operated with 24 VDC power).
Dimensions	½ DIN—144 x 144 x 180.9 mm (5.7 x 5.7 x 7.12 in.)
Weight	1.7 kg (3.75 lb)
Compliance information[2]	CE approved (with all sensor types). Listed for use in general locations to UL and CSA safety standards by ETL (with all sensor types). Certain AC mains powered models are listed for use in general safety locations to UL and CSA safety standards by Underwriters Laboratories (with all sensor types).
Digital communication	Optional Modbus, RS232/RS485, Profibus DPV1 or HART network connection for data transmission
Data logging	Secure Digital Card (32 GB maximum) or special RS232 cable connector for data logging and performing software updates. The controller will keep approximately 20,000 data points per sensor.
Warranty	2 years

General information

In no event will the manufacturer be liable for direct, indirect, special, incidental or consequential damages resulting from any defect or omission in this manual. The manufacturer reserves the right to

[1] Units that have the Underwriters Laboratories (UL) certification are intended for indoor use only and do not have a NEMA 4X/IP66 rating.

[2] DC powered units are not listed by UL.

make changes in this manual and the products it describes at any time, without notice or obligation. Revised editions are found on the manufacturer's website.

Safety information

NOTICE
The manufacturer is not responsible for any damages due to misapplication or misuse of this product including, without limitation, direct, incidental and consequential damages, and disclaims such damages to the full extent permitted under applicable law. The user is solely responsible to identify critical application risks and install appropriate mechanisms to protect processes during a possible equipment malfunction.

Please read this entire manual before unpacking, setting up or operating this equipment. Pay attention to all danger and caution statements. Failure to do so could result in serious injury to the operator or damage to the equipment.

Make sure that the protection provided by this equipment is not impaired. Do not use or install this equipment in any manner other than that specified in this manual.

Use of hazard information

⚠ DANGER
Indicates a potentially or imminently hazardous situation which, if not avoided, will result in death or serious injury.

⚠ WARNING
Indicates a potentially or imminently hazardous situation which, if not avoided, could result in death or serious injury.

⚠ CAUTION
Indicates a potentially hazardous situation that may result in minor or moderate injury.

NOTICE
Indicates a situation which, if not avoided, may cause damage to the instrument. Information that requires special emphasis.

Precautionary labels

Read all labels and tags attached to the instrument. Personal injury or damage to the instrument could occur if not observed. A symbol on the instrument is referenced in the manual with a precautionary statement.

	This symbol, if noted on the instrument, references the instruction manual for operation and/or safety information.
	This symbol indicates that a risk of electrical shock and/or electrocution exists.
	This symbol indicates the presence of devices sensitive to Electro-static Discharge (ESD) and indicates that care must be taken to prevent damage with the equipment.
	Electrical equipment marked with this symbol may not be disposed of in European domestic or public disposal systems. Return old or end-of-life equipment to the manufacturer for disposal at no charge to the user.

Certification

Canadian Radio Interference-Causing Equipment Regulation, IECS-003, Class A:

Supporting test records reside with the manufacturer.

This Class A digital apparatus meets all requirements of the Canadian Interference-Causing Equipment Regulations.

Cet appareil numérique de classe A répond à toutes les exigences de la réglementation canadienne sur les équipements provoquant des interférences.

FCC Part 15, Class "A" Limits

Supporting test records reside with the manufacturer. The device complies with Part 15 of the FCC Rules. Operation is subject to the following conditions:

1. The equipment may not cause harmful interference.
2. The equipment must accept any interference received, including interference that may cause undesired operation.

Changes or modifications to this equipment not expressly approved by the party responsible for compliance could void the user's authority to operate the equipment. This equipment has been tested and found to comply with the limits for a Class A digital device, pursuant to Part 15 of the FCC rules. These limits are designed to provide reasonable protection against harmful interference when the equipment is operated in a commercial environment. This equipment generates, uses and can radiate radio frequency energy and, if not installed and used in accordance with the instruction manual, may cause harmful interference to radio communications. Operation of this equipment in a residential area is likely to cause harmful interference, in which case the user will be required to correct the interference at their expense. The following techniques can be used to reduce interference problems:

1. Disconnect the equipment from its power source to verify that it is or is not the source of the interference.
2. If the equipment is connected to the same outlet as the device experiencing interference, connect the equipment to a different outlet.
3. Move the equipment away from the device receiving the interference.
4. Reposition the receiving antenna for the device receiving the interference.
5. Try combinations of the above.

Product overview

The controller displays sensor measurements and other data, can transmit analog and digital signals, and can interact with and control other devices through outputs and relays. Outputs, relays, sensors and sensor modules are configured and calibrated through the user interface on the front of the controller.

Figure 1 shows the product components. Components may vary according to controller configuration. Contact the manufacturer if parts are damaged or missing.

Figure 1 System components

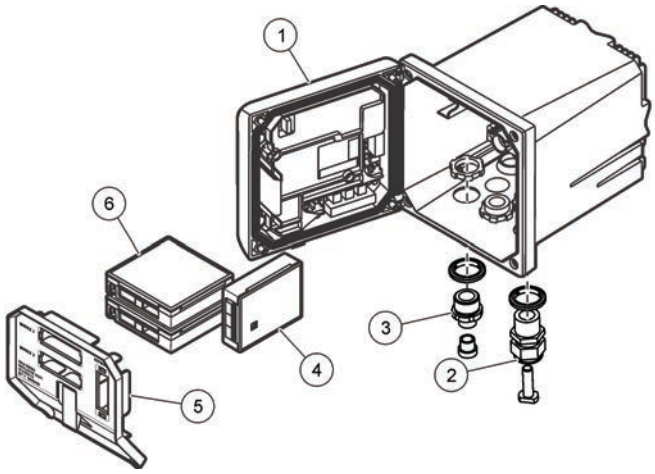

1 Controller	**4** Network module (optional)
2 Strain relief assembly (optional depending on controller version)	**5** High-voltage barrier
3 Digital connection fitting (optional depending on controller version)	**6** Sensor modules (optional)

Sensors and sensor modules

The controller accepts up to a maximum of two sensor modules or two digital sensors (depending on the controller configuration), along with one communication module. A single digital sensor and a single sensor module can be installed in combination. A variety of sensors can be wired to the sensor modules. Sensor wiring information is given in the specific sensor manuals and in the user instructions for specific modules.

Relays outputs and signals

The controller has four configurable relay switches and two analog outputs. An optional analog output module can increase the number of analog outputs to five.

Device scans

With two exceptions, the controller automatically scans for connected devices without user input when it is powered on. The first exception is when the controller is powered on for the first time before initial use. The second exception is after the controller configuration settings have been set to their default values and the controller is powered on. In both cases, the controller first displays the language, date and time edit screens. After the language, date and time entries are accepted, the controller performs a device scan. Refer to Connect a digital sc sensor on page 20 for instructions about how to scan for devices when the controller is already powered on.

Controller enclosure

The controller enclosure is NEMA 4X/IP66-rated and has a corrosion-resistant finish designed to withstand corrosive environmental constituents such as salt spray and hydrogen sulfide. Protection against environmental damage is strongly recommended for outdoor use.
Note: *Units that have the Underwriters Laboratories (UL) certification are intended for indoor use only and do not have a NEMA 4X/IP66 rating.*

Controller mounting options

The controller can be mounted to a panel, to a wall or to a vertical or horizontal pipe. A neoprene sealing gasket is included and can be used to reduce vibration. The gasket can be used as a template for panel mounting before the inner gasket component is separated.

Installation

Mounting components and dimensions

⚠ CAUTION

Personal injury hazard. Only qualified personnel should conduct the tasks described in this section of the manual.

The controller can be installed on a surface, panel or pipe (horizontal or vertical). For mounting options and instructions, refer to Figure 2, Figure 3 on page 8, Figure 4 on page 9, Figure 5 on page 10 and Figure 6 on page 11.

For horizontal pipe mounts, the mounting feet (Figure 2) must be attached to the mounting bracket in a vertical position.

For both horizontal and vertical pipe mounts, attach the mounting bracket to the controller as shown in Figure 5 on page 10.

Figure 2 Mounting components

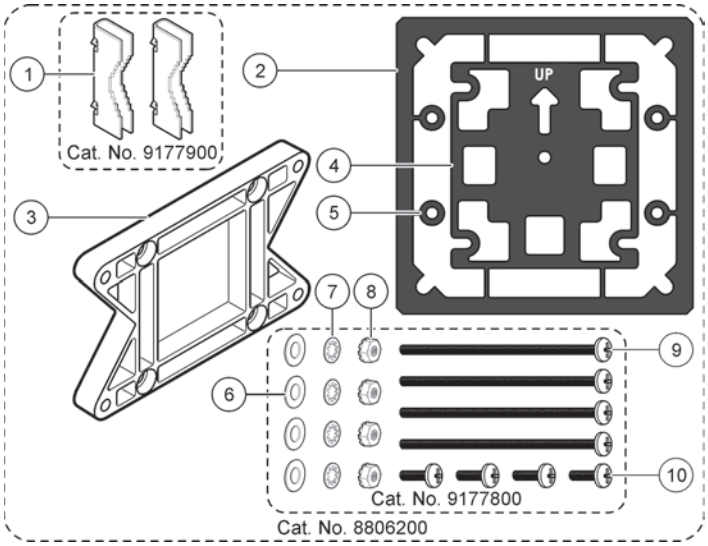

1	Mounting foot (2x)	**6**	Flat washer, ¼-inch ID (4x)
2	Sealing gasket for panel mount, Neoprene	**7**	Lock washer, ¼-inch ID (4x)
3	Bracket for wall and pipe mounting	**8**	M5 x 0.8 Keps hexnut (4x)
4	Vibration isolation gasket for pipe mount	**9**	Pan head screws, M5 x 0.8 x 100mm (4x) (Used for variable diameter pipe mount installations)
5	Vibration isolation washer for pipe mount (4x)	**10**	Pan head screws, M5 x 0.8 x 15 mm (4x)

Note: *A bracket for panel mounting is available as an optional accessory.*

Controller mounting

Figure 3 Surface mounting dimensions

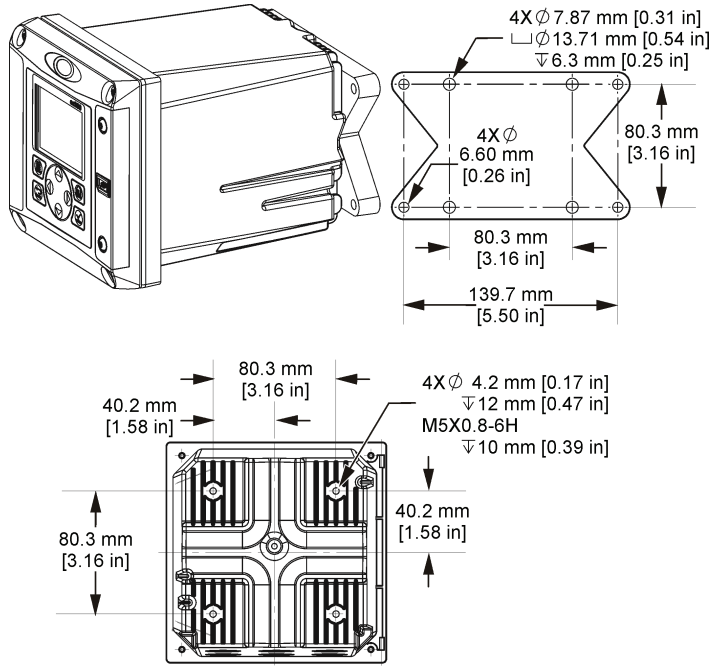

Figure 4 Panel mounting dimensions

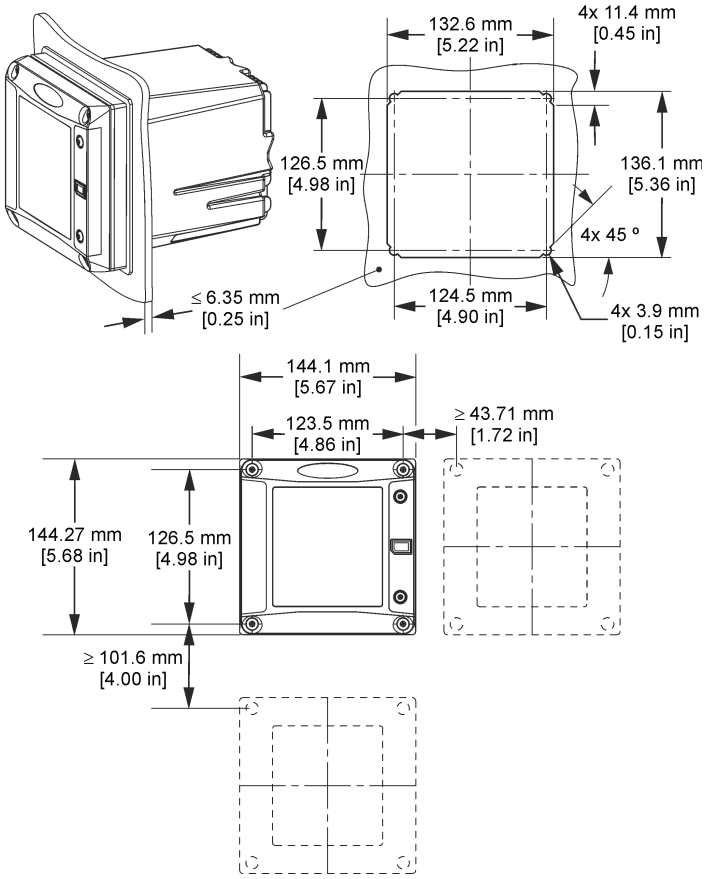

Note: *If using the bracket (optional) for panel mounting, push the controller through the hole in the panel and then slide the bracket over the controller on the back side of the panel. Use the four 15 mm pan head screws (supplied) to attach the bracket to the controller and secure the controller to the panel.*

Figure 5 Pipe mounting (vertical pipe)

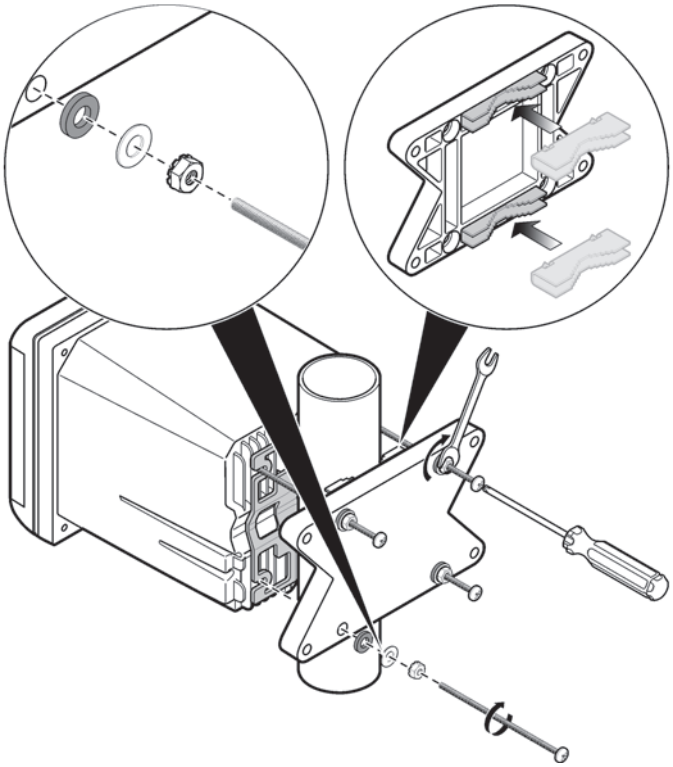

Figure 6 Top and bottom views

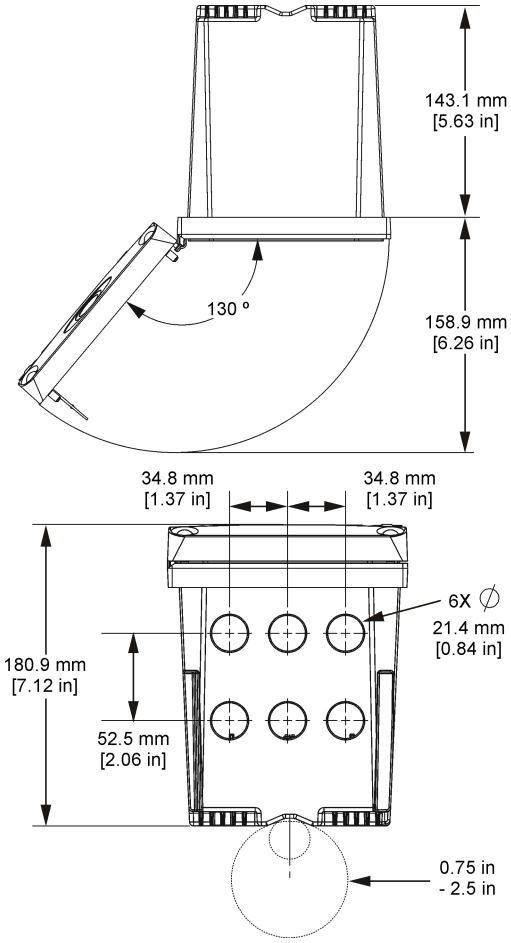

High-voltage barrier

High-voltage wiring for the controller is located behind the high-voltage barrier in the controller enclosure. The barrier must remain in place except when installing modules or when a qualified installation technician is wiring for power, alarms, outputs or relays. Do not remove the barrier while power is applied to the controller.

Electrostatic discharge (ESD) considerations

NOTICE	
	Potential Instrument Damage. Delicate internal electronic components can be damaged by static electricity, resulting in degraded performance or eventual failure.

Refer to the steps in this procedure to prevent ESD damage to the instrument:

- Touch an earth-grounded metal surface such as the chassis of an instrument, a metal conduit or pipe to discharge static electricity from the body.

- Avoid excessive movement. Transport static-sensitive components in anti-static containers or packages.
- Wear a wrist strap connected by a wire to earth ground.
- Work in a static-safe area with anti-static floor pads and work bench pads.

Wiring overview

Figure 7 shows an overview of the wiring connections inside the controller with the high voltage barrier removed. The left side of the figure shows the back side of the controller cover.
Note: *Remove connector caps from the connectors before module installation.*

Figure 7 Wiring connections overview

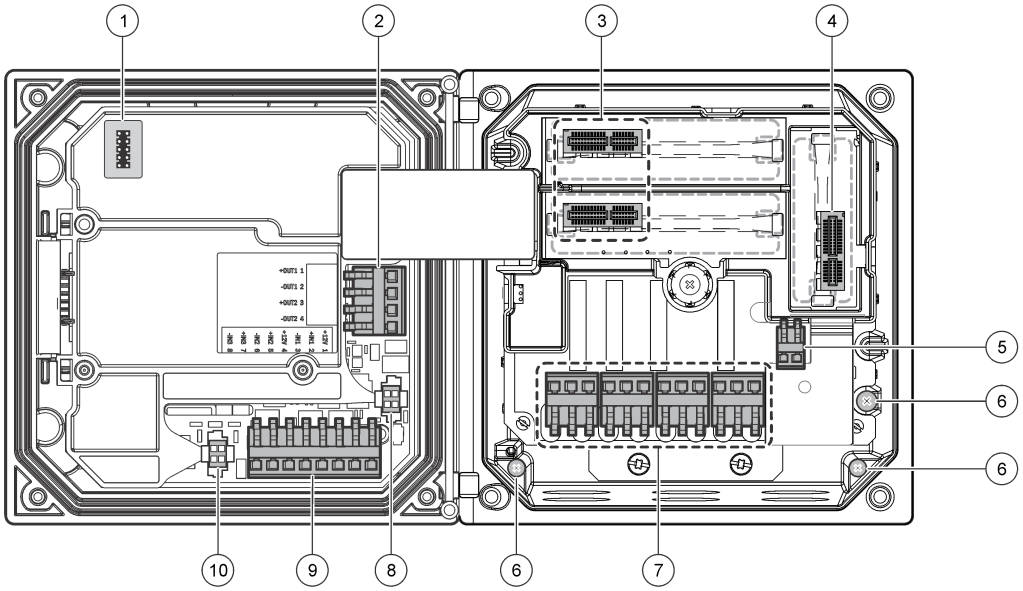

1 Service cable connection	**5** AC and DC power connector[3]	**9** Discrete input wiring connector[3]
2 4-20 mA output[3]	**6** Ground terminals	**10** Digital sensor connector[3]
3 Sensor module connector	**7** Relay connections[3]	
4 Communication module connector (e.g., Modbus, Profibus, HART, optional 4-20 mA module, etc.)	**8** Digital sensor connector[3]	

Wiring for power

⚠ WARNING

Potential Electrocution Hazard. Always disconnect power to the instrument when making electrical connections.

[3] Terminals can be removed for improved access.

⚠WARNING

Potential Electrocution Hazard. If this equipment is used outdoors or in potentially wet locations, a **Ground Fault Interrupt** device must be used for connecting the equipment to its mains power source.

⚠DANGER

Electrocution Hazard. Do not connect AC power to a 24 VDC powered model.

⚠WARNING

Potential Electrocution Hazard. A protective earth (PE) ground connection is required for both 100-240 VAC and 24 VDC wiring applications. Failure to connect a good PE ground connection can result in shock hazards and poor performance due to electromagnetic interferences. ALWAYS connect a good PE ground to the controller terminal.

NOTICE

Install the device in a location and position that gives easy access to the disconnect device and its operation.

The controller can be purchased as either a 100-240 VAC powered model or a 24 VDC powered model. Follow the appropriate wiring instructions for the purchased model.

The controller can be wired for line power by hard-wiring in conduit or wiring to a power cord. Regardless of the wire used, the connections are made at the same terminals. A local disconnect designed to meet local electrical code is required and must be identified for all types of installation. In hard-wired applications, the power and safety ground service drops for the instrument must be 18 to 12 AWG. Make sure that the field wiring insulation is rated 80 °C (176 °F) minimum.

Notes:

- The voltage barrier must be removed before making any electrical connections. After making all connections, replace the voltage barrier before closing the controller cover.
- A sealing type strain relief and a power cord less than 3 meters (10 feet) in length with three 18-gauge conductors (including a safety ground wire) can be used to maintain the NEMA 4X/IP66 environmental rating.
- Controllers can be ordered with AC power cords pre-installed. Additional power cords may also be ordered.
- The DC power source that supplies power to the 24 VDC powered controller must maintain voltage regulation within the specified 24 VDC-15% +20% voltage limits. The DC power source must also provide adequate protection against surges and line transients.

Wiring procedure

Refer to the illustrated steps that follow and Table 1 or Table 2 to wire the controller for power. Insert each wire into the appropriate terminal until the insulation is seated against the connector with no bare wire exposed. Tug gently after insertion to make sure that there is a secure connection. Seal any unused openings in the controller box with conduit opening sealing plugs.

Table 1 AC power wiring information (AC powered models only)

Terminal	Description	Color—North America	Color—EU
1	Hot (L1)	Black	Brown
2	Neutral (N)	White	Blue
—	Protective Earth (PE) Ground lug	Green	Green with yellow stripe

Table 2 DC power wiring information (DC powered models only)

Terminal	Description	Color—North America	Color—EU
1	+24 VDC	Red	Red
2	24 VDC return	Black	Black
—	Protective Earth (PE) Ground lug	Green	Green with yellow stripe

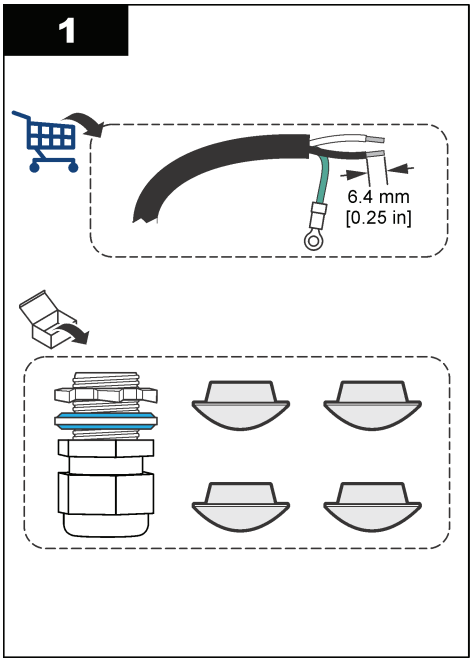

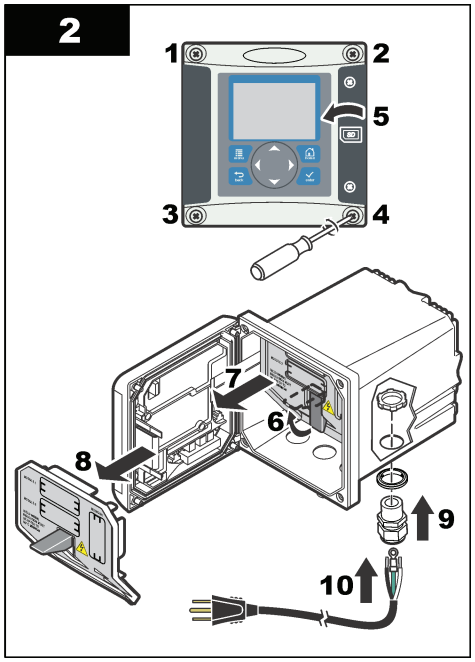

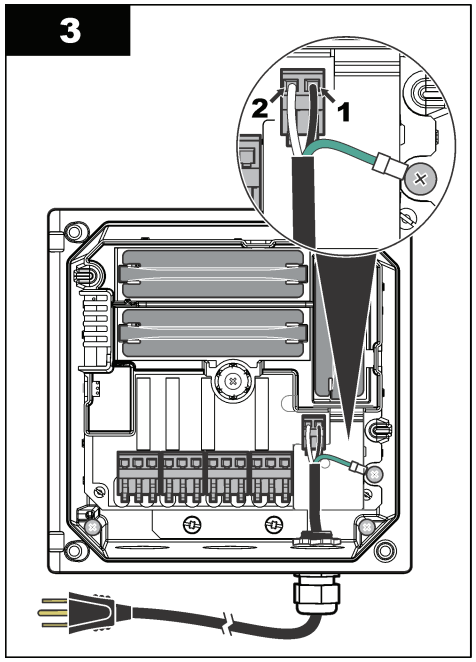

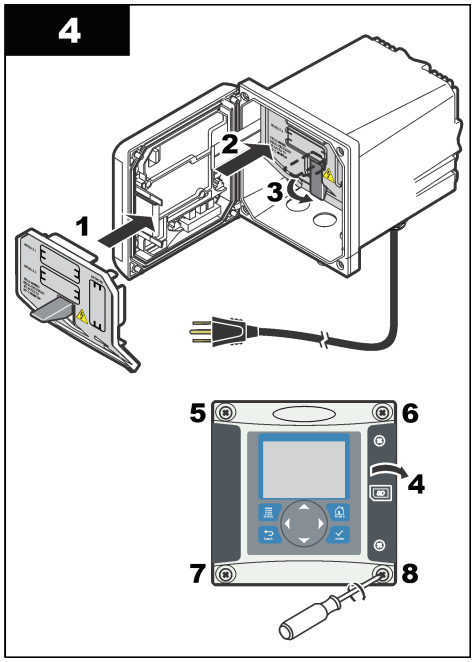

Alarms and relays

The controller is equipped with four unpowered, single pole relays rated 100-250 VAC, 50/60 Hz, 5 amp resistive maximum. Contacts are rated 250 VAC, 5 amp resistive maximum for the AC powered controller and 24 VDC, 5A resistive maximum for the DC powered controller. The relays are not rated for inductive loads.

Wiring relays

⚠ WARNING
Potential Electrocution Hazard. Always disconnect power to the instrument when making electrical connections.

⚠ WARNING
Potential fire hazard. The relay contacts are rated 5A and are not fused. External loads connected to the relays must have current limiting devices provided to limit current to < 5 A.

⚠ WARNING
Potential fire hazard. Do not daisy-chain the common relay connections or jumper wire from the mains power connection inside the instrument.

⚠ WARNING
Potential electrocution hazard. In order to maintain the NEMA/IP environmental ratings of the enclosure, use only conduit fittings and cable glands rated for at least NEMA 4X/IP66 to route cables in to the instrument.

AC line (100—250 V) powered controllers

⚠ WARNING

Potential electrocution hazard. AC mains powered controllers (115 V–230 V) are designed for relay connections to AC mains circuits (i.e., voltages greater than 16 V-RMS, 22.6 V-PEAK or 35 VDC).

The wiring compartment is not designed for voltage connections in excess of 250 VAC.

24 VDC powered controllers

⚠ WARNING

Potential electrocution hazard. 24 V powered controllers are designed for relay connections to low voltage circuits (i.e., voltages less than 16 V-RMS, 22.6 V-PEAK or 35 VDC).

The 24 VDC controller relays are designed for the connection to low voltage circuits (i.e., voltages less than 30 V-RMS, 42.2 V-PEAK or 60 VDC). The wiring compartment is not designed for voltage connections above these levels.

The relay connector accepts 18–12 AWG wire (as determined by load application). Wire gauge less than 18 AWG is not recommended. Make sure that the field wiring insulation is rated 80 °C (176 °F) minimum.

The Normally Open (NO) and Common (COM) relay contacts will be connected when an alarm or other condition is active. The Normally Closed (NC) and Common relay contacts will be connected when an alarm or other condition is inactive (unless the Fail Safe is set to Yes) or when power is removed from the controller.

Most relay connections use either the NO and COM terminals or the NC and COM terminals. The numbered installation steps show connection to the NO and COM terminals.

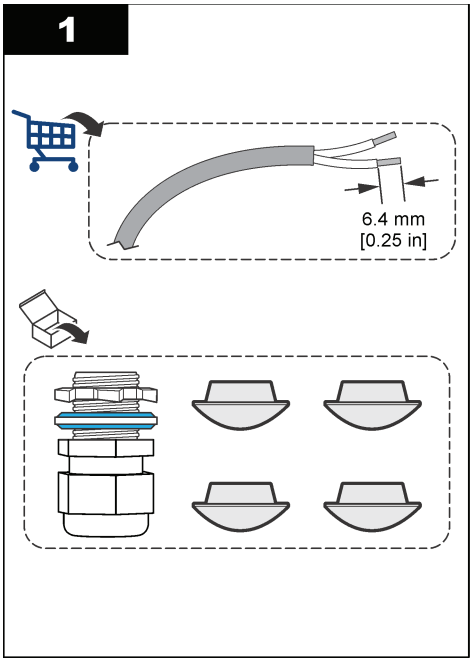

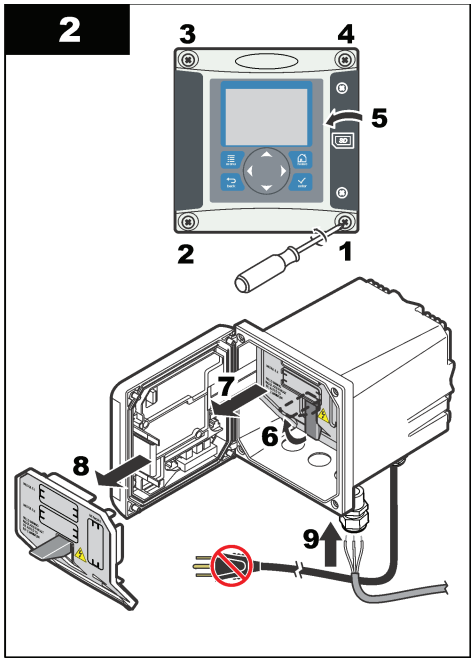

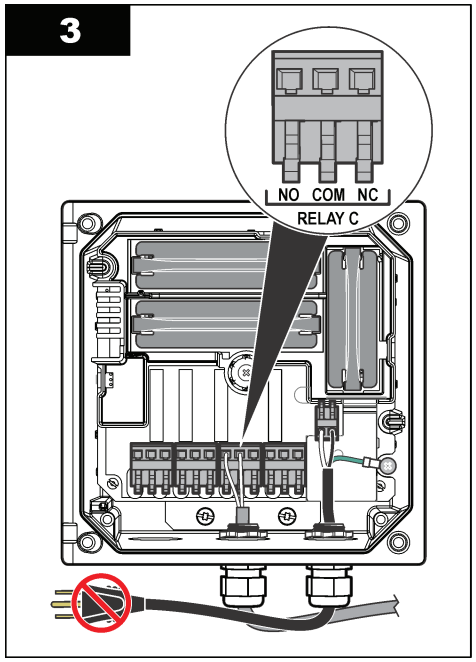

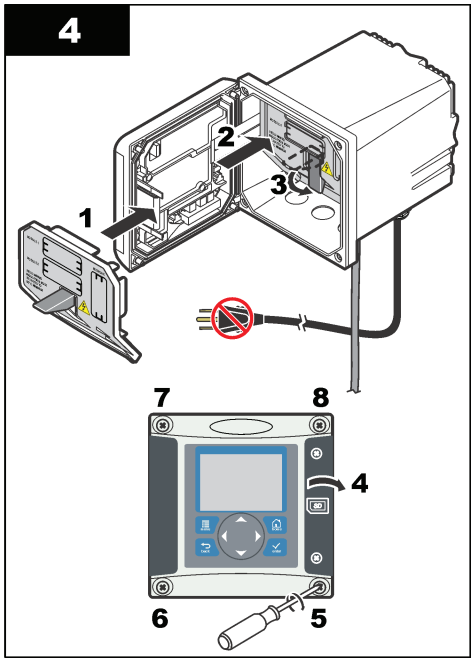

Analog output connections

⚠WARNING

Potential Electrocution Hazard. Always disconnect power to the instrument when making electrical connections.

⚠WARNING

Potential electrocution hazard. In order to maintain the NEMA/IP environmental ratings of the enclosure, use only conduit fittings and cable glands rated for at least NEMA 4X/IP66 to route cables in to the instrument.

Two isolated analog outputs (1 and 2) are provided (Figure 8). Such outputs are commonly used for analog signaling or to control other external devices.

Make wiring connections to the controller as shown in Figure 8 and Table 3.
Note: *Figure 8 shows the back of the controller cover and not the inside of the main controller compartment.*

Table 3 Output connections

Recorder wires	Circuit board position
Output 2–	4
Output 2+	3
Output 1–	2
Output 1+	1

1. Open the controller cover.
2. Feed the wires through the strain relief.
3. Adjust the wire as necessary and tighten the strain relief.

4. Make connections with twisted-pair shielded wire and connect the shield at the controlled component end or at the control loop end.
   - Do not connect the shield at both ends of the cable.
   - Use of non-shielded cable may result in radio frequency emission or susceptibility levels higher than allowed.
   - Maximum loop resistance is 500 ohm.
5. Close the controller cover and tighten the cover screws.
6. Configure outputs in the controller.

Figure 8 Analog output connections

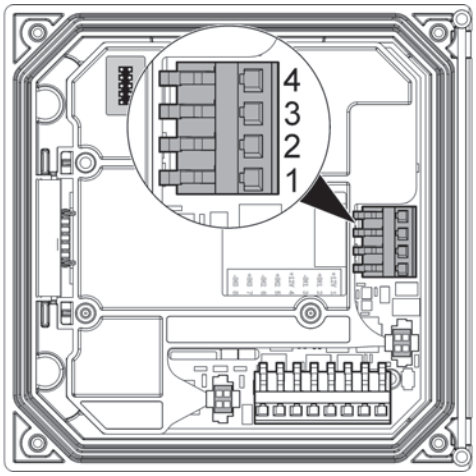

Discrete input wiring connections

⚠ WARNING
Potential Electrocution Hazard. Always disconnect power to the instrument when making electrical connections.

⚠ WARNING
Potential electrocution hazard. In order to maintain the NEMA/IP environmental ratings of the enclosure, use only conduit fittings and cable glands rated for at least NEMA 4X/IP66 to route cables in to the instrument.

Three discrete inputs are provided for switch closure inputs or logic level voltage inputs. Make wiring connections and configure jumper settings to the controller as shown in Figure 9, Table 4 and Figure 10.

Note: Figure 9 *shows the back of the controller cover and not the inside of the main controller compartment.*

Figure 9 Discrete input wiring connections

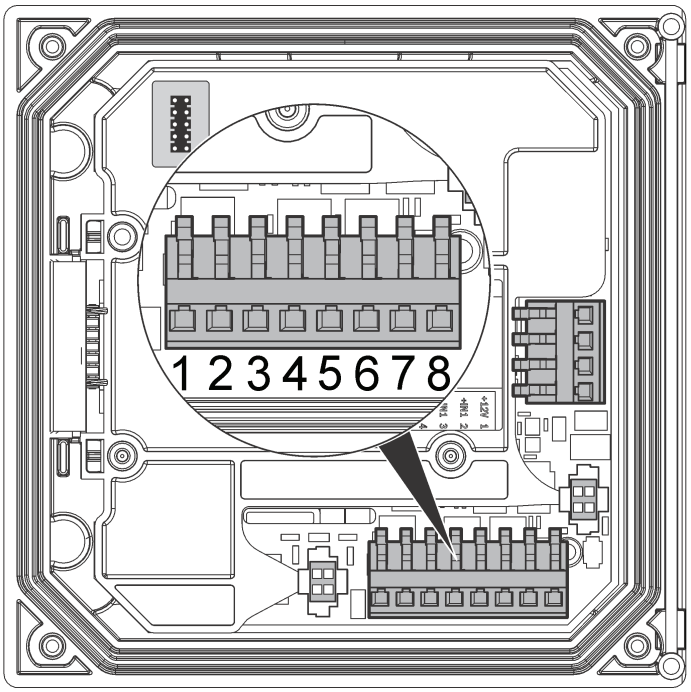

Table 4 Input connections

Discrete inputs	Connector position - Switch input	Connector position - Voltage input
Input 1+	3	2
Input 1-	2	3
Input 2+	6	5
Input 2-	5	6
Input 3+	8	7
Input 3-	7	8

Figure 10 Jumper settings

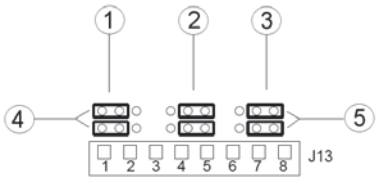

1	Input 1 configuration jumpers	**4**	Jumpers positioned to the left for switch inputs
2	Input 2 configuration jumpers	**5**	Jumpers positioned to the right for voltage inputs
3	Input 3 configuration jumpers		

1. Open the controller cover.
2. Feed the wires through the cable gland.
3. Adjust the wire as necessary and tighten the cable gland.
4. The jumpers are positioned immediately behind the connector. Remove the connector for improved access to the jumpers and configure the jumper settings according to the type of input as shown in Figure 10.
5. Close the controller cover and tighten the cover screws.
6. Configure inputs in the controller.

Note: *In* ***switch input*** *mode the controller supplies 12 volts to the switch and is not isolated from the controller. In* ***voltage input*** *mode the inputs are isolated from the controller (user input voltage from 0 to 30 volts).*

Connect a digital sc sensor

Note: *To connect an analog sensor, refer to the instructions supplied in the module or sensor manual.*

A digital sc sensor can be connected to the controller using the keyed quick-connect fitting (Figure 11). A digital sensor can be connected with the controller powered on or off.

When a sensor is connected with the controller powered on, the controller does not automatically perform a device scan. To make the controller perform a device scan, navigate to the Test/Maintenance menu and select Scan Devices. If a new device is found, the controller performs the installation process without further user action.

When a sensor is connected with the controller powered off, the controller will perform a device scan when it is powered on again. If a new device is found, the controller performs the installation process without further user action.

Retain the connector cap to seal the connector opening in case the sensor must be removed.

Figure 11 Digital sensor quick connect

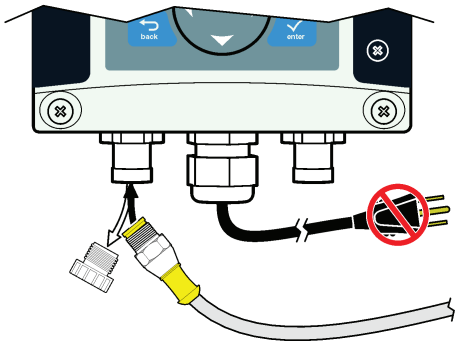

Connect the optional digital communication output

The manufacturer supports Modbus RS485, Modbus RS232, Profibus DPV1 and HART communication protocols. The optional digital output module is installed in the location indicated by item 4 in Figure 7 on page 12. Refer to the instructions supplied with the network module for more details.

For information about Modbus registers, go to http://www.de.hach.com or http://www.hach.com and search *Modbus registers* or go to any sc200 product page.

Install a Secure Digital (SD) memory card

For instructions on how to install an SD card in the controller, refer to Figure 12. Information on how to use the SD memory card can be found in Using the secure digital memory (SD) card on page 42.

To remove an SD card, push down on the edge of the card and release, then pull the card up and out of the slot. After the card is removed, close the slot cover and tighten the cover screws.

Figure 12 SD card installation

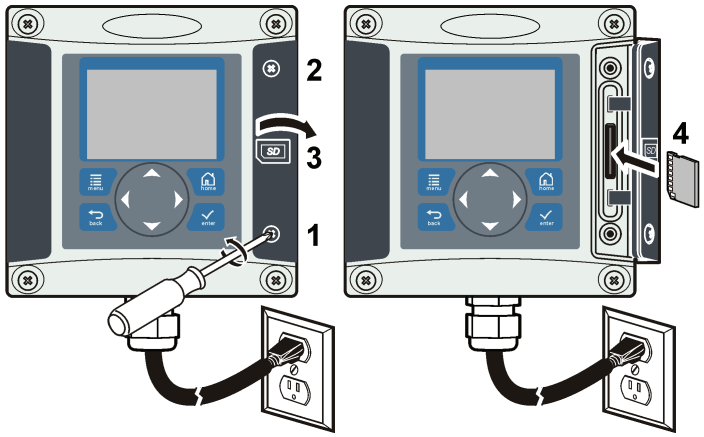

User interface and navigation

User interface

The keypad has four menu keys and four directional keys as shown in Figure 13.

Figure 13 Keypad and front panel overview

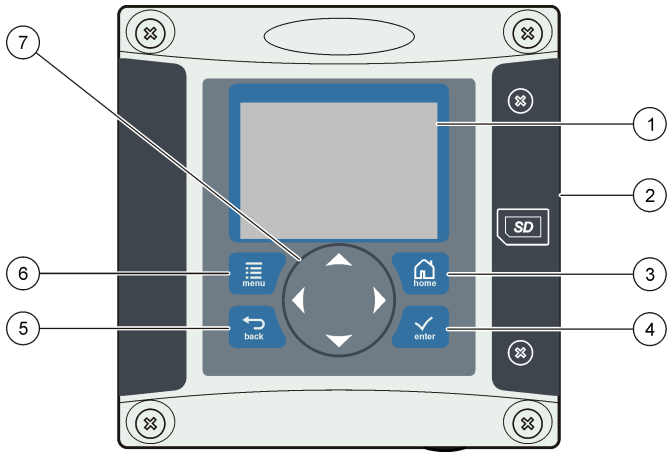

1 Instrument display	**5** **BACK** key. Moves back one level in the menu structure.
2 Cover for secure digital memory card slot	**6** **MENU** key. Moves to the Settings Menu from other screens and submenus.
3 **HOME** key. Moves to the Main Measurement screen from other screens and submenus.	**7** Directional keys. Used to navigate through the menus, change settings, and increment or decrement digits.
4 **ENTER** key. Accepts input values, updates, or displayed menu options.	

Inputs and outputs are set up and configured through the front panel using the keypad and display screen. This user interface is used to set up and configure inputs and outputs, create log information and calculated values, and calibrate sensors. The SD interface can be used to save logs and update software.

Display

Figure 14 shows an example of the main measurement screen with a DO sensor connected to the controller.

The front panel display screen shows sensor measurement data, calibration and configuration settings, errors, warnings and other information.

Figure 14 Example of Main Measurement screen

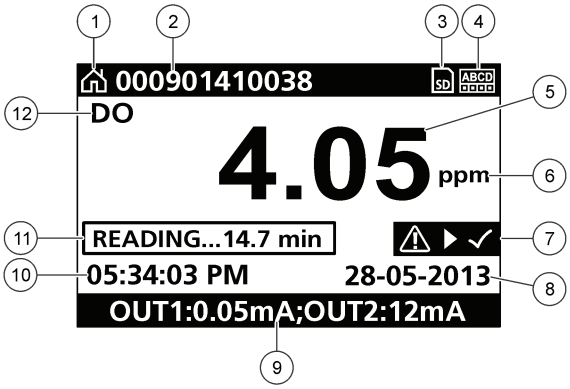

1 Home screen icon	**7** Warning status bar
2 Sensor name	**8** Date
3 SD Memory card icon	**9** Analog output values
4 Relay status indicator	**10** Time
5 Measurement value	**11** Progress bar
6 Measurement unit	**12** Measurement parameter

Table 5 Icon descriptions

Icon	Description
Home screen	The icon may vary depending on the screen or menu being displayed. For example, if an SD card is installed, an SD card icon appears here when the user is in the SD Card Setup menu.
SD memory card	This icon appears only if an SD card is in the reader slot. When a user is in the SD Card Setup menu, this icon appears in the upper left corner.
Warning	A warning icon consists of an exclamation point within a triangle. Warning icons appear on the right of the main display below the measurement value. Push the **ENTER** key then select the device to view any problems associated with that device. The warning icon will no longer be displayed once all problems have been corrected or acknowledged.
Error	An error icon consists of an exclamation point within a circle. When an error occurs, the error icon and the measurement screen flash alternately in the main display. To view errors, push the **MENU** key and select **Diagnostics**. Then select the device to view any problems associated with that device.

Additional display formats

- From the Main Measurement screen push the **UP** and **DOWN** arrow keys to switch between measurement parameters
- From the Main Measurement screen push the **RIGHT** arrow key to switch to a split display of up to 4 measurement parameters. Push the **RIGHT** arrow key to include additional measurements. Push the **LEFT** arrow key as needed to return to the Main Measurement screen
- From the Main Measurement screen push the **LEFT** arrow key to switch to the graphical display (see Graphical display on page 23 to define the parameters). Push the **UP** and **DOWN** arrow keys to switch measurement graphs

Graphical display

The graph shows concentration and temperature measurements for each channel in use. The graph supplies easy monitoring of trends and shows changes in the process.

1. From the graphical display screen use the up and down arrow keys to select a graph and push the **HOME** key.
2. Select an option:

Option	Description
MEASUREMENT VALUE	Set the measurement value for the selected channel. Select between Auto Scale and Manually Scale. For manual scaling enter the minimum and maximum measurement values
DATE & TIME RANGE	Select the date and time range from the available options

System startup

When initially powered up, the Language, Date Format and Date/Time screens appear in order. After these options are set, the controller performs a device scan and displays the message **Scanning for devices. Please wait...** If a new device is found, the controller performs an installation process before displaying a main measurement screen.

If the scan finds previously installed devices without configuration changes, the main measurement screen of the device in the number one position appears immediately after the scan is complete.

If a device has been removed from the controller or is not found during the next power-cycled or menu-driven scan, the controller displays a **Device missing** message and prompts to delete the missing device.

If no sensor is connected to an installed analog module, the controller will indicate an error. If devices are connected but not found by the controller, refer to Troubleshooting on page 46.

Set the language, date and time for the first time

The controller displays the language, date and time edit screens when the controller is powered on for the first time, and when it is powered on after the configuration settings have been set to their default values.
After the language, date and time options are set for the first time, update the options as necessary through the sc200 setup menu.

1. In the Language screen, highlight a language in the options list and push the **ENTER** key. English is the default language for the controller.
   The selected language is saved. The Date Format screen appears.
2. In the Date Format screen, highlight a format and push the **ENTER** key.
   The date and time format is saved. Next, the Date /Time screen appears.
3. In the Date/Time screen, push the **RIGHT** or **LEFT** arrow keys to highlight a field, then push the **UP** and **DOWN** arrow keys to update the value in the field. Update the other fields as necessary.
4. Push the **ENTER** key.
   The changes are saved and the controller performs a start-up scan for devices. If connected devices are found, the controller displays the main measurement screen for the device in the number one position. If the controller fails to find connected devices, refer to Troubleshooting on page 46.

Controller configuration information

General information about configuration options is listed in the table.

1. To navigate to the menu options, from the Settings Menu, select sc200 Setup.

Option	Description
Security setup	Sets the passcode preferences (refer to Security setup on page 25)
Output setup	Configures the controller analog outputs (refer to Configure the controller analog outputs on page 27)

Option	Description
Relay setup	Configures the controller relays (refer to Configure relays on page 30)
Display setup	Configures the controller display (refer to Display setup on page 39)
Set Date/Time	Sets the controller time and date (refer to Update the date and time on page 40)
Datalog setup	Configures data logging options. Available only if Calculation has been setup. At least one sensor must be attached to enter a calculation (refer to Set the datalog mode and interval on page 40)
Manage Data	Select the device from the list of installed components to view the data or event log
Error Hold Mode	**Hold Outputs**—Holds outputs at last known value when controller loses communication with the sensor. **Transfer Outputs**—Switches to transfer mode when controller loses communication with the sensor. Outputs transfer to a pre-defined value.
Calculation	Configures the controller math function (refer to Set up a calculation on page 40)
sc200 Information	**S/W VER:**—Displays the current version of controller software **Bootloader VER:**—Displays the current Bootloader version. The Bootloader is a file that loads the main operating system for the controller **S/N:**—Displays the controller serial number **Version:**—Displays the current version of controller hardware
Discrete Input Setup	Configures three discrete input channels (refer to Set up the discrete inputs on page 41)
Language	Assigns the language used in the controller (refer to Update the display language on page 42)

2. Select an option and push **ENTER** to activate the menu item.

Advanced operation

Security setup

Enable or disable the passcode

By default the passcode option is disabled and all configuration settings and calibrations can be changed. When the passcode function is enabled, access to Sensor calibration and Test/Maint menus requires a passcode.
To enable the passcode:

1. From the Settings Menu, select sc200 Setup and push the **ENTER** key.
2. Select Security Setup and push the **ENTER** key.
3. Select Set Passcode and push the **ENTER** key.
4. Select Disabled or Enabled and push the **ENTER** key.
   The passcode is enabled.
5. Push the **BACK** key to return to the sc200 Setup Menu, or push the **MENU** key to return to the Settings Menu.

Edit the passcode

The passcode is factory set to SC200. The Edit Passcode menu option appears in the Security Setup menu only after the passcode feature is enabled and a valid passcode has been entered.
A passcode consists of up to six upper or lower-case alpha, numeric and special characters. Passcodes are case-sensitive.

To edit the passcode:

1. Make sure the passcode is enabled. Refer to Enable or disable the passcode on page 25 for information on how to enable the passcode.
2. From the Settings menu, select Security Setup and push **ENTER**.
3. Use the arrow keys to enter the current valid passcode and push **ENTER**.
   The Edit Passcode option appears in the Security Setup menu.
4. Select Edit Pass Code and push **ENTER**.
   The Edit Pass Code screen appears.
5. Use the arrow keys to edit the passcode and push **ENTER**.
   The new passcode is saved and the Security Setup menu appears.
   Note: *All menus stay accessible until the* ***HOME*** *key is pushed or the controller is restarted.*
6. Push the **HOME** key or perform a controller restart.
   The new passcode settings are saved, and the new passcode is required to enter the Security Setup, Datalog Setup and Test/Maint menus.

Protect features

This option is only displayed if an analyzer or sensor that supports this feature is connected to the controller. Security categories are displayed that are defined by the connected analyzer or sensor. The user can then enable or disable password protection against individual menu options within these categories.

Configure a 4-20 mA input module

An analog module must be installed in the controller.

1. Determine what output the connected device is using (0-20 mA or 4-20 mA). This information will be used to set the scale.
2. Determine what the 20 mA value is equal to (e.g, 100 psi).
3. Determine what the low end (0 or 4 mA) value is equal to (e.g., 10 psi). This information will be used to set the display range.
4. From the Settings Menu, select Sensor Setup.
5. Select Configure.
6. Update the options.
   a. Highlight an option and push **ENTER**.
   b. Make a selection or update the entries.
   c. Push **ENTER** to save the changes.

Option	Description
Edit name	Edits the module name
Edit units	Edits the measurement units
Edit parameter	Edits the parameter name
Display range **For the 0-20 mA scale:** • **Set the 20 mA value** • **Set the 0 mA value** **For the 4-20 mA scale:** • **Set the 20 mA value** • **Set the 4 mA value**	Sets the values used for the selected scale (0-20 mA or 4-20 mA)

Option	Description
Signal average	Sets how often signals are averaged. Higher values produce a smoother signal but increase the time it takes for a signal to respond to a change in the process value.
Set resolution— **X.XXX, XX.XX, XXX.X, XXXX**	Sets the number of decimal places used in the display.
Select scale— **4-20 mA or 0-20 mA**	Sets scale used for the 4-20 mA input
Data log interval—5 sec, 30 sec, 1 min, 2 min, 5 min, 10 min, 15 min, 30 min, 60 min	Sets how often data is logged to the internal controller memory.
Reset defaults—Push ENTER to reset configuration settings or push the BACK key to cancel.	Resets configuration settings to the default values.

For additional information, refer to the *sc200 4–20 Analog Input Module User Manual*.

Configure a 4-20 mA output module

The Network Setup option appears in the Settings Menu only if an analog output module or other network module such as Modbus or Profibus is installed in the controller.

Outputs for analog output modules are set at 4-20 mA. Outputs can be assigned to represent a measured parameter such as pH, temperature, flow or calculated values.

1. From the Settings menu, select Network Setup.
2. Select Edit Name and enter a name for the module. Push **ENTER** to save the name.
3. Select an output (A, B, C, D) and push **ENTER**.
   a. Highlight an option and push **ENTER**.
   b. Make a selection from the list or update the entries.
   c. Push **ENTER** to save the changes.

Option	Description
Select Source	Selects the output to configure—None, sensor 1 name, sensor 2 name, calculation (if set up). For sensor output, Select Parameter sets the measurement options. When the measurement is autorange, Set Range sets the range.
Set Low Value	Sets the 4 mA value (default: 0.000). (Range and units depend on sensor)
Set High Value	Sets the 20 mA value (default: 1.000). (Range and units depend on sensor)
Set Transfer	Sets the transfer value. Range 3.0 to 25.0 mA (default 4.000).
Set Filter	Sets a time-average filter value of 0 (default) to 120 seconds.

For additional information, refer to the *sc200 4-20 Output Module User Manual*.

Configure the controller analog outputs

The controller analog outputs can be assigned to represent the measured parameter or secondary measurements such as temperature and calculations. To configure the options, highlight a menu option, push **ENTER** and select an option or update the entries. Push **ENTER** after an option is selected or the entries are updated.

1. From the Settings menu, select sc200 Setup.
2. Select Output Setup.
3. Select Output 1 or Output 2.

4. Choose Select Source and select a source from the list. Typically the source is one of the sensors attached to the system. If an analog input card is installed, the analog input may be used as a source.
5. From the Output Setup menu, choose Select Parameter and choose an option from the list. Parameters will vary depending on the type of sensors installed.
6. From the Output Setup menu, select Set Function and choose a function. Further setup options will vary depending on which function is chosen.

Option	Description
Linear	Signal is linearly dependent on the process value
PID	Signal works as a PID (Proportional, Integral, Derivative) controller
Logarithmic	Signal is represented logarithmically within the process variable range
Bilinear	Signal is represented as two linear segments within the process variable range

7. From the Output Setup menu, select Activation. Use the information in the table below the chosen function to configure the options.
8. If Transfer is or will be selected as the Error Hold Mode, or if the Transfer will be used during calibration or other functions within the sensor menu, select Set Transfer from the Output Setup menu and enter the transfer value.
9. From the Output Setup menu, select Set Filter and enter the filter value.
10. From the Output Setup menu, select Scale and choose the scale (0-20 mA or 4-20 mA).

- **Linear**

Option	Description
Set low value	Sets the low endpoint of the process variable range
Set high value	Sets the high endpoint of the process variable range

- **PID**

Option	Description
Set mode (Auto or Manual)	Auto—the signal is automatically controlled by the algorithm within the analyzer using proportional, integral, and derivative inputs. Manual—the signal is controlled by the user through manual adjustment of the % change value. This option is shown as Manual Output after the manual set mode is selected.
Phase (Direct or Reverse)	The direction in which the signal responds to process change. Direct—signal increases as the process increases. Reverse—signal increases as process decreases.
Set setpoint	Creates a desired control point of process
Prop band	A function of the difference between the measured signal and the desired setpoint.
Integral	The period of time from the injection point of a reagent to contact with the measuring device.
Derivative	Used to compensate for the 2nd order effects of the process. The majority of applications can be controlled without the use of the derivative setting.
Transit time	Stops all PID control for a selected period of time as the sample travels from the control pump to the measurement sensor.

- **Logarithmic**

Option	Description
Set 50% value	Sets the value corresponding to 50% of the process variable range.
Set high value	Sets the upper value of the process variable range.

- **Bilinear**

Option	Description
Set low value	Sets the low endpoint value of the process variable range.
Set high value	Sets the high endpoint value of the process variable range.
Set knee point value	Sets the value at which the process variable range divides into another linear segment.
Set knee point current	Sets the value of the current at the knee point value.

Logarithmic output mode

Figure 15 shows in graph form the operation of the logarithmic output mode.

Figure 15 Logarithmic output

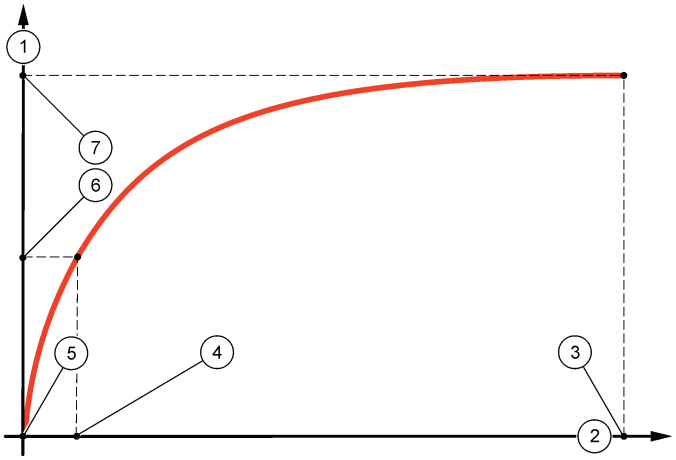

1 Output current axis	**5** Minimum output current (0-4 mA)
2 Source value axis	**6** 50% output current
3 High value	**7** Maximum output current (20 mA)
4 50% value	

Bilinear output mode

Figure 16 shows in graph form the operation of the bilinear output mode.

Figure 16 Bilinear output

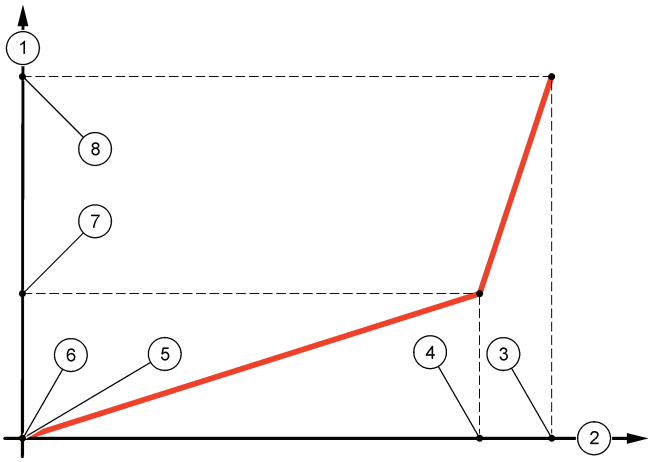

1	Output current axis	**5**	Low value
2	Source value axis	**6**	Minimum output current (0-4 mA)
3	High value	**7**	Knee point current
4	Knee point value	**8**	Maximum output current (20 mA)

Configure relays

The Normally Open (NO) and Common (COM) relay contacts will be connected when an alarm or other condition is active. The Normally Closed (NC) and Common relay contacts will be connected when an alarm or other condition is inactive (unless the Fail Safe is set to Yes), or when power is removed from the controller. To select a menu option, highlight the option and push **ENTER**.

1. From the sc200 Setup menu, select Relay Setup.
2. Select a relay from the list.
3. From the Relay Setup menu, choose Select Source and push **ENTER**. Normally, a source is one of the sensors attached to the system, but the controller can also function as a source. If an analog input module is installed, the source may be the analog input.
4. From the Relay Setup menu, select Set Parameter and choose from the list of parameters. The list of parameter options will vary with the type of attached sensor.
5. From the Relay Setup menu, select Set Function and choose from the list. Further setup will depend on the function chosen.

Option	Description
Scheduler Function (available if the controller is selected as the relay source)	Relay switches at certain times independently of any process value
Alarm Function	Relay activates when upper or lower alarm value is exceeded
Feeder Control Function	Relay indicates if a process value exceeds or falls below a setpoint
Event Control Function	Relay toggles if a process value reaches an upper or lower limit
Pulse Width Modulation (PWM) Control Function	Relay uses a Pulse Width Modulation control depending on a process value

Option	Description
Frequency control	Relay switches with a frequency depending on a process value
Warning	Relay indicates warning and error conditions in probes

6. From the Relay Setup menu, select Set Transfer and choose Active or Inactive.
7. From the Relay Setup menu, select Fail Safe and choose Yes or No.
8. From the Relay Setup menu, select Activation.
   The activation options for the selected function appear. Use the information in the table below each function to update the options.
9. Test the relay function to make sure it is properly energizing the connected device. To do relay testing, go to the Setting menu, then select **Test/Maint>Test Relay**.

- **Scheduler Function (refer to Figure 17)**

Option	Description
Hold outputs	Holds outputs in the present ON or OFF state
Run days	Sets the weekday(s) that the relay operates. Options: Sunday, Monday, Tuesday., Wednesday, Thursday, Friday, Saturday
Start time	Sets the start time.
Interval	Sets the time between activation cycles (Default value: 5 min).
Duration	Sets the period of time the relay is energized (Default value: 30 sec).
Off delay	Sets the time for additional hold/output time after the relay has been turned off.

Figure 17 Scheduler function

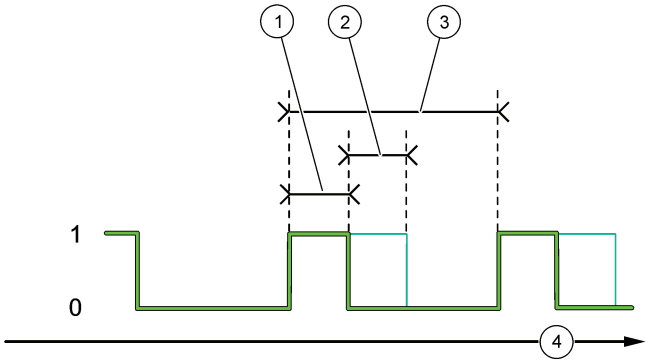

1 Duration	**3** Interval
2 OFF delay	**4** Time (x-axis)

- **Alarm Function (refer to Figure 18)**

Option	Description
Low alarm	Sets the value where the relay will turn on in response to decreasing measured value. For example, if the low alarm is set for 1.0 and the measured value drops to 0.9, the relay activates.
High alarm	Sets the value where the relay will turn on in response to increasing measured value. For example, if the high alarm is set for 1.0 and the measured value increases to 1.1, the relay activates.

Option	Description
Low deadband	Sets the range where the relay remains on after the measured value increases above the low alarm value. For example, if the low alarm is set for 1.0 and the low deadband is set for 0.5, the relay remains on between 1.0 and 1.5. Default is 5% of the range.
High deadband	Sets the range where the relay remains on after the measured value decreases below the high alarm value. For example, if the high alarm is set for 4.0 and the high deadband is set for 0.5, the relay remains on between 3.5 and 4.0. Default is 5% of the range.
Off delay	Sets a time (0-300 seconds) to delay the relay from normally turning off (Default: 0 seconds).
On delay	Sets a delay time for the relay to turn on (Default: 0 seconds).

Figure 18 Alarm function

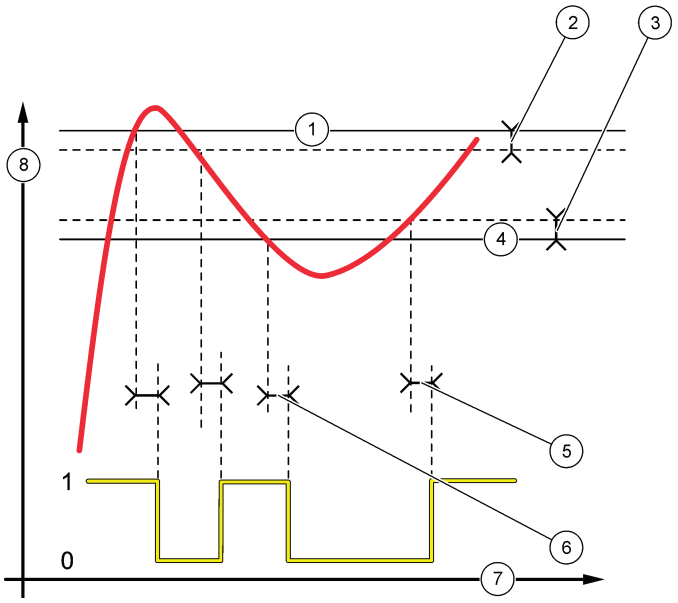

1 High alarm	**5** ON delay
2 High deadband	**6** OFF delay
3 Low deadband	**7** Time (x-axis)
4 Low alarm	**8** Source (y-axis)

- **Feeder Control Function (refer to Figure 19 and Figure 20)**

Option	Description
Phase	Defines the relay status if the process value exceeds the setpoint. High (default)—turns the relay on when the process value exceeds the setpoint. Low—turns the relay on when the process value falls below the setpoint.
Set setpoint	Sets the process value at which the relay toggles. The default value is different for each sensor.
Deadband	Sets the area for an amount of change necessary after the relay setpoint is reached in order to satisfy a condition.

Option	Description
Overfeed timer	Sets a time period for de-activating an active relay if the process setpoint cannot be reached. Once an overfeed alarm is present, it must be manually reset.
Off delay	Sets a delay time for the relay to turn off (default: 0 seconds).
On delay	Sets a delay time for the relay to turn on (default: 0 seconds).

Figure 19 Feeder control function

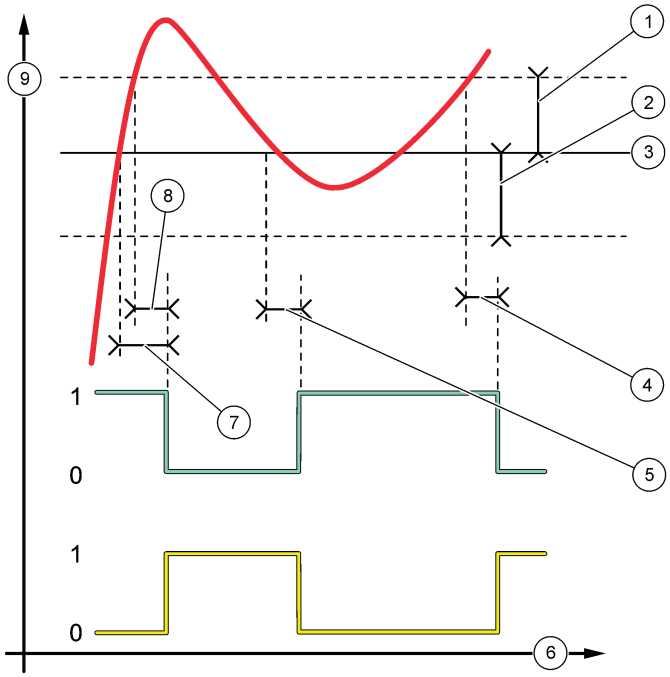

1 Deadband (Phase = Low)	**6** Time (x-axis)
2 Deadband (Phase = High)	**7** ON delay (phase set high)
3 Setpoint	**8** OFF delay (phase set low)
4 OFF delay (phase set high)	**9** Source (y-axis)
5 ON delay (phase set low)	

Figure 20 Feeder control function (Phase low, Overfeed timer)

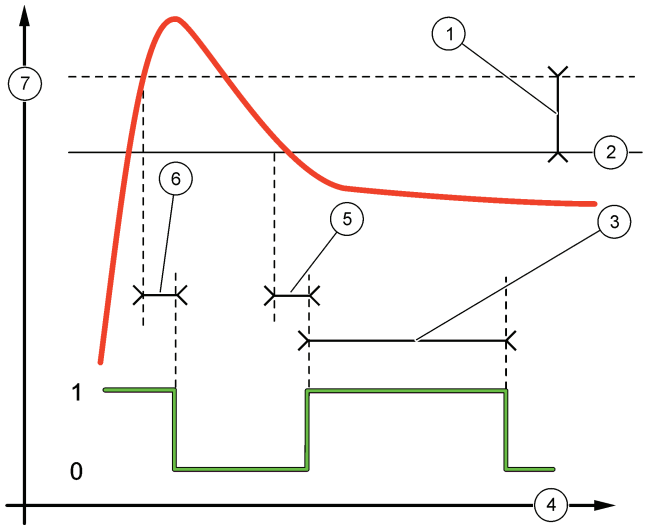

1 Deadband	**5** ON delay
2 Setpoint	**6** OFF delay
3 Overfeed timer	**7** Source (y-axis)
4 Time (x-axis)	

- **Event Control Function (refer to Figure 21, Figure 22 and Figure 23)**

Option	Description
Set setpoint	Sets the value where the relay will turn on.
Deadband	Sets a hysteresis so the relay will not swing unregulated when the process value converges to the setpoint.
OnMax timer	Sets the maximum time the relay can stay on independent from the measured value (default: + 0 min).
OffMax timer	Sets the maximum time the relay can stay off independent from the measured value (default: + 0 min).
OnMin timer	Sets the minimum time the relay can stay on independent from the measured value (default: + 0 min).
OffMin timer	Sets the minimum time the relay can stay off independent from the measured value (default: + 0 min).

Figure 21 Event control function (no delay)

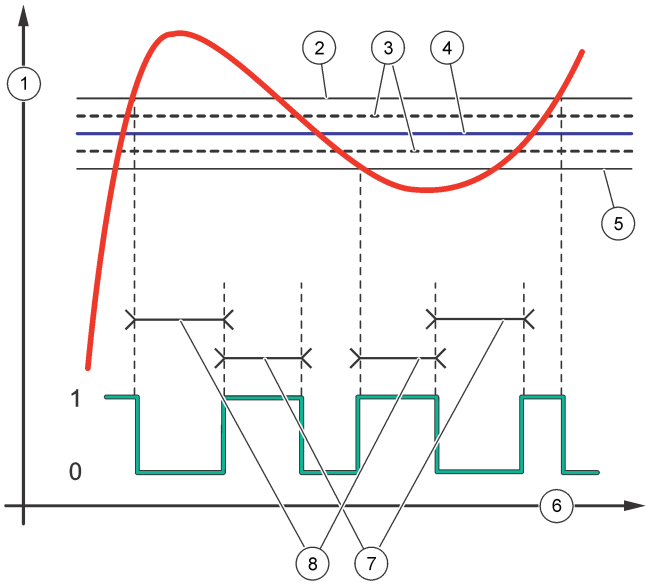

1 Source (y-axis)	**5** Low alarm
2 High alarm	**6** Time (x-axis)
3 Deadband	**7** OnMax-time
4 Setpoint	**8** OffMax-time

Figure 22 Event control function (OnMin timer, OffMin timer)

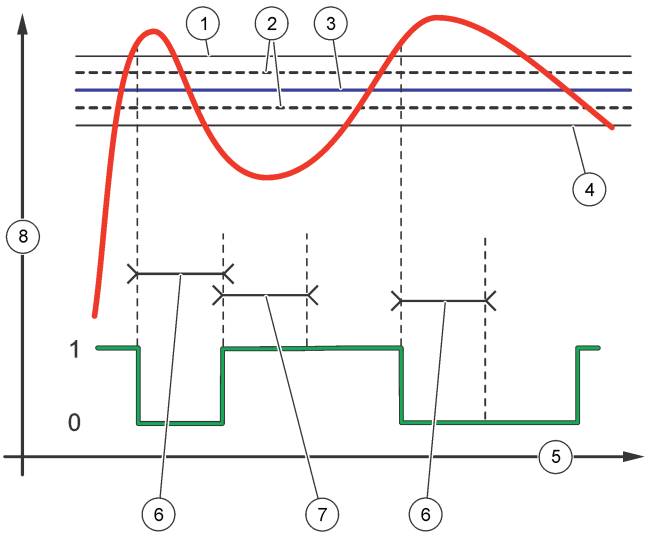

1 High alarm	**5** Time (x-axis)
2 Deadband	**6** OffMin timer
3 Setpoint	**7** OnMin timer
4 Low alarm	**8** Source (y-axis)

Figure 23 Event control function (ON/OFF delay)

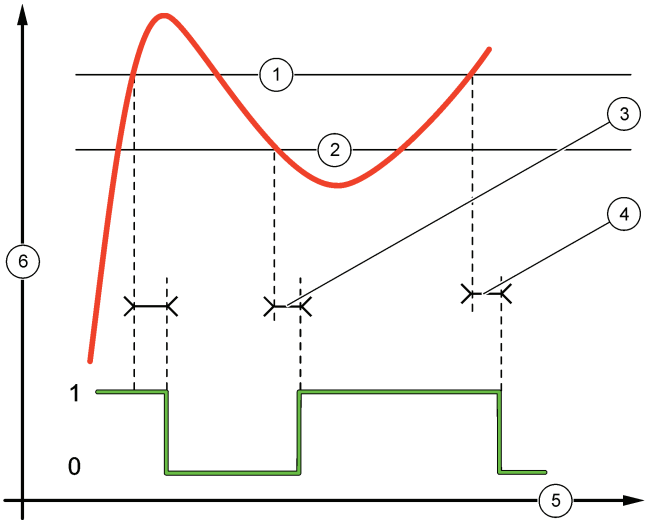

1 High alarm	**4** OFF delay
2 Low alarm	**5** Time (x-axis)
3 ON delay	**6** Source (y-axis)

- **Pulse Width Modulation Control Function (refer to Figure 24)**

Option	Description
Set mode	Auto—the relay output works as a PID controller. Manual—the signal is controlled by the user through manual adjustment of the % change value. This option is shown as Manual Output after the manual set mode is selected.
Phase	Reverses the leading sign of the control deviation for the PID controller (default: Reverse). The phase selects whether the relay will operate at the first part of a cycle (direct phase) or the second part (reverse phase).
Set setpoint	Creates a setpoint value.
Dead zone	The range above and below the setpoint. In this set range, the PID controller does not take action to change the Pulse Width Modulation On/Off Ratio output signal until the limits of the dead zone are reached.
Period	Sets the cycle duration of the PWM output signal (default: 5 seconds).
Min width	Sets the minimum PWM ratio (default: 1.0 second).
Max width	Sets the maximum PWM ratio (default: 4.0 seconds).
Prop band	Sets the proportional part of the PID controller. The proportional part of the controller supplies an output signal which is linearly dependent to the control deviation. The proportional part reacts on any changes at the input but starts to oscillate easily if the value is set high. The proportional part cannot completely compensate for disturbances.
Integral	Sets the integral part of the PID controller (default: 000 minutes). The integration part of the controller supplies an output signal. The output signal increases linearly if the control deviation is constant. The integration part responds slower than the proportional part and can completely compensate disturbances. The higher the integration part, the slower it responds. If the integration part is set too low, it starts to oscillate.

Figure 24 Pulse Width Modulation function (linear mode)

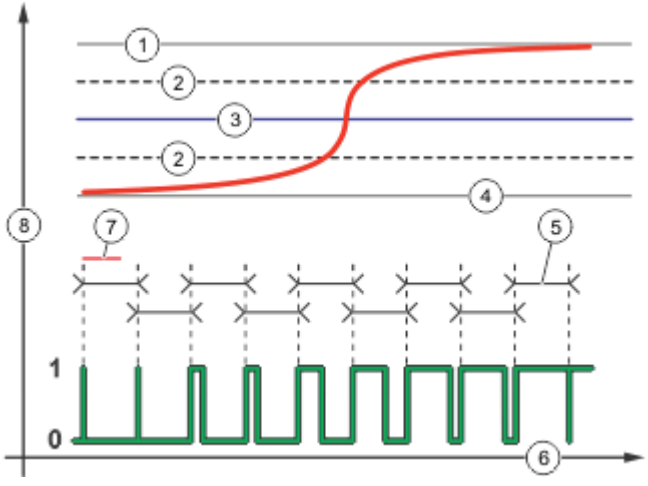

1 High alarm	**5** Period
2 Deadband	**6** Time (x-axis)
3 Setpoint	**7** Phase
4 Low alarm	**8** Selected source (y-axis)

- **Frequency Control Function (refer to Figure 25)**

Option	Description
Set mode	Auto—The relay works as a PID controller. Manual—the signal is controlled by the user through manual adjustment of the % change value. This option is shown as Manual Output after the manual set mode is selected.
Phase	Reverses the leading sign of the control deviation for the PID controller (default: Reverse). The phase selects whether the relay will operate at the first part of a cycle (direct phase) or the second part (reverse phase).
Set setpoint	Sets the process value which is controlled by the PID controller.
Dead zone	In this set range, the PID controller does not take action to change the output frequency until within the limits of the dead zone.
Pulse width	Sets the cycle duration (0-600 seconds) of the PWM output signal. (default: 0.5 seconds) The cycle duration is equal to the duty cycle of the output signal.
Minimum pulses	Sets the minimum number of pulses per minute at which the relay can operate. Range: 0.001–4.000 (default: 1.000)
Maximum pulses	Sets the maximum number of pulses per minute at which the relay can operate. Range: 0.001–60.000 (default: 04.000). This value cannot be set lower than Minimum Pulses value.
Prop band	Sets the proportional part of the PID controller. The proportional part of the controller supplies an output signal which is linearly dependent to the control deviation. The proportional part reacts on any changes at the input but starts to oscillate easily if the value is set high. The proportional part cannot fully compensate for disturbances.
Integral	Sets the derivative part of the PID controller (default: 000 minutes). The integration part of the controller generates an output signal. The output signal increases linearly if the control deviation is constant. The integration part responds slower than the proportional part and can fully compensate disturbances. The higher the integration part, the slower it responds. If the integration part is set too low, it starts to oscillate.

Figure 25 Frequency control function

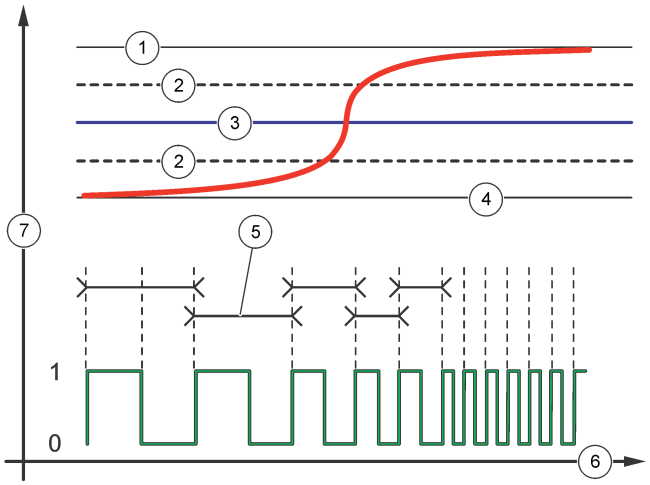

1	High limit	**5**	Cycle duration
2	Deadband	**6**	Time (x-axis)
3	Setpoint	**7**	Selected source (y-axis)
4	Low limit		

- **Warning Function**

Option	Description
Warning	Sets the level for warning activation. Refer to the sensor manual for the numbers for individual warning messages.

Display setup

Configures the controller display.

1. From the Settings menu, select sc200 Setup and push **ENTER**.
2. Select Display Setup and push **ENTER**.

Option	Description
Adjust Order	View and modify the measurement display order. • **See Current Order**—View the current display order • **Add Measurements**—Add selected measurements to the display • **Remove Measurements**—Remove selected measurements from the display • **Reorder List**—Select one or more measurements and change their order in the display • **See Default Order**—View the default display order • **Set to Default**—Set the display order to the default configuration ***Note:*** *Some of the above will not be available if no adjustment is possible for that option (e.g.* ***Reorder List*** *and* ***Remove Measurements*** *will not be available if only one measurement is selected for display).*
Display Contrast	Adjust the contrast to a value between the minimum of +1 and the maximum of +9
Edit Name	Assigns a name to the controller

Update the date and time

1. From the Settings menu, select sc200 Setup and push **ENTER**.
2. Select Set Date/Time and push **ENTER**.
3. Select Date Format from the Set Date/Time screen and push **ENTER**.
4. Select a format and push **ENTER**.
5. Select Date/Time from the Set Date/Time screen and push **ENTER**.
6. Update the entries.
   a. Use the right and left arrow keys to highlight a field.
   b. Use the up and down arrow keys to change the values in the field and push **ENTER**.
   c. At the end of the date field, push the right arrow to wrap down to the time fields.
   d. Use the up and down and arrow keys to update the time fields.
7. Push **ENTER** to save the changes.
   The controller returns to the Set Date/Time menu.

Set the datalog mode and interval

Datalog Setup is available if a calculation has been set up.

1. From the Settings menu, select sc200 Setup and push **ENTER**.
2. Select Datalog Setup and push **ENTER**.
3. Select Set Mode and push **ENTER**.
4. Select an option (Snap Shot, Average, Maximum, Minimum) and push **ENTER**.
5. From the Datalog Setup menu, select Set Interval and push **ENTER**.
6. Select an interval from the list and push **ENTER**.

Set up a calculation

1. From the Settings menu, select sc200 Setup and push **ENTER**.
2. Select Calculation and push **ENTER**. Select a menu option and choose from the displayed list or update the entry. Refer to the table below for more information about each option.

Option	Description
Set variable X	Selects the sensor for the x variable
Set parameter X	Selects the sensor measurement for the x variable
Set variable Y	Selects the sensor for the y variable
Set parameter Y	Selects the sensor measurement for the y variable
Set formula	Select the math function to implement: • **None**—Disables the math function • **X-Y**—Subtraction function • **X+Y**—Addition function • **X/Y**—Division function • **[X/Y]%**—Percentage function • **[X+Y]/2**—Average function • **[X*Y]**—Multiplication function • **[X-Y]%/X**—Difference function
Display format	Selects the number of digits and decimal points

Option	Description
Set units	Selects the units for the calculated reading
Set parameter	Selects the parameter for the calculated reading

3. Push **ENTER** to save the selection or setting and return to the Calculation menu.

Set up the discrete inputs

Use these inputs to switch closure inputs or logic level voltage inputs.

1. Press the **MENU** key.
2. Select sc200 Setup and push **ENTER**.
3. Select Discrete Input Setup and push **ENTER**.
4. Select the desired channel (Input 1, Input 2 or Input 3) and push **ENTER**.
5. Select a control logic option and push **ENTER**.

Option	Description
Disable	This channel is disabled and not used.
On/High	This channel is active when either the switch input is On (or closed), or the logic level voltage input is at a High level.
Off/Low	This channel is active when either the switch input is Off (or opened), or the logic level voltage input is at a Low level.

6. Select a warning option and push **ENTER**.

Option	Description
Off	An active discrete input does not trigger a device warning.
On	An active discrete input triggers a device warning.

7. Select an output mode option and push **ENTER**.

Option	Description
Active	Output level continues to represent operating conditions.
Hold	Output level is held static.
Transfer	Output level moves to a pre-configured value.

8. Select the sensors that will have their outputs (analog and relay) affected when one of the discrete inputs becomes active. Push **ENTER**.
9. Use the arrows to select the On Delay value (the duration time delay between the discrete input activation and the configured response of the controller). Push **ENTER**.
10. Use the arrows to select the Off Delay value (the duration time delay between the discrete input de-activation and the configured response of the controller). Push **ENTER**.
11. Repeat steps 4–10 for each desired channel.
12. If a discrete input needs to be changed after initially set up:
    a. Repeat steps 1–4 and an Input Settings menu appears with the following options:
       - Control Logic
       - Set Warning
       - Output Mode
       - On Delay
       - Off Delay
    b. Select the desired option and push **ENTER**.

c. Make the desired changes and push **ENTER** to save the changes and return to the Inputs Setting menu.

Update the display language

The display language can be changed through the Setup menu.

1. From the Settings Menu, select sc200 Setup and push **ENTER**.
2. Select Language and push **ENTER**.
   The list of language options appears. English is the default language for the controller.
3. Highlight the language to be used for the controller and push **ENTER**.
   The selected language is saved and is used for the controller display. The display returns to the sc200 Setup menu.

Using the secure digital memory (SD) card

An SD card must be installed in the controller.

- The SD card can be used to update software and firmware and to download event and data logs. If the SD card is installed while the controller is in the Settings Menu, push the **HOME** key and then the **MENU** key to verify the option is visible. The SD icon will also be visible in the upper status bar of the main measurement screen when a card is installed.
- Data log files on the SD card are available in XML and binary formats.
- DataCom is used to convert files from binary to CSV format. Refer to the DataCom manual for more information on how to use the application. For a copy of the DataCom manual, software updates or other downloadable resources, go to http://www.de.hach.com or http://www.hach.com. Search *DataCom* or go to any sc200 product page.

Updating software

Notes:

- The controller does not automatically transfer information to or from an SD card.
- When the SD card is put in multiple controllers, each controller has a separate set of folders in the SD card memory. To make sure software updates are in the correct folder for the controller in use, it is best to use a separate dedicated SD card for each controller.

1. From the Settings Menu, select SD Card Setup and push the **ENTER** key.
2. Select Upgrade Software and push the **ENTER** key.

   Note: *If the Upgrade Software option does not appear, do the steps in* Firmware updates with SD cards on page 44.
3. Select a device from the list and push the **ENTER** key. The list of options includes the controller and all connected devices that have software placed in the appropriate folder on the SD card.
4. If more than one version of the upgrade software is available, select the version with the highest number and push the **ENTER** key.
5. Push the **ENTER** key to begin the software transfer.
   The display will show "Transferring files. Please wait..." The percentage of completion appears in the bottom left corner of the display. The upgrade cannot be halted once it has begun.

   - When the transfer is successful, the display will show "Transfer complete" along with a prompt to push **ENTER** to restart the controller or to push the **BACK** key and exit to the SD Card Setup menu. Controller updates take effect when the controller is restarted. A restart is not necessary for sensor updates.
   - If the transfer is unsuccessful, the display will show "Transfer failed" and an error message. Press the **ENTER** key to acknowledge the warning and exit out of the menu. Error messages are different for each sensor. Refer to the applicable sensor manual.

Saving data and event logs with SD cards

Notes:

- Data and event logs can be downloaded to an SD card and viewed with any device capable of reading an SD card.
- Data logs store the measurement data at selected intervals in a packed binary format (.flg file).
- Event logs store a variety of events that occur on the devices such as configuration changes, alarms and warning conditions. Event logs are set up during the sensor or module configuration process. Event logs are stored in a CSV format.

1. From the Settings Menu, select SD Card Setup and push the **ENTER** key.
2. Select Save Logs and push the **ENTER** key.
3. If more than one device appears on the screen, all devices are selected by default. To deselect an item, highlight the selection and push the left arrow key. Select the devices from which logs will be saved and push the **ENTER** key.
4. Select the time period from which logs are to be saved.

Option	Description
Last Day	All logs from the last full 24 hours, starting from 12:00 a.m., and any additional time remaining on the current day
Last Week	All logs from the last full week (7 days) starting from 12:00 a.m., and any additional time remaining on the current day
Last Month	All logs from the last full month (30 days) starting from 12:00 a.m., and any additional time remaining on the current day
All	Save all logs in memory
New	All logs that are new since the last time logs were saved to the SD card

5. Push the **ENTER** key to confirm the choice, and push the **ENTER** key again to begin the file transfers.
6. Allow time for the files to transfer. The display will show Transferring files. Please wait... and the percentage of files transferred.
   If the transfer is successful, the display will show "Transfer complete." If the transfer is not successful, the display will show "Transfer failed."
7. Do one of the following:
   a. Push the **ENTER** key to exit back to the SD Card Setup menu.
   b. Push the **HOME** key to return to the measurement screen.
   c. Push the **BACK** keys to return to the Settings Menu.

Access data and event log files on the SD card

A PC with an SD Card reader device or USB adapter is necessary to view the event and data logs kept on the SD Card. Excel 2003 or higher (for XML files) or the Data Com application (for binary flg files) is necessary to open the event and data logs.
Data logs have the following structure: Device Name, Device Serial Number, Device Identification, Data Log, Time Stamp.

Event logs have the following structure: Device Name, Device Serial Number, Device Identification, Event Log, Time Stamp.

To view data or event log files stored on the SD card:

1. Attach the card reader device to the PC (if necessary) and install the SD card that contains the files in the reader device.
2. In the SD card directory, open the HACH folder.
3. Select the Logs folder.
4. Select a device folder.

The event and data log files in the folder are shown.

5. To view XML data log files:
   a. Make sure the HachDatalog.xsl style sheet exists in the device folder.
   b. Open the Excel application.
   c. Go to File, Open.
   d. Select the data log file.
   e. In the Import XML dialog box, select **Open the file with the following style sheet applied** and select **HachDatalog.xml**.
   f. Click OK to view the data.
6. To view binary data log (.flg) files:
   a. Make sure the device driver (.flg.drv) file exists in the device folder.
   b. Open Data Com.
   c. In the File Viewer section, click Open.
   d. Select the data log file.
   The data log file is shown in the box and a comma separated values (csv) file with the same file name is created. This csv file can be opened in Excel.

Firmware updates with SD cards

The latest firmware updates can be placed on an SD card. The SD card can then be used to update the controller or device firmware.

A PC and a USB card reader or other device capable of reading an SD card are necessary.

1. Find the zip file at http://www.hach-lange.com or http://www.hach.com and copy it to the PC.
2. Extract file(s) from the zip folder and save them to the SD card.
3. Remove the SD card and update the controller and device firmware. Refer to Updating software on page 42.

Backup settings to an SD card

Saves the configuration of a device to the SD card.

1. Push the **MENU** key.
2. Select SD Card Setup and push **ENTER**.
3. Select Manage Configuration and push **ENTER**.
4. Select Backup Settings and push **ENTER**.
5. Select the devices to be backed up. All devices are selected by default. To deselect an item, highlight the selection and push the left arrow key. Push **ENTER** to begin the file transfers. If backup files already exist on the SD card, a confirmation window appears. Select the devices again and push **ENTER**. Wait for the "Transfer complete" message.
6. Push **ENTER** again to return to the Manage Configuration menu.

Restore settings to the controller

This menu selection only appears if a (serial number-specific) backup file for the controller or one of the sensors connected to it exists on the SD Card. This menu selection loads the configuration of a specific device from the SD card to the same device (serial number-controlled function).

1. Push the **MENU** key.
2. Select SD Card Setup and push **ENTER**.
3. Select Manage Configuration and push **ENTER**.
4. Select Restore Settings and push **ENTER**.
5. Select the device that will be restored. All devices are selected by default. To deselect an item, highlight the selection and push the left arrow key. Push **ENTER** to begin the file transfers.

6. When the transfer is complete, push **ENTER**.
7. To have the settings take effect immediately, restart the controller. Push the **BACK** key to exit the Manage Configuration menu.

Transfer settings to another device

All device settings including calibration, sensor name, selected temperature and measurement units and data logging settings are transferred.

1. Push the **MENU** key.
2. Select SD Card Setup and push **ENTER**.
3. Select Manage Configuration and push **ENTER**.
4. Select Transfer Settings and push **ENTER**. Two options appear:
   - Retrieve Settings
   - Copy Settings
5. To retrieve settings from the controller (or a device connected to it) and put the settings on the SD card:
   a. Select Retrieve Settings and push **ENTER**.
   b. Select the devices that contain the information to be transferred. All devices are selected by default. To deselect an item, highlight the selection and push the left arrow key. Push **ENTER** to begin the file transfers. Wait for the "Transfer complete" message.
   c. If files already exist on the SD card, a confirmation window appears. Select the devices again and push **ENTER**. Wait for the "Transfer complete" message.
   d. Push **ENTER** to return to the Manage Configuration menu.
6. To copy settings from the SD card to a controller (or a device connected to it):
   a. Select Transfer Settings and push **ENTER**.
   b. Select Copy Settings and push **ENTER**.
   c. Select the devices on the SD card. All devices are selected by default. To deselect an item, highlight the selection and push the left arrow key. Push **ENTER** to begin the file transfers.
7. When the transfer is complete, push **ENTER** to restart the connected devices.
8. Push **ENTER** to restart the controller or push **BACK** to return to the Manage Configuration menu.

Using the service port

The service port is used to download data files from the controller and install new versions of controller and sensor firmware. To download data and update software, use the service port in combination with DataCom and a service cable (LZX887).

Using DataCom

When using the service port, it is necessary to use DataCom. DataCom is a PC Application Utility that downloads data log and event log files from the controller and installed sensors. Files are downloaded from the controller through the controller service port or they can be placed on a Secure Digital Memory (SD) card installed in the controller. In addition, DataCom is used to upload software for the controller and sensors. The DataCom application must be installed on a PC to read the files.

Refer to the DataCom manual for more information on how to use the application. The DataCom manual, software updates and other downloadable resources are available at http://www.de.hach.com or http://www.hach.com on any sc200 product page.

Maintenance

⚠ DANGER



Multiple hazards. Only qualified personnel must conduct the tasks described in this section of the document.

Cleaning the controller

⚠ DANGER



Always remove power from the controller before performing maintenance activities.

Note: *Never use flammable or corrosive solvents to clean any part of the controller. Use of these solvents may degrade the environmental protection of the unit and may void the warranty.*

1. Make sure the controller cover is securely closed.
2. Wipe the controller exterior with a cloth dampened with water, or with a mixture of water and mild detergent.

Fuse replacement

Fuses are not user-serviceable items. The need for fuse replacement in controllers indicates severe technical failure and is therefore considered to be a service activity. If a blown fuse is suspected, contact Technical Support.

Battery replacement

The lithium ion backup battery is not user replaceable. Contact technical support for replacement.

Troubleshooting

Problem	Resolution
No current output	Verify current output configuration.
	Test current output signal using the Test/Maintenance submenu. Input a current value and verify the output signal at the controller connections.
	Contact Technical Support.
Incorrect current output	Verify current output configuration.
	Test current output signal using the Test/Maintenance submenu. Input a current value and verify the output signal at the controller connections. If the output is incorrect, perform an output calibration.

Problem	Resolution
No relay activation	Make sure relay connections are secure.
	If using an external power source, make sure the relay wiring is correct.
	Make sure the relay configuration is correct.
	Test the relay activation through the Test/Maintenance menu. The relay should energize and de-energize as selected.
	Make sure the controller is not in calibration mode and that the relay is not being held.
	Reset the Overfeed Timer to make sure the timer has not expired.
Secure Digital Memory (SD) card not recognized by the controller	Make sure the SD card is properly oriented. The copper traces should face toward the controller display.
	Make sure the SD card is fully seated in the slot and the spring lock is engaged.
	Make sure the SD card is properly formatted with a Fat 32 format. The MMC format is not supported. Follow the instructions of the card manufacturer to format the SD card on a PC.
	Make sure the card is not larger than 32 GB.
	Make sure an SD card is being used. Other types of cards (such as xSD, micro SD, mini SD) will not work properly.
Information not saving, or not saving properly to the SD card.	Make sure the SD card is properly formatted with the FAT 32 format. The MMC format is not supported. Follow the instructions of the card manufacturer to format the SD card on a PC.
	If the SD card has previously been in use, format the card with the Fat 32 format, install the card in the controller, and try downloading files.
	Try a different SD card.
SD card full	Read the SD card with a PC or other card reader device. Save important files and then delete some or all of the files on the SD card.
Controller cannot find software updates on the SD card.	Make sure an appropriate folder is created by installing the SD card in the controller. An update folder will automatically be created.
	Install the SD card on a PC and make sure the software files are located in the appropriate update folder.
	If the same SD card is used with multiple controllers, each controller will have a separate folder on the system. Make sure the software updates are in the folder dedicated to the controller in use.
Display is lit but shows no characters or characters are faint or blurry.	Adjust the display contrast
	Make sure protective film has been removed from display.
	Clean the outside of the controller, including the display screen.

Problem	Resolution
Controller will not power up, or powers up intermittently	Make sure the AC power connections are properly terminated in the controller.
	Make sure the power strip, line power, wall plug are all properly plugged in.
	Contact Technical Support
Network or sensor module not recognized	Make sure the module is properly installed.
	Make sure the module selector switch is set to the proper number.
	Remove sensor module and install the module into the second analog slot. Apply power to the controller and allow the controller to perform a device scan.
	Contact Technical Support.
Sensor not recognized ***Note:*** *Example of possible display message: *****	If the sensor is an analog sensor and a corresponding module is installed in the controller, refer to the instructions supplied with the Network or Sensor Module.
	Make sure the digital connector wiring harness is seated on the inside of the door assembly and that the wiring harness is not damaged.
	If the digital sensor is connected to the controller with a digital termination box, user supplied junction box, digital extension cables, or a user-supplied extension cable, connect the sensor directly to the controller and perform a device scan. If the controller recognizes the sensor, check that all the wiring in the junction boxes or extension cables is correct.
	Make sure that only two sensors are installed in the controller. Although two analog module ports are available, if a digital sensor and two analog modules are installed, only two of the three devices will be seen by the controller.
	Contact Technical Support
Device Missing error message appears	Perform a Device Scan from the Test/Maintenance menu.
	Power cycle the controller

Test and Maintenance menu

1. From the Settings Menu, select Test/Maint and push **ENTER**.

Option	Description
Scan devices	Performs a scan for active and missing devices.
Output cal • **Output 1** • **Output 2**	Lets the user calibrate the 4–20 mA outputs with a 250 ohm resistor in series to the mA output terminals. The settings for each output are adjusted until the correct value (4 mA or 20 mA) is supplied. Calibrate 4 mA output (Min: 0 Max: 25000) Calibrate 20 mA output (Min: 35000 Max: 65533)
Hold outputs	Sets the value the controller sends to an external system for a defined period of time. After the time period, the instrument goes back to reporting real time values. Set activation—Launch or release Set Outmode—Hold Outputs (default) or Transfer Outputs Set Channels—All (default) or select from hardware list

Option	Description
Test output • **Output 1** • **Output 2**	Lets the user select a mA value that is sent by the controller for verification. Min: 0 mA (default +04.00) Max: 25.00 mA
Status	View status of all modules, sensors and relays.
Test relay—A, B, C, D	Energize or De-energize the selected relay
Overfeed reset	Resets the Overfeed Timer.
Reset default config	Resets the controller configuration settings to the default values (language, date and time, relay function and data output function).
Restart sc200	Performs a controller restart
Simulation (only displays if sensors or modules are connected)	After the sim value is entered, the controller outputs this value as if it was the value sent from the sensor. The simulation stops after the user exits the screen. Source- • <Module 1> • <Module 2> (Footer displays current source selection) Parameter—Source measurement type (footer displays current source selection) Sim value—Use arrow keys to change value (footer displays current source selection)
Modbus stats	Displays Error and Good count stats for selected port. • Sensor port 1, 2, 3 or 4 • Network port • Service port • Clear stats
System data	Displays the current system current, temperature and voltage data.

Warning and error conditions

Follow the steps below to acknowledge controller warnings.

1. From the Settings menu, select Diagnostics and push **ENTER**.
2. Select the device (controller, sensor, network card) with the warning or error and push **ENTER**.
3. Select the warning, error or event list and push **ENTER**.
4. Select Yes and push **ENTER** to acknowledge the warning.
   Note: *Errors cannot be acknowledged.*
5. For more information on a specific warning, error or event, refer to the device manual.

Device scan information

Display message	Action
Installing device...please wait	The controller has found a new device. No action is necessary. The controller automatically performs an installation process for the new device and displays the main measurement screen of the device installed in the number one position.
Device missing <device id>	A previously installed device has been removed from the controller or is not detected. • Push the **Enter** key to continue. • Push the left arrow key to select or de-select a missing device. • Push the **Enter** key to delete the missing device. The controller will display the main measurement screen for the device in the number one position. ***Note:*** *This message also displays when a device is missing and a new device has been installed. After the missing device is deleted, the controller automatically installs the new device and displays Installing device...please wait. The controller then displays the main measurement screen for the device installed in the number one position.*

Replacement parts and accessories

Note: *Product and Article numbers may vary for some selling regions. Contact the appropriate distributor or refer to the company website for contact information.*

Description	Item number
4 GB Secure Digital Memory (SD) card	9218100
Connector kit for digital sensor	9201000
Controller installation kit	8806200
DataCom cable	LZX887
Mounting bracket inserts	9177900
Plug, conduit opening (set of 3)	5868700
Power cord kit, with strain relief, 125 VAC, U.S.-style plug	9202900
Power cord kit, with strain relief, 230 VAC, European-style plug	9203000
Screw driver	6134300
SD card reader	9218200
SD card cover kit for sc200 controller	9200900
Screws for controller installation kit	9177800
Cord grip kit (1)	9178000
Sealing washer for cord grip assembly	1033814
UV protection screen	8809200
Weather and sun shield w/ UV protection screen	9220600
Sensor and communication modules	
Conductivity module	9013000

Description	Item number
Flow module	9012700
4-20 mA input module	9012800
pH and DO module	9012900
4-20 mA output module	9334600
HART network module kit	9328100
Modbus network module	9013200
Profibus network module	9173900
Profibus M12 connector kit	9178500
Profibus M12 socket (hard wire to quick connector adapter)	9178200
Profibus M12 T-splitter	9178400



HACH COMPANY World Headquarters
P.O. Box 389, Loveland, CO 80539-0389 U.S.A.
Tel. (970) 669-3050
(800) 227-4224 (U.S.A. only)
Fax (970) 669-2932
orders@hach.com
www.hach.com

HACH LANGE GMBH
Willstätterstraße 11
D-40549 Düsseldorf, Germany
Tel. +49 (0) 2 11 52 88-320
Fax +49 (0) 2 11 52 88-210
info-de@hach.com
www.de.hach.com

HACH LANGE Sàrl
6, route de Compois
1222 Vésenaz
SWITZERLAND
Tel. +41 22 594 6400
Fax +41 22 594 6499

© Hach Company/Hach Lange GmbH, 2011-2014, 2016, 2018.
All rights reserved.

HACH

MODEL D3725E2T, CONDUCTIVITY SENSOR

LEFT BLANK

DOC023.97.80079

Inductive Conductivity Sensor

05/2010, Edition 1

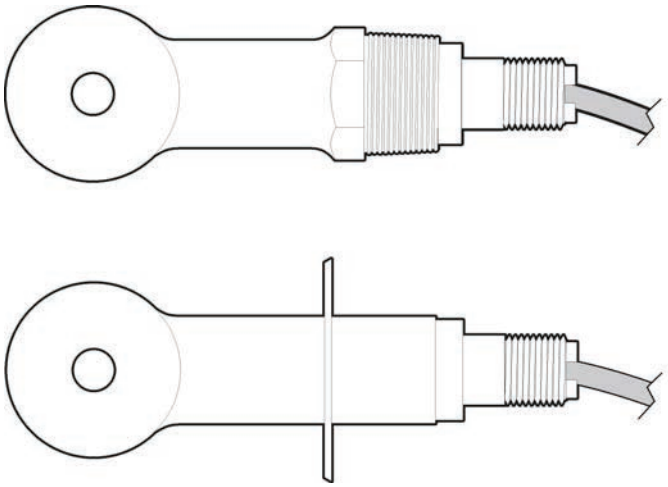

User Manual

English 3

Specifications

Specifications are subject to change without notice.

Table 1 Module specifications

Specification	Details
Linearity	≥ 1.5 mS/cm: ±1% of reading; < 1.5 mS/cm: ±15 µS/cm
Measuring range	0–2000 mS/cm
Response time	0.5 seconds
Precision	> 500 µS/cm: ±0.5% of reading; < 500 µS/cm: ±5 µS/cm
Maximum cable length	200 to 2000 µS/cm: 61 m (200 ft); 2000 to 2,000,000 µS/cm: 91 m (300 ft)
Warranty	1 year; 2 years (EU)

Table 2 Sensor specifications

Specification	Details
Temperature element	PT1000
Sensor cable	5 conductor (plus 1 shield), 6 m (20 ft); rated at 150 °C (302 °F)—polypropylene and PVDF sensors or 200 °C (392 °F)—PEEK and PFA Teflon sensors
Wetted materials	Polypropylene, PVDF, PEEK® or PFA Teflon®
Temperature/pressure limit	Polypropylene: 100 °C at 6.9 bar (212 °C at 100 psi); PVDF: 120 °C at 6.9 bar (248 °C at 100 psi); PEEK and PFA Teflon: 200 °C at 13.8 bar (392 °F at 200 psi);
Maximum flow rate	3 m/s (10 ft/s)
Warranty	1 year; 2 years (EU)

General Information

In no event will the manufacturer be liable for direct, indirect, special, incidental or consequential damages resulting from any defect or omission in this manual. The manufacturer reserves the right to make changes in this manual and the products it describes at any time, without notice or obligation. Revised editions are found on the manufacturer's website.

Safety information

Please read this entire manual before unpacking, setting up or operating this equipment. Pay attention to all danger and caution statements. Failure to do so could result in serious injury to the operator or damage to the equipment.

Make sure that the protection provided by this equipment is not impaired, do not use or install this equipment in any manner other than that specified in this manual.

Use of hazard information

⚠ DANGER

Indicates a potentially or imminently hazardous situation which, if not avoided, will result in death or serious injury.

⚠ WARNING

Indicates a potentially or imminently hazardous situation which, if not avoided, could result in death or serious injury.

⚠ CAUTION

Indicates a potentially hazardous situation that may result in minor or moderate injury.

NOTICE

Indicates a situation which, if not avoided, may cause damage to the instrument. Information that requires special emphasis.

Precautionary labels

Read all labels and tags attached to the instrument. Personal injury or damage to the instrument could occur if not observed. A symbol on the instrument is referenced in the manual with a precautionary statement.

	This symbol, if noted on the instrument, references the instruction manual for operation and/or safety information.

	This symbol, when noted on a product enclosure or barrier, indicates that a risk of electrical shock and/or electrocution exists.
	Delicate internal electronic components can be damaged by static electricity, resulting in degraded performance or eventual failure.
	Electrical equipment marked with this symbol may not be disposed of in European public disposal systems after 12 August of 2005. In conformity with European local and national regulations (EU Directive 2002/98/EC), European electrical equipment users must now return old or end-of-life equipment to the Producer for disposal at no charge to the user. ***Note:*** *For return for recycling, please contact the equipment producer or supplier for instructions on how to return end-of-life equipment, producer-supplied electrical accessories, and all auxillary items for proper disposal.*

Product overview

This sensor is designed to work with a controller for data collection and operation. Multiple controllers can be used with this sensor. This document assumes sensor installation and use with an sc200 controller. To use the sensor with other controllers, refer to the user manual for the controller that is used.

The sensor is available in different styles. Refer to Figure 1.

Figure 1 Sensor styles

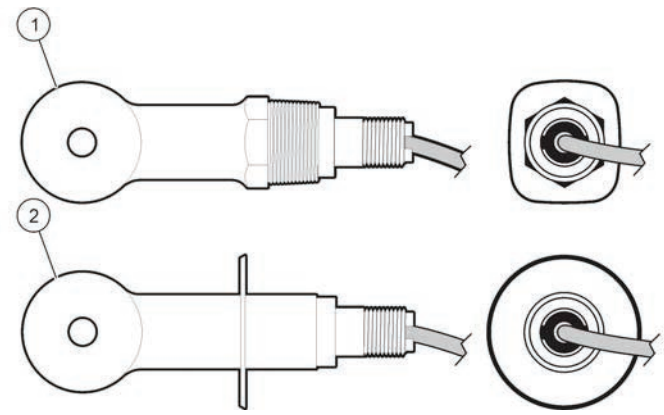

1 Convertible—for a pipe tee or an open vessel with appropriate mounting hardware	**2** Sanitary—for install in a 2-inch sanitary tee

Installation

⚠ WARNING

Personal injury hazard. Only qualified personnel should conduct the tasks described in this section of the manual.

Mounting

⚠ WARNING

Personal injury hazard. Always consider the temperature and pressure rating of the mounting hardware that is used to install the sensor. The hardware material usually limits the temperature and pressure rating of the system.

For examples of sensors in different applications, refer to Figure 2. The sensor must be calibrated before use. Refer to Calibrate the sensor on page 9.

Figure 2 Mounting examples

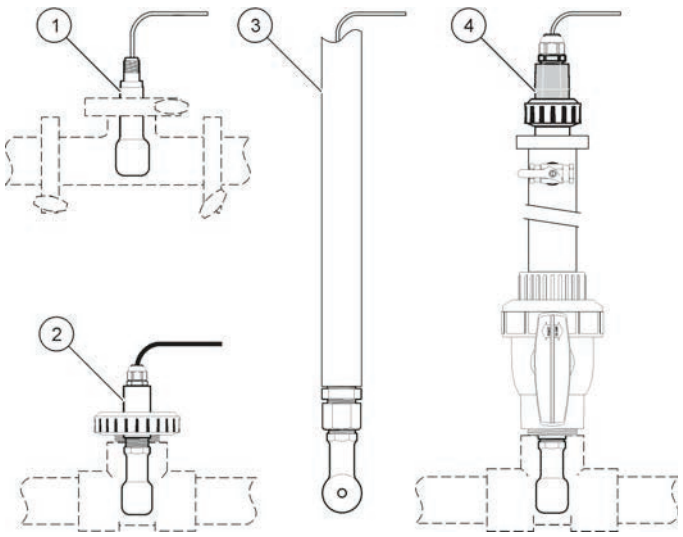

1 Sanitary (CIP) flange mount	**3** End of pipe immersion
2 Union T-mount	**4** Ball valve insertion

Connect the sensor to the module

⚠ WARNING

Potential Electrocution Hazard. Always disconnect power to the instrument when making electrical connections.

⚠ WARNING

Electrocution Hazard. High voltage wiring for the controller is conducted behind the high voltage barrier in the controller enclosure. The barrier must remain in place except when installing modules, or when a qualified installation technician is wiring for power, relays or analog and network cards.

NOTICE

Potential Instrument Damage. Delicate internal electronic components can be damaged by static electricity, resulting in degraded performance or eventual failure.

To install the module and connect the sensor, refer to the illustrated steps and Table 3. Be sure to connect the clear wire with the black band from the contacting conductivity sensors to the controller chassis.

Note: *If the sensor cable is not long enough to reach the controller, an interconnect cable and junction box are required to extend the distance. The T-factor should then be adjusted (*Adjust the T-factor for non-standard cable lengths *on page 9**).*

Table 3 3700 series inductive conductivity sensor wiring

Connector pin no.	Signal	Sensor wire
1	Sense	Green
2	Signal ground/Temp –	Yellow
3	—	—
4	—	—
5	—	—
6	—	—
7	—	—
8	—	—
9	Shield	Clear
10	Temp +	Red
11	Drive 1	White
12	Drive 2	Blue

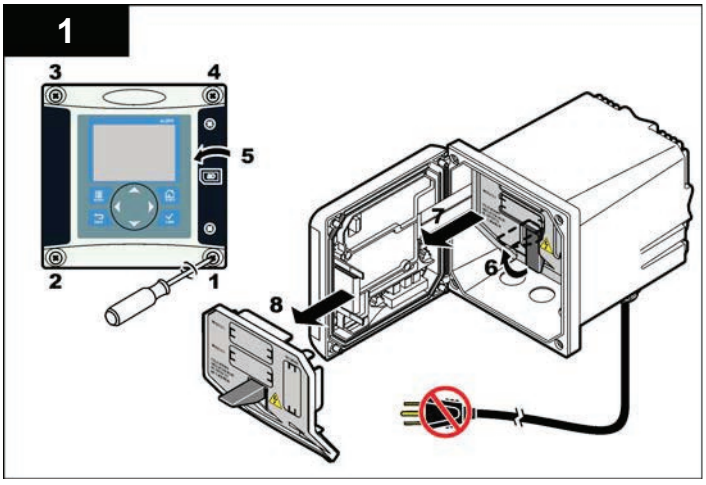
1
3
4
5
2
1
8
7
6

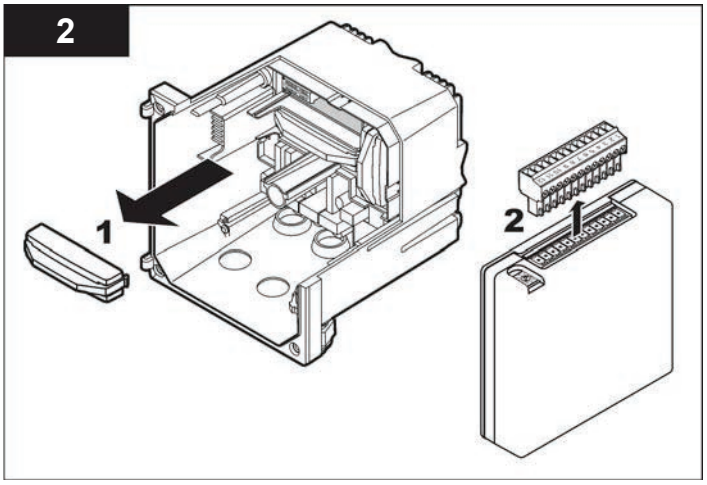
2
1
2

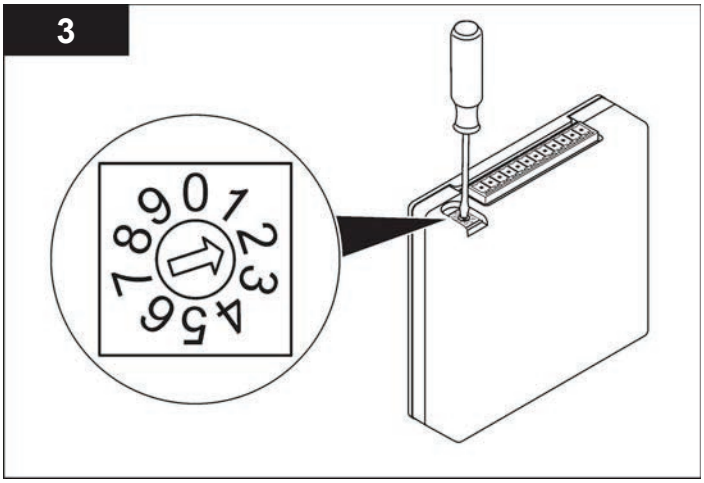
3
0
1
2
3
4
5
6
7
8
9

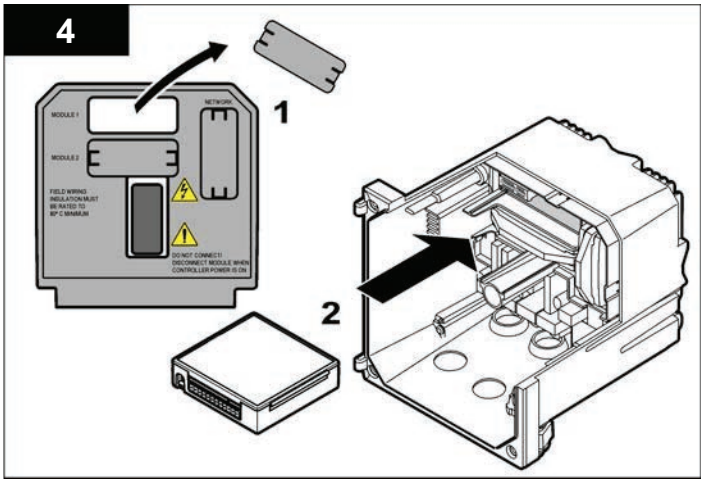
4
1
2

5

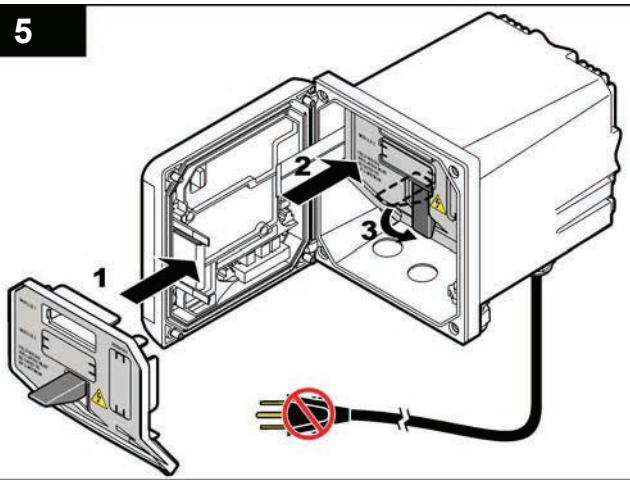
1
2
3

6

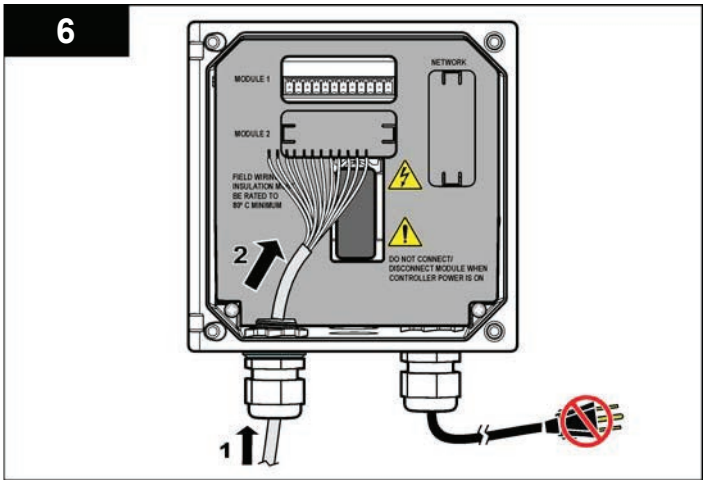
MODULE 1
NETWORK
MODULE 2
DO NOT CONNECT/ DISCONNECT MODULE WHEN CONTROLLER POWER IS ON
1
2

7

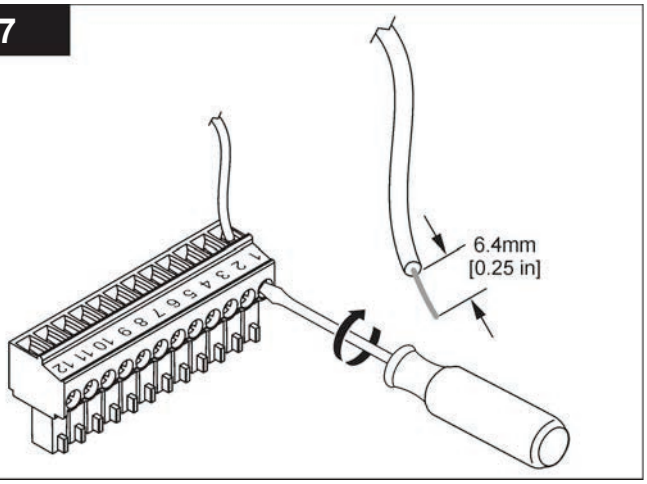
6.4mm
[0.25 in]

8

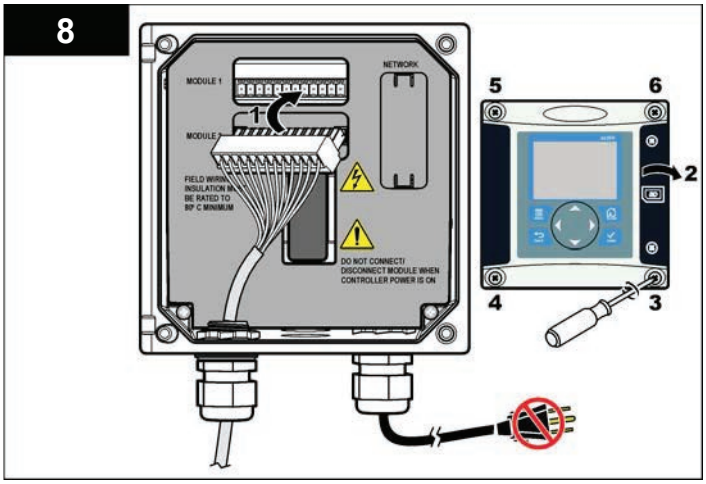
MODULE 1
NETWORK
MODULE 2
DO NOT CONNECT/ DISCONNECT MODULE WHEN CONTROLLER POWER IS ON
1
2
3
4
5
6

Operation

User navigation

Refer to the controller documentation for keypad description and navigation information.

Configure the sensor

Use the Configure menu to enter identification information for the sensor and to change options for data handling and storage.

1. Push the **MENU** key and select Sensor Setup, [Select Sensor], Configure.
2. Use the arrow keys to select an option and push **ENTER**. To enter numbers, characters or punctuation, push and hold the **UP** or **DOWN** arrow keys. Push the **RIGHT** arrow key to advance to the next space.

Option	Description
EDIT NAME	Changes the name that corresponds to the sensor on the top of the measure screen. The name is limited to 10 characters in any combination of letters, numbers, spaces or punctuation.
SENSOR S/N	Allows the user to enter the serial number of the sensor, limited to 16 characters in any combination of letters, numbers, spaces or punctuation.
SELECT MEASURE	Changes the measured parameter to conductivity (default), TDS (total dissolved solids), salinity or % concentration. When the parameter is changed, all other configured settings are reset to the default values.
DISPLAY FORMAT	Changes the number of decimal places that are shown on the measure screen to auto (default), X.XXX, XX.XX, XXX.X or XXXX. When set to auto, the number of decimal places changes automatically with changes in the measured value.
COND UNITS	Changes the conductivity units—µS/cm (default), mS/cm, S/cm or auto. When set to auto, the units change automatically with changes in the measured value. For concentration measurements, changes the units for calibration and user conductivity-concentration table—µS/cm, mS/cm (default) or S/cm.
TEMP UNITS	Sets the temperature units to °C (default) or °F
T-COMPENSATION	Adds a temperature-dependent correction to the measured value—linear (default: 2.0%/°C, 25 °C), natural water, temp table (enter x,y points in ascending order) or none. For special applications, a user-defined linear compensation can be entered (0–4%/°C, 0–200 °C). Natural water is not available for TDS or concentration.
CONFIG TDS	TDS only—changes the factor that is used to convert conductivity to TDS: NaCl (default, 0.49 ppm/µS) or custom (enter factor between 0.01 and 99.99 ppm/µS).
CONFIG CONC	Concentration (%) only—sets the type of concentration table to use: built-in (default) or user table. When built-in is selected, the user can select the chemical that is measured. If user table is selected, the user can enter up to 10 x,y (conductivity, %) points in ascending order. Built-in options: H_3PO_4: 0–40%; HCl: 0–18% or 22–36%; NaOH: 0–16%; $CaCl_2$ 0–22%; HNO_3: 0–28% or 36–96%; H_2SO_4: 0–30%, 40–80% or 93–99%; HF: 0–30%; NaCl: 0–26%; HBr: 0–35%; KOH: 0–45%; seawater: 0–5.5%
TEMP ELEMENT	Sets the temperature element for automatic temperature compensation to PT100 or PT1000 (default). After selection, the user should enter the certified T-factor from the label on the sensor cable for best accuracy. If no element is used, the type can be set to manual and a value for temperature compensation can be entered (manual default: 25 °C). ***Note:*** *If a sensor with a PT100 or PT1000 element is set to manual and the sensor is replaced or the sensor days are reset, the TEMP ELEMENT automatically changes to the default setting.*

Option	Description
CELL CONSTANT	Changes the cell constant to the actual certified K value from the label on the sensor cable. When the certified K value is entered, the calibration curve is defined.
FILTER	Sets a time constant to increase signal stability. The time constant calculates the average value during a specified time—0 (no effect, default) to 60 seconds (average of signal value for 60 seconds). The filter increases the time for the sensor signal to respond to actual changes in the process.
LOG SETUP	Sets the time interval for data storage in the data log—5, 30 seconds, 1, 2, 5, 10, 15 (default), 30, 60 minutes.
RESET DEFAULTS	Sets the configuration menu to the default settings. All sensor information is lost.

Adjust the T-factor for non-standard cable lengths

When the sensor cable is extended or shortened from the standard 6 m (20 ft), the resistance of the cable changes. This change reduces the accuracy of temperature measurements. To correct for this difference, calculate a new T-factor.
Note: *This procedure applies only to sensors with a PT1000 temperature element. Sensors with a PT100 temperature element are less accurate.*

1. Measure the temperature of a solution with the sensor and with an independent, reliable instrument such as a thermometer.
2. Record the difference between the temperature measured from the sensor and from the independent source (actual).
   For example, if the actual temperature is 50 °C and the sensor reading is 53 °C, the difference is 3 °C.
3. Multiply this difference by 3.85 to get an adjustment value.
   Example: 3 x 3.85 = 11.55.
4. Calculate a new T-factor:
   - Sensor temperature > actual—add the adjustment value to the T-factor on the sensor cable
   - Sensor temperature < actual—subtract the adjustment value from the T-factor on the sensor cable
5. Enter the new T-factor in the Configure, Temp Element menu.

Calibrate the sensor

About sensor calibration

The wet cal method should be used to calibrate the conductivity sensor:

- **Wet cal**—use air (Zero Cal) and a reference solution or process sample to define a calibration curve. A reference solution calibration is recommended for best accuracy. When the process sample is used, the reference value must be determined with a secondary verification instrument. Be sure to enter the T-factor in the Configure menu for accurate temperature compensation.

During calibration, data is not sent to the datalog. Thus, the datalog can have areas where the data is intermittent.

Zero calibration procedure

Use the zero calibration procedure to define the unique zero point of the conductivity sensor. The zero point must be defined before the sensor is calibrated for the first time with a reference solution or process sample.

1. Remove the sensor from the process. Wipe the sensor with a clean towel to make sure the sensor is dry.
2. Push the **MENU** key and select Sensor Setup, [Select Sensor], Calibrate.
3. Push **ENTER** to select Zero Cal.
4. If the passcode is enabled in the security menu for the controller, enter the passcode.
5. Select the option for the output signal during calibration:

Option	Description
Active	The instrument sends the current measured output value during the calibration procedure.
Hold	The sensor output value is held at the current measured value during the calibration procedure.

Option	Description
Transfer	A preset output value is sent during calibration. Refer to the controller user manual to change the preset value.

6. Hold the dry sensor in the air and push **ENTER**.
7. Review the calibration result:
   - Pass—the zero point is set.
   - Fail—the value is outside of accepted limits. Make sure the sensor is dry and repeat the zero calibration procedure.
8. If the calibration passed, push **ENTER** to continue.
9. If the option for operator ID is set to Yes in the Calibration Options menu, enter an operator ID. Refer to Change calibration options on page 12.
10. On the New Sensor screen, select whether the sensor is new:

Option	Description
Yes	The sensor was not calibrated previously with this controller. The days of operation and previous calibration curves for the sensor are reset.
No	The sensor was calibrated previously with this controller.

11. Proceed to the calibration with a reference solution or process sample.

Calibration with a reference solution

Calibration adjusts the sensor reading to match the value of a reference solution. Use a reference solution that is at the same value or higher than the expected measurement readings.

Note: *If the sensor is calibrated for the first time, be sure to complete the zero calibration first.*

1. Thoroughly rinse the clean sensor in deionized water.
2. Put the sensor in the reference solution. Support the sensor so that it does not touch the container. Make sure that there is at least 2 inches of space between the sensor and the sides of the container (Figure 3). Stir the sensor to remove bubbles.

Figure 3 Sensor in reference solution

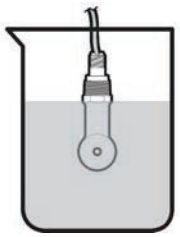

3. Wait for the sensor and solution temperature to equalize. This can take 30 minutes or more if the temperature difference between the process and reference solution is significant.
4. Push the **MENU** key and select Sensor Setup, [Select Sensor], Calibrate.
5. Select the calibration for the specified parameter and push **ENTER**:
   - Conductivity—Cond Cal
   - TDS—TDS Cal
   - Salinity—Cond Cal
   - Concentration—Conc Cal or Cond Cal
6. If the passcode is enabled in the security menu for the controller, enter the passcode.
7. Select the option for the output signal during calibration:

Option	Description
Active	The instrument sends the current measured output value during the calibration procedure.
Hold	The sensor output value is held at the current measured value during the calibration procedure.
Transfer	A preset output value is sent during calibration. Refer to the controller user manual to change the preset value.

8. With the sensor in the reference solution, push **ENTER**.

9. Enter the reference temperature of the reference solution and push **ENTER**.
10. Enter the slope of the reference solution and push **ENTER**.
11. Wait for the value to stabilize and push **ENTER**.
    Note: *The screen may advance to the next step automatically.*
12. Enter the value of the reference solution and push **ENTER**.
13. Review the calibration result:
    - Passed—the sensor is calibrated and ready to measure samples. The slope and/or offset values are shown.
    - Failed—the calibration slope or offset is outside of accepted limits. Repeat the calibration with fresh reference solutions. Refer to Maintenance on page 13 and Troubleshooting on page 13 for more information.
14. If the calibration passed, push **ENTER** to continue.
15. If the option for operator ID is set to Yes in the Calibration Options menu, enter an operator ID. Refer to Change calibration options on page 12.
16. On the New Sensor screen, select whether the sensor is new:

Option	Description
Yes	The sensor was not calibrated previously with this controller. The days of operation and previous calibration curves for the sensor are reset.
No	The sensor was calibrated previously with this controller.

17. Return the sensor to the process and push **ENTER**.
    The output signal returns to the active state and the measured sample value is shown on the measure screen.
    Note: *If the output mode is set to hold or transfer, select the delay time when the outputs return to the active state.*

Calibration with the process sample

The sensor can remain in the process sample, or a portion of the process sample can be removed for calibration. The reference value must be determined with a secondary verification instrument.

Note: *If the sensor is calibrated for the first time, be sure to complete the zero calibration first.*

1. Push the **MENU** key and select Sensor Setup, [Select Sensor], Calibrate.
2. Select the type of calibration and push **ENTER**:
   - Conductivity—Sample Cal
   - TDS—TDS Cal
   - Salinity—Sample Cal
   - Concentration—Conc Cal
3. If the passcode is enabled in the security menu for the controller, enter the passcode.
4. Select the option for the output signal during calibration:

Option	Description
Active	The instrument sends the current measured output value during the calibration procedure.
Hold	The sensor output value is held at the current measured value during the calibration procedure.
Transfer	A preset output value is sent during calibration. Refer to the controller user manual to change the preset value.

5. With the sensor in the process sample, push **ENTER**.
   The measured value is shown.
6. Wait for the value to stabilize and push **ENTER**.
7. Measure the conductivity (or other parameter) value with a secondary verification instrument. Use the arrow keys to enter the value and push **ENTER**.
8. Review the calibration result:
   - Passed—the sensor is calibrated and ready to measure samples. The slope and/or offset values are shown.
   - Failed—the calibration slope or offset is outside of accepted limits. Repeat the calibration with fresh reference solutions. Refer to Maintenance on page 13 and Troubleshooting on page 13 for more information.

9. If the calibration passed, push **ENTER** to continue.
10. If the option for operator ID is set to Yes in the Calibration Options menu, enter an operator ID. Refer to Change calibration options on page 12.
11. On the New Sensor screen, select whether the sensor is new:

Option	Description
Yes	The sensor was not calibrated previously with this controller. The days of operation and previous calibration curves for the sensor are reset.
No	The sensor was calibrated previously with this controller.

12. Return the sensor to the process and push **ENTER**.
    The output signal returns to the active state and the measured sample value is shown on the measure screen.
    Note: *If the output mode is set to hold or transfer, select the delay time when the outputs return to the active state.*

Temperature calibration

The instrument is calibrated at the factory for accurate temperature measurement. The temperature can be calibrated to increase accuracy.

1. Put the sensor in a container of water that is at a known temperature. Measure the temperature of the water with an accurate thermometer or independent instrument.
2. Push the **MENU** key and select Sensor Setup, [Select Sensor], Calibrate.
3. Select 1 PT Temp Cal and push **ENTER**.
4. Wait for the value to stabilize and push **ENTER**.
5. Enter the exact value and push **ENTER**.
6. Return the sensor to the process and push **ENTER**.

Exit calibration procedure

If the **BACK** key is pushed during a calibration, the user can exit the calibration.

1. Push the **BACK** key during a calibration. Three options are shown:

Option	Description
QUIT CAL	Stop the calibration. A new calibration must start from the beginning.
BACK TO CAL	Return to the calibration.
LEAVE CAL	Exit the calibration temporarily. Access to other menus is allowed. A calibration for a second sensor (if present) can be started. To return to the calibration, push the **MENU** key and select Sensor Setup, [Select Sensor].

2. Use the arrow keys to select one of the options and push **ENTER**.

Change calibration options

The user can set a reminder or include an operator ID with calibration data from the CAL OPTIONS menu.

1. Push the **MENU** key and select Sensor Setup, [Select Sensor], Calibrate, Cal Options.
2. Use the arrow keys to select an option and push **ENTER**.

Option	Description
CAL REMINDER	Sets a reminder for the next calibration in days, months or years—Off (default), 1 day, 7, 30, 60, or 90 days, 6 or 9 months, 1 or 2 years
OP ID on CAL	Includes an operator ID with calibration data—Yes or No (default). The ID is entered during the calibration.

Reset calibration options

The calibration options can be reset to the factory default options.

1. Push the **MENU** key and select Sensor Setup, [Select Sensor], Calibrate, Reset Default Cal.
2. If the passcode is enabled in the security menu for the controller, enter the passcode.
3. Push **ENTER**. The Reset Cal? screen is shown.
4. Push **ENTER**. All calibration options are set to the default values.

5. If the option for operator ID is set to Yes in the Calibration Options menu, enter an operator ID. Refer to Change calibration options on page 12.
6. On the New Sensor screen, select whether the sensor is new:

Option	Description
Yes	The sensor was not calibrated previously with this controller. The days of operation and previous calibration curves for the sensor are reset.
No	The sensor was calibrated previously with this controller.

7. Push the **BACK** key to return to the measure screen.

Modbus registers

A list of Modbus registers is available for network communication. Refer to www.hach.com or www.hach-lange.com for more information.

Maintenance

⚠ WARNING

Personal injury hazard. Only qualified personnel should conduct the tasks described in this section of the manual.

Clean the sensor

⚠ WARNING

Chemical hazard. Always wear personal safety protection in accordance with the Material Safety Data Sheet for the chemical that is used.

⚠ WARNING

Personal injury hazard. Removal of a sensor from a pressurized vessel can be dangerous. Reduce the process pressure to below 10 psi before removal. If this is not possible, use extreme caution. Refer to the documentation supplied with the mounting hardware for more information.

Pre-requisite: Prepare a mild soap solution with warm water and dishwashing detergent, Borax hand soap or a similar soap.

Examine the sensor periodically for debris and deposits. Clean the sensor when there is a buildup of deposits or when performance has degraded.

1. Use a clean, soft cloth to remove loose debris from the end of the sensor. Rinse the sensor with clean, warm water.
2. Soak the sensor for 2 to 3 minutes in a soap solution.
3. Use a soft bristle brush to scrub the entire measuring end of the sensor. Scrub the inside of the toroid.
4. If debris remains, soak the measuring end of the sensor in a dilute acid solution such as < 5% HCl for a maximum of 5 minutes.
5. Rinse the sensor with water and then return to the soap solution for 2 to 3 minutes.
6. Rinse the sensor with clean water.

Always calibrate the sensor after maintenance procedures.

Troubleshooting

Intermittent data

During calibration, data is not sent to the datalog. Thus, the datalog can have areas where the data is intermittent.

Test the conductivity sensor

If a calibration fails, first complete the maintenance procedures in Maintenance on page 13.

1. Disconnect the sensor from the module.
2. Use an ohmmeter to test the resistance between the sensor wires as shown in Table 4.

   Note: *Be sure that the ohmmeter is set to its highest range for all infinite (open circuit) resistance readings.*

Table 4 Conductivity resistance measurements

Measurement points	Resistance
Between red and yellow wires	1090–1105 ohms at 23–27 °C
Between blue and white wires	Less than 5 ohms
Between green and yellow wires	Less than 5 ohms

Table 4 Conductivity resistance measurements (continued)

Measurement points	Resistance
Between white and shield wires	Infinite (open circuit)

If one or more of the measurements is incorrect, call technical support.

Sensor diagnostic and test menu

The sensor diagnostic and test menu shows current and historical information about the instrument. Refer to Table 5. To access the sensor diagnostic and test menu, push the **MENU** key and select Sensor Setup, [Select Sensor], DIAG/TEST.

Table 5 Sensor DIAG/TEST menu

Option	Description
SENSOR INFORMATION	Shows the name and serial number that was entered by the user.
CARD INFORMATION	Shows the version and the serial number for the sensor module.
CAL DAYS	Shows the number of days since the last calibration.
CAL HISTORY	Shows a list of and details for each calibration.
RESET CAL HISTORY	Resets the calibration history for the sensor (requires service-level passcode). All previous calibration data is lost.
SENSOR SIGNALS	Shows the current sensor signal and span in µS/cm.
SENSOR DAYS	Shows the number of days that the sensor has been in operation.
RESET SENSOR DAYS	Resets the number of days that the sensor has been in operation.

Error list

Errors may occur for various reasons. The reading on the measurement screen flashes. All outputs are held when specified in the controller menu.

To show the sensor errors, press the **MENU** key and select Sensor Diag, [Select Sensor], Error List. A list of possible errors is shown in Table 6.

Table 6 Error list for conductivity sensors

Error	Description	Resolution
MEAS TOO HIGH	The measured value is > 2 S/cm, 1,000,000 ppm, 200% or 20,000 ppt	Make sure that the display format is set for the correct measurement range.
MEAS TOO LOW	The measured value is < 0 µS/cm, 0 ppm, 0% or 0 ppt	Make sure that the sensor is configured for the correct cell constant.
ZERO TOO HIGH	The zero calibration value is > 500,000 counts	Make sure that the sensor is held in air during zero calibration and is not located near radio frequency or electromagnetic interference. Make sure that the cable is shielded by metal conduit.
ZERO TOO LOW	The zero calibration value is < –500,000 counts	
TEMP TOO HIGH	The measured temperature is > 130 °C	Make sure that the sensor is configured for the correct temperature element. Refer to Test the conductivity sensor on page 13.
TEMP TOO LOW	The measured temperature is < –10 °C	
ADC FAILURE	The analog to digital conversion failed	Make sure that the sensor module is fully inserted into the controller connector. Replace the sensor module.
SENSOR MISSING	The sensor is missing or disconnected	Examine the wiring and connections for the sensor and for the module. Make sure that the terminal block is fully inserted into the module.
SENS OUT RANGE	The sensor signal is outside of the accepted limits (2 S/cm)	Make sure that the display format is set for the correct measurement range.

Warning list for sensors

A warning does not affect the operation of menus, relays and outputs. A warning icon flashes and a message is shown on the bottom of the measurement screen. To show the sensor warnings, press the **MENU** key and select Sensor Diag, [Select Sensor], Warning List. A list of possible warnings is shown in Table 7.

Table 7 Warning list for conductivity sensors

Warning	Description	Resolution
ZERO TOO HIGH	The zero calibration value is >300,000 counts	Make sure that the sensor is held in air during zero calibration and is not located near radio frequency or electromagnetic interference. Make sure that the cable is shielded by metal conduit.
ZERO TOO LOW	The zero calibration value is < –300,000 counts	
TEMP TOO HIGH	The measured temperature is > 100 °C	Make sure that the sensor is configured for the correct temperature element.
TEMP TOO LOW	The measured temperature is < 0 °C	
CAL OVERDUE	The Cal Reminder time has expired	Calibrate the sensor.
NOT CALIBRATED	The sensor has not been calibrated	Calibrate the sensor.
REPLACE SENSOR	The sensor has been in operation > 365 days	Calibrate the sensor with a reference solution and reset the sensor days. Refer to Sensor diagnostic and test menu on page 14. If the calibration fails, call technical support.
CAL IN PROGRESS	A calibration was started but not completed	Return to calibration.
OUTPUTS ON HOLD	During calibration, the outputs were set to hold for a selected time.	The outputs will become active after the selected time period.

Table 7 Warning list for conductivity sensors (continued)

Warning	Description	Resolution
WRONG LINEAR TC	The user-defined linear temperature compensation is out of range	The value must be between 0 and 4%/°C; 0 to 200 °C.
WRONG TC TABLE	The user-defined temperature compensation table is out of range	The temperature is above or below the temperature range defined by the table.
WRNG USER CONC TABLE	The concentration measurement is outside of the range of the user table	Make sure that the user table is set for the correct measurement range.
WRNG BLT-IN TEMP TABLE	The measured temperature is outside of the range of the built-in temperature compensation table	Make sure that the temperature compensation is configured correctly.
WRNG BLT-IN CONC TABLE	The concentration measurement is outside of the range of the built-in concentration table	Make sure that the concentration measurement is configured for the correct chemical and range.

Event list for sensors

The event list shows current activities such as configuration changes, alarms, warning conditions, etc. To show the events, press the **MENU** key and select Sensor Diag, [Select Sensor], Event List. A list of possible events is shown in Table 8. Previous events are recorded in the event log, which can be downloaded from the controller.

Table 8 Event list for conductivity sensors

Event	Description
CAL READY	The sensor is ready for calibration
CAL OK	The current calibration is good

Table 8 Event list for conductivity sensors (continued)

Event	Description
TIME EXPIRED	The stabilization time during calibration expired
CAL FAIL	The calibration failed
CAL HIGH	The calibration value is above the upper limit
K OUTRANGE	The cell constant K is out of range for the current calibration
UNSTABLE	The reading during calibration was unstable
CHANGE IN CONFIG float	The configuration was changed—floating point type
CHANGE IN CONFIG text	The configuration was changed—text type
CHANGE IN CONFIG int	The configuration was changed—integer value type
RESET CONFIG	The configuration was reset to the default options
POWER ON EVENT	The power was turned on
ADC FAILURE	The ADC conversion failed (hardware failure)
FLASH ERASE	The external serial flash memory erase occurred
TEMPERATURE	The temperature is out of range (-20 to 200 °C)
SAMPLE CAL START	Start of calibration for conductivity
SAMPLE CAL END	End of calibration for conductivity
ZERO CAL START	Start of zero calibration
ZERO CAL END	End of zero calibration
COND SOLN START	Start of reference solution calibration for conductivity
COND SOLN END	End of reference solution calibration for conductivity
TDS CAL START	Start of calibration for TDS
TDS CAL END	End of calibration for TDS
CONC CAL START	Start of calibration for concentration

Table 8 Event list for conductivity sensors (continued)

Event	Description
CONC CAL END	End of calibration for concentration
SALIN CAL START	Start of calibration for salinity
SALIN CAL END	End of calibration for salinity

Replacement parts and accessories

Note: *Product and Article numbers may vary for some selling regions. Contact the appropriate distributor or refer to the company website for contact information.*

Consumables

Description	Quantity	Item no.
Conductivity reference solution, 100–1000 µS/cm	1 L	25M3A2000-119
Conductivity reference solution, 1000–2000 µS/cm	1 L	25M3A2050-119
Conductivity reference solution, 2000–150,000 µS/cm	1 L	25M3A2100-119
Conductivity reference solution, 200,000–300,000 µS/cm	1 L	25M3A2200-119

Parts and accessories

Description	Item no.
Gasket, EDPM, for 2-in. sanitary sensors	9H1327
Junction box, aluminum	60A2053
Junction box, NEMA-4X	76A4010-001
Sanitary clamp, 2-in. heavy duty	9H1132
Cap, 2-in., sanitary	70F1037-003

www.hach.com



© Hach Company, 2010. All rights reserved. Printed in the U.S.A.

HACH

MODEL TSS sc, TURBIDITY SENSOR

LEFT BLANK

DOC023.53.90171

TSS EX1 sc

User Manual

07/2017, Edition 8

Turbidity and Solid matter sensor TSS EX1 sc

Table of contents

Section 1 Specifications 5
1.1 Dimensions 6
Section 2 General information 7
2.1 Safety information 7
2.1.1 Hazard warnings in this manual 7
2.1.2 Warning labels 8
2.2 Areas of application 8
2.3 Measuring principle 9
2.3.1 Turbidity according to DIN standards 9
2.3.2 Measurement of solids according to plant-specific curves 9
2.4 Handling 9
2.5 Scope of delivery 9
Section 3 Installation 11
3.1 Installation overview of basin sensor 12
3.2 Installation sensor pipe installation option 13
3.3 Grounding 13
3.4 Installation of the sc controller 13
3.5 Connect the sensor cable 13
3.5.1 Attaching a sc Sensor with a Quick-connect Fitting in a Hazardous Location 14
Section 4 Operation 17
4.1 sc controller operation 17
4.2 Sensor setup 17
4.3 Sensor data logger 17
4.4 Menu structure 17
4.4.1 SENSOR STATUS 17
4.4.2 SENSOR setup 18
4.5 CALIBRATE 20
4.5.1 Calibration of the TURBIDITY (TRB) parameter 20
4.5.1.1 Select TURBIDITY (TRB) parameter 20
4.5.1.2 FACTOR 20
4.5.1.3 OFFSET 21
4.5.1.4 1 to 3 point calibration 21
4.5.2 Calibration of the SOLID (TS) parameter 22
4.5.2.1 Select the SOLID (TS) parameter 22
4.5.2.2 FACTOR 22
4.5.2.3 1 to 3 point calibration 23
4.5.3 General information about calibration 24
4.5.3.1 Delete recorded points 24
4.5.3.2 Delete a calibration point 24
Section 5 Maintenance 25
5.1 Maintenance schedule 25
5.2 Clean the measurement windows 25

Table of contents

Section 6 Malfunctions, causes, resolution.....27
6.1 Error messages.....27
6.2 Warning messages.....27
Section 7 Replacement parts and accessories.....29
7.1 Replacement parts.....29
7.2 Accessories.....29
Section 8 Limited warranty.....31
Appendix A Modbus register.....33
Index.....35

Section 1 Specifications

Specifications are subject to change without notice.

Measurement		
Measurement method	Combined multiple-beam alternating light technique with IR diode system and beam focusing	
	Turbidity (TRB)	2-channel 90° scattered light measurement in accordance with DIN/EN 27027/ISO7027, wavelength = 860 nm additional measurement value verification through eight-channel multiple-angle measurement
	Solid matter (TS)	Modified absorption measurement: Eight-channel multiple-angle measurement, wavelength = 860 nm
	Air-bubble compensation	Software-based
	Measurement value compensation	Software-based (process-adaptable)
Measurement range	Turbidity (TRB)	0.001 to 9999 FNU
	Solid matter (TS)	0.001 to 500 g/L
Measurement accuracy	Turbidity (TRB)	Up to 1000 FNU/NTU: < 5% of measurement value ± 0.01 FNU/NTU
Reproducibility	Turbidity (TRB)	< 3%
	Solid matter (TS)	< 4%
Response time	1 s ≤ T90 ≤ 300 s (adjustable)	
Calibration	Turbidity (TRB)	Calibrated before shipping
	Solid matter (TS)	To be calibrated on site by the customer
	Zero point	Calibrated permanently before shipping
Environmental conditions		
Pressure range	≤ 10 bar or ≤ 100 m (≤ 145 PSI)	
Flow rate	Maximum 3 m/s (air bubbles created affect measurement)	
Ambient temperature	–10 to 50 °C (14 to 122 °F)	
Distance: Sensor — Wall/Floor	Solid matter (TS) > 10 cm, turbidity (TRB) > 50 cm	
Instrument properties		
Dimensions	Basin sensor: Ø × L Installation sensor (TriClamp): Ø × L Installation sensor (InLine): Ø × L	48.5 mm x 385 mm (1.91 in x 15.16 in) 48.5 mm x 448 mm (1.91 in x 17.64 in) 48.5 mm x 410 mm (1.91 in x 16.03 in)
Materials	Parts in contact with medium	Head: stainless steel DIN 1.4460 Sleeve: stainless steel DIN 1.4404 Shank: stainless steel DIN 1.4571 Sapphire glass Gaskets: FPM
	Sensor connection cable (permanently connected), Semoflex (PUR):	1 AWG 22/12 V DC twisted cable pair, 1 AWG 22/data twisted cable pair, shared cable screen
	Cable hardware	stainless steel 1.4305
Weight	Basin sensor, installation sensor (TriClamp/InLine):approximately 2.7 kg	

Cable length	10 m (32.81 ft), maximum 100 m (328 ft) with extension cable
Miscellaneous	
Inspection interval	upon request 1/year service contract with warranty extension to 5 years
Maintenance requirements	1 hour/month, typical
Declarations of conformity	CE, GS from the Technical Inspection Association, UL/CSA, FM
Grounding	Ground wire 4 mm^2 minimum
Hazardous location certifications	Class I Division 2 Groups A, B, C, D, T4 Class I Zone 2 Group IIC, T4

1.1 Dimensions

Figure 1 Dimensions

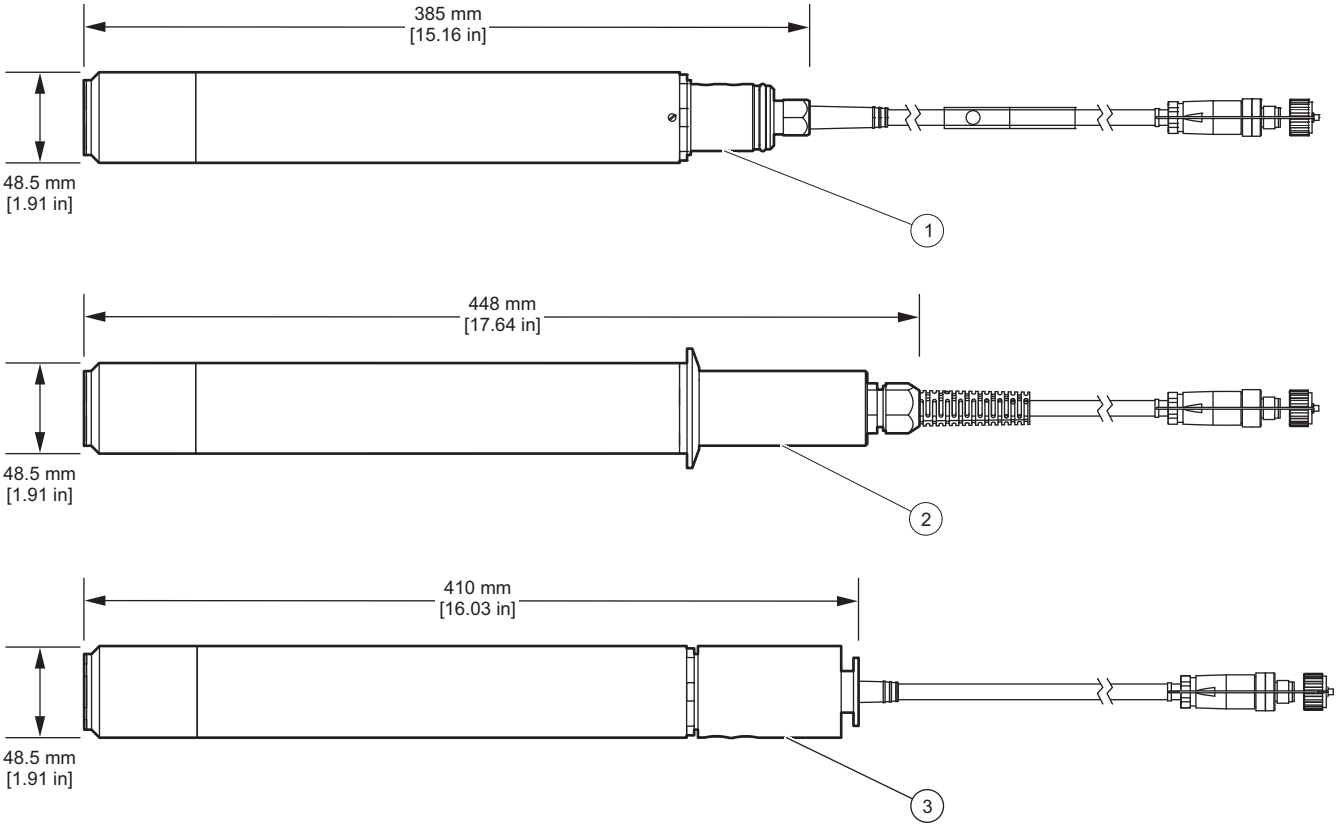

1 Basin sensor	**2** Installation sensor (TriClamp)	**3** Installation sensor (InLine)

2.1 Safety information

Please read this entire manual before unpacking, setting up, or operating this equipment. Pay attention to all danger and caution statements. Failure to do so could result in serious injury to the operator or damage to the equipment.

To ensure that the protection provided by the equipment is not impaired, do not use or install this equipment in any manner other than that specified in this manual.

DANGER

Class I Division 2
Groups A, B, C, D, T4
Class I Zone 2
Group IIC, T4.

DANGER

The probe (especially the type plate) must not be cleaned with or come into contact with acetone or p-Xylene, or any liquids containing these solvents.

DANGER

The free end of the feed hose must be connected either outside of the zone at risk of explosion or within equipment approved for the equipment category in question.

2.1.1 Hazard warnings in this manual

DANGER

Indicates a potentially or imminently hazardous situation that, if not avoided, can result in death or serious injury.

WARNING

Indicates a potentially or imminently dangerous situation that, if it is not avoided, can lead to death or to serious injuries.

CAUTION

Indicates a potentially hazardous situation that may result in minor or moderate injury if it is not avoided.

NOTICE

Indicates a situation that, if it is not avoided, can lead to damage to the device. Information that requires special emphasis.

Note: *Information that supplements points in the main text.*

2.1.2 Warning labels

Read all labels and tags attached to the instrument. Failure to do so may result in personal injury or damage to the instrument.

	This symbol may have been attached to the device, and in such cases it references the instruction manual for operating and/or safety information.
	This symbol may have been attached to a housing or barrier in the product and warns that there is a risk of electric shock and/or danger of death by electrocution.
	Electrical equipment marked with this symbol may not be disposed of in European domestic or public disposal systems after August 12, 2005. In conformity with European local and national regulations (EU Directive 2002/96/EC), European electrical equipment users must now return old or end-of life equipment to the manufacturer for disposal at no charge to the user. ***Note:*** *Instructions on the correct disposal of all (marked and unmarked) electrical products supplied or manufactured by Hach-Lange may be obtained from your local Hach-Lange sales office.*

2.2 Areas of application

Figure 2 Overview

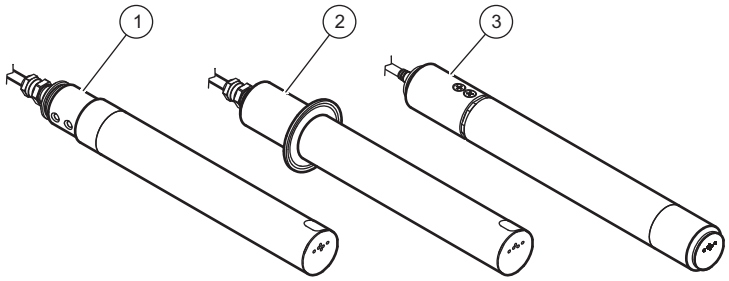

1	Basin sensor	**2**	Installation sensor (TriClamp)	**3**	Installation sensor (InLine)

The TSS EX1 sc sensor is an extremely accurate turbidity and solid sensor made from stainless steel for color-independent measurement of highly concentrated sludges.

This sensor was specially developed for
Class I Division 2
Groups A, B, C, D, T4
Class I Zone 2
Group IIC, T4

2.3 Measuring principle

2.3.1 Turbidity according to DIN standards

Turbidity is measured in accordance with DIN standard EN 27027 (ISO 7027) and is calibrated by the manufacturer. Measurement is exceptionally simple and accurate.

2.3.2 Measurement of solids according to plant-specific curves

Software-based optimization routines enable extremely precise simulation of medium-specific calibration curves with few calibration points. Usually, a single calibration point is sufficient.

Up to three calibration points can be defined for a strongly fluctuating medium. The combined multiple-beam alternating light technique records solids in the medium with even greater accuracy.

2.4 Handling

DANGER

Switch off the sc controller before connection or disconnection of the probe and sc controller.

NOTICE

Protect the probe from impacts and never rest the probe on the measurement head.

NOTICE

Never operate the probe within powerful magnetic fields! (EN50021 6.4)

2.5 Scope of delivery

- TSS EX1 sc sensor
- Test log
- Operating instructions

Make sure that all components have been received. If any items are missing or damaged, contact the manufacturer or a sales representative immediately.

DANGER

Observe the requirements for installation in hazardous zones.

This system must only be installed by qualified experts in accordance with all local safety regulations.

DANGER

DANGER

EXPLOSION HAZARD - DO NOT DISCONNECT EQUIPMENT UNLESS POWER HAS BEEN SWITCHED OFF OR THE AREA IS KNOWN TO BE NON-HAZARDOUS.

AVERTISSEMENT - RISQUE D'EXPLOSION - AVANT DE DECONNECTER L'EQUIPEMENT, COUPER LE COURANT OU S'ASSURER QUE L'EMPLACEMENT EST DESIGNE NON DANGEREUX.

Note: *Depending on the area of application, the sensor may have to be installed with additional optional accessories*

3.1 Installation overview of basin sensor

Figure 3 Example of installation with optional accessories

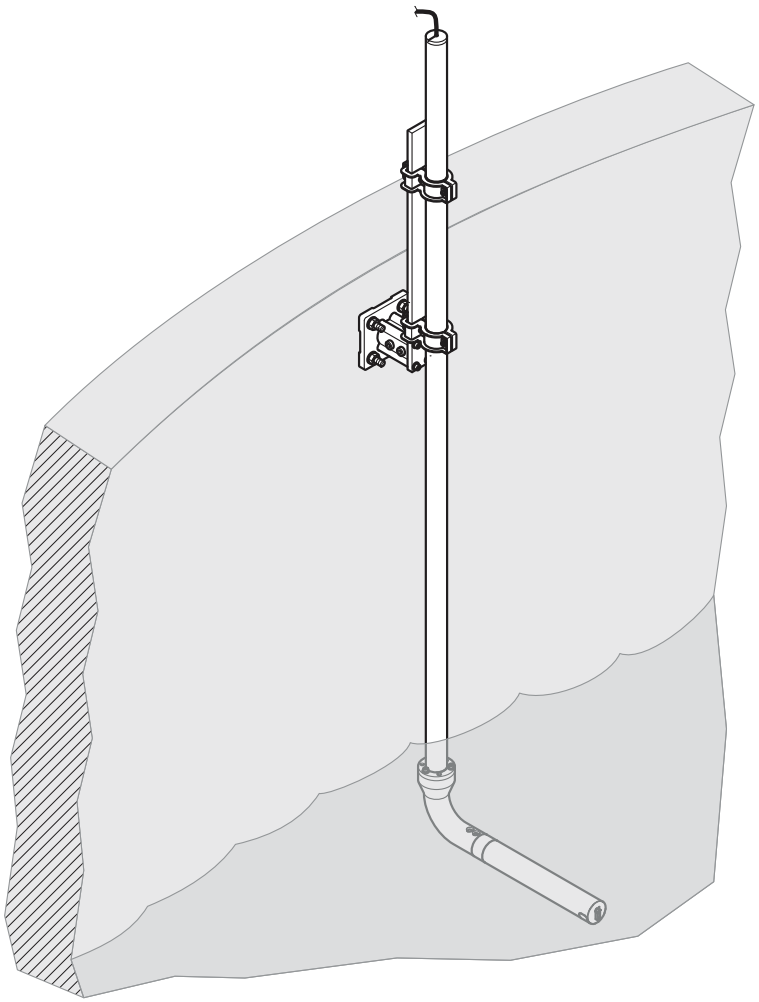

3.2 Installation sensor pipe installation option

Figure 4 Installation options

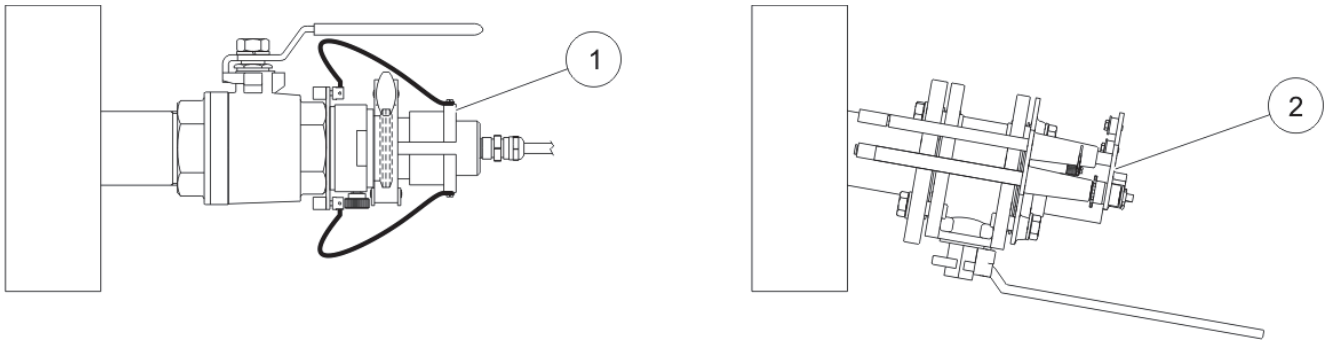

1	TSS EX1 sc TriClamp with retractable ball valve fitting (maximum operating pressure 1.5 bar; LZU301.99.00000	**2**	TSS EX1 sc Inline with built in safety valve LZY630.00.2x000 (maximum operating pressure 6 bar) (x= Identifier for material selection of the corresponding connecting flange))

3.3 Grounding

DANGER

Make sure that a ground wire with a cross-section of at least 4 mm^2 at the cable lug is attached directly to the probe/the band clamp on the assembly rod. The ground wire must be attached with a screw and lock washer.

3.4 Installation of the sc controller

Note: *The sc200 controller can be installed within the hazardous zone.*

3.5 Connect the sensor cable

CAUTION

Always lay cables and hoses so that they do not pose a tripping risk.

1. Unscrew the protective caps from the sc controller socket and the cable plug and retain them.
2. Pay attention to the guide in the plug and slide the plug into the socket.
3. Tighten the nut by hand.

Note: *Extension cables are available in various lengths (refer to Section 7 Replacement parts and accessories). Maximum cable length 100 m (328 ft).*

Figure 5 Connect the sensor plug to the sc controller

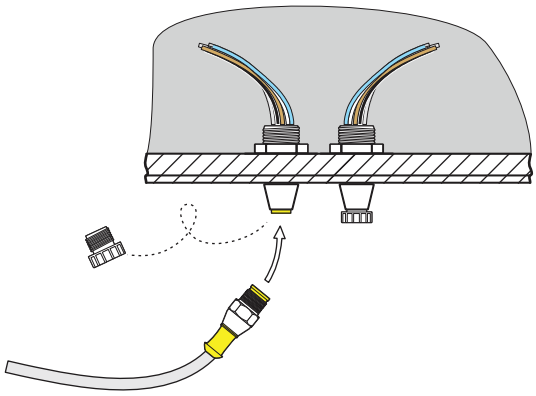

Figure 6 Pin assignment

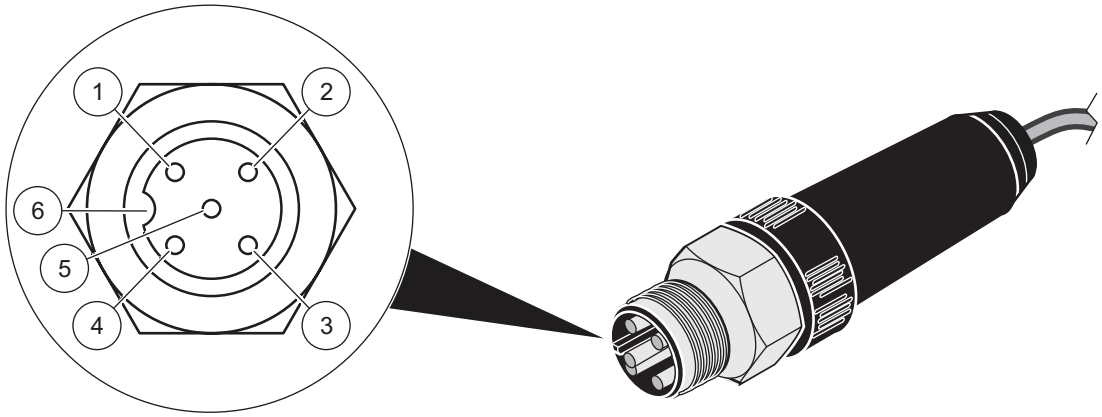

Number	Description	Cable color
1	+12 VDC	Brown
2	Earth	White
3	Data (+)	Blue
4	Data (–)	Black
5	Screen	Screen (gray)
6	Guide	

3.5.1 Attaching a sc Sensor with a Quick-connect Fitting in a Hazardous Location

The sensor cable is supplied with a keyed quick-connect fitting for easy attachment to the controller, see Figure 5. For hazardous locations, a connector safety lock is supplied and **must** be installed (see Figure 7 on page 15). Retain the connector cap to seal the connector opening in case the sensor must be removed.

Note: *The load termination box (Cat. No. 5867000) cannot be used in a hazardous location.*

1. Remove the connector cap from sc200 controller. Retain the connector cap to seal the connector opening in case the sensor must be removed.
2. Connect the sensor connector to the plug on the sc200.

3. Install a connector safety lock (Figure 7). Align the lock over the connector and squeeze the two halves together to lock. To remove the connector safety lock by inserting a small flat-bladed screwdriver into the locking groove. Pivot the screwdriver away from the groove and separate the two halves (Figure 7).

Figure 7 Installing the Connector Safety Lock

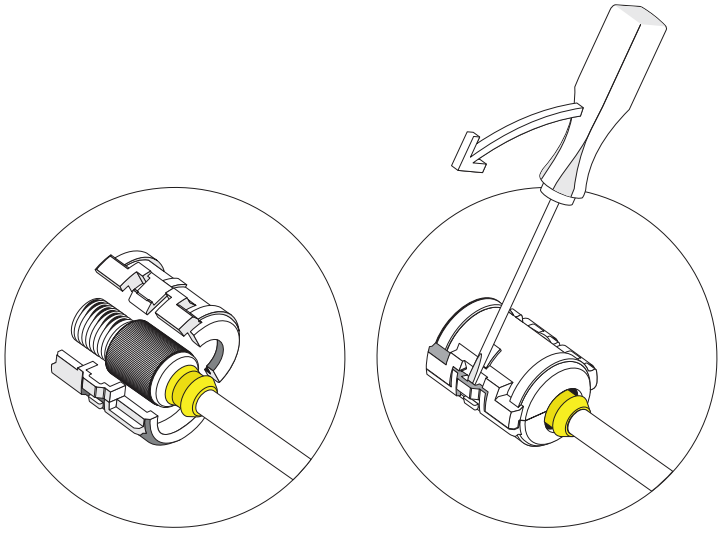

Section 4 Operation

4.1 sc controller operation

The sensor can be operated with all sc controllers. Become familiar with the functionality of the sc controller before using the sensor. Learn how to navigate the menu and execute the corresponding functions.

4.2 Sensor setup

When the sensor is connected for the first time, the sensor serial number is displayed as the sensor name. The sensor name can be changed as follows.

1. Open the MAIN MENU.
2. Press SENSOR SETUP and confirm.
3. Select the corresponding sensor and confirm.
4. Select CONFIGURE and confirm.
5. Press EDITED NAME and confirm.
6. Edit the names and confirm to return to the CONFIGURE menu.

Complete the system configuration in the same way by defining settings for the following menu items:

- MEAS UNITS
- PARAMETERS
- RESPONSE TIME
- LOGGER INTERVAL

7. Go back to the MAIN MENU or the Measurement mode display.

4.3 Sensor data logger

A data storage unit and an event memory unit are provided for each sensor. The data storage unit stores measurement data at predefined time intervals, while the event memory unit stores events such as configuration changes, alarms and warning conditions. Both storage units can be output in CSV format (refer to sc controller manual).

4.4 Menu structure

4.4.1 SENSOR STATUS

SELECT SENSOR (if there is more than one sensor)	
ERRORS	Possible error messages: MEAS. OVERRANGE, CAL. INSUFF. +/–, ZERO, CAL REQUIRED, EE RSRVD ERR, ERROR PROBE, LED FAILURE
WARNINGS	Possible warning messages: TEST/MAINT

Note: *Refer to Section 6 Malfunctions, causes, resolution for a list of all error and warning messages as well as a description of all necessary corrective actions.*

4.4.2 SENSOR setup

SELECT SENSOR (if there is more than one sensor)	
WIPE	Triggers a wiping operation
CALIBRATE (turbidity)	
OUTPUT MODE	Behavior of the outputs during calibration or while the zero point is being set
HOLD	
ACTIVE	
TRANSFER	
SELECTION	
SENS MEASURE	Current, uncorrected measurement value
FACTOR	Can be set from 0.10 to 10.00, a detailed description is provided in section 4.5 CALIBRATE
OFFSET	Can be set from –100 to +100, a detailed description is provided in section 4.5 CALIBRATE
CALIBRATE	
MEMORY	
POINT 1	Calibration point 1 is recorded
POINT 2	Calibration point 2 is recorded
POINT 3	Calibration point 3 is recorded
CLEAR MEMORY	Clears the recorded values for all points.
POINT 1	Current calibration for point 1
POINT 2	Current calibration for point 2
POINT 3	Current calibration for point 3
SET CAL DEFLT	Security prompt, reset to default calibration
CALIBRATE (TS content)	
OUTPUT MODE	Behavior of the outputs during calibration or while the zero point is being set
HOLD	
ACTIVE	
TRANSFER	
SELECTION	
SENS MEASURE	Current, uncorrected measurement value
FACTOR	Can be set from 0.10 to 10.00, a detailed description is provided in section 4.5 CALIBRATE
CALIBRATE	
MEMORY	
POINT 1	Calibration point 1 is recorded
POINT 2	Calibration point 2 is recorded
POINT 3	Calibration point 3 is recorded
CLEAR MEMORY	Clears the recorded values for all points.
POINT 1	Current calibration for point 1
POINT 2	Current calibration for point 2
POINT 3	Current calibration for point 3
SET CAL DEFLT	Security prompt, all calibration points are cleared

4.4.2 SENSOR setup

SELECT SENSOR (if there is more than one sensor)		
CONFIGURE		
	EDIT NAME	Name can include up to 16 characters, FACTORY CONFIG: Device number
	MEAS UNITS	TRB: (FNU, EBC, TE/F, NTU, FTU) TS: (mg/L, g/L, ppm, %) FACTORY CONFIG: FNU
	PARAMETERS	TRB, TS, FACTORY CONFIG: TRB
	RESPONSE TIME	1 to 300 s, FACTORY CONFIG: 60 s
	LOGGER INTERVAL	10 s, 30 s, 1 min, 2 min, 3 min, 4 min, 5 min, 6 min, 10 min, 15 min, 30 min, FACTORY CONFIG: 10 min
	FACTORY CONFIG	Security prompt, reset to factory configuration for all menu items listed above.
TEST / MAINT		
	PROBE INFO	
	SENSOR NAME	Device name
	EDITED NAME	
	INSTRUMENT NUMBER	
	TURBIDITY	0.001 to 9999 FNU
	SOLID	0.001 to 500 g/L
	MODEL NUMBER	Sensor item number
	CODE VERSION	Sensor software
	COUNTER	MANUAL RESET PRESS ENTER: Security prompt TEST / MAINT: COUNTER X DAYS BACKWARDS, TOTAL: OPERATING HOURS COUNTER,
	INTERVAL	Default for maintenance counter
	SERVICE	
	SIGNALS	Explanation: refer to service manual
		S5E1
		S5E3
		S6E1
		S6E3
		S5E2
		S5E4
		S6E2
		S6E4
	OUTPUT MODE	Behavior of instrument outputs in the SERVICE menu
		HOLD
		ACTIVE
		TRANSFER
		SELECTION
		Service access

4.5 CALIBRATE

Note: *Turbidity measurement has been calibrated by the manufacturer — it does not need to be calibrated again.*

Note: *It is imperative to calibrate for solid matter measurement (refer to section 4.5.2 Calibration of the SOLID (TS) parameter).*

The zero point for turbidity and solid matter measurement has been set in the sensors by the manufacturer.

Installation conditions in the pipes can cause interfering ground reflection when measuring turbidity, which in turn may cause the zero point to shift. Compensate for this effect with an offset correction (section 4.5.1.3 OFFSET). If there are deviations between the displayed measurement values and laboratory results that are unrelated to the factors described above, the slope of the calibration curve can be adjusted using a factor (refer to section 4.5.1 Calibration of the TURBIDITY (TRB) parameter).

At least a 1-point calibration must be carried out for a solid matter measurement. In difficult application conditions, a 2-point or 3-point calibration may be necessary (refer to section 4.5.2 Calibration of the SOLID (TS) parameter).

4.5.1 Calibration of the TURBIDITY (TRB) parameter

Before the sensor can be calibrated to the TURBIDITY (TRB) parameter, the parameter must be selected.

4.5.1.1 Select TURBIDITY (TRB) parameter

1. Open the MAIN MENU.
2. Press SENSOR SETUP and confirm.
3. Select the corresponding sensor and confirm.
4. Select CONFIGURE and confirm.
5. Press PARAMETERS and confirm.
6. Select the TRB parameter and confirm.
7. Go back to the MAIN MENU or the Measurement mode display.

4.5.1.2 FACTOR

1. Open the MAIN MENU.
2. Press SENSOR SETUP and confirm.
3. Select the corresponding sensor and confirm.
4. Press CALIBRATE and confirm.
5. Press FACTOR and confirm.
6. Set the desired factor and confirm.
7. Go back to the MAIN MENU or the Measurement mode display.

4.5.1.3 OFFSET

1. Open the MAIN MENU.
2. Press SENSOR SETUP and confirm.
3. Select the corresponding sensor and confirm.
4. Press CALIBRATE and confirm.
5. Press OFFSET and confirm.
6. Set the required offset and confirm.
7. Go back to the MAIN MENU or the Measurement mode display.

4.5.1.4 1 to 3 point calibration

Note: *The turbidity measurement has been calibrated by the manufacturer.*

Note: *Before the sensor can be calibrated to the TRB parameter, the parameter must be selected (refer to 4.5.1.1 Select TURBIDITY (TRB) parameter).*

1. Open the MAIN MENU.
2. Press SENSOR SETUP and confirm.
3. Select the corresponding sensor and confirm.
4. Press CALIBRATE and confirm.
5. Press CALIBRATE and confirm.
6. Press RECORD and confirm.
7. Press POINT... (point 1, 2 or 3) and confirm.

   Once the calibration point has been recorded by the probe, a mark "<<" is displayed after the point or points that has (have) been recorded for approximately 3 seconds.

   Note: *If the Calibrate menu is closed before the calibration is complete and then called again, the "<<" mark is displayed again. This shows that the calibration for this point or points has not yet been completed. The old calibration values are still being used.*

8. Select the recorded POINT parameter and confirm.
9. Enter the laboratory comparison value and confirm.

   To record more calibration points: repeat steps 6 to 9.

10. Go back to the MAIN MENU or the Measurement mode display.

The instrument automatically sorts the saved calibration points according to the size of the calibration values, irrespective of the sequence in which the calibration points were recorded.

- Point 1 is always assigned to the smallest calibration value.
- Point 2 is assigned to the next smallest calibration value.
- Point 3 is assigned to the largest calibration value.

The value calculated in the laboratory can be corrected at any time by overwriting.

4.5.2 Calibration of the SOLID (TS) parameter

Before the probe can be calibrated to the SOLID (TS) parameter, the parameter must be selected.

4.5.2.1 Select the SOLID (TS) parameter

1. Open the MAIN MENU.
2. Press SENSOR SETUP and confirm.
3. Select the corresponding sensor and confirm.
4. Select CONFIGURE and confirm.
5. Press PARAMETERS and confirm.
6. Select the parameter TS and confirm.
7. Go back to the MAIN MENU or the Measurement mode display.

4.5.2.2 FACTOR

1. Open the MAIN MENU.
2. Press SENSOR SETUP and confirm.
3. Select the corresponding sensor and confirm.
4. Press CALIBRATE and confirm.
5. Press FACTOR and confirm.
6. Set the desired factor and confirm.
7. Go back to the MAIN MENU or the Measurement mode display.

4.5.2.3 1 to 3 point calibration

Note: *It is imperative to calibrate for solid matter measurement (refer to section 4.5.2 Calibration of the SOLID (TS) parameter).*

Note: *Before the sensor can be calibrated to the TS parameter, the parameter must be selected (refer to 4.5.2.1 Select the SOLID (TS) parameter).*

1. Open the MAIN MENU.
2. Press SENSOR SETUP and confirm.
3. Select the corresponding sensor and confirm.
4. Press CALIBRATE and confirm.
5. Press CALIBRATE and confirm.
6. Press RECORD and confirm.
7. Press POINT... (point 1, 2 or 3) and confirm.

   Note: *Points 2 and 3 are not displayed unless point 1 or points 1 and 2 have already been recorded.*

   Note: *This comparison is made from a grab sample and not a known standard.*

   Once the calibration point has been recorded by the probe, a mark "<<" is displayed after the point or points that has (have) been recorded for approximately 3 seconds.

   Note: *If the Calibrate menu is closed before the calibration is complete and then called again, the "<<" mark is displayed again. This shows that the calibration for this point or points has not yet been completed. The old calibration values are still being used.*

8. Remove a sample and determine the solid matter content in the laboratory.
9. Select the recorded POINT parameter and confirm.
10. Enter the laboratory comparison value and confirm.

    To record more calibration points: repeat steps 6 to 10.

11. Go back to the MAIN MENU or the Measurement mode display.

The instrument automatically sorts the saved calibration points according to the size of the calibration values, irrespective of the sequence in which the calibration points were recorded.

- Point 1 is always assigned to the smallest calibration value.
- Point 2 is assigned to the next smallest calibration value.
- Point 3 is assigned to the largest calibration value.

The value calculated in the laboratory can be corrected at any time by overwriting.

4.5.3 General information about calibration

4.5.3.1 Delete recorded points

Points that have been saved with RECORD can be reset and deleted at any time.

1. Open the MAIN MENU.
2. Press SENSOR SETUP and confirm.
3. Select the corresponding sensor and confirm.
4. Press CALIBRATE and confirm.
5. Press CALIBRATE and confirm.

   A mark "<<" is displayed after the recorded point or points for approximately 3 seconds.
6. Press RECORD and confirm.
7. Press CLEAR MEMORY and confirm.

   The sensor will continue working with the old calibration values.
8. Go back to the MAIN MENU or the Measurement mode display.

4.5.3.2 Delete a calibration point

An individual calibration point can be deleted at any time by entering the value 0.0 for the concentration.

1. Open the MAIN MENU.
2. Press SENSOR SETUP and confirm.
3. Select the corresponding sensor and confirm.
4. Press CALIBRATE and confirm.
5. Press CALIBRATE and confirm.
6. Select the POINT to be deleted and confirm.
7. Enter the value 0 and confirm.
8. Go back to the MAIN MENU or the Measurement mode display.

The cleanliness of the measurement windows in the sensor head is decisive for the accuracy of the measurement results!

Check the measurement windows for dirt and wear once a month.

DANGER

The probe must not be opened. Work on the inside of the probe may only be carried out by the manufacturer.

5.1 Maintenance schedule

Maintenance task	Maintenance interval
Visual inspection	Monthly
Test calibration	Monthly (depending on environmental conditions)
Inspection	Every 6 months (counter)

5.2 Clean the measurement windows

DANGER

The probe (especially the type plate) must not come into contact with acetone or p-Xylene, or any liquids containing these solvents.

DANGER

Potential danger with contact with chemical/biological substances.

Working with chemical samples, standards and reagents can be dangerous.

Make yourself familiar with the necessary safety procedures and the correct handling of the chemicals before use and read and follow all relevant safety data sheets.

CAUTION

Observe safety conditions and wear protective clothing!

Safety glasses

Gloves

Overalls

The windows are made of sapphire glass. The measurement windows can be cleaned with any conventional cleaning agent and a soft cloth.

In the case of stubborn deposits, it is recommended that 5% hydrochloric acid is used.

Section 6 Malfunctions, causes, resolution

6.1 Error messages

Possible sensor error messages are displayed by the sc controller.

Table 1 Error messages

Error displayed	Definition	Resolution
MEAS OVERRANGE	Measurement range exceeded, signals too small, probe can no longer measure this concentration.	If error occurs more frequently: find another installation location.
CAL. INSUFF. –	Calibration insufficient.	Probe requires another calibration point in a lower concentration.
CAL. INSUFF. +	Calibration insufficient.	Probe requires another calibration point in a higher concentration.
ZERO POINT	Calibration is too close to the zero point.	Calibrate again with higher concentration.
CAL REQUIRED	No existing calibration	Calibrate probe.
EE RSRVD ERR	Error in the probe electronics	Call customer service department.
ERROR PROBE	Error in the probe electronics	Call customer service department.
LED FAILURE	Faulty LED	Call customer service department.

6.2 Warning messages

Possible sensor warning messages are displayed by the sc controller.

Table 2 Warnings

Warning displayed	Definition	Resolution
TEST / MAINT	Counter at zero	Call customer service department.

Section 7 Replacement parts and accessories

7.1 Replacement parts

Description	Catalog number
Manual (xx = language code)	DOC023.xx.90171

7.2 Accessories

Description	Catalog number
Stainless Steel pole mount kit, 10 cm base, 2 m pole, 90° adapter	LZY714.99.53120
Stainless Steel pole mount kit, 24 cm base, 2 m pole, 90° adapter	LZY714.99.52120
1.8 m (5.9 ft) extension pipe	LZY714.99.00040
1.0 m (3 ft) extension pipe	LZY714.99.00030
Retractable ball valve armature for TSS EX1 sc TriClamp sensor	LZU301.99.00000
Ball valve armature for TSS EX1 sc Inline, 6 bar, with stainless steel flange	LZY630.00.20000
Ball valve armature for TSS EX1 sc Inline, 6 bar, with carbon steel flange	LZY630.00.21000
Ball valve armature for TSS EX1 sc Inline, 6 bar, without flange	LZY630.00.22000
Silicone gasket for TriClamp fitting	LZY653
PTFE gasket for TriClamp fitting	LZY654
FKM Gasket for TriClamp fitting	LZY655
2-piece clip with thumb screw for TriClamp fitting	LZY656
3-piece clip with thumb screw for TriClamp fitting (for use with PTFE gasket)	LZY657
sc sensor plug	LZX971
Band clamp for grounding of explosion-proof probes	LZI12020
Cable, sensor extension, Class 1, Division 2 Hazardous Location, 1 m (3.3 ft)	6122401
Cable, sensor extension, Class 1, Division 2 Hazardous Location, 7m (23 ft)	5796001
Cable, sensor extension, Class 1, Division 2 Hazardous Location, 15 m (49.21 ft)	5796101
Cable, sensor extension, Class 1, Division 2 Hazardous Location, 31 m (101.71 ft)	5796201
Sensor cable lock for hazardous locations	6139900

Section 8 Limited warranty

Hach Company warrants its products to the original purchaser against any defects that are due to faulty material or workmanship for a period of one year from date of shipment unless otherwise noted in the product manual.

In the event that a defect is discovered during the warranty period, Hach Company agrees that, at its option, it will repair or replace the defective product or refund the purchase price excluding original shipping and handling charges. Any product repaired or replaced under this warranty will be warranted only for the remainder of the original product warranty period.

This warranty does not apply to consumable products such as chemical reagents; or consumable components of a product, such as, but not limited to, lamps and tubing.

Contact Hach Company or your distributor to initiate warranty support. Products may not be returned without authorization from Hach Company.

Limitations

This warranty does not cover:

- Damage caused by acts of God, natural disaster, labor unrest, acts of war (declared or undeclared), terrorism, civil strife or acts of any governmental jurisdiction
- Damage caused by misuse, neglect, accident or improper application or installation
- Damage caused by any repair or attempted repair not authorized by Hach Company
- Any product not used in accordance with the instructions furnished by Hach Company
- Freight charges to return merchandise to Hach Company
- Freight charges on expedited or express shipment of warranted parts or product
- Travel fees associated with on-site warranty repair

This warranty contains the sole express warranty made by Hach Company in connection with its products. All implied warranties, including without limitation, the warranties of merchantability and fitness for a particular purpose, are expressly disclaimed.

Some states within the United States do not allow the disclaimer of implied warranties and if this is true in your state the above limitation may not apply to you. This warranty gives you specific rights, and you may also have other rights that vary from state to state.

This warranty constitutes the final, complete, and exclusive statement of warranty terms and no person is authorized to make any other warranties or representations on behalf of Hach Company.

Limitation of Remedies

The remedies of repair, replacement or refund of purchase price as stated above are the exclusive remedies for the breach of this warranty. On the basis of strict liability or under any other legal theory, in no event shall Hach Company be liable for any incidental or consequential damages of any kind for breach of warranty or negligence.

Appendix A Modbus register

Table 3 Sensor modBUS registers

Tag Name	Group Name	Register	Data Type	Length	R/W	Description
TURBIDITY FNU	Measurement	40001	Float	2	R	Turbidity in FNU
TURBIDITY NTU	Measurement	40001	Float	2	R	Turbidity in NTU
TURBIDITY TEF	Measurement	40001	Float	2	R	Turbidity in TEF
TURBIDITY FTU	Measurement	40001	Float	2	R	Turbidity in FTU
TURBIDITY EBC	Measurement	40003	Float	2	R	Turbidity in EBC
SOLID mg/L	Measurement	40005	Float	2	R	Solid in mg/L
SOLID ppm	Measurement	40005	Float	2	R	Solid in ppm
SOLID g/L	Measurement	40007	Float	2	R	Solid in g/L
SOLID %	Measurement	40009	Float	2	R	Solid in percent
Reserved	Reserved	40011	Unsigned Integer	1	R	Reserved
SET PARAMETER	Configuration	40012	Unsigned Integer	1	R/W	Parameter
UnitTM	Unit	40013	Unsigned Integer	1	R/W	Turbidity Unit
UnitDS	Unit	40014	Unsigned Integer	1	R/W	Solid Unit
OFFSET	Calibration	40015	Float	2	R/W	Turbidity Offset
TRB Factor	Calibration	40017	Float	2	R/W	Turbidity Factor
TS Factor	Calibration	40019	Float	2	R/W	Solid Factor
Reserved	Reserved	40021	Unsigned Integer	1	R	Reserved
RESPONSE TIME	Configuration	40022	Unsigned Integer	1	R/W	Response time
LOGGER INTERVAL	Configuration	40024	Unsigned Integer	1	R/W	Log Interval
Outputmodekal	Service	40025	Unsigned Integer	1	R/W	Calibrate Output Mode
Outputmodesrv	Service	40026	Unsigned Integer	1	R/W	Output Mode Service
EDITED NAME	Configuration	40027	String	8	R/W	Measurement Location
SERIAL NUMBER	Configuration	40036	String	6	R/W	Serial Number
CAL. DATE	Configuration	40042	Time2	2	R	Default Calibration Date
TURBIDITY	Calibration	40044	Float	2	R	Turbidity Sensor Measurement Value
SOLID	Calibration	40046	Float	2	R	Solid Sensor Measurement Value
PROGRAM	Maintenance	40048	Float	2	R	Application Version
BOOTPROGR.	Maintenance	40050	Float	2	R	Bootloader Version
STRUCTURE	Maintenance	40052	Unsigned Integer	1	R	Structure Driver Version
FIRMWARE	Maintenance	40053	Unsigned Integer	1	R	Register Driver Version
CONTENT	Maintenance	40054	Unsigned Integer	1	R	Firmware Driver Version
FormatMinFNU	Configuration	40055	Float	2	R	Turbidity Lower Limit in FNU
FormatMaxFNU	Configuration	40057	Float	2	R	Turbidity Upper Limit in FNU
FormatMinEBC	Configuration	40059	Float	2	R	Turbidity Lower Limit in EBC
FormatMaxEBC	Configuration	40061	Float	2	R	Turbidity Upper Limit in EBC
FormatMinGL	Configuration	40063	Float	2	R	Solid Lower Limit in g/L
FormatMaxGL	Configuration	40065	Float	2	R	Solid Upper Limit in g/L
FormatMinMGL	Configuration	40067	Float	2	R	Solid Lower Limit in mg/L
FormatMaxMGL	Configuration	40069	Float	2	R	Solid Upper Limit in mg/L

Table 3 Sensor modBUS registers (continued)

FormatMinPR	Configuration	40071	Float	2	R	Solid Lower Limit in Percent
FormatMaxPR	Configuration	40073	Float	2	R	Solid Upper Limit in Percent
S5E1	Maintenance	40075	Float	2	R	Signal LED S5E1
S5E3	Maintenance	40077	Float	2	R	Signal LED S5E3
S6E1	Maintenance	40079	Float	2	R	Signal LED S6E1
S6E3	Maintenance	40081	Float	2	R	Signal LED S6E3
S5E2	Maintenance	40083	Float	2	R	Signal LED S5E2
S5E4	Maintenance	40085	Float	2	R	Signal LED S5E4
S6E2	Maintenance	40087	Float	2	R	Signal LED S6E2
S6E4	Maintenance	40089	Float	2	R	Signal LED S6E4

Index

A

Areas of application 8

C

Cable length 6
Calibration
  general information 24
Clean the measurement windows 25

D

Data logger 17
Dimensions 6
Dry matter measurement 9

E

Error messages 27

M

Maintenance schedule 25
Measurement
  accuracy 5
  method 5
  range 5
Measuring principle 9

R

Reproducibility 5
Response time 5

S

Safety information 7
Scope of delivery 9
Specifications 5
System configuration 17

T

Turbidity measurement 9

W

Warning labels 8
Warnings 27
Warranty 31
Warranty and liability 31

HACH COMPANY World Headquarters
P.O. Box 389, Loveland, CO 80539-0389 U.S.A.
Tel. (970) 669-3050
(800) 227-4224 (U.S.A. only)
Fax (970) 669-2932
orders@hach.com
www.hach.com

HACH LANGE GMBH
Willstätterstraße 11
D-40549 Düsseldorf, Germany
Tel. +49 (0) 2 11 52 88-320
Fax +49 (0) 2 11 52 88-210
info-de@hach.com
www.de.hach.com

HACH LANGE Sàrl
6, route de Compois
1222 Vésenaz
SWITZERLAND
Tel. +41 22 594 6400
Fax +41 22 594 6499



© Hach Company/Hach Lange GmbH, 2009, 2011, 2012, 2013, 2014, 2017. All rights reserved. Printed in Germany
7/2017, Edition 8

LEFT BLANK

HACH

MODEL LDO MODEL 2, DISSOLVED OXYGEN PROBE

LEFT BLANK

DOC023.97.80170

LDO Sensor

12/2012, Edition 4

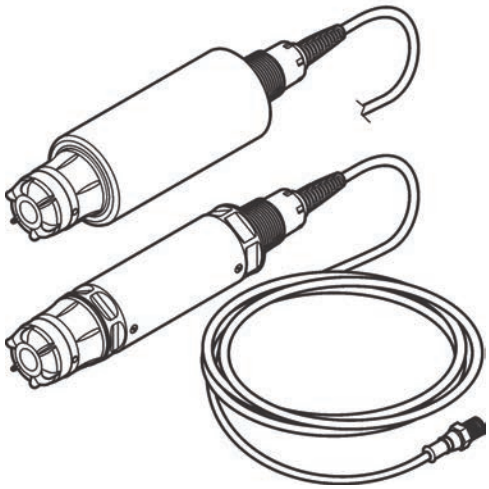

USER MANUAL
~~MANUEL D'UTILISATION~~
~~MANUAL DEL USUARIO~~
~~MANUAL DO USUÁRIO~~
~~用户手册~~
~~ユーザーマニュアル~~
~~사용 설명서~~
~~คู่มือผู้ใช้~~

English 3
Français 19
Español 37
Português 56
中文 74
日本語 90
한글 107
ไทย 123

Table of Contents

Specifications on page 3

General information on page 4

Product overview on page 6

Installation on page 7

Calibration for measurements on page 12

Operation on page 9

Maintenance on page 14

Troubleshooting on page 16

Replacement parts and accessories on page 17

Specifications

Specifications are subject to change without notice.

Specification	Details
Wetted materials	Standard Probe, Standard Class 1-Div 2 Probe • CPVC, sensor end and cable end • Polyurethane, over-molding on cable end and cable jacket • 316 stainless steel body and screws • Viton, O-ring • Noryl, nut on the cable end
	Standard Seawater Probe, Seawater Class 1-Div 2 Probe • CPVC, sensor end and cable end • Polyurethane, over-molding on cable end and cable jacket • PVC seawater body • Seawater epoxy sealant • Noryl, nut on the cable end
IP classification	IP68
Wetted materials (sensor cap)	Acrylic
Measurement range (dissolved oxygen)	0 to 20 ppm (0 to 20 mg/L)
	0 to 200% saturation
Measurement accuracy (dissolved oxygen)	Below 5 ppm: ± 0.1 ppm
	Above 5 ppm: ± 0.2 ppm
Repeatability (dissolved oxygen)	0.1 ppm (mg/L)
Response time (dissolved oxygen)	T_{90}<40 seconds
	T_{95}<60 seconds
Resolution, sensor (dissolved oxygen)	0.01 ppm (mg/L); 0.1% saturation.
Measurement range (temperature)	0 to 50 °C (32 to 122 °F)
Measurement accuracy (temperature)	± 0.2 °C (± 0.36 °F)
Interferences	No interferences from the following: H_2S, pH, K^+, Na^+, Mg^{2+}, Ca^{2+}, NH_4^+, Al^{3+}, Pb^{2+}, Cd^{2+}, Zn^{2+}, Cr (total), Fe^{2+}, Fe^{3+}, Mn^{2+}, Cu^{2+}, Ni^{2+}, Co^{2+}, CN^-, NO_3^-, SO_4^{2-}, S^{2-}, PO_4^{3-}, Cl^-, Anion Active Tensides, Crude Oils, Cl_2 < 4 ppm
Storage temperature	–20 to 70 °C (–4 to 158 °F)
Maximum temperature	0 to 50 ºC (32 to 122 °F)

Specification	Details
Hazardous location classification (9020000-C1D2 sensor only)	Class I Division 2, Groups A–D, T4 / Class I, Zone 2 Group 2C, T4 ***Note:*** *This product does not fulfill the requirements of the 94/9/EC Directive (ATEX Directive).*
Certifications (9020000-C1D2 sensor only)	ETL listed to ANSI/ISA, CSA and FM standards for use in hazardous location. ***Note:*** *This product does not fulfill the requirements of the 94/9/EC Directive (ATEX Directive).*
Minimum flow rate	Not required
Calibration/verification	Air calibration: One point, 100% water-saturated air
	Sample calibration: Comparison with standard instrument
Probe immersion depth and pressure limits	Pressure Limits at 34 m (112 ft.), 345 kPa (50 psi) maximum; accuracy may not be maintained at this depth
Sensor cable	10 m (30 ft) integral cable with quick disconnect plug (all sensor types) Up to 100 m possible with extension cables (non-Class I, Division 2 sensor types only) Up to 1000 m with junction box (non-Class I, Division 2 sensor types only)
Probe weight	1.0 kg (2 lb, 3 oz)
Probe dimensions	Standard probe (diameter x length): 49.53 x 255.27 mm (1.95 x 10.05 in.)
	Seawater probe (diameter x length): 60.45 x 255.27 mm (2.38 x 10.05 in.)
Power requirements	12 VDC, 0.25 A, 3 W
Warranty	Probe: 3 years against manufacturing defects
	Sensor cap: 2 years against manufacturing defects

General information

In no event will the manufacturer be liable for direct, indirect, special, incidental or consequential damages resulting from any defect or omission in this manual. The manufacturer reserves the right to make changes in this manual and the products it describes at any time, without notice or obligation. Revised editions are found on the manufacturer's website.

Safety information

NOTICE

The manufacturer is not responsible for any damages due to misapplication or misuse of this product including, without limitation, direct, incidental and consequential damages, and disclaims such damages to the full extent permitted under applicable law. The user is solely responsible to identify critical application risks and install appropriate mechanisms to protect processes during a possible equipment malfunction.

Please read this entire manual before unpacking, setting up or operating this equipment. Pay attention to all danger and caution statements. Failure to do so could result in serious injury to the operator or damage to the equipment.

Make sure that the protection provided by this equipment is not impaired. Do not use or install this equipment in any manner other than that specified in this manual.

Use of hazard information

⚠ DANGER

Indicates a potentially or imminently hazardous situation which, if not avoided, will result in death or serious injury.

⚠ WARNING
Indicates a potentially or imminently hazardous situation which, if not avoided, could result in death or serious injury.

⚠ CAUTION
Indicates a potentially hazardous situation that may result in minor or moderate injury.

NOTICE
Indicates a situation which, if not avoided, may cause damage to the instrument. Information that requires special emphasis.

Precautionary labels

Read all labels and tags attached to the instrument. Personal injury or damage to the instrument could occur if not observed. A symbol on the instrument is referenced in the manual with a precautionary statement.

	This is the safety alert symbol. Obey all safety messages that follow this symbol to avoid potential injury. If on the instrument, refer to the instruction manual for operation or safety information.
	This symbol indicates the presence of a light source that may have the potential to cause minor eye injury. Obey all messages that follow this symbol to avoid potential eye injury.
	This symbol indicates the presence of devices sensitive to Electro-static Discharge (ESD) and indicated that care must be taken to prevent damage with the equipment.
	Electrical equipment marked with this symbol may not be disposed of in European public disposal systems after 12 August of 2005. In conformity with European local and national regulations (EU Directive 2002/96/EC), European electrical equipment users must now return old or end-of-life equipment to the Producer for disposal at no charge to the user. ***Note:*** *For return for recycling, please contact the equipment producer or supplier for instructions on how to return end-of-life equipment, producer-supplied electrical accessories, and all auxiliary items for proper disposal.*

Certification

Canadian Radio Interference-Causing Equipment Regulation, IECS-003, Class A:

Supporting test records reside with the manufacturer.

This Class A digital apparatus meets all requirements of the Canadian Interference-Causing Equipment Regulations.

Cet appareil numèrique de classe A répond à toutes les exigences de la réglementation canadienne sur les équipements provoquant des interférences.

FCC Part 15, Class "A" Limits

Supporting test records reside with the manufacturer. The device complies with Part 15 of the FCC Rules. Operation is subject to the following conditions:

1. The equipment may not cause harmful interference.
2. The equipment must accept any interference received, including interference that may cause undesired operation.

Changes or modifications to this equipment not expressly approved by the party responsible for compliance could void the user's authority to operate the equipment. This equipment has been tested and found to comply with the limits for a Class A digital device, pursuant to Part 15 of the FCC rules. These limits are designed to provide reasonable protection against harmful interference when the equipment is operated in a commercial environment. This equipment generates, uses and can radiate radio frequency energy and, if not installed and used in accordance with the instruction

manual, may cause harmful interference to radio communications. Operation of this equipment in a residential area is likely to cause harmful interference, in which case the user will be required to correct the interference at their expense. The following techniques can be used to reduce interference problems:

1. Disconnect the equipment from its power source to verify that it is or is not the source of the interference.
2. If the equipment is connected to the same outlet as the device experiencing interference, connect the equipment to a different outlet.
3. Move the equipment away from the device receiving the interference.
4. Reposition the receiving antenna for the device receiving the interference.
5. Try combinations of the above.

Product overview

⚠ DANGER	
	Chemical or biological hazards. If this instrument is used to monitor a treatment process and/or chemical feed system for which there are regulatory limits and monitoring requirements related to public health, public safety, food or beverage manufacture or processing, it is the responsibility of the user of this instrument to know and abide by any applicable regulation and to have sufficient and appropriate mechanisms in place for compliance with applicable regulations in the event of malfunction of the instrument.

This sensor is designed to work with a controller for data collection and operation. The sensor can be used with several controllers. Refer to the controller-specific user manual for more information.

The primary applications for this sensor are municipal and industrial wastewater applications. LDO sensor technology does not consume oxygen, and can measure DO concentration in low or no-flow applications. Refer to Figure 1.

Figure 1 LDO sensor



1 Sensor cap	**3** 1-inch NPT
2 Temperature sensor	**4** Connector, quick-connect (standard)

LDO Sensor component list

Make sure that all components shown in Figure 2 have been received. If any items are missing or damaged, contact the manufacturer or a sales representative immediately. Refer to Figure 2.

Figure 2 Sensor component list

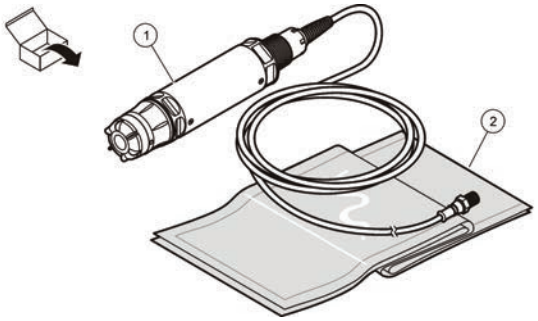

1 LDO sensor[1]	**2** Calibration bags (2x)

Installation

⚠ WARNING

Personal injury hazard. Only qualified personnel should conduct the tasks described in this section of the manual.

Validate the sensor type

⚠ DANGER



Explosion hazard. Connect only peripheral components that are clearly marked as certified for Class 1, Division 2 Hazardous Locations.

NOTICE

The hazardous location certified version of this product does not fulfill the requirements of the 94/9/EC Directive (ATEX Directive).

1. Go to the connector end of the cable.
2. Read the label on the connector end of the cable. For hazardous location certified sensors, the label will show "Rated: Class 1 Division 2".
3. Examine the connector.
   - Hazardous location certified sensors have a safety lock connector. Refer to Figure 3 on page 8.
   - Sensors that are not certified for hazardous locations have a quick-connect connector, without a safety lock.

[1] Included user manual is not shown.

Connect the sensor in a hazardous location

DANGER

Explosion hazard. This equipment is suitable for use in non-hazardous locations or Class 1, Division 2, Groups A, B, C, D Hazardous Locations with specified sensors and options when installed per the Hazardous Location Installation Control Drawing. Always refer to the Control Drawing and applicable electrical code regulations for proper installation instructions.

DANGER

Explosion hazard. Do not connect or disconnect electrical components or circuits to the equipment unless power has been removed or the area is known to be non-hazardous.

NOTICE

Use only a hazardous location certified sensor and cable lock in hazardous locations. The hazardous location certified version of this product does not fulfill the requirements of the 94/9/EC Directive (ATEX Directive).

For more information, refer to Validate the sensor type on page 7 .

1. Remove the connector cap from the controller. Keep the connector cap to seal the connector opening when the sensor is removed.
2. Connect the sensor to the controller. Refer to the controller manual for more information.
3. Close the safety lock over the connector.
4. To remove the connector safety lock, use a small flat screwdriver. Refer to Figure 3.

Figure 3 Connector safety lock

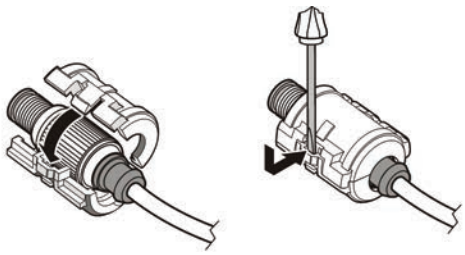

Connect the sensor in a non-hazardous location

Refer to Figure 4 to connect an LDO sensor to an sc controller. Refer to the specific sc controller manual for hard-wiring instructions.

Figure 4 Connect the LDO sensor (non-hazardous location sensor shown)

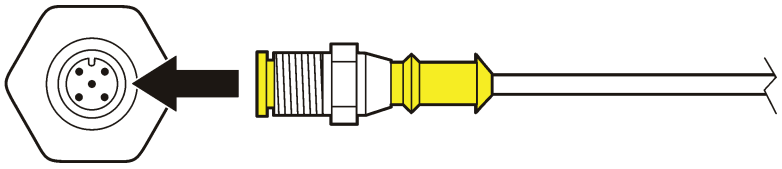

After the sensor is attached, scan for the sensor. Refer to Install the sensor on page 8.

Install the sensor

There are two options to install the sensor:

- Connect the sensor while power to the controller is off. The controller will look for and install new sensors when it is turned on.
- Connect the sensor while power to the controller is on. Use the Scan Devices command to install the new sensor:

Option	Description
sc200 controller	Go to MENU>TEST/MAINT>SCAN DEVICE
sc100 controller	Go to MENU>TEST/MAINT>SCAN SENSORS
sc1000 controller	Go to MENU>SYSTEM SETUP>DEVICE MANAGEMENT>SCANNING FOR NEW DEVICES

Refer to Connect the sensor in a non-hazardous location on page 8 for digital sensor connection.

Sensor installation options

The installation and accessory options available for the LDO sensor are supplied with installation instructions in the hardware kit. Figure 5 shows several installation options. To order installation hardware, refer to Replacement parts and accessories on page 17.

Figure 5 Installation options

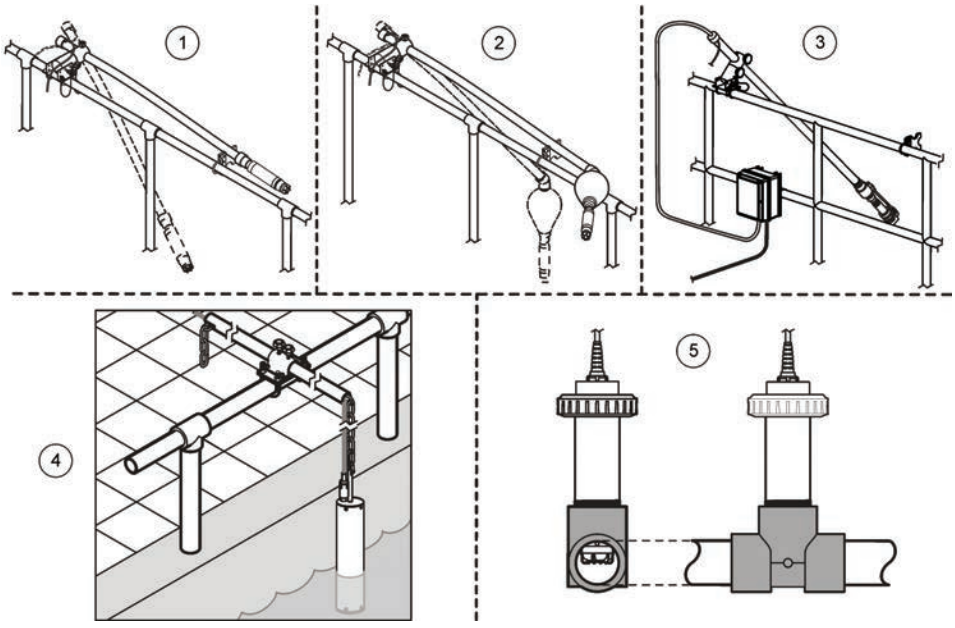

1 Rail mount	**4** Chain mount
2 Float mount	**5** Union mount (not seawater probe compatible)
3 Air blast system mount (not seawater probe compatible)	

Operation

User navigation

Refer to the controller documentation for keypad description and navigation information.

Configure the sensor

Use the Configure menu to enter identification information for the sensor and to change options for data handling and storage.

For information about sensor installation, refer to Install the sensor on page 8.

Make sure that all of the Configuration menu values are correct for the application.

1. Go to MENU>SENSOR SETUP>[Select Sensor]>CONFIGURE.
2. Select an option, ENTER. The list of available options is shown in the table below.

Option	Description
EDIT NAME	Changes the name that corresponds to the sensor on the top of the measure screen. The name is limited to 10 characters in any combination of letters, numbers, spaces or punctuation.
SET UNITS	TEMP–Sets the temperature units to °C (default) or °F.
	MEASURE–Set the measurement units in mg/L, ppm or % .
	ALT/PRESS–Set the altitude in m or ft, or set the atmospheric pressure units in mmHg or torr. (Default value = 0 ft)
ALT/PRESS	Enter the value of the altitude or atmospheric pressure. This value must be accurate to complete % saturation measurements and calibration in air. (Default = 0 ft).
SALINITY	Enter the salinity value. Salinity range: 0.00 to 250.00 parts per thousand (‰). Refer to Enter a salinity correction value on page 11 for more information. (Default value = 0)
SIGNAL AVERAGE	Set the time interval to average signal in seconds
CLEAN INTRVL	Set the time interval for manual sensor cleaning in days (Default value = 0 days. A value of 0 days disables the clean interval.)
RESET CLN INTRVL	Set the time interval to the last saved clean interval
LOG SETUP	Sets the time interval for data storage in the data log—0.5, 1, 2, 5, 10, 15 (default), 30, 60 minutes.
SET DEFAULTS	Restores the configurable default values for the sensor. Does not change the setting for slope or offset.

Enter the atmospheric pressure value

The factory setting for atmospheric (air) pressure is 0 ft, or sea level. To change the default value, use the steps in this procedure. The adjustment for air pressure is entered as either elevation or as pressure units (preferred).

Note: *Accurate air pressure is critical for saturated air calibration (Calibration with air on page 12). Use only absolute pressure, not adjusted. If the absolute air pressure is not known, use the correct elevation for the location.*

1. Go to MENU>SENSOR SETUP>[Select Sensor]>CONFIGURE>SET UNITS>AIR PRESS/ALT UNITS.
2. Select **one** of the unit options listed:

Option	Description
ft	Feet—unit of measure for elevation
m	Meters—metric unit of measure for elevation
mmHg	Millimeters of mercury—metric unit of measure for absolute air pressure
torr	Unit of measure for absolute air pressure

3. Confirm the selection. The value entry screen will show the selected units.
4. Enter the value, then confirm.

Enter a salinity correction value

Dissolved oxygen measurements in saline samples can show an apparent DO value that is very different from the actual DO value. To correct for the influence of dissolved salts in a sample, enter a salinity correction factor.

Note: *If the presence or amount of salinity in the process is unknown, consult with the treatment facility engineering staff.*

1. Use a conductivity meter to measure the conductivity of the sample in mS/cm at a reference temperature of 20 °C (68 °F).
2. Use Table 1 to estimate the salinity correction factor in parts per thousand (‰) saturation.

   Note: *The chloride ion concentration, in g/kg is equal to the chlorinity of the sample. Salinity is calculated with the formula: Salinity = 1.80655 × chlorinity.*

   Salinity can be calculated with the relationship in section 2520 B of *Standard Methods for the Examination of Water and Wastewater*.[2],
3. Go to MENU>SENSOR SETUP>[Select Sensor]>CONFIGURE>SALINITY.
4. Enter the salinity correction factor and confirm.

Table 1 Salinity saturation (‰) per conductivity value (mS/cm)

mS/cm	‰	mS/cm	‰	mS/cm	‰	mS/cm	‰
5	3	16	10	27	18	38	27
6	4	17	11	28	19	39	28
7	4	18	12	29	20	40	29
8	5	19	13	30	21	42	30
9	6	20	13	31	22	44	32
10	6	21	14	32	22	46	33
11	7	22	15	33	23	48	35
12	8	23	15	34	24	50	37
13	8	24	17	35	25	52	38
14	9	25	17	36	25	54	40
15	10	26	18	37	26		

Configure linear output on the controller

Linear outputs send probe data back to the facility PLC, SCADA or other data collection system.

1. Go to the controller output setup menu.

Option	Description
sc200	Go to MENU>SETTINGS>sc200 SETUP>OUTPUT SETUP>[Select Output]>SET FUNCTION.

[2] *Standard Methods for the Examiniation of Water and Wastewater*, 20th Edition. Editors Lenore S. Clesceri, Arnold E. Greenberg and Andrew D. Eaton, p. 2-48-2-29 (1998). The relationship between Chlorinity and Oxygen Solubitity is provided in the same reference in 4500-O:I p. 4-131.

Option	Description
sc100	Go to MENU>SYSTEM SETUP>OUTPUT SETUP>[Select Output]>SET FUNCTION.
sc1000	Go to MENU>SYSTEM SETUP>OUTPUT SETUP>[Select Output]>SET FUNCTION.

2. Set the function for the controller.

Option	Description
sc200	LINEAR
sc100	LINEAR CONTROL (Default value)
sc1000	LINEAR CONTROL (Default value)

Modbus registers

A list of Modbus registers is available for network communication. Refer to www.hach.com or www.hach-lange.com for more information.

Calibration for measurements

The sensor is calibrated to specification at the factory. The manufacturer does not recommend calibration unless periodically required by regulatory agencies. If calibration is required, let the sensor come to equilibrium with the process before calibration. Do not calibrate the sensor at setup.

Table 2 shows options for calibration.

Table 2 Calibration options

Option	Description
AIR CAL	Recommended calibration method. This calibration modifies the slope.
SAMPLE CAL	Calibration by comparison with a hand-held DO meter . This calibration modifies the offset.
RESET DFLT CAL	Resets the calibration gain (slope) and offset to the factory default: default gain=1.0; default offset=0.0

Calibration with air

User notes:

- Make sure that calibration bag has water inside.
- Make sure that the seal between the calibration bag and the sensor body is tight.
- Make sure that the sensor is dry when it is calibrated.
- Make sure the air pressure/elevation setting is accurate for the calibration location.
- Allow enough time for the sensor temperature to stabilize to the temperature of the calibration bag location. A large difference in temperature between the process and the calibration location can take up to 15 minutes to stabilize.

1. Remove the sensor from the process. Use a wet cloth to clean the sensor.
2. Put the entire sensor in a calibration bag with 25-50 mL of water. Make sure that the sensor cap is not in contact with the water inside the calibration bag and that no water drops are on the sensor cap (Figure 6).
3. Use a rubber band, tie or hand to create a tight seal around the sensor body.
4. Let the instrument stabilize for 15 minutes before calibration. Keep the calibration bag out of direct sunlight during stablization.
5. Make sure that the current absolute air pressure or elevation is configured correctly. Refer to Enter the atmospheric pressure value on page 10.

   Note: *The manufacturer recommends the use of absolute or actual air pressure as a best practice.*

6. Go to MENU>SENSOR SETUP>[Select Sensor]>CALIBRATE>AIR CAL.
7. Select the option for the output signal during calibration:

Option	Description
Active	The instrument sends the current measured output value during the calibration procedure.
Hold	The sensor output value is held at the current measured value during the calibration procedure.
Transfer	A preset value is sent during calibration. Refer to the controller user manual to change the preset value.

8. The controller will show "Move the probe to bag". Allow the value to stabilize. Push ENTER to accept the stable value. Alternately, let the calibration continue until the display shows "Complete".
9. When the sensor is calibrated, put the sensor into the process. Push ENTER.

Figure 6 Air calibration procedure

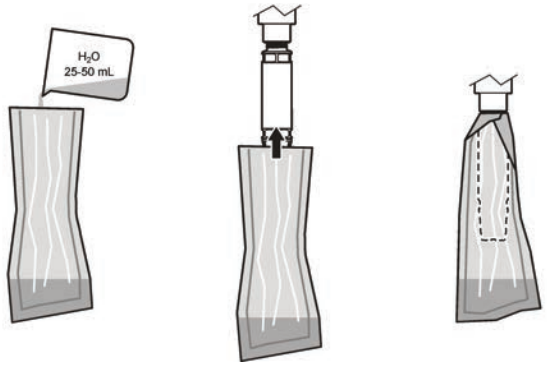

If the value does not stabilize, the display will show "Unable to Calibrate" followed by an error message. Table 3 shows the error message and resolution for calibration problems.

Table 3 Air calibration error messages

Message	Description	Resolution
Cal fail, gain high	The calculated gain value is too high.	Repeat the calibration.
Cal fail, gain low	The calculated gain value is too low.	Repeat the calibration.
Cal fail, unstable	The value did not stabilize in the maximum allowed calibration time.	Repeat the calibration.

Sample CAL - calibration by comparison

This calibration method uses an alternate sensor attached to a hand-held meter.

1. Put the alternate sensor into the process. Put the second sensor as close as possible to the first sensor.
2. Wait for the DO value to stabilize .
3. On the controller for the first sensor, go to MENU>SENSOR SETUP>[Select Sensor]>CALIBRATE>SAMPLE CAL.
4. Select the option for the output signal during calibration:

Option	Description
Active	The instrument sends the current measured output value during the calibration procedure.

Option	Description
Hold	The sensor output value is held at the current measured value during the calibration procedure.
Transfer	A preset value is sent during calibration. Refer to the controller user manual to change the preset value.

5. The controller will show:
   - "Press ENTER when stabilized"
   - The current dissolved oxygen measurement
   - The current temperature measurement
6. When the measurement is stable, push ENTER. The display will show an entry screen.

   Note: *The measurement will usually stabilize in 2 to 3 minutes.*

If the value does not stabilize, the display will show "Unable to Calibrate" followed by an error message. Table 4 shows the error message and resolution for calibration problems.

Table 4 Sample cal error messages

Message	Description	Resolution
Cal fail, offset high	The calculated offset value is too high.	Repeat the calibration.
Cal fail, offset low	The calculated offset value is too low.	Repeat the calibration.
Cal fail, unstable	The value did not stabilize in the maximum allowed calibration time.	Repeat the calibration.

Exit the calibration procedure

1. During calibration, push the BACK key. Three options are shown:

Option	Description
ABORT	Stop the calibration. A new calibration must start from the beginning.
BACK TO CAL	Return to the current calibration.
LEAVE	Exit the calibration temporarily. Access to other menus is allowed while the calibration continues in the background. A calibration for a second sensor (if present) can be started. To return to the calibration, push the MENU key and select Sensor Setup, [Select Sensor].

2. Select one of the options. Confirm.

Reset calibration defaults

Calibration settings can be reset to the factory defaults. Gain and offset values are set to 1.0 and 0.0, respectively.

1. Go to MENU>SENSOR SETUP>[Select Sensor]>CALIBRATE>RESET CAL DEFLT.
2. The display will show a confirmation message. Confirm to reset the sensor to the factory default calibration curve.

Maintenance

⚠ DANGER



Multiple hazards. Only qualified personnel must conduct the tasks described in this section of the document.

⚠ DANGER



Explosion hazard. Do not connect or disconnect electrical components or circuits to the equipment unless power has been switched off or the area is known to be non-hazardous.

⚠ DANGER



Explosion hazard. Substitution of components may impair suitability for Class 1, Division 2. Do not replace any component unless power has been switched off and the area is known to be non-hazardous.

NOTICE

The hazardous location certified version of this product does not fulfill the requirements of the 94/9/EC Directive (ATEX Directive).

Maintenance schedule

The maintenance schedule shows minimum intervals for regular maintenance tasks. Perform maintenance tasks more frequently for applications that cause electrode fouling.
Note: *Do not disassemble the probe for maintenance or cleaning.*

Maintenance task	Recommended minimum frequency
Clean the sensor	90 days
Inspect the sensor for damage	90 days
Calibrate the sensor	As recommended by regulatory agencies

Clean the sensor

Clean the exterior of the sensor with a soft, wet cloth.
Note: *If the sensor cap must be removed for cleaning, do not expose the interior of the cap to direct sunlight for extended periods of time.*

Set or change the clean interval

Application conditions may need shorter or longer durations between manual sensor cleanings. The default clean interval is 0 days. To change the interval, refer to the steps in this procedure.

1. Go to MENU>SENSOR SETUP>[Select Sensor]>CONFIGURE>CLEAN INTRVL.
2. Change the shown value as needed. Confirm the change.
   - To turn off the clean interval, set the value to '0'.

Change the sensor cap

⚠ WARNING



Potential explosion hazard. The sensor setup cap is not rated for hazardous location use.

Replacement sensor caps and setup caps are shipped with installation instructions. Refer to the included instructions to change the cap.

For best performance and accuracy, replace the sensor cap:

- Every two years
- When routine inspection shows significant erosion of the sensor cap

Troubleshooting

Diagnostic and test menu

The diagnostic and test menu shows current and historical information about the LDO sensor. To access the diagnostic and test menu, go to MENU>SENSOR SETUP>[Select Sensor]>DIAG/TEST.

Refer to Table 5.

Table 5 DIAG/TEST menu

Option	Description
SENSOR INFO	SOFTWARE VERS—Shows the installed software version
	BOOT VERSION—Shows the installed boot version
	DRIVER VERS—Shows the installed software driver version
LOT CODE	Shows the sensor cap manufacturing lot
SERIAL NUMBER	Sensor serial number
GAIN CORR	Adjust the calibration gain value.
	Range: 0.50 to 2.00
OFFSET CORR	Adjust the calibration offset value (mg/L or ppm).
	Range: –3.00 to +3.00
PHASE DIAG	Shows the phase for total, red and blue wavelengths. Updates once per second.
AMPL DIAG	Shows the amplitude for red and blue wavelengths. Updates once per second.
DAYS TO CLEAN	Shows the number of days until the next scheduled manual cleaning.
SENSOR LIFE	Shows the number of days until the next scheduled sensor cap replacement

Error list

If an error occurs, the reading on the measurement screen flashes. Output behavior is determined by controller settings. Refer to the controller manual for details.
To show the current sensor errors, go to MENU>DIAGNOSTICS>[Select Sensor]>ERROR LIST. Refer to Table 6.

Table 6 Error list for the LDO sensor

Error	Possible cause	Resolution
RED AMPL LOW (Value is below 0.01) OR BLUE AMPL LOW (Value is below 0.01)	The sensor cap is not installed, or is not installed correctly.	Remove the sensor cap and install it again.
	The light path is blocked in the sensor cap.	Inspect the inside of the sensor cap and lens.
	The sensor is not operating correctly.	Make sure that the LED is flashing. Contact the manufacturer.

Warning list

When the warning icon flashes (sc100 and sc200) or when the screen turns yellow (sc1000), a message is shown on the bottom of the measurement screen. On the sc1000, the screen turns

yellow to show a warning. To show the current sensor warnings, go to MENU> DIAGNOSTICS>[Select Sensor]>WARNING LIST. Refer to Table 7.

Table 7 Sensor warning list

Warning	Definition	Resolution
EE SETUP ERR	Storage is corrupt. The values have been set to the factory default.	Contact technical support.
EE RSRVD ERR		
TEMP < 0 C	The process temperature is below 0 °C (32 °F)	Increase the process temperature or stop use until the process temperature is in the sensor specification range.
TEMP > 50 C	The process temperature is above 50 °C (120 °F)	Decrease the process temperature or stop use until the process temperature is in the sensor specification range.
RED AMPL LOW	Value falls below 0.03	Refer to Table 6 on page 16 .
RED AMPL HIGH	Value is greater than 0.35	Call technical support.
BLUE AMPL LOW	Value is below 0.03	Refer to Table 6 on page 16.
BLUE AMPL HIGH	Value is greater than 0.35	Call technical support.
CAP CODE FAULT	The sensor cap code has become corrupt. The code has been reset automatically to the default cap and lot codes.	Complete the sensor setup cap procedure. If no setup cap is available for the sensor cap, call technical support.

Event list

The Event list keeps a log of changes to how data is recorded by the sensor. To show sensor events, go to MENU>DIAGNOSTICS>[Select Sensor]>EVENT LIST.
Refer to Table 8.

Table 8 Event list for the sensor

Event	Description
ALT/PRESSURE UNIT CHANGE	Atmospheric pressure or altitude units have changed.
ALT/PRESSURE CHANGE	The value for altitude or atmospheric pressure has changed.
TEMP UNIT CHANGE	The units for temperature have changed.
MEAS UNIT CHANGE	A new unit of measurement has changed.
SALINITY CHANGE	The value for salinity has changed.
SET DEFAULT	Sensor settings have been reset to the default values.
SENSOR SETUP CHANGE	The sensor setup has changed.
CLEAN INTERVAL TIMER CHANGE	The time between sensor cleaning has changed.
SENSOR CAP LIFE TIMER CHANGE	The time between sensor cap replacements has changed.

Replacement parts and accessories

Use only replacement parts approved by the manufacturer. Use of non-approved parts may cause personal injury, damage to the instrument or equipment malfunction.

Replacement items

Description	Item no. (US / EU)
LDO Probe, with one sensor cap and 2 calibration bags	9020000 / LXV416.99.20001
LDO Probe for seawater, with one sensor cap and two calibration bags	9020000-SW / —
LDO Probe for seawater hazardous locations, with one sensor cap and two calibration bags	9020000-C1D2-SW / —
LDO Probe for hazardous locations, with one sensor cap and 2 calibration bags	9020000-C1D2 / —
Sensor cap, replacement (includes the sensor setup cap, which is not rated for use in Class 1, Division 2 hazardous locations)	9021100 / 9021150

Accessories

Description	Item no. (US / EU)
Sensor cable lock for hazardous locations	6139900 / —
Cable, sensor extension, Class 1, Division 2 Hazardous Location, 1 m (3.3 ft)	6122402 / —
Cable, sensor extension, Class 1, Division 2 Hazardous Location, 7m (23 ft)	5796002 / —
Cable, sensor extension, Class 1, Division 2 Hazardous Location, 15 m (49.21 ft)	5796102 / —
Cable, sensor extension, Class 1, Division 2 Hazardous Location, 31 m (101.71 ft)	5796202 / —
High output air blast cleaning system, 115 V (not rated for use in hazardous locations)	6860000 / 6860003.99.0001
High output air blast cleaning system, 230 V (not ATEX rated for use in hazardous locations)	6860100 / 6860103.99.0001
Calibration bag (1x)	5796600 / 5796600
Cable, sensor extension, non-hazardous location, 7.7 m (25 ft)[3]	US: 5796000, 7.7 m (25 ft)
	EU: LZX849, 10 m (33 ft)
Hardware kit for pipe mount (PVC)	9253000 / LZY714.99.21810
Hardware kit for float mount (PVC)	9253100 / LZX914.99.42200
Hardware kit for air blast mount	9253500 / LZY812
Hardware kit for chain mount (stainless steel)	— / LZX914.99.11200
Hardware kit for union mount	9257000 / 9257000
HQd meter with LDO rugged probe (not rated for use in hazardous locations)	8505200 / HQ40D.99.310.000

[3] 15 m (49 ft) and 30 m (98 ft) also available



HACH COMPANY World Headquarters
P.O. Box 389, Loveland, CO 80539-0389 U.S.A.
Tel. (970) 669-3050
(800) 227-4224 (U.S.A. only)
Fax (970) 669-2932
orders@hach.com
www.hach.com

HACH LANGE GMBH
Willstätterstraße 11
D-40549 Düsseldorf, Germany
Tel. +49 (0) 2 11 52 88-320
Fax +49 (0) 2 11 52 88-210
info@hach-lange.de
www.hach-lange.de

HACH LANGE Sàrl
6, route de Compois
1222 Vésenaz
SWITZERLAND
Tel. +41 22 594 6400
Fax +41 22 594 6499

© Hach Company/Hach-Lange GmbH, 2012.
All rights reserved. Printed in U.S.A.

LEFT BLANK

IFC

MODEL B150FSS4BW1-OB, STRAINER

LEFT BLANK

Installation and Maintenance Instructions for IFC Fabricated Strainers

Strainer Installation Instructions

- Ensure all machined surfaces are free of defects and that the inside of the strainer is free of foreign objects.
- For horizontal pipelines, the strainer should be installed such that the blow-down connection is pointed downwards.
- For flanged end strainers, the flange bolting should be tightened gradually in a back and forth clockwise pattern. Threaded end strainers should use an appropriate sealant.
- Once installed, increase line pressure gradually and check for leakage around joints.
- If the strainer is supplied with a start-up screen, monitor pressure drop carefully.

Strainer Removal Instructions (Y, Basket, T and Duplex)

- Drain piping (For duplex strainers, isolate required chamber).
- Vent line to relieve pressure.
- Loosen cover and open to access screen. Remove, clean and replace screen in original position (Note: In some instances, a high pressure water jet or steam may be required for effective cleaning).
- Inspect cover gasket for damage. If necessary, replace. (Note: If spiral wound gaskets have been used, they must be replaced and cannot be used again).
- Tighten cover. The strainer is ready for line start-up

CAUTION SHOULD BE TAKEN DUE TO POSSIBLE EMISSION OF PROCESS MATERIAL FROM PIPING. ALWAYS ENSURE NO LINE PRESSURE EXISTS WHEN OPENING COVER.

Maintenance Instructions

For maximum efficiency, determine the length of time it takes for the pressure drop to double that in the clean condition. Once the pressure drop reaches an unacceptable value, shut down line (For duplex strainers divert flow to their chamber) and follow the “Basket Removal Instructions” above.
A pressure gauge installed before and after the strainer inline will indicate pressure loss due to clogging and may be used to determine when cleaning is required.

Trouble Shooting Guides and Diagnostic Techniques

- After pressurizing, inspect cover and other joints for leakage. Gasket replacement or cover tightening is necessary if leakage occurs.
- If the required filtration is not taking place, ensure the screen is installed in the correct position, that being flush to the upper and lower screen seating surfaces.

Limited Warranty

All products are warranted to be free of defects in material and workmanship for a period of one year from the date of shipment, subject to the limitations below: If the purchaser believes a product defective, the purchaser shall:
(a) Notify the manufacturer, state the alleged defect and request permission to return the product.
(b) If permission is given, return the product with transportation prepaid. If the product is accepted for return and found to be defective, the manufacturer will, at its discretion, either repair or replace the product, f.o.b. factory, within 60 days of receipt, or refund the purchase price.

Other than to repair, replace or refund described above, the purchaser agrees that the manufacturer shall not be liable for any losses, costs, expenses or damages of any kind arising out of the product, its use, installation or replacement, labeling, instructions, information or technical data of any kind, description of product use, sample or model, warnings or lack of foregoing. No other warranties, written or oral, expressed or implied, including the warranties of fitness for a particular purpose and merchantability, are made or authorized. No affirmation of fact, promise, description of product use or sample or model shall create any warranty from the manufacturer, unless signed by the president or vice-president. These products are not manufactured, sold or intended for personal, family or household purposes.

Manufacturer Information

Islip Flow Controls Inc.
Phone: (905) 335-8777 866-872-0072
Fax: (905) 335-0977 866-872-0073

Contact: Derek Islip-Contract/Sales Inquiries

LEFT BLANK

IFM EFECTOR

MODEL PN7294, PRESSURE SWITCH

LEFT BLANK

CE

Operating instructions
Electronic pressure sensor

PN72xx

PN73xx

PN76xx

UK

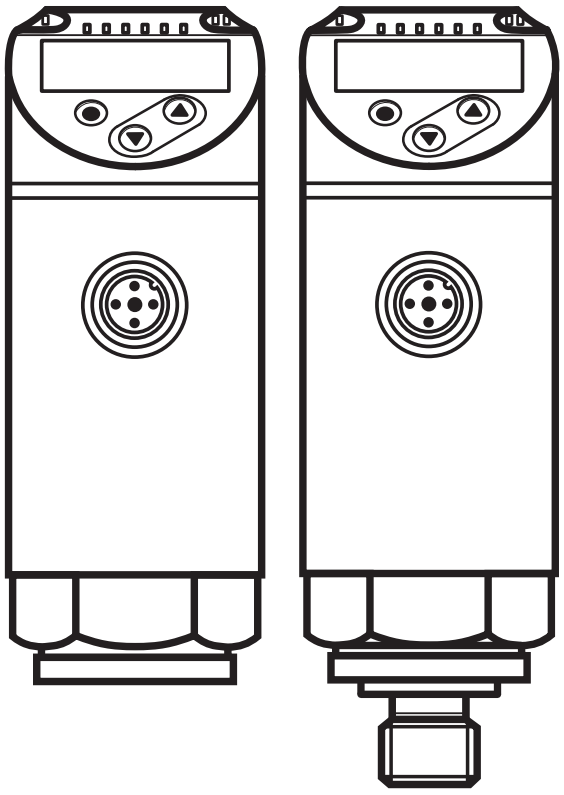

80012464 / 00 08 / 2018

Contents

1 Preliminary note 4
1.1 Symbols used 4

2 Safety instructions 4

3 Functions and features 5
3.1 Applications 5

4 Function 7
4.1 Communication, parameter setting, evaluation 7
4.2 Switching function 7
4.3 IO-Link 8

5 Installation 9

6 Electrical connection 9

7 Operating and display elements 10

8 Menu 11
8.1 Menu structure: Main menu 11
8.2 Explanation of the menu 12
8.2.1 Explanation of the menu level 1 12
8.2.2 Explanation of the menu level 2 12

9 Parameter setting 13
9.1 Parameter setting in general 13
9.2 Configure display (optional) 16
9.3 Set output signals 16
9.3.1 Set output functions 16
9.3.2 Define switching limits for the hysteresis function 16
9.3.3 Define switching limits for the window function 17
9.4 User settings (optional) 17
9.4.1 Set delay for the switching outputs 17
9.4.2 Set output logic for the switching outputs 17
9.4.3 Set damping for the switching signal 17
9.4.4 Read min/max values for the system pressure 17
9.4.5 Reset all parameters to factory setting 18
9.4.6 Set colour change of the display 18
9.4.7 Graphical depiction of the colour change of the display 19

10 Operation 21
10.1 Read set parameters 21
10.2 Self-diagnosis / error indications 22
11 Technical data and scale drawing 24
11.1 Setting ranges 24
11.2 Further technical data 25
12 Factory setting 25

1 Preliminary note

1.1 Symbols used

▶ Instructions

> Reaction, result

[…] Designation of keys, buttons or indications

→ Cross-reference



Important note
Non-compliance can result in malfunction or interference.



Information
Supplementary note.

2 Safety instructions

- Please read this document prior to set-up of the unit. Ensure that the product is suitable for your application without any restrictions.
- If the operating instructions or the technical data are not adhered to, personal injury and/or damage to property can occur.
- Check the compatibility of the product materials with the media to be measured in all applications.
- Correct condition of the device for the operating time can only be guaranteed if the device is only used for media to which the wetted materials are sufficiently resistant → 3.1 Applications.
- If the devices are used in gas applications with pressures > 362 psi (25 bar) the notes in chapter 3.1 for devices with the marking **) must be absolutely observed.



The responsibility whether the measurement device is suitable for the respective application lies with the operator. The manufacturer assumes no liability for consequences of misuse by the operator. Improper installation and use of the devices results in a loss of the warranty claims.

3 Functions and features

The device monitors the system pressure of machines and installations.

3.1 Applications

Type of pressure: relative pressure

Order no.	Measuring range		Permissible overpressure *)		Bursting pressure	
	psi	bar	psi	bar	psi	bar
Pressure sensors with internal thread 1/4 - 18 NPT						
PN7270	0…5800	0...400	11580	800	24650	1700
PN7271	0…3625	0...250	7250	500	17400	1200
PN7292**	0…1450	0...100	4350	300	9400	650
PN7293**	0…362	0...25	2175	150	5075	350
PN7294**	-14.5…145	-1...10	1087	75	2175	150
PN7296	0…36.2	0...2.5	290	20	725	50
PN7297	0…14.5	0...1	145	10	450	30
PN7299	-14.5...14.5	-1...1	145	10	450	30
Pressure sensors with external thread 1/4 - 18 NPT						
PN7670	0...5800	0...400	11580	800	24650	1700
PN7271	0…3625	0...250	7250	500	17400	1200
PN7692**	0...1450	0...100	4350	300	9400	650
PN7693**	0...362	0...25	2175	150	5075	350
PN7694**	-14.5...145	-1...10	1087	75	2175	150
PN7696	0...36.2	0...2.5	290	20	725	50
PN7697	0...14.5	0...1	145	10	450	30
PN7699	-14.5...14.5	-1...1	145	10	450	30
Pressure sensors with internal thread 7/16“ - 20 UNF						
PN7370	0...5800	0...400	11580	800	24650	1700
PN7392	0…1450	0...100	4350	300	9400	650

*) With static overload pressure or max. 100 million pressure cycles.

**) For gas applications > 362 psi (25 bar) it is necessary to use devices with a measuring range ≥ 3620 psi (250 bar)!

MPa = (measured value in bar) ÷ 10
kPa = (measured value in bar) x 100

UK

Avoid static and dynamic overpressure exceeding the specified overload pressure by taking appropriate measures.

The indicated bursting pressure must not be exceeded.

Even if the bursting pressure is exceeded only for a short time, the unit may be destroyed. ATTENTION: Risk of injury!

Pressure Equipment Directive (PED):
The units comply with the Pressure Equipment Directive and are designed and manufactured for group 2 fluids in accordance with the sound engineering practice. Use of group 1 fluids on request!

4 Function

- The unit displays the current system pressure.
- It generates output signals according to the operating mode and the parameter setting.
- It moreover provides the process data via IO-Link.
- The unit is laid out for fully bidirectional communication. So, the following options are possible:
  - Remote display: reading and display of the current system pressure.
  - Remote parameter setting: reading and changing the current parameter setting.
  - IO-Link parameter setting → 4.3

4.1 Communication, parameter setting, evaluation

OUT1 (pin 4)	• Switching signal for system pressure limit value. • Communication via IO-Link.
OUT2 (pin 2)	• Switching signal for system pressure limit value.

4.2 Switching function

OUTx changes its switching state if it is above or below the set switching limits (SPx, rPx). The following switching functions can be selected:

- Hysteresis function / normally open: [oux] = [Hno] (→ fig. 1).
- Hysteresis function / normally closed: [oux] = [Hnc] (→ fig. 1).

  First the set point (SPx) is set, then the reset point (rPx).
  The hysteresis defined remains even if SPx is changed again.
- Window function / normally open: [oux] = [Fno] (→ fig. 2).
- Window function / normally closed: [oux] = [Fnc] (→ fig. 2).
  The width of the window can be set by means of the difference between FHx and FLx. FHx = upper value, FLx = lower value.

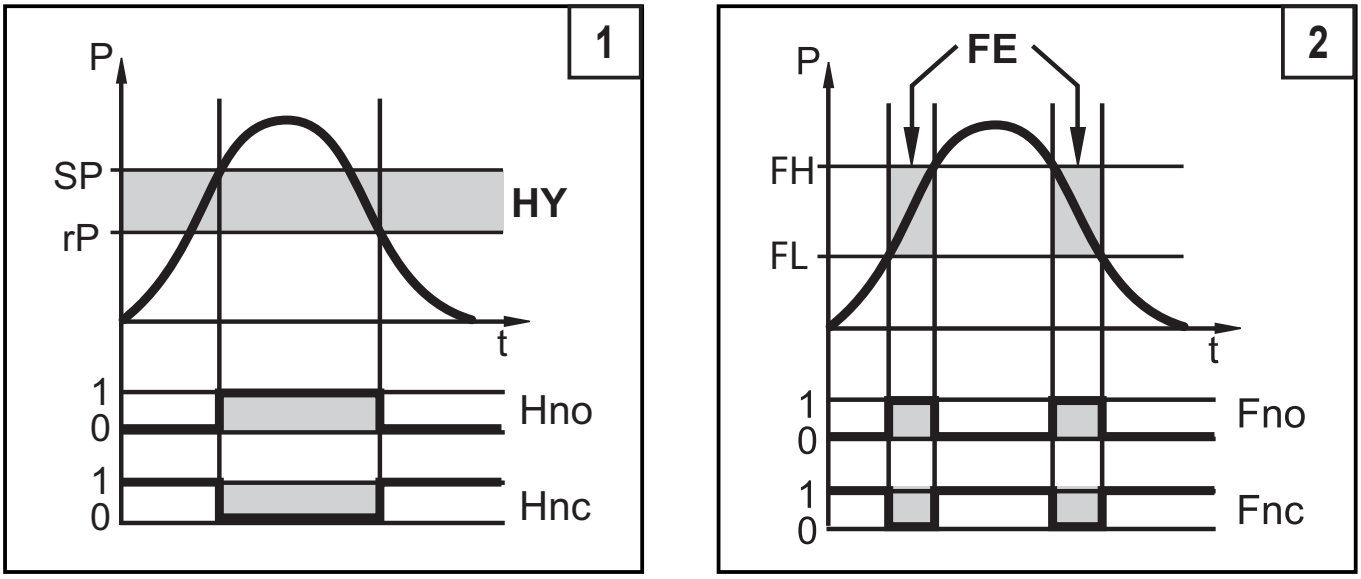

P = system pressure; HY = hysteresis; FE = window

4.3 IO-Link

General information

This unit has an IO-Link communication interface which requires an IO-Link-capable module (IO-Link master) for operation.

The IO-Link interface enables direct access to the process and diagnostic data and provides the possibility to set the parameters of the unit during operation.

In addition communication is possible via a point-to-point connection with a USB adapter cable.

Further information about IO-Link at www.ifm.com → more product information → Specials → IO-Link.

Device-specific information

You can find the IODDs necessary for the configuration of the IO-Link unit and detailed information about process data structure,

diagnostic information and parameter addresses at www.ifm.com → more product information → Specials → IO-Link.

Parameter setting tools

You will find all necessary information about the required IO-Link hardware and software at www.ifm.com → more product information → Specials → IO-Link.

5 Installation

Before installing and removing the unit: Make sure that no pressure is applied to the system.

▶ Insert the unit in a process connection with a suitable thread.

▶ Tighten firmly.

Tightening Torque 1/4-18 NPT threads: 2...3 turns after finger tightened.

To ensure leak-free joints for NPT threads, sealants and lubricants commonly used in the industry should be used.

Tightening Torque 7/16“-20 UNF threads: 25...35 Nm.

UK

6 Electrical connection

The unit must be connected by a qualified electrician.

The national and international regulations for the installation of electrical equipment must be adhered to.

Voltage supply according to EN 50178, SELV, PELV.

▶ Disconnect power.

▶ Connect the unit as follows:

Core colours	
BK	black
BN	brown
BU	blue
WH	white

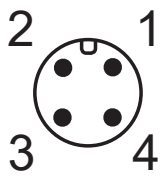

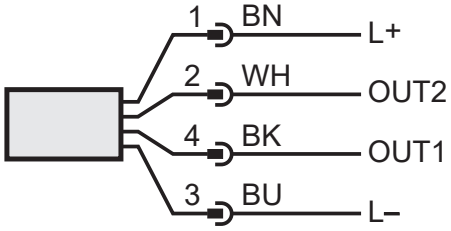

OUT1: Binary switching output or IO-Link

OUT2: Binary switching output

Colours to DIN EN 60947-5-6

Example circuits

2 x positive switching

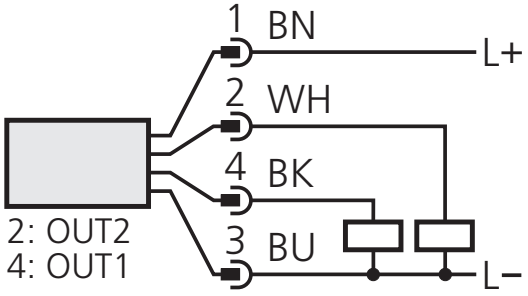

2 x negative switching

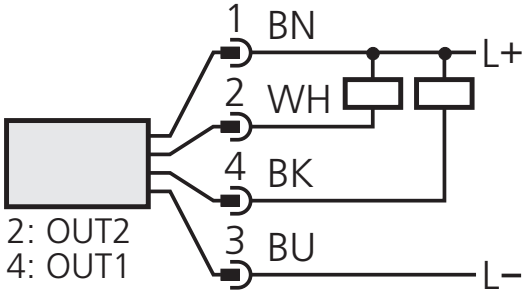

7 Operating and display elements

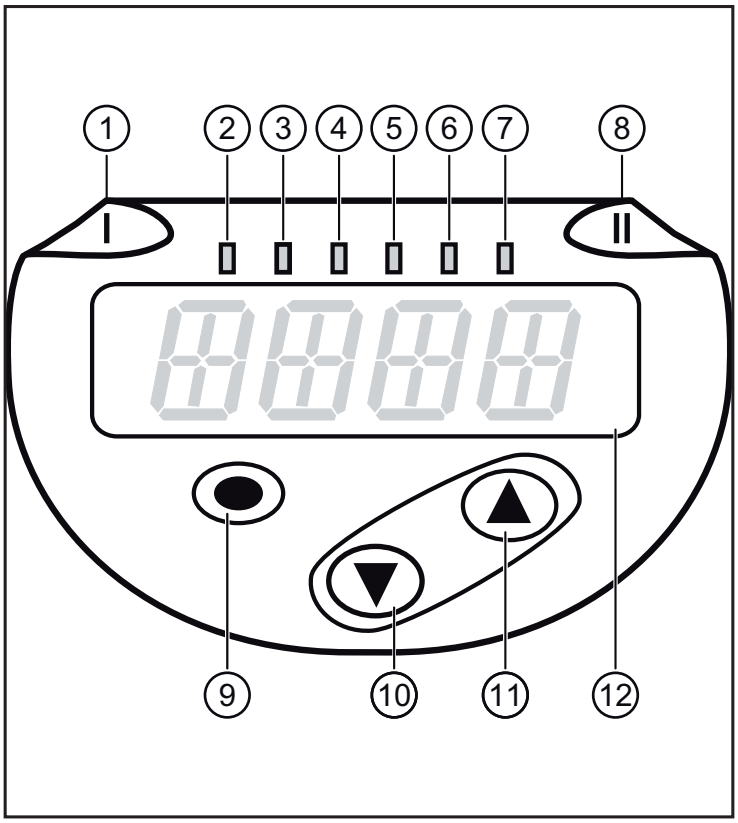

1 to 8: Indicator LEDs	
LED 1	Switching status OUT1 (lights when output 1 is switched).
LED 8	Switching status OUT2 (lights when output 2 is switched).
LEDs 2 - 7	System pressure in the indicated unit of measurement.
9: [Enter] button [●]	
- Selection of the parameters and acknowledgement of the parameter values.	
10 to 11: Arrow keys up [▲] and down [▼]	
- Setting of the parameter values (scrolling by holding pressed; incremental by pressing once).	
12: Alphanumeric display, 4 digits	
- Display of the current system pressure. - Indication of the parameters and parameter values.	

8 Menu

8.1 Menu structure: Main menu

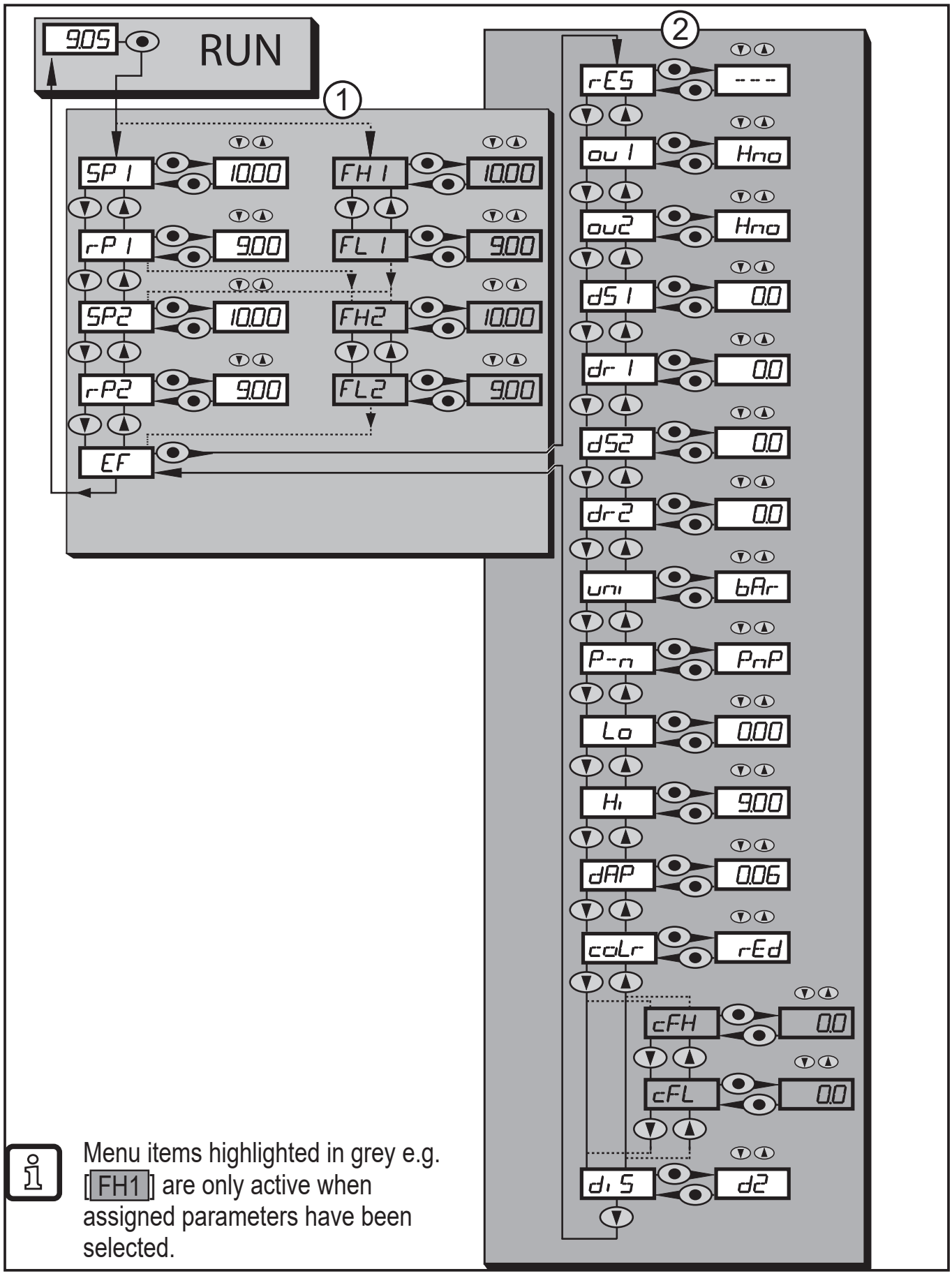

Menu items highlighted in grey e.g. [FH1] are only active when assigned parameters have been selected.

UK

8.2 Explanation of the menu

8.2.1 Explanation of the menu level 1

SPx/rPx	Upper / lower limit value for system pressure at which OUT1 switches with hysteresis setting. SPx/rPx is displayed if the parameter [Hno] or [Hnc] for OUTx was set in the extended functions "EF" menu.
FHx/FLx	Upper / lower limit value for system pressure at which OUT1 switches with window setting. FHx/FLx is displayed if the parameter [Fno] or [Fnc] for OUTx was set in the extended functions "EF" menu.
EF	Extended functions / opening of menu level 2.

8.2.2 Explanation of the menu level 2

rES	Restore factory setting.
ou1	Output function for OUT1: • Switching signal for the pressure limit values: hysteresis function [H ..] or window function [F ..], either normally open [. no] or normally closed [. nc].
ou2	Output function for OUT2: • Switching signal for the pressure limit values: hysteresis function [H . .] or window function [F . .] as normally open (. no) or normally closed (. nc) each.
dS1 / dS2	Switching delays for OUT1 / OUT2.
dr1 / dr2	Switch-off delay for OUT1 / OUT2.
uni	Standard unit of measurement for system pressure (display): [psi] / [bAr] / [mbar] / [MPA] / [kPA] / [inHG]
P-n	Output logic: pnp / npn.
Lo	Minimum value memory for system pressure.
HI	Maximum value memory for system pressure.
dAP	Damping of the measured signal.
coLr	Assignment of the display colours "red" and "green" within the measuring range.
cFH / cFL	Upper / lower value for colour change. Parameter only active after selection of a freely definable colour window in the coLr parameter: [r-cF] or [G-cF].
diS	Update rate and orientation of the display.

9 Parameter setting

During parameter setting the unit remains in the operating mode. It continues to monitor with the existing parameters until the parameter setting has been completed.

9.1 Parameter setting in general

3 steps must be taken for each parameter setting:

1	**Select parameter** ▶ Press [●] to get to the menu. ▶ Press [▲] or [▼] until the requested parameter is displayed.	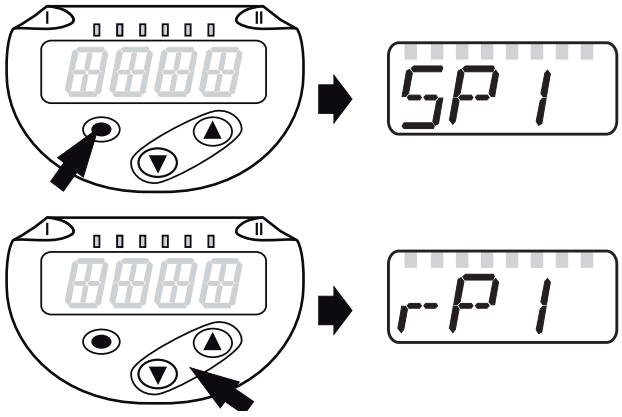
2	**Set parameter value** ▶ Press [●] to edit the selected parameter. ▶ Press [▲] or [▼] for min. 2 s. > After 2 s: setting value is changed: incrementally by pressing the button once or continuously by keeping the button pressed.	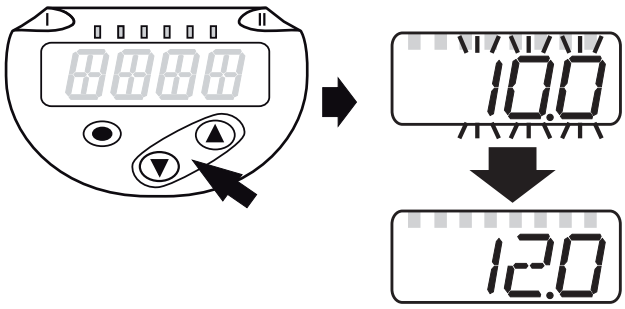
	Numerical values are incremented continuously with [▲] or decremented with [▼].	
3	**Acknowledge parameter value** ▶ Briefly press [●]. > The parameter is displayed again. The new setting value is saved.	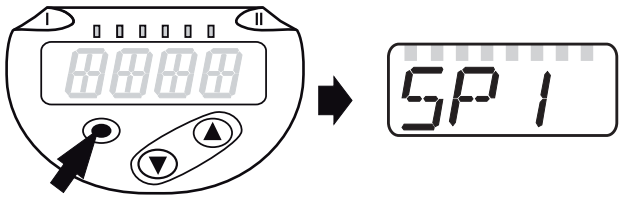
Set other parameters ▶ Press [▲] or [▼] until the requested parameter is displayed.		
Finish parameter setting ▶ Press [▲] or [▼] several times until the current measured value is displayed or wait for 30 s. > The unit returns to the process value display.		

If [C.Loc] is displayed when an attempt is made to modify a parameter value, an IO-Link communication is active (temporary locking).

If [S.Loc] is displayed, the sensor is permanently locked via software. This locking can only be removed using a parameter setting software.

- Change from menu level 1 to menu level 2:

▶ Press [●] to get to the menu. ▶ Press [▼] until [EF] is displayed.	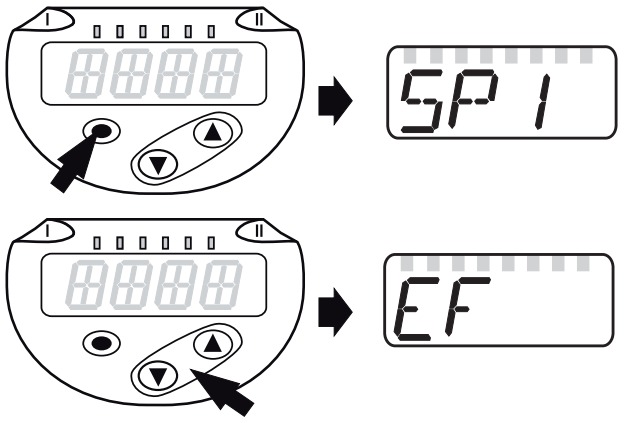
▶ Press [●]. > The first parameter of the submenu is displayed (here: [rES]).	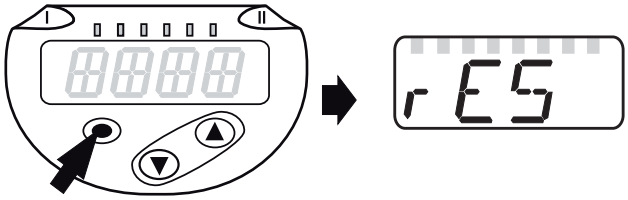

- Locking / unlocking
  The unit can be locked electronically to prevent unintentional settings.

▶ Make sure that the unit is in the normal operating mode. ▶ Press [▲] + [▼] simultaneously for 10 s. > [Loc] is displayed.	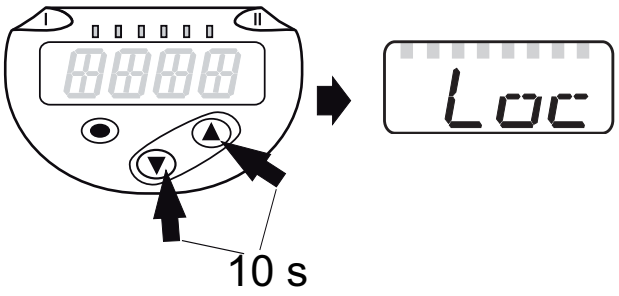
During operation: [Loc] is briefly displayed if you try to change parameter values.	
For unlocking: ▶ Make sure that the unit is in the normal operating mode. ▶ Press [▲] + [▼] simultaneously for 10 s. > [uLoc] is displayed.	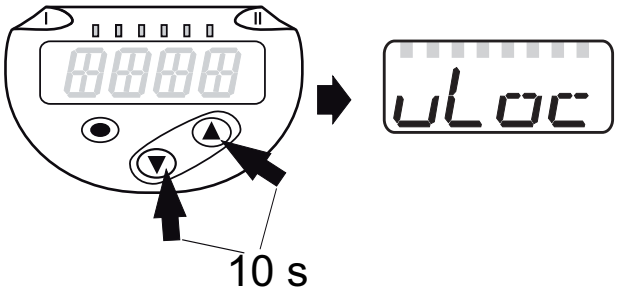

On delivery: not locked.

- Timeout:

If no button is pressed for 30 s during parameter setting, the unit returns to the operating mode with unchanged values.

9.2 Configure display (optional)

▶ Select [Uni] and set the unit of measurement: - [Psi], - [bAr], [mbAr], - [MPA], [kPA], - [inHG] The selectable units of measurement depend on the respective unit.	uni
▶ Select [diS] and set the update rate and orientation of the display: - [d1]: update of the measured values every 50 ms. - [d2]: update of the measured values every 200 ms. - [d3]: update of the measured values every 600 ms. - [rd1], [rd2], [rd3]: display as for d1, d2, d3; rotated by 180°. - [OFF] = The measured value display is deactivated in the Run mode. The LEDs remain active even if the display is deactivated. Error messages are displayed even if the display is deactivated.	diS
Even with unsteady pressure characteristics [d1] provides optimum readability; the corresponding algorithms are stored.	

9.3 Set output signals

9.3.1 Set output functions

▶ Select [ou1] and set the switching function: - [Hno] = hysteresis function/NO, - [Hnc] = hysteresis function/NC, - [Fno] = window function/NO, - [Fnc] = window function/NC.	ou1
▶ Select [OU2] and set the function: - [Hno] = hysteresis function/NO, - [Hnc] = hysteresis function/NC, - [Fno] = window function/NO, - [Fnc] = window function/NC.	ou2

9.3.2 Define switching limits for the hysteresis function

▶ [ou1] / [ou2] must be set as [Hno] or [Hnc]. ▶ Select [SP1] / [SP2] and set the value at which the output is set.	SP1 SP2
▶ Select [rP1] / [rP2] and set the value at which the output is reset. rPx is always smaller than SPx. The unit only accepts values which are lower than the value for SPx.	rP1 rP2

9.3.3 Define switching limits for the window function

▶ [ou1] /[ou2] must be set as [Fno] or [Fnc]. ▶ Select [FH1] / [FH2] and set the upper limit value.	
▶ Select [FL1] / [FL2] and set the lower limit value. FLx is always lower than FHx. The unit only accepts values which are lower than the value for FHx.	

9.4 User settings (optional)

9.4.1 Set delay for the switching outputs

UK

[dS1] / [dS2] = switching delay for OUT1 / OUT2. [dr1] / [dr2] = reset delay for OUT1 / OUT2. ▶ Select [dS1], [dS2], [dr1] or [dr2] and set a value between 0 and 50 s (at 0 the delay time is not active).	
For this unit the parameters [dSx] und [drx] for the set and reset points are designed strictly to the VDMA guideline.	

9.4.2 Set output logic for the switching outputs

▶ Select [P-n] and set [PnP] or [nPn].	

9.4.3 Set damping for the switching signal

▶ Select [dAP], set the value in seconds; setting range 0.000...4.000 s (τ value: 63 %). At 0.00 [dAP] is not active.	

9.4.4 Read min/max values for the system pressure

▶ Select [HI] or [Lo] and briefly press [●]. [HI] = maximum value, [LO] = minimum value. Delete memory: ▶ Select [HI] or [LO]. ▶ Press and hold [▲] or [▼] until [----] is displayed. ▶ Briefly press [●].	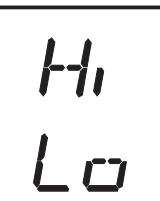

9.4.5 Reset all parameters to factory setting

▶ Select [rES]. ▶ Press [●]. ▶ Press and hold [▲] or [▼] until [----] is displayed. ▶ Briefly press [●]. We recommend noting down your own settings before carrying out a reset (→ 12 Factory setting).	

9.4.6 Set colour change of the display

▶ Select [coLr] and set the function: - [rEd] = display colour red (independent of the measured value). - [GrEn] = display colour green (independent of the measured value). - [r1ou] = display colour red when OUT1 switches. - [G1ou] = display colour green when OUT1 switches. - [r2ou] = display colour red when OUT2 switches. - [G2ou] = display colour green when OUT2 switches. - [r-12] = Display colour red when the measured value is between the limit values of OUT1 and OUT2. - [G-12] = Display colour green when the measured value is between the limit values of OUT1 and OUT2. - [r-cF] = Display colour red when the measured value is between the freely definable limit values [cFL]*) and [cFH]*). - [G-cF] = Display colour green when the measured value is between the freely definable limit values [cFL]*) and [cFH]*). *) The parameters [cFL] and [cFH] can only be selected in the menu tree when [r-cF] or [G-cF] were activated.	
▶ Select [cFH] and set the upper limit value. (only possible when [r-cF] or [G-cF] were activated). > The setting range corresponds to the measuring range and its minimum limit is [cFL].	
▶ Select [cFL] and set the lower limit value (only possible when [r-cF] or [G-cF] were activated). > The setting range corresponds to the measuring range and its maximum limit is [cFH].	

9.4.7 Graphical depiction of the colour change of the display

Display colour change for the parameters **[r1ou]** / **[r2ou]**, mode **hysteresis function**	Display colour change for the parameters **[G1ou]** / **[G2ou]**, mode **hysteresis function**
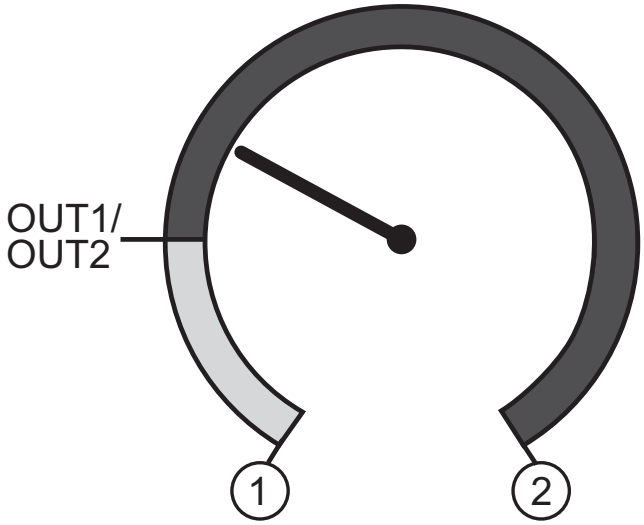	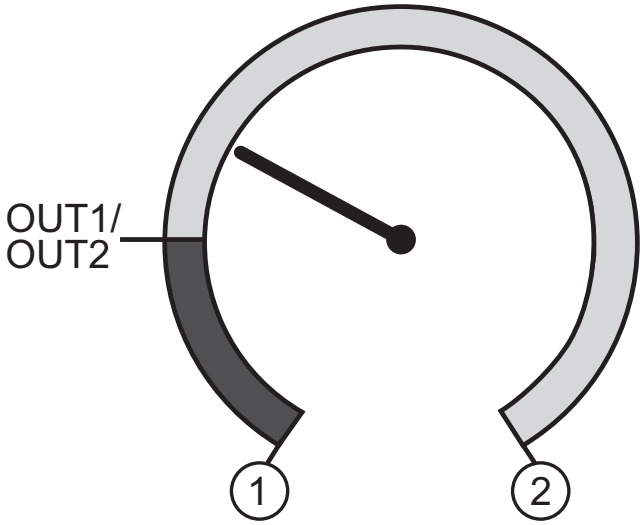
Measured value > switch point OUT1/OUT2; Display = red	Measured value > switch point OUT1/OUT2; Display = green

Display colour change for the parameters **[r1ou]** / **[r2ou]**, mode **window function**	Display colour change for the parameters **[G1ou]** / **[G2ou]**, mode **window function**
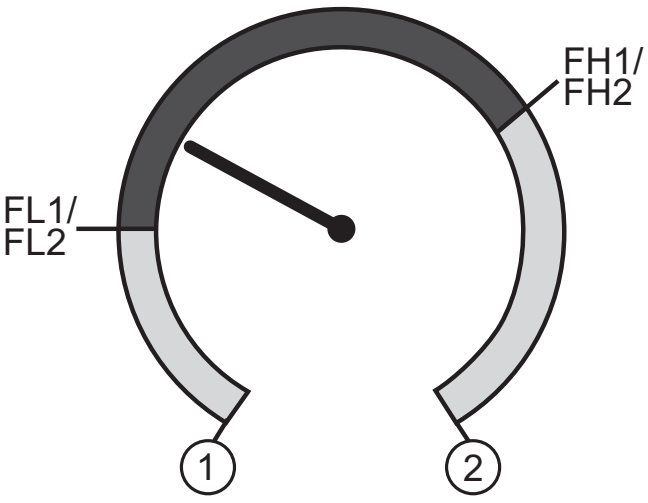	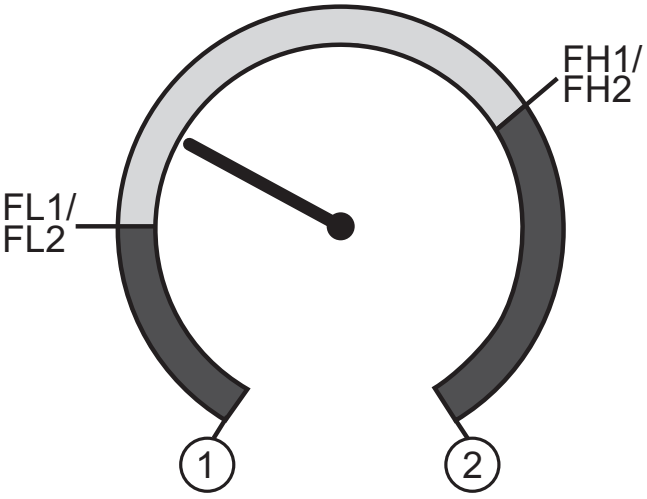
Measured value between FL1/FL2 and FH1/FH2; Display = red	Measured value between FL1/FL2 and FH1/FH2; Display = green

	Colour change display green
	Colour change display red
1	Initial value of the measuring range
2	Final value of the measuring range

Display colour change for the parameters **[r-12],** mode **hysteresis function**	Display colour change for the parameters **[G-12]**, mode **hysteresis function**
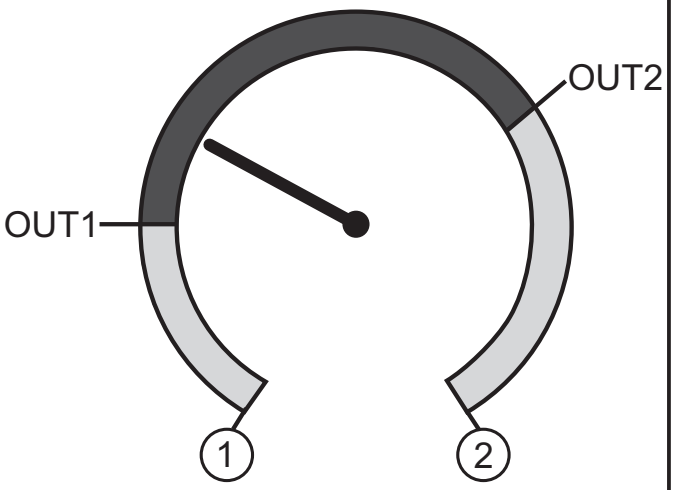	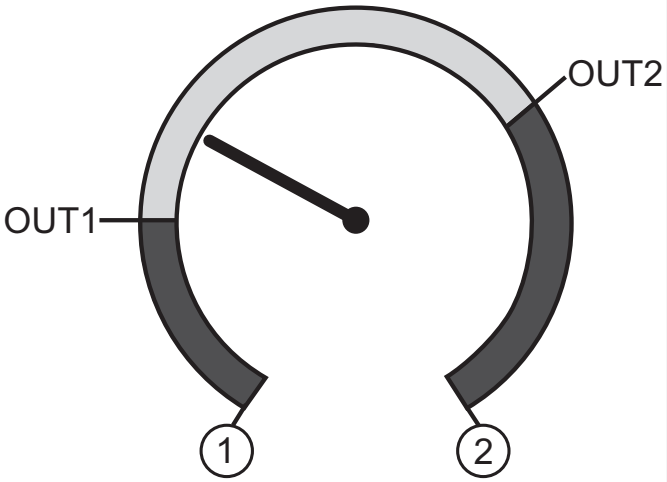
Measured value between OUT1 and OUT2; Display = red	Measured value between OUT1 and OUT2; Display = green

Display colour change for the parameters **[r-12],** mode **window function**	Display colour change for the parameters **[G-12]**, mode **window function**
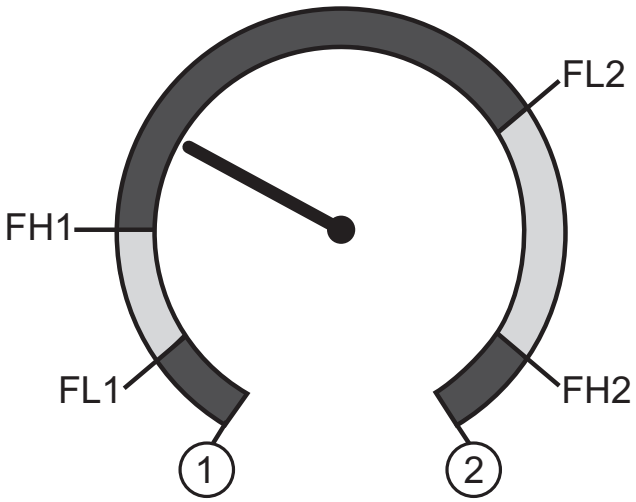	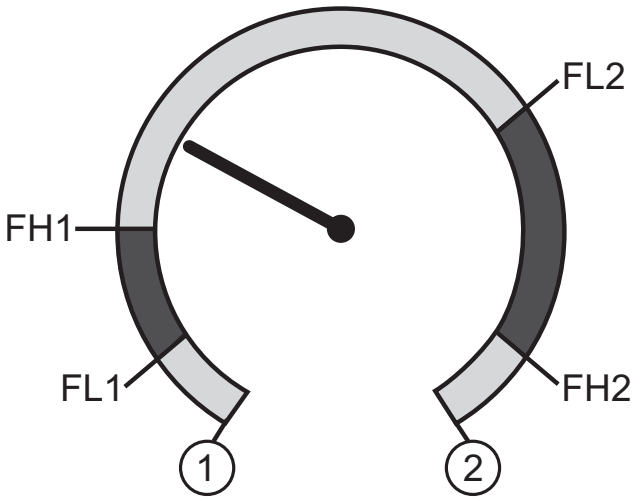
Measured value outside FL1...FH1 and FL2...FH2; Display = red	Measured value outside FL1...FH1 and FL2...FH2; Display = green

	Colour change display green
	Colour change display red
1	Initial value of the measuring range
2	Final value of the measuring range
FL1/FL2	Lower limit value window function outputs OUT1 / OUT2
FH1/FH2	Upper limit value window function outputs OUT1 / OUT2

Display colour change with parameter **[r-cF]** independent of OUT1 / OUT2.	Display colour change with parameter **[G-cF]** independent of OUT1 / OUT2
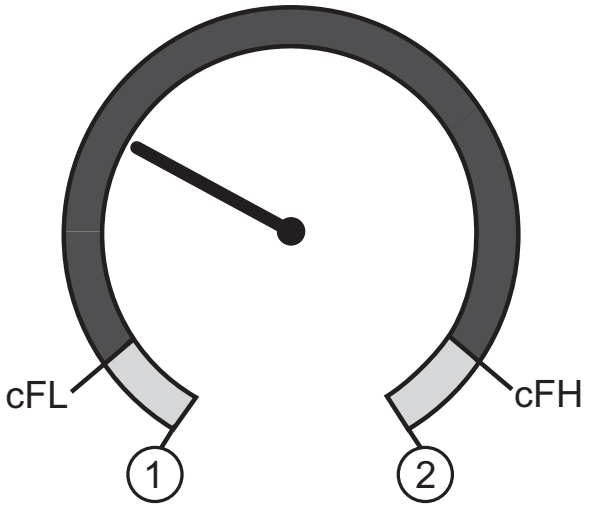	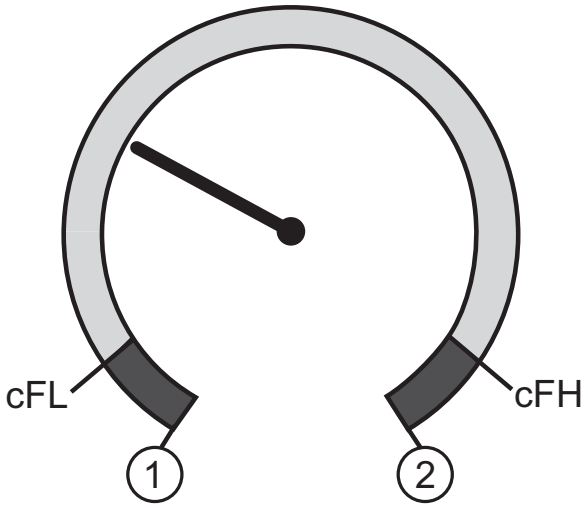
Measured value between cFL and cFH; Display = red	Measured value between cFL and cFH; Display = green

	Colour change display green
	Colour change display red
1	Initial value of the measuring range
2	Final value of the measuring range
cFL	Lower limit value (independent of the output function)
cFH	Upper limit value (independent of the output function)

10 Operation

After power on, the unit is in the Run mode (= normal operating mode). It carries out its measurement and evaluation functions and provides output signals according to the set parameters.

Operating indicators → 7 Operating and display elements.

10.1 Read set parameters

▶ Press [●].

▶ Press [▲] or [▼] until the requested parameter is displayed.

▶ Briefly press [●].

> The unit displays the corresponding parameter value for approx. 30 s; then it changes to the process value display.

10.2 Self-diagnosis / error indications

The unit has many self-diagnostic options.

- It monitors itself automatically during operation.
- Warnings and faults are displayed (even if the display is deactivated), in addition they are available via IO-Link.

Display	Status LED OUT1	Status LED OUT2	Type of fault	Corrective measures
none			Supply voltage too low.	▶ Check / correct the supply voltage.
SC flashes	flashes	flashes	Excessive current at switching outputs OUT1 + OUT2 *)	▶ Check switching outputs for short-circuit or excessive current; remove the fault.
SC1 flashes	flashes		Excessive current at switching output OUT1 *).	▶ Check switching output OUT1 for short-circuit or excessive current; remove the fault.
SC2 flashes		flashes	Excessive current at switching output OUT2*).	▶ Check switching output OU2 for short-circuit or excessive current; remove the fault.
Loc			Parameter setting locked via pushbuttons.	▶ Unlock buttons → 9.1 Parameter setting in general →“Locking / unlocking“.
C.Loc			Parameter setting locked via pushbuttons, parameter setting is active via IO-Link communication (→ 9.1)	▶ Wait until parameter setting via IO-Link is finished.
S.Loc			Setting buttons locked via parameter software. Parameter change is rejected (→ 9.1).	▶ Unlocking only possible via IO-Link interface / parameter software.
OL			Process value too high. (measuring range exceeded)	▶ Check / reduce system pressure / select unit with corresponding measuring range.

Display	Status LED OUT1	Status LED OUT2	Type of fault	Corrective measures
UL			Process value too low (value below measuring range).	▶ Check / increase system pressure / select unit with corresponding measuring range.
Err flashes			Internal fault / malfunction.	▶ Contact the manufacturer.

*) The respective output remains deactivated as long as the excessive current / short circuit continues.

11 Technical data and scale drawing

11.1 Setting ranges

		SP1 / SP2		rP1 / rP2		ΔP
		min	max	min	max	
PN7270 PN7370 PN7670	psi	40	5800	20	5780	20
	bar	4	400	2	398	2
	MPa	0.4	40	0.2	39.8	0.2
PN7271 PN7671	psi	40	3620	20	3600	20
	bar	2	250	1	249	1
	MPa	0.2	25	0.1	24.9	0.1
PN7292 PN7392 PN7692	psi	10	1450	5	1445	5
	bar	1	100	0.5	99.5	0.5
	MPa	0.1	10	0.05	9.95	0.05
PN7293 PN7693	psi	4	362	2	360	2
	bar	0.2	25	0.1	24.9	0.1
	MPa	0.02	2.5	0.01	2.49	0.01
PN7294 PN7694	psi	-13,5	145	-14	144,5	0,5
	bar	-0.9	10	-0.95	9.95	0.05
	MPa	-0.09	1	-0.095	0.995	0.005
PN7296 PN7696	psi	0.4	36.2	0.2	36	0.2
	bar	0.02	2.5	0.01	2.49	0.01
	kPa	2	250	1	249	1
PN7297 PN7697	psi	0.1	14.5	0.05	14.45	0.05
	mbar	10	1000	5	995	5
	kPa	1	100	0.5	99.5	0.5
	inHG	0.2	29.5	0.1	29.4	0.1
PN7299 PN7699	psi	-14.3	14.5	-14.4	14.4	0.1
	mbar	-980	1000	-990	990	10
	kPa	-98	100	-99	99	1
	inHG	-29,0	29.6	-29.2	29.4	0.2

ΔP = step increment

11.2 Further technical data

Further technical data and scale drawing at www.ifm.com → Data sheet search → Enter the article number.

12 Factory setting

	Factory setting	User setting
SP1	25% VMR *	
rP1	23% VMR *	
ou1	Hno	
ou2	Hno	
SP2	75% VMR *	
rP2	73% VMR *	
dS1	0.0	
dr1	0.0	
dS2	0.0	
dr2	0.0	
uni	Psi	
P-n	PnP	
dAP	0.06	
colr	rEd	
diS	d2	

UK

* = The indicated percentage of the final value of the measuring range (VMR) of the respective sensor in Psi (for PN7xx9 the percentage of the measuring span) is set.

More information at www.ifm.com

LEFT BLANK

KINGTRON

FIGURE S-212T, BALL VALVE

LEFT BLANK

KingTron *Stainless Steel & Carbon Steel valve series*

2-PIECE STANDARD PORT BALL VALVES

FIG. S-212T / C-212T: THREADED ENDS, 2000 PSI(138 BAR) W.O.G..

FEATURES:

- Reinforced TFE seats increase durability.
- Adjustable packing gland.
- Bottom-loaded blow-out proof stem.
- Basic design complied with ANSI B16.34 & EN 12516-1.
- NPT threaded ends complied with ANSI B 1.20.1..
- Rc, Rp & G Threaded ends complied with BS 21/2779, JIS B-0203/0202, DIN 259/2999, ISO 228-1, AS1722.1/1722.2 are upon request.
- Tested according to API 598.



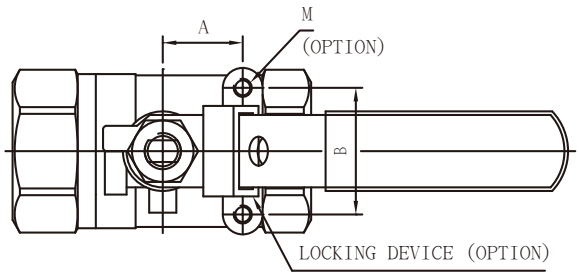

MATERIALS LIST:

NO.	PARTS	S-212T	C-212T
1	BODY	ASTM A351-CF8M	ASTM A216-WCB
2	SEAT	REINFORCED PTFE	REINFORCED PTFE
3	BALL	ASTM A351-CF8M/316	ASTM A351-CF8/304
4	GASKET	PTFE	PTFE
5	END CAP	ASTM A351-CF8M	ASTM A216-WCB
6	HANDLE NUT	AISI 304	AISI 304
7	HANDLE WASHER	AISI 304	AISI 304
8	GLAND	AISI 304	AISI 304
9	STEM PACKING	PTFE	PTFE
10	THRUST WASHER	PTFE	PTFE
11	STEM	ASTM A276-316	ASTM A276-304
12	HANDLE	AISI 304	ZINC PLATED STEEL
13	HANDLE COVER	PVC	PVC

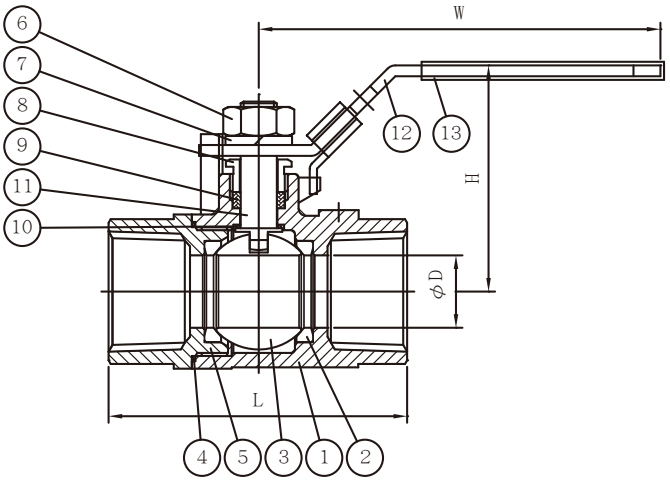

OPTIONS:

-L: LOCKING DEVICE. -V: VENTED BALL.
-M: TAPPED MOUNTING PAD. -W: BODY JOINT FULLY WELDED.
-A: ANTI-STATIC DEVICE.

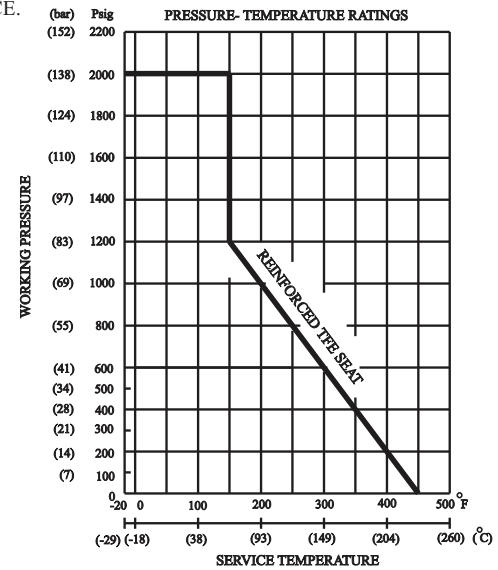

DIMENSIONS

SIZE		ϕD		L		A		B		H		W		M
inch	DN	in	mm	in	mm	in	mm	in	mm	in	mm	in	mm	(OPTION)
1/4"	8	0.37	9.5	2.09	53	0.50	12.7	1.12	28.5	2.13	54	3.70	94	10-24UNC
3/8"	10	0.37	9.5	2.09	53	0.50	12.7	1.12	28.5	2.13	54	3.70	94	10-24UNC
1/2"	15	0.49	12.5	2.38	60.5	0.50	12.7	1.12	28.5	2.13	54	3.70	94	10-24UNC
3/4"	20	0.59	15	2.70	68.5	0.50	12.7	1.12	28.5	2.24	57	3.70	94	10-24UNC
1"	25	0.79	20	3.25	82.5	0.87	22.1	1.38	35	2.46	62.5	4.37	111	10-24UNC
1 1/4"	32	0.98	25	3.58	91	0.93	23.6	1.38	35	2.87	73	5.37	136.5	10-24UNC
1 1/2"	40	1.26	32	3.94	100	0.93	23.6	1.50	38.1	3.09	78.5	5.37	136.5	1/4-20UNC
2"	50	1.50	38	4.61	117	0.93	23.6	1.50	38.1	3.48	88.5	6.57	167	1/4-20UNC

We reserve the rights to modify our product design or construction for improvement without prior notice.

LEFT BLANK

KITZ

SERIES AKUJM, GLOBE VALVE

LEFT BLANK

Document No.: KE-0001-09

KITZ

Operation and Maintenance Manual

For
KITZ Carbon Steel, Low Alloy Steel, Stainless Steel
and Nickel Based Alloy

Gate, Globe and Check Valves

(Flanged, Butt Welding, Threaded and Socket Welding Ends)

Thank you for having chosen KITZ products.
For safe and trouble-free function and performance of the product, ensure to read and understand all items of this manual before valve mounting and operation.
Keep this manual in a convenient place for your valve operators' easy access.

KITZ CORPORATION

Document No.: KE-0001-09

This manual applies to the KITZ gate, globe and check valves made of carbon steel, low alloy steel, stainless steel and nickel based alloy.

This manual is prepared for manual valve operation.
For electric or pneumatic valve operation, refer to the operation manual prepared by the manufacturers of relevant valve actuators.

CAUTION AND WARNING

To ensure safe and trouble-free function and performance, please read all the contents of this manual before handling, transportation, mounting, operation and maintenance of valves. Keep this manual in a convenient place for your valve operators' easy access.

The signal words "WARNING" and "CAUTION" are defined as follows:

⚠ WARNING	Indicates a potentially hazardous situation which, if not avoided, will result in death or serious injury.
⚠ CAUTION	Indicates a potentially hazardous situation which, if not avoided, could result in minor or moderate injury.



Indicates a prohibited action that must not be carried out.



Indicates a mandatory action that must be carried out.

NOTES TO USERS

This manual covers the normal usage of the product. Technical data and instructions for operation, maintenance and inspection of the product are prepared in consideration of safety. However, they are good only to cover typical applications and provided as a general guideline to users. If technical assistance beyond the scope of this manual is required, contact KITZ Corporation.

The illustrations given in this manual do not introduce all details. If more detailed data is needed, refer to the relevant valve assembly drawings.

* Any information provided in this operation manual is subject to revision at any time without notice. This edition cancels all previous issues.

CONTENTS

		Sheet
I	Construction and Design Features	
	Gate Valves with Outside Screw and Yoke	2
	Globe Valves with Outside Screw and Yoke	3
	Swing Check Valves	4
	Lift Check Valves	5
II	Valve Operating Device	
	Handwheel	7
	Hammer Blow Handle	8
	Bevel Gear Operator	9
III	Transportation and Storage	10
IV	Valve Mounting	
	Flanged Type	14
	Butt Welding Type	18
	Threaded Type	21
	Socket Welding Type	25
V	Valve Operation	28
VI	Periodic Inspection	35
VII	Disassembly and Assembly	
	Gate Valves with Outside Screw and Yoke	42
	Globe Valves with Outside Screw and Yoke	47
	Swing Check Valves	52
	Lift Check Valves	56

CHAPTER I

Construction and Design Features

I Construction and Design Features

1. Gate Valves with Outside Screw and Yoke

1.1 The typical valve design is as illustrated below.

1.2 The threaded portion of the stem is exposed beyond the bonnet, known as outside screw. Rotation of the handwheel mounted on the stem top raises or lowers stem and disc together.

1.3 Clearance for stem rising is required for valve operation.

1.4 Outside screw designs have an advantage of better resistance against erosion and corrosion than inside screw designs because their stem threads are not in contact with service fluid.

1.5 Gate valves are designed for use in the fully open or fully closed position only.
Services in intermediate position can damage valve disc and seats.

1.6 Fluid can flow through valve port in both directions.

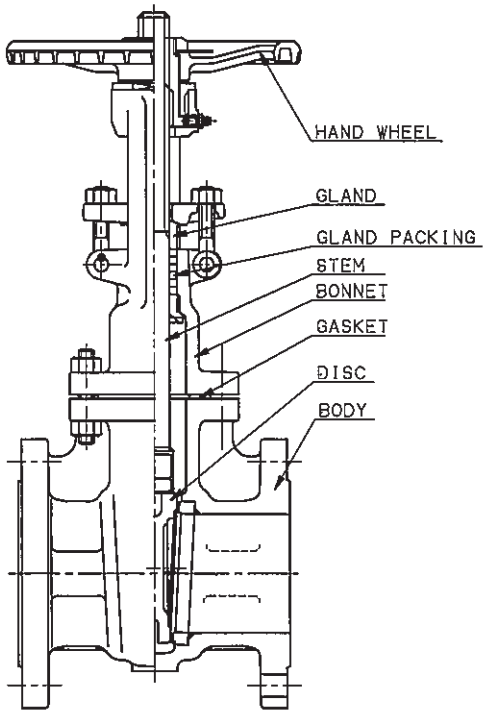

This illustration introduces a typical construction.

I Construction and Design Features

2. Globe Valves with Outside Screw and Yoke

2.1 The typical valve design is as illustrated below.

2.2 The threaded portion of the stem is exposed beyond the bonnet, known as outside screw. Rotation of the handwheel mounted on the stem top causes the handwheel to rise or fall together with the stem and disc.

2.3 Clearance for handwheel and stem rising is required for valve operation.

2.4 Outside screw designs have an advantage of better resistance against the erosion and corrosion than inside screw designs because their stem threads are not in contact with service fluid.

2.5 Globe valves are designed for use in the fully open, fully closed and intermediate positions for regulating services.

2.6 Globe valves have a high fluid resistance due to their design.

2.7 When the valve is in the closed position with flow under the seat, the fluid pushes against the disc and greater torque is required for operation.

2.8 Flow under the seat is the preferred direction of flow.

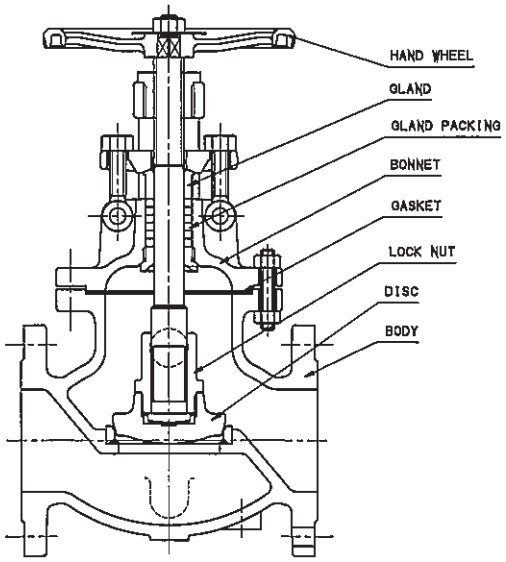

Flow Direction

This illustration introduces a typical construction.

I Construction and Design Features

3. Swing Check Valves

3.1 The typical valve design is as illustrated below.

3.2 The hinge pin retains the arm and disc. The disc moves upwards with fluid flow.
With flow in one direction the disc hinges upward to permit flow through the valve. With reverse flow the disc is held closed.

3.3 Swing check valves permit flow in one direction and prevent the backflow.

3.4 Fluid can flow through valve port in one direction.

3.5 Swing check valves can be used both on horizontal and vertical piping.

On vertical piping, they can be used with upward flow and should be installed according to the arrow on the body.
On horizontal piping, they should be installed in upright position to pipe lines.

3.6 The disc may tend to float in the body and flap against the body seat due to a low volume of fluid flow, which is known as "chattering".

3.7 Fluid vortex, turbulence and pulsation are expected at pump outlet and downstream of reducer and elbow, which may damage the valves and result in shortening life cycles of the valves.

It is recommended to place valves at the distance of 6 times nominal size or further from these devices.

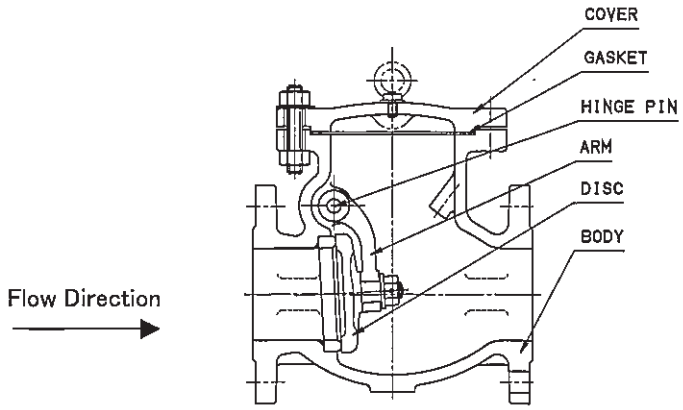

This illustration introduces a typical construction

I Construction and Design Features

4. Lift Check Valves

4.1 The typical valve design is as illustrated below.

4.2 The disc moves upward and downward along the guide provided with inside of the cover. With flow in one direction, the disc moves upward to permit flow through the valve. With reverse flow, the disc is held closed.

4.3 Lift check valves permit flow in a certain direction and prevent the backflow.

4.4 Fluid can flow through valve port in one direction.

4.5 Lift check valves can be used only on the horizontal piping with upright installation position to the piping.

4.6 The disc may tend to float in the body and flap on the body seat due to a low volume of fluid flow, which is known as "chattering" (See 3.6).

4.7 Fluid vortex, turbulence and pulsation are expected at pump outlet and downstream of reducer and elbow, which may damage the valves and result in shortening life cycles of the valves.
It is recommended to place valves at the distance of 6 times nominal size or further from these devices.

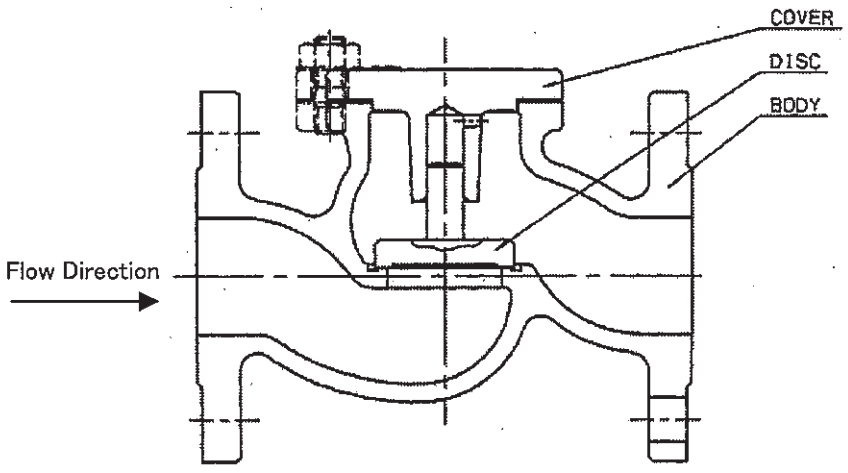

This illustration introduces a typical construction.

CHAPTER Ⅱ

Valve Operating Device

Ⅱ Valve Operating Device

1. Handwheel

1.1 The handwheel is directly mounted to the valve stem on globe valves and to the yoke sleeve on gate valves.

1.2 According to the arrow or letter on the handwheel, turning the handwheel clockwise closes the valve, and turning the handwheel counterclockwise opens the valve.

1.3 Handwheel operating torque depends on the type of valves, the direction for opening or closing, pressure in piping, and the tightening condition of the gland packing.

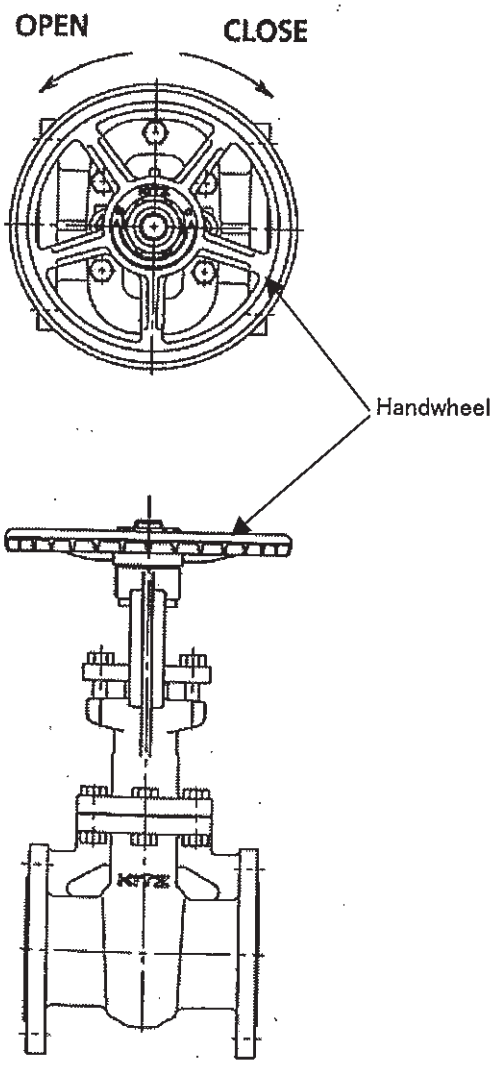

Ⅱ Valve Operating Device

2. Hammer Blow Handle

2.1 The handwheel is directly mounted to the valve stem on globe valves and to the yoke sleeve on gate valves.

2.2 According to the arrow or letter on the handwheel, turning the handwheel clockwise closes the valve, and turning the handwheel counterclockwise opens the valve.

2.3 Handwheel operating torque depends on the type of valves, the direction for opening or closing, pressure in piping, and the tightening condition of the gland packing.

2.4 The impact generated by the blow of handwheel and boss converts the applied torque into a larger torque.
This is effective when a larger torque is immediately needed for the valve operation.

2.4.1 The rotation of the handwheel is transmitted through boss to stem.

2.4.2 A clearance (backlash) with the connecting area of handwheel and boss is furnished.

2.4.3 The clearance (backlash) helps hammer blow effect to increase the valve operator output.

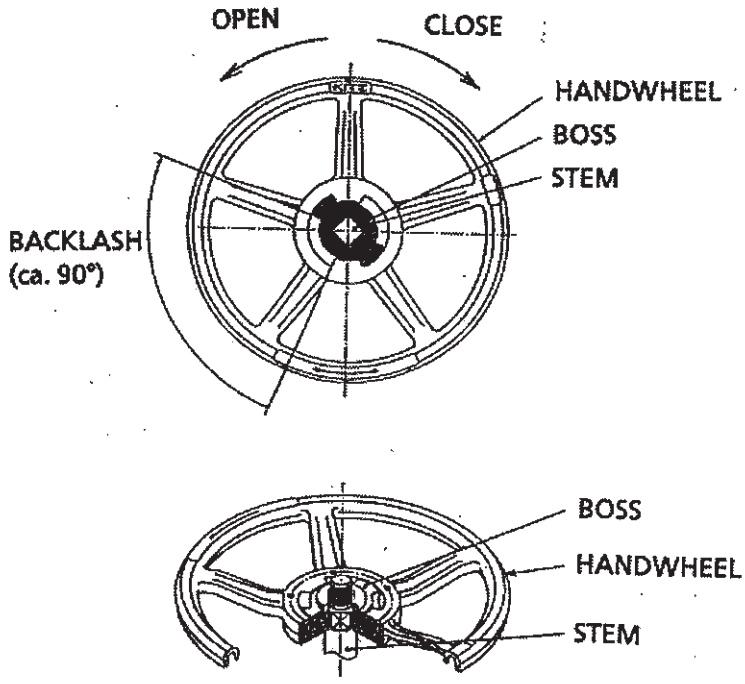

Ⅱ Valve Operating Device

3. Bevel Gear Operator

3.1 For valve operation, the bevel gear operator is mounted on the valve.

3.2 According to the arrow or letter on the handwheel, turning the handwheel clockwise closes the valve, and turning the handwheel counterclockwise opens the valve.

3.3 Handwheel operating torque depends on the type of valves, the direction for opening or closing, pressure in piping, and the tightening condition of the gland packing.

3.4 Bevel gear operators are able to transmit a greater torque to valve stems, by converting the torque from drive shaft by means of a reduction gearing unit.

3.5 A similar mechanism to the hammer blow handle is built into the gear operator.
This is effective when a larger torque output is immediately needed for valve operation.

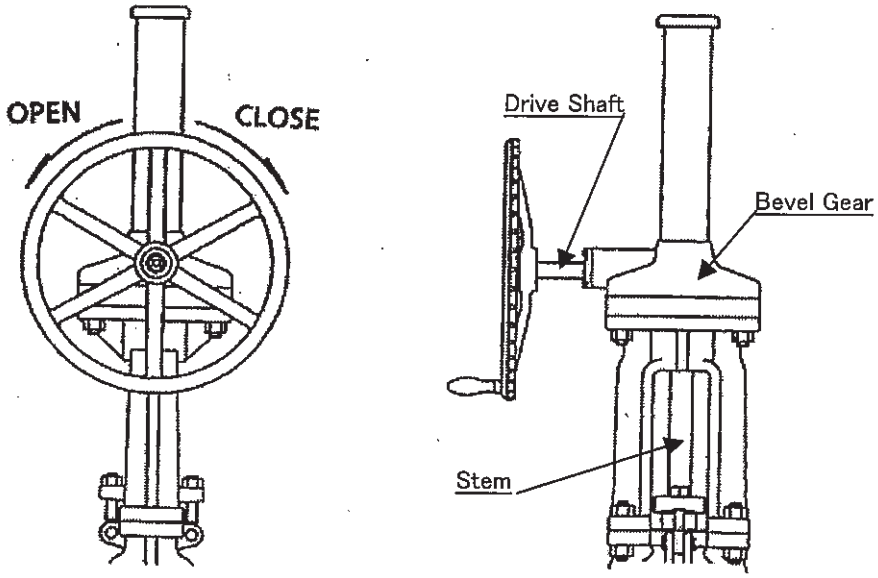

CHAPTER Ⅲ

Transportation and Storage

Ⅲ Transportation and Storage

1. Transportation

1.1 Cautions for safety

⚠ WARNING	
	(1) Keep off the valve lifting area to prevent personal injury caused by unsecured valves.

⚠ CAUTION	
	(1) Take care not to damage painting surface of valves during transportation, which may subsequently cause corrosion and rust. Any damaged surface should be adequately touched up before installation. (2) Take care when handling carton packed products. High humidity may damage the cartons.

1.2 Transportation

1.2.1 Keep packages as they are delivered until installation.
If the protective covers are found missing during transportation, provide appropriate type of protective covers.

1.2.2 Handle valves carefully so that they may not fall or drop on the ground. Any extraordinary mechanical impact should be avoided.

Ⅲ Transportation and Storage

2. Storage

2.1 Cautions for safety

⚠ CAUTION	
⊘	(1) Do not store valves in a corrosive environment, which may cause corrosion on threaded portions of valves. (2) Do not remove protective covers until installation. (3) Do not place any other objects on valves, and do not step on them. Overloading may damage valves. (4) Do not pile up valves for storage. Unstable piling may damage the valves or cause personal injury.

2.2 Storage

2.2.1 Store valves in a dust-free, low humidity and well ventilated place.
Indoor storage is recommended.

2.2.2 Storage of valves directly on the ground or concrete floor is not recommended.
Packed valves should be placed on racks for storage.

2.2.3 If valves should be stored outdoors, take appropriate measures to prevent valves from direct exposure to dust, rain and sunlight.

CHAPTER Ⅳ

Valve Mounting

Ⅳ Valve Mounting

1. Flanged Type

1.1 Cautions for safety

⚠ WARNING	
❗	(1) Check the valve specifications with the catalogs and/or the attached nameplate. Services beyond the valve specifications may cause fluid leakage and valve malfunctions.
⃠	(2) Do not install valves for pipe end service. It may cause external leakage. In such a case, use a blank flange to prevent external leakage.

⚠ CAUTION	
❗	(1) Keep a secure footing for valve installation and operation. (2) Appropriate level of lighting should be provided to the valve mounting area. (3) Piping should be properly supported.

1.1.1 Allow sufficient room for operation, installation and subsequent maintenance of valves.

1.1.2 For smooth operation, inspection and maintenance, take appropriate actions for valves which are required to be installed in limited access locations.

1.1.3 Try not to install valves in locations where valve functionality may be hampered by such external forces, such as vibration and other.

1.1.4 It is recommended to install valves on horizontal piping in an upright position.

1.1.5 Swing check valves can be used both on horizontal and vertical piping.
When installed on vertical piping, they can be used only with upward flow.

1.1.6 Lift check valves can be used only on horizontal piping.

Ⅳ Valve Mounting

1.2 Cautions for safety

⚠ WARNING	
❗	(1) Keep off the valve lifting area to prevent personal injury caused by unsecured valves.

⚠ CAUTION	
❗	(1) Take care not to catch fingers in flanges during mounting work. (2) Take care not to damage flange and seat surfaces. (3) Pipes should be properly supported, if needed. (4) Check valves are provided with stuffing inside for protection of the seat damage during transportation. Be sure to remove these stuffing completely before valve mounting. (5) In case of globe or check valves, the arrow on the valve body indicates the direction of fluid flow. Valves should be mounted according to this arrow. For gate valves with vent holes, vent holes should be positioned to the higher pressure side in fully closed position. (6) Retighten gland bolts before operation. Packing tightening stress may have been lowered due to the stress relaxation during transportation and storage, which may cause leakage problem from gland area. (7) Be sure to insert new gaskets between the valve and the pipe flange for valve mounting. (8) Retighten bolts at working temperatures to restore surface stress at sealing areas of valves used at high temperatures (+200℃ and over).

Ⅳ Valve Mounting

1.2.1 Check the following items before valve mounting:

(1) Service conditions should be within the range of the valve class and material specifications.

(2) Valve flanges should correspond with piping flanges.

(3) No scratch or defect should be found on the flange gasket surfaces.

(4) The appropriate length should be secured between the pipe flanges with the valve face-to-face dimensions and gasket thickness taken into consideration.

(5) Pipes should be aligned accurately.

(6) Pipe flanges should face parallel to each other. Bolt holes of flanges should be arranged symmetrically such that they are lined up against the center line of flanges.

1.2.2 Before valve mounting, remove any foreign objects such as sand, dust and welding spatters from the connecting pipe interior.

1.2.3 Handle valves carefully so that they do not fall or drop on the ground. Any extraordinary mechanical impact should be avoided.

1.2.4 Remove protective covers just before valve mounting.

1.2.5 After valve mounting, all threaded portions should be checked.
Retighten them, if needed.

1.2.6 The valve and pipe interior should be flushed to remove foreign objects.
Do not operate valves during flushing.

Ⅳ Valve Mounting

1.3 Installation procedures

1.3.1 Make sure that pipes are aligned accurately.

1.3.2 The length between the pipe flanges should correspond with the valve face-to-face dimensions including gasket thickness.

1.3.3 Insert the valve between the pipe flanges. Thread bolts through bottom bolt holes and tighten bolts lightly.

1.3.4 Insert gaskets between the valve and the pipe flange. It is recommended to apply a gasket paste to gasket faces.

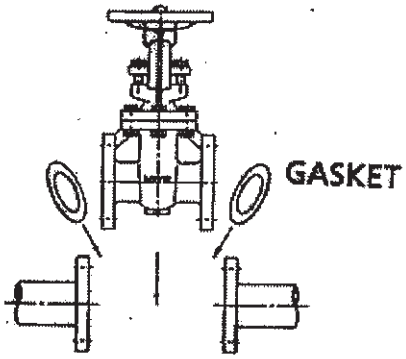

1.3.5 Make sure the correct alignment of gaskets, which are held by bottom bolts between the valve and the pipe flange.

1.3.6 Thread bolts through the other bolt holes and tighten them lightly.

1.3.7 Tighten bolts evenly, gradually and alternately on the diagonal line shown as follows.
The ends of all tightened bolts should protrude equally beyond the nuts.

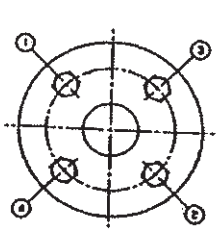

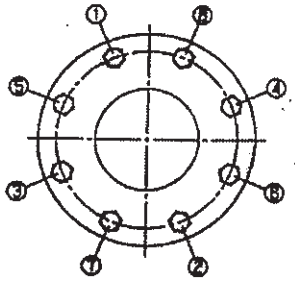

1.3.8 Raise the line temperature and increase pressure gradually on test operation.
Retighten the threaded portions, if needed.

Ⅳ Valve Mounting

2. Butt Welding Type

2.1 Cautions for safety

⚠ WARNING	
❗	(1) Check the valve specifications with the catalogs and/or the attached nameplate. Services beyond the valve specifications may cause fluid leakage and valve malfunctions.
🚫	(2) Do not install valves for pipe end service. It may cause external leakage.

⚠ CAUTION	
❗	(1) Keep a secure footing for valve installation and operation. (2) Appropriate level of lighting should be provided to the valve mounting area. (3) Piping should be properly supported.

2.1.1 Allow sufficient room for operation, installation and subsequent maintenance of valves.

2.1.2 For smooth operation, inspection and maintenance, take appropriate actions for valves which are required to be installed in limited access locations.

2.1.3 Try not to install valves in locations where valve functionality may be hampered by external forces, such as vibration and other.

2.1.4 It is recommended to install valves on horizontal piping in an upright position.

2.1.5 Swing check valves can be used both on horizontal and vertical piping.
When installed on vertical piping, they can be used only with upward flow.

Ⅳ Valve Mounting

2.2 Cautions for safety

⚠ WARNING

(1) Keep off the valve lifting area to prevent personal injury caused by unsecured valves.

⚠ CAUTION

(1) Take care not to damage butt welding ends and seat surfaces.

(2) Pipes should be properly supported, if needed.

(3) Check valves are provided with stuffing inside for protection of the seat damage during transportation. Be sure to remove these stuffing completely before valve mounting.

(4) In case of globe or check valves, the arrow on the valve body indicates the direction of fluid flow. Valves should be mounted according to this arrow.
For gate valves with vent holes, vent holes should be positioned to the higher pressure side in fully closed position.

(5) Retighten gland bolts before operation. Packing tightening stress may have been lowered due to the stress relaxation during transportation and storage, which may cause leakage from gland area.

(6) Retighten bolts at working temperatures to restore surface stress at sealing areas for valves used at high temperatures (+200℃ and over).

2.2.1 The service conditions should be within the range of the valve class and material specifications.

2.2.2 Before valve mounting, remove sand, dust and welding spatters from the connecting pipe interior.

2.2.3 Handle valves carefully so that they may not fall or drop on the ground. Any extraordinary mechanical impact should be avoided.

2.2.4 Remove protective covers just before valve mounting.

2.2.5 After valve mounting, all threaded portion should be checked. Retighten them, if needed.

2.2.6 The valve and pipe interior should be flushed to remove foreign objects.
Do not operate the valve during flushing.

Ⅳ Valve Mounting

2.3 Cautions for welding work

To prevent valve damage from overheating, welding work should be made carefully according to the following cautions:

2.3.1 Valve should be welded with the disc slightly opened.

2.3.2 All welding work for mounting valves on the pipeline should be made by qualified welders in accordance with the qualified welding procedures.

2.3.3 Select appropriate welding rods for valves and piping materials.
If covered welding rods are used, check that they are stored and dried appropriately.

2.3.4 It is recommended to use back-shielding gas for the first layer of welding.

2.3.5 Visual inspection or non-destructive examinations are required to check weld cracks, overlaps and undercut or other defects.

2.3.6 Depending on the valve and pipe materials, heat treatment after welding may be required.

2.3.7 Valves should be protected from overheating by means of covering them with wet cloths.

Ⅳ Valve Mounting

3. Threaded Type

3.1 Cautions for safety

⚠ WARNING	
	(1) Check the valve specifications with the catalogs and/or the attached nameplate. Services beyond the valve specifications may cause fluid leakage and valve malfunctions.
	(2) Do not install valves for pipe end service. It may cause external leakage.

⚠ CAUTION	
	(1) Keep a secure footing for valve installation and operation. (2) Appropriate level of lighting should be provided to the valve mounting area. (3) Piping should be properly supported, if needed.

3.1.1 Allow sufficient room for operation, installation and subsequent maintenance of valves.

3.1.2 For smooth operation, inspection and maintenance, take appropriate actions for valves which are required to be installed in limited access locations.

3.1.3 Try not to install valves in locations where valve functionality may be hampered by external forces, such as vibration and other.

3.1.4 It is recommended to install valves on horizontal piping in an upright position.

3.1.5 Swing check valves can be used both on horizontal and vertical piping.
When installed on vertical piping, they can be used only with upward flow.

3.1.6 Lift check valves can be used only on horizontal piping.

3.2 Cautions for safety

⚠ WARNING	
	(1) Keep off the valve lifting area to prevent personal injury caused by unsecured valves.

Ⅳ Valve Mounting

⚠ CAUTION

(1) Take care not to damage threaded areas and seat surfaces.

(2) Do not disassemble valves during mounting work.

(3) Check valves are provided with stuffing for protection of the seat damage during transportation. Be sure to remove the stuffing completely before valve mounting.

(4) In case of globe or check valves, an arrow on the valve body indicates the direction of fluid flow. Valves should be mounted according to this arrow.

(5) Use sealing materials applicable to the temperature and the fluid at threaded areas.

(6) Use spanners or any other appropriate tools. It is prohibited to use a pipe wrench.

(7) Fit spanners on the valve ends to be connected with pipes. Do not fit them on the other ends.

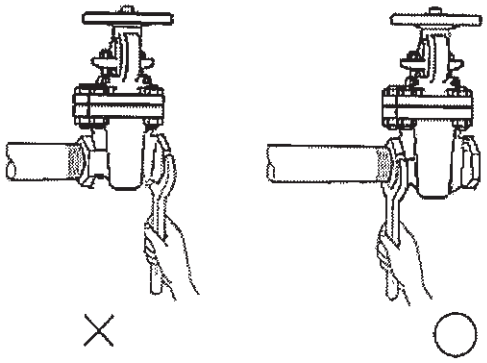

(8) Do not overtighten valves. It may damage valve internals.

(9) Retighten the gland bolts before operation. Packing tightening stress may be lowered due to the stress relaxation during transportation and storage, which may cause leakage problem from the gland area.

(10) Retighten bolts at working temperatures to restore surface stress at sealing areas for valves used at high temperatures (+200℃ and over).

Ⅳ Valve Mounting

3.2.1 Check the following items before valve mounting:

(1) Service conditions should be within the range of the valve class and material specifications.

(2) Valve threads should correspond with piping threads.

(3) No damage should be found on valve and piping threads.

(4) Threads dimensions should correspond with the applicable standards.

3.2.2 Remove foreign objects such as sand, dust and welding spatters from the connecting pipe interior.

3.2.3 Handle valves carefully so that they do not fall or drop on the ground. Any extraordinary mechanical impact should be avoided.

3.2.4 Remove protective covers just before valve mounting.

3.2.5 After valve mounting, all threaded portions should be checked.
Retighten them, if needed.

3.2.6 The valve and pipe interior should be flushed to remove foreign objects.
Do not operate valves during flushing.

Ⅳ Valve Mounting

3.3 Installation procedures (threaded)

3.3.1 Make sure that valves and pipes are threaded properly.

3.3.2 Remove foreign objects such as cutting oil and spatters from pipe internals and threaded areas with detergent or waste cloth.

3.3.3 Apply sealing material such as sealing tape to the pipe threads.

3.3.4 Use appropriate tools to thread pipes into valves.

3.3.5 Do not apply any excessive torque to thread pipe ends into valves. Torques to be applied should be within the following ranges.

Nominal Size	1/8	1/4	3/8	1/2	3/4	1
Torque N•m	20 to 29	20 to 29	20 to 29	20 to 29	39 to 49	49 to 59

Nominal Size	1-1/4	1-1/2	2	2-1/2	3 and up
Torque N•m	59 to 69	69 to 78	78 to 88	108 to 118	127 to 137

3.3.6 Raise the line temperature and increase pressure gradually on test operation. Retighten the threaded areas, if needed.

Ⅳ Valve Mounting

4. Socket Welding Type

4.1 Cautions for safety

⚠ WARNING	
❗	(1) Check the valve specifications with the catalogs and/or the attached nameplate. Services beyond the valve specifications may cause fluid leakage and valve malfunctions.
⃠	(2) Do not install valves for pipe end service. It may cause external leakage.

⚠ CAUTION	
❗	(1) Keep a secure footing for valve installation and operation. (2) Appropriate level of lighting should be provided to the valve mounting area. (3) Piping should be properly supported, if needed.

4.1.1 Allow sufficient room for operation, installation and subsequent maintenance of valves.

4.1.2 For smooth operation, inspection and maintenance, take appropriate actions for valves which are required to be installed in limited access locations.

4.1.3 Try not to install valves in locations where valve functionality may be hampered by external forces, such as vibration and other.

4.1.4 It is recommended to install valves on horizontal piping in an upright position.

4.1.5 Swing check valves can be used both on horizontal and vertical piping.
When installed on vertical piping, they can be used only with upward flow.

4.1.6 Lift check valves can be used only on horizontal piping.

Ⅳ Valve Mounting

4.2 Cautions for safety

⚠ WARNING	
❗	(1) Keep off the valve lifting area to prevent personal injury caused by unsecured valves.

⚠ CAUTION	
❗	(1) Take care not to damage socket welding ends and seat surfaces. (2) Check valves are provided with stuffing inside for protection of the seat damage during transportation. Be sure to remove these stuffing completely before valve mounting. (3) In case of globe or check valves, an arrow on the valve body indicates the direction of fluid flow. Valves should be mounted according to this arrow. For gate valves with vent holes, vent holes should be positioned to the higher pressure side in fully closed position. (4) Retighten bolts at working temperatures to restore surface stress at sealing areas for valves used at high temperatures (+ 200°C and over). (5) Retighten gland bolts before operation. Packing tightening stress may have been lowered due to the stress relaxation during transportation and storage, which may cause leakage from gland area.

4.2.1 The service conditions should be within the range of the valve class and material specifications.

4.2.2 Before valve mounting, remove foreign objects such as sand, dust and welding spatters from the connecting pipe interior.

4.2.3 Handle valves carefully so that they do not fall or drop on the ground. Any extraordinary mechanical impact should be avoided.

4.2.4 Remove protective covers just before valve mounting.

4.2.5 After valve mounting, all threaded portions should be checked.
Retighten them, if needed.

4.2.6 The valve and pipe interior should be flushed to remove foreign objects.
Do not operate valves during flushing.

Ⅳ Valve Mounting

4.3 Cautions for welding work

To prevent valves from overheating, welding work should be made carefully according to the following cautions.

4.3.1 Valves should be welded with the disc slightly opened.

4.3.2 All welding work for mounting valves on the pipeline should be made by qualified welders in accordance with the qualified welding procedures.

4.3.3 Select appropriate welding rods for valves and piping materials.
If covered welding rods are used, check that they are stored and dried appropriately.

4.3.4 It is recommended that the pipe be withdrawn approximately 1.6mm away from the bottom of the socket, when the pipe is seated against the bottom of the socket.

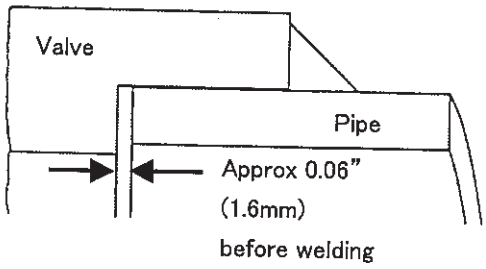

4.3.5 Visual inspection or non-destructive examinations are required to check weld cracks, overlaps and undercut or other defects.

4.3.6 Depending on the valve and pipe materials, heat treatment after welding may be required.

4.3.7 Valves should be protected from overheating by means of covering them with wet cloths.

CHAPTER V

Valve Operation

V Valve Operation

1. Cautions for safety

⚠ CAUTION	
	(1) Do not apply too much torque to the valve operating devices. (2) Do not loosen bolts and nuts of gland and bonnet of pressurized valves. (3) Do not operate gate valves in the intermediate position for a long period. It may damage the disc and seats.
	(4) Open valves gradually to prevent damage of pipes, when the valve handles high temperature fluid such as steam. (5) Close valves gradually to prevent water hammer, if the valve handles liquid fluid. (6) Take appropriate measures to prevent valves and pipes from freezing.

2. Operation (Gate and Globe Valves)

2.1 Turn the handwheel clockwise according to the symbols or marks indicating the direction to close valves. Turn it counterclockwise to open them.

2.2 Operating torque depends on the type of valve, opening degree, and service conditions.

2.3 Be sure to turn the handwheel of gate valves back to the reverse direction by about 90° , when valves reach fully closed position. This is important in high temperature services to prevent thermal stress and enable valve reopening easier and smoother.

V Valve Operation

3. When the special tool illustrated below is used for the easy valve operation, do not apply too much torque to valves.
   Refer to the following table for recommended maximum sizes of tools.

(Unit: mm)

Valve Nominal Size (mm)	Globe Valve		Gate Valve	
	JIS 10K ASME Class 150	JIS 20K ASME Class 300	JIS 10K ASME Class 150	JIS 20K ASME Class 300
	Length (L)	Length (L)	Length (L)	Length (L)
40	70	185	80	130
50	100	200	80	200
65	200	285	150	300
80	225	460	150	320
100	380	650	250	440
125	660	1150	360	600
150	680		515	620
200	750		590	670
250			670	820
300			800	1040

Note) The table shown above quoted from "Guideline of Valve Handling", fourth edition, issued by High Pressure Gas Safety Institute of Japan.

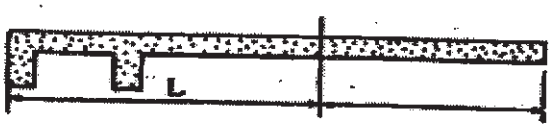

GRIP (Approx. 100 mm)

V Valve Operation

4. Daily Inspection

In order to operate your valves safety and satisfactorily, the daily inspection is very important. Here are the inspection items.

Periodic retightening of packing is necessary as a maintenance procedure.

Items to be inspected	Valve type	Areas to be inspected	Inspection method	Recommended remedial measures
External leakage	Gate valves Glove valves	Gland area	Visual check Soap water	Retighten gland bolts. Replace gland packing.
	All	Flanged areas	Visual check Soap water	Retighten flange bolts. Replace gaskets.
		Threaded portions	Visual check Soap water	Retighten each threaded portion. Replace components as required.
		Body surface	Visual check Soap water	Replace the valve when excessive corrosion or damage is observed.
Abnormal noises	All	Valve body	Auditory check	Consult a piping engineer.
		Loosened bolts	Auditory check	Retighten bolts.
		Vibration of pipes	Auditory check	Consult a piping engineer
Loosened bolts and nuts	All	Bolts and nuts	Visual check Tactual check	Retighten bolts and nuts.
Seat leakage	All	–	–	Remove any foreign objects. Disassemble and inspect the valve components. (Lap the seat surfaces) Replace the valve.
Valve operation	Gate valves Globe valves	Operating position	Visual check	Make sure that the valve is in an appropriate predetermined position.
	All	Unsmooth operation	Test operation Auditory check	Lubricate the moving area. Disassemble and inspect the valve components.

V Valve Operation

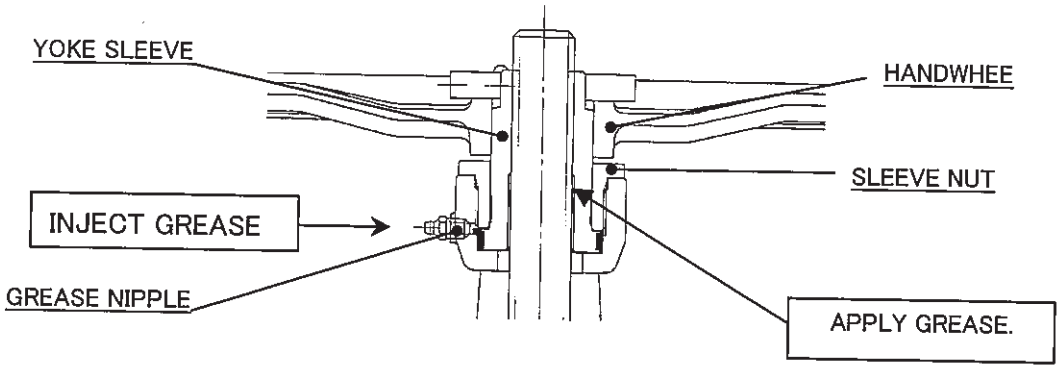

This illustration shows injection and application of grease to the yoke sleeve section.

5. Remedial Measures

⚠ CAUTION	
❗	(1) Wear protective items such as goggles, gloves and working boots as required at work site. (2) Take safety measures against toxic, flammable or corrosive fluids. (3) Reduce line pressure to the atmospheric level before retightening gland and flange bolts and nuts. (4) Operators should take protective measures to prevent direct exposure to the fluid, when the fluid spouts out from flanged areas. (5) Reduce line pressure to the atmospheric level when the packing and gaskets are replaced or bolts and nuts are loosened. Loosen the gland bolts gradually, when the valve handles volatile fluid. (6) When the packing needs to be replaced with valves installed on piping, backseating of the stem and body is effective in the valves fully open position. But sometimes foreign objects may be stuck between the backseat surface and cause leakage. Be sure to check that no leakage is observed before packing replacement To avoid replacement of all packing rings, add or replace one or two packing rings as a temporary remedy, and replace all packing rings during the next planned maintenance.
⃠	(7) Do not apply lubricants to the pipes and valves which handle oxygen.

V Valve Operation

5.1 Leakage from the gland area

Retighten the gland bolts or nuts if the leakage is found from the gland area. If retightening the gland bolts or nuts cannot solve the leakage problem, the gland packing should be replaced with a new set.

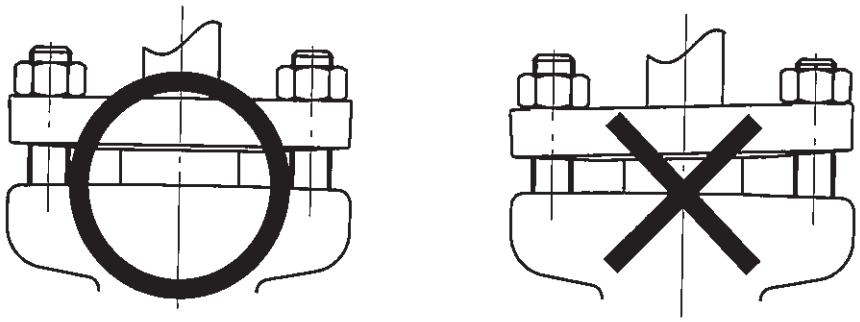

5.2 Leakage from the flange area

Tighten flange bolts evenly, gradually and alternately on the diagonal line shown as follows.

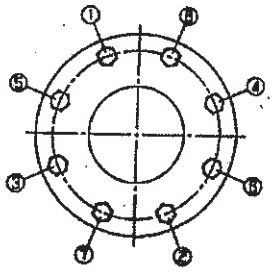

V Valve Operation

6. Troubleshooting

Trouble	Possible causes	Recommended remedial measures
Operation impossible	Threaded sections on the stem become stiff because the valve was not used for a long period.	Apply lubricant to the yoke sleeve and the stem screw engagement part. Injection grease through the grease nipple if applicable (see page 32/59).
	Foreign objects choke up the seats.	Flush out the foreign objects with fluid flow.
Unsmooth operation	Foreign objects adhere to the stem.	Remove the foreign objects and check the valve. Then, evenly apply grease to the threaded portions.
	Foreign objects choke up the valve cavity.	Flush out the foreign objects with fluid flow. Disassemble and inspect the valve components.
	Gland bolts and nuts are overtightened.	Loosen gland bolts and nuts and retighten them adequately.
Stem damage	Too much torque is applied.	Replace the damaged components.
Leakage from gland area	Gland bolts and nuts are loosened.	Retighten gland bolts and nuts.
	Gland bolts and nuts are tightened unevenly.	Tighten bolts and nuts evenly.
	Gland packing is damaged.	Replace the gland packing.
	Stem is damaged.	Replace the stem.
Leakage from seat area when the valve is in the fully closed position	Seats are damaged. (cavitation)	Consult the piping engineer.
	Seats are deformed.	Consult the piping engineer
Generation of abnormal noises and vibration	Bolts and nuts are loosened.	Retighten bolts and nuts.

CHAPTER VI

Periodic Inspection

Ⅵ Periodic Inspection

1. Periodic Inspection

1.1 It is recommended to carry out a periodic inspection about once a year against valves on pipes.

1.2 Ensure the smooth operation and sufficient valve function.

1.3 See Chapter Ⅴ "Valve Operation" for inspection items and inspection methods.

1.4 Carry out the periodic inspection for valves which are not operated for a long period or not subjected to daily inspection.

1.5 It is extremely important to check any valves when such valves are used under the following services or conditions:

a) Where erosion and corrosion of valve interior are expected.
b) Where choking of fluid is expected.
c) Where performance failure of valves could result in a major shutdown of an entire plant.

1.6 It is recommended to replace the gland packing on periodic inspection.

VI Periodic Inspection

2. Maintenance and Inspection

In piping facilities where valves are installed and are to be set open for periodic maintenance and inspection, it is recommended to carry out leakage and operational tests. No internal/seat leakage and external leakage should be detected, and valves should operate smoothly without galling and sticking. If detecting any of above problems, disassemble and check the valve components. After reassembly, the above-mentioned tests should be carried out and results should be satisfactory.

2.1 Cautions for safety

⚠ WARNING

(1) Discharge fluid from the pipes and reduce the line pressure to atmospheric level. Trapped pressure of fluid is very dangerous and may cause accidents resulting in personal injury.

In case of installation for pipe end service, fluid might be enclosed between the valve and the blank flange. Open the valve and discharge the fluid from the pipe before removing the blank flange.

(2) For gate valves, dismantle valves from piping with the valve in the intermediate position. Discharge fluid and pressure trapped within the fully closed valve body.

(3) Completely discharge toxic, flammable or corrosive fluid from pipe and valve interior.

(4) Operators must take protective measures against fluid spouting. No fire should be allowed in working area.

(5) Keep off the valve lifting area to prevent personal injury caused by unsecured valves.

⚠ CAUTION

(1) Wear protective items such as goggles, gloves and working boots.

(2) Keep a secure footing for valve dismantling and installation.

(3) Piping and valves should be properly supported, if needed.

(4) Before dismantling valves from the pipeline, mark the valve body and coupled pipe flanges with their original position. Reinstall the valve on pipes aligning these matchmarks after assembly.

(5) Be sure to insert new gaskets between the valve and the flange for valve mounting.

Ⅵ Periodic Inspection

2.2 Disassembly

Disassemble the valve according to the instructions in Chapter Ⅶ of this manual.

2.3 Each disassembled part should be inspected according to the following table.

Parts to be inspected	Valve types	Areas to be inspected	Items to be inspected	Inspection methods	Judgment	Remedial methods
body and bonnet	all	flanges	corrosion harmful damage crack	visual examination measurement of wall thickness	no corrosion no harmful damage no crack	weld repair*
		wetted areas	corrosion scratch crack	visual examination measurement of wall thickness NDE	no corrosion minimum wall thickness	weld repair*
	gate	disc guide	corrosion erosion	visual examination	smooth operation	weld repair and machining
seat and disc	all	seat surfaces	corrosion scratch crack erosion	visual examination	no corrosion no harmful damage good lapping	lapping
	gate	disc guide	corrosion erosion	visual examination	smooth operation	weld repair and machining
		stem-disc connection	corrosion deformation	visual examination	no corrosion no deformation	replacement of the disc
	globe	lock nut	corrosion	visual examination	no corrosion	replacement
	check	sliding area of disc & cover/arm	smooth operation	tactual examination	smooth operation	grinding
		moving area of hinge pin & arm	smooth operation	tactual examination	smooth operation	grinding

* Replace the valve, if weld repair is impossible.

Ⅵ Periodic Inspection

Parts to be inspected	Valve types	Areas to be inspected	Items to be inspected	Inspection methods	Judgment	Remedial methods
stem	gate globe	stem	corrosion erosion scratch deformation	visual examination measurement	no corrosion no scratch no deformation	replacement repair
		threaded areas	corrosion erosion	visual examination	no corrosion no erosion	replacement
stuffing box	gate globe	inside surface of stuffing box	corrosion erosion scratch	visual examination	no corrosion no erosion no scratch	replacement
gland packing gasket	gate globe	gland packing gasket	deterioration	visual examination	replacement (once a year)	replacement
yoke sleeve yoke bush	gate globe	sliding areas	smooth operation	tactual examination	smooth operation	repair and lubrication
		threaded areas	erosion	visual examination	no erosion	replacement
		shoulder	crack deformation	visual examination	no crack no deformation	replacement

2.4 Assembly

Assemble the valve according to the instructions in Chapter Ⅶ of this manual.

2.5 Tests and Inspections

The following are main items required for tests and inspections of valves.

2.5.1 Operation test

(1) The valve should be operated smoothly by handwheel without galling or sticking.

(2) The stem should be firmly connected with the disc.

(3) For gate valves, when they are fully closed, the center of the disc should be located upwards from the center of the body seat. And when they are fully opened, the lower end of the disc should not protrude into the port of the valve.

(4) For globe valves, the disc should be seated and aligned on the body seats perfectly, when the valve is fully closed. No misalignment or offset of disc and seat center shall be acceptable.

(5) For check valves, the disc should move smoothly. And when valves are fully opened, the disc should be stopped against the stopper provided in the valve body.

2.5.2 Shell test and seat leakage test

(1) Cautions for shell test and seat leakage test

⚠ CAUTION	
	(1) Wear protective items such as goggles, gloves and working boots. (2) Take sufficient precautions before performing shell test and seat leakage test for operator's safety.

(2) Shell test and seat leakage test

All valves are subjected to a hydrostatic or pneumatic shell test and seat leakage test at the required test pressure after assembly.
Refer to the JIS B 2003, JPI-7S-39 or API 598 for test methods.

LEFT BLANK

KOFLO

MODEL 1.5-40C-4-6-2, STATIC MIXER

LEFT BLANK

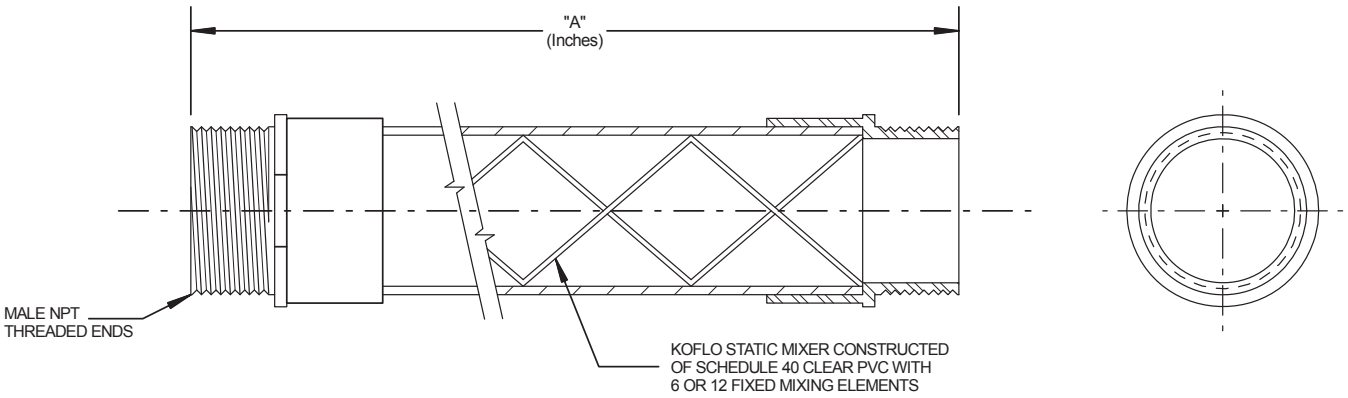

Size	6 Element Model Number	"A" 6 Element	12 Element Model Number	"A" 12 Element
3/8"	3/8-40C-4-6-2	6-1/2	3/8-40C-4-12-2	11
1/2"	1/2-40C-4-6-2	7	1/2-40C-4-12-2	12
3/4"	3/4-40C-4-6-2	9	3/4-40C-4-12-2	15
1"	1-40C-4-6-2	11	1-40C-4-12-2	18
1-1/4"	1.25-40C-4-6-2	14	1.25-40C-4-12-2	25
1-1/2"	1.5-40C-4-6-2	15	1.5-40C-4-12-2	28
2"	2-40C-4-6-2	19	2-40C-4-12-2	35

Koflo Corporation
309 CARY POINT DR.
CARY, IL 60013

SCALE: NONE	APPROVED BY JJ7	DRAWN BY NJF
DATE: 1/18/94		REVISED 10/15/01
CUSTOMER:		REVISED 5/22/08
		REVISED 6/12/09
MODEL NO: CLEAR PVC SCHEDULE 40 MIXER		DRAWING NUMBER: KD-993

LEFT BLANK

NETZSCH

MODEL NM015BY01L06B, PROGRESSIVE CAVITY PUMP
MODEL NM021BY01L06B, PROGRESSIVE CAVITY PUMP

LEFT BLANK

SHOP DRAWINGS SUBMITTAL PACKAGE

PROJECT: IQALUIT
PROJECT#: 5000218036

VEOLIA WATER TECHNOLOGIES INC.
4105 Sartelon, Saint-Laurent,
Québec, Canada H4S 2B3.

NETZSCH CANADA INC.
500 Welham Road
Barrie, ON
L4N 8Z7

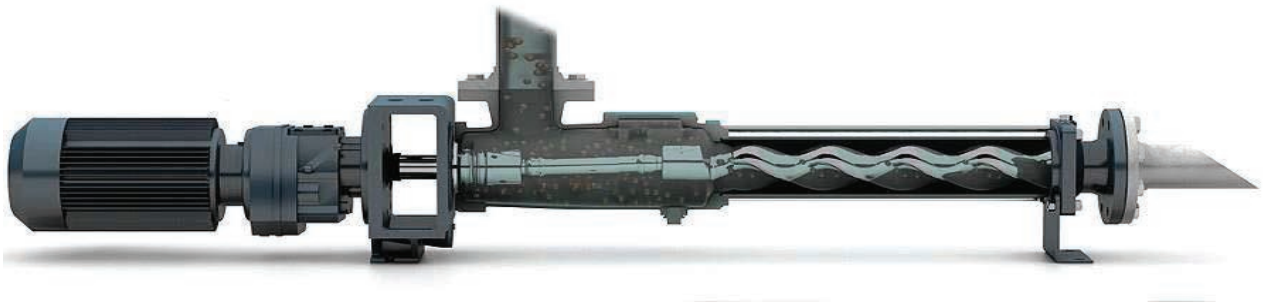

1	Pump Product Brochure	Page:4
2	DAF Polymer dosing pumps - NM015BY01L06B Pump	Page 31
3	Pump Technical Specification with Performance Curve	Page:32
4	General Arrangement Drawings	Page:39
5	Pump manual	Page: 41
6	Pump datasheet	Page: 100
7	Motor data package	Page:103
8	Motor IOM Manual	Page:110
9	Nozzle orientation	Page:120
10	Nord Gear reducer manual	Page: 122
11	STP3 Probe and controller	Page: 146

.
NETZSCH CANADA INC.
500 WELHAM ROAD
BARRIE, ONTARIO, L4N 8Z7
www.pumps.netzsch.com

TEL: +1 705-797-8426
FAX: +1 705-797-8427

12	BFP Polymer dosing pumps -NM021BY01L06B Pump	Page:169
13	Pump Technical Specification with Performance Curve	Page:170
14	General Arrangement Drawings	Page:176
15	Pump datasheet	Page: 178
16	Motor data package	Page: 180
17	Nord gear reducer manual	Page:187

NETZSCH CANADA INC.
500 WELHAM ROAD
BARRIE, ONTARIO, L4N 8Z7
www.pumps.netzsch.com

TEL: +1 705-797-8426
FAX: +1 705-797-8427

NETZSCH

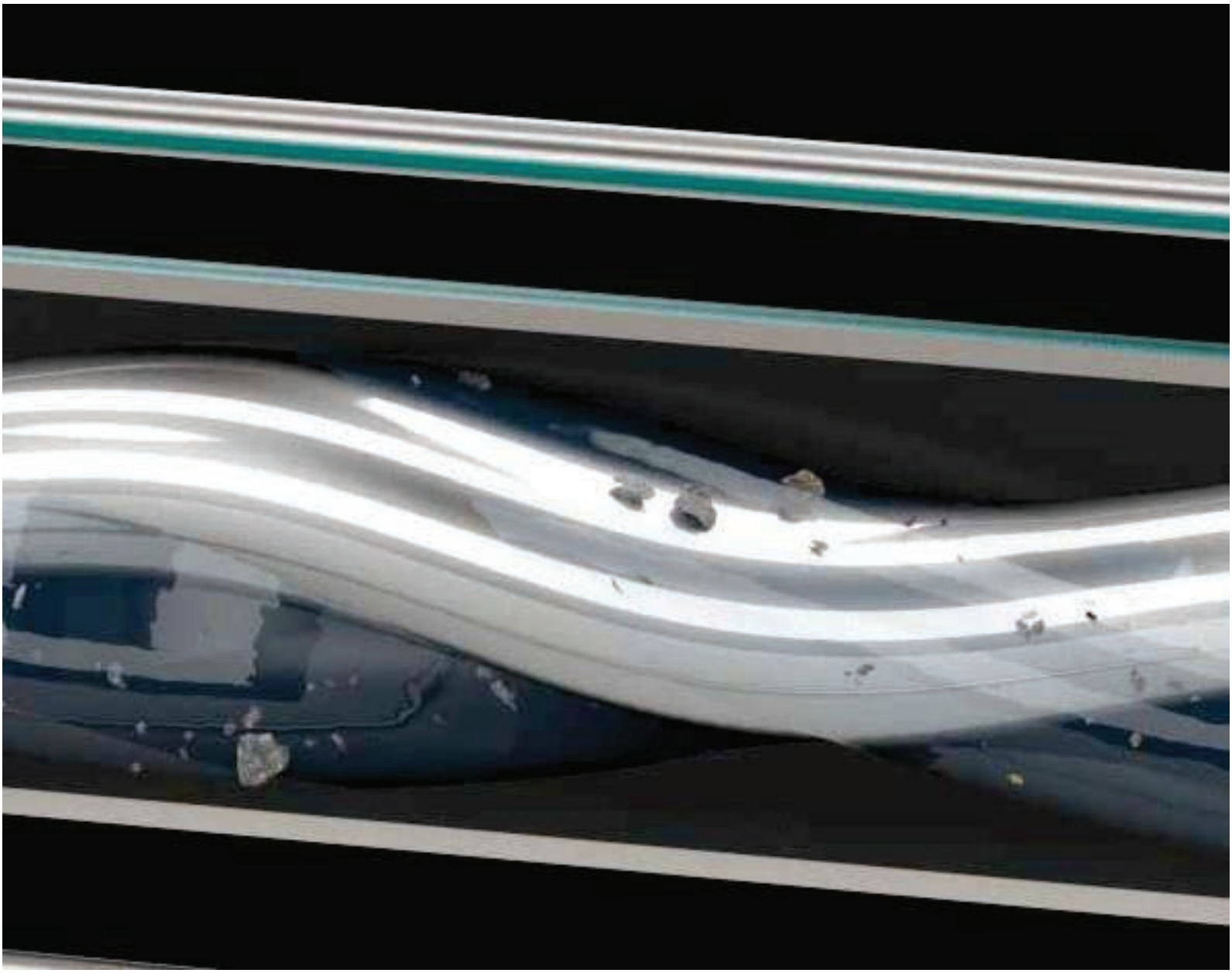

NEMO® Progressing Cavity

NETZSCH Pumps & Systems – Solutions you can trust ■

For six decades and at five sites all over the world, NETZSCH has been developing and producing high-quality, innovative pump systems supported by a large number of patents.

Good reasons

for choosing NEMO® Progressing Cavity Pumps

Benefit to the customer

Always focused on benefit to the customer, the NETZSCH product range covers everything from the smallest dosing pumps with flow rates of a few ml to high-performance pumps that pump up to 1000 m³/h. We also supply grinders and a comprehensive range of accessories. We supply everything in and around the pump to suit your application perfectly, because we understand and know your process.

Proximity to our customers

We guarantee proximity to our customers with 30 branches and more than 130 agencies around the world. Our application-oriented organisational structure across six business fields ensures that each of your contacts at NETZSCH® has detailed knowledge of the application, that national and international standards are complied with, and that contact routes are short, delivery is fast and on-site service is competent.

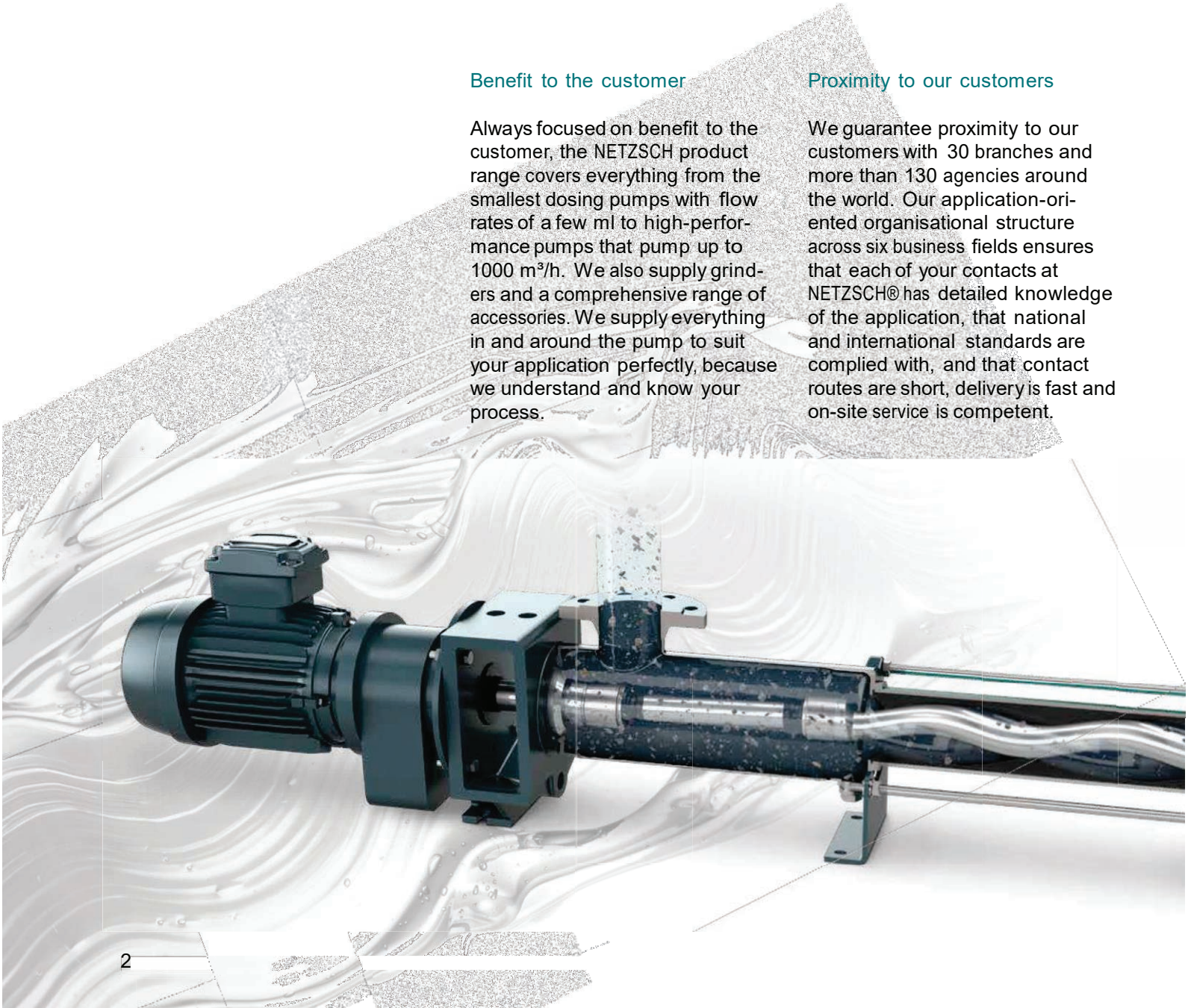

Individual pump selection

Each individual pump is precisely tuned to the requirements of the application to deliver optimum performance, service life and reliability.
The pumps are available with conveying elements in four different rotor/stator geometries, so that the right solution can always be found for your application.
Another benefit from our continued investment in product development is a range of gear joints selected to suit each and every application no matter how demanding.
And last but not least, we supply a comprehensive range of options and accessories, as well as expert service, as we want you to stay in close contact with NETZSCH even after your pump has been commissioned.

Please see for yourself and contact us.

Large capacity and pressure range

- Flow rates from just a few ml/h up to 1000 m^3/h
- Number of stages ranging from 1 to 8 for pressures from 6 to 48 bar (standard) or up to 240 bar (high pressure)



Broad range of applications

The pumps are primarily used with media that have the following features:

- Containing solids (max. solid size up to 150 mm) and free of solids
- Low to high viscosity (1 mPas – 3 millions mPas)
  Thixotropic and dilatant
- Shear sensitive
  Abrasive
- Non-lubricating and lubricating
  Aggressive (pH 0 – 14)
  Adhesive
- Toxic

Wide range of materials

Our range of metallic materials extends from simple grey cast iron and chrome-nickel steel to highly acid-resistant materials such as Duplex, Hastelloy and titanium to suit different conveying tasks.
Ceramics and plastics round off the list for aggressive and abrasive applications. Our elastomers range from highly abrasion-resistant natural rubber, to oil-, acid- and alkali-resistant elastomers and finally Aflas and Viton. For products in which elastomers cannot be used because of high temperatures or for reasons of durability, a large number of solid-based stators made from plastics or metallic materials is available.

(See pages 20 to 23)

Various conveying elements

Four different rotor/stator geometries are available to ensure the design is optimally adapted to the specific task.

(See page 18 and 19)

Large variety of shaft seals

The range of mechanical shaft seals includes simple seals with and without quench, double-acting seals arranged back to back or in tandem, and cartridge seals. For specific applications, stuffing-box packing, lip seals and special seals are available. A pump with magnetic coupling is available for use with toxic media – to guarantee 100% that there are no leaks.

(See pages 24 and 25)

Additional features

- High suction capacity - up to 9 mH_2O
- Direction of rotation and flow can be reversed
  Can be installed in any position
  Quiet, smooth running
- Temperatures from - 20 °C to + 200 °C

Continuous and smooth conveying

Design of the NEMO® Pump



1 Rotor

From wear- and corrosion-resistant metal designs to the wear-free ceramic rotor NEMO CERATEC®.

2 Stator

We manufacture stators to the latest standards. Minimised tolerance ranges thereby optimise the performance of the pump. Our unique, fully networked production and process data monitoring system, developed in-house, is backed up by consistent quality testing.

2.1 Stator with conventional technology

The stator inlet is vulcanised into the tubes with integrated seals on both ends. The inlets are available in a wide variety of NEMOLAST® elastomers, plastics and metals. Stator inlet with cone-shaped opening to improve product feeding into the conveying chamber.

(see pages 20 and 21)

2.2 Stator with iFD technology

The iFD-Stator consists of a two-part reusable housing with a polygonal profile and the NEMOLAST® elastomer housed within. The advantages of this new technology include a lower breakaway torque, higher efficiency, increased service life, simple and quick replacement, and environmentally friendly.

(See brochure NPS · 344)

3 Drive train

The drive and connecting shaft with coupling rod and two universal joints provide the power transmission from the drive to the rotor.

4 Shaft sealing

Standard design with single-acting, wear-resistant, bi-directional mechanical seals. On request, single-/double-acting mechanical seals from a range of manufacturers, as well as cartridge and special seals and stuffing-box packing.

5 Suction and pressure housing

Hydrodynamic design with flange or thread connections in accordance with DIN and international standards. Grey cast iron, chromium-nickel-molybdenum steel, rubber-lined or Halar®-coated cast iron and special materials as per requirements.

Halar® is a registered trademark of Solvay Solexis



NEMO® industrial block pump



optional: iFD-Stator® 2.0

6 Block design

As the drive is directly flanged onto the pump‘s lantern, the dimensions are compact, the overall weight is low, the shaft heights are constant irrespective of the design and size of the drive – the pump requires low maintenance, is easy to maintain and economical.

„Full Service in Place“

Pump service without removing the pump from the system

The NEMO® Progressing Cavity Pump in FSIP® design is available…

- in the sizes NM 045 to NM 105 for flow rates from 2 to 200 m³/h for differential pressures from 6 bar (1 stage) up to 12 bar (2 stages)
- in various materials, from steel to chrome-nickel-steel, various other materials on request
- with various stator elastomers, from highly abrasion-resistant natural rubber, to oil-, acid-, and alkali-resistant elastomers, to Aflas and Viton
- in all 4 geometries, S, L, D, and P to be customized optimally to your application

…and conveys

- substances with consistencies from runny to pasty, with or without solid content.

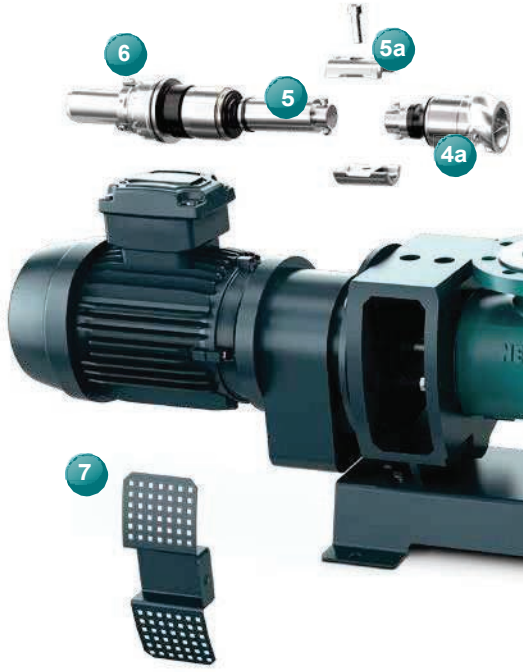

1 Housing in FSIP® design with inspection cover

The FSIP® design of the suction housing mainly differs from the standard design when you look at the new large inspection cover, but the housing dimensions remain unchanged. All installed NEMO® BY/SY pumps in the sizes mentioned above can be upgraded without any problem. After this upgrade you can fully service the pump while it is installed. All wetted parts are immediately accessible. All wearing parts can be replaced in less than half the time.

2 Inspection cover

The inspection cover is fixed by only 5 screws which can be easily removed without special tool.

3 Stator with iFD® technology

The stator consists of a reusable two-part stator housing and an exchangeable elastomer part. The benefits of the new technology are a reduced starting torques, higher degree of efficiency, prolonged lifetime, easier and faster change of the wear part and environmentally friendly disposal. In combination with the suction housing in FSIP® design there is the additional benefit that the rotor/stator can be changed simply and quickly outside the pump and without pre-tensioning, once the stator housing has been opened. The rotating unit can simply be lifted out and leaves the pump open from flange to flange. The formerly needed „service length“ is no longer required, giving the pump a much shorter footprint – a strong argument for the installation of the relatively long progressing cavity pumps. This is also valid when a standard stator is being used.

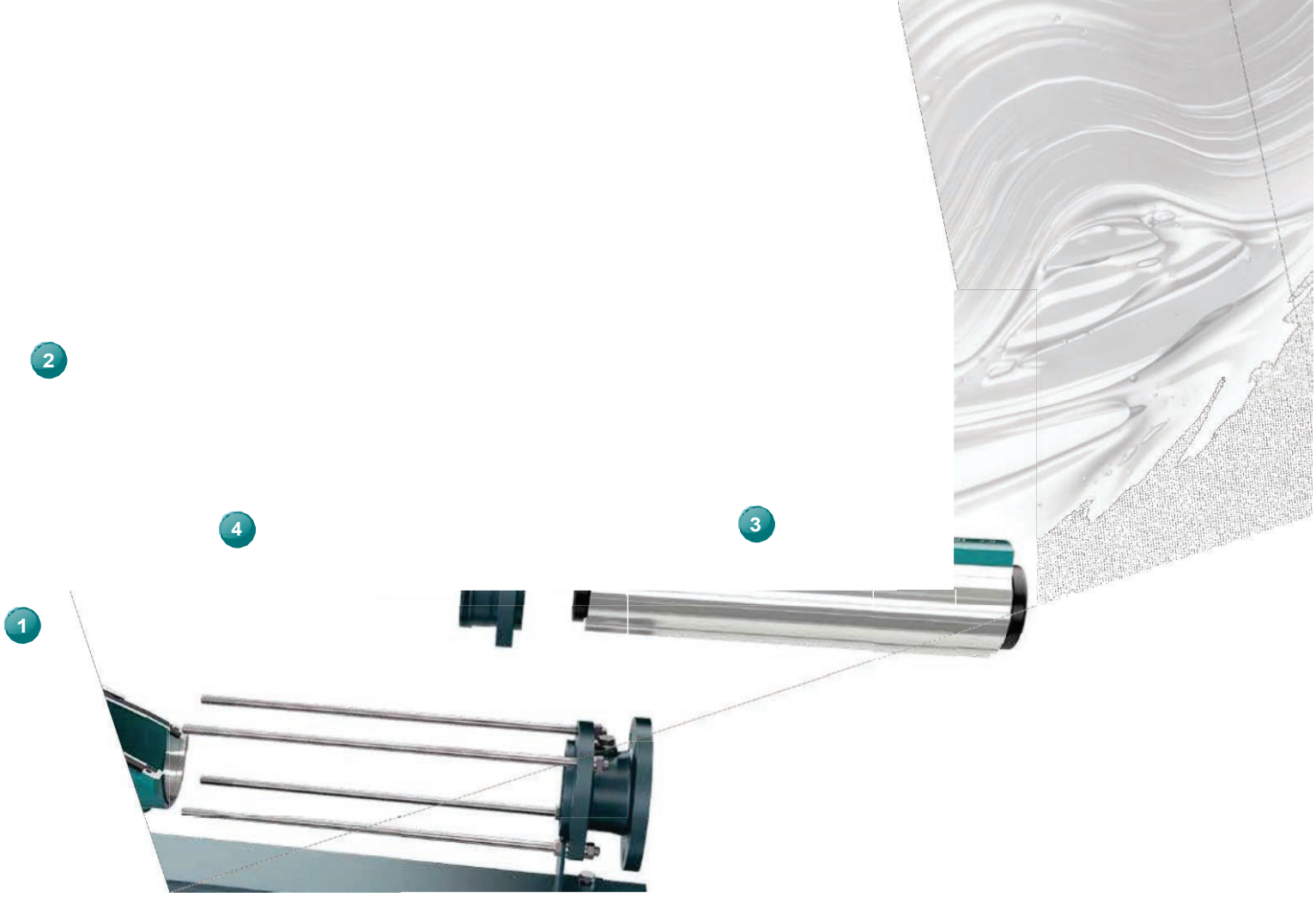

4 Rotor

In wear- and corrosion-resistant designs, various materials on request.

4a Cartridge joint and rotor head

For the pump in FSIP® design we offer you to order the rotor screw separately as a spare part, changing only the worn part and keeping the rotor head in combination with the cartridge joint. Besides you safe the time for the disassembly of the joint.

5 5a Drive train and sleeve coupling

Removing the inspection cover from the FSIP® pump you gain access to a sleeve coupling which joins the rotor to the coupling rod. Here only one screw has to be removed to split both elements from each other.

6 Shaft sealing

Standard for the FSIP concept is a MG 1 single acting mechanical seal in cartridge design, which can be easily removed through the large inspection opening. Other options upon request.

7 Block design

The drive is flanged directly to the lantern of the pump, resulting in compact dimensions, low total weight, constant axial heights irrespective of the construction type and size of the drive. The pump requires low maintenance, is easy to service and economical.

NEMO® Industrial Pumps

NEMO® progressing cavity pumps are used in all sectors of industries to convey almost all types of media continuously, smoothly, with low pulsation and dosing in proportion to speed.

NEMO® BY

in block design



Performance
Flow rates up to 400 m³/h at pressures up to 24 bar.

Fields of application
Industrial applications in environmental technology and in the food, oil and chemical industries for fluid to viscous media with and without solids.

Features
Compact design with directly flanged drive. Its low investment, operating and maintenance costs really make it stand out. Four rotor/stator geometries for optimum performance with every kind of application.

NEMO® SY

with bearing housing and drive shaft



Performance
Flow rates up to 500 m³/h at pressures up to 48 bar (standard) or up to 240 bar (special applications).

Fields of application
Industrial applications in environmental technology and in the food, oil and chemical industries for fluid to viscous media with and without solids.

Features
Design with bearing housing and two-part shaft allows all types of drive to be used universally and makes servicing the rotating parts simple and fast. Four rotor/stator geometries for optimum performance with every kind of application.

NEMO® Progressing Cavity Pump in FSIP® design

FSIP.ready, FSIP.advanced and FSIP.pro

Technique

The FSIP® design is fully compatible to the existing BY and SY series. The concept consists of three stages, FSIP.ready, FSIP.advanced and FSIP. pro, which are designed to upgrade already installed pumps step by step, or which are available for new installations according to the individual needs of our customers.



FSIP.ready

Basic BY/SY pump including revised housing design with large inspection cover, with standard drive train and various seal arrangements.

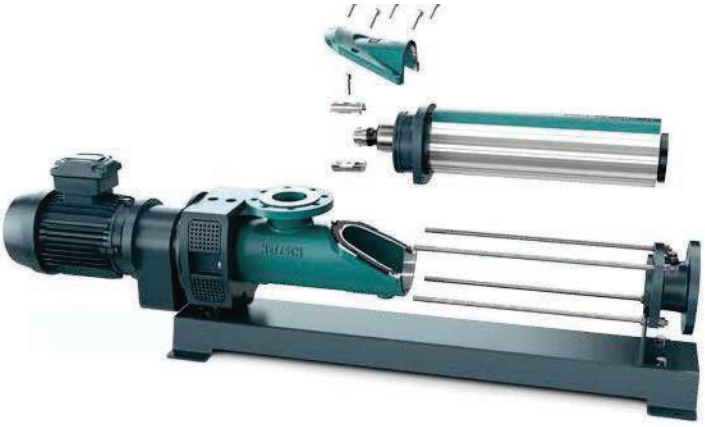

FSIP.advanced

BY/SY pump with new housing design and large inspection cover, split coupling rod and various seal arrangements. Rotor and stator can be serviced in place.

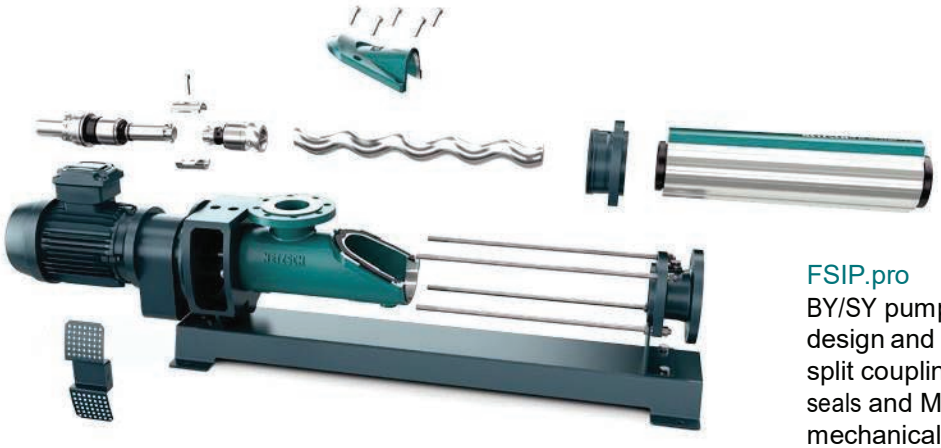

FSIP.pro

BY/SY pump with new housing design and large inspection cover, split coupling rod and 2 cartridge seals and MG 1 single acting mechanical seal for „Full Service in Place“.

NEMO® C.Pro®

Mini dosing pump in plastic design



Performance
Flow rates from 0.5 up to 1,500 m³/h at pressures up to 20 bar.

Fields of application
Industrial applications in environmental and chemical technology to convey and dose low- to moderately viscous media with and without solids.

Features
High dosing accuracy (deviation of < 1%). Compact design with directly flanged drive.

Further information

NEMO® C.Pro®
Brochure NPS · 313

NEMO® Hygienic Pumps

The pumps are designed and manufactured in accordance with EHEDG and QHD guidelines, are CIP/SIP-capable and comply with the US 3-A Sanitary Standards. Two rotor/stator geometries are available to ensure optimum performance*.

These pumps are suited for hygienic applications in the foodstuff, pharmaceutical, cosmetic and biotechnology industries for low and highly viscous media with and without solids.

*excluding NEMO® Mini BH

NEMO® BH

Hygienic pump

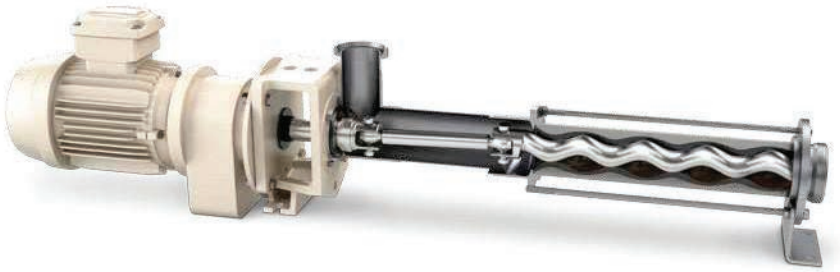

Performance
Flow rates up to 140 m³/h at pressures up to 24 bar.

Features
Compact design with directly flanged drive. Its low investment, operating and maintenance costs really make it stand out.

NEMO® BH

Hygienic Plus Pumpe with heating jacket

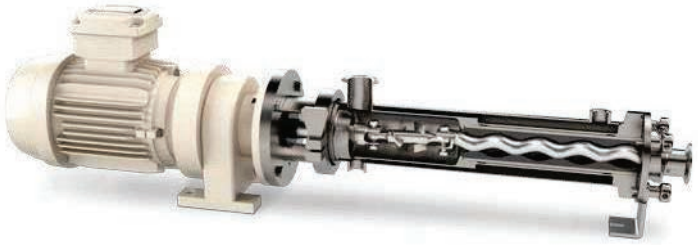

Performance
Flow rates up to 40 m³/h at pressures up to 12 bar.

Features
This pump is suitable for all hygienic applications in the foodstuff, pharmaceutical, cosmetic and biotechnology industries, especially for viscous media which have to be heated or cooled. The pump operates reliably and guarantees your process because the specially designed mechanical seals are arranged with no dead spaces, the housing and stator are heated, the products are conveyed smoothly and it can be cleaned to standard. It can also be taken apart easily for maintenance thanks to quick-fit connections. It is available with various rotor/stator geometries and has open hygienic pin joints, exposed housing seals, mixing elements on the coupling rod and a heating jacket over the entire length of the stator and pump housing. All surfaces that come into contact with the product are polished. This prevents medium deposits forming and facilitates cleaning.

NEMO® MINI BH

Hygienic Mini Plus Pump

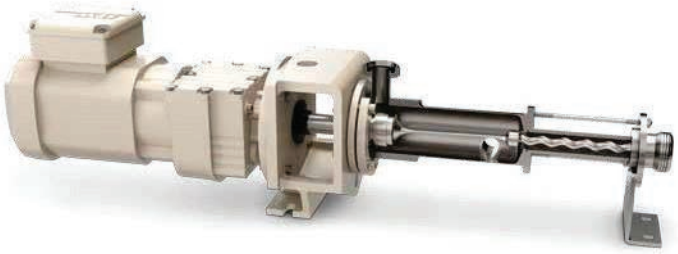

Performance
Flow rates from 0.1 up to 500 m³/h
at pressures up to 36 bar.

Features
The flexible rod is free of dead space and is wear- and maintenance-free so that it can be used even with highly sensitive and abrasive products. High dosing accuracy (deviation of < 1%). Compact design with directly flanged drive gives you low investment, operating and maintenance costs.

NEMO® SH

Hygienic Plus Pump



Performance
Flow rates up to 140 m³/h at pressures up to 24 bar.

Features
The flexible rod is free of dead space and is wear- and maintenance-free so that it can be used even with highly sensitive and abrasive products. The design with bearing housing and drive shaft means it can be used with all types of drives.

NEMO® SA

Aseptic pump



Performance
Flow rates up to 140 m³/h at pressures up to 24 bar.

Features
The flexible rod is free of dead space and is wear- and maintenance-free so that it can be used even with highly sensitive and abrasive products. The pump housing has a reduced diameter and a product inlet displaced towards the shaft sealing (outlet in vertical installation). The pump chamber is therefore completely free of dead space and the flow of the product through the pump is also optimised. The cleaning ports are arranged tangentially and pressure port eccentrically for residue-free self-emptying. All sealing points are designed for steam or sterile condensate and the pipe work is installed ready for use to prevent contamination from the environment. As standard, the stator is supplied with reduced elastomer wall thickness for use at varying product temperatures and with a stator protector to prevent dry running and overheating. The design with bearing housing and drive shaft means it can be used with all types of drives.

Further information

Business Field
Food & Pharmaceutical
Brochure NPS · 308

NEMO® Hopper Pumps

We provide you NEMO® progressing cavity pumps in diverse designs and materials, designed according to the location of use. Low viscosity and also abrasive sludge is reliably conveyed using our pumps with flanged connections.

For media with a high dry material content, such as de-watered sludge are available either for different designs of the NEMO® hopperpumps with screw conveyors or also with our aBP Module® to prevent bridging.

* Technical notes: the hopper dimensions can be adjusted to suit the specific application.

NEMO® BO/BS

in block design with directly flanged drive or as NEMO® SO/SS with bearing housing and drive shaft

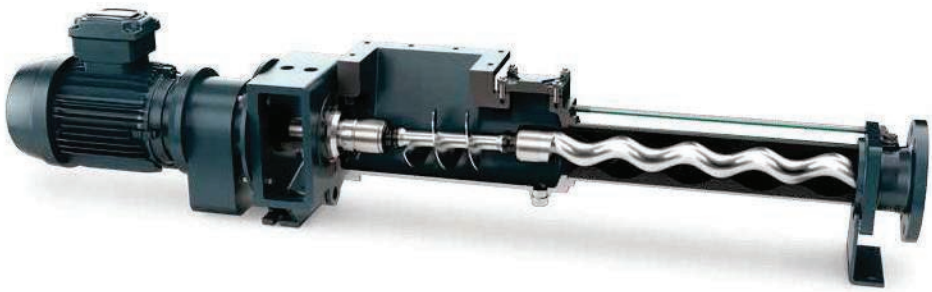

Performance
Flow rates up to 200 m³/h at pressures up to 24 bar.

Fields of application
Industrial applications in environmental technology, the food industry and the chemical industry for viscous to non-free flowing media with and without solids.

Features
Housing with rectangular/quadratic feed hopper and coupling rod with conveying screw with compression chamber for improved product feeding into the conveying elements.

NEMO® B.Max®

in block design with directly flanged drive or with bearing housing and drive shaft



Performance
Flow rates up to 70 m³/h at pressures up to 48 bar.

Fields of application
Industrial applications in biogas and environmental technology for viscous to non-free flowing media with and without solids.

Features
Housing with large, rectangular feed hopper, coupling rod with patented, horizontally positioned conveying screw for optimum product feeding into the conveying elements. The additional, hydrodynamically designed flushing stud installed on the hopper housing ensures the substrates are fed and mixed optimally into the biomass.

Further information

Pulp Feeding
Brochure NPS · 061

NEMO® BP

in block design with directly flanged drive or NEMO® SP with bearing housing and drive shaft

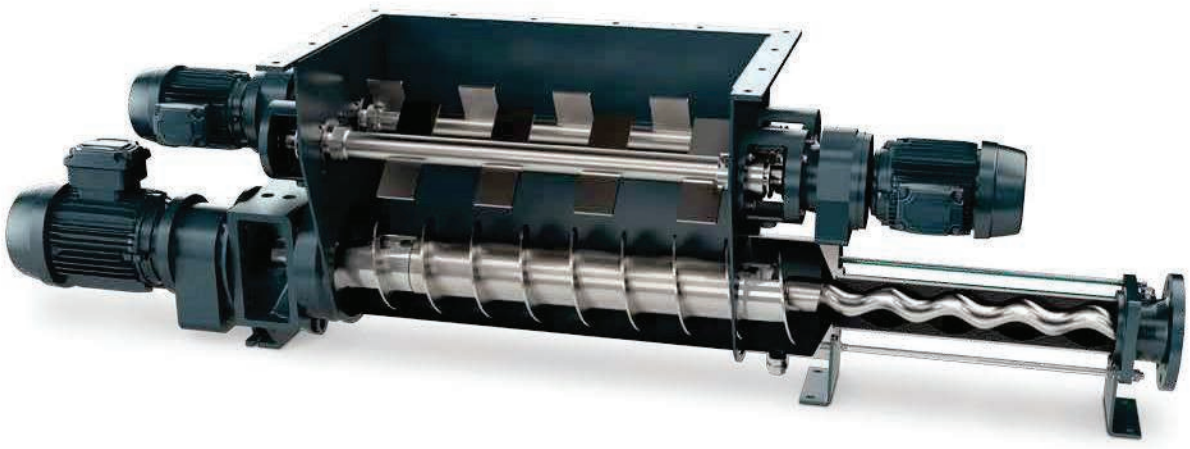

Performance
Flow rates up to 200 m³/h at pressures up to 48 bar.
NEMO® BP/SP available from size NM090.

Fields of application
Industrial applications in environmental technology, the food industry and the chemical industry for compacted, lumpy and crumbly media that tends to bridge.

Features
Housing with integrated bridge breaker to prevent bridging and to mix in additives, enlarged rectangular feed hopper and removable, cone-shaped compression chamber, coupling rod with patented, horizontally positioned conveying screw for optimum product feeding into the conveying elements.

NEMO® BF optional mit aBP-Module®

in block design with directly flanged drive or NEMO® SF with bearing housing and drive shaft

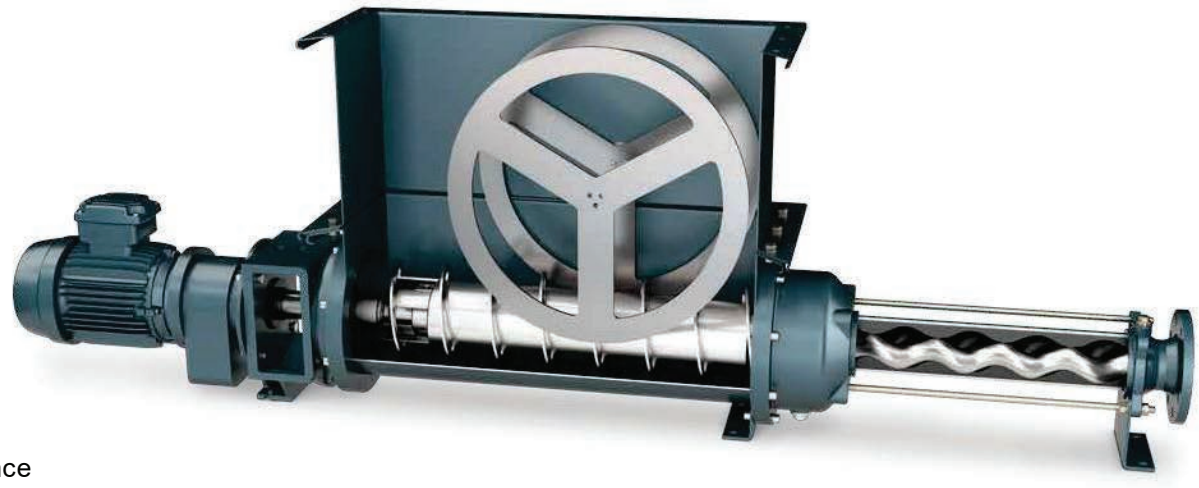

Performance
Flow rates up to 200 m³/h at pressures up to 48 bar.
NEMO® BF/SF with aBP-Module® available from size NM045 to NM090.

Fields of application
Industrial applications in environmental technology, the food industry and the chemical industry for highly viscous, compacted and crumbly media. For media that tend to bridge, the pump is fitted with the optional aBP-Module®.

Features
Housing with enlarged, rectangular feed hopper and with removable, cone-shaped compression chamber, coupling rod with patented, horizontally positioned conveying screw for optimum product feeding into the conveying elements.

Further information

aBP-Module®
Brochure NPS · 070

NEMO® Immersible Pumps

NEMO® Immersible Pumps are used to empty barrels, containers, tanks, sedimentation tanks, pits etc. and where space is restricted, there is a risk of cavitation or there is very low NPSH. The pumps are also used to empty containers holding materials that are hazardous to water or the environment for which standard emptying via a flange on the bottom of the container is not permitted.

NEMO® Immersible Pump BT

with suspension bracket

This pump is used to empty open barrels and containers. It is fitted with a clamp to be suspended from a crane. Immersion depth up to 3m.

Performance
Flow rates up to 140 m³/h at pressures up to 24 bar. Depending on the specific application, various models/immersion variants are available. The immersion depth is adapted specifically to the application.

Features
Compact design with directly flanged drive. Four rotor/stator geometries for optimum performance with every kind of application. Immersion depths up to 10m. The immersion tube length can be modified by extending the pump housing, adding a suction pipe or by a combination of the two.





NEMO® Immersible Pump BT

with integral mounting plate

Depending on pump size, speed and immersion depth up to 10 m, an additional support guide is available to secure the pump to the bottom or to the wall near the bottom. Removal of the pump from a full tank is possible because the guide units are self-centering and secure the pump suction without fixings. In the variant with discharge connection below the mounting position the discharge connection of the pump is below the tank lid. The product is either piped to the outside vertically through the lid via a 90 ° elbow or horizontally through the tank wall. This minimises the dead space in the pump housing thus reducing the overall height of the pump above the tank lid.

Performance
Flow rates up to 140 m³/h at pressures up to 24 bar. Depending on the specific application, various models/immersion variants are available. The immersion depth is adapted specifically to the application.

Features
Compact design with directly flanged drive. Four rotor/stator geometries for optimum performance with every kind of application. Immersion depths up to 10m. The immersion tube length can be modified by extending the pump housing, adding a suction pipe or by a combination of the two.

Operating method and conveying principle in NEMO PUMPS® with different rotor/stator geometries

Modular system

NEMO® Pumps belong to the group of rotary positive displacement pumps. The two conveying elements are the rotor and the fixed stator, in which the rotor eccentrically turns.

As all four pump geometries have the same outer dimensions. We have a modular design where – apart from rotor and stator – all other components are identical. When a change in flow rate or pressure is required, installed NEMO® Pumps can be adapted to the new operating conditions by simply changing rotor and stator.

S Geometry

- Very smooth pumping
- Compact dimensions despite large number of stages
  Large rotor inlet cross-sections
- Low flow velocity/NPSH
  Pumps compacted products
- Pumps large solid particles

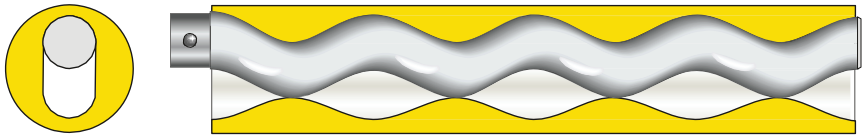

- 1/2 lobe Double stage Flow rate:
- 100%
  Differential pressure: 12 bar

L Geometry

- Good volumetric efficiency/long service life thanks to long seal line between rotor and stator
- Compact dimensions with high flow rates

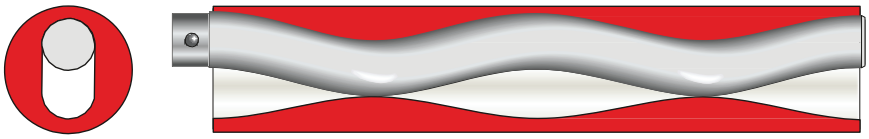

- 1/2 lobe
- Single stage Flow rate: 200% Differential
- pressure: 6 bar

D Geometry

- Very compact dimensions despite high pressures and flow rates
  Almost pulsation-free pumping
- High dosing accuracy

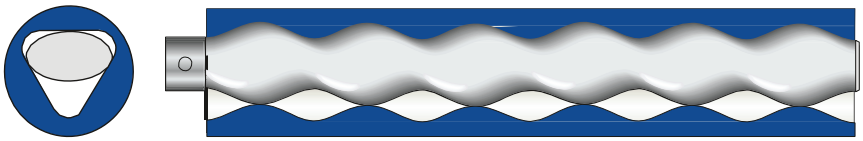

- 2/3 lobe Double stage Flow rate: 150%
- Differential pressure: 12 bar

P Geometry

- Compact dimensions in conjunction with very high flow rates
  Almost pulsation-free pumping
  High dosing accuracy
- Good volumetric efficiency/long service life thanks to long seal line between rotor and stator



- 2/3 lobe
- Single stage Flow rate: 300% Differential
- pressure: 6 bar



Testing properties and quality

NEMOLAST®

elastomer quality developed, continuously tested and optimised at NETZSCH



Developing new blends



Manufacturing blends

Development

Elastomer research & development is in-house at NETZSCH. At its in-house laboratory and in close collaboration with selected materials suppliers established over many years, NETZSCH develops and tests elastomer blends and optimises them for the specific requirements of customers.

We therefore offer each customer the optimum quality of elastomer for the media to be conveyed in terms of abrasion resistance, temperature range, dynamic load and chemical resistance – something other suppliers cannot offer. Only using original NETZSCH spare parts guarantees our pumps remain reliable.

Production

60 years of experience in a wide range of industries and processes and 40 years of experience developing and manufacturing elastomers for NEMO® pumps led up to the development of complex bonded parts made of glass fibre, metal and elastomer for the casing liners of our new generation of TORNADO® T2 rotary lobe pumps.

To meet the constantly growing demand for our pumps and the associated demand for spare parts, NETZSCH invested in a new 4000 m² production hall in Waldkraiburg to produce elastomer parts using the latest production methods and the latest product standards. Alongside five extruder sets to manufacture conventional tube stators, injection moulding machines and presses were also acquired to manufacture iFD stators, lobes and casing liners for rotary lobe pumps.

Specific requirements in oil production and transfer

This applies in particular to the difficult operating conditions in oil production. NETZSCH stators stand out with their long service life, leading to a significant reduction in operating costs.

Both for elastomer development as well as for optimal material selection the specific bore hole and fluid conditions have to be considered. NETZSCH pumps are used as multiphase pumps, which means that gas-oil-water mixtures and various solids are conveyed simultaneously or alternately.

Therefore, we have developed special elastomer mixtures, for conveying these phases in changing and variable concentrations. Additional challenges to the material are the fluctuating and sometimes very high temperatures and the high differential pressure up to 300 bar between the suction and pressure side. Very aggressive gases (such as H_2S and $C0_2$) or oils (with high aromatic content) can also be present.



Extruder with stator for oil production



Press with casing liners for TORNADO® T2



Injection moulding machine for iFD-stators®

NEMOLAST® – stator qualities for industrial applications

Material description/ NEMOLAST® Code	11	31	43		
Colour	black	black	white	black	black
Base polymer	Natural rubber/ butadiene rubber (NR/BR)	Chlorinated polyethylene (CM)	Ethylene propylene diene rubber (EPDM)	Ethylene propylene diene rubber (EPDM)	Hydrogenated acrylonitrile butadiene rubber (HNBR)
Ageing resistance	0	++	+	+	++
Ozone resistance	–	++	+	++	++
Petrol resistance	––	––	––	––	0
Oil and fat resistance	––	–	––	––	++
Acid resistance	0	++	0	+	0
Alkali resistance	0	++	0	+	0
Hot water	0	+	+	+	0
Min. operating temperature	-20			-10	
Max. operating temperature	+90			+110	
Abrasion resistance mm³	<40	<90	<320	<130	<40
Abrasion resistance	++	++	0	+	++
Hardness range (shore)	64 ± 5	73 ± 5	70 ± 5	70 ± 5	73 ± 5
FDA	no	no	no	yes	no
Nitrosamine-free	no	no	no	yes	no

NEMOLAST® stator qualities for oil production and transfer

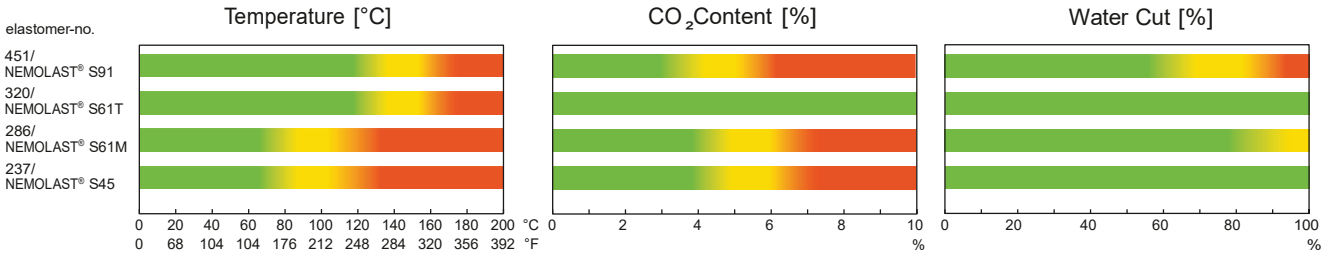

					Solid Stators	
62L*2)	65L*1)	66L*2)	85	91*2)	teflon	cast iron**3)
black	black	black	opaque	black	white	grey
Acrylonitrile butadiene rubber (NBR)	Acrylonitrile butadiene rubber (NBR)	Acrylonitrile butadiene rubber (NBR)	Silicone rubber (SI)	Fluororubber (FKM FPM)	Polytetrafluo-roethylene	Grey cast iron
0	0	0	+	++	++	For neutral media
–	–	–	+	++	++	
0	0	0	– –	++	++	
+	+	+	+	++	++	
0	0	0	– –	++	++	
0	0	0	+	++	++	
0	0	0	+	++	+ +	
-5	-5	-5	-40	-5	-20	-20
+100	+100	+100	+150	+160	+160	+200
<60	<70	<130	<60	<160	–	–
++	++	+	++	+	–	–
73 ± 5	70 ± 5	68 ± 5	65 ± 5	73 ± 5	–	–
no	yes	yes	yes	no	yes	–
yes	yes	yes	yes	no	–	–

*1) only for TORNADO® T2 rotary lobe pumps
*2) also for TORNADO® T2 rotary lobe pumps
*3) different solid stator materials on request

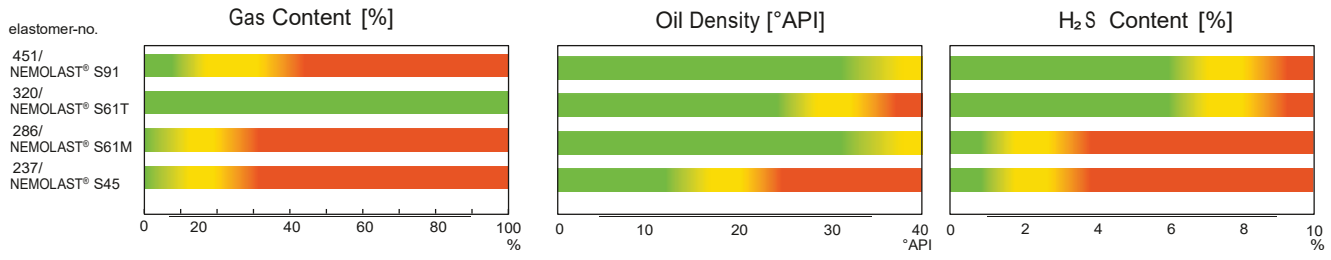

Please take into consideration that the given material limits are a guideline.
The final selection has to be based on a detailed analysis (e.g. swelling test).

recommended range
caution range
not recommended

Having the right joint in your NEMO® pump has a decisive impact on operational reliability and life-cycle costs. The optimum joint is selected on the basis of the application, the operating conditions and the conveyed media. To achieve the optimum performance of a NEMO® pump, joints at NETZSCH also be further developed and adapted to the individual conditions.

The right NEMO® joint

FOR EVERY APPLICATION

B Universal Pin Joint

The NEMO® universal pin joint is the standard joint for NEMO® industrial pumps thanks to its simple design and outstanding degree of reliability. The joint has a very long service life, as it is oil-filled and sealed using a NEMO® SM® seal. The joint can also be used without a seal at extremely high temperatures and flow rates where elastomers are not suitable. The joint, has just a small number of components and can therefore be easily dismantled for maintenance.

V Pin Joint

The NEMO® V pin joint functions in the same way as the B pin joint, but has a longer service life under tough operating conditions thanks to hardened bushings, which are fitted into boreholes in the coupling rod and the rotor/drive shaft head and can be replaced easily during maintenance.

H Hygienic Pin Joint

This open, patented pin joint has been developed specifically for use in NEMO® hygienic pumps. The joint has no crevices or dead space and is polished, so is easy to clean. The hygienic pin joint meets the requirements of the US 3-A Sanitary Standards.

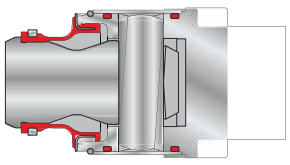

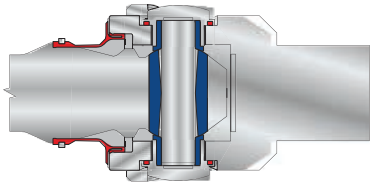

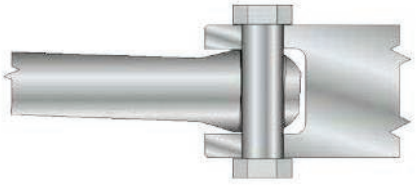



Flextec Flexible Rod

This flexible rod is wear- and maintenance-free, because no parts move against each other as in other joint types. It also does not require lubricants or seals, so that it can be used at the extremely high ambient pressures and temperatures. As it is free of crevices and dead space, the flexible rod is also used to convey highly sensitive products in aseptic conditions. The flexible rod meets the requirements of the US 3-A Sanitary Standards.

K Joint

The patented K joint was designed for highly demanding industrial applications. It is kinematically designed so that the torque and axial loads are shared by separate elements within the joint. The joint is oil lubricated and sealed hermetically by two joint seals that are resistant to/compatible with the lubricant and the pumped product. Filling the space between the two joint seals additionally with oil means that the joint can be used at ambient pressures of up to 12 bar.

Z Double Seal Pivot Joint

For large flows and/or pressures (from bearing block size NM125SY upward), NEMO® industrial pumps are equipped with kinematic precision cartridgetype double seal pivot joints, which have been designed with extremely high permanent loads, torques and axial forces in mind. The joint is oil lubricated and sealed hermetically by two joint seals that are resistant to/compatible with the lubricant and the pumped product.



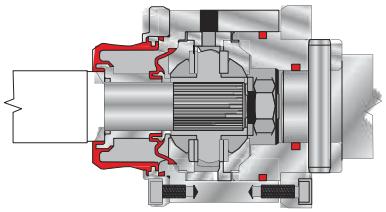

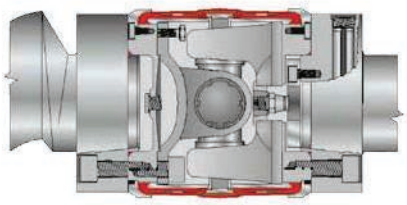

FROM A TO Z

Accessories & Service

Accessories to increase the operational safety of both pump and plant to prevent downtimes

Process monitoring

Dry running protectors safeguard elastomer parts of the pump against thermal damage and protect the pump.

- Dry running protection (STPA2A, STP2D)
  Flow sensors for solid stators
- Speed monitoring device

Overpressure and underpressure protectors safeguard the pump and protect downstream aggregates and valves against overpressure and underpressure.

  Diaphragm Pressure Gauge
  Pressure control device DTSL 3

- Multi-function pressure instrument
- By-pass line

Seal Support Systems

Additional flushing, quench or pressurised flushing systems that flush or close the seals with clean conveyed medium are often required to ensure shaft seals function correctly and reliably.

  Quench pot Permanent lubricator Pressurised flush

- for double mechanical seals

Tools and additional equipment

A large number of useful equipment is available to correctly maintain and smoothly operate your pumps.

  Gear joint filling unit

- Ring dosing nozzle
  Chemical anchor
- Stator removal tool

Protection Units and Trolleys

In all areas of production within the food, pharmaceutical and cosmetic industries, a range of optional parts are available to ensure uncompromising hygiene and to enable mobile use.

  Covers for drives
  Transport devices

- Machine feet - flexible, rigid

Further information

NETZSCH Customer Service
Brochure NPS · 400

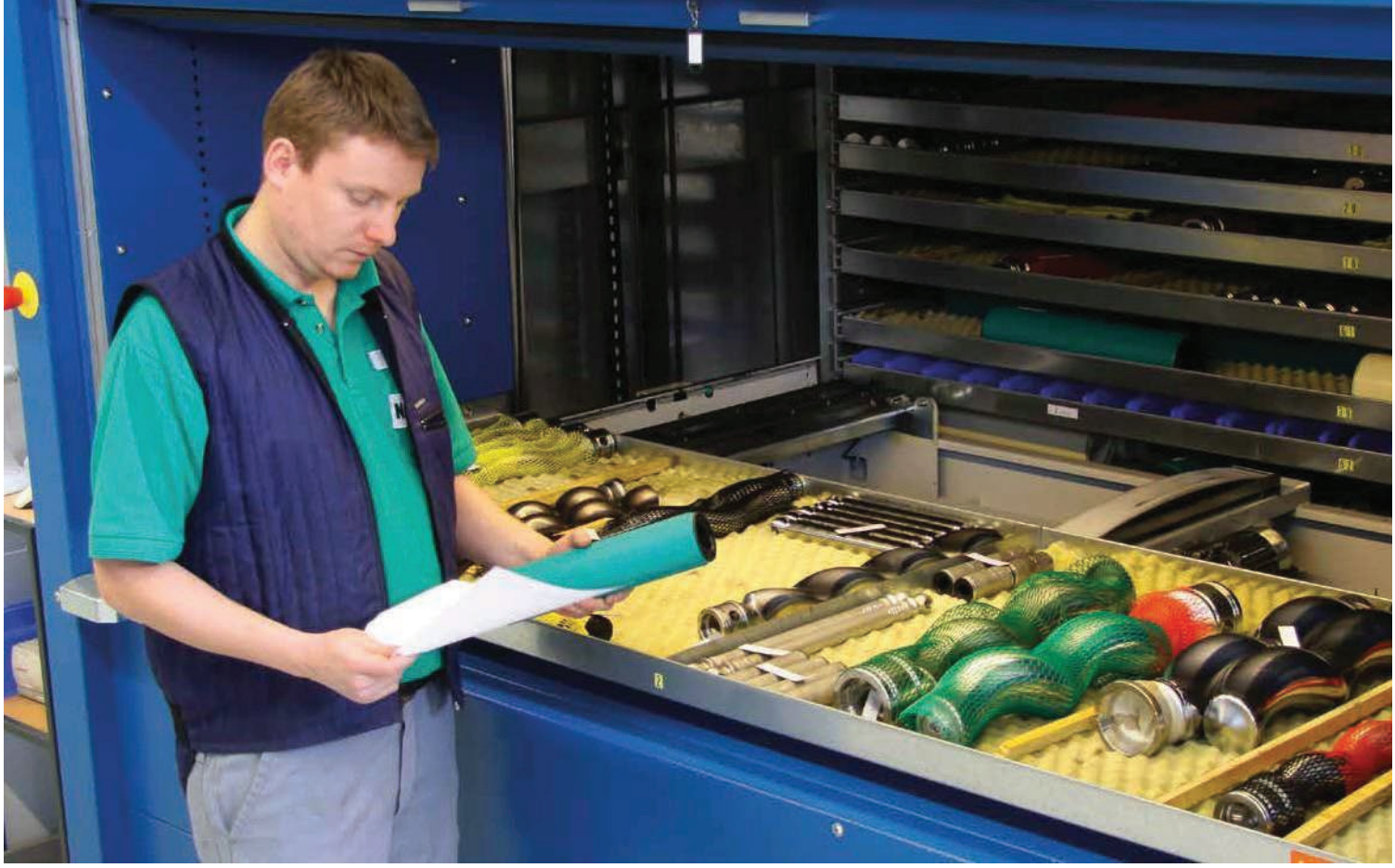

NETZSCH Service

The benefit to you

Advice, service and quality are out strengths. Strict quality standards, test procedures and certification in accordance with DIN EN ISO 9001 guarantee that you receive the very highest quality without exception. To maintain the performance and quality of your pump, we continue to provide support after delivery in all aspects of your pump to ensure it operates reliably in your system. We have experience over 60 years with more than 500,000 installed pumps behind us.

Spare Parts and Service

In your area welltrained service partners are available for quick and economic service of the pumps at your premises. You will find your personal service partner in our homepage at **www.netzsch.com** | Pumps & Systems | Consultation/ Service.

DAF POLYMER DOSING PUMPS P04-770, P04-780, P04-790
NM015BY01L06B PUMP

TECHNICAL SPECIFICATIONS

NETZSCH Canada, Inc. 500 Welham Road, Barrie, On., L4N 8Z7
Ph: 705-797-8426 Fax: 705-797-8427 Toll Free: 1-866-683-7867

Pump Quotation - Technical

Offer: N180717ST-01(REV03) (Item #30)

NEMO® pump with base plate and drive: NM015BY01L06B

The physical characteristics of the pumped product, the application details, as well as the General Operating Conditions detailed in our offer have been taken from your inquiry or where not specified have been assumed by us. In the event of an order we would ask you to check any assumptions and all details as they will become contractually binding along with the selection of pump model, Drive, all specifications, and materials of construction, based on these details.

Product:			Polymer
Composition			not advised
Specific gravity	assumed	kg/dm³	1.0
Particle size/solid ball size	allowed	mm	maximum 2 / 9
pH value	Approx.		not advised
Solids content (w/w)		% TS	not advised
Dynamic viscosity	approx.	cP	2000
Vapour pressure		mm Hg	Not advised

Application details:		*DW #*	*172020*	*172020*	*172020*	*172020*
Flow rate (Q)	approx.	LPH	150	175	200	250
	approx.	GPM	0.66	0.77	0.88	1.1
Differential pressure	approx.	psi	85	85	85	85
Suction pressure	assumed	psig	Flooded	flooded	flooded	flooded
Discharge pressure	approx.	psig	85	85	85	85
Pump operating speed	approx.	RPM	200	230	260	310
NPSHr	Approx.	M	1	1.1	1.15	1.15
Sliding velocity	approx.	ft/s	0.65	0.85	0.95	1.15
Frequency	approx.	Hz	38	44	50	60
Power required at drive shaft	approx.	HP	0.12	0.13	0.14	0.15
Running torque	approx.	lb-ft	2.6	2.6	2.6	2.6
Starting torque	approx.	lb-ft	1.6	1.6	1.6	1.6
Operating temperature	assumed	°C	20	20	20	20

Assembly specification

installation	vertical

General operating conditions

Installation area	inside
ambient Temperature	approx. 20°C / 70 F
humidity	up to 75%
application type	Continuous operation
operating hours	24 hours/day
service voltage	3/60/575

Painting	coating system	Netzsch standard

Operating and Maintenance Instructions

Standard documentation in accordance with the 98/37/EG Machinery Directive.
Special documentation is available on request and would be charged for.

number	1
medium	Paper
language for O&M's and spare parts list	English
dispatch method	shipped with pump

NETZSCH Canada, Inc. 500 Welham Road, Barrie, On., L4N 8Z7
Ph: 705-797-8426 Fax: 705-797-8427 Toll Free: 1-866-683-7867

Offer: N180717ST-01(REV03) (Item #30)
Date: January 14, 2019

Customer No.:

NEMO® NM015BY01L06B Pump

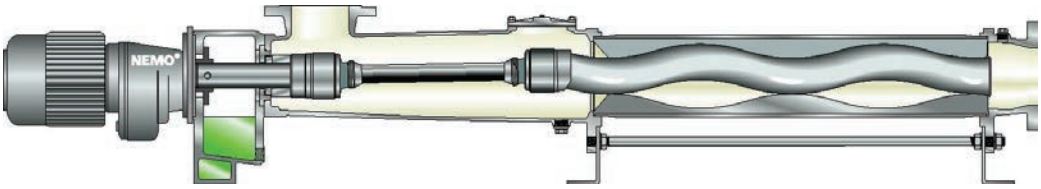

Characteristics and benefits of the NEMO® BY Block pump:

- Reliable and sophisticated construction
- Space-saving construction
- Modular construction system
- 4 different stator – rotor geometries available for most sizes
- Low investment and operating costs
- Low maintenance expenses

General characteristics	
name plate on the pump	in English (Stainless steel)
direction of rotation	to the right, clockwise (as viewed from drive end)

Pump Pedastal	
material	Cast iron 0.6025

Pump housing / End connection	
housing material	316 Stainless Steel
Suction flange position	horizontal sidewards to right from drive end
function of housing connection	pressure connection
flange design	N.A.
nom. dia. & pressure for pump housing	1" ANSI Class 150 B16.5
suction flange design	N.A.
nom. dia. & pressure of suction flange	1" ANSI Class 150 B16.5
Function of end connection	discharge connection
housing seals	FPM

Shaft seal	
type	Single mechanical Seal
shaft seal materials	Silicon Carbide Faces – Viton Elastomers
shaft seal type	Burgmann Single MG1-G60 – Q1Q1VGG

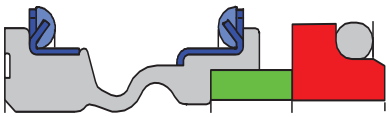

Rotating parts	
rotating parts materials	316 Stainless Steel

NETZSCH Canada, Inc. 500 Welham Road, Barrie, On., L4N 8Z7
Ph: 705-797-8426 Fax: 705-797-8427 Toll Free: 1-866-683-7867

Offer: N180717ST-01(REV03) (Item #30)
Date: January 14, 2019

Customer No.:

Joints	
joint type	pin joint
sealing type	SM Pin joint
joint sealing material	Viton/316 Stainless Steel
joint lubrication	Mineral oil

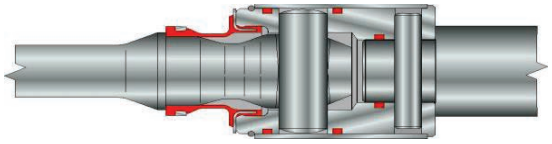

Rotor	
rotor material	316 Stainless Steel
temperature range for Stator expansion	UM20

Stator	
stator material	NEMOLAST® S91- Viton

Drive

Helical gear reducer	
manufacturer	Nord
type	SK072.1F-56C
gear ratio	5.5
speed @ 60 Hz	312
mounting position	M4
Motor	
Manufacturer	Marathon Black Max
motor HP	0.5
winding voltage	575
voltage range	+/- 10%
frequency / range	60 Hz / 1000:1 @ CT
number of poles	4
number of phases	3
Motor speed	1720 rpm
protection type	TENV
insulation class	F
motor conduit box position	Top side

Baseplate

assembly specification - material	Structural steel base plate(0.5" thickness special)

Approximate weight of pump assembly	95 lbs.

Temperature sensor for run-dry protection
Supplied progressive cavity pumps are equipped with a temperature sensor in the stator sleeve for run-dry protection and associated relay.

NETZSCH Canada, Inc. 500 Welham Road, Barrie, On., L4N 8Z7
Ph: 705-797-8426 Fax: 705-797-8427 Toll Free: 1-866-683-7867

Offer: N180717ST-01(REV03) (Item #30)
Date: January 14, 2019

Customer No.:

Performance curve:

NM015--01L Performance Curve
elastomer quality: standard

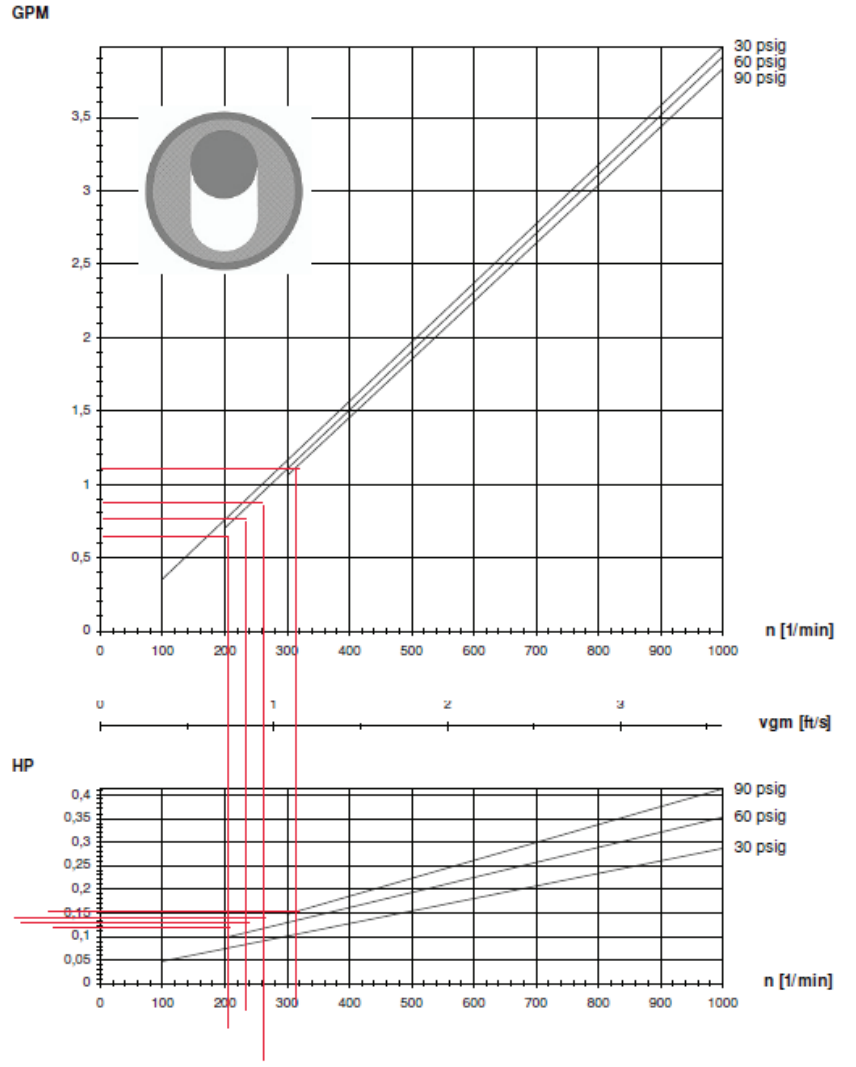

starting torque T(L) = 1,628 lbft

pressure	T
30 psig	1,85 lbft
60 psig	2,294 lbft
90 psig	2,664 lbft

Valid for water (1 cP) at 20 °C (70 °F). Tolerances are in accordance with VDMA 24284 (+10%/-5%).

www.netzsch-pumpen.de

NETZSCH Canada, Inc. 500 Welham Road, Barrie, On., L4N 8Z7
Ph: 705-797-8426 Fax: 705-797-8427 Toll Free: 1-866-683-7867

Offer: N180717ST-01(REV03) (Item #30)
Date: January 14, 2019

Customer No.:

Pump drawing:

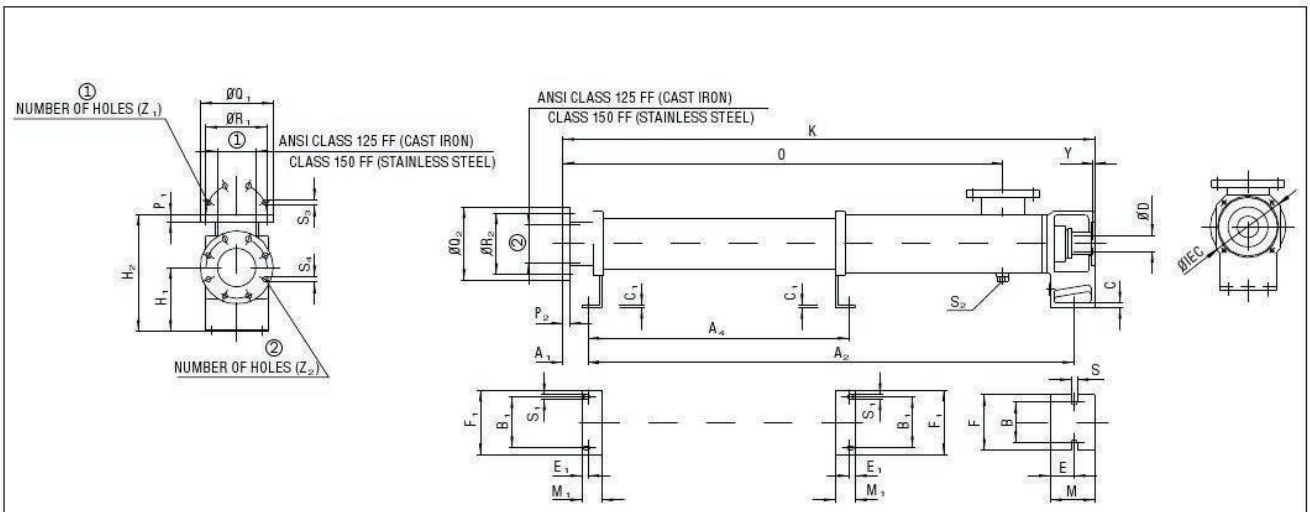

TYPE		BASIC DIMENSIONS																				ANSI PIPE CONNECTION						SHAFT END	
		A_1	A_2	A_4	B	B_1	C	C_1	E	E_1	F	F_1	H_1	H_2	K	M	M_1	O	S	S_1	S_2	Y	① / ②	P_1 / P_2	Q_1 / Q_2	R_1 / R_2	S_3 / S_4	Z_1 / Z_2	D_{MIN} / D_{MAX}	IEC
NM015BY	02S12	41	411	–	95	50	8	5	28	15	125	80	100	160	481	55	40	328	12	9	NPT 1/2"	5	① INTERNAL THREAD NPT 1 1/4"						12	140
	01L06																						② INTERNAL THREAD NPT 1 1/4"						20	160
NM021BY	02S12	41	487	–	95	50	8	5	28	15	125	80	100	160	557	55	40	404	12	9	NPT 1/2"	5	① INTERNAL THREAD NPT 1 1/4"						12	140
	01L06																						② INTERNAL THREAD NPT 1 1/4"						20	160
NM031BY	02S12	77	637	–	115	69	10	5	27	20	150	100	112	222	759	70	50	540	12	11	NPT 3/4"	5	① 2"	15.7	152.4	120.6	19	4	20	160
	01L06																						② 2"	15.7	152.4	120.6	19	4	28	200 250
NM038BY	02S12	85	950	–	115	95	10	6	35	20	150	130	132	262	1082	80	55	838	14	11	NPT 3/4"	5	① 3"	19.1	190.5	152.4	19	4	20	200
	01L06																						② 2.5"	17.5	177.8	139.7	19	4	32	250

All dimensions are in mm. All dimensions are subject to change without notice.
Flanges are ANSI to inch standards. All flanges are flat faced.
All pumps are Thru-bolt Construction. Thru-bolts not shown for clarity.
For weights, use equivalent weights for SY pumps.

NETZSCH

NEMO PUMP (WP)
RANGE NM --- B 02S12/01L06

DRAWING NUMBER
NDB4908995

GENERAL ARRANGEMENT DRAWING(GAD)

Tolerâncias Dimensionais/Dimensional Tolerances				Tolerâncias para Flanges cfs./Tolerances for Flanges according ASME B16.1 e B16.5	
Medida/Dimension	Tolerância/Tolerance	Medida/Dimension	Tolerância/Tolerance		Tolerância/Tolerance
>3 até/to 6	±0,5	>400 até/to 1000	±4,0		
>6 até/to 30	±1,0	>1000 até/to 2000	±6,0	Diâmetro da Furação/Drilling Diameter	±1,5
>30 até/to 120	±1,5	>2000 até/to 4000	±8,0	Diâmetro Furos/Holes Diameter	+1,0
>120 até/to 400	±2,5	>4000	±20	Espessura/Thickness	+3,0

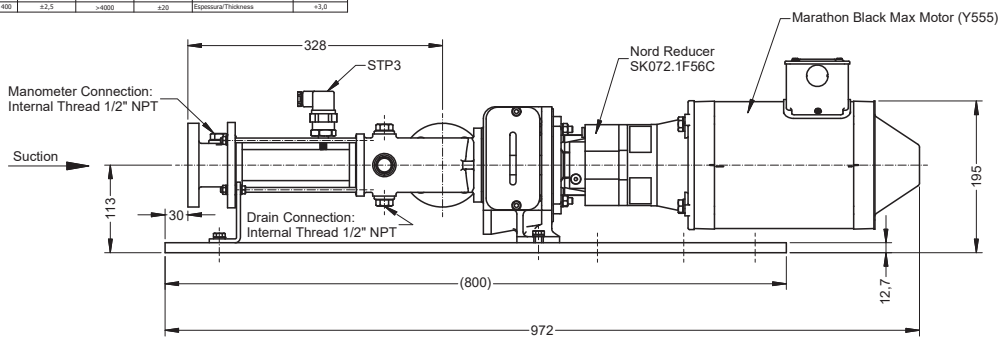

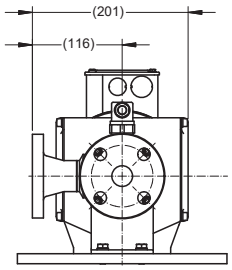

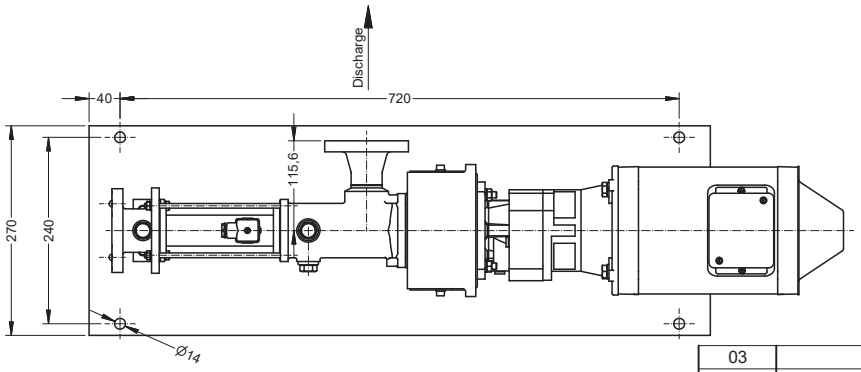

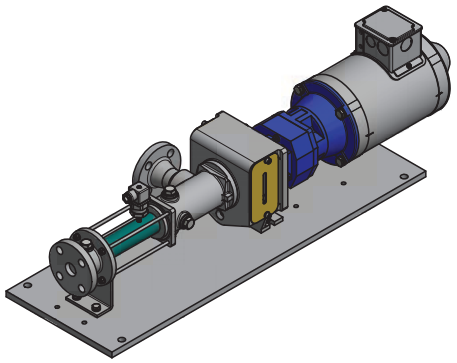

Revisão/Revision	Descrição/Description	Nome/Name	Data/Date
03	Rotacionado bocal de sucção 180°	Douglas	22/02/19
02	Rotacionado bocal de sucção 180°	Douglas	11/09/18
01	Alterado Bocal de Sucção e Descarga	Douglas	17/08/18

Cliente/Costumer:

Pedido/Order: | Referência/Reference:

Flanges
Borings acc. Norm:

ASME B16.5 / Classe 150 / FF / NPS 1

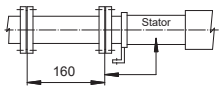

Lenght required for
stator disassembly

NETZSCH

Título/Tittle:

Pump NM015BY01L06B

HD-252848

	Data/Date	Nome/Name
Desenhado/Designer	17/08/2018	douglas.lourenco
Verificado/Checked Aprovado/Approved	17/08/2018	douglas.lourenco
TAG:	Peso/Weight kgf	

Nr. Desenho/Drawing Nr.: NDB4735478 | Folha/Sheet: 1/1 | Escala/Scale: 1:5

Reservado todos os direitos sobre este documento técnico. All rights reserved.

0

PUMP MANUAL

Pumps
Business Unit

Operating and Maintenance Instructions



NETZSCH Canada, Incorporated
500 Welham Road
Barrie, Ontario L4N 8Z7
Tel: (705) 797-8426
Fax: (705) 797-8427
Toll: 866 683-7867

www.pumps.netzsch.com

WARNING!!!!

When **Variable Frequency Drives (VFD's)**
are being used to vary the speed of the
NETZSCH Progressing Cavity Pumps, then they
MUST be CONSTANT TORQUE VFD's.

How the pump works

NETZSCH Progressing Cavity Pumps operate at a constant torque requirement for a specific operating pressure. The speed of the pump does NOT affect the torque requirement. **For example:** a pump running at 60psi output pressure at a speed of 200 revolutions per minute requires the same toque input as if it were running at 60psi output pressure at a speed of 600 revolutions per minute. The only exception to this rule is during pump startup; at the moment the pump starts the motor must provide more torque than the pump requires when it is running. This is due to the force of static friction that the motor must overcome in order to begin rotation. Although this is only a momentary force, enough torque has to be available to break the static load.

How the VFD works

Variable Frequency Drives work by taking the supplied power and modulating the supplied power frequency in linear proportion to the supplied voltage. This proportional modulation allows the motors speed to be altered without the motor drawing too many amps and burning out. A VFD can be built to perform this modulation in one of two ways. The VFD can be set to modulate the frequency above the normal supplied 60HZ frequency allowing the output to provide a constant amount of power but the torque will drop off as speed is increased **(THIS IS A CONSTANT HP VFD**) or it can modulate the frequency below the normal supplied 60HZ frequency allowing the output to provide constant Torque but the power will decrease as the speed is reduced **(THIS IS A CONSTANT TORQUE VFD).** This relationship is shown in the detail below. The manufacturers of VFD's typically offer two service factors. Normal Duty; which

has an overload capacity of the VFD's full load ampere rating times 110% - 120% for one minute and Heavy Duty; which has an overload capacity of the VFD's full load ampere rating times 150% for one minute. Typically, constant Hp VFD's are sold with a Normal duty rating since the applications don't call for high starting torque which causes amp draw to spike. Constant torque VFD's are usually sold with heavy duty ratings so that they can supply elevated startup amp draws for high starting torque applications.

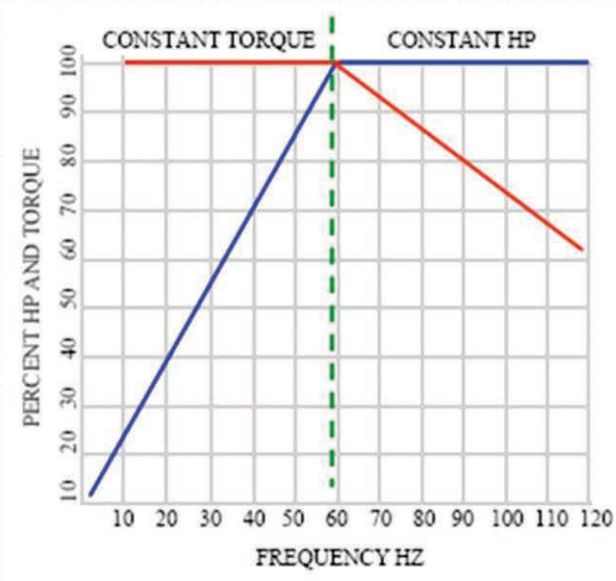

VFD Speed Torque Characteristics

Blue = Horsepower
Red = Torque
Green = Motor Nameplate Frequency (60 Hz)

In Constant Torque Area - VFD supplies rated motor nameplate voltage and motor develops full horsepower at 60 hertz base frequency.

In Constant Horsepower Area - VFD delivers motor nameplate rated voltage from 60 Hertz to 120 hertz (or drive maximum). Motor horse-power is constant in this range but motor torque is reduced as frequency increases.
Note: Motor HP = Torque x RPM

Application:

Because while running a progressing cavity pump the torque value required by the pump is fixed; any reduction in supplied torque as a result of operational speed could cause the pump to fail. Also, depending on the running speed required, a constant HP VFD may not be capable of supplying the torque needed for pump startup. This is the reason a **Constant Torque** VFD **MUST** be used to operate a progressing cavity pump.

Operating and Maintenance Instructions

NEMO®-Pump

Type of machine	Number of confirmation order
NM015BY01L06B	TBD
Number of machine	**Date of issue**
TBD	TBD

Important Note

These Operating Instructions are designed to familiarize the User with the machine and its designated use.

The Instruction Manual

- is valid only for this machine (pls. see machine-no. / conf. no.)
- contains important information on how to operate the machine safely, properly and efficiently. Observing these instructions helps to avoid danger, to reduce repair costs and downtimes and to increase the reliability and life of the machine;
- must always be available wherever the machine is in use;
- must be read and applied by any **person in charge** of carrying out work with and on the machine, such as

  operation including setting up, troubleshooting in the course of work, evacuation of production waste, care and disposal of fuels and consumables, **maintenance** (servicing, inspection, repair) and/or **transport;**
- shall be completed by the Enduser and his authorized personnel with the national requirements in force for the prevention of accidents and the environmental protection.

In addition to the operating instructions and to the mandatory rules and regulations for accident prevention and environmental protection in the country and place of use of the machine, the generally recognized technical rules for safe and proper working must also be observed.

GB

NEMO®, NEMO PUMPEN®, NEMOTUR®, NEMO CERATEC®, SBBPF®, EBPBF®, SM®, NE®, NM®, TORNADO®:
Registered Trademarks of NETZSCH MOHNOPUMPEN GmbH

NETZSCH Canada, Inc.
500 Welham Road
Barrie, Ontario, Canada
L4N 8Z7
Phone: 705-797-8426
Fax: 705-797-8427
Web: www.pumps.netzsch.com

	TABLE OF CONTENTS	PAGE **0.0**

		Page
1	Safety Precautions	1.0
2	Description	2.0
3	Packing, Transportation, Storage	3.0
4	Installation Instructions	4.0
5	Start-up	5.0
6	Temporary Shutdown	6.0
7	Maintenance	7.0
8	Trouble-Shooting and Remedying	8.0
9	Dismantling and Assembly of the Pump Housing	9.0
10	Dismantling and Assembly of the Rotating Parts	10.0
11	Removal and Fitting of the Connecting Shaft	11.0
12	Dismantling and Assembly of the Shaft Sealing	12.0
13	Dismantling and Assembly of Special Units	13.0
14	Recommended Stock of Wear Parts	14.0
15	List of Spares and Sectional Drawing	15.0
16	List of After-Sales Service Centres	16.0

Remark: Because of data transfer the text sheet printouts of our operating instructions do not contain a personal signature.

1 Safety Instructions

This manual contains basic instructions which must be observed when installing, operating and servicing the machine / equipment. It is essential therefore for the user / installer or responsible technician to read the manual thoroughly prior to installation and operation.
A copy of the manual must always be at hand where the machine / equipment is being used. In addition to the general safety instructions listed in this main section on safety, it is necessary to observe the special safety rules included in other sections of the manual, eg. for private use.

1.1 Safety Signs

The signs below are printed in the manual as general hazard / danger symbols to mark those safety instructions whose non-observance can result in danger to personnel or to the machine / equipment. These signs are:



Hazard sign DIN 4844 - W9
Danger to general public



Hazard sign DIN 4844 - W8
Risk of electric shock



Risk of injury from machinery



Danger from suspended loads



Damage to machinery



Risk of injury to your eyes: goggles required.

Continued Page 1.0R

Warning plates located directly on the pump/ equipment showing for example the correct direction of rotation or the fluid connections used must always be observed and kept completely legible.

1.2 Personnel Qualifications and Training

Operating, maintenance, inspection and installation staff must possess the correct qualifications for their work. Areas of responsibility, scope of authority and staff supervision must be exactly defined by the user. If personnel do not have the necessary knowledge they must receive due training and instruction. If necessary, the user of the machine / equipment can arrange for such training and instruction to be provided by the manufacturer / supplier. The user must also make sure that the content of the manual is fully understood by the staff concerned.

Responsibilites

All work on and operation of the pump/ equipment should be carried out by trained/ competent and qualified operators, tradesmen and / or engineers as appropriate.

Any person responsible for or in charge of

– **working with lifting gear** and ropes when moving a pump / equipment will have to be duly instructed prior to doing the transportation job;

– **mounting a drive** to a pump / equipment must be qualified / trained as an industrial mechanic / technician;

– **setting up installations into a plant** must be qualified / trained as an industrial mechanic/ technician and must be familiar with the design and functioning of the plant in which the pump / equipment is being installed;

– **doing work on starting up, operation and maintenance** must gain knowledge of the pump / equipment principle prior to performing such works and must study the safety instructions and the manual thoroughly;

– **doing repair works**, and prior to doing such works, must be trained and skilled in the job. He must have due knowledge of the pump/ equipments specific details set up in the repair instructions. Unskilled personnel must be trained and repair works checked.

1.3 Dangers arising from Non-Observance of the Safety Instructions

Non-observance of the safety instructions can result in danger to personnel as well as to the environment and the machine. Non-observance of the safety instructions can result in the loss of claims for compensation.

Non-observance of the safety instructions can have, for example, the following consequences:

▲ Failure of essential functions of the machine / equipment

▲ Failure of mandatory maintenance and servicing methods

Continued Page 1.1

- ▲ Danger to personnel from electricity, machinery and chemicals
- ▲ Danger to the environment from leakage of hazardous substances.

1.4 Safety Conscious Working

In addition to the safety instructions listed in the manual, it is essential to observe the national accident prevention directives currently in force and any of the users own internal regulations concerning work and safety.

1.5 Safety Instructions for the User / Operator

- ▲ If there is a risk of danger from any hot or cold machine component, the user must fit protective guards to prevent such components from being touched (according to Standard EN 563).
- ▲ Protective guards fitted to prevent contact with moving parts (eg. couplings) must be in position when the machine / equipment is in use.
- ▲ Leakages (eg. from a shaft seal) of hazardous materials (eg. explosive, toxic, hot material) must be discharged in such a way that neither personnel nor the environment are placed at risk. Legal directives must be observed.
- ▲ All possible danger from electricity must be eliminated (for details see eg. the regulations of your local power supply company).

1.6 Safety Instructions for Maintenance, Inspection and Installation

The user must ensure that all maintenance, inspection and installation work is carried out by authorized and qualified personnel who understand the operating instructions and are adequately trained.

Work on a pump / equipment must only be carried out with the machine stopped and electrical power supply turned off. The pump/ equipment must not be under any pressure and must have cooled off. All procedures detailed in these operating instructions on the stoppage of the machine must always be adhered to.

Pumps / equipment which convey harmful media must be decontaminated.

Immediately after the maintenance work is finished all safety devices and guards must be re-installed and the safety trips must be tested.

Before putting the machine back into operation the points detailed in section "Start-up" should be observed.

Continued Page 1.1R

1.7 Unauthorized Modifications and Manufacture of Spares

Modifications or changes to machines / equipment are only permissible with the manufacturer's agreement. Original spare parts and accessories authorized by the manufacturer ensure safety.
The use of other components revokes any liability for consequences which may result.

1.8 Improper Application

Delivered machinery / equipment is only guaranteed safe for the use specified.

This machine / equipment was designed in accordance with the prescribed conditions of use.
The limits of use are laid down in the conditions of use and should in no way be exceeded.

1.9 Specific Points for the Use of a NEMO® Pump

A NEMO® pump must be used for the purpose only for which it was sold.

If you change or wish to change the process medium, you must check with either the supplier or manufacturer that the pump is suitable for the new medium. This is especially important with aggressive, poisonous or otherwise hazardous substances.

Pump criteria include:

1. Compatibility with the medium
2. Suitability for seal design / material, especially the shaft seal
3. Resistance to pressure and temperature of the medium.

Please note that NEMO® pumps are progressing cavity pumps and as such can generate very high pressure.

A blockage or the chance closure of a valve in the discharge line can cause a pressure rise manifold as high as can be tolerated by the installation. This can result in the bursting of pipes, which must be avoided especially in the case of dangerous media.

Corresponding safety equipment must therefore be installed, for example an emergency stop button, a pressure relief valve with return pipe or a bursting disc.

During maintenance and repair work on the pump please note the following:

1. Ensure that the pump drive can not be turned on without authorization.
2. When opening the pump follow the instructions for handling the medium (eg. protective clothing, no smoking etc).
3. Before putting the pump back into operation ensure that all guards and other safety devices (eg. drive–belt protection, coupling protection) are properly re–installed.

Continued Page 1.2

1 SAFETY PRECAUTIONS

Always bear in mind your safety during operation, maintenance and installation of equipment. Please adhere to the EC-Directive for machinery including the national regulations and follow the US OSHA regulation #1910.219 & 1910.147 titled Mechanical Power transmission apparatus as well as the European Standard EN 292 with the accidents prevention rules laid down by the trade unions and other appropriate technical institutions.

Always bear in mind your safety during operation, maintenance and installation of equipment. Please adhere to the EC-Directive for Machinery including the national regulations and follow the European Standard EN 292 with the accident prevention rules laid down by the trade unions and other appropriate technical institutions.

Continued Page 1.2R

1.10 Notes on Inspection and Repair

The legal regulations for safety at work, such as regulations for the workplace, regulations governing dangerous materials, accident prevention, environmental protection eg. regulations on disposal and water balance obligate all commercial business to protect their employees and / or people and the environment from adverse effects caused by contact with dangerous materials.

Important:

Inspection / repair of machinery and its parts only takes place when a safety conformity certificate has been completed by an authorized and qualified specialist. Please use a copy and leave the original in the operation and maintenance manual.

Where special safety precautions are necessary in spite of careful emptying and cleaning of the machinery, the necessary information must be given.

Machinery operating with radio-active media will only be repaired or inspected by one of our specialist engineers under the safety of the owner.

The safety conformity certificate is part of the inspection / repair service. We reserve the right to refuse acceptance of this order / service for other reasons.

Continued Page 1.3

1.11 Instructions concerning explosion protection

The instructions below are to be considered and kept to when using pumps in potentially explosive areas in order to guarantee durable explosion protection of the pumps and avoid any danger of ignition.

In accordance with the regulations 94 / 9 / EC, the pumps are admitted for use in the area II 2G IIB T 4 or II 2G IIB T 3
(pls. see manufacturer's declaration or declaration of conformity).

It is to be taken into account that in case of aggregates the components (e.g. gears, couplings) mounted on the pumps must comply with the regulations 94 /9 / EC as well. The relevant documentation concerning these components is to be considered.
The application area of aggregates is determined by the application area of the mounted component with the lowest approval and thus may deviate from the allowed application area of the pump.

Temperature category	Max. temperature of the conveying product
T 4	100 °C
T 3	165 °C
T 2	265 °C
T 1	415 °C

The maximum conveying product temperatures apply when mechanical seals of Messrs. Burgmann with carbide – carbide and carbide – carbon as sliding material combinations are used.
In the case of other manufacturers or other sliding material combinations it is necessary to consult the manufacturer.

1. Assembly and repair in potentially explosive areas

   When performing assembly and repair work, it is to be seen to it that no dangers of ignition arise especially during heating up the pump parts. This means e.g. heating up by explosion-proof heating devices or exclusively in non-explosive areas. The temperature of the heated part and the ignition temperature of the materials by which the danger of explosion may be caused are to be considered.

2. Dry-running protection

   Under no circumstances is the pump to run dry.
   The pump is to be equipped with an appropriate dry-running protection device.

Continued Page 1.3R

The device for dry-running protection should be self-regulating.
This means that this device can give alarm signals and/or switch off the pump also in case of failures in its own control system.

Dry-running protection concerning stationary immersion pumps (with mounting plate)

Operation is only permitted with redundant or self-regulating automatic devices to guarantee dry-running protection as well as to control the pump capacity.

Dry-running protection concerning movable immersion pumps (drum pumps)

The filling with liquid during the operation is to be ensured by specific requirements of behavior:

- Drum pumps may only be introduced in and removed from the container in switched-off condition
- Drum pumps, after being introduced in the container to be discharged, may only be started after they have immerged in the fluid.
- Drum pumps are to be switched off before they run dry or are to be switched off at once when specific noises ("slurping" or speed rise) suggest that dry running may or will immediately occur.

3. Overpressure protection

The pump must not be loaded over the maximum allowable pressure.
The pump is to be equipped with an appropriate overpressure protection device. The pump must not convey against a closed slide valve.
The overpressure protection device should be self-regulating.

4. Drives

The drives must be adjusted to the performance of each pump.
In the case of a blocking of the pump, the drives must be turned off automatically by means of a motor protection unit.

5. Alignment of the drive (concerning the pump types SY / SH / SA / SO / SF / SP)

It is absolutely necessary that the drive be aligned within the maximum allowable tolerances. Incorrect alignment causes damage to the seals and the shaft bearings.

6. Potential equalization concerning immersion pumps

The immersion pumps are to be integrated in the potential equalization of the installation. Hand-operated movable immersion pumps are to be grounded before being introduced in the container.

Continued Page 1.4

The connection to ground is to be maintained until the pump has been completely pulled out of the container.
There must not be any potential difference between the pump and a conductive container. This means that container and pump are to be connected at a common grounding point and thus be conductively connected with each other.
(see information brochure "Statische Elektrizität, Zündgefahren und Schutzmaßnahmen" (Static electricity, dangers of ignition and preventive measures); Publisher: "Internationale Sektion für die Verhütung von Arbeitsunfällen und Berufskrankheiten in der chemischen Industrie der IVSS" (International section for the prevention of employment accidents and occupational diseases in the chemical industry of the ISSA (International Social Security Association)) , Heidelberg 1995).
The hand-operated movable immersion pumps are to be provided with an indication referring to the grounding measure (pay attention to grounding).

7. Potential equalization concerning all other pump types (no immersion pumps)

   All conductive parts of the pump are to be integrated in the potential equalization of the pumping set unless the conductive connection to the ground potential is guaranteed by the drive or connecting shafts or otherwise.

8. Stator

   The stator is to be regularly checked for wear. When the allowable wear limit is reached, the stator is to be replaced. Before exchanging the conveying product, the pump operator has to consult the manufacturer concerning the durability of the stator unless the stator has already been confirmed for the intended application.

   Inspection and maintenance interval of the stator:
   – in the case of an operating time of > 16 h/day, at least twice a year
   – in the case of an operating time of < 16 h/day, at least once a year.

9. Joints / joint lubrication

   The sealing and the lubrication of the joints are to be regularly checked. If necessary, the seals and the lubricants are to be replaced.

   Inspection and maintenance interval of the joints:
   – in the case of an operating time of > 16 h/day, at least twice a year
   – in the case of an operating time of < 16 h/day, at least once a year.

10. Inspection after initial startup

    The aspects relevant for ensuring the explosion protection (such as lubrication and wear check) are to be checked six months after the initial startup of the pump at the latest.

Continued Page 1.4R

11. Shaft bearings
(concerning the pump types SY / SH / SA / SO / SF / SP)

Replacement of the bearings after 14,500 operating hours (according to prEN 13463-5: replacement after 90 % of the designated service life).

12. Materials

Although being allowed as material for the pumps, aluminum should be avoided in potentially explosive areas.
The pumps may only be used if, under the particular operating conditions, the materials are resistant to mechanical and/or chemical influences or corrosion such that the explosion protection will be maintained.

13. Noise development
(concerning the pump types SO / BO / SF / BF / SP / BP)

As soon as unusual noises (such as knocking or rubbing) are realized, the pump is to be switched off. The cause of the failure is to be eliminated before the pump is reoperated.
Regular check of the paddle equipment.

14. Direction of flow of immersion pumps

The direction of flow of immersion pumps always has to be from the end connection piece to the pressure nozzle at the top. The reverse direction of flow is not allowed.

15. Mechanical seal of immersion pumps

Before the initial startup and after a prolonged shutdown, the mechanical seal is to be lubricated from outside before the pump is started. In this connection, the compatibility of the lubricant with the sealing material is to be considered.

16. Impurities in immersion pumps

Especially in the case of hand-operated movable immersion pumps it is to be seen to it that no impurities can get into the pump. The pumps are to be deposited only on clean and solid ground or else to be suspended. In case of unusual noises or power losses, the immersion pumps are to be switched off immediately.

17. Gland

If a gland packing is applied it has to be observed that the permitted temperature corresponding to the temperature category is not exceeded. Recommendation: fasten the screws of the stuffing box gland only with low torque (approx. 5 Nm).

Continued Page 1.5

Safety Conformity Certificate

The machinery and its accessories together with this safety conformity certificate relating to repair / inspection services given to the undersigned by ourselves

Machine Type .....
Number .....
Delivery Date ..... Delivery Note No. .....

was carefully emptied and cleaned both inside and out in preparation for shipment
☐ yes
☐ no

Special safety precautions with regard to health or media endangered by water are to be implemented
☐ necessary
☐ unnecessary

The machinery is set up to transport materials dangerous to health or water and came in contact with media containing harmful substances
☐ yes
☐ no

The following safety precautions are necessary with regard to irrigation media, overflow liquid and waste management:

.....

.....

We confirm that the above mentioned details are correct and complete and that despatch will follow in accordance with the legal requirements:

Company ..... Telephone .....
..... Fax .....
..... Telex .....

Address

.....

.....

Name ..... Position .....

....
Date Company Stamp / Signature

2 Description

The NEMO® pump is a progressing cavity pump.
The main components which determine the system discovered by Professor René Moineau are a rotating part, called the rotor and a static part, called the stator.
The rotor is a helical screw with an extremely large pitch, large thread depth and small centre diameter with round cross-section for 1/2-geometry and elliptical cross-section for 2/3-geometry. The stator has a two start or resp. 3 start thread and is double or resp. 1.5 the pitch length of the rotor. This provides space for the medium between the rotor and stator. When the rotor turns round inside the stator the medium moves continuously from the inlet to the outlet.

The universal NEMO® pump system unifies many positive characteristics of other pump types:

■ Like centrifugal pumps NEMO® pumps have no suction or pressure valves, but do have a stable flow rate in proportion to the number of revolutions.

■ Like piston pumps NEMO® pumps have a suction capability of up to 8.5 m vacuum metric.

■ Like membrane and peristaltic pumps the NEMO® pump can transport every type of inhomogenous, gaseous and abrasive media, as well as those that are not of a liquid consistency or contain solids and/or fibrous material.

■ Like gear pumps and screw pumps the NEMO® pump is capable of coping with high medium viscosities.

■ Like piston, membrane, gear or screw pumps the NEMO® pump can perform dosing operations.

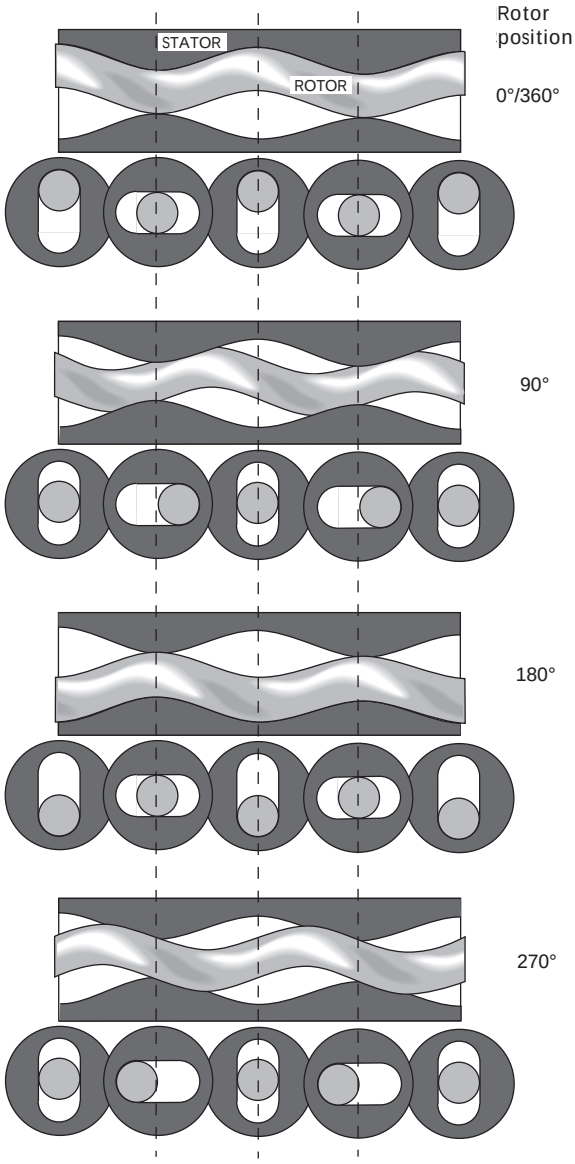

Length and cross-sections through the rotor and stator with 1/2-geometry during a rotation.

Continued Page 2.0R

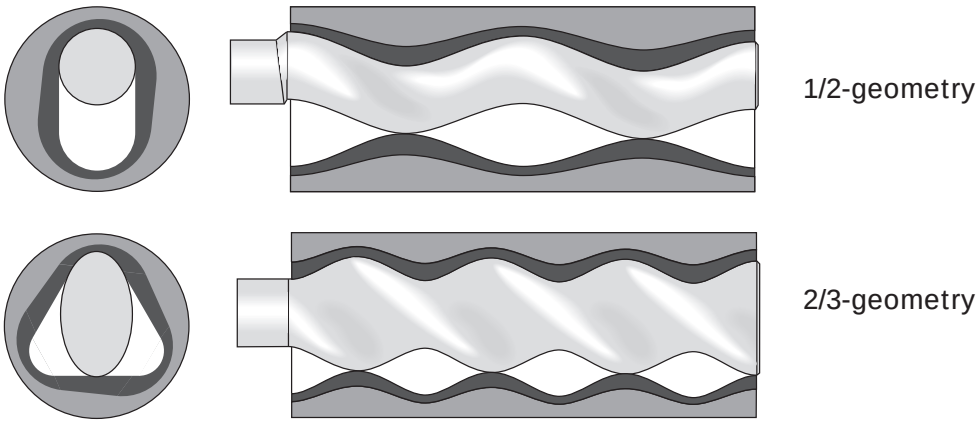

Length and cross-sections through the stator with rotor
with reduced stator wall thickness

2.2 General Data

Noise emissions:

The maximum permitted noise emission level at a work place is 70 dB (A).

The noise level was measured in accordance with DIN Standard 45635-24-01-KL2 to assure that the pump does not exceed 70 dB (A).

Noises generated by the drive and pipes are not included in the above emission value.

A prerequisite for the noise emission level of ≤ 70 dB (A) is that the pump is operated in a cavity free regime and is bolted to a concrete base.

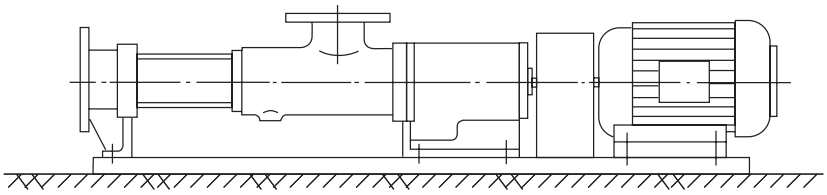

3 Packaging, Transportation, Storage

3.1 Packaging and Transportation

NEMO® pumps are shipped in railroad containers or crates unless the customer specifies otherwise.
The packings are labelled and symbols give the handling instructions in accordance with DIN 55402.
On receipt check for any transport damages.
Transport damages should be reported to the transporter immediately.
The pumps should be transported as closely as possible to the location of installation and only there should they be uncrated.

Uncrated horizontal pumps should be lifted by using a shackle which can be attached to the baseplate. The bolt holes of the frame or the lifting lugs attached to the baseplate could be used as shown on the installation drawing.

Vertical pumps should be lifted by using the bolt down holes, lifting lugs or shackles attached to the baseplate. This is shown on the installation drawing. For most applications, the drive is mounted on top of the pump.



Be careful when lifting top heavy pumps. The centre of gravity may be above the points where the lifting gear is attached to. If the case, secure additionally against tipping over!

Vertical pumps should not be deposited unless they are secured vertically. **Hazards of tipping**! Deposit only in horizontal position!



It is essential to avoid that the total pump unit be suspended with eye bolts of the motor or gear box. These eye bolts should be used for lifting the motor and/or the gear box **only.**

The Accident Prevention Rules, Section 18.4 relating to lifting accessories for the lifting of loads (VBG 9a) must be strictly adhered to.

Because of the variety of possible pump designs and applications, only general instructions can be given here. These should be good enough for experienced assemblymen or transportation experts.
When in doubt, please ask for detailed information on the pump unit concerned.

Continued Page 3.0R

When moving the pump or unit on **wheels** strictly attend to the following:

- Pad lock the motor drive and secure against unintended starting up.
- Move the pump unit carefully and slowly, especially where the ground is uneven. **Hazards of tipping!**
- Ensure a stable position of the pump or unit at the operating/storage place and secure it by actuating **all** clamping devices on **all** the wheels or rollers against voluntary moving away.
- Where fitted loosely, carefully watch the pipe bends when pumping. **Power of repulsion!**
- Where necessary, secure the pump unit additionally with support blocks.

3.2 Storage

The pumps are preserved for transport unless specified otherwise.
In cases of longer storage the pumps should be handled as follows until installation:

- **Stator:**

  If the pump is not to be used immediately, then the elastomer along the contact line between rotor and stator may become permanently distorted (compression-set). This will increase the break away torque. Therefore, the stator should be removed and kept separately in a clean, cool and dry environment.
  Standard DIN 7716 summarizes detailed information on the storage of rubber products, some of which is gathered here, and the following notice applies to a storage for a period of up to six months.

  General

  Most of the rubber products may change their physical properties under unfavourable conditions or if treated improperly, which will result in a shorter lifetime.
  Or they may become useless through excessive hardening, aging, regenerating or permanent deformation, also because of blistering, cracking or other damages appearing on the surfaces.
  The changes may occur under the influence of oxygen, ozone, heat, light, humidity, solvents or because of storing the products under tension.
  If stored and treated properly, the rubber products will keep their properties, even over a long period of time (some years), almost unchanged.
  This does, however, not apply to uncured rubber compounds.

Continued Page 3.1

Store room

The environment in which rubber products are being kept must be cool, dry, free of dust and rather airy, and they must not be stored in the open, not even in a weather sheltered space.
Rubber products should be kept in surroundings not having less than minus 10 °C and not more than plus 15 °C.
Store rooms should not be damp, and it must be ensured that there will be no condensation.
Most favourable is an environment offering a relative humidity under 65 %.
Rubber products must be protected against light, particularly direct sunlight or artificial light when having a high UV portion.
They should furthermore be kept away from ventilation, especially draught, by wrapping them up.
As ozone is very aggressive and harmful there should be no store room used which houses equipment likely to produce ozone, e.g. electric motors or other equipment which might bring about sparks or other electrical discharges.
There must be no solvents, oil, grease, lubricants or any chemicals kept in a store room.

- **Rotor**

  Please support with wooden blocks and cover up against harm from mechanical impact.
  For rotors of RCC (material number 1.2436):
  coat the surfaces with protective grease to avoid rusting.

- **Shaft Sealing by packing gland**

  Remove the gland and coat the exposed shaft surface with grease.

- **Pump parts in stainless steel**

  No grease coating necessary.

- **Other, non-coated pump parts**

  Protect with grease.

- **Drives**

  Please observe the drive supplier's instructions.

4 Mounting and Installation

If the NEMO® pump was stored and the rotor grease protected: Remove the grease before installing the stator.
Clean the rotor thoroughly in order to avoid unsuitability of the grease with the stator material and the pumping medium.

Screw the pump at all fixing points (bearing housing / drive stool, end stud, support feet) using all fixing bores securely down to the sub-structure (ground plate, machine frame, foundation etc.).

4.1 Direction of Rotation

The direction of rotation of the pump is given on the model plate and in the order confirmation. The direction of delivery of the NEMO® pump is a function of the direction of rotation.

Changes must be agreed upon and confirmed by the supplier.

4.2 Pressure

If not explicitly confirmed otherwise in the order confirmation, the maximum permissible pressure (e.g. when turning clockwise) inside the pump housing (A)

– for models with pump housing of cast iron 6 bar

– for models with welded pump housing 10 bar.

The maximum permissible pressures inside the end flange (B) is a function of the design applied for connections

– with flange: maximum nominal pressure (e.g. PN 16)

– with threaded internal socket: maximum 25 bar

– with DIN 11851 "dairy" thread up to DN 100 for one or two stage pumps: max. 12 bar, for multi stage pumps: max. 25 bar

– for other versions: maximum permissible pressure of the socket connection, but not more than 6 bar per pump stage, depending on the stator installed.

4.3 Piping System

■ Arrange suction and pressure pipes so that when the pump is not running, the medium is still present before and after the pump. Sufficient media should remain inside in order to lubricate the pump during restart.

Continued Page 4.0R

4 INSTALLATION INSTRUCTIONS

■ The installation of a removable distance piece between the end flange (B) and the pipe work is recommended in order to make the dismantling of the stator easy. The distance piece (see sketch) needs to have a minimum "ABL" disassembly length the values of which are shown in the table below, depending on the pump size and the number of stages.

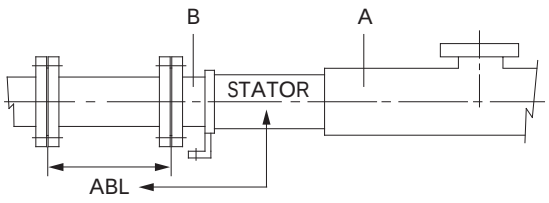

Disassembly length ABL in mm:

Pump size	Number of stages			
	1 *)	2	3	4
0 1 5	90	160	230	310
0 2 1	130	230	340	450
0 3 1	170	310	450	590
0 3 8	230	430	630	830
0 4 5	270	500	730	960
0 5 3	320	600	880	1170
0 6 3	370	690	1010	1330
0 7 6	420	800	1170	1540
0 9 0	500	950	1390	1840
1 0 5	630	1180	1740	-
1 2 5	740	1400	-	-

*) for one stage pumps with L or P geometry the ABL values of 2 stage pumps are valid

Continued Page 4.1

Type key

Example: **N M 0 9 0 B Y 0 2 S 1 2 B**

Internal
Pump size
Type
Model
Number of stages
Geometry
max. permissible pressure difference
anti–clockwise
Joint

The disassembly length "ABL" is also shown in the arrangement drawings in accordance with our Standard QSH V - TB 01 - 002.

- Clean the pipe work and rinse thoroughly before installing the pump.
- Connect the pipe work ensuring that no external stress attacks the pump body. The installation of compensators between the pump and the pipework is recommended:
  - No risk of damage to the pump housing from pipelines "resting" on the pump.
  - No risk of damage to the pump housing through vibrating pipelines.
- The twisting loads (F_x, F_y, F_z) and bending loads (M_x, M_y, M_z) permitted to be put on the suction/discharge flange comply with the requirements of API 676 and exceed the requirements of EN ISO 14847. They are shown in the table below.

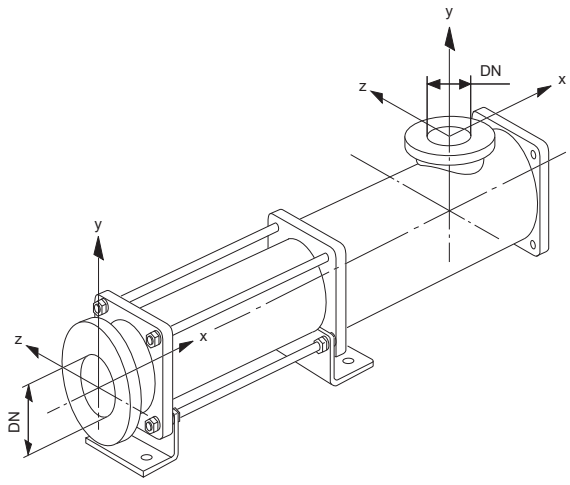

Continued Page 4.1R

Pump type NM	Standard nominal diameter DN	F_x, F_y, F_z N	M_x, M_y, M_z Nm	
015 021	(32) G 1¼"	550	(300)	Screwed joints must not be charged with loads which may result in tightening or loosening these joints
31	50	780	420	
38	65	990	530	
45 53	80	1160	620	
63	100	1490	800	
76	125	1820	980	
90 105	150	2190	1180	
125	200	2850	1530	

4.4 Shaft Sealing

- Where applicable, ensure that adequate supply lines for the buffer, flushing or quenching fluid for the shaft seals are connected **before** the pump is put into **operation**.
  For more details see Section 7.4!

4.5 Electrical Connection



All work relating to electricity shall only be made by **authorized and qualified personnel** and it should be in compliance with the requirements of the relevant national regulations!

In particular for control systems should the latest version of the **EC-Directive for Machinery 98/37/EEC, Annex I, Section 1.2 Controls** be carefully observed!

Note for frequency converter operation:
It is absolutely necessary to connect the PTC-resistors of the drive in case of frequency converter operation to protect the drive against overheating.

5 Start-up

The NEMO® pump design requires strict attention to the following:



Never run the NEMO® pump dry!
A few rotations in dry condition
will damage the stator!

- Before starting up for the first time, fill the pump with medium.
  In the case of high viscosity media fill with a liquid.
  Pump priming is vital to ensure lubrication of the rubber stator.
  Fill the piping on the pump suction side.
  In anti–clockwise rotation only: Fill the pump housing.

The NEMO® pump is a progressing cavity pump which can produce pressures that may cause the bursting of vessels or pipes.



The power transmission train (shaft, coupling rod, joints, rotor) of the pump may be overloaded thus resulting in damage or breakage.

Also the pump housing parts with their connections may be overloaded and break. There is a table in Section 4 of these Maintenance and Operating Instructions showing the pressure resistance of the pump housing parts.



Never run the pump against a closed inlet or outlet valve!

- Open valves and vents before starting the pump!
- Check the direction of rotation by briefly switching on the pump motor.

DETERMINING WHEN TO LOCKOUT

Having performed a hazard analysis on your company's equipment, you can now determine when machines must be locked out – i.e., when employees are exposed to injury from each (or any) of a machine's hazardous energy sources during servicing or maintenance activities. To do this, use your Hazard Analysis Checklist and the "Four Key Questions for Lockout Implementation."

OSHA Requirements

OSHA rules state that equipment must be locked out during equipment servicing and maintenance whenever employees are exposed to injury from unintentional machine movement or startup. According to OSHA's regulations, servicing or maintenance procedures that require lockout include:

"Workplace activities such as construction, installing, setting up, inspecting, modifying, and maintaining and/or servicing machines or equipment. These activities include lubrication, cleaning, or un-jamming of machines or equipment and making adjustments or tool changes, where the employee may be exposed to the unexpected energization or startup of the equipment or release of hazardous energy."

In addition, lockout is required during any machine service or maintenance that requires an employee to:

- Remove or bypass a safety device; or
- Place any part of his or her body into a point of operation or similar danger zone during a machine's operating cycle.

Routine, Repetitive Activities

Routing and repetitive servicing procedures that take place during normal production operations, such as minor tool changes and adjustments, do not require lockout tagout, as long as the work is performed using "alternative measures which provide effective protection." These "alternative measures" include safeguarding methods approved by OSHA and ANSI (American Standards Institute) to protect operators, such as:

- Presence sensing devices
- Interlocking barrier guards

Remember, the factor that determines whether these or any other safeguarding methods eliminate the need for lockout tagout during routine, repetitive activities is whether the employee is protected from injury.

If lockout is not required, you MUST have clearly written procedure that describe the alternative safeguarding measures used and the tasks that may be performed. Refer to OSHA and ANSI standards for approved safeguarding methods.

6 Temporary Shutdown

- After stopping the pump empty and if necessary rinse it if



  – the medium might freeze due to the temperature surrounding the pump. Especially where there is a danger of frost if the pump is installed outside a building
  – the medium tends to solidify or harden
  – the medium tends to glue up the shaft seal.

- Stator:

  When stored for a long period, the elastomer along the contact line between the rotor and stator may become permanently distorted (compression-set).
  This will increase the break away torque. For this reason, the stator should be removed (please observe Section 9!), and stored in a cool, dry place in air tight package to give protection against light and air.

- Rotor:

  Remove ceramic rotors (please observe Section 10!) and store away, safe in the original packing.

  Support other rotors on wooden blocks and cover to protect them from mechanical damage, after the stator has been removed.

  Rotors made of RCC (material number 1.2436):
  Protect the rotor surfaces against corrosion with protective grease.



  Remove the grease before re–installing the stator and clean the rotor thoroughly in order to avoid unsuitability of the grease with the pumping medium or the stator material.

- Stand-by pump:

  A stand-by pump is sometimes used as a back-up for the main pump and, when standing idle for longer periods, should be operated from time to time. The pump may otherwise become seized when being started up. This is due to compression set i.e. distortion of the stator against the surface of the rotor.

7 Maintenance

7.1 Pumps in General

- The pumps should be regularly rinsed or cleaned if deposits of medium are likely to build up (sedimentation).





If the pump needs to be opened to do this, ensure that the pump and motor are switched off and cannot be turned on accidently (eg. by removing the fuse).

Periodical standstill to allow for cleaning during operation depends on the medium and type of operation.

- The pump can be cleaned:

  – through the cleaning ports provided in the pump housing

  – manually by dismantling the pump

  – automatically (CIP cleaning) for special housings with a flushing section (important instructions for CIP procedures are given in Section 5 (START UP).

7.2 Lubrication

The NEMO® pump does not require frequent lubrication.

- Maintenance of the drive should be carried out according to the drive manufacturers instructions.

- Maintenance
  – where no manufacturers instructions are available and
  – when normal conditions of use exist:

  – Strip down the drive unit
  – Remove the bearings
  – Clean all parts
  – Renew the lubricant

  every 5000 operating hours or at least every two years.



Special lubricants are often specified for mechanically controlled variable speed drives.
It is therefore important to follow the drive manufacturers maintenance instructions.

7.3 Lubricating the Pin Joints with SM-Pin Joint Seals

- It is advisable to change the oil and check the seals of the pin joints:
  - when renewing worn joint parts
  - when opening the pump for any reason.

  The quantity of oil added per pin joint is a function of the joint external diameter D:

Joint external diameter D in mm (see sketch)	Basic joint size	Quantity of oil per joint in cm^3
28	NM 015	1,5
30	NM 021	2
40	NM 031	5
54	NM 038	15
65	NM 045	22
76	NM 053	36
83	NM 063	78
102	NM 076	165
125	NM 090	205
148	NM 105	450
162	NM 125	470
Journal cross joint 175	NM125	1650

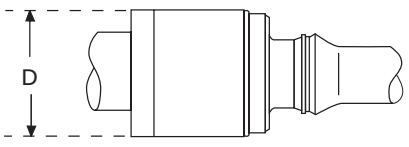

Pin joint

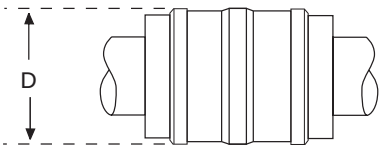

Journal cross joint

Continued Page 7.2R

Lubricating Oil:

Industrial application	Designation DIN 51502	Permitted Product
Food and Beverage Industry only	Authorized for use in foodstuffs — CLP HC 460	"KLÜBER" KLÜBEROIL 4 UH 1 - 460 authorized under USDA H1



This synthetic oil meets both the German "Arzneimittelbuch" requirements and the still stricter US American FDA regulations.
Nevertheless, it is not quite harmless if swallowed in more than minor quantities!

At a sudden break in a joint up to 450 ml of lubricating oil together with metal rubbings may enter the pumping medium. It is therefore of essential importance to regularly check the state of the joint seals and renew in time, if necessary.

If the pin joints operate without lubricating oil or seals, there will be no risk of contaminating the medium with oil. This operation, however, results in a higher amount of rubbed off metal parts through wear on the joints. These metal rubbings will inevitably and continuously come into contact with the pumping medium.

General Industry	CLP 460	"SHELL" Omala 460
	with SM-pin joint seal (8235) of EPDM CLP PG 320	prescribed: KLÜBERSYNTH GH 6-320

7.5 Shaft Sealing through Single Mechanical Seal

There are various constructions of mechanical seals. Especially advantageous is the use of standard mechanical seals according to DIN 24960. These seals have regardless of their brand the same fitting dimensions which makes them interchangeable. Mechanical seals with a coil spring can only be used for pumps which are run in one direction of rotation.

- The seal specification of a NEMO® pump is recorded on the order confirmation sheet.
- Pumps fitted with direction dependent seals should **never** be run in the opposite direction of the rotation arrow.
- If excessive leakages occur the spring tension and the seal surfaces should be checked, and the seal be replaced, if necessary.

Single mechanical seals usually work without any additional equipment. Their application range can be increased by operating them with a rinsing or cooling system.

a) **Quench,** in accordance with ISO 5199, Appendix E, Plan Nos. 08, 09, 10 or 13 or API 610, Appendix D, Plan No. 62.

Quench is the designation commonly used in sealing engineering for an arrangement that applies a non pressurized external fluid to the atmospheric side of a mechanical seal. The quench is used when

– a single mechanical seal will not work or only to a limited extent without auxiliary measures or

– a double mechanical seal with pressurized buffer fluid is not necessary.

Recommended for the following applications:

– Low temperature (danger of freezing)

– Operation in a vacuum (dry running)

– Media which must be isolated from the atmosphere (eg. due to build up of solid deposits or because of less severe damage to the environment, like smell).

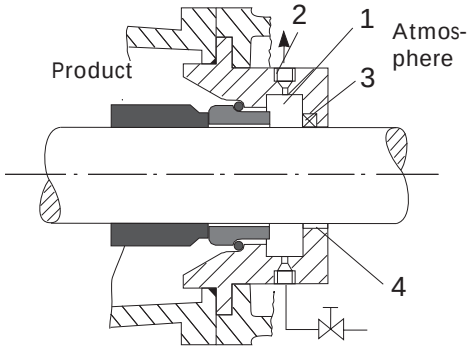

Continued Page 7.5R

Leakages will be transportet away by the quenching liquid.
In vacuum operation dry running of the seals is avoided.



No pressure higher than that of the pumped medium **in front** of the mechanical seal is allowed to build up in the quenching area (1) **behind** the mechanical seal. Otherwise the counter ring will be pushed out of the housing. **Free discharge** from (2) is necessary!

Closing off the quenching area from the atmosphere can be done in three ways:

1. In the case that high emission levels can be tolerated:
   Through a throttle bush (4). Cooling liquid not permanently used, only released from time to time.
2. In the case that medium emission levels can be tolerated:
   By a radial shaft seal ring (3). Permanent radial shaft seal lubrication through quenching liquid is necessary.

b) **Top lubrication**

Attention: For vertically installed pumps with overhead drive as type NT:

On initial start-up the mechanical seal has not come in contact with the medium. It runs therefore dry for a short period of time until the air is displaced from the pump housing.

- On first start–up and if stood idle for longer periods lubricate the mechanical seal before switching on the pump.
- Apply water, glycerine or oil depending on their compatibility with the pumping medium and the elastomer of the mechanical seal.
- Fill the quench cup of the mechanical seal housing.

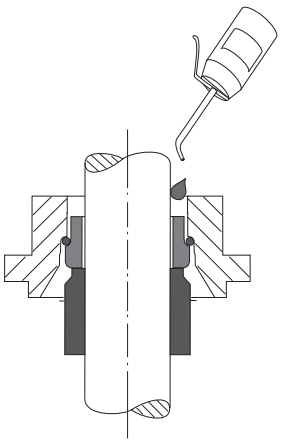

8 Trouble-Shooting and Remedying

8.1 Trouble Chart

The chart overleaf lists possible problems

- the type
- the likely reason / cause
- the remedy.

- A problem may have various causes: Several boxes in the vertical column are marked with a cross.
- A reason/cause may result in various problems:
  Several boxes in the horizontal column are marked with a cross.

8.2 How do you trace the kind of problem to find the possible cause ?

- The column describing a possible problem shows one or several boxes marked with a cross.
- On the corresponding lines you will find the possible reasons/cause and some hints how to handle the problem . Thus the actual cause of the problem can be narrowed down and eventually detected.
- If you find further cross-marked boxes on one of the lines and should there appear corresponding problems as well, then the likely cause of the problem has been detected.

- The table helps in finding the root of the problem and will give you the remedy if it is straight forward. For more complicated problems the manufacturer has to be consulted.

Continued Page 8.0R

The NEMO®-pump is a well established product which was thoroughly tested before leaving the factory. If you use the pump in keeping with your Order Specification and treat it in accordance with our Operating and Maintenance Instructions, it will run satisfactorily for a long period of time.

Possible Problems											
The pump is no longer starting	The pump is no longer sucking	The pumped medium is too little	The pressure is too low	The pumped medium is unstable	The pump is running loudly	The pump is stuck	The drive is overloaded	The stator life time is too short	The rotor life time is too short	The shaft seal is leaking	**Possible Causes** (Remedy overleaf)
X							X				In new pumps or stators : the static friction is too great.
X		X	X				X				The pump electrical equipment is not compatible with the electrical supply.
		X					X	X	X		The pressure is too high.
X						X	X				There are foreign bodies in the pump.
X						X	X	X	X		The temperature of the liquid medium is too high, the stator is too ductile.
X						X	X	X			The stator has swollen, the elastomer is not compatible with the medium.
X						X	X	X			The solids content of the medium is too high and leads to blockages.
X						X	X	X	X	X	The liquid medium sediments or hardens when left to stand.
		X	X	X							There is air in the suction pipe.
	X	X	X	X							The suction pipe is leaking.
	X	X	X	X							The shaft seal is leaking.
		X	X								The rpm is too low.
	X	X	X								With reduced diameter rotors : operating temperature has not been reached.
		X	X	X	X			X	X		The suction is too great or pressure too low (cavitation).
		X	X		X	X	X	X			The pump is running dry.
	X	X	X		X						The stator is worn out, or temperature of liquid is too low.
	X	X	X		X			X	X		The stator material is brittle.
	X	X	X		X			X			The rotor is worn out.
					X						The joints are worn out.
					X						The pump and drive are not axially aligned.
					X						The elastic element of the coupling is worn out.
					X					X	The roller bearings are destroyed.
							X				The rpm is too high.
							X				The viscosity is too high.
							X				The specific weight of the medium is too high.
							X			X	The stuffing box is incorrectly tightened.
										X	The packing is not suited to the liquid medium.
	X									X	Mechanical seal : rotation is incorrect.
										X	Mechanical seal : mechanical seal and mating ring have failed.
										X	Mechanical seal : elastomers damaged, swollen or brittle.

Remedy
Fill the pump up, then pump through manually using a suitable appliance; if necessary use glycerine as lubricant in the stator.
Check order information. Examine electrical installation (possibly 2 phase operation).
Measure the pressure with a manometer and check against order details. Reduce the pressure or change the drive.
Remove foreign bodies and eliminate possible damage.
If the liquid medium temperature cannot be lowered, use a reduced diameter rotor.
Check whether the liquid medium agrees with the order requirements. Possibly change stator material..
Increase the liquid part of the medium.
Clean the pump and rinse through after each run.
Increase the suction liquid level, prevent turbulance and air bubbles at the inlet.
Check seals and tighten pipe connections.
Stuffing box : tighten or renew. Mechanical seal : renew seals, eliminate solid deposits.
In the case of adjustable drives : increase the rpm. If necessary change the drive.
Warm up the pump (stator) to operating temperature first of all.
Decrease suction resistance, lower the temperature of the liquid medium, install the pump at a lower location.
Fill up the pump, provide for dry running protection, move the pipes.
Replace with a new stator or ensure correct liquid temperature.
Fit a new stator. Check the liquid medium agrees with order details; if necessary change the stator material.
Change rotor, establish the cause. Wear and tear, corrosion, cavitation; if necessary change to a different material or coating.
Replace relevant parts, carefully reseal and lubricate.
Re-align the unit.
Use a new connection and re-align the pump.
Replace roller bearings, lubricate, reseal. At higher temperatures observe the lubricant and the bearings.
In the case of adjustable drives : lower the rpm.
Measure the viscosity and compare with order details. If necessary adjust viscosity or change the drive.
Measure specific weight and compare with order details. If necessary adjust specific weight or change the drive.
Service stuffing box according to page 7.4, if necessary renew worn shaft.
Replace fitted packing with another packing type.
Change electrical connection.
Replace relevant rings with new ones.
Replace elastomers. Check whether the liquid medium agrees with order details, if necessary change material.

9 Removal and Fitting of End Stud, Stator and Pump Housing

The pump with attached pipework should be empty and must have cooled off!
Disconnect the pipework on the suction side and pressure side of the pump.

Caution for pumps with ceramic rotors!

Where a pump is fitted with a **ceramic** rotor (1999) the following operations should be carried out **with great care.**
Do not use any force or sharp tools! Special care must be taken to prevent heavy strokes, vibrations or impact by a hammer.

Dismantling

- Remove the securing screws (S) from support feet (2035) to baseplate (G).

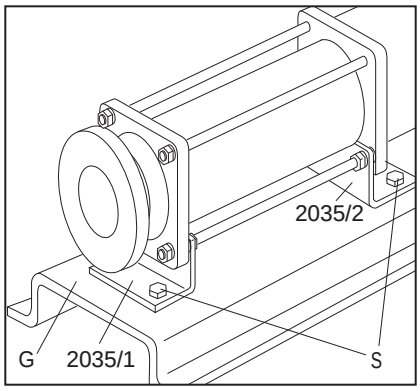

- Unscrew the hex nuts A (3020) and remove with spring washers (3015), then withdraw the end stud (2005) and first support foot (2035/1) with washers (3070).

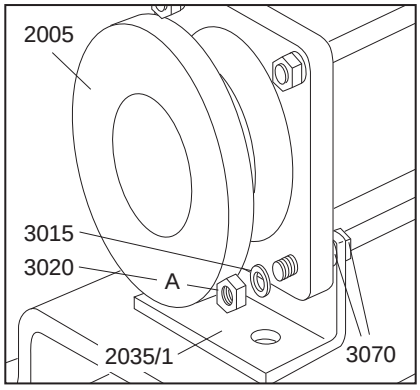

Continued Page 9.0R

9 DISMANTLING AND ASSEMBLY OF THE PUMP HOUSING

- Support pump housing (2010) and stator (3005) with wooden blocks.
- Loosen the hex nuts B (3020), where fitted, and remove the thru bolts (3010).

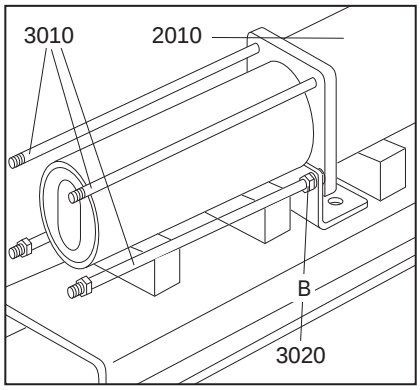

- Where fitted, remove the second support foot (2035/2) and the washers (3070).

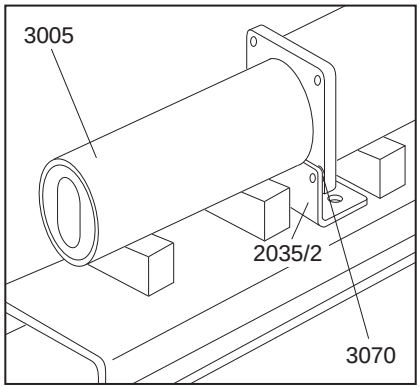

Caution for pumps with ceramic rotors!

When the stator (3005) is removed from the **ceramic** rotor (1999), the stator must be supported to prevent it from suddenly tilting away downwards. The same applies to the rotor (1999) as soon as it is disengaged from the stator (3005). Removing the stator (3005) from the **ceramic** rotor (1999) is easier by using an extractor. This should be done slowly and with care in a rotating movement. When sliding pump housing (2010) over **ceramic** rotor (1999), both coupling rod (1998) and rotor (1999) should be lifted as the **ceramic** rotor (1999) must not knock onto the pump housing (2010).

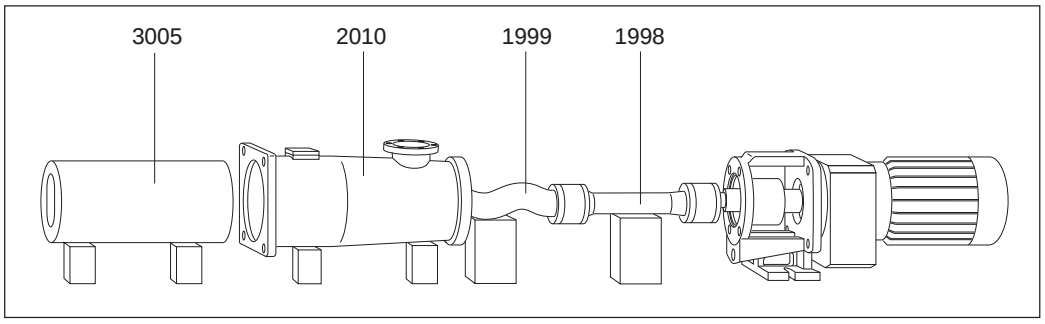

Continued Page 9.1

Caution for pumps with tubular rotors:

Where the walls of tubular rotors are worn in the wear zones, pumping medium may occur inside the rotor and may come out when pulling off the stator.
Ensure that protective measures have been taken when pumping dangerous media!

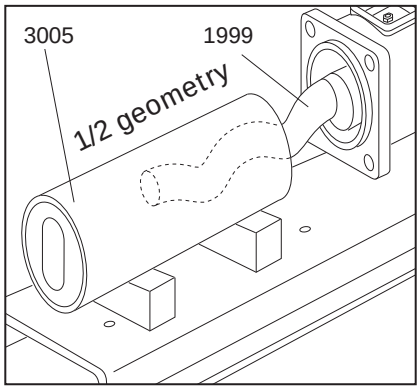

- Pull the stator (3005) out forward.
  A stator extractor can be supplied as special accessory.

- Remove the hex nuts (2030) with spring washers (2025).
- Pull the pump housing (2010) off forward.

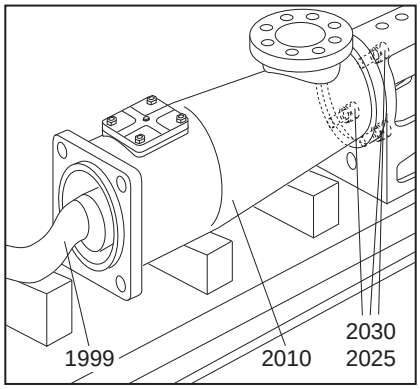

Assembly

- Refitting is a simple reversal of this procedure.

  When refitting the stator (3005) check direction of stator (3005) is correct! The funnel-shaped inflow side (E) of the stator (3005) must show to
  - the pump housing (2010) when rotation is **anti-clockwise**
  - the end stud (2005) when rotation is **clockwise**

  when viewed on pump shaft end.

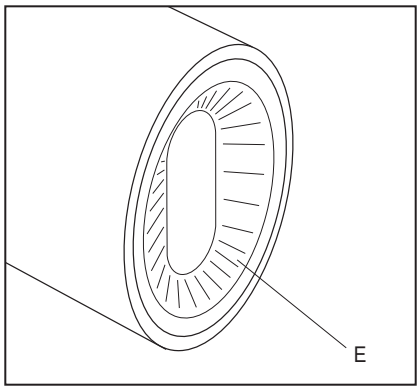

- **Elastomer stators (A)** have integrated front side sealing profiles (D). They don't need additional gaskets for sealing off the end stud (2005) and the pump housing (2010).

- **Solid stators (B)** have **no** integrated front side sealing profiles. Therefore additional gaskets (8005) should be installed to seal off the end stud (2005) as well as the pump housing (2010).

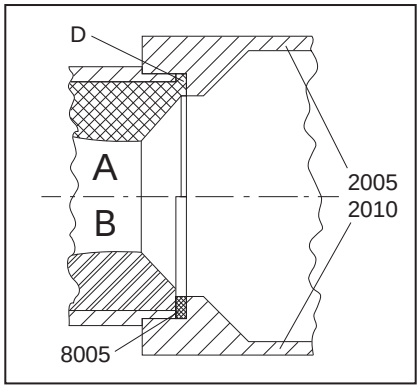

Continued Page 9.1R

9 DISMANTLING AND ASSEMBLY OF THE PUMP HOUSING



Be careful when engaging the stator (3005) and rotor (1999). Do not trap your fingers!
Do not reach inside the stator!

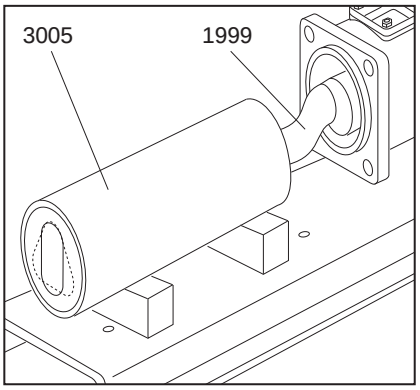

- Push the stator (3005) with a rotating movement on to rotor (1999).
  Apply an assembly device and some glycerine to ease engaging the stator (3005) and rotor (1999).

- When tightening hex nuts (2030) a gap will remain between drive stool (0085) and pump housing (2010).



Please do not try to close this gap by overtightening the nuts!
Drive stool (0085) may break!

Torque values for hex nuts (2030):

Size	M6	M8	M10	M12	M16	M20	M24	M30
Required torque Nm	8	15	30	45	75	80	100	120

- Fastening the end stud (2005):

Screw the hex nuts C (3020) down into the thru bolts (3010) as far as possible.
Slip on the first washers (3070), the support foot (2035), the second washers (3070), the end stud (2005) and tighten with spring washers (3015) and hex nuts A (3020).
Finally, fasten the support foot (2035) from behind with the two hex nuts C (3020).

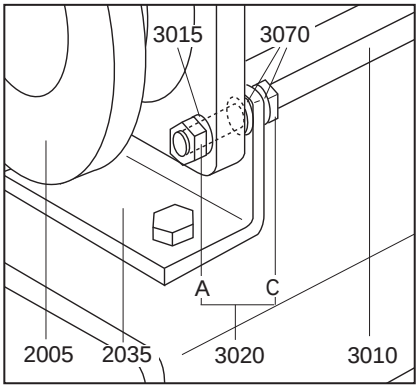

Ensure during refitting that the O-ring (8015) or, where a heating jacket (3025) is installed, the O-rings (8030) are in perfect condition and will sit correctly.



Ensure that the drain plug (2015) is not screwed too tightly into the pump housing (2010), since otherwise its conical thread may break the pump housing (2010).
The torque should be about 40 - 50 Nm.

10 Dismantling and Assembly of the Rotating Parts with Pin Joints with SM-Pin Joint Seal (basic joint size NM015 - NM125)

10.1 Removal of Rotor and Coupling Rod

Where a pump is fitted with a **ceramic** rotor (1999) the following operations should be carried out **with great care.** Do not use any force or sharp tools! Special care must be taken to prevent heavy strokes, vibrations or impact by a hammer.
For removal of the rotor (1999) and coupling rod (1998) the pin joints should be dismantled as follows:

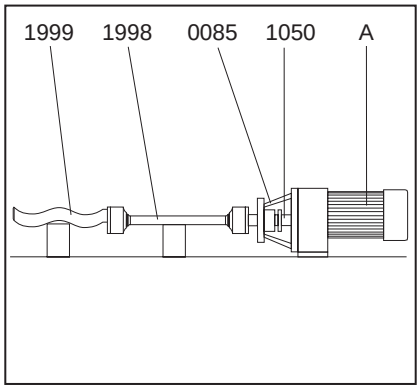

- Place the dismantled unit – consisting of drive stool (0085) with drive (A) and connecting shaft (1050), coupling rod (1998) and rotor (1999) – on the work-bench with a wooden block supporting the rotor (1999).

Basic joint size NM125:

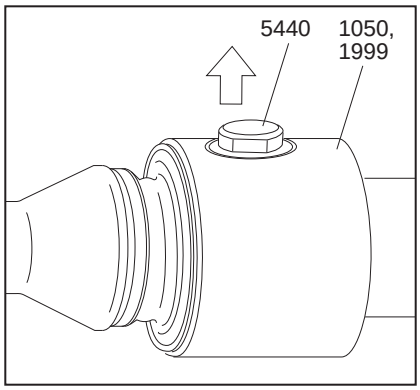

- Unscrew the wear sleeves (5440) from the head of rotor (1999) or connecting shaft (1050)

Basic joint size NM021 - NM105:

- Push circlip (5065) out of its groove and slip off over the head of rotor (1999 or connecting shaft (1050).

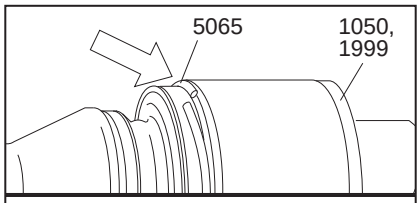

Pumps fitted with a ceramic rotor (1999):



- **Carefully** turn safety sleeve (5115) with a squeeze belt wrench, and remove.
The following method should **not** be employed for pumps fitted with a **ceramic** rotor.

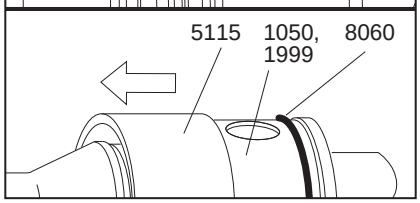

Pumps fitted with a metallic rotor (1999):

- If necessary hit the edge of sleeve (5115) at an angle with the help of a wooden block and a plastic hammer. Taking care not to damage the O-rings (8060)!

Continued Page 10.0R

10 DISMANTLING AND ASSEMBLY OF THE ROTATING PARTS

Basic joint size NM021 - NM125:

- Press the pin (5075) out of the head of rotor (1999) or connecting shaft (1050). If necessary use a hammer and a thin cylindrical pin (DIN 6450 C).
  Drain the oil into a receptacle.

  Caution for pumps with ceramic rotors!

  Where a pin (5075) may not come out easily, the metallic head of rotor (1999) should be supported on wooden blocks. Then the pin (5075) can be driven out with the help of a pin punch (DIN 6450 C). This should be done **with care**, holding the **ceramic** rotor with your hands.
  Please dispose of this oil in the proper manner.

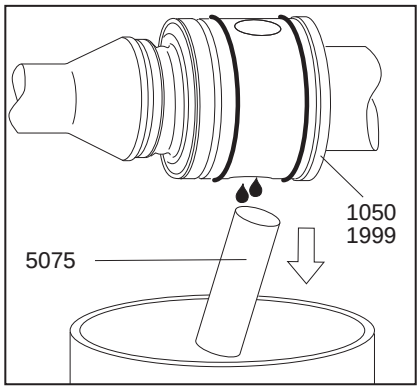

- Using a screwdriver, carefully lever the SM-pin joint seal (8235) out of the head of rotor (1999) or connecting shaft (1050).



Taking care not to damage the SM-pin joint seal (8235)!

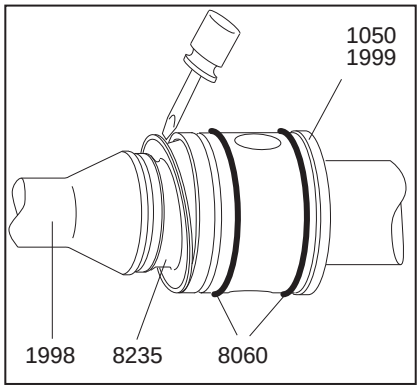

- Pull apart the rotor (1999)/ coupling rod (1998) / connecting shaft (1050) assembly. Remove the O-rings (8060).

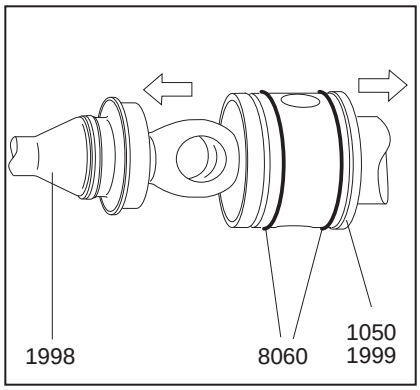

- Push the SM-pin joint seal (8235) towards the head of coupling rod (1998). In the narrow coupling rod section press the clamp ring (5425) out of the groove of the seal. Then slip the SM-pin joint seal (8235) and clamp ring (5425) off over the head of the coupling rod (1998).

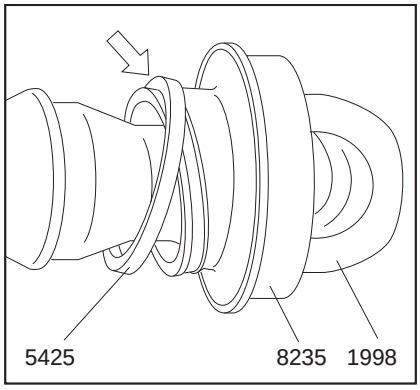

Continued Page 10.1

10.2 Fitting the Rotor and Coupling Rod

For fitting the rotor (1999) with coupling rod (1998), the two pin joints should be assembled as follows:

- Slip the clamp ring (5425) over the head of coupling rod (1998).

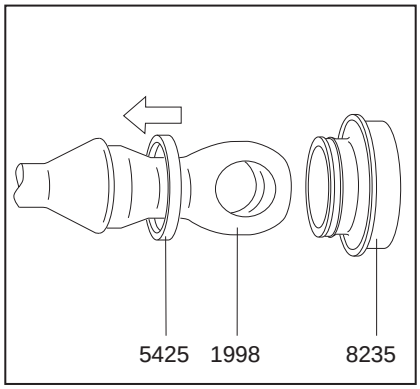

- Push the SM-pin joint seal (8235) over the head of coupling rod (1998) towards its narrow section, there sqeezing the clamp ring (5425) into the groove of the SM-pin joint seal (8235).

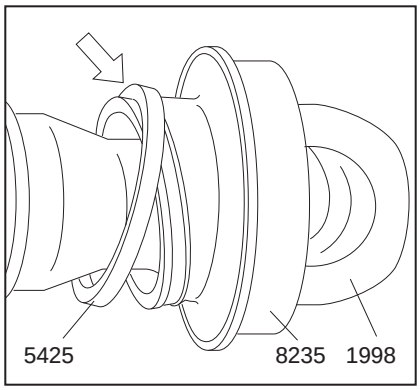

- Push the SM-pin joint seal (8235) with the correctly placed clamp ring (5425) up to the shoulder of coupling rod (1998).

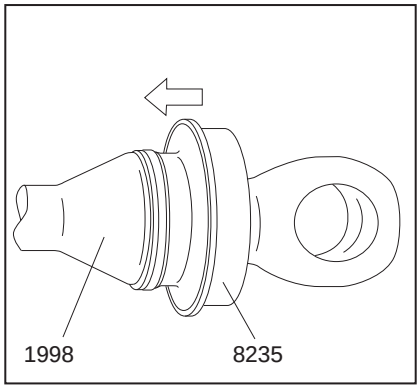

Continued Page 10.1R

10 DISMANTLING AND ASSEMBLY OF THE ROTATING PARTS

Basic joint size NM021 - NM105:

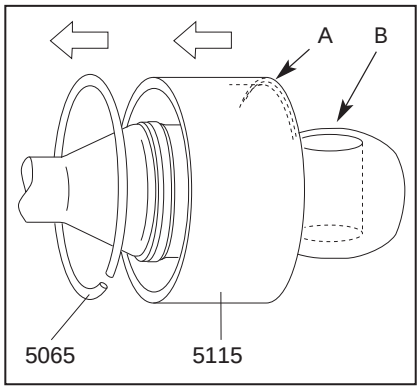

- Slip the circlip (5065) on to the coupling rod (1998). Slide the sleeve (5115) on to coupling rod (1998) so the inside diameter of chamfering (A) is being placed towards the coupling rod (1998) extension. Chamfering (A) will later on ease the installation over the O-rings (8060).
  Orient the head of coupling rod (1998) until it is in vertical position for the bore (B) for the pin (5075).

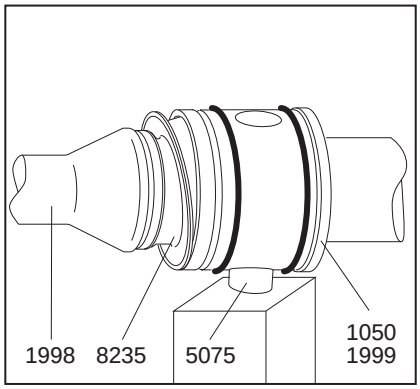

- Slide the coupling rod (1998) with SM-pin joint seal (8235) into the bore of rotor (1999) or connecting shaft (1050) and insert the pin (5075) from below and push up to the upper edge of coupling rod (1998).
  Support the pin (5075) against dropping out.
  Slide the SM-pin joint seal (8235) into the rotor (1999) or connecting shaft (1050) only from below, and in a slightly slanted position.

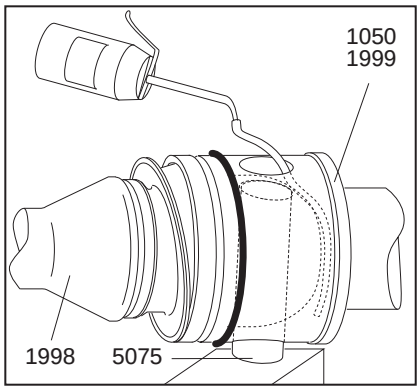

- For lubrication, use an oil can which should be fitted with a thin plastic hose having an outside diameter of not more than 4 mm.
  Insert this hose into the upper oil port opening in the rotor (1999) or connecting shaft (1050). Then slide the hose end past the coupling rod (1998) all the way down to the bottom section of the rotor head (1999) or connecting shaft (1050).
  Slowly fill with lubricating oil up to the filling port.

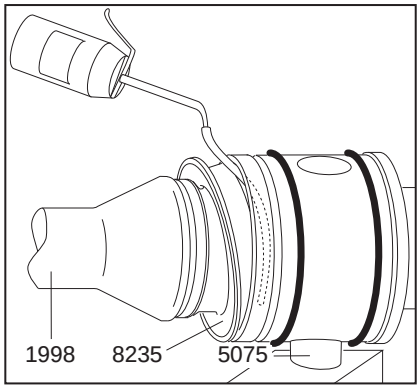

- Pull the hose out.
  Then insert the hose end through the small gap on the topside of SM-pin joint seal (8235) and guide it down to the bottom of the hollow space between coupling rod (1998) and SM-pin joint seal (8235).
  Slowly fill with lubricating oil up to the gap.

Continued Page 10.2

- Pull the hose out.
  Push the pin (5075) entirely into the bore of head of rotor (1999) or connecting shaft (1050) and retain in place.
  Only now, press the SM-pin joint seal (8235) into the bore of head of rotor (1999) or connecting shaft (1050) and push up to the shoulder. In doing so the SM-pin joint seal (8235) should be slightly bulbous around the outer surface. Wipe off overflow oil. Use this oil for lubricating the O-rings (8060).

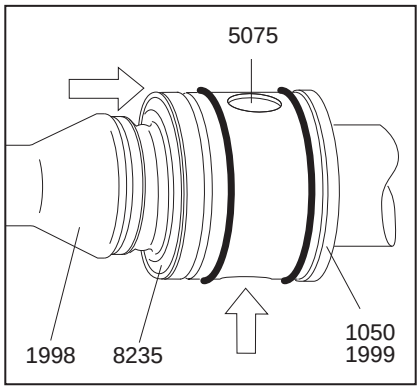

- Slip the sleeve (5110) or (5115), with its chamfering (A) forward, on to the head of rotor (1999) or connecting shaft (1050) and push up to the shoulder.

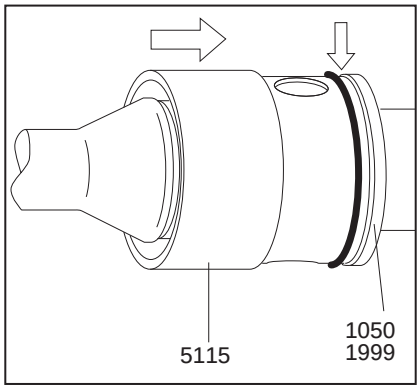

- Place the circlip (5065) into its groove on the rotor head (1999) or connecting shaft (1050) and carefully snap in place all around.

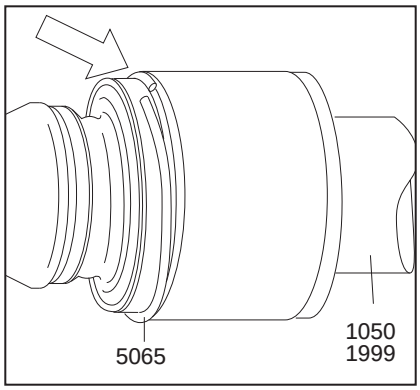

- **Basic joint size NM125:**

  Slide the coupling rod (1998) into the bore of the head of rotor (1999) and connecting shaft (1050) and insert the pins (5075).
  Insert the SM-pin joint seal (8235) (8235) into the head of rotor (1999) and connecting shaft (1050).
  Only then screw in one wear sleeve (5440) with O-ring (8060) into the head of rotor (1999) and connecting shaft (1050) and turn upside down.

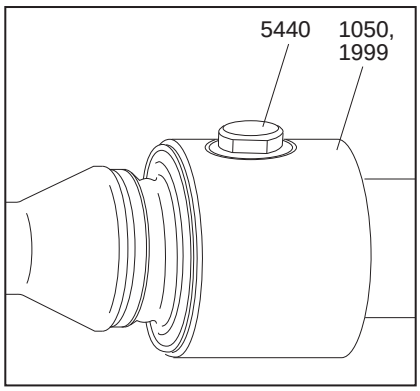

10 DISMANTLING AND ASSEMBLY OF THE ROTATING PARTS

- For lubrication, use an oil can which should be fitted with a thin plastic hose having an outside diameter of not more than 4 mm.
  Insert this hose into the upper oil port opening in the rotor (1999) or connecting shaft (1050). Then slide the hose end past the coupling rod (1998) all the way down to the bottom section of the rotor head (1999) or connecting shaft (1050).
  Slowly fill with lubricating oil up to the filling port.

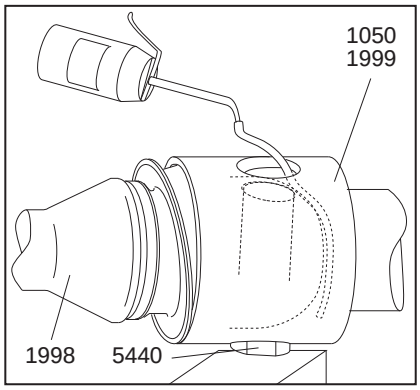

- Pull the hose out.
  Then insert the hose end through the small gap on the topside of SM-pin joint seal (8235) and guide it down to the bottom of the hollow space between coupling rod (1998) and SM-pin joint seal (8235).
  Slowly fill with lubricating oil up to the gap.
- Screw in the second wear sleeve (5440) with O-ring (8060) into the head of rotor (1999) and connecting shaft (1050).

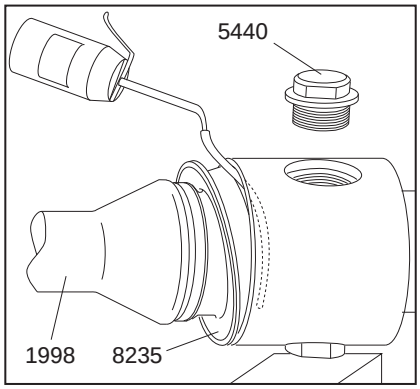

- **Basic joint size NM021 - NM125:**

  Drive connecting shaft (1050), coupling rod (1998) and rotor (1999) are now joined by means of the two pin joints.
  Pump housing (2010), stator (3005) and end stud (2005) may now be fitted.

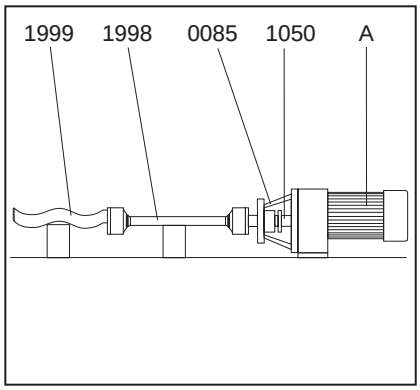

Continued Page 10.3

10.3 Dismantling and Assembly of the Rotating Parts with Pin Joints with SM-Pin Joint Seal (joint basic size NM015)

For removal and refitting of the rotor (1999) and coupling rod (1998) the pin joints should be dismantled and re-assembled as follows:

Dismantling:

- Push the SM-pin joint seal (8235) away from the rotor (1999), drive shaft (1005) or connecting shaft (1050) so the bore for the pin (5075) comes free.

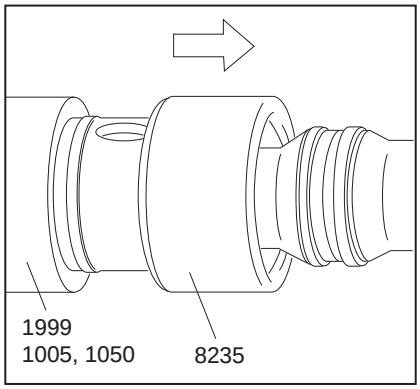

- Press the pin (5075) out of the rotor (1999), connecting shaft (1050) or drive shaft (1005). Then withdraw the coupling rod (1998) from the bore of rotor (1999), connecting shaft (1050) or drive shaft (1005).

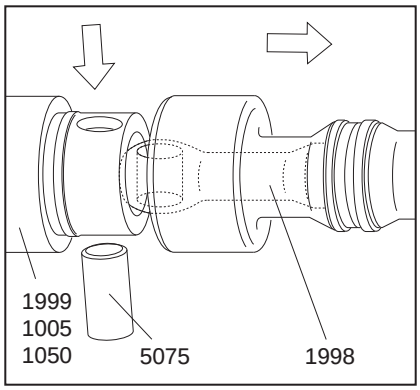

- Push the SM-pin joint seal (8235) towards the head of coupling rod (1998). In the narrow coupling rod section press the clamp ring (5425) out of the groove of the seal. Then slip the SM-pin joint seal (8235) and clamp ring (5425) off over the head of the coupling rod (1998).

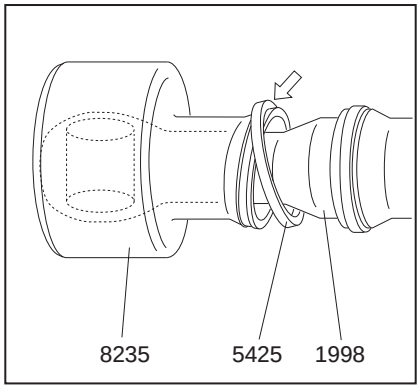

Continued Page 10.0R

Re-Assembly:

- Slip the clamp ring (5425) and the SM-pin joint seal (8235) on over the head of the coupling rod (1998).

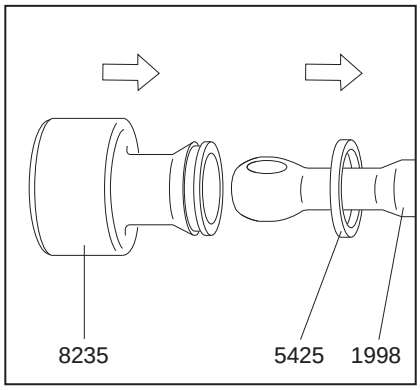

- Push the SM-pin joint seal (8235) towards the narrow section on the head of coupling rod (1998) and place the clamp ring (5425) back into the groove of the SM-pin joint seal (8235).
  Then move the SM-pin joint seal (8235) up to the coupling rod (1998) shoulder.

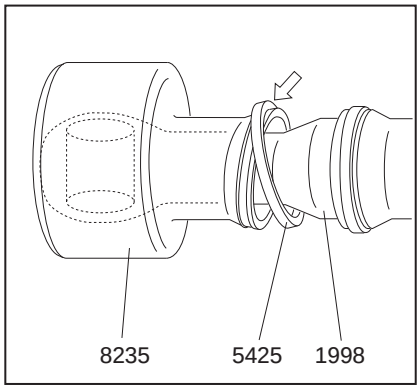

- Place the head of coupling rod (1998) into the bore of the rotor (1999), drive shaft (1005) or connecting shaft (1050).

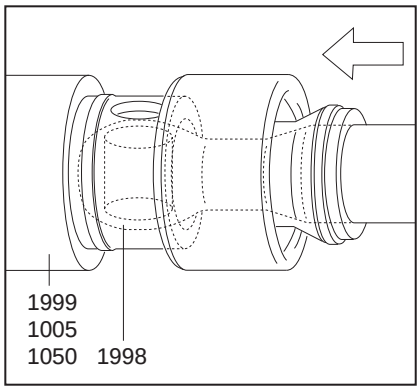

- Join the rotor (1999), drive shaft (1005) or connecting shaft (1050) and coupling rod (1998) by the pin (5075).
  Then push the SM-pin joint seal (8235) up to the shoulder of the rotor (1999), drive shaft (1005) or connecting shaft (1050).

  Re-assemble the second pin joint in the same manner.

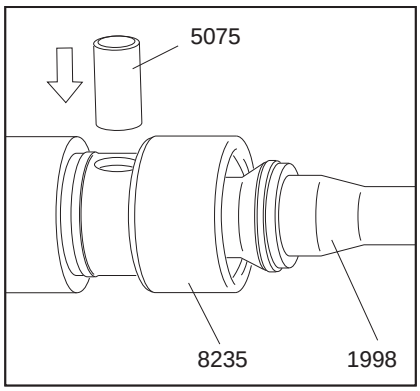

10.3 Replacing the Wear Sleeves of Adapter, Rotor and Coupling Rod

The wear sleeves (5435, 5440) have a very tight fit. A press should be used to remove or refit them.

It may be possible though to drive the damaged sleeves out with a suitable mandrel. A rigid vice however is needed at the least for pressing new sleeves (5435, 5440) in again.

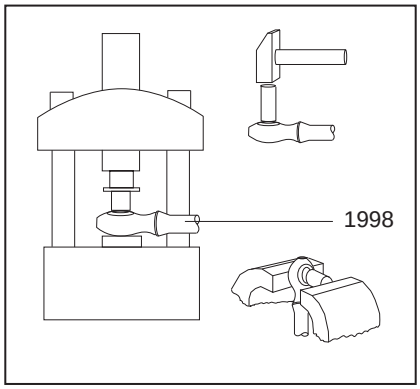

Orient the wear sleeves (5435) so that their oval bore agrees with the longitudinal axis of the coupling rod (1998).

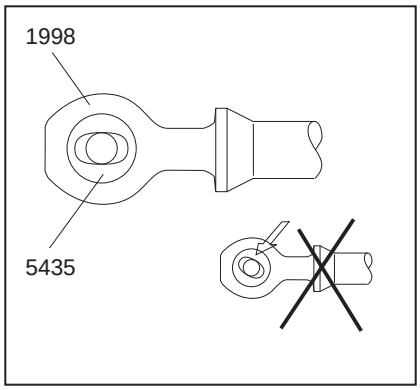

- Generously oil the wear sleeves (5435, 5440).
- Every wear sleeve (5435, 5440) has got one smaller outer diameter on one end for better insertion into the bores of the coupling rod.
- Ensure the sleeves are placed in the correct orientation to the coupling rod (1998).

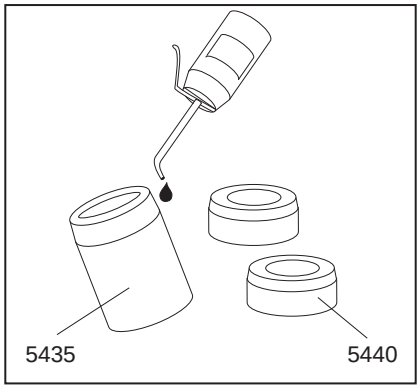

11 Removal and Fitting of the Connecting Shaft with Shaft Seal

Removal:

- Push the circlip (1035) in the direction to the mechanical seal.
- Remove pin (1030).
- Remove the shaft seal housing (7005) and mechanical seal (7010) together with connecting shaft (1050) and set ring (1035) from drive stool (0085) and the drive shaft.
  The thread of cylindrical head screw (1040) can be used as forcing screw.
- If a mechanical seal is installed, see description "Removal and Fitting of Mechanical Seal" after Page 12.0.

Fitting:

- Apply grease into the bore of the connecting shaft (1050) to avoid rust (e.g. TCE-Metallic 600).
- Assemble the shaft seal housing (7005) and mechanical seal (7010) together with connecting shaft (1050) and set ring (1035) with drive stool (0085) and push connecting shaft (1050) on to the drive shaft.
  At this please observe the installation direction of set ring (1035) (please see mark).
- If a mechanical seal is installed, see description "Removal and Fitting of Mechanical Seal" after Page 12.0.
- Connect the connecting shaft (1050) and the drive shaft by pin (1030).
  Push set ring (1035) on pin (1030).

12.1 Removal and Fitting of the Single Mechanical Seal

- **Carefully** slide out mechanical seal housing (7005) together with the parts of the mechanical seal contained in it from connecting shaft (1050).
- **Carefully** push mechanical seal (7010) stationary seat out of mechanical seal housing (7005).

Refitting is a simple reversal of the above procedure.

- To reduce frictional forces during seal assembly, apply some glycerine to the shaft and the seal housing in the area of the gaskets.
- Special care must be taken when fitting double PTFE-coated gaskets: the **joint** of the outer coating must point away from the seal assembly direction, otherwise the coating may open or be pulled off!



Ensure that the distribution of pressure is uniform when inserting the pressure sensitive counter rings. When inserting larger rings, use a suitable mandrel.
Do not allow any foreign bodies to get between the sliding surfaces.

- Exactly keep to the seal installation dimensions and ensure that the sealing faces are correctly pressed together (see table on sectional drawing W 209.000 or W 210.000).
- Insert mechanical seal (7010) stationary seat into mechanical seal housing (7005).
- Insert mechanical seal housing (7005) together with the stationary seat into the drive stool **without the installed connecting shaft (1050).**
- If necessary take the installation dimension from the table and add the thickness S of the set ring (7086) when existing.
- Mark this installation dimension on the connecting shaft (1050).
- Fix the rotating unit of the mechanical seal (7010) on the connceting shaft (1050) depending on the installation dimension so that the rotating unit of the mechanical seal (7010) or the set ring (7086) is at the mark.
- Insert connecting shaft (1050) with the rotating unit of the mechanical seal (7010) into drive stool (0085) and install lip seal (7091, if existing. Push the set ring (1035) on to connecting shaft (1050) and observe at this the installation direction (see mark).
  Push connecting shaft (1050) on to the drive shaft and connect with pin (1030). Push the set ring (1035) on pin (1030).

Inspection Opening at the Pump Housing

gray cast iron model on from size NM045

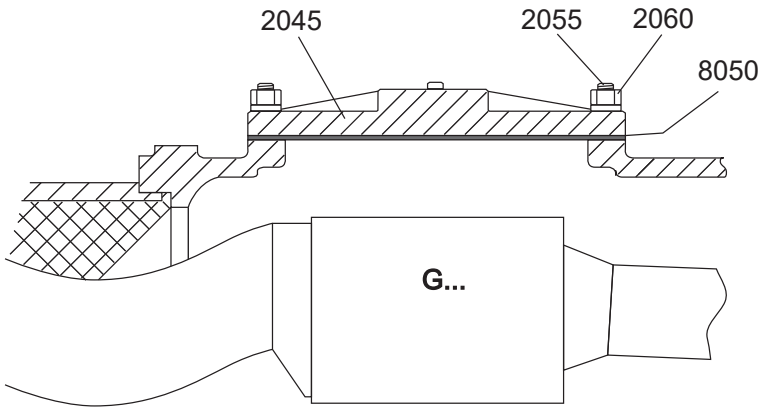

design for welded housings – nominal size DN 76,1 – ISO 2852

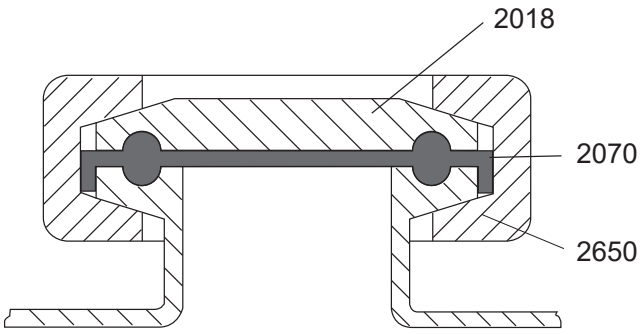

15 Sectional Drawings and List of Spare Parts

14 Recommended Spare Parts

In general, we have all spare parts in stock. Our subsidiaries and exclusive representatives also hold a certain stock. For special cases and when short waiting periods are not acceptable, we recommend to keep an amount of spare parts, corresponding to the pump, in stock on site (please see table below).

- Rotor
- Stator
- Elastomer parts as O-rings and sleeves
- joint parts
- shaft seals.

To avoid mistakes in delivery, please identify the parts by their position number shown in the spare parts list or on the sectional drawing.

For placing a spare parts order, it is absolutely necessary to give the following details:

Pieces (see column 2) - Designation (see column 3) - Identification Number (see column 4)

The column details are taken from the spare parts list. See example.

Example:

SPARE PARTS LIST		10.05.94		10:50:18	Page: 1 / 5
1		2		3	4
PART EURO	POS.	Quantity	Unit	Designation Size – Norm – Material/Surface	Ident-Number
3410	0005	1,000	pc	bearing housing	850221
2910	0010	1,000	pc	distance sleeve	850220
3520	0015	1,000	pc	bearing cover	850222

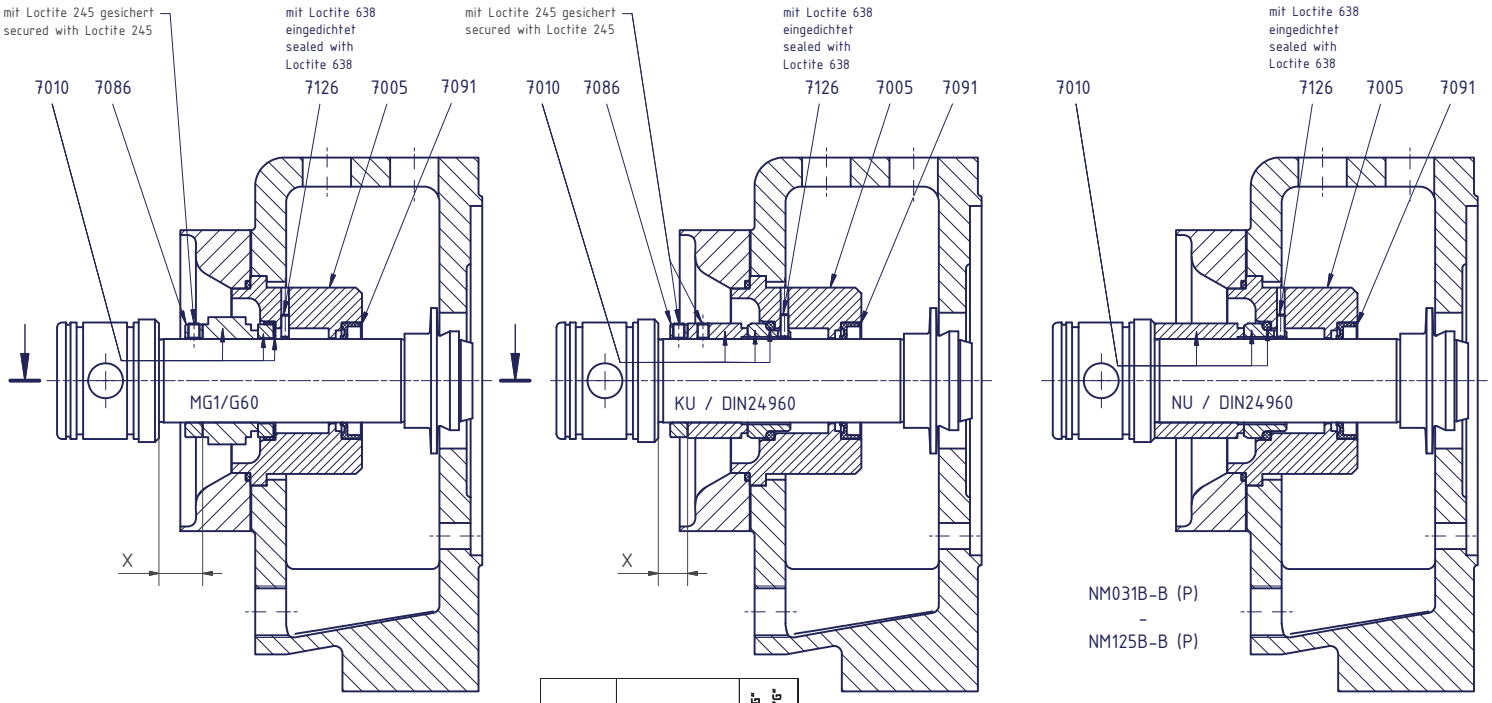

Type	Einstellmaß "X" setting "X"		Spülanschluß "G" flushing connection "G"
	MG1	KU	
NM015B	10,5	0	G 1/8
NM021B	10,5	0	
NM031B	20,5	12,5	
NM038B	17,5	10	
NM045B	22,5	15	G 1/4
NM053B	25,5	22,5	
NM063B	30,5	27,5	
NM076B	30	20	
NM090B	36,5	30	
NM105B	30,5	25	
NM125B	30,5	25	

NETZSCH
The heart of your process

Zeichnung-Nr.: Drawing No.: W210.000

Einf. wirk. GLRD
mit Quenchanschluß
Single Mechanical Seal
with Quench

Type: NM015B-B (P) - NM125B-B (P)

	Datum / date	Name / name	Unterschrift/Signature
Maßst./Scale: 1 : X			
gezeichnet / drawn	09.03.2006	Preintner	
geprüft / checked	09.03.2006	Denk	
freigegeben / released	09.03.2006	Denk	

Verteiler: Distributor: 2 / 3 / 50 / 51 / 52 / 58 / 95 / 98 / 49

Revision: 2

Ersatz für Ausgabe vom: Replacement for Version of: 23.10.2003

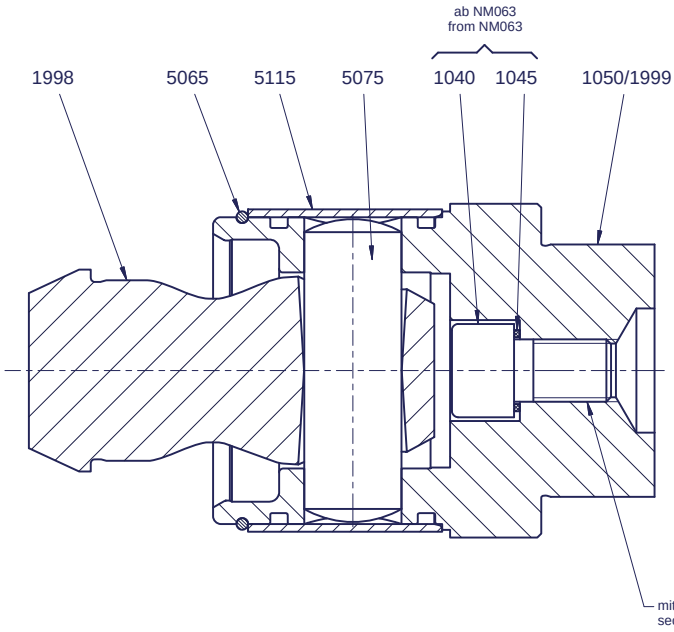

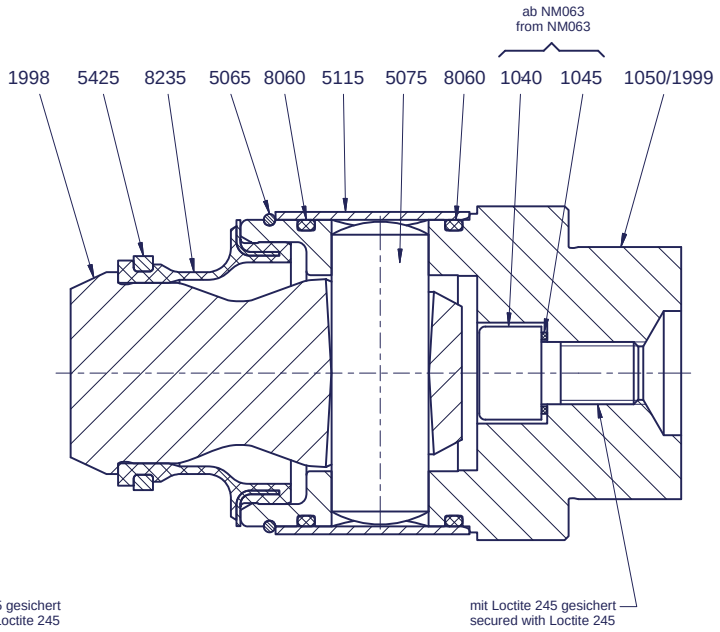

nur/only NM015B- (P)

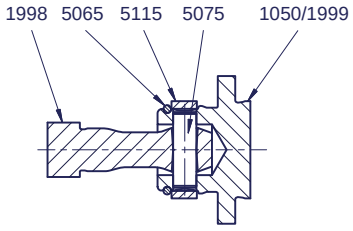

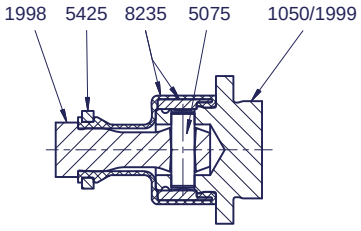

NETZSCH The heart of your process	Zeichnung-Nr.: Drawing No.: G146.000	Bolzengelenk ohne/mit SM-Bolzenabdichtung Pin Joint without/with SM-Pin Joint Seal		Type: NM015B- (P) - NM105B- (P)
Maßst./Scale: 1 : X	Datum / date	Name / name	Unterschrift/Signature	Revision: 1
gezeichnet / drawn	14.10.2003	Preintner		
geprüft / checked	14.10.2003	Thoma		Ersatz für Ausgabe vom: Replacement for Version of: 23.05.2003
freigegeben / released	14.10.2003	Thoma		
Verteiler: Distributor: 2 / 3 / 50 / 51 / 52 / 58 / 98				

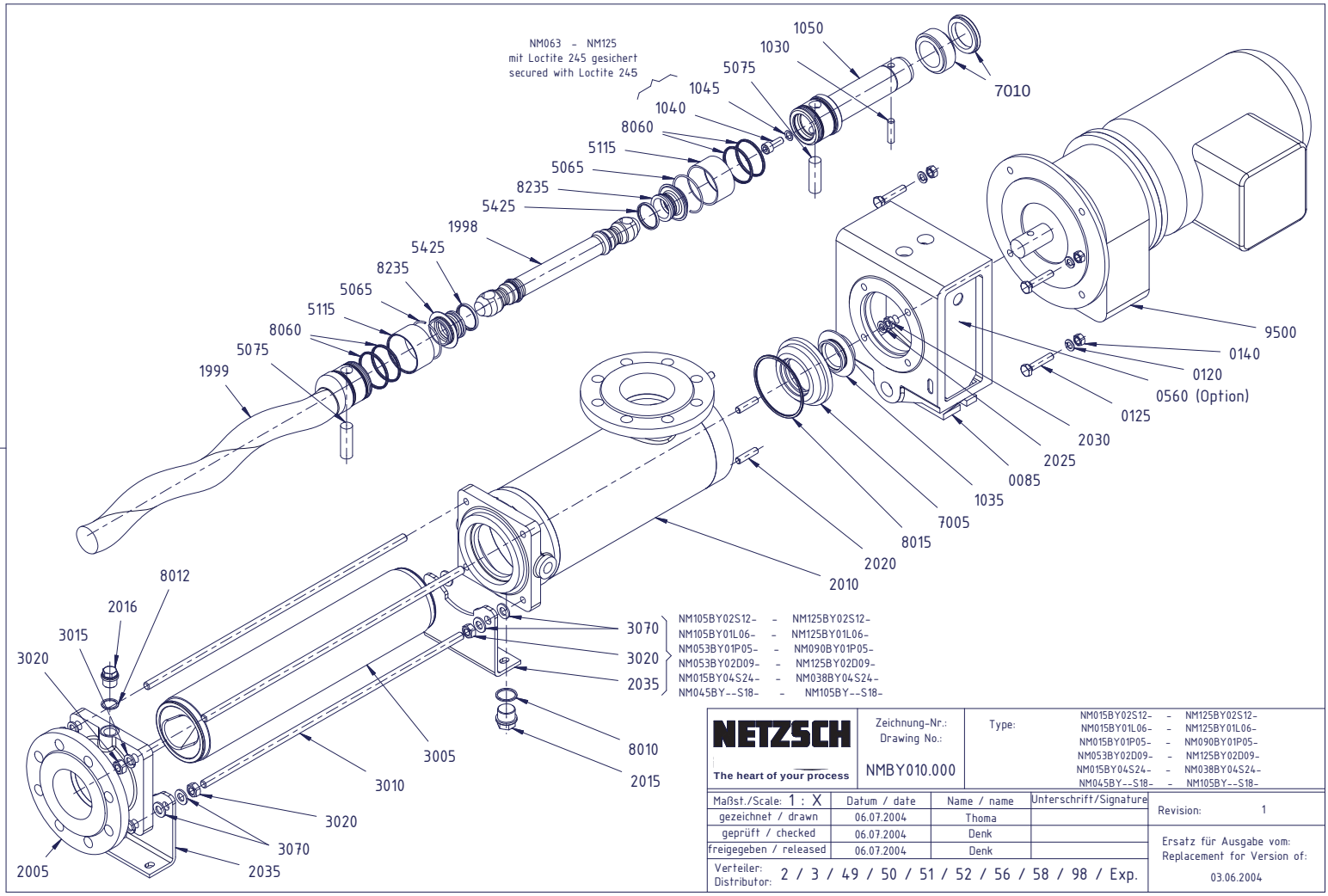

NETZSCH The heart of your process	Zeichnung-Nr.: Drawing No.: NMBY010.000	Type:	NM015BY02S12– – NM125BY02S12– NM015BY01L06– – NM125BY01L06– NM015BY01P05– – NM090BY01P05– NM053BY02D09– – NM125BY02D09– NM015BY04S24– – NM038BY04S24– NM045BY--S18– – NM105BY--S18–

Maßst./Scale: 1 : X	Datum / date	Name / name	Unterschrift/Signature	Revision: 1
gezeichnet / drawn	06.07.2004	Thoma		
geprüft / checked	06.07.2004	Denk		Ersatz für Ausgabe vom: Replacement for Version of:
freigegeben / released	06.07.2004	Denk		03.06.2004
Verteiler: Distributor: 2 / 3 / 49 / 50 / 51 / 52 / 56 / 58 / 98 / Exp.				

PUMP DATASHEET

NETZSCH	NR. CP:	NR. DOC:	
	CUSTOMER: VEOLIA		REV. 0
	ORDER: TBD		SHEET 1 OF 2
TITLE:	NM015BY01L06B PUMP DATA SHEET		

GENERAL NOTES

REV.	DESCRIPTION	DATE	EXEC.	VERIFY.	APPROV.
	FOR APPROVAL	21/02/19			

NETZSCH	NR. CP: 0	NR. DOC: 0	
	CUSTOMER: VEOLIA		REV. 0
			SHEET
	ORDER: TBD		2 OF 2
TITLE:	NM015BY01L06B PUMP DATA SHEET		

01 / NEMO PUMP / NM015BY01L06B

CONSTRUCTIVE FEATURES		
☑ Base:	Model:	Carbon steel with 0.5" thickness(custom)
☐ Bearing		
☐ By-pass:		
☐ Coupling:		
☐ Relief Valve:		
☑ Mechanical Seal:	Manufacturer / Model:	
☐ Gasket:		
☐ Shaft Sleeve:		
Transmission:	○ Direct ○ Gear ○ Belt ◉ N/A	

SUCTION NOZZLE (INTERFACE WITH THE INSTALLATION)	
Rating:	HORIZONTAL TO THE RIGHT FROM DRIVE END
Facing:	FLAT FACE
Dimension/Class:	1" ANSI Class 150 B16.5

DISCHARGE NOZZLE (INTERFACE WITH THE INSTALLATION)	
Rating:	HORZONTAL
Facing:	FLAT FACE
Dimension/Class:	1" ANSI Class 150 B16.5

MATERIALS	
Rotor:	316 STAINLESS STEEL
Stator:	S91 ELASTOMER(VITON)
Mechanical Seal:	AISI 316 / AISI 316 / SILICON CARBIDE
Mechanical Seal Housing:	STAINLESS STEEL 316
Casing:	STAINLESS STEEL 316
SM Pin Joint Seal:	"V" JOINT VITON SEALS
Drive Shaft:	STAINLESS STEEL 316
Connecting Shaft:	STAINLESS STEEL 316
Coupling Shaft:	STAINLESS STEEL 316
Base:	Cusotm plate

INSPECTION			
☐ Hydrostatic	UNWITNESSED	☐ Painting	UNWITNESSED
☐ Performance	UNWITNESSED	☐ Dimensional	UNWITNESSED
☐ Dye penetrant	UNWITNESSED	☐ Welding	UNWITNESSED

NOTES:

PERFORMANCE	
Pumped fluid:	**POLYMER**
Concentration:	N/A
Operating Temp.:	N/A
Density:	1Kg/dm3
Viscosity:	2000 cps
pH:	N/A
NPSH Available:	-
NPSH Required:	1.15 m
Absorbed Power:	0.15 hp
Nominal Flow :	150 LPH
Project Flow :	250 LPH
Discharge Pressure:	85 psig
Suction Pressure:	flooded
Differential Press.:	85 psig
Set Press. Relief Val.:	-
Pump Design Press.:	85 psig
Máx. Dif. Pressure.:	85 psig
Efficiency:	30.00%
Rotations:	200-310
Installation Conditions:	◉ Indoor
	○ Outdoor
	○ Uninformed
Classified area:	○ Yes ◉ No

FLUSHING	
Fluid:	N/A
Pressure:	N/A
Flow:	N/A
Temperature:	N/A

HYDROSTATIC TEST PRESSURE	
Pump Housing:	N/A
Pressure Stud:	N/A

WEIGHTS	
Pump (kgf):	-
Base (kgf):	-
Gear (kgf):	-
Total (kgf):	45

THE INFORMATION CONTAINED IN THIS DOCUMENT IS THE OWNERSHIP OF NETZSCH OF BRAZIL, WHICH IS PROHIBITED TO BE USED OUTSIDE OF ITS PURPOSE.

MOTOR DATA PACKAGE

PRODUCT INFORMATION PACKET

marathon® Motors

Model No: 056H17T5311
Catalog No: Y555
1/2,1725,TENV,56CZ,3/60/575
1000:1 Speed Ratio



Regal and Marathon are trademarks of Regal Beloit Corporation or one of its affiliated companies.
©2018 Regal Beloit Corporation, All Rights Reserved. MC017097E

REGAL

Product Information Packet: Model No: 056H17T5311, Catalog No:Y555 1/2,1725,TENV,56CZ,3/60/575

marathon® Motors

Nameplate Specifications

Output HP	**0.50 Hp**	Output KW	**0.37 kW**
Frequency	**60 Hz**	Voltage	**575 V**
Current	**0.65 A**	Speed	**1725 rpm**
Service Factor	**1**	Phase	**3**
Efficiency	**80 %**	Duty	**Continous**
Insulation Class	**F**	Design Code	**INV**
KVA Code	**L**	Frame	**56CZ**
Enclosure	**Totally Enclosed Non Ventilated**	Overload Protector	**No**
Ambient Temperature	**40 °C**	Drive End Bearing Size	**6203**
Opp Drive End Bearing Size	**6203**	UL	**Recognized**
CSA	**Y**	CE	**Y**
IP Code	**43**		

Technical Specifications

Electrical Type	**Squirrel Cage Inverter Duty**	Starting Method	**Inverter Only**
Poles	**4**	Rotation	**Reversible**
Mounting	**Rigid base**	Motor Orientation	**Horizontal**
Drive End Bearing	**Ball**	Opp Drive End Bearing	**Ball**
Frame Material	**Rolled Steel**	Shaft Type	**NEMA 56**
Overall Length	**13.48 in**	Frame Length	**7.06 in**
Shaft Diameter	**0.625 in**	Shaft Extension	**2.06 in**
Assembly/Box Mounting	**F1 Only**		
Outline Drawing	**A-104043-706**	Connection Diagram	**A-EE7300T**

This is an uncontrolled document once printed or downloaded and is subject to change without notice. Date Created: 07/02/2018

Uncontrolled Copy

104043

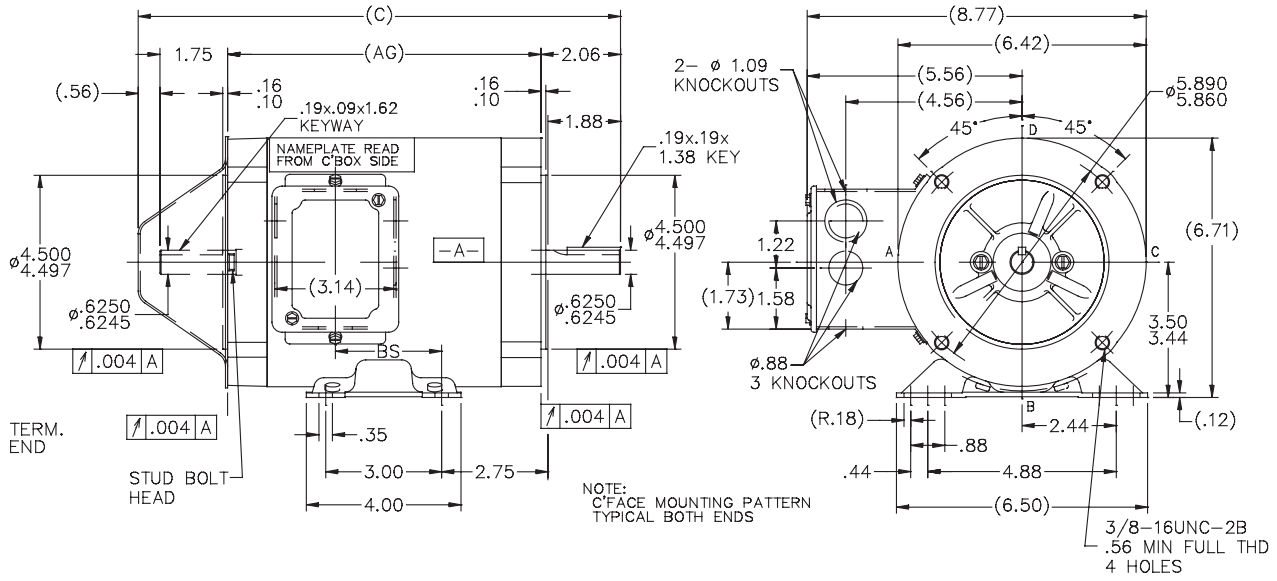

DASH	FR.	C	AG	BS	DASH	FR.	C	AG	BS
606	56–60	12.48	8.11	2.75	756	56–75	13.98	9.61	4.25
656	56–65	12.98	8.61	3.25	806	56–80	14.48	10.11	4.75
706	56–70	13.48	9.11	3.75	856	56–85	14.98	10.61	5.25

NOTES:
1– REMOVABLE BASE
2– CONDUIT BOX CAN BE ROTATED 180°

NO.	REVISION	BY & DATE
6	CHANGED LOGO FROM MARATHON TO REGAL	SAJ 08/28/15
5	REDRAWN IN AUTOCAD	TAT 07-06-2004
4	ADDED KEYWAY TO FRONT EXT. CN 27200–169	CAV 02-21-2000
3	REMOVED KEYWAY FROM FRONT EXT. CN 27400–442	CAV 10-08-1999
2	REV. BLACK MAX 56 FR. –706 WAS –856 CN27400–264	BLR 07-14-1999

TOLERANCES UNLESS SPECIFIED

CHK	DEC.	INCHES
AB	.X	±.1
ML	.XX	±.03
	.XXX	±.005
	.XXXX	±.0005
ANG		±7'30"

Regal Beloit America, Inc.

TITLE OUTLINE
56 FR. – TENV – BB – DBL. C' FACE

MAT'L.
FINISH
CAD FILE 104043
RFP
DIST WP

DRAWN	CEB 08–16–1995
CHK	DA 08–18–1995
APPD	EAB 08–21–1995
SCALE	5=16
REF	
FMF	
PREV	

SIZE A | DRAWING NO. 104043 | PAGE OF | REV. 6

THIS DRAWING IN DESIGN AND DETAIL IS OUR PROPERTY AND MUST NOT BE USED EXCEPT IN CONNECTION WITH OUR WORK ALL RIGHTS OF DESIGN AND INVENTION ARE RESERVED
THIS IS AN ELECTRONICALLY GENERATED DOCUMENT – DO NOT SCALE THIS PRINT

Uncontrolled Copy

THREE PHASE - SINGLE VOLTAGE
MOTOR - CONDUIT BOX @ 'A'

TO REVERSE ROTATION:
INTERCHANGE ANY TWO LINE
LEAD CONNECTIONS

NOTE FOR FACTORY USE ONLY:
TO SURGE TEST:
FOR 3 LEAD COMMON CONNECT:
CONNECT P1 TO T1 THEN P2 TO L1
FOR 6 LEAD COMMON CONNECT:
CONNECT P1 TO BOTH T1
THEN P2 TO L1

TERMINIAL BLOCK WHEN SPECIFIED

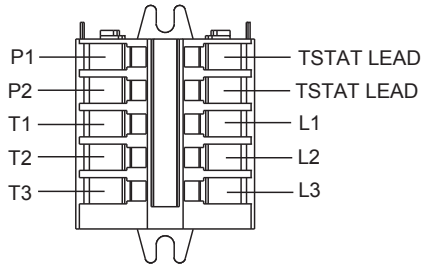

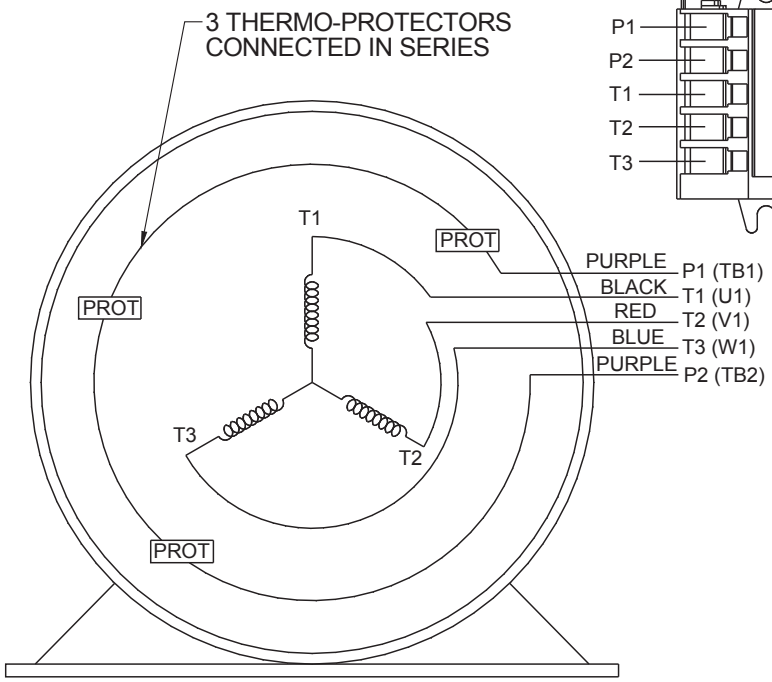

VIEW OF TERMINAL END

T2BM
T6AW
T6AL
T6Z
T4EG
T4BF
T8A
T6H
T6A
T4AX
T4A
T2A
T2F

IF MOTOR HAS MULTIPLE
T'S PER LEAD CONNECT
TOGETHER LIKE T'S

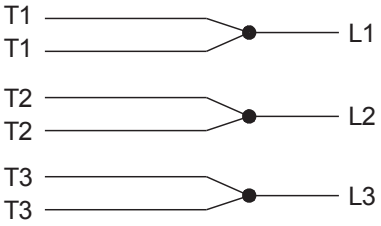

A-9806 DECAL

DRAWING REVISION: AB	REVISION BY: AJW	DATE: 07-17-2015
ECO: ECO-0081632	APPROVED BY: T.VUE	DATE: 07-17-2015
ECO DESCRIPTION: REV'D IEC MARKINGS PER IEC-60034-8		

COPYRIGHT REGAL BELOIT AMERICA, INC. ALL RIGHTS RESERVED.
PROPRIETARY AND CONFIDENTIAL INFORMATION - THIS DOCUMENT IS THE PROPERTY OF REGAL BELOIT AMERICA, INC. ("OWNER") AND CONTAINS OWNER'S PROPRIETARY INFORMATION. ANY PERSON, CORPORATION OR OTHER FIRM RECEIVING IT IS DEEMED, BY RECEIVING IT, TO AGREE THAT IT, AND/OR ANY PART OF IT, SHALL NOT BE DISCLOSED TO ANY PERSON, CORPORATION OR OTHER ENTITY, DUPLICATED, AND/OR USED, EXCEPT AS EXPRESSLY APPROVED IN WRITING IN ADVANCE BY OWNER. THIS DOCUMENT SHALL BE RETURNED TO OWNER UPON REQUEST. IT MAY BE SUBJECT TO CERTAIN RESTRICTIONS UNDER APPLICABLE EXPORT CONTROL LAWS AND REGULATIONS.

DRAWN BY: LZ	Regal Beloit America, Inc.
DATE: 01-04-1994	
APPROVED BY: GK	DESCRIPTION: CONN DIAGRAM-EXTERNAL
DATE: 01-20-1994	3Ø-SINGLE VOLT-MOTOR WITH PROTECTOR
REFERENCE	MATERIAL / PROCESS/FINISH
THIRD ANGLE PROJECTION	SIZE: A / DRAWING NUMBER: EE7300T / SHEET: 1 OF 1

Uncontrolled Copy

CERTIFICATION DATA SHEET

Model#:	56H17T5311 A	**WINDING#:**	ZT471 F 5
CONN. DIAGRAM:	A-EE7300T	**ASSEMBLY:**	F1 ONLY
OUTLINE:	A-104043-706		

TYPICAL MOTOR PERFORMANCE DATA

HP	KW	SYNC. RPM	F.L. RPM	FRAME	ENCLOSURE	KVA CODE	DESIGN
1/2	.37	1800	1725	56CZ	TENV	L	INV

PH	Hz	VOLTS	FL AMPS	START TYPE	DUTY	INSL	S.F	AMB°C	ELEVATION
3	60	575	.65	INVERTER ONLY	CONTINUOUS	F3	1.0	40	3300

FULL LOAD EFF: 80	3/4 LOAD EFF: 78.5	1/2 LOAD EFF: 75	GTD. EFF	ELEC. TYPE	NO LOAD AMPS
FULL LOAD PF: 72	3/4 LOAD PF: 63	1/2 LOAD PF: 50.5	77.5	SQ CAGE INV DUTY	.4

F.L. TORQUE	LOCKED ROTOR AMPS	L.R. TORQUE	B.D. TORQUE	F.L. RISE°C
1.52 LB-FT	4.5	4.6 LB-FT 303	5.8 LB-FT 382	55

SOUND PRESSURE @ 3 FT.	SOUND POWER	ROTOR WK^2	MAX. WK^2	SAFE STALL TIME	STARTS /HOUR	APPROX. MOTOR WGT
62 dBA	72 dBA	0.056 LB-FT^2	0 LB-FT^2	0 SEC.	0	25 LBS.

EQUIVALENT WYE CKT.PARAMETERS (OHMS PER PHASE)

R1	R2	X1	X2	XM
22.30668	17.028	24.123	18.1632	532.9764

RM	ZREF	XR	TD	TD0
20263.32	567.6	1.5	0.0054	0.885

*** SUPPLEMENTAL INFORMATION ***

DE BRACKET TYPE	ODE BRACKET TYPE	MOUNT TYPE	ORIENTATION	SEVERE DUTY	HAZARDOUS LOCATION	DRIP COVER	SCREENS	PAINT
C-FACE	BRAKE OR ENCODER	RIGID	HORIZONTAL	FALSE	NONE	FALSE	NONE	BLACK (POWDER)

BEARINGS		GREASE	SHAFT TYPE	SPECIAL DE	SPECIAL ODE	SHAFT MATERIAL	FRAME MATERIAL
DE	OPE						
BALL 6203	BALL 6203	POLYREX EM	STANDARD 56	NONE	NONE	1144 STRESSPROOF (C-223)	ROLLED STEEL

THERMO-PROTECTORS				THERMISTORS	CONTROL	SPACE /n HEATERS
THERMOSTATS	PROTECTORS	WDG RTDs	BRG RTDs			
TSTATS (N/C)	NOT	NONE	NONE	NONE	FALSE	NONE VOLTS

If Inverter equals NONE, contact factory for further information

NOTES

INVERTER TORQUE: CONSTANT 1000:1
INV. HP SPEED RANGE: 2.0 X BASE SPEED

ENCODER: PROVISIONS ONLY
NORTHSTAR ST56
NONE NONE PPR

BRAKE: PROVISIONS ONLY NONE

Uncontrolled Copy

STEARNS	P/N NONE	
56,000	NONE	
10 FT-LB	NONE V	NONE Hz

DATE: 06/28/2017 02:09:36 AM
FORM 3531 REV.3 02/07/99
** Subject to change without notice.

MOTOR IOM MANUAL

marathon™ Motors

Standard Induction Motors

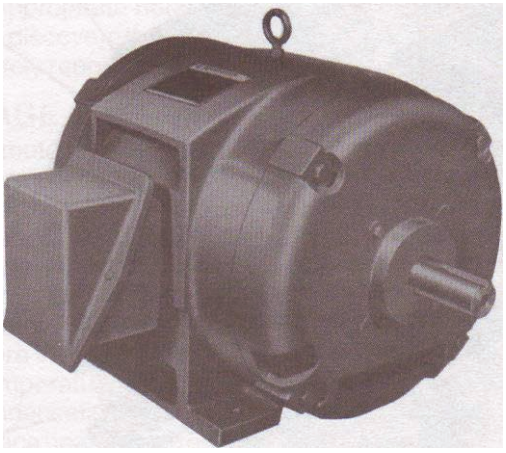

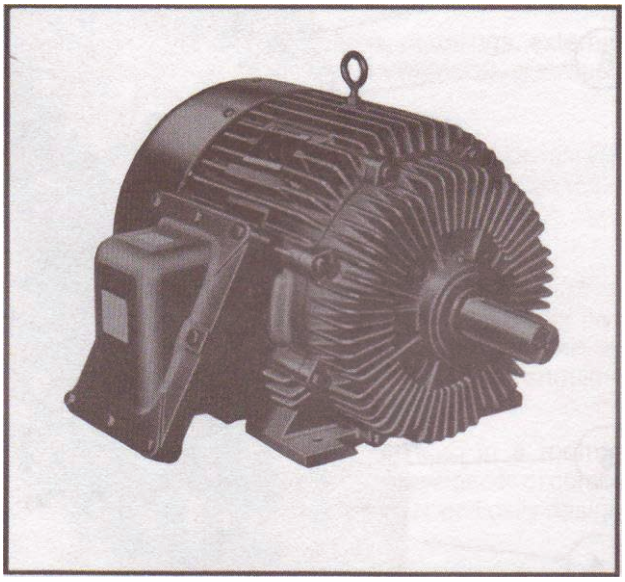

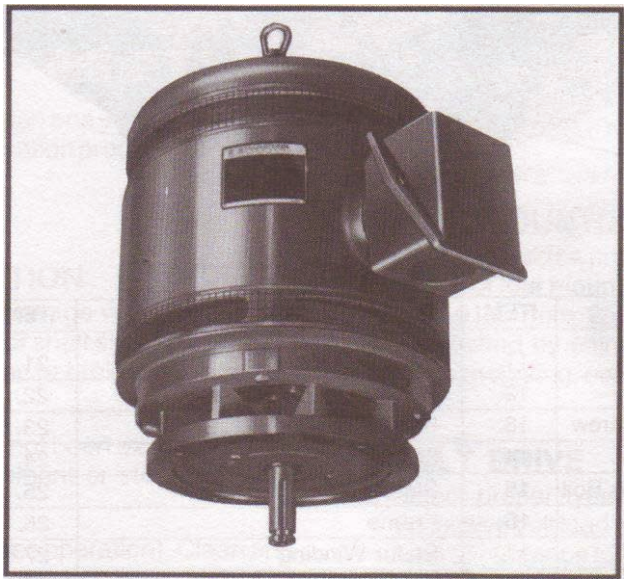

Installation, Operation, & Maintenance Instructions

TYPICAL CUTAWAY VIEW
OF A DRIPPROOF, HORIZONTAL
INTEGRAL HORSEPOWER MOTOR & PARTS DESCRIPTION
364 THRU 445 FRAME SIZE

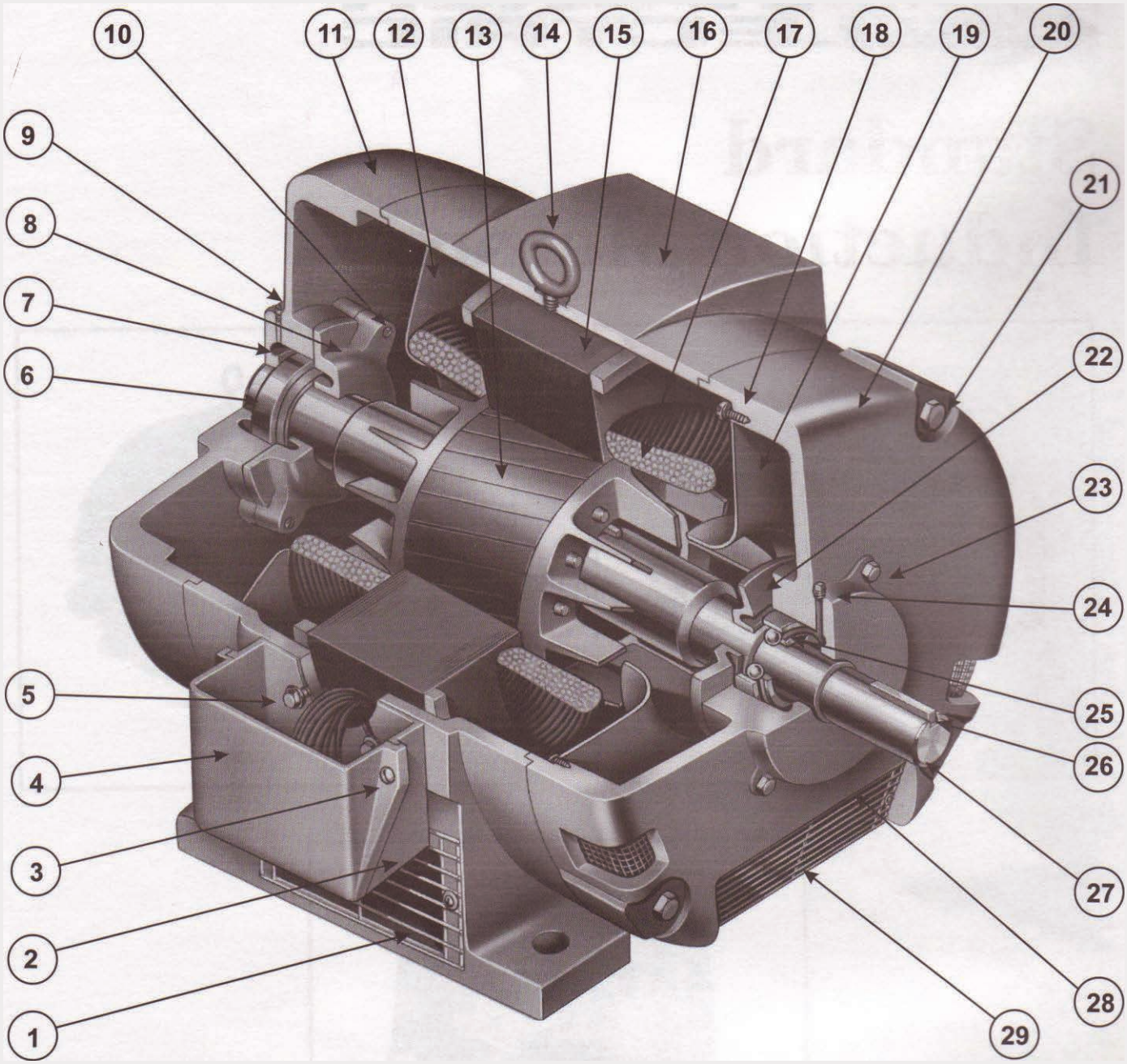

ITEM	DESCRIPTION	ITEM	DESCRIPTION	ITEM	DESCRIPTION
1.	**Frame Vent Screen	11.	Bracket O.P. E.	21.	Bracket Holding Bolt
2.	Conduit Box Bottom	12.	Baffle Plate O.P.E.	22.	Inner Bearing Cap P.E.
3.	Conduit Box Top-Holding Screw	13.	Rotor Core	23.	Inner Bearing Cap **Bolt**
4.	Conduit Box Top	14.	Lifting Eye Bolt	24.	Grease Plug
5.	Conduit Box Bottom-Holding Bolt	15.	Stator Core	25.	*Ball Bearing P.E.
6.	*Ball Bearing O.P.E.	16.	Frame	26.	Shaft Extension Key
7.	Pre-loading Spring	17.	Stator Winding	27.	Shaft
8.	Inner Bearing Cap O.P.E.	18.	Baffle Plate Holding Screw	28.	Drain Plug (grease)
9.	Grease Plug	19.	Baffle Plate P.E.	29.	**Bracket Screen
10.	Inner Bearing Cap Bolt	20.	Bracket P.E.		

P.E. = Pulley End

O.P.E. = Opposite Pulley End

* = Bearing Numbers are shown on motor nameplate when requesting information or parts always give complete motor description, model and serial numbers.

** = Bracket and frame screens are optional.

WARNING

These instructions must be followed to ensure safe and proper installation, operation and maintenance of the motor. They should be brought to the attention of all persons who install, operate or maintain this equipment.

GENERAL INFORMATION

Motors are all fully factory tested and inspected before shipping. Damage during shipment and storage can occur. Motors not correctly matched to the power supply and/or the load will not operate properly. These instructions are intended as a guide to identify and eliminate these problems before they are overlooked or cause further damage.

ACCEPTANCE

Check carefully for any damage that may have occurred in transit. If any damage or shortage is discovered, do not accept until an appropriate notation on the freight bill is made. Any damage discovered after receipt of equipment should be immediately reported to the carrier.

STORAGE

A. Keep motors clean
   1. Store indoors
   2. Keep covered to eliminate airborne dust and dirt.
   3. Cover openings for ventilation, conduit connections, etc. to prevent entry of rodents, snakes, birds, and insects, etc.

B. Keep motors dry
   1. Store in a dry area indoors
   2. Temperature swings should be minimal to prevent condensation.
   3. Space heaters are recommended to prevent condensation.
   4. Treat unpainted flanges, shafts, and fittings with a rust inhibitor.
   5. Check insulation resistance before putting motor into service. (Consult manufacturer for guidelines).

C. Keep Bearings Lubricated
   1. Once per month, rotate shaft several turns to distribute grease in bearings.
   2. If unit has been stored more than one year, add grease before start-up. (Refer to lubrication procedure).

INSTALLATION

UNCRATING AND INSPECTION

After uncrating, check for any damage which may have been incurred in handling. The motor shaft should turn freely by hand. Repair or replace any loose or broken parts before attempting to use the motor.

Check to be sure that motor has not been exposed to dirt, grit, or excessive moisture in shipment or storage before installation.

Measure insulation resistance (see operation). Clean and dry the windings as required.

Never start a motor which has been wet without having it thoroughly dried.

SAFETY

Motors should be installed, protected and fused in accordance with latest issue of National Electrical Code, NEMA Standard Publication No. MG 2 and local codes.

Eyebolts or lifting lugs are intended for lifting the motor only. These lifting provisions should never be used when lifting or handling the motor with other equipment (i.e. pumps, gear boxes, fans or other driven equipment) as a single unit. Be sure the eyebolt is fully threaded and tight in its mounting hole.

Eyebolt lifting capacity ratings is based on a lifting alignment coincident with the eyebolt centerline. Eyebolt capacity reduces as deviation from this alignment increases. See NEMA MG 2.

Frames and accessories of motors should be grounded in accordance with National Electrical Code (NEC) Article 430. For general information of grounding refer to NEC Article 250.

Rotating parts such as pulleys, couplings, external fans, and shaft extensions should be permanently guarded.

LOCATION

In selecting a location for the motor, consideration should be given to environment and ventilation. A motor with the proper enclosure for the expected operating condition should be selected.

The ambient temperature of the air surrounding the motor should not exceed 40c C (104°F) unless the motor has been especially designed for high ambient temperature applications. The free flow of air around the motor should not be obstructed.

The motor should never be placed in a room with a hazardous process, or where flammable gases or combustible material may be present, unless it is specifically designed for this type of service.

1. Dripproof (open) motors are intended for use indoors where atmosphere is relatively clean, dry and non-corrosive.
2. Totally enclosed motors may be installed where dirt, moisture and corrosion are present, or in outdoor locations.
3. Explosion proof motors are built for use in hazardous locations as indicated by Underwriters' label on motor. Consult UL, NEC, and local codes for guidance.

Refer to manufacturer for application assistance.

FLOOR MOUNTING

Motors should be provided with a firm, rigid foundation, with the plane of four mounting pads flat within .010" for 56 to 210 frame; .015" from 250 through 500 frame. This may be accomplished by shims under the motor feet. For special isolation mounting, contact manufacturer for assistance.

V-BELT DRIVE

1. Select proper type and number of belts and sheaves. Excessive belt load will damage bearings. Sheaves should be in accordance to NEMA Spec. MG-1 or as approved by the manufacturer for a specific application.
2. Align sheaves carefully to avoid axial thrust on motor bearing. The drive sheave on the motor should be positioned toward the motor so it is as close as possible to the bearing.

3. When adjusting belt tension, make sure the motor is secured by all mounting bolts before tightening belts.
4. Adjust belt tension to belt manufacturer's recommendations. Excessive tension will decrease bearing life.
5. For more information see Marathon Electric Publication SB528.

DIRECT CONNECTED DRIVE

Flexible or solid shaft couplings must be properly aligned for satisfactory operation. On flexible couplings, the clearance between the ends of the shafts should be in accordance with the coupling manufacturer's recommendations or NEMA standards for end play and limited travel in coupling.

MISALIGNMENT and RUN-OUT between direct connected shafts will cause increased bearing loads and vibration even when the connection is made by means of a flexible coupling. Excessive misalignment will decrease bearing life. Proper alignment, per the specifications of the coupling being used, is critical.

Some large motors are furnished with roller bearings. Roller bearings should **not** be used for direct drive.

ELECTRICAL CONNECTIONS

CAUTION

Install and ground per local and national codes. Consult qualified personnel with questions or if repairs are required.

WARNING

1. Disconnect power before working on motor or driven equipment.
2. Motors with automatic thermal protectors will automatically restart when the protector temperature drops sufficiently. Do not use motors with automatic thermal protectors in applications where automatic restart will be hazardous to personnel or equipment.
3. Motors with manual thermal protectors may start unexpectedly after protector trips. If manual protector trips, disconnect motor from power line. After protector cools (five minutes or more) it can be reset and power may be applied to motor.
4. Discharge all capacitors before servicing motor.
5. Always keep hands and clothing away from moving parts.
6. Never attempt to measure the temperature rise of a motor by touch. Temperature rise must be measured by thermometer, resistance, imbedded detector, or thermocouple.
7. Electrical repairs should be performed by trained and qualified personnel only.
8. Failure to follow instructions and safe electrical procedures could result in serious injury or death.
9. If safety guards are required, be sure the guards are in use.

1. All wiring, fusing, and grounding must comply with National Electrical Codes and local codes.
2. To determine proper wiring, rotation and voltage connections, refer to the information and diagram on the nameplate, separate connection plate or decal. If the plate or decal has been removed, contact Marathon Electric for assistance.
3. Use the proper size of line current protection and motor controls as required by the National Electrical Code and local codes. Recommended use is 125% of full load amps as shown on the nameplate for motors with 40°C ambient and a service factor over 1.0. Recommended use is 115% of full load amps as shown on the nameplate for all other motors. Do not use protection with larger capacities than recommended. Three phase motors must have all three phases protected.

THERMAL PROTECTOR INFORMATION

The nameplate will indicate one of the following:

1. Motor is thermally protected
2. Motor is not thermally protected
3. Motor is provided with overheat protective device

For examples, refer to paragraphs below:

1. Motors equipped with built-in thermal protection have "THERMALLY PROTECTED" stamped on the nameplate. Thermal protectors open the motor circuit electrically when the motor overheats or is overloaded.
   The protector cannot be reset until the motor cools. If the protector is automatic, it will reset itself. If the protector is manual, press the red button to reset.
2. Motors without thermal protection have nothing stamped on nameplate about thermal protection.
3. Motors that are provided with overheat protective device that does not open the motor circuit directly will indicate "WITH OVERHEAT PROTECTIVE DEVICE".
   A. Motors with this type of "Overheat Protective Device" have protector leads brought out in the motor conduit box marked "P1" and "P2". These leads are intended for connection in series with the stop button of the 3-wire pilot circuit for the magnetic starter which controls the motor. See Figure 1.
   B. The circuit controlled by the above "Overheat Protective Device" must be limited to a maximum of 600 volts and 360 volt-amps.

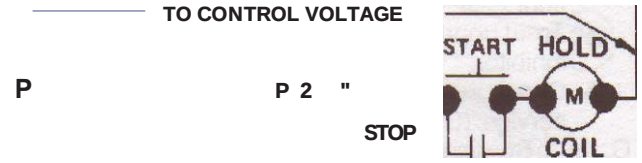

FIGURE 1

NORMALLY CLOSED PROTECTORS

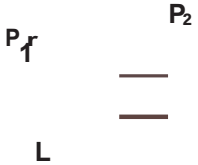

Normally Open (N/O) Motor Thermostats may be used in conjunction with controls installed by Original Equipment Manufacturers.

NORMALLY OPEN PROTECTORS

FIGURE 1A

CHANGING ROTATION

1. Keep hands and clothing away from rotating parts.
2. Before the motor is coupled to the load, determine proper rotation.
3. Check rotation by jogging or bumping. Apply power to the motor leads for a short period of time, enough to just get motor shaft to rotate a slight amount to observe shaft rotating direction.
4. Three phase - interchange any two (2) of the three (3) line leads. Single phase - reconnect per the connection diagram on the motor.

REDUCED VOLTAGE STARTING

Motors used on reduced voltage starting, should be carefully selected based upon power supply limitations and driven load requirements. The motors starting torque will be reduced when using reduced voltage starting. The elapsed time on the start step should be kept as short as possible and should not exceed 5 seconds. It is recommended that this time be limited to 2 seconds. Refer to Marathon Electric for application assistance.

OPERATION

WARNING

Disconnect and lock out before working on motor or driven equipment.

BEFORE INITIAL STARTING

1. If a motor has become damp in shipment or in storage, measure the insulation resistance of the stator winding.

$$\text{Minimum Insulation Resistance In Megohms} = 1 + \frac{\text{Rated Voltage}}{1000}$$

   Do not attempt to run the motor if the insulation resistance is below this value.

2. If insulation resistance is low, dry out the moisture in one of the following ways:
   a. Bake in oven at temperature not more than 90°C (1 94°F).
   b. Enclose motor with canvas or similar covering, leaving a hole at the top for moisture to escape, and insert heating units or lamps.
   c. Pass a current at low voltage (rotor locked) through the stator winding. Increase the current gradually until the winding temperature, measured with a thermometer, reaches 90°C (194°F). Do not exceed this temperature.
3. See that voltage and frequency stamped on motor and control nameplates correspond with that of the power line.
4. Check all connections to the motor and control with the wiring diagram.
5. Be sure rotor turns freely when disconnected from the load. Any foreign matter in the air gap should be removed.
6. Leave the motor disconnected from the load for the initial start (see following caution). Check for proper rotation. Check for correct voltage (within + 10% of nameplate value) and that it is balanced within 1% at the motor terminals. After the machine is coupled to the load, check that the nameplate amps are not exceeded. Recheck the voltage level and balance under load per the above guidelines. Shut down the motor if the above parameters are not met or if any other noise or vibration disturbances are present. Consult NEMA guidelines or the equipment manufacturer if any questions exist before operating equipment.

CAUTION

For motors nameplated as "belted duty only", do not run motor without belts properly installed.

COLLECTOR RINGS (Wound Rotor Motors Only)

The collector rings are sometimes treated at the factory to protect them while in stock and during shipment. The brushes have been fastened in a raised position. Before putting the motor into service, the collector rings should be cleaned to remove this treatment. Use a cleaning fluid that is made for degreasing electrical equipment. All of the brushes must be released and lowered to the collector surface. Keep the rings clean and maintain their polished surfaces. Ordinarily, the rings will require only occasional wiping with a piece of canvas or non-linting cloth. Do not let dust or dirt accumulate between the collector rings.

BRUSHES (Wound Rotor Motors Only)

See that the brushes move freely in the holders and at the same time make firm, even contact with the collector rings. The pressure should be between 2 and 3 pounds per square inch of brush surface.

When installing new brushes, fit them carefully to the collector rings. Be sure that the copper pigtail conductors are securely fastened to, and make good contact with, the brush holders.

ALLOWABLE VOLTAGE AND FREQUENCY RANGE

If voltage and frequency are within the following range, motors will operate, but with somewhat different characteristics than obtained with correct nameplate values.

1. Voltage: Within 1 0% above or below the value stamped on the nameplate. On three phase systems the voltage should be balanced within 1%. A small voltage unbalance will cause a significant current unbalance.
2. Frequency: Within 5% above or below the value stamped on the nameplate.
3. Voltage and Frequency together: Within 10% (providing frequency above is less than 5%) above or below values stamped on the nameplate.

CLEANLINESS

Keep both the interior and exterior of the motor free from dirt, water, oil and grease. Motors operating in dirty places should be periodically disassembled and thoroughly cleaned.

CONDENSATION DRAIN PLUGS

All explosion proof and some totally enclosed motors are equipped with automatic drain plugs, they should be free of oil, grease, paint, grit and dirt so they don't clog up. The drain system is designed for normal floor (feet down) mounting. For other mounting positions, modification of the drain system may be required, consult Marathon Electric.

SERVICE

WARNING

Disconnect power before working on motor or driven equipment. Motors with automatic thermal protectors will automatically restart when the protector cools. Do not use motors with automatic thermal protectors in applications where automatic restart will be hazardous to personnel or equipment.

CAUTION

Overgreasing bearings can cause premature bearing and/or motor failure. The amount of grease added should be carefully controlled.

NOTE

If lubrication instructions are shown on the motor nameplate, they will supersede this general instruction.

Motors are pregreased with polyurea mineral oil NGLI grade 2 type grease unless stated otherwise on the motor nameplate. Some compatible brands of polyurea mineral base type grease are: Chevron SRI #2, Rykon Premium #2, Exxon Polyrex EM or Texaco Polystar RB.

Motors are properly lubricated at the time of manufacture. It is not necessary to lubricate at the time of installation unless the motor has been in storage for a period of 12 months or longer (refer to lubrication procedure that follows).

LUBRICATION PROCEDURES

1. Stop motor. Disconnect and lock out of service.
2. Remove contaminants from grease inlet area.
3. Remove filler and drain plugs.
4. Check filler and drain holes for blockage and clean as necessary.
5. Add proper type and amount of grease. See the Relubrication Time Intervals table for service schedule and Relubrication Amounts table for volume of grease required.
6. Wipe off excess grease and replace filler and drain plugs (see following warning).
7. Motor is ready for operation.

WARNING

If motor is nameplated for hazardous locations, do not run motor without all of the grease or drain plugs installed.

RELUBRICATION TIME INTERVAL AND AMOUNTS

(For motors with regreasing provisions)

Service Condition	NEMA FRAME SIZE					
	140-180		210-360		400-510	
	1800 RPM and less	Over 1800 RPM	1800 RPM and less	Over 1800 RPM	1800 RPM and less	Over 1800 RPM
Standard	3 yrs.	6 months	2 yrs.	6 months	1 yr.	3 months
Severe	1 yr.	3 months	1 yr.	3 months	6 months	1 month
Seasonal	See Note 2.					

NOTE

1. For motors nameplated as "belted duty only" divide the above intervals by 3.

2. Lubricate at the beginning of the season. Then follow service schedule above.

SEASONAL SERVICE: The motor remains idle for a period of 6 months or more.

STANDARD SERVICE: Up to 16 hours of operation per day, indoors, 100°F maximum ambient.

SEVERE SERVICE: Greater than 16 hours of operation per day. Continuous operation under high ambient temperatures (100° to 150°F) and/or any of the following: dirty, moist locations, high vibration (above NEMA standards), heavy shock loading, or where shaft extension end is hot.

RELUBRICATION AMOUNTS

(For motors with regreasing provisions)

NEMA FRAME SIZE	VOLUME cu. in. (fluid oz.)
140	.25 (.14)
180	.50 (.28)
210	.75 (.42)
250	1.00 (.55)
280	1.25 (.69)
320	1.50 (.83)
360	1.75 (.97)
400	2.25 (1.2)
440	2.75 (1.5)
500	3.00 (1.7)

TROUBLESHOOTING

WARNING

1. Disconnect power before working on motor or driven equipment.

2. Motors with automatic thermal protectors will automatically restart when the protector temperature drops sufficiently. Do not use motors with automatic thermal protectors in applications where automatic restart will be hazardous to personnel or equipment.

3. Motors with manual thermal protectors may start unexpectedly after protector trips. If manual protector trips, disconnect motor from power line. After protector cools (five minutes or more) it can be reset and power may be applied to motor.

4. Discharge all capacitors before servicing motor.

5. Always keep hands and clothing away from moving parts.

6. Never attempt to measure the temperature rise of a motor by touch. Temperature rise must be measured by thermometer, resistance, imbedded detector, or thermocouple.

7. Electrical repairs should be performed by trained and qualified personnel only.

8. Failure to follow instructions and safe electrical procedures could result in serious injury or death.

9. If safety guards are required, be sure the guards are in use.

If trouble is experienced in the operation of the motor, make sure that:

1. The bearings are in good condition and operating properly.
2. There is no mechanical obstruction to prevent rotation in the motor or in the driven load.
3. The air gap is uniform. (Consult manufacturer for specifications).
4. All bolts and nuts are tightened securely.
5. Proper connection to drive machine or load has been made.

In checking for electrical troubles, be sure that:

1. The line voltage and frequency correspond to the voltage and frequency stamped on the nameplate of the motor.
2. The voltage is actually available at motor terminals.
3 The fuses and other protective devices are in proper condition.
4. All connections and contacts are properly made in the circuits between the control apparatus and motor.

These instructions do not cover all details or variations in equipment nor provide for every possible condition to be met in connection with installation, operation or maintenance. Should additional information be desired for the purchaser's purposes, the matter should be referred to the manufacturer.

MOTOR TROUBLE SHOOTING CHART

Your motor service and any trouble shooting must be handled by qualified persons who have proper tools and equipment.

TROUBLE	CAUSE	WHAT TO DO
Motor fails to start	Blown fuses	Replace fuses with proper type and rating
	Overload trips	Check and reset overload in starter.
	Improper power supply	Check to see that power supplied agrees with motor nameplate and load factor.
	Improper line connections	Check connections with diagram supplied with motor.
	Open circuit in winding or control switch	Indicated by humming sound when switch is closed. Check for loose wiring connections. Also see that all control contacts are closing.
	Mechanical failure	Check to see if motor and drive turn freely. Check bearings and lubrication.
	Short circuited stator	Indicated by blown fuses. Motor must be rewound.
	Poor stator coil connection	Remove end bells, locate with test lamp.
	Rotor defective	Look for broken bars or end rings.
	Motor may be overloaded	Reduce load.
Motor stalls	One phase may be open	Check lines for open phase.
	Wrong application	Change type or size. Consult manufacturer.
	Overload	Reduce load.
	Low voltage	See that nameplate voltage is maintained. Check connection.
	Open circuit	Fuses blown, check overload relay. stator and pushbuttons.
Motor runs and then dies down	Power failure	Check for loose connections to line, to fuses and to control.
Motor does not come up to speed	Not applied properly	Consult supplier for proper type.
	Voltage too low at motor terminals because of line drop.	Use higher voltage on transformer terminals or reduce load. Check connections. Check conductors for proper size.
	Starting load too high	Check load motor is supposed to carry at start.
	Broken rotor bars or loose rotor	Look for cracks near the rings. A new rotor may be required as repairs are usually temporary.
	Open primary circuit	Locate fault with testing device and repair.
Motor takes too long to accelerate and/or draws high amp	Excessive load	Reduce load.
	Low voltage during start	Check for high resistance. Adequate wire size.
	Defective squirrel cage rotor	Replace with new rotor.
	Applied voltage too low	Get power company to increase power tap.
Wrong rotation	Wrong sequence of phases	Reverse connections at motor or at switchboard.
Motor overheats while running under load	Overload	Reduce load.
	Frame or bracket vents may be clogged with dirt and prevent proper ventilation of motor.	Open vent holes and check for a continuous stream of air from the motor.
	Motor may have one phase open	Check to make sure that all leads are well connected.
	Grounded coil	Locate and repair.
	Unbalanced terminal voltage	Check for faulty leads, connections and transformers.
Motor vibrates	Motor misaligned	Realign.
	Weak support	Strengthen base
	Coupling out of balance	Balance coupling.
	Driven equipment unbalanced	Rebalance driven equipment.
	Defective bearings	Replace bearing.
	Bearings not in line	Line up properly.
	Balancing weights shifted	Rebalance motor.
	Polyphase motor running single phase	Check for open circuit.
	Excessive end play	Adjust bearing or add shim.
Unbalanced line current on polyphase motors during normal operation	Unequal terminal volts	Check leads and connections.
	Single phase operation	Check for open contacts.
	Unbalanced voltage	Correct unbalanced power supply.
Scraping noise	Fan rubbing air shield	Remove interference.
	Fan striking insulation	Clear fan.
	Loose on bedplate	Tighten holding bolts.
Noisy operation	Airgap not uniform	Check and correct bracket fits or bearing.
	Rotor unbalance	Rebalance.
Hot bearings general	Bent or sprung shaft	Straighten or replace shaft.
	Excessive belt pull	Decrease belt tension.
	Pulleys too far away	Move pulley closer to motor bearing.
	Pulley diameter too small.	Use larger pulleys.
	Misalignment	Correct by realignment of drive.
Hot bearings ball	Insufficient grease	Maintain proper quantity of grease in bearing.
	Deterioration of grease or lubricant contaminated	Remove old grease, wash bearings thoroughly in kerosene and replace with new grease.
	Excess lubricant	Reduce quantity of grease, bearing should not be more than 1/2 filled.
	Overloaded bearing	Check alignment, side and end thrust.
	Broken ball or rough races	Replace bearing, first clean housing thoroughly.

MARATHON ELECTRIC
INSTALLATION, OPERATION, AND MAINTENANCE INSTRUCTIONS FOR 48 AND 56 FRAME MOTORS

WARNING

1. Disconnect power to the motor before performing installation or maintenance.
2. Discharge all capacitors before servicing motor.
3. Always keep hands and clothing away from moving parts.
4. Electrical repairs should be performed by trained and qualified personnel only.
5. Be sure required safety guards are in place before starting equipment.
6. Failure to follow instructions and safe electrical procedures could result in serious injury.

GENERAL INFORMATION:
Marathon Electric motors are all fully tested and inspected before shipment. The most common cause of troubles occurs in either: shipment, improperly matched power supply, or failure to follow the following installation instructions. These instructions are intended as a guide to prevent these troubles from occurring.

UNCRATING:
Check carefully for any damage that may have occurred in transit. Report any obvious damage to your freight claim agent immediately before uncrating. After uncrating, check further that no apparent damage has been incurred in handling. Check that the motor shaft turns freely.

POWER SUPPLY:
Make certain that the line voltage of the power supply on which the motor is to operate corresponds with the motor nameplate voltage (also check frequency and phase against the motor nameplate). Be sure that dual voltage motors are properly connected to correspond to the power supply voltage (check motor connections with the diagram on the motor nameplate or decal). Check the size and ampere rating of the power supply and control box against the amperes marked on the nameplate (for voltage used) to insure adequate wiring capacity.

EXPOSURE:
Check to determine that the motor has not been exposed to dirt, grit, or excessive moisture in either shipment or storage before installation. Never start a motor that has been wet without having it thoroughly dried (by a competent service shop). Clean the motor of any dirt or grit.

INSTALLATION:
Now...properly mount, align, and connect the motor to a free turning load. With adequate power, wiring, and horsepower, you should experience dependable service from your new Marathon Electric motor for many years to come.

OPERATION:
Before initial starting:
1. Check that voltage and frequency stamped on motor and control nameplates correspond with that of the line.
2. Check all connections to the motor and control with the wiring diagram.

ALLOWABLE VOLTAGE AND FREQUENCY RANGE:
If voltage and frequency are within the following range, motors will operate, but with somewhat different characteristics than obtained with correct nameplate values.
1. Voltage: Within 10% above or below the value stamped on the nameplate.
2. Frequency: Within 5% above or below the value stamped on the nameplate.

CLEANLINESS:
Keep both the interior and exterior of the motor free from dirt, water, oil, and grease. Motors operating in dirty places should be periodically disassembled and thoroughly cleaned by a competent service shop.

CARE AND MAINTENANCE:
Ball Bearings: Require no attention during the life of the bearings.

Sleeve Bearings: Reoil with 10 drops of 5W30 oil annually, after three years of normal service.

TROUBLES:
If trouble is experienced in the operation of the motor, make sure that:
1. The bearings are in good condition and operating properly.
2. There is no mechanical obstruction to prevent rotation.
3. All bolts and nuts are tightened securely.
4. Proper connection and alignment to driven machine or load has been made.

In checking for electrical troubles, be sure that:
1. The power supply voltage and frequency correspond to the voltage and frequency stamped on the nameplate of the motor.
2. The voltage is actually available at the motor terminals.
3. The fuses and other protective devices are properly sized for the motor and are in proper operating condition.
4. All connections and contacts are properly made in the circuits between the control apparatus and motor.

marathon® electric

P.O. Box 8003
Wausau, WI 54402-8003

Phone: (715) 675-3311

MPN 415 10/98

Marathon Electric
P.O. Box 8003
100 E. Randolph Street
Wausau, WI 54402-8003
Phone: (715) 675-3311
Fax: (715) 675-8028

This manual is printed on recycled stock.

SB 181 5/2003

NOZZLE ORIENTATION

NM015BY01L06B PUMPS

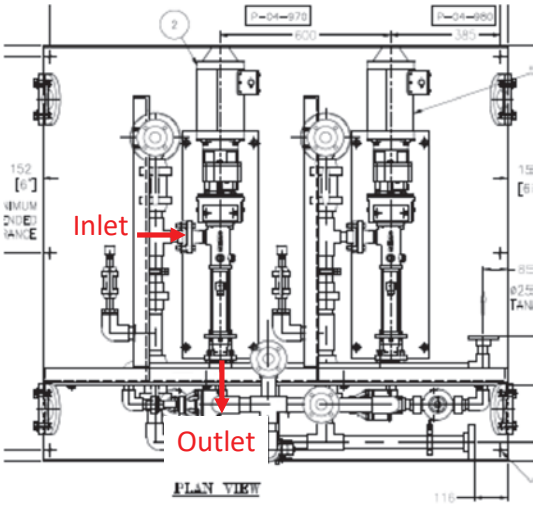

NM021BY01L06B PUMPS

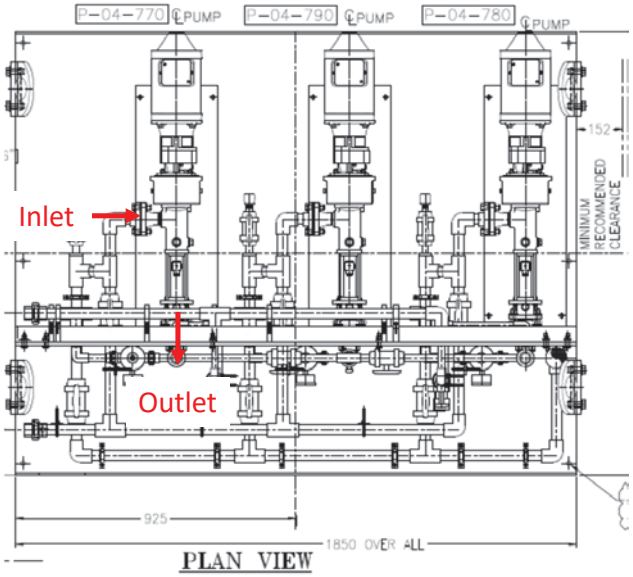

NORD GEAR REDUCER MANUAL

Intelligent Drivesystems, Worldwide Services

INSTALLATION & OPERATING INSTRUCTIONS



NORD.COM/DOCS
DOCUMENT COLLECTION

NORD DRIVESYSTEMS

Order Number:
NORD Model

SK072.1F-56C

Order and product data

Order Number	202293029-100
Product Name	Nordbloc® Helical Gearbox
NORD Model Type	SK072.1F-56C
Mounting Position	M4
Lubricant	VG220-SYN-PAO
Lubricant Qty	1.160 Qts

Contents

Manuals

U10060-Unit Installation
U10060 Version: 2.02

U10250-Solid Shaft Connections
U10250 Version: 0.06

U10500-Reducer Mounting Footed & Flange Mount Gear Units
U10500 Version: 0.05

U10750-Helical & Bevel Reducer lubrication
U10750 Version: 0.05

U11000-Helical & Bevel Reducer Lubrication Types
U11000 Version: 0.07

U12900-Nordbloc.1 Footed Oil Fill Quantities
U12900 Version: 0.04

U14700-Nordbloc.1 Oil Plug & Vent Locations
U14700 Version: 0.03

U19000-Troubleshooting
U19000 Version: 2409

U45100-NEMA IEC Input Adapters and Their Couplings
U45100 Version: 0.05

Spare Part Lists

U15150 - NORDBLOC.1 Parts List Drawings
U15150 Version: 0.02

U15705-Nordbloc.1 Parts Lists
U15705 Version: 0.02

1. Installation site

Drives must be properly installed if they are to produce the rated torque. Improper installation may lead to oil leaks, reduced life, or even catastrophic failure. NORD gear drives and motors are intended to be installed at a suitable mounting site under the following conditions:

- Unimpeded airflow to and around the units.
- Accessibility to oil drain, level and breather plugs.
- On brakemotors, allow adequate space for removing the fan guard and replacing and adjusting the brake.
- Mounting surfaces must be flat, torsionally rigid, and dampened against vibration.
- Unless special measures are taken, the immediate vicinity around the gear drive or motor should not be exposed to any aggressive or corrosive substances, contaminated air, ozone, gases, solvents, acids, alkalis, salts, radioactivity, etc.

2. Mounting position

Reducer mounting position charts illustrate the standard mounting positions for horizontal and vertical mounting. All gear units are assembled with the oil fill-level, oil-drain and vent plugs installed in their proper locations, **according to the customer-specified mounting position**. For mounting orientations other than shown consult NORD Gear.

NOTICE

Improper oil levels may lead to premature component wear and diminished service life. The gear reducer may not receive proper lubrication if the unit is not mounted in the position for which it is designed. Observe the mounting position designated on the reducer nameplate, or specified in the order acknowledgement. Consult NORD prior to changing mounting position in the field. While it is often possible to simply relocate the oil fill-level and vent locations, and adjust the oil fill amount, in some cases, different mounting positions may lend themselves to different internal construction features.

3. Reducer mounting

- The support foundation must be straight, level and flat. Whether the gear unit is foot-mounted or flange-mounted, NORD recommends that the straightness and flatness of the customer-supplied support foundation follow **Table 1**.
- The gear unit must be properly aligned with the driven shaft of the machine in order to prevent additional stress or load forces from being imposed upon the gear unit.
- To facilitate oil drainage it may be desirable to elevate the gear box foundation above the surrounding support structure.
- All bolting surfaces must be clean and free from contamination and corrosion.

Table 1: Recommended Straightness and Flatness of Customer-Supplied Support Foundation

Above (in)	To & Including (in)	General Tolerance on Straigtness & Flatness ISO 2768-2, Tolerance Class K
0.00	0.39	+/- 0.002 in
0.39	1.18	+/- 0.004 in
1.18	3.9	+/- 0.008 in
3.9	11.8	+/- 0.016 in
11.8	39	+/- 0.024 in
39	118	+/- 0.031 in

Above (mm)	To & Including (mm)	General Tolerance on Straigtness & Flatness ISO 2768-2, Tolerance Class K
0	10	+/- 0.05 mm
10	30	+/- 0.1 mm
30	100	+/- 0.2 mm
100	300	+/- 0.4 mm
300	1000	+/- 0.6 mm
1000	3000	+/- 0.8 mm

Straightness: Based upon the length of the corresponding line.

Flatness: Based upon the longer lateral surface or the diameter of the circular surface.

IMPORTANT NOTE

The responsibility for the design and construction of the support foundation is with the user. The foundation must be adequate to withstand normal operating loads and possible overloads while maintaining alignment to attached system components under such loads. ***Motors and drive components mounted on prefabricated base plates can become misaligned during shipment. Always check alignment after installation.***

4. Steel foundation

An engineered structural steel foundation should be designed to provide adequate rigidity and prevent loads from distorting the housing or causing misalignment of internal gears and shafts. When foot-mounting the gear reducer, a base plate or sole plate with suitable thickness (generally equal or greater than the thickness of the drive feet) should be securely bolted to steel supports and extend under the entire gear drive assembly. When flange-mounting the gear unit, the bulk head plate must be engineered to minimize buckling distortions and support the cantilevered weight of the gear unit or gear motor.

NOTICE

Do not weld on the gear unit or use the gear unit as an earth or ground connection for any welding procedure as this may cause permanent damage to the bearings and gears.

5. Concrete foundation

If a concrete foundation is used, allow the concrete to set firmly before bolting down the gear drive. Grout structural steel mounting pads and bolts of sufficient size into the concrete, to adequately distribute the load stress onto the concrete foundation.

Figure 1: Concrete Foundation

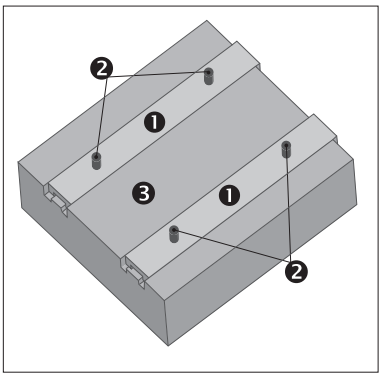

❶ Grouted Structural Steel Mounting Pads
❷ Mounting Bolts
❸ Concrete Foundation

6. Bolt connections for footed & flange mounted units

NORD footed reducers and flange-mount reducers (with B5 flange) have clearance designed into the mounting holes to allow for some minor adjustments in alignment. Bolt size, strength and quantity should be verified to insure proper torque reaction capacity whatever the mounting arrangement. Tightening torque for gear reducer mounting bolts, and recommended fastener grades, are provided in Table 2.

Table 2A: Tightening Torque for Inch Reducer Mounting Bolts

Thread Size	Grade SAE 5 / ASTM A449		Grade SAE 8	
(in)	(lb-ft)	(Nm)	(lb-ft)	(Nm)
1/4-20	7.1	9.6	10.0	13.6
5/16-18	16	21	22	30
3/8-16	28	37	39	53
1/2-13	69	93	98	132
5/8-11	138	188	195	264
3/4-10	247	334	348	472
7/8-9	396	537	558	757
1-8	592	802	833	1,130
1 1/8-7	-	-	1,233	1,672
1 1/4-7	-	-	1,717	2,327
1 3/8-6	-	-	2,267	3,073
1 1/2-6	-	-	2,983	4,045
1 3/4-5	-	-	4,458	6,045

- Calculated tightening torques are based a conventional 60°, clean and dry (un-lubricated) thread, with thread-friction and head-friction equal to 0.15.
- When using inch-fasteners, NORD recommends a minimum Grade SAE 5 (ASTM A-449) for sizes up to 1-8 UNC, and Grade SAE 8 for all larger sizes.

Table 2B: Tightening Torque for Metric Reducer Mounting Bolts

Above	ISO Grade 8.8		ISO Grade 10.9		ISO Grade 12.9	
(mm)	(lb-ft)	(Nm)	(lb-ft)	(Nm)	(lb-ft)	(Nm)
M4	2.4	3.2	3.5	4.7	4.1	5.5
M5	4.7	6.4	6.9	9.3	8.1	11
M6	8	11	12	16	14	19
M8	20	27	29	39	34	46
M10	39	53	58	78	67	91
M12	68	92	100	135	110	155
M14	107	145	159	215	180	250
M16	170	230	247	335	290	390
M18	240	325	343	465	400	540
M20	339	460	487	660	570	770
M22	465	630	664	900	770	1,050
M24	583	790	848	1,150	960	1,300
M27	848	1,150	1,217	1,650	1,440	1,950
M30	1,180	1,600	1,660	2,250	1,950	2,650
M36	2,050	2,780	2,884	3,910	3,470	4,710
M42	3,297	4,470	4,639	6,290	5,560	7,540
M48	4,940	6,700	7,010	9,500	8,260	11,200

- Calculated tightening torques are based on a conventional 60°, clean and dry (un-lubricated) thread, with thread-friction and head-friction equal to 0.15.
- When using metric-fasteners, NORD recommends a minimum ISO Grade 8.8 bolt.

7. Mounting the prime mover

When the motor is not flange mounted or integrally mounted to the gearbox, it is important to properly secure and align the gear drive with respect to the driven machine before attempting to align the prime mover or motor.

A. After the main gear drive is properly aligned and bolted in place, align the prime mover with respect to the reducer input shaft.

B. Use shims under the feet of the prime mover as needed, and secure in place with the proper mounting bolts. Dowel pins may be field-installed to help prevent misalignment and ensure proper realignment if removed for service.

IMPORTANT NOTE

When using a high speed coupling connection between the prime mover and the reducer, check alignment per the coupling manufacturers recommendations. If the coupling is misaligned, the reducer alignment or shimming is incorrect. Re-align the gear reducer and re-check the high-speed coupling alignment before re-aligning the motor.

1. Solid shaft diameter tolerance

Reducer input and output shaft extensions have a diameter tolerance as specified in **Table 1**.

Table 1: Solid Shaft Diameter Tolerance

Above ø (in)	To & Including ø (in)	Tolerance (in)
0.375	1.750	+0.0000 / -0.0005
1.750	7.500	+0.0000 / -0.0010

Above ø (mm)	To & Including ø (mm)	Tolerance (mm)	ISO 286-2 Fit Class
10	18	+0.012 / +0.001	k6
18	30	+0.015 / +0.002	k6
30	50	+0.018 / +0.002	k6
50	80	+0.030 / +0.011	m6
80	120	+0.035 / +0.013	m6
120	180	+0.040 / +0.015	m6
180	190	+0.046 / +0.017	m6

2. Fitting drive elements onto the reducer solid shaft

Solid input and output shaft extensions are provided with a drill and tap feature as indicated in Table 2. When installing drive elements such as coupling hubs, pulleys, sprockets, or gears, NORD recommends using the threaded hole in the end of the shaft, along with a suitable assembly device fitted into the threaded hole.

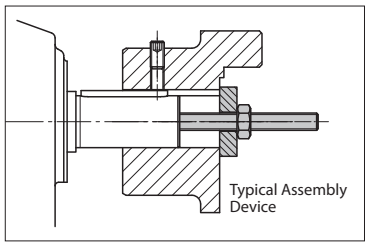

Table 2: Solid Shaft End - Threaded Holes

Above ø (in)	To & Including ø (in)	Tap Size & Depth (in)
0.375	0.500	10-24 x 0.43 in
0.500	0.875	1/4-20 x 0.59 in
0.875	0.938	5/16-18 x 0.71 in
0.938	1.100	3/8-16 x 0.87 in
1.100	1.300	1/2-13 x 1.10 in
1.300	1.875	5/8-11 x 1.42 in
1.875	3.500	3/4-10 x 1.73 in
3.500	7.500	1-8 x 2.63 in
5.125	8.875	1 1/4 - 7 x 3.15*
6.000	8.875	1 3/8 - 6 x 3.46**

Above ø (mm)	To & Including ø (mm)	Tap Size & Depth (mm)
10	13	M4 x 10 mm
13	16	M5 x 12.5 mm
16	21	M6 x 16 mm
21	24	M8 x 19 mm
24	30	M10 x 22 mm
30	38	M12 x 28 mm
38	50	M16 x 36 mm
50	85	M20 x 42 mm
85	130	M24 x 50 mm
130	225	M30 x 60 mm*
130	225	M36 x 74 mm**

* Only used on the SK9096.1 Helical-Bevel Gear Unit.

** Only used on the SK10382.1 & SK11382.1 CLINCHER™ gear units.

NOTICE

DO NOT DRIVE or **HAMMER** the coupling hub, pulley, sprocket, or gear into place. An endwise blow to the reducer shaft can generate damaging axial forces and cause damage to the reducer housing, bearings or internal components.

⚠ WARNING

To avoid serious injury the user must provide suitable safety guards for all rotating shafts and shaft components such as couplings, chain drives, belt drives, etc. All guarding must adhere to local regulations and safety standards.

3. Installing interference-fit hubs to the reducer shaft

Prior to installing any interference-fit hubs to the reducer shaft, consult with the manufacturer to determine proper assembly and fit. Interference-fits usually require heating the coupling, sprocket or gear hub, per the manufacturer's recommendations. Coupling hub installation typically follows ANSI/AGMA 9002-A86. Always make sure the reducer shaft seals are protected from the heat source. Apply uniform heat to the drive element hub to prevent distortion. NORD does not recommend heating the drive element hub beyond 212°F to 275°F (100°C to 135° C).

⚠ WARNING

When using heat to mount a drive element hub, do not use open flame in a combustible atmosphere or near flammable materials. Use suitable protection to avoid burns or serious injury.

IMPORTANT NOTE

When using external chain or belt drives, make sure the reducer is sized so that the shaft and bearings have adequate capacity. To avoid unnecessary bearing loads and additional shaft deflection, mount all power take-off devices (sprockets, pulleys, etc.) so that the applied load center is as close to the gear housing as possible and check component alignment and tension of any belts or chains per the manufacturer's recommendation. Do not over tighten the belts or chains.

4. Coupling installation

The performance and life of any coupling depends upon how well it is installed. Coupling hubs are typically mounted flush with the shaft ends, unless specifically ordered for overhung mounting. Shaft couplings should be installed according to the coupling manufacturer's recommendations for gap, angular and parallel alignment. To help obtain critical shaft alignment coupling hubs may be installed to the machine shafts prior to final shimming or tightening of the foundation bolts. Proper coupling alignment allows for thermal and mechanical shaft movement during operation and ensures that only torque (no radial load) is transmitted between the mating shafts.

Coupling gap and angular alignment

The shaft gap must be sufficient to accommodate any anticipated thermal or mechanical axial movement. When setting the coupling gap, insert a spacer or shim stock equal to the required spacing or gap between the coupling hub faces. Measure the clearance using feeler gauges at 90-degree intervals, to verify the angular alignment.

Parallel (or offset) alignment

Mount a dial indicator to one coupling hub, and rotate this hub, sweeping the outside diameter of the other hub. The parallel or offset misalignment is equal to one-half of the total indicator reading. Another method is to rest a straight edge squarely on the outside diameter of the hubs at 90° intervals and measure any gaps with feeler gauges. The maximum gap measurement is the parallel or offset misalignment.

Check alignment

After both angular and parallel alignments are within specified limits, tighten all foundation bolts securely and re-check critical alignment. If any of the specified limits for alignment are exceeded, realign the coupling.

5. Installing sheaves (pulleys), sprockets and gears

To avoid unnecessary bearing loads and additional shaft deflection, mount all power take-off devices (sprockets, pulleys, gears, etc.) so that the applied load center is as close to the gear housing as possible, as shown in **Figure 2**.

Figure 2: Sprocket or Gear Mounting

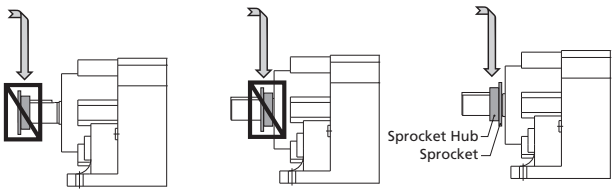

Preferred Mounting of Sprocket or Gear

Align the driver sheave or sprocket with the driven sheave or sprocket by placing a straight-edge length-wise across the face of the sheaves or sprockets. Alignment of bushed sheaves and sprockets should be checked only after bushings have been tightened. Check horizontal shaft alignment by placing one leg of a square or a level vertically against the face of the sheave or sprocket.

Always check component alignment and tension any belts or chains per the manufacturer's recommendation. The ideal belt or chain tension allows proper wrap of the driver and driven wheels, while maintaining the lowest possible tension of the belts or chain, so that no slipping occurs under load conditions. Check belt or chain tension frequently over the first 24 to 48 hours of operation.

IMPORTANT NOTE

When using external chain or belt drives, make sure the reducer is sized so that the shaft and bearings have adequate capacity. To avoid unnecessary bearing loads and additional shaft deflection, mount all power take-off devices (sprockets, pulleys, etc.) so that the applied load center is as close the gear housing as possible and check component alignment and tension of any belts or chains per the manufacturer's recommendation. Do not over tension the belts or chains.

6. Outboard pinion gear alignment

Align outboard pinion gears and adjust the gear tooth clearance according to the manufacturer's recommendations, checking for acceptable outboard pinion tooth contact. The foundation bolts may have to be loosened and the gear unit moved slightly to obtain proper gear tooth contact. After the unit is moved to correct tooth contact, the prime mover may need to be realigned.

1. Foot-mounted reducers

When installing the foot-mounted gear unit, observe the flatness specifications and bolt tightening torque guidelines provided in U10060 and make sure the mating mounting surface and reducer feet are clean and free of debris. Use of shims under the feet of the gear unit may be required in order to align the output shaft to the driven equipment. Make sure that all feet are supported so that the housing will not distort when it is bolted down. Improper shimming will cause mis-alignment and may reduce the life of the gear unit or cause component failure. Dowel pins may be field-installed to help prevent misalignment and ensure proper realignment if removed for service.

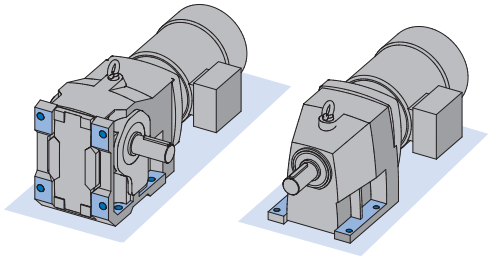

IMPORTANT NOTE

Gear units may be subjected to radial loads or side pull, caused by external chain drives or belt drives. In these instances it is recommended that the mounting base be designed with a slide-plate adjustment to accommodate extra slack in the chain or the belt after the feet are loosened. When using an external chain or belt drive, make sure the reducer is sized so that the shaft and bearings have adequate capacity.

2. Flange-mounted reducers (with B5 flange)

When using the B5 flange to mount the gear unit, the bulk head plate must be engineered to minimize buckling distortions and support the cantilevered weight of the gear reducer or gearmotor. When the mating hole is designed with the proper fit, the flange pilot tenon provides a means of accurately positioning the reducer while the hold-down bolts are properly secured; once the reducer is secured, the tenon helps prevent movement of the reducer and it helps locate the center of the reducer output shaft. The flange centering shoulder tolerance for standard units is listed in table 1. For units with NSD Tuph please see table 2 on the following page.

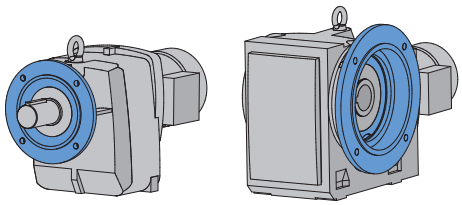

Table 1 : Flange Centering Shoulder Tolerance

Above ø (in)	To & Including ø (in)	Tolerance (in)	ISO 286-2 Fit Class
1.969	3.150	+0.0005 / -0.0003	j6
3.150	4.724	+0.0005 / -0.0004	j6
4.724	7.087	+0.0006 / -0.0004	j6
7.087	9.055	+0.0006 / -0.0005	j6
9.055	9.843	+0.0000 / -0.0011	h6
9.843	12.402	+0.0000 / -0.0013	h6
12.402	15.748	+0.0000 / -0.0014	h6
15.748	19.685	+0.0000 / -0.0016	h6
19.685	21.654	+0.0000 / -0.0017	h6

Above ø (mm)	To & Including ø (mm)	Tolerance (mm)	ISO 286-2 Fit Class
50	80	+0.012 / -0.007	j6
80	120	+0.013 / -0.009	j6
120	180	+0.014 / -0.011	j6
180	230	+0.016 / -0.013	j6
230	250	+0.000 / -0.029	h6
250	315	+0.000 / -0.032	h6
315	400	+0.000 / -0.036	h6
400	500	+0.000 / -0.040	h6
500	550	+0.000 / -0.044	h6

When installing the flange mounted gear unit, observe the flatness specifications and bolt tightening torque guidelines provided in U10060. Make sure the mating mounting surface and reducer flange are clean and free of debris. Use a straight edge or parallel bar to check for high spots on the mating mounting surface and remove any raised material around the mounting holes.

Set the gear unit into place and tighten the bolts until they are snug. Before final bolt-tightening check for any material gaps between the mating surfaces and if shimming is required, use "U" shaped shims at least 2 times the width of the bolt. Avoid over shimming a very irregular surface as this will make it very difficult to achieve proper alignment.

IMPORTANT NOTE

For heavy shock applications, it is advisable to field-install dowel pins through the mounting flange connection (in addition to the mounting bolts). This will help control flange movement or flange rotation and relieve the mounting bolts from this additional stress.

3. Flange-mounted reducers (with B14 flange)

When using the B14 flange to mount the gear unit, the bulk head plate must be engineered to minimize buckling distortions and support the cantilevered weight of the gear reducer or gearmotor. When properly installed, the output flange of the reducer housing is designed to enable the permissible torques and radial forces to be reliably transmitted by the bolt connections. The flange centering shoulder tolerance for standard units is listed in table 1 on the previous page. For units with NSD Tuph please see table 2 below.

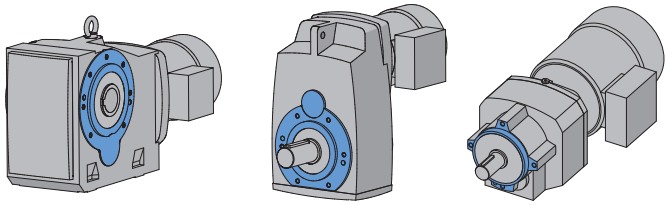

IMPORTANT NOTE

When using the B14 flange-face for mounting, if dowel pin holes are provided in addition to the threaded holes, then it is advisable to also use the proper dowel pins, to help control flange movement or flange rotation and relieve the mounting bolts from this additional stress This is especially important for heavy shock applications.

Table 2 : Flange Centering Shoulder Tolerance on NSD Tuph Units

Above ø (in)	To & Including ø (in)	Tolerance (in)
1.969	3.150	+0.0020 / +0.0013
3.150	4.724	+0.0021 / +0.0012
4.724	7.087	+0.0021 / +0.0011
7.087	9.055	+0.0022 / +0.0011

Above ø (mm)	To & Including ø (mm)	Tolerance (mm)
50	80	+0.052 / +0.033
80	120	+0.053 / +0.031
120	180	+0.054 / +0.029
180	230	+0.056 / +0.027

4. Foot & flange reducer housings

Some gear reducer housings are available with a foot and an output flange. Units with a foot and a B5 Flange are designated with the suffix XF after the primary model number and units with a B14 face-flange are designated with the suffix XZ after the primary model number. When a gear unit is provided with both a foot and a flange, the foot is consider the primary mounting surface. The flange is generally considered to be the secondary mounting option and it is intended that this surface be used for auxiliary add on elements that place minimal load stress on the reducer housing.

NOTICE

To prevent overstress on the main gear unit housing, never tighten the reducer mounting feet and the mounting flange against one-another. Auxiliary add-on elements that are mounted to the reducer flange, must not transmit excessive force, torque or vibration to the main gear housing.

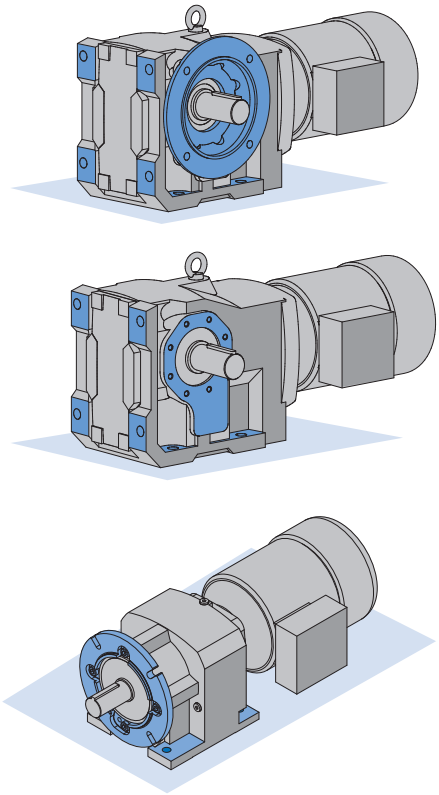

HELICAL & BEVEL REDUCER LUBRICATION

1. Importance of proper lubrication

Proper gearbox lubrication is essential in order to reduce friction, heat, and component wear. Lubricants reduce heat and wear by inserting a protective "fluid boundary" between mating parts and preventing direct metal to metal contact. Lubricants also help prevent corrosion and oxidation, minimize foam, improve heat transfer, optimize reducer efficiency, absorb shock loads and reduce noise.

Most NORD reducers are shipped from the factory with a pre-determined oil fill level in accordance to the specified reducer size and mounting position.

2. Standard oil type

The following tables indicate the standard oil fill type used. Please see user manual U11000 for more specific information and for optional helical and bevel gear lubricants:

Serviceable Gear Units	
Helical In-line	Standard Oil Fill: ISO VG 220, Mineral Oil
Clincher Parallel-Shaft	
Right-Angle Bevel	
NORDBLOC® Series In-line	
NORDBLOC®.1 Series In-line	
Standard Series In-line	

IMPORTANT NOTE

For shipping purposes, the following large Clincher™ gear units are supplied without oil:
- Clincher™ Sizes SK11282, SK11382, SK11382.1 and SK12382

Maintenance-free / Lubricated For Life Gear Units	
Clincher™ sizes SK0182NB, SK0282NB & SK1382NB	Standard Oil Fill: ISO VG220 SHC/PAO Synthetic Oil
NORDBLOC® Sizes SK172, SK272, SK371F, SK372, SK373, SK320	

IMPORTANT NOTE

Maintenance-free units are supplied as sealed units with no vent-plug. Consult NORD prior to ordering if interested in ordering any of the above sizes as serviceable gear units.

IMPORTANT NOTE

Consult the sticker adjacent to the fill plug to determine the type of lubricant installed at the factory. Some units have special lubricants designed to operate in certain environments or intended to extend the service life or service temperature range of the lubricant. If in doubt about which lubricant is needed for a certain application, please contact NORD Gear.

3. Lubrication replacement

If the gear unit is filled with mineral oil, the lubricant should be replaced at least after every 10,000 operating hours or after every two years. If the gear unit is filled with synthetic oil, the lubricant should be replaced at least after every 20,000 operating hours or after every four years. Often gear reducers are exposed to extreme ambient conditions, hostile environments, wet conditions, or dirty and dusty operating areas. Especially in these situations, it is important to establish a condition-based oil service interval.

4. Oil viscosity

Viscosity, or the oil's resistance to shear under load, is often considered the single most important property of any gear oil.

- Often one will consider making a viscosity correction to the oil to improve the performance when operating the gear unit at low temperature or high temperature.
- In cases of extreme load conditions, gear pairs and antifriction bearings may be more susceptible to sliding or scuffing wear. In these operating conditions, it may also be beneficial to consider an increased lubrication viscosity and/or a lubrication with improved antiwear additive packages.

IMPORTANT NOTE

The user should consult with their primary lubrication supplier before considering changes in oil type or viscosity.

5. Maximum oil sump temperature limit

To prevent reducer overheating, the reducer's maximum oil sump temperature limit must not be exceeded for prolonged periods of operation (up to 3 hours continuous operation depending upon reducer size).

Oil Type	Maximum Oil Temperature Limit	
	NORD	AGMA 9005-D94
Mineral	80-85°C (176-185°F)	95°C (203°F)
Synthetic	105°C (220°F)	107°C (225°F)

IMPORTANT NOTE

Use caution when specifying gear reducers for high temperature service. If there is concern about exceeding the allowable safe operating temperatures, please consult NORD to discuss alternatives.

6. The importance of routine oil analysis

Routine oil analysis, sound lubrication practices, and good tracking of oil performance trends will help establish proper lubrication maintenance and change-out intervals. To maximize equipment reliability, NORD Gear generally recommends a condition-based lubrication maintenance program. One may take exceptions to this general recommendation on sealed-for-life or maintenance-free gear units or smaller and less costly gear units. In these instances, the replacement cost of the gear unit is often small compared to the costs associated with this type of oil analysis program.

NOTICE

NORD suggests replacing the gear oil if oil analysis indicates any of the following. Failure to replace the oil may cause internal damage to gearbox and diminished performance:

- Viscosity has changed by approximately 10% or more.
- Debris particles (silicon, dust, dirt or sand) exceed 25 ppm.
- Iron content exceeds 150-200 ppm.
- Water content is greater than 0.05% (500 ppm).
- The total acid number (TAN) tests indicate a significant level of oxidative break-down of the oil, and a critical reduction in performance; If the TAN number measured changes by more than 5% over the new oil, then an oil change would be recommended.

7. Mounting position and oil fill quantity

All NORD Gear reducers are shipped from the factory with a pre-determined oil fill level in accordance to the specified reducer size and mounting position. ***For additional information, please see the seperate mounting position diagrams and the corresponding oil fill quantity tables for the specified gear unit.***

The gearbox nametag will indicate the mounting position that was provided. ***For mounting orientations other than shown in the mounting position charts, please consult NORD Gear.***

IMPORTANT NOTE

Actual oil volume can vary slightly depending upon the gear case size, mounting and ratio. Prior to commissioning the reducer, check the oil-fill level using the reducer's oil-level plug and drain or add additional oil as needed. The minimum acceptable oil level is 0.15 in (4mm) below the oil level hole.

8. Oil plug locations

All gear units are assembled with the oil fill-level, oil-drain and vent plugs installed in their proper locations, according to the specified mounting position. All standard plugs are metric and utilize sealing gaskets between the head of the plug and the reducer housing.

9. Drain and fill-level plugs

All reducer drain plugs are metric socket head cap screws. For easier identification, it is NORD's standard practice to provide a hex-head screw for the fill-level plug. For ease of draining the used oil from the gear reducer, use the socket head screw located at the lowest part of the gearbox.


Drain Plug

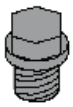
Fill Level Plug

10. Vent plug locations

Reducer venting allows for air pressure differences that occur during operation, between the inner space of the reducer and the atmosphere, while ensuring leak-free operation. The AUTOVENT™ is standard for all vented gear units, unless otherwise noted.

AUTOVENT™ - The AUTOVENT™ helps prevent bearing and gear damage by behaving like a check valve to block the entry of foreign material and prevent lubrication contamination from dust particles, moisture and air-borne process chemicals. The breather opens at approximately 0.3-0.9 psi during operation and closes tightly as the gearbox cools. This option is perfect for humid conditions and wash-down environments, helping to maintain proper oil cleanliness, while reducing foaming and oxidation.

Figure 1 AUTOVENT™ Types


Type 1

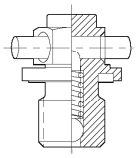

Type 2 with transportation plug

Open Vent - An optional open vent can be supplied by NORD. The open vent comes closed upon delivery with a transportation sealing plug (see Warning).

NOTICE

To prevent build-up of excessive pressure, sealed vents must be activated as shown prior to gear unit start up. Excessive pressure may cause damage to internal components and cause leakage.

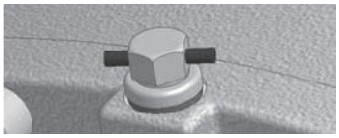
Sealed vent

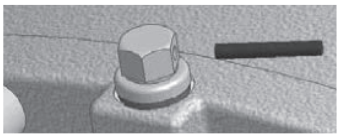
Activated vent

Filtered Vent - NORD may offer an optional filtered vent, which allows gases to permeate, but does not allow dust and debris to pass through the vent.

HELICAL & BEVEL REDUCER LUBRICATION TYPES

Lubrication Tables – Helical and Bevel Gear Units

Standard Oil Lubricants

ISO Viscosity	Oil Type	Ambient Temperature Range	Manufacturer Brand/Type	Notes
VG220	MIN-EP	0 to 40°C (32 to 104°)	Mobilgear 600XP220	♦❶
	PAO	-35 to 60°C (-31 to 140°F)	Mobil SHC630	♦❷
	FG	-5 to 40°C (23 to 104°F)	Fuchs FM220	♦

Optional Oil Lubricants

ISO Viscosity	Oil Type	Ambient Temperature Range	Manufacturer Brand/Type	Notes
VG460	PAO	-35 to 80°C (-31 to 176°F)	Mobil SHC 634	-
	FG-PAO	-35 to 80°C (-31 to 176°F)	Mobil SHC Cibus 460	-
VG220	FG-PAO	-35 to 60°C (-31 to 140°F)	Mobil SHC Cibus 220	S
VG150	PAO	-35 to 25°C (-31 to 77°F)	Mobil SHC629	-

Grease Options (applied to greased bearings and seal cavities)

NLGI Grade	Grease Thickener	Grease Base Oil	Ambient Temperature Range	Manufacturer Brand/Type	Notes
NLGI 2	Li-Complex	MIN	-30 to 60°C (-22 to 140°F)	Mobil Grease XHP222	♦❶
	Li-Complex	PAO	-40 to 80°C (-40 to 176°F)	Mobil / Mobilith SHC 220	♦❷
	Polyurea	FG-PAO	-30 to 80°C (-22 to 176°F)	Mobil SHC Polyrex 222	♦

♦ Stocked Lubricants

❶ Standard product on serviceable gear units

❷ Standard product on maintenance free gear units

IMPORTANT NOTE

- The "Ambient Temperature" is intended to be an operation guideline based upon the typical properties of all the lubricant. The viscosity and other properties of the lubricant change based upon load, speed, ambient conditions, and reducer operating temperatures. The user should consult with their lubrication supplier & NORD gear before considering changes in oil type or viscosity.
- To prevent reducer overheating, observe the maximum operating oil temperature limits:
  Mineral Oil: 80-85 °C (176 – 180 °F).
  Synthetic Oil: 105 °C (225 °F).
- In the following instances, please consult NORD for specific recommendations:
  - √ Gear units will operate in high ambient temperature conditions exceeding 40 °C (104 °F).
  - √ Gear units will operate in cold ambient temperature conditions approaching 0 °C (32 °F) or lower.
  - √ Lower than an ISO VG100 viscosity oil is being considered for a cold-temperature service.
  - √ Fluid grease is required for lubricating the gear unit.
- Observe the general lubrication guidelines outlined in user manual U10750.

Oil Formulation Codes

MIN-EP - Mineral Oil with EP Additive
PAO-EP - Synthetic Polyalphaolefin Oil with EP Additive
PAO - Synthetic Polyalphaolefin Oil
PG - Synthetic Polyglycol Oil
FG - Food-Grade Oil
FG-PAO - Food-Grade, Synthetic Poyalphaolefin Oil
FG-PG - Food-Grade, Synthetic Polyglycol Oil

Lubrication Notes

- Avoid using (EP) gear oils in worm gears that contain sulfur-phosphorous chemistries, as these additives can react adversely with bronze worm gears and accelerate wear.
- Food grade lubricants must be in compliance with FDA 212 CFR 178.3570 and qualify as a NSF-H1 lubricant. Please consult with lubrication manufacturer for more information.
- When making a lubrication change, check with the lubrication supplier to assure compatibility and to obtain recommended cleaning or flushing procedures.
- Do not to mix different oils with different additive packages or different base oil formulation types. Polyglycol (PG) oils are not miscible with other oil types and should never be mixed with mineral oil or polyalphaolefin (PAO) synthetic oil.

HELICAL & BEVEL REDUCER LUBRICATION TYPES

Oil Cross-reference Chart

ISO Viscosity	Oil Type	Ambient Temperature Range	Mobil	Shell	Castrol	FUCHS	KLÜBER LUBRICATION
VG150	MIN-EP	0 to 25°C (32 to 77°F)	Mobilgear 600XP150	Omala S2 G 150	Alpha SP150	Renolin EP150	Klüberoil GEM 1-150N
	PAO-EP	-30 to 25 °C (-22 to 77 °F)	Mobilgear SHC150	Omala S4 GX 150	Alphasyn EP150	Gearmaster SYN150/NA	Klübersynth EG 4-150
	PAO	-30 to 25°C (-22 to 77°F)	Mobil SHC629	Morlina S4 B 150	Alphasyn T150	N/A	Klübersynth GEM 4-150N
	PG	-25 to 25°C (-13 to 77°F)	Mobil Glygoyle 150	Omala S4 WE 150	Alphasyn PG150	Renolin PG150	Klübersynth GH 6-150
	FG	0 to 25°C (32 to 77°F)	Mobil DTE FM 150	N/A	N/A	N/A	N/A
	FG-PAO	-15 to 25°C (5 to 77°F)	Mobil SHC Cibus 150	N/A	N/A	Cassida GL150	Klüberoil 4 UH 1-150N
	FG-PG	-25 to 25°C (-13 to 77°F)	Mobil Glygoyle 150	N/A	N/A	N/A	Klübersynth UH1 6-150
VG220	MIN-EP	0 to 40°C (32 to 104°)	Mobilgear 600XP220	Omala S2 G 220	Alpha SP220	Renolin EP220	Klüberoil GEM 1-220N
	PAO-EP	-30 to 60 °C (-22 to 140 °F)	Mobilgear SHC220	Omala S4 GX 220	Alphasyn EP220	Gearmaster SYN220/NA	Klübersynth EG 4-220
	PAO	-30 to 60°C (-22 to 140°F)	Mobil SHC630	Morlina S4 B 220	Alphasyn T220	N/A	Klübersynth GEM 4-220N
	PG	-25 to 60°C (-13 to 140°F)	Mobil Glygoyle 220	Omala S4 WE 220	Alphasyn PG220	Renolin PG220	Klübersynth GH 6-220
	FG	0 to 40°C (32 to 104°F)	Mobil DTE FM 220	N/A	N/A	Fuchs FM220	N/A
	FG-PAO	-25 to 60°C (-13 to 140°F)	Mobil SHC Cibus 220	N/A	N/A	Cassida GL220	Klüberoil 4 UH 1-220N
	FG-PG	-25 to 60°C (-13 to 140°F)	Mobil Glygoyle 220	N/A	N/A	Cassida WG220	Klübersynth UH1 6-220
VG460	MIN-EP	0 to 40°C (32 to 104°F)	Mobilgear 600XP460	Omala S2 G 460	Alpha SP460	Renolin EP460	Klüberoil GEM 1-460N
	PAO-EP	-20 to 80°C (-4 to 176°F)	Mobilgear SHC460	Omala S4 GX 460	Alphasyn EP460	Gearmaster SYN460/NA	Klübersynth EG 4-460
	PAO	-20 to 80°C (-4 to 176°F)	Mobil SHC 634	Morlina S4 B 460	Alphasyn T460	N/A	Klübersynth GEM 4-460N
	PG	-20 to 80°C (-4 to 176°F)	Mobil Glygoyle 460	Omala S4 WE 60	Alphasyn PG460	N/A	Klübersynth GH 6-460
	FG	0 to 40°C (32 to 104°F)	Mobil DTE FM460	N/A	N/A	Fuchs FM460	N/A
	FG-PAO	-20 to 80°C (-4 to 176°F)	Mobil SHC Cibus 460	N/A	N/A	Cassida GL460	Klüberoil 4 UH 1-460N
	FG-PG	-20 to 80°C (-4 to 176°F)	Mobil Glygoyle 460	N/A	N/A	Cassida WG460	Klübersynth UH1 6-460

Low-end service temperature limit may vary for a specific lubricant; Please also see the important notes on Page 1.

NORDBLOC®.1 FOOTED OIL FILL QUANTITIES

NORDBLOC®.1 Fill Quantities (Footed)

The following NORD Gear reducers are shipped from the factory with a pre-determined oil fill level in accordance to the specified reducer size and mounting position. For oil plug & vent locations please see U14700.

IMPORTANT NOTE

Actual oil volume can vary slightly depending upon the gear case size, mounting and ratio. Prior to commissioning the reducer, check the oil-fill level using the reducer's oil level plug and drain or add addition oil as needed. The correct oil level should be located at the lower edge of the oil level hole.

For mounting orientations other than shown please consult NORD Gear. Reducer modifications may be required.

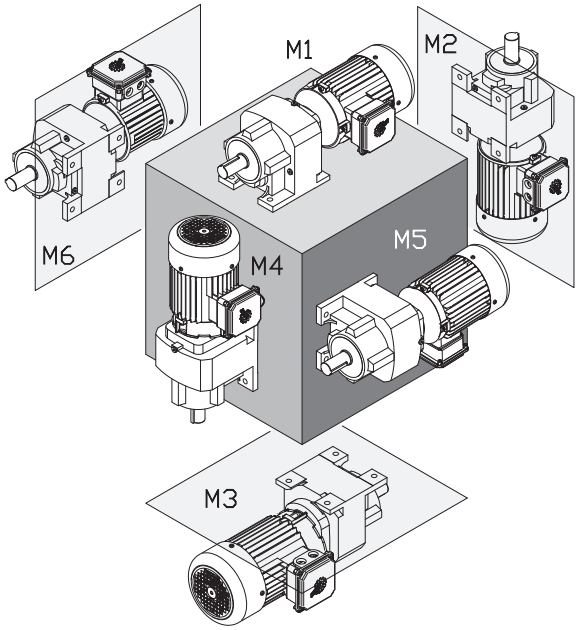

Type	M1		M2		M3		M4		M5		M6	
	Quarts	Liters	Quarts	Liters	Quarts	Liters	Quarts	Liters	Quarts	Liters	Quarts	Liters
SK 071.1	0.19	0.18	0.42	0.40	0.40	0.38	0.42	0.40	0.32	0.30	0.32	0.30
SK 072.1	0.17	0.16	0.34	0.32	0.22	0.21	0.24	0.23	0.19	0.18	0.21	0.20
SK 171.1	0.23	0.22	0.42	0.40	0.38	0.36	0.42	0.40	0.35	0.33	0.35	0.33
SK 172.1	0.29	0.27	0.62	0.59	0.44	0.42	0.48	0.45	0.34	0.32	0.41	0.39
SK 371.1	0.37	0.35	0.61	0.58	0.58	0.55	0.61	0.58	0.52	0.49	0.52	0.49
SK 372.1	0.48	0.45	1.10	1.05	0.79	0.75	1.10	1.00	0.63	0.60	0.69	0.65
SK 373.1	0.48	0.45	1.10	1.05	0.79	0.75	1.10	1.00	0.63	0.60	0.69	0.65
SK 571.1	0.51	0.48	0.91	0.86	0.85	0.80	0.97	0.92	0.72	0.68	0.72	0.68
SK 572.1	0.79	0.75	2.00	1.90	1.60	1.50	2.10	2.00	1.20	1.10	1.20	1.15
SK 573.1	0.79	0.75	2.00	1.90	1.60	1.50	2.10	2.00	1.20	1.10	1.20	1.15
SK 672.1	1.20	1.10	2.70	2.60	2.30	2.15	2.90	2.70	1.60	1.55	1.70	1.65
SK 673.1	1.20	1.10	2.70	2.60	2.30	2.15	2.90	2.70	1.60	1.55	1.70	1.65
SK 771.1	0.95	0.90	1.60	1.50	1.30	1.20	1.80	1.70	1.20	1.16	1.20	1.16
SK 772.1	1.40	1.30	4.00	3.80	2.50	2.40	3.40	3.20	1.70	1.60	2.60	2.50
SK 772.1 VL	2.10	2.00	4.00	3.80	2.50	2.40	3.40	3.20	1.70	1.60	2.60	2.50
SK 773.1	2.40	2.30	4.00	3.80	3.50	3.30	3.40	3.20	2.50	2.40	3.30	3.10
SK 773.1 VL	2.40	2.30	4.00	3.80	3.50	3.30	3.40	3.20	2.50	2.40	3.30	3.10
SK 872.1	3.10	2.90	8.20	7.80	4.90	4.60	6.80	6.40	2.60	2.50	4.20	4.00
SK 872.1 VL	5.30	5.00	8.20	7.80	4.90	4.60	6.80	6.40	2.60	2.50	4.20	4.00
SK 873.1	4.40	4.20	8.20	7.80	6.20	5.90	6.80	6.40	4.30	4.10	6.20	5.90
SK 873.1 VL	4.40	4.20	8.20	7.80	6.20	5.90	6.80	6.40	4.30	4.10	6.20	5.90
SK 972.1	4.80	4.50	13.00	12.00	7.90	7.50	12.00	11.50	4.40	4.20	7.90	7.50
SK 972.1 VL	9.00	8.50	13.00	12.00	7.90	7.50	12.00	11.50	4.40	4.20	7.90	7.50
SK 973.1	7.90	7.50	13.00	12.00	11.00	10.50	12.00	11.50	7.90	7.50	11.00	10.50
SK 973.1 VL	7.90	7.50	13.00	12.00	11.00	10.50	12.00	11.50	7.90	7.50	11.00	10.50

NORDBLOC®.1
OIL PLUG & VENT LOCATIONS

Oil plug connections

Prior to commissioning the reducer, check the oil-fill level using the reducer's oil-level plug and drain or add additional oil as needed. The correct oil level should be located at the lower edge of the oil level hole. ***For mounting orientations other than shown please consult NORD Gear. New plug locations may be required.***

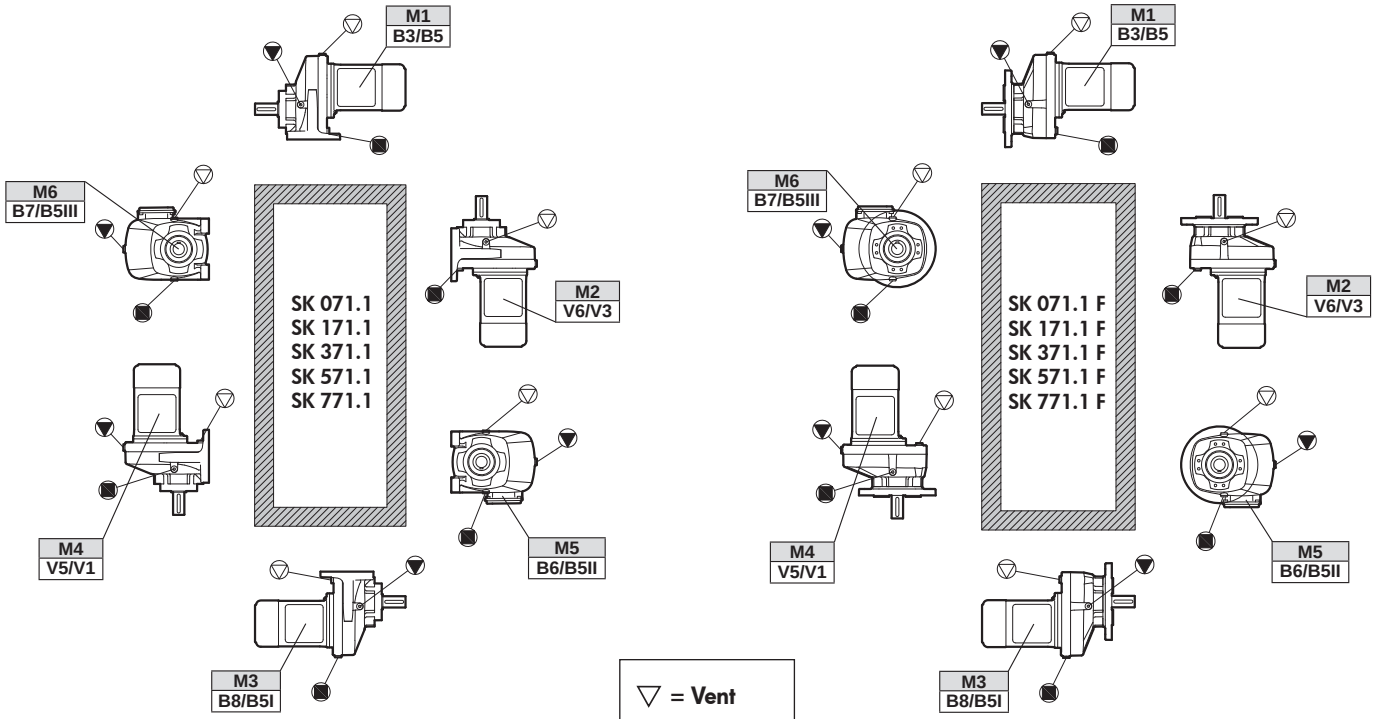

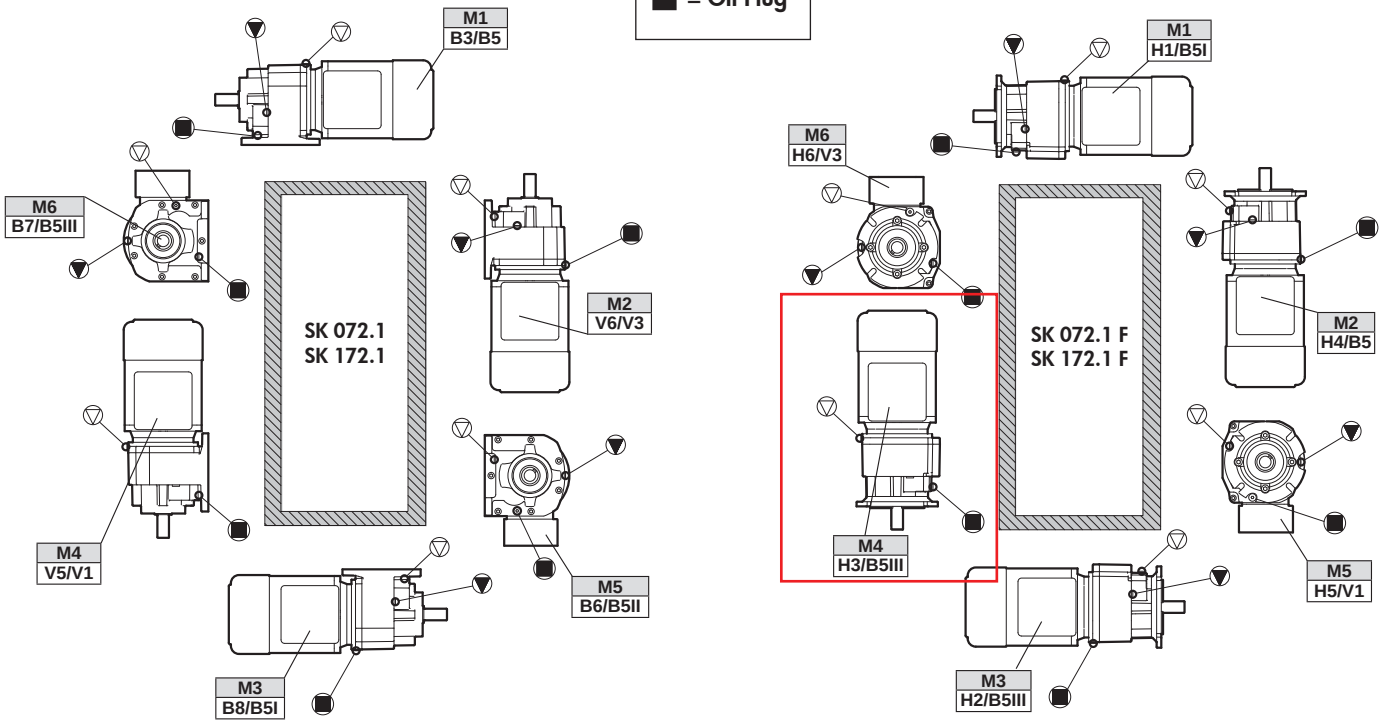

NORDBLOC®.1
OIL PLUG & VENT LOCATIONS

Oil plug connections

Prior to commissioning the reducer, check the oil-fill level using the reducer's oil-level plug and drain or add additional oil as needed. The correct oil level should be located at the lower edge of the oil level hole. ***For mounting orientations other than shown please consult NORD Gear. New plug locations may be required.***

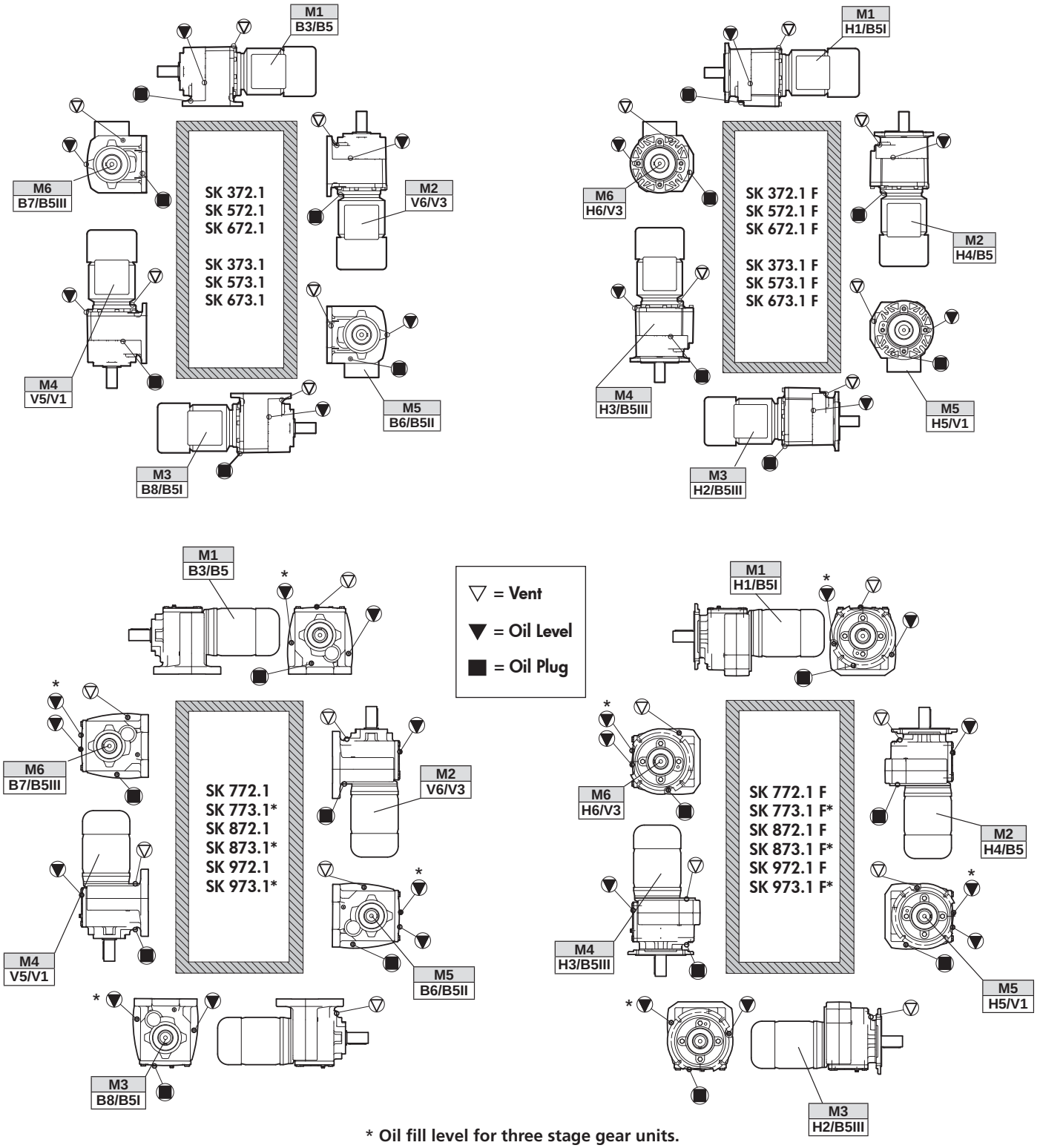

*** Oil fill level for three stage gear units.**

TROUBLESHOOTING

Troubleshooting

This section identifies some of the most common issues involved with NORD Gear speed reducers , and provides recommendations to assist you in defining and answering your questions as you work with our products. You may also contact our Engineering/Application departments if your questions are not answered in the table below.

Problem With the Reducer		Possible Causes	Suggested Remedy
Runs Hot	Overloading	Load exceeds the capacity of the reducer	Check rated capacity of reducer, replace with unit of sufficient capacity or reduce the load.
	Improper lubrication	Insufficient lubrication	Check lubricant level and adjust up to recommended levels
		Excessive lubrication	Check lubricant level and adjust down to recommended levels.
		Wrong lubrication	Flush out and refill with correct lubricant as recommended
Runs Noisy	Loose foundation bolts	Weak mounting structure	Inspect mounting of reducer. Tighten loose bolts and/or reinforce mounting and structure.
		Loose hold down bolts	Tighten bolts
	Failure of bearings	May be due to lack of lubricant	Replace bearing. Clean and flush reducer and fill with recommended lubricant.
		Overload	Check rated capacity of reducer.
	Insufficient lubricant	Level of lubricant in reducer not properly maintained.	Check lubricant level and adjust to factory recommended level.
Output shaft does not turn	Internal parts are broken or missing	Overloading of reducer can cause damage	Replace broken parts. Check rated capacity of reducer.
		Key missing or sheared off on input shaft.	Replace key.
		Coupling loose or disconnected	Properly allign reducer and coupling. Tighten coupling.
Oil Leakage	Worn seals	Caused by dirt or grit entering seal.	Replace seals. Autovent may be clogged. Replace or clean.
	Unit runs hot or leaks	Overfilled reducer	Check lubricant level and adjust to recommended level.
		Vent clogged.	Clean or replace, being sure to prevent any dirt from falling into the reducer.
	Incorrect fill level	Improper mounting position, such as wall or ceiling mount of horizontal reducer.	Check mounting position on the name tag & verify with mounting chart in manual.

NEMA/IEC/SERVO INPUT ADAPTERS & THEIR COUPLINGS

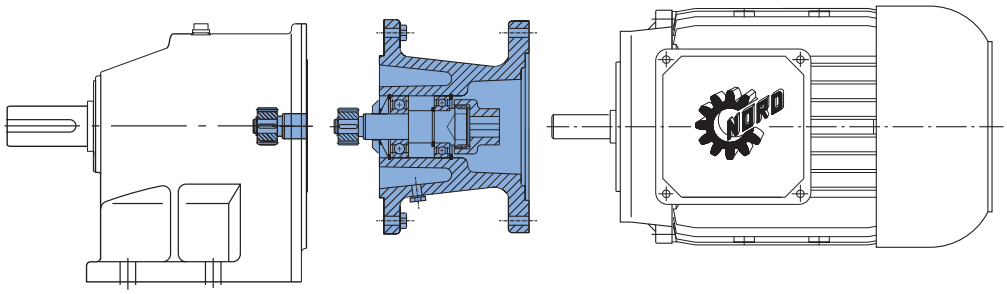

⚠ WARNING

While working on the gear drive system, make sure the power from the prime mover is isolated or secured on "lock-out" to prevent accidental start-up and to safeguard against injury!

NEMA/ IEC Motor Adapters

Motor adapters allow for easy installation and removal of industry standard motors. Motor adapters consist of a coupling and an adapter housing that connects the motor to the gear reducer.

NORD Gear supplies a coupling that is to be mounted on the motor shaft. It is important that the coupling is properly positioned.

- For NEMA Input Adapters, follow the Motor Installation Instructions on pages 3-4.
- For IEC Input Adapters, the supplied coupling will mount directly against the motor shaft shoulder. No locating measurements need to be taken.

IMPORTANT NOTE

Some of the larger IEC inputs will have a coupling spacer included to help locate the coupling. Slide the spacer against the motor shaft shoulder, slide the coupling against the spacer and tighten set screw(s).

IMPORTANT NOTE

For the larger motor adapters (IEC160 / N250TC and larger), an Automatic Lubricator is supplied. This will need to be activated at the time of startup. For operation and activation instructions, refer to user manual U45200.

NEMA/IEC Motor Weight Limits

When mounting a motor to a NORD NEMA C-face motor adapter it is important to consider the motor's weight. Following is a table that includes the maximum motor weight the NEMA adapter can support. If the motor exceeds the listed weight is must be externally supported. When a C-face mounted motor is externally supported care must be taken to ensure that the support system does not impose additional pre-loads on the NEMA motor adapter.

NEMA Motor Weight Limit

Motor FRAME	56C	143TC	145TC	182TC	184TC	210TC
Max Weight [lb]	66	88	110	130	175	220
Motor FRAME	**250TC**	**280TC**	**324TC**	**326TC**	**365TC**	
Max Weight [lb]	440	550	770	1100	1540	

IEC Motor Weight Limit

Motor FRAME	63	71	80	90	100	112	132
Max Weight [lb]	55	66	88	110	130	175	220
Motor FRAME	**160**	**180**	**200**	**225**	**250**	**280**	**315**
Max Weight [lb]	440	550	770	1100	1540	1540	3300

Couplings

Couplings are made with tough abrasion resistant materials, which resist most chemicals and petroleum products. They are electrically isolated (prevent metal to metal contact) and require no lubrication or maintenance. Depending upon the size of the C-face input, NORD provides either a gear or a jaw type coupling.

NORD supplies three different types of couplings depending on the size of input: "J" style, "M" style and "Jaw" style coupling. Following are instructions on how to properly mount each type of coupling onto the motor.

NEMA / IEC / SERVO INPUT ADAPTERS & THEIR COUPLINGS

Couplings for the NEMA and IEC Adapters

Depending on the size of the input adapter to the gearbox, NORD Gear supplies two styles of couplings - BoWex® (gear tooth) and Rotex® (jaw) couplings.

BoWex® Couplings

NORD C-face adapter input shafts have a machined spline on the end. NORD incorporates two styles of BoWex® couplings, the "J" and "M" styles. The "J" style is a one-piece coupling with a metal hub and nylon spline. The "M" style is a two-piece coupling – the metal hub and a nylon sleeve. Nylon and steel components allow them to operate in high ambient temperatures without lubrication or maintenance.

- Nylon sleeves resist dirt, moisture, most chemicals and petroleum products
- No lubrication required
- Operating Conditions: -22°F - 212°F (-30°C - 100°C)
- Higher temperature coupling sleeve available up to 250°F (120°C)
- Special bore available

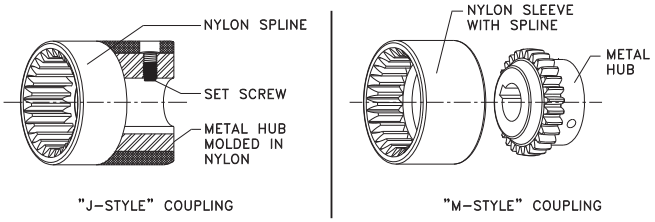

BoWex® Couplings Mechanical Ratings "J" Style (NEMA & IEC)

Coupling Type	Rated Torque Cont.	Rated Torque Peak	Input Adapter Sizes	Bore Size
BoWex® J14	44.3 lb-in 5 N-m	88.5 lb-in 10 N-m	N56C IEC63, IEC71	5/8" 11mm, 14mm
BoWex® J24	106 lb-in 12 N-m	212 lb-in 24 N-m	N56C, N140TC IEC80, IEC90	5/8", 7/8" 19mm, 24mm
BoWex® J28	398 lb-in 45 N-m	1,195 lb-in 135 N-m	N180TC IEC100, IEC112	1-1/8" 28mm

BoWex® Couplings Mechanical Ratings "M" Style (NEMA & IEC)

Coupling Type	Rated Torque Cont.	Rated Torque Peak	Input Adapter Sizes	Bore Size
BoWex® M38	708 lb-in 80 N-m	2,124 lb-in 240 N-m	N180TC, N210TC IEC132	1-1/8", 1-3/8" 38 mm
BoWex® M42	885 lb-in 100 N-m	2,655 lb-in 300 N-m	N250TC IEC160	1-5/8" 42 mm
BoWex® M48	1,239 lb-in 140 N-m	3,717 lb-in 420 N-m	N280TC IEC180	1-7/8" 48 mm

Rotex® Couplings

The cast iron jaw type couplings have an integral urethane "spider" that provides smooth transmission of the motor torque. A set screw on the coupling prohibits axial movement along the motor shaft.

- Excellent shock and vibration dampening
- Excellent resistance to oils and most chemicals
- No metal-to-metal contact
- Operating Conditions: -22°F - 195°F (-30°C - 90°C)
- Higher temperature material (Hytrel) spider available up to 230°F (110°C)
- Low temperature materials available upon request
- Special bores available

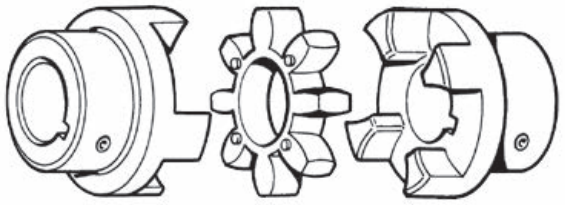

Rotex® Couplings Mechanical Ratings "R" Style (NEMA & IEC)

Coupling Type	Rated Torque Cont.	Rated Torque Peak	Input Adapter Sizes	Bore Size
Rotex® R65	5,532 lb-in 625 N-m	11,063 lb-in 1,250 N-m	N320TC IEC200, IEC225	2-3/8" 55mm, 60mm
Rotex® R90	21,242 lb-in 2400 N-m	42,484 lb-in 4800 N-m	N360TC IEC250, 280, 315	1-5/8" 65, 70, 80 mm

Couplings for Servo Adapters

NORD Gear supplies Rotex® (jaw) couplings for SERVO adapter connections.

Rotex® Couplings Mechanical Ratings (Servo Adapter)

Coupling Type	Rated Torque Cont.	Rated Torque Peak	Input Adapter Sizes	Reducer Input Flange	Bore Size
Rotex® R19 GS	150 lb-in 17 Nm	301 lb-in 34 Nm	-SEP100, -SEK100	160S	19 mm
Rotex® R24 GS	531 lb-in 60 Nm	1062 lb-in 120 Nm	-SEP130, -SEK130	160S, 250S	24 mm
Rotex® R28 GS	1416 lb-in 160 Nm	2832 lb-in 320 Nm	-SEP165, -SEK165, -SEP215, -SEK215	160S, 250S 250S	32 mm 38 mm
Rotex® R48 GS	4647 lb-in 525 Nm	9293 lb-in 1050 Nm	-SEP215, -SEK215 -SEP300, -SEK300 -SEP300, -SEK300	300S 300S 350	38 mm 48 mm

SEP adapter couplings are for keyed motor shafts.
SEK adapter couplings are clamping style for shafts without key.
Alternate bores upon request.

"J" Style Coupling NEMA C-face Motor Installation

1. Measure the distance from the face of the input adapter to the face of the splined shaft and record that measurement as A in the equation below.
2. Measure depth of coupling engagement zone and record the measurement as "B" in the equation below.
3. Add "A" + "B" and subtract 0.08" (~2mm) from the distance. This needs to be done so that the coupling will not be preloaded after installation!
4. Use that measurement to locate the coupling from the face of the motor onto the shaft.
5. Once in place, tighten the set screw to lock the coupling in place. It is recommended that the key is staked or bonded (Loctite) in place to prohibit the key from vibrating out.
6. Mount the motor onto the input adapter with customer supplied bolts. Make sure that the coupling from the adapter and the motor engage securely. Use lock washers or Loctite to prohibit bolts from becoming loose from vibration.

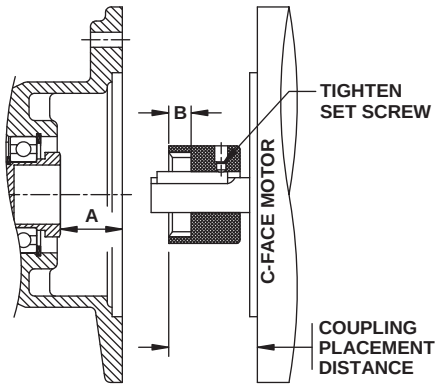

MEASURED DISTANCES A + B		SUBTRACT DISTANCE	COUPLING PLACEMENT DISTANCE
____ +	____	- 0.080" (2mm) =	____

"M" Style Coupling NEMA C-face Motor Installation

1 Measure the distance from the face of the input adapter to the face of the splined shaft & record that measurement.
2. Subtract 0.31" (~8mm) from the distance. This needs to be done so that the coupling will not be preloaded after installation!
3. Use that measurement to locate the coupling from the face of the motor onto the shaft.
4. Once in place, tighten the set screw to lock the coupling in place. It is recommended that the key is staked or bonded (Loctite) in place to prohibit the key from vibrating out.
5. Mount the motor onto the input adapter with customer supplied bolts. Make sure that the coupling from the adapter and the motor engage securely. Use lock washers or Loctite to prohibit bolts from becoming loose from vibration.

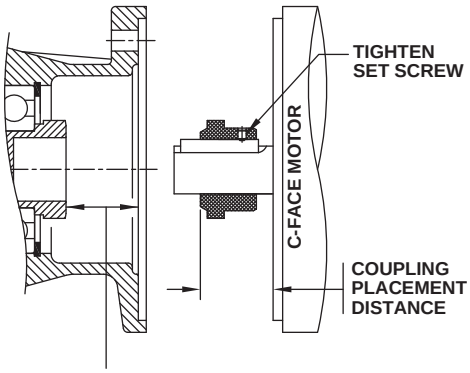

MEASURED DISTANCE	SUBTRACT DISTANCE	COUPLING PLACEMENT DISTANCE
____	- 0.310" (8mm) =	____

"Jaw" Style Coupling NEMA C-face Installation

1. Measure the distance from the face of the input adapter to the face of the coupling as shown and record that measurement.

2. Subtract the "X" dimension from the measured distance. This needs to be done so that the coupling will not be preloaded after installation!

3. Use that measurement to locate the coupling from the face of the motor onto the shaft.

4. The metal portion of the coupling should be heated up prior to assembly, generally 250°F to 300°F (120°C to 150°C).

IMPORTANT NOTE
DO NOT HEAT THE URETHANE SPIDER.

5. Once in place, tighten the setscrew to lock coupling in place. Let the coupling cool down before placing the spider into the jaws. It is recommended that the key is staked or bonded (Loctite) in place to prohibit the key from vibrating out.

6. Mount the motor onto the input adapter with customer supplied bolts. Make sure that the coupling from the adapter and the motor engage securely. Use lock washers or Loctite to prohibit bolts from becoming loose from vibration.

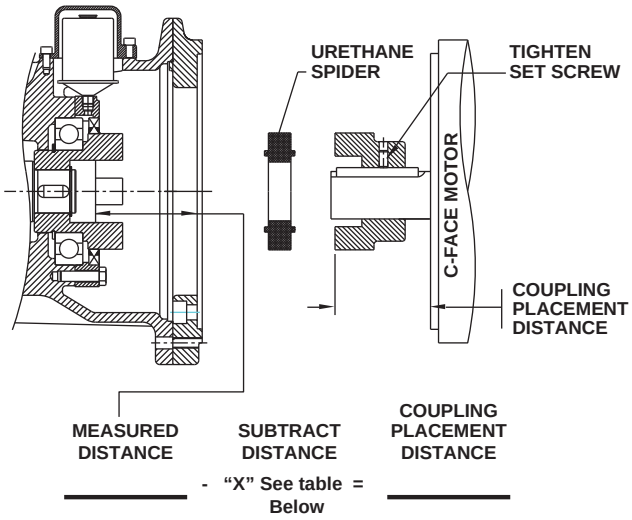

Coupling Size	"X" (Subtract this value from measured distance)
R14	0.06" (1.5 mm)
R19 & R24	0.08" (2.0 mm)
R28	0.10" (2.5 mm)
R38 & 42	0.12" (3.0 mm)
R48	0.14" (3.5 mm)
R65	0.18" (4.5 mm)
R90	0.22" (5.5 mm)

NEMA/IEC/SERVO INPUT ADAPTERS & THEIR COUPLINGS

IEC 63-112 / IEC132-180 / IEC 160-315 &
NEMA 56C-180TC, NEMA 180TC-N280TC, NEMA 320TC-360TC

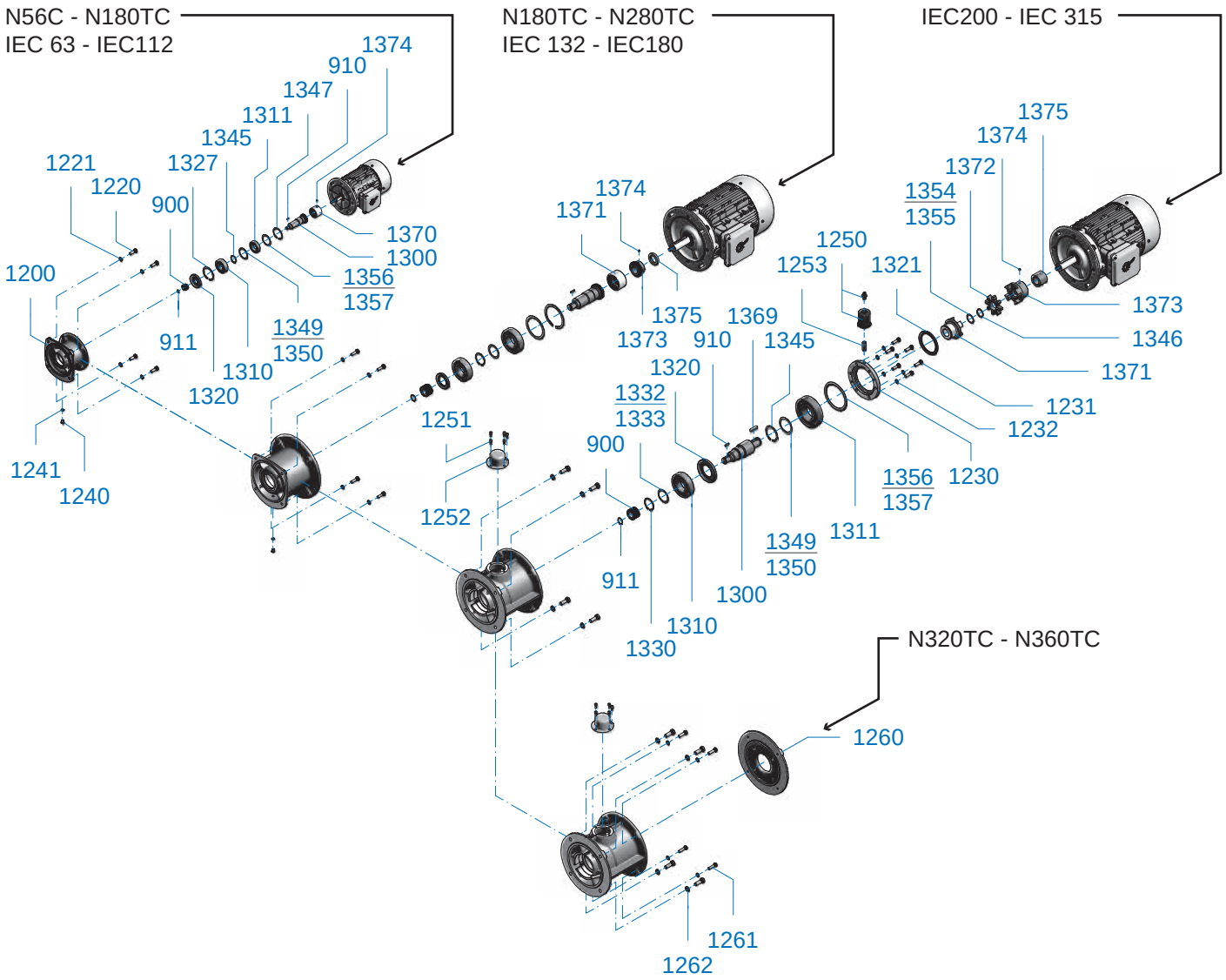

NEMA/IEC Parts List

900	Drive pinion	1231	Screw	1305	Parallel key	1332	Shim
910	Parallel key	1232	Spring lock washer	1310	Bearing	1333	Shim
911	Circlip	1234	Shim	1311	Bearing	1345	Circlip
1200	Housing	1235	Shim	1312	Bearing	1346	Circlip
1210	Gasket	1240	Screw	1320	Radial packing ring	1348	Support disc
1220	Screw	1241	Gasket	1321	Radial packing ring	1356	Shim
1221	Spring lock washer	1245	Lubricating nipple	1330	Circlip	1357	Shim
1230	Lid	1300	Drive Shaft	1331	Circlip	1380	Gamma ring

SERVO SEP/SEK 100, SEP/SEK 130, SEP/SEK 165, SEP/SEK 215, SEP/SEK 300

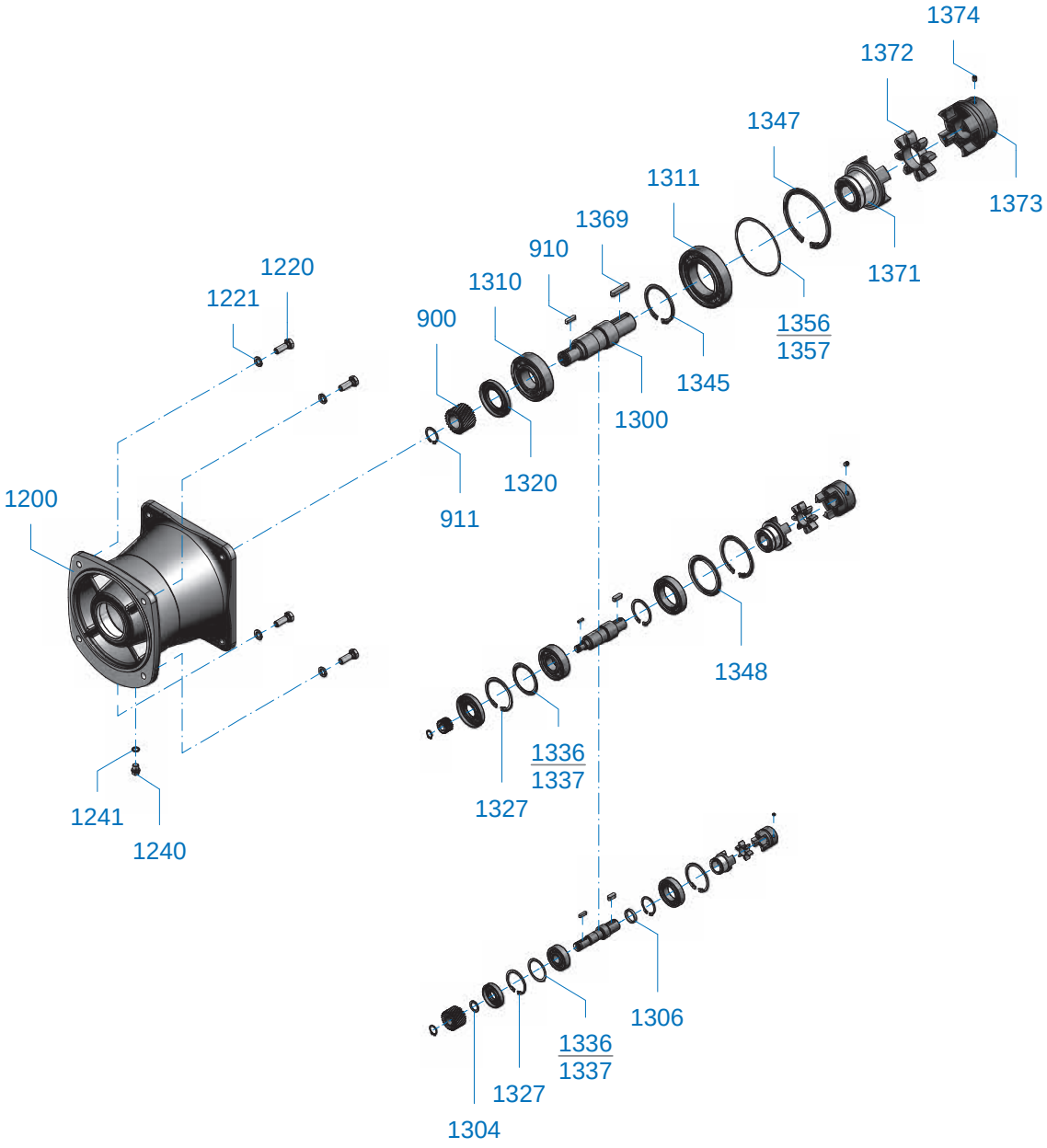

SERVO Parts List

900	Drive pinion	1241	Gasket	1327	Circlip	1357	Shim
910	Parallel key	1300	Drive Shaft	1336	Shim	1369	Parallel key
911	Circlip	1304	Support disc	1337	Shim	1371	Coupling half
1200	Housing	1306	Support disc	1345	Circlip	1372	Ring gear
1220	Screw	1310	Bearing	1347	Circlip	1373	Half-coupling
1221	Spring lock washer	1311	Bearing	1348	Support disc	1374	Screw
1240	Screw	1320	Radial packing ring	1356	Shim		

STP3 SENSOR & OMRON CONTROLLER MANUAL

NETZSCH CANADA INC. 2017

OPERATING AND MAINTENANCE INSTRUCTIONS:

STP3 DRY RUN PROTECTION

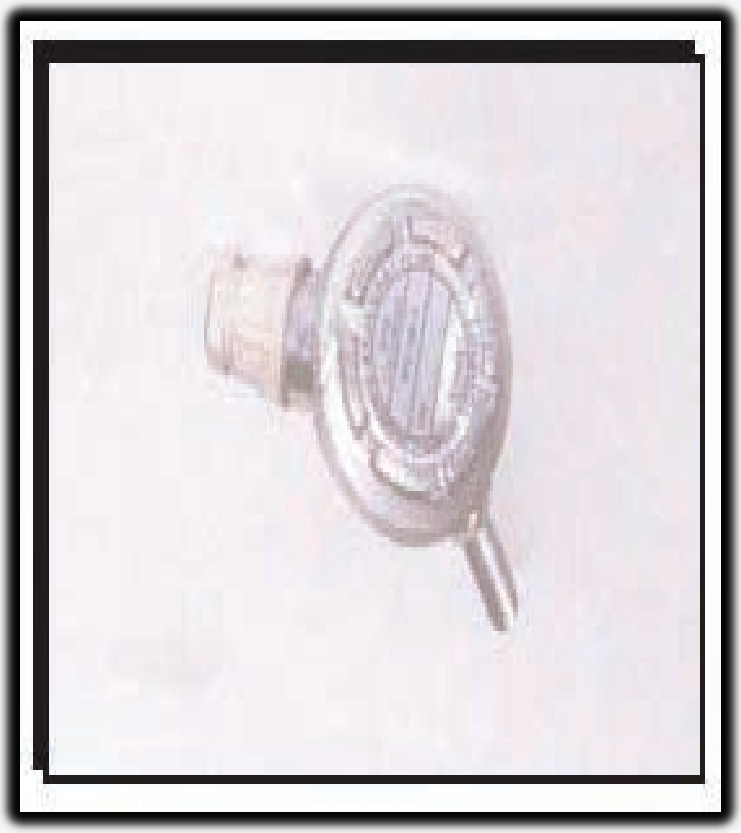



NETZSCH Canada, Incorporated
500 Welham Road
Barrie, Ontario L4N 8Z7
Tel: (705) 797-8426
Fax: (705) 797-8427
Toll: 866 683-7867

www.pumps.netzsch.com

1 DISMANTLING AND ASSEMBLY OF SPECIAL UNITS

WARNING Make sure that the power has been disconnected from the Temperature Controller prior to servicing.

The Stator Protector, which is a device to protect the stator from dry running mainly consists of three parts; the Temperature Controller (processor) with LED display, the Temperature Sensor (PT-100 RTD), and the Thermal Well.

1. The Device functions as follows

In the stator of the pump there is a Temperature Sensor. This sensor continuously measures the stator temperature which ranges from 0°C to 255°C. If the stator temperature rises above the programmed or specified cut-off temperature (about normal pumping temperature), which is set on the controller, there will be an optical or acoustic signal indication on the controller display. The controller can also be set to switch the pump off immediately. If the pump is not constantly monitored, it is recommended that the controller be set to shut the pump off automatically.

2. Technical Data

- Microprocessor based
- Measuring input for PT-100 RTD Temperature Sensor. Material of Construction: Platinum
- LED display, three digits, 13mm height, red indicator
- Switching position indication for internal K1 relay
- Resistance-Temperature Curve:
  European Alpha Curve = 0.00385
  American Alpha Curve = 0.003916
- Supply voltage 110 or 220 VAC or according to specification 24VAC.
- Storage temperature (-20°C to 70°C)
- Operating temperature (0°C to 60°C)
- Relative humidity maximum 75% no dew
- Suitable for panel mounting. Device is rated IP-54
- Output: 1relay 250 VAC 7^{A}, 1 changeover contact
- Installation Dimensions: front panel 72mm x 72mm; 90mm deep including terminals
- Terminals for threads max. 2,5 mm^2.

*Controller should be no more than 75 feet from the temperature sensor.

3. Setting the Cut-Off Temperature

The cut-off temperature value of the controller in normal conditions is easy to adjust. When no key is pressed, the display shows the actual stator temperature.

- When the PGM button is pressed, the cut-off temperature is shown on the display.
- By keeping the PGM button pressed, the cut-off temperature can be raised or lowered to the desired setting by using the UP or DOWN key.
- Releasing the arrow UP or DOWN key loads the adjusted new value into the memory.
- Be careful. Always release the UP or DOWN key before releasing the PGM key to retain this value in memory even if there is a power failure.

1 DISMANTLING AND ASSEMBLY OF SPECIAL UNITS

4. Selecting the Cut-Off Temperature

- Adjust the cut-off temperature up to 150°C at the controller.
- Start the pump.
- When steady pumping is being obtained, a read out of the stator temperature will be displayed on the controller.
- If this temperature is accurate, taking into consideration the product and ambient temperatures, then the cut-off temperature can be set 5°C higher.

5. Switching Functions

With the temperature sensor connected and the operating voltage applied to the controller, the internal relay K1 is energized.

If the cut-off temperature is being exceeded or a short-circuit is occurring, the internal relay K1 drops out.

For terminals, see illustration on the following page.

In the event of sensor failure or short-circuit, the maximum temperature of 255°C flashes on the display.

6. Safety Precautions

For the installation of the Stator Protector, as well as for the separate mini transformer, the latest regulations which apply for electrical installations must be adhered to.
If a temperature sensor is operated within a hazardous area there must be a special enclosure installed between the Temperature Controller and the Temperature Sensor (RTD).

The switching of inductive loads (contacts) may result a false reading from the Controller, or in complete malfunction of the Unit. Here, we recommended the wiring of a Surge Suppressor.

7. Installation of Temperature Sensor and Controller

The stator (3005), as displayed in tables 1,2 and 3, is equipped with a Reducing Fitting (4580) and a Temperature Sensor (RTD), (4180).

The stator is delivered with a built-in Thermal Well (4570). When installed on a NEMO Pump, this Thermal Well should be mounted on its inlet side.

***Controller should be no more than 75 feet from the temperature sensor (RTD).**

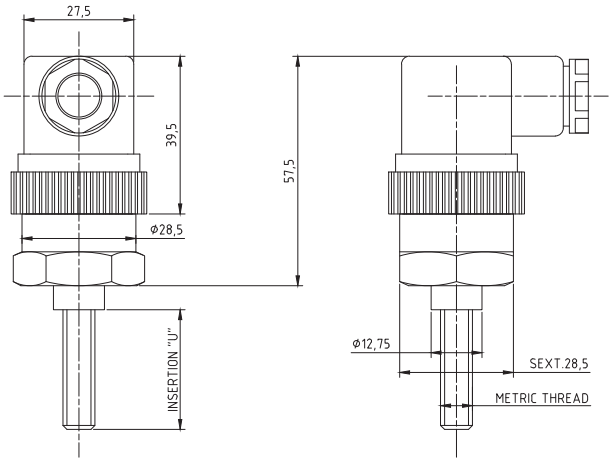

TECHNICAL DATA		
CODE NDB	SCREW THREAD METRIC	INSERTION "U"
NDB4344429	**M6x1,0**	5,0mm
NDB4344430	M6x1,0	5,5mm
NDB4344431	M6x1,0	7,0mm
NDB4344432	M6x1,0	8,0mm
NDB4344433	M8x1,25	9,0mm
NDB4344474	M6x1,0	9,0mm
NDB4344434	M6x1,0	9,5mm
NDB4344435	M8x1,25	10,0mm
NDB4344436	M8x1,25	12,0mm
NDB4344437	M8x1,25	13,0mm
NDB4344438	M8x1,25	15,0mm
NDB4344439	M8x1,25	16,0mm
NDB4344440	M8x1,25	17,0mm
NDB4344441	M8x1,25	21,0mm
NDB4344442	M8x1,25	22,0mm
NDB4344443	M8x1,25	23,0mm
NDB4344444	M8x1,25	25,0mm
NDB4344445	M8x1,25	26,0mm
NDB4344446	M8x1,25	27,0mm
NDB4344447	M8x1,25	30,0mm
NDB4344448	M8x1,25	33,0mm
NDB4344449	M8x1,25	35,0mm
NDB4344450	M8x1,25	36,0mm
NDB4344451	M8x1,25	39,0mm
NDB4344452	M8x1,25	40,0mm
NDB4344453	M8x1,25	43,0mm
NDB4344454	M8x1,25	45,0mm
NDB4344455	M8x1,25	47,0mm
NDB4344456	M8x1,25	48,0mm
NDB4344457	M8x1,25	52,0mm
NDB4344458	M8x1,25	54,0mm
NDB4344459	M8x1,25	55,5mm
NDB4344460	M8x1,25	58,0mm
NDB4344461	M8x1,25	65,0mm
NDB4344462	M8x1,25	66,0mm
NDB4344463	M8x1,25	68,0mm
NDB4344464	M8x1,25	80,0mm
NDB4344465	M8x1,25	102,0mm
NDB4344466	M8x1,25	117,5mm
NDB4346755	M8x1,25	6,0mm
NDB4346756	M8x1,25	10,5mm
NDB4346757	M8x1,25	8,0mm



TECHNICAL SPECIFICATIONS

TERMORESISTANCE

Mounting Type:	Standard
Sensor Element:	PT-100 (Class A)
Working Range:	-50 ... 250 ° C
Diameter of insertion rod:	Threaded according to table beside
Insertion "U":	As shown in the table beside
Rod material:	Gr.316 stainless steel
Electrical connection:	DIN 43650 connector
Electrical Terminal:	3 Wire

REFERENCE DOCUMENTS

GENERAL NOTES

(1) Supplied with Certificate of Conformity

REV.	DESCRIPTION	DATE	EXEC.	VERIFY.	APPROV.

CUSTOMER ORDER:
CUSTOMER:

TITLE:
STP3 PROTECTIVE ASSEMBLY;
DEGREE OF PROTECTION: IP-65;
WIRE: 3 / CONNECTOR: DIN43650

PROJ.	NDB	EXEC.	EVERTON	VERIFY.	ALEXANDRE
APPROV.	GABRIEL	FORMAT	A3	CP.	
DATE	20/11/18	SCALE	N/A	SHEET	1 OF 1

NETZSCH

No. 4651076

A3 420 x 297

OMRON

Temperature Controllers
E5CSV

Simple to Set and Operate 1/16 DIN Size Controllers

- Easy setting using internal DIP and rotary switches
- ON/OFF or PID control (with on-demand auto-tuning) selectable
- Clearly visible digital display with character height of 13.5 mm
- Deviation indicator makes monitoring more effective
- Multiple temperature sensor input (thermocouple/platinum resistance thermometer) models stocked; thermocouple input only and platinum RTD input only models available
- Models with two alarms are ideal for temperature alarm applications
- Setting change protection prohibits tampering
- Sampling rate (500 ms) and selectable control period (2 and 20 s) improves response
- 8-mode alarm output and sensor error detection
- "Input shift" function adjusts display to reflect known sensor offsets



CE cULus LISTED NEW

- °C or °F field selectable
- Black or white cases available to match panel aesthetics
- RoHS compliant
- Water-resistant front panel rated NEMA 4X/IP66
- Compact: measures 48 H x 48 W x 78 D mm
- Accuracy ±0.5% of value

Model Number Structure

■ Model Number Legend

Models with Terminal Blocks

E5CSV-□□□□-□□
1 2 3 4 5 6

1. Output type
- R: Relay
- Q: Voltage for driving SSR

2. Number of alarms
- Blank: No alarm
- 1: 1 alarm
- 2: 2 alarms

3. Input type
- T: Thermocouple/platinum resistance thermometer (multi-input)
- KJ: Thermocouple
- P: Platinum resistance thermometer

4. Power supply voltage
- Blank: 100 to 240 VAC
- D: 24 VAC/VDC

5. Case color / Display scale
- Blank: Black
- W: Light gray
- F: Scale marked in °F (Black case only)

6. Power supply voltage
- AC100-240: 100 to 240 VAC
- AC/DC24: 24 VAC/VDC

Note: A functional explanation is provided here for illustration, but models are not necessarily available for all possible combinations. Please refer to *Ordering Information* when ordering.

Examples
- Voltage control output, without alarm, multi-input, light gray case: 115 VAC: E5CSV-QT-W AC100-240
- Relay control output, one alarm output, multi-input, black case: 24 VDC: E5CSV-R1TD AC/DC24

Ordering Information

■ List of Models

Size	Power supply voltage	Number of alarm points	Control output	TC/Pt multi-input Case color: Black Scale marked in °C	TC input Case color: Light gray Scale marked in °C	Pt input Case color: Light gray Scale marked in °C	TC/Pt multi-input Case color: Black Scale marked in °F
1/16 DIN 48 × 48 × 78 mm (W × H × D)	100 to 240 VAC	0	Relay	E5CSV-RT AC100-240			E5CSV-RT-F AC100-240
			Voltage (for driving SSR)	E5CSV-QT AC100-240			E5CSV-QT-F AC100-240
		1	Relay	E5CSV-R1T AC100-240	E5CSV-R1KJ-W	E5CSV-R1P-W	E5CSV-R1T-F AC100-240
			Voltage (for driving SSR)	E5CSV-Q1T AC100-240	E5CSV-Q1KJ-W	E5CSV-Q1P-W	E5CSV-Q1T-F AC100-240
		2 (See note)	Relay	E5CSV-R2T AC100-240			E5CSV-R2T-F AC100-240
			Voltage (for driving SSR)	E5CSV-Q2T AC100-240			E5CSV-Q2T-F AC100-240
	24 VAC/ VDC	0	Relay	E5CSV-RTD AC/DC24			
			Voltage (for driving SSR)	E5CSV-QTD AC/DC24			
		1	Relay	E5CSV-R1TD AC/DC24			E5CSV-R1TD-F AC/DC24
			Voltage (for driving SSR)	E5CSV-Q1TD AC/DC24			E5CSV-Q1TD-F AC/DC24
		2 (See note)	Relay	E5CSV-R2TD AC/DC24			
			Voltage (for driving SSR)	E5CSV-Q2TD AC/DC24			

Note: Models with two alarm outputs always use the upper limit alarm mode for the alarm 2 output.

■ Accessories (Order Separately)

Protective Cover

Type	Model
Hard Protective Cover	Y92A-48B

Terminal Cover

Model
E53-COV10

Specifications

■ Ratings

Supply voltage		100 to 240 VAC, 50/60 Hz	24 VAC/VDC, 50/60 Hz
Operating voltage range		85% to 110% of rated supply voltage	
Power consumption		5 VA	3 VA/2 W
Sensor input		Thermocouple input type: K, J, L Platinum resistance thermometer input type: Pt100, JPt100 Multi-input (thermocouple/platinum resistance thermometer) type: K, J, L, T, U, N, R, Pt100, JPt100	
Control output	Relay output	SPST-NO, 250 VAC, 3A (resistive load)	
	Voltage output (for driving the SSR)	12 VDC, 21 mA (with short-circuit protection circuit)3	
Control method		ON/OFF or 2-PID (with auto-tuning)	
Alarm output		SPST-NO, 250 VAC, 1A (resistive load)	
Setting method		Digital setting using front panel keys	
Indication method		3.5 digit, 7-segment digital display (character height: 13.5 mm) and deviation indicators	
Other functions		• Setting change prohibit (key protection) • Input shift • Temperature unit change (°C/°F) • Direct/reverse operation • Temperature range, Sensor switching (K/J/L, Pt100/JPt100) • Switching is performed between a thermocouple and platinum resistance thermometer for multi-input models. • Control period switching • 8-mode alarm output • Sensor error detection	
Ambient temperature		–10 to 55°C (with no condensation or icing)	
Ambient humidity		25% to 85%	
Storage temperature		–25 to 65°C (with no condensation or icing)	

■ Characteristics

Setting accuracy	Thermocouple (See note 1.):	(±0.5% of indication value or ±1°C, whichever is greater) ±1 digit max.
Indication accuracy (ambient temperature of 23°C)	Platinum resistance thermometer (See note 2.):	(±0.5% of indication value or ±1°C, whichever is greater) ±1 digit max.
Influence of temperature	R thermocouple inputs:	(±1% of PV or ±10°C, whichever is greater) ±1 digit max.
Influence of voltage	Other thermocouple inputs:	(±1% of PV or ±4°C, whichever is greater) ±1 digit max.
	Platinum resistance thermometer inputs:	(±1% of PV or ±2°C, whichever is greater) ±1 digit max.
Hysteresis (for ON/OFF control)	0.2% FS (0.1% FS for multi-input (thermocouple/platinum resistance thermometer) models)	
Proportional band (P)	1 to 999°C (automatic adjustment using auto-tuning/self-tuning)	
Integral time (I)	1 to 1,999 s (automatic adjustment using auto-tuning/self-tuning	
Derivative time (D)	1 to 1,999 s (automatic adjustment using auto-tuning/self-tuning)	
Alarm output range	Absolute-value alarm: Same as the control range Other: 0% to 100% FS Alarm hysteresis: 0.2°C or °F (fixed)	
Control period	2/20 s	
Sampling period	500 ms	
Insulation resistance	20 MΩ min. (at 500 VDC)	
Dielectric strength	2,000 VAC, 50/60 Hz for 1 min between current-carrying terminals of different polarity	
Vibration resistance — **Malfunction**	10 to 55 Hz, 20 m/s² for 10 min each in X, Y, and Z directions	
Vibration resistance — **Destruction**	10 to 55 Hz, 0.75-mm single amplitude for 2 hr each in X, Y, and Z directions	
Shock resistance — **Malfunction**	100 m/s² min., 3 times each in 6 directions	
Shock resistance — **Destruction**	300 m/s² min., 3 times each in 6 directions	
Life expectancy — **Electrical**	100,000 operations min. (relay output models)	
Weight	Approx. 120 g (Controller only)	
Degree of protection	Front panel: Equivalent to IP66; Rear case: IP20; Terminals: IP00	
Memory protection	EEPROM (non-volatile memory) (number of writes: 1,000,000)	
EMC	EMI Radiated: EN 55011 Group 1 Class A EMI Conducted: EN 55011 Group 1 Class A ESD Immunity: EN 61000-4-2: 4 kV contact discharge (level 2), 8 kV air discharge (level 3) Radiated Electromagnetic Field Immunity: EN 61000-4-3: 10 V/m (80-1000 MHz, 1.4-2.0 GHz amplitude modulated) (level 3), 10 V/m (900 MHz pulse modulated) Conducted Disturbance Immunity: EN 61000-4-6: 3 V (0.15 to 80 MHz) (level 2) Noise Immunity (First Transient Burst Noise): EN 61000-4-4 Burst Immunity: 2 kV power-line (level 3), 1 kV I/O signal-line (level 3) Surge Immunity: EN 61000-4-5: Power line: Normal mode 1 kV; Common mode 2 kV Output line (relay output): Normal mode 1 kV; Common mode 2 kV Voltage Dip/Interrupting Immunity: EN 61000-4-11 0.5 cycle, 100% (rated voltage)	
Approved standards	UL 61010C-1 (listing) CSA C22.2 No.1010-1	
Conformed standards	EN 61326, EN 61010-1, IEC 61010-1 VDE 0106 Part 100 (finger protection), when the terminal cover is mounted.	

Note: 1. The following exceptions apply to thermocouples.
- U, L: ±2°C ±1 digit max.
- R: ±3°C ±1 digit max. at 200°C or less

2. The following exceptions apply to platinum resistance thermometers.
Input set values 0, 1, 2, 3 for E5CSV: 0.5% FS ±1 digit max.
Input set value 1 for E5CSV: 0.5% FS ±1 digit max.

■ Electrical Life Expectancy Curve for Relays (Reference Values)

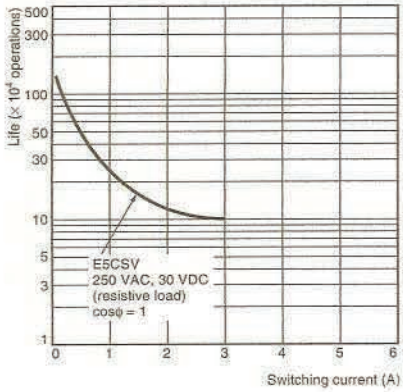

■ Temperature Range

Thermocouple Input Models

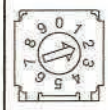

Temperature range (selected using switch)

(Default setting: 2)

Input	K						J/L			
Temperature range	200	300	400	500	600	999	200	300	400	500
Setting number	0	1	2	3	4	5	6	7	8	9
Minimum setting unit	1°C						1°C			

The shaded value indicates the default setting status.

Platinum Resistance Thermometer Input Models

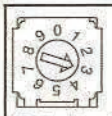

Temperature range (selected using switch)

(Default setting: 3)

Input	JPt100/Pt100									
Temperature range	50 / −50	50.0 / 0.0	80 / −20	99.9 / 0.0	200 / 0	300 / 0	400 / 0	300 / 0	400 / 0	199.9 / 0.0
Setting number	0	1	2	3	4	5	6	7	8	9
Minimum setting unit	1°C	0.1°C	1°C	0.1°C	1°C					0.1°C

The shaded value indicates the default setting status.

Multi-input (Thermocouple/Platinum Resistance Thermometer) Models

• Using Thermocouple Sensors, Control Mode Switch 5: OFF



Temperature range (selected using switch)

(Default setting: 0)

Input	K		J		L	T		U	N	R
Temperature range	1,300 / −99	199.9 / 0.0	850 / −99	199.9 / 0.0	850 / −99	400 / −99	199.9 / 0.0	400 / −99	1,300 / −99	1,700 / 0
Setting number	0	1	2	3	4	5	6	7	8	9
Minimum setting unit	1°C	0.1°C	1°C	0.1°C	1°C		0.1°C	1°C		

The shaded value indicates the default setting status.

• Using Platinum Resistance Thermometers, Control Mode Switch 5: ON



Temperature range (selected using switch)

(Default setting: 0)

Input	Pt100					JPt100				
Temperature range	850 / −99	199.9 / 0.0	99 / −99	200 / 0	400 / 0	500 / −99	199.9 / 0.0	99 / −99	200 / 0	400 / 0
Setting number	0	1	2	3	4	5	6	7	8	9
Minimum setting unit	1°C	0.1°C	1°C				0.1°C	1°C		

The shaded value indicates the default setting status.

External Connection Diagram

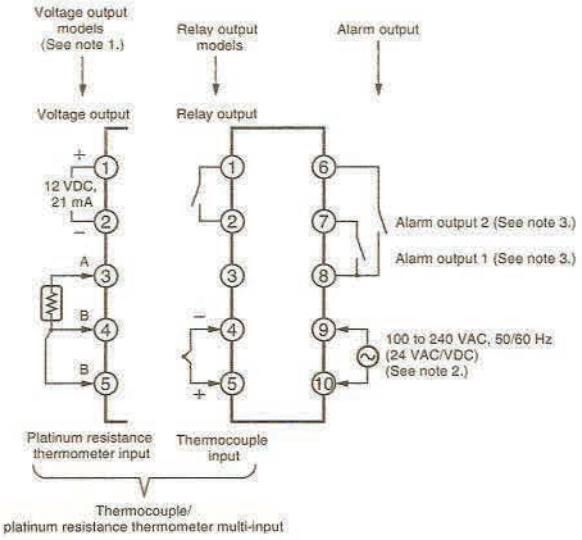

Note: 1. The voltage output (12 VDC, 21 mA) is not electrically isolated from the internal circuits. When using a grounding thermocouple, do not connect output terminals 1 or 2 to ground. Otherwise, unwanted current paths will cause measurement errors.

2. Models with 100 to 240 VAC and 24 VAC/VDC are separate. Models using 24 VDC have no polarity.

3. The number of alarm outputs depends on the model.

Nomenclature

E5CSV Models with Terminal Blocks



Operation

E5CSV

Deviation indicators

The △ indicator lights when the PV is greater than the SP and the ▽ indicator lights when the PV is less than the SP. The □ indicator (green) lights when the deviation is less than 1% FS (0.25% FS for multi-input models). These indicators flash during ST (self-tuning)/AT (auto-tuning).

Mode indicators

The SP indicator lights when the setting temperature is being displayed. The ALM indicator lights when the alarm value 1 is being displayed and flashes when the alarm value 2 is being displayed.

Mode Key

When the power is turned ON, normally the display will use the display items in the following order each time the Mode Key is pressed.

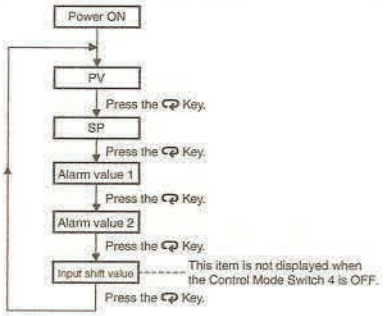



Lock Release Key

When the protect switch is ON, the set value can be changed by pressing the Up and Down Keys while holding down the Lock Release Key.

PV, SP, Alarm Value, Input Shift Display

The display switches each time the Key is pressed.

Output indicator

Lights when the control output is ON.

Alarm indicators

ALM1 (Alarm 1): Lights when the alarm 1 output is ON.
ALM2 (Alarm 2): Lights when the alarm 2 output is ON.

Up Key

Pressing the Up Key increases the SP/alarm value display. Keeping the Up Key pressed continues to increase the display value. When the internal protect switch is ON, press the Up Key while holding down the Lock Release Key.

Down Key

Pressing the Down Key decreases the SP/alarm value display. Keeping the Down Key pressed continues to decrease the display value. When the internal protect switch is ON, press the Down Key while holding down the Lock Release Key.

Settings before Turning ON the Power

E5CSV

Remove the E5CSV from the case to make the settings.

1. Insert the tool into the two tool insertion holes (one on the top and one on the bottom) and release the hooks.

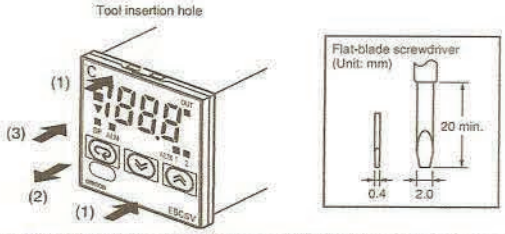

2. Insert the tool in the gap between the front panel and rear case, and pull out the front panel slightly. Grip the front panel and pull out fully. Be sure not to impose excessive force on the panel.

3. When inserting the E5CSV, check to make sure that the sealing rubber is in place and push the E5CSV toward the rear case until it snaps into position. While pushing the E5CSV into place, push down on the hooks on the top and bottom surfaces of the rear case so that the hooks are securely locked in place. Make sure that electronic components do not come into contact with the case.

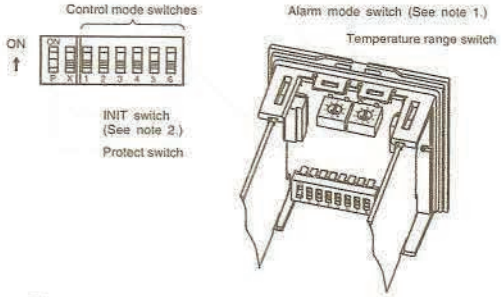

Note: 1. The alarm mode switch is not provided on models without alarms. Alarm 2 is always set to the upper limit in models with two alarms. A setting switch is not provided for alarm 2.
2. The INIT switch is always OFF during normal operation.

1. Sensor Type Specification

Select the number on the temperature range switch to change the temperature range.

Thermocouple (The default is 2.)

Input	K						J/L			
SP range	200	300	400	500	600	999	200	300	400	500
	0	0	0	0	0	0	0	0	0	0
Setting number	0	1	2	3	4	5	6	7	8	9

- The control range is -10% to +10% FS for each temperature range.

Note: The input indication range is the range that can be displayed for the control range (–99 to 1999). If the input is within the control range but exceeds the display range (–99 to 1999), values below –99 will be displayed as "ccc" and values above 1,999 will be displayed as "ddd."

Platinum Resistance Thermometer

(The default is 3.)

Input	JPt100/Pt100									
SP range	50	50.0	80	99.9	200	300	400	300	400	199.9
	–50	0.0	–20	0.0	0	0	0	0	0	0.0
Setting number	0	1	2	3	4	5	6	7	8	9

- The control range is -10% to +10% FS for each temperature range.

Note: 1. The input indication range is the range that can be displayed for the control range (–99 to 1999). If the input is within the control range but exceeds the display range (–99 to 1999), values below –99 will be displayed as "ccc" and values above 1,999 will be displayed as "ddd."
2. If the unit is changed to 1 degree when the SP and alarm value for the temperature range are displayed in 0.1-units from 0.0 to 199.9 or 0.0 to 99.9, the values will be multiplied by 10 (e.g., 0.5 becomes 5). If the unit is changed in the reverse direction, the values will be divided by 10. After changing the range, set the SP and alarm value again.
3. The temperature range for setting numbers 5 and 6 are the same as for 7 and 8, respectively.

Multi-input (Thermocouple/Platinum Resistance Thermometer) Models

- Using Thermocouple Sensors, Control Mode Switch 5: OFF

Input	K		J		L	T		U	N	R
SP range	1,300	199.9	850	199.9	850	400	199.9	400	1,300	1,700
	–99	0.0	–99	0.0	–99	–99	0.0	–99	–99	0
Setting number	0	1	2	3	4	5	6	7	8	9

- The control range is -20°C to +20°C of the input temperature range.

Note: 1. The input indication range is the range that can be displayed for the control range (–99 to 1999). If the input is within the control range but exceeds the display range (–99 to 1999), values below –99 will be displayed as "ccc" and values above 1,999 will be displayed as "ddd."
2. If unit is changed to 1 degree when the SP and alarm value for the temperature range are displayed in 0.1-units from 0.0 to 199.9 or 0.0 to 99.9, the values will be multiplied by 10 (e.g., 0.5 becomes 5). If the unit is changed in the reverse direction, the values will be divided by 10. After changing the range, set the SP and alarm value again.

- Using Platinum Resistance Thermometers, Control Mode Switch 5: ON

Input	Pt100					JPt100				
SP range	850	199.9	99	200	400	500	199.9	99	200	400
	–99	0.0	–99	0	0	–99	0.0	–99	0	0
Setting number	0	1	2	3	4	5	6	7	8	9

- The control range is -20°C to +20°C of the input temperature range.

Note: 1. The input indication range is the range that can be displayed for the control range (–99 to 1999). If the input is within the control range but exceeds the display range (–99 to 1999), values below –99 will be displayed as "ccc" and values above 1,999 will be displayed as "ddd."
2. If unit is changed to 1 degree when the SP and alarm value for the temperature range are displayed in 0.1-units from 0.0 to 199.9 or 0.0 to 99.9, the values will be multiplied by 10 (e.g., 0.5 becomes 5). If the unit is changed in the reverse direction, the values will be divided by 10. After changing the range, set the SP and alarm value again.

Mode Key Display Order

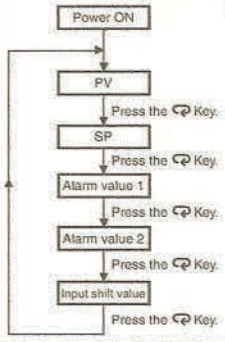

- If the SP falls outside the temperature range when the temperature range is changed, the SP will be displayed first. The SP will be changed automatically either to the minimum value or the maximum value, whichever is nearest.
- If the alarm value falls outside the temperature range when the temperature range is changed, the alarm value will be displayed first. The alarm value will be changed automatically to the maximum value in the new temperature range.

2. Operation Settings

Use the control mode switches () to change the control mode. (All switches are OFF for the default settings.)



Function selection			1	2	3	4	5	6
ON/OFF PID	PID control		ON					
	ON/OFF control		OFF					
Control period	2 s			ON				
	20 s			OFF				
Direct/ reverse operation	Direct operation (cooling)				ON			
	Reverse operation (heating)				OFF			
Input shift display	Enabled					ON		
	Disabled					OFF		
Temperature Sensor selection	Thermocouple	K, L					OFF	
		K, J					ON	
	Platinum resistance thermometer	Pt100					OFF	
		JPt100					ON	
	Multi-input (thermocouple/ platinum resistance thermometer)	Platinum resistance thermometer input					OFF	
		Thermocouple input					ON	
Temperature unit	°F							ON
	°C							OFF

Note: The previous name Pt100 has been changed to JPt100 in accordance with revisions to JIS. The previous name J-DIN has been changed to L in accordance with revisions to DIN standards.

3. Alarm Modes

Select the number of the alarm mode switch  when changing the alarm mode. (The default is 2).

Set value	Alarm type	Alarm output operation
0, 9	Alarm function OFF	OFF
1	Upper- and lower-limit	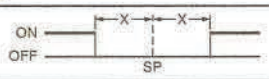
2	Upper-limit	
3	Lower-limit	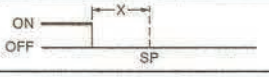
4	Upper- and lower-limit range	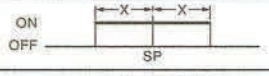
5	Upper- and lower-limit with standby sequence (See note 2.)	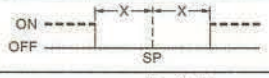
6	Upper-limit with standby sequence (See note 2.)	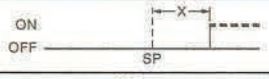
7	Lower-limit with standby sequence (See note 2.)	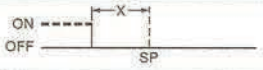
8	Absolute-value upper-limit	

Note: 1. No alarm. The alarm value (alarm operation display) will not be displayed when the setting is 0 or 9 even if the selection key is pressed.
Alarm Setting Range
X: 0 to FS (full scale); Y: Within temperature range
The value of X is the deviation setting for the SP (set point).

2. Standby Sequence Function (The standby sequence operates when the power is turned ON.)

Rising Temperature

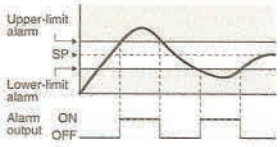

Dropping Temperature

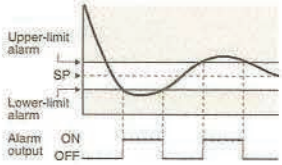

Note: Turn OFF the power before changing the DIP switch settings on the E5CSV. Each of the switch settings will be enabled after the power is turned ON.

For details on the position of the temperature range switch, control mode switches, and alarm mode switch, refer to page 6.

4. Using the Control Mode Switches

(1) Using ON/OFF Control and PID Control

ON/OFF Control

The control mode is set to ON/OFF control as the default setting.

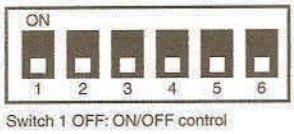

Switch 1 OFF: ON/OFF control

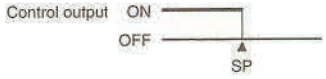

To perform cooling control of freezers, etc., turn ON switch 3.



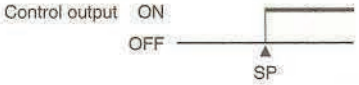

PID Control

Turn ON switch 1 to use PID control.

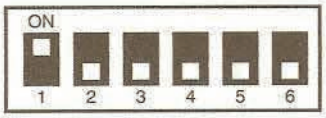

Switch 1 ON: PID control

1. Set the control period.

Performing Control via Relay Output, External Relay, or Conductor

Switch 2: OFF (control period: 20 s)



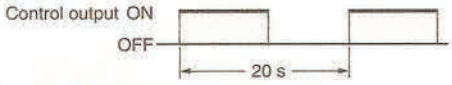

Quick Control Response Using an SSR

Switch 2: ON (control period: 2 s)



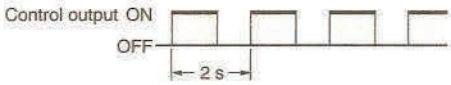

2. Set direct/reverse operation for the output.

Performing Heating Control for Heaters

Switch 3: OFF





Performing Cooling Control for Freezers

Switch 3: ON



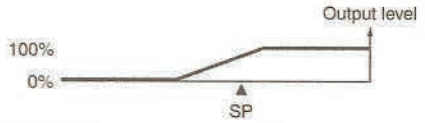

ST (Self-tuning) Features

ST (self-tuning) is a function that finds PID constants by using step response tuning (SRT) when Controller operation begins or when the set point is changed. Once the PID constants have been calculated, ST is not executed when the next control operation is started as long as the set point remains unchanged. When the ST function is in operation, be sure to turn ON the power supply of the load connected to the control output simultaneously with or before starting Controller operation.

Executing AT (Auto-tuning)

AT (auto-tuning) is executed by pressing the Up and Down Keys for at least 2 s while the PV is displayed. The deviation indicators flash during auto-tuning (AT) execution. AT will be cancelled by performing the same operation that AT is executing during AT operation. Flashing stops when AT is completed.

AT execution

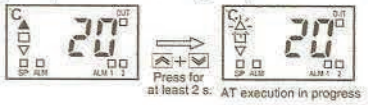

AT cancelled

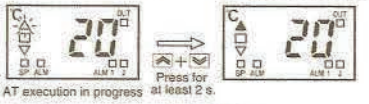

Note: One of the deviation indicators (▲■▼) will flash.

(2) Using the E5CSV in Devices for Fahrenheit-scale Users

(Displaying in °F)

Turn ON switch 6 to display temperatures in °F.

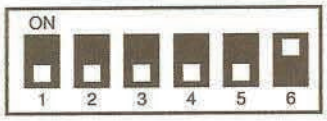

Temperature Range for °F

The temperature is set to °F using the same temperature range switch as °C.

Thermocouple

Setting	°F	
0	K	0 to 200
1		0 to 300
2		0 to 400
3		0 to 500
4		0 to 600
5		0 to 999
6	J/L	0 to 999
7		0 to 300
8		0 to 400
9		0 to 500

Platinum Resistance Thermometer

Setting	°F	
0	JPt100 or Pt100	-50 to 50
1		0.0 to 50.0
2		-20 to 80
3		0.0 to 99.9
4		0 to 200
5		0 to 300
6		0 to 400
7		0 to 600
8		0 to 800
9		0.0 to 199.9

Multi-input (Thermocouple/ Platinum Resistance Thermometer)

Control mode switch 5: OFF

Setting	°F	
0	K	-99 to 1999
1		0.0 to 199.9
2	J	-99 to 1500
3		0.0 to 199.9
4	L	-99 to 1500
5	T	-99 to 700
6		0.0 to 199.9
7	U	-99 to 700
8	N	-99 to 1999
9	R	0 to 1999

Multi-input (Thermocouple/ Platinum Resistance Thermometer)

Control mode switch 5: ON

Setting	°F	
0	Pt100	-99 to 1500
1		0.0 to 199.9
2		-99 to 99
3		0 to 200
4		0 to 400
5	JPt100	-99 to 900
6		0.0 to 199.9
7		-99 to 99
8		0 to 200
9		0 to 400

Note: The control range for a thermocouple input or platinum resistance thermometer input is -10% to +10% FS for each temperature range. The control range for multi-input (thermocouple/platinum resistance thermometer) models is -40 to +40° F of each temperature range.

Using K, L/Pt100 Thermometers

Turn ON switch 5 when using K, L/Pt100 Thermometers.

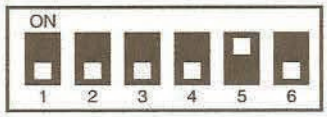

Note: The previous name J-DIN has been changed to L in accordance with revisions to DIN standards.

---

(3) Setting Input Shift

Turn ON switch 4, and after turning ON the power, press the Mode Key until *H0* (indicates input shift of 0) is displayed. Press the Up and Down Keys to set the shift value.

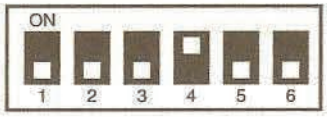

Shift Example

Input shift display	Measured temperature	Temperature display
H0 (no shift)	100°C	100°C
H9 (+9°C shift)	100°C	109°C
L9 (-9°C shift)	100°C	91°C

Note: When control mode switch 4 is turned OFF (no input shift display), the input shift is not displayed but the shift value is enabled. To disable input shift, set the input shift value to *H0*. The shift range depends on the setting unit.

Setting unit	1°C	0.1°C
Compensation range	-99 to +99°C	-9.9 to +9.9°C
Input shift display	L99 to H99	L9.9 to H9.9

5. Protect Switch

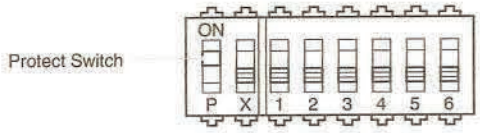

When the protect switch is ON, Up Key and Down Key operations are prohibited to prevent setting mistakes.

Installation

- All models in the E5CSV Series conform to DIN 43700 standards.
- The recommended panel thickness is 1 to 4 mm.
- Be sure to mount the E5CSV horizontally.

Mounting the E5CSV

1. For waterproof mounting, waterproof packing must be installed on the Controller. Waterproofing is not possible when group mounting several Controllers.
2. Insert the E5CSV into the mounting hole in the panel.
3. Push the adapter from the terminals up to the panel, and temporarily fasten the E5CSV.
4. Tighten the two fastening screws on the adapter. Alternately tighten the two screws little by little to maintain a balance. Tighten the screws to a torque of 0.29 to 0.39 N·m.

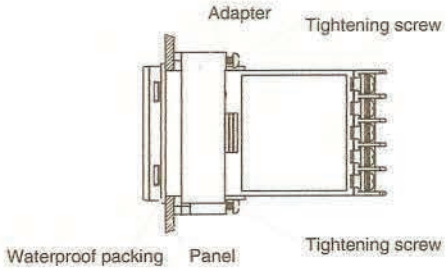

Error Displays and Causes

In addition to the alarm indicator, errors notification is provided on the display. Be sure to remove the cause of the error promptly.

Display status	Cause	Control output
PV displayed as FFF	The process value is higher than the control temperature range (overflow).	Heating control (reverse operation): OFF Cooling control (direct operation): ON
PV displayed as ---	The process value is lower than the control temperature range (underflow).	Heating control (reverse operation): ON Cooling control (direct operation): OFF
FFF flashing	(1)Thermocouple models and platinum resistance thermometer models: The process value is higher than the overflow temperature, or a Sensor error has occurred. (2)Multi-input (Thermocouple/platinum resistance thermometer) models: The process value is higher than the control temperature range or a Sensor error has occurred.	OFF
--- flashing	(1)Thermocouple and platinum resistance thermometer input: The process value is lower than the underflow temperature, or a Sensor error has occurred. (2)Thermocouples: The polarity is reversed. (3)Multi-input (Thermocouple/platinum resistance thermometer) models: The process value is lower than the control temperature range or a Sensor error has occurred.	OFF
E11 is displayed	A memory error (E11) has occurred. Turn the power ON again. If the display remains the same, the Controller must be repaired.	The control outputs and alarm outputs turn OFF.

Note: In models with an alarm, FFF appears or flashes on the display to indicate that the temperature has exceeded the maximum display temperature and the output is set according to the alarm mode. In the same way, --- appears or flashes on the display to indicate that the temperature has exceeded the minimum display temperature and the output is set according to the alarm mode.

Sensor Error Displays and Causes

■ Thermocouple

Status		Display	Control output
Burnout	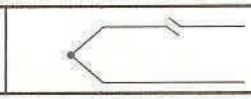	FFF flashing	OFF

Note: The room temperature is displayed if an input short-circuit occurs.

■ Platinum Resistance Thermometer

Status		Display	Control output
Burnout	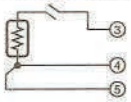	FFF flashing	OFF
	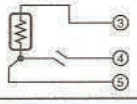	--- flashing	OFF
	2 or 3 wires disconnected	FFF flashing	OFF
Short-circuit	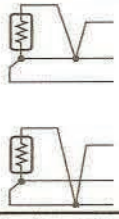	--- flashing	OFF

Note: The resistance value for platinum resistance thermometers is 100 Ω at 0°C and 140 Ω at 100°C.

Comparison with E5CS-X

■ Model Number Legend

Previous model

E5CS-□□□X
1 2 3

	Classification	Symbol	Meaning
1	Control output	R	Relay: SPDT (single-pole, double-throw)
		Q	Voltage
2	Alarm output	Blank	No alarms
		1	One alarm
3	Input type	KJ	Thermocouple (K, J)
		P	Platinum resistance thermometer (Pt100, JPt100)
	Terminal appearance	X	Model with terminal block

Main Differences

Terminal block models use the model number E5CSV.
The suffix "D" is added to models with a supply voltage of 24 VAC/VDC.
The suffix "W" is added to models with a light gray case color.

E5CSV

E5CSV-□□□□-□
1 2 3 4 5

	Classification	Symbol	Meaning
1	Control output	R	Relay: SPST-NO (single-pole, single-throw, normally open)
		Q	Voltage
2	Alarm output	Blank	No alarms
		1	One alarm
		2	Two alarms
3	Input type	T	Multi-input (thermocouple/platinum resistance thermometer) models
		KJ	Thermocouple (K, J)
		P	Platinum resistance thermometer (Pt100, JPt100)
4	Supply specifications	Blank	100 to 240 VAC
		D	24 VAC/VDC
5	Case color	Blank	Black
		W	Light gray
		F	Scale marked in F° (Black case only)

■ Display

Previous model

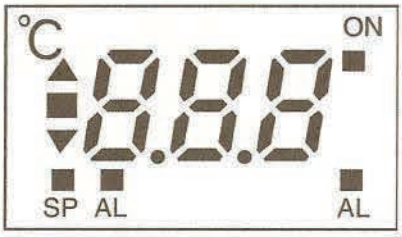

E5CSV

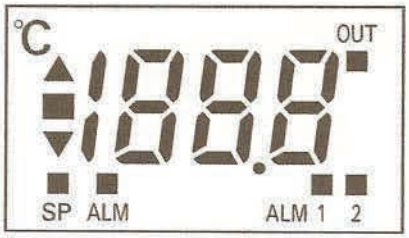

The display digits can be increased up to 1,999.
The ALM2 display has been added.
The display "ON" has changed to "OUT" and "AL" has changed to "ALM."

■ Functions

The control outputs for relay outputs have been changed from SPDT (single-pole, double-throw) to SPST-NO (single-pole, single-throw, normally open) contacts.
The control method has been changed to 2-PID control.
An auto-tuning (AT) function has been added.
The deviation display flashes during self-tuning (ST) and auto-tuning (AT).
The control calculation period has been improved from 2 s to 0.5 s.

■ External Dimensions

The depth has been shortened from 100 mm to 76 mm.

Comparison with E5CS-X

■ Model Number Legend

Previous model

E5CS-□□□X
1 2 3

	Classification	Symbol	Meaning
1	Control output	R Q	Relay: SPDT (single-pole, double-throw) Voltage
2	Alarm output	Blank 1	No alarms One alarm
3	Input type	KJ P	Thermocouple (K, J) Platinum resistance thermometer (Pt100, JPt100)
	Terminal appearance	X	Model with terminal block

Main Differences

Terminal block models use the model number E5CSV.
The suffix "D" is added to models with a supply voltage of 24 VAC/VDC.
The suffix "W" is added to models with a light gray case color.

E5CSV

E5CSV-□□□□-□
1 2 3 4 5

	Classification	Symbol	Meaning
1	Control output	R Q	Relay: SPST-NO (single-pole, single-throw, normally open) Voltage
2	Alarm output	Blank 1 2	No alarms One alarm Two alarms
3	Input type	T KJ P	Multi-input (thermocouple/platinum resistance thermometer) models Thermocouple (K, J) Platinum resistance thermometer (Pt100, JPt100)
4	Supply specifications	Blank D	100 to 240 VAC 24 VAC/VDC
5	Case color	Blank W F	Black Light gray Scale marked in F° (Black case only)

■ Terminal Arrangement

• The terminal arrangement has changed from a horizontal to vertical configuration.

Previous model	E5CSV
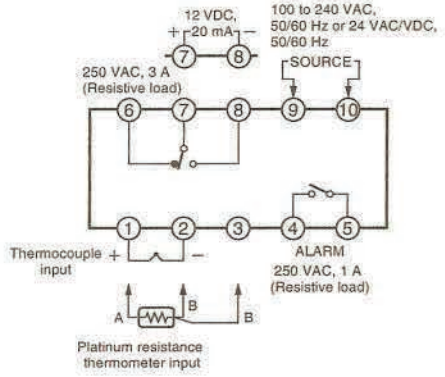	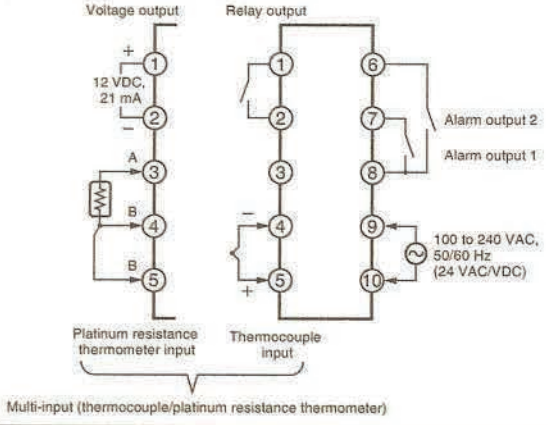

■ DIP Switch and Rotary Switch Setting Methods

No change from previous models.

Dimensions

Note: All units are in millimeters unless otherwise indicated.

■ Controller

E5CSV



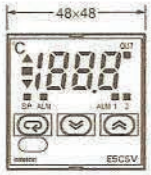

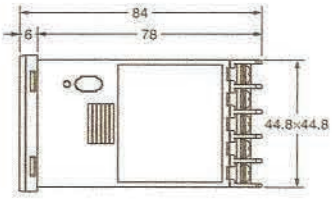

Note: Terminals cannot be removed.

Panel Cutout Dimensions

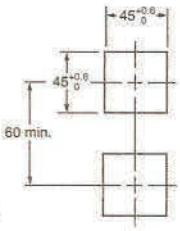

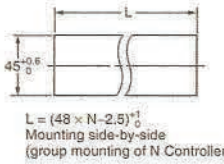

L = (48 × N−2.5) +1 0
Mounting side-by-side
(group mounting of N Controllers)

E5CSV + Adapter for Flush Mounting (Provided)

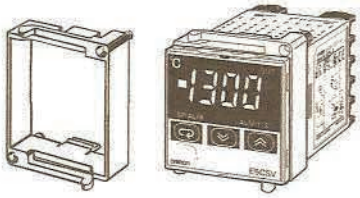

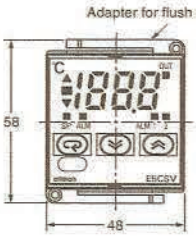

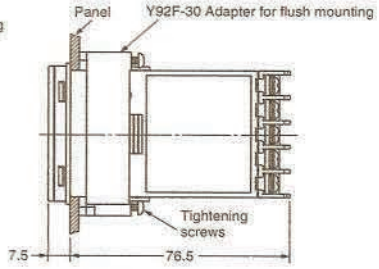

Note: 1. The recommended panel thickness is 1 to 4 mm.
2. Group mounting is possible in one direction only.

Hard Protective Cover

The Y92A-48B Protective Cover (hard type) is available for the following applications.

- To protect the set from dust and dirt.
- To prevent the panel from being accidentally touched causing displacement of set values.
- To provide effective protection against water droplets.



Terminal Cover

E53-COV10

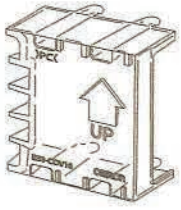

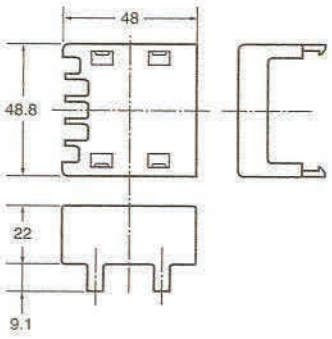

Precautions

⚠ Caution

Do not touch the terminals while power is being supplied. Doing so may occasionally result in minor injury due to electric shock.



Do not allow pieces of metal, wire clippings, or fine metallic shavings or filings from installation to enter the product. Doing so may occasionally result in electric shock, fire, or malfunction.



Do not use the product where subject to flammable or explosive gas. Otherwise, minor injury from explosion may occasionally occur.



Never disassemble, modify, or repair the product or touch any of the internal parts. Minor electric shock, fire, or malfunction may occasionally occur.



CAUTION - Risk of Fire and Electric Shock

a) This product is UL listed as Open Type Process Control Equipment. It must be mounted in an enclosure that does not allow fire to escape externally.

b) More than one disconnect switch may be required to de-energize the equipment before servicing the product.

c) Signal inputs are SELV, limited energy. (See note 1.)

d) Caution: To reduce the risk of fire or electric shock, do not interconnect the outputs of different Class 2 circuits. (See note 2.)



If the output relays are used past their life expectancy, contact fusing or burning may occasionally occur. Always consider the application conditions and use the output relays within their rated load and electrical life expectancy. The life expectancy of output relays varies considerably with the output load and switching conditions.



Loose screws may occasionally result in fire.
Tighten terminal screws to the specified torque of 0.74 to 0.90 N·m.



Unexpected operation may result in equipment damage or accidents if the settings are not appropriate for the controlled system. Set the Temperature Controller as follows:

- Set the parameters of the Temperature Controller so that they are appropriate for the controlled system.
- Turn the power supply to the Temperature Controller OFF before changing any switch setting. Switch settings are read only when the power supply is turned ON.
- Make sure that the INIT switch in the control mode switches is turned OFF before operating the Temperature Controller.



A malfunction in the Temperature Controller may occasionally make control operations impossible or prevent alarm outputs, resulting in property damage. To maintain safety in the event of malfunction of the Temperature Controller, take appropriate safety measures, such as installing a monitoring device on a separate line.



Faulty terminal contact or decreased waterproofing capability may result in a fire or equipment malfunction. When inserting the Temperature Controller into the rear case after setting the switches, check the watertight packing and make sure that the top and bottom hooks are locked securely in place.



Note: 1. A SELV circuit is one separated from the power supply with double insulation or reinforced insulation, that does not exceed 30 V r.m.s. and 42.4 V peak or 60 VDC.

2. A class 2 power supply is one tested and certified by UL as having the current and voltage of the secondary output restricted to specific levels.

■ Precautions for Safe Use

Be sure to observe the following precautions to prevent operation failure, malfunction, or adverse affects on the performance and functions of the product. Not doing so may occasionally result in unexpected events.

1. The product is designed for indoor use only. Do not use the product outdoors or in any of the following locations.
   - Places directly subject to heat radiated from heating equipment.
   - Places subject to splashing liquid or oil atmosphere.
   - Places subject to direct sunlight.
   - Places subject to dust or corrosive gas (in particular, sulfide gas and ammonia gas).
   - Places subject to intense temperature change.
   - Places subject to icing and condensation.
   - Places subject to vibration and large shocks.
2. Use and store the product within the rated temperature and humidity ranges.
   Group-mounting two or more Temperature Controllers, or mounting Temperature Controllers above each other may cause heat to build up inside the Temperature Controllers, which will shorten their service life. In such a case, use forced cooling by fans or other means of air ventilation to cool down the Temperature Controllers.
3. To allow heat to escape, do not block the area around the product. Do not block the ventilation holes on the product.
4. Use the specified size (M3.5, width of 7.2 mm or less) crimped terminals for wiring. To connect bare wires to the terminal block, use copper braided or solid wires with a gage of AWG24 to AWG18 (equal to a cross-sectional area of 0.205 to 0.832 mm^2). (The stripping length is 5 to 6 mm.) Up to two wires of the same size and type, or two crimp terminals can be inserted into a single terminal.
5. Be sure to wire properly with correct polarity of terminals. Do not wire any of the I/O terminals incorrectly.
6. Do not wire the terminals that are not used.
7. The voltage output (control output) is not electrically isolated from the internal circuits. When using a grounded temperature sensor, do not connect any of the control output terminals to ground. Otherwise unwanted current paths will cause measurement errors.
8. To avoid inductive noise, keep the wiring for the Temperature Controller's terminal block away from power cables carrying high voltages or large currents. Also, do not wire power lines together with or parallel to Temperature Controller wiring. Using shielded cables and using separate conduits or ducts is recommended.
   Attach a surge suppressor or noise filter to peripheral devices that generate noise (in particular, motors, transformers, solenoids, magnetic coils or other equipment that have an inductance component).
   When a noise filter is used at the power supply, first check the voltage or current, and attach the noise filter as close as possible to the temperature controller.
   Allow as much space as possible between the Temperature Controller and devices that generate powerful high frequencies (high-frequency welders, high-frequency sewing machines, etc.) or surge.

9. Use the product within the rated load and power supply.
10. Use a switch, relay, or other contact so that the power supply voltage reaches the rated voltage within 2 seconds. If the applied voltage is increased gradually, the power supply may not be reset or malfunctions may occur.
11. When using PID operation (self-tuning), turn ON the power supply to the load (e.g., heater) at the same time or before turning the power supply to the Temperature Controller ON. If power is turned ON for the Temperature Controller before turning ON power supply to the load, self-tuning will not be performed properly and optimum control will not be achieved.
12. Design the system (e.g., control panel) to allow for the 2 seconds of delay required for the Temperature Controller's output to stabilize after the power is turned ON.
13. A switch or circuit breaker should be provided close to this unit. The switch or circuit breaker should be within easy reach of the operator, and must be marked as a disconnecting means for this unit.
14. Approximately 30 minutes is required for the correct temperature to be displayed after turning the power supply to the Temperature Controller ON. Turn the power supply ON at least 30 minutes prior to starting control operations.
15. Be sure that the platinum resistance thermometer type and the input type set on the Temperature Controller are the same.
16. When extending the thermocouple lead wires, always use compensating conductors suitable for the type of thermocouple. Do not extend the lead wires on a platinum resistance thermometer. Use only low-resistance wire (5 Ω max. per line) for lead wires and make sure that the resistance is the same for all three wires.
17. When drawing out the Temperature Controller from the case, do not apply force that would deform or alter the Temperature Controller.
18. When drawing out the Temperature Controller from the case to replace the Temperature Controller, check the status of the terminals. If corroded terminals are used, contact faults with the terminals may cause the temperature inside the Temperature Controller to increase, possibly resulting in fire. If the terminals are corroded, replace the rear case as well.
19. When drawing out the Temperature Controller from the case, turn the power supply OFF first, and absolutely do not touch the terminals or electronic components or apply shock to them. When inserting the Temperature Controller, do not allow the electronic components to come into contact with the case.
20. Static electricity may damage internal components. Always touch grounded metal to discharge any static electricity before handling the Temperature Controller. When drawing out the Temperature Controller from the case, do not touch the electronic components or patterns on the board with your hand. Hold the Temperature Controller by the edge of the front panel when handling it.
21. Do not use paint thinner or similar chemical to clean with. Use standard grade alcohol.
22. Use tools when separating parts for disposal. Contact with the sharp internal parts may cause injury.

■ Precautions for Correct Use

Service Life

Use the Temperature Controller within the following temperature and humidity ranges:

Temperature: -10 to 55°C (with no icing or condensation)
Humidity: 25% to 85%

If the Controller is installed inside a control board, the ambient temperature must be kept to under 55°C, including the temperature around the Controller.

The service life of electronic devices like Temperature Controllers is determined not only by the number of times the relay is switched but also by the service life of internal electronic components. Component service life is affected by the ambient temperature: the higher the temperature, the shorter the service life and, the lower the temperature, the longer the service life. Therefore, the service life can be extended by lowering the temperature of the Temperature Controller.

When two or more Temperature Controllers are mounted horizontally close to each other or vertically next to one another, the internal temperature will increase due to heat radiated by the Temperature Controllers and the service life will decrease. In such a case, use forced cooling by fans or other means of air ventilation to cool down the Temperature Controllers. When providing forced cooling, however, be careful not to cool down the terminals sections alone to avoid measurement errors.

Measurement Accuracy

When extending or connecting the thermocouple lead wire, be sure to use compensating wires that match the thermocouple type. Do not extend the lead wire of the platinum resistance thermometer. If the lead wire of the platinum resistance thermometer must be extended, be sure to use wires that have low resistance and keep the resistance of the three lead wires the same.

Mount the Temperature Controller so that it is horizontally level.

If the measurement accuracy is low, check whether the input shift has been set correctly.

Waterproofing

The degree of protection is as shown below. Sections without any specification on their degree of protection or those with IP□0 are not waterproof.

Front panel: IP66, rear case: IP20, terminals: IP00

of use. Buyer shall be solely responsible for determining appropriateness of the particular Product with respect to Buyer's application, product or system. Buyer shall take application responsibility in all cases but the following is a non-exhaustive list of applications for which particular attention must be given:
(i) Outdoor use, uses involving potential chemical contamination or electrical interference, or conditions or uses not described in this document.
(ii) Use in consumer products or any use in significant quantities.
(iii) Energy control systems, combustion systems, railroad systems, aviation systems, medical equipment, amusement machines, vehicles, safety equipment, and installations subject to separate industry or government regulations.
(iv) Systems, machines and equipment that could present a risk to life or property. Please know and observe all prohibitions of use applicable to this Product.
NEVER USE THE PRODUCT FOR AN APPLICATION INVOLVING SERIOUS RISK TO LIFE OR PROPERTY OR IN LARGE QUANTITIES WITHOUT ENSURING THAT THE SYSTEM AS A WHOLE HAS BEEN DESIGNED TO

ity and does not constitute a warranty. It may represent the result of Omron's test conditions, and the user must correlate it to actual application requirements. Actual performance is subject to the Omron's Warranty and Limitations of Liability.

4. Change in Specifications. Product specifications and accessories may be changed at any time based on improvements and other reasons. It is our practice to change part numbers when published ratings or features are changed, or when significant construction changes are made. However, some specifications of the Product may be changed without any notice. When in doubt, special part numbers may be assigned to fix or establish key specifications for your application. Please consult with your Omron's representative at any time to confirm actual specifications of purchased Product.
5. Errors and Omissions. Information presented by Omron Companies has been checked and is believed to be accurate; however, no responsibility is assumed for clerical, typographical or proofreading errors or omissions.

BFP POLYMER DOSING PUMPS P04-970, P04-980
NM021BY01L06B PUMP

TECHNICAL SPECIFICATIONS

NETZSCH Canada, Inc. 500 Welham Road, Barrie, On., L4N 8Z7
Ph: 705-797-8426 Fax: 705-797-8427 Toll Free: 1-866-683-7867

Pump Quotation - Technical

Offer: N180717ST-01(REV02) (Item #50)

NEMO® pump with base plate and drive: NM021BY01L06B

The physical characteristics of the pumped product, the application details, as well as the General Operating Conditions detailed in our offer have been taken from your inquiry or where not specified have been assumed by us. In the event of an order we would ask you to check any assumptions and all details as they will become contractually binding along with the selection of pump model, Drive, all specifications, and materials of construction, based on these details.

Product:			Polymer
Composition			not advised
Specific gravity	assumed	kg/dm³	1.0
Particle size/solid ball size	allowed	mm	maximum 3 / 12
pH value	Approx.		not advised
Solids content (w/w)		% TS	not advised
Dynamic viscosity	approx.	cP	2000
Vapour pressure		mm Hg	Not advised

Application details:		*DW #*	*171841*	*171841*	*171841*	*171841*	*171841*	*171841*
Flow rate (Q)	approx.	LPH	300	350	400	450	500	600
	approx.	GPM	1.32	1.54	1.76	1.98	2.2	2.64
Differential pressure	approx.	psi	85	85	85	85	85	85
Suction pressure	assumed	psig	Flooded	flooded	flooded	flooded	flooded	flooded
Discharge pressure	approx.	psig	85	85	85	85	85	85
Pump operating speed	approx.	RPM	160	200	210	220	240	275
NPSHr	Approx.	M	1.0	1.0	1.0	1.1	1.1	1.1
Sliding velocity	approx.	ft/s	0.8	1.0	1.1	1.2	1.3	1.4
Frequency	approx.	Hz	32	40	42	44	48	55
Power required at drive shaft	approx.	HP	0.3	0.32	0.34	0.36	0.38	0.40
Running torque	approx.	lb-ft	8.8	8.8	8.8	8.8	8.8	8.8
Starting torque	approx.	lb-ft	7.4	7.4	7.4	7.4	7.4	7.4
Operating temperature	assumed	°C	20	20	20	20	20	20

Assembly specification

installation	vertical

General operating conditions

Installation area	inside
ambient Temperature	approx. 20°C / 70 F
humidity	up to 75%
application type	Continuous operation
operating hours	8 hours/day
service voltage	3/60/575

Painting	coating system	Netzsch standard

Operating and Maintenance Instructions

Standard documentation in accordance with the 98/37/EG Machinery Directive.
Special documentation is available on request and would be charged for.

number	1
medium	Paper
language for O&M's and spare parts list	English
dispatch method	shipped with pump

NETZSCH Canada, Inc. 500 Welham Road, Barrie, On., L4N 8Z7
Ph: 705-797-8426 Fax: 705-797-8427 Toll Free: 1-866-683-7867

Offer: N180717ST-01(REV02) (Item #50)
Date: August 23, 2018

Customer No.:

NEMO® NM021BY01L06B Pump

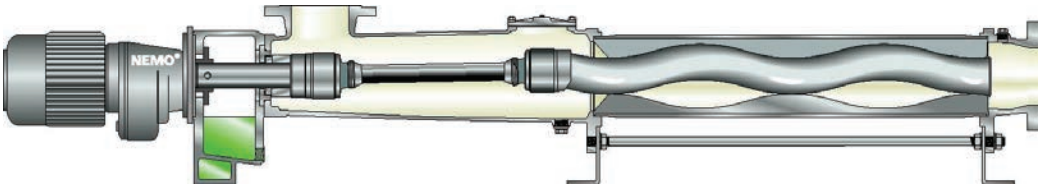

Characteristics and benefits of the NEMO® BY Block pump:

- Reliable and sophisticated construction
- Space-saving construction
- Modular construction system
- 4 different stator – rotor geometries available for most sizes
- Low investment and operating costs
- Low maintenance expenses

General characteristics	
name plate on the pump	in English (Stainless steel)
direction of rotation	to the right, clockwise (as viewed from drive end)

Pump Pedastal	
material	Cast iron 0.6025

Pump housing / End connection	
housing material	316 Stainless Steel
flange position	horizontal sidewards to right
function of housing connection	pressure connection
flange design	N.A.
nom. dia. & pressure for pump housing	1" ANSI Class 150 B16.5
suction flange design	N.A.
nom. dia. & pressure of suction flange	1" ANSI Class 150 B16.5
Function of end connection	suction connection
housing seals	FPM

Shaft seal	
type	Single mechanical Seal
shaft seal materials	Silicon Carbide Faces – Viton Elastomers
shaft seal type	Burgmann Single MG1-G60 – Q1Q1VGG

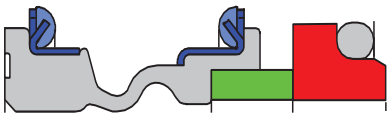

Rotating parts	
rotating parts materials	316 Stainless Steel

Offer: N180717ST-01(REV02) (Item #50)
Date: August 23, 2018

Customer No.:

Joints		
	joint type	pin joint
	sealing type	SM Pin joint
	joint sealing material	Viton/316 Stainless Steel
	joint lubrication	Mineral oil

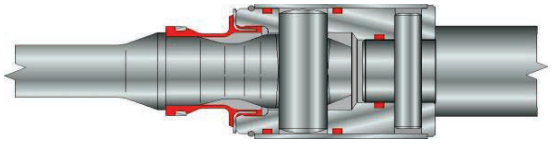

Rotor		
	rotor material	316 Stainless Steel
	temperature range for Stator expansion	UM20

Stator		
	stator material	NEMOLAST® S61L – Buna Nitrile

Drive

Helical gear reducer		
	manufacturer	Nord
	type	SK172.1F-56C
	gear ratio	5.77
	speed @ 60 Hz	300
	mounting position	M4
Motor		
	Manufacturer	Marathon Black Max
	motor HP	1.0
	winding voltage	575
	voltage range	+/- 10%
	frequency / range	60 Hz / 1000:1 @ CT
	number of poles	4
	number of phases	3
	Motor speed	1730 rpm
	protection type	TENV
	insulation class	F
	conduit box position	Left (Position 2)

Baseplate

	assembly specification - material	Structural steel base plate(0.5" thickness special)

Approximate weight of pump assembly	135 lbs.

Temperature sensor for run-dry protection
Supplied progressive cavity pumps are equipped with a temperature sensor in the stator sleeve for run-dry protection and associated relay.

NETZSCH Canada, Inc. 500 Welham Road, Barrie, On., L4N 8Z7
Ph: 705-797-8426 Fax: 705-797-8427 Toll Free: 1-866-683-7867

Offer: N180717ST-01(REV02) (Item #50)
Date: August 23, 2018

Customer No.:

Performance curve:

NM021--01L Performance Curve
elastomer quality: standard

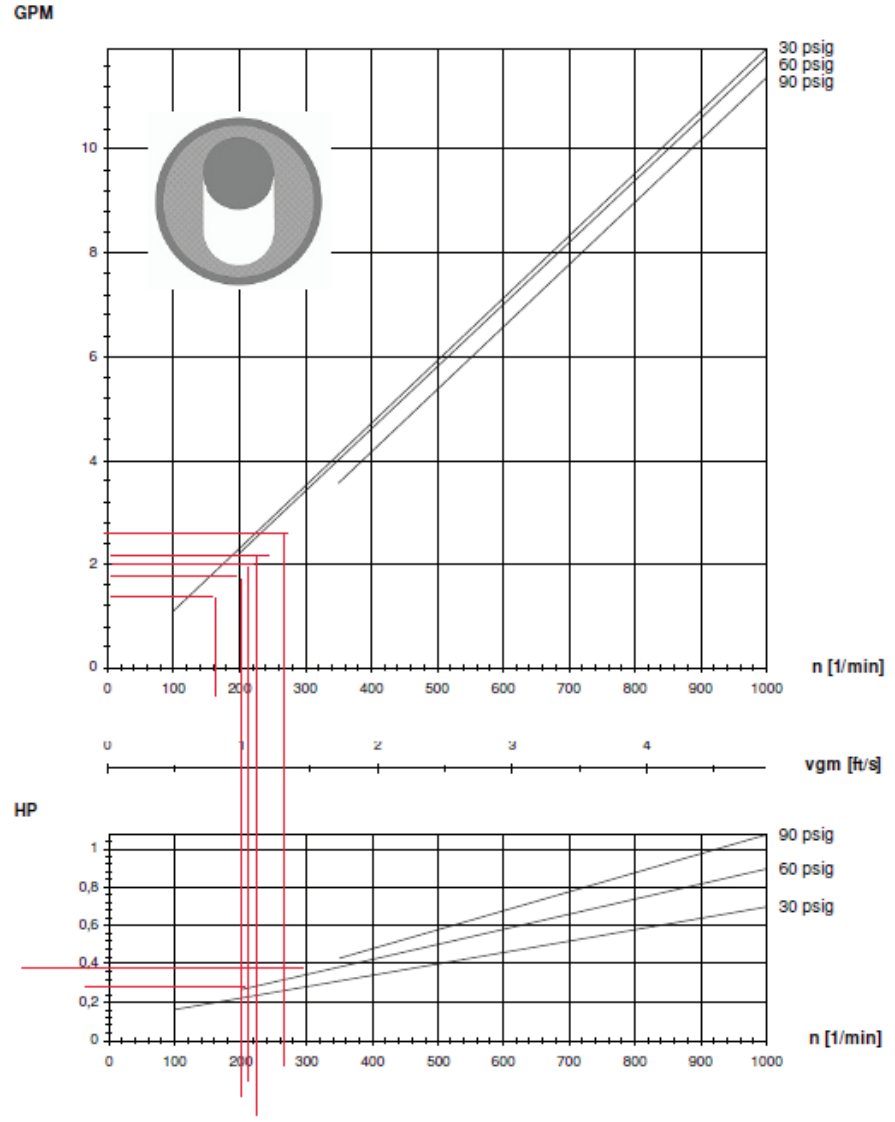

starting torque T(L) = 7,4 lbft

pressure	T
30 psig	7,4 lbft
60 psig	8,14 lbft
90 psig	8,88 lbft

Valid for water (1 cP) at 20 °C (70 °F). Tolerances are in accordance with VDMA 24284 (+10%/-5%).

NETZSCH Canada, Inc. 500 Welham Road, Barrie, On., L4N 8Z7
Ph: 705-797-8426 Fax: 705-797-8427 Toll Free: 1-866-683-7867

Offer: N180717ST-01(REV02) (Item #50)
Date: August 23, 2018

Customer No.:

Pump drawing:

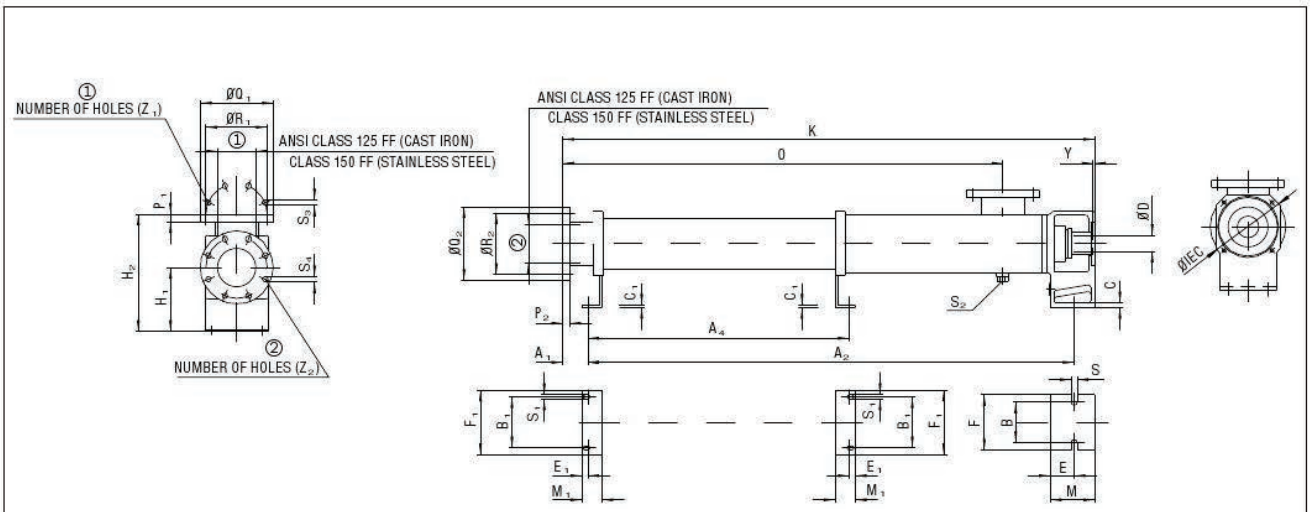

TYPE		BASIC DIMENSIONS																				ANSI ① / ②	PIPE CONNECTION						SHAFT END	
		A1	A2	A4	B	B1	C	C1	E	E1	F	F1	H1	H2	K	M	M1	O	S	S1	S2	Y		P1 / P2	Q1 / Q2	R1 / R2	S3 / S4	Z1 / Z2	DMIN / DMAX	IEC
NM015BY	02S12	41	411	–	95	50	8	5	28	15	125	80	100	160	481	55	40	328	12	9	NPT 1/2"	5	①	INTERNAL THREAD NPT 1 1/4"					12	140
	01L06																						②	INTERNAL THREAD NPT 1 1/4"					20	160
NM021BY	02S12	41	487	–	95	50	8	5	28	15	125	80	100	160	557	55	40	404	12	9	NPT 1/2"	5	①	INTERNAL THREAD NPT 1 1/4"					12	140
	01L06																						②	INTERNAL THREAD NPT 1 1/4"					20	160
NM031BY	02S12	77	637	–	115	69	10	5	27	20	150	100	112	222	759	70	50	540	12	11	NPT 3/4"	5	①	2"	15.7	152.4	120.6	19	4	20	160
	01L06																						②	2"	15.7	152.4	120.6	19	4	28	200 250
NM038BY	02S12	85	950	–	115	95	10	6	35	20	150	130	132	262	1082	80	55	838	14	11	NPT 3/4"	5	①	3"	19.1	190.5	152.4	19	4	20	200
	01L06																						②	2.5"	17.5	177.8	139.7	19	4	32	250

All dimensions are in mm. All dimensions are subject to change without notice.
Flanges are ANSI to inch standards. All flanges are flat faced.
All pumps are Thru-bolt Construction. Thru-bolts not shown for clarity.
For weights, use equivalent weights for SY pumps.

NETZSCH

NEMO PUMP (WP)
RANGE NM --- B 02S12/01L06

DRAWING NUMBER
NDB4908995

GENERAL ARRANGEMENT DRAWING(GAD)

Tolerâncias Dimensionais/Dimensional Tolerances				Tolerâncias para Flanges cfe./Tolerances for Flanges according ASME B16.1 e B16.5	
Medida/Dimension	Tolerância/Tolerance	Medida/Dimension	Tolerância/Tolerance		Tolerância/Tolerance
>3 até/to 6	±0,5	>400 até/to 1000	±4,0		
>6 até/to 30	±1,0	>1000 até/to 2000	±6,0	Diâmetro da Furação/Drilling Diameter	±1,5
>30 até/to 120	±1,5	>2000 até/to 4000	±8,0	Diâmetro Furos/Holes Diameter	+1,0
>120 até/to 400	±2,5	>4000	±20	Espessura/Thickness	+3,0

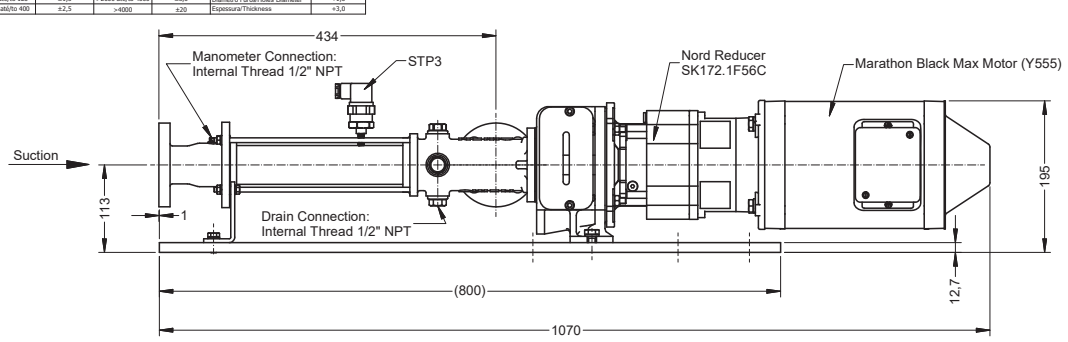

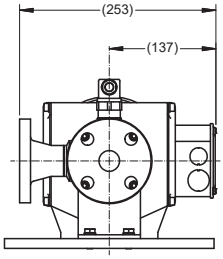

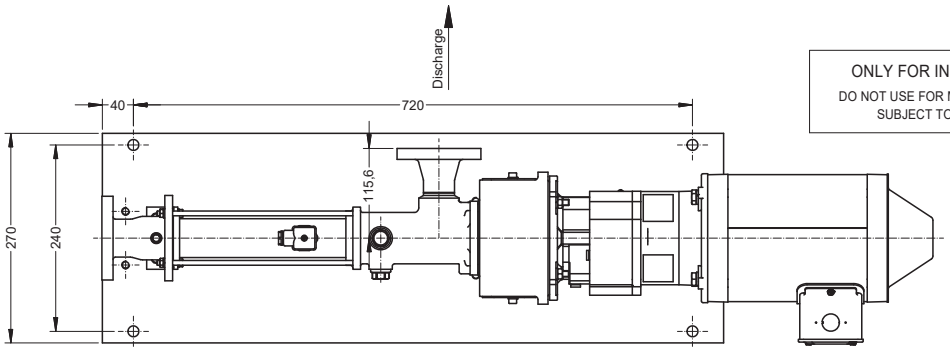

ONLY FOR INFORMATION

DO NOT USE FOR MANUFACTURING
SUBJECT TO CHANGES

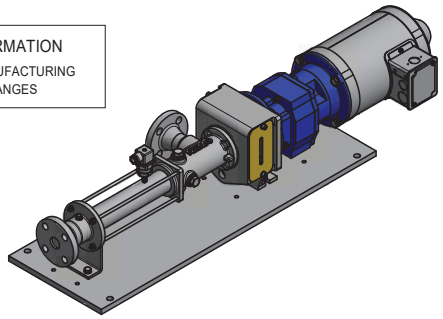

Flanges
Borings acc. Norma:

ASME B16.5 / Class 150 / FF / NPS 1

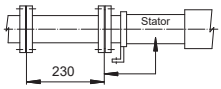

Lenght required for
stator disassembly

Revisão/Revision	Descrição/Description	Nome/Name	Data/Date
01	Alterado Bocal de Sucção e Descarga	Douglas	17/08/18

Cliente/Costumer:

Pedido/Order: Referência/Reference:

NETZSCH

Título/Tittle:

Pump NM021BY01L06B

HD-252848

	Data/Date	Nome/Name
Desenhado/Designer	17/08/2018	douglas.lourenco
Verificado/Checked Aprovado/Approved	17/08/2018	douglas.lourenco

TAG: Peso/Weight kgf

Nr. Desenho/Drawing Nr.: NDB4735479 | Folha/Sheet: 1/1 | Escala/Scale: 1:5

Reservado todos os direitos sobre este documento técnico. All rights reserved.

A3

PUMP DATASHEET

NETZSCH	NR. CP: 0	NR. DOC: 0	
	CUSTOMER: VEOLIA		REV. 0
			SHEET
	ORDER: 4210000237		2 OF 2
TITLE:	NM021BY01L06B PUMP DATA SHEET		

01 / NEMO PUMP / NM021BY01L06B

CONSTRUCTIVE FEATURES		
☑ Base:	Model:	Carbon steel with 0.5" thickness(custom)
☐ Bearing		
☐ By-pass:		
☐ Coupling:		
☐ Relief Valve:		
☑ Mechanical Seal:	Manufacturer / Model:	
☐ Gasket:		
☐ Shaft Sleeve:		
Transmission:	○ Direct ○ Gear ○ Belt ◉ N/A	

SUCTION NOZZLE (INTERFACE WITH THE INSTALLATION)	
Rating:	HORIZONTAL TO THE RIGHT FROM DRIVE END
Facing:	FLAT FACE
Dimension/Class:	1" ANSI Class 150 B16.5

DISCHARGE NOZZLE (INTERFACE WITH THE INSTALLATION)	
Rating:	HORZONTAL
Facing:	FLAT FACE
Dimension/Class:	1" ANSI Class 150 B16.5

MATERIALS	
Rotor:	316 STAINLESS STEEL
Stator:	S61M ELASTOMER-BUNA
Mechanical Seal:	AISI 316 / AISI 316 / SILICON CARBIDE
Mechanical Seal Housing:	STAINLESS STEEL 316
Casing:	STAINLESS STEEL 316
SM Pin Joint Seal:	"V" JOINT VITON SEALS
Drive Shaft:	STAINLESS STEEL 316
Connecting Shaft:	STAINLESS STEEL 316
Coupling Shaft:	STAINLESS STEEL 316
Base:	Cusotm plate

INSPECTION			
☐ Hydrostatic	UNWITNESSED	☐ Painting	UNWITNESSED
☐ Performance	UNWITNESSED	☐ Dimensional	UNWITNESSED
☐ Dye penetrant	UNWITNESSED	☐ Welding	UNWITNESSED

NOTES:

PERFORMANCE	
Pumped fluid:	**POLYMER**
Concentration:	N/A
Operating Temp.:	N/A
Density:	1Kg/dm3
Viscosity:	2000 cps
pH:	N/A
NPSH Available:	-
NPSH Required:	1.15 m
Absorbed Power:	0.15 hp
Nominal Flow :	700 LPH
Project Flow :	900 LPH
Discharge Pressure:	85 psig
Suction Pressure:	flooded
Differential Press.:	85 psig
Set Press. Relief Val.:	-
Pump Design Press.:	85 psig
Máx. Dif. Pressure.:	85 psig
Efficiency:	50.00%
Rotations:	315-380
Installation Conditions:	◉ Indoor
	○ Outdoor
	○ Uninformed
Classified area:	○ Yes ◉ No

FLUSHING	
Fluid:	N/A
Pressure:	N/A
Flow:	N/A
Temperature:	N/A

HYDROSTATIC TEST PRESSURE	
Pump Housing:	N/A
Pressure Stud:	N/A

WEIGHTS	
Pump (kgf):	-
Base (kgf):	-
Gear (kgf):	-
Total (kgf):	62

THE INFORMATION CONTAINED IN THIS DOCUMENT IS THE OWNERSHIP OF NETZSCH OF BRAZIL, WHICH IS PROHIBITED TO BE USED OUTSIDE OF ITS PURPOSE.

MOTOR DATA PACKAGE

PRODUCT INFORMATION PACKET

marathon® Motors

Model No: 056H17T5312
Catalog No: Y556
1HP,1725RPM,TENV,56C,3PH,60HZ,575V
1000:1 Speed Ratio



Regal and Marathon are trademarks of Regal Beloit Corporation or one of its affiliated companies.
©2018 Regal Beloit Corporation, All Rights Reserved. MC017097E

REGAL

Product Information Packet: Model No: 056H17T5312, Catalog No:Y556
1HP,1725RPM,TENV,56C,3PH,60HZ,575V

marathon® Motors

Nameplate Specifications

Output HP	**1 Hp**	Output KW	**0.75 kW**
Frequency	**60 Hz**	Voltage	**575 V**
Current	**1.2 A**	Speed	**1725 rpm**
Service Factor	**1**	Phase	**3**
Efficiency	**84 %**	Duty	**Continous**
Insulation Class	**F**	Design Code	**INV**
KVA Code	**P**	Frame	**56C**
Enclosure	**Totally Enclosed Non Ventilated**	Overload Protector	**No**
Ambient Temperature	**40 °C**	Drive End Bearing Size	**6203**
Opp Drive End Bearing Size	**6203**	UL	**Recognized**
CSA	**Y**	CE	**Y**
IP Code	**43**		

Technical Specifications

Electrical Type	**Squirrel Cage Inverter Duty**	Starting Method	**Inverter Only**
Poles	**4**	Rotation	**Reversible**
Mounting	**Rigid base**	Motor Orientation	**Horizontal**
Drive End Bearing	**Ball**	Opp Drive End Bearing	**Ball**
Frame Material	**Rolled Steel**	Shaft Type	**NEMA 56**
Overall Length	**14.98 in**	Frame Length	**8.56 in**
Shaft Diameter	**0.625 in**	Shaft Extension	**2.06 in**
Assembly/Box Mounting	**F1 Only**		
Outline Drawing	**A-104043-856**	Connection Diagram	**A-EE7300T**

This is an uncontrolled document once printed or downloaded and is subject to change without notice. Date Created: 06/28/2018

Uncontrolled Copy

104043

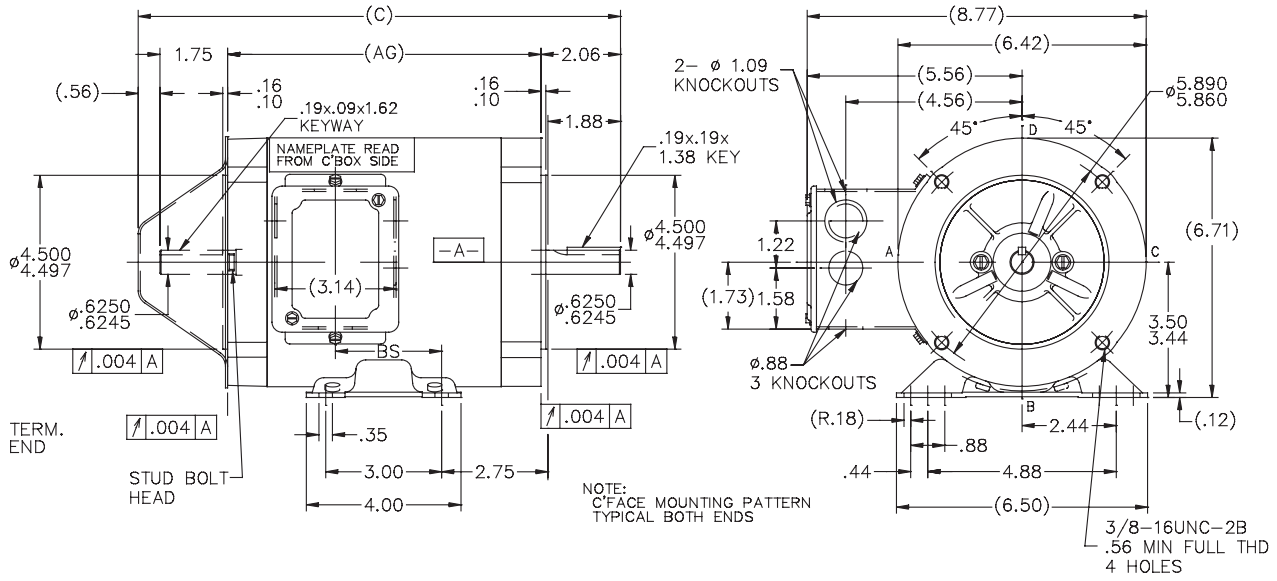

DASH	FR.	C	AG	BS	DASH	FR.	C	AG	BS
606	56–60	12.48	8.11	2.75	756	56–75	13.98	9.61	4.25
656	56–65	12.98	8.61	3.25	806	56–80	14.48	10.11	4.75
706	56–70	13.48	9.11	3.75	856	56–85	14.98	10.61	5.25

NOTES:
1– REMOVABLE BASE
2– CONDUIT BOX CAN BE ROTATED 180°

NO.	REVISION	BY & DATE
6	CHANGED LOGO FROM MARATHON TO REGAL	SAJ 08/28/15
5	REDRAWN IN AUTOCAD	TAT 07-06-2004
4	ADDED KEYWAY TO FRONT EXT. CN 27200–169	CAV 02-21-2000
3	REMOVED KEYWAY FROM FRONT EXT. CN 27400–442	CAV 10-08-1999
2	REV. BLACK MAX 56 FR. –706 WAS –856 CN27400–264	BLR 07-14-1999

TOLERANCES UNLESS SPECIFIED

CHK	DEC.	INCHES
AB	.X	±.1
ML	.XX	±.03
	.XXX	±.005
	.XXXX	±.0005
ANG		±7'30"

Regal Beloit America, Inc.

TITLE OUTLINE
56 FR. – TENV – BB – DBL. C' FACE

MAT'L.
FINISH
CAD FILE 104043
RFP
DIST WP

DRAWN	CEB 08–16–1995
CHK	DA 08–18–1995
APPD	EAB 08–21–1995
SCALE	5=16
REF	
FMF	
PREV	

SIZE A | DRAWING NO. 104043 | PAGE OF | REV. 6

THIS DRAWING IN DESIGN AND DETAIL IS OUR PROPERTY AND MUST NOT BE USED EXCEPT IN CONNECTION WITH OUR WORK ALL RIGHTS OF DESIGN AND INVENTION ARE RESERVED
THIS IS AN ELECTRONICALLY GENERATED DOCUMENT – DO NOT SCALE THIS PRINT

Uncontrolled Copy

THREE PHASE - SINGLE VOLTAGE
MOTOR - CONDUIT BOX @ 'A'

TO REVERSE ROTATION:
INTERCHANGE ANY TWO LINE
LEAD CONNECTIONS

NOTE FOR FACTORY USE ONLY:
TO SURGE TEST:
FOR 3 LEAD COMMON CONNECT:
CONNECT P1 TO T1 THEN P2 TO L1
FOR 6 LEAD COMMON CONNECT:
CONNECT P1 TO BOTH T1
THEN P2 TO L1

TERMINIAL BLOCK WHEN SPECIFIED

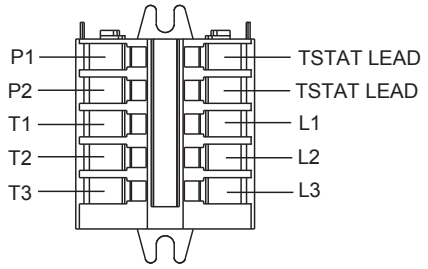

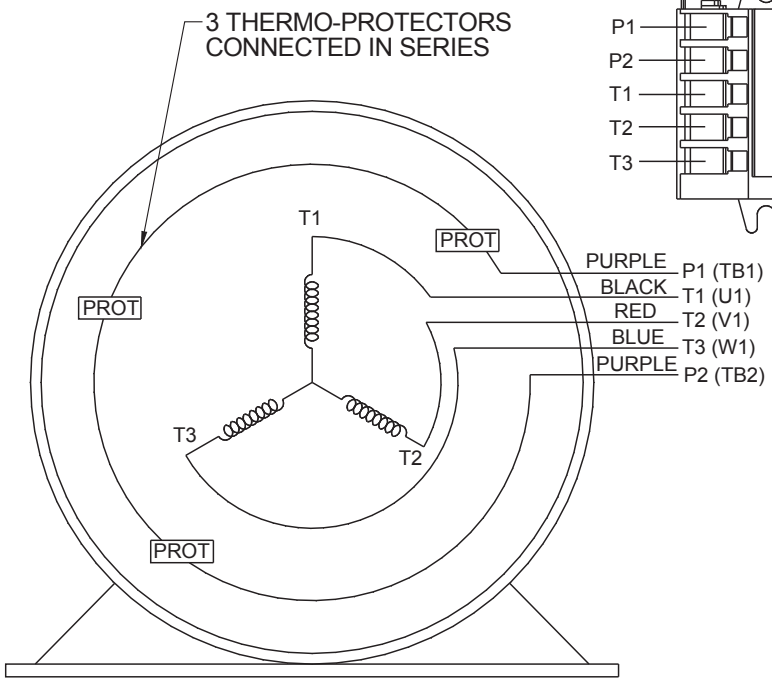

VIEW OF TERMINAL END

T2BM
T6AW
T6AL
T6Z
T4EG
T4BF
T8A
T6H
T6A
T4AX
T4A
T2A
T2F

IF MOTOR HAS MULTIPLE
T'S PER LEAD CONNECT
TOGETHER LIKE T'S

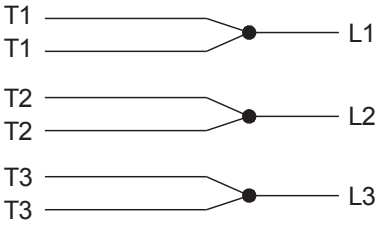

A-9806 DECAL

DRAWING REVISION: AB	REVISION BY: AJW	DATE: 07-17-2015
ECO: ECO-0081632	APPROVED BY: T.VUE	DATE: 07-17-2015
ECO DESCRIPTION: REV'D IEC MARKINGS PER IEC-60034-8		

COPYRIGHT REGAL BELOIT AMERICA, INC. ALL RIGHTS RESERVED.
PROPRIETARY AND CONFIDENTIAL INFORMATION - THIS DOCUMENT IS THE PROPERTY OF REGAL BELOIT AMERICA, INC. ("OWNER") AND CONTAINS OWNER'S PROPRIETARY INFORMATION. ANY PERSON, CORPORATION OR OTHER FIRM RECEIVING IT IS DEEMED, BY RECEIVING IT, TO AGREE THAT IT, AND/OR ANY PART OF IT, SHALL NOT BE DISCLOSED TO ANY PERSON, CORPORATION OR OTHER ENTITY, DUPLICATED, AND/OR USED, EXCEPT AS EXPRESSLY APPROVED IN WRITING IN ADVANCE BY OWNER. THIS DOCUMENT SHALL BE RETURNED TO OWNER UPON REQUEST. IT MAY BE SUBJECT TO CERTAIN RESTRICTIONS UNDER APPLICABLE EXPORT CONTROL LAWS AND REGULATIONS.

DRAWN BY: LZ	Regal Beloit America, Inc.
DATE: 01-04-1994	
APPROVED BY: GK	DESCRIPTION: CONN DIAGRAM-EXTERNAL
DATE: 01-20-1994	3Ø-SINGLE VOLT-MOTOR WITH PROTECTOR
REFERENCE	MATERIAL / PROCESS/FINISH
THIRD ANGLE PROJECTION	SIZE: A / DRAWING NUMBER: EE7300T / SHEET: 1 OF 1

Uncontrolled Copy

CERTIFICATION DATA SHEET

Model#:	56H17T5312 B	**WINDING#:**	ZT472 TR 2
CONN. DIAGRAM:	A-EE7300T	**ASSEMBLY:**	F1 ONLY
OUTLINE:	A-104043-856		

TYPICAL MOTOR PERFORMANCE DATA

HP	KW	SYNC. RPM	F.L. RPM	FRAME	ENCLOSURE	KVA CODE	DESIGN
1	.75	1800	1725	56C	TENV	P	INV

PH	Hz	VOLTS	FL AMPS	START TYPE	DUTY	INSL	S.F	AMB°C	ELEVATION
3	60	575	1.2	INVERTER ONLY	CONTINUOUS	F3	1.0	40	3300

FULL LOAD EFF: 84	3/4 LOAD EFF: 82.5	1/2 LOAD EFF: 78.5	GTD. EFF	ELEC. TYPE	NO LOAD AMPS
FULL LOAD PF: 75	3/4 LOAD PF: 65.5	1/2 LOAD PF: 51	81.5	SQ CAGE INV DUTY	.8

F.L. TORQUE	LOCKED ROTOR AMPS	L.R. TORQUE	B.D. TORQUE	F.L. RISE°C
3 LB-FT	12	10.8 LB-FT 360	15 LB-FT 500	65

SOUND PRESSURE @ 3 FT.	SOUND POWER	ROTOR WK^2	MAX. WK^2	SAFE STALL TIME	STARTS /HOUR	APPROX. MOTOR WGT
62 dBA	72 dBA	0.11 LB-FT^2	0 LB-FT^2	0 SEC.	0	42 LBS.

EQUIVALENT WYE CKT.PARAMETERS (OHMS PER PHASE)

R1	R2	X1	X2	XM
8.378	5.6232	10.7068	9.9116	278.036

RM	ZREF	XR	TD	TD0
11132.8	284	1.7	0.0071	0.136

*** SUPPLEMENTAL INFORMATION ***

DE BRACKET TYPE	ODE BRACKET TYPE	MOUNT TYPE	ORIENTATION	SEVERE DUTY	HAZARDOUS LOCATION	DRIP COVER	SCREENS	PAINT
C-FACE	BRAKE OR ENCODER	RIGID	HORIZONTAL	FALSE	NONE	FALSE	NONE	BLACK (POWDER)

BEARINGS		GREASE	SHAFT TYPE	SPECIAL DE	SPECIAL ODE	SHAFT MATERIAL	FRAME MATERIAL
DE	OPE						
BALL 6203	BALL 6203	POLYREX EM	STANDARD 56	NONE	NONE	1144 STRESSPROOF (C-223)	ROLLED STEEL

THERMO-PROTECTORS				THERMISTORS	CONTROL	SPACE /n HEATERS
THERMOSTATS	PROTECTORS	WDG RTDs	BRG RTDs			
TSTATS (N/C)	NOT	NONE	NONE	NONE	FALSE	NONE VOLTS

If Inverter equals NONE, contact factory for further information

NOTES

INVERTER TORQUE: CONSTANT 1000:1
INV. HP SPEED RANGE: 2.0 X BASE SPEED

ENCODER: PROVISIONS ONLY
NONE NONE
NONE NONE PPR

BRAKE: PROVISIONS ONLY NONE

Uncontrolled Copy

NONE	P/N NONE		
NONE	NONE		
NONE FT-LB		NONE V	NONE Hz

DATE: 06/28/2017 02:10:24 AM
FORM 3531 REV.3 02/07/99
** Subject to change without notice.

NORD GEAR REDUCER MANUAL

Intelligent Drivesystems, Worldwide Services

INSTALLATION & OPERATING INSTRUCTIONS



NORD.COM/DOCS
DOCUMENT COLLECTION

NORD DRIVESYSTEMS

Order Number:
NORD Model

SK172.1F-56C

Order and product data

Order Number	202293029-100
Product Name	Nordbloc® Helical Gearbox
NORD Model Type	SK172.1F-56C
Mounting Position	M4
Lubricant	VG220-SYN-PAO
Lubricant Qty	1.160 Qts

Contents

Manuals

U10060-Unit Installation
U10060 Version: 2.02

U10250-Solid Shaft Connections
U10250 Version: 0.06

U10500-Reducer Mounting Footed & Flange Mount Gear Units
U10500 Version: 0.05

U10750-Helical & Bevel Reducer lubrication
U10750 Version: 0.05

U11000-Helical & Bevel Reducer Lubrication Types
U11000 Version: 0.07

U12900-Nordbloc.1 Footed Oil Fill Quantities
U12900 Version: 0.04

U14700-Nordbloc.1 Oil Plug & Vent Locations
U14700 Version: 0.03

U19000-Troubleshooting
U19000 Version: 2409

U45100-NEMA IEC Input Adapters and Their Couplings
U45100 Version: 0.05

Spare Part Lists

U15150 - NORDBLOC.1 Parts List Drawings
U15150 Version: 0.02

U15705-Nordbloc.1 Parts Lists
U15705 Version: 0.02

1. Installation site

Drives must be properly installed if they are to produce the rated torque. Improper installation may lead to oil leaks, reduced life, or even catastrophic failure. NORD gear drives and motors are intended to be installed at a suitable mounting site under the following conditions:

- Unimpeded airflow to and around the units.
- Accessibility to oil drain, level and breather plugs.
- On brakemotors, allow adequate space for removing the fan guard and replacing and adjusting the brake.
- Mounting surfaces must be flat, torsionally rigid, and dampened against vibration.
- Unless special measures are taken, the immediate vicinity around the gear drive or motor should not be exposed to any aggressive or corrosive substances, contaminated air, ozone, gases, solvents, acids, alkalis, salts, radioactivity, etc.

2. Mounting position

Reducer mounting position charts illustrate the standard mounting positions for horizontal and vertical mounting. All gear units are assembled with the oil fill-level, oil-drain and vent plugs installed in their proper locations, **according to the customer-specified mounting position**. For mounting orientations other than shown consult NORD Gear.

NOTICE

Improper oil levels may lead to premature component wear and diminished service life. The gear reducer may not receive proper lubrication if the unit is not mounted in the position for which it is designed. Observe the mounting position designated on the reducer nameplate, or specified in the order acknowledgement. Consult NORD prior to changing mounting position in the field. While it is often possible to simply relocate the oil fill-level and vent locations, and adjust the oil fill amount, in some cases, different mounting positions may lend themselves to different internal construction features.

3. Reducer mounting

- The support foundation must be straight, level and flat. Whether the gear unit is foot-mounted or flange-mounted, NORD recommends that the straightness and flatness of the customer-supplied support foundation follow **Table 1**.
- The gear unit must be properly aligned with the driven shaft of the machine in order to prevent additional stress or load forces from being imposed upon the gear unit.
- To facilitate oil drainage it may be desirable to elevate the gear box foundation above the surrounding support structure.
- All bolting surfaces must be clean and free from contamination and corrosion.

Table 1: Recommended Straightness and Flatness of Customer-Supplied Support Foundation

Above (in)	To & Including (in)	General Tolerance on Straigtness & Flatness ISO 2768-2, Tolerance Class K
0.00	0.39	+/- 0.002 in
0.39	1.18	+/- 0.004 in
1.18	3.9	+/- 0.008 in
3.9	11.8	+/- 0.016 in
11.8	39	+/- 0.024 in
39	118	+/- 0.031 in

Above (mm)	To & Including (mm)	General Tolerance on Straigtness & Flatness ISO 2768-2, Tolerance Class K
0	10	+/- 0.05 mm
10	30	+/- 0.1 mm
30	100	+/- 0.2 mm
100	300	+/- 0.4 mm
300	1000	+/- 0.6 mm
1000	3000	+/- 0.8 mm

Straightness: Based upon the length of the corresponding line.

Flatness: Based upon the longer lateral surface or the diameter of the circular surface.

IMPORTANT NOTE

The responsibility for the design and construction of the support foundation is with the user. The foundation must be adequate to withstand normal operating loads and possible overloads while maintaining alignment to attached system components under such loads. ***Motors and drive components mounted on prefabricated base plates can become misaligned during shipment. Always check alignment after installation.***

4. Steel foundation

An engineered structural steel foundation should be designed to provide adequate rigidity and prevent loads from distorting the housing or causing misalignment of internal gears and shafts. When foot-mounting the gear reducer, a base plate or sole plate with suitable thickness (generally equal or greater than the thickness of the drive feet) should be securely bolted to steel supports and extend under the entire gear drive assembly. When flange-mounting the gear unit, the bulk head plate must be engineered to minimize buckling distortions and support the cantilevered weight of the gear unit or gear motor.

NOTICE

Do not weld on the gear unit or use the gear unit as an earth or ground connection for any welding procedure as this may cause permanent damage to the bearings and gears.

5. Concrete foundation

If a concrete foundation is used, allow the concrete to set firmly before bolting down the gear drive. Grout structural steel mounting pads and bolts of sufficient size into the concrete, to adequately distribute the load stress onto the concrete foundation.

Figure 1: Concrete Foundation

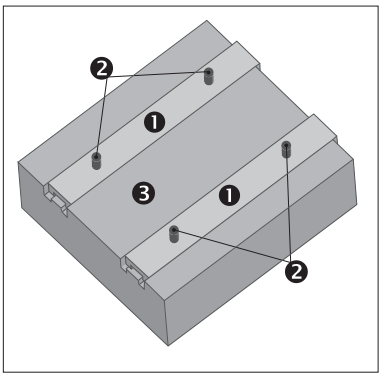

❶ Grouted Structural Steel Mounting Pads
❷ Mounting Bolts
❸ Concrete Foundation

6. Bolt connections for footed & flange mounted units

NORD footed reducers and flange-mount reducers (with B5 flange) have clearance designed into the mounting holes to allow for some minor adjustments in alignment. Bolt size, strength and quantity should be verified to insure proper torque reaction capacity whatever the mounting arrangement. Tightening torque for gear reducer mounting bolts, and recommended fastener grades, are provided in Table 2.

Table 2A: Tightening Torque for Inch Reducer Mounting Bolts

Thread Size	Grade SAE 5 / ASTM A449		Grade SAE 8	
(in)	(lb-ft)	(Nm)	(lb-ft)	(Nm)
1/4-20	7.1	9.6	10.0	13.6
5/16-18	16	21	22	30
3/8-16	28	37	39	53
1/2-13	69	93	98	132
5/8-11	138	188	195	264
3/4-10	247	334	348	472
7/8-9	396	537	558	757
1-8	592	802	833	1,130
1 1/8-7	-	-	1,233	1,672
1 1/4-7	-	-	1,717	2,327
1 3/8-6	-	-	2,267	3,073
1 1/2-6	-	-	2,983	4,045
1 3/4-5	-	-	4,458	6,045

- Calculated tightening torques are based a conventional 60°, clean and dry (un-lubricated) thread, with thread-friction and head-friction equal to 0.15.
- When using inch-fasteners, NORD recommends a minimum Grade SAE 5 (ASTM A-449) for sizes up to 1-8 UNC, and Grade SAE 8 for all larger sizes.

Table 2B: Tightening Torque for Metric Reducer Mounting Bolts

Above	ISO Grade 8.8		ISO Grade 10.9		ISO Grade 12.9	
(mm)	(lb-ft)	(Nm)	(lb-ft)	(Nm)	(lb-ft)	(Nm)
M4	2.4	3.2	3.5	4.7	4.1	5.5
M5	4.7	6.4	6.9	9.3	8.1	11
M6	8	11	12	16	14	19
M8	20	27	29	39	34	46
M10	39	53	58	78	67	91
M12	68	92	100	135	110	155
M14	107	145	159	215	180	250
M16	170	230	247	335	290	390
M18	240	325	343	465	400	540
M20	339	460	487	660	570	770
M22	465	630	664	900	770	1,050
M24	583	790	848	1,150	960	1,300
M27	848	1,150	1,217	1,650	1,440	1,950
M30	1,180	1,600	1,660	2,250	1,950	2,650
M36	2,050	2,780	2,884	3,910	3,470	4,710
M42	3,297	4,470	4,639	6,290	5,560	7,540
M48	4,940	6,700	7,010	9,500	8,260	11,200

- Calculated tightening torques are based on a conventional 60°, clean and dry (un-lubricated) thread, with thread-friction and head-friction equal to 0.15.
- When using metric-fasteners, NORD recommends a minimum ISO Grade 8.8 bolt.

7. Mounting the prime mover

When the motor is not flange mounted or integrally mounted to the gearbox, it is important to properly secure and align the gear drive with respect to the driven machine before attempting to align the prime mover or motor.

A. After the main gear drive is properly aligned and bolted in place, align the prime mover with respect to the reducer input shaft.

B. Use shims under the feet of the prime mover as needed, and secure in place with the proper mounting bolts. Dowel pins may be field-installed to help prevent misalignment and ensure proper realignment if removed for service.

IMPORTANT NOTE

When using a high speed coupling connection between the prime mover and the reducer, check alignment per the coupling manufacturers recommendations. If the coupling is misaligned, the reducer alignment or shimming is incorrect. Re-align the gear reducer and re-check the high-speed coupling alignment before re-aligning the motor.

1. Solid shaft diameter tolerance

Reducer input and output shaft extensions have a diameter tolerance as specified in **Table 1**.

Table 1: Solid Shaft Diameter Tolerance

Above ø (in)	To & Including ø (in)	Tolerance (in)
0.375	1.750	+0.0000 / -0.0005
1.750	7.500	+0.0000 / -0.0010

Above ø (mm)	To & Including ø (mm)	Tolerance (mm)	ISO 286-2 Fit Class
10	18	+0.012 / +0.001	k6
18	30	+0.015 / +0.002	k6
30	50	+0.018 / +0.002	k6
50	80	+0.030 / +0.011	m6
80	120	+0.035 / +0.013	m6
120	180	+0.040 / +0.015	m6
180	190	+0.046 / +0.017	m6

2. Fitting drive elements onto the reducer solid shaft

Solid input and output shaft extensions are provided with a drill and tap feature as indicated in Table 2. When installing drive elements such as coupling hubs, pulleys, sprockets, or gears, NORD recommends using the threaded hole in the end of the shaft, along with a suitable assembly device fitted into the threaded hole.

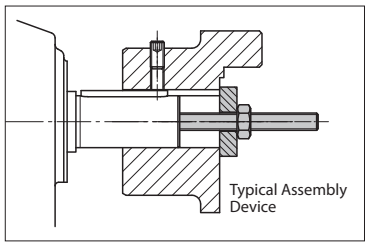

Table 2: Solid Shaft End - Threaded Holes

Above ø (in)	To & Including ø (in)	Tap Size & Depth (in)
0.375	0.500	10-24 x 0.43 in
0.500	0.875	1/4-20 x 0.59 in
0.875	0.938	5/16-18 x 0.71 in
0.938	1.100	3/8-16 x 0.87 in
1.100	1.300	1/2-13 x 1.10 in
1.300	1.875	5/8-11 x 1.42 in
1.875	3.500	3/4-10 x 1.73 in
3.500	7.500	1-8 x 2.63 in
5.125	8.875	1 1/4 - 7 x 3.15*
6.000	8.875	1 3/8 - 6 x 3.46**

Above ø (mm)	To & Including ø (mm)	Tap Size & Depth (mm)
10	13	M4 x 10 mm
13	16	M5 x 12.5 mm
16	21	M6 x 16 mm
21	24	M8 x 19 mm
24	30	M10 x 22 mm
30	38	M12 x 28 mm
38	50	M16 x 36 mm
50	85	M20 x 42 mm
85	130	M24 x 50 mm
130	225	M30 x 60 mm*
130	225	M36 x 74 mm**

* Only used on the SK9096.1 Helical-Bevel Gear Unit.

** Only used on the SK10382.1 & SK11382.1 CLINCHER™ gear units.

NOTICE

DO NOT DRIVE or **HAMMER** the coupling hub, pulley, sprocket, or gear into place. An endwise blow to the reducer shaft can generate damaging axial forces and cause damage to the reducer housing, bearings or internal components.

⚠ WARNING

To avoid serious injury the user must provide suitable safety guards for all rotating shafts and shaft components such as couplings, chain drives, belt drives, etc. All guarding must adhere to local regulations and safety standards.

3. Installing interference-fit hubs to the reducer shaft

Prior to installing any interference-fit hubs to the reducer shaft, consult with the manufacturer to determine proper assembly and fit. Interference-fits usually require heating the coupling, sprocket or gear hub, per the manufacturer's recommendations. Coupling hub installation typically follows ANSI/AGMA 9002-A86. Always make sure the reducer shaft seals are protected from the heat source. Apply uniform heat to the drive element hub to prevent distortion. NORD does not recommend heating the drive element hub beyond 212°F to 275°F (100°C to 135° C).

⚠ WARNING

When using heat to mount a drive element hub, do not use open flame in a combustible atmosphere or near flammable materials. Use suitable protection to avoid burns or serious injury.

IMPORTANT NOTE

When using external chain or belt drives, make sure the reducer is sized so that the shaft and bearings have adequate capacity. To avoid unnecessary bearing loads and additional shaft deflection, mount all power take-off devices (sprockets, pulleys, etc.) so that the applied load center is as close to the gear housing as possible and check component alignment and tension of any belts or chains per the manufacturer's recommendation. Do not over tighten the belts or chains.

4. Coupling installation

The performance and life of any coupling depends upon how well it is installed. Coupling hubs are typically mounted flush with the shaft ends, unless specifically ordered for overhung mounting. Shaft couplings should be installed according to the coupling manufacturer's recommendations for gap, angular and parallel alignment. To help obtain critical shaft alignment coupling hubs may be installed to the machine shafts prior to final shimming or tightening of the foundation bolts. Proper coupling alignment allows for thermal and mechanical shaft movement during operation and ensures that only torque (no radial load) is transmitted between the mating shafts.

Coupling gap and angular alignment

The shaft gap must be sufficient to accommodate any anticipated thermal or mechanical axial movement. When setting the coupling gap, insert a spacer or shim stock equal to the required spacing or gap between the coupling hub faces. Measure the clearance using feeler gauges at 90-degree intervals, to verify the angular alignment.

Parallel (or offset) alignment

Mount a dial indicator to one coupling hub, and rotate this hub, sweeping the outside diameter of the other hub. The parallel or offset misalignment is equal to one-half of the total indicator reading. Another method is to rest a straight edge squarely on the outside diameter of the hubs at 90° intervals and measure any gaps with feeler gauges. The maximum gap measurement is the parallel or offset misalignment.

Check alignment

After both angular and parallel alignments are within specified limits, tighten all foundation bolts securely and re-check critical alignment. If any of the specified limits for alignment are exceeded, realign the coupling.

5. Installing sheaves (pulleys), sprockets and gears

To avoid unnecessary bearing loads and additional shaft deflection, mount all power take-off devices (sprockets, pulleys, gears, etc.) so that the applied load center is as close to the gear housing as possible, as shown in **Figure 2**.

Figure 2: Sprocket or Gear Mounting

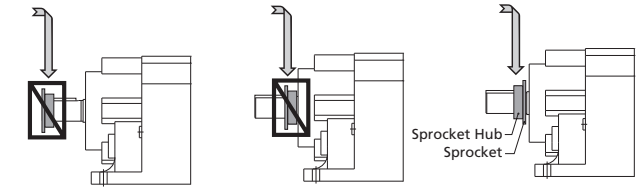

Preferred Mounting of Sprocket or Gear

Align the driver sheave or sprocket with the driven sheave or sprocket by placing a straight-edge length-wise across the face of the sheaves or sprockets. Alignment of bushed sheaves and sprockets should be checked only after bushings have been tightened. Check horizontal shaft alignment by placing one leg of a square or a level vertically against the face of the sheave or sprocket.

Always check component alignment and tension any belts or chains per the manufacturer's recommendation. The ideal belt or chain tension allows proper wrap of the driver and driven wheels, while maintaining the lowest possible tension of the belts or chain, so that no slipping occurs under load conditions. Check belt or chain tension frequently over the first 24 to 48 hours of operation.

IMPORTANT NOTE

When using external chain or belt drives, make sure the reducer is sized so that the shaft and bearings have adequate capacity. To avoid unnecessary bearing loads and additional shaft deflection, mount all power take-off devices (sprockets, pulleys, etc.) so that the applied load center is as close the gear housing as possible and check component alignment and tension of any belts or chains per the manufacturer's recommendation. Do not over tension the belts or chains.

6. Outboard pinion gear alignment

Align outboard pinion gears and adjust the gear tooth clearance according to the manufacturer's recommendations, checking for acceptable outboard pinion tooth contact. The foundation bolts may have to be loosened and the gear unit moved slightly to obtain proper gear tooth contact. After the unit is moved to correct tooth contact, the prime mover may need to be realigned.

1. Foot-mounted reducers

When installing the foot-mounted gear unit, observe the flatness specifications and bolt tightening torque guidelines provided in U10060 and make sure the mating mounting surface and reducer feet are clean and free of debris. Use of shims under the feet of the gear unit may be required in order to align the output shaft to the driven equipment. Make sure that all feet are supported so that the housing will not distort when it is bolted down. Improper shimming will cause mis-alignment and may reduce the life of the gear unit or cause component failure. Dowel pins may be field-installed to help prevent misalignment and ensure proper realignment if removed for service.

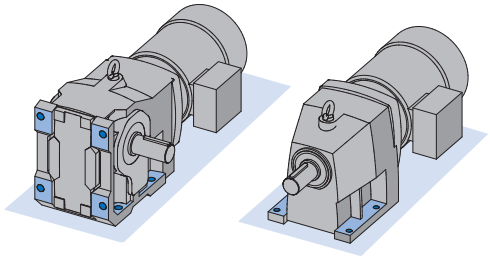

IMPORTANT NOTE

Gear units may be subjected to radial loads or side pull, caused by external chain drives or belt drives. In these instances it is recommended that the mounting base be designed with a slide-plate adjustment to accommodate extra slack in the chain or the belt after the feet are loosened. When using an external chain or belt drive, make sure the reducer is sized so that the shaft and bearings have adequate capacity.

2. Flange-mounted reducers (with B5 flange)

When using the B5 flange to mount the gear unit, the bulk head plate must be engineered to minimize buckling distortions and support the cantilevered weight of the gear reducer or gearmotor. When the mating hole is designed with the proper fit, the flange pilot tenon provides a means of accurately positioning the reducer while the hold-down bolts are properly secured; once the reducer is secured, the tenon helps prevent movement of the reducer and it helps locate the center of the reducer output shaft. The flange centering shoulder tolerance for standard units is listed in table 1. For units with NSD Tuph please see table 2 on the following page.

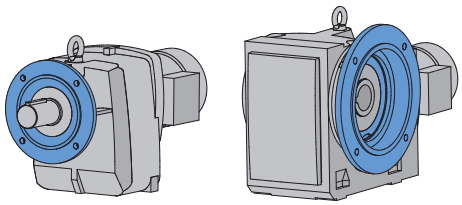

Table 1 : Flange Centering Shoulder Tolerance

Above ø (in)	To & Including ø (in)	Tolerance (in)	ISO 286-2 Fit Class
1.969	3.150	+0.0005 / -0.0003	j6
3.150	4.724	+0.0005 / -0.0004	j6
4.724	7.087	+0.0006 / -0.0004	j6
7.087	9.055	+0.0006 / -0.0005	j6
9.055	9.843	+0.0000 / -0.0011	h6
9.843	12.402	+0.0000 / -0.0013	h6
12.402	15.748	+0.0000 / -0.0014	h6
15.748	19.685	+0.0000 / -0.0016	h6
19.685	21.654	+0.0000 / -0.0017	h6

Above ø (mm)	To & Including ø (mm)	Tolerance (mm)	ISO 286-2 Fit Class
50	80	+0.012 / -0.007	j6
80	120	+0.013 / -0.009	j6
120	180	+0.014 / -0.011	j6
180	230	+0.016 / -0.013	j6
230	250	+0.000 / -0.029	h6
250	315	+0.000 / -0.032	h6
315	400	+0.000 / -0.036	h6
400	500	+0.000 / -0.040	h6
500	550	+0.000 / -0.044	h6

When installing the flange mounted gear unit, observe the flatness specifications and bolt tightening torque guidelines provided in U10060. Make sure the mating mounting surface and reducer flange are clean and free of debris. Use a straight edge or parallel bar to check for high spots on the mating mounting surface and remove any raised material around the mounting holes.

Set the gear unit into place and tighten the bolts until they are snug. Before final bolt-tightening check for any material gaps between the mating surfaces and if shimming is required, use "U" shaped shims at least 2 times the width of the bolt. Avoid over shimming a very irregular surface as this will make it very difficult to achieve proper alignment.

IMPORTANT NOTE

For heavy shock applications, it is advisable to field-install dowel pins through the mounting flange connection (in addition to the mounting bolts). This will help control flange movement or flange rotation and relieve the mounting bolts from this additional stress.

3. Flange-mounted reducers (with B14 flange)

When using the B14 flange to mount the gear unit, the bulk head plate must be engineered to minimize buckling distortions and support the cantilevered weight of the gear reducer or gearmotor. When properly installed, the output flange of the reducer housing is designed to enable the permissible torques and radial forces to be reliably transmitted by the bolt connections. The flange centering shoulder tolerance for standard units is listed in table 1 on the previous page. For units with NSD Tuph please see table 2 below.

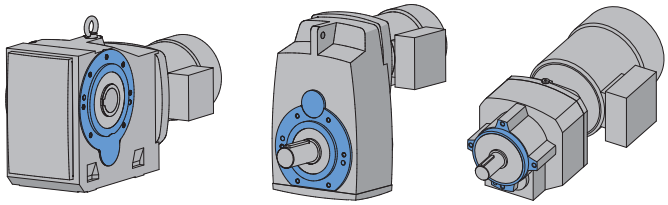

IMPORTANT NOTE

When using the B14 flange-face for mounting, if dowel pin holes are provided in addition to the threaded holes, then it is advisable to also use the proper dowel pins, to help control flange movement or flange rotation and relieve the mounting bolts from this additional stress This is especially important for heavy shock applications.

Table 2 : Flange Centering Shoulder Tolerance on NSD Tuph Units

Above ø (in)	To & Including ø (in)	Tolerance (in)
1.969	3.150	+0.0020 / +0.0013
3.150	4.724	+0.0021 / +0.0012
4.724	7.087	+0.0021 / +0.0011
7.087	9.055	+0.0022 / +0.0011

Above ø (mm)	To & Including ø (mm)	Tolerance (mm)
50	80	+0.052 / +0.033
80	120	+0.053 / +0.031
120	180	+0.054 / +0.029
180	230	+0.056 / +0.027

4. Foot & flange reducer housings

Some gear reducer housings are available with a foot and an output flange. Units with a foot and a B5 Flange are designated with the suffix XF after the primary model number and units with a B14 face-flange are designated with the suffix XZ after the primary model number. When a gear unit is provided with both a foot and a flange, the foot is consider the primary mounting surface. The flange is generally considered to be the secondary mounting option and it is intended that this surface be used for auxiliary add on elements that place minimal load stress on the reducer housing.

NOTICE

To prevent overstress on the main gear unit housing, never tighten the reducer mounting feet and the mounting flange against one-another. Auxiliary add-on elements that are mounted to the reducer flange, must not transmit excessive force, torque or vibration to the main gear housing.

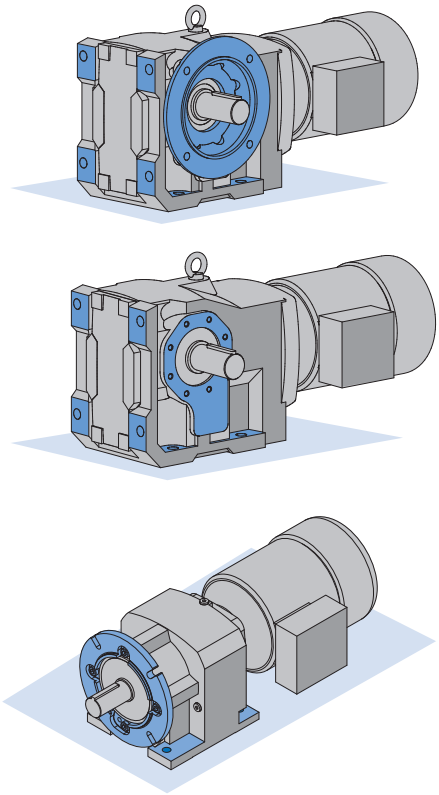

HELICAL & BEVEL REDUCER LUBRICATION

1. Importance of proper lubrication

Proper gearbox lubrication is essential in order to reduce friction, heat, and component wear. Lubricants reduce heat and wear by inserting a protective "fluid boundary" between mating parts and preventing direct metal to metal contact. Lubricants also help prevent corrosion and oxidation, minimize foam, improve heat transfer, optimize reducer efficiency, absorb shock loads and reduce noise.

Most NORD reducers are shipped from the factory with a pre-determined oil fill level in accordance to the specified reducer size and mounting position.

2. Standard oil type

The following tables indicate the standard oil fill type used. Please see user manual U11000 for more specific information and for optional helical and bevel gear lubricants:

Serviceable Gear Units	
Helical In-line	Standard Oil Fill: ISO VG 220, Mineral Oil
Clincher Parallel-Shaft	
Right-Angle Bevel	
NORDBLOC® Series In-line	
NORDBLOC®.1 Series In-line	
Standard Series In-line	

IMPORTANT NOTE

For shipping purposes, the following large Clincher™ gear units are supplied without oil:
- Clincher™ Sizes SK11282, SK11382, SK11382.1 and SK12382

Maintenance-free / Lubricated For Life Gear Units	
Clincher™ sizes SK0182NB, SK0282NB & SK1382NB	Standard Oil Fill: ISO VG220 SHC/PAO Synthetic Oil
NORDBLOC® Sizes SK172, SK272, SK371F, SK372, SK373, SK320	

IMPORTANT NOTE

Maintenance-free units are supplied as sealed units with no vent-plug. Consult NORD prior to ordering if interested in ordering any of the above sizes as serviceable gear units.

IMPORTANT NOTE

Consult the sticker adjacent to the fill plug to determine the type of lubricant installed at the factory. Some units have special lubricants designed to operate in certain environments or intended to extend the service life or service temperature range of the lubricant. If in doubt about which lubricant is needed for a certain application, please contact NORD Gear.

3. Lubrication replacement

If the gear unit is filled with mineral oil, the lubricant should be replaced at least after every 10,000 operating hours or after every two years. If the gear unit is filled with synthetic oil, the lubricant should be replaced at least after every 20,000 operating hours or after every four years. Often gear reducers are exposed to extreme ambient conditions, hostile environments, wet conditions, or dirty and dusty operating areas. Especially in these situations, it is important to establish a condition-based oil service interval.

4. Oil viscosity

Viscosity, or the oil's resistance to shear under load, is often considered the single most important property of any gear oil.

- Often one will consider making a viscosity correction to the oil to improve the performance when operating the gear unit at low temperature or high temperature.
- In cases of extreme load conditions, gear pairs and antifriction bearings may be more susceptible to sliding or scuffing wear. In these operating conditions, it may also be beneficial to consider an increased lubrication viscosity and/or a lubrication with improved antiwear additive packages.

IMPORTANT NOTE

The user should consult with their primary lubrication supplier before considering changes in oil type or viscosity.

5. Maximum oil sump temperature limit

To prevent reducer overheating, the reducer's maximum oil sump temperature limit must not be exceeded for prolonged periods of operation (up to 3 hours continuous operation depending upon reducer size).

Oil Type	Maximum Oil Temperature Limit	
	NORD	AGMA 9005-D94
Mineral	80-85°C (176-185°F)	95°C (203°F)
Synthetic	105°C (220°F)	107°C (225°F)

IMPORTANT NOTE

Use caution when specifying gear reducers for high temperature service. If there is concern about exceeding the allowable safe operating temperatures, please consult NORD to discuss alternatives.

6. The importance of routine oil analysis

Routine oil analysis, sound lubrication practices, and good tracking of oil performance trends will help establish proper lubrication maintenance and change-out intervals. To maximize equipment reliability, NORD Gear generally recommends a condition-based lubrication maintenance program. One may take exceptions to this general recommendation on sealed-for-life or maintenance-free gear units or smaller and less costly gear units. In these instances, the replacement cost of the gear unit is often small compared to the costs associated with this type of oil analysis program.

NOTICE

NORD suggests replacing the gear oil if oil analysis indicates any of the following. Failure to replace the oil may cause internal damage to gearbox and diminished performance:

- Viscosity has changed by approximately 10% or more.
- Debris particles (silicon, dust, dirt or sand) exceed 25 ppm.
- Iron content exceeds 150-200 ppm.
- Water content is greater than 0.05% (500 ppm).
- The total acid number (TAN) tests indicate a significant level of oxidative break-down of the oil, and a critical reduction in performance; If the TAN number measured changes by more than 5% over the new oil, then an oil change would be recommended.

7. Mounting position and oil fill quantity

All NORD Gear reducers are shipped from the factory with a pre-determined oil fill level in accordance to the specified reducer size and mounting position. ***For additional information, please see the seperate mounting position diagrams and the corresponding oil fill quantity tables for the specified gear unit.***

The gearbox nametag will indicate the mounting position that was provided. ***For mounting orientations other than shown in the mounting position charts, please consult NORD Gear.***

IMPORTANT NOTE

Actual oil volume can vary slightly depending upon the gear case size, mounting and ratio. Prior to commissioning the reducer, check the oil-fill level using the reducer's oil-level plug and drain or add additional oil as needed. The minimum acceptable oil level is 0.15 in (4mm) below the oil level hole.

8. Oil plug locations

All gear units are assembled with the oil fill-level, oil-drain and vent plugs installed in their proper locations, according to the specified mounting position. All standard plugs are metric and utilize sealing gaskets between the head of the plug and the reducer housing.

9. Drain and fill-level plugs

All reducer drain plugs are metric socket head cap screws. For easier identification, it is NORD's standard practice to provide a hex-head screw for the fill-level plug. For ease of draining the used oil from the gear reducer, use the socket head screw located at the lowest part of the gearbox.


Drain Plug

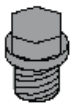
Fill Level Plug

10. Vent plug locations

Reducer venting allows for air pressure differences that occur during operation, between the inner space of the reducer and the atmosphere, while ensuring leak-free operation. The AUTOVENT™ is standard for all vented gear units, unless otherwise noted.

AUTOVENT™ - The AUTOVENT™ helps prevent bearing and gear damage by behaving like a check valve to block the entry of foreign material and prevent lubrication contamination from dust particles, moisture and air-borne process chemicals. The breather opens at approximately 0.3-0.9 psi during operation and closes tightly as the gearbox cools. This option is perfect for humid conditions and wash-down environments, helping to maintain proper oil cleanliness, while reducing foaming and oxidation.

Figure 1 AUTOVENT™ Types


Type 1

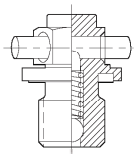

Type 2 with transportation plug

Open Vent - An optional open vent can be supplied by NORD. The open vent comes closed upon delivery with a transportation sealing plug (see Warning).

NOTICE

To prevent build-up of excessive pressure, sealed vents must be activated as shown prior to gear unit start up. Excessive pressure may cause damage to internal components and cause leakage.

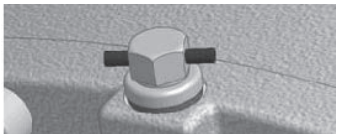
Sealed vent

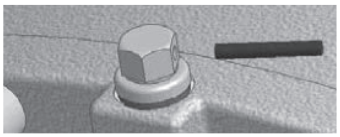
Activated vent

Filtered Vent - NORD may offer an optional filtered vent, which allows gases to permeate, but does not allow dust and debris to pass through the vent.

HELICAL & BEVEL REDUCER LUBRICATION TYPES

Lubrication Tables – Helical and Bevel Gear Units

Standard Oil Lubricants

ISO Viscosity	Oil Type	Ambient Temperature Range	Manufacturer Brand/Type	Notes
VG220	MIN-EP	0 to 40°C (32 to 104°)	Mobilgear 600XP220	♦❶
	PAO	-35 to 60°C (-31 to 140°F)	Mobil SHC630	♦❷
	FG	-5 to 40°C (23 to 104°F)	Fuchs FM220	♦

Optional Oil Lubricants

ISO Viscosity	Oil Type	Ambient Temperature Range	Manufacturer Brand/Type	Notes
VG460	PAO	-35 to 80°C (-31 to 176°F)	Mobil SHC 634	-
	FG-PAO	-35 to 80°C (-31 to 176°F)	Mobil SHC Cibus 460	-
VG220	FG-PAO	-35 to 60°C (-31 to 140°F)	Mobil SHC Cibus 220	S
VG150	PAO	-35 to 25°C (-31 to 77°F)	Mobil SHC629	-

Grease Options (applied to greased bearings and seal cavities)

NLGI Grade	Grease Thickener	Grease Base Oil	Ambient Temperature Range	Manufacturer Brand/Type	Notes
NLGI 2	Li-Complex	MIN	-30 to 60°C (-22 to 140°F)	Mobil Grease XHP222	♦❶
	Li-Complex	PAO	-40 to 80°C (-40 to 176°F)	Mobil / Mobilith SHC 220	♦❷
	Polyurea	FG-PAO	-30 to 80°C (-22 to 176°F)	Mobil SHC Polyrex 222	♦

♦ Stocked Lubricants

❶ Standard product on serviceable gear units

❷ Standard product on maintenance free gear units

IMPORTANT NOTE

- The "Ambient Temperature" is intended to be an operation guideline based upon the typical properties of all the lubricant. The viscosity and other properties of the lubricant change based upon load, speed, ambient conditions, and reducer operating temperatures. The user should consult with their lubrication supplier & NORD gear before considering changes in oil type or viscosity.
- To prevent reducer overheating, observe the maximum operating oil temperature limits:
  Mineral Oil: 80-85 °C (176 – 180 °F).
  Synthetic Oil: 105 °C (225 °F).
- In the following instances, please consult NORD for specific recommendations:
  - √ Gear units will operate in high ambient temperature conditions exceeding 40 °C (104 °F).
  - √ Gear units will operate in cold ambient temperature conditions approaching 0 °C (32 °F) or lower.
  - √ Lower than an ISO VG100 viscosity oil is being considered for a cold-temperature service.
  - √ Fluid grease is required for lubricating the gear unit.
- Observe the general lubrication guidelines outlined in user manual U10750.

Oil Formulation Codes

MIN-EP - Mineral Oil with EP Additive
PAO-EP - Synthetic Polyalphaolefin Oil with EP Additive
PAO - Synthetic Polyalphaolefin Oil
PG - Synthetic Polyglycol Oil
FG - Food-Grade Oil
FG-PAO - Food-Grade, Synthetic Poyalphaolefin Oil
FG-PG - Food-Grade, Synthetic Polyglycol Oil

Lubrication Notes

- Avoid using (EP) gear oils in worm gears that contain sulfur-phosphorous chemistries, as these additives can react adversely with bronze worm gears and accelerate wear.
- Food grade lubricants must be in compliance with FDA 212 CFR 178.3570 and qualify as a NSF-H1 lubricant. Please consult with lubrication manufacturer for more information.
- When making a lubrication change, check with the lubrication supplier to assure compatibility and to obtain recommended cleaning or flushing procedures.
- Do not to mix different oils with different additive packages or different base oil formulation types. Polyglycol (PG) oils are not miscible with other oil types and should never be mixed with mineral oil or polyalphaolefin (PAO) synthetic oil.

HELICAL & BEVEL REDUCER LUBRICATION TYPES

Oil Cross-reference Chart

ISO Viscosity	Oil Type	Ambient Temperature Range	Mobil	Shell	Castrol	FUCHS	KLÜBER LUBRICATION
VG150	MIN-EP	0 to 25°C (32 to 77°F)	Mobilgear 600XP150	Omala S2 G 150	Alpha SP150	Renolin EP150	Klüberoil GEM 1-150N
	PAO-EP	-30 to 25 °C (-22 to 77 °F)	Mobilgear SHC150	Omala S4 GX 150	Alphasyn EP150	Gearmaster SYN150/NA	Klübersynth EG 4-150
	PAO	-30 to 25°C (-22 to 77°F)	Mobil SHC629	Morlina S4 B 150	Alphasyn T150	N/A	Klübersynth GEM 4-150N
	PG	-25 to 25°C (-13 to 77°F)	Mobil Glygoyle 150	Omala S4 WE 150	Alphasyn PG150	Renolin PG150	Klübersynth GH 6-150
	FG	0 to 25°C (32 to 77°F)	Mobil DTE FM 150	N/A	N/A	N/A	N/A
	FG-PAO	-15 to 25°C (5 to 77°F)	Mobil SHC Cibus 150	N/A	N/A	Cassida GL150	Klüberoil 4 UH 1-150N
	FG-PG	-25 to 25°C (-13 to 77°F)	Mobil Glygoyle 150	N/A	N/A	N/A	Klübersynth UH1 6-150
VG220	MIN-EP	0 to 40°C (32 to 104°)	Mobilgear 600XP220	Omala S2 G 220	Alpha SP220	Renolin EP220	Klüberoil GEM 1-220N
	PAO-EP	-30 to 60 °C (-22 to 140 °F)	Mobilgear SHC220	Omala S4 GX 220	Alphasyn EP220	Gearmaster SYN220/NA	Klübersynth EG 4-220
	PAO	-30 to 60°C (-22 to 140°F)	Mobil SHC630	Morlina S4 B 220	Alphasyn T220	N/A	Klübersynth GEM 4-220N
	PG	-25 to 60°C (-13 to 140°F)	Mobil Glygoyle 220	Omala S4 WE 220	Alphasyn PG220	Renolin PG220	Klübersynth GH 6-220
	FG	0 to 40°C (32 to 104°F)	Mobil DTE FM 220	N/A	N/A	Fuchs FM220	N/A
	FG-PAO	-25 to 60°C (-13 to 140°F)	Mobil SHC Cibus 220	N/A	N/A	Cassida GL220	Klüberoil 4 UH 1-220N
	FG-PG	-25 to 60°C (-13 to 140°F)	Mobil Glygoyle 220	N/A	N/A	Cassida WG220	Klübersynth UH1 6-220
VG460	MIN-EP	0 to 40°C (32 to 104°F)	Mobilgear 600XP460	Omala S2 G 460	Alpha SP460	Renolin EP460	Klüberoil GEM 1-460N
	PAO-EP	-20 to 80°C (-4 to 176°F)	Mobilgear SHC460	Omala S4 GX 460	Alphasyn EP460	Gearmaster SYN460/NA	Klübersynth EG 4-460
	PAO	-20 to 80°C (-4 to 176°F)	Mobil SHC 634	Morlina S4 B 460	Alphasyn T460	N/A	Klübersynth GEM 4-460N
	PG	-20 to 80°C (-4 to 176°F)	Mobil Glygoyle 460	Omala S4 WE 60	Alphasyn PG460	N/A	Klübersynth GH 6-460
	FG	0 to 40°C (32 to 104°F)	Mobil DTE FM460	N/A	N/A	Fuchs FM460	N/A
	FG-PAO	-20 to 80°C (-4 to 176°F)	Mobil SHC Cibus 460	N/A	N/A	Cassida GL460	Klüberoil 4 UH 1-460N
	FG-PG	-20 to 80°C (-4 to 176°F)	Mobil Glygoyle 460	N/A	N/A	Cassida WG460	Klübersynth UH1 6-460

Low-end service temperature limit may vary for a specific lubricant; Please also see the important notes on Page 1.

NORDBLOC®.1 FOOTED OIL FILL QUANTITIES

NORDBLOC®.1 Fill Quantities (Footed)

The following NORD Gear reducers are shipped from the factory with a pre-determined oil fill level in accordance to the specified reducer size and mounting position. For oil plug & vent locations please see U14700.

IMPORTANT NOTE

Actual oil volume can vary slightly depending upon the gear case size, mounting and ratio. Prior to commissioning the reducer, check the oil-fill level using the reducer's oil level plug and drain or add addition oil as needed. The correct oil level should be located at the lower edge of the oil level hole.

For mounting orientations other than shown please consult NORD Gear. Reducer modifications may be required.

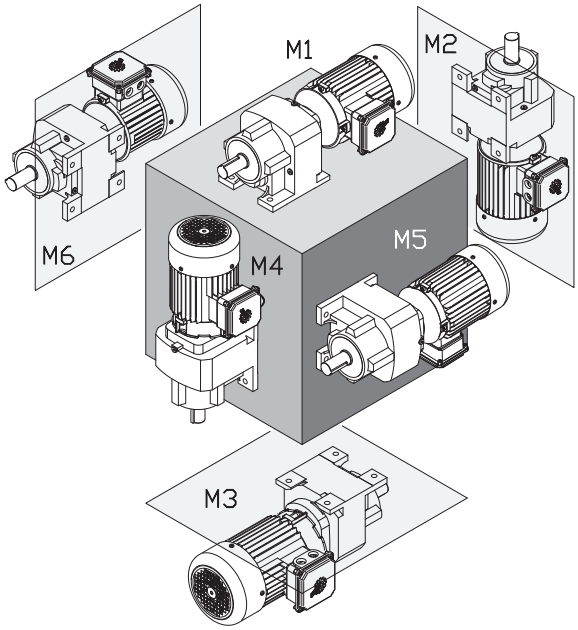

Type	M1		M2		M3		M4		M5		M6	
	Quarts	Liters	Quarts	Liters	Quarts	Liters	Quarts	Liters	Quarts	Liters	Quarts	Liters
SK 071.1	0.19	0.18	0.42	0.40	0.40	0.38	0.42	0.40	0.32	0.30	0.32	0.30
SK 072.1	0.17	0.16	0.34	0.32	0.22	0.21	0.24	0.23	0.19	0.18	0.21	0.20
SK 171.1	0.23	0.22	0.42	0.40	0.38	0.36	0.42	0.40	0.35	0.33	0.35	0.33
SK 172.1	0.29	0.27	0.62	0.59	0.44	0.42	0.48	0.45	0.34	0.32	0.41	0.39
SK 371.1	0.37	0.35	0.61	0.58	0.58	0.55	0.61	0.58	0.52	0.49	0.52	0.49
SK 372.1	0.48	0.45	1.10	1.05	0.79	0.75	1.10	1.00	0.63	0.60	0.69	0.65
SK 373.1	0.48	0.45	1.10	1.05	0.79	0.75	1.10	1.00	0.63	0.60	0.69	0.65
SK 571.1	0.51	0.48	0.91	0.86	0.85	0.80	0.97	0.92	0.72	0.68	0.72	0.68
SK 572.1	0.79	0.75	2.00	1.90	1.60	1.50	2.10	2.00	1.20	1.10	1.20	1.15
SK 573.1	0.79	0.75	2.00	1.90	1.60	1.50	2.10	2.00	1.20	1.10	1.20	1.15
SK 672.1	1.20	1.10	2.70	2.60	2.30	2.15	2.90	2.70	1.60	1.55	1.70	1.65
SK 673.1	1.20	1.10	2.70	2.60	2.30	2.15	2.90	2.70	1.60	1.55	1.70	1.65
SK 771.1	0.95	0.90	1.60	1.50	1.30	1.20	1.80	1.70	1.20	1.16	1.20	1.16
SK 772.1	1.40	1.30	4.00	3.80	2.50	2.40	3.40	3.20	1.70	1.60	2.60	2.50
SK 772.1 VL	2.10	2.00	4.00	3.80	2.50	2.40	3.40	3.20	1.70	1.60	2.60	2.50
SK 773.1	2.40	2.30	4.00	3.80	3.50	3.30	3.40	3.20	2.50	2.40	3.30	3.10
SK 773.1 VL	2.40	2.30	4.00	3.80	3.50	3.30	3.40	3.20	2.50	2.40	3.30	3.10
SK 872.1	3.10	2.90	8.20	7.80	4.90	4.60	6.80	6.40	2.60	2.50	4.20	4.00
SK 872.1 VL	5.30	5.00	8.20	7.80	4.90	4.60	6.80	6.40	2.60	2.50	4.20	4.00
SK 873.1	4.40	4.20	8.20	7.80	6.20	5.90	6.80	6.40	4.30	4.10	6.20	5.90
SK 873.1 VL	4.40	4.20	8.20	7.80	6.20	5.90	6.80	6.40	4.30	4.10	6.20	5.90
SK 972.1	4.80	4.50	13.00	12.00	7.90	7.50	12.00	11.50	4.40	4.20	7.90	7.50
SK 972.1 VL	9.00	8.50	13.00	12.00	7.90	7.50	12.00	11.50	4.40	4.20	7.90	7.50
SK 973.1	7.90	7.50	13.00	12.00	11.00	10.50	12.00	11.50	7.90	7.50	11.00	10.50
SK 973.1 VL	7.90	7.50	13.00	12.00	11.00	10.50	12.00	11.50	7.90	7.50	11.00	10.50

NORDBLOC®.1
OIL PLUG & VENT LOCATIONS

Oil plug connections

Prior to commissioning the reducer, check the oil-fill level using the reducer's oil-level plug and drain or add additional oil as needed. The correct oil level should be located at the lower edge of the oil level hole. ***For mounting orientations other than shown please consult NORD Gear. New plug locations may be required.***

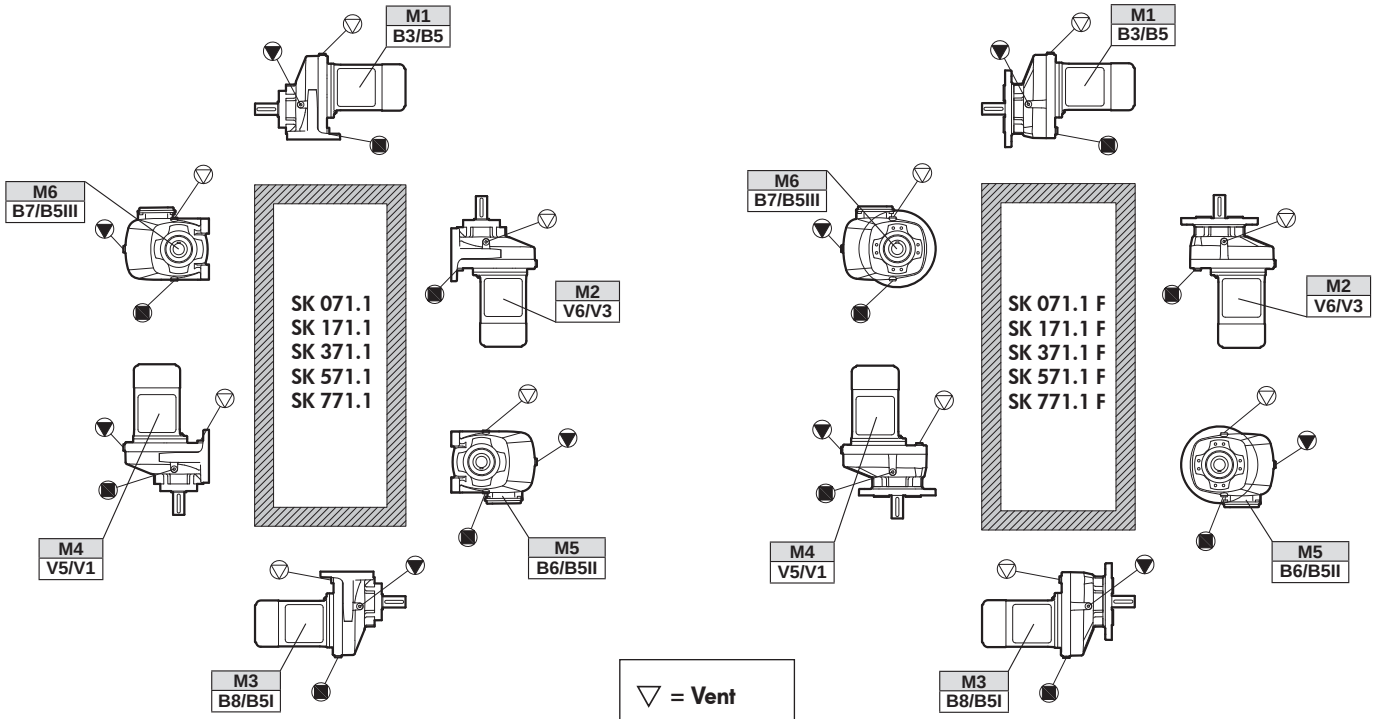

▽ = Vent

▼ = Oil Level

■ = Oil Plug

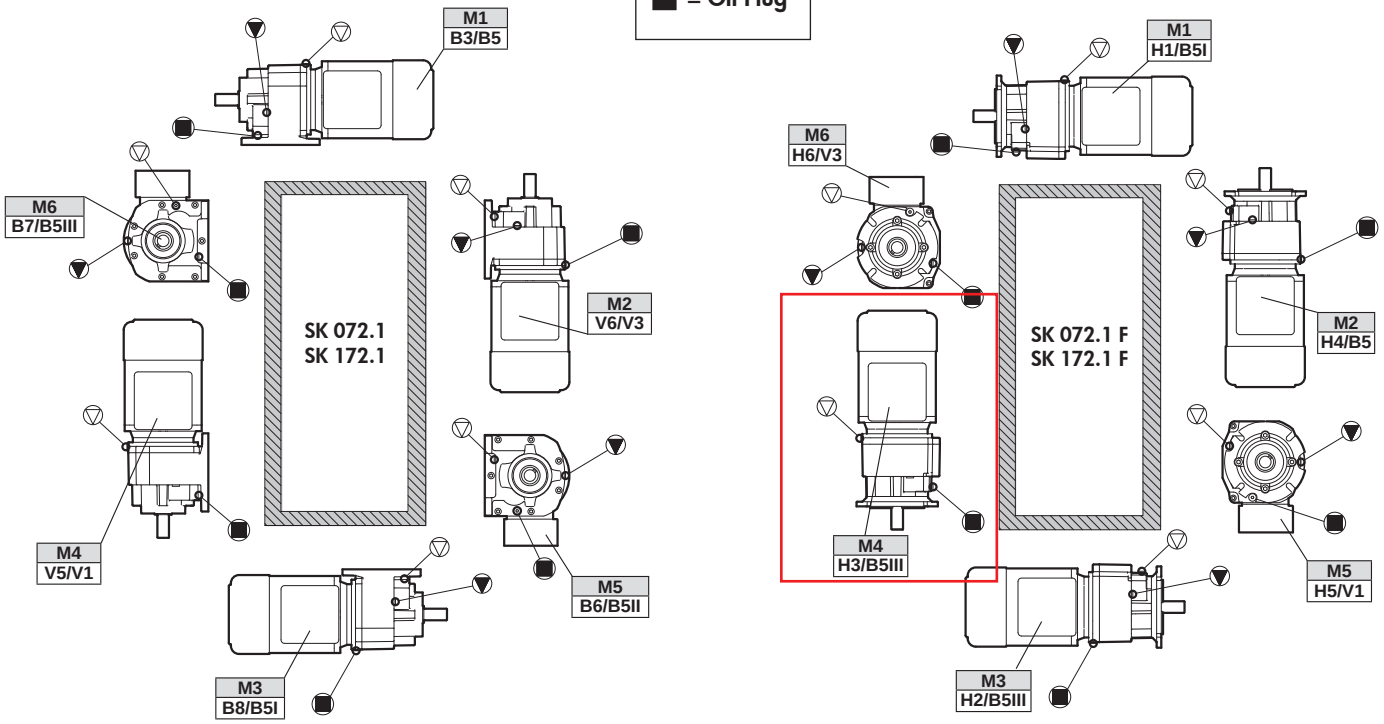

NORD Gear Limited
Toll Free in Canada: 800.668.4378

NORD Gear Corporation
Toll Free in the United States: 888.314.6673

NORDBLOC®.1
OIL PLUG & VENT LOCATIONS

Oil plug connections

Prior to commissioning the reducer, check the oil-fill level using the reducer's oil-level plug and drain or add additional oil as needed. The correct oil level should be located at the lower edge of the oil level hole. ***For mounting orientations other than shown please consult NORD Gear. New plug locations may be required.***

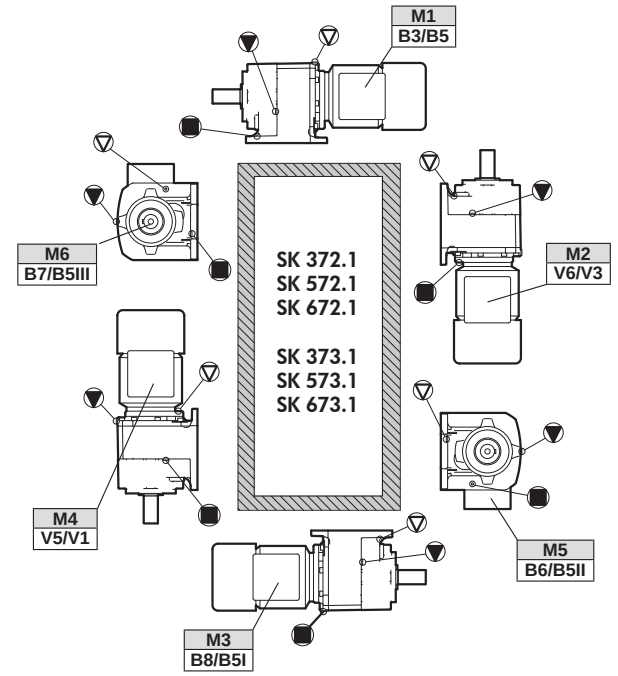

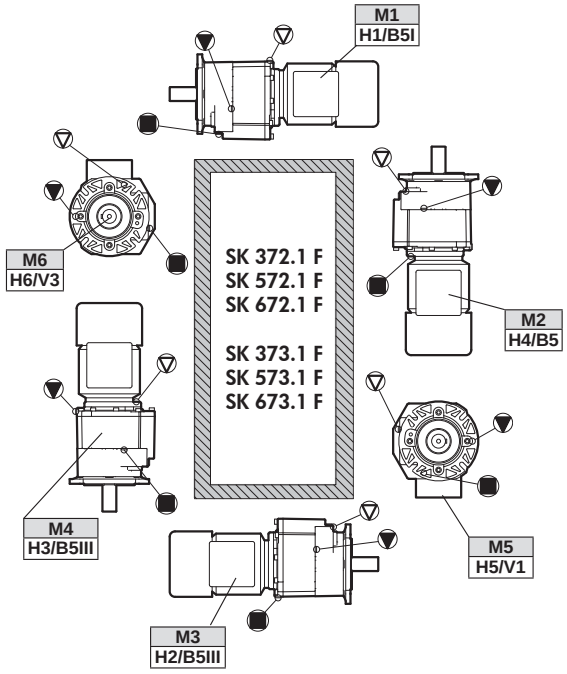

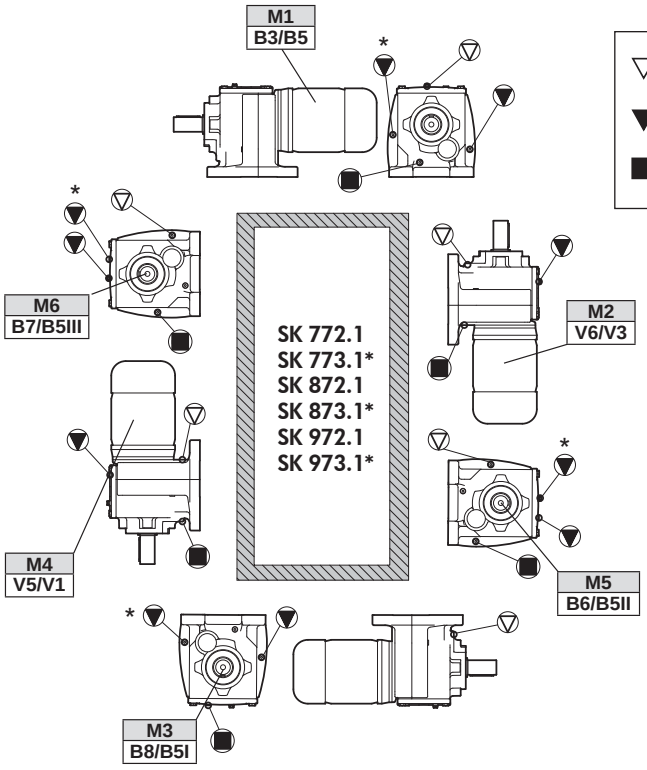

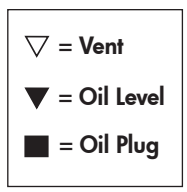

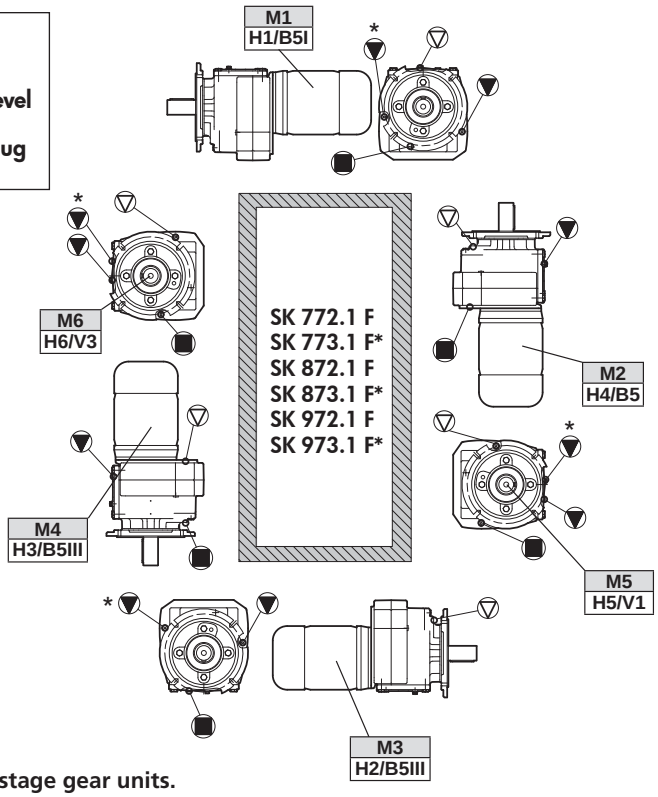

*** Oil fill level for three stage gear units.**

NORD Gear Limited
Toll Free in Canada: 800.668.4378

NORD Gear Corporation
Toll Free in the United States: 888.314.6673

TROUBLESHOOTING

Troubleshooting

This section identifies some of the most common issues involved with NORD Gear speed reducers , and provides recommendations to assist you in defining and answering your questions as you work with our products. You may also contact our Engineering/Application departments if your questions are not answered in the table below.

Problem With the Reducer		Possible Causes	Suggested Remedy
Runs Hot	Overloading	Load exceeds the capacity of the reducer	Check rated capacity of reducer, replace with unit of sufficient capacity or reduce the load.
	Improper lubrication	Insufficient lubrication	Check lubricant level and adjust up to recommended levels
		Excessive lubrication	Check lubricant level and adjust down to recommended levels.
		Wrong lubrication	Flush out and refill with correct lubricant as recommended
Runs Noisy	Loose foundation bolts	Weak mounting structure	Inspect mounting of reducer. Tighten loose bolts and/or reinforce mounting and structure.
		Loose hold down bolts	Tighten bolts
	Failure of bearings	May be due to lack of lubricant	Replace bearing. Clean and flush reducer and fill with recommended lubricant.
		Overload	Check rated capacity of reducer.
	Insufficient lubricant	Level of lubricant in reducer not properly maintained.	Check lubricant level and adjust to factory recommended level.
Output shaft does not turn	Internal parts are broken or missing	Overloading of reducer can cause damage	Replace broken parts. Check rated capacity of reducer.
		Key missing or sheared off on input shaft.	Replace key.
		Coupling loose or disconnected	Properly allign reducer and coupling. Tighten coupling.
Oil Leakage	Worn seals	Caused by dirt or grit entering seal.	Replace seals. Autovent may be clogged. Replace or clean.
	Unit runs hot or leaks	Overfilled reducer	Check lubricant level and adjust to recommended level.
		Vent clogged.	Clean or replace, being sure to prevent any dirt from falling into the reducer.
	Incorrect fill level	Improper mounting position, such as wall or ceiling mount of horizontal reducer.	Check mounting position on the name tag & verify with mounting chart in manual.

NEMA/IEC/SERVO INPUT ADAPTERS & THEIR COUPLINGS

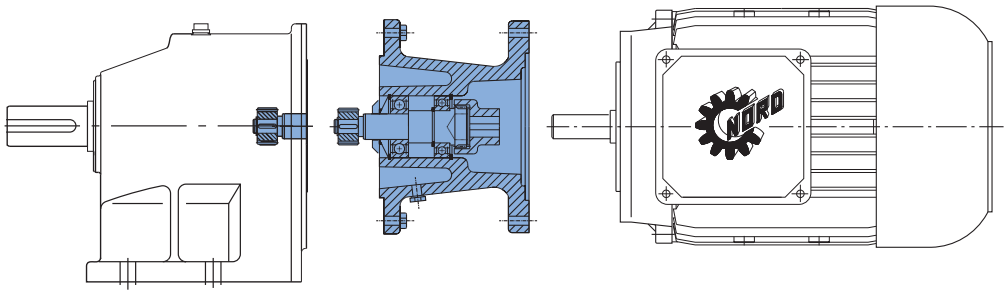

⚠ WARNING

While working on the gear drive system, make sure the power from the prime mover is isolated or secured on "lock-out" to prevent accidental start-up and to safeguard against injury!

NEMA/ IEC Motor Adapters

Motor adapters allow for easy installation and removal of industry standard motors. Motor adapters consist of a coupling and an adapter housing that connects the motor to the gear reducer.

NORD Gear supplies a coupling that is to be mounted on the motor shaft. It is important that the coupling is properly positioned.

- For NEMA Input Adapters, follow the Motor Installation Instructions on pages 3-4.
- For IEC Input Adapters, the supplied coupling will mount directly against the motor shaft shoulder. No locating measurements need to be taken.

IMPORTANT NOTE

Some of the larger IEC inputs will have a coupling spacer included to help locate the coupling. Slide the spacer against the motor shaft shoulder, slide the coupling against the spacer and tighten set screw(s).

IMPORTANT NOTE

For the larger motor adapters (IEC160 / N250TC and larger), an Automatic Lubricator is supplied. This will need to be activated at the time of startup. For operation and activation instructions, refer to user manual U45200.

NEMA/IEC Motor Weight Limits

When mounting a motor to a NORD NEMA C-face motor adapter it is important to consider the motor's weight. Following is a table that includes the maximum motor weight the NEMA adapter can support. If the motor exceeds the listed weight is must be externally supported. When a C-face mounted motor is externally supported care must be taken to ensure that the support system does not impose additional pre-loads on the NEMA motor adapter.

NEMA Motor Weight Limit

Motor FRAME	56C	143TC	145TC	182TC	184TC	210TC
Max Weight [lb]	66	88	110	130	175	220
Motor FRAME	**250TC**	**280TC**	**324TC**	**326TC**	**365TC**	
Max Weight [lb]	440	550	770	1100	1540	

IEC Motor Weight Limit

Motor FRAME	63	71	80	90	100	112	132
Max Weight [lb]	55	66	88	110	130	175	220
Motor FRAME	**160**	**180**	**200**	**225**	**250**	**280**	**315**
Max Weight [lb]	440	550	770	1100	1540	1540	3300

Couplings

Couplings are made with tough abrasion resistant materials, which resist most chemicals and petroleum products. They are electrically isolated (prevent metal to metal contact) and require no lubrication or maintenance. Depending upon the size of the C-face input, NORD provides either a gear or a jaw type coupling.

NORD supplies three different types of couplings depending on the size of input: "J" style, "M" style and "Jaw" style coupling. Following are instructions on how to properly mount each type of coupling onto the motor.

NEMA / IEC / SERVO INPUT ADAPTERS & THEIR COUPLINGS

Couplings for the NEMA and IEC Adapters

Depending on the size of the input adapter to the gearbox, NORD Gear supplies two styles of couplings - BoWex® (gear tooth) and Rotex® (jaw) couplings.

BoWex® Couplings

NORD C-face adapter input shafts have a machined spline on the end. NORD incorporates two styles of BoWex® couplings, the "J" and "M" styles. The "J" style is a one-piece coupling with a metal hub and nylon spline. The "M" style is a two-piece coupling – the metal hub and a nylon sleeve. Nylon and steel components allow them to operate in high ambient temperatures without lubrication or maintenance.

- Nylon sleeves resist dirt, moisture, most chemicals and petroleum products
- No lubrication required
- Operating Conditions: -22°F - 212°F (-30°C - 100°C)
- Higher temperature coupling sleeve available up to 250°F (120°C)
- Special bore available

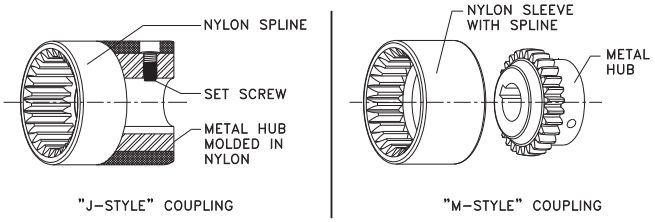

BoWex® Couplings Mechanical Ratings "J" Style (NEMA & IEC)

Coupling Type	Rated Torque Cont.	Rated Torque Peak	Input Adapter Sizes	Bore Size
BoWex® J14	44.3 lb-in 5 N-m	88.5 lb-in 10 N-m	N56C IEC63, IEC71	5/8" 11mm, 14mm
BoWex® J24	106 lb-in 12 N-m	212 lb-in 24 N-m	N56C, N140TC IEC80, IEC90	5/8", 7/8" 19mm, 24mm
BoWex® J28	398 lb-in 45 N-m	1,195 lb-in 135 N-m	N180TC IEC100, IEC112	1-1/8" 28mm

BoWex® Couplings Mechanical Ratings "M" Style (NEMA & IEC)

Coupling Type	Rated Torque Cont.	Rated Torque Peak	Input Adapter Sizes	Bore Size
BoWex® M38	708 lb-in 80 N-m	2,124 lb-in 240 N-m	N180TC, N210TC IEC132	1-1/8", 1-3/8" 38 mm
BoWex® M42	885 lb-in 100 N-m	2,655 lb-in 300 N-m	N250TC IEC160	1-5/8" 42 mm
BoWex® M48	1,239 lb-in 140 N-m	3,717 lb-in 420 N-m	N280TC IEC180	1-7/8" 48 mm

Rotex® Couplings

The cast iron jaw type couplings have an integral urethane "spider" that provides smooth transmission of the motor torque. A set screw on the coupling prohibits axial movement along the motor shaft.

- Excellent shock and vibration dampening
- Excellent resistance to oils and most chemicals
- No metal-to-metal contact
- Operating Conditions: -22°F - 195°F (-30°C - 90°C)
- Higher temperature material (Hytrel) spider available up to 230°F (110°C)
- Low temperature materials available upon request
- Special bores available

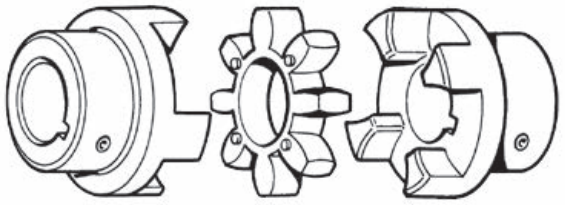

Rotex® Couplings Mechanical Ratings "R" Style (NEMA & IEC)

Coupling Type	Rated Torque Cont.	Rated Torque Peak	Input Adapter Sizes	Bore Size
Rotex® R65	5,532 lb-in 625 N-m	11,063 lb-in 1,250 N-m	N320TC IEC200, IEC225	2-3/8" 55mm, 60mm
Rotex® R90	21,242 lb-in 2400 N-m	42,484 lb-in 4800 N-m	N360TC IEC250, 280, 315	1-5/8" 65, 70, 80 mm

Couplings for Servo Adapters

NORD Gear supplies Rotex® (jaw) couplings for SERVO adapter connections.

Rotex® Couplings Mechanical Ratings (Servo Adapter)

Coupling Type	Rated Torque Cont.	Rated Torque Peak	Input Adapter Sizes	Reducer Input Flange	Bore Size
Rotex® R19 GS	150 lb-in 17 Nm	301 lb-in 34 Nm	-SEP100, -SEK100	160S	19 mm
Rotex® R24 GS	531 lb-in 60 Nm	1062 lb-in 120 Nm	-SEP130, -SEK130	160S, 250S	24 mm
Rotex® R28 GS	1416 lb-in 160 Nm	2832 lb-in 320 Nm	-SEP165, -SEK165, -SEP215, -SEK215	160S, 250S 250S	32 mm 38 mm
Rotex® R48 GS	4647 lb-in 525 Nm	9293 lb-in 1050 Nm	-SEP215, -SEK215 -SEP300, -SEK300 -SEP300, -SEK300	300S 300S 350	38 mm 48 mm

SEP adapter couplings are for keyed motor shafts.
SEK adapter couplings are clamping style for shafts without key.
Alternate bores upon request.

"J" Style Coupling NEMA C-face Motor Installation

1. Measure the distance from the face of the input adapter to the face of the splined shaft and record that measurement as A in the equation below.
2. Measure depth of coupling engagement zone and record the measurement as "B" in the equation below.
3. Add "A" + "B" and subtract 0.08" (~2mm) from the distance. This needs to be done so that the coupling will not be preloaded after installation!
4. Use that measurement to locate the coupling from the face of the motor onto the shaft.
5. Once in place, tighten the set screw to lock the coupling in place. It is recommended that the key is staked or bonded (Loctite) in place to prohibit the key from vibrating out.
6. Mount the motor onto the input adapter with customer supplied bolts. Make sure that the coupling from the adapter and the motor engage securely. Use lock washers or Loctite to prohibit bolts from becoming loose from vibration.

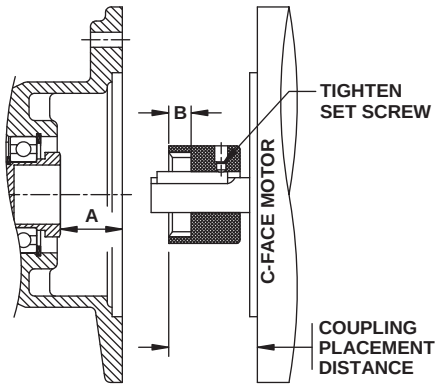

MEASURED DISTANCES A + B		SUBTRACT DISTANCE	COUPLING PLACEMENT DISTANCE
___ +	___	- 0.080" (2mm) =	_____

"M" Style Coupling NEMA C-face Motor Installation

1 Measure the distance from the face of the input adapter to the face of the splined shaft & record that measurement.
2. Subtract 0.31" (~8mm) from the distance. This needs to be done so that the coupling will not be preloaded after installation!
3. Use that measurement to locate the coupling from the face of the motor onto the shaft.
4. Once in place, tighten the set screw to lock the coupling in place. It is recommended that the key is staked or bonded (Loctite) in place to prohibit the key from vibrating out.
5. Mount the motor onto the input adapter with customer supplied bolts. Make sure that the coupling from the adapter and the motor engage securely. Use lock washers or Loctite to prohibit bolts from becoming loose from vibration.

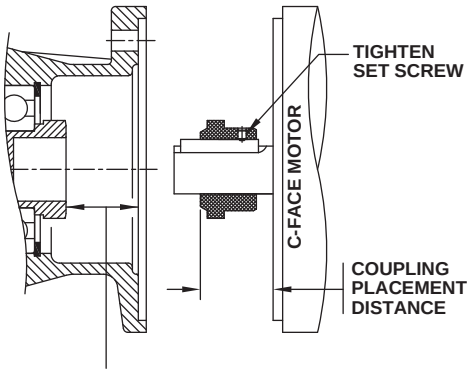

MEASURED DISTANCE	SUBTRACT DISTANCE	COUPLING PLACEMENT DISTANCE
_____	- 0.310" (8mm) =	_____

"Jaw" Style Coupling NEMA C-face Installation

1. Measure the distance from the face of the input adapter to the face of the coupling as shown and record that measurement.
2. Subtract the "X" dimension from the measured distance. This needs to be done so that the coupling will not be preloaded after installation!
3. Use that measurement to locate the coupling from the face of the motor onto the shaft.
4. The metal portion of the coupling should be heated up prior to assembly, generally 250°F to 300°F (120°C to 150°C).

> *IMPORTANT NOTE*
>
> DO NOT HEAT THE URETHANE SPIDER.

5. Once in place, tighten the setscrew to lock coupling in place. Let the coupling cool down before placing the spider into the jaws. It is recommended that the key is staked or bonded (Loctite) in place to prohibit the key from vibrating out.
6. Mount the motor onto the input adapter with customer supplied bolts. Make sure that the coupling from the adapter and the motor engage securely. Use lock washers or Loctite to prohibit bolts from becoming loose from vibration.

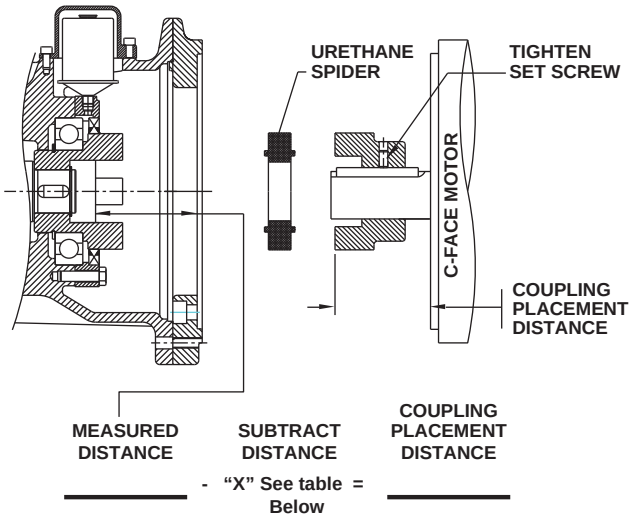

Coupling Size	"X" (Subtract this value from measured distance)
R14	0.06" (1.5 mm)
R19 & R24	0.08" (2.0 mm)
R28	0.10" (2.5 mm)
R38 & 42	0.12" (3.0 mm)
R48	0.14" (3.5 mm)
R65	0.18" (4.5 mm)
R90	0.22" (5.5 mm)

NEMA/IEC/SERVO INPUT ADAPTERS & THEIR COUPLINGS

IEC 63-112 / IEC132-180 / IEC 160-315 &
NEMA 56C-180TC, NEMA 180TC-N280TC, NEMA 320TC-360TC

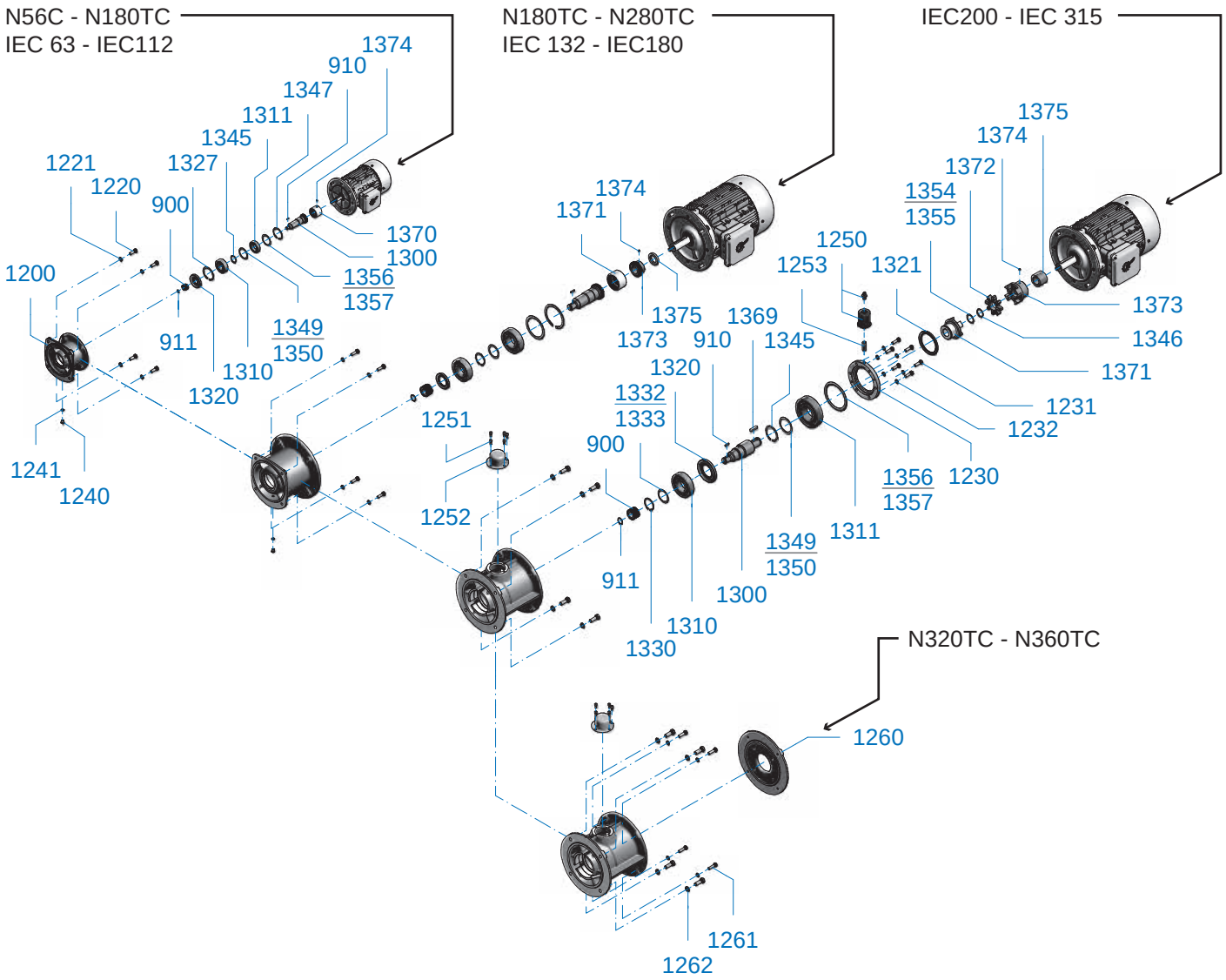

NEMA/IEC Parts List

900	Drive pinion	1231	Screw	1305	Parallel key	1332	Shim
910	Parallel key	1232	Spring lock washer	1310	Bearing	1333	Shim
911	Circlip	1234	Shim	1311	Bearing	1345	Circlip
1200	Housing	1235	Shim	1312	Bearing	1346	Circlip
1210	Gasket	1240	Screw	1320	Radial packing ring	1348	Support disc
1220	Screw	1241	Gasket	1321	Radial packing ring	1356	Shim
1221	Spring lock washer	1245	Lubricating nipple	1330	Circlip	1357	Shim
1230	Lid	1300	Drive Shaft	1331	Circlip	1380	Gamma ring

SERVO SEP/SEK 100, SEP/SEK 130, SEP/SEK 165, SEP/SEK 215, SEP/SEK 300

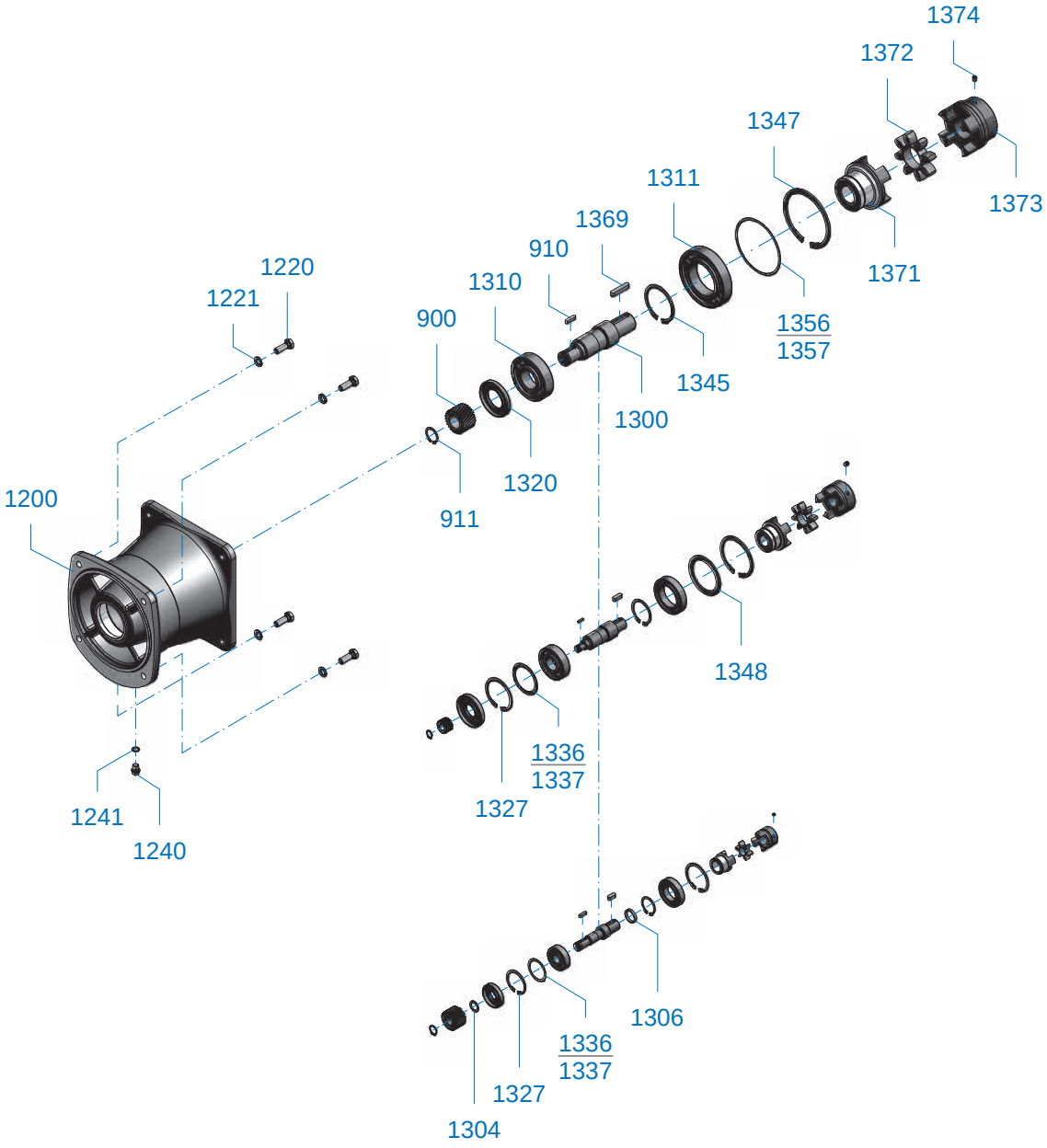

SERVO Parts List

900	Drive pinion	1241	Gasket	1327	Circlip	1357	Shim
910	Parallel key	1300	Drive Shaft	1336	Shim	1369	Parallel key
911	Circlip	1304	Support disc	1337	Shim	1371	Coupling half
1200	Housing	1306	Support disc	1345	Circlip	1372	Ring gear
1220	Screw	1310	Bearing	1347	Circlip	1373	Half-coupling
1221	Spring lock washer	1311	Bearing	1348	Support disc	1374	Screw
1240	Screw	1320	Radial packing ring	1356	Shim		

MANUFACTURER INSTALLATION OPERATION AND MAINTENANCE MANUAL

IQALUIT – WWTP UPGRADE – NUNAVUT

VEOLIA PROJECT: 5000 218 036

NETZSCH

MODEL NM031BY01L06B, PROGRESSIVE CAVITY PUMP
MODEL NM045BY01L07V, PROGRESSIVE CAVITY PUMP

LEFT BLANK

SHOP DRAWINGS SUBMITTAL PACKAGE

PROJECT: IQALUIT
PROJECT#: 5000218036

VEOLIA WATER TECHNOLOGIES INC.
4105 Sartelon, Saint-Laurent,
Québec, Canada H4S 2B3.

-

NETZSCH CANADA INC.
500 Welham Road
Barrie, ON
L4N 8Z7

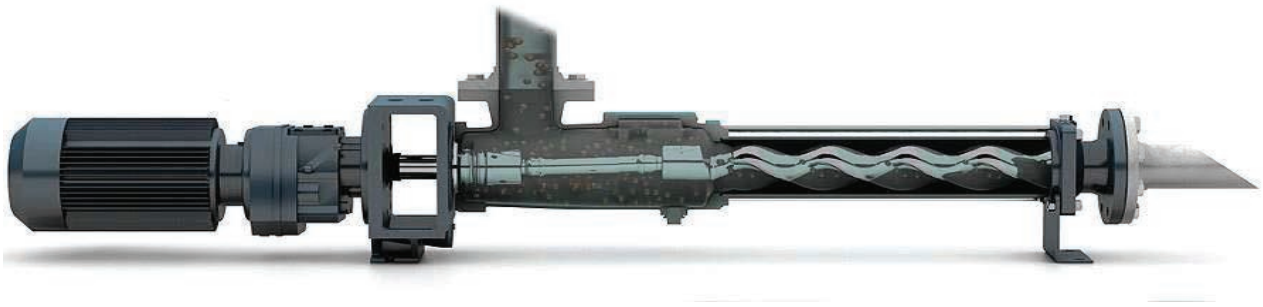

1	Pump Technical Specification with Performance Curve TWAS Pumps P02-610, P02-620 - NM031BY01L06B	Page:4
2	General Arrangement Drawings NM031BY01L06B	Page:10
3	Pump manual	Page: 13
4	Pump datasheet NM031BY01L06B	Page: 73
5	Motor data package NM031BY01L06B	Page:75
6	Motor IOM Manual	Page:83
7	Onyx Isolator ring	Page:93
8	Nord Gear reducer manual	Page: 127
9	STP3 Probe and controller	Page: 142

.
NETZSCH CANADA INC.
500 WELHAM ROAD
BARRIE, ONTARIO, L4N 8Z7
www.pumps.netzsch.com

TEL: +1 705-797-8426
FAX: +1 705-797-8427

10	**Pump Technical Specification with Performance Curve BFP feed Pumps P02-630, P02-640 - NM045BY01L07V**	**Page:165**
11	**General Arrangement Drawings NM045BY01L07V**	**Page:171**
12	**Pump datasheet NM045BY01L07V**	**Page: 174**
13	**Motor data package NM045BY01L07V**	**Page: 176**

.
NETZSCH CANADA INC.
500 WELHAM ROAD
BARRIE, ONTARIO, L4N 8Z7
www.pumps.netzsch.com

TEL: +1 705-797-8426
FAX: +1 705-797-8427

TECHNICAL SPECIFICATIONS
TWAS PUMPS P02-610, P02-620

NETZSCH Canada, Inc. 500 Welham Rd., Barrie, On., L4N 8Z7
Ph: 705-797-8426 Fax: 705-797-8427 Toll Free: 1-866-683-7867

Pump Quotation – Technical

Offer: N180503ST-01

NEMO® pump with base plate and drive: NM031BY01L06B

The physical characteristics of the pumped product, the application details, as well as the General Operating Conditions detailed in our offer have been taken from your inquiry or where not specified have been assumed by us. In the event of an order we would ask you to check any assumptions and all details as they will become contractually binding along with the selection of pump model, Drive, all specifications, and materials of construction, based on these details.

Product:		***Content***	***TWAS***
Composition			
Specific Gravity	Assumed	kg/dm³	1.05
Particle size/solid ball size	Allowed	mm	7/28
pH value	Approx.		NA
Solids content (w/w)	approx.	% TS	1-5
Dynamic viscosity	Approx.	cP	30000-63000
Vapour pressure	Approx.	kPaa	NA

Application details:		***Content***	***normal***	***maximum***
Flow rate (Q)	approx.	m^3/hr	0.936	1.656
Differential pressure		bar	0.6	1
Suction pressure	Assumed	barg	flooded	Flooded
Discharge pressure	approx.	barg	0.6	1
Pump operating speed	approx.	RPM	120	205
Sliding velocity	approx.	m/s	0.25	0.45
Frequency	approx.	Hz	20	60
Power required at drive shaft	approx.	Kw	0.18	0.3
Running torque	approx.	Nm	11	11
Starting torque	approx.	Nm	23	23
Operating temperature	Assumed	°C	10	20

Assembly specification

installation	horizontal

General operating conditions

Installation area	Inside
ambient Temperature	approx. 20°C
humidity	up to 75%
application type	Continuous operation
operating hours	24 hours/day
service voltage	3/60/575

Painting	coating system	Netzsch Standard

Operating and Maintenance Instructions

Standard documentation in accordance with the 98/37/EG Machinery Directive.
Special documentation is available on request and would be charged for.

number	1
medium	Paper
language for O&M's and spare parts list	English
dispatch method	shipped with pump

NETZSCH Canada, Inc. 500 Welham Rd., Barrie, On., L4N 8Z7
Ph: 705-797-8426 Fax: 705-797-8427 Toll Free: 1-866-683-7867

Offer: N180503ST-01
Date: May 3, 2018
Customer No.:

NEMO® NM031BY01L06B Pump

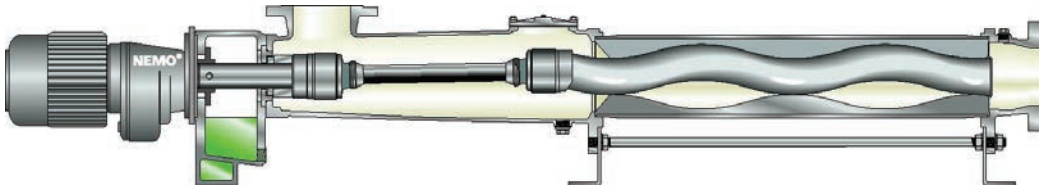

Characteristics and benefits of the NEMO® BY Block pump:

- Reliable and sophisticated construction
- Space-saving construction
- Modular construction system
- 4 different stator – rotor geometries available for most sizes
- Low investment and operating costs
- Low maintenance expenses

General characteristics	
name plate on the pump	in English (Stainless steel)
direction of rotation	to the left, counterclockwise (as viewed from drive end)

Pump Pedastal	
material	Cast iron 0.6025

Pump housing / End connection	
housing material	Cast Iron 0.6025
flange position	Pump#1::Left from DE, Pump#2: Right from DE
function of housing connection	suction connection
nom. dia. & pressure for pump housing	2" – 125# ANSI FF
nom. dia. & pressure of discharge flange	2" – 125# ANSI FF
Function of end connection	discharge connection
housing seals	FPM

Shaft seal	
type	Single mechanical Seal
shaft seal materials	Silicon Carbide Faces – Viton Elastomers
shaft seal type	MG1 Single Mechanical Seal

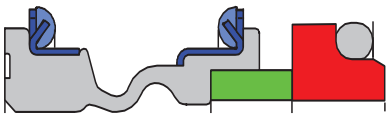

Rotating parts	
rotating parts materials	316 Stainless Steel Internals

NETZSCH Canada, Inc. 500 Welham Rd., Barrie, On., L4N 8Z7
Ph: 705-797-8426 Fax: 705-797-8427 Toll Free: 1-866-683-7867

Offer: N180503ST-01
Date: May 3, 2018
Customer No.:

Joints		
	joint type	pin joint (B)
	sealing type	SM Pin joint
	joint sealing material	Buna/316 Stainless Steel
	joint lubrication	Mineral oil

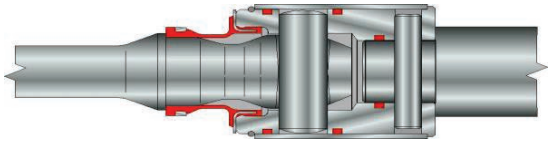

Rotor		
	rotor material	SAE 4140- Hard Chrome Plated Tool steel
	temperature range for Stator expansion	UM20

Stator		
	stator material	NEMOLAST® S61M - Buna Nitrile
	accesory	STP-3 Dry Run Protection Sensor with Omron Controller

Drive

Gear reducer		
	manufacturer	Nord
	type	SK92172.1VF-140TC
	gear ratio	7.58
	speed @ 60 Hz	202
	mounting position	M1
Motor		
	Manufacturer	TECO Westinghouse
	motor HP	1
	winding voltage	575
	voltage range	+/- 10%
	Frequency	60 Hz
	number of poles	4
	number of phases	3
	Motor speed	1765 rpm
	Protection Type	IP54- TEFC, Class I, Div. II, Premium Efficiency
	insulation class	F

Baseplate

	assembly specification - material	Structural steel baseplate

Approximate weight of pump, gear reducer and baseplate	175 lb.

NETZSCH Canada, Inc. 500 Welham Rd., Barrie, On., L4N 8Z7
Ph: 705-797-8426 Fax: 705-797-8427 Toll Free: 1-866-683-7867

Offer: N180503ST-01
Date: May 3, 2018
Customer No.:

Performance curve:

NM031--01L

Förderkennlinie / Performance Curve
Statorwerkstoff / elastomer quality: standard

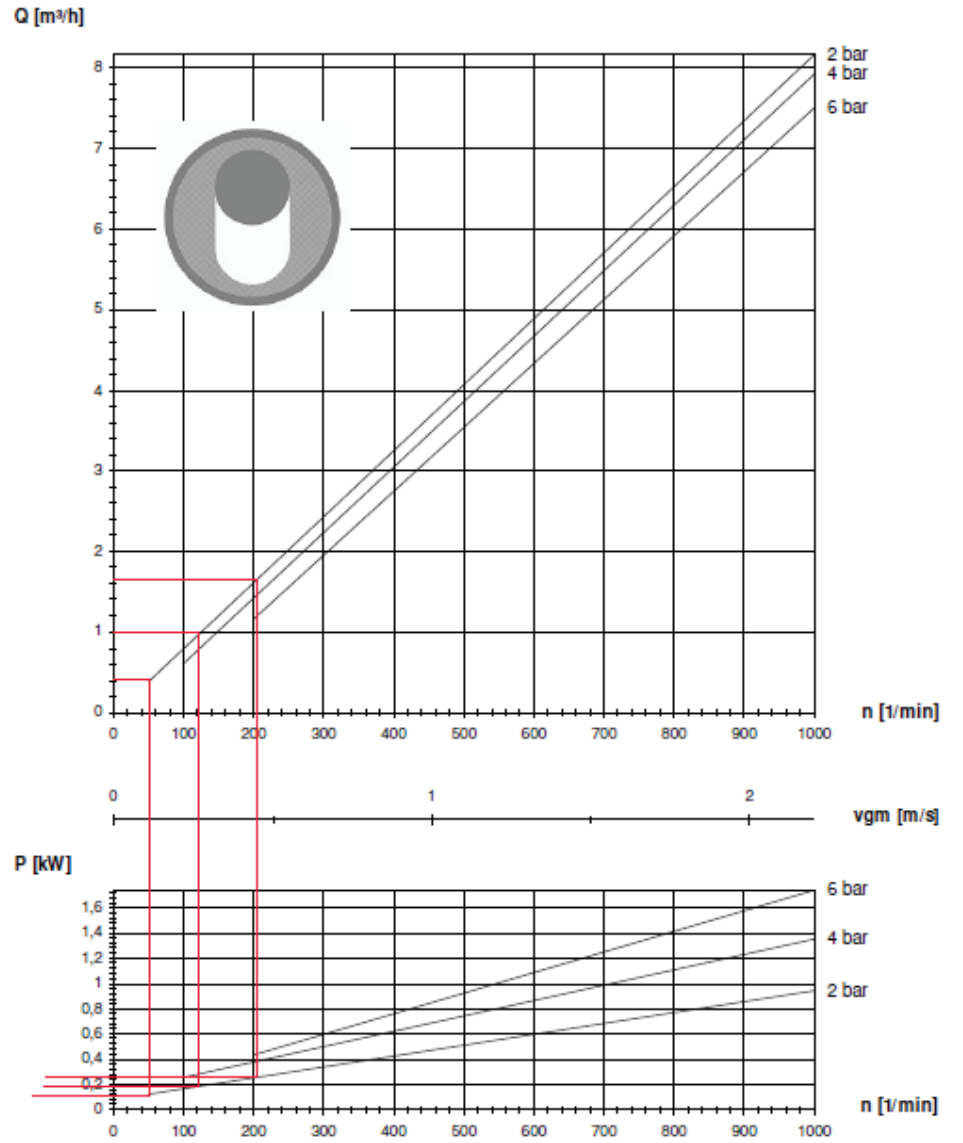

Losbrechmoment / starting torque T(L) = 23 Nm

Druck / pressure	T
2 bar	11 Nm
4 bar	15 Nm
6 bar	19 Nm

Gültigkeit für Wasser (1 cP) bei 20 °C. Toleranzen nach VDMA 24284 (+10%/-5%).
Valid for water (1 cP) at 20 °C (70 °F). Tolerances are in accordance with VDMA 24284 (+10%/-5%).

www.netzsch-pumpen.de

NETZSCH Canada, Inc. 500 Welham Rd., Barrie, On., L4N 8Z7
Ph: 705-797-8426 Fax: 705-797-8427 Toll Free: 1-866-683-7867

Offer: N180503ST-01
Date: May 3, 2018
Customer No.:

Pump drawing: For reference only

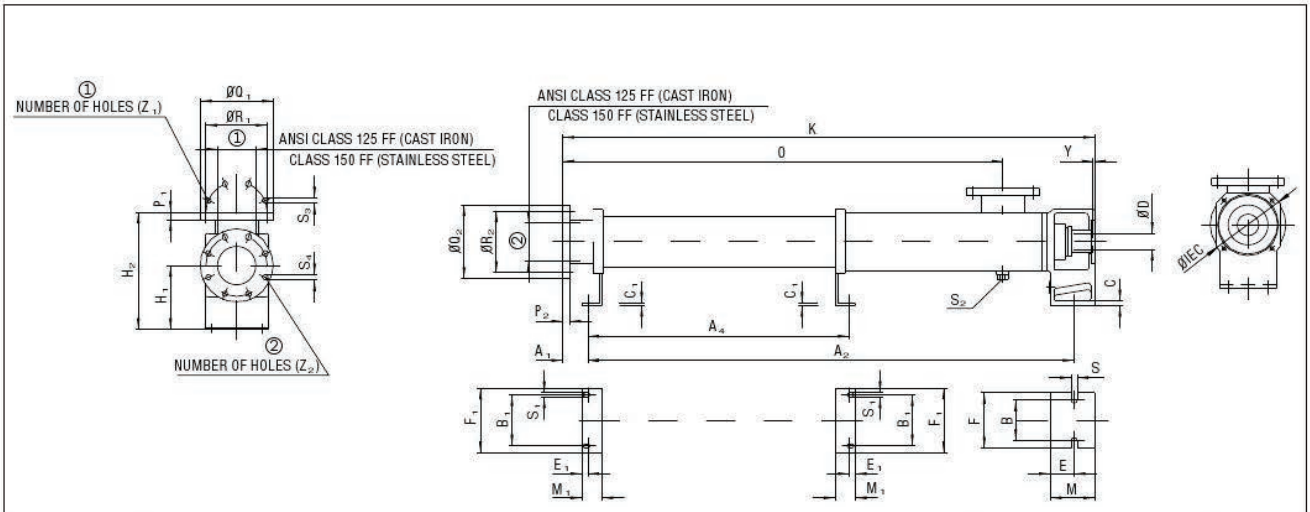

TYPE	BASIC DIMENSIONS																				ANSI PIPE CONNECTION						SHAFT END	
	A1	A2	A4	B	B1	C	C1	E	E1	F	F1	H1	H2	K	M	M1	O	S	S1	S2	Y	① / ②	P1 / P2	Q1 / Q2	R1 / R2	S3 / S4	Z1 / Z2	DMIN / DMAX	IEC
NM015BY 02S12 / 01L06	41	411	–	95	50	8	5	28	15	125	80	100	160	481	55	40	328	12	9	NPT 1/2"	5	①	INTERNAL THREAD NPT 1 1/4"					12 / 20	140 / 160
																						②	INTERNAL THREAD NPT 1 1/4"						
NM021BY 02S12 / 01L06	41	487	–	95	50	8	5	28	15	125	80	100	160	557	55	40	404	12	9	NPT 1/2"	5	①	INTERNAL THREAD NPT 1 1/4"					12 / 20	140 / 160
																						②	INTERNAL THREAD NPT 1 1/4"						
NM031BY 02S12 / 01L06	77	637	–	115	69	10	5	27	20	150	100	112	222	759	70	50	540	12	11	NPT 3/4"	5	①	2"	15.7	152.4	120.6	19	4	20 / 28	160 / 200 / 250
																						②	2"	15.7	152.4	120.6	19	4		
NM038BY 02S12 / 01L06	85	950	–	115	95	10	6	35	20	150	130	132	262	1082	80	55	838	14	11	NPT 3/4"	5	①	3"	19.1	190.5	152.4	19	4	20 / 32	200 / 250
																						②	2.5"	17.5	177.8	139.7	19	4		

All dimensions are in mm. All dimensions are subject to change without notice.
Flanges are ANSI to inch standards. All flanges are flat faced.
All pumps are Thru-bolt Construction. Thru-bolts not shown for clarity.
For weights, use equivalent weights for SY pumps.

NETZSCH

NEMO PUMP (WP)
RANGE NM ··· B 02S12 / 01L06

DRAWING NUMBER
NDB4908995

GENERAL ARRANGEMENT DRAWING(GAD)

Dimension tolerances				Tolerances to flanges according ASME B16.1 E B16.5	
Measure	Tolerance	Measure	Tolerance		
>3 to 6	±0,5	>400 to 1000	±4,0		Tolerance
>6 to 30	±1,0	>1000 to 2000	±6,0	Diameter of bolt circle	+1,5
>30 to 120	±1,5	>2000 to 4000	±8,0	Diameter of bolt holes	+1,0
>120 to 400	±2,5	>4000	±20	Thickness	+3,0

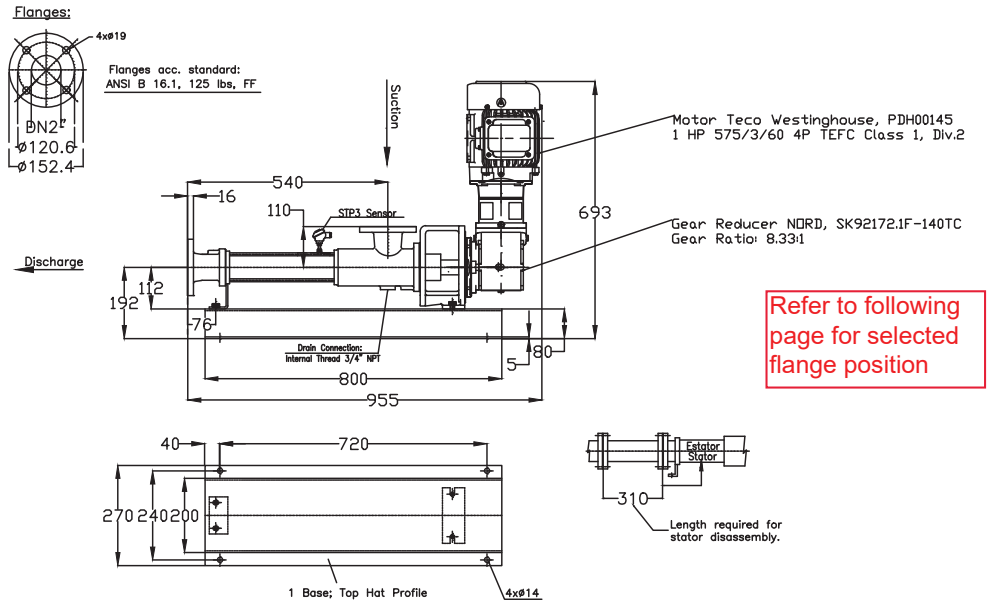

Refer to following page for selected flange position

WEIGHT: 170 lbs approx.

NETZSCH, CANADA INC.

THIRD ANGLE PROJECTION

THIS DRAWING IS THE SOLE PROPERTY OF NETZSCH CANADA, INC. BARRIE, ONT, CANADA. ANY USE OR REPRODUCTION OF ANY PART THERE OF IS FORBIDDEN WITHOUT WRITTEN APPROVAL OF NETZSCH CANADA, INC.

NETZSCH

UNLESS OTHERWISE SPECIFIED:
DIMENSIONS ARE IN mm [inches]
TOLERANCES: 2 PL DEC ± 0.01
3 PL DEC ± 0.005
ANGLE ± 0.5 °
REMOVE ALL BURRS
ALL CORNERS R 0.010 OR BBEAK
MIN RECEIVING INSPECTION PT

Project #	Part #	P.O.#	REV.
DESCRIPTION: NEMO PUMP MODEL NM031BY01L06B		DRAWN BY: A.E.	DATE: Nov. 26, 2018
NTC DRAWING NO.: B031BY1-N180503ST-01	Materials: 0.6025/316/4140vcp/NBR/MG1/C.S.Baseplate		
COMMENTS: Baseplate to have drip lip,grout holes & drain		DO NOT SCALE	SHEET: 1 of 1

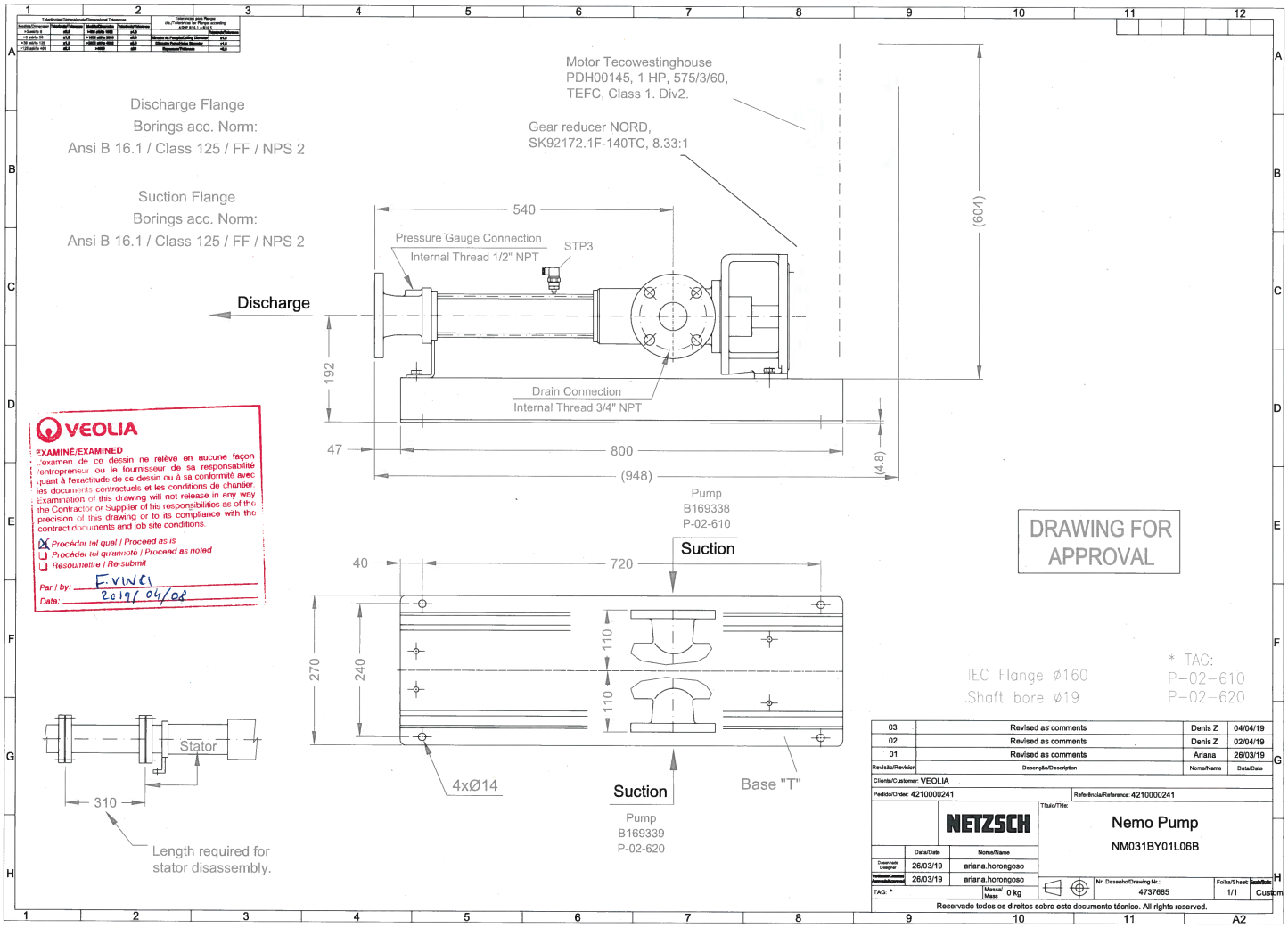
Discharge Flange
Borings acc. Norm:
Ansi B 16.1 / Class 125 / FF / NPS 2
Suction Flange
Borings acc. Norm:
Ansi B 16.1 / Class 125 / FF / NPS 2
Motor Tecowestinghouse
PDH00145, 1 HP, 575/3/60,
TEFC, Class 1. Div2.
Gear reducer NORD,
SK92172.1F-140TC, 8.33:1
Pressure Gauge Connection
Internal Thread 1/2" NPT
STP3
Discharge
Drain Connection
Internal Thread 3/4" NPT
540
(604)
192
47
800
(948)
(4.8)
Pump
B169338
P-02-610
Suction
40
720
270
240
110
110
4xØ14
Suction
Base "T"
Pump
B169339
P-02-620
Stator
310
Length required for
stator disassembly.
IEC Flange Ø160
Shaft bore Ø19
* TAG:
P-02-610
P-02-620
DRAWING FOR
APPROVAL
VEOLIA
EXAMINÉ/EXAMINED
L'examen de ce dessin ne relève en aucune façon l'entrepreneur ou le fournisseur de sa responsabilité quant à l'exactitude de ce dessin ou à sa conformité avec les documents contractuels et les conditions de chantier.
Examination of this drawing will not release in any way the Contractor or Supplier of his responsibilities as of the precision of this drawing or to its compliance with the contract documents and job site conditions.
Procéder tel quel / Proceed as is
Procéder tel qu'annoté / Proceed as noted
Resoumettre / Re-submit
Par / by: F.VINCI
Date: 2019/04/08
03 Revised as comments Denis Z 04/04/19
02 Revised as comments Denis Z 02/04/19
01 Revised as comments Ariana 26/03/19
Revisão/Revision | Descrição/Description | Nome/Name | Data/Date
Cliente/Customer: VEOLIA
Pedido/Order: 4210000241
Referência/Reference: 4210000241
NETZSCH
Título/Title:
Nemo Pump
NM031BY01L06B
Desenhado/Designed 26/03/19 ariana.horongoso
Verificado/Checked
Aprovado/Approved 26/03/19 ariana.horongoso
TAG: *
Massa/Mass 0 kg
Nr. Desenho/Drawing Nr.: 4737685
Folha/Sheet 1/1
Custom
Reservado todos os direitos sobre este documento técnico. All rights reserved.
A2

PUMP MANUAL

Pumps
Business Unit

Operating and Maintenance Instructions



NETZSCH Canada, Incorporated
500 Welham Road
Barrie, Ontario L4N 8Z7
Tel: (705) 797-8426
Fax: (705) 797-8427
Toll: 866 683-7867

www.pumps.netzsch.com

WARNING!!!!

When **Variable Frequency Drives (VFD's)** are being used to vary the speed of the NETZSCH Progressing Cavity Pumps, then they **MUST be CONSTANT TORQUE VFD's.**

How the pump works

NETZSCH Progressing Cavity Pumps operate at a constant torque requirement for a specific operating pressure. The speed of the pump does NOT affect the torque requirement. **For example:** a pump running at 60psi output pressure at a speed of 200 revolutions per minute requires the same toque input as if it were running at 60psi output pressure at a speed of 600 revolutions per minute. The only exception to this rule is during pump startup; at the moment the pump starts the motor must provide more torque than the pump requires when it is running. This is due to the force of static friction that the motor must overcome in order to begin rotation. Although this is only a momentary force, enough torque has to be available to break the static load.

How the VFD works

Variable Frequency Drives work by taking the supplied power and modulating the supplied power frequency in linear proportion to the supplied voltage. This proportional modulation allows the motors speed to be altered without the motor drawing too many amps and burning out. A VFD can be built to perform this modulation in one of two ways. The VFD can be set to modulate the frequency above the normal supplied 60HZ frequency allowing the output to provide a constant amount of power but the torque will drop off as speed is increased **(THIS IS A CONSTANT HP VFD**) or it can modulate the frequency below the normal supplied 60HZ frequency allowing the output to provide constant Torque but the power will decrease as the speed is reduced **(THIS IS A CONSTANT TORQUE VFD).** This relationship is shown in the detail below. The manufacturers of VFD's typically offer two service factors. Normal Duty; which

has an overload capacity of the VFD's full load ampere rating times 110% - 120% for one minute and Heavy Duty; which has an overload capacity of the VFD's full load ampere rating times 150% for one minute. Typically, constant Hp VFD's are sold with a Normal duty rating since the applications don't call for high starting torque which causes amp draw to spike. Constant torque VFD's are usually sold with heavy duty ratings so that they can supply elevated startup amp draws for high starting torque applications.

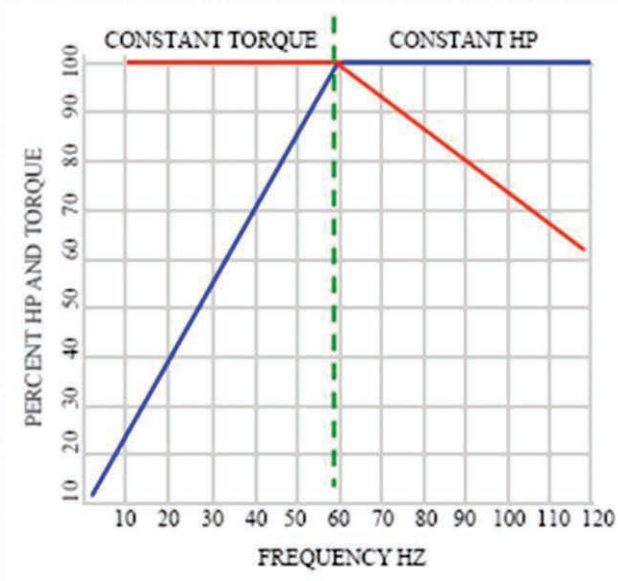

VFD Speed Torque Characteristics

Blue = Horsepower
Red = Torque
Green = Motor Nameplate Frequency (60 Hz)

In Constant Torque Area - VFD supplies rated motor nameplate voltage and motor develops full horsepower at 60 hertz base frequency.

In Constant Horsepower Area - VFD delivers motor nameplate rated voltage from 60 Hertz to 120 hertz (or drive maximum). Motor horsepower is constant in this range but motor torque is reduced as frequency increases.
Note: Motor HP = Torque x RPM

Application:

Because while running a progressing cavity pump the torque value required by the pump is fixed; any reduction in supplied torque as a result of operational speed could cause the pump to fail. Also, depending on the running speed required, a constant HP VFD may not be capable of supplying the torque needed for pump startup. This is the reason a **Constant Torque** VFD **MUST** be used to operate a progressing cavity pump.

Operating and Maintenance Instructions

NEMO®-Pump

Type of machine	Number of confirmation order
Number of machine	**Date of issue**

Important Note

These Operating Instructions are designed to familiarize the User with the machine and its designated use.

The Instruction Manual

- is valid only for this machine (pls. see machine-no. / conf. no.)
- contains important information on how to operate the machine safely, properly and efficiently. Observing these instructions helps to avoid danger, to reduce repair costs and downtimes and to increase the reliability and life of the machine;
- must always be available wherever the machine is in use;
- must be read and applied by any **person in charge** of carrying out work with and on the machine, such as

  operation including setting up, troubleshooting in the course of work, evacuation of production waste, care and disposal of fuels and consumables, **maintenance** (servicing, inspection, repair) and/or **transport;**
- shall be completed by the Enduser and his authorized personnel with the national requirements in force for the prevention of accidents and the environmental protection.

In addition to the operating instructions and to the mandatory rules and regulations for accident prevention and environmental protection in the country and place of use of the machine, the generally recognized technical rules for safe and proper working must also be observed.

GB

NEMO®, NEMO PUMPEN®, NEMOTUR®, NEMO CERATEC®, SBBPF®, EBPBF®, SM®, NE®, NM®, TORNADO®:
Registered Trademarks of NETZSCH MOHNOPUMPEN GmbH

NETZSCH Canada, Inc.
500 Welham Road
Barrie, Ontario, Canada
L4N 8Z7
Phone: 705-797-8426
Fax: 705-797-8427
Web: www.pumps.netzsch.com

	TABLE OF CONTENTS	PAGE 0.0

		Page
1	Safety Precautions	1.0
2	Description	2.0
3	Packing, Transportation, Storage	3.0
4	Installation Instructions	4.0
5	Start-up	5.0
6	Temporary Shutdown	6.0
7	Maintenance	7.0
8	Trouble-Shooting and Remedying	8.0
9	Dismantling and Assembly of the Pump Housing	9.0
10	Dismantling and Assembly of the Rotating Parts	10.0
11	Removal and Fitting of the Connecting Shaft	11.0
12	Dismantling and Assembly of the Shaft Sealing	12.0
13	Dismantling and Assembly of Special Units	13.0
14	Recommended Stock of Wear Parts	14.0
15	List of Spares and Sectional Drawing	15.0
16	List of After-Sales Service Centres	16.0

Remark: Because of data transfer the text sheet printouts of our operating instructions do not contain a personal signature.

1 Safety Instructions

This manual contains basic instructions which must be observed when installing, operating and servicing the machine / equipment. It is essential therefore for the user / installer or responsible technician to read the manual thoroughly prior to installation and operation.
A copy of the manual must always be at hand where the machine / equipment is being used. In addition to the general safety instructions listed in this main section on safety, it is necessary to observe the special safety rules included in other sections of the manual, eg. for private use.

1.1 Safety Signs

The signs below are printed in the manual as general hazard / danger symbols to mark those safety instructions whose non-observance can result in danger to personnel or to the machine / equipment. These signs are:



Hazard sign DIN 4844 - W9
Danger to general public



Hazard sign DIN 4844 - W8
Risk of electric shock



Risk of injury from machinery



Danger from suspended loads



Damage to machinery



Risk of injury to your eyes: goggles required.

Continued Page 1.0R

Warning plates located directly on the pump/ equipment showing for example the correct direction of rotation or the fluid connections used must always be observed and kept completely legible.

1.2 Personnel Qualifications and Training

Operating, maintenance, inspection and installation staff must possess the correct qualifications for their work. Areas of responsibility, scope of authority and staff supervision must be exactly defined by the user. If personnel do not have the necessary knowledge they must receive due training and instruction. If necessary, the user of the machine / equipment can arrange for such training and instruction to be provided by the manufacturer / supplier. The user must also make sure that the content of the manual is fully understood by the staff concerned.

Responsibilites

All work on and operation of the pump/ equipment should be carried out by trained/ competent and qualified operators, tradesmen and / or engineers as appropriate.

Any person responsible for or in charge of

– working with lifting gear and ropes when moving a pump / equipment will have to be duly instructed prior to doing the transportation job;

– mounting a drive to a pump / equipment must be qualified / trained as an industrial mechanic / technician;

– setting up installations into a plant must be qualified / trained as an industrial mechanic/ technician and must be familiar with the design and functioning of the plant in which the pump / equipment is being installed;

– doing work on starting up, operation and maintenance must gain knowledge of the pump / equipment principle prior to performing such works and must study the safety instructions and the manual thoroughly;

– doing repair works, and prior to doing such works, must be trained and skilled in the job. He must have due knowledge of the pump/ equipments specific details set up in the repair instructions. Unskilled personnel must be trained and repair works checked.

1.3 Dangers arising from Non-Observance of the Safety Instructions

Non-observance of the safety instructions can result in danger to personnel as well as to the environment and the machine. Non-observance of the safety instructions can result in the loss of claims for compensation.

Non-observance of the safety instructions can have, for example, the following consequences:

▲ Failure of essential functions of the machine / equipment

▲ Failure of mandatory maintenance and servicing methods

Continued Page 1.1

▲ Danger to personnel from electricity, machinery and chemicals

▲ Danger to the environment from leakage of hazardous substances.

1.4 Safety Conscious Working

In addition to the safety instructions listed in the manual, it is essential to observe the national accident prevention directives currently in force and any of the users own internal regulations concerning work and safety.

1.5 Safety Instructions for the User / Operator

▲ If there is a risk of danger from any hot or cold machine component, the user must fit protective guards to prevent such components from being touched (according to Standard EN 563).

▲ Protective guards fitted to prevent contact with moving parts (eg. couplings) must be in position when the machine / equipment is in use.

▲ Leakages (eg. from a shaft seal) of hazardous materials (eg. explosive, toxic, hot material) must be discharged in such a way that neither personnel nor the environment are placed at risk. Legal directives must be observed.

▲ All possible danger from electricity must be eliminated (for details see eg. the regulations of your local power supply company).

1.6 Safety Instructions for Maintenance, Inspection and Installation

The user must ensure that all maintenance, inspection and installation work is carried out by authorized and qualified personnel who understand the operating instructions and are adequately trained.

Work on a pump / equipment must only be carried out with the machine stopped and electrical power supply turned off. The pump/ equipment must not be under any pressure and must have cooled off. All procedures detailed in these operating instructions on the stoppage of the machine must always be adhered to.

Pumps / equipment which convey harmful media must be decontaminated.

Immediately after the maintenance work is finished all safety devices and guards must be re-installed and the safety trips must be tested.

Before putting the machine back into operation the points detailed in section "Start-up" should be observed.

Continued Page 1.1R

1.7 Unauthorized Modifications and Manufacture of Spares

Modifications or changes to machines / equipment are only permissible with the manufacturer's agreement. Original spare parts and accessories authorized by the manufacturer ensure safety.
The use of other components revokes any liability for consequences which may result.

1.8 Improper Application

Delivered machinery / equipment is only guaranteed safe for the use specified.

This machine / equipment was designed in accordance with the prescribed conditions of use.
The limits of use are laid down in the conditions of use and should in no way be exceeded.

1.9 Specific Points for the Use of a NEMO® Pump

A NEMO® pump must be used for the purpose only for which it was sold.

If you change or wish to change the process medium, you must check with either the supplier or manufacturer that the pump is suitable for the new medium. This is especially important with aggressive, poisonous or otherwise hazardous substances.

Pump criteria include:

1. Compatibility with the medium
2. Suitability for seal design / material, especially the shaft seal
3. Resistance to pressure and temperature of the medium.

Please note that NEMO® pumps are progressing cavity pumps and as such can generate very high pressure.

A blockage or the chance closure of a valve in the discharge line can cause a pressure rise manifold as high as can be tolerated by the installation. This can result in the bursting of pipes, which must be avoided especially in the case of dangerous media.

Corresponding safety equipment must therefore be installed, for example an emergency stop button, a pressure relief valve with return pipe or a bursting disc.

During maintenance and repair work on the pump please note the following:

1. Ensure that the pump drive can not be turned on without authorization.
2. When opening the pump follow the instructions for handling the medium (eg. protective clothing, no smoking etc).
3. Before putting the pump back into operation ensure that all guards and other safety devices (eg. drive–belt protection, coupling protection) are properly re–installed.

Continued Page 1.2

1 SAFETY PRECAUTIONS

Always bear in mind your safety during operation, maintenance and installation of equipment. Please adhere to the EC-Directive for machinery including the national regulations and follow the US OSHA regulation #1910.219 & 1910.147 titled Mechanical Power transmission apparatus as well as the European Standard EN 292 with the accidents prevention rules laid down by the trade unions and other appropriate technical institutions.

Always bear in mind your safety during operation, maintenance and installation of equipment. Please adhere to the EC-Directive for Machinery including the national regulations and follow the European Standard EN 292 with the accident prevention rules laid down by the trade unions and other appropriate technical institutions.

Continued Page 1.2R

1.10 Notes on Inspection and Repair

The legal regulations for safety at work, such as regulations for the workplace, regulations governing dangerous materials, accident prevention, environmental protection eg. regulations on disposal and water balance obligate all commercial business to protect their employees and / or people and the environment from adverse effects caused by contact with dangerous materials.

Important:

Inspection / repair of machinery and its parts only takes place when a safety conformity certificate has been completed by an authorized and qualified specialist. Please use a copy and leave the original in the operation and maintenance manual.

Where special safety precautions are necessary in spite of careful emptying and cleaning of the machinery, the necessary information must be given.

Machinery operating with radio-active media will only be repaired or inspected by one of our specialist engineers under the safety of the owner.

The safety conformity certificate is part of the inspection / repair service. We reserve the right to refuse acceptance of this order / service for other reasons.

Continued Page 1.3

1.11 Instructions concerning explosion protection

The instructions below are to be considered and kept to when using pumps in potentially explosive areas in order to guarantee durable explosion protection of the pumps and avoid any danger of ignition.

In accordance with the regulations 94 / 9 / EC, the pumps are admitted for use in the area II 2G IIB T 4 or II 2G IIB T 3
(pls. see manufacturer's declaration or declaration of conformity).

It is to be taken into account that in case of aggregates the components (e.g. gears, couplings) mounted on the pumps must comply with the regulations 94 /9 / EC as well. The relevant documentation concerning these components is to be considered.
The application area of aggregates is determined by the application area of the mounted component with the lowest approval and thus may deviate from the allowed application area of the pump.

Temperature category	Max. temperature of the conveying product
T 4	100 °C
T 3	165 °C
T 2	265 °C
T 1	415 °C

The maximum conveying product temperatures apply when mechanical seals of Messrs. Burgmann with carbide – carbide and carbide – carbon as sliding material combinations are used.
In the case of other manufacturers or other sliding material combinations it is necessary to consult the manufacturer.

1. Assembly and repair in potentially explosive areas

   When performing assembly and repair work, it is to be seen to it that no dangers of ignition arise especially during heating up the pump parts. This means e.g. heating up by explosion-proof heating devices or exclusively in non-explosive areas. The temperature of the heated part and the ignition temperature of the materials by which the danger of explosion may be caused are to be considered.

2. Dry-running protection

   Under no circumstances is the pump to run dry.
   The pump is to be equipped with an appropriate dry-running protection device.

Continued Page 1.3R

The device for dry-running protection should be self-regulating.
This means that this device can give alarm signals and/or switch off the pump also in case of failures in its own control system.

Dry-running protection concerning stationary immersion pumps
(with mounting plate)

Operation is only permitted with redundant or self-regulating automatic devices to guarantee dry-running protection as well as to control the pump capacity.

Dry-running protection concerning movable immersion pumps
(drum pumps)

The filling with liquid during the operation is to be ensured by specific requirements of behavior:

- Drum pumps may only be introduced in and removed from the container in switched-off condition
- Drum pumps, after being introduced in the container to be discharged, may only be started after they have immerged in the fluid.
- Drum pumps are to be switched off before they run dry or are to be switched off at once when specific noises ("slurping" or speed rise) suggest that dry running may or will immediately occur.

3. Overpressure protection

   The pump must not be loaded over the maximum allowable pressure.
   The pump is to be equipped with an appropriate overpressure protection device. The pump must not convey against a closed slide valve.
   The overpressure protection device should be self-regulating.

4. Drives

   The drives must be adjusted to the performance of each pump.
   In the case of a blocking of the pump, the drives must be turned off automatically by means of a motor protection unit.

5. Alignment of the drive
   (concerning the pump types SY / SH / SA / SO / SF / SP)

   It is absolutely necessary that the drive be aligned within the maximum allowable tolerances. Incorrect alignment causes damage to the seals and the shaft bearings.

6. Potential equalization concerning immersion pumps

   The immersion pumps are to be integrated in the potential equalization of the installation. Hand-operated movable immersion pumps are to be grounded before being introduced in the container.

Continued Page 1.4

The connection to ground is to be maintained until the pump has been completely pulled out of the container.
There must not be any potential difference between the pump and a conductive container. This means that container and pump are to be connected at a common grounding point and thus be conductively connected with each other.
(see information brochure "Statische Elektrizität, Zündgefahren und Schutzmaßnahmen" (Static electricity, dangers of ignition and preventive measures); Publisher: "Internationale Sektion für die Verhütung von Arbeitsunfällen und Berufskrankheiten in der chemischen Industrie der IVSS" (International section for the prevention of employment accidents and occupational diseases in the chemical industry of the ISSA (International Social Security Association)) , Heidelberg 1995).
The hand-operated movable immersion pumps are to be provided with an indication referring to the grounding measure (pay attention to grounding).

7. Potential equalization concerning all other pump types (no immersion pumps)

   All conductive parts of the pump are to be integrated in the potential equalization of the pumping set unless the conductive connection to the ground potential is guaranteed by the drive or connecting shafts or otherwise.

8. Stator

   The stator is to be regularly checked for wear. When the allowable wear limit is reached, the stator is to be replaced. Before exchanging the conveying product, the pump operator has to consult the manufacturer concerning the durability of the stator unless the stator has already been confirmed for the intended application.

   Inspection and maintenance interval of the stator:
   – in the case of an operating time of > 16 h/day, at least twice a year
   – in the case of an operating time of < 16 h/day, at least once a year.

9. Joints / joint lubrication

   The sealing and the lubrication of the joints are to be regularly checked. If necessary, the seals and the lubricants are to be replaced.

   Inspection and maintenance interval of the joints:
   – in the case of an operating time of > 16 h/day, at least twice a year
   – in the case of an operating time of < 16 h/day, at least once a year.

10. Inspection after initial startup

    The aspects relevant for ensuring the explosion protection (such as lubrication and wear check) are to be checked six months after the initial startup of the pump at the latest.

Continued Page 1.4R

11. Shaft bearings
(concerning the pump types SY / SH / SA / SO / SF / SP)

Replacement of the bearings after 14,500 operating hours (according to prEN 13463-5: replacement after 90 % of the designated service life).

12. Materials

Although being allowed as material for the pumps, aluminum should be avoided in potentially explosive areas.
The pumps may only be used if, under the particular operating conditions, the materials are resistant to mechanical and/or chemical influences or corrosion such that the explosion protection will be maintained.

13. Noise development
(concerning the pump types SO / BO / SF / BF / SP / BP)

As soon as unusual noises (such as knocking or rubbing) are realized, the pump is to be switched off. The cause of the failure is to be eliminated before the pump is reoperated.
Regular check of the paddle equipment.

14. Direction of flow of immersion pumps

The direction of flow of immersion pumps always has to be from the end connection piece to the pressure nozzle at the top. The reverse direction of flow is not allowed.

15. Mechanical seal of immersion pumps

Before the initial startup and after a prolonged shutdown, the mechanical seal is to be lubricated from outside before the pump is started. In this connection, the compatibility of the lubricant with the sealing material is to be considered.

16. Impurities in immersion pumps

Especially in the case of hand-operated movable immersion pumps it is to be seen to it that no impurities can get into the pump. The pumps are to be deposited only on clean and solid ground or else to be suspended. In case of unusual noises or power losses, the immersion pumps are to be switched off immediately.

17. Gland

If a gland packing is applied it has to be observed that the permitted temperature corresponding to the temperature category is not exceeded. Recommendation: fasten the screws of the stuffing box gland only with low torque (approx. 5 Nm).

Continued Page 1.5

Safety Conformity Certificate

The machinery and its accessories together with this safety conformity certificate relating to repair / inspection services given to the undersigned by ourselves

Machine Type .....
Number .....
Delivery Date ..... Delivery Note No. .....

was carefully emptied and cleaned both inside and out in preparation for shipment ☐ yes ☐ no

Special safety precautions with regard to health or media endangered by water are to be implemented ☐ necessary ☐ unnecessary

The machinery is set up to transport materials dangerous to health or water and came in contact with media containing harmful substances ☐ yes ☐ no

The following safety precautions are necessary with regard to irrigation media, overflow liquid and waste management:

.....

.....

We confirm that the above mentioned details are correct and complete and that despatch will follow in accordance with the legal requirements:

Company ..... Telephone .....

..... Fax .....

..... Telex .....

Address

.....

.....

Name ..... Position .....

....
Date Company Stamp / Signature

2 Description

The NEMO® pump is a progressing cavity pump.
The main components which determine the system discovered by Professor René Moineau are a rotating part, called the rotor and a static part, called the stator.
The rotor is a helical screw with an extremely large pitch, large thread depth and small centre diameter with round cross-section for 1/2-geometry and elliptical cross-section for 2/3-geometry. The stator has a two start or resp. 3 start thread and is double or resp. 1.5 the pitch length of the rotor. This provides space for the medium between the rotor and stator. When the rotor turns round inside the stator the medium moves continuously from the inlet to the outlet.

The universal NEMO® pump system unifies many positive characteristics of other pump types:

■ Like centrifugal pumps NEMO® pumps have no suction or pressure valves, but do have a stable flow rate in proportion to the number of revolutions.

■ Like piston pumps NEMO® pumps have a suction capability of up to 8.5 m vacuum metric.

■ Like membrane and peristaltic pumps the NEMO® pump can transport every type of inhomogenous, gaseous and abrasive media, as well as those that are not of a liquid consistency or contain solids and/or fibrous material.

■ Like gear pumps and screw pumps the NEMO® pump is capable of coping with high medium viscosities.

■ Like piston, membrane, gear or screw pumps the NEMO® pump can perform dosing operations.

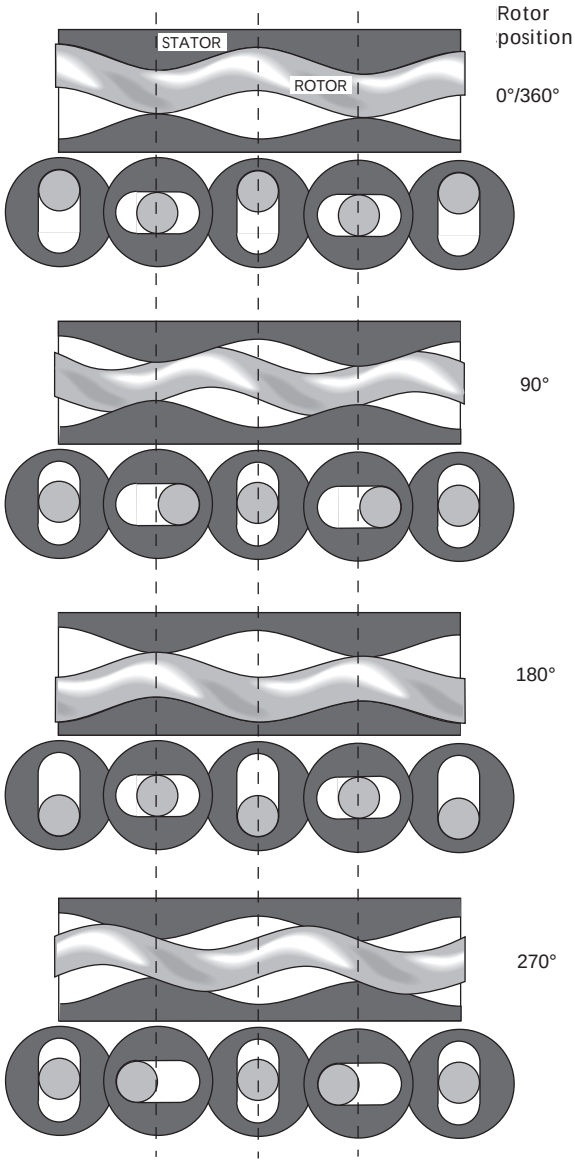

Length and cross-sections through the rotor and stator with 1/2-geometry during a rotation.

Continued Page 2.0R

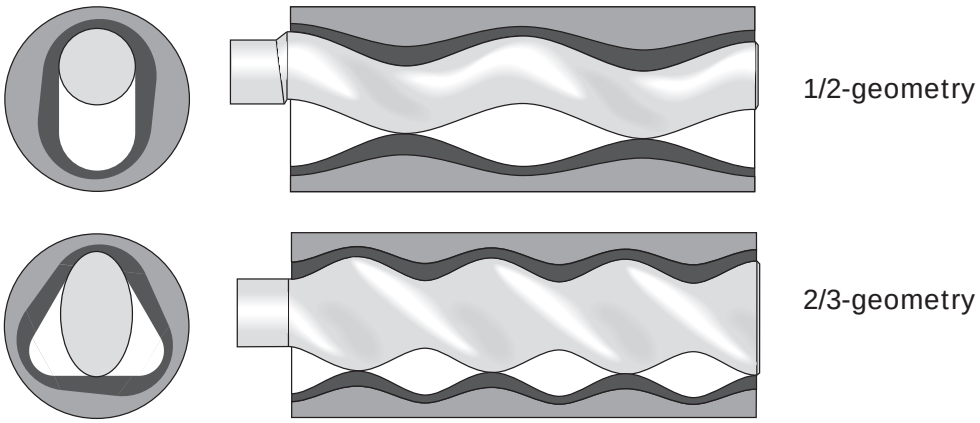

Length and cross-sections through the stator with rotor
with reduced stator wall thickness

2.2 General Data

Noise emissions:

The maximum permitted noise emission level at a work place is 70 dB (A).

The noise level was measured in accordance with DIN Standard 45635-24-01-KL2 to assure that the pump does not exceed 70 dB (A).

Noises generated by the drive and pipes are not included in the above emission value.

A prerequisite for the noise emission level of ≤ 70 dB (A) is that the pump is operated in a cavity free regime and is bolted to a concrete base.

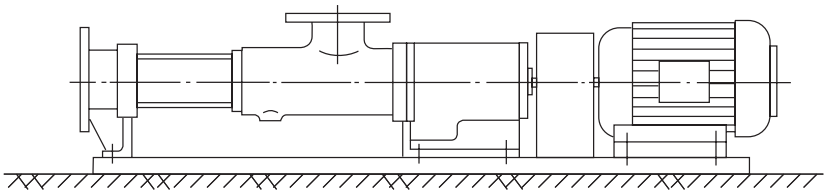

3 Packaging, Transportation, Storage

3.1 Packaging and Transportation

NEMO® pumps are shipped in railroad containers or crates unless the customer specifies otherwise.
The packings are labelled and symbols give the handling instructions in accordance with DIN 55402.
On receipt check for any transport damages.
Transport damages should be reported to the transporter immediately.
The pumps should be transported as closely as possible to the location of installation and only there should they be uncrated.

Uncrated horizontal pumps should be lifted by using a shackle which can be attached to the baseplate. The bolt holes of the frame or the lifting lugs attached to the baseplate could be used as shown on the installation drawing.

Vertical pumps should be lifted by using the bolt down holes, lifting lugs or shackles attached to the baseplate. This is shown on the installation drawing. For most applications, the drive is mounted on top of the pump.



Be careful when lifting top heavy pumps. The centre of gravity may be above the points where the lifting gear is attached to. If the case, secure additionally against tipping over!

Vertical pumps should not be deposited unless they are secured vertically. Hazards of tipping! Deposit only in horizontal position!



It is essential to avoid that the total pump unit be suspended with eye bolts of the motor or gear box. These eye bolts should be used for lifting the motor and/or the gear box only.

The Accident Prevention Rules, Section 18.4 relating to lifting accessories for the lifting of loads (VBG 9a) must be strictly adhered to.

Because of the variety of possible pump designs and applications, only general instructions can be given here. These should be good enough for experienced assemblymen or transportation experts.
When in doubt, please ask for detailed information on the pump unit concerned.

Continued Page 3.0R

When moving the pump or unit on wheels strictly attend to the following:

- Pad lock the motor drive and secure against unintended starting up.
- Move the pump unit carefully and slowly, especially where the ground is uneven. Hazards of tipping!
- Ensure a stable position of the pump or unit at the operating/storage place and secure it by actuating all clamping devices on all the wheels or rollers against voluntary moving away.
- Where fitted loosely, carefully watch the pipe bends when pumping. Power of repulsion!
- Where necessary, secure the pump unit additionally with support blocks.

3.2 Storage

The pumps are preserved for transport unless specified otherwise.
In cases of longer storage the pumps should be handled as follows until installation:

- Stator:

  If the pump is not to be used immediately, then the elastomer along the contact line between rotor and stator may become permanently distorted (compression-set). This will increase the break away torque. Therefore, the stator should be removed and kept separately in a clean, cool and dry environment.
  Standard DIN 7716 summarizes detailed information on the storage of rubber products, some of which is gathered here, and the following notice applies to a storage for a period of up to six months.

  General

  Most of the rubber products may change their physical properties under unfavourable conditions or if treated improperly, which will result in a shorter lifetime.
  Or they may become useless through excessive hardening, aging, regenerating or permanent deformation, also because of blistering, cracking or other damages appearing on the surfaces.
  The changes may occur under the influence of oxygen, ozone, heat, light, humidity, solvents or because of storing the products under tension.
  If stored and treated properly, the rubber products will keep their properties, even over a long period of time (some years), almost unchanged.
  This does, however, not apply to uncured rubber compounds.

Continued Page 3.1

Store room

The environment in which rubber products are being kept must be cool, dry, free of dust and rather airy, and they must not be stored in the open, not even in a weather sheltered space.
Rubber products should be kept in surroundings not having less than minus 10 °C and not more than plus 15 °C.
Store rooms should not be damp, and it must be ensured that there will be no condensation.
Most favourable is an environment offering a relative humidity under 65 %.
Rubber products must be protected against light, particularly direct sunlight or artificial light when having a high UV portion.
They should furthermore be kept away from ventilation, especially draught, by wrapping them up.
As ozone is very aggressive and harmful there should be no store room used which houses equipment likely to produce ozone, e.g. electric motors or other equipment which might bring about sparks or other electrical discharges.
There must be no solvents, oil, grease, lubricants or any chemicals kept in a store room.

- Rotor

  Please support with wooden blocks and cover up against harm from mechanical impact.
  For rotors of RCC (material number 1.2436):
  coat the surfaces with protective grease to avoid rusting.

- Shaft Sealing by packing gland

  Remove the gland and coat the exposed shaft surface with grease.

- Pump parts in stainless steel

  No grease coating necessary.

- Other, non-coated pump parts

  Protect with grease.

- Drives

  Please observe the drive supplier's instructions.

4 Mounting and Installation

If the NEMO® pump was stored and the rotor grease protected: Remove the grease before installing the stator.
Clean the rotor thoroughly in order to avoid unsuitability of the grease with the stator material and the pumping medium.

Screw the pump at all fixing points (bearing housing / drive stool, end stud, support feet) using all fixing bores securely down to the sub-structure (ground plate, machine frame, foundation etc.).

4.1 Direction of Rotation

The direction of rotation of the pump is given on the model plate and in the order confirmation. The direction of delivery of the NEMO® pump is a function of the direction of rotation.

Changes must be agreed upon and confirmed by the supplier.

4.2 Pressure

If not explicitly confirmed otherwise in the order confirmation, the maximum permissible pressure (e.g. when turning clockwise) inside the pump housing (A)

– for models with pump housing of cast iron 6 bar

– for models with welded pump housing 10 bar.

The maximum permissible pressures inside the end flange (B) is a function of the design applied for connections

– with flange: maximum nominal pressure (e.g. PN 16)

– with threaded internal socket: maximum 25 bar

– with DIN 11851 "dairy" thread up to DN 100 for one or two stage pumps: max. 12 bar, for multi stage pumps: max. 25 bar

– for other versions: maximum permissible pressure of the socket connection, but not more than 6 bar per pump stage, depending on the stator installed.

4.3 Piping System

■ Arrange suction and pressure pipes so that when the pump is not running, the medium is still present before and after the pump. Sufficient media should remain inside in order to lubricate the pump during restart.

Continued Page 4.0R

4 INSTALLATION INSTRUCTIONS

■ The installation of a removable distance piece between the end flange (B) and the pipe work is recommended in order to make the dismantling of the stator easy. The distance piece (see sketch) needs to have a minimum "ABL" disassembly length the values of which are shown in the table below, depending on the pump size and the number of stages.

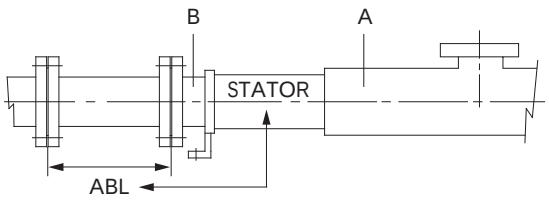

Disassembly length ABL in mm:

Pump size	Number of stages			
	1 *)	2	3	4
0 1 5	90	160	230	310
0 2 1	130	230	340	450
0 3 1	170	310	450	590
0 3 8	230	430	630	830
0 4 5	270	500	730	960
0 5 3	320	600	880	1170
0 6 3	370	690	1010	1330
0 7 6	420	800	1170	1540
0 9 0	500	950	1390	1840
1 0 5	630	1180	1740	-
1 2 5	740	1400	-	-

*) for one stage pumps with L or P geometry the ABL values of 2 stage pumps are valid

Continued Page 4.1

Type key

Example: N M 0 9 0 B Y 0 2 S 1 2 B

- Internal
- Pump size
- Type
- Model
- Number of stages
- Geometry
- max. permissible pressure difference
- anti–clockwise
- Joint

The disassembly length "ABL" is also shown in the arrangement drawings in accordance with our Standard QSH V - TB 01 - 002.

- Clean the pipe work and rinse thoroughly before installing the pump.
- Connect the pipe work ensuring that no external stress attacks the pump body. The installation of compensators between the pump and the pipework is recommended:
  - No risk of damage to the pump housing from pipelines "resting" on the pump.
  - No risk of damage to the pump housing through vibrating pipelines.
- The twisting loads (F_x, F_y, F_z) and bending loads (M_x, M_y, M_z) permitted to be put on the suction/discharge flange comply with the requirements of API 676 and exceed the requirements of EN ISO 14847. They are shown in the table below.

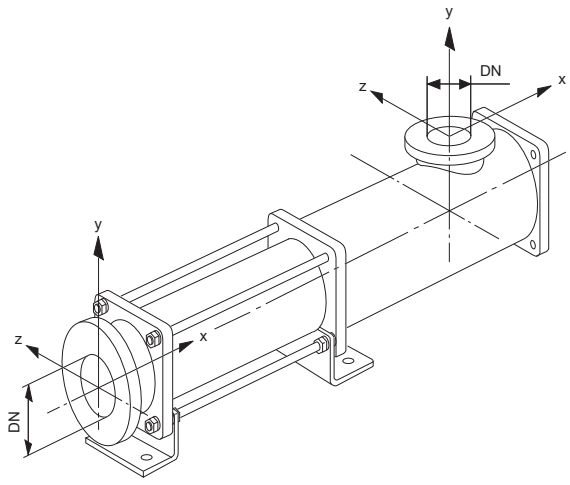

Continued Page 4.1R

Pump type NM	Standard nominal diameter DN	F_x, F_y, F_z N	M_x, M_y, M_z Nm	
015 021	(32) G 1¼"	550	(300)	Screwed joints must not be charged with loads which may result in tightening or loosening these joints
31	50	780	420	
38	65	990	530	
45 53	80	1160	620	
63	100	1490	800	
76	125	1820	980	
90 105	150	2190	1180	
125	200	2850	1530	

4.4 Shaft Sealing

- Where applicable, ensure that adequate supply lines for the buffer, flushing or quenching fluid for the shaft seals are connected before the pump is put into operation.
  For more details see Section 7.4!

4.5 Electrical Connection



All work relating to electricity shall only be made by authorized and qualified personnel and it should be in compliance with the requirements of the relevant national regulations!

In particular for control systems should the latest version of the EC-Directive for Machinery 98/37/EEC, Annex I, Section 1.2 Controls be carefully observed!

Note for frequency converter operation:
It is absolutely necessary to connect the PTC-resistors of the drive in case of frequency converter operation to protect the drive against overheating.

5 Start-up

The NEMO® pump design requires strict attention to the following:



Never run the NEMO® pump dry!
A few rotations in dry condition
will damage the stator!

- Before starting up for the first time, fill the pump with medium.
  In the case of high viscosity media fill with a liquid.
  Pump priming is vital to ensure lubrication of the rubber stator.
  Fill the piping on the pump suction side.
  In anti–clockwise rotation only: Fill the pump housing.

The NEMO® pump is a progressing cavity pump which can produce pressures that may cause the bursting of vessels or pipes.



The power transmission train (shaft, coupling rod, joints, rotor) of the pump may be overloaded thus resulting in damage or breakage.

Also the pump housing parts with their connections may be overloaded and break. There is a table in Section 4 of these Maintenance and Operating Instructions showing the pressure resistance of the pump housing parts.



Never run the pump against a closed inlet or outlet valve!

- Open valves and vents before starting the pump!
- Check the direction of rotation by briefly switching on the pump motor.

DETERMINING WHEN TO LOCKOUT

Having performed a hazard analysis on your company's equipment, you can now determine when machines must be locked out – i.e., when employees are exposed to injury from each (or any) of a machine's hazardous energy sources during servicing or maintenance activities. To do this, use your Hazard Analysis Checklist and the "Four Key Questions for Lockout Implementation."

OSHA Requirements

OSHA rules state that equipment must be locked out during equipment servicing and maintenance whenever employees are exposed to injury from unintentional machine movement or startup. According to OSHA's regulations, servicing or maintenance procedures that require lockout include:

"Workplace activities such as construction, installing, setting up, inspecting, modifying, and maintaining and/or servicing machines or equipment. These activities include lubrication, cleaning, or un-jamming of machines or equipment and making adjustments or tool changes, where the employee may be exposed to the unexpected energization or startup of the equipment or release of hazardous energy."

In addition, lockout is required during any machine service or maintenance that requires an employee to:

- Remove or bypass a safety device; or
- Place any part of his or her body into a point of operation or similar danger zone during a machine's operating cycle.

Routine, Repetitive Activities

Routing and repetitive servicing procedures that take place during normal production operations, such as minor tool changes and adjustments, do not require lockout tagout, as long as the work is performed using "alternative measures which provide effective protection." These "alternative measures" include safeguarding methods approved by OSHA and ANSI (American Standards Institute) to protect operators, such as:

- Presence sensing devices
- Interlocking barrier guards

Remember, the factor that determines whether these or any other safeguarding methods eliminate the need for lockout tagout during routine, repetitive activities is whether the employee is protected from injury.

If lockout is not required, you MUST have clearly written procedure that describe the alternative safeguarding measures used and the tasks that may be performed. Refer to OSHA and ANSI standards for approved safeguarding methods.

6 Temporary Shutdown

- After stopping the pump empty and if necessary rinse it if



  – the medium might freeze due to the temperature surrounding the pump. Especially where there is a danger of frost if the pump is installed outside a building
  – the medium tends to solidify or harden
  – the medium tends to glue up the shaft seal.

- Stator:

  When stored for a long period, the elastomer along the contact line between the rotor and stator may become permanently distorted (compression-set).
  This will increase the break away torque. For this reason, the stator should be removed (please observe Section 9!), and stored in a cool, dry place in air tight package to give protection against light and air.

- Rotor:

  Remove ceramic rotors (please observe Section 10!) and store away, safe in the original packing.

  Support other rotors on wooden blocks and cover to protect them from mechanical damage, after the stator has been removed.

  Rotors made of RCC (material number 1.2436):
  Protect the rotor surfaces against corrosion with protective grease.



  Remove the grease before re–installing the stator and clean the rotor thoroughly in order to avoid unsuitability of the grease with the pumping medium or the stator material.

- Stand-by pump:

  A stand-by pump is sometimes used as a back-up for the main pump and, when standing idle for longer periods, should be operated from time to time. The pump may otherwise become seized when being started up. This is due to compression set i.e. distortion of the stator against the surface of the rotor.

7 Maintenance

7.1 Pumps in General

- The pumps should be regularly rinsed or cleaned if deposits of medium are likely to build up (sedimentation).

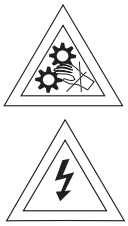

If the pump needs to be opened to do this, ensure that the pump and motor are switched off and cannot be turned on accidently (eg. by removing the fuse).

Periodical standstill to allow for cleaning during operation depends on the medium and type of operation.

- The pump can be cleaned:

  – through the cleaning ports provided in the pump housing

  – manually by dismantling the pump

  – automatically (CIP cleaning) for special housings with a flushing section (important instructions for CIP procedures are given in Section 5 (START UP).

7.2 Lubrication

The NEMO® pump does not require frequent lubrication.

- Maintenance of the drive should be carried out according to the drive manufacturers instructions.

- Maintenance
  – where no manufacturers instructions are available and
  – when normal conditions of use exist:

  – Strip down the drive unit
  – Remove the bearings
  – Clean all parts
  – Renew the lubricant

  every 5000 operating hours or at least every two years.



Special lubricants are often specified for mechanically controlled variable speed drives.
It is therefore important to follow the drive manufacturers maintenance instructions.

7.3 Lubricating the Pin Joints with SM-Pin Joint Seals

- It is advisable to change the oil and check the seals of the pin joints:
  - when renewing worn joint parts
  - when opening the pump for any reason.

  The quantity of oil added per pin joint is a function of the joint external diameter D:

Joint external diameter D in mm (see sketch)	Basic joint size	Quantity of oil per joint in cm^3
28	NM 015	1,5
30	NM 021	2
40	NM 031	5
54	NM 038	15
65	NM 045	22
76	NM 053	36
83	NM 063	78
102	NM 076	165
125	NM 090	205
148	NM 105	450
162	NM 125	470
Journal cross joint 175	NM125	1650

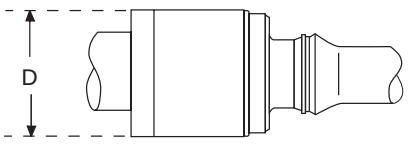

Pin joint

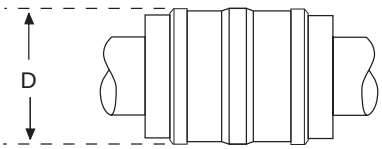

Journal cross joint

Continued Page 7.2R

Lubricating Oil:

Industrial application	Designation DIN 51502	Permitted Product
Food and Beverage Industry only	Authorized for use in foodstuffs CLP HC 460	"KLÜBER" KLÜBEROIL 4 UH 1 - 460 authorized under USDA H1



This synthetic oil meets both the German "Arzneimittelbuch" requirements and the still stricter US American FDA regulations.
Nevertheless, it is not quite harmless if swallowed in more than minor quantities!

At a sudden break in a joint up to 450 ml of lubricating oil together with metal rubbings may enter the pumping medium. It is therefore of essential importance to regularly check the state of the joint seals and renew in time, if necessary.

If the pin joints operate without lubricating oil or seals, there will be no risk of contaminating the medium with oil. This operation, however, results in a higher amount of rubbed off metal parts through wear on the joints. These metal rubbings will inevitably and continuously come into contact with the pumping medium.

General Industry	CLP 460	"SHELL" Omala 460
	with SM-pin joint seal (8235) of EPDM CLP PG 320	prescribed: KLÜBERSYNTH GH 6-320

7.5 Shaft Sealing through Single Mechanical Seal

There are various constructions of mechanical seals. Especially advantageous is the use of standard mechanical seals according to DIN 24960. These seals have regardless of their brand the same fitting dimensions which makes them interchangeable. Mechanical seals with a coil spring can only be used for pumps which are run in one direction of rotation.

- The seal specification of a NEMO® pump is recorded on the order confirmation sheet.
- Pumps fitted with direction dependent seals should never be run in the opposite direction of the rotation arrow.
- If excessive leakages occur the spring tension and the seal surfaces should be checked, and the seal be replaced, if necessary.

Single mechanical seals usually work without any additional equipment. Their application range can be increased by operating them with a rinsing or cooling system.

a) Quench, in accordance with ISO 5199, Appendix E, Plan Nos. 08, 09, 10 or 13 or API 610, Appendix D, Plan No. 62.

Quench is the designation commonly used in sealing engineering for an arrangement that applies a non pressurized external fluid to the atmospheric side of a mechanical seal. The quench is used when

– a single mechanical seal will not work or only to a limited extent without auxiliary measures or

– a double mechanical seal with pressurized buffer fluid is not necessary.

Recommended for the following applications:

– Low temperature (danger of freezing)

– Operation in a vacuum (dry running)

– Media which must be isolated from the atmosphere (eg. due to build up of solid deposits or because of less severe damage to the environment, like smell).

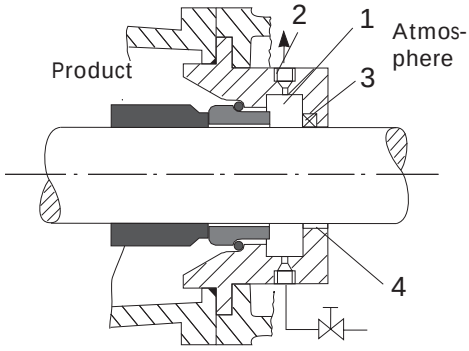

Continued Page 7.5R

Leakages will be transportet away by the quenching liquid.
In vacuum operation dry running of the seals is avoided.

No pressure higher than that of the pumped medium in front of the mechanical seal is allowed to build up in the quenching area (1) behind the mechanical seal. Otherwise the counter ring will be pushed out of the housing. Free discharge from (2) is necessary!

Closing off the quenching area from the atmosphere can be done in three ways:

1. In the case that high emission levels can be tolerated:
   Through a throttle bush (4). Cooling liquid not permanently used, only released from time to time.
2. In the case that medium emission levels can be tolerated:
   By a radial shaft seal ring (3). Permanent radial shaft seal lubrication through quenching liquid is necessary.

b) Top lubrication

Attention: For vertically installed pumps with overhead drive as type NT:

On initial start-up the mechanical seal has not come in contact with the medium. It runs therefore dry for a short period of time until the air is displaced from the pump housing.

- On first start–up and if stood idle for longer periods lubricate the mechanical seal before switching on the pump.
- Apply water, glycerine or oil depending on their compatibility with the pumping medium and the elastomer of the mechanical seal.
- Fill the quench cup of the mechanical seal housing.

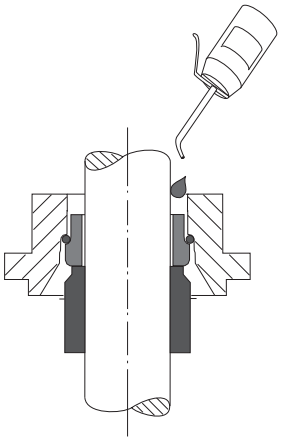

8 Trouble-Shooting and Remedying

8.1 Trouble Chart

The chart overleaf lists possible problems

- the type
- the likely reason / cause
- the remedy.

- A problem may have various causes: Several boxes in the vertical column are marked with a cross.
- A reason/cause may result in various problems:
  Several boxes in the horizontal column are marked with a cross.

8.2 How do you trace the kind of problem to find the possible cause ?

- The column describing a possible problem shows one or several boxes marked with a cross.
- On the corresponding lines you will find the possible reasons/cause and some hints how to handle the problem . Thus the actual cause of the problem can be narrowed down and eventually detected.
- If you find further cross-marked boxes on one of the lines and should there appear corresponding problems as well, then the likely cause of the problem has been detected.

- The table helps in finding the root of the problem and will give you the remedy if it is straight forward. For more complicated problems the manufacturer has to be consulted.

Continued Page 8.0R

The NEMO®-pump is a well established product which was thoroughly tested before leaving the factory. If you use the pump in keeping with your Order Specification and treat it in accordance with our Operating and Maintenance Instructions, it will run satisfactorily for a long period of time.

Possible Problems											Possible Causes (Remedy overleaf)
The pump is no longer starting	The pump is no longer sucking	The pumped medium is too little	The pressure is too low	The pumped medium is unstable	The pump is running loudly	The pump is stuck	The drive is overloaded	The stator life time is too short	The rotor life time is too short	The shaft seal is leaking	
X							X				In new pumps or stators : the static friction is too great.
X		X	X				X				The pump electrical equipment is not compatible with the electrical supply.
		X					X	X	X		The pressure is too high.
X						X	X				There are foreign bodies in the pump.
X						X	X	X	X		The temperature of the liquid medium is too high, the stator is too ductile.
X						X	X	X			The stator has swollen, the elastomer is not compatible with the medium.
X						X	X	X			The solids content of the medium is too high and leads to blockages.
X						X	X	X	X	X	The liquid medium sediments or hardens when left to stand.
		X	X	X							There is air in the suction pipe.
	X	X	X	X							The suction pipe is leaking.
	X	X	X	X							The shaft seal is leaking.
		X	X								The rpm is too low.
	X	X	X								With reduced diameter rotors : operating temperature has not been reached.
		X	X	X	X			X	X		The suction is too great or pressure too low (cavitation).
		X	X		X	X	X	X			The pump is running dry.
	X	X	X		X						The stator is worn out, or temperature of liquid is too low.
	X	X	X		X			X	X		The stator material is brittle.
	X	X	X		X			X			The rotor is worn out.
					X						The joints are worn out.
					X						The pump and drive are not axially aligned.
					X						The elastic element of the coupling is worn out.
					X					X	The roller bearings are destroyed.
							X				The rpm is too high.
							X				The viscosity is too high.
							X				The specific weight of the medium is too high.
							X			X	The stuffing box is incorrectly tightened.
										X	The packing is not suited to the liquid medium.
	X									X	Mechanical seal : rotation is incorrect.
										X	Mechanical seal : mechanical seal and mating ring have failed.
										X	Mechanical seal : elastomers damaged, swollen or brittle.

Remedy
Fill the pump up, then pump through manually using a suitable appliance; if necessary use glycerine as lubricant in the stator.
Check order information. Examine electrical installation (possibly 2 phase operation).
Measure the pressure with a manometer and check against order details. Reduce the pressure or change the drive.
Remove foreign bodies and eliminate possible damage.
If the liquid medium temperature cannot be lowered, use a reduced diameter rotor.
Check whether the liquid medium agrees with the order requirements. Possibly change stator material..
Increase the liquid part of the medium.
Clean the pump and rinse through after each run.
Increase the suction liquid level, prevent turbulance and air bubbles at the inlet.
Check seals and tighten pipe connections.
Stuffing box : tighten or renew. Mechanical seal : renew seals, eliminate solid deposits.
In the case of adjustable drives : increase the rpm. If necessary change the drive.
Warm up the pump (stator) to operating temperature first of all.
Decrease suction resistance, lower the temperature of the liquid medium, install the pump at a lower location.
Fill up the pump, provide for dry running protection, move the pipes.
Replace with a new stator or ensure correct liquid temperature.
Fit a new stator. Check the liquid medium agrees with order details; if necessary change the stator material.
Change rotor, establish the cause. Wear and tear, corrosion, cavitation; if necessary change to a different material or coating.
Replace relevant parts, carefully reseal and lubricate.
Re-align the unit.
Use a new connection and re-align the pump.
Replace roller bearings, lubricate, reseal. At higher temperatures observe the lubricant and the bearings.
In the case of adjustable drives : lower the rpm.
Measure the viscosity and compare with order details. If necessary adjust viscosity or change the drive.
Measure specific weight and compare with order details. If necessary adjust specific weight or change the drive.
Service stuffing box according to page 7.4, if necessary renew worn shaft.
Replace fitted packing with another packing type.
Change electrical connection.
Replace relevant rings with new ones.
Replace elastomers. Check whether the liquid medium agrees with order details, if necessary change material.

9 Removal and Fitting of End Stud, Stator and Pump Housing



The pump with attached pipework should be empty and must have cooled off!
Disconnect the pipework on the suction side and pressure side of the pump.

Caution for pumps with ceramic rotors!



Where a pump is fitted with a ceramic rotor (1999) the following operations should be carried out with great care.
Do not use any force or sharp tools! Special care must be taken to prevent heavy strokes, vibrations or impact by a hammer.

Dismantling

- Remove the securing screws (S) from support feet (2035) to baseplate (G).

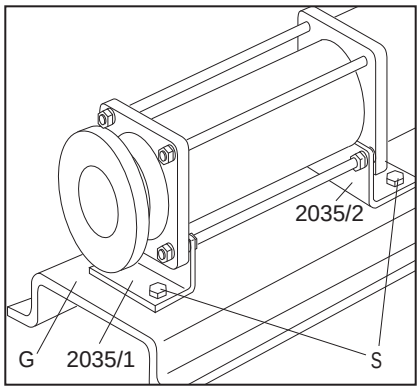

- Unscrew the hex nuts A (3020) and remove with spring washers (3015), then withdraw the end stud (2005) and first support foot (2035/1) with washers (3070).

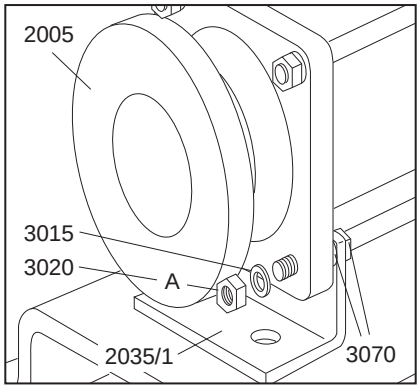

Continued Page 9.0R

9 DISMANTLING AND ASSEMBLY OF THE PUMP HOUSING

- Support pump housing (2010) and stator (3005) with wooden blocks.
- Loosen the hex nuts B (3020), where fitted, and remove the thru bolts (3010).

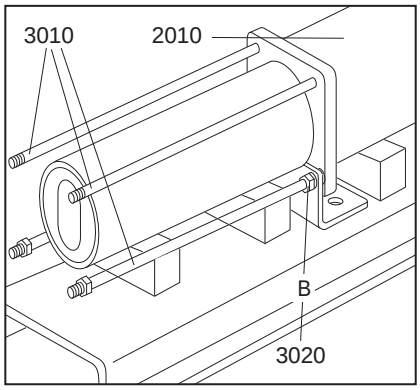

- Where fitted, remove the second support foot (2035/2) and the washers (3070).

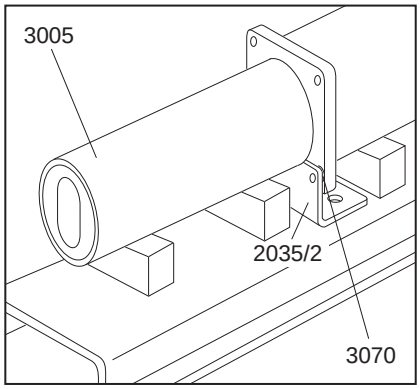

Caution for pumps with ceramic rotors!

When the stator (3005) is removed from the ceramic rotor (1999), the stator must be supported to prevent it from suddenly tilting away downwards. The same applies to the rotor (1999) as soon as it is disengaged from the stator (3005). Removing the stator (3005) from the ceramic rotor (1999) is easier by using an extractor. This should be done slowly and with care in a rotating movement. When sliding pump housing (2010) over ceramic rotor (1999), both coupling rod (1998) and rotor (1999) should be lifted as the ceramic rotor (1999) must not knock onto the pump housing (2010).

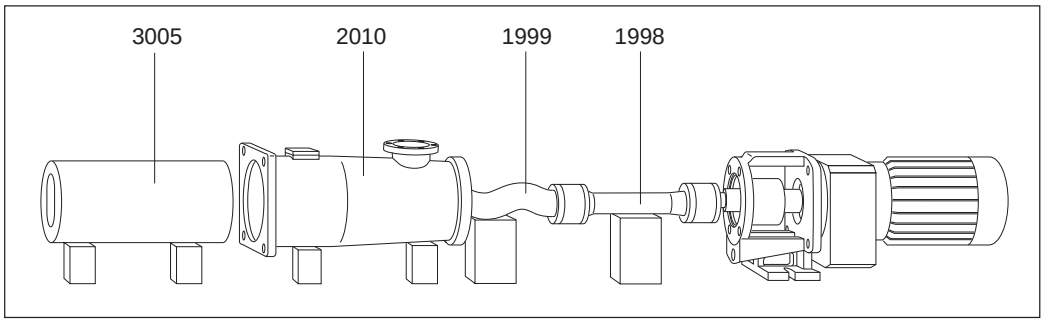

Continued Page 9.1

Caution for pumps with tubular rotors:

Where the walls of tubular rotors are worn in the wear zones, pumping medium may occur inside the rotor and may come out when pulling off the stator.
Ensure that protective measures have been taken when pumping dangerous media!

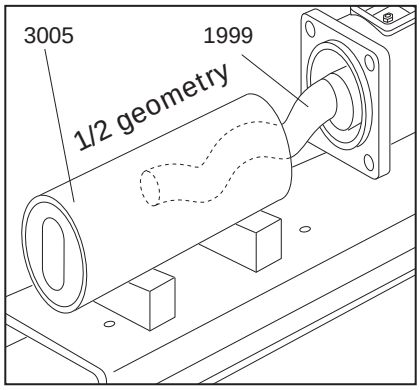

- Pull the stator (3005) out forward.
  A stator extractor can be supplied as special accessory.

- Remove the hex nuts (2030) with spring washers (2025).
- Pull the pump housing (2010) off forward.

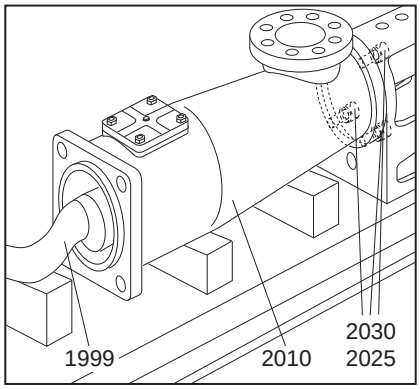

Assembly

- Refitting is a simple reversal of this procedure.

  When refitting the stator (3005) check direction of stator (3005) is correct! The funnel-shaped inflow side (E) of the stator (3005) must show to
  - the pump housing (2010) when rotation is anti-clockwise
  - the end stud (2005) when rotation is clockwise

  when viewed on pump shaft end.

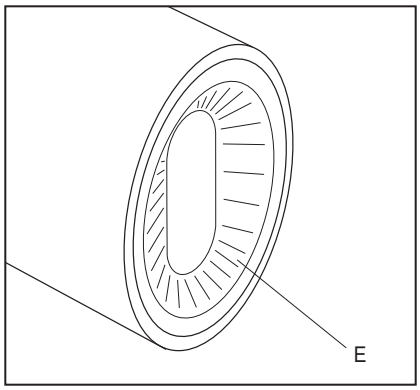

- Elastomer stators (A) have integrated front side sealing profiles (D). They don't need additional gaskets for sealing off the end stud (2005) and the pump housing (2010).

- Solid stators (B) have no integrated front side sealing profiles. Therefore additional gaskets (8005) should be installed to seal off the end stud (2005) as well as the pump housing (2010).

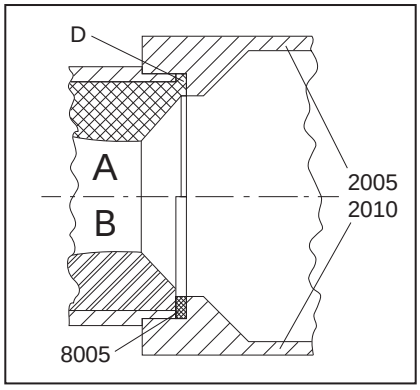

Continued Page 9.1R

9 DISMANTLING AND ASSEMBLY OF THE PUMP HOUSING



Be careful when engaging the stator (3005) and rotor (1999). Do not trap your fingers!
Do not reach inside the stator!

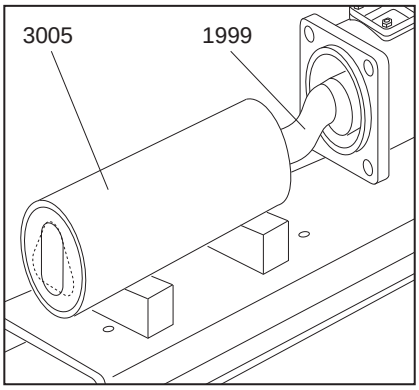

- Push the stator (3005) with a rotating movement on to rotor (1999).
  Apply an assembly device and some glycerine to ease engaging the stator (3005) and rotor (1999).

- When tightening hex nuts (2030) a gap will remain between drive stool (0085) and pump housing (2010).



Please do not try to close this gap by overtightening the nuts!
Drive stool (0085) may break!

Torque values for hex nuts (2030):

Size	M6	M8	M10	M12	M16	M20	M24	M30
Required torque Nm	8	15	30	45	75	80	100	120

- Fastening the end stud (2005):

Screw the hex nuts C (3020) down into the thru bolts (3010) as far as possible.
Slip on the first washers (3070), the support foot (2035), the second washers (3070), the end stud (2005) and tighten with spring washers (3015) and hex nuts A (3020).
Finally, fasten the support foot (2035) from behind with the two hex nuts C (3020).

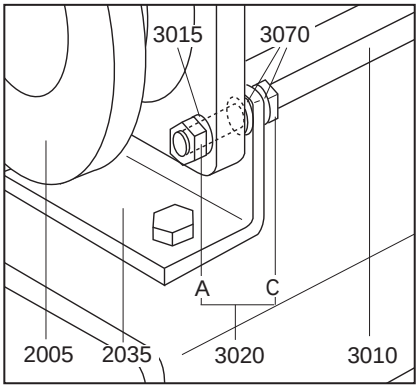

Ensure during refitting that the O-ring (8015) or, where a heating jacket (3025) is installed, the O-rings (8030) are in perfect condition and will sit correctly.



Ensure that the drain plug (2015) is not screwed too tightly into the pump housing (2010), since otherwise its conical thread may break the pump housing (2010).
The torque should be about 40 - 50 Nm.

10 Dismantling and Assembly of the Rotating Parts with Pin Joints with SM-Pin Joint Seal (basic joint size NM015 - NM125)

10.1 Removal of Rotor and Coupling Rod

Where a pump is fitted with a ceramic rotor (1999) the following operations should be carried out with great care. Do not use any force or sharp tools! Special care must be taken to prevent heavy strokes, vibrations or impact by a hammer.
For removal of the rotor (1999) and coupling rod (1998) the pin joints should be dismantled as follows:

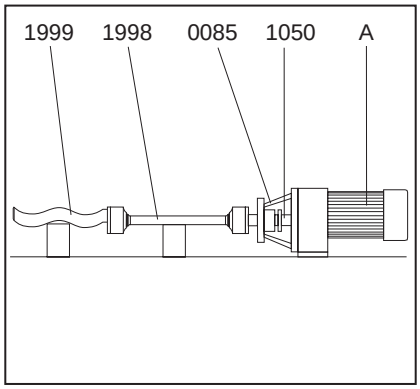

- Place the dismantled unit – consisting of drive stool (0085) with drive (A) and connecting shaft (1050), coupling rod (1998) and rotor (1999) – on the work-bench with a wooden block supporting the rotor (1999).

Basic joint size NM125:

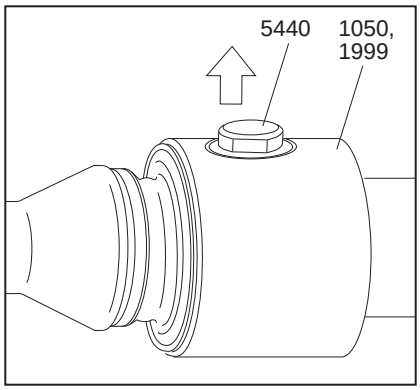

- Unscrew the wear sleeves (5440) from the head of rotor (1999) or connecting shaft (1050)

Basic joint size NM021 - NM105:

- Push circlip (5065) out of its groove and slip off over the head of rotor (1999 or connecting shaft (1050).

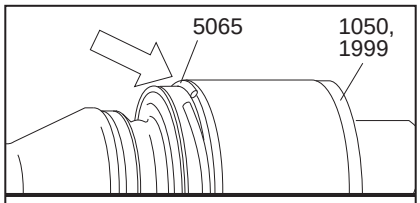

Pumps fitted with a ceramic rotor (1999):

- Carefully turn safety sleeve (5115) with a squeeze belt wrench, and remove.

The following method should not be employed for pumps fitted with a ceramic rotor.
Pumps fitted with a metallic rotor (1999):

- If necessary hit the edge of sleeve (5115) at an angle with the help of a wooden block and a plastic hammer. Taking care not to damage the O-rings (8060)!

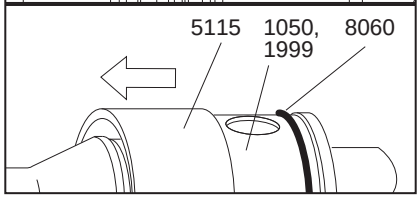

Continued Page 10.0R

10 DISMANTLING AND ASSEMBLY OF THE ROTATING PARTS

Basic joint size NM021 - NM125:

- Press the pin (5075) out of the head of rotor (1999) or connecting shaft (1050). If necessary use a hammer and a thin cylindrical pin (DIN 6450 C).
  Drain the oil into a receptacle.

  Caution for pumps with ceramic rotors!

  Where a pin (5075) may not come out easily, the metallic head of rotor (1999) should be supported on wooden blocks. Then the pin (5075) can be driven out with the help of a pin punch (DIN 6450 C). This should be done with care, holding the ceramic rotor with your hands.
  Please dispose of this oil in the proper manner.

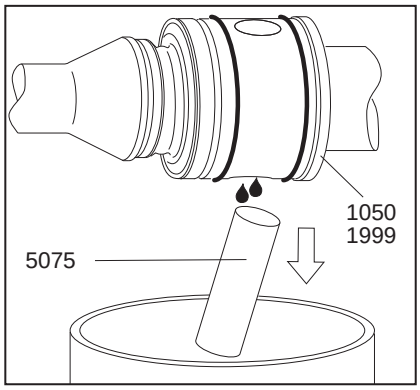

- Using a screwdriver, carefully lever the SM-pin joint seal (8235) out of the head of rotor (1999) or connecting shaft (1050).



Taking care not to damage the SM-pin joint seal (8235)!

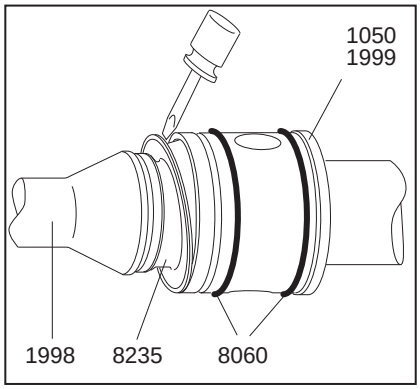

- Pull apart the rotor (1999)/ coupling rod (1998) / connecting shaft (1050) assembly. Remove the O-rings (8060).

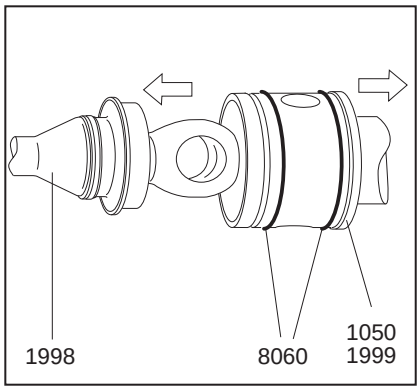

- Push the SM-pin joint seal (8235) towards the head of coupling rod (1998). In the narrow coupling rod section press the clamp ring (5425) out of the groove of the seal. Then slip the SM-pin joint seal (8235) and clamp ring (5425) off over the head of the coupling rod (1998).

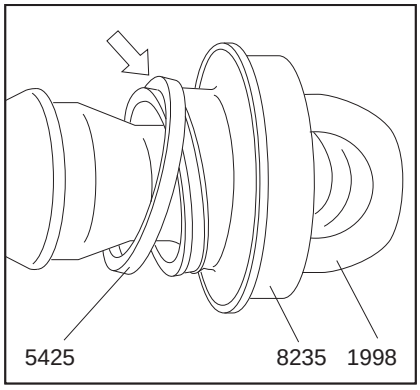

Continued Page 10.1

10.2 Fitting the Rotor and Coupling Rod

For fitting the rotor (1999) with coupling rod (1998), the two pin joints should be assembled as follows:

- Slip the clamp ring (5425) over the head of coupling rod (1998).

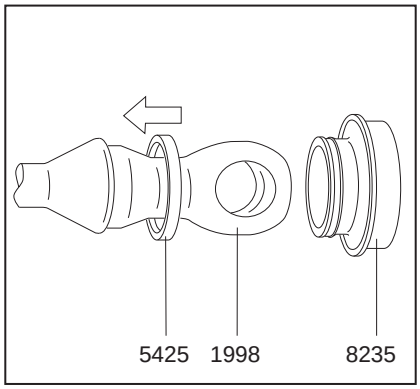

- Push the SM-pin joint seal (8235) over the head of coupling rod (1998) towards its narrow section, there sqeezing the clamp ring (5425) into the groove of the SM-pin joint seal (8235).

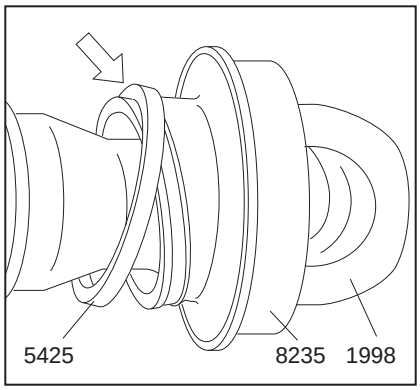

- Push the SM-pin joint seal (8235) with the correctly placed clamp ring (5425) up to the shoulder of coupling rod (1998).

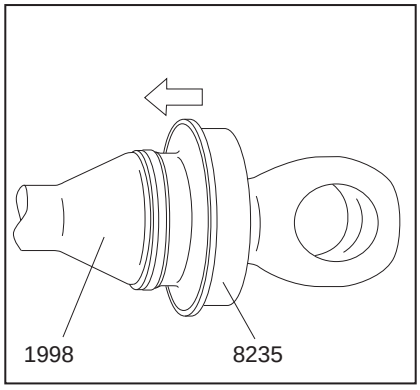

Continued Page 10.1R

10 DISMANTLING AND ASSEMBLY OF THE ROTATING PARTS

Basic joint size NM021 - NM105:

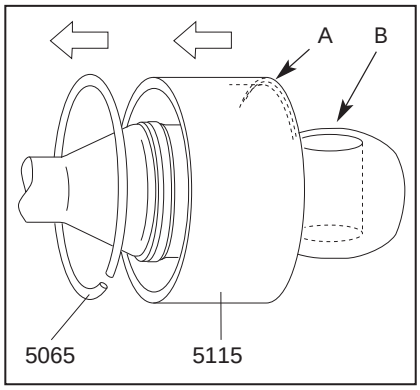

- Slip the circlip (5065) on to the coupling rod (1998). Slide the sleeve (5115) on to coupling rod (1998) so the inside diameter of chamfering (A) is being placed towards the coupling rod (1998) extension. Chamfering (A) will later on ease the installation over the O-rings (8060).
  Orient the head of coupling rod (1998) until it is in vertical position for the bore (B) for the pin (5075).

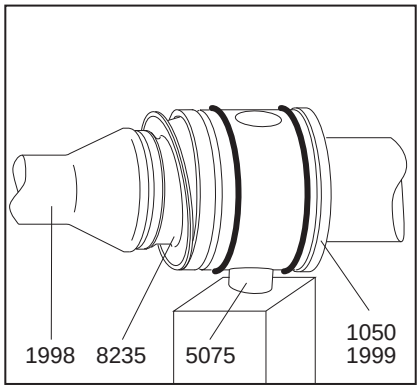

- Slide the coupling rod (1998) with SM-pin joint seal (8235) into the bore of rotor (1999) or connecting shaft (1050) and insert the pin (5075) from below and push up to the upper edge of coupling rod (1998).
  Support the pin (5075) against dropping out.
  Slide the SM-pin joint seal (8235) into the rotor (1999) or connecting shaft (1050) only from below, and in a slightly slanted position.

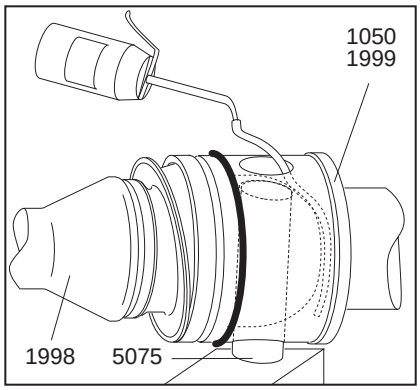

- For lubrication, use an oil can which should be fitted with a thin plastic hose having an outside diameter of not more than 4 mm.
  Insert this hose into the upper oil port opening in the rotor (1999) or connecting shaft (1050). Then slide the hose end past the coupling rod (1998) all the way down to the bottom section of the rotor head (1999) or connecting shaft (1050).
  Slowly fill with lubricating oil up to the filling port.

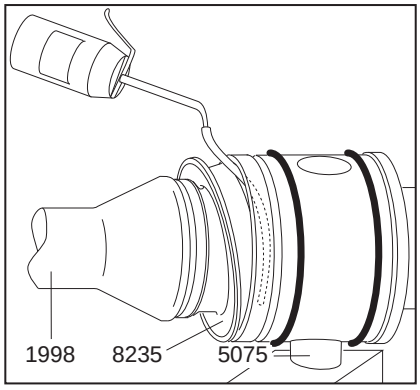

- Pull the hose out.
  Then insert the hose end through the small gap on the topside of SM-pin joint seal (8235) and guide it down to the bottom of the hollow space between coupling rod (1998) and SM-pin joint seal (8235).
  Slowly fill with lubricating oil up to the gap.

Continued Page 10.2

- Pull the hose out.
  Push the pin (5075) entirely into the bore of head of rotor (1999) or connecting shaft (1050) and retain in place.
  Only now, press the SM-pin joint seal (8235) into the bore of head of rotor (1999) or connecting shaft (1050) and push up to the shoulder. In doing so the SM-pin joint seal (8235) should be slightly bulbous around the outer surface. Wipe off overflow oil. Use this oil for lubricating the O-rings (8060).

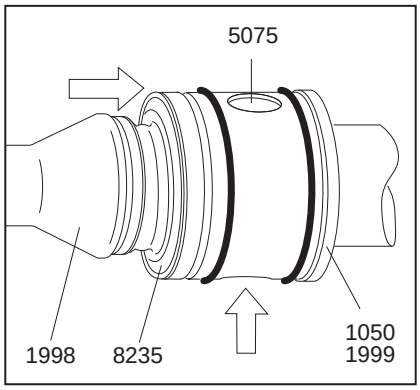

- Slip the sleeve (5110) or (5115), with its chamfering (A) forward, on to the head of rotor (1999) or connecting shaft (1050) and push up to the shoulder.

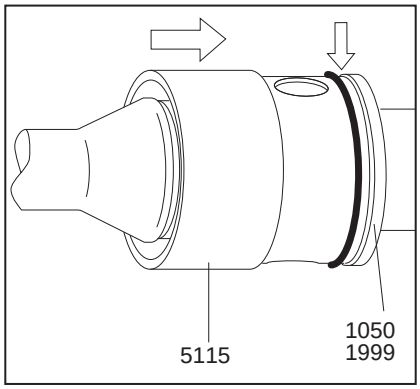

- Place the circlip (5065) into its groove on the rotor head (1999) or connecting shaft (1050) and carefully snap in place all around.

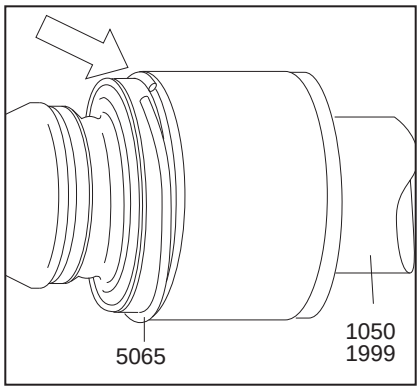

- Basic joint size NM125:

  Slide the coupling rod (1998) into the bore of the head of rotor (1999) and connecting shaft (1050) and insert the pins (5075).
  Insert the SM-pin joint seal (8235) (8235) into the head of rotor (1999) and connecting shaft (1050).
  Only then screw in one wear sleeve (5440) with O-ring (8060) into the head of rotor (1999) and connecting shaft (1050) and turn upside down.

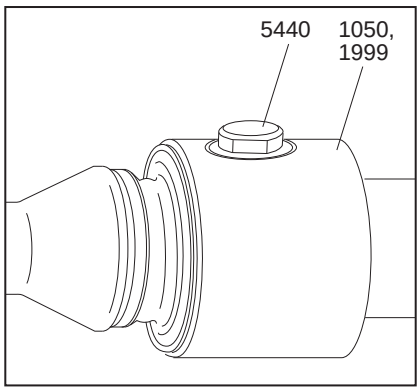

- For lubrication, use an oil can which should be fitted with a thin plastic hose having an outside diameter of not more than 4 mm.
  Insert this hose into the upper oil port opening in the rotor (1999) or connecting shaft (1050). Then slide the hose end past the coupling rod (1998) all the way down to the bottom section of the rotor head (1999) or connecting shaft (1050).
  Slowly fill with lubricating oil up to the filling port.

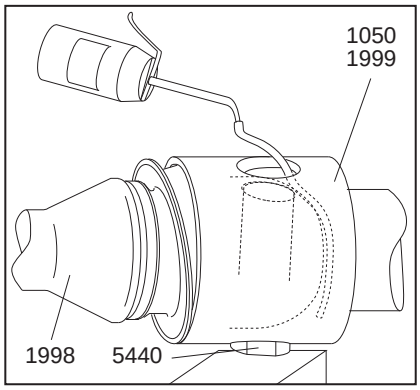

- Pull the hose out.
  Then insert the hose end through the small gap on the topside of SM-pin joint seal (8235) and guide it down to the bottom of the hollow space between coupling rod (1998) and SM-pin joint seal (8235).
  Slowly fill with lubricating oil up to the gap.
- Screw in the second wear sleeve (5440) with O-ring (8060) into the head of rotor (1999) and connecting shaft (1050).

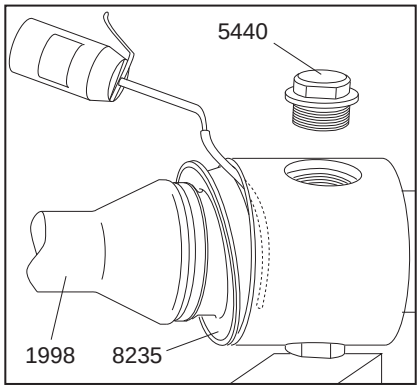

- Basic joint size NM021 - NM125:

  Drive connecting shaft (1050), coupling rod (1998) and rotor (1999) are now joined by means of the two pin joints.
  Pump housing (2010), stator (3005) and end stud (2005) may now be fitted.

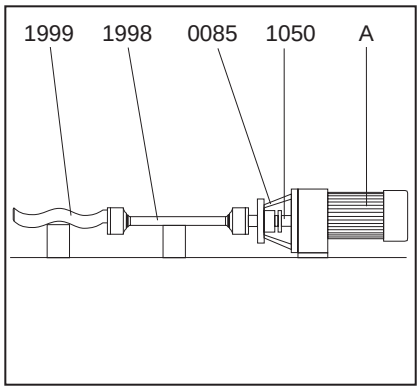

Continued Page 10.3

10.3 Dismantling and Assembly of the Rotating Parts with Pin Joints with SM-Pin Joint Seal (joint basic size NM015)

For removal and refitting of the rotor (1999) and coupling rod (1998) the pin joints should be dismantled and re-assembled as follows:

Dismantling:

- Push the SM-pin joint seal (8235) away from the rotor (1999), drive shaft (1005) or connecting shaft (1050) so the bore for the pin (5075) comes free.

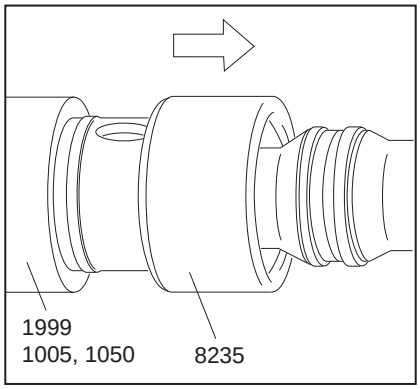

- Press the pin (5075) out of the rotor (1999), connecting shaft (1050) or drive shaft (1005). Then withdraw the coupling rod (1998) from the bore of rotor (1999), connecting shaft (1050) or drive shaft (1005).

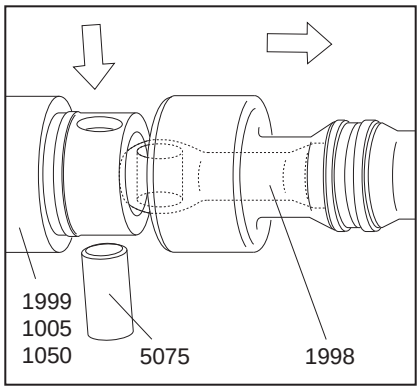

- Push the SM-pin joint seal (8235) towards the head of coupling rod (1998). In the narrow coupling rod section press the clamp ring (5425) out of the groove of the seal. Then slip the SM-pin joint seal (8235) and clamp ring (5425) off over the head of the coupling rod (1998).

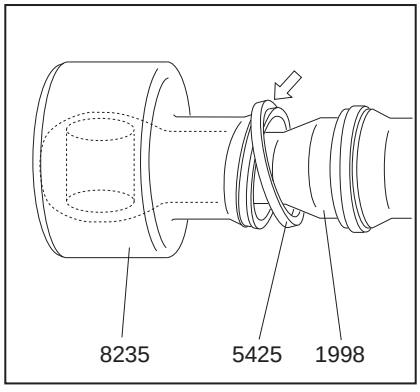

Continued Page 10.0R

Re-Assembly:

- Slip the clamp ring (5425) and the SM-pin joint seal (8235) on over the head of the coupling rod (1998).

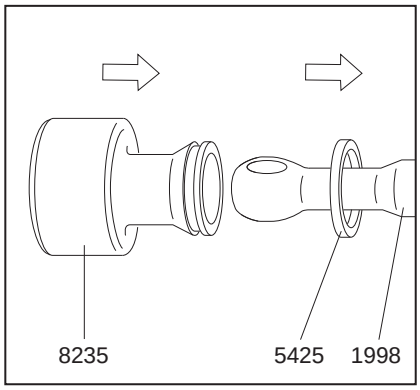

- Push the SM-pin joint seal (8235) towards the narrow section on the head of coupling rod (1998) and place the clamp ring (5425) back into the groove of the SM-pin joint seal (8235).
  Then move the SM-pin joint seal (8235) up to the coupling rod (1998) shoulder.

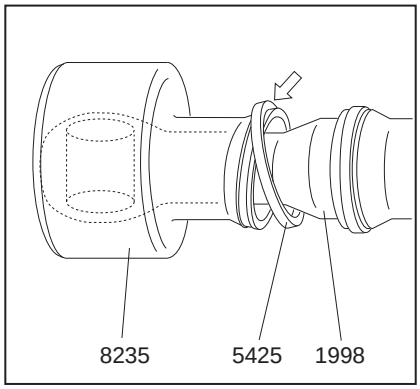

- Place the head of coupling rod (1998) into the bore of the rotor (1999), drive shaft (1005) or connecting shaft (1050).

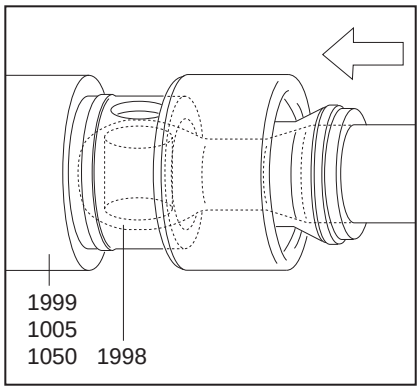

- Join the rotor (1999), drive shaft (1005) or connecting shaft (1050) and coupling rod (1998) by the pin (5075).
  Then push the SM-pin joint seal (8235) up to the shoulder of the rotor (1999), drive shaft (1005) or connecting shaft (1050).

  Re-assemble the second pin joint in the same manner.

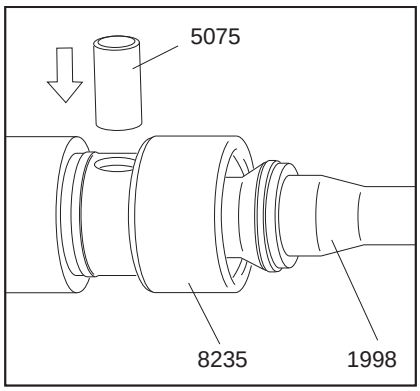

10.3 Replacing the Wear Sleeves of Adapter, Rotor and Coupling Rod

The wear sleeves (5435, 5440) have a very tight fit. A press should be used to remove or refit them.

It may be possible though to drive the damaged sleeves out with a suitable mandrel. A rigid vice however is needed at the least for pressing new sleeves (5435, 5440) in again.

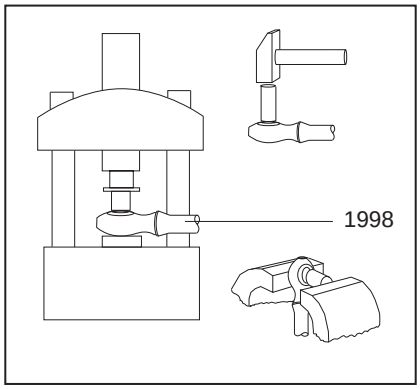

Orient the wear sleeves (5435) so that their oval bore agrees with the longitudinal axis of the coupling rod (1998).

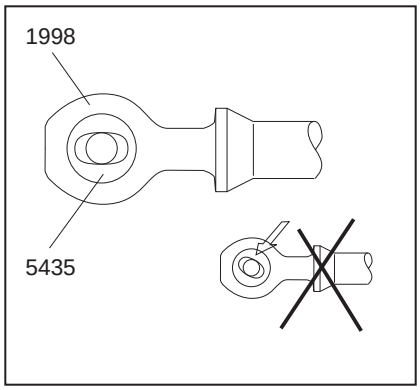

- Generously oil the wear sleeves (5435, 5440).
- Every wear sleeve (5435, 5440) has got one smaller outer diameter on one end for better insertion into the bores of the coupling rod.
- Ensure the sleeves are placed in the correct orientation to the coupling rod (1998).

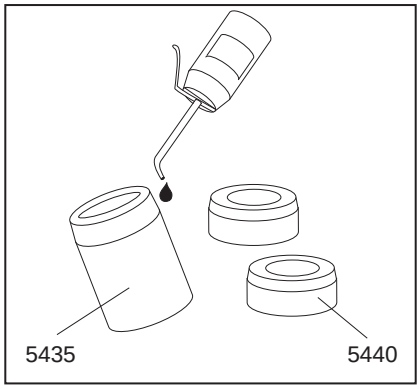

11 Removal and Fitting of the Connecting Shaft with Shaft Seal

Removal:

- Push the circlip (1035) in the direction to the mechanical seal.
- Remove pin (1030).
- Remove the shaft seal housing (7005) and mechanical seal (7010) together with connecting shaft (1050) and set ring (1035) from drive stool (0085) and the drive shaft.
  The thread of cylindrical head screw (1040) can be used as forcing screw.
- If a mechanical seal is installed, see description "Removal and Fitting of Mechanical Seal" after Page 12.0.

Fitting:

- Apply grease into the bore of the connecting shaft (1050) to avoid rust (e.g. TCE-Metallic 600).
- Assemble the shaft seal housing (7005) and mechanical seal (7010) together with connecting shaft (1050) and set ring (1035) with drive stool (0085) and push connecting shaft (1050) on to the drive shaft.
  At this please observe the installation direction of set ring (1035) (please see mark).
- If a mechanical seal is installed, see description "Removal and Fitting of Mechanical Seal" after Page 12.0.
- Connect the connecting shaft (1050) and the drive shaft by pin (1030).
  Push set ring (1035) on pin (1030).

12.1 Removal and Fitting of the Single Mechanical Seal

- Carefully slide out mechanical seal housing (7005) together with the parts of the mechanical seal contained in it from connecting shaft (1050).
- Carefully push mechanical seal (7010) stationary seat out of mechanical seal housing (7005).

Refitting is a simple reversal of the above procedure.

- To reduce frictional forces during seal assembly, apply some glycerine to the shaft and the seal housing in the area of the gaskets.
- Special care must be taken when fitting double PTFE-coated gaskets: the joint of the outer coating must point away from the seal assembly direction, otherwise the coating may open or be pulled off!



Ensure that the distribution of pressure is uniform when inserting the pressure sensitive counter rings. When inserting larger rings, use a suitable mandrel.
Do not allow any foreign bodies to get between the sliding surfaces.

- Exactly keep to the seal installation dimensions and ensure that the sealing faces are correctly pressed together (see table on sectional drawing W 209.000 or W 210.000).
- Insert mechanical seal (7010) stationary seat into mechanical seal housing (7005).
- Insert mechanical seal housing (7005) together with the stationary seat into the drive stool without the installed connecting shaft (1050).
- If necessary take the installation dimension from the table and add the thickness S of the set ring (7086) when existing.
- Mark this installation dimension on the connecting shaft (1050).
- Fix the rotating unit of the mechanical seal (7010) on the connceting shaft (1050) depending on the installation dimension so that the rotating unit of the mechanical seal (7010) or the set ring (7086) is at the mark.
- Insert connecting shaft (1050) with the rotating unit of the mechanical seal (7010) into drive stool (0085) and install lip seal (7091, if existing. Push the set ring (1035) on to connecting shaft (1050) and observe at this the installation direction (see mark).
  Push connecting shaft (1050) on to the drive shaft and connect with pin (1030). Push the set ring (1035) on pin (1030).

Inspection Opening at the Pump Housing

gray cast iron model on from size NM045

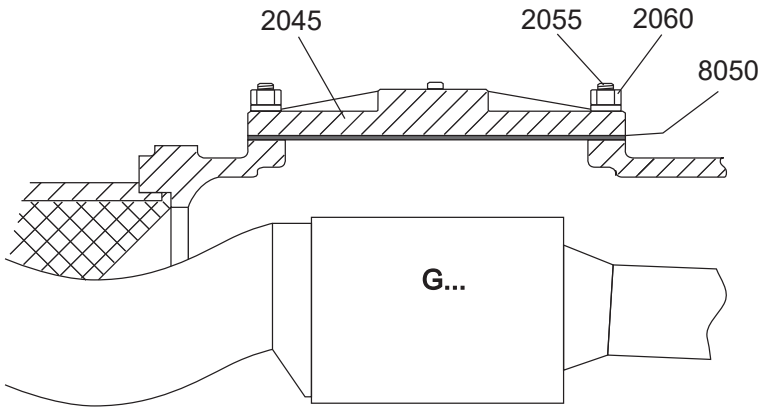

design for welded housings – nominal size DN 76,1 – ISO 2852

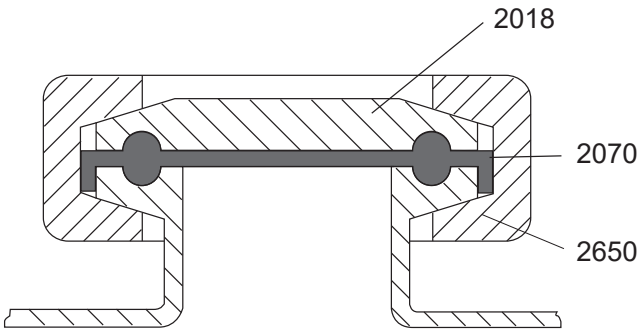

15 Sectional Drawings and List of Spare Parts

14 Recommended Spare Parts

In general, we have all spare parts in stock. Our subsidiaries and exclusive representatives also hold a certain stock. For special cases and when short waiting periods are not acceptable, we recommend to keep an amount of spare parts, corresponding to the pump, in stock on site (please see table below).

- Rotor
- Stator
- Elastomer parts as O-rings and sleeves
- joint parts
- shaft seals.

To avoid mistakes in delivery, please identify the parts by their position number shown in the spare parts list or on the sectional drawing.

For placing a spare parts order, it is absolutely necessary to give the following details:

Pieces (see column 2) - Designation (see column 3) - Identification Number (see column 4)

The column details are taken from the spare parts list. See example.

Example:

SPARE PARTS LIST		10.05.94		10:50:18	Page: 1 / 5
1		2		3	4
PART EURO	POS.	Quantity	Unit	Designation Size – Norm – Material/Surface	Ident-Number
3410	0005	1,000	pc	bearing housing	850221
2910	0010	1,000	pc	distance sleeve	850220
3520	0015	1,000	pc	bearing cover	850222

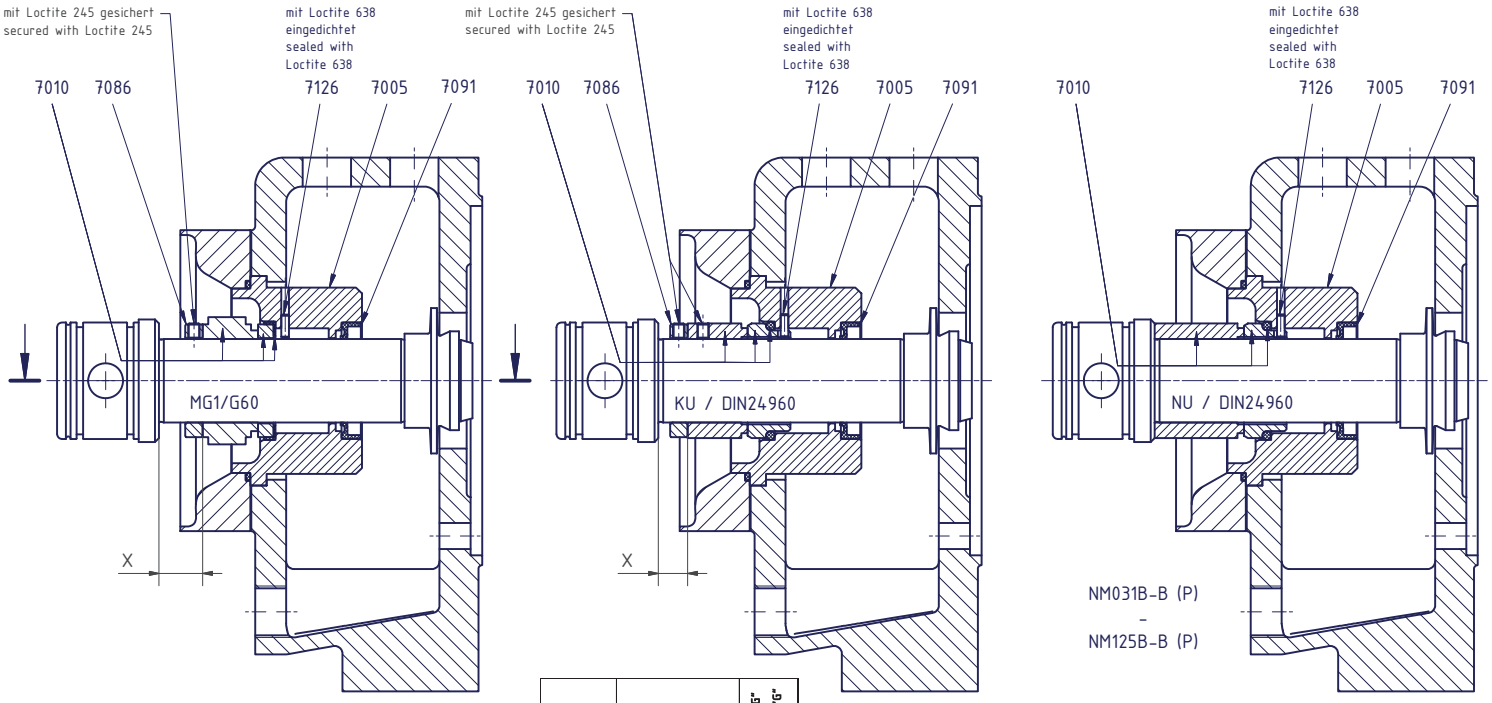

Type	Einstellmaß "X" setting "X"		Spülanschluß "G" flushing connection "G"
	MG1	KU	
NM015B	10,5	0	G 1/8
NM021B	10,5	0	
NM031B	20,5	12,5	
NM038B	17,5	10	
NM045B	22,5	15	G 1/4
NM053B	25,5	22,5	
NM063B	30,5	27,5	
NM076B	30	20	
NM090B	36,5	30	
NM105B	30,5	25	
NM125B	30,5	25	

NETZSCH
The heart of your process

Zeichnung-Nr.: Drawing No.: W210.000

Einf. wirk. GLRD
mit Quenchanschluß
Single Mechanical Seal
with Quench

Type: NM015B-B (P) - NM125B-B (P)

	Datum / date	Name / name	Unterschrift/Signature
Maßst./Scale: 1 : X			
gezeichnet / drawn	09.03.2006	Preintner	
geprüft / checked	09.03.2006	Denk	
freigegeben / released	09.03.2006	Denk	

Verteiler: Distributor: 2 / 3 / 50 / 51 / 52 / 58 / 95 / 98 / 49

Revision: 2

Ersatz für Ausgabe vom: Replacement for Version of: 23.10.2003

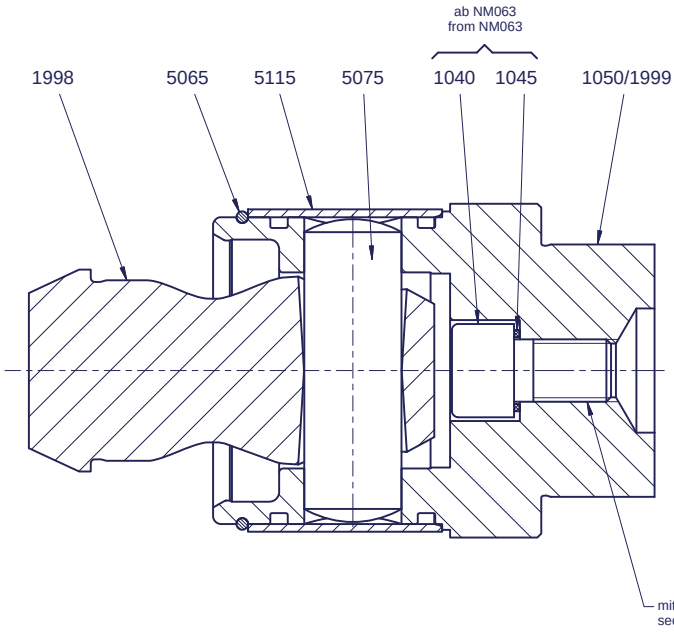

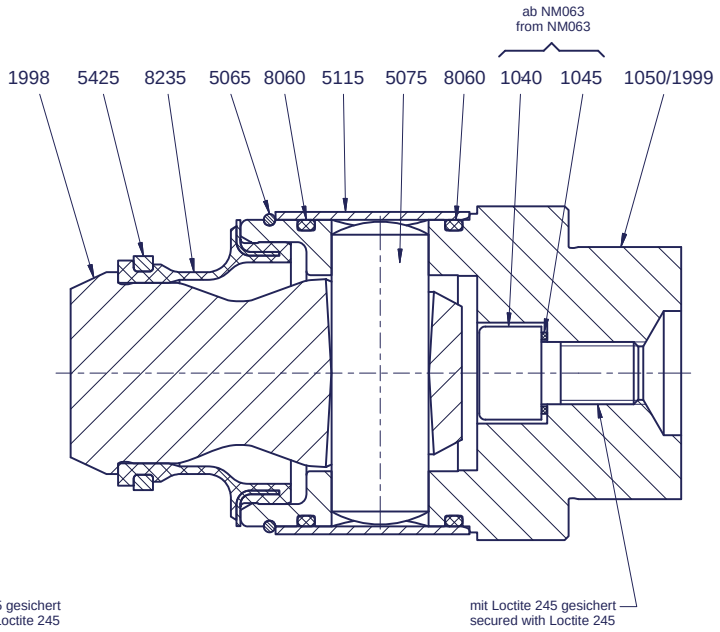

nur/only NM015B- (P)

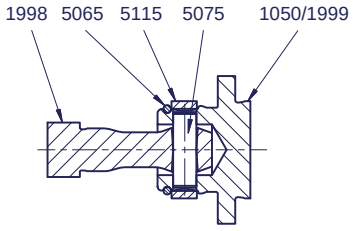

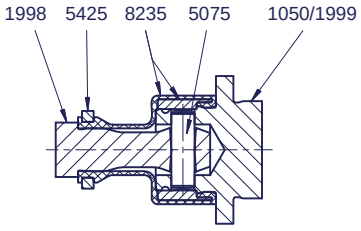

NETZSCH The heart of your process	Zeichnung-Nr.: Drawing No.: G146.000	Bolzengelenk ohne/mit SM-Bolzenabdichtung Pin Joint without/with SM-Pin Joint Seal		Type: NM015B- (P) - NM105B- (P)
Maßst./Scale: 1 : X	Datum / date	Name / name	Unterschrift/Signature	Revision: 1
gezeichnet / drawn	14.10.2003	Preintner		
geprüft / checked	14.10.2003	Thoma		Ersatz für Ausgabe vom: Replacement for Version of: 23.05.2003
freigegeben / released	14.10.2003	Thoma		
Verteiler: Distributor: 2 / 3 / 50 / 51 / 52 / 58 / 98				

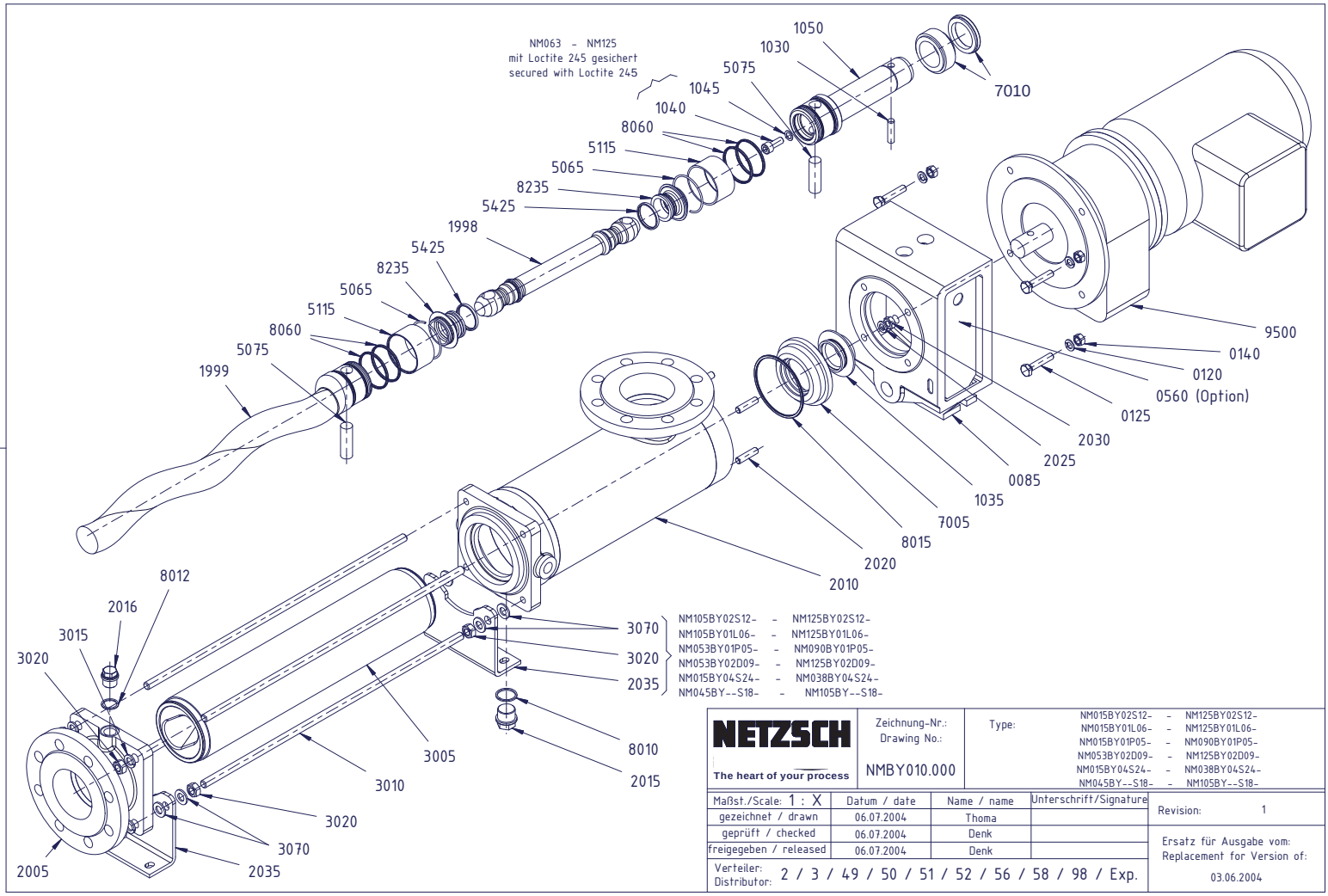

NETZSCH The heart of your process	Zeichnung-Nr.: Drawing No.: NMBY010.000	Type:	NM015BY02S12– – NM125BY02S12– NM015BY01L06– – NM125BY01L06– NM015BY01P05– – NM090BY01P05– NM053BY02D09– – NM125BY02D09– NM015BY04S24– – NM038BY04S24– NM045BY--S18– – NM105BY--S18–

Maßst./Scale: 1 : X	Datum / date	Name / name	Unterschrift/Signature	Revision: 1
gezeichnet / drawn	06.07.2004	Thoma		
geprüft / checked	06.07.2004	Denk		Ersatz für Ausgabe vom: Replacement for Version of:
freigegeben / released	06.07.2004	Denk		03.06.2004
Verteiler: Distributor: 2 / 3 / 49 / 50 / 51 / 52 / 56 / 58 / 98 / Exp.				

PUMP DATASHEET

NETZSCH	NR. CP: 0	NR. DOC: 0	
	CUSTOMER: VEOLIA		REV. 0
			SHEET
	ORDER: 4210000241		
TITLE:	NM031BY01L06B PUMP DATA SHEET		

01 / NEMO PUMP / NM031BY01L06B

CONSTRUCTIVE FEATURES		
☑ Base:	Model:	Carbon steel Standard top hat profile
☐ Bearing		
☐ By-pass:		
☐ Coupling:		
☐ Relief Valve:		
☑ Mechanical Seal:	Manufacturer / Model:	
☐ Gasket:		
☐ Shaft Sleeve:		
Transmission:	○ Direct ○ Gear ○ Belt ◉ N/A	

SUCTION NOZZLE (INTERFACE WITH THE INSTALLATION)	
Rating:	Pump#1:Horizontally right from Drive end Pump#2:Horizontally left from Drive end
Facing:	FLAT FACE
Dimension/Class:	2" -125#ANSI ANSI B16.1 FLANGE

DISCHARGE NOZZLE (INTERFACE WITH THE INSTALLATION)	
Rating:	HORZONTAL
Facing:	FLAT FACE
Dimension/Class:	2" -125#ANSI ANSI B16.1 FLANGE

MATERIALS	
Rotor:	SAE 4140 HARD CHROME PLATED TOOL STEEL
Stator:	S61M ELASTOMER-BUNA
Mechanical Seal:	AISI 316 / AISI 316 / SILICON CARBIDE
Mechanical Seal Housing:	STAINLESS STEEL 316
Casing:	CAST IRON
SM Pin Joint Seal:	"V" JOINT VITON SEALS
Drive Shaft:	STAINLESS STEEL 316
Connecting Shaft:	STAINLESS STEEL 316
Coupling Shaft:	STAINLESS STEEL 316
Base:	1020 CARBON STEEL
EQPT TAG: P-03-610/620	

INSPECTION			
☐ Hydrostatic	UNWITNESSED	☐ Painting	UNWITNESSED
☑ Performance	UNWITNESSED	☐ Dimensional	UNWITNESSED
☐ Dye penetrant	UNWITNESSED	☐ Welding	UNWITNESSED

PERFORMANCE	
Pumped fluid:	**TWAS**
Concentration:	N/A
Operating Temp.:	20 C
Density:	1Kg/dm3
Viscosity:	30000-63000 cps
pH:	N/A
NPSH Available:	-
NPSH Required:	1.15
Absorbed Power:	0.18-0.3 kw
Nominal Flow :	0.93 m3/hr
Project Flow :	1.65 m3/hr
Discharge Pressure:	1 bar
Suction Pressure:	flooded
Differential Press.:	1 bar
Set Press. Relief Val.:	-
Pump Design Press.:	1 bar
Máx. Dif. Pressure.:	1 bar
Efficiency:	30.00%
Rotations:	120-205 rpm
Installation Condition:	◉ Indoor
	○ Outdoor
	○ Uninformed
Classified area:	○ Yes ◉ No

FLUSHING	
Fluid:	N/A
Pressure:	N/A
Flow:	N/A
Temperature:	N/A

HYDROSTATIC TEST PRESSURE	
Pump Housing:	N/A
Pressure Stud:	N/A

WEIGHTS	
Pump (kgf):	-
Base (kgf):	-
Gear (kgf):	-
Total (kgf):	79.5

NOTES:

2" Onyx Isolator rings with pressure gauge, pressure switch and manual reset will be provided

THE INFORMATION CONTAINED IN THIS DOCUMENT IS THE OWNERSHIP OF NETZSCH OF BRAZIL, WHICH IS PROHIBITED TO BE USED OUTSIDE OF ITS PURPOSE.

MOTOR DATA PACKAGE

Technical Documentation

PDH00145C

Optim TEFC | AEHH8N

Date: March 8, 2019

TECO Westinghouse
MOTORS (CANADA) INC.

Date: March 8, 2019

Dimensional Drawing

Catalogue	Model	HP	Pole	kW	Rating	Voltage	Hz	RPM
PDH00145C	AEHH8N	1	4	0.75	Continuous	575	60	1800

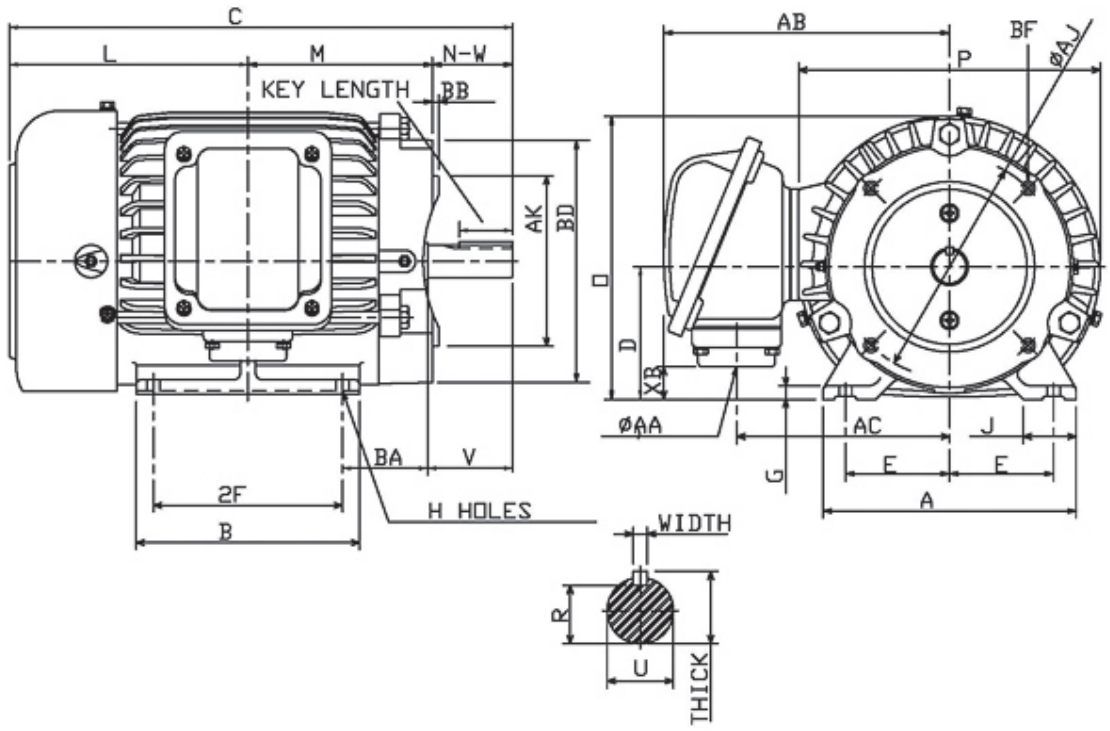

Frame Size	Mounting					A	B	C	CD	D
	E	2F	2F2	H	BA					
143TC	2.75	4		0.34	2.25	6.7	5.1	12.34		3.5

G	J	K	L	M	O	P	T	Key			Keyseat
								Width	Thick	Length	R
0.35	1.4		5.84	4.03	7.48	7.97		0.188	0.188	1.41	0.771

Terminal Housing				Aux Box		C/D Flange					
AA	AB	AC	XB	AE	AX	BB	AH	AK	BD	AJ	BF
3/4 NPT	7.56	5.63	0.86			0.16	2.12	4.5	6.4	5.875	3/8-16UNC

Shaft Extension			Bearings		Approx. Weight Lbs	SPL dBA/3ft	Ins. Class	S.F.	Drive Method	Dimensions
N-W	U	V	DE	NDE						
2.25	0.875	2.2	6205ZZ	6205ZZ	55	49	F	1.15	Direct Coupling / Belt Drive	Inches

TECO Westinghouse MOTORS (CANADA) INC.	
	Date: March 8, 2019

Technical Data Sheet

Motor Type: AEHH8N	Catalogue No: PDH00145C

Nameplate Information

HP	Pole	RPM	Frame	Voltage	Hz	Phase
1	4	1745	143TC	575	60	3
Enclosure	Ins. Class	Service Factor	Time Rating	NEMA Design	Rated Amb.	Rated Altitude
TEFC	F	1.15	Continuous	B	-40 to 40 °C	<3300 ft

Typical Performance

Efficiency (%)				Power Factor (%)		
Full Load		3/4 Load	1/2 Load	Full Load	3/4 Load	1/2 Load
Nom.	Min.					
85.5	82.5	84	81.5	73	64.5	51.5

Torque				Current (A)		
Full Load (lb-ft)	Locked Rotor (% FLT)	Pull Up (% FLT)	Break Down (% FLT)	No Load	Full Load	Locked Rotor
3.01	310	280	410	0.6	1.2	12

NEMA KVA Code	Inertia (WR^2)			Safe Stall Time (s)		Noise Level Sound Press. dB(A)
	Rotor ($lb\text{-}ft^2$)	NEMA Load ($lb\text{-}ft^2$)	Max. Allowable ($lb\text{-}ft^2$)	Cold	Hot	
N	0.086	5.8	46	71	50	49

VFD Duty Information

Speed Range			VFD		S.F.
Constant Torque	Variable Torque	Constant Power	Carrier	Type	
6-60Hz	3-60Hz	60-120Hz	≤ 5 kHz	VPWM or CPWM	1.0 Only

Additional Information

Bearings		Approx. Weight
DE	NDE	lbs
6205ZZ	6205ZZ	55

Hazardous Locations Information

CSA Certified	
Class I, Div 2, Groups B, C & D Class I, Zone 2, Groups IIB+H2, IIB & IIA	
Temp Code (Sinewave / VFD)	T3C / T3C

TECO Westinghouse MOTORS (CANADA) INC.	
	Date: March 8, 2019

Nameplate Drawing

Optim TEFC

TYPE	AEHH8N	CAT. NO.	PDH00145C		
OUTPUT	1 HP 0.75 kW	FRAME	143TC	TEFC	
R.P.M.	1745	POLE	4	INS.	F
VOLTS	575	PHASE	3	Hz	60
AMPS	1.2	CODE	N	S.F.	1.15
AMBIENT	40 °C	NOM. EFF. 85.5		MIN. EFF. 82.5	
BEARINGS	6205ZZ / 6205ZZ			RATING Cont.	

SER. NO.	TBD	DESIGN	B	WT. 55 LBS

PWM VFD DUTY	VT	CT	CP	S.F.
	3-60Hz	6-60Hz	60-120Hz	1.0 Only

Connection Diagram

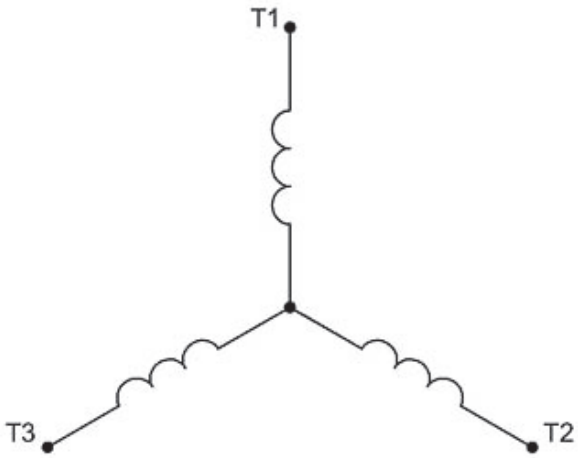

3 LEAD SINGLE VOLTAGE WYE					
VOLTAGE	CONN.	L1	L2	L3	
-	WYE	1	2	3	

WD_3Y

TECO Westinghouse MOTORS (CANADA) INC.	
	Date: March 8, 2019

Thermal Limit Curves

Motor Type: AEHH8N	Catalogue No: PDH00145C	Family: Optim TEFC

HP	1	Safe Stall Time		Full Load A	1.2 A
Voltage	575V 60Hz	Hot	50 s	% Inrush	1,000 %
RPM	1800	Cold	71 s	Locked Rotor A	12 A

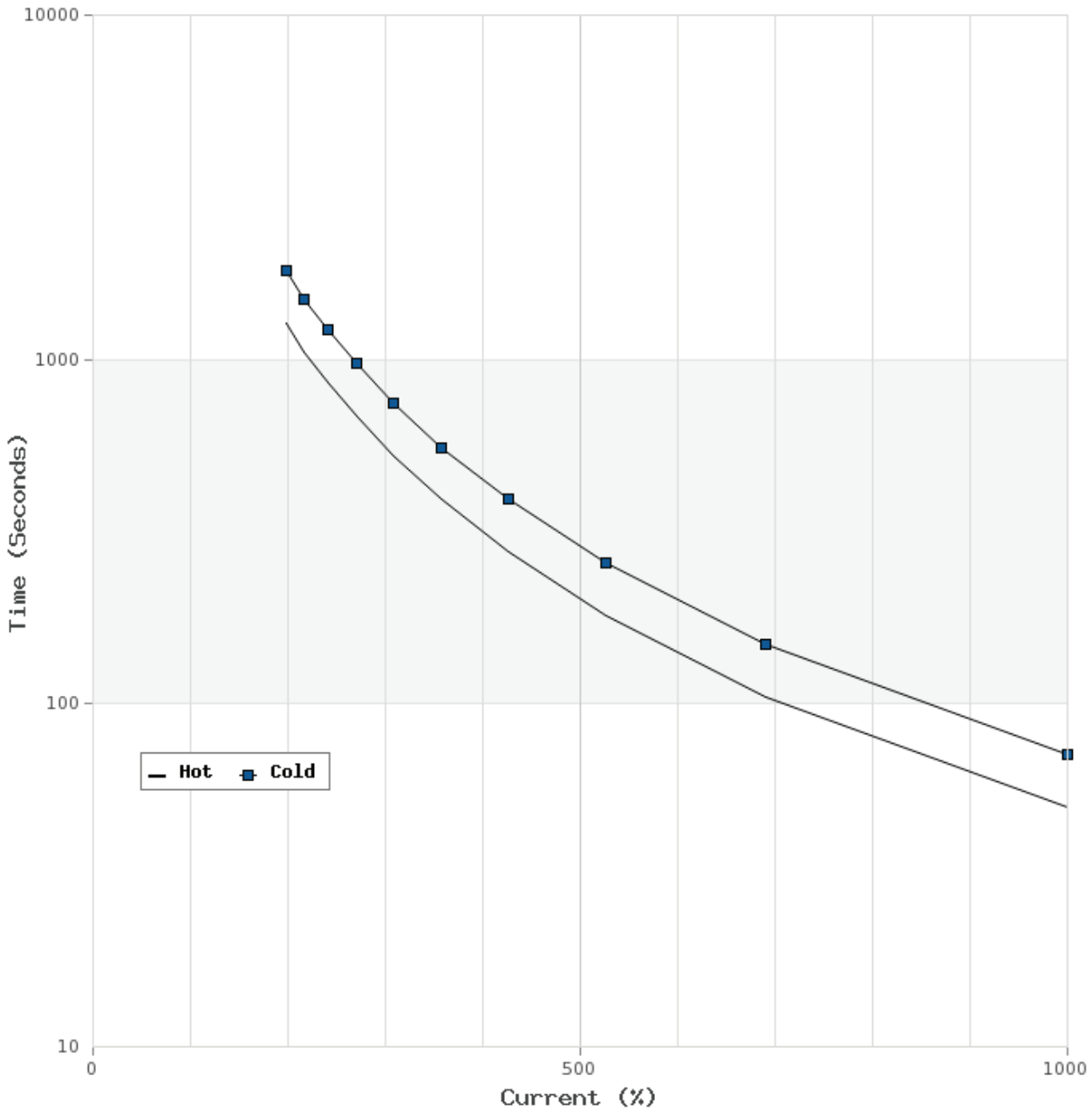

TECO Westinghouse MOTORS (CANADA) INC.	
	Date: March 8, 2019

T-N and I-N Curves

Motor Type: AEHH8N	Catalogue No: PDH00145C	Family: Optim TEFC

HP	1	Full Load T	3.01 lb-ft	Full Load A	1.2 A
Voltage	575V 60Hz	Locked Rotor T	310 %	Locked Rotor A	12.0 A
RPM	1800	Pull Up T	280 %	Break Down T	410 %

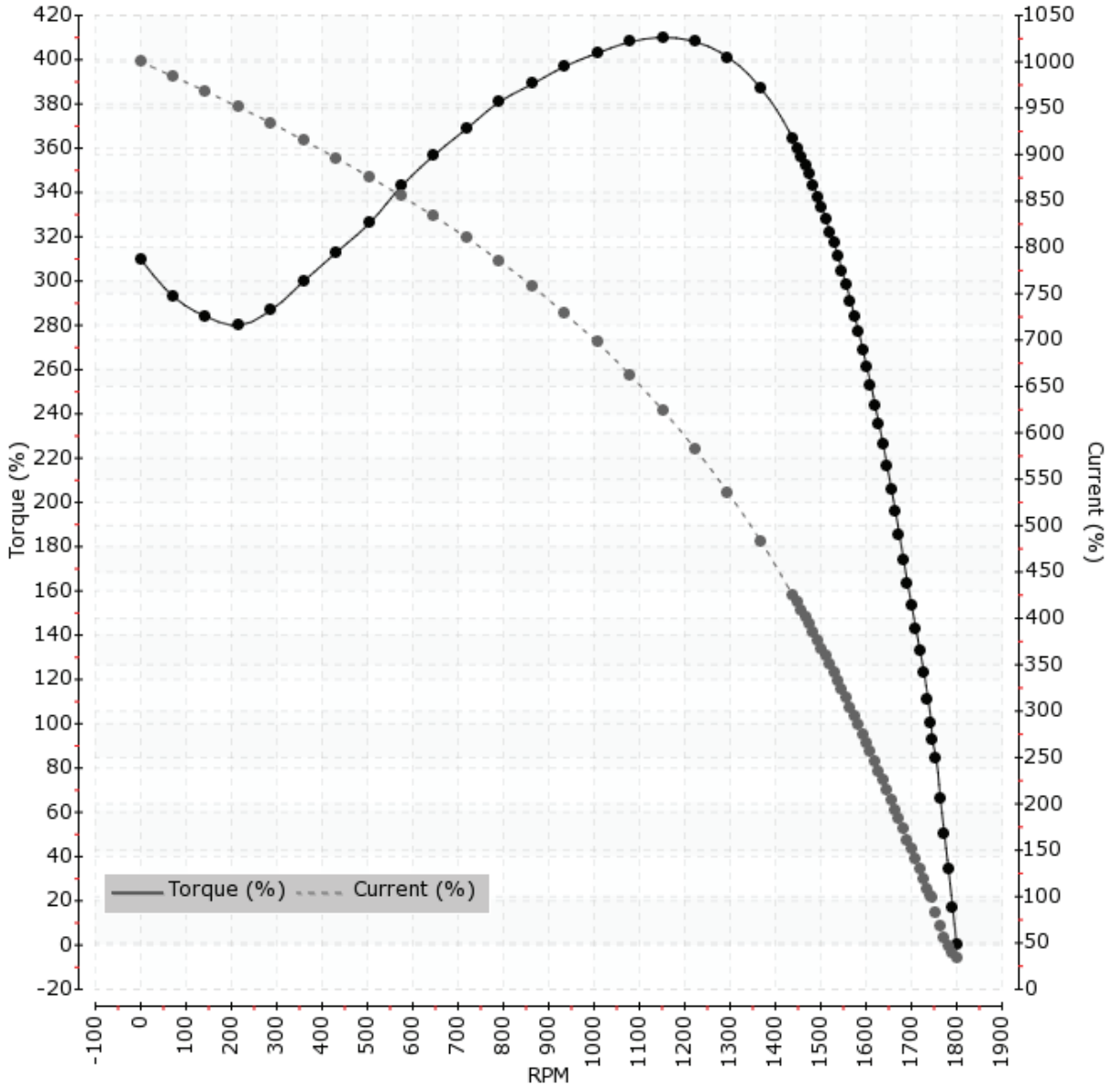

MOTOR IOM MANUAL

TECO—Westinghouse

INSTALLATION AND MAINTENANCE INSTRUCTIONS FOR THREE PHASE INDUCTION MOTORS

Frames 143T - 449T

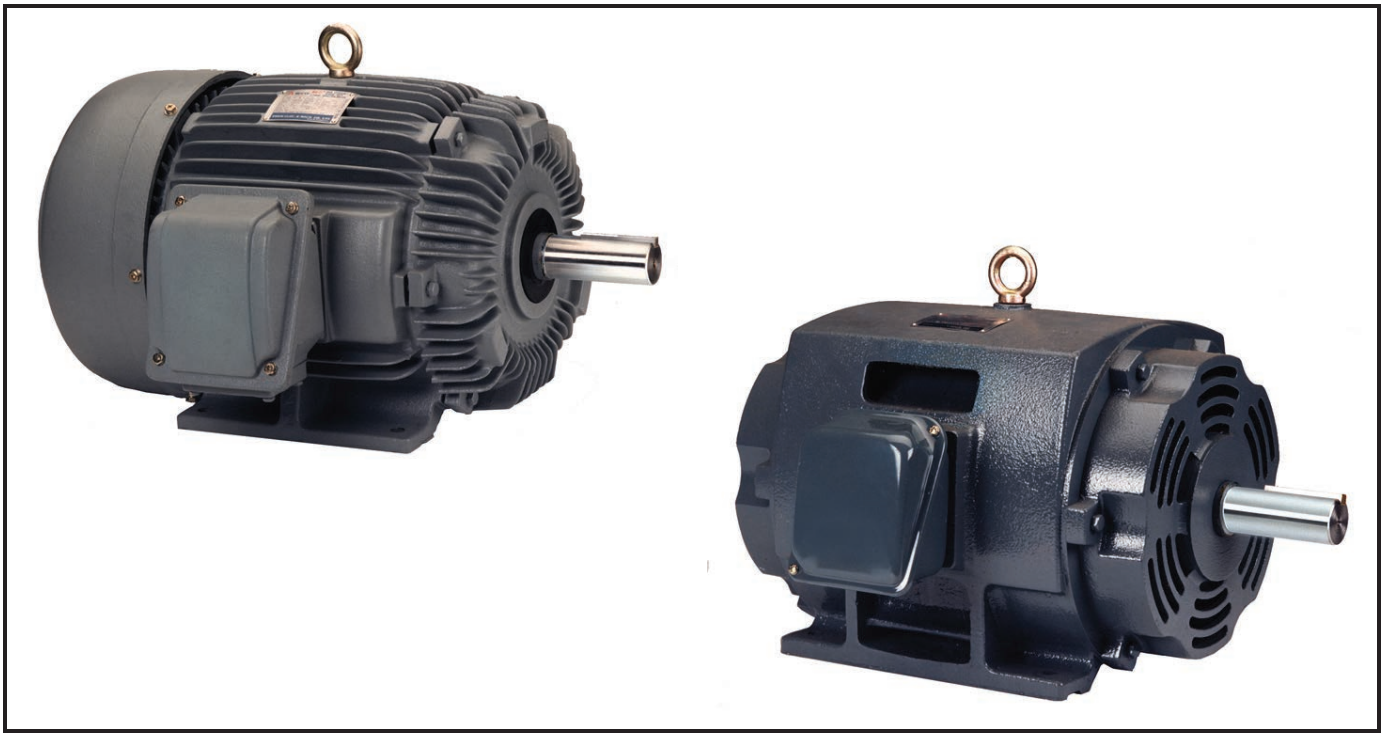

18060 -109 Ave Edmonton, AB T5S 2K2
Phone: 800-661-4023 780-444-8933 Fax: 888-873-8964

RECEIVING

1. Check nameplate data.
2. Check whether any damage has occurred during transportation.
3. After removal of shaft clamp, turn shaft by hand to check that it turns freely.
4. If motor is to be reshipped (alone or installed to another piece of equipment) the shaft must again be clamped to prevent axial movement.
   Note: Remove the bearing clamp before turning the shaft on 284T-449TZ frame motors.

WARNING
THE FOLLOWING SAFETY PRECAUTIONS MUST BE OBSERVED:

1. Electric rotating machinery and high voltage can cause serious or fatal injury if improperly installed, operated or maintained. Responsible personnel should be familiarized with NEMA MG2; Safety Standards for Construction and Guide Selection. Installation and Use of Electric Motors and Generators; National Electric Code and all local safety requirements.
2. When servicing, all power sources to the motor and to the accessory devices should be de-energized and disconnected and all rotating parts should be at standstill.
3. Lifting means, when supplied, are intended for lifting the motor only. When two lifting devices are supplied with the motor a dual chain must be used.
4. Suitable protection must be used when working near machinery with high noise levels.
5. Safeguard or protective devices must not be by-passed or rendered inoperative.
6. The frame of this machine must be grounded in accordance with the National Electric Code and applicable local codes.
7. A suitable enclosure should be provided to prevent access to the motor by other than authorized personnel. Extra caution should be observed around motors that are automatically or have automatic re-setting relays as they may restart unexpectedly.
8. Shaft key must be fully captive or removed before motor is started.
9. Provide proper safeguards for personnel against possible failure of motor-mounted brake, particularly on applications involving overhauling loads.
10. Explosion proof motors are constructed to comply with the label service procedure manual, repair of these motors must be made by TECO-Westinghouse Motor Company or U/L listed service center in order to maintain U/L listing.

LOCATION

1. Drip-proof motors are intended for use where atmosphere is relatively clean, dry, well ventilated and non-corrosive.
2. Totally enclosed motors may be installed where dirt, moisture, or dust are present and in outdoor locations.
3. Explosion-proof motors are built for use in hazardous locations as indicated by Underwriters label on the motor.
4. Chemical duty enclosed motors are designed for installation in high corrosion or excessive moisture locations.
   Note: in all cases, no surrounding structure should obstruct normal flow or ventilating air through or over the motor.

MOUNTING

1. Mount motor securely on a firm, flat base. All ball bearing normal thrust motors up to and including 256T frame size may be side-wall or ceiling mounted; all others check nearest TECO-Westinghouse office for mounting recommendations.
2. Align motor accurately, using a flexible coupling if possible. For drive recommendations, consult with drive or equipment manufacturer, or TECO-Westinghouse.
3. Mounting bolts must be carefully tightened to prevent changes in alignment and possible damage to the equipment. The recommended tightening torque s for medium carbon steel bolts, identified by three radial lines at 120 degrees on the head, are:

Bolt Size	Recommended Torque (Ft-lb.)	
	Minimum	Maximum
2/8	25	37
1/2	60	90
5/8	120	180
3/4	210	320

4. V-belts Sheave Pitch Diameters should not be less than those shown in Table 1 (NEMA recommended values)
5. Tighten belts only enough to prevent slippage. Belt speed should not exceed 5000 ft. per min.

TABLE 1. V-Belt Sheave Pitch Diameters (MG1-14.42)

Frame Number	Horsepower at Synchronous Speed, RPM				V-Belt Sheave			
					Conventional A, B, C, D AND E		Narrow 3V, 5V, AND 8V	
	3600	1800	1200	900	Minimum Pitch Diameter Inches	*Maximum Width Inches	Minimum Outside Diameter Inches	**Maximum Width Inches
143T	1.5	1	.75	.5	2.2	4.25	2.2	2.25
145T	2-3	1.5-2	1	.75	2.4	4.25	2.4	2.25
182T	3	3	1.5	1	2.4	5.25	2.4	2.75
182T	5				2.6	5.25	2.4	2.75
184T			2	1.5	2.4	5.25	2.4	2.75
184T	5				2.6	5.25	2.4	2.75
184T	7.5	5			3.0	5.25	3.0	2.75
213T	7.5-10	7.5	3	2	3.0	6.5	3.0	3.375
215T	10		5	3	3.0	6.5	3.0	3.375
215T	15	10			3.8	6.5	3.8	3.375
254T	15		7.5	5	3.8	7.75	3.8	4
254T	20	15			4.4	7.75	4.4	4
256T	20-25		10	7.5	4.4	7.75	4.4	4
256T		20			4.6	7.75	4.4	4
284T			15	10	4.6	9	4.4	4.625
284T		25			5.0	9	4.4	4.625
286T		30	20	15	5.4	9	5.2	4.625

TABLE 1. V-Belt Sheave Pitch Diameters (MG1-14.42)

Frame Number	Horsepower at Synchronous Speed, RPM				V-Belt Sheave			
					Conventional A, B, C, D AND E		Narrow 3V, 5V, AND 8V	
	3600	1800	1200	900	Minimum Pitch Diameter Inches	*Maximum Width Inches	Minimum Outside Diameter Inches	**Maximum Width Inches
324T		40	25	20	6.0	10.25	6.0	5.25
326T		50	30	25	6.8	10.25	6.8	5.25
364T			40	30	6.8	11.5	6.8	5
364T		60			7.4	11.5	7.4	5.785
365T			50	40	8.2	11.5	8.2	5.785
365T		75			9.0	11.5	8.6	5.785
404T			60		9.0	14.25	8.0	7.25
404T				50	9.0	14.25	8.4	7.25
404T		100			10.0	14.25	8.6	7.25
405T			75	60	10.0	14.25	10.0	7.25
405T		100			10.0	14.25	8.6	7.25
405T		125			11.5	14.25	10.5	7.25
444T			100		11.0	16.75	10.0	8.5
444T				75	10.5	16.75	9.5	8.5
444T		125			11.0	16.75	9.5	8.5
444T		150				16.75	10.5	8.5
445T			125		12.5	16.75	12.0	8.5
445T				100	12.5	16.75	12.0	8.5
445T		150				16.75	10.5	8.5

*Max. Sheave width = 2(N-W) - .25

**Max Sheave width = N-W

***Sheave ratios grater than 5:1 and center-to-center distance less than the diameter of the large sheave should be referred to TECO-Westinghouse.

POWER SUPPLY & CONNECTIONS

1. Wiring of motor and control, overload protection and grounding should be in accordance with National Electrical Code and all local safety requirements.
2. Nameplate voltage and frequency should agree with power supply. Motor will operate satisfactorily on line voltage within –10% of nameplate voltage; or frequency with –5% and with a combined variation not to exceed –10%. 230-volt motors can be used on 208-volt network systems, but with slightly modified performance characteristics as shown on the nameplate.
3. Dual voltage and single voltage motors can be connected for the desired voltage by following connection diagram shown on the nameplate or inside of the conduit box.
4. All Explosion Proof motors have Temperature Limiting Devices in the motor enclosure to prevent excessive external surface temperature of the motor in accordance with U/L standards. Terminals of thermal protectors (P1 & P2) should be connected to the motor control equipment, according to the connection diagram inside of the conduit box.
5. Standard connection diagram for three phase, not thermally protected, dual rotation motors are shown in diagrams A through E.
   (Note: To change rotation, Interchange any two line leads)

A. 3 Lead, Single Voltage



B. 6 Lead, Dual Voltage & Voltage Ration 1 to 3

B-1 Across the Line Start & Run

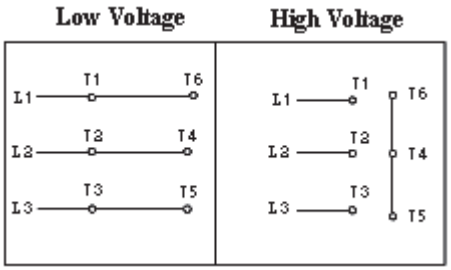

B-2 Wye Start & Delta Run
(Low Voltage only)

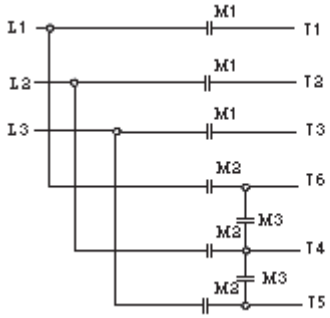

	START	RUN
M1	CLOSE	CLOSE
M2	OPEN	CLOSE
M3	CLOSE	OPEN

C. 9 Leads; Dual Voltage & Voltage Ratio 1 to 2, Wye Connected

C-1 Across the Line Start & Run

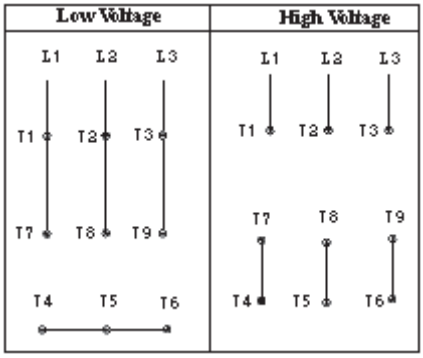

C-2 Part Winding Start
(Low Voltage only)

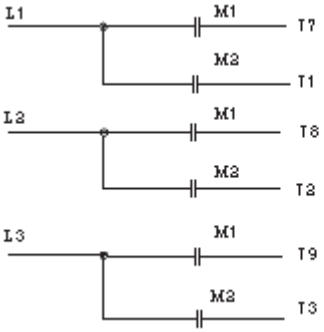

	START	RUN
M1	CLOSE	CLOSE
M2	OPEN	CLOSE
Tie Together	(T4-T5-T6)	

D. 9 Leads; Dual Voltage & Voltage Ration 1 to 2, Delta Connected

D-1 Across the Line Start & Run

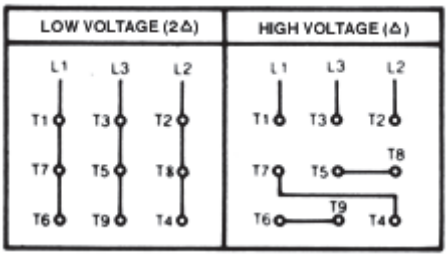

D-2 Part Winding Start
(Low Voltage only)

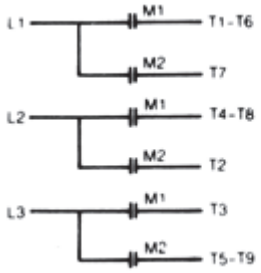

	START	RUN
M1	CLOSE	CLOSE
M2	OPEN	CLOSE

E. 12 Leads, Dual Voltage

E-1 Across the Line Start & Run

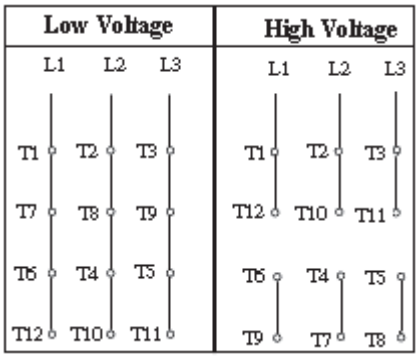

E-2-1 Wye Start & Delta Run (Low Voltage only)

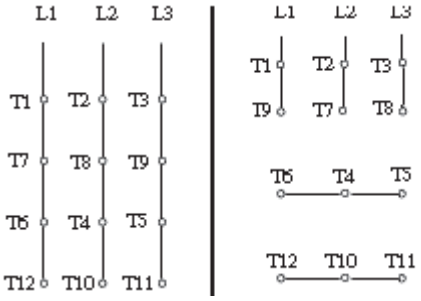

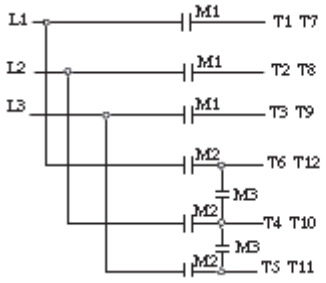

	START	RUN
M1	CLOSE	CLOSE
M2	OPEN	CLOSE
M3	CLOSE	OPEN

E-2-2 Wye Start & Delta Run (High Voltage only)

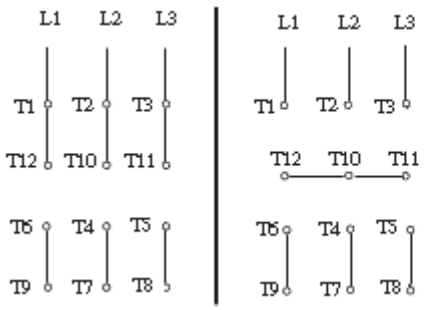

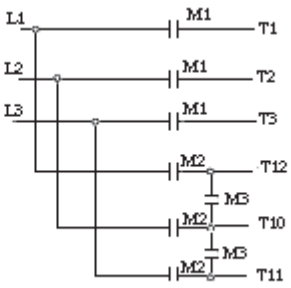

	START	RUN
M1	CLOSE	CLOSE
M2	OPEN	CLOSE
M3	CLOSE	OPEN

Tie Together (T4-T7); (T5-T8); (T6-T9)

E-3 Part Winding Start (Low Voltage only)

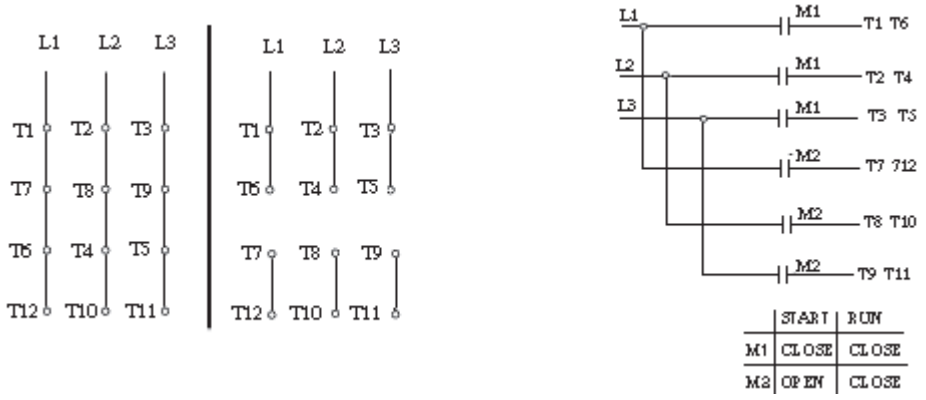

*Important: For Part Winding Start, M2 contactor should be closed within two (2) seconds after M1 contactor is closed.
Only 4 pole and above (e.g., 6P, 8P) motors are satisfactory for Part Winding Start at low voltage.

START UP

1. Disconnect load and start motor. Check direction of rotation. If rotation must be changed, ALLOW THE MOTOR TO STOP COMPLETLEY. Interchange any two leads of a three-phase motor.
2. Connect load. The motor should start quickly and run smoothly. If no, shut power off at once. Recheck the assembly including all connections before restarting.
3. If excessive vibration is noted, check for loose mounting bolts too flexible motor support structure or transmitted vibration from adjacent machinery. Periodic vibration checks should be made; foundations often settle.
4. Operate under load for short period of time and check operating current against nameplate.

TESTING

If the motor has been in storage for an extensive period or has been subjected to adverse moisture conditions, it is best to check the insulation resistance of the stator winding with a megometer. Depending on the length and conditions of storage it may be necessary to regrease or change rusted bearings.
If the resistance is lower than one megohm the windings should be dried in one of the following two ways:

1. Bake in oven at temperatures not exceeding 194¡F until insulation resistance becomes constant.
2. With rotor locked, apply low voltage and gradually increase the current through windings until temperature measured with a thermometer reaches 194¡F. Do not exceed this temperature.

MAINTENANCE

INSPECTION

Inspect motor at regular intervals. Keep motor clean and ventilation openings clear.

LUBRICATION

1. Frame 143T-256T: Double shielded and pre-lubricated ball-bearing motors without grease fittings and don t need relubrication, except on MAX-E1¤ and MAX-E2¤ products which have regreasable features.
2. Frames 280TS, 320-449TZ(TS): Motors having grease fittings and grease discharge devices at brackets. Motors are shipped with grease for initial running. It is necessary to relubricate anti-friction bearing motors periodically, depending on size and type of service. See Table 2 to provide maximum bearing life. Excessive or too frequent lubrication may damage the motor.

TABLE 2

Horsepower	Standard Conditions	Severe Conditions	Extreme Conditions
1 Thru 30 Hp, 1800 rpm and below	7 years	3 years	180 days
40 Thru 75 Hp, 1800 rpm and below	210 days	70 days	30 days
100 Thru 150 Hp, 1800 rpm and below	90 days	30 days	15 days
1 Thru 20 Hp, 3600 rpm	5 years	2 years	90 days
25 Thru 75 Hp, 3600 rpm	180 days	60 days	30 days
100 Thru 150 Hp, 3600 rpm	90 days	30 days	15 days

Note:

A. Standard conditions: 8 hours operation per day, normal or light loading, clear and 40¡C ambient conditions.
B. Severe conditions: 24-hour operation per day or light shock loading, vibration or in dirty or dusty conditions.
C. Extreme conditions: With heavy shock loading or vibration or dusty conditions.
D. For double shielded bearings, above data (lubrication frequency) means that the bearing must be replaced.

3. Be sure fittings are clean and free from dirt. Using a low-pressure grease gun, pump in the recommended grease until new grease appears at grease discharge hole.
4. Use the ALVANIA R3 grease or equivalent lithium based grease unless special grease is specified on the nameplate.
5. If relubrication is to be performed with the motor running, stay clear of rotating parts. After regreasing, allow the motor to run for ten to thirty minutes.

RENEWAL PARTS

1. Use only genuine TECO-Westinghouse renewal parts or as recommended by TECO-Westinghouse Motor Company.
2. When you order renewal parts please specify complete information to TECO-Westinghouse office/agent such as type, frame no., poles, horsepower, voltage, series no., quantity, etc.

FOR FURTHER INFORMATION PLEASE CONTACT

TECO-WESTINGHOUSE MOTORS (CANADA) INC.

ONYX ISOLATOR RING

UTILITY GAUGE

SPECIFICATIONS:

GAUGE SIZE:
METRIC - 100mm (4")

CASE:
304 STAINLESS STEEL

RING:
304 STAINLESS STEEL

LENS:
PLEXIGLASS

LIQUID FILL:
GLYCERINE (STD)

TUBE MATERIAL:
BRASS

SOCKET MATERIAL:
BRASS

ACCURACY:
ANSI GRADE B

RANGE: **0-160 PSI**

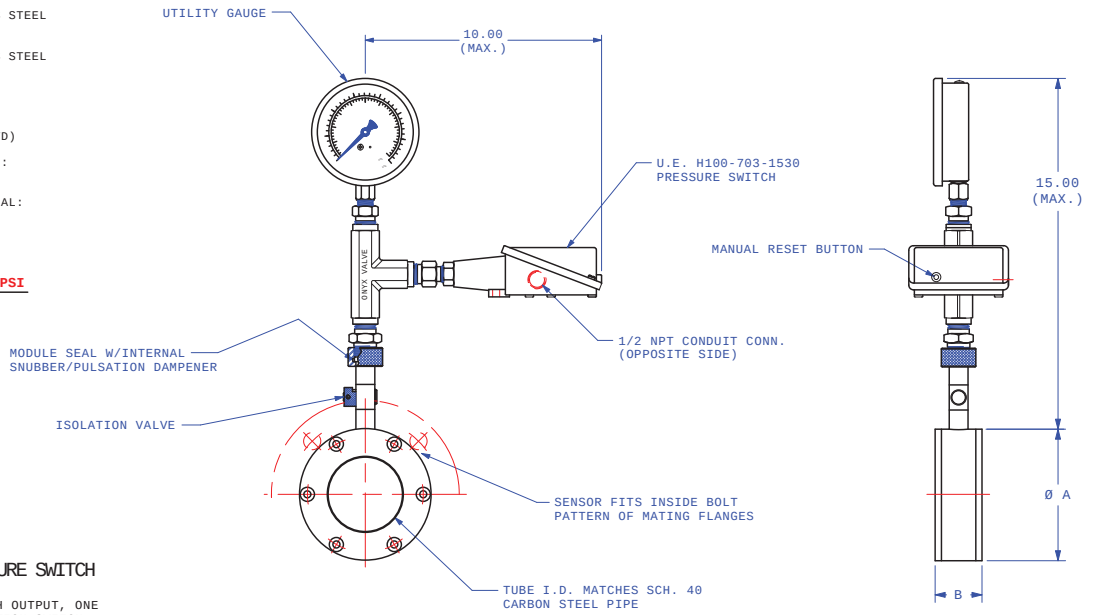

SIZE	ØA	B
2"	4.00	1.87
3"	5.25	1.87

CENTER MATERIAL:
- ■ CARBON STEEL
- ☐ 316 STAINLESS STEEL
- ☐ CARPENTER 20 STAINLESS STEEL
- ☐ OTHER _____

END PLATE MATERIAL:
- ■ ~~ACETAL~~
- ☑ 316 STAINLESS STEEL
- ☐ CARPENTER 20 STAINLESS STEEL
- ☐ TEFLON
- ☐ OTHER _____

SLEEVE ELASTOMER:
BUNA

MODULE SEAL MATERIAL:
- ☐ CARBON STEEL/BRASS
- ☐ CARBON STEEL/316 S.S.
- ■ 316 S.S./316 S.S.
- ☐ 316 S.S./BRASS
- ☐ OTHER _____

FILL FLUID:
- ■ SILICONE (STD) (-40° F TO 400° F)
- ☐ FDA SILICONE (-20° F TO 400° F)
- ☐ OTHER _____

PRESSURE RATING:
1,000 PSI MAXIMUM

U.E. PRESSURE SWITCH

SINGLE SWITCH OUTPUT, ONE
SPDT SNAP ACTION SWITCH,
EXTERNAL MANUAL RESET

STANDARD ELECTRICAL RATING:
15 AMPS @ 125/250/480 VAC

ENCLOSURE:
EPOXY COATED AND GASKETED CAST
ALUMINUM, NEMA 4X

BUNA-N DIAPHRAGM & O-RING

PRESSURE CONNECTION:
1/4" NPT FEMALE

ELECTRICAL CONNECTION:
1/2" NPT CONDUIT, (2) 7/8" KNOCKOUTS

ADJUSTABLE SET POINT RANGE: **9-300 PSI**

ALL DIMENSIONS ARE IN INCHES.

CUSTOMER	NETZSCH
FOR	
CUSTOMER NO.	PO# 4500122866
TAG NO.	
ORDER/ER	38925

REV	DESCRIPTION	BY	DATE	APP'D

ONYX VALVE

Armadillo Automation Inc.

TITLE: PSW W/UTILITY GAUGE & U.E. PRESSURE SWITCH

SCALE: NONE	DRAWN: RJD	DATE: 3-8-19	
ORDER/ER: 38925	CHK'D:	DATE:	
CUSTOMER: NETZSCH	APP'D:	DATE:	
CODE: P	DWG NO: D-43635	SHT: 1 OF 1	REV:

ONYX VALVE
835 Industrial Hwy, Cinnaminson, NJ 08077
phone: 856-829-2888 | Fax: 856-829-3080 | onyxvalve.com

Onyx Pressure Sensors

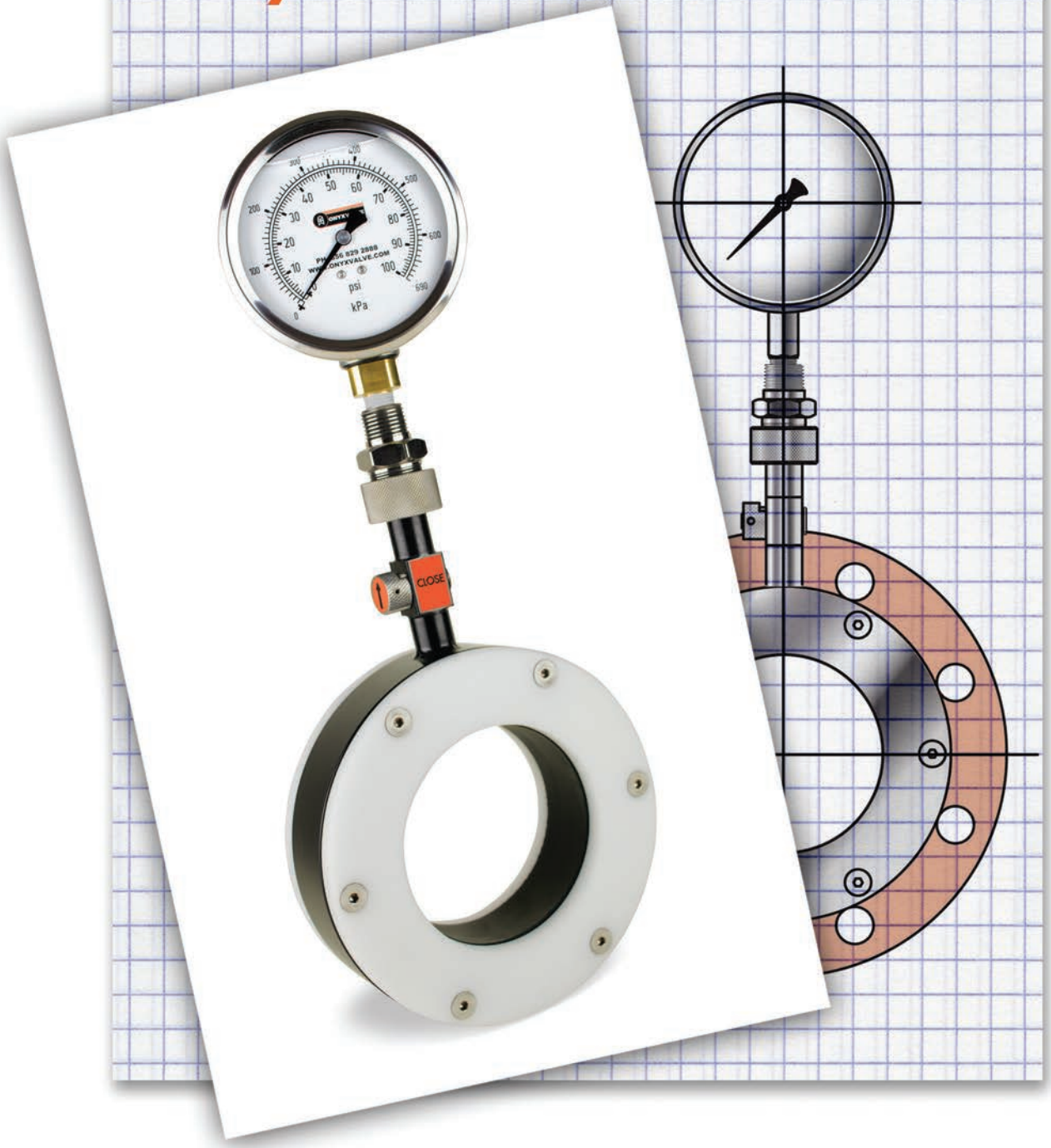

ONYX VALVE

The New Onyx Isolator Ring

Solves the Problem with Conventional Isolator Rings:

The problem: What if the pressure gauge, switch, or transmitter has to be repaired or replaced?

The instant you remove the instrument from the isolator ring you break the vacuum seal and air contaminates the fill fluid. Now you have to re-evacuate the isolator ring with a vacuum pump and recharge it with fresh oil after replacing the instrumentation. What this means in practical terms is that in order to replace the gauge (or switch or transmitter) you have to remove the entire isolator ring assembly from the process pipe and bring it to an instrument shop equipped with a vacuum pump.

This entails shutting down the process and draining the piping!



Block Valve in operating position and Block Valve in closed position

The Onyx Solution:

The patented Onyx Isolator Ring provides the ultimate solution to this dilemma:

The Onyx Isolator Ring is equipped with an integral block valve and module seal.

The bottom half of the Module Seal consists of a ½" thick rubber membrane at the top of the mounting post. This provides a hermetic seal for the Isolator Ring keeping the instrument oil in and the air out.

The top half of the Module Seal is the "Stinger Fitting" a brass or stainless steel fitting with a needle projecting out of the bottom.

Replacing the gauge without compromising the integrity of the vacuum fill – and without removing the Isolator ring from the process pipe - is simple:

1. **Close the Block Valve.**
2. **Unscrew the Lock Ring.**
3. **Pull the gauge and stinger fitting out as a complete unit.**
4. **Plug the new gauge and stinger assembly into the Module Seal.**
5. **Re-tighten the Lock Ring.**
6. **Open the Block Valve.**

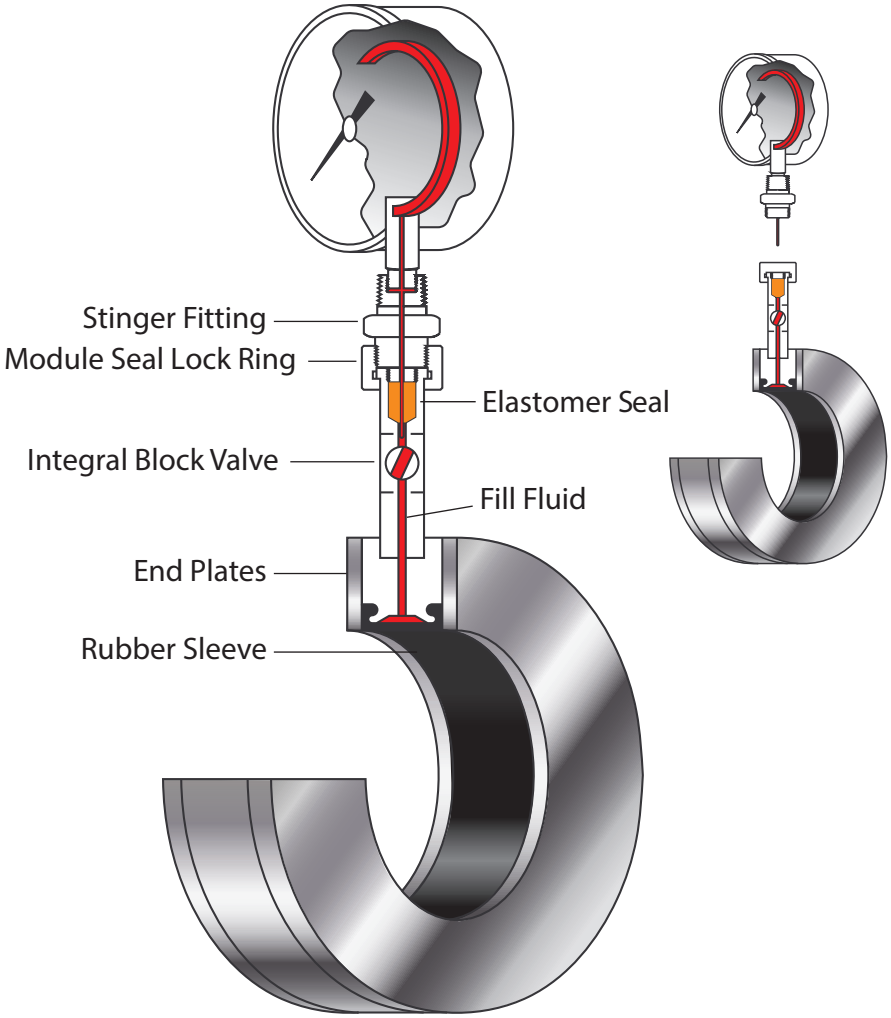

PSW

The Onyx Isolator Ring provides a simple, method to measure pressure of slurries and corrosive fluids. The PSW series is compatible with flanged pipe connections. Nesting inside the bolt circle of mating flanges provides accurate alignment and minimum weight at the lowest installed cost.

The inside diameter of the PSW precisely matches standard pipe for smooth, unobstructed flow, self-cleaning operation, and minimum turbulence and friction. Onyx ultra-deep vacuum filling insures the highest accuracy in the industry. The patented "Module Seal" - standard on all Onyx Isolator Rings - allows instruments to be or replaced or calibrated with minimum down time.



Materials of Construction

Center Section:	Carbon Steel	Carbon-Kynar Coat	316 Stainless Steel
End Plates:	Acetal (Standard) 316 Stainless Steel Teflon	Kynar Titanium	UHMW-PE Carpenter-20
Elastomer: (Available with optional Teflon coatings)	Nitrile (Buna-N) EPDM* (Nordel*) Neoprene Viton Hypalon	-30°F →220°F -40°F →300°F -20°F →220°F -15°F →375°F -10°F →250°F	
Fill Fluid:	Silicone Fluid Food Grade Silicone	-40°F →400°F -20°F →400°F	
Module Seal Stinger Fitting:	Brass	316 Stainless Steel	
Pipe Fittings:	Carbon Steel	316 Stainless Steel	
Pressure Range:	Vacuum to +1,000 psi	The Onyx Isolator ring has been tested by an independent lab to 1,500 psi.	

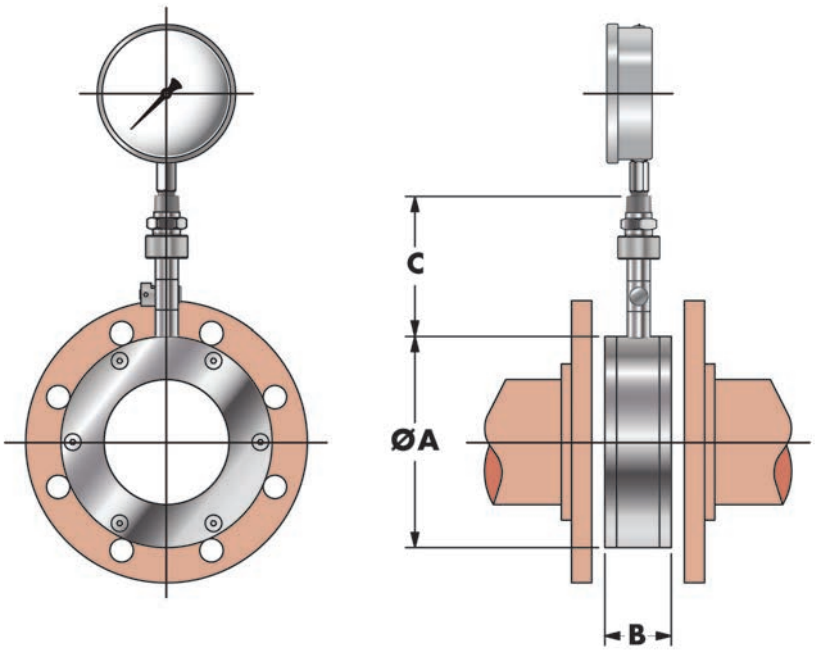

Benefits:

- Absolute immunity to clogging
- Combines accurate alignment, reduced weight, and maximum economy
- Mates with 150# flanges, compatible with 300# or 600# flanges with adapters
- Superior accuracy compared to diaphragm seals
- No tools required to change pressure instrument
- High displacement design can operate up to three instruments on one ring

Size	ØA	B	C
1	2.50	1.87	4.50
1 ½	3.25	1.87	4.50
2	4.00	1.87	4.50
2 ½	4.75	1.87	4.50
3	5.25	1.87	4.50
4	6.75	2.12	4.50
5	7.62	2.25	4.50
6	8.62	2.25	4.50
8	10.87	2.25	4.50
10	13.25	2.81	4.50
12	16.00	3.12	4.50
14	17.62	3.12	4.50
16	20.12	3.12	4.50
18	21.50	3.12	5.37
20	23.75	3.12	5.37
24	28.12	3.12	5.37
28	32.62	3.12	5.37
30	34.62	3.12	5.37
36	41.12	4.00	5.37

PSR

The Onyx Isolator Ring provides a simple, method to measure pressure of slurries and corrosive fluids. The PSR series is compatible with flanged pipe connections. The full face thru bolt holes match the bolt circle of mating flanges for accurate alignment making it the ideal choice for use with non-metallic flanges.

The inside diameter of the PSR precisely matches standard pipe for smooth, unobstructed flow, self-cleaning operation, and minimum turbulence and friction. Onyx ultra-deep vacuum filling insures the highest accuracy in the industry. The patented "Module Seal" - standard on all Onyx Isolator Rings - allows instruments to be or replaced or calibrated with minimum down time.



Materials of Construction

Center Section:	Carbon Steel	PVC-C	316 Stainless Steel
End Plates:	Acetal (Standard) 316 Stainless Steel Teflon	Kynar Titanium PVC	UHMW-PE Carpenter-20
Elastomer: (Available with optional Teflon coatings)	Nitrile (Buna-N) EPDM (Nordel) Neoprene Viton Hypalon	-30°F →220°F -40°F →300°F -20°F →220°F -15°F →375°F -10°F →250°F	
Fill Fluid:	Silicone Fluid Food Grade Silicone	-40°F →400°F -20°F →400°F	
Module Seal Stinger Fitting:	Brass	316 Stainless Steel	
Pipe Fittings:	Carbon Steel	316 Stainless Steel	
Pressure Range:	Vacuum to +1,000 psi	The Onyx Isolator ring has been tested by an independent lab to 1,500 psi.	

Benefits:

- Absolute immunity to clogging
- Available with either 150# or 300# hole pattern
- Integral snubber eliminates gauge fluctuations at no additional cost
- Instruments can be replaced without vacuum filling
- Immune to errors caused by ambient temperature fluctuations
- No tools required to change pressure instruments

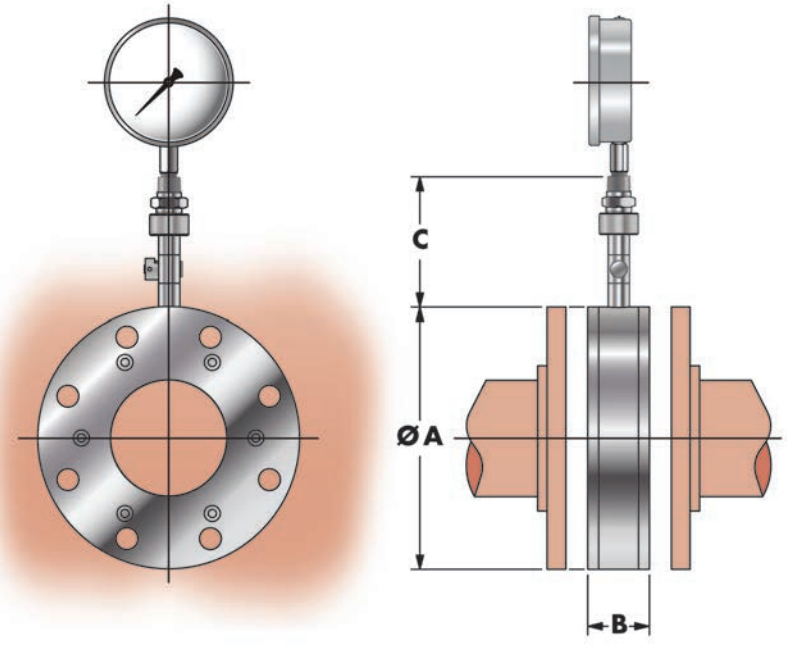

Size	ØA	B	C
1	4.25	1.87	4.50
1 ½	5.00	1.87	4.50
2	6.00	1.87	4.50
2 ½	7.00	1.87	4.50
3	7.50	1.87	4.50
4	9.00	2.12	4.50
5	10.00	2.25	4.50
6	11.00	2.25	4.50
8	13.50	2.25	4.50
10	16.00	2.81	4.50
12	19.00	3.12	4.50
14	21.00	3.12	4.50
16	23.50	3.12	4.50
18	25.00	3.12	5.37
20	27.50	3.12	5.37
24	32.00	3.12	5.37
30	38.75	3.12	5.37
36	41.12	4.00	5.37
42	53.00	4.00	5.37

PSS

The Onyx Isolator Ring provides a simple, method to measure pressure of slurries and corrosive fluids. The PSS series is compatible with threaded pipe connections.

Onyx ultra-deep vacuum filling insures the highest accuracy in the industry. The patented "Module Seal" - standard on all Onyx Isolator Rings - allows instruments to be or replaced or calibrated with minimum down time.



Materials of Construction

Center Section:	Carbon Steel	316 Stainless Steel	
End Plates: 316 Stainless Steel	Acetal Titanium	Kynar Carpenter-20	UHMW-PE
Elastomer: (Available with optional Teflon coatings)	Nitrile (Buna-N) EPDM (Nordel) Neoprene Viton Hypalon	-30°F →220°F -40°F →300°F -20°F →220°F -15°F →375°F -10°F →250°F	
Fill Fluid:	Silicone Fluid Food Grade Silicone	-40°F →400°F -20°F →400°F	
Module Seal Stinger Fitting:	Brass	316 Stainless Steel	
Pipe Fittings:	Carbon Steel	316 Stainless Steel	
Pressure Range:	Vacuum to 200 psi	The Onyx Isolator ring has been tested by an independent lab to 250 psi.	

Benefits:

- Low-Cost
- Superior accuracy compared to diaphragm seals
- Instruments can be replaced without removing the isolator ring from the pipe
- Immune to errors caused by ambient temperature fluctuations
- Integral snubber eliminates gauge fluctuations at no additional cost
- Silicone oil fill fluid is safe, non-toxic, non-corrosive, and stable from -40°F to +400°F

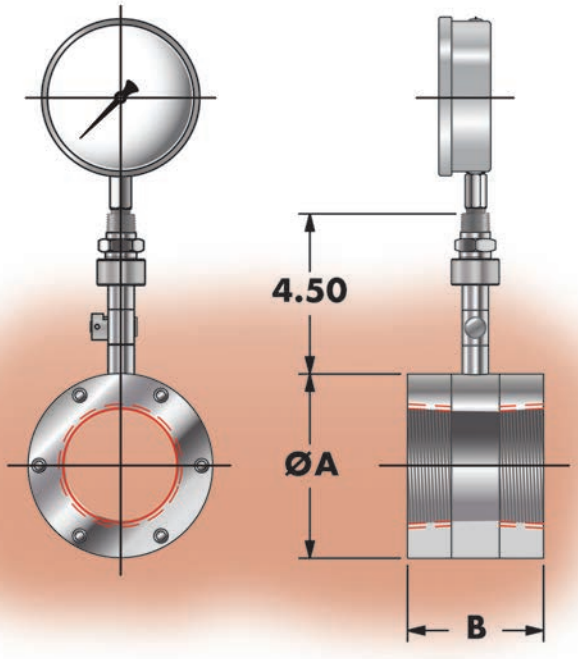

Size	ØA	B
1/2	2.50	2.87
3/4	2.50	2.87
1	2.50	3.37
1 ½	3.25	3.37
2	4.00	3.37
3	5.25	3.87
4	6.75	4.12

PSQ



The Onyx Isolator Ring provides a simple, method to measure pressure of slurries and corrosive fluids. The PSQ series is compatible with Tri-Clover pipe connections. Quick connection to Tri-Clover pipe provides accurate alignment and fast installation.

The inside diameter of the PSQ precisely matches sanitary pipe for smooth, unobstructed flow, self-cleaning operation, and minimum turbulence and friction. Onyx ultra-deep vacuum filling insures the highest accuracy in the industry. The patented "Module Seal" - standard on all Onyx Isolator Rings - allows instruments to be or replaced or calibrated with minimum down time.

Materials of Construction

Center Section:	316 Stainless Steel	
End Plates:	316 Stainless Steel	
Elastomer: (Available with optional Teflon coatings)	Nitrile (Buna-N) EPDM (Nordel) Viton White Neo	-30°F →220°F -40°F →300°F -15°F →375°F -20°F →220°F
Fill Fluid:	Silicone Fluid Vegatable Oil Food Grade Silicone	-40°F →400°F 0°F→250°F -20°F →400°F
Module Seal Stinger Fitting:	316 Stainless Steel	
Pipe Fittings:	316 Stainless Steel	
Pressure Range:	Vacuum to 150 psi	

Benefits:

- Absolute immunity to clogging
- Tri-Clover fittings allows for quick disconnect from piping system
- FDA Silicone oil fill fluid is safe, non-toxic, non-corrosive, and stable from -40°F to +400°F
- High displacement design can operate multiple instruments on one ring
- Ideal for brine, pickling solutions, tomato paste, chilies, mustard, pet food, and chocolate
- No tools required to change pressure instrument

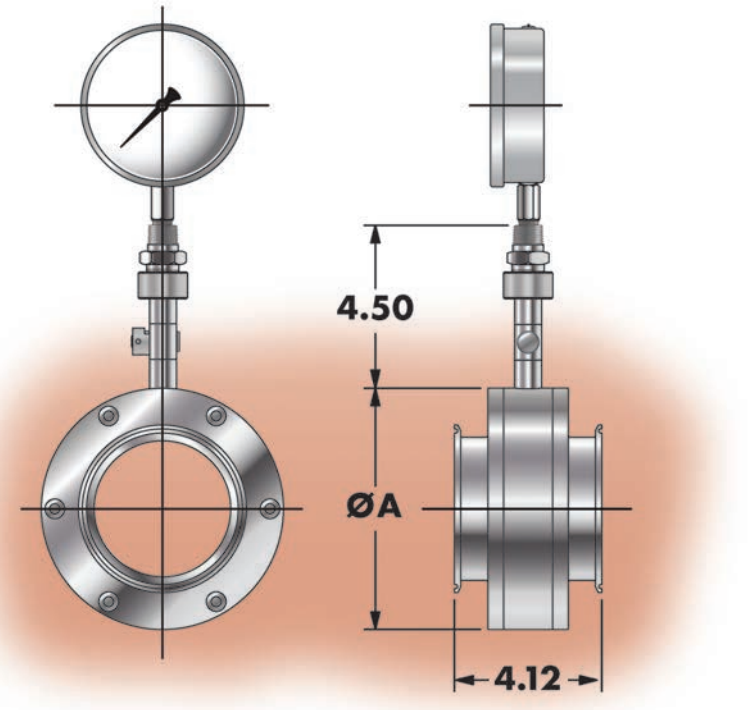

Size	ØA
1	3.25
1 ½	3.25
2	4.00
2 ½	4.75
3	5.25
4	6.75
6	8.62

Model K



The Onyx Model-K series diaphragm seal provides outstanding protection for pressure instruments against chemical attack and corrosion.

The exclusive convoluted rolling diaphragm design features:

- Compact design takes up little space and light weight
- High available displacement volume can drive multiple instruments with a single diaphragm seal, including instruments with large bourdon tubes or diaphragms.
- High system accuracy is assured by the combination of large surface area and ultra-low modulus of elasticity of the diaphragm element.
- Teflon-coated Viton diaphragm offers outstanding chemical compatibility with a wide variety of process fluids. Wetted materials of construction include 316-stainless steel, PVC, and Kynar for broad based chemical resistance.
- Optional Clamp-Ring design enables users to remove the pressure instruments with the top half of the diaphragm assembly without fill fluid loss or compromising the vacuum seal.
- Optional flush port is available for cleaning in place.

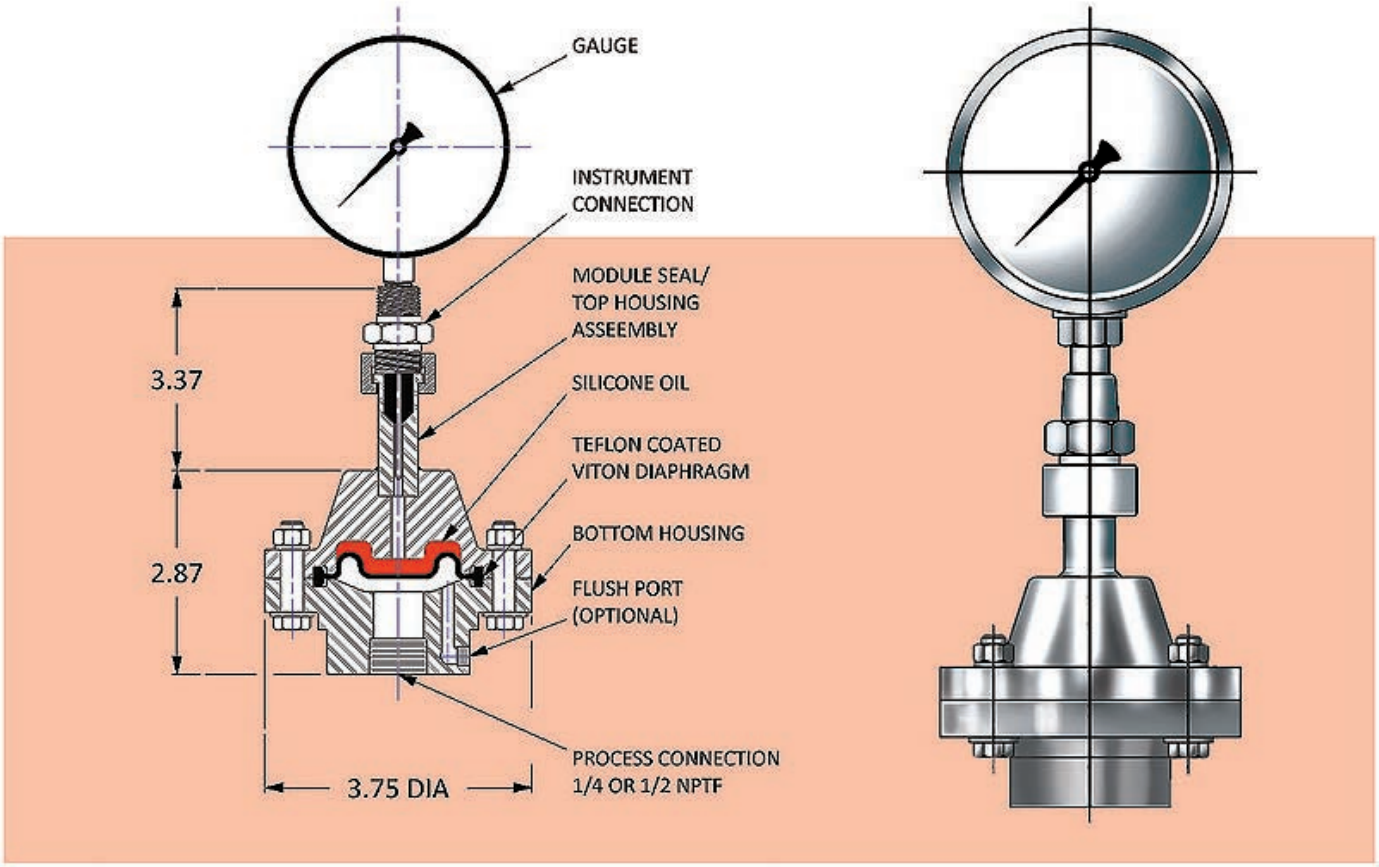

Smart Box-3

Smart Box-3 insures safe, reliable operation of **progressing cavity pumps**, protecting them from over-pressure, run-dry situations, or seal water failure.

This latest generation Smart Box is versatile, easy to install, easy to use, and compatible with either fixed speed or variable speed pumps.

The Smart Box-3 uses a solid state PLC and touch-screen for maximum reliability, eliminating wiring, mechanical push buttons, and lights. The touch-screen interface displays simple English text so pump status and fault conditions are easy to understand. It comes standard in a fiberglass weatherproof (NEMA-4X) enclosure, with optional stainless steel also available. It operates on 120-230 VAC power and includes its own internal DC power supply.

Working in combination with the Onyx Isolator Ring ensures reliable operation with abrasive slurries, viscous fluids, suspended solids, and corrosive liquids.

Our standard 2-point **solid state pressure switch** with digital readout is easier to set, more robust, and more accurate than traditional mechanical gauges and switches.

Smart Box-3 can be configured as a "Master" controller where all pump commands are routed through the Smart Box. Or, it can be a designated as a "slave" where it ties into the pump control circuit at a single point for simpler wiring.

The Smart Box can be configured to work as a Local Control Station, eliminating the need for an H-O-A (Hand-Off–Auto) switch or Reset button.

The Smart Box can turn seal flush water on and off, and can monitor seal water flow switch.



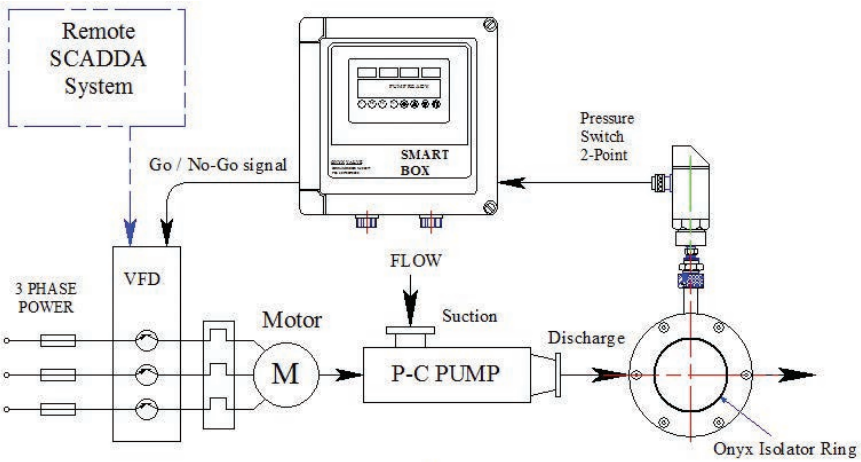

Smart Box General Arrangement
Closing the Loop



Onyx Valve Calibrating Machine

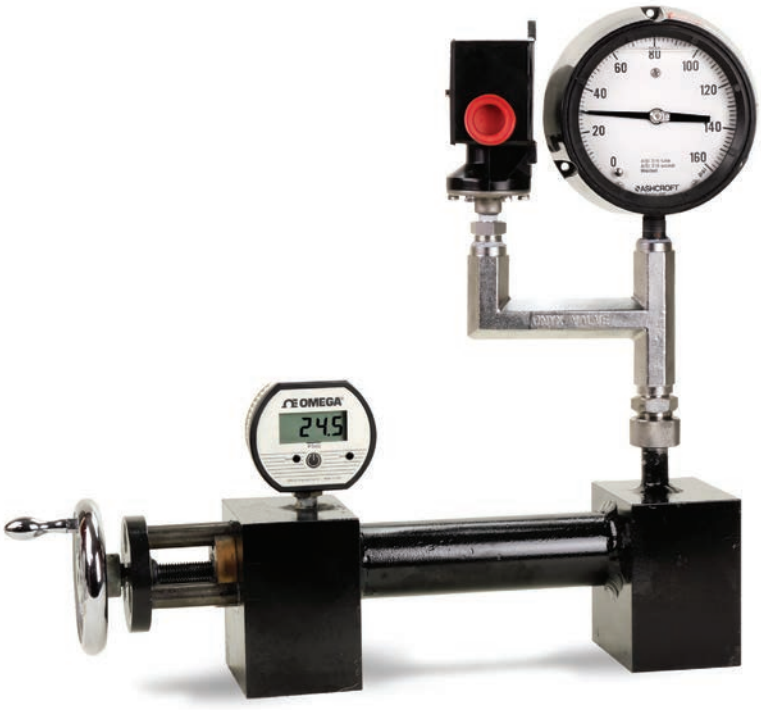

Onyx Valve Calibrating Machine provides a reliable method to calibrate gauges, switches, or transmitters originally supplied as integral components on Onyx Isolator Rings.

This rugged machine is light weight, completly portable, and requires no external power, making it the ideal companion for field service. It can generate any pressure from near full vacuum to +400 psi.

Calibrating instruments on a **conventional** isolator ring is virtually impossible: As soon as you break the fitting connections, you risk loosing fill fluid or getting air bubbles into the instrument. Air must be excluded because it will compress to a smaller volume under pressure. This forces the rubber sleeve to stretch, increasing the error in the gauge reading. Beyond a certain point the rubber reaches its limit and pressure indication ceases. Even a miniscule air bubble can adversely affect performance, leaving the pressure instrument worse off than before you attempted to calibrate it.

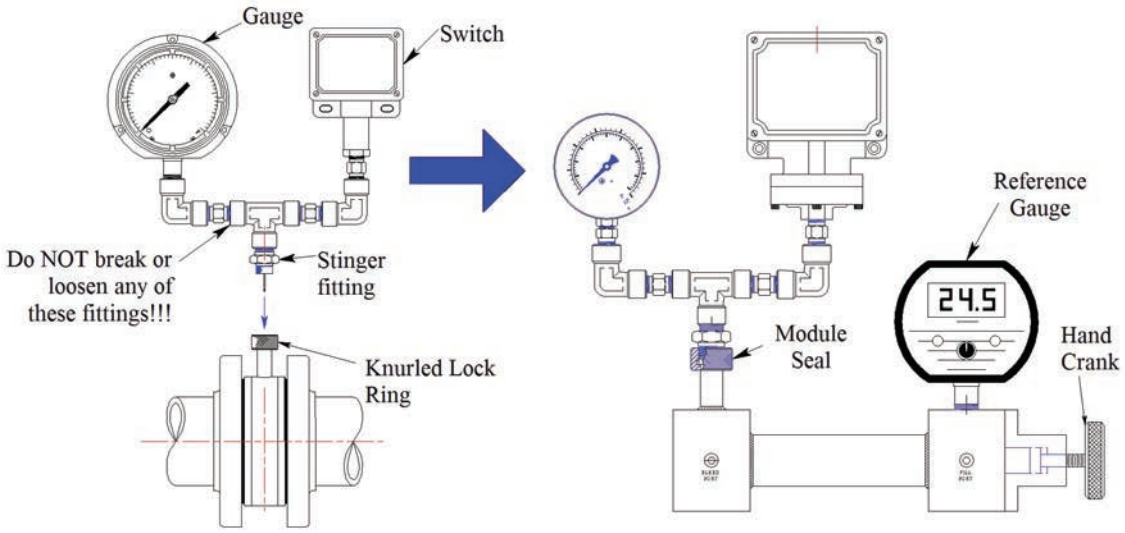

Onyx Isolator Ring

Onyx Calibrator Machine

The Onyx Calibrating Machine provides a simple means to circumvent this problem. The Onyx Calibrating Machine includes the patented Onyx Module Seal as the connection point for the instrument to be calibrated.

Gauges, pressure switches, transmitters, or any combination of these instruments can easily be temporarily removed from the Onyx Isolator Ring, attached to the calibration machine for verification, then put back on the isolator ring. To calibrate the instrument, simply turn the crank to build up the required pressure and compare the reading on the process instrument to the reference gauge.

The Calibrating Machine is available with a variety of reference gauges, either mechanical and electronic (battery powered), with analogue or digital readout, with accuracy equal to or better than ANSI class-3A, and tracability to NIST certificates are available.

The Onyx Syringe Kit



A simple method to prepare instruments for attaching to the Onyx Isolator Ring.

The problem: Any device that isolates pressure instruments from the process, such as a diaphragm seal or isolator ring, must be vacuum filled to work properly. If an air bubble becomes entrained inside the instrument assembly, it will collapse to a smaller volume under pressure. This causes a gross error in the pressure reading, or the instrument stops working altogether.

If a conventional isolator has a gauge, switch, or transmitter that has to be replaced for any reason, the normal procedure is to remove the entire ring and instrument assembly and transport them to a service center equipped with a vacuum filling facility. This leaves a gap in the process piping, effectively shutting down the entire process.

The Solution: The Onyx Syringe functions as a miniature vacuum pump and oil reservoir. Light weight and requiring no external power, this field service kit provides a simple method to vacuum fill gauges, switches, and transmitters in a matter of minutes, minimizing down time and eliminating the need to remove the isolator ring from the process pipe.

Simply remove the instrument from the isolator rings and turn the instrument assembly upside down and connect the syringe to the pressure instruments. The filling procedure is a simple 2-step process:

Pull up on the plunger to extract the air. Push down on the plunger to inject the instrument oil.

The transparent syringe body provides visual indication when all the air bubbles are extracted. This syringe can generate a vacuum equal to the highest grade of motor operated vacuum pumps, insuring that instrumentation prepared with this kit performs comparably to instruments shipped direct from the factory.

The Onyx Syringe Kit includes everything necessary to vacuum fill instruments or isolator rings, including a ¼ liter bottle of silicone instrument oil.





CAUTION:
NEVER ATTEMPT TO REFILL AN ISOLATOR RING UNDER PRESSSURE.

REFER TO THE INSTRUCTION MANUAL FOR DETAILED INSTRUCTIONS ON HOW TO SAFELY REFILL ISOLATOR RINGS IN THE FIELD.

Onyx Instrumentation Manifolds



A-Configuration



B-Configuration



C-Configuration



90° Vertical Installation

Onyx Dual Mount Instrument Manifolds are the ideal way to mount two instruments on one isolator ring. Robust ½" NPT manifolds can support multiple heavy instruments including turret case gauges, switches, and transmitters. One-piece design minimizes potential leak paths. Made from 316-stainless steel. Available in three configurations shown above, there's an instrument manifold available for just about any combination of instruments imaginable.

Pressure Sensor Applications

Robust ½" NPT Onyx Dual Mount Instrument Manifolds are the ideal way to mount two instruments on one isolator ring. The manifolds can support multiple heavy instruments including turret case gauges, switches, and transmitters. One-piece design minimizes potential leak paths. Made from 316-stainless steel. Available in three configurations shown above, there's an instrument manifold available for just about any combination of instruments imaginable.

Brand-X uses ¼" pipe fittings.

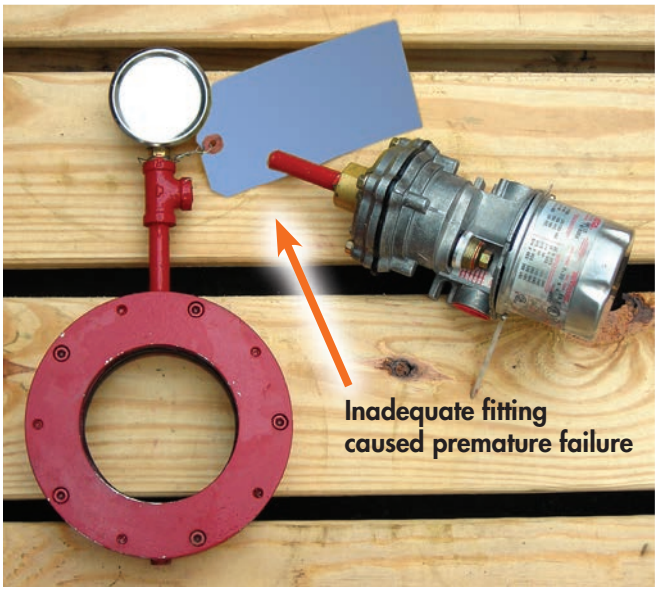

Onyx Module Seal/Fittings can easily support multiple instruments without breakage.



ONYX VALVE CO ISOLATOR RING
Installation & Maintenance

Operation:

(03-2016)

Obtaining accurate pressure readings on slurry lines is difficult because slurries, abrasives and solids clog pressure elements such as gauges, switches and transmitters.

Onyx Isolator rings consist of rubber “inner tube” captured in a steel ring. The assembly is installed between flanges in the process pipe. Clear instrument oil behind the rubber membrane transmits pressure to the gauge

Onyx Isolator ring are vacuum filled at the factory with high viscosity silicone fluid. (Other fluids available on special order.)

After vacuum filling, the Isolator Ring is permanently sealed with our patented “Module Seal”. The Module Seal enables the users to remove or replace the gauges and other pressure instruments while the Isolator Ring remains in the process pipe without having to vacuum fill the rings.

Onyx Isolator rings are usually supplied with instrumentation such as gauges, transducers, and pressure switches; refer to specific manufacturer’s literature concerning maintenance for these accessories.

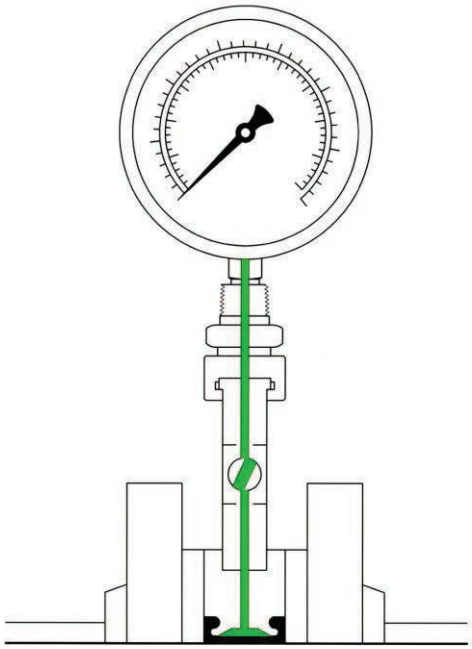

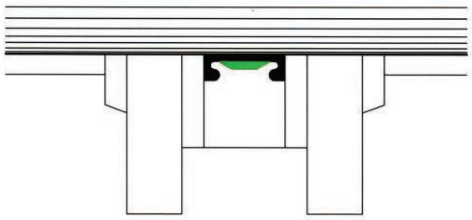

If you detect instrument oil weeping from under the Lock Ring, the Module seal may require minor adjustment.

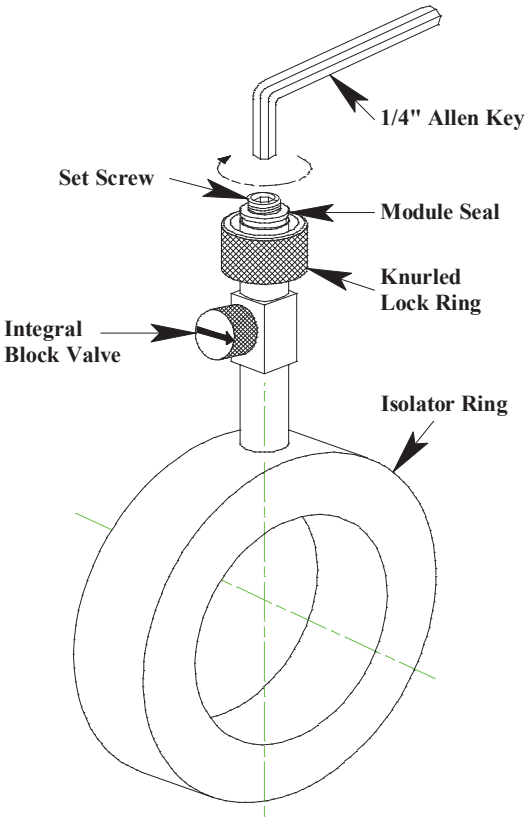

To adjust the Module Seal:

a) Loosen the Lock Ring, and then carefully remove the pressure measuring instruments.

b) Insert a 0.250 inch Allen key into the Module Seal Set Screw and turn clockwise 1/8 revolution.

c) Reinstall the pressure measuring instruments and tighten Lock Ring.

Turning the Module Seal Set Screw clockwise eliminates weeping but makes the fit around the needle tighter.

If the Module Seal is too tight to reinstall the pressure measuring instrument, do not force the needle in or you will risk bending or breaking the needle. Instead, loosen the Set Screw until the needle can be inserted easily. If fluid weeping persists, it may be necessary to tighten the Set Screw further. When tightening the Set Screw, turn clockwise 1/8 revolution at a time.

STORAGE:

Correct storage extends service life. Rubber is perishable. Ideal storage conditions are 50˚F / 60% relative humidity. We recommend the following precautions for Isolators and spare parts stored for any length of time prior to installation.

1. Keep Isolators cool. They can be stored in an unheated area, but allow maximum ventilation in storage areas subject to high ambient temperatures. Trailers and storage sheds become incredibly hot during summer months. Avoid such locations.

2. Avoid sunlight. Ultra-violet light deteriorates rubber. Leave the Isolator in its box.

3. Avoid ozone. DO NOT STORE Isolator near active electrical equipment.

4. The Isolator may be supplied with sensitive instrumentation. Refer to specific manufacturer's literature concerning proper storage.

5. Separate instruments may be supplied with a stinger fitting attached. DO NOT REMOVE RUBBER TIP PROTECTOR FROM THE STINGER FITTING NEEDLE UNTIL ATTACHING THE FITTING TO THE ISOLATOR RING.

INSTALLATION:

1. **Safety Considerations:**

   a) Isolators rings frequently handle chemically reactive and abrasive fluids; it is reasonable to expect the elastomer sleeve to eventually wear out. Instrument fill fluid must be compatible with the process liquid. Mixing incompatible fluids may cause a violent chemical reaction resulting in equipment damage or personal injury.

   b) Make certain that instruments such as gauges, pressure switches, etc, have pressure and temperature rating suitable for actual operating conditions. Exceeding manufacturer's design limits may result in equipment damage or personal injury.

   c) The rubber sleeve elastomer must be compatible with the chemistry and temperature of the process fluid.

   d) **Do not use Onyx Isolator rings for oxygen service**.

2. Inspect prior to installation. Onyx Isolator rings should not show any indication of leakage, and rubber sleeve should be free from cuts or punctures.

3. Onyx Isolator rings can be installed in any attitude with flow in either direction. For best sleeve life, install with 2 diameters of straight pipe on inlet.

4. Onyx Isolator rings may be installed without pressure instruments attached. This minimizes damage to gauges and sensitive pressure instruments during pipe fitting and construction.

5. Onyx Isolator rings are vacuum filled at the factory to insure high accuracy in operation. DO NOT DISASSEMBLE.

6. To install, sandwich the Isolator between two flanges in the process pipe line. Center as carefully as possible. Install gaskets on both sides of Isolator ring. Insert flange bolts. Tighten flange bolts in criss cross pattern.

OPERATING INSTRUCTIONS:

1. Onyx Isolator Rings and pressure instruments are vacuum filled at the factory. They may be shipped assembled or shipped separately for field assembly.

a) Do not disassemble the ring.

b) Do not break connections between the stinger fitting and pressure instruments.

2. To attach a pressure instrument to the Isolator Ring:

Pressure measuring element and stinger fitting must be pre-assembled and vacuum filled prior to attaching to the Isolator ring!!!

a) If you are installing an isolator ring without instrumentation attached close the integral block valve (#7). This valve MUST remain closed until the instrument package in mounted to the isolator ring.

b) Instruments can be attached to an Isolator Ring installed in the pipe line while the system is pressurized.

b) Hold the pressure instrument and stinger fitting assembly upright above the Isolator Ring.

c) Remove the rubber tip protector from the stinger needle (#5F). (Save the rubber tip protector.)

d) Gently push the needle through the rubber seal (#5) until it hits bottom.

e) Thread the lock ring (#5C) onto the stinger fitting (#5E).

f) Gauges can be rotated to face any direction by loosening the coupling ring, turning the gauge, and re-tightening the ring.

g) After the instruments have been attached to the isolator ring, open integral block valve (#7).

3. To attach instruments which did not come with a stinger fitting, refer to instructions on attaching stinger fitting to instruments at the end of this booklet.

4. To remove pressure instruments from the Isolator Ring:

A) It is NOT necessary to remove the Isolator Ring from the process pipe.

B) In order to minimize fluid loss, **reduce process pressure as low as possible before removing gauges or other instruments from the Isolator Ring.**

Turn off pump prior to removing instrument from the Isolator Ring (The interruption will be brief. Instruments can be removed from the Isolator in about 10 seconds.)

C) Close integral block valve (#7).

D) Loosen knurled lock ring (#5C).

E) Gently lift the gauge and stinger assembly out of the module seal.

F) Immediately attach a rubber tip protector to the end of the stinger needle.

G) Now your process can be re-pressurized without loosing fluid from the Isolator Ring.

SLEEVE AND MODULE SEAL REPLACEMENT:

1. Remove Isolator Ring from process line.
2. Remove gauge or auxiliary instrument.
3. Remove end plate screws (#4A).
4. Remove end plates (#4).
5. Remove old sleeve (#1).
6. Use a 0.250 inch hex key to remove the module seal set screw (#5B).
7. Remove seal washer (#5D).
8. Use a packing extractor to remove the old rubber seal (#5).
9. Clean all components thoroughly.
10. Press new rubber seal (#5) into the module seal tube (#5A). Drive all the way to bottom of bore. Replace seal washer (#5D). Replace module seal set screw (#5B). Do not over tighten.
11. Collapse new sleeve (#l), push through center housing (#3) and work sleeve lips into housing grooves.

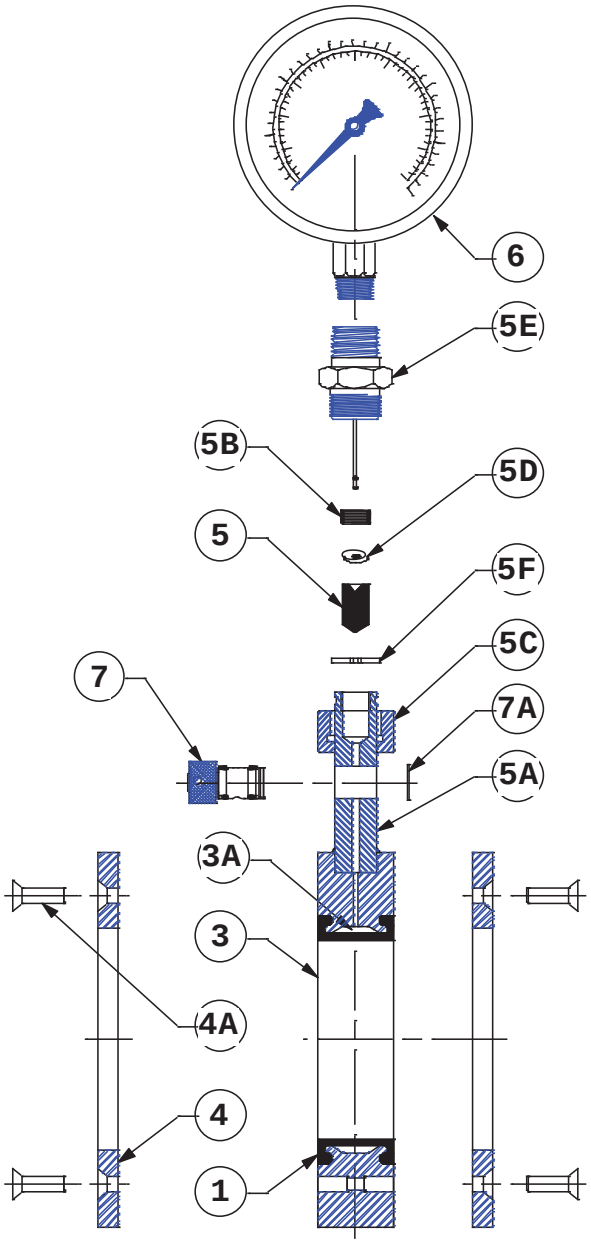

ITEM	DESCRIPTION
1	SLEEVE
3	CENTER HOUSING
3A	SENSING LIQUID, CENTER
4	END PLATE
4A	SCREW, END PLATE
5	RUBBER SEAL
5A	TUBE, MODULE SEAL
5B	SET SCREW, MODULE SEAL
5C	LOCK RING, MODULE SEAL
5D	SEAL WASHER
5E	STINGER FITTING
5F	EXTERNAL RETAINING RING
6	GAUGE
7	BLOCK VALVE
7A	RETAINING RING, BLOCK VALVE

12. Reinstall end plates (#4).
13. Replace end plate screws (#4A).
14. Connect a separate stinger fitting (#5E), to vacuum filling system, evacuate air from the ring assembly, and refill with fresh instrument fluid. Use Onyx silicone fluid.
15. The Isolator Ring can now be returned to service.

TO ATTACH STINGER FITTING TO INSTRUMENTS:

1. Attach gauge or other instrument to the stinger fitting (#5E).
2. Connect an **Onyx Vacuum Fill Tool Adapter, P/N #T75132-01-00,** to your vacuum filling system.
3. Attach the instrument assembly to the adapter fitting.
4. Evacuate all the air from the instrument, and fill with silicone fluid.
5. Detach the instrument from the filling system.
6. The instrument can now be attached to an Isolator Ring, or stored for future use.

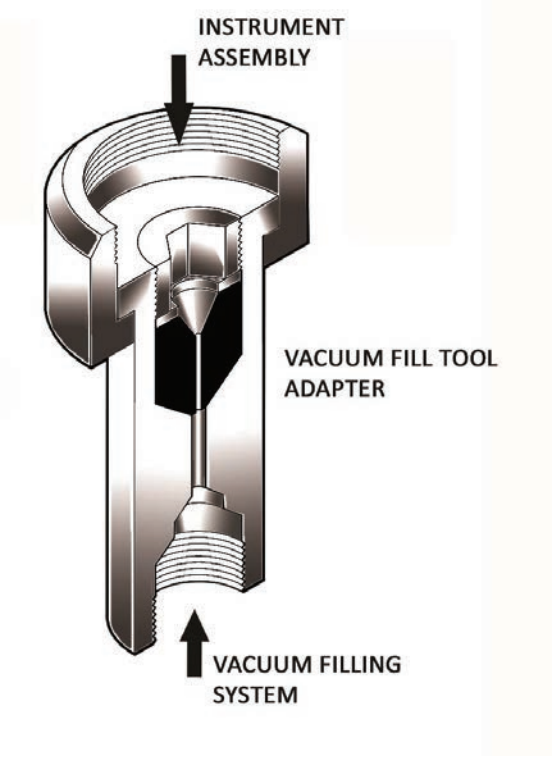

Questions?

Contact **Onyx Valve Company**

Tel: 856-829-2888
Fax: 856-829-3080

E–mail: david@onyxvalve.com

Quick Start Instructions

Changing Instruments on an Onyx Isolator Ring

How to replace a defective gauge (or other instrument) and replace it with a new gauge:

Make sure you have a new gauge at hand. The new gauge **must** be vacuum filled with silicone oil and it must be connected to an Onyx stinger fitting. Pre-filled gauge and stinger assemblies are available from the factory, or you can prepare a gauge yourself with the Onyx Syringe Kit. The only tools you might need are a pair of channel lock pliers and a ¼" Allen key.

Important: Do **NOT** separate the gauge and stinger fitting. Doing so will compromise the integrity of the vacuum fill which is essential to reliable accurate operation.

Before removing the old gauge, reduce the line pressure as close to zero as practical. Turn off the pump if there is one connected to the process line.

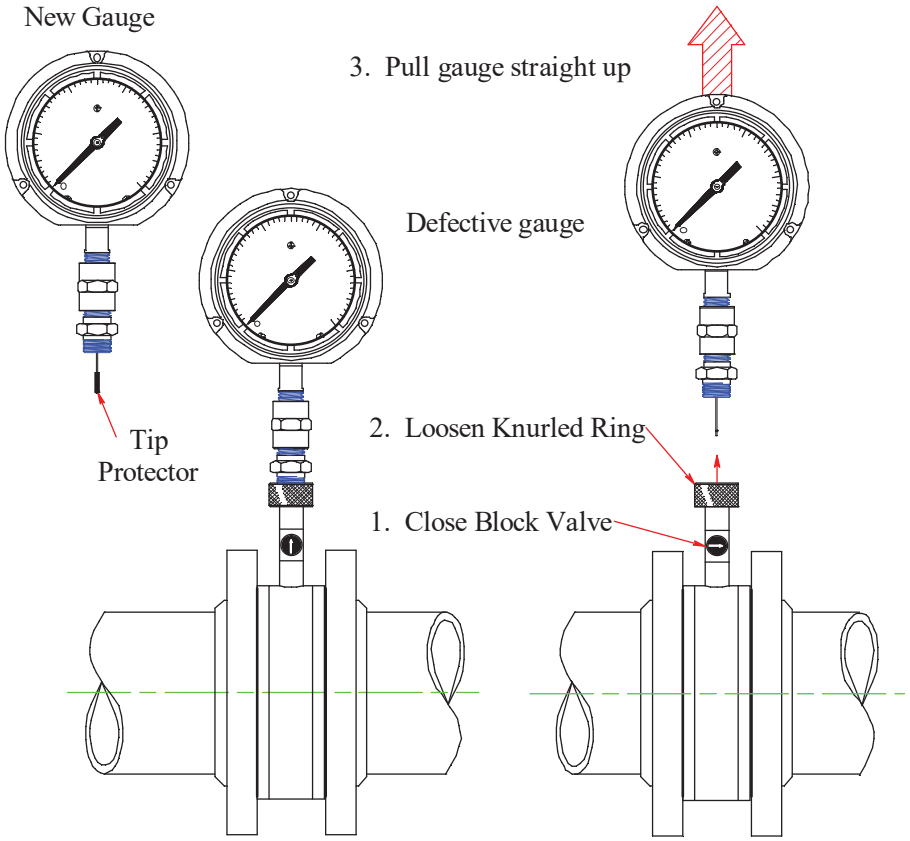

Step-1: Close the block valve in the mounting post.

Step-2: Loosen the knurled lock ring. If you can't loosen the ring by hand, a pair of channel lock pliers should persuade it to cooperate.

Step-3: When the knurled lock ring is free from the stinger, pull straight up on the gauge with a firm, gentle pressure until the stinger needle pulls free from rubber diaphragm in the Module Seal.

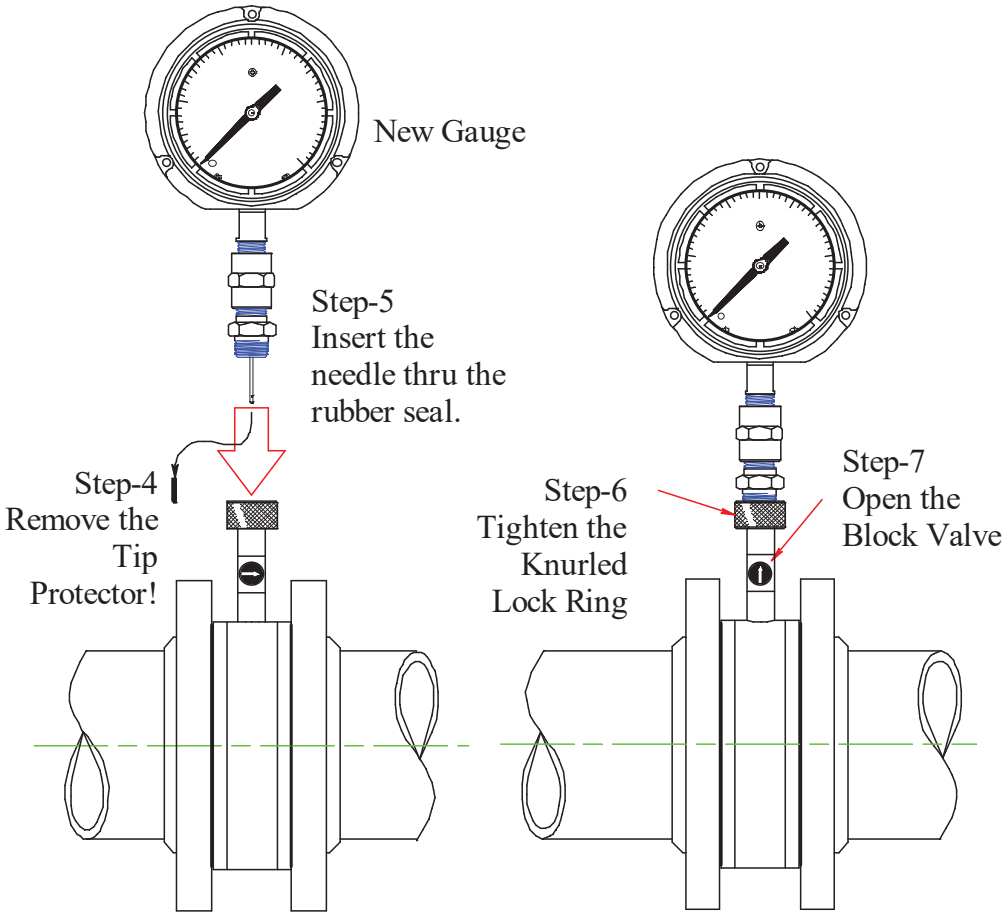

Step-4: On the new gauge, ***remove the rubber tip protector.***

Step-5: Take the new gauge, position the stinger needle right over the rubber diaphragm in the Module Seal and applying firm steady pressure insert the needle through the original hole in the Module Seal until the bottom of the stinger fitting hits home. Don't force it. If it doesn't go in readily, use an Allen key and loosen the module seal about 1/8 turn and try again.

Step-6: Replace the knurled lock ring and thread it back onto the new stinger fitting. Turn the gauge into any position convenient for viewing. Use a channel lock to snug it up so it doesn't vibrate loose.

Step-7: Open the Block Valve.

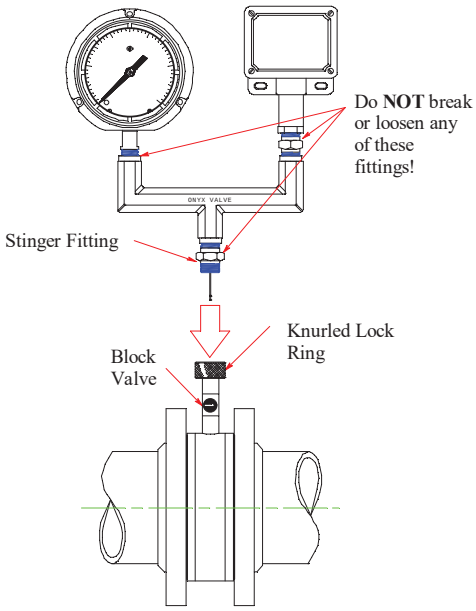

The "gauge" can be just a gauge by itself, or it might be a complete assembly consisting of a gauge and switch, or a gauge and a transmitter, or any other combination of pressure instruments. In this case, the same procedure applies.

You extract and replace the entire manifold assembly ***as one piece.***

CAUTION: This assembly is vacuum filled with instrument oil. Do NOT loosen or separate any pipe fittings, or the instrument will not function properly and the warranty is void.

If you notice fill fluid weeping from the module seal:

Occasionally the module seal will weep a few drops of the fill fluid. If this happens, temporarily remove the gauge assembly from the isolator ring. Insert a ¼" Allen hex key into the module seal as shown in the picture on the right and turn 1/8 of a turn clockwise to tighten the seal. Then replace the gauge.

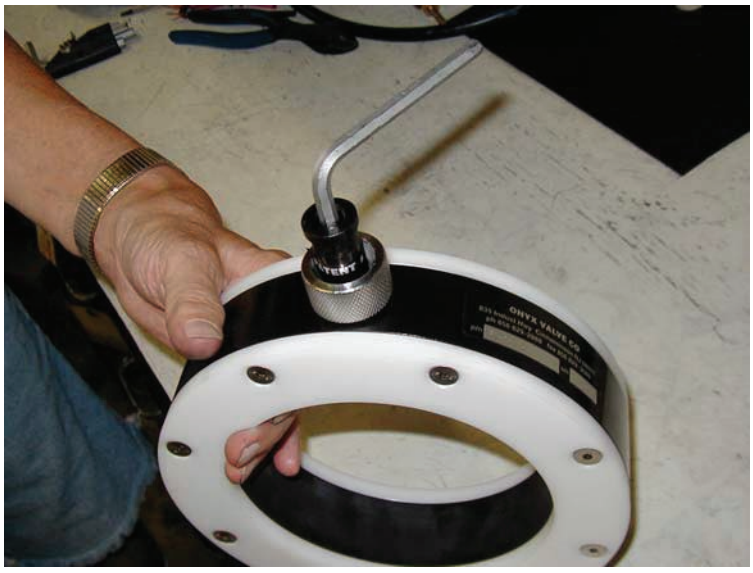

If the module seal is too tight to insert the stinger fitting, loosen the adjustment a little bit by rotating the hex key anti-clockwise. Just a few degrees of rotation with the hex key should be sufficient to reinsert the stinger.

How to Turn the Gauge to Face a New Direction

Onyx Isolator Rings are usually assembled with the gauge axis parallel to the axis of the process pipe. This allows for the most compact configuration for shipping purposes. However, if you wish, it is possible rotate the gauge to face any desired direction without compromising the integrity of the vacuum fill.

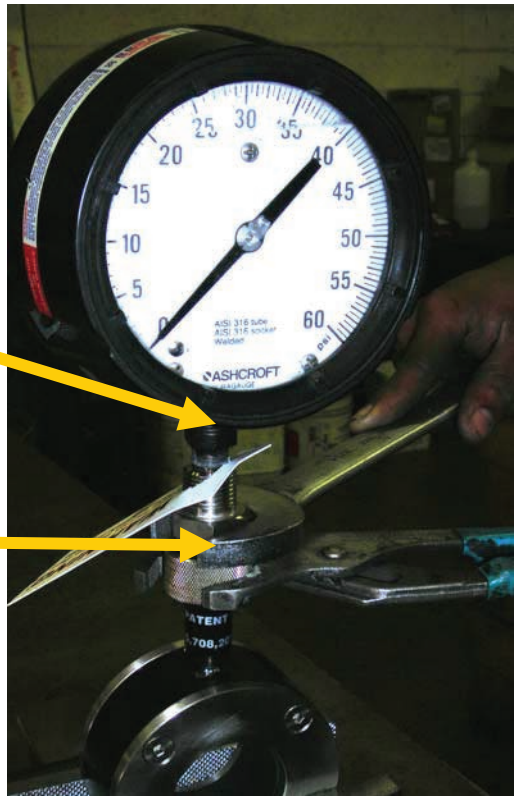

DO NOT LOOSEN THE CONNECTION BETWEEN THE STINGER FITTING AND THE GAUGE. Failure to observe this precaution could cause the fill fluid to leak, compromising the integrity of the vacuum fill.

To rotate the gauge, loosen **the knurled lock ring** on the module seal. This can usually be loosened by hand, but if it is too tight, you can use channel lock pliers.

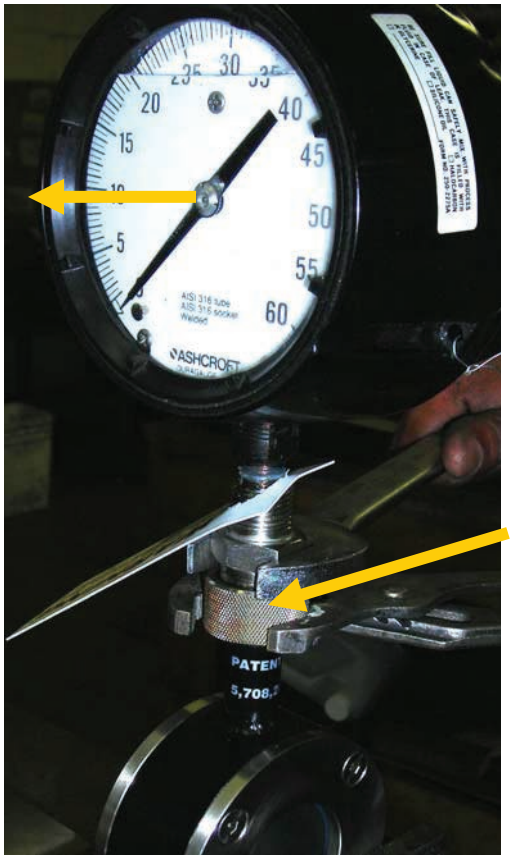

Use an open-end wrench to keep the stinger fitting from rotating, and use the channel lock pliers to loosen the knurled ring as shown in the picture.

Rotate the knurled ring clockwise as viewed from above to loosen it. You just have to break the lock ring free, 1/8 turn is more than adequate. Don't remove it completely. The gauge will now rotate freely to face any desired direction.

Turn the gauge as desired, and use the channel lock pliers to re-tighten the lock ring.

Revised 1-March-2016

Questions?
Call Onyx Valve Co.
P: 856-829-2888
www.onyxvalve.com

PRESSURE, VACUUM, DIFFERENTIAL PRESSURE AND TEMPERATURE SWITCHES









FEATURES

- Single Switch Output
- Epoxy Coated and Gasketed Cast Aluminum Enclosure Type 4X
- Tamper-Resistant Set Point "Lock"
- Heat Trace and Freeze Protection Thermostats
- Proof Pressures to 10,000 psi (689,5 bar)
- Adjustable Ranges:

  Pressure:
  30 "Hg Vac to 5000 psi
  (-1 to 344,7 bar)

  "wc Ranges:
  300 "wc Vacuum to 250 "wc Pressure
  (-746,7 to 622,3 mbar)

  Differential Pressure:
  0.2 "wcd to 500 psid
  (0,5 mbar to 34,5 bar)

  Temperature:
  -180 to 650°F
  (-117.8 to 343.3°C)

ISO 9001 CERTIFIED COMPANY

OVERVIEW

The 100 Series is a cost-effective pressure and temperature switch for process plants and OEM equipment. The rugged, one piece enclosure features a slanted cover for wiring accessibility.

A wide variety of microswitch and process-connection options make this versatile series ideal for applications requiring a rugged weather-proof mechanical switch.

Typical applications that utilize the 100 Series are heat tracing, freeze protection, processing equipment (pumps, compressors), inputs for annunciator panels, and fire suppression systems.

FEATURES

- UL listed and cUL certified.
- CE compliant to low voltage directive and pressure equipment directive.
- Optional ATEX or GOST intrinsic safety compliance
- Single switch (SPDT or DPDT) output
- Welded stainless steel diaphragm models
- Ultra low pressure, "wc models
- Optional sensor material for corrosive media
- Polished stainless steel flush-mount connection
- Pump switch models with wide adjustable deadband



"Clam shell" design allows for ease in wiring (pressure model shown)

Bulb and capillary temperature model with manual reset option

Differential pressure model

SPECIFICATIONS

STORAGE TEMPERATURE	-65 to 160°F (-54 to 71°C)
AMBIENT TEMPERATURE LIMITS	-40 to 160°F (-40 to 71°C); models 520-525, 540-548, 700-706, 15731-15736: 0 to 160°F (-18 to 71°C); Set point typically shifts less than 1% of range for a 50°F (28°C) ambient temperature change
SET POINT REPEATABILITY	Temperature models: ± 1% of adjustable range Pressure models 15623, 15731-15737, 171-174, 218, 270-376, 520-535, 540-543, 700-706, 560-564: ± 1% of adjustable range; models 190-194, 183-189, 483-494, 544-548, 565-567, 610-680, 15884: ±1.5% of adjustable range Internal set point lock on all pressure models
SHOCK	Set point repeats after 15 G, 10 millisecond duration
VIBRATION	Set point repeats after 2.5 G, 5-500 Hz
ENCLOSURE	Die cast aluminum, epoxy powder coated, gasketed, captive cover screws
ENCLOSURE CLASSIFICATION	Enclosure type 4X
SWITCH OUTPUT	One SPDT snap action switch; switch may be wired "normally open" or "normally closed"
ELECTRICAL RATING	15A 125/250/480 VAC resistive except for H100-15623, 15731-15737, 15884, 20A 125/250/480 VAC resistive, B100-13546 and E100-13545, 22A/480 VAC. Electrical switches have limited DC capabilities at 24-30 VDC, 2A resistive and 1A inductive. 125 VDC, 0.5A resistive, 0.03A inductive. Consult factory for additional information.
WEIGHT	2-7 lbs; Varies with model
ELECTRICAL CONNECTION	1/2" NPT (female); Two 7/8" diameter knockouts
PRESSURE CONNECTION	Models 15623, 218, 270-376, 610-680, 701-706, 15731-15884: 1/4" NPT (female); Models 171-194, 483-494, 520-535, 15737: 1/2" NPT (female); Models 540-548: 1/8" NPT (female); Models 560-564: 2" Sanitary Fitting; Models 565-567: 1.5" Sanitary Fitting (Sanitary fittings mate with Tri-Clamp® fitting systems)
TEMPERATURE ASSEMBLY	Bulb and capillary: 6 feet 304 stainless steel except for E100-13545, 10 feet 304 stainless steel Immersion stem: nickel-plated brass (standard) except for B100-13546 stainless steel; optional 316L stainless steel
FILL	Models 1BS/BC are solvent filled, models 2-8 non-toxic oil filled
TEMPERATURE DEADBAND	Type **F** typically 1% and type **B**, **C**, and **E** typically 2% of range under laboratory conditions (70°F ambient circulating bath at rate of 1/2°F per minute change)
HEAT TRACING OR FREEZE PROTECTION	Thermostats designed specifically for heat tracing and freeze protection ambient sensing applications are available with types B100 and E100

100 Series

APPROVALS

UE declarations and third-party issued Agency certifications are available for download at www.ueonline.com/prod_approval.

UNITED STATES AND CANADA

UL Listed, **cUL** Certified
Temperature: UL 873; CSA C22.2 no. 24, File # E10667
Pressure: UL 508; CSA C22.2 no. 14, File # E42272;
Enclosure Type 4X

EUROPE

ATEX Directive (94/9/EC)

II 1 G EEx ia IIC T6, **(OPTIONAL - code M405**)
Tamb.= -50°C to +60°C
UL International DEMKO A/S (N.B.#0539)
Certificate #DEMKO 03 ATEX 0335063
EN 50014, 50020, 50284

Low Voltage Directive (LVD) (73/23/EC & 93/68/EEC)

UEC compliant to LVD
Products rated lower than 50 VAC and 75 VDC are outside of the scope of the LVD

Pressure Equipment Directive (PED) (97/23/EC)

Compliant to PED
Products rated lower than 7.5 psi are outside the scope of the PED

RUSSIA

Gosgortechnadzor Permit **(OPTIONAL – code M406)**
0ExiaIICT6
Tamb = -50°C to +60°C
NANIO CCVE Certification Center
Certificate # ROSS US.GB05.Bo2933
GOST R 51330.0, 51330.1, 51330.10 & 51330.14

PRESSURE MODEL CHART

Model	Adjustable Set Point Range Low end of range on fall; High end of range on rise		Deadband		Over Range Pressure*		Proof Pressure**	
	psi	bar (unless noted)	psi	bar (unless noted)	psi	bar	psi	bar
Type H100								
1.5" sanitary welded 316L stainless steel diaphragm and pressure connection. Mates with Tri-Clamp® fitting systems (not UE supplied)								
565	5 to 30	0,3 to 2,1	1 to 5	68,9 mbar to 0,3	1000	68,9	1500	103,4
566	10 to 100	0,7 to 6,9	1 to 12	68,9 mbar to 0,8	1000	68,9	1500	103,4
567	15 to 300	1,0 to 20,7	3 to 22	0,2 to 1,5	1000	68,9	1500	103,4
Buna-N diaphragm and O-ring with nickel-plated brass 1/4" NPT (female) pressure connection; Option M540 Viton® diaphragm and O-ring available for models 701-705								
701	1.5 to 30	103,4 mbar to 2,1	1 to 2	68,9 mbar to 0,1	500	34,5	600	41,4
702	3 to 100	0,2 to 6,9	1 to 4	68,9 mbar to 0,3	500	34,5	600	41,4
703	9 to 300	0,6 to 20,7	1 to 5	68,0 mbar to 0,3	500	34,5	600	41,4
704	15 to 500	1,0 to 34,5	2 to 8	0,1 to 0,6	1500	103,4	2500	172,4
705	30 to 1000	2,1 to 68,9	3 to 20	0,2 to 1,4	1500	103,4	2500	172,4
706	100 to 1700	6,9 to 117,2	10 to 30	0,7 to 2,1	2000	103,4	2500	172,4
	psi	bar	psi	bar	psi	bar	psi	bar
Viton® diaphragm and O-Ring with 316 stainless steel 1/4" NPT (female) pressure connection (includes adjustable deadband switch)								
15623	20 to 200	1,4 to 13,8	12 to 26	0,8 to 1,8	500	34,5	1000	68,9

Model	Adjustable Set Point Range		Adjustable Deadband						Over Range Pressure*		Proof Pressure**	
			Low End		Mid Range		High End					
	psi	bar	psi	bar	psi	bar	psi	bar	psi	bar	psi	bar
Buna N diaphragm and O-Ring nickel-plated brass 1/4" NPT (female) pressure connection; includes adjustable deadband microswitch												
15731	3 to 30	0,2 to 2,1	1.5 to 4	0,1 to 0,3	2 to 4.5	0,1 to 0,3	2.5 to 5	0,2 to 0,3	500	34,5	600	41,4
15732	5 to 100	0,3 to 6,9	3 to 6	0,2 to 0,4	4 to 7.5	0,3 to 0,5	5 to 9	0,3 to 0,6	500	34,5	600	41,4
15733	9 to 300	0,6 to 27,0	4 to 11	0,3 to 0,8	5 to 13	0,3 to 0,9	5 to 16	0,3 to 1,1	500	34,5	600	41,4
15734	15 to 500	1,0 to 34,5	8 to 25	0,6 to 1,7	9 to 28	0,6 to 1,9	10 to 31	0,7 to 2,1	1500	103,4	2500	172,4
15735	30 to 1000	2,1 to 68,9	9 to 30	0,6 to 2,1	10 to 35	0,7 to 2,4	30 to 90	2,1 to 6,2	1500	103,4	2500	172,4
15736	100 to 1700	6,9 to 117,2	25 to 60	1,7 to 4,1	40 to 80	2,8 to 5,5	50 to 100	3,4 to 6,9	2000	137,9	2500	172,4

Model	Adjustable Set Point Range		Deadband				Over Range Pressure*		Proof Pressure**	
			Lower 75% range span		Top 25% range span					
	psi	bar	psi	bar	psi	bar	psi	bar	psi	bar
Welded 316 stainless steel diaphragm and 1/2" NPT (female) pressure connection, large 0.72" orifice for clean-out purposes (NACE MR-0175 compliant)										
190	5 to 30	0,3 to 2,1	1 to 3	0,1 to 0,2	6 max	0,4	1500	103,4	2500	172,4
191	10 to 100	0,7 to 6,9	1 to 8	0,1 to 0,6	15 max	1,0	1500	103,4	2500	172,4
192	15 to 300	1,0 to 20,7	3 to 18	0,2 to 1,2	25 max	1,7	1500	103,4	2500	172,4
193	20 to 500	1,4 to 34,5	4 to 30	0,3 to 2,1	45 max	3,1	1500	103,4	2500	172,4
194	80 to 1700	5,5 to 117,2	5 to 120	0,3 to 8,3	150 max	10,3	2000	137,9	2500	172,4

Application Note: The use of metallic diaphragms where higher pressure shock or heavy cycling is expected should be avoided. Models 171-174 should not be used where system or start-up vacuum pressure might exceed 26" Hg Vac (-0.9 bar).

HOW TO ORDER

BUILDING A PART NUMBER

Select a **Type**

Refer to the "Type" section below.

Determine type number based on switch output, enclosure, adjustment and reference.

Fill in the type portion of your part number with the corresponding number.

Select a **Model**

Refer to the "Model Charts".

Determine model based on adjustable range, deadband and proof pressure.

Fill in the model portion of your part number with the corresponding number.

Select an **Option**

Refer to the "Options" section.

Determine option number based on switch output, optional materials or other product enhancements.

Fill in the option portion of your part number with the corresponding number.

Leave "option" portion blank if no options are needed.

FOR MULTIPLE OPTIONS: Call United Electric Controls.

TYPE	DESCRIPTION
PRESSURE	Type H100 - One SPDT output; epoxy coated enclosure; internal adjustment with "High-Low" reference scale
DIFFERENTIAL PRESSURE	Type H100K- One SPDT output; epoxy coated enclosure; internal adjustment with "High-Low" reference scale
TEMPERATURE	Type B100 - Immersion stem; one SPDT output; internal adjustment with reference dial Type C100 - Immersion stem; one SPDT output; internal adjustment with no reference Type E100 - Bulb and capillary; one SPDT output; internal adjustment with reference dial Type F100 - Bulb and capillary; one SPDT output; internal adjustment with no reference

SWITCH OPTIONS*	
0140	Gold contacts, 1A 125 VAC resistive. NOT AVAILABLE MODELS 13545, 13546, 15623, 15731-15884
0500	Close deadband, 5A 125/250 VAC resistive. NOT AVAILABLE MODELS 520-535, 13545, 13546, 15623, 15731-15884
1010	DPDT switch, 10A 125/250 VAC resistive; deadband and minimum set point will increase. NOT AVAILABLE TEMPERATURE VERSIONS, TYPE H100K OR MODELS 171-194, 483-567, 680, 15623, AND 15731-15884
1070	10 A 125 VDC resistive; deadband and minimum set point will increase. NOT AVAILABLE MODELS 171-194, 483-535, 560-567, 13545, 13546, 15623, 15731-15884
1519	Adjustable deadband, 15 A 125/250/480 VAC resistive; adjustment wheel changes rise setting only. If adjustment on fall setting is required, use primary adjustment. NOT AVAILABLE TYPES B100, E100 OR MODELS 171-194, 483-494, 560-567, 610-616, 51623, 15731-15884
1530	External manual reset, 15 A 125/250/480 VAC resistive; latches on rise, only. NOT AVAILABLE MODELS 13545, 13546, 15623, 15731-15884
1535	High ambient, 15 A 125/250 VAC resistive; temperatures up to 250°F (121.1°C). NOT AVAILABLE MODELS 520-535, 13545, 13546, 15623, 15731-15884
1537	Vapor sealed switch, 15 A 125/250 VAC resistive. NOT AVAILABLE MODELS 523, 533, 13545, 13546, 15623, 15731-15884
2000	20 A 125/250/480 VAC resistive. NOT AVAILABLE TYPE H100K OR MODELS 520-535, 13545, 13546, 15623, 15731-15884
3000	30 A 125/250/277 VAC resistive. NOT AVAILABLE TYPE H100K OR MODELS 171-194, 483-567, 680, 13545, 13546, 15623, 15731-15884

* *All switches have limited DC capabilities. Consult factory for details.*

DIMENSIONAL DRAWINGS

Dimensional drawings for all models may be found at www.ueonline.com

Types B100, C100, E100, F100, H100, H100K

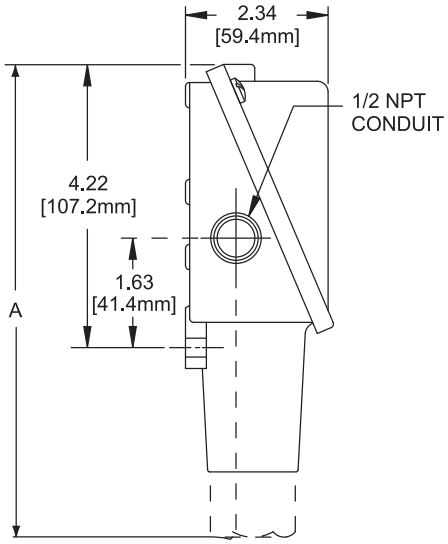

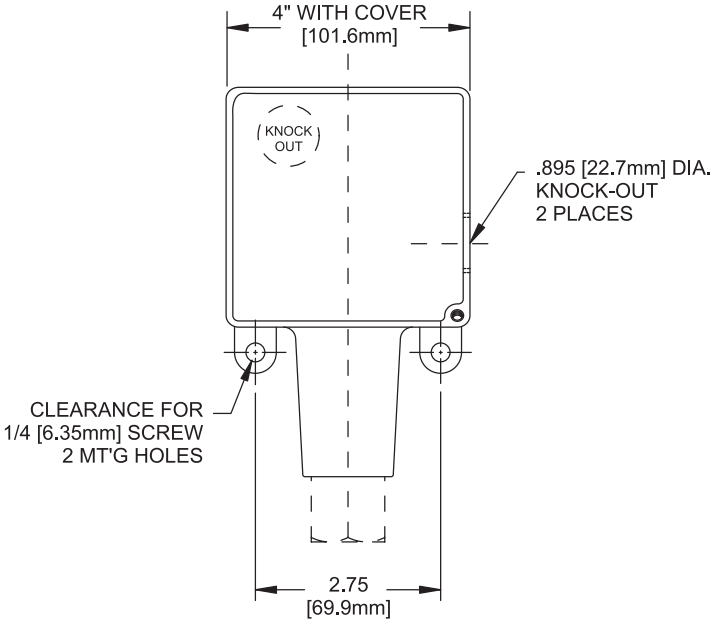

Dimension A			
Models	**Inches**	**mm**	**NPT**
Pressure			
171-174	7.63	193.8	1/2"
183-186, 484-486	7.56	192.0	1/2"
188-189, 488-489	6.63	168.4	1/2"
190-194, 490-494	6.63	168.4	1/2"
218	6.56	166.6	1/4"
270-274	7.00	177.8	1/4"
358-376	7.00	177.8	1/4"
520-525, 15737	8.44	214.4	1/2"
530-535	8.00	203.2	1/2"
560-564	6.63	168.4	2" Sanitary Fitting
565-567	6.63	168.4	1-1/2" Sanitary Fitting
610-616, 680, 15884	7.00	177.8	1/4"
701-706, 15623, 15731-15736	6.63	168.4	1/4"
Differential Pressure			
540-543	8.47	215.1	1/8"
544-548	8.53	216.7	1/8"
Temperature			
120, 121, 13546	9.38	238.3	Immersion stem
1BC-8BC, 1BS-8BS,13545	8.69	220.7	Bulb & capillary

All dimensions stated in inches (millimeters)

100 Series

DIMENSIONAL DRAWINGS

Dimensional drawings for all models may be found at www.ueonline.com

Temperature Sensors

Models 1BC-8BC, 1BS-8BS, 13545

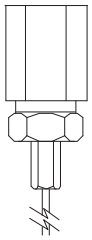

Models 120,121

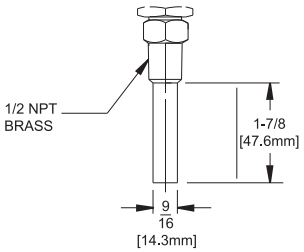

Model 13546

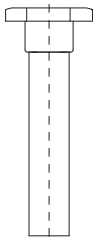

Pressure Sensors

Models 171-174

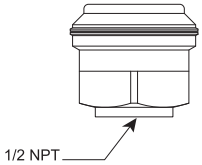

Models 183-186, 483-486

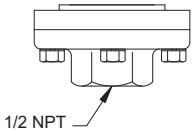

Models 188-194, 488-494

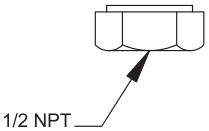

Models 218-376, 610-706, 15623,15731-15736

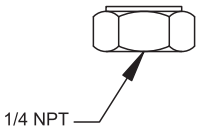

Models 520-525, 15737

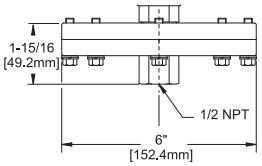

Models 530-535

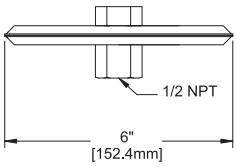

Models 540-543

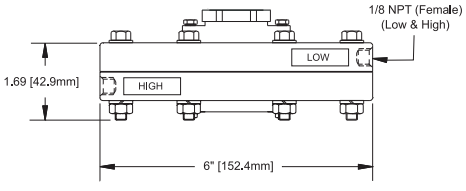

Models 544-548

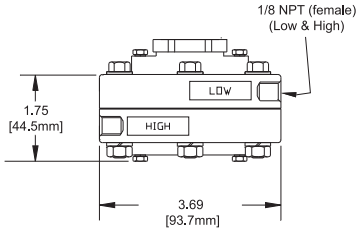

Models 560-564

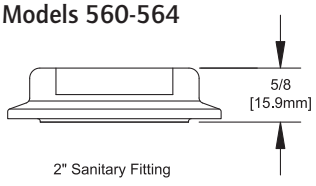

Models 565-567

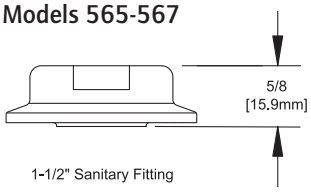

All dimensions stated in inches (millimeters)

ALTERNATIVE PRODUCTS FROM UE

One Series

- Electronic solid-state reliability
- Two-wire operation
- Digital display with keypad set-up
- 100% of range adjustable on-off deadband
- 4-20 mA output models
- Continuous diagnostic health check



10 Series

- Compact, cylindrical enclosure
- Pressure ranges from 4 to 7,500 psi, and proof pressure to 12,000 psi
- Choice of seven electrical terminations
- NPT or SAE threaded pressure connections



117 Series

- Single Switch for Corrosive and Hazardous Division 2 Locations
- Compact pressure, differential pressure and temperature models
- Hermetically-sealed SPDT and DPDT output
- Epoxy-coated weather-tight design houses stainless steel internal construction
- Convenient terminal block wiring



400 Series

- 1, 2, and 3 switch output may be separated up to 100% of range
- Wide selection of pressure, differential pressure, and temperature ranges
- Setting via reference dial or hex screw adjustment
- Weathertight 4X design ideal for ordinary location applications



Temperature Sensors

Rugged RTDs and thermocouples for process and energy applications, available with Nema 4X and explosion-proof heads to match heat-trace, turbine, combustion, and stack-emission applications



RECOMMENDED PRACTICES AND WARNINGS

United Electric Controls Company recommends careful consideration of the following factors when specifying and installing UE pressure and temperature units. Before installing a unit, the Installation and Maintenance instructions provided with unit must be read and understood.

- To avoid damaging unit, proof pressure and maximum temperature limits stated in literature and on nameplates must never be exceeded, even by surges in the system. Operation of the unit up to maximum pressure or temperature is acceptable on a limited basis (e.g., start-up, testing) but continuous operation must be restricted to the designated over range pressure. Excessive cycling at maximum pressure or temperature limits could reduce sensor life.
- A back-up unit is necessary for applications where damage to a primary unit could endanger life, limb or property. A high or low limit switch is necessary for applications where a dangerous runaway condition could result.
- The adjustable range must be selected so that incorrect, inadvertent or malicious setting at any range point cannot result in an unsafe system condition.
- Install unit where shock, vibration and ambient temperature fluctuations will not damage unit or affect operation. When applicable, orient unit so that moisture does not enter the enclosure via the electrical connection. When appropriate, this entry point should be sealed to prevent moisture entry.
- Unit must not be altered or modified after shipment. Consult UE if modification is necessary.
- Monitor operation to observe warning signs of possible damage to unit, such as drift in set point or faulty display. Check unit immediately.
- Preventative maintenance and periodic testing is necessary for critical applications where damage could endanger property or personnel.
- Electrical ratings stated in literature and on nameplate must not be exceeded. Overload on a switch can cause damage, even on the first cycle. Wire unit according to local and national electrical codes, using wire size recommended in installation sheet.
- Do not mount unit in ambient temp. exceeding published limits.

LIMITED WARRANTY

Seller warrants that the product hereby purchased is, upon delivery, free from defects in material and workmanship and that any such product which is found to be defective in such workmanship or material will be repaired or replaced by Seller (Ex-works, Factory, Watertown, Massachusetts. INCOTERMS); provided, however, that this warranty applies only to equipment found to be so defective within a period of 24 months from the date of manufacture by the Seller. Seller shall not be obligated under this warranty for alleged defects which examination discloses are due to tampering, misuse, neglect, improper storage, and in any case where products are disassembled by anyone other than authorized Seller's representatives. EXCEPT FOR THE LIMITED WARRANTY OF REPAIR AND REPLACEMENT STATED ABOVE, SELLER DISCLAIMS ALL WARRANTIES WHATSOEVER WITH RESPECT TO THE PRODUCT, INCLUDING ALL IMPLIED WARRANTIES OF MERCHANTABILITY OR FITNESS FOR ANY PARTICULAR PURPOSE.

LIMITATION OF SELLER'S LIABILITY

SELLER'S LIABILITY TO BUYER FOR ANY LOSS OR CLAIM, INCLUDING LIABILITY INCURRED IN CONNECTION WITH (I) BREACH OF ANY WARRANTY WHATSOEVER, EXPRESSED OR IMPLIED, (II) A BREACH OF CONTRACT, (III) A NEGLIGENT ACT OR ACTS (OR NEGLIGENT FAILURE TO ACT) COMMITTED BY SELLER, OR (IV) AN ACT FOR WHICH STRICT LIABILITY WILL BE INPUTTED TO SELLER, IS LIMITED TO THE "LIMITED WARRANTY" OF REPAIR AND/OR REPLACEMENT AS SO STATED IN OUR WARRANTY OF PRODUCT. IN NO EVENT SHALL THE SELLER BE LIABLE FOR ANY SPECIAL, INDIRECT, CONSEQUENTIAL OR OTHER DAMAGES OF A LIKE GENERAL NATURE, INCLUDING, WITHOUT LIMITATION, LOSS OF PROFITS OR PRODUCTION, OR LOSS OR EXPENSES OF ANY NATURE INCURRED BY THE BUYER OR ANY THIRD PARTY.

UE specifications subject to change without notice.

Be sure to visit www.ueonline.com for the latest information.

U.S. SALES OFFICES

United Electric Controls
31 Old Stage Road
Hampton Falls, NH 03844
Phone: 617-899-1132
email: northeastsales@ueonline.com

United Electric Controls
28 N. Wise Ave.
Freeport, IL 61032
Phone: 815-341-2588
email: midwestsales@ueonline.com

United Electric Controls
1022 Vineyard Drive
Conyers, GA 30013
Phone: 770-335-9802
email: southeastsales@ueonline.com

United Electric Controls
5829 Grazing Court
Mason, OH 45040
Phone: 513-535-5486
email: midatlanticsales@ueonline.com

United Electric Controls
102 Salazar Court
Clayton, CA 94517
Phone: 925-408-5997
email: westcoastsales@ueonline.com

United Electric Controls
27 Summit Terrace
Sparta, NJ 07871
Phone: 973-271-2550
email: easternsales@ueonline.com

United Electric Controls
33018 Weatherby Court
Fulshear, Texas 77441
Phone: 832-457-6138
email: southwestsales@ueonline.com

CANADA

EASTERN
68 Mosley Crescent
Brampton, Ontario
Canada L6Y 5C8
Phone: 905-455-5131
FAX: 905-455-5131

INTERNATIONAL OFFICES

CHINA

United Electric Controls, *Shanghai Office*
Room 1011, 10th Flr,
Huai Hai Zhonghua Building
No. 885, Renmin Road, Luwan District
Shanghai 200010, P.R. China
Phone: +8621-6255 8059
email: chinasales@ueonline.com

United Electric Controls, *Beijing Office*
Room 1006, Jainhao International Bldg.
Block D, No. 116
Zizhuyuanlu, Haidian District
Beijing, China 100089
Phone: +86-10-5893-0518
email: beijingsales@ueonline.com

EUROPE

United Electric Controls
05-806 Komorow
Kujawska 5, Poland
Phone: +48 22 499 4804
email: easterneuropesales@ueonline.com

INDIA

#402, Aries Avenue - 1
United Colony, Sama
Baroda (Gujarat), India 390 008
Phone: +91 (-265) -2788654
email: indiasales@ueonline.com

ASIA-PACIFIC

United Electric Controls, Far East
No. 1-2-2, 2nd Floor
Jalan 4/101C
Cheras Business Centre
Batu 5, Jalan Cheras
56100 Kuala Lumpur, Malaysia
Phone: 603-9133-4122
email: fareastsales@ueonline.com

MEXICO - LATIN AMERICA

United Electric Controls
Zacatecas # 206, Suite 20
Col Guadalupe CP 89120
Tampico, Tamaulipas Mexico
Phone: 833-217-5201
email: latinamericasales@ueonline.com

RUSSIA & NORTHERN EUROPE

United Electric Controls, Moscow
Elninskaya str., 15-140
Moscow, 121552, Russia
Phone: +7 (495) 792-88-06
email: russiansales@ueonline.com

UNITED ELECTRIC CONTROLS

180 Dexter Avenue, P.O. Box 9143
Watertown, MA 02471-9143 USA
Telephone: 617 926-1000 Fax: 617 926-2568
http://www.ueonline.com

CP07112500

NORD GEAR REDUCER MANUAL

Intelligent Drivesystems, Worldwide Services

INSTALLATION & OPERATING INSTRUCTIONS



NORD.COM/DOCS
DOCUMENT COLLECTION

Order Number:
NORD Model

NORD DRIVESYSTEMS

Order and product data

Order Number	202293029-100
Product Name	Nordbloc® Helical Gearbox
NORD Model Type	
Mounting Position	M4
Lubricant	VG220-SYN-PAO
Lubricant Qty	1.160 Qts

Contents

Manuals

U10060-Unit Installation
U10060 Version: 2.02

U10250-Solid Shaft Connections
U10250 Version: 0.06

U10500-Reducer Mounting Footed & Flange Mount Gear Units
U10500 Version: 0.05

U10750-Helical & Bevel Reducer lubrication
U10750 Version: 0.05

U11000-Helical & Bevel Reducer Lubrication Types
U11000 Version: 0.07

U12900-Nordbloc.1 Footed Oil Fill Quantities
U12900 Version: 0.04

U14700-Nordbloc.1 Oil Plug & Vent Locations
U14700 Version: 0.03

U19000-Troubleshooting
U19000 Version: 2409

U45100-NEMA IEC Input Adapters and Their Couplings
U45100 Version: 0.05

Spare Part Lists

U15150 - NORDBLOC.1 Parts List Drawings
U15150 Version: 0.02

U15705-Nordbloc.1 Parts Lists
U15705 Version: 0.02

1. Storage

IMPORTANT NOTE

For storage periods longer than 9 months, or for storage in less than desirable conditions, please consult NORD for recommendations.

Storage for up to 9 months is possible, so long as the following conditions are observed:

- Store the gear unit in its actual mounting position in accordance with the specified oil fill-level, in a clean and dry temperature controlled area. Avoid temperature fluctuations within the range of 0°C and 40°C (32°F to 104°F) and avoid relative humidity conditions in excess of 60%.
- Protect all exposed or unpainted shaft and flange surfaces with an anti-corrosion agent or grease.
- Store in a location free from shock and vibration, to avoid false brinelling of bearing elements and raceways.
- Whenever possible, rotate the shafts periodically, by hand if necessary, to help prevent brinelling (bearing damage) and to help keep the shaft seals pliable.
- Avoid direct exposure to the sun or UV light and aggressive or corrosive materials in the environment (ozone, gases, solvents, acids, caustic solutions, salts, radioactivity, etc.

2. Commissioning

Prior to gear unit start-up, complete the following:

- Please check your gear unit for a vent and if applicable to your product, remove the sealing plug to activate.

NOTICE

To prevent build-up of excessive pressure, sealed vents must be activated as shown prior to gear unit start up. Excessive pressure may cause damage to internal gearbox components and leakage.



Sealed vent

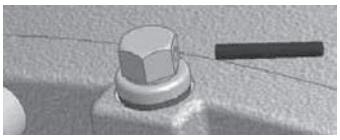

Activated vent

- Check the lubricant and be sure the gear unit is filled with the proper oil type, to the proper level, as determined by the mounting position.

IMPORTANT NOTE

Some smaller gear units are supplied as maintenance free/ lubricated for life gear units. Oil level may not be checked on some of these units.

- Check the condition of all shaft seals and all assembled flange gasket areas. If any change is detected in the shape, color, hardness or permeability, or if any leaks are detected, the corresponding shaft seals and/or gaskets must be replaced.
- Remove all anti-corrosive metal protectant from otherwise bare metal surfaces. Follow product manufacturers directions and warnings during surface protection removal.
- Check the resistance of all motor and brake windings to verify the integrity of the winding insulation and inspect all terminal box openings and wire connection areas to verify that all components are dry and free of corrosion.

3. Long-Term Storage

By taking special precautions, problems such as seal leakage and reducer failure due to the lack of lubrication, improper lubrication quantity, or contamination can be avoided. The following precautions will protect gear reducers during periods of extended storage:

- Store the gear unit in its actual mounting position in accordance with the specified oil fill-level, in a clean and dry temperature controlled area. Avoid temperature fluctuations within the range of 0°C and 40°C (32°F to 104°F) and avoid relative humidity conditions in excess of 60%.
- Fill the reducer full with oil that is compatible with the product normally used or recommended during service.
- Apply grease to all unpainted or unprotected shafts, bores, keyways, flange surfaces, tapped holes, and to the exterior of all oil seals.
- Store in a location free from shock and vibration, to avoid false brinelling of bearing elements and raceways.
- Once every few months rotate the input shaft approximately 10-20 revolutions to redistribute the weight of gears and shafts and to prevent brinnelling of the bearings and drying of the seal track.
- Avoid direct exposure to the sun or UV light and aggressive or corrosive materials in the environment (ozone, gases, solvents, acids, caustic solutions, salts, radioactivity, etc.)

4. Commissioning After Long-Term Storage

• Please check your gear unit for a vent and if applicable to your product, remove the sealing plug to activate.

NOTICE

To prevent build-up of excessive pressure, sealed vents must be activated as shown prior to gear unit start up. Excessive pressure may cause damage to internal gearbox components and leakage.



Sealed vent

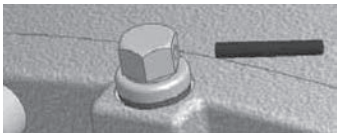

Activated vent

- Remove all anti-corrosive metal protectant from otherwise bare metal surfaces. Follow product manufacturers directions and warnings during surface protection removal.
- Drain the reducer and refill it with the proper type and amount of lubricant.
- Observe start-up and initial operation to make sure there are no seal or gasket leaks, or unusual sounds, vibration or heat rise during operation.
- Check the resistance of all motor and brake windings to verify the integrity of the winding insulation and inspect all terminal box openings and wire connection areas to verify that all components are dry and free of corrosion.

1. Safety & information symbols

All work including transportation, storage, installation, electrical connection, commissioning, servicing, maintenance and repair must be performed **only by qualified specialists or personnel**. It is recommended that repairs to NORD Products are carried out by the NORD Service Department. Instructions related to operational safety will be emphasized as shown.

Symbol	Meaning
⚠	**Danger, Caution or Warning -** Severe risk or danger of personal injury or death by working around dangerously high electrical voltage or moving machinery. Proper safety precautions must be taken.
NOTICE	**Notice -** Care must be taken to avoid the possibility of damaging the drive unit, driven machine, or the environment.
ℹ	**Important Note -** Useful note or tip to help assure trouble-free operation.
♻	**Material Disposal Note -** Important note concerning suggested material disposal.

2. Safety warnings

⚠ DANGER

- All work involved in the transport, connection, commissioning and maintenance of any NORD product must be carried out by qualified and responsible technicians. All applicable national, regional, and local work regulations and safety requirements must also be complied with. **NORD assumes no liability for personal injury, accidental death, or equipment damage and malfunctions resulting from failure to comply with installation or operating instructions, safety notes, or any work regulations and laws!**
- Gear unit installation and maintenance work may only be performed when no power is available to the prime mover or motor. Electric motors, electrical brakes, and variable frequency drives, contain potentially dangerous high-voltage. Prior to installation or maintenance, shut down the power at the circuit breaker or power switch. **While working on the drive, make sure the power from the prime mover is isolated or secured on "lock-out" to prevent accidental start-up and to safeguard against injury!**
- Surfaces of motors and gear units may become hot during operation or shortly after start-up. In some instances additional protection against accidental contact may be necessary. **Use caution to avoid burns or serious injury!**

3. Observe published performance range & nameplate data

NOTICE

Observe the data on all reducer nameplates and verify published ratings for the NORD item/s in question. Do not operate any NORD equipment outside the published performance range. Failure to comply may result in damage to the drive unit, driven machine, or the environment.

U.S. Nameplate

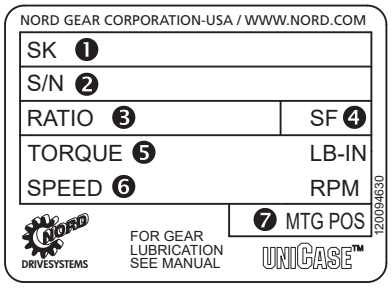

❶ Model/Type
❷ Serial Number
❸ Gear Ratio
❹ Service Factor
❺ Torque Rating
❻ Output Speed RPM
❼ Mounting Position

European Nameplate

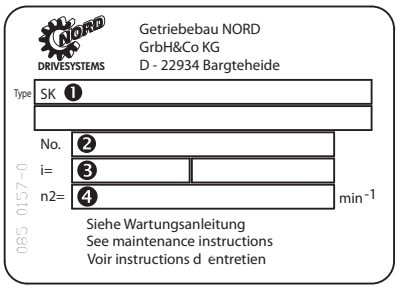

❶ Model/Type
❷ Serial Number
❸ Gear Ratio
❹ Speed

4. Transportation and handling

Make sure that all eyebolts and lifting lugs are tight and lift only at designed points. Protect the mounting surface from possible damage during transportation.

⚠ WARNING

Do not attach other machinery or loads to the NORD assembly, the supplied lifting bolts are not designed for this purpose and may result in drive damage or personal injury.

If the gearmotor or assembly is equipped with two suspension eye bolts, then both locations should be used for transportation and placement of the unit; in this case the tension force of the slings must not exceed a 45° angle.

In some instances it may be appropriate to use additional lifting straps or slings in order to assure safe transportation of the assembly. Always use sufficiently rated handling equipment and ensure that adequate safety measures are taken to protect personnel from injury during transportation. Once the NORD assembly is properly installed, remove the transportation fixtures.

7. DISPOSAL

MATERIAL DISPOSAL

Properly dispose of all used gear units and internal parts in accordance with all local regulations. In particular, all lubricants must be properly collected and disposed.

For confirmation of specific materials used in a specific reducer or gearmotor assembly, please consult NORD with the appropriate unit identification or serial number.

Components	Material
Gear wheels, shafts, rolling bearings, parallel keys, snap rings, spacers, shims, etc.	Steel
Gear housing and housing components	Cast iron or Aluminum (depending on type and size)
Worm gears	Bronze alloy
Radial seals, sealing caps, and rubber components	Elastomers with some steel
Coupling components	Plastic or Elastomer with Steel
Housing gaskets and flat oil seals	Asbestos-free sealing or gasket material (various types used)
Gear Oil	Mineral, SHC-Synthetic or PG-Synthetic (can vary)

1. Installation site

Drives must be properly installed if they are to produce the rated torque. Improper installation may lead to oil leaks, reduced life, or even catastrophic failure. NORD gear drives and motors are intended to be installed at a suitable mounting site under the following conditions:

- Unimpeded airflow to and around the units.
- Accessibility to oil drain, level and breather plugs.
- On brakemotors, allow adequate space for removing the fan guard and replacing and adjusting the brake.
- Mounting surfaces must be flat, torsionally rigid, and dampened against vibration.
- Unless special measures are taken, the immediate vicinity around the gear drive or motor should not be exposed to any aggressive or corrosive substances, contaminated air, ozone, gases, solvents, acids, alkalis, salts, radioactivity, etc.

2. Mounting position

Reducer mounting position charts illustrate the standard mounting positions for horizontal and vertical mounting. All gear units are assembled with the oil fill-level, oil-drain and vent plugs installed in their proper locations, **according to the customer-specified mounting position**. For mounting orientations other than shown consult NORD Gear.

NOTICE

Improper oil levels may lead to premature component wear and diminished service life. The gear reducer may not receive proper lubrication if the unit is not mounted in the position for which it is designed. Observe the mounting position designated on the reducer nameplate, or specified in the order acknowledgement. Consult NORD prior to changing mounting position in the field. While it is often possible to simply relocate the oil fill-level and vent locations, and adjust the oil fill amount, in some cases, different mounting positions may lend themselves to different internal construction features.

3. Reducer mounting

- The support foundation must be straight, level and flat. Whether the gear unit is foot-mounted or flange-mounted, NORD recommends that the straightness and flatness of the customer-supplied support foundation follow **Table 1**.
- The gear unit must be properly aligned with the driven shaft of the machine in order to prevent additional stress or load forces from being imposed upon the gear unit.
- To facilitate oil drainage it may be desirable to elevate the gear box foundation above the surrounding support structure.
- All bolting surfaces must be clean and free from contamination and corrosion.

Table 1: Recommended Straightness and Flatness of Customer-Supplied Support Foundation

Above (in)	To & Including (in)	General Tolerance on Straigtness & Flatness ISO 2768-2, Tolerance Class K
0.00	0.39	+/- 0.002 in
0.39	1.18	+/- 0.004 in
1.18	3.9	+/- 0.008 in
3.9	11.8	+/- 0.016 in
11.8	39	+/- 0.024 in
39	118	+/- 0.031 in

Above (mm)	To & Including (mm)	General Tolerance on Straigtness & Flatness ISO 2768-2, Tolerance Class K
0	10	+/- 0.05 mm
10	30	+/- 0.1 mm
30	100	+/- 0.2 mm
100	300	+/- 0.4 mm
300	1000	+/- 0.6 mm
1000	3000	+/- 0.8 mm

Straightness: Based upon the length of the corresponding line.

Flatness: Based upon the longer lateral surface or the diameter of the circular surface.

IMPORTANT NOTE

The responsibility for the design and construction of the support foundation is with the user. The foundation must be adequate to withstand normal operating loads and possible overloads while maintaining alignment to attached system components under such loads. ***Motors and drive components mounted on prefabricated base plates can become misaligned during shipment. Always check alignment after installation.***

4. Steel foundation

An engineered structural steel foundation should be designed to provide adequate rigidity and prevent loads from distorting the housing or causing misalignment of internal gears and shafts. When foot-mounting the gear reducer, a base plate or sole plate with suitable thickness (generally equal or greater than the thickness of the drive feet) should be securely bolted to steel supports and extend under the entire gear drive assembly. When flange-mounting the gear unit, the bulk head plate must be engineered to minimize buckling distortions and support the cantilevered weight of the gear unit or gear motor.

NOTICE

Do not weld on the gear unit or use the gear unit as an earth or ground connection for any welding procedure as this may cause permanent damage to the bearings and gears.

5. Concrete foundation

If a concrete foundation is used, allow the concrete to set firmly before bolting down the gear drive. Grout structural steel mounting pads and bolts of sufficient size into the concrete, to adequately distribute the load stress onto the concrete foundation.

Figure 1: Concrete Foundation

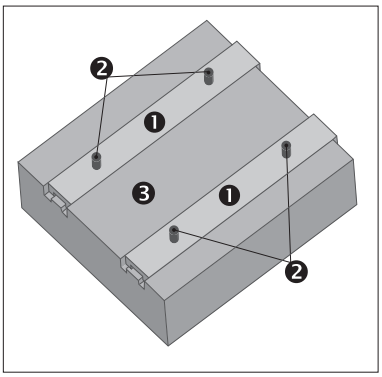

❶ Grouted Structural Steel Mounting Pads
❷ Mounting Bolts
❸ Concrete Foundation

6. Bolt connections for footed & flange mounted units

NORD footed reducers and flange-mount reducers (with B5 flange) have clearance designed into the mounting holes to allow for some minor adjustments in alignment. Bolt size, strength and quantity should be verified to insure proper torque reaction capacity whatever the mounting arrangement. Tightening torque for gear reducer mounting bolts, and recommended fastener grades, are provided in Table 2.

Table 2A: Tightening Torque for Inch Reducer Mounting Bolts

Thread Size	Grade SAE 5 / ASTM A449		Grade SAE 8	
(in)	(lb-ft)	(Nm)	(lb-ft)	(Nm)
1/4-20	7.1	9.6	10.0	13.6
5/16-18	16	21	22	30
3/8-16	28	37	39	53
1/2-13	69	93	98	132
5/8-11	138	188	195	264
3/4-10	247	334	348	472
7/8-9	396	537	558	757
1-8	592	802	833	1,130
1 1/8-7	-	-	1,233	1,672
1 1/4-7	-	-	1,717	2,327
1 3/8-6	-	-	2,267	3,073
1 1/2-6	-	-	2,983	4,045
1 3/4-5	-	-	4,458	6,045

- Calculated tightening torques are based a conventional 60°, clean and dry (un-lubricated) thread, with thread-friction and head-friction equal to 0.15.
- When using inch-fasteners, NORD recommends a minimum Grade SAE 5 (ASTM A-449) for sizes up to 1-8 UNC, and Grade SAE 8 for all larger sizes.

Table 2B: Tightening Torque for Metric Reducer Mounting Bolts

Above	ISO Grade 8.8		ISO Grade 10.9		ISO Grade 12.9	
(mm)	(lb-ft)	(Nm)	(lb-ft)	(Nm)	(lb-ft)	(Nm)
M4	2.4	3.2	3.5	4.7	4.1	5.5
M5	4.7	6.4	6.9	9.3	8.1	11
M6	8	11	12	16	14	19
M8	20	27	29	39	34	46
M10	39	53	58	78	67	91
M12	68	92	100	135	110	155
M14	107	145	159	215	180	250
M16	170	230	247	335	290	390
M18	240	325	343	465	400	540
M20	339	460	487	660	570	770
M22	465	630	664	900	770	1,050
M24	583	790	848	1,150	960	1,300
M27	848	1,150	1,217	1,650	1,440	1,950
M30	1,180	1,600	1,660	2,250	1,950	2,650
M36	2,050	2,780	2,884	3,910	3,470	4,710
M42	3,297	4,470	4,639	6,290	5,560	7,540
M48	4,940	6,700	7,010	9,500	8,260	11,200

- Calculated tightening torques are based on a conventional 60°, clean and dry (un-lubricated) thread, with thread-friction and head-friction equal to 0.15.
- When using metric-fasteners, NORD recommends a minimum ISO Grade 8.8 bolt.

7. Mounting the prime mover

When the motor is not flange mounted or integrally mounted to the gearbox, it is important to properly secure and align the gear drive with respect to the driven machine before attempting to align the prime mover or motor.

A. After the main gear drive is properly aligned and bolted in place, align the prime mover with respect to the reducer input shaft.

B. Use shims under the feet of the prime mover as needed, and secure in place with the proper mounting bolts. Dowel pins may be field-installed to help prevent misalignment and ensure proper realignment if removed for service.

IMPORTANT NOTE

When using a high speed coupling connection between the prime mover and the reducer, check alignment per the coupling manufacturers recommendations. If the coupling is misaligned, the reducer alignment or shimming is incorrect. Re-align the gear reducer and re-check the high-speed coupling alignment before re-aligning the motor.

HELICAL & BEVEL REDUCER LUBRICATION

1. Importance of proper lubrication

Proper gearbox lubrication is essential in order to reduce friction, heat, and component wear. Lubricants reduce heat and wear by inserting a protective "fluid boundary" between mating parts and preventing direct metal to metal contact. Lubricants also help prevent corrosion and oxidation, minimize foam, improve heat transfer, optimize reducer efficiency, absorb shock loads and reduce noise.

Most NORD reducers are shipped from the factory with a pre-determined oil fill level in accordance to the specified reducer size and mounting position.

2. Standard oil type

The following tables indicate the standard oil fill type used. Please see user manual U11000 for more specific information and for optional helical and bevel gear lubricants:

Serviceable Gear Units	
Helical In-line	Standard Oil Fill: ISO VG 220, Mineral Oil
Clincher Parallel-Shaft	
Right-Angle Bevel	
NORDBLOC® Series In-line	
NORDBLOC®.1 Series In-line	
Standard Series In-line	

IMPORTANT NOTE

For shipping purposes, the following large Clincher™ gear units are supplied without oil:
- Clincher™ Sizes SK11282, SK11382, SK11382.1 and SK12382

Maintenance-free / Lubricated For Life Gear Units	
Clincher™ sizes SK0182NB, SK0282NB & SK1382NB	Standard Oil Fill: ISO VG220 SHC/PAO Synthetic Oil
NORDBLOC® Sizes SK172, SK272, SK371F, SK372, SK373, SK320	

IMPORTANT NOTE

Maintenance-free units are supplied as sealed units with no vent-plug. Consult NORD prior to ordering if interested in ordering any of the above sizes as serviceable gear units.

IMPORTANT NOTE

Consult the sticker adjacent to the fill plug to determine the type of lubricant installed at the factory. Some units have special lubricants designed to operate in certain environments or intended to extend the service life or service temperature range of the lubricant. If in doubt about which lubricant is needed for a certain application, please contact NORD Gear.

3. Lubrication replacement

If the gear unit is filled with mineral oil, the lubricant should be replaced at least after every 10,000 operating hours or after every two years. If the gear unit is filled with synthetic oil, the lubricant should be replaced at least after every 20,000 operating hours or after every four years. Often gear reducers are exposed to extreme ambient conditions, hostile environments, wet conditions, or dirty and dusty operating areas. Especially in these situations, it is important to establish a condition-based oil service interval.

4. Oil viscosity

Viscosity, or the oil's resistance to shear under load, is often considered the single most important property of any gear oil.

- Often one will consider making a viscosity correction to the oil to improve the performance when operating the gear unit at low temperature or high temperature.
- In cases of extreme load conditions, gear pairs and antifriction bearings may be more susceptible to sliding or scuffing wear. In these operating conditions, it may also be beneficial to consider an increased lubrication viscosity and/or a lubrication with improved antiwear additive packages.

IMPORTANT NOTE

The user should consult with their primary lubrication supplier before considering changes in oil type or viscosity.

5. Maximum oil sump temperature limit

To prevent reducer overheating, the reducer's maximum oil sump temperature limit must not be exceeded for prolonged periods of operation (up to 3 hours continuous operation depending upon reducer size).

Oil Type	Maximum Oil Temperature Limit	
	NORD	AGMA 9005-D94
Mineral	80-85°C (176-185°F)	95°C (203°F)
Synthetic	105°C (220°F)	107°C (225°F)

IMPORTANT NOTE

Use caution when specifying gear reducers for high temperature service. If there is concern about exceeding the allowable safe operating temperatures, please consult NORD to discuss alternatives.

6. The importance of routine oil analysis

Routine oil analysis, sound lubrication practices, and good tracking of oil performance trends will help establish proper lubrication maintenance and change-out intervals. To maximize equipment reliability, NORD Gear generally recommends a condition-based lubrication maintenance program. One may take exceptions to this general recommendation on sealed-for-life or maintenance-free gear units or smaller and less costly gear units. In these instances, the replacement cost of the gear unit is often small compared to the costs associated with this type of oil analysis program.

NOTICE

NORD suggests replacing the gear oil if oil analysis indicates any of the following. Failure to replace the oil may cause internal damage to gearbox and diminished performance:

- Viscosity has changed by approximately 10% or more.
- Debris particles (silicon, dust, dirt or sand) exceed 25 ppm.
- Iron content exceeds 150-200 ppm.
- Water content is greater than 0.05% (500 ppm).
- The total acid number (TAN) tests indicate a significant level of oxidative break-down of the oil, and a critical reduction in performance; If the TAN number measured changes by more than 5% over the new oil, then an oil change would be recommended.

7. Mounting position and oil fill quantity

All NORD Gear reducers are shipped from the factory with a pre-determined oil fill level in accordance to the specified reducer size and mounting position. ***For additional information, please see the seperate mounting position diagrams and the corresponding oil fill quantity tables for the specified gear unit.***

The gearbox nametag will indicate the mounting position that was provided. ***For mounting orientations other than shown in the mounting position charts, please consult NORD Gear.***

IMPORTANT NOTE

Actual oil volume can vary slightly depending upon the gear case size, mounting and ratio. Prior to commissioning the reducer, check the oil-fill level using the reducer's oil-level plug and drain or add additional oil as needed. The minimum acceptable oil level is 0.15 in (4mm) below the oil level hole.

8. Oil plug locations

All gear units are assembled with the oil fill-level, oil-drain and vent plugs installed in their proper locations, according to the specified mounting position. All standard plugs are metric and utilize sealing gaskets between the head of the plug and the reducer housing.

9. Drain and fill-level plugs

All reducer drain plugs are metric socket head cap screws. For easier identification, it is NORD's standard practice to provide a hex-head screw for the fill-level plug. For ease of draining the used oil from the gear reducer, use the socket head screw located at the lowest part of the gearbox.


Drain Plug

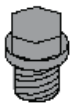
Fill Level Plug

10. Vent plug locations

Reducer venting allows for air pressure differences that occur during operation, between the inner space of the reducer and the atmosphere, while ensuring leak-free operation. The AUTOVENT™ is standard for all vented gear units, unless otherwise noted.

AUTOVENT™ - The AUTOVENT™ helps prevent bearing and gear damage by behaving like a check valve to block the entry of foreign material and prevent lubrication contamination from dust particles, moisture and air-borne process chemicals. The breather opens at approximately 0.3-0.9 psi during operation and closes tightly as the gearbox cools. This option is perfect for humid conditions and wash-down environments, helping to maintain proper oil cleanliness, while reducing foaming and oxidation.

Figure 1 AUTOVENT™ Types


Type 1

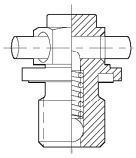

Type 2 with transportation plug

Open Vent - An optional open vent can be supplied by NORD. The open vent comes closed upon delivery with a transportation sealing plug (see Warning).

NOTICE

To prevent build-up of excessive pressure, sealed vents must be activated as shown prior to gear unit start up. Excessive pressure may cause damage to internal components and cause leakage.

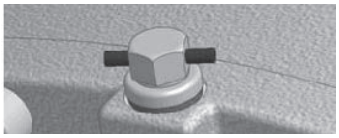
Sealed vent

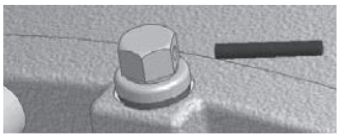
Activated vent

Filtered Vent - NORD may offer an optional filtered vent, which allows gases to permeate, but does not allow dust and debris to pass through the vent.

HELICAL & BEVEL REDUCER LUBRICATION TYPES

Lubrication Tables – Helical and Bevel Gear Units

Standard Oil Lubricants

ISO Viscosity	Oil Type	Ambient Temperature Range	Manufacturer Brand/Type	Notes
VG220	MIN-EP	0 to 40°C (32 to 104°)	Mobilgear 600XP220	♦❶
	PAO-EP	-35 to 60°C (-31 to 140°F)	Mobil SHC Gear 220	♦❷
	FG	-5 to 40°C (23 to 104°F)	Fuchs FM220	♦

Optional Oil Lubricants

ISO Viscosity	Oil Type	Ambient Temperature Range	Manufacturer Brand/Type	Notes
VG460	PAO-EP	-35 to 80°C (-31 to 176°F)	Mobil SHC Gear 460	-
	FG-PAO	-35 to 80°C (-31 to 176°F)	Mobil SHC Cibus 460	-
VG220	FG-PAO	-35 to 60°C (-31 to 140°F)	Mobil SHC Cibus 220	S
VG150	PAO-EP	-35 to 25°C (-31 to 77°F)	Mobil SHC Gear 150	-

Grease Options (applied to greased bearings and seal cavities)

NLGI Grade	Grease Thickener	Grease Base Oil	Ambient Temperature Range	Manufacturer Brand/Type	Notes
NLGI 2	Li-Complex	MIN	-30 to 60°C (-22 to 140°F)	Mobil Grease XHP222	♦❶
	Li-Complex	PAO	-40 to 80°C (-40 to 176°F)	Mobil / Mobilith SHC 220	♦❷
	Polyurea	FG-PAO	-30 to 80°C (-22 to 176°F)	Mobil SHC Polyrex 222	♦

♦ Stocked Lubricants

❶ Standard product on serviceable gear units

❷ Standard product on maintenance free gear units

IMPORTANT NOTE

- The "Ambient Temperature" is intended to be an operation guideline based upon the typical properties of all the lubricant. The viscosity and other properties of the lubricant change based upon load, speed, ambient conditions, and reducer operating temperatures. The user should consult with their lubrication supplier & NORD gear before considering changes in oil type or viscosity.
- To prevent reducer overheating, observe the maximum operating oil temperature limits:
  Mineral Oil: 80-85 °C (176 – 180 °F).
  Synthetic Oil: 105 °C (225 °F).
- In the following instances, please consult NORD for specific recommendations:
  - √ Gear units will operate in high ambient temperature conditions exceeding 40 °C (104 °F).
  - √ Gear units will operate in cold ambient temperature conditions approaching 0 °C (32 °F) or lower.
  - √ Lower than an ISO VG100 viscosity oil is being considered for a cold-temperature service.
  - √ Fluid grease is required for lubricating the gear unit.
- Observe the general lubrication guidelines outlined in user manual U10750.

Oil Formulation Codes

MIN-EP - Mineral Oil with EP Additive
PAO-EP - Synthetic Polyalphaolefin Oil with EP Additive
PAO - Synthetic Polyalphaolefin Oil
PG - Synthetic Polyglycol Oil
FG - Food-Grade Oil
FG-PAO - Food-Grade, Synthetic Poyalphaolefin Oil
FG-PG - Food-Grade, Synthetic Polyglycol Oil

Lubrication Notes

- Avoid using (EP) gear oils in worm gears that contain sulfur-phosphorous chemistries, as these additives can react adversely with bronze worm gears and accelerate wear.
- Food grade lubricants must be in compliance with FDA 212 CFR 178.3570 and qualify as a NSF-H1 lubricant. Please consult with lubrication manufacturer for more information.
- When making a lubrication change, check with the lubrication supplier to assure compatibility and to obtain recommended cleaning or flushing procedures.
- Do not to mix different oils with different additive packages or different base oil formulation types. Polyglycol (PG) oils are not miscible with other oil types and should never be mixed with mineral oil or polyalphaolefin (PAO) synthetic oil.

HELICAL & BEVEL REDUCER LUBRICATION TYPES

Oil Cross-reference Chart

ISO Viscosity	Oil Type	Ambient Temperature Range	Mobil	Shell	Castrol	FUCHS	KLÜBER LUBRICATION
VG150	MIN-EP	0 to 25°C (32 to 77°F)	Mobilgear 600XP150	Omala S2 G 150	Alpha SP150	Renolin EP150	Klüberoil GEM 1-150N
	PAO-EP	-30 to 25 °C (-22 to 77 °F)	Mobil SHC Gear 150	Omala S4 GX 150	Alphasyn EP150	Gearmaster SYN150/NA	Klübersynth EG 4-150
	PAO	-30 to 25°C (-22 to 77°F)	Mobil SHC629	Morlina S4 B 150	Alphasyn T150	N/A	Klübersynth GEM 4-150N
	PG	-25 to 25°C (-13 to 77°F)	Mobil Glygoyle 150	Omala S4 WE 150	Alphasyn PG150	Renolin PG150	Klübersynth GH 6-150
	FG	0 to 25°C (32 to 77°F)	Mobil DTE FM 150	N/A	N/A	N/A	N/A
	FG-PAO	-15 to 25°C (5 to 77°F)	Mobil SHC Cibus 150	N/A	N/A	Cassida GL150	Klüberoil 4 UH 1-150N
	FG-PG	-25 to 25°C (-13 to 77°F)	Mobil Glygoyle 150	N/A	N/A	N/A	Klübersynth UH1 6-150
VG220	MIN-EP	0 to 40°C (32 to 104°)	Mobilgear 600XP220	Omala S2 G 220	Alpha SP220	Renolin EP220	Klüberoil GEM 1-220N
	PAO-EP	-30 to 60 °C (-22 to 140 °F)	Mobil SHC Gear 220	Omala S4 GX 220	Alphasyn EP220	Gearmaster SYN220/NA	Klübersynth EG 4-220
	PAO	-30 to 60°C (-22 to 140°F)	Mobil SHC630	Morlina S4 B 220	Alphasyn T220	N/A	Klübersynth GEM 4-220N
	PG	-25 to 60°C (-13 to 140°F)	Mobil Glygoyle 220	Omala S4 WE 220	Alphasyn PG220	Renolin PG220	Klübersynth GH 6-220
	FG	0 to 40°C (32 to 104°F)	Mobil DTE FM 220	N/A	N/A	Fuchs FM220	N/A
	FG-PAO	-25 to 60°C (-13 to 140°F)	Mobil SHC Cibus 220	N/A	N/A	Cassida GL220	Klüberoil 4 UH 1-220N
	FG-PG	-25 to 60°C (-13 to 140°F)	Mobil Glygoyle 220	N/A	N/A	Cassida WG220	Klübersynth UH1 6-220
VG460	MIN-EP	0 to 40°C (32 to 104°F)	Mobilgear 600XP460	Omala S2 G 460	Alpha SP460	Renolin EP460	Klüberoil GEM 1-460N
	PAO-EP	-20 to 80°C (-4 to 176°F)	Mobil SHC Gear 460	Omala S4 GX 460	Alphasyn EP460	Gearmaster SYN460/NA	Klübersynth EG 4-460
	PAO	-20 to 80°C (-4 to 176°F)	Mobil SHC 634	Morlina S4 B 460	Alphasyn T460	N/A	Klübersynth GEM 4-460N
	PG	-20 to 80°C (-4 to 176°F)	Mobil Glygoyle 460	Omala S4 WE 60	Alphasyn PG460	N/A	Klübersynth GH 6-460
	FG	0 to 40°C (32 to 104°F)	Mobil DTE FM460	N/A	N/A	Fuchs FM460	N/A
	FG-PAO	-20 to 80°C (-4 to 176°F)	Mobil SHC Cibus 460	N/A	N/A	Cassida GL460	Klüberoil 4 UH 1-460N
	FG-PG	-20 to 80°C (-4 to 176°F)	Mobil Glygoyle 460	N/A	N/A	Cassida WG460	Klübersynth UH1 6-460

Low-end service temperature limit may vary for a specific lubricant; Please also see the important notes on Page 1.

92.1/93.1 SERIES HELICAL-BEVEL OIL FILL QUANTITIES

92.1/93.1 Helical-bevel mount lubrication

All NORD Gear reducers are shipped from the factory with a pre-determined oil fill level in accordance to the specified reducer size & mounting position. For additional information, please refer to the "Oil Plug & Vent Locations" documentation for your gear unit.

IMPORTANT NOTE

Actual oil volume can vary slightly depending upon the gear case size, mounting and ratio. Prior to commissioning the reducer, check the oil-fill level using the reducer's oil level plug and drain or add addition oil as needed.

For mounting orientations other than shown please consult NORD Gear. Reducer modifications may be required.

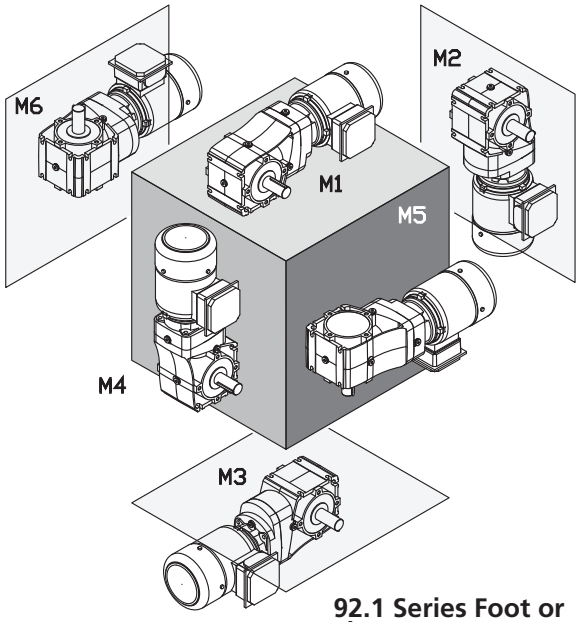

92.1 Series Foot or Flange Mount

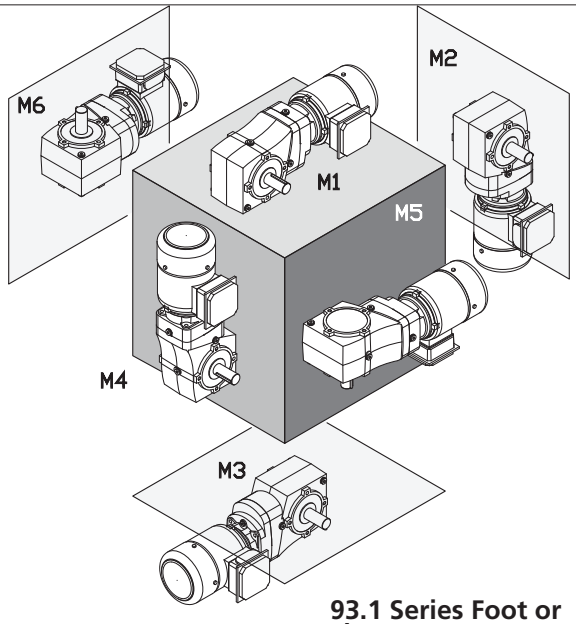

93.1 Series Foot or Flange Mount

92.1 Series Oil Fill

Type	M1		M2		M3		M4		M5		M6	
	Quarts	Liters	Quarts	Liters	Quarts	Liters	Quarts	Liters	Quarts	Liters	Quarts	Liters
SK 920072.1	0.22	0.21	0.50	0.47	0.22	0.36	0.22	0.34	0.22	0.28	0.22	0.28
SK 92072.1	0.28	0.26	0.52	0.49	0.44	0.42	0.57	0.54	0.31	0.29	0.33	0.31
SK 92172.1	0.36	0.34	0.65	0.61	0.55	0.52	0.71	0.67	0.44	0.42	0.51	0.48
SK 92372.1	0.45	0.43	0.97	0.92	0.77	0.73	0.88	0.83	0.58	0.55	0.65	0.61
SK 92672.1	0.90	0.85	1.69	1.60	1.27	1.20	1.59	1.50	1.08	1.02	1.08	1.02
SK 92772.1	1.37	1.30	2.80	2.65	1.97	1.86	2.85	2.70	1.69	1.60	1.69	1.60

Oil levels shown apply to all foot & flange mounted units.

93.1 Series Oil Fill

Type	M1		M2		M3		M4		M5		M6	
	Quarts	Liters	Quarts	Liters	Quarts	Liters	Quarts	Liters	Quarts	Liters	Quarts	Liters
SK 930072.1	0.30	0.28	0.69	0.65	0.22	0.56	0.22	0.54	0.22	0.39	0.22	0.39
SK 93072.1	0.41	0.39	0.98	0.93	0.83	0.79	1.08	1.02	0.52	0.49	0.66	0.62
SK 93172.1	0.63	0.60	1.24	1.17	0.99	0.94	1.29	1.22	0.69	0.65	0.90	0.85
SK 93372.1	1.06	1.00	2.08	1.97	1.74	1.65	2.26	2.14	1.18	1.12	1.42	1.34
SK 93672.1	1.90	1.80	3.41	3.23	2.86	2.71	4.02	3.80	2.13	2.02	2.59	2.45
SK 93772.1	2.87	2.72	4.89	4.63	3.91	3.70	6.13	5.80	3.10	2.93	3.43	3.25

Oil levels shown apply to all foot & flange mounted units.

92.1/93.1 SERIES HELICAL-BEVEL OIL PLUG & VENT LOCATIONS

Oil plug locations

Prior to commissioning the reducer, check the oil-fill level using the reducer's oil-level plug and drain or add additional oil as needed. ***For mounting orientations other than shown please consult NORD Gear. New plug locations may be required.***

92.1 Series

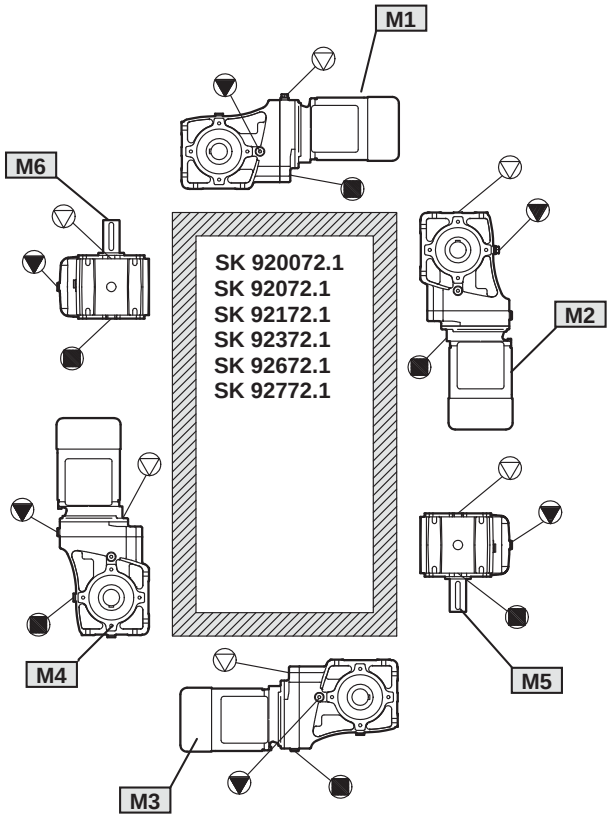

93.1 Series

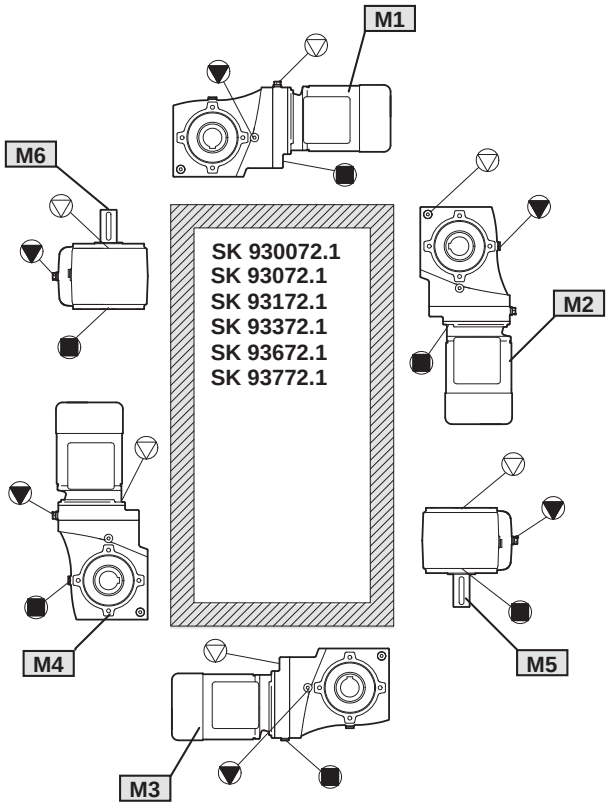

▽ = Vent

▼ = Oil Level

■ = Oil Plug

STP3 SENSOR & OMRON CONTROLLER MANUAL

NETZSCH CANADA INC. 2018

OPERATING AND MAINTENANCE INSTRUCTIONS:

STP3 DRY RUN PROTECTION

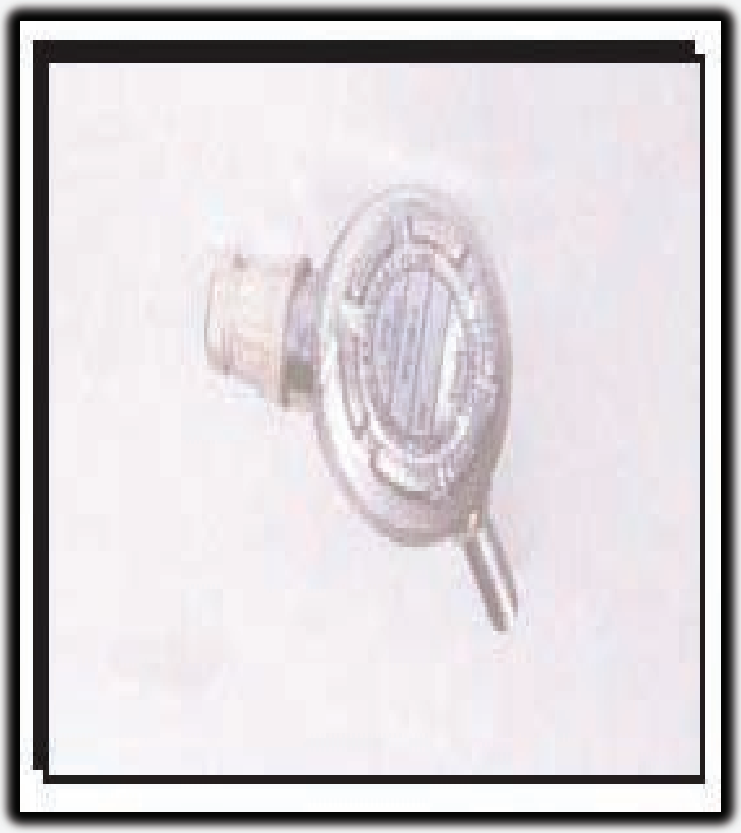



NETZSCH Canada, Incorporated
500 Welham Road
Barrie, Ontario L4N 8Z7
Tel: (705) 797-8426
Fax: (705) 797-8427
Toll: 866 683-7867

www.pumps.netzsch.com

1 DISMANTLING AND ASSEMBLY OF SPECIAL UNITS

WARNING Make sure that the power has been disconnected from the Temperature Controller prior to servicing.

The Stator Protector, which is a device to protect the stator from dry running mainly consists of three parts; the Temperature Controller (processor) with LED display, the Temperature Sensor (PT-100 RTD), and the Thermal Well.

1. The Device functions as follows

In the stator of the pump there is a Temperature Sensor. This sensor continuously measures the stator temperature which ranges from 0°C to 255°C. If the stator temperature rises above the programmed or specified cut-off temperature (about normal pumping temperature), which is set on the controller, there will be an optical or acoustic signal indication on the controller display. The controller can also be set to switch the pump off immediately. If the pump is not constantly monitored, it is recommended that the controller be set to shut the pump off automatically.

2. Technical Data

- Microprocessor based
- Measuring input for PT-100 RTD Temperature Sensor. Material of Construction: Platinum
- LED display, three digits, 13mm height, red indicator
- Switching position indication for internal K1 relay
- Resistance-Temperature Curve:
  European Alpha Curve = 0.00385
  American Alpha Curve = 0.003916
- Supply voltage 110 or 220 VAC or according to specification 24VAC.
- Storage temperature (-20°C to 70°C)
- Operating temperature (0°C to 60°C)
- Relative humidity maximum 75% no dew
- Suitable for panel mounting. Device is rated IP-54
- Output: 1relay 250 VAC 7^{A}, 1 changeover contact
- Installation Dimensions: front panel 72mm x 72mm; 90mm deep including terminals
- Terminals for threads max. 2,5 mm^2.

*Controller should be no more than 75 feet from the temperature sensor.

3. Setting the Cut-Off Temperature

The cut-off temperature value of the controller in normal conditions is easy to adjust. When no key is pressed, the display shows the actual stator temperature.

- When the PGM button is pressed, the cut-off temperature is shown on the display.
- By keeping the PGM button pressed, the cut-off temperature can be raised or lowered to the desired setting by using the UP or DOWN key.
- Releasing the arrow UP or DOWN key loads the adjusted new value into the memory.
- Be careful. Always release the UP or DOWN key before releasing the PGM key to retain this value in memory even if there is a power failure.

1 DISMANTLING AND ASSEMBLY OF SPECIAL UNITS

4. Selecting the Cut-Off Temperature

- Adjust the cut-off temperature up to 150°C at the controller.
- Start the pump.
- When steady pumping is being obtained, a read out of the stator temperature will be displayed on the controller.
- If this temperature is accurate, taking into consideration the product and ambient temperatures, then the cut-off temperature can be set 5°C higher.

5. Switching Functions

With the temperature sensor connected and the operating voltage applied to the controller, the internal relay K1 is energized.

If the cut-off temperature is being exceeded or a short-circuit is occurring, the internal relay K1 drops out.

For terminals, see illustration on the following page.

In the event of sensor failure or short-circuit, the maximum temperature of 255°C flashes on the display.

6. Safety Precautions

For the installation of the Stator Protector, as well as for the separate mini transformer, the latest regulations which apply for electrical installations must be adhered to.
If a temperature sensor is operated within a hazardous area there must be a special enclosure installed between the Temperature Controller and the Temperature Sensor (RTD).

The switching of inductive loads (contacts) may result a false reading from the Controller, or in complete malfunction of the Unit. Here, we recommended the wiring of a Surge Suppressor.

7. Installation of Temperature Sensor and Controller

The stator (3005), as displayed in tables 1,2 and 3, is equipped with a Reducing Fitting (4580) and a Temperature Sensor (RTD), (4180).

The stator is delivered with a built-in Thermal Well (4570). When installed on a NEMO Pump, this Thermal Well should be mounted on its inlet side.

***Controller should be no more than 75 feet from the temperature sensor (RTD).**

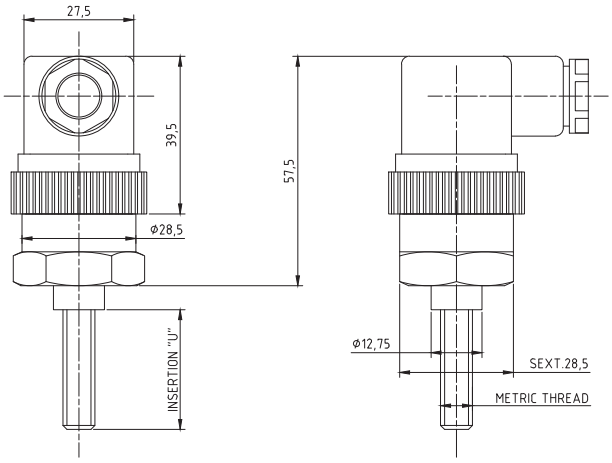

TECHNICAL DATA		
CODE NDB	SCREW THREAD METRIC	INSERTION "U"
NDB4344429	**M6x1,0**	5,0mm
NDB4344430	M6x1,0	5,5mm
NDB4344431	M6x1,0	7,0mm
NDB4344432	M6x1,0	8,0mm
NDB4344433	M8x1,25	9,0mm
NDB4344474	M6x1,0	9,0mm
NDB4344434	M6x1,0	9,5mm
NDB4344435	M8x1,25	10,0mm
NDB4344436	M8x1,25	12,0mm
NDB4344437	M8x1,25	13,0mm
NDB4344438	M8x1,25	15,0mm
NDB4344439	M8x1,25	16,0mm
NDB4344440	M8x1,25	17,0mm
NDB4344441	M8x1,25	21,0mm
NDB4344442	M8x1,25	22,0mm
NDB4344443	M8x1,25	23,0mm
NDB4344444	M8x1,25	25,0mm
NDB4344445	M8x1,25	26,0mm
NDB4344446	M8x1,25	27,0mm
NDB4344447	M8x1,25	30,0mm
NDB4344448	M8x1,25	33,0mm
NDB4344449	M8x1,25	35,0mm
NDB4344450	M8x1,25	36,0mm
NDB4344451	M8x1,25	39,0mm
NDB4344452	M8x1,25	40,0mm
NDB4344453	M8x1,25	43,0mm
NDB4344454	M8x1,25	45,0mm
NDB4344455	M8x1,25	47,0mm
NDB4344456	M8x1,25	48,0mm
NDB4344457	M8x1,25	52,0mm
NDB4344458	M8x1,25	54,0mm
NDB4344459	M8x1,25	55,5mm
NDB4344460	M8x1,25	58,0mm
NDB4344461	M8x1,25	65,0mm
NDB4344462	M8x1,25	66,0mm
NDB4344463	M8x1,25	68,0mm
NDB4344464	M8x1,25	80,0mm
NDB4344465	M8x1,25	102,0mm
NDB4344466	M8x1,25	117,5mm
NDB4346755	M8x1,25	6,0mm
NDB4346756	M8x1,25	10,5mm
NDB4346757	M8x1,25	8,0mm



TECHNICAL SPECIFICATIONS

TERMORESISTANCE

Mounting Type:	Standard
Sensor Element:	PT-100 (Class A)
Working Range:	-50 ... 250 ° C
Diameter of insertion rod:	Threaded according to table beside
Insertion "U":	As shown in the table beside
Rod material:	Gr.316 stainless steel
Electrical connection:	DIN 43650 connector
Electrical Terminal:	3 Wire

REFERENCE DOCUMENTS

GENERAL NOTES

(1) Supplied with Certificate of Conformity

REV.	DESCRIPTION	DATE	EXEC.	VERIFY.	APPROV.

CUSTOMER ORDER:
CUSTOMER:

TITLE:
STP3 PROTECTIVE ASSEMBLY;
DEGREE OF PROTECTION: IP-65;
WIRE: 3 / CONNECTOR: DIN43650

PROJ.	NDB	EXEC.	EVERTON	VERIFY.	ALEXANDRE
APPROV.	GABRIEL	FORMAT	A3	CP.	
DATE	20/11/18	SCALE	N/A	SHEET	1 OF 1

NETZSCH

No. 4651076

A3 420 x 297

OMRON

Temperature Controllers
E5CSV

Simple to Set and Operate 1/16 DIN Size Controllers

- Easy setting using internal DIP and rotary switches
- ON/OFF or PID control (with on-demand auto-tuning) selectable
- Clearly visible digital display with character height of 13.5 mm
- Deviation indicator makes monitoring more effective
- Multiple temperature sensor input (thermocouple/platinum resistance thermometer) models stocked; thermocouple input only and platinum RTD input only models available
- Models with two alarms are ideal for temperature alarm applications
- Setting change protection prohibits tampering
- Sampling rate (500 ms) and selectable control period (2 and 20 s) improves response
- 8-mode alarm output and sensor error detection
- "Input shift" function adjusts display to reflect known sensor offsets



CE cULus LISTED NEW

- °C or °F field selectable
- Black or white cases available to match panel aesthetics
- RoHS compliant
- Water-resistant front panel rated NEMA 4X/IP66
- Compact: measures 48 H x 48 W x 78 D mm
- Accuracy ±0.5% of value

Model Number Structure

■ Model Number Legend

Models with Terminal Blocks

E5CSV-□□□□-□□
1 2 3 4 5 6

1. Output type
- R: Relay
- Q: Voltage for driving SSR

2. Number of alarms
- Blank: No alarm
- 1: 1 alarm
- 2: 2 alarms

3. Input type
- T: Thermocouple/platinum resistance thermometer (multi-input)
- KJ: Thermocouple
- P: Platinum resistance thermometer

4. Power supply voltage
- Blank: 100 to 240 VAC
- D: 24 VAC/VDC

5. Case color / Display scale
- Blank: Black
- W: Light gray
- F: Scale marked in °F (Black case only)

6. Power supply voltage
- AC100-240: 100 to 240 VAC
- AC/DC24: 24 VAC/VDC

Note: A functional explanation is provided here for illustration, but models are not necessarily available for all possible combinations. Please refer to *Ordering Information* when ordering.

Examples
- Voltage control output, without alarm, multi-input, light gray case: 115 VAC: E5CSV-QT-W AC100-240
- Relay control output, one alarm output, multi-input, black case: 24 VDC: E5CSV-R1TD AC/DC24

Ordering Information

■ List of Models

Size	Power supply voltage	Number of alarm points	Control output	TC/Pt multi-input Case color: Black Scale marked in °C	TC input Case color: Light gray Scale marked in °C	Pt input Case color: Light gray Scale marked in °C	TC/Pt multi-input Case color: Black Scale marked in °F
1/16 DIN 48 × 48 × 78 mm (W × H × D)	100 to 240 VAC	0	Relay	E5CSV-RT AC100-240			E5CSV-RT-F AC100-240
			Voltage (for driving SSR)	E5CSV-QT AC100-240			E5CSV-QT-F AC100-240
		1	Relay	E5CSV-R1T AC100-240	E5CSV-R1KJ-W	E5CSV-R1P-W	E5CSV-R1T-F AC100-240
			Voltage (for driving SSR)	E5CSV-Q1T AC100-240	E5CSV-Q1KJ-W	E5CSV-Q1P-W	E5CSV-Q1T-F AC100-240
		2 (See note)	Relay	E5CSV-R2T AC100-240			E5CSV-R2T-F AC100-240
			Voltage (for driving SSR)	E5CSV-Q2T AC100-240			E5CSV-Q2T-F AC100-240
	24 VAC/ VDC	0	Relay	E5CSV-RTD AC/DC24			
			Voltage (for driving SSR)	E5CSV-QTD AC/DC24			
		1	Relay	E5CSV-R1TD AC/DC24			E5CSV-R1TD-F AC/DC24
			Voltage (for driving SSR)	E5CSV-Q1TD AC/DC24			E5CSV-Q1TD-F AC/DC24
		2 (See note)	Relay	E5CSV-R2TD AC/DC24			
			Voltage (for driving SSR)	E5CSV-Q2TD AC/DC24			

Note: Models with two alarm outputs always use the upper limit alarm mode for the alarm 2 output.

■ Accessories (Order Separately)

Protective Cover

Type	Model
Hard Protective Cover	Y92A-48B

Terminal Cover

Model
E53-COV10

Specifications

■ Ratings

Supply voltage		100 to 240 VAC, 50/60 Hz	24 VAC/VDC, 50/60 Hz
Operating voltage range		85% to 110% of rated supply voltage	
Power consumption		5 VA	3 VA/2 W
Sensor input		Thermocouple input type: K, J, L Platinum resistance thermometer input type: Pt100, JPt100 Multi-input (thermocouple/platinum resistance thermometer) type: K, J, L, T, U, N, R, Pt100, JPt100	
Control output	Relay output	SPST-NO, 250 VAC, 3A (resistive load)	
	Voltage output (for driving the SSR)	12 VDC, 21 mA (with short-circuit protection circuit)3	
Control method		ON/OFF or 2-PID (with auto-tuning)	
Alarm output		SPST-NO, 250 VAC, 1A (resistive load)	
Setting method		Digital setting using front panel keys	
Indication method		3.5 digit, 7-segment digital display (character height: 13.5 mm) and deviation indicators	
Other functions		• Setting change prohibit (key protection) • Input shift • Temperature unit change (°C/°F) • Direct/reverse operation • Temperature range, Sensor switching (K/J/L, Pt100/JPt100) • Switching is performed between a thermocouple and platinum resistance thermometer for multi-input models. • Control period switching • 8-mode alarm output • Sensor error detection	
Ambient temperature		–10 to 55°C (with no condensation or icing)	
Ambient humidity		25% to 85%	
Storage temperature		–25 to 65°C (with no condensation or icing)	

■ Characteristics

Setting accuracy	Thermocouple (See note 1.):	(±0.5% of indication value or ±1°C, whichever is greater) ±1 digit max.
Indication accuracy (ambient temperature of 23°C)	Platinum resistance thermometer (See note 2.):	(±0.5% of indication value or ±1°C, whichever is greater) ±1 digit max.
Influence of temperature	R thermocouple inputs:	(±1% of PV or ±10°C, whichever is greater) ±1 digit max.
Influence of voltage	Other thermocouple inputs:	(±1% of PV or ±4°C, whichever is greater) ±1 digit max.
	Platinum resistance thermometer inputs:	(±1% of PV or ±2°C, whichever is greater) ±1 digit max.
Hysteresis (for ON/OFF control)	0.2% FS (0.1% FS for multi-input (thermocouple/platinum resistance thermometer) models)	
Proportional band (P)	1 to 999°C (automatic adjustment using auto-tuning/self-tuning)	
Integral time (I)	1 to 1,999 s (automatic adjustment using auto-tuning/self-tuning	
Derivative time (D)	1 to 1,999 s (automatic adjustment using auto-tuning/self-tuning)	
Alarm output range	Absolute-value alarm: Same as the control range Other: 0% to 100% FS Alarm hysteresis: 0.2°C or °F (fixed)	
Control period	2/20 s	
Sampling period	500 ms	
Insulation resistance	20 MΩ min. (at 500 VDC)	
Dielectric strength	2,000 VAC, 50/60 Hz for 1 min between current-carrying terminals of different polarity	
Vibration resistance — **Malfunction**	10 to 55 Hz, 20 m/s² for 10 min each in X, Y, and Z directions	
Vibration resistance — **Destruction**	10 to 55 Hz, 0.75-mm single amplitude for 2 hr each in X, Y, and Z directions	
Shock resistance — **Malfunction**	100 m/s² min., 3 times each in 6 directions	
Shock resistance — **Destruction**	300 m/s² min., 3 times each in 6 directions	
Life expectancy — **Electrical**	100,000 operations min. (relay output models)	
Weight	Approx. 120 g (Controller only)	
Degree of protection	Front panel: Equivalent to IP66; Rear case: IP20; Terminals: IP00	
Memory protection	EEPROM (non-volatile memory) (number of writes: 1,000,000)	
EMC	EMI Radiated: EN 55011 Group 1 Class A EMI Conducted: EN 55011 Group 1 Class A ESD Immunity: EN 61000-4-2: 4 kV contact discharge (level 2), 8 kV air discharge (level 3) Radiated Electromagnetic Field Immunity: EN 61000-4-3: 10 V/m (80-1000 MHz, 1.4-2.0 GHz amplitude modulated) (level 3), 10 V/m (900 MHz pulse modulated) Conducted Disturbance Immunity: EN 61000-4-6: 3 V (0.15 to 80 MHz) (level 2) Noise Immunity (First Transient Burst Noise): EN 61000-4-4 Burst Immunity: 2 kV power-line (level 3), 1 kV I/O signal-line (level 3) Surge Immunity: EN 61000-4-5: Power line: Normal mode 1 kV; Common mode 2 kV Output line (relay output): Normal mode 1 kV; Common mode 2 kV Voltage Dip/Interrupting Immunity: EN 61000-4-11 0.5 cycle, 100% (rated voltage)	
Approved standards	UL 61010C-1 (listing) CSA C22.2 No.1010-1	
Conformed standards	EN 61326, EN 61010-1, IEC 61010-1 VDE 0106 Part 100 (finger protection), when the terminal cover is mounted.	

Note: 1. The following exceptions apply to thermocouples.
- U, L: ±2°C ±1 digit max.
- R: ±3°C ±1 digit max. at 200°C or less

2. The following exceptions apply to platinum resistance thermometers.
Input set values 0, 1, 2, 3 for E5CSV: 0.5% FS ±1 digit max.
Input set value 1 for E5CSV: 0.5% FS ±1 digit max.

■ Electrical Life Expectancy Curve for Relays (Reference Values)

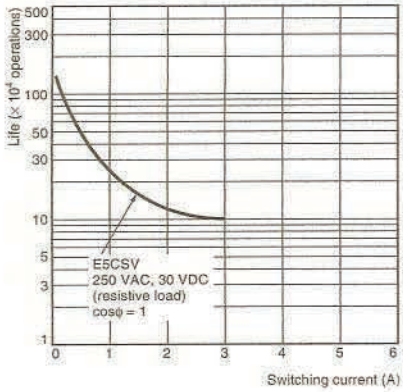

■ Temperature Range

Thermocouple Input Models

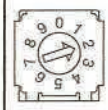

Temperature range (selected using switch)

(Default setting: 2)

Input	K						J/L			
Temperature range	200	300	400	500	600	999	200	300	400	500
Setting number	0	1	2	3	4	5	6	7	8	9
Minimum setting unit	1°C						1°C			

The shaded value indicates the default setting status.

Platinum Resistance Thermometer Input Models

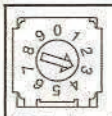

Temperature range (selected using switch)

(Default setting: 3)

Input	JPt100/Pt100									
Temperature range	50 / −50	50.0 / 0.0	80 / −20	99.9 / 0.0	200 / 0	300 / 0	400 / 0	300 / 0	400 / 0	199.9 / 0.0
Setting number	0	1	2	3	4	5	6	7	8	9
Minimum setting unit	1°C	0.1°C	1°C	0.1°C	1°C					0.1°C

The shaded value indicates the default setting status.

Multi-input (Thermocouple/Platinum Resistance Thermometer) Models

• Using Thermocouple Sensors, Control Mode Switch 5: OFF



Temperature range (selected using switch)

(Default setting: 0)

Input	K		J		L	T		U	N	R
Temperature range	1,300 / −99	199.9 / 0.0	850 / −99	199.9 / 0.0	850 / −99	400 / −99	199.9 / 0.0	400 / −99	1,300 / −99	1,700 / 0
Setting number	0	1	2	3	4	5	6	7	8	9
Minimum setting unit	1°C	0.1°C	1°C	0.1°C	1°C		0.1°C	1°C		

The shaded value indicates the default setting status.

• Using Platinum Resistance Thermometers, Control Mode Switch 5: ON



Temperature range (selected using switch)

(Default setting: 0)

Input	Pt100					JPt100				
Temperature range	850 / −99	199.9 / 0.0	99 / −99	200 / 0	400 / 0	500 / −99	199.9 / 0.0	99 / −99	200 / 0	400 / 0
Setting number	0	1	2	3	4	5	6	7	8	9
Minimum setting unit	1°C	0.1°C	1°C				0.1°C	1°C		

The shaded value indicates the default setting status.

External Connection Diagram

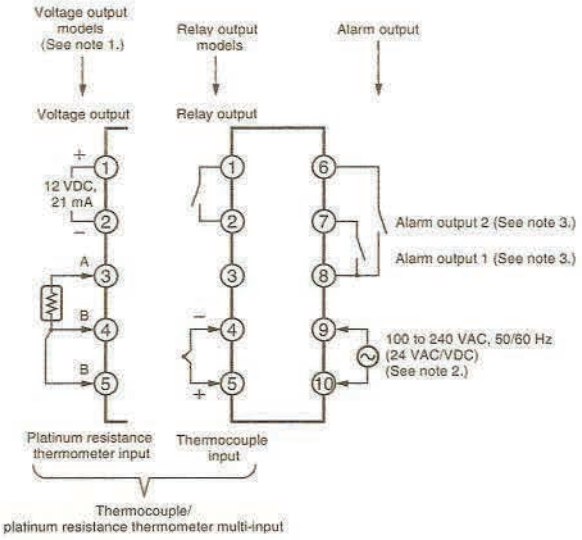

Note: 1. The voltage output (12 VDC, 21 mA) is not electrically isolated from the internal circuits. When using a grounding thermocouple, do not connect output terminals 1 or 2 to ground. Otherwise, unwanted current paths will cause measurement errors.

2. Models with 100 to 240 VAC and 24 VAC/VDC are separate. Models using 24 VDC have no polarity.

3. The number of alarm outputs depends on the model.

Nomenclature

E5CSV Models with Terminal Blocks



Operation

E5CSV

Deviation indicators

The △ indicator lights when the PV is greater than the SP and the ▽ indicator lights when the PV is less than the SP. The □ indicator (green) lights when the deviation is less than 1% FS (0.25% FS for multi-input models). These indicators flash during ST (self-tuning)/AT (auto-tuning).

Mode indicators

The SP indicator lights when the setting temperature is being displayed. The ALM indicator lights when the alarm value 1 is being displayed and flashes when the alarm value 2 is being displayed.

Mode Key

When the power is turned ON, normally the display will use the display items in the following order each time the Mode Key is pressed.

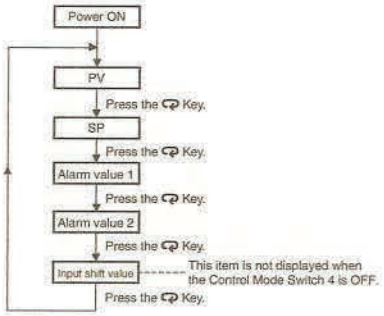



Lock Release Key

When the protect switch is ON, the set value can be changed by pressing the Up and Down Keys while holding down the Lock Release Key.

PV, SP, Alarm Value, Input Shift Display

The display switches each time the Key is pressed.

Output indicator

Lights when the control output is ON.

Alarm indicators

ALM1 (Alarm 1): Lights when the alarm 1 output is ON.
ALM2 (Alarm 2): Lights when the alarm 2 output is ON.

Up Key

Pressing the Up Key increases the SP/alarm value display. Keeping the Up Key pressed continues to increase the display value. When the internal protect switch is ON, press the Up Key while holding down the Lock Release Key.

Down Key

Pressing the Down Key decreases the SP/alarm value display. Keeping the Down Key pressed continues to decrease the display value. When the internal protect switch is ON, press the Down Key while holding down the Lock Release Key.

Settings before Turning ON the Power

E5CSV

Remove the E5CSV from the case to make the settings.

1. Insert the tool into the two tool insertion holes (one on the top and one on the bottom) and release the hooks.

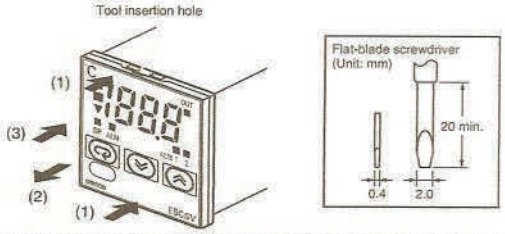

2. Insert the tool in the gap between the front panel and rear case, and pull out the front panel slightly. Grip the front panel and pull out fully. Be sure not to impose excessive force on the panel.

3. When inserting the E5CSV, check to make sure that the sealing rubber is in place and push the E5CSV toward the rear case until it snaps into position. While pushing the E5CSV into place, push down on the hooks on the top and bottom surfaces of the rear case so that the hooks are securely locked in place. Make sure that electronic components do not come into contact with the case.

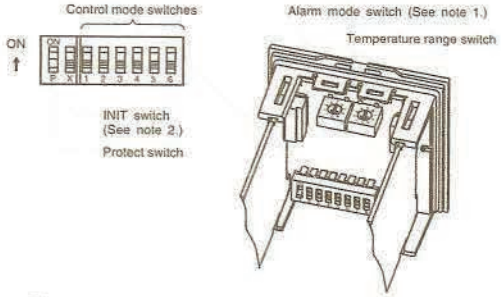

Note: 1. The alarm mode switch is not provided on models without alarms. Alarm 2 is always set to the upper limit in models with two alarms. A setting switch is not provided for alarm 2.
2. The INIT switch is always OFF during normal operation.

1. Sensor Type Specification

Select the number on the temperature range switch to change the temperature range.

Thermocouple (The default is 2.)

Input	K						J/L			
SP range	200	300	400	500	600	999	200	300	400	500
	0	0	0	0	0	0	0	0	0	0
Setting number	0	1	2	3	4	5	6	7	8	9

- The control range is -10% to +10% FS for each temperature range.

Note: The input indication range is the range that can be displayed for the control range (–99 to 1999). If the input is within the control range but exceeds the display range (–99 to 1999), values below –99 will be displayed as "ccc" and values above 1,999 will be displayed as "ddd."

Platinum Resistance Thermometer

(The default is 3.)

Input	JPt100/Pt100									
SP range	50	50.0	80	99.9	200	300	400	300	400	199.9
	–50	0.0	–20	0.0	0	0	0	0	0	0.0
Setting number	0	1	2	3	4	5	6	7	8	9

- The control range is -10% to +10% FS for each temperature range.

Note: 1. The input indication range is the range that can be displayed for the control range (–99 to 1999). If the input is within the control range but exceeds the display range (–99 to 1999), values below –99 will be displayed as "ccc" and values above 1,999 will be displayed as "ddd."
2. If the unit is changed to 1 degree when the SP and alarm value for the temperature range are displayed in 0.1-units from 0.0 to 199.9 or 0.0 to 99.9, the values will be multiplied by 10 (e.g., 0.5 becomes 5). If the unit is changed in the reverse direction, the values will be divided by 10. After changing the range, set the SP and alarm value again.
3. The temperature range for setting numbers 5 and 6 are the same as for 7 and 8, respectively.

Multi-input (Thermocouple/Platinum Resistance Thermometer) Models

- Using Thermocouple Sensors, Control Mode Switch 5: OFF

Input	K		J		L	T		U	N	R
SP range	1,300	199.9	850	199.9	850	400	199.9	400	1,300	1,700
	–99	0.0	–99	0.0	–99	–99	0.0	–99	–99	0
Setting number	0	1	2	3	4	5	6	7	8	9

- The control range is -20°C to +20°C of the input temperature range.

Note: 1. The input indication range is the range that can be displayed for the control range (–99 to 1999). If the input is within the control range but exceeds the display range (–99 to 1999), values below –99 will be displayed as "ccc" and values above 1,999 will be displayed as "ddd."
2. If unit is changed to 1 degree when the SP and alarm value for the temperature range are displayed in 0.1-units from 0.0 to 199.9 or 0.0 to 99.9, the values will be multiplied by 10 (e.g., 0.5 becomes 5). If the unit is changed in the reverse direction, the values will be divided by 10. After changing the range, set the SP and alarm value again.

- Using Platinum Resistance Thermometers, Control Mode Switch 5: ON

Input	Pt100					JPt100				
SP range	850	199.9	99	200	400	500	199.9	99	200	400
	–99	0.0	–99	0	0	–99	0.0	–99	0	0
Setting number	0	1	2	3	4	5	6	7	8	9

- The control range is -20°C to +20°C of the input temperature range.

Note: 1. The input indication range is the range that can be displayed for the control range (–99 to 1999). If the input is within the control range but exceeds the display range (–99 to 1999), values below –99 will be displayed as "ccc" and values above 1,999 will be displayed as "ddd."
2. If unit is changed to 1 degree when the SP and alarm value for the temperature range are displayed in 0.1-units from 0.0 to 199.9 or 0.0 to 99.9, the values will be multiplied by 10 (e.g., 0.5 becomes 5). If the unit is changed in the reverse direction, the values will be divided by 10. After changing the range, set the SP and alarm value again.

Mode Key Display Order

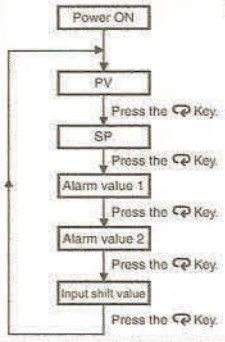

- If the SP falls outside the temperature range when the temperature range is changed, the SP will be displayed first. The SP will be changed automatically either to the minimum value or the maximum value, whichever is nearest.
- If the alarm value falls outside the temperature range when the temperature range is changed, the alarm value will be displayed first. The alarm value will be changed automatically to the maximum value in the new temperature range.

2. Operation Settings

Use the control mode switches () to change the control mode. (All switches are OFF for the default settings.)



Function selection			1	2	3	4	5	6
ON/OFF PID	PID control		ON					
	ON/OFF control		OFF					
Control period	2 s			ON				
	20 s			OFF				
Direct/ reverse operation	Direct operation (cooling)				ON			
	Reverse operation (heating)				OFF			
Input shift display	Enabled					ON		
	Disabled					OFF		
Temperature Sensor selection	Thermocouple	K, L					OFF	
		K, J					ON	
	Platinum resistance thermometer	Pt100					OFF	
		JPt100					ON	
	Multi-input (thermocouple/ platinum resistance thermometer)	Platinum resistance thermometer input					OFF	
		Thermocouple input					ON	
Temperature unit	°F							ON
	°C							OFF

Note: The previous name Pt100 has been changed to JPt100 in accordance with revisions to JIS. The previous name J-DIN has been changed to L in accordance with revisions to DIN standards.

3. Alarm Modes

Select the number of the alarm mode switch  when changing the alarm mode. (The default is 2).

Set value	Alarm type	Alarm output operation
0, 9	Alarm function OFF	OFF
1	Upper- and lower-limit	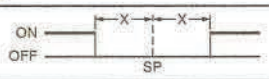
2	Upper-limit	
3	Lower-limit	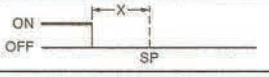
4	Upper- and lower-limit range	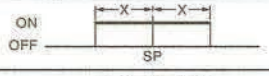
5	Upper- and lower-limit with standby sequence (See note 2.)	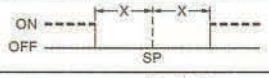
6	Upper-limit with standby sequence (See note 2.)	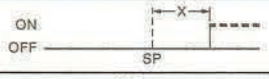
7	Lower-limit with standby sequence (See note 2.)	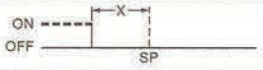
8	Absolute-value upper-limit	

Note: 1. No alarm. The alarm value (alarm operation display) will not be displayed when the setting is 0 or 9 even if the selection key is pressed.
Alarm Setting Range
X: 0 to FS (full scale); Y: Within temperature range
The value of X is the deviation setting for the SP (set point).

2. Standby Sequence Function (The standby sequence operates when the power is turned ON.)

Rising Temperature

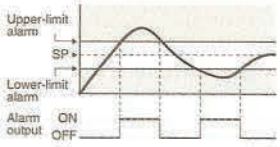

Dropping Temperature

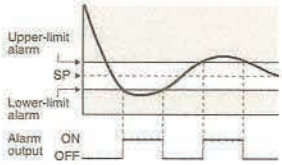

Note: Turn OFF the power before changing the DIP switch settings on the E5CSV. Each of the switch settings will be enabled after the power is turned ON.

For details on the position of the temperature range switch, control mode switches, and alarm mode switch, refer to page 6.

4. Using the Control Mode Switches

(1) Using ON/OFF Control and PID Control

ON/OFF Control

The control mode is set to ON/OFF control as the default setting.

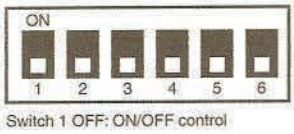

Switch 1 OFF: ON/OFF control

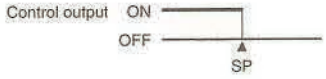

To perform cooling control of freezers, etc., turn ON switch 3.



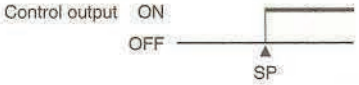

PID Control

Turn ON switch 1 to use PID control.

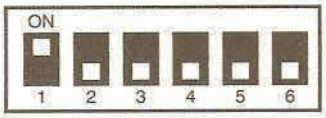

Switch 1 ON: PID control

1. Set the control period.

Performing Control via Relay Output, External Relay, or Conductor

Switch 2: OFF (control period: 20 s)



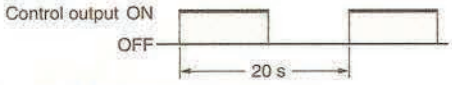

Quick Control Response Using an SSR

Switch 2: ON (control period: 2 s)



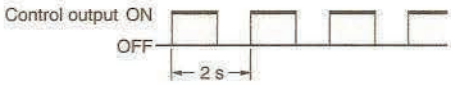

2. Set direct/reverse operation for the output.

Performing Heating Control for Heaters

Switch 3: OFF





Performing Cooling Control for Freezers

Switch 3: ON



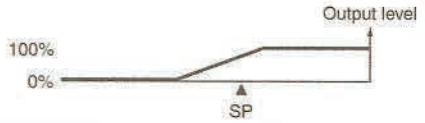

ST (Self-tuning) Features

ST (self-tuning) is a function that finds PID constants by using step response tuning (SRT) when Controller operation begins or when the set point is changed. Once the PID constants have been calculated, ST is not executed when the next control operation is started as long as the set point remains unchanged. When the ST function is in operation, be sure to turn ON the power supply of the load connected to the control output simultaneously with or before starting Controller operation.

Executing AT (Auto-tuning)

AT (auto-tuning) is executed by pressing the Up and Down Keys for at least 2 s while the PV is displayed. The deviation indicators flash during auto-tuning (AT) execution. AT will be cancelled by performing the same operation that AT is executing during AT operation. Flashing stops when AT is completed.

AT execution

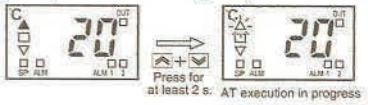

AT cancelled

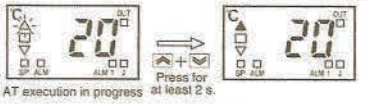

Note: One of the deviation indicators (▲■▼) will flash.

(2) Using the E5CSV in Devices for Fahrenheit-scale Users

(Displaying in °F)

Turn ON switch 6 to display temperatures in °F.

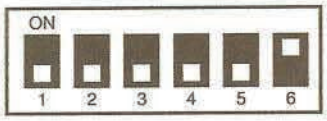

Temperature Range for °F

The temperature is set to °F using the same temperature range switch as °C.

Thermocouple

Setting	°F	
0	K	0 to 200
1		0 to 300
2		0 to 400
3		0 to 500
4		0 to 600
5		0 to 999
6	J/L	0 to 999
7		0 to 300
8		0 to 400
9		0 to 500

Platinum Resistance Thermometer

Setting	°F	
0	JPt100 or Pt100	-50 to 50
1		0.0 to 50.0
2		-20 to 80
3		0.0 to 99.9
4		0 to 200
5		0 to 300
6		0 to 400
7		0 to 600
8		0 to 800
9		0.0 to 199.9

Multi-input (Thermocouple/ Platinum Resistance Thermometer)

Control mode switch 5: OFF

Setting	°F	
0	K	-99 to 1999
1		0.0 to 199.9
2	J	-99 to 1500
3		0.0 to 199.9
4	L	-99 to 1500
5	T	-99 to 700
6		0.0 to 199.9
7	U	-99 to 700
8	N	-99 to 1999
9	R	0 to 1999

Multi-input (Thermocouple/ Platinum Resistance Thermometer)

Control mode switch 5: ON

Setting	°F	
0	Pt100	-99 to 1500
1		0.0 to 199.9
2		-99 to 99
3		0 to 200
4		0 to 400
5	JPt100	-99 to 900
6		0.0 to 199.9
7		-99 to 99
8		0 to 200
9		0 to 400

Note: The control range for a thermocouple input or platinum resistance thermometer input is -10% to +10% FS for each temperature range. The control range for multi-input (thermocouple/platinum resistance thermometer) models is -40 to +40° F of each temperature range.

Using K, L/Pt100 Thermometers

Turn ON switch 5 when using K, L/Pt100 Thermometers.

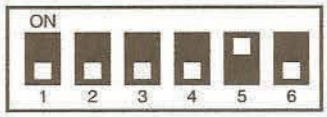

Note: The previous name J-DIN has been changed to L in accordance with revisions to DIN standards.

---

(3) Setting Input Shift

Turn ON switch 4, and after turning ON the power, press the Mode Key until *H0* (indicates input shift of 0) is displayed. Press the Up and Down Keys to set the shift value.

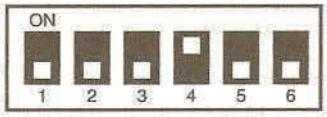

Shift Example

Input shift display	Measured temperature	Temperature display
H0 (no shift)	100°C	100°C
H9 (+9°C shift)	100°C	109°C
L9 (-9°C shift)	100°C	91°C

Note: When control mode switch 4 is turned OFF (no input shift display), the input shift is not displayed but the shift value is enabled. To disable input shift, set the input shift value to *H0*. The shift range depends on the setting unit.

Setting unit	1°C	0.1°C
Compensation range	-99 to +99°C	-9.9 to +9.9°C
Input shift display	L99 to H99	L9.9 to H9.9

5. Protect Switch

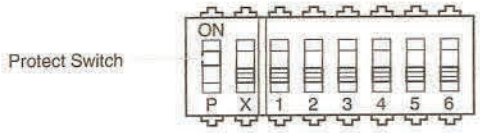

When the protect switch is ON, Up Key and Down Key operations are prohibited to prevent setting mistakes.

Installation

- All models in the E5CSV Series conform to DIN 43700 standards.
- The recommended panel thickness is 1 to 4 mm.
- Be sure to mount the E5CSV horizontally.

Mounting the E5CSV

1. For waterproof mounting, waterproof packing must be installed on the Controller. Waterproofing is not possible when group mounting several Controllers.
2. Insert the E5CSV into the mounting hole in the panel.
3. Push the adapter from the terminals up to the panel, and temporarily fasten the E5CSV.
4. Tighten the two fastening screws on the adapter. Alternately tighten the two screws little by little to maintain a balance. Tighten the screws to a torque of 0.29 to 0.39 N·m.

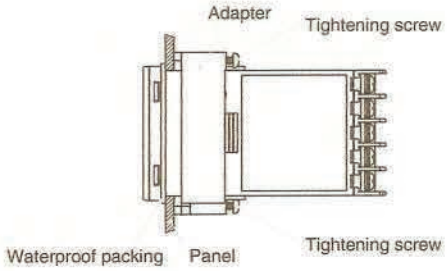

Error Displays and Causes

In addition to the alarm indicator, errors notification is provided on the display. Be sure to remove the cause of the error promptly.

Display status	Cause	Control output
PV displayed as FFF	The process value is higher than the control temperature range (overflow).	Heating control (reverse operation): OFF Cooling control (direct operation): ON
PV displayed as ---	The process value is lower than the control temperature range (underflow).	Heating control (reverse operation): ON Cooling control (direct operation): OFF
FFF flashing	(1)Thermocouple models and platinum resistance thermometer models: The process value is higher than the overflow temperature, or a Sensor error has occurred. (2)Multi-input (Thermocouple/platinum resistance thermometer) models: The process value is higher than the control temperature range or a Sensor error has occurred.	OFF
--- flashing	(1)Thermocouple and platinum resistance thermometer input: The process value is lower than the underflow temperature, or a Sensor error has occurred. (2)Thermocouples: The polarity is reversed. (3)Multi-input (Thermocouple/platinum resistance thermometer) models: The process value is lower than the control temperature range or a Sensor error has occurred.	OFF
E11 is displayed	A memory error (E11) has occurred. Turn the power ON again. If the display remains the same, the Controller must be repaired.	The control outputs and alarm outputs turn OFF.

Note: In models with an alarm, FFF appears or flashes on the display to indicate that the temperature has exceeded the maximum display temperature and the output is set according to the alarm mode. In the same way, --- appears or flashes on the display to indicate that the temperature has exceeded the minimum display temperature and the output is set according to the alarm mode.

Sensor Error Displays and Causes

■ Thermocouple

Status		Display	Control output
Burnout	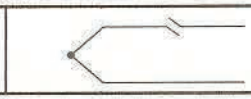	FFF flashing	OFF

Note: The room temperature is displayed if an input short-circuit occurs.

■ Platinum Resistance Thermometer

Status		Display	Control output
Burnout	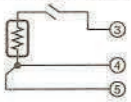	FFF flashing	OFF
	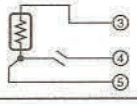	--- flashing	OFF
	2 or 3 wires disconnected	FFF flashing	OFF
Short-circuit	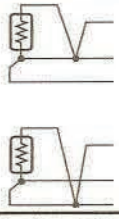	--- flashing	OFF

Note: The resistance value for platinum resistance thermometers is 100 Ω at 0°C and 140 Ω at 100°C.

Comparison with E5CS-X

■ Model Number Legend

Previous model

E5CS-□□□X
1 2 3

	Classification	Symbol	Meaning
1	Control output	R	Relay: SPDT (single-pole, double-throw)
		Q	Voltage
2	Alarm output	Blank	No alarms
		1	One alarm
3	Input type	KJ	Thermocouple (K, J)
		P	Platinum resistance thermometer (Pt100, JPt100)
	Terminal appearance	X	Model with terminal block

Main Differences

Terminal block models use the model number E5CSV.
The suffix "D" is added to models with a supply voltage of 24 VAC/VDC.
The suffix "W" is added to models with a light gray case color.

E5CSV

E5CSV-□□□□-□
1 2 3 4 5

	Classification	Symbol	Meaning
1	Control output	R	Relay: SPST-NO (single-pole, single-throw, normally open)
		Q	Voltage
2	Alarm output	Blank	No alarms
		1	One alarm
		2	Two alarms
3	Input type	T	Multi-input (thermocouple/platinum resistance thermometer) models
		KJ	Thermocouple (K, J)
		P	Platinum resistance thermometer (Pt100, JPt100)
4	Supply specifications	Blank	100 to 240 VAC
		D	24 VAC/VDC
5	Case color	Blank	Black
		W	Light gray
		F	Scale marked in F° (Black case only)

■ Display

Previous model

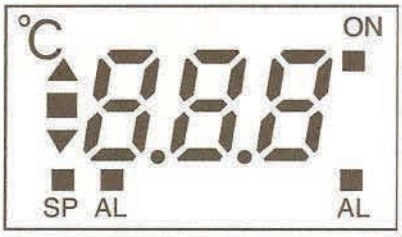

E5CSV

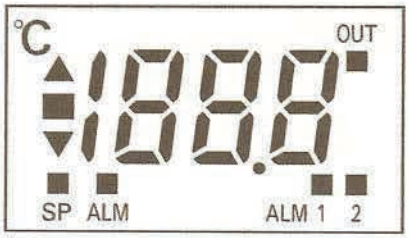

The display digits can be increased up to 1,999.
The ALM2 display has been added.
The display "ON" has changed to "OUT" and "AL" has changed to "ALM."

■ Functions

The control outputs for relay outputs have been changed from SPDT (single-pole, double-throw) to SPST-NO (single-pole, single-throw, normally open) contacts.
The control method has been changed to 2-PID control.
An auto-tuning (AT) function has been added.
The deviation display flashes during self-tuning (ST) and auto-tuning (AT).
The control calculation period has been improved from 2 s to 0.5 s.

■ External Dimensions

The depth has been shortened from 100 mm to 76 mm.

Comparison with E5CS-X

■ Model Number Legend

Previous model

E5CS-□□□X
1 2 3

	Classification	Symbol	Meaning
1	Control output	R Q	Relay: SPDT (single-pole, double-throw) Voltage
2	Alarm output	Blank 1	No alarms One alarm
3	Input type	KJ P	Thermocouple (K, J) Platinum resistance thermometer (Pt100, JPt100)
	Terminal appearance	X	Model with terminal block

Main Differences

Terminal block models use the model number E5CSV.
The suffix "D" is added to models with a supply voltage of 24 VAC/VDC.
The suffix "W" is added to models with a light gray case color.

E5CSV

E5CSV-□□□□-□
1 2 3 4 5

	Classification	Symbol	Meaning
1	Control output	R Q	Relay: SPST-NO (single-pole, single-throw, normally open) Voltage
2	Alarm output	Blank 1 2	No alarms One alarm Two alarms
3	Input type	T KJ P	Multi-input (thermocouple/platinum resistance thermometer) models Thermocouple (K, J) Platinum resistance thermometer (Pt100, JPt100)
4	Supply specifications	Blank D	100 to 240 VAC 24 VAC/VDC
5	Case color	Blank W F	Black Light gray Scale marked in F° (Black case only)

■ Terminal Arrangement

• The terminal arrangement has changed from a horizontal to vertical configuration.

Previous model	E5CSV
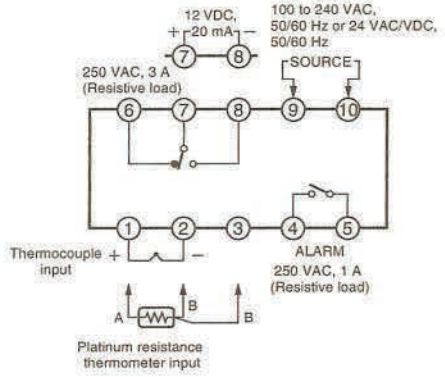	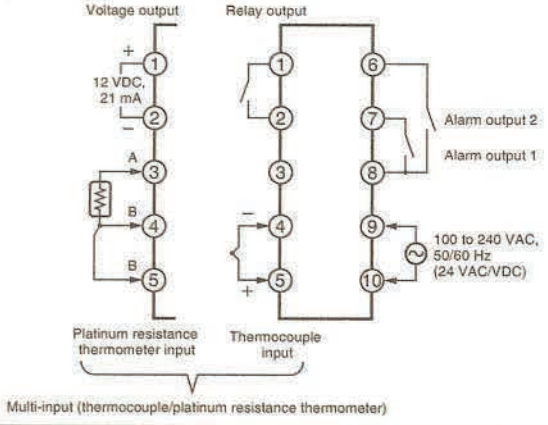

■ DIP Switch and Rotary Switch Setting Methods

No change from previous models.

Dimensions

Note: All units are in millimeters unless otherwise indicated.

■ Controller

E5CSV



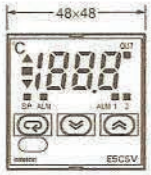

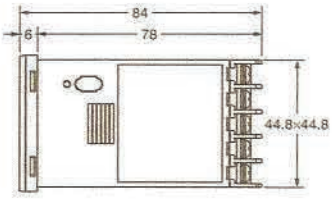

Note: Terminals cannot be removed.

Panel Cutout Dimensions

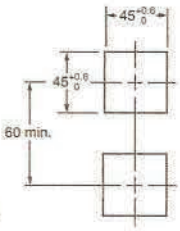

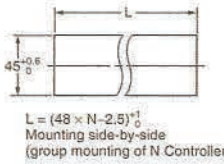

L = (48 × N−2.5) +1 0
Mounting side-by-side
(group mounting of N Controllers)

E5CSV + Adapter for Flush Mounting (Provided)

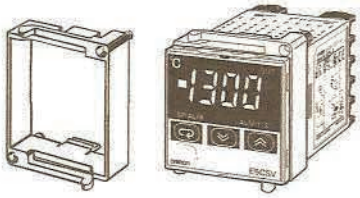

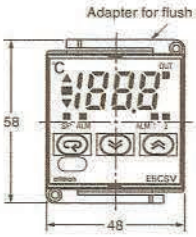

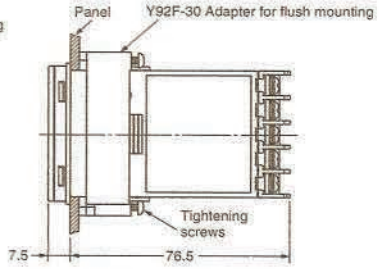

Note: 1. The recommended panel thickness is 1 to 4 mm.
2. Group mounting is possible in one direction only.

Hard Protective Cover

The Y92A-48B Protective Cover (hard type) is available for the following applications.

- To protect the set from dust and dirt.
- To prevent the panel from being accidentally touched causing displacement of set values.
- To provide effective protection against water droplets.



Terminal Cover

E53-COV10

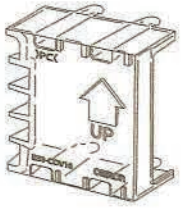

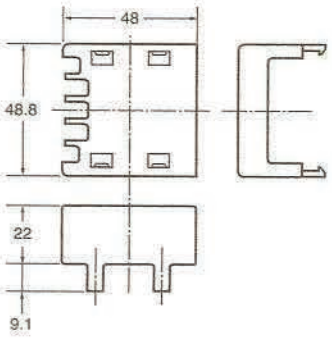

Precautions

⚠ Caution

Do not touch the terminals while power is being supplied. Doing so may occasionally result in minor injury due to electric shock.



Do not allow pieces of metal, wire clippings, or fine metallic shavings or filings from installation to enter the product. Doing so may occasionally result in electric shock, fire, or malfunction.



Do not use the product where subject to flammable or explosive gas. Otherwise, minor injury from explosion may occasionally occur.



Never disassemble, modify, or repair the product or touch any of the internal parts. Minor electric shock, fire, or malfunction may occasionally occur.



CAUTION - Risk of Fire and Electric Shock

a) This product is UL listed as Open Type Process Control Equipment. It must be mounted in an enclosure that does not allow fire to escape externally.

b) More than one disconnect switch may be required to de-energize the equipment before servicing the product.

c) Signal inputs are SELV, limited energy. (See note 1.)

d) Caution: To reduce the risk of fire or electric shock, do not interconnect the outputs of different Class 2 circuits. (See note 2.)



If the output relays are used past their life expectancy, contact fusing or burning may occasionally occur. Always consider the application conditions and use the output relays within their rated load and electrical life expectancy. The life expectancy of output relays varies considerably with the output load and switching conditions.



Loose screws may occasionally result in fire.
Tighten terminal screws to the specified torque of 0.74 to 0.90 N·m.



Unexpected operation may result in equipment damage or accidents if the settings are not appropriate for the controlled system. Set the Temperature Controller as follows:

- Set the parameters of the Temperature Controller so that they are appropriate for the controlled system.
- Turn the power supply to the Temperature Controller OFF before changing any switch setting. Switch settings are read only when the power supply is turned ON.
- Make sure that the INIT switch in the control mode switches is turned OFF before operating the Temperature Controller.



A malfunction in the Temperature Controller may occasionally make control operations impossible or prevent alarm outputs, resulting in property damage. To maintain safety in the event of malfunction of the Temperature Controller, take appropriate safety measures, such as installing a monitoring device on a separate line.



Faulty terminal contact or decreased waterproofing capability may result in a fire or equipment malfunction. When inserting the Temperature Controller into the rear case after setting the switches, check the watertight packing and make sure that the top and bottom hooks are locked securely in place.



Note: 1. A SELV circuit is one separated from the power supply with double insulation or reinforced insulation, that does not exceed 30 V r.m.s. and 42.4 V peak or 60 VDC.

2. A class 2 power supply is one tested and certified by UL as having the current and voltage of the secondary output restricted to specific levels.

■ Precautions for Safe Use

Be sure to observe the following precautions to prevent operation failure, malfunction, or adverse affects on the performance and functions of the product. Not doing so may occasionally result in unexpected events.

1. The product is designed for indoor use only. Do not use the product outdoors or in any of the following locations.
   - Places directly subject to heat radiated from heating equipment.
   - Places subject to splashing liquid or oil atmosphere.
   - Places subject to direct sunlight.
   - Places subject to dust or corrosive gas (in particular, sulfide gas and ammonia gas).
   - Places subject to intense temperature change.
   - Places subject to icing and condensation.
   - Places subject to vibration and large shocks.
2. Use and store the product within the rated temperature and humidity ranges.
   Group-mounting two or more Temperature Controllers, or mounting Temperature Controllers above each other may cause heat to build up inside the Temperature Controllers, which will shorten their service life. In such a case, use forced cooling by fans or other means of air ventilation to cool down the Temperature Controllers.
3. To allow heat to escape, do not block the area around the product. Do not block the ventilation holes on the product.
4. Use the specified size (M3.5, width of 7.2 mm or less) crimped terminals for wiring. To connect bare wires to the terminal block, use copper braided or solid wires with a gage of AWG24 to AWG18 (equal to a cross-sectional area of 0.205 to 0.832 mm^2). (The stripping length is 5 to 6 mm.) Up to two wires of the same size and type, or two crimp terminals can be inserted into a single terminal.
5. Be sure to wire properly with correct polarity of terminals. Do not wire any of the I/O terminals incorrectly.
6. Do not wire the terminals that are not used.
7. The voltage output (control output) is not electrically isolated from the internal circuits. When using a grounded temperature sensor, do not connect any of the control output terminals to ground. Otherwise unwanted current paths will cause measurement errors.
8. To avoid inductive noise, keep the wiring for the Temperature Controller's terminal block away from power cables carrying high voltages or large currents. Also, do not wire power lines together with or parallel to Temperature Controller wiring. Using shielded cables and using separate conduits or ducts is recommended.
   Attach a surge suppressor or noise filter to peripheral devices that generate noise (in particular, motors, transformers, solenoids, magnetic coils or other equipment that have an inductance component).
   When a noise filter is used at the power supply, first check the voltage or current, and attach the noise filter as close as possible to the temperature controller.
   Allow as much space as possible between the Temperature Controller and devices that generate powerful high frequencies (high-frequency welders, high-frequency sewing machines, etc.) or surge.

9. Use the product within the rated load and power supply.
10. Use a switch, relay, or other contact so that the power supply voltage reaches the rated voltage within 2 seconds. If the applied voltage is increased gradually, the power supply may not be reset or malfunctions may occur.
11. When using PID operation (self-tuning), turn ON the power supply to the load (e.g., heater) at the same time or before turning the power supply to the Temperature Controller ON. If power is turned ON for the Temperature Controller before turning ON power supply to the load, self-tuning will not be performed properly and optimum control will not be achieved.
12. Design the system (e.g., control panel) to allow for the 2 seconds of delay required for the Temperature Controller's output to stabilize after the power is turned ON.
13. A switch or circuit breaker should be provided close to this unit. The switch or circuit breaker should be within easy reach of the operator, and must be marked as a disconnecting means for this unit.
14. Approximately 30 minutes is required for the correct temperature to be displayed after turning the power supply to the Temperature Controller ON. Turn the power supply ON at least 30 minutes prior to starting control operations.
15. Be sure that the platinum resistance thermometer type and the input type set on the Temperature Controller are the same.
16. When extending the thermocouple lead wires, always use compensating conductors suitable for the type of thermocouple. Do not extend the lead wires on a platinum resistance thermometer. Use only low-resistance wire (5 Ω max. per line) for lead wires and make sure that the resistance is the same for all three wires.
17. When drawing out the Temperature Controller from the case, do not apply force that would deform or alter the Temperature Controller.
18. When drawing out the Temperature Controller from the case to replace the Temperature Controller, check the status of the terminals. If corroded terminals are used, contact faults with the terminals may cause the temperature inside the Temperature Controller to increase, possibly resulting in fire. If the terminals are corroded, replace the rear case as well.
19. When drawing out the Temperature Controller from the case, turn the power supply OFF first, and absolutely do not touch the terminals or electronic components or apply shock to them. When inserting the Temperature Controller, do not allow the electronic components to come into contact with the case.
20. Static electricity may damage internal components. Always touch grounded metal to discharge any static electricity before handling the Temperature Controller. When drawing out the Temperature Controller from the case, do not touch the electronic components or patterns on the board with your hand. Hold the Temperature Controller by the edge of the front panel when handling it.
21. Do not use paint thinner or similar chemical to clean with. Use standard grade alcohol.
22. Use tools when separating parts for disposal. Contact with the sharp internal parts may cause injury.

■ Precautions for Correct Use

Service Life

Use the Temperature Controller within the following temperature and humidity ranges:

Temperature: -10 to 55°C (with no icing or condensation)
Humidity: 25% to 85%

If the Controller is installed inside a control board, the ambient temperature must be kept to under 55°C, including the temperature around the Controller.

The service life of electronic devices like Temperature Controllers is determined not only by the number of times the relay is switched but also by the service life of internal electronic components. Component service life is affected by the ambient temperature: the higher the temperature, the shorter the service life and, the lower the temperature, the longer the service life. Therefore, the service life can be extended by lowering the temperature of the Temperature Controller.

When two or more Temperature Controllers are mounted horizontally close to each other or vertically next to one another, the internal temperature will increase due to heat radiated by the Temperature Controllers and the service life will decrease. In such a case, use forced cooling by fans or other means of air ventilation to cool down the Temperature Controllers. When providing forced cooling, however, be careful not to cool down the terminals sections alone to avoid measurement errors.

Measurement Accuracy

When extending or connecting the thermocouple lead wire, be sure to use compensating wires that match the thermocouple type. Do not extend the lead wire of the platinum resistance thermometer. If the lead wire of the platinum resistance thermometer must be extended, be sure to use wires that have low resistance and keep the resistance of the three lead wires the same.

Mount the Temperature Controller so that it is horizontally level.

If the measurement accuracy is low, check whether the input shift has been set correctly.

Waterproofing

The degree of protection is as shown below. Sections without any specification on their degree of protection or those with IP□0 are not waterproof.

Front panel: IP66, rear case: IP20, terminals: IP00

of use. Buyer shall be solely responsible for determining appropriateness of the particular Product with respect to Buyer's application, product or system. Buyer shall take application responsibility in all cases but the following is a non-exhaustive list of applications for which particular attention must be given:
(i) Outdoor use, uses involving potential chemical contamination or electrical interference, or conditions or uses not described in this document.
(ii) Use in consumer products or any use in significant quantities.
(iii) Energy control systems, combustion systems, railroad systems, aviation systems, medical equipment, amusement machines, vehicles, safety equipment, and installations subject to separate industry or government regulations.
(iv) Systems, machines and equipment that could present a risk to life or property. Please know and observe all prohibitions of use applicable to this Product.
NEVER USE THE PRODUCT FOR AN APPLICATION INVOLVING SERIOUS RISK TO LIFE OR PROPERTY OR IN LARGE QUANTITIES WITHOUT ENSURING THAT THE SYSTEM AS A WHOLE HAS BEEN DESIGNED TO

ity and does not constitute a warranty. It may represent the result of Omron's test conditions, and the user must correlate it to actual application requirements. Actual performance is subject to the Omron's Warranty and Limitations of Liability.

4. Change in Specifications. Product specifications and accessories may be changed at any time based on improvements and other reasons. It is our practice to change part numbers when published ratings or features are changed, or when significant construction changes are made. However, some specifications of the Product may be changed without any notice. When in doubt, special part numbers may be assigned to fix or establish key specifications for your application. Please consult with your Omron's representative at any time to confirm actual specifications of purchased Product.
5. Errors and Omissions. Information presented by Omron Companies has been checked and is believed to be accurate; however, no responsibility is assumed for clerical, typographical or proofreading errors or omissions.

PUMP TECHNICAL SPECIFICATIONS

BFP FEED PUMPS P02-630, P02-640
NM045BY01L07V

NETZSCH Canada, Inc. 500 Welham Road, Barrie, On., L4N 8Z7
Ph: 705-797-8426 Fax: 705-797-8427 Toll Free: 1-866-683-7867

Pump Quotation - Technical

NEMO® pump with drive & baseplate: NM045BY01L07V

The physical characteristics of the pumped product, application details, as well as the General Operating Conditions detailed in our offer have been taken from your inquiry or where not specified have been assumed by us. In the event of an order we would ask you to check any assumptions and all details as they will become contractually binding along with the selection of pump model, Drive, all specifications, and materials of construction, based on these details.

Product:			TWAS
Composition			Flowable
Specific gravity	Assumed	kg/dm³	1.05
Particle size/Solid size	Allowed	mm	15/61
pH value	Approx.		NA
Solids content (w/w)	Approx.	% TS	1-5
Dynamic viscosity	Assumed	CP	30000-63000
Vapour pressure		PSI	No advice

Application details:		***Content***	***normal***	***maximum***
Flow rate (Q)	approx.	M³/hr	7.2	10.8
Differential pressure		Bar	2	2.6
Suction pressure	assumed	Barg	Flooded	flooded
Discharge pressure	Assumed	barg	2	2.6
Pump operating speed	approx.	RPM	185	245
Sliding velocity	approx.	m/s	0.7	0.9
Frequency	approx.	Hz	30	60
Power required at drive shaft	approx.	kW	0.85	1.5
Running torque	approx.	NM	49	55
Starting torque	approx.	NM	84	84
Operating temperature	assumed	°C	10	20

Assembly specification

installation	horizontal

General operating conditions

Installation area	inside
ambient Temperature	approx. 20°C / 70 F
humidity	up to 75%
application type	Continuous operation
operating hours	24 hours/day
service voltage	3/60/575

Painting	coating system	Netzsch Standard

Operating and Maintenance Instructions

Standard documentation in accordance with the 98/37/EG Machinery Directive.
Special documentation is available on request and would be charged for.

number	1
medium	Paper
language for O&M's and spare parts list	English
dispatch method	shipped with pump

NETZSCH Canada, Inc. 500 Welham Road, Barrie, On., L4N 8Z7
Ph: 705-797-8426 Fax: 705-797-8427 Toll Free: 1-866-683-7867

Offer: N180503ST-01
Date: May 3, 2018

Customer No.:

NEMO® NM045BY01L07V Pump

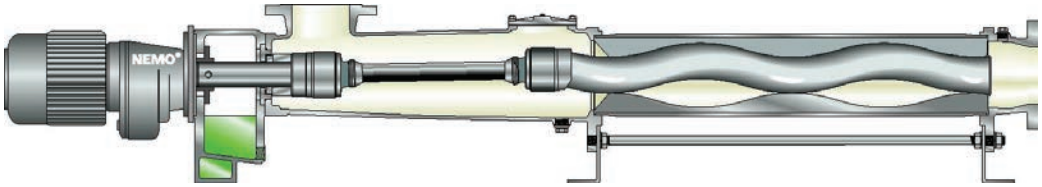

Characteristics and benefits of the NEMO® BY Block pump:

- Reliable and sophisticated construction
- Space-saving construction
- Modular construction system
- 4 different stator – rotor geometries available for most sizes
- Low investment and operating costs
- Low maintenance expenses

General characteristics	
name plate on the pump	in English (Stainless steel)
direction of rotation	to the left, counter clockwise (as viewed from drive end)

Pump Pedastal	
material	Cast iron 0.6025

Pump housing / End connection	
housing material	Cast Iron 0.6025
flange position	Pump#1:Left from DE, Pump#2: Right from DE
function of housing connection	suction connection
flange design	ANSI B16.1
nom. dia. & pressure for pump housing	3" -125#ANSI FLANGE
discharge flange design	ANSI B16.1
nom. dia. & pressure of discharge flange	3" -125#ANSI FLANGE
Function of end connection	pressure connection
housing seals	Buna

Shaft seal	
type	Single mechanical Seal
shaft seal materials	Silicon Carbide Faces – Viton Elastomers
shaft seal type	Burgmann Single MG1-G60 – Q1Q1VGG

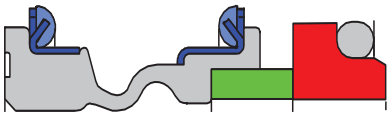

Rotating parts	
rotating parts materials	316 Stainless Steel Internals

NETZSCH Canada, Inc. 500 Welham Road, Barrie, On., L4N 8Z7
Ph: 705-797-8426 Fax: 705-797-8427 Toll Free: 1-866-683-7867

Offer: N180503ST-01
Date: May 3, 2018

Customer No.:

Joints	
joint type	pin joint
sealing type	SM Pin joint
joint sealing material	Viton/316 Stainless Steel
joint lubrication	Mineral oil

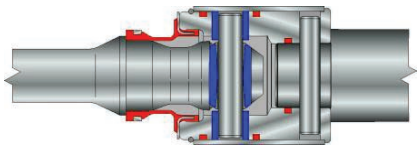

Rotor	
rotor material	SAE 4140- Hard Chrome Plated
temperature range	UM 20

Stator	
stator material	NEMOLAST® S61M Buna
accesory	STP-3 Dry Run protection Sensor

Drive

Helical gear reducer	
manufacturer	Nord
type	SK92672.1-180TC
gear ratio	7.44
speed @ 60 Hz	240
mounting position	M1
Motor	
Manufacturer	TECO Westinghouse
motor HP	5
winding voltage	575
voltage range	+/-10 %
frequency	60 Hz
number of poles	4
number of phases	3
Motor speed	1750 rpm
protection type	IP54 – TEFC, Class 1, Div.2, premium Efficiency
insulation class	F

Baseplate **Structural Steel Baseplate**

Approximate weight of Pump and Gearmotor	845 lbs

NETZSCH Canada, Inc. 500 Welham Road, Barrie, On., L4N 8Z7
Ph: 705-797-8426 Fax: 705-797-8427 Toll Free: 1-866-683-7867

Offer: N180503ST-01
Date: May 3, 2018

Customer No.:

Performance curve:

NM045--01L Förderkennlinie / Performance Curve
Statorwerkstoff / elastomer quality: standard

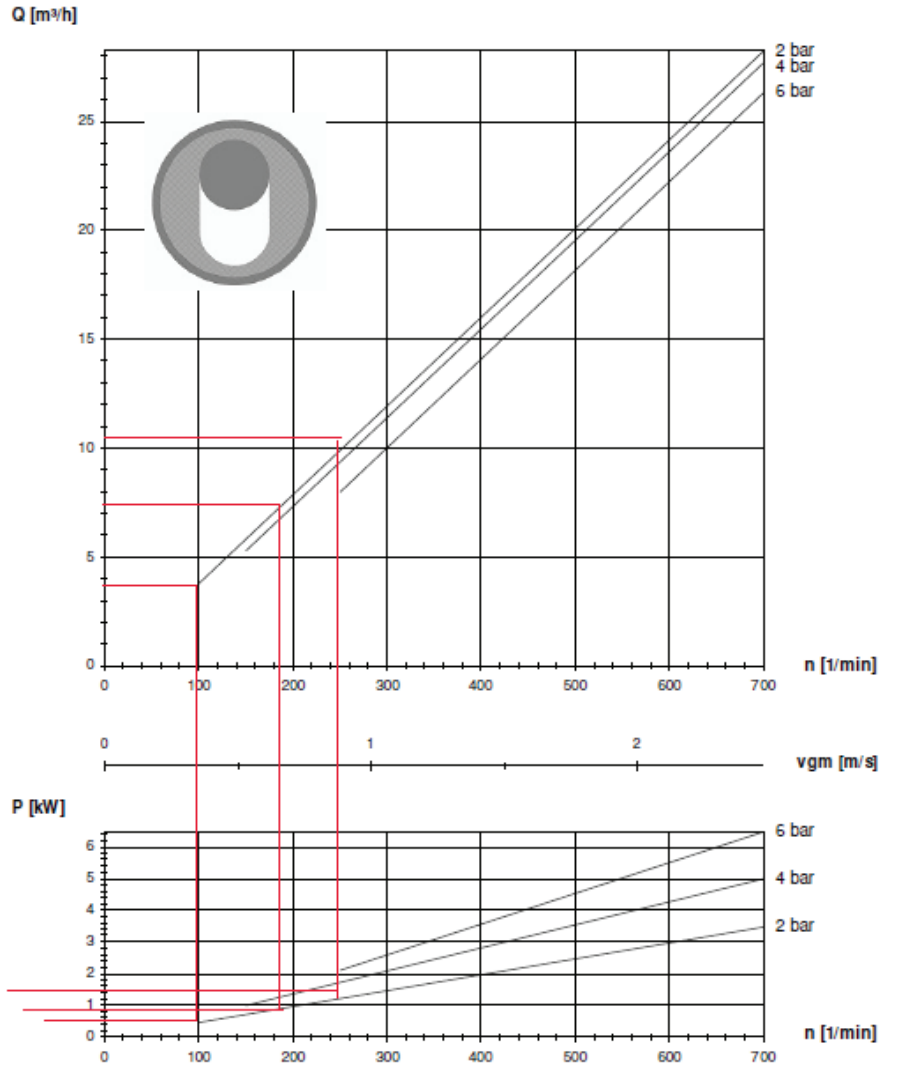

Losbrechmoment / starting torque T(L) = 84 Nm

Druck / pressure	T
2 bar	49 Nm
4 bar	71 Nm
6 bar	92 Nm

Gültigkeit für Wasser (1 cP) bei 20 °C. Toleranzen nach VDMA 24284 (+10%/-5%).
Valid for water (1 cP) at 20 °C (70 °F). Tolerances are in accordance with VDMA 24284 (+10%/-5%).

www.netzsch-pumpen.de

NETZSCH Canada, Inc. 500 Welham Road, Barrie, On., L4N 8Z7
Ph: 705-797-8426 Fax: 705-797-8427 Toll Free: 1-866-683-7867

Offer: N180503ST-01
Date: May 3, 2018

Customer No.:

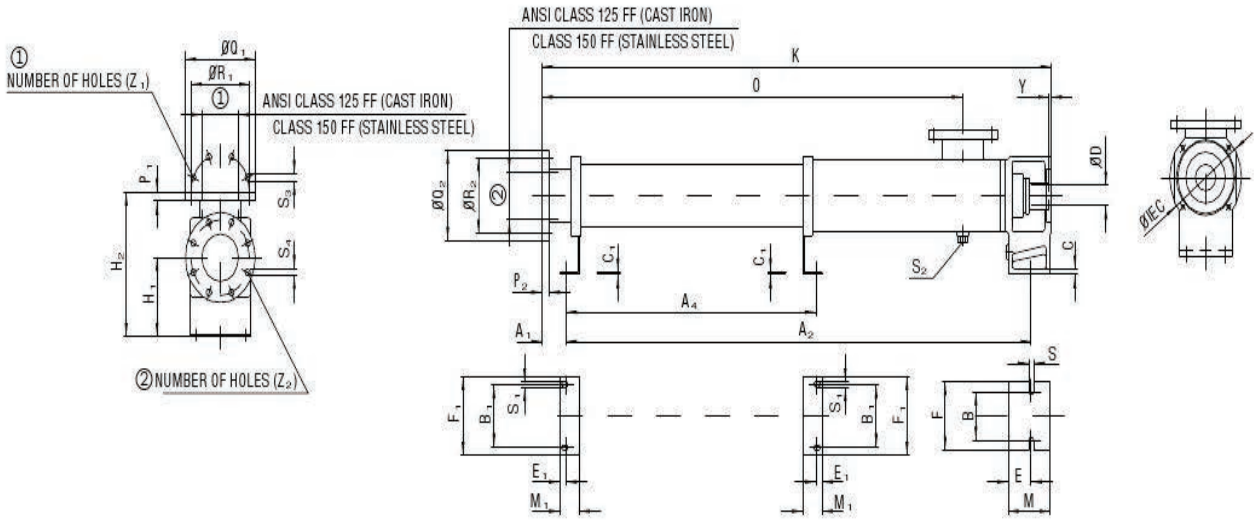

TYPE	BASIC DIMENSIONS																				ANSI	PIPE CONNECTION						SHAFT END	
	A_1	A_2	A_4	B	B_1	C	C_1	E	E_1	F	F_1	H_1	H_2	K	M	M_1	O	S	S_1	S_2	Y	① / ②	P_1 / P_2	Q_1 / Q_2	R_1 / R_2	S_3 / S_4	Z_1 / Z_2	D_{MIN} / D_{MAX}	IEC
NM045BY 02S14 / 01L07	84	1081	–	115	115	10	6	42	20	150	150	160	310	1210	85	55	971	14	11	NPT 3/4"	5	3"	19.1	190.5	152.4	19	4	24	200
																						3"	19.1	190.5	154.4	19	4	35	250
NM053BY 02S14 / 01L07	89	1303	–	115	125	10	6	50	25	150	160	170	335	1434	90	60	1159	14	13.5	NPT 3/4"	8	4"	23.9	228.6	190.5	19	8	25	200
																						3"	19.1	190.5	152.4	19	4	45	250
NM063BY 02S14 / 01L07	119	1524	–	125	145	12	6	60	25	175	180	200	400	1685	100	70	1365	18	13.5	NPT 1"	8	6"	25.4	279.4	241.3	22.2	8	30	250
																						4"	23.9	228.6	190.5	19	8	55	300
NM076BY 02S14 / 01L07	129	1709	–	125	195	15	6	90	25	175	230	225	435	1926	176	70	1558	18	13.5	NPT 1"	8	6"	25.4	279.4	241.3	22.2	8	35	250
																						6"	25.4	279.4	241.3	22.2	8	55	300
NM090BY 02S14 / 01L07	122	1995	–	160	200	18	8	95	25	210	250	250	470	2197	173	80	1837	18	17.5	NPT 1"	10	6"	25.4	279.4	241.3	22.2	8	40	250
																						6"	25.4	279.4	241.3	22.2	8	65	300
NM105BY 02S14 / 01L07	133	2421	1265	200	220	18	8	100	25	250	270	280	535	2649	193	80	2244	18	17.5	NPT 1"	10	8"	28.4	342.9	298.4	22.2	8	55	300
																						6"	25.4	279.4	241.3	22.2	8	80	350
																													400

All dimensions are in mm. All dimensions are subject to change without notice.
Flanges are ANSI to inch standards. All flanges are flat faced.
All pumps are Thru-bolt Construction. Thru-bolts not shown for clarity.
For weights, use equivalent weights for SY pumps.

NETZSCH

NEMO PUMP (WP)
RANGE NM ··· B 02S14 / 01L07

DRAWING NUMBER
NDB4908996

GENERAL ARRANGEMENT DRAWING
NM045BY01L07V

Dimension tolerances				Tolerances to flanges according ASME B16.1 E B16.5	
Measure	Tolerance	Measure	Tolerance		
>3 to 6	±0,5	>400 to 1000	±4,0		Tolerance
>6 to 30	±1,0	>1000 to 2000	±6,0	Diameter of bolt circle	+1,5
>30 to 120	±1,5	>2000 to 4000	±8,0	Diameter of bolt holes	+1,0
>120 to 400	±2,5	>4000	±20	Thickness	+3,0

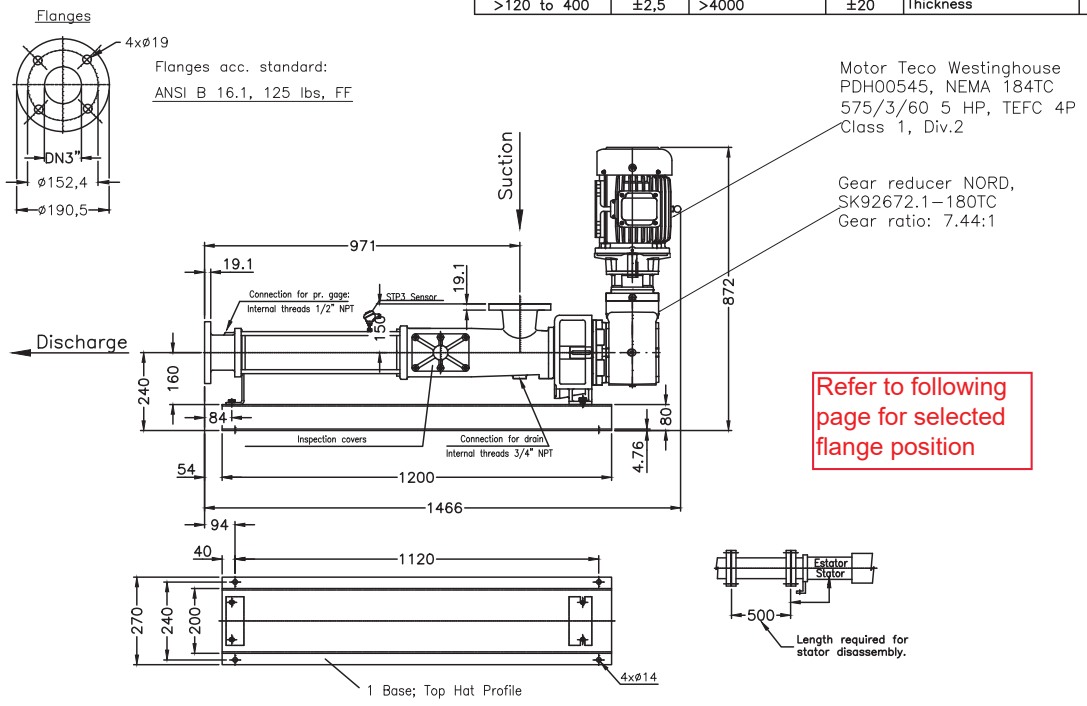

Refer to following page for selected flange position

WEIGHT: 375 lbs. approx.

NETZSCH, CANADA INC.

THIRD ANGLE PROJECTION

THIS DRAWING IS THE SOLE PROPERTY OF NETZSCH CANADA, INC. BARRIE, ONT, CANADA. ANY USE OR REPRODUCTION OF ANY PART THERE OF IS FORBIDDEN WITHOUT WRITTEN APPROVAL OF NETZSCH CANADA, INC.

NETZSCH

UNLESS OTHERWISE SPECIFIED:
DIMENSIONS ARE IN mm [Inches]
TOLERANCES: 2 PL DEC ± 0.01
3 PL DEC ± 0.005
ANGLE ± 0.5 °
REMOVE ALL BURRS
ALL CORNERS R 0.010 OR BBEAK
MIN RECEIVING INSPECTION PT

Tag #	Part #	P.O.#	REV.
DESCRIPTION: NEMO PUMP NM045BY01L07V		DRAWN BY: A.E.	DATE: Nov. 26, 2018
NTC DRAWING NO.: B045BY1-N180503ST-01	MATERIALS: CI/316/4140VCP/NBR/MG1/C.S.Baseplate		
COMMENTS: Baseplate to have drip rim, grout holes and drain		DO NOT SCALE	SHEET: 1 of 1

Tolerâncias Dimensionais/Dimensional Tolerances				Tolerâncias para Flanges cfe./Tolerances for Flanges according ASME B16.1 e B16.5	
Medida/Dimension	Tolerância/Tolerance	Medida/Dimension	Tolerância/Tolerance		Tolerância/Tolerance
>3 até/to 6	±0,6	>400 até/to 1000	±4,0		
>6 até/to 30	±1,0	>1000 até/to 2000	±6,0	Diâmetro da Furação/Drilling Diameter	±1,6
>30 até/to 120	±1,5	>2000 até/to 4000	±8,0	Diâmetro Furos/Holes Diameter	+1,0
>120 até/to 400	±2,5	>4000	±20	Espessura/Thickness	+3,0

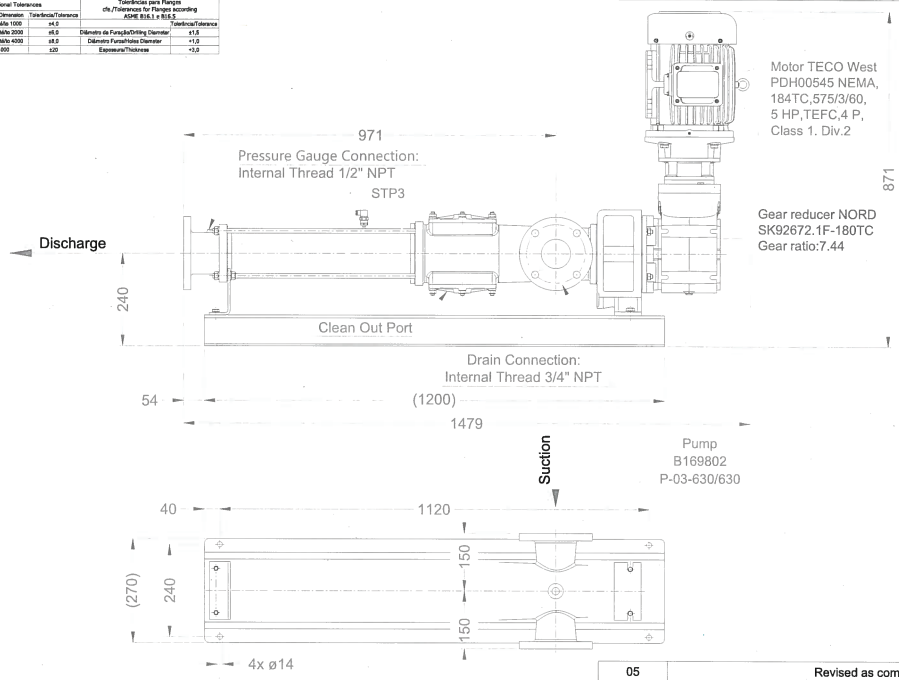

Suction Flange
Boring acc. Norm:
Asme B-16.1 / Class 125 / FF / NPS 3

Discharge Flange
Boring acc. Norm:
Asme B-16.1 / Class 125 / FF / NPS 3

VEOLIA

EXAMINÉ/EXAMINED

L'examen de ce dessin ne relève en aucune façon l'entrepreneur ou le fournisseur de sa responsabilité quant à l'exactitude de ce dessin ou à sa conformité avec les documents contractuels et les conditions de chantier. Examination of this drawing will not release in any way the Contractor or Supplier of his responsibilities as of the precision of this drawing or to its compliance with the contract documents and job site conditions.

☒ *Procéder tel quel / Proceed as is*
☐ *Procéder tel qu'amnoté / Proceed as noted*
☐ *Resoumettre / Re-submit*

Par / by: F. VINCI
Date: 2019/04/08

DRAWING FOR APPROVAL

IEC Flange: ø200
Shaft bore: ø30

Revisão/Revision	Descrição/Description	Nome/Name	Data/Date
05	Revised as comments	Knaesel	05/04/19
04	Included Baseplante	Knaesel	02/04/19
03	Revised as comments	Knaesel	27/03/19

Cliente/Customer: VEOLIA
Pedido/Order: 4210000241
Referência/Reference: L50009344

NETZSCH

Título/Title: Pump NM045BY01L07V

	Data/Date	Nome/Name
Desenhado/Designer	07/03/19	matheus.knaesel
Verificado/Checked Aprovado/Approved	07/03/19	gustavo.henrique

TAG:
Peso/Weight 170 kgf
Nr. Desenho/Drawing Nr.: 4737650
Folha/Sheet: 1/1
Escala/Scale: 1:9

Reservado todos os direitos sobre este documento técnico. All rights reserved.

A3

PUMP DATASHEET

NETZSCH	NR. CP: 0	NR. DOC: 0	
	CUSTOMER: VEOLIA		REV. 0
			SHEET
	ORDER: 4210000241		
TITLE:	NM045BY01L07V PUMP DATA SHEET		

01 / NEMO PUMP / NM045BY01L07V

CONSTRUCTIVE FEATURES		
☑ Base:	Model:	Carbon steel Standard top hat profile
☐ Bearing		
☐ By-pass:		
☐ Coupling:		
☐ Relief Valve:		
☑ Mechanical Seal:	Manufacturer / Model:	
☐ Gasket:		
☐ Shaft Sleeve:		
Transmission:	○ Direct ○ Gear ○ Belt ◉ N/A	

SUCTION NOZZLE (INTERFACE WITH THE INSTALLATION)	
Rating:	Pump#1:Horizontally right from Drive end Pump#2:Horizontally left from Drive end
Facing:	FLAT FACE
Dimension/Class:	3" -125#ANSI ANSI B16.1 FLANGE

DISCHARGE NOZZLE (INTERFACE WITH THE INSTALLATION)	
Rating:	HORZONTAL
Facing:	FLAT FACE
Dimension/Class:	3" -125#ANSI ANSI B16.1 FLANGE

MATERIALS	
Rotor:	SAE 4140 HARD CHROME PLATED TOOL STEEL
Stator:	S61M ELASTOMER-BUNA
Mechanical Seal:	AISI 316 / AISI 316 / SILICON CARBIDE
Mechanical Seal Housing:	STAINLESS STEEL 316
Casing:	CAST IRON
SM Pin Joint Seal:	"V" JOINT VITON SEALS
Drive Shaft:	STAINLESS STEEL 316
Connecting Shaft:	STAINLESS STEEL 316
Coupling Shaft:	STAINLESS STEEL 316
Base:	1020 CARBON STEEL

EQPT TAG: P-03-630/640

INSPECTION			
☐ Hydrostatic	UNWITNESSED	☐ Painting	UNWITNESSED
☑ Performance	UNWITNESSED	☐ Dimensional	UNWITNESSED
☐ Dye penetrant	UNWITNESSED	☐ Welding	UNWITNESSED

PERFORMANCE	
Pumped fluid:	**TWAS**
Concentration:	N/A
Operating Temp.:	20 C
Density:	1Kg/dm3
Viscosity:	30000-63000 cps
pH:	N/A
NPSH Available:	-
NPSH Required:	1.25 m
Absorbed Power:	0.85-1.5 kw
Nominal Flow :	7.2 m3/hr
Project Flow :	10.8 m3/hr
Discharge Pressure:	2.6 bar
Suction Pressure:	flooded
Differential Press.:	2.6 bar
Set Press. Relief Val.:	-
Pump Design Press.:	2.6 bar
Máx. Dif. Pressure.:	2.6 bar
Efficiency:	30.00%
Rotations:	185-245 rpm
Installation Condition:	◉ Indoor
	○ Outdoor
	○ Uninformed
Classified area:	○ Yes ◉ No

FLUSHING	
Fluid:	N/A
Pressure:	N/A
Flow:	N/A
Temperature:	N/A

HYDROSTATIC TEST PRESSURE	
Pump Housing:	N/A
Pressure Stud:	N/A

WEIGHTS	
Pump (kgf):	-
Base (kgf):	-
Gear (kgf):	-
Total (kgf):	384

NOTES:

3" Onyx Isolator rings with pressure gauge, pressure switch and manual reset will be provided

THE INFORMATION CONTAINED IN THIS DOCUMENT IS THE OWNERSHIP OF NETZSCH OF BRAZIL, WHICH IS PROHIBITED TO BE USED OUTSIDE OF ITS PURPOSE.

MOTOR DATA PACKAGE

Technical Documentation

PDH00545C

Optim TEFC | AEHH8N

Date: March 9, 2019

TECO Westinghouse
MOTORS (CANADA) INC.

Date: March 9, 2019

Dimensional Drawing

Catalogue	Model	HP	Pole	kW	Rating	Voltage	Hz	RPM
PDH00545C	AEHH8N	5	4	3.7	Continuous	575	60	1800

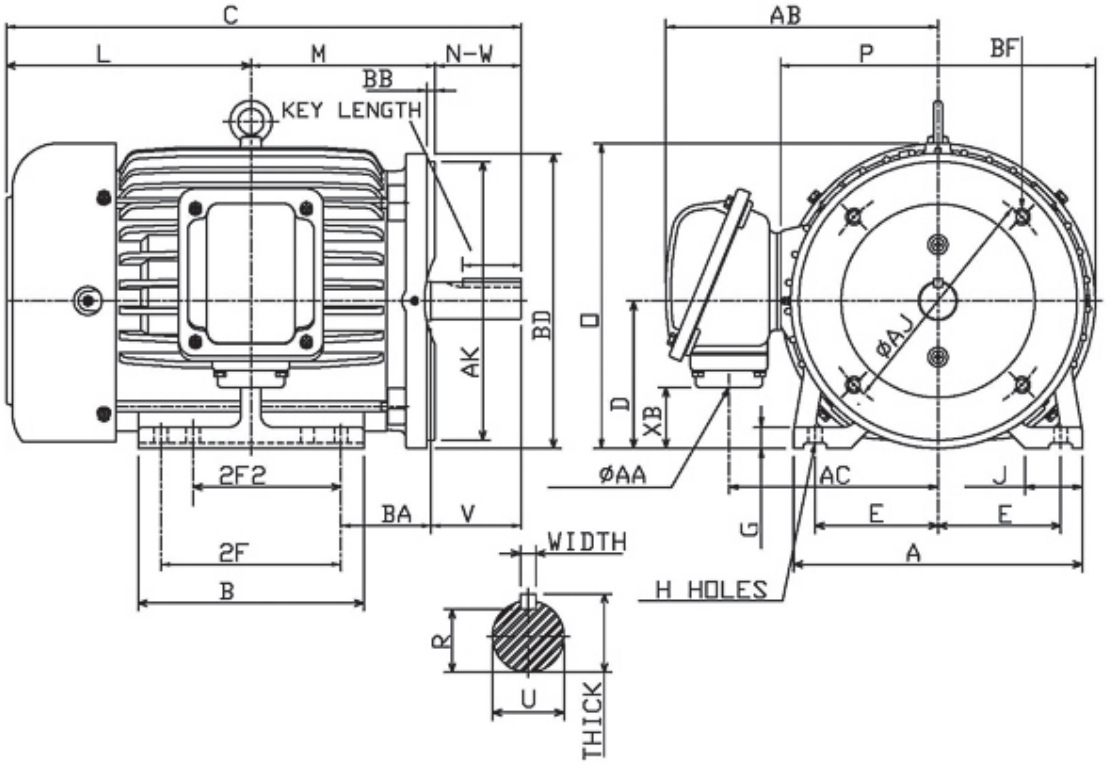

Frame Size	Mounting					A	B	C	CD	D
	E	2F	2F2	H	BA					
184TC	3.75	5.5	4.5	0.41	2.75	8.8	6.9	15.73		4.5

G	J	K	L	M	O	P	T	Key			Keyseat
								Width	Thick	Length	R
0.65	1.75		7.48	5.37	9.31	9.61	1.19	0.25	0.25	1.78	0.986

Terminal Housing				Aux Box		C/D Flange					
AA	AB	AC	XB	AE	AX	BB	AH	AK	BD	AJ	BF
3/4 NPT	8.31	6.38	1.86			0.25	2.62	8.5	9	7.25	1/2-13UNC

Shaft Extension			Bearings		Approx. Weight Lbs	SPL dBA/3ft	Ins. Class	S.F.	Drive Method	Dimensions
N-W	U	V	DE	NDE						
2.75	1.125	2.7	6306ZZ	6306ZZ	110	54	F	1.15	Direct Coupling / Belt Drive	Inches

TECO Westinghouse MOTORS (CANADA) INC.	
	Date: March 9, 2019

Technical Data Sheet

Motor Type: AEHH8N	Catalogue No: PDH00545C

Nameplate Information

HP	Pole	RPM	Frame	Voltage	Hz	Phase
5	4	1745	184TC	575	60	3
Enclosure	Ins. Class	Service Factor	Time Rating	NEMA Design	Rated Amb.	Rated Altitude
TEFC	F	1.15	Continuous	B	-40 to 40 °C	<3300 ft

Typical Performance

Efficiency (%)				Power Factor (%)		
Full Load		3/4 Load	1/2 Load	Full Load	3/4 Load	1/2 Load
Nom.	Min.					
89.5	87.5	88.5	88.5	85.5	81.5	71.5

Torque				Current (A)		
Full Load (lb-ft)	Locked Rotor (% FLT)	Pull Up (% FLT)	Break Down (% FLT)	No Load	Full Load	Locked Rotor
15.04	185	140	285	1.8	4.9	37

NEMA KVA Code	Inertia (WR^2)			Safe Stall Time (s)		Noise Level Sound Press. dB(A)
	Rotor ($lb\text{-}ft^2$)	NEMA Load ($lb\text{-}ft^2$)	Max. Allowable ($lb\text{-}ft^2$)	Cold	Hot	
J	0.422	27	88	35	25	54

VFD Duty Information

Speed Range			VFD		S.F.
Constant Torque	Variable Torque	Constant Power	Carrier	Type	
6-60Hz	3-60Hz	60-120Hz	≤ 5 kHz	VPWM or CPWM	1.0 Only

Additional Information

Bearings		Approx. Weight
DE	NDE	lbs
6306ZZ	6306ZZ	110

Hazardous Locations Information

CSA Certified	
Class I, Div 2, Groups B, C & D Class I, Zone 2, Groups IIB+H2, IIB & IIA	
Temp Code (Sinewave / VFD)	T3C / T3C

TECO Westinghouse MOTORS (CANADA) INC.	
	Date: March 9, 2019

Nameplate Drawing

Optim TEFC

TYPE	AEHH8N	CAT. NO.	PDH00545C		
OUTPUT	5 HP 3.7 kW	FRAME	184TC	TEFC	
R.P.M.	1745	POLE	4	INS.	F
VOLTS	575	PHASE	3	Hz	60
AMPS	4.9	CODE	J	S.F.	1.15
AMBIENT	40 °C	NOM. EFF. 89.5		MIN. EFF. 87.5	
BEARINGS	6306ZZ / 6306ZZ			RATING Cont.	

SER. NO.	TBD	DESIGN	B	WT. 110 LBS

PWM VFD DUTY	VT	CT	CP	S.F.
	3-60Hz	6-60Hz	60-120Hz	1.0 Only

Connection Diagram

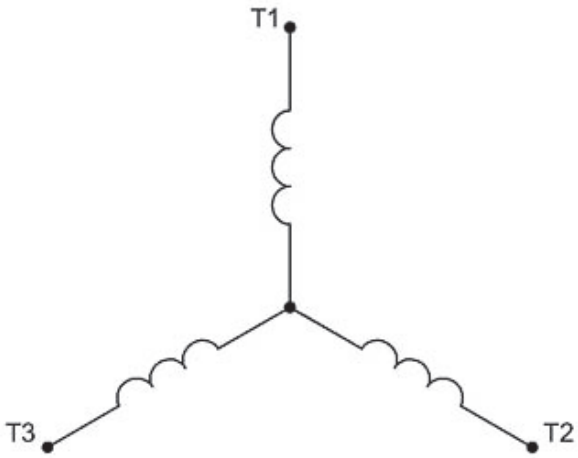

3 LEAD SINGLE VOLTAGE WYE					
VOLTAGE	CONN.	L1	L2	L3	
-	WYE	1	2	3	

WD_3Y

TECO Westinghouse MOTORS (CANADA) INC.	
	Date: March 9, 2019

Thermal Limit Curves

Motor Type: AEHH8N	Catalogue No: PDH00545C	Family: Optim TEFC

HP	5	Safe Stall Time		Full Load A	4.9 A
Voltage	575V 60Hz	Hot	25 s	% Inrush	757 %
RPM	1800	Cold	35 s	Locked Rotor A	37 A

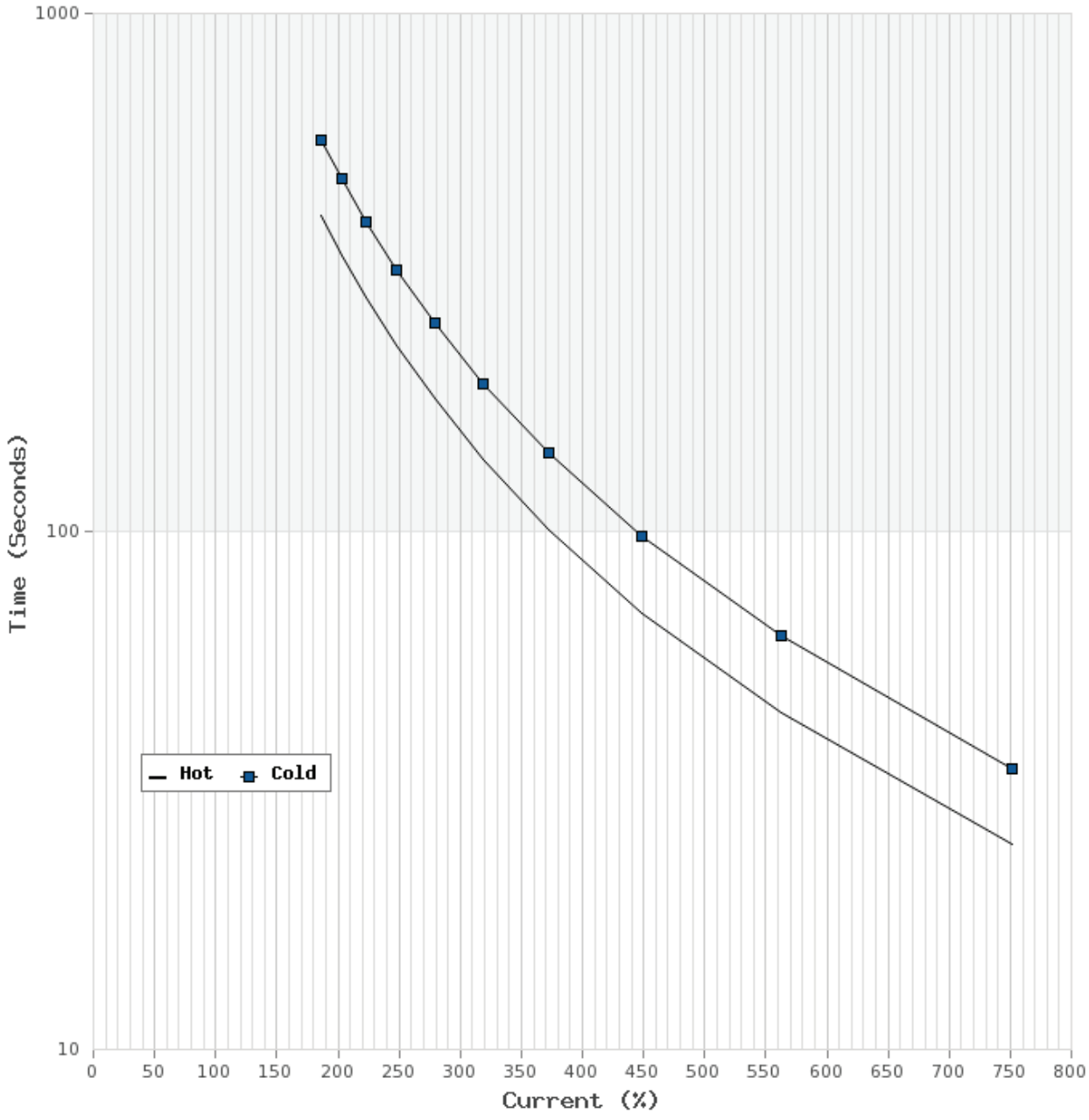

TECO Westinghouse MOTORS (CANADA) INC.	
	Date: March 9, 2019

T-N and I-N Curves

Motor Type: AEHH8N	Catalogue No: PDH00545C	Family: Optim TEFC

HP	5	Full Load T	15.04 lb-ft	Full Load A	4.9 A
Voltage	575V 60Hz	Locked Rotor T	185 %	Locked Rotor A	37.0 A
RPM	1800	Pull Up T	140 %	Break Down T	285 %

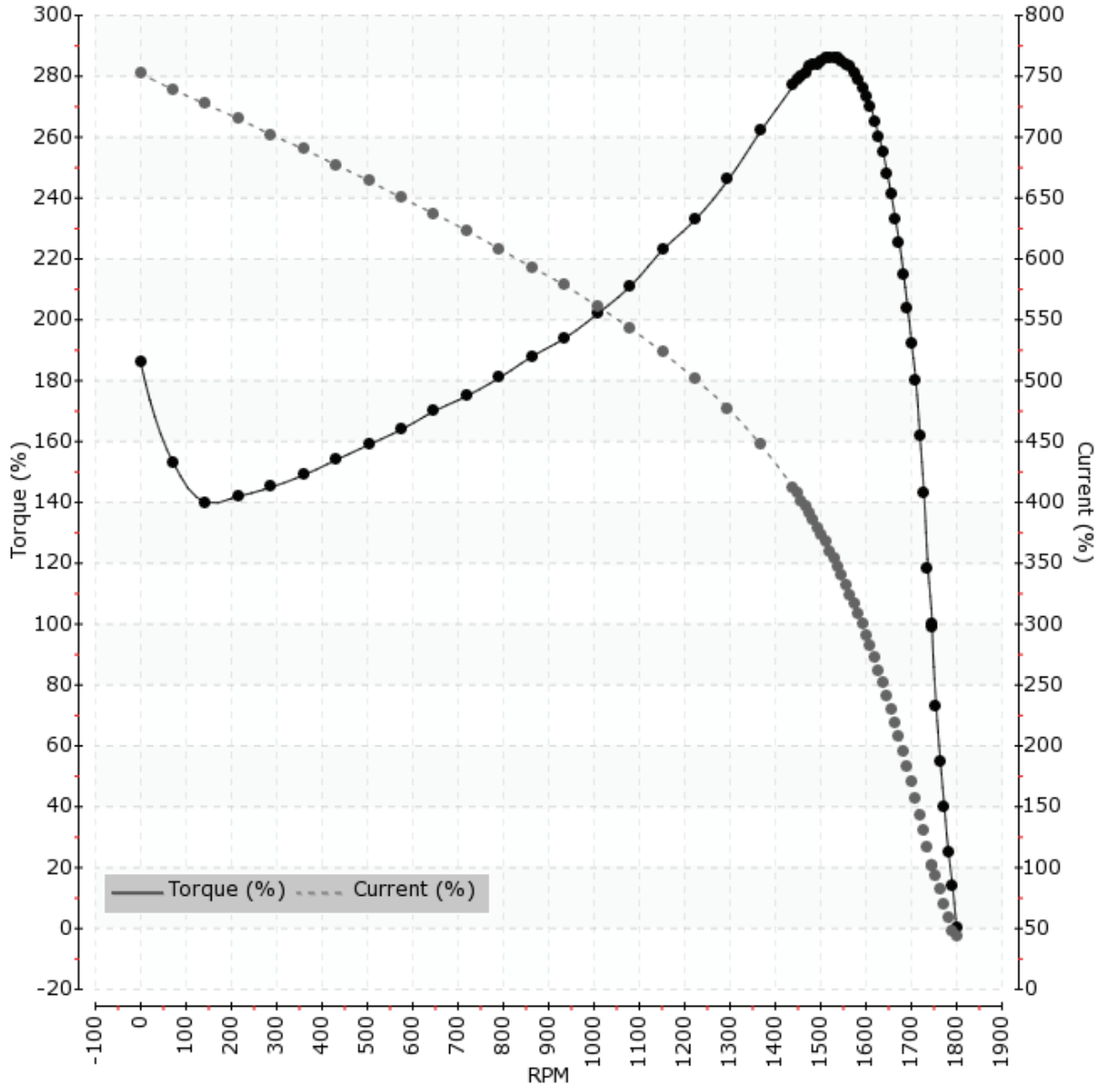

LEFT BLANK

NORD

CLINCHER SERIES, GEARMOTOR
90 SERIES RIGHT ANGLE, GEARMOTOR

LEFT BLANK

Intelligent Drivesystems



B1000

Operating & Instruction Manuals For Gear Units

B1000

NORD DRIVESYSTEMS

TABLE OF CONTENTS

TITLE	Document Number & Hyperlink
General Instructions	U10000
Safety Notes	U10020
Storage & Commissioning	U10040
Unit Installation	U10060
Solid Shaft Connections	U10250
Keyed Hollow Shaft	U10270
Fixing Kit	U10280
Hollow Shaft With Shrink Disc	U10290
GRIPMAXX™ Bushing System	U10310
Reducer Mounting Footed & Flange Mount Gear Units	U10500
Clincher Shaft Mount With Rubber Buffer	U10580
Right Angle Shaft Mount with Bottom Mount Torque Arm (K)	U10600
Helical Bevel Shaft Mount with Torque Arm (D)	U10620
Helical & Bevel Reducer Lubrication	U10750
Helical Worm Reducer Lubrication	U10770
Minicase Worm Reducer Lubrication	U10790
FLEXBLOC Worm Reducer Lubrication	U10810
Expansion Chambers	U10830
Helical & Bevel Reducer Lubrication Types	U11000
Helical Worm Reducer Lubrication Types	U11020
Minicase Worm Reducer Lubrication Types	U11040
FLEXBLOC Worm Reducer Lubrication Types	U11060
Standard In-Line Foot Oil Fill Quantities	U11500
Standard In-Line Flange Oil Fill Quantities	U11600
Helical In-Line Foot Mount Oil Fill Quantities	U11700
Helical In-Line Flange Mount Oil Fill Quantities	U11800
CLINCHER Oil Fill Quantities	U11900
Helical Bevel Foot Mount Oil Fill Quantities	U12000
Helical Bevel Flange Mount Oil Fill Quantities	U12100
92 Helical Bevel Foot Mount Oil Fill Quantities	U12200
92 Helical Bevel Flange Mount Oil Fill Quantities	U12300
Helical Worm Foot Mount Oil Fill Quantities	U12400
Helical Worm Solid Shaft/Flange Mount Oil Fill Quantities	U12500
Helical Worm Hollow Shaft Oil Fill Quantities	U12600
Nordbloc Foot Mount Oil Fill Quantities	U12700
Nordbloc Flange Mount Oil Fill Quantities	U12800
Nordbloc.1 Foot Mount Oil Fill Quantities	U12900
Nordbloc.1 Flange Mount Oil Fill Quantities	U13000
Minicase Foot Mount Oil Fill Quantities	U13100
Minicase Flange Mount Oil Fill Quantities	U13200
FLEXBLOC Oil Fill Quantities	U13300
Standard In-Line Oil & Drain Plug Locations	U14000
Helical In-Line Oil & Drain Plug Locations	U14100
CLINCHER Oil & Drain Plug Locations	U14200
92 Helical Bevel Oil & Drain Plug Locations	U14300
90.1 Helical Bevel Oil & Drain Plug Locations	U14400
Helical Worm Oil & Drain Plug Locations	U14500
Nordbloc Oil & Drain Plug Locations	U14600
Nordbloc.1 Oil & Drain Plug Locations	U14700
FLEXBLOC Oil & Drain Plug Locations	U14800
Standard In-Line Parts Lists	U15000
Helical In-Line Parts Lists	U15100
CLINCHER Parts Lists	U15200
90.1 Helical Bevel Parts Lists	U15300
92 Helical Bevel Parts Lists	U15400
Helical Worm Parts LIsts	U15500
Nordbloc Parts Lists	U15600
Troubleshooting	U19000
Terms & Conditions	Terms

NORD Gear Limited
Toll Free in Canada: 800.668.4378

NORD Gear Corporation
Toll Free in the United States: 888.314.6673

1. Importance of the operating instructions

These operating instructions are intended to provide general information and safety guidelines. It is the responsibility of the buyer, machine builder, installer and user of the NORD product to make sure that all the proper safetynotes and operating instructions have been reviewed and understood. If the contents of this instruction or any applicable operating instructions are not understood, please consult NORD.

⚠ *WARNING* ⚠

Electric motors, gearmotors, electrical brakes, variable frequency drives, and gear reducers contain potentially dangerous high-voltage, rotating-components and surfaces that may become hot during operation. All work involved in the transport, connection, commissioning and maintenance of any NORD product must be carried out by qualified and responsible technicians.

2. Inspect incoming freight

Before accepting shipment from the freight company, thoroughly inspect the NORD equipment for any shipping and handling damage. If any goods called for in the bill of lading or express receipt are damaged, or if the quantity is short, do not accept until the freight express agent makes an appropriate notation on your freight bill or express receipt. If any concealed loss or damage is discovered later, notify your freight carrier or express agent at once, and request a formal review of your claim.

Claims for loss or damage in shipment must not be deducted from the NORD invoice, nor should payment of the NORD invoice be withheld awaiting adjustment of such claims, as the carrier guarantees safe delivery. NORD will try to assist in collecting claims for loss or damage during shipment; however, this willingness on our part does not remove the transportation company's responsibility in reimbursing you for collection of claims or replacement of material.

3. Obtaining detailed operating instructions

One can receive the detailed installation and maintenance instructions by entering a serial number (or NORD order number) at the appropriate location on the NORD web site.

i. Record the serial number from your gearmotor, gear reducer, or motor nameplate, or record the serial number found on your order confirmation.

ii. Go to **www.nord.com/docs** to download the appropriate operating instructions.

EXAMPLE: www.nord.com/docs

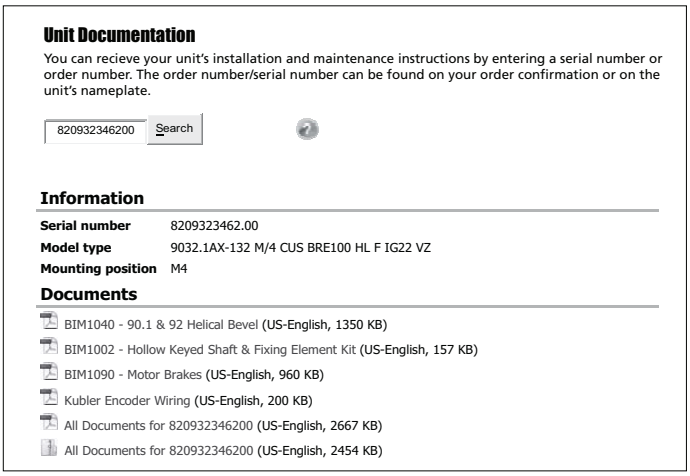

4. Intended use

NORD is a supplier of electric motors, gearmotors, reducers, electromechanical brakes, mechanical variators, and electrical variable frequency drives that are intended for commercial installations on larger systems and machines.

⚠ *WARNING* ⚠

NORD does not accept any liability for damage or injury caused by:

- Inappropriate use, operation or adaptation of the drive system.
- Unauthorized removal of housing covers, safety and inspection covers, guarding, etc.
- Unauthorized modifications to the drive system.
- Improper servicing or repair work on the drive system.
- Damage caused during shipment or transportation.
- Disregard of the important Safety Notes or Operating Instructions.

5. Notes concerning warranty and liability

All units are supplied according to the terms described in our standard "Conditions of Sale." The unit limited warranty is also defined in our "Conditions of Sale" and is located in the back of our product catalogs as well as the back of your order invoice.

All NORD Safety Notes and all related NORD Operating instructions shall be considered up-to-date at the time in which they were compiled by the buyer, machine builder, installer or user. NORD reserves the right to incorporate technical modifications and information updates to any safety/operating instructions that are within the scope of providing additional knowledge or clarification, communicating design changes, or product enhancements. Information updates may include any NORD product, or subsequent products purchased and supplied by NORD; No specific claims can be derived from the information or illustrations and descriptions contained in the safety notes or related operating instructions.

⚠ *WARNING* ⚠

NORD assumes no liability for personal injury, equipment damage or malfunctions resulting from failure to comply with any installation safety notes. The applicable national, regional, and local work regulations and safety requirements must also be complied with. Failure to comply with any safety notes or regulations may result in serious injury, damage to property, or even death.

6. Checklist for installation and operation

- ☑ Verify that the purchased NORD product has been supplied with the expected accessories & options. Check the received goods and packing slip to make sure items are properly received.
- ☑ Make sure that you have all of the required Operating Instructions for your NORD electric motor, gearmotor, reducer, electromechanical brake, mechanical variable speed drives, or electrical variable frequency drives.
- ☑ Consult NORD if you feel you are missing any documentation or if you have questions.

1. Safety & information symbols

All work including transportation, storage, installation, electrical connection, commissioning, servicing, maintenance and repair must be performed **only by qualified specialists or personnel**. It is recommended that repairs to NORD Products are carried out by the NORD Service Department. Instructions related to operational safety will be emphasized as shown.

Symbol	Meaning
⚠	**General Warning or Hazard -** Severe risk or danger of personal injury or death by working around dangerously high electrical voltage or moving machinery. Proper safety precautions must be taken.
STOP	**Possible Harmful Situation -** Care must be taken to avoid the possibility of damaging the drive unit, driven machine, or the environment.
ℹ	**Important Note -** Useful note or tip to help assure trouble-free operation.
♻	**Material Disposal Note -** Important note concerning suggested material disposal.

2. Safety warnings

⚠ GENERAL WARNINGS ⚠

- All work involved in the transport, connection, commissioning and maintenance of any NORD product must be carried out by qualified and responsible technicians. All applicable national, regional, and local work regulations and safety requirements must also be complied with. **NORD assumes no liability for personal injury, accidental death, or equipment damage and malfunctions resulting from failure to comply with installation or operating instructions, safety notes, or any work regulations and laws!**
- Gear unit installation and maintenance work may only be performed when no power is available to the prime mover or motor. Electric motors, electrical brakes, and variable frequency drives, contain potentially dangerous high-voltage. Prior to installation or maintenance, shut down the power at the circuit breaker or power switch. **While working on the drive, make sure the power from the prime mover is isolated or secured on "lock-out" to prevent accidental start-up and to safeguard against injury!**
- Surfaces of motors and gear units may become hot during operation or shortly after start-up. In some instances additional protection against accidental contact may be necessary. **Use caution to avoid burns or serious injury!**

3. Observe published performance range & nameplate data

STOP HARMFUL SITUATION STOP

Observe the data on all reducer nameplates and verify published ratings for the NORD item/s in question. Do not operate any NORD equipment outside the published performance range. Failure to comply may result in damage to the drive unit, driven machine, or the environment.

U.S. Nameplate

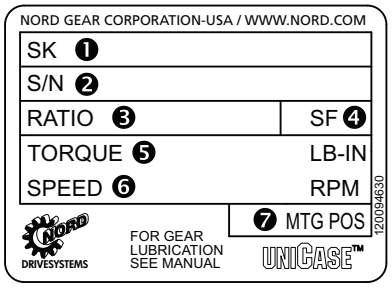

❶ Model/Type
❷ Serial Number
❸ Gear Ratio
❹ Service Factor
❺ Torque Rating
❻ Output Speed RPM
❼ Mounting Position

European Nameplate

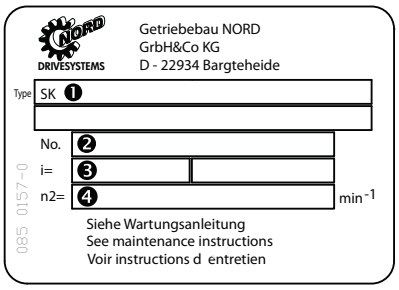

❶ Model/Type
❷ Serial Number
❸ Gear Ratio
❹ Speed

4. Transportation and handling

Make sure that all eyebolts and lifting lugs are tight and lift only at designed points. Protect the mounting surface from possible damage during transportation.

⚠ WARNING ⚠

Do not attach other machinery or loads to the NORD assembly, since the supplied lifting bolts are not designed for this purpose.

If the gearmotor or assembly is equipped with two suspension eye bolts, then both locations should be used for transportation and placement of the unit; in this case the tension force of the slings must not exceed a 45° angle.

In some instances it may be appropriate to use additional lifting straps or slings in order to assure safe transportation of the assembly. Always use sufficiently rated handling equipment and ensure that adequate safety measures are taken to protect personnel from injury during transportation. Once the NORD assembly is properly installed, remove the transportation fixtures.

7. DISPOSAL

MATERIAL DISPOSAL

Properly dispose of all used gear units and internal parts in accordance with all local regulations. In particular, all lubricants must be properly collected and disposed.

For confirmation of specific materials used in a specific reducer or gearmotor assembly, please consult NORD with the appropriate unit identification or serial number.

Components	Material
Gear wheels, shafts, rolling bearings, parallel keys, snap rings, spacers, shims, etc.	Steel
Gear housing and housing components	Cast iron or Aluminum (depending on type and size)
Worm gears	Bronze alloy
Radial seals, sealing caps, and rubber components	Elastomers with some steel
Coupling components	Plastic or Elastomer with Steel
Housing gaskets and flat oil seals	Asbestos-free sealing or gasket material (various types used)
Gear Oil	Mineral, SHC-Synthetic or PG-Synthetic (can vary)

STORAGE & COMMISSIONING

1. Storage

IMPORTANT NOTE

For storage periods longer than 9 months, or for storage in less than desirable conditions, please consult NORD for recommendations.

Storage for up to 9 months is possible, so long as the following conditions are observed:

- Store the gear unit in its actual mounting position in accordance with the specified oil fill-level, in a clean and dry temperature controlled area. Avoid temperature fluctuations within the range of 0°C and 40°C (32°F to 104°F) and avoid relative humidity conditions in excess of 60%.
- Protect all exposed or unpainted shaft and flange surfaces with an anti-corrosion agent (such as CRC® SP400™ Corrosion Inhibitor).
- Store in a location free from shock and vibration, to avoid false brinelling of bearing elements and raceways.
- Whenever possible, rotate the shafts periodically, by hand if necessary, to help prevent brinelling (bearing damage) and to help keep the shaft seals pliable.
- Avoid direct exposure to the sun or UV light and aggressive or corrosive materials in the environment (ozone, gases, solvents, acids, caustic solutions, salts, radioactivity, etc.

2. Commissioning

Prior to gear unit start-up, complete the following:

- Check the lubricant and be sure the gear unit is filled with the proper oil type, to the proper level, as determined by the mounting position.
- Check the condition of all shaft seals and all assembled flange gasket areas. If any change is detected in the shape, color, hardness or permeability, or if any leaks are detected, the corresponding shaft seals and/or gaskets must be replaced.
- Remove all anti-corrosive metal protectant from otherwise bare metal surfaces. Follow product manufacturers directions and warnings during surface protection removal.
- Check the resistance of all motor and brake windings to verify the integrity of the winding insulation and inspect all terminal box openings and wire connection areas to verify that all components are dry and free of corrosion.

• *CRC® and SP400™ are trademarks of CRC Industries.*

UNIT INSTALLATION

1. Installation site

Drives must be properly installed if they are to produce the rated torque. Improper installation may lead to oil leaks, reduced life, or even catastrophic failure. NORD gear drives and motors are intended to be installed at a suitable mounting site under the following conditions:

- Unimpeded airflow to and around the units.
- Accessibility to oil drain, level and breather plugs.
- On brakemotors, allow adequate space for removing the fan guard and replacing and adjusting the brake.
- Mounting surfaces must be flat, torsionally rigid, and dampened against vibration.
- Unless special measures are taken, the immediate vicinity around the gear drive or motor should not be exposed to any aggressive or corrosive substances, contaminated air, ozone, gases, solvents, acids, alkalis, salts, radioactivity, etc.

2. Mounting position

Reducer mounting position charts illustrate the standard mounting positions for horizontal and vertical mounting. All gear units are assembled with the oil fill-level, oil-drain and vent plugs installed in their proper locations, **according to the customer-specified mounting position**. For mounting orientations other than shown consult NORD Gear.

HARMFUL SITUATION

The gear reducer may not receive proper lubrication if the unit is not mounted in the position for which it is designed. Observe the mounting position designated on the reducer nameplate, or specified in the order acknowledgement. Consult NORD prior to changing mounting position in the field. While it is often possible to simply relocate the oil fill-level and vent locations, and adjust the oil fill amount, in some cases, different mounting positions may lend themselves to different internal construction features.

3. Reducer mounting

- The support foundation must be straight, level and flat. Whether the gear unit is foot-mounted or flange-mounted, NORD recommends that the straightness and flatness of the customer-supplied support foundation follow **Table 1**.
- The gear unit must be properly aligned with the driven shaft of the machine in order to prevent additional stress or load forces from being imposed upon the gear unit.
- To facilitate oil drainage it may be desirable to elevate the gear box foundation above the surrounding support structure.
- All bolting surfaces must be clean and free from contamination and corrosion.

Table 1: Recommended Straightness and Flatness of Customer-Supplied Support Foundation

Above (in)	To & Including (in)	General Tolerance on Straigtness & Flatness ISO 2768-2, Tolerance Class K
0.00	0.39	+/- 0.002 in
0.39	1.18	+/- 0.004 in
1.18	3.9	+/- 0.008 in
3.9	11.8	+/- 0.016 in
11.8	39	+/- 0.024 in
39	118	+/- 0.031 in

Above (mm)	To & Including (mm)	General Tolerance on Straigtness & Flatness ISO 2768-2, Tolerance Class K
0	10	+/- 0.05 mm
10	30	+/- 0.1 mm
30	100	+/- 0.2 mm
100	300	+/- 0.4 mm
300	1000	+/- 0.6 mm
1000	3000	+/- 0.8 mm

Straightness: Based upon the length of the corresponding line.

Flatness: Based upon the longer lateral surface or the diameter of the circular surface.

HARMFUL SITUATION

The responsibility for the design and construction of the support foundation is with the user. The foundation must be adequate to withstand normal operating loads and possible overloads while maintaining alignment to attached system components under such loads. ***Motors and drive components mounted on prefabricated base plates can become misaligned during shipment. Always check alignment after installation.***

4. Steel foundation

An engineered structural steel foundation should be designed to provide adequate rigidity and prevent loads from distorting the housing or causing misalignment of internal gears and shafts. When foot-mounting the gear reducer, a base plate or sole plate with suitable thickness (generally equal or greater than the thickness of the drive feet) should be securely bolted to steel supports and extend under the entire gear drive assembly. When flange-mounting the gear unit, the bulk head plate must be engineered to minimize buckling distortions and support the cantilevered weight of the gear unit or gear motor.

HARMFUL SITUATION

Do not weld on the gear unit or use the gear unit as an earth or ground connection for any welding procedure as this may cause permanent damage to the bearings and gears.

5. Concrete foundation

If a concrete foundation is used, allow the concrete to set firmly before bolting down the gear drive. Grout structural steel mounting pads and bolts of sufficient size into the concrete, to adequately distribute the load stress onto the concrete foundation.

Figure 1: Concrete Foundation

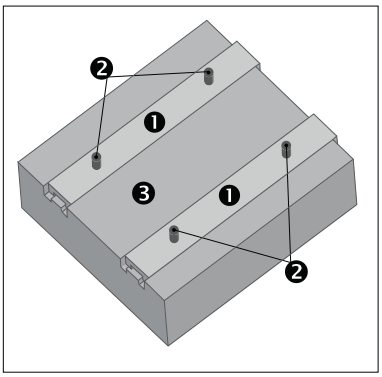

❶ Grouted Structural Steel Mounting Pads
❷ Mounting Bolts
❸ Concrete Foundation

6. Bolt connections for footed & flange mounted units

NORD footed reducers and flange-mount reducers (with B5 flange) have clearance designed into the mounting holes to allow for some minor adjustments in alignment. Bolt size, strength and quantity should be verified to insure proper torque reaction capacity whatever the mounting arrangement. Tightening torque for gear reducer mounting bolts, and recommended fastener grades, are provided in Table 2.

Table 2A: Tightening Torque for Inch Reducer Mounting Bolts

Thread Size	Tightening Torque					
	Grade SAE 5 / ASTM A449			Grade SAE 8		
(in)	(lb-in)	(lb-ft)	(Nm)	(lb-in)	(lb-ft)	(Nm)
1/4-20	85	7.1	9.6	120	10.0	13.6
5/16-18	190	16	21	267	22	30
3/8-16	330	28	37	470	39	53
1/2-13	825	69	93	1,170	98	132
5/8-11	1,660	138	188	2,340	195	264
3/4-10	2,960	247	334	4,180	348	472
7/8-9	4,750	396	537	6,700	558	757
1-8	7,100	592	802	10,000	833	1,130
1 1/8-7	-	-	-	14,800	1,233	1,672
1 1/4-7	-	-	-	20,600	1,717	2,327
1 3/8-6	-	-	-	27,200	2,267	3,073
1 1/2-6	-	-	-	35,800	2,983	4,045
1 3/4-5	-	-	-	53,500	4,458	6,045

- Calculated tightening torques are based a conventional 60°, clean and dry (un-lubricated) thread, with thread-friction and head-friction equal to 0.15.
- When using inch-fasteners, NORD recommends a minimum Grade SAE 5 (ASTM A-449) for sizes up to 1-8 UNC, and Grade SAE 8 for all larger sizes.

Table 2B: Tightening Torque for Metric Reducer Mounting Bolts

Above	Tightening Torque					
	ISO Grade 8.8			ISO Grade 10.9		
(mm)	(lb-in)	(lb-ft)	(Nm)	(lb-in)	(lb-ft)	(Nm)
M4	28	2.4	3.2	42	3.5	4.7
M5	57	4.7	6.4	82	6.9	9.3
M6	97	8	11	142	12	16
M8	239	20	27	345	29	39
M10	469	39	53	690	58	78
M12	814	68	92	1,195	100	135
M14	1,283	107	145	1,903	159	215
M16	2,036	170	230	2,965	247	335
M18	2,036	170	230	2,965	247	335
M20	4,071	339	460	5,841	487	660
M22	5,576	465	630	7,966	664	900
M24	6,992	583	790	10,178	848	1,150
M27	10,178	848	1,150	14,604	1,217	1,650
M30	14,161	1,180	1,600	19,914	1,660	2,250
M36	24,605	2,050	2,780	34,606	2,884	3,910
M42	39,563	3,297	4,470	55,671	4,639	6,290

- Calculated tightening torques are based on a conventional 60°, clean and dry (un-lubricated) thread, with thread-friction and head-friction equal to 0.15.
- When using metric-fasteners, NORD recommends a minimum ISO Grade 8.8 bolt.

7. Mounting the prime mover

When the motor is not flange mounted or integrally mounted to the gearbox, it is important to properly secure and align the gear drive with respect to the driven machine before attempting to align the prime mover or motor.

A. After the main gear drive is properly aligned and bolted in place, align the prime mover with respect to the reducer input shaft.

B. Use shims under the feet of the prime mover as needed, and secure in place with the proper mounting bolts. Dowel pins may be field-installed to help prevent misalignment and ensure proper realignment if removed for service.

IMPORTANT NOTE

When using a high speed coupling connection between the prime mover and the reducer, check alignment per the coupling manufacturers recommendations. If the coupling is misaligned, the reducer alignment or shimming is incorrect. Re-align the gear reducer and re-check the high-speed coupling alignment before re-aligning the motor.

SOLID SHAFT CONNECTIONS

1. Solid shaft diameter tolerance

Reducer input and output shaft extensions have a diameter tolerance as specified in **Table 1**.

Table 1: Solid Shaft Diameter Tolerance

Above ø (in)	To & Including ø (in)	Tolerance (in)
0.375	1.750	+0.0000 / -0.0005
1.750	7.500	+0.0000 / -0.0010

Above ø (mm)	To & Including ø (mm)	Tolerance (mm)	ISO 286-2 Fit Class
10	18	+0.012 / +0.001	k6
18	30	+0.015 / +0.002	k6
30	50	+0.018 / +0.002	k6
50	80	+0.030 / +0.011	m6
80	120	+0.035 / +0.013	m6
120	180	+0.040 / +0.015	m6
180	190	+0.046 / +0.017	m6

2. Fitting drive elements onto the reducer solid shaft

Solid input and output shaft extensions are provided with a drill and tap feature as indicated in Table 2. When installing drive elements such as coupling hubs, pulleys, sprockets, or gears, NORD recommends using the threaded hole in the end of the shaft, along with a suitable assembly device fitted into the threaded hole.

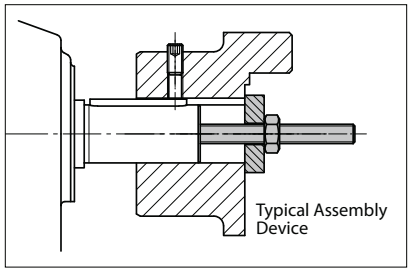

Table 2: Solid Shaft End - Threaded Holes

Above ø (in)	To & Including ø (in)	Tap size & Depth (in)
0.375	0.500	10-24 x 0.43 in
0.500	0.875	1/4-20 x 0.59 in
0.875	0.938	5/16-18 x 0.71 in
0.938	1.100	3/8-16 x 0.87 in
1.100	1.300	1/2-13 x 1.10 in
1.300	1.875	5/8-11 x 1.42 in
1.875	3.500	3/4-10 x 1.73 in
3.500	7.500	1-8 x 2.20 in

Above ø (mm)	To & Including ø (mm)	Tap Size & Depth (mm)
10	13	M4 x 10 mm
13	16	M5 x 12.5 mm
16	21	M6 x 16 mm
21	24	M8 x 19 mm
24	30	M10 x 22 mm
30	38	M12 x 28 mm
38	50	M16 x 36 mm
50	85	M20 x 42 mm
85	130	M24 x 50 mm
130	190	M30 x 60 mm

HARMFUL SITUATION

DO NOT DRIVE or **HAMMER** the coupling hub, pulley, sprocket, or gear into place. An endwise blow to the reducer shaft can generate damaging axial forces and cause damage to the reducer housing, bearings or internal components.

WARNING

To avoid serious injury the user must provide suitable safety guards for all rotating shafts and shaft components such as couplings, chain drives, belt drives, etc. All guarding must adhere to local regulations and safety standards.

3. Installing interference-fit hubs to the reducer shaft

Prior to installing any interference-fit hubs to the reducer shaft, consult with the manufacturer to determine proper assembly and fit. Interference-fits usually require heating the coupling, sprocket or gear hub, per the manufacturer's recommendations. Coupling hub installation typically follows ANSI/AGMA 9002-A86. Always make sure the reducer shaft seals are protected from the heat source. Apply uniform heat to the drive element hub to prevent distortion. NORD does not recommend heating the drive element hub beyond 212°F to 275°F (100°C to 135° C).

WARNING

When using heat to mount a drive element hub, do not use open flame in a combustible atmosphere or near flammable materials. Use suitable protection to avoid burns or serious injury.

HARMFUL SITUATION

When using external chain or belt drives, make sure the reducer is sized so that the shaft and bearings have adequate capacity. To avoid unnecessary bearing loads and additional shaft deflection, mount all power take-off devices (sprockets, pulleys, etc.) so that the applied load center is as close to the gear housing as possible and check component alignment and tension of any belts or chains per the manufacturer's recommendation. Do not over tighten the belts or chains.

4. Coupling installation

The performance and life of any coupling depends upon how well it is installed. Coupling hubs are typically mounted flush with the shaft ends, unless specifically ordered for overhung mounting. Shaft couplings should be installed according to the coupling manufacturer's recommendations for gap, angular and parallel alignment. To help obtain critical shaft alignment coupling hubs may be installed to the machine shafts prior to final shimming or tightening of the foundation bolts. Proper coupling alignment allows for thermal and mechanical shaft movement during operation and ensures that only torque (no radial load) is transmitted between the mating shafts.

Coupling gap and angular alignment

The shaft gap must be sufficient to accommodate any anticipated thermal or mechanical axial movement. When setting the coupling gap, insert a spacer or shim stock equal to the required spacing or gap between the coupling hub faces. Measure the clearance using feeler gauges at 90-degree intervals, to verify the angular alignment.

Parallel (or offset) alignment

Mount a dial indicator to one coupling hub, and rotate this hub, sweeping the outside diameter of the other hub. The parallel or offset misalignment is equal to one-half of the total indicator reading. Another method is to rest a straight edge squarely on the outside diameter of the hubs at 90° intervals and measure any gaps with feeler gauges. The maximum gap measurement is the parallel or offset misalignment.

Check alignment

After both angular and parallel alignments are within specified limits, tighten all foundation bolts securely and re-check critical alignment. If any of the specified limits for alignment are exceeded, realign the coupling.

5. Installing sheaves (pulleys), sprockets and gears

To avoid unnecessary bearing loads and additional shaft deflection, mount all power take-off devices (sprockets, pulleys, gears, etc.) so that the applied load center is as close to the gear housing as possible, as shown in **Figure 2**.

Figure 2: Sprocket or Gear Mounting

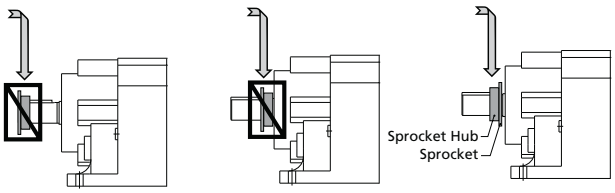

Preferred Mounting of Sprocket or Gear

Align the driver sheave or sprocket with the driven sheave or sprocket by placing a straight-edge length-wise across the face of the sheaves or sprockets. Alignment of bushed sheaves and sprockets should be checked only after bushings have been tightened. Check horizontal shaft alignment by placing one leg of a square or a level vertically against the face of the sheave or sprocket.

Always check component alignment and tension any belts or chains per the manufacturer's recommendation. The ideal belt or chain tension allows proper wrap of the driver and driven wheels, while maintaining the lowest possible tension of the belts or chain, so that no slipping occurs under load conditions. Check belt or chain tension frequently over the first 24 to 48 hours of operation.

STOP ***HARMFUL SITUATION*** **STOP**

When using external chain or belt drives, make sure the reducer is sized so that the shaft and bearings have adequate capacity. To avoid unnecessary bearing loads and additional shaft deflection, mount all power take-off devices (sprockets, pulleys, etc.) so that the applied load center is as close the gear housing as possible and check component alignment and tension of any belts or chains per the manufacturer's recommendation. Do not over tension the belts or chains.

6. Outboard pinion gear alignment

Align outboard pinion gears and adjust the gear tooth clearance according to the manufacturer's recommendations, checking for acceptable outboard pinion tooth contact. The foundation bolts may have to be loosened and the gear unit moved slightly to obtain proper gear tooth contact. After the unit is moved to correct tooth contact, the prime mover may need to be realigned.

KEYED HOLLOW SHAFT

1. Keyed hollow shaft design

NORD uses high quality carbon steel to manufacture hollow-shafts. Upon request, NORD can provide alternate materials, such as stainless steel. NORD hollow shafts are designed with a bore relief (reduced contact area) between the mating shafts.

The bore relief provides a cavity to hold an anti-seize assembly paste. It also acts as a design feature intended to help prevent corrosion and to facilitate gearbox removal from the solid shaft.

NORD furnishes dual keys designed to be used in each of the bore land areas, as opposed to supplying a single long key. The dual keys are intended to simplify assembly onto the machine's solid shaft.

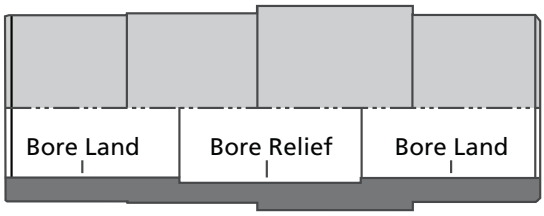

IMPORTANT NOTE

If a single shaft key or dual shaft keys are supplied by others, the key/s must engage the full bore-land length at each end of the hollow shaft.

2. Key and keyway dimensions

Unless otherwise indicated, inch keys and keyways follow the ANSI B17.1 standard and metric keys and keyways follow the DIN6885-1 standard. Inch bores will typically utilize square keys but in some instances the larger hollow shaft bore sizes utilize the alternate rectangular key shown in the ANSI B17.1 standard.

Key slots for the solid machine shaft should be made with a Class 2, transitional-fit class (slightly loose to slightly tight). Key slots in the female shaft are designed to be a low clearance fit. These suggested practices should allow for easier assembly with the mating solid shaft, without allowing excessive clearance which could cause keys to work loose during reducer operation.

IMPORTANT NOTE

If the key fit is too tight, light filing of the key sides and hand-fitting of the keys may be required.

3. Keyed hollow-shaft bore tolerances

Standard keyed hollow-shaft bore tolerances are shown in the following table.

Table 1 - Keyed hollow bore tolerances

Above ø [in]	To and Including ø [in]	Bore Diameter Tolerance ø [in]
0.4375	1.6250	+0.0010 / -0.0000
1.6250	3.2500	+0.0012 / -0.0000
3.2500	7.0000	+0.0014 / -0.0000

Above ø [mm]	To and Including ø [mm]	Bore Diameter Tolerance ø [mm]
10	18	+0.018 / -0.000
18	30	+0.021 / -0.000
30	50	+0.025 / -0.000
50	80	+0.030 / -0.000
80	120	+0.035 / -0.000
120	180	+0.040 / -0.000
180	190	+0.035 / -0.000

Metric hollow bore tolerances per ISO286-2, Class H7

4. Suggested solid shaft (machine shaft) tolerances

NORD recommends a close fit of the customer-supplied solid shaft or machine-shaft, for the following reasons:

- To help minimize the potential for fretting and corrosion.
- To help prevent excessive free play in the shaft connection that could lead to excessive load stress on the driven system, the gear drive, or both.

Table 2 - Suggested solid shaft tolerances

Above ø [in]	To and Including ø [in]	Shaft Diameter Tolerance Uniform Load ø [in]	Shaft Diameter Tolerance Shock Load ø [in]
0.4375	0.8750	+0.0000 / -0.0005	+0.0000 / +0.0005
0.8750	4.5000	+0.0000 / -0.0010	+0.0000 / +0.0010
4.5000	7.0000	+0.0000 / -0.0012	+0.0000 / +0.0015

Above ø [mm]	To and Including ø [mm]	Shaft Diameter Tolerance Uniform Load ❶ ø [mm]	Shaft Diameter Tolerance Shock Load ❷ ø [mm]
10	18	+0.000 / -0.011	+0.012 / +0.001
18	30	+0.000 / -0.013	+0.015 / +0.002
30	50	+0.000 / -0.016	+0.018 / +0.002
50	80	+0.000 / -0.019	+0.021 / +0.002
80	120	+0.000 / -0.022	+0.025 / +0.003
120	180	+0.000 / -0.025	+0.028 / +0.003
180	190	+0.000 / -0.029	+0.033 / +0.004

❶ **Uniform load: Mating shaft diameter tolerance per ISO286-2, class h6**

❷ **Shock load: Mating shaft diameter tolerance per ISO286-2, class k6**

As indicated in Table 2, different solid shaft tolerances are suggested depending upon the load type.

- If the machine load conditions are considered "Uniform" a clearance fit is allowed.
- If the machine load conditions are considered to have "Shock Load" a light clearance to interference fit condition is suggested.

Typically the machine builder will have good knowledge as to the load type. As an alternate method to classify load type, one could follow the "Mass Acceleration Factor Selection Method" that is discussed in NORD's product catalog/s.

Straightness, roundness, and diameter tolerance variations of both shafts should be controlled as accurately as possible. When mating, solid shaft design features are not controlled, reducer installation may be very difficult without ordering special hollow-bore design features to accomodate.

STOP ***HARMFUL SITUATION*** **STOP**

The supporting solid shaft or driven machine shaft must be of adequate size and strength to withstand normal operating loads and peak loads without damage to itself or any of the system components.

5. Suggested solid-shaft mating shaft surface finish

Controlling the mating shaft surface finish helps to assure proper fit and assembly while minimizing the possibility of corrosion and fretting. NORD recommends that the mating solid shaft surface should be at least 125 micro-inches (3.2 microns) or smoother.

6. Assembly to the machine shaft

A. Clean and remove any dirt, grease, or rust-preventative coatings from both the reducer hollow shaft and the machine shaft.

B. Make sure the edges of both the reducer hollow shaft and machine shaft are free from any nicks or burrs. If nicks or burrs are present remove them using an abrasive material such as an emery cloth.

C. Before installing the gear reducer onto the machine shaft, apply an anti-seize compound or anti-corrosive lubricant to the mating shafts as shown in Figure 1. Assembly and subsequent dismantling will be aided by the anti-seize agent.

Figure 1 – Application of anti-seize to the mating shafts

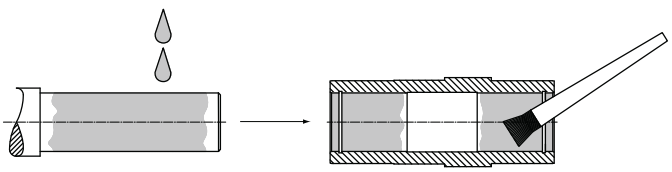

Apply to machine shaft Apply to bore land area

D. Fit the shaft key/s into place on the machine shaft. Depending upon the key slot design on the machine shaft, it may be necessary to stake or Loctite® the key/s into place so they do not slide axially while fitting the reducer to the shaft.

E. Lift the gear unit assembly into place and align it carefully with respect to the machine shaft.

F. Fit the gear unit assembly onto the machine shaft using a suitable pulling device.

G. Secure the reducer onto the machine shaft in an axial direction, to prevent the reducer from shifting or walking out of place during operation.

STOP ***HARMFUL SITUATION*** **STOP**

Do not use excessive force or try to hammer the gear unit into place. The housing, shafting, bearings or gear wheels may become damaged.

7. Securing the reducer onto the machine shaft

There are slight shaft oscillations during operation in any rotating shaft equipment or any shaft-mounted reducer assembly. Therefore it is important to secure the reducer in an axial direction onto the machine shaft, to prevent the reducer from shifting or walking out of place during operation.

Possible methods to secure the reducer axially to the machine shaft include:

- Using commercial set collars, retaining rings, or snap rings.
- Using the optional "NORD Fixing Element Kit" (see U10280).

The NORD Fixing Element Kit includes all of the necessary parts to secure the shaft by using a tapped hole in the end of the mating male shaft.

Loctite® is a registered trademark of Loctite Corporation U.S.A. and Henkel.

SHAFT FIXING KIT

1. Shaft fixing kit - basic design

The NORD Fixing Kit provides a method for securing the reducer in an axial direction, after the keyed-hollow shaft reducer is mounted onto the machine shaft. The fixing kit prevents the reducer from shifting or walking out of place during operation. NORD offers a variety of standard fixing kits, based upon bore size, as shown on Page 2 of this manual.

Figure 1 – Fixing kit components

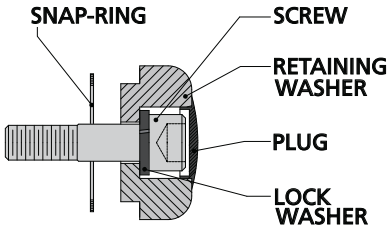

IMPORTANT NOTE

For installation of the keyed-hollow bore reducer to the machine-shaft, see user manual U10270.

2. Assembly types

There are two types of assembly methods commonly used for securing the fixing kit.

Figure 2 – Fixing kit assembly methods

Type 1

The machine-shaft is located against a fixed snap-ring located inside the bore of the reducer.

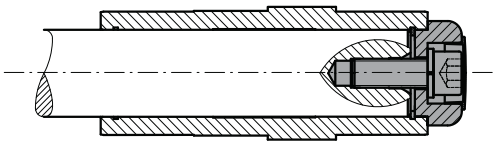

Type 2

The machine shaft is shouldered and is pulled tight against the hollow-shaft; the snap-ring is no longer required.

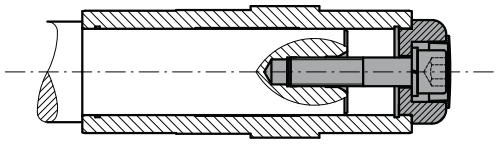

HARMFUL SITUATION

The maximum edge break on the solid machine shaft must not exceed the values shown on Page 2 of this manual. Otherwise the load-bearing capacity of the snap-ring will be reduced and may result in failure.

3. Assembly

A. If using a Type 1 assembly, secure the appropriate snap-ring into the bore of the reducer. With Type 2 assembly, no snap-ring is required.

B. Draw the hollow bore gear reducer onto the machine shaft as instructed in U10270. Remember to apply a suitable assembly paste or anti-seize compound to the mating shafts.

C. Install the retaining washer over the end of the hollow bore.

D. Secure the appropriate cap-screw into the machine shaft and tighten the screw based upon the assembly type, as noted below. Then install the protective plug over the screw hole.

Type 1 - Screw tightening

Tighten until lightly snug and secure the screw with a thread-locking compound to prevent the screw from backing out.

HARMFUL SITUATION

Over tightening the retaining screw may cause the snap ring to be pulled out of its seating groove, causing damage to the hollow-bore or snap ring.

Type 2 - Screw tightening

Follow the cap screw manufactures guidelines and tighten the screw to the proper torque, based upon the bolt grade and material. For reference tightening torque values, also see manual U10060, Table 2.

4. Disassembly

When using Type 2 assembly, it is possible to design a simple disassembly tool to allow easier removal of the hollow-bore reducer. The solid shaft is shouldered to rest against the hollow-bore of the reducer. The machine shaft is supported in both of the hollow bore land areas, but the overall length is reduced compared to Type 1 assembly.

Figure 3 – Disassembly Tool

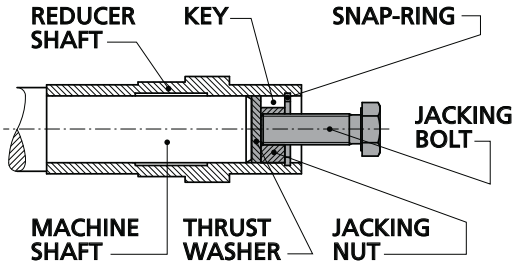

IMPORTANT NOTE

For suggestions on how to construct a disassembly tool for a particular reducer and bore size, please consult NORD's application engineering department.

5. Standard fixing kit size offerings

NORD offers a variety of standard fixing kit sizes as shown by the following tables.

Table 1 - Standard fixing kit size offerings

Shaft Bore [in]	Bolt Size	Allowable Thrust Groove ❷ lb [N]	Allowable Thrust Ring ❸ lb [N]	Max. Edge Break ❹ in [mm]
0.500	10-32	730 [3255]	520 [2300]	0.02 [0.5]
0.750	1/4-20	1800 [7905]	560 [2500]	0.04 [1]
1.000	3/8-16	2900 [13020]	1000 [4600]	0.04 [1]
1.188	7/16-14	5100 [22630]	1000 [4700]	0.04 [1]
1.250	7/16-14	5100 [22630]	1000 [4700]	0.04 [1]
1.375	5/8-11	6500 [29140]	1400 [6400]	0.06 [1.5]
1.438	5/8-11	6900 [30690]	1500 [6500]	0.06 [1.5]
1.500	5/8-11	7800 [34875]	1500 [6700]	0.06 [1.5]
1.625	5/8-11	9900 [44020]	1900 [8400]	0.08 [2]
1.688	5/8-11	10500 [46810]	1800 [8200]	0.08 [2]
1.938	5/8-11	11100 [49600]	1900 [8400]	0.08 [2]
2.000	5/8-11	14100 [62775]	2700 [12100]	0.08 [2]
2.063	5/8-11	14100 [62775]	2700 [12100]	0.08 [2]
2.188	3/4-10	16800 [74865]	2900 [13000]	0.08 [2]
2.375	3/4-10	17400 [77190]	2900 [13000]	0.08 [2]
2.438	3/4-10	17400 [77190]	2900 [13000]	0.08 [2]
2.750	3/4-10	19600 [87110]	4700 [21000]	0.10 [2.5]
2.938	3/4-10	20900 [93000]	4700 [21000]	0.10 [2.5]
3.188	3/4-10	27700 [123225]	7000 [31200]	0.12 [3]
3.438	3/4-10	29300 [130200]	7000 [31400]	0.12 [3]
3.625	7/8-9	30900 [137330]	7000 [31400]	0.12 [3]
3.938	7/8-9	32400 [144305]	6900 [30800]	0.12 [3]
4.000	7/8-9	39000 [173600]	16400 [73000]	0.12 [3]
4.063	7/8-9	39000 [173600]	16400 [73000]	0.12 [3]
4.375	7/8-9	41500 [184450]	16200 [72000]	0.12 [3]
4.438	7/8-9	41500 [184450]	16200 [72000]	0.12 [3]
4.750	7/8-9	44200 [196850]	15700 [70000]	0.12 [3]
4.938	7/8-9	48000 [213900]	15500 [69000]	0.12 [3]

Upon request, additional hollow-bore sizes & fixing kit sizes may be offered.

Shaft Bore [mm]	Bolt Size	Allowable Thrust Groove ❷ N [lb]	Allowable Thrust Ring ❸ N [lb]	Max. Edge Break ❹ mm [in]
16	M5	Not applicable ❶		
20	M6	8370 [1900]	5600 [1300]	1.0 [0.04]
25	M10	12400 [2800]	7300 [1600]	1.0 [0.04]
30	M10	17515 [3900]	7200 [1600]	1.0 [0.04]
35	M12	29140 [6500]	8700 [1900]	1.5 [0.06]
40	M16	41850 [9400]	10900 [2400]	2.0 [0.08]
45	M16	46810 [10500]	10700 [2400]	2.0 [0.08]
50	M16	62775 [14100]	19000 [4300]	2.0 [0.08]
60	M20	74865 [16800]	29200 [6600]	2.0 [0.08]
70	M20	87110 [19600]	30300 [6800]	2.5 [0.10]
80	M20	115630 [26000]	56000 [12600]	2.5 [0.10]
90	M24	130200 [29300]	56000 [12600]	3.0 [0.12]
100	M24	144305 [32400]	55000 [12400]	3.0 [0.12]
110	M24	181350 [40800]	71000 [16000]	3.0 [0.12]
120	M24	196850 [44300]	70000 [15700]	3.0 [0.12]

Upon request, additional hollow-bore sizes and fixing kit sizes may be offered.

❶ This fixing kit is not supplied with a snap-ring. A Type 2 machine shaft is required.

❷ Thrust load-bearing capacity of the groove is based upon using a hollow-shaft material with a yield-strength of at least 45,000 psi (310 N/mm²).

❸ Thrust load-bearing capacity of the snap-ring is based upon a typical snap-ring material with a yield-strength of at least 30,500 psi (210 N/mm²).

❹ On the solid machine shaft, observe the maximum edge break (radius or chamfer) shown. A larger edge break will result in reduced load-bearing capacity of the snap-ring.

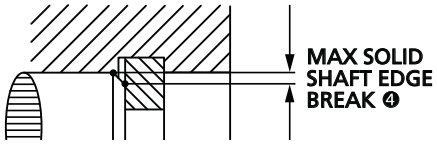

HOLLOW SHAFT WITH SHRINK DISC

1. Shrink disc design concept

A shrink disc option is adaptable to many NORD hollow-bore reducers. The shrink disc applies a high-capacity, zero backlash, interference fit to the driven machine shaft. The double tapered inner ring converts most all of the screw clamping load into radial contact pressure, as the outer clamping discs are pulled together by proper tightening of the locking screws. As the inner ring is contracted, the clearance between the customer solid shaft and reducer shaft is absorbed.

- In their relaxed state, shrink discs provide a generous assembly clearance, thus eliminating the typical assembly and disassembly challenges of using interference fits.
- Shrink discs also reduce solid machine shaft stresses by eliminating the need for shaft keys and keyways.
- When properly applied, high shrink fits help eliminate shaft fretting corrosion and allow for easier shaft mounting and dismounting.

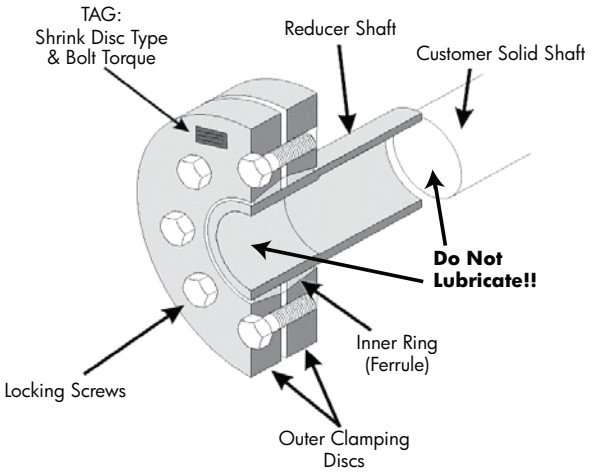

2. Solid (machine) shaft design guidelines

Always use a solid shaft material of adequate strength and apply proper shaft fits in order to establish adequate clamping force during assembly and assure proper shaft release during disassembly.

- Use solid shaft material with yield strength of at least 52,260 psi (360 N/mm²).
- The solid machine shaft should be machined according to ISO 286-2, Class h6 fit tolerances, with a shaft finish of 125 micro inches (3.2 µm) or smoother, per Table 1.
- The solid machine shaft must extend the full length of the reducer hollow shaft.

HARMFUL SITUATION

Contact NORD when using a shrink disc in an application where the shrink disc connection must simultaneously transmit torque and thrust.

3. Safety

WARNING

- The supporting solid shaft or driven machine shaft must be of adequate size and strength to withstand normal operating loads and peak loads without damage to itself or any of the system components.
- The transmissible torque and the gripping capacity of the shrink disc may be reduced if shaft tolerances or clearances are larger than specified.
- Excessive tightening torque can result in permanent deformation of the inner ring and the reducer hollow bore, making disassembly very difficult. Do not over tighten the shrink disc to compensate for excessive clearance between the machine shaft and reducer bore.
- Observe the published ratings and safety factors for both the reducer and shrink disc. Overload conditions or excessively high torque can cause the shrink disc connection to slip. In extreme cases localized galling or welding of components may occur.

4. Shrink disc shaft tolerances

Recommended solid shaft tolerances and reducer bore tolerances are shown in the table below.

Table 1: Shrink disc shaft tolerances

Above & Including ø [in]	To & Including ø [in]	Solid Shaft Tolerance ø [in]	Reducer Bore Tolerance ø [in]
0.4375	0.6875	+0.0000 / -0.0004	+0.0007 / -0.0000
0.7500	1.1250	+0.0000 / -0.0005	+0.0008 / -0.0000
1.1250	1.9375	+0.0000 / -0.0006	+0.0009 / -0.0000
2.0000	3.1250	+0.0000 / -0.0007	+0.0011 / -0.0000
3.1875	4.6875	+0.0000 / -0.0008	+0.0013 / -0.0000
4.7500	7.0625	+0.0000 / -0.0009	+0.0015 / -0.0000
7.1250	7.5000	+0.0000 / -0.0011	+0.0018 / -0.0000

Above ø [mm]	To & Including ø [mm]	Solid Shaft Tolerance ø [mm]	Reducer Bore Tolerance ø [mm]
10	18	+0.000 / -0.011	+0.018 / -0.000
18	30	+0.000 / -0.013	+0.021 / -0.000
30	50	+0.000 / -0.016	+0.025 / -0.000
50	80	+0.000 / -0.019	+0.030 / -0.000
80	120	+0.000 / -0.022	+0.035 / -0.000
120	180	+0.000 / -0.025	+0.040 / -0.000
180	190	+0.000 / -0.029	+0.046 / -0.000

Shaft/bore tolerances per ISO 282-6, Class h6/H7.

Solid shaft finish should be 125 micro inches (3.2 mocro meters) or smoother.

HOLLOW SHAFT WITH SHRINK DISC

5. Installation

⚠ WARNING ⚠

Disconnect all power sources from the equipment before beginning this installation procedure. Handle the components with care and avoid all sharp machined edges to prevent personal injury.

STOP HARMFUL SITUATION STOP

Do not tighten any of the shrink disc locking screws prior to installing the reducer with shrink disc onto the machine shaft. The inner ring of the shrink disc can become permanently contracted or damaged at relatively low tightening torque.

A. Inspect the gear unit received. Make sure the shrink disc and extended hollow shaft projection is on the side of the reducer where it was specified or ordered.

B. Loosen the shrink disc locking screws but do not take the shrink disc completely apart. Remove and discard any packaging material or transportation spacers that come with the shrink disc.

C. Remove all burrs, rust, corrosion, lubricants, and foreign matter from the surfaces of the solid shaft and hollow-bore.

D. Make sure the shrink disk is positioned onto the hollow shaft until the outer clamping ring is flush with the edge of the hollow shaft.

E. To aid in assembly, it is acceptable to lightly grease the solid shaft, only in the area that will come in contact with the bronze-bushing side of the reducer hollow-shaft. ***The reducer hollow shaft must be completely de-greased and free of lubricant, especially in the area of the shrink disc.***

F. Position the gear reducer onto the solid machine shaft and make certain the area under the shrink disc is completely supported by the solid shaft.

G. After confirming the proper positioning of gear reducer and the shrink disc, hand tighten (3) or (4) equally spaced locking screws to make sure the outer collars of the shrink disc are drawn together in a parallel fashion. Then hand-tighten the remaining screws.

H. Refer to Table 2 for the specified tightening torques for the shrink disc locking screws. Using a properly set torque wrench using approximately ¼ (90°) turns; tighten the locking screws, by working in a circular clockwise or counterclockwise sequence around the shrink disc.

I. Continue the tightening sequence (Step H.) even if some locking screws initially require very low tightening torque to achieve ¼ turns; do this for several passes until ¼ turns can no longer be achieved.

J. Reset the torque wrench to approximately 3-5% over-torque and tighten the locking screws for 1 or 2 more passes. This procedure will compensate for relaxation of the locking screws, since tightening of a given screw will always tend to relax the adjacent screw. Without a slight overtorquing of the screws, an infinite number of passes would be required to reach the desired tightening torque.

Table 2 - Shrink Disc Locking Screw Torque

Screw Size	Wrench Size [mm]	Tightening Torque [Nm]	[lb-in]	[ft-lb]
M5	8	7	62	5.2
M6	10	12	106	8.9
M8	13	30	266	22
M10	17	59	522	44
M12	19	100	885	74
M16	24	250	2213	184
M20	30	490	4337	361

BOLT TIGHTENING PATTERN

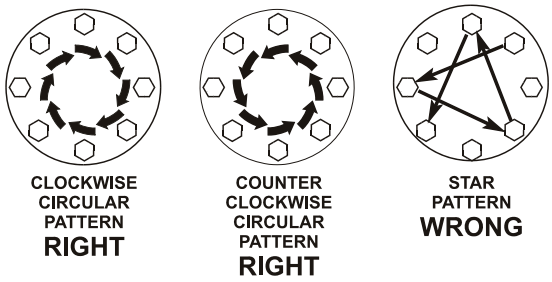

K. Reset the torque wrench to the correct tightening torque as indicated in Table 2. Make sure each locking screw has been properly tightened until the screws are no longer turning at the specified torque wrench setting. If necessary repeat Steps G. & H.

6. Removal

A. Loosen the shrink disc locking screws in a circular pattern by using ½ (180°) turns, until the shrink disc hub can be moved or until the shrink disc hub and reducer shaft will return to their original fits.

⚠ WARNING ⚠

Do not completely remove the locking screws before the outer clamping disks of the shrink disc are disengaged from the inner ring. A sudden release of the outer collars will create high separating forces and could result in injury or even death.

B. Loosen the outer collars of the shrink disc from the tapered inner ring. This may require tapping the bolts with a **soft faced** hammer or prying lightly between the outer collars.

C. Remove the gear reducer from the machine shaft.

7. Re-installation

A. It may be possible to re-use the shrink disc. However the shrink disk should not be re-used if it becomes damaged during removal, or excessively rusty or corroded. Shrink discs must always be disassembled and thoroughly cleaned before re-using.

B. After cleaning the shrink disc, lubricate between the taper of the outer clamping disks and the outside of the inner ring using MOLYKOTE® G-Rapid Plus Paste (product of Dow Corning) or equivalent. In addition, grease screw threads and head contact area with multi-purpose grease.

NORD GRIPMAXX™

1. General information

The NORD GRIPMAXX™ keyless bushing system is adaptable to most all NORD shaft-mounted reducers. The bushing system offers interchangeable bushings to accommodate a large range of driven machine-shaft sizes.

The unique design of the NORD GRIPMAXX™ bushing system offers a number of distinct advantages as follows:

- The NORD GRIPMAXX™ allows the machine builder to utilize standard cold finished shaft stock, without the need for additional shaft machining or shaft keys.
- It uses a NORD shrink disc to apply a high-capacity, zero backlash, interference fit to the driven machine shaft, while eliminating the typical assembly and disassembly challenges of using interference fits.
- The built in clearance between the customer shaft and the bushing system helps to ensure easy installation and removal of the gearbox. To help ensure easy removal, the NORD GRIPMAXX™ bushings are prepared with a special low-wear, corrosion-resistant hardened surface treatment, that minimizes the formation of shaft corrosion and fretting.
- The NORD GRIPMAXX™ is ideal for start-stop operation and bi-directional loading because it does not depend on keys or keyways that transmit torque, which can also can become loose or deform when subjected to these loading conditions.
- Unlike the typical conical or tapered bushing kits, the NORD GRIPMAXX™ design allows a tight fit against a shouldered machine shaft.
- The torque bushing and support bushing are the same part and are fully interchangeable with one another.

2. GRIPMAXX™ assembly detail

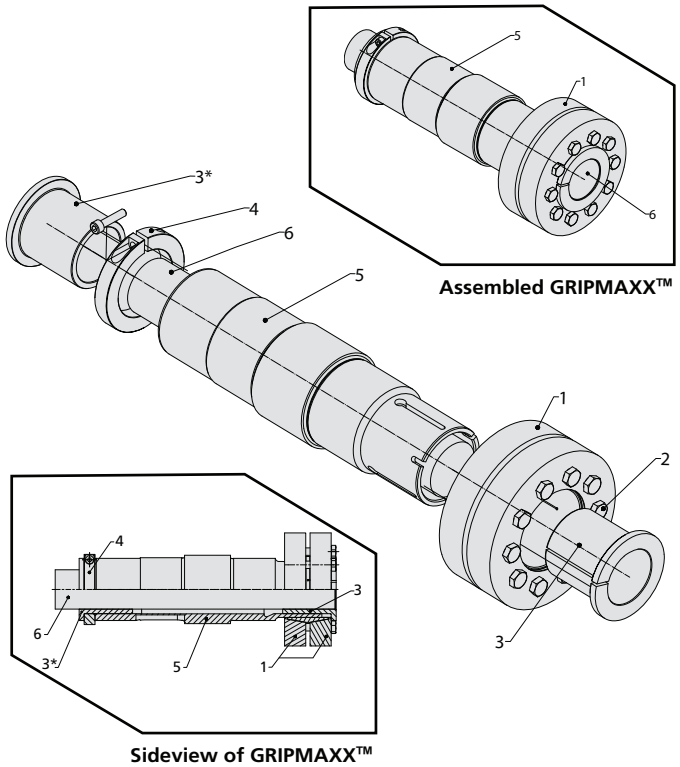

Assembled GRIPMAXX™

Sideview of GRIPMAXX™

[1] NORD Shrink Disc
[2] Locking Screw
[3] Bushing (Torque Side)
[3*] Bushing (Support Side)
[4] Clamp Ring
[5] Gear Reducer Hollow Shaft
[6] Machine Shaft

IMPORTANT NOTE

NORD recommends that the machine shaft have a yield strength of at least 52,260psi (360N/mm^2)

IMPORTANT NOTE

Observe the recommended machine shaft tolerances in table 1, page 2.

WARNING

The supporting solid shaft or driven machine shaft must be of adequate size and strength to withstand normal operating loads and peak loads without damage to itself or any of the system components.

3. Installation

⚠ WARNING ⚠

Disconnect all power sources from the equipment before beginning this installation procedure. Handle the components with care and avoid all sharp or machined edges to prevent personal injury.

STOP HARMFUL SITUATION STOP

Do not tighten any of the shrink disc locking screws prior to installing the reducer with shrink disc onto the machine shaft. The inner ring of the shrink disc can become permanently contracted or damaged at a relatively low tightening torque.

Table 1 - Required Machined Shaft Tolerance

Inch Machine Shaft			Metric Machine Shaft		
Above ø [in]	To & Including ø [in]	Tolerance ISO 286-2 [in]	Above ø [mm]	To & Including ø [mm]	Tolerance h11 [mm]
0.4375	0.6875	- 0.0043	10	18	- 0.110
0.7500	1.1250	- 0.0051	18	30	- 0.130
1.1250	1.9375	- 0.0063	30	50	- 0.160
2.0000	2.9375	- 0.0074	50	75	- 0.190

A. Carefully inspect the machine shaft [6] and remove all burrs, rust, corrosion, lubricants, and foreign matter from the shaft surface. Verify that the diameter is within the dimensional tolerances shown in Table 1.

B. Inspect the gear unit received to confirm the correct position of the shrink disc [1]. Make sure the hollow shaft [5] projection is on the side of the reducer where it was specified or ordered.

C. In addition to cleaning the machine shaft [6], remove all dirt, grease or oils from the reducer hollow shaft [5], bushings [3], clamp ring [4], and shrink disk [1]. ***Do not apply lubricants, corrosion preventatives, anti-sieze compounds or coatings to the mating surfaces of the shaft, bushings, clamp collars or shrink disc.***

D. Position the clamp ring [4] and support bushing [3*] over the machine shaft [6], making sure the support bushing is in its desired location. Then secure the support bushing [3*] with the clamp ring [4] and tighten the clamp ring screw.

E. Slide the gear reducer unto the machine shaft [6] until the gear reducer stops against the secured support bushing [3*].

F. Without taking the shrink disc [1] apart, loosen the shrink disc locking screws [2]. Slide the shrink disk over the reducer shaft [5] and slide the torque bushing [3] onto the machine shaft, making sure it is seated completely.

G. Confirm the positioning of the shrink disc [1] and torque bushing [3]. ***Do not tighten the shrink disc until the machine shaft and torque bushing are in proper position, or the reducer shaft will be damaged.*** Hand-tighten 3 or 4 or locking screws [2] and make sure the outer collars of the shrink disc are drawn together in a parallel fashion and then hand-tighten the remaining screws.

H. Refer to Table 2 for the specified tightening torques for the shrink disc locking screws. Using a properly set torque wrench using approximately ¼ (90°) turns; tighten the locking screws, by working in a circular clockwise or counterclockwise sequence around the shrink disc.

I. Continue the tightening sequence (Step H.) even if some locking screws initially require very low tightening torque to achieve ¼ turns; do this for several passes until ¼ turns can no longer be achieved.

J. Reset the torque wrench to approximately 3-5% over-torque and tighten the locking screws for 1 or 2 more passes. This procedure will compensate for relaxation of the locking screws, since tightening of a given screw will always tend to relax the adjacent screw. Without a slight overtorquing of the screws, an infinite number of passes would be required to reach the desired tightening torque.

Table 2 - Shrink Disc Locking Screw Torque

Screw Size	Wrench Size [mm]	Tightening Torque [Nm]	[lb-in]	[ft-lb]
M5	8	7	62	5.2
M6	10	12	106	8.9
M8	13	30	266	22
M10	17	59	522	44
M12	19	100	885	74
M16	24	250	2213	184
M20	30	490	4337	361

BOLT TIGHTENING PATTERN

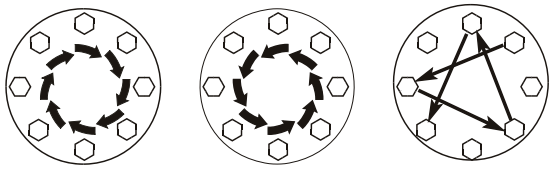

CLOCKWISE CIRCULAR PATTERN **RIGHT**

COUNTER CLOCKWISE CIRCULAR PATTERN **RIGHT**

STAR PATTERN **WRONG**

K. Reset the torque wrench to the correct tightening torque as indicated in Table 2. Make sure each locking screw has been properly tightened until the screws are no longer turning at the specified torque wrench setting. If necessary repeat Steps G. & H.

5. Bushing kit removal

A. Loosen the shrink disc locking screws [2] in circular pattern by using ½ (180°) turns, until the shrink disc hub can be moved or until the shrink disc hub and reducer shaft will return to their original fits.

> ⚠ ***WARNING*** ⚠
>
> Do not completely remove the locking screws before the outer clamping disks of the shrink disc are disengaged from the inner ring. A sudden release of the outer collars will create high separating forces and could result in injury or even death.

B. Loosen the outer collars of the shrink disc from the tapered inner ring. This may require tapping the bolts with a **soft faced** hammer or prying lightly between the outer collars.

C. Remove the gear reducer from the machine shaft.

6. Re-installation

A. It may be possible to re-use the bushings and shrink disc that are part of the NORD bushing system. However these components should not be re-used if they are damaged during removal, or excessively rusty or corroded.

B. Never re-use any of the bushing kit components without prior cleaning. Shrink discs must always be disassembled and thoroughly cleaned before re-using.

C. After cleaning the shrink disc, lubricate between the taper of the outer clamping disks and the outside of the inner ring using MOLYKOTE® G-Rapid Plus Paste (product of Dow Corning) or equivalent. In addition, grease screw threads and head contact area with multipurpose grease.

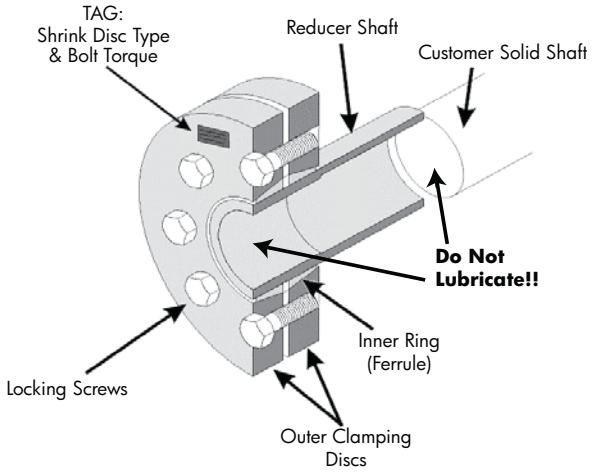

REDUCER MOUNTING
FOOTED & FLANGE MOUNT GEAR UNITS

1. Foot-mounted reducers

When installing the foot-mounted gear unit, observe the flatness specifications and bolt tightening torque guidelines provided in U10060 and make sure the mating mounting surface and reducer feet are clean and free of debris. Use of shims under the feet of the gear unit may be required in order to align the output shaft to the driven equipment. Make sure that all feet are supported so that the housing will not distort when it is bolted down. Improper shimming will cause mis-alignment and may reduce the life of the gear unit or cause component failure. Dowel pins may be field-installed to help prevent misalignment and ensure proper realignment if removed for service.

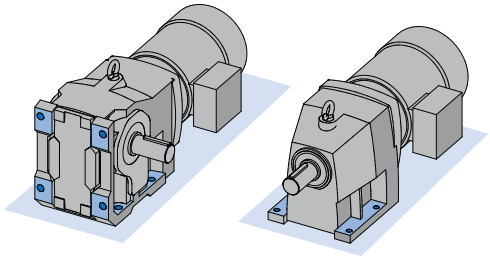

IMPORTANT NOTE

Gear units may be subjected to radial loads or side pull, caused by external chain drives or belt drives. In these instances it is recommended that the mounting base be designed with a slide-plate adjustment to accommodate extra slack in the chain or the belt after the feet are loosened. When using an external chain or belt drive, make sure the reducer is sized so that the shaft and bearings have adequate capacity.

2. Flange-mounted reducers (with B5 flange)

When using the B5 flange to mount the gear unit, the bulk head plate must be engineered to minimize buckling distortions and support the cantilevered weight of the gear reducer or gearmotor. On the B5 mounting flange NORD provides a pilot register or and the flange pilot tolerance as listed per Table 1. When the mating hole is designed with the proper fit, the flange pilot tenon provides a means of accurately positioning the reducer while the hold-down bolts are properly secured; once the reducer is secured, the tenon helps prevent movement of the reducer and it helps locate the center of the reducer output shaft.

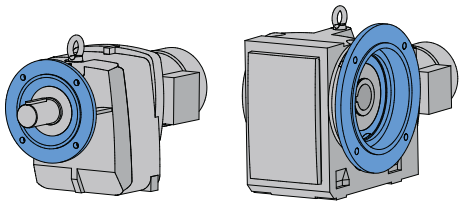

Table : Flange Pilot Tolerance

Above ø (in)	To & Including ø (in)	Tolerance (in)	ISO 286-2 Fit Class
1.969	3.150	+0.0005 / -0.0003	j6
3.150	4.724	+0.0005 / -0.0004	j6
4.724	7.087	+0.0006 / -0.0004	j6
7.087	9.055	+0.0000 / -0.0005	h6
9.055	9.843	+0.0000 / -0.0011	h6
9.843	12.402	+0.0000 / -0.0013	h6
12.402	15.748	+0.0000 / -0.0014	h6
15.748	19.685	+0.0000 / -0.0016	h6

Above ø (mm)	To & Including ø (mm)	Tolerance (mm)	ISO 286-2 Fit Class
50	80	+0.012 / -0.007	j6
80	120	+0.013 / -0.009	j6
120	180	+0.014 / -0.011	j6
180	230	+0.000 / -0.013	h6
230	250	+0.000 / -0.029	h6
250	315	+0.000 / -0.032	h6
315	400	+0.000 / -0.036	h6
400	500	+0.000 / -0.040	h6

When installing the flange mounted gear unit, observe the flatness specifications and bolt tightening torque guidelines provided in U10060. Make sure the mating mounting surface and reducer flange are clean and free of debris. Use a straight edge or parallel bar to check for high spots on the mating mounting surface and remove any raised material around the mounting holes.

Set the gear unit into place and tighten the bolts until they are snug. Before final bolt-tightening check for any material gaps between the mating surfaces and if shimming is required, use "U" shaped shims at least 2 times the width of the bolt. Avoid over shimming a very irregular surface as this will make it very difficult to achieve proper alignment.

IMPORTANT NOTE

For heavy shock applications, it is advisable to field-install dowel pins through the mounting flange connection (in addition to the mounting bolts). This will help control flange movement or flange rotation and relieve the mounting bolts from this additional stress.

3. Flange-mounted reducers (with B14 flange)

When using the B14 flange to mount the gear unit, the bulk head plate must be engineered to minimize buckling distortions and support the cantilevered weight of the gear reducer or gearmotor. When properly installed, the output flange of the reducer housing is designed to enable the permissible torques and radial forces to be reliably transmitted by the bolt connections.

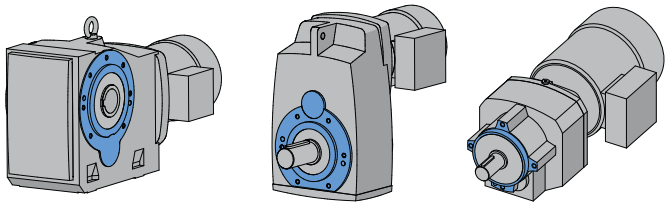

IMPORTANT NOTE

When using the B14 flange-face for mounting, if dowel pin holes are provided in addition to the threaded holes, then it is advisable to also use the proper dowel pins, to help control flange movement or flange rotation and relieve the mounting bolts from this additional stress This is especially important for heavy shock applications.

4. Foot & flange reducer housings

Some gear reducer housings are available with a foot and an output flange. Units with a foot and a B5 Flange are designated with the suffix XF after the primary model number and units with a B14 face-flange are designated with the suffix XZ after the primary model number. When a gear unit is provided with both a foot and a flange, the foot is consider the primary mounting surface. The flange is generally considered to be the secondary mounting option and it is intended that this surface be used for auxiliary add on elements that place minimal load stress on the reducer housing.

HARMFUL SITUATION

To prevent overstress on the main gear unit housing, never tighten the reducer mounting feet and the mounting flange against one-another. Auxiliary add-on elements that are mounted to the reducer flange, must not transmit excessive force, torque or vibration to the main gear housing.

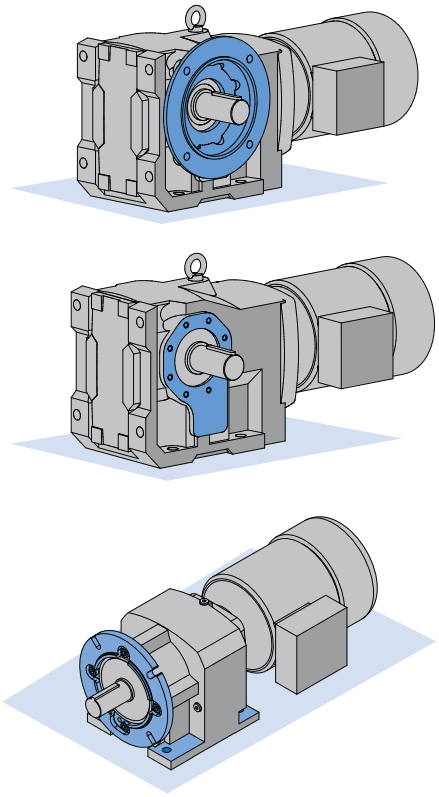

CLINCHER™ SHAFT-MOUNT WITH RUBBER BUFFERS

1. Purpose of the built-in torque arm lug

The preferred method of installing a shaft-mounted Clincher™ reducer is to support the weight of the gear unit or gearmotor assembly from the driven solid machine shaft. In order to restrain the gearbox, react the torque, and keep the gear unit from spinning around the shaft, the Clincher™ gear units have a built-in torque arm lug or tab cast into the reducer housing. This torque tab is intended to be used in conjunction with the NORD Rubber Buffers.

Figure 1: Built-in torque lug

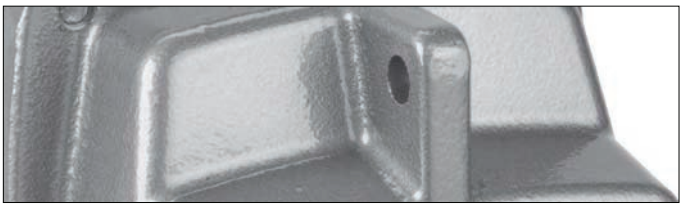

2. Rubber buffers

When specified, NORD provides two rubber buffers that are installed on either side of the gear unit's integral torque lug.

When properly used in tandem, on either side of the torque-arm lug, the rubber buffers help isolate and absorb the load forces present in the system and increase the reducer's service life by reducing cumulative torsional shock loads.

- The primary load force acts in the direction of driven shaft rotation, reacts the torque of the reducer, keeping the gearbox from spinning on the shaft.
- Additional forces present themselves in the direction opposite of the shaft rotation, due to the typical slight out-of-round condition present in the machine shaft. This condition is the reason most shaft mounted-reducers have a slight shaft-wobble, which is normal.

For further dampening it is possible to combine several rubber buffers in a row, on either side of the torque lug.

IMPORTANT NOTE

Please reference Table 1 on page 2 of this manual for dimensional information.

HARMFUL SITUATION

Always mount at least one rubber buffer on either side of the reducer's torque-arm lug. When using rubber buffers in tandem, make sure equal numbers are used on both sides of the torque tab. Failure to do so will not properly cushion the reducer and can result in excessive binding, bearing stress, and damage to the reducer.

3. Machine support

WARNING

It is the responsibility of the machine builder to design a support bracket of adequate strength and rigidity, and supply an appropriate tightening bolt assembly. Failure to do so may result in injury caused from a damaged or broken torque-reaction assembly.

A single customer-supplied machine support bracket, of adequate strength and rigidity, can provide adequate restraint for both directions. This is because when the rubber buffer system is used, the applied load forces are always parallel to the retaining bolt and there are no twisting forces induced onto the bolt in either the clockwise or counter-clockwise direction. In some cases the customer may desire to supply a rigid support on either side of the rubber buffers. In these instances, longer assembly hardware is required.

4. Installation of the rubber buffers

A. Install the Clincher™ hollow bore reducer onto the machine shaft. Line up the hole in the reducer's torque-arm lug with the hole in the machine's support bracket and temporarily hold the reducer in place.

B. Properly secure the gear unit assembly to the driven shaft in an axial direction. If using the NORD Shaft Fixing Kit, follow the instructions in User Manual U10280.

C. Install the rubber buffers on either side of the gear unit's torque-arm lug. Apply a thread locking compound to the end of the fixing bolt. Then place the fixing bolt through the rubber buffers, torque-arm lug and rigid machine support bracket and loosely secure the nut onto the end of the bolt.

D. Tighten the fixing bolt and nut until lightly snug until all of the free play is eliminated from the rubber buffer assembly. Then snug the fixing bolt assembly by tightening an additional 1/4 to 1/2 turn.

E. Tighten the fixing bolt and nut until lightly snugand all of the free-play is eliminated from the rubber buffer assembly. Then snug the fixing bolt assembly by tightening an additional ¼ to ½ turn.

WARNING

To help prevent damage to the rubber buffers, avoid over-tightening.

IMPORTANT NOTE

- A min. of (2) rubber buffers are required for each unit.
- For larger size CLINCHER'S™, NORD offers the heavy-duty rubber buffer (Option VG).
- A metric fixing bolt is preferred for rubber buffer assembly. NORD recommends a minimum ISO Grade 8.8 fixing bolt.

CLINCHER™ SHAFT-MOUNT WITH RUBBER BUFFERS

Table 1: Rubber buffer assembly/typical dimensions

Standard Rubber Buffer Assembly Option **(V)**

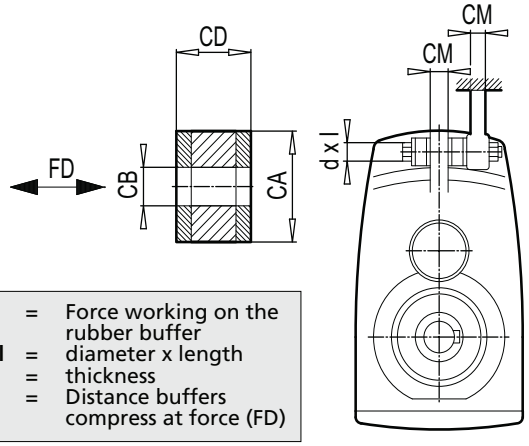

FD = Force working on the rubber buffer
d x l = diameter x length
c = thickness
S_{FD} = Distance buffers compress at force (FD)

Heavy Duty Rubber Buffer Assembly Option **(VG)**

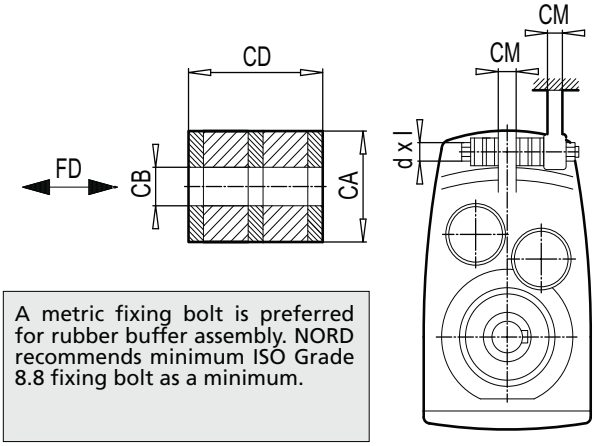

A metric fixing bolt is preferred for rubber buffer assembly. NORD recommends minimum ISO Grade 8.8 fixing bolt as a minimum.

Type	Rubber Buffer P/N	CB inch [mm]	CA inch [mm]	CD inch [mm]	CM inch [mm]	Bolt d x l [metric]	FD lb [kN]	SFD inch [mm]
SK0182NB..G	29603000	0.43 [11]	1.18 [30]	0.59 [15]	0.39 [10]	M10 x 70	217 [0.967]	0.06 [1.5]
SK0282NB..G	29603000	0.43 [11]	1.18 [30]	0.59 [15]	0.47 [12]	M10 x 70	234 [1.04]	0.07 [1.7]
SK1282..G	29603000	0.43 [11]	1.18 [30]	0.59 [15]	0.55 [14]	M10 x 80	504 [2.24]	0.14 [3.6]
SK1382NB..G	29603000	0.43 [11]	1.18 [30]	0.59 [15]	0.55 [14]	M10 x 80	402 [1.79]	0.11 [2.8]
SK2282..G SK2382..G	29604000	0.49 [12.5]	1.57 [40]	0.59 [15]	0.63 [16]	M12 x 90	600 [2.67]	0.07 [1.8]
SK3282..G SK3382..G	29604000	0.49 [12.5]	1.57 [40]	0.59 [15]	0.71 [18]	M12 x 90	935 [4.16]	0.11 [2.9]
SK4282..G SK4382..G	29606000	0.83 [21]	2.36 [60]	1.18 [30]	0.87 [22]	M20 x 150	1661 [7.39]	0.29 [7.3]
SK5282..G SK5382..G	29606000	0.83 [21]	2.36 [60]	1.18 [30]	1.1 [28]	M20 x 150	2133 [9.49]	0.37 [9.4]
SK6282..G SK6382..G	29608000	0.98 [25]	3.15 [80]	1.57 [40]	1.38 [35]	M24 x 190	3779 [16.81]	0.36 [9.2]
SK7282..G SK7382..G	29608000	0.98 [25]	3.15 [80]	1.57 [40]	1.57 [40]	M24 x 200	4676 [20.8]	0.45 [11.4]
SK8282..G SK8382..G	29610000	1.22 [31]	3.94 [100]	1.97 [50]	1.97 [50]	M30 x 260	6382 [28.39]	0.64 [16.3]
SK9282..G SK9382..G	29610000	1.22 [31]	3.94 [100]	1.97 [50]	2.17 [55]	M30 x 260	9777 [43.49]	0.98 [24.9]

Type	Rubber Buffer P/N	CB inch [mm]	CA inch [mm]	CD inch [mm]	CM inch [mm]	Bolt d x l [metric]	FD lb [kN]	SFD inch [mm]
SK7282.VG SK7382.VG	29620850	0.98 [25]	3.35 [85]	2.36 [60]	1.57 [40]	M24 x 240	4676 [20.8]	0.48 [12.2]
SK8282.VG SK8382.VG	29621100	1.22 [31]	4.33 [110]	3.54 [90]	1.97 [50]	M30 x 340	6382 [28.39]	0.76 [19.3]
SK9282.VG SK9382.VG	29621400	1.22 [31]	5.51 [140]	4.33 [110]	2.17 [55]	M30 x 380	9777 [43.49]	0.83 [21.2]
SK10282.VG SK10382.VG	29621800	1.22 [31]	5.51 [140]	4.33 [110]	3.15 [80]	M30 x 430	12670 [56.36]	1.08 [27.4]
SK11282.VG SK11382.VG	29621800	1.93 [49]	7.09 [180]	5.91 [150]	3.54 [90]	M48 x 550	18185 [80.89]	1.52 [38.5]
SK12382.VG	29621800	1.93 [49]	7.09 [180]	5.91 [150]	3.54 [90]	M48 x 550	23720 [105.51]	1.98 [50.2]

RIGHT ANGLE SHAFT-MOUNT WITH TORQUE ARM (D)

1. Torque arm (D)

The preferred method of installing a shaft-mounted reducer is to support the weight of the gear unit or gearmotor assembly from the driven solid machine shaft. A torque arm is required in order to restrain the gearbox, react the load torque, and keep the gear unit from spinning around the shaft.

Table 1 (Page 2) provides a list of Torque-Arm (D) part numbers available based upon reducer series and type. The torque-arm is a tear-drop shaped bracket that is mounted to the B14 flange-face of the reducer. Each torque-arm bracket is supplied with a resilient rubber bushing located at the fastening hole-end of the bracket.

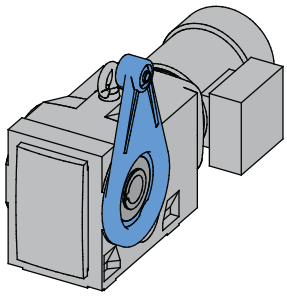

IMPORTANT NOTE

The side of the reducer that the torque arm is mounted on, and the angular position can be specified at time of order. Consult the appropriate NORD catalog for specific Torque Arm (D) mounting options and ordering guidelines.

2. Purpose of the built-in resilient rubber bushing

The resilient rubber bushing installed into the fastening hole end of the torque-arm helps isolate and absorb all the load forces present in the system and increase the reducer's service life by reducing cumulative torsional shock loads.

- The primary load force acts in the direction of driven shaft rotation, reacts the load torque of the reducer, and prevents the gearbox from spinning on the shaft.
- Additional forces present themselves in the direction opposite of the shaft rotation, due to the typical slight out-of-round condition present in the machine shaft. This condition is the reason most shaft mounted-reducers have a slight shaft-wobble, which is normal.

HARMFUL SITUATION

Always make sure that the Torque Arm (D) has the resilient rubber bushing installed into the fastening hole end of the torque arm. Failure to do so will not properly cushion the reducer and can result in excessive binding, bearing stress, and damage to the reducer.

3. Machine support

The user must supply a suitably strong and rigid mating machine support that provides load bearing capacity on both sides of the torque-arm bracket.

WARNING

It is the responsibility of the machine builder to design a support bracket of adequate strength and rigidity, and supply an appropriate tightening bolt assembly. Failure to do so may result in injury caused from a damaged or broken torque-reaction assembly.

4. Installation of the right-angle reducer with torque arm (D)

A. Make sure the Torque-Arm (D) is mounted in the correct position on the reducer.
   - The torque-arm can be repositioned on the as-received unit by removing the fixing screws, re-position the torque-arm in the correct location, and re-securing the fixing screws to the proper tightening torque, as indicated in Table 2 (Page 2).
   - If the torque-arm was shipped loose, position the torque-arm in the correct location on the gear unit, and secure the torque-arm with the proper fixing screws & tightening torque, as indicated in Table 2 (Page 2).

B. Install the right-angle hollow bore reducer onto the machine shaft. Line up the hole in the reducer's torque-arm with the hole in the machine's support bracket and temporarily hold the reducer in place

C. Properly secure the gear unit assembly to the driven shaft in an axial direction.

D. Place the fastening bolt through the rigid machine support bracket and reducer torque-arm. Then apply a thread locking compound to the end of the fixing bolt and loosely secure the nut onto the end of the bolt.

E. Tighten the fixing bolt to the proper tightening torque as indicated in Table 2 (Page 2).

RIGHT ANGLE SHAFT-MOUNT WITH TORQUE ARM (D)

Table 1 - Torque Arm (D) with rubber buffer

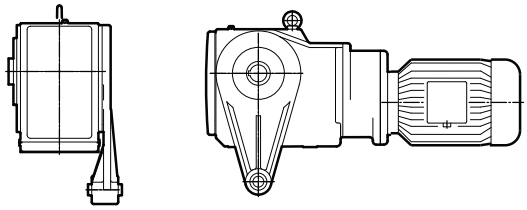

- For all 90.1 Series Helical-Bevel gear units, NORD also offers a bottom mount Torque Arm (K). See User Manual U10620.
- For the large 90.1 Series Helical-Bevel gear units sizes: SK9082.1, SK9086.1, SK9092.1, and SK9096.1, please use the Torque Arm (K).
- A metric fixing bolt is preferred for fastening the Torque-Arm(D) to the machine support bracket.

Series	Type	Torque Arm P/N	Reducer Mounting Screws	Mounting Screw P/N	Fastening Hole in [mm]	Fastening Bolt Size
92 Series Helical- Bevel	SK92172AZD	69290600	(Qty 8) M6 X 16 SHCS	22106165	0.41 [10.5]	M10
	SK92372AZD	69390600	(Qty 8) M8 X 25 SHCS	22108250	0.41 [10.5]	M10
	SK92672AZD	69390600	(Qty 8) M8 X 25 SHCS	22108250	0.41 [10.5]	M10
	SK92772AZD	69590600	(Qty 8) M8 X 25 SHCS	22108250	0.65 [16.5]	M16
90.1 Series Helical-Bevel	SK9012.1AZD/SK9013.1AZD	61090600	(Qty 7) M8 X 20 SHCS	22108205	0.41 [10.5]	M10
	SK9016.1AZD/SK9017.1AZD	61090600	(Qty 7) M8 X 20 SHCS	22108205	0.41 [10.5]	M10
	SK9022.1AZD/SK9023.1AZD	68290600	(Qty 7) M8 X 25 SHCS	22108250	0.65 [16.5]	M16
	SK9032.1AZD/SK9033.1AZD	68390600	(Qty 7) M10 X 30 SHCS	22110305	0.65 [16.5]	M16
	SK9042.1AZD/SK9043.1AZD	68490600	(Qty 7) M12 X 35 SHCS	22112350	0.98 [25]	M24
	SK9052.1AZD/SK9053.1AZD	68590600	(Qty 7) M12 X 35 SHCS	22112350	0.98 [25]	M24
	SK9072.1AZD	68690600	(Qty 7) M16 X 45 SHCS	22116450	0.98 [25]	M24
Helical-Worm	SK02040AZD	60190600	(Qty 4) M6 X 20 SHCS	22106205	0.41 [10.5]	M10
	SK02050AZD/SK13050AZD	60290600	(Qty 4) M8 X 20 SHCS	22108205	0.41 [10.5]	M10
	SK12063AZD/SK13063AZD	61090600	(Qty 7) M8 X 22 SHCS	22108220	0.41 [10.5]	M10
	SK12080AZD/SK13080AZD	61290600	(Qty 7) M10 X 25 SHCS	22110255	0.41 [10.5]	M10
	SK32100AZD/SK33100AZD	63290600	(Qty 7) M12 X 30 SHCS	22112300	0.65 [16.5]	M16
	SK42125AZD/SK43125AZD	64290600	(Qty 7) M12 X 30 SHCS	22112300	0.65 [16.5]	M16
MINICASE® Worm	1SM31AZD	60390600	(Qty 4) M6 X 20 SHCS	22106205	0.41 [10.5]	M10
	1SM40AZD/2SM40AZD	60490600	(Qty 4) M8 X 20 SHCS	22008206	0.41 [10.5]	M10
	1SM50AZD/2SM50AZD	60490600	(Qty 4) M8 X 20 SHCS	22008206	0.41 [10.5]	M10
	1SM63AZD/2SM63AZD	60690600	(Qty 4) M8 X 20 SHCS	22008206	0.41 [10.5]	M10
FLEXBLOC™ Worm	SK1SI31AZD	60393900	(Qty 4) M6 X 16 SHCS	22106160	0.41 [10.5]	M10
	SK1SI40AZD	60493900	(Qty 4) M8 X 22 SHCS	22108220	0.41 [10.5]	M10
	SK1SI50AZD	60593900	(Qty 4) M8 X 22 SHCS	22108220	0.41 [10.5]	M10
	SK1SI63AZD	60693900	(Qty 4) M10 X 25 SHCS	22110250	0.41 [10.5]	M10
	SK1SI75AZD	60793900	(Qty 4) M12 X 30 SHCS	22112300	0.41 [10.5]	M10

Thread Size	Tightening Torque					
	ISO Grade 8.8			ISO Grade 10.9		
(mm)	(lb-in)	(lb-ft)	(N-m)	(lb-in)	(lb-ft)	(Nm)
M6	97	8	11	142	12	16
M8	239	20	27	345	29	39
M10	469	39	53	690	58	78
M12	814	68	92	1,195	100	135
M16	2,036	170	230	2,965	247	335
M20	4,071	339	460	5,841	487	660
M24	6,992	583	790	10,178	848	1,150

90.1 HELICAL-BEVEL SHAFT-MOUNT WITH BOTTOM MOUNT TORQUE ARM (K)

1. Torque arm (K)

The preferred method of installing a shaft-mounted reducer is to support the weight of the gear unit or gearmotor assembly from the driven solid machine shaft. A torque arm is required in order to restrain the gearbox, react to the load torque, and keep the gear unit from spinning around the shaft.

Table 1 (Page 2) provides a list of Torque-Arm (K) part numbers available for the 90.1 Series Helical-Bevel gear units. The Torque Arm (K) is secured to the base of the reducer. On most sizes there is an integral resilient rubber bushing located at the fastening hole-end of the torque arm. On the larger sizes, rubber buffers are used in conjunction with the torque arm and when properly used they are applied in tandem, on either side of the torque arm lug.

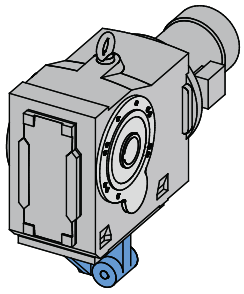

IMPORTANT NOTE

When ordering the Torque Arm (K) one can specify which side of the reducer to mount the fastening hole that bolts to the machine support bracket. Consult the appropriate NORD catalog for specific Torque Arm (K) mounting options and ordering guidelines.

2. Purpose of the rubber bushing or rubber buffers

Regardless if the Torque Arm (K) is supplied with the integral rubber bushing or whether separate rubber buffers are required, the bushing/buffers help isolate and absorb all the load forces present in the system and increase the reducer's service life by reducing cumulative torsional shock loads.

- The primary load force acts in the direction of driven shaft rotation, reacts the load torque of the reducer, and prevents the gearbox from spinning on the shaft.
- Additional forces present themselves in the direction opposite of the shaft rotation, due to the typical slight out-of-round condition present in the machine shaft. This condition is the reason most shaft mounted-reducers have a slight shaft-wobble, which is normal.

HARMFUL SITUATION

Always make sure that the Torque Arm (K) is used in conjunction with the required rubber bushing/s. Failure to do so will not properly cushion the reducer and can result in excessive binding, bearing stress, and damage to the reducer.

3. Machine support

The user must supply a suitably strong and rigid mating machine support that provides load bearing capacity on both sides of the machine support bracket.

WARNING

It is the responsibility of the machine builder to design a support bracket of adequate strength and rigidity, and supply an appropriate tightening bolt assembly. Failure to do so may result in injury caused from a damaged or broken torque-reaction assembly.

4. Installation of the right-angle reducer with torque arm (K)

A. Make sure the Torque-Arm (K) is mounted so that the machine fastening hole is on the correct side of the reducer.
   - The torque-arm can be repositioned on the as-received unit by removing the fixing screws, re-position the torque-arm in the correct location, and re-securing the fixing screws to the proper tightening torque, as indicated in Table 2 (Page 2).
   - If the torque-arm was shipped loose, position the torque-arm in the correct location on the gear unit, and secure the torque-arm with the proper fixing screws & tightening torque, as indicated in Table 2 (Page 2).

B. Install the right-angle hollow bore reducer onto the machine shaft. Line up the hole in the reducer's torque-arm with the hole in the machine's support bracket ,and temporarily hold the reducer in place

C. Properly secure the gear unit assembly to the driven shaft in an axial direction.

D. Apply thread locking compound to the end of the fixing bolt, then place the fastening bolt through the rigid machine support bracket and reducer torque-arm and loosely secure the nut onto the end of the bolt.

E. If the torque arm has an integral rubber bushing follow step F and skip steps G-H. If the torque arm uses rubber buffers skip forward to steps G-H.

F. Tighten the fixing bolt to the proper tightening torque as indicated in Table 2 (Page 2).

G. Install the rubber buffers on either side of the gear unit's torque-arm lug and place the fixing bolt through the rubber buffers and torque-arm lug and into the rigid machine support bracket.

H. Tighten the fixing bolt and nut lightly snug, until all the free-play is eliminated from the rubber buffer assembly. Then snug the fixing bolt assembly by tightening an additional ¼ to ½ turn.

WARNING

To prevent damage to the rubber buffers, avoid over-tightening.

90.1 HELICAL-BEVEL SHAFT-MOUNT WITH BOTTOM MOUNT TORQUE ARM (K)

Torque Arm (K) with integrated bushing

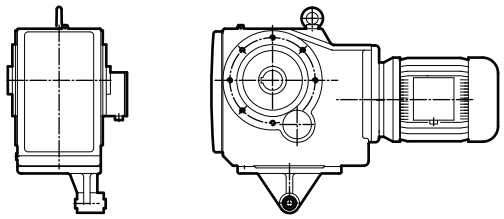

Torque Arm (K) with rubber buffer

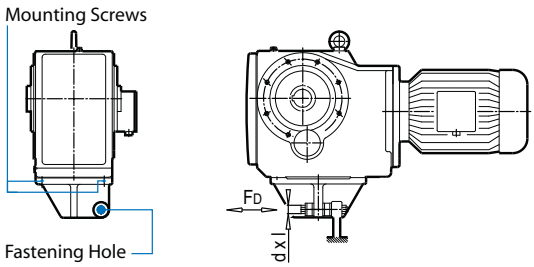

- For most all 90.1 series Helical-Bevel gear units, an optional tear-drop shaped side -mounted torque arm (D) is available. See user manual U10600.

- A metric fixing bolt is preferred for fastening the torque arm (K) to the machine support bracket.

Type	Torque Arm P/N	Reducer Hardware Hex Head Cap Screws + Lock Washer	Mounting Screw P/N	Lock Washer P/N	Rubber Buffer P/N	Fastening Hole In [mm]	Fastening Bolt Size	Bolt d x l [metric]	FD lb [N]	SFD inch [mm]
SK9012.1...K SK9013.1...K	68190600	M10 X 30 + A10 (Qty 3 Ea.)	22010300	28560106	N/A	0.41 [10.5]	M10	N/A	N/A	N/A
SK9016.1...K SK9017.1...K	68190600	M10 X 30 + A10 (Qty 3 Ea.)	22010300	28560106	N/A	0.41 [10.5]	M10	N/A	N/A	N/A
SK9022.1...K SK9023.1...K	68290610	M12 X 35 + A12 (Qty 3 Ea.)	22012350	28560126	N/A	0.65 [16.5]	M16	N/A	N/A	N/A
SK9032.1...K SK9033.1...K	68390610	M12 X 35 + A12 (Qty 3 Ea.)	22012350	28560126	N/A	0.65 [16.5]	M16	N/A	N/A	N/A
SK9042.1...K SK9043.1...K	68490610	M16 X 40 + A16 (Qty 3 Ea.)	22016400	28560166	N/A	0.98 [25]	M24	N/A	N/A	N/A
SK9052.1...K SK9053.1...K	68590620	M16 X 40 + A16 (Qty 3 Ea.)	22016450	28560166	N/A	0.98 [25]	M24	N/A	N/A	N/A
SK9072.1...K	68690620	M24 X 60 + A24 (Qty 4 Ea.)	22024060	28560246	N/A	0.98 [25]	M24	N/A	N/A	N/A
SK9082.1...K SK9082.1...SHK	68819010	M24 x 65 + A24 (Qty 4 Ea.)	22024650	22024650	29610000	1.22 [31]	M30	M30 x 260	5300 [23.64]	0.53 [13.5]
SK9086.1...K SK9086.1...SHK	68819010	M24 x 65 + A24 (Qty 4 Ea.)	22024650	22024650	29610000	1.22 [31]	M30	M30 x 260	6900 [30.77]	0.69 [17.6]
SK9092.1...SHK	68919010	M36 x 90 + A36 (Qty 4 Ea.)	22036900	28560366	29610000	1.22 [31]	M30	M30 x 260	10300 [45.71]	1.03 [26.2]
SK9096.1...SHK	69019000	M42 x 120 + A42 (Qty 4 Ea.)	22042120	28560426	29621800	1.93 [49]	M48	M48 x 550	12,500 [55.56]	1.06 [27.0]

Thread Size	Tightening torque					
	ISO Grade 8.8			ISO Grade 10.9		
[mm]	[lb-in]	[lb-ft]	[N-m]	[lb-in]	[lb-ft]	[N-m]
M10	469	39	53	690	58	78
M12	814	68	92	1,195	100	135
M16	2,036	170	230	2,965	247	335
M20	4,071	339	460	5,841	487	660
M24	6,992	583	790	10,178	848	1,150
M30	14,161	1,180	1,600	19,914	1,660	2,250
M36	24,605	2,050	2,780	34,606	2,884	3,910
M42	39,563	3,297	4,470	55,671	4,639	6,290
M48	59,300	4,942	6,700	84,436	7,036	9,540

HELICAL & BEVEL REDUCER LUBRICATION

1. Importance of proper lubrication

Proper gearbox lubrication is essential in order to reduce friction, heat, and component wear. Lubricants reduce heat and wear by inserting a protective "fluid boundary" between mating parts and preventing direct metal to metal contact. Lubricants also help prevent corrosion and oxidation, minimize foam, improve heat transfer, optimize reducer efficiency, absorb shock loads and reduce noise.

Most NORD reducers are shipped from the factory with a pre-determined oil fill level in accordance to the specified reducer size and mounting position.

2. Standard oil type

The following tables indicate the standard oil fill type used. Please see user manual U11000 for more specific information and for optional helical and bevel gear lubricants:

Serviceable Gear Units	
Helical In-line	Standard Oil Fill: ISO VG 220, Mineral Oil
Clincher Parallel-Shaft	
Right-Angle Bevel	
NORDBLOC® Series In-line	
NORDBLOC®.1 Series In-line	
Standard Series In-line	

IMPORTANT NOTE

For shipping purposes, the following large gear units are supplied without oil:
- Clincher™ Sizes SK10282, SK10382, SK11282 and SK12382
- Right-Angle Bevel Size SK9096.1

Maintenance-free / Lubricated For Life Gear Units	
Clincher™ sizes SK0182NB, SK0282NB & SK1382NB	Standard Oil Fill: ISO VG220 SHC/PAO Synthetic Oil
NORDBLOC® Sizes SK172, SK272, SK371F, SK372, SK373, SK320	

IMPORTANT NOTE

Maintenance-free units are supplied as sealed units with no vent-plug. Consult NORD prior to ordering if interested in ordering any of the above sizes as serviceable gear units.

IMPORTANT NOTE

Consult the sticker adjacent to the fill plug to determine the type of lubricant installed at the factory. Some units have special lubricants designed to operate in certain environments or intended to extend the service life or service temperature range of the lubricant. If in doubt about which lubricant is needed for a certain application, please contact NORD Gear.

3. Lubrication replacement

If the gear unit is filled with mineral oil, the lubricant should be replaced at least after every 10,000 operating hours or after every two years. If the gear unit is filled with synthetic oil, the lubricant should be replaced at least after every 20,000 operating hours or after every four years. Often gear reducers are exposed to extreme ambient conditions, hostile environments, wet conditions, or dirty and dusty operating areas. Especially in these situations, it is important to establish a condition-based oil service interval.

4. Oil viscosity

Viscosity, or the oil's resistance to shear under load, is often considered the single most important property of any gear oil.

- Often one will consider making a viscosity correction to the oil to improve the performance when operating the gear unit at low temperature or high temperature.
- In cases of extreme load conditions, gear pairs and antifriction bearings may be more susceptible to sliding or scuffing wear. In these operating conditions, it may also be beneficial to consider an increased lubrication viscosity and/or a lubrication with improved antiwear additive packages.

IMPORTANT NOTE

The user should consult with their primary lubrication supplier before considering changes in oil type or viscosity.

5. Maximum oil sump temperature limit

To prevent reducer overheating, the reducer's maximum oil sump temperature limit must not be exceeded for prolonged periods of operation (up to 3 hours continuous operation depending upon reducer size).

Oil Type	Maximum Oil Temperature Limit	
	NORD	AGMA 9005-D94
Mineral	80-85°C (176-185°F)	95°C (203°F)
Synthetic	105°C (220°F)	107°C (225°F)

IMPORTANT NOTE

Use caution when specifying gear reducers for high temperature service. If there is concern about exceeding the allowable safe operating temperatures, please consult NORD to discuss alternatives.

HELICAL & BEVEL REDUCER LUBRICATION

6. The importance of routine oil analysis

Routine oil analysis, sound lubrication practices, and good tracking of oil performance trends will help establish proper lubrication maintenance and change-out intervals. To maximize equipment reliability, NORD Gear generally recommends a condition-based lubrication maintenance program. One may take exceptions to this general recommendation on sealed-for-life or maintenance-free gear units or smaller and less costly gear units. In these instances, the replacement cost of the gear unit is often small compared to the costs associated with this type of oil analysis program.

STOP ***HARMFUL SITUATION*** **STOP**

NORD suggests replacing the gear oil if oil analysis indicates any of the following:

- Viscosity has changed by approximately 10% or more.
- Debris particles (silicon, dust, dirt or sand) exceed 25 ppm.
- Iron content exceeds 150-200 ppm.
- Water content is greater than 0.05% (500 ppm).
- The total acid number (TAN) tests indicate a significant level of oxidative break-down of the oil, and a critical reduction in performance; If the TAN number measured changes by more than 5% over the new oil, then an oil change would be recommended.

7. Mounting position and oil fill quantity

All NORD Gear reducers are shipped from the factory with a pre-determined oil fill level in accordance to the specified reducer size and mounting position. ***For additional information, please see the seperate mounting position diagrams and the corresponding oil fill quantity tables for the specified gear unit.***

The gearbox nametag will indicate the mounting position that was provided. ***For mounting orientations other than shown in the mounting position charts, please consult NORD Gear.***

STOP ***HARMFUL SITUATION*** **STOP**

Actual oil volume can vary slightly depending upon the gear case size, mounting and ratio. Prior to commissioning the reducer, check the oil-fill level using the reducer's oil-level plug and drain or add additional oil as needed.

8. Oil plug locations

All gear units are assembled with the oil fill-level, oil-drain and vent plugs installed in their proper locations, according to the specified mounting position. All standard plugs are metric and utilize sealing gaskets between the head of the plug and the reducer housing.

9. Drain and fill-level plugs

All reducer drain plugs are metric socket head cap screws. For ease of draining the used oil from the gear reducer use the socket head screw located at the lowest part of the gearbox. For ease of identification, it is NORD's standard practice to provide a hex-head screw for the fill-level plug.

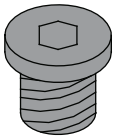

Drain Plug

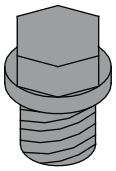

Fill Level Plug

10. Vent plug locations

Reducer venting allows for air pressure differences that occur during operation, between the inner space of the reducer and the atmosphere, while ensuring leak-free operation. The AUTOVENT™ is standard on all helical-inline gear units.



AUTOVENT™ - The AUTOVENT™ helps prevent bearing and gear damage by blocking entry of foreign material (water, dust, corrosives, etc.). The breather acts like a check valve that opens at approximately 2 psi during operation, closes tightly as the gearbox cools, and produces a slightly negative pressure. This option is perfect for humid conditions and wash-down environments, helping to maintain proper oil cleanliness, and reducing foaming and oxidation.

Open Vent - An optional open vent can be supplied on NORD reducers. The open vent will be closed upon delivery to prevent oil leakage. Before the reducer is put into operation the open vent should be activated by removing the sealing plug.

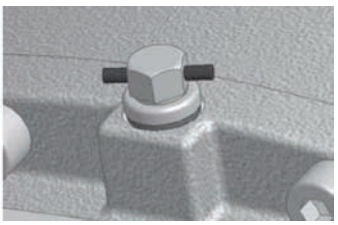

Sealed open vent

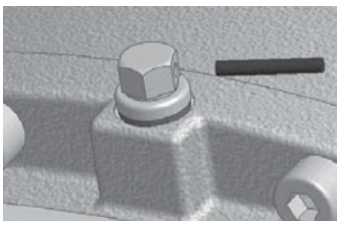

Activated open vent

Filtered Vent - NORD may offer an optional filtered vent, which allows gases to permeate, but does not allow dust and debris to pass through the vent.

HELICAL WORM REDUCER LUBRICATION

1. Importance of proper lubrication

Proper gearbox lubrication is essential in order to reduce friction, heat, and component wear. Lubricants reduce heat and wear by inserting a protective "fluid boundary" between mating parts and preventing direct metal to metal contact. Lubricants also help prevent corrosion and oxidation, minimize foam, improve heat transfer, optimize reducer efficiency, absorb shock loads and reduce noise.

NORD helical-worm reducers are shipped from the factory with a pre-determined oil fill level in accordance to the specified reducer size and mounting position.

2. Standard oil type

NORD helical worm gear reducers are filled with ISO VG 680 synthetic-hydrocarbon/polyalphaolefin (SHC/PAO) worm gear oil.

- SHC/PAO worm gear oils have good high and low temperature stability, are compatible with most paint and seal types, and are miscible with mineral oils.
- SHC/PAO worm gear oils also contain a small amount of organic ester and other antiwear (AW) packages to offer improved lubrication conditions, especially in the worm mesh, where a sideways sliding motion prevails.

Please see user manual U11020 for more specific information and for optional helical worm lubricants.

HARMFUL SITUATION

In worm gears avoid using extreme pressure (EP) gear oils containing sulfur-phosphorous chemistries; these additives can react adversely with bronze worm gears, and accelerate wear.

IMPORTANT NOTE

Consult the sticker adjacent to the fill plug to determine the type of lubricant installed at the factory. Some units have special lubricants designed to operate in certain environments or intended to extend the service life or service temperature range of the lubricant. If in doubt about which lubricant is needed for a certain application, please contact NORD Gear.

3. Lubrication replacement

The helical-worm gear oil should be replaced at least after every 20,000 operating hours or after every four years. Often gear reducers are exposed to extreme ambient conditions, hostile environments, wet conditions, or dirty and dusty operating areas. Especially in these situations, it is important to establish a condition-based oil service interval.

4. Efficiency

Helical worm gears reach efficiencies up to 92% and are generally much more efficient than worm-only gear units. However, it is important to consider the following, when using worm gears.

- Worm gears reach their peak rated efficiency, after they undergo a natural run-in process (up to 25 hours operating time at maximum rated load). Catalog published power and torque figures are based upon the rated efficiency after the run-in is complete.
- Worm gears have naturally lower startup efficiencies compared to operating efficiencies. As input speed increases the enhanced hydrodynamic effects of the oil result in less tooth friction and increased worm gear efficiency.

IMPORTANT NOTE

Worm gear reducers applied in cold temperature service, may require increased motor power for the following reasons:

- Lower operating temperatures, cause lubrication viscosity to increase in both the gearbox and in the moving areas of the driven machine.
- Worm-gears have naturally lower start-up efficiencies compared to operating efficiencies.
- In extreme cases, one might need to consider increasing the motor power and lowering the oil viscosity

5. Oil Viscosity

Viscosity, or the oil's resistance to shear under load, is often considered the single most important property of any gear oil.

- Often one will consider making a viscosity correction to the oil to improve the performance when operating the gear unit at low temperature or high temperature.
- In cases of extreme load conditions, gear pairs and antifriction bearings may be more susceptible to sliding or scuffing wear. In these operating conditions, it may also be beneficial to consider an increased lubrication viscosity and/or a lubrication with improved antiwear additive packages.

IMPORTANT NOTE

The user should consult with their primary lubrication supplier before considering changes in oil type or viscosity.

6. Maximum oil sump temperature limit

To prevent reducer overheating, the reducer's maximum oil sump temperature limit must not be exceeded for prolonged periods of operation (up to 3 hours continuous operation depending upon reducer size).

Oil Type	Maximum Oil Temperature Limit	
	NORD	AGMA 9005-D94
Synthetic	105°C (220°F)	107°C (225°F)

IMPORTANT NOTE

Use caution when specifying gear reducers for high temperature service. If there is concern about exceeding the allowable safe operating temperatures, please consult NORD to discuss alternatives.

HELICAL WORM REDUCER LUBRICATION

7. The importance of routine oil analysis

Routine oil analysis, sound lubrication practices, and good tracking of oil performance trends will help establish proper lubrication maintenance and change-out intervals. To maximize equipment reliability, NORD Gear generally recommends a condition-based lubrication maintenance program. One may take exceptions to this general recommendation on sealed-for-life or maintenance-free gear units or smaller and less costly gear units. In these instances, the replacement cost of the gear unit is often small compared to the costs associated with this type of oil analysis program.

STOP ***HARMFUL SITUATION*** **STOP**

NORD suggests replacing the gear oil if oil analysis indicates any of the following:

- Viscosity has changed by approximately 10% or more.
- Debris particles (silicon, dust, dirt or sand) exceed 25 ppm.
- Iron content exceeds 150-200 ppm.
- Water content is greater than 0.05% (500 ppm).
- The total acid number (TAN) tests indicate a significant level of oxidative break-down of the oil, and a critical reduction in performance; If the TAN number measured changes by more than 5% over the new oil, then an oil change would be recommended.

8. Mounting position and oil fill quantity

All NORD Gear reducers are shipped from the factory with a pre-determined oil fill level in accordance to the specified reducer size and mounting position. ***For additional information, please see the seperate mounting position diagrams and the corresponding oil fill quantity tables for the specified gear unit.***

The gearbox nametag will indicate the mounting position that was provided. ***For mounting orientations other than shown in the mounting position charts, please consult NORD Gear.***

STOP ***HARMFUL SITUATION*** **STOP**

Actual oil volume can vary slightly depending upon the gear case size, mounting and ratio. Prior to commissioning the reducer, check the oil-fill level using the reducer's oil-level plug and drain or add additional oil as needed.

9. Oil plug locations

All gear units are assembled with the oil fill-level, oil-drain and vent plugs installed in their proper locations, according to the specified mounting position. All standard plugs are metric and utilize sealing gaskets between the head of the plug and the reducer housing.

10. Drain and fill-level plugs

All reducer drain plugs are metric socket head cap screws. For ease of draining the used oil from the gear reducer use the socket head screw located at the lowest part of the gearbox. For ease of identification, it is NORD's standard practice to provide a hex-head screw for the fill-level plug.

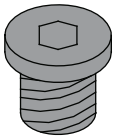

Drain Plug

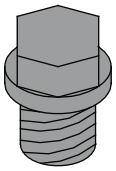

Fill Level Plug

11. Vent plug locations

Reducer venting allows for air pressure differences that occur during operation, between the inner space of the reducer and the atmosphere, while ensuring leak-free operation. The AUTOVENT™ is standard on all helical-inline gear units.



AUTOVENT™ - The AUTOVENT™ helps prevent bearing and gear damage by blocking entry of foreign material (water, dust, corrosives, etc.). The breather acts like a check valve that opens at approximately 2 psi during operation, closes tightly as the gearbox cools, and produces a slightly negative pressure. This option is perfect for humid conditions and wash-down environments, helping to maintain proper oil cleanliness, and reducing foaming and oxidation.

Open Vent - An optional open vent can be supplied on NORD reducers. The open vent will be closed upon delivery to prevent oil leakage. Before the reducer is put into operation the open vent should be activated by removing the sealing plug.

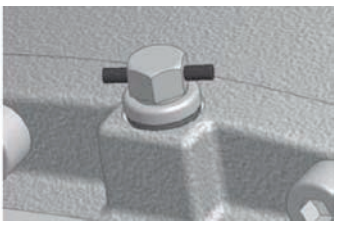

Sealed open vent

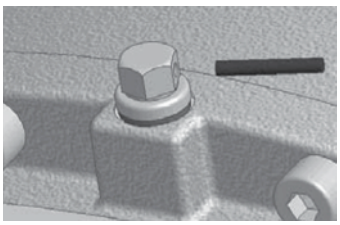

Activated open vent

Filtered Vent - NORD may offer an optional filtered vent, which allows gases to permeate, but does not allow dust and debris to pass through the vent.

MINICASE™ WORM REDUCER LUBRICATION

1. Importance of proper gearbox lubrication

Proper gearbox lubrication is essential in order to reduce friction, heat, and component wear. Lubricants reduce heat and wear by inserting a protective "fluid boundary" between mating parts and preventing direct metal to metal contact. Lubricants also help prevent corrosion and oxidation, minimize foam, improve heat transfer, optimize reducer efficiency, absorb shock loads and reduce noise.

2. Maintenance free design

NORD MINICASE™ worm gear reducers are designed to be maintenance-free and are supplied completely sealed. They are factory oil-filled with a pre-determined oil fill amount in accordance to the specified reducer size and mounting position. The synthetic lubrication used is suitable for the life of the product so the MINICASE™ is inherently maintenance free.

3. Standard oil type

NORD MINICASE™ worm gear reducers are filled with ISO VG 680 synthetic-hydrocarbon/polyalphaolefin (SHC/PAO) worm gear oil.

- SHC/PAO worm gear oils have good high and low temperature stability, are compatible with most paint and seal types, and are miscible with mineral oils.
- SHC/PAO worm gear oils also contain a small amount of organic ester and other antiwear (AW) packages to offer improved lubrication conditions, especially in the worm mesh, where a sideways sliding motion prevails.

Please see user manual U11040 for more specific information and for optional MINICASE™ worm lubricants.

HARMFUL SITUATION

In worm gears avoid using extreme pressure (EP) gear oils containing sulfur-phosphorous chemistries; these additives can react adversely with bronze worm gears, and accelerate wear.

4. Efficiency

It is important to consider the following, when using worm gears.

- Worm gears reach their peak rated efficiency, after they undergo a natural run-in process (up to 25 hours operating time at maximum rated load). Catalog published power and torque figures are based upon the rated efficiency after the run-in is complete.
- Worm gears have naturally lower startup efficiencies compared to operating efficiencies. As input speed increases the enhanced hydrodynamic effects of the oil result in less tooth friction and increased worm gear efficiency.

IMPORTANT NOTE

Worm gear reducers applied in cold temperature service, may require increased motor power for the following reasons:

- Lower operating temperatures, cause lubrication viscosity to increase in both the gearbox and in the moving areas of the driven machine.
- Worm-gears have naturally lower start-up efficiencies compared to operating efficiencies.
- In extreme cases, one might need to consider increasing the motor power and/or lowering the oil viscosity.

5. Oil Viscosity

Viscosity, or the oil's resistance to shear under load, is often considered the single most important property of any gear oil.

- Often one will consider making a viscosity correction to the oil to improve the performance when operating the gear unit at low temperature or high temperature.
- In cases of extreme load conditions, gear pairs and antifriction bearings may be more susceptible to sliding or scuffing wear. In these operating conditions, it is also may be beneficial to consider an increased lubrication viscosity and/or a lubrication with improved antiwear additive packages.

IMPORTANT NOTE

The user should consult with their primary lubrication supplier before considering changes in oil type or viscosity.

6. Maximum oil sump temperature limit

To prevent reducer overheating, the reducer's maximum oil sump temperature limit must not be exceeded for prolonged periods of operation (up to 3 hours continuous operation depending upon reducer size).

Oil Type	Maximum Oil Temperature Limit	
	NORD	AGMA 9005-D94
Synthetic	105°C (220°F)	107°C (225°F)

IMPORTANT NOTE

Use caution when specifying gear reducers for high temperature service. If there is concern about exceeding the allowable safe operating temperatures, please consult NORD to discuss alternatives.

FLEXBLOC™ WORM REDUCER LUBRICATION

1. Importance of proper gearbox lubrication

Proper gearbox lubrication is essential in order to reduce friction, heat, and component wear. Lubricants reduce heat and wear by inserting a protective "fluid boundary" between mating parts and preventing direct metal to metal contact. Lubricants also help prevent corrosion and oxidation, minimize foam, improve heat transfer, optimize reducer efficiency, absorb shock loads and reduce noise.

2. FLEXBLOC™ - Sealed or vented options available

FLEXBLOC™ worm gear modules are designed to operate sealed or vented. They are factory oil filled for any mounting configuration with a pre-determined oil level (See User Manual U13300). There are four factors that need to be considered when deciding to use a sealed unit versus a vented unit.

A. If the duty cycle is intermittent, the run times are short, and any build-up of internal pressure or temperature is low to modest, the sealed unit option can be used.

B. If running continuous under moderate to high load, worm gears generate moderate to high operating temperature and a build-up of internal pressure. In these instances a vented option is usually suggested.

C. By design radial shaft seals produce a hydrodynamic pumping action to help push lubricant back into the gear unit. This causes the unit to ingest some air. Tests have shown that this only causes a small pressure increase (1-2 psi) but when combined with "factor B" this minimal pressure can seem significant.

D. When the environment is contaminated with water, dirt, etc., which can be ingested into the breather, increased wear of bearings and gearing, and lubrication breakdown, can result. In these instances the sealed option or an AUTOVENT™ should be considered.

Typical Execution – Sealed maintenance free design

The FLEXBLOC™ is supplied completely sealed and the unit's lubrication is considered suitable for the life of the product, so it is inherently maintenance free.

Optional Execution – A Field Installable Vent Kit Is Ordered

When ordered, NORD can provide field installable vent kit option for most all FLEXBLOC™ Gear units, with exception to the smallest SK1SI31 unit.

Open Vent Kit	P/N 60693500
Autovent™:	P/N 22008005 (vent) + P/N 25308120 (gasket)

3. Standard oil type

FLEXBLOC™ worm gear reducers are oil-filled as follows:

- FLEXBLOC™ inch hollow-bore modules are factory-filled with an ISO VG220 food grade synthetic polyglycol lubricant (suitable for NSF-H1 incidental contact).
- FLEXBLOC™ metric hollow-bore modules are factory filled with an ISO VG220 polyglycol lubricant (unless special ordered).

Please see user manual U11060 for more specific information concerning FLEXBLOC™ lubricants.

4. Efficiency

It is important to consider the following, when ordering worm gears.

- Worm gears reach their peak rated efficiency, after they undergo a natural run-in process (up to 25 hours operating time at maximum rated load). Catalog published power and torque figures are based upon the rated efficiency after the run-in is complete.
- Worm gears have naturally lower startup efficiencies compared to operating efficiencies. As input speed increases the enhanced hydrodynamic effects of the oil result in less tooth friction and increased worm gear efficiency.

IMPORTANT NOTE

Worm gear reducers applied in cold temperature service, may require increased motor power for the following reasons:

- Lower operating temperatures, cause lubrication viscosity to increase in both the gearbox and in the moving areas of the driven machine.
- Worm-gears have naturally lower start-up efficiencies compared to operating efficiencies.
- In extreme cases, one might need to consider increasing the motor power and lowering the oil viscosity

5. Oil Viscosity

Viscosity, or the oil's resistance to shear under load, is often considered the single most important property of any gear oil.

- Often one will consider making a viscosity correction to the oil to improve the performance when operating the gear unit at low temperature or high temperature.
- In cases of extreme load conditions, gear pairs and antifriction bearings may be more susceptible to sliding or scuffing wear. In these operating conditions, it also may be beneficial to consider an increased lubrication viscosity and/or a lubrication with improved antiwear additive packages.

IMPORTANT NOTE

The user should consult with their primary lubrication supplier before considering changes in oil type or viscosity.

6. Maximum oil sump temperature limit

To prevent reducer overheating, the reducer's maximum oil sump temperature limit must not be exceeded for prolonged periods of operation (up to 3 hours continuous operation depending upon reducer size).

Oil Type	Maximum Oil Temperature Limit	
	NORD	AGMA 9005-D94
Synthetic	105°C (220°F)	107°C (225°F)

IMPORTANT NOTE

Use caution when specifying gear reducers for high temperature service. If there is concern about exceeding the allowable safe operating temperatures, please consult NORD to discuss alternatives.

NORD Gear Limited
Toll Free in Canada: 800.668.4378

NORD Gear Corporation
Toll Free in the United States: 888.314.6673

EXPANSION CHAMBERS INSTALLATION & MAINTENANCE MANUAL

Installation Instructions

Sometimes NORD requires the use of an oil expansion chamber when the motor or reducer input is mounted vertically. Consult your NORD catalog for additional information and application considerations.

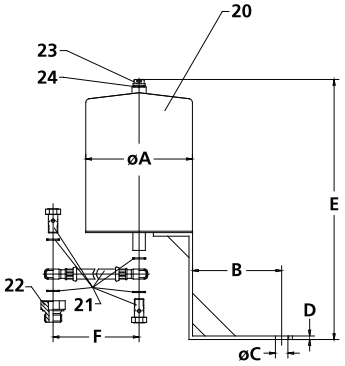

1. Secure the gear reducer in the proper mounting position for the application and remove the vent plug from the gear reducer. The hose assembly kit (21) will be fitted to the reducer using the housing port provided.
2. When using the larger 2.7 and 5.4 liter chambers, screw the adapter fitting (22) into the reducer housing port. Use all sealing gaskets provided.
3. Mount the overflow tank (20) at the highest location from the reducer, as permitted by the hose assembly kit (21). Typical mounting configurations are represented below. Use one of the input cover's mounting bolts, to mount the chamber support leg to the reducer.

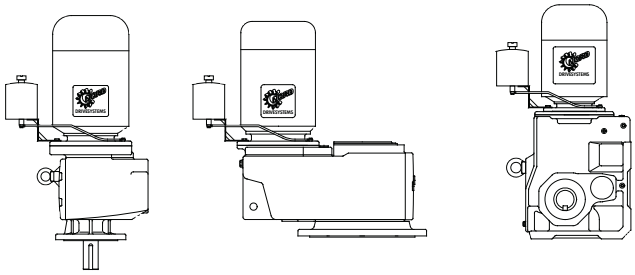

4. Be sure to use the proper fittings. Assemble one end of the vent-hose assembly (21) to bottom of the chamber and one-end to the reducer.
5. Secure the vent-plug (23) and gasket (24) that is supplied with the kit to the top of the expansion chamber.

HARMFUL SITUATION

Remove the protective "rubber element" from the supplied vent prior to use so that an open-vent is formed on top of the overflow tank. Avoid using a pressurized AUTOVENT™ breather on the overflow tank since this may create an undesired pressure-vacuum in the overflow tank.

Expansion Chamber Kit Dimensions & Parts List

Kit Part Number: 28390390 - 0.7 Liter Oil Expansion Chamber

Kit P/N	Ø A	B	Ø C	D	E	F	Units
28390390 (0.7 Liter)	3.94	1.97	0.53	0.20	8.50	19.69	inch
	100	50	13.5	5	216	500	mm

Item	Part Number	Description
20	28300390	Overflow Tank - 0.7 Liter
21	28310020	Flexible Vent Hose Assembly - Includes: Hose, metal gaskets & 2 Hollow Bolts (1 Bolt. - M12 X 1.5 and 1 Pc. - G1/4)
22	None	Adapter Fitting
23	22012004	Normal Style Vent Plug (M12 X 1.5, DIN 910)
24	25312150	Vent Plug Gasket (12 X 15.5 X 1.5)

Kit Part Number: 28390400 - 2.7 Liter Oil Expansion Chamber

Kit P/N	Ø A	B	Ø C	D	E	F	Units
28390400 (2.7 Liter)	5.91	4.92	0.69	0.20	15.22	27.56	inch
	150	125	17.5	5	386.5	700	mm

Item	Part Number	Description
20	28300400	Overflow Tank - 2.7 Liter
21	28310030	Flexible Vent Hose Assy - Includes: Hose, metal gaskets & 2 Hollow Bolts (2 Pcs. - G1/4)
22	22024030	Adapter Fitting (M24 X 1.5 to G1/4)
23	22012004	Normal Style Vent Plug (M12 X 1.5, DIN 910)
24	25312150	Vent Plug Gasket (12 X 15.5 X 1.5)

Kit Part Number: 28390400 - 2.7 Liter Oil Expansion Chamber

Kit P/N	Ø A	B	Ø C	D	E	F	Units
28390410 (5.4 Liter)	7.09	3.54	0.69	0.20	15.18	31.50	inch
	180	90	17.5	5	385.5	800	mm

Item	Part Number	Description
20	28300410	Overflow Tank - 5.4 Liter
21	28310040	Flexible Vent Hose Assy - Includes: Hose, metal gaskets & 2 Hollow Bolts (2 Pcs. - G1/4)
22	22030030	Adapter Fitting (M30 X 1.5 to G1/4)
23	22012004	Normal Style Vent Plug (M12 X 1.5, DIN 910)
24	25312150	Vent Plug Gasket (12 X 15.5 X 1.5)

Please see page 2 for gearbox compatability

Expansion Chamber Compatability Chart

Helical In-line	NORDBLOC™	NORDBLOC.1™	Clincher™	Helical-Bevel	Part Number	[lb]
SK 42/43 SK 52/53 SK 63	SK472/473 SK572/573 SK672/673 SK772/773 SK872/873 SK972/973	SK572.1/573.1* SK672.1/673.1*	SK 4282/4382 SK 5282/5382 SK 6382	SK 9042.1/9043.1 SK 9052.1/9053.1	28390390	11.0
SK 62 SK 72/73			SK 6282 SK 7282/7382	SK 9072.1 SK 9082.1	28390400	13.2
SK 82/83 SK 92/93 SK 102/103			SK 8282/8382	SK 9086.1 SK 9092.1	28390410	15.4

* Need to additionally order part #28390380 which is sub-assembly shown below.

Sub-Assembly P/N 28390380 for NORDBLOC®.1 gear units with M10x1 air vent.

❶	❷	❸	❹
			
1x DIN 7643 M10x1 283 00380	1x DIN 7603A Cu 10x16x1 253 10166	1x Ring 10x14x5 283 00370	1xDIN 9021 ø8,4 227 10840

Assembly of the expansion unit at the gear unit. Types SK 572.1/573.1, SK 672.1/673.1



Vent Hose Sub-Assembly

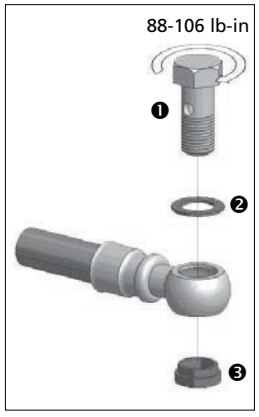

❹ For motor sizes 63, 71, 80, 90, 100 & 112

• Motor attachment bolt

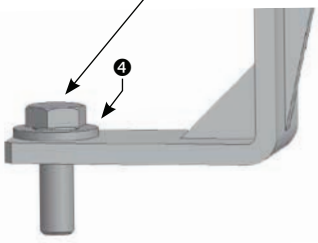

Motor Sizes 63, 71 & 80:
Assembly vent-hose to port as shown.

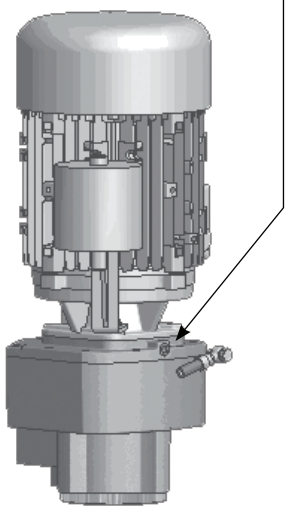

Motor Sizes 90,100 & 112:
Assembly vent-hose to port as shown.

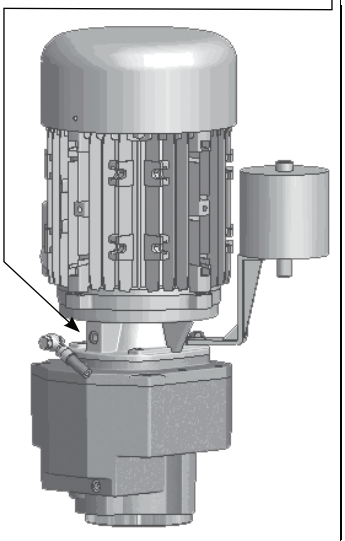

HELICAL & BEVEL REDUCER LUBRICATION TYPES

Lubrication Tables – Helical and Bevel Gear Units

Standard Oil Lubricants

ISO Viscosity	Oil Type	Ambient Temperature Range	Manufacturer Brand / Type
VG220	MIN-EP	-5 to 40 °C (23 to 104 °F)	Mobil / Spartan EP220 ♦ ❶
	PAO	-35 to 50 °C (-31 to 122 °F)	Mobil / SHC630 ♦ ❷
	FG	-5 to 40 °C (23 to 104 °F)	Shell / FM220 ♦

Optional Oil Lubricants

ISO Viscosity	Oil Type	Ambient Temperature Range	Manufacturer Brand / Type
VG460	PAO	-35 to 80 °C (-31 to 176 °F)	Mobil / SHC634
	FG-PAO	-40 to 80 °C (-40 to 176 °F)	Shell / Cassida GL460
VG220	FG-PAO	-40 to 50 °C (-40 to 122 °F)	Shell / Cassida GL220
VG150	PAO	-40 to 25 °C (-40 to 77 °F)	Mobil / SHC629
	FG-PAO	-45 to 25 °C (-49 to 77 °F)	Shell / Cassida GL220

Grease Options (applied to greased bearings and seal cavities)

NLGI Grade	Grease Type / Thickener	Ambient Temperature Range	Manufacturer Brand / Type
NLGI 2	Standard / Li-Complex	-30 to 60 °C (-22 to 140 °F)	Shell Albida EP 2 ♦ ❶
	High-Temperature / Polyurea	-25 to 80 °C (-13 to 176 °F)	Mobil Polyrex EP 2 ♦ ❷
	Food-Grade / Al-Complex	-25 to 40 °C (-13 to 104 °F)	Mobil Grease FM222 ♦

♦ Stocked Lubricants

❶ Standard product on serviceable gear units

❷ Standard product on maintenance free gear units

IMPORTANT NOTES

- The "Ambient Temperature" is intended to be an operation guideline based upon the typical properties of all the lubricant. The viscosity and other properties of the lubricant change based upon load, speed, ambient conditions, and reducer operating temperatures. The user should consult with their lubrication supplier & NORD gear before considering changes in oil type or viscosity.
- To prevent reducer overheating, observe the maximum operating oil temperature limits:
  Mineral Oil: 80-85 °C (176 – 180 °F).
  Synthetic Oil: 105 °C (225 °F).
- In the following instances, please consult NORD for specific recommendations:
  - √ Gear units will operate in high ambient temperature conditions exceeding 40 °C (104 °F).
  - √ Gear units will operate in cold ambient temperature conditions approaching 0 °C (32 °F) or lower.
  - √ Lower than an ISO VG100 viscosity oil is being considered for a cold-temperature service.
  - √ Fluid grease is required for lubricating the gear unit.
- Observe the general lubrication guidelines outlined in user manual U10750.

Oil Formulation Codes

MIN-EP - Mineral Oil with EP Additive
PAO-EP - Synthetic Polyalphaolefin Oil with EP Additive
PAO - Synthetic Polyalphaolefin Oil
PG - Synthetic Polyglycol Oil
FG - Food-Grade Oil
FG-PAO - Food-Grade, Synthetic Poyalphaolefin Oil
FG-PG - Food-Grade, Synthetic Polyglycol Oil

Lubrication Notes

- Avoid using (EP) gear oils in worm gears that contain sulfur-phosphorous chemistries, as these additives can react adversely with bronze worm gears and accelerate wear.
- Food grade lubricants must be in compliance with FDA 212 CFR 178.3570 and qualify as a NSF-H1 lubricant. Please consult with lubrication manufacturer for more information.
- When making a lubrication change, check with the lubrication supplier to assure compatibility and to obtain recommended cleaning or flushing procedures.
- Do not to mix different oils with different additive packages or different base oil formulation types. Polyglycol (PG) oils are not miscible with other oil types and should never be mixed with mineral oil or polyalphaolefin (PAO) synthetic oil.

NORD Gear Limited
Toll Free in Canada: 800.668.4378

NORD Gear Corporation
Toll Free in the United States: 888.314.6673

HELICAL & BEVEL REDUCER LUBRICATION TYPES

Oil Cross-reference Chart

ISO Viscosity	Oil Type	Ambient Temperature Range	Mobil	Shell	Castrol	FUCHS	KLÜBER LUBRICATION
VG460	MIN-EP	0 to 40 °C (32 to 104 °F)	Spartan EP460	Omala 460	Alpha SP460	Renolin EP460	Klüberoil GEM 1-460N
	PAO-EP	-20 to 80 °C (-4 to 176 °F)	Mobilgear SHC460	Omala HD460	Alphasyn EP460	Gearmaster SYN460/NA	Klübersynth EG 4-460
	PAO	-20 to 80 °C (-4 to 176 °F)	Mobil SHC634	Omala RL460	Alphasyn T460	Geralyn SF460	Klübersynth GEM 4-460N
	PG	-20 to 80 °C (-4 to 176 °F)	Mobil Glygoyle 460	Tivela S460	Alphasyn PG460	Renolin PG460	Klübersynth GH 6-460
	FG-PAO	-20 to 80 °C (-4 to 176 °F)	N/A	Cassida GL460	N/A	Geralyn SF460	Klüberoil 4 UH 1-460N
	FG-PG	-20 to 80 °C (-4 to 176 °F)	Mobil Glygoyle 460	Cassida WG460	N/A	N/A	Klübersynth UH 1-460
VG220	MIN-EP	0 to 40 °C (32 to 104 °F)	Spartan EP220	Omala 220	Alpha SP220	Renolin EP220	Klüberoil GEM 1-220N
	PAO-EP	-30 to 60 °C (-22 to 140 °F)	Mobilgear SHC220	Omala HD220	Alphasyn EP220	Gearmaster SYN220/NA	Klübersynth EG 4-220
	PAO	-20 to 50 °C (-4 to 122 °F)	Mobil SHC630	Omala RL220	Alphasyn T220	Geralyn SF220	Klübersynth GEM 4-220N
	PG	-25 to 60 °C (-13 to 140 °F)	Mobil Glygoyle 220	Tivela S220	Alphasyn PG220	Renolin PG220	Klübersynth GH 6-220
	FG	0 to 40 °C (32 to 104 °F)	Mobil DTE FM 220	Shell FM220	N/A	Geralyn AW220	N/A
	FG-PAO	-20 to 50 °C (-4 to 122 °F)	N/A	Cassida GL220	N/A	Geralyn SF220	Klüberoil 4 UH 1-220N
	FG-PG	-25 to 60 °C (-13 to 140 °F)	Mobil Glygoyle 220	Cassida WG220	N/A	N/A	Klübersynth UH 1-220
VG150	MIN-EP	0 to 40 °C (32 to 104 °F)	Spartan EP150	Omala 150	Alpha SP150	Renolin EP150	Klüberoil GEM 1-150N
	PAO-EP	-30 to 25 °C (-22 to 77 °F)	Mobilgear SHC150	Omala HD150	Alphasyn EP150	Gearmaster SYN150/NA	Klübersynth EG 4-150
	PAO	-25 to 25 °C (-13 to 77 °F)	Mobil SHC629	Omala RL150	Alphasyn T150	Geralyn SF150	Klübersynth GEM 4-150N
	PG	-25 to 25 °C (-13 to 77 °F)	Mobil Glygoyle 150	Tivela S150	Alphasyn PG150	Renolin PG150	Klübersynth GH 6-150
	FG-PAO	-25 to 25 °C (-13 to 77 °F)	N/A	Cassida GL150	N/A	Geralyn SF150	Klüberoil 4 UH 1-150N
	FG-PG	-25 to 25 °C (-13 to 77 °F)	Mobil Glygoyle 150	N/A	N/A	N/A	Klübersynth UH 1-150

Low-end service temperature limit may vary for a specific lubricant; Please also see the important notes on Page 1.

HELICAL WORM REDUCER LUBRICATION TYPES

Lubrication Tables – Helical Worm Gear Units

Standard Oil Lubricants

ISO Viscosity	Oil Type	Ambient Temperature Range	Manufacturer Brand / Type
VG680	PAO	-30 to 60 °C (-22 to 140 °F)	Mobil / SHC636 ♦ ❶
	FG-PAO	-30 to 60 °C (-22 to 140 °F)	Shell / Cassida GL680 ♦ ❷

Optional Oil Lubricants

ISO Viscosity	Oil Type	Ambient Temperature Range	Manufacturer Brand / Type
VG460	PAO	-35 to 50 °C (-31 to 122 °F)	Mobil / SHC634
	FG-PAO	-40 to 50 °C (-40 to 122 °F)	Shell / Cassida GL460

Grease Options (applied to greased bearings and seal cavities)

NLGI Grade	Grease Type / Thickener	Ambient Temperature Range	Manufacturer Brand / Type
NLGI 2	Standard / Li-Complex	-30 to 60 °C (-22 to 140 °F)	Shell Albida EP 2 ♦ ❶
	High-Temperature / Polyurea	-25 to 80 °C (-13 to 176 °F)	Mobil Polyrex EP 2 ♦ ❷
	Food-Grade / Al-Complex	-25 to 40 °C (-13 to 104 °F)	Mobil Grease FM222 ♦

♦ **Stocked Lubricants**

❶ Standard product on serviceable gear units

❷ Standard product on maintenance free gear units

IMPORTANT NOTES

- The "Ambient Temperature" is intended to be an operation guideline based upon the typical properties of all the lubricant. The viscosity and other properties of the lubricant change based upon load, speed, ambient conditions, and reducer operating temperatures. The user should consult with their lubrication supplier & NORD Gear before considering changes in oil type or viscosity.
- To prevent reducer overheating, observe the maximum operating oil temperature limits:

  Synthetic Oil: 105 °C (225 °F).
- In the following instances, please consult NORD for specific recommendations:

√ Gear units will operate in high ambient temperature conditions exceeding 40 °C (104 °F).

√ Gear units will operate in cold ambient temperature conditions approaching 0 °C (32 °F) or lower.

√ Lower than an ISO VG100 viscosity oil is being considered for a cold-temperature service.

√ Fluid grease is required for lubricating the gear unit.

- Observe the general lubrication guidelines outlined in user manual U10770.

Oil Formulation Codes

PAO - Synthetic Polyalphaolefin Oil
PG - Synthetic Polyglycol Oil
FG-PAO - Food-Grade, Synthetic Poyalphaolefin Oil
FG-PG - Food-Grade, Synthetic Polyglycol Oil

Lubrication Notes

- Avoid using (EP) gear oils in worm gears that contain sulfur-phosphorous chemistries, as these additives can react adversely with bronze worm gears and accelerate wear.
- Food grade lubricants must be in compliance with FDA 212 CFR 178.3570 and qualify as a NSF-H1 lubricant. Please consult with lubrication manufacturer for more information.
- When making a lubrication change, check with the lubrication supplier to assure compatibility and to obtain recommended cleaning or flushing procedures.
- Do not to mix different oils with different additive packages or different base oil formulation types. Polyglycol (PG) oils are not miscible with other oil types and should never be mixed with mineral oil or polyalphaolefin (PAO) synthetic oil.

HELICAL WORM REDUCER LUBRICATION TYPES

Oil Cross-reference Chart

ISO Viscosity	Oil Type	Ambient Temperature Range	Mobil	Shell	Castrol	FUCHS	KLÜBER LUBRICATION
VG680	PAO	-20 to 60 °C (-4 to 140 °F)	Mobil SHC636	Omala RL680	N/A	Geralyn SF680	Klübersynth GEM 4-680N
	PG	-20 to 60 °C (-4 to 140 °F)	Mobil Glygoyle 680	Tivela S680	N/A	Renolin PG680	Klübersynth GH 6-680
	FG-PAO	-20 to 60 °C (-4 to 140 °F)	N/A	Cassida GL680	N/A	Geralyn SF680	Klüberoil 4 UH 1-680N
	FG-PG	-20 to 60 °C (-4 to 140 °F)	Mobil Glygoyle 680	Cassida WG680	N/A	N/A	Klübersynth UH1 6-680
VG460	PAO	-20 to 50 °C (-4 to 122 °F)	Mobil SHC634	Omala RL460	Alphasyn T460	Geralyn SF460	Klübersynth GEM 4-640N
	PG	-20 to 50 °C (-4 to 122 °F)	Mobil Glygoyle 460	Tivela S460	Alphasyn PG460	Renolin PG460	Klübersynth GH 6-460
	FG-PAO	-20 to 50 °C (-4 to 122 °F)	Mobil Cibus SHC 460	Cassida GL460	N/A	Geralyn SF460	Klüberoil 4 UH 1-460N
	FG-PG	-20 to 50 °C (-4 to 122 °F)	Mobil Glygoyle 460	Cassida WG460	N/A	N/A	Klübersynth UH 1-460

Low-end service temperature limit may vary for a specific lubricant; Please also see the important notes on Page 1.

MINICASE™ WORM REDUCER LUBRICATION TYPES

Lubrication Tables – MINICASE™ Worm Gear Units

Standard Oil Lubricants

ISO Viscosity	Oil Type	Ambient Temperature Range	Manufacturer Brand / Type
VG680	PAO	-30 to 60 °C (-22 to 140 °F)	Mobil / SHC636 ♦
	FG-PAO	-30 to 60 °C (-22 to 140 °F)	Shell / Cassida GL680 ♦

Optional Oil Lubricants

ISO Viscosity	Oil Type	Ambient Temperature Range	Manufacturer Brand / Type
VG460	PAO	-35 to 50 °C (-31 to 122 °F)	Mobil / SHC634
	FG-PAO	-40 to 50 °C (-40 to 122 °F)	Shell / Cassida GL460

Grease Options (applied to greased bearings and seal cavities)

NLGI Grade	Grease Type / Thickener	Ambient Temperature Range	Manufacturer Brand / Type
NLGI 2	Standard / Li-Complex	-30 to 60 °C (-22 to 140 °F)	Shell Albida EP 2 ♦ (standard grease)
	High-Temperature / Polyurea	-25 to 80 °C (-13 to 176 °F)	Mobil Polyrex EP 2 ♦
	Food-Grade / Al-Complex	-25 to 40 °C (-13 to 104 °F)	Mobil Grease FM222 ♦

♦ **Stocked Lubricants**

IMPORTANT NOTES

- The "Ambient Temperature" is intended to be an operation guideline based upon the typical properties of all the lubricant. The viscosity and other properties of the lubricant change based upon load, speed, ambient conditions, and reducer operating temperatures. The user should consult with their lubrication supplier & NORD Gear before considering changes in oil type or viscosity.
- To prevent reducer overheating, observe the maximum operating oil temperature limits:

  Synthetic Oil: 105 °C (225 °F).
- In the following instances, please consult NORD for specific recommendations:

√ Gear units will operate in high ambient temperature conditions exceeding 40 °C (104 °F).
√ Gear units will operate in cold ambient temperature conditions approaching 0 °C (32 °F) or lower.
√ Lower than an ISO VG100 viscosity oil is being considered for a cold-temperature service.
√ Fluid grease is required for lubricating the gear unit.

- Observe the general lubrication guidelines outlined in user manual U10790.

Oil Formulation Codes

PAO - Synthetic Polyalphaolefin Oil
PG - Synthetic Polyglycol Oil
FG-PAO - Food-Grade, Synthetic Poyalphaolefin Oil
FG-PG - Food-Grade, Synthetic Polyglycol Oil

Lubrication Notes

- Avoid using (EP) gear oils in worm gears that contain sulfur-phosphorous chemistries, as these additives can react adversely with bronze worm gears and accelerate wear.
- Food grade lubricants must be in compliance with FDA 212 CFR 178.3570 and qualify as a NSF-H1 lubricant. Please consult with lubrication manufacturer for more information.
- When making a lubrication change, check with the lubrication supplier to assure compatibility and to obtain recommended cleaning or flushing procedures.
- Do not to mix different oils with different additive packages or different base oil formulation types. Polyglycol (PG) oils are not miscible with other oil types and should never be mixed with mineral oil.

MINICASE™ WORM REDUCER LUBRICATION TYPES

Oil Cross-reference Chart

ISO Viscosity	Oil Type	Ambient Temperature Range	Mobil	Shell	Castrol	FUCHS	KLÜBER LUBRICATION
VG680	PAO	-20 to 60 °C (-4 to 140 °F)	Mobil SHC636	Omala RL680	N/A	Geralyn SF680	Klübersynth GEM 4-680N
	PG	-20 to 60 °C (-4 to 140 °F)	Mobil Glygoyle 680	Tivela S680	N/A	Renolin PG680	Klübersynth GH 6-680
	FG-PAO	-20 to 60 °C (-4 to 140 °F)	N/A	Cassida GL680	N/A	Geralyn SF680	Klüberoil 4 UH 1-680N
	FG-PG	-20 to 60 °C (-4 to 140 °F)	Mobil Glygoyle 680	Cassida WG680	N/A	N/A	Klübersynth UH1 6-680
VG460	PAO	-20 to 50 °C (-4 to 122 °F)	Mobil SHC634	Omala RL460	Alphasyn T460	Geralyn SF460	Klübersynth GEM 4-640N
	PG	-20 to 50 °C (-4 to 122 °F)	Mobil Glygoyle 460	Tivela S460	Alphasyn PG460	Renolin PG460	Klübersynth GH 6-460
	FG-PAO	-20 to 50 °C (-4 to 122 °F)	Mobil Cibus SHC 460	Cassida GL460	N/A	Geralyn SF460	Klüberoil 4 UH 1-460N
	FG-PG	-20 to 50 °C (-4 to 122 °F)	Mobil Glygoyle 460	Cassida WG460	N/A	N/A	Klübersynth UH 1-460

Low-end service temperature limit may vary for a specific lubricant; Please also see the important notes on Page 1.

FLEXBLOC™ WORM REDUCER LUBRICATION TYPES

Lubrication Tables – FLEXBLOC™ Worm Gear Units

Standard Oil Lubricants

NORD uses a semi automated assembly process to produce the FLEXBLOC™ gear unit assemblies. During this process the gear units are factory filled in accordance with the following table.

ISO Viscosity	Unit Type	Oil Type	Ambient Temperature Range	Manufacturer Brand / Type
VG220	Inch	FG-PG	-20 to 60 °C (-4 to 140 °F)	Klüber / Klübersynth UH 1-220
	Metric	PG	-20 to 60 °C (-4 to 140 °F)	Klüber / Klübersynth GH 6-220

Please consult with NORD prior to considering any optional lubricants for the FLEXBLOC™ gear unit

IMPORTANT NOTES

- The "Ambient Temperature" is intended to be an operation guideline based upon the typical properties of the lubricant. The viscosity and other properties of the lubricant change based upon load, speed, ambient conditions, and reducer operating temperatures. The user should consult with their lubrication supplier before considering changes in oil type or viscosity.
- To prevent reducer overheating, observe the maximum operating oil temperature limits:
  Synthetic Oil: 105 °C (225 °F).
- In the following instances, please consult NORD for specific recommendations:

√ Gear units will operate in high ambient temperature conditions exceeding 40 °C (104 °F).
√ Gear units will operate in cold ambient temperature conditions approaching 0 °C (32 °F) or lower.
√ Lower than an ISO VG100 viscosity oil is being considered for a cold-temperature service.
√ Fluid grease is required for lubricating the gear unit.

- Observe the general lubrication guidelines outlined in user manual U10810.

Oil Formulation Codes

PAO - Synthetic Polyalphaolefin Oil
PG - Synthetic Polyglycol Oil
FG-PAO - Food-Grade, Synthetic Poyalphaolefin Oil
FG-PG - Food-Grade, Synthetic Polyglycol Oil

Lubrication Notes

- Avoid using (EP) gear oils in worm gears that contain sulfur-phosphorous chemistries, as these additives can react adversely with bronze worm gears and accelerate wear.
- Food grade lubricants must be in compliance with FDA 212 CFR 178.3570 and qualify as a NSF-H1 lubricant. Please consult with lubrication manufacturer for more information.
- When making a lubrication change, check with the lubrication supplier to assure compatibility and to obtain recommended cleaning or flushing procedures.
- Do not to mix different oils with different additive packages or different base oil formulation types. Polyglycol (PG) oils are not miscible with other oil types and should never be mixed with mineral oil.

FLEXBLOC™ WORM REDUCER LUBRICATION TYPES

Oil Cross-reference Chart

ISO Viscosity	Oil Type	Ambient Temperature Range	Mobil	Shell	Castrol	FUCHS	KLÜBER LUBRICATION
VG680	PAO	-20 to 60 °C (-4 to 140 °F)	Mobil SHC636	Omala RL680	N/A	Geralyn SF680	Klübersynth GEM 4-680N
	PG	-20 to 60 °C (-4 to 140 °F)	Mobil Glygoyle 680	Tivela S680	N/A	Renolin PG680	Klübersynth GH 6-680
	FG-PAO	-20 to 60 °C (-4 to 140 °F)	N/A	Cassida GL680	N/A	Geralyn SF680	Klüberoil 4 UH 1-680N
	FG-PG	-20 to 60 °C (-4 to 140 °F)	Mobil Glygoyle 680	Cassida WG680	N/A	N/A	Klübersynth UH1 6-680
VG460	PAO	-20 to 50 °C (-4 to 122 °F)	Mobil SHC634	Omala RL460	Alphasyn T460	Geralyn SF460	Klübersynth GEM 4-640N
	PG	-20 to 50 °C (-4 to 122 °F)	Mobil Glygoyle 460	Tivela S460	Alphasyn PG460	Renolin PG460	Klübersynth GH 6-460
	FG-PAO	-20 to 50 °C (-4 to 122 °F)	Mobil Cibus SHC 460	Cassida GL460	N/A	Geralyn SF460	Klüberoil 4 UH 1-460N
	FG-PG	-20 to 50 °C (-4 to 122 °F)	Mobil Glygoyle 460	Cassida WG460	N/A	N/A	Klübersynth UH 1-460
VG220	PAO	-20 to 50 °C (-4 to 122 °F)	Mobil SHC630	Omala RL220	Alphasyn T220	Geralyn SF220	Klübersynth GEM 4-220N
	PG	-25 to 60 °C (-13 to 140 °F)	Mobil Glygoyle 220	Tivela S220	Alphasyn PG220	Renolin PG220	Klübersynth GH 6-220
	FG-PAO	-20 to 50 °C (-4 to 122 °F)	Mobil Cibus SHC220	Cassida GL220	N/A	Geralyn SF220	Klüberoil 4 UH 1-220N
	FG-PG	-25 to 60 °C (-13 to 140 °F)	Mobil Glygoyle 220	Cassida WG220	N/A	N/A	Klübersynth UH 1 6-220

Low-end service temperature limit may vary for a specific lubricant; Please also see the important notes on Page 1.

STANDARD IN-LINE FOOT MOUNTED OIL FILL QUANTITIES

Standard In-line foot mounted lubrication

All Standard In-line reducers are shipped from NORD with a pre-determined oil fill level in accordance to the specified reducer size and mounting position. When filling these gear units the oil must be measured and added until one establishes the proper fill quantity. For additional information please refer to the "Oil & vent plug locations" documentation for your specified gear unit

STOP ***HARMFUL SITUATION*** **STOP**

For mounting orientations other than shown please consult NORD Gear. Reducer modifications may be required.

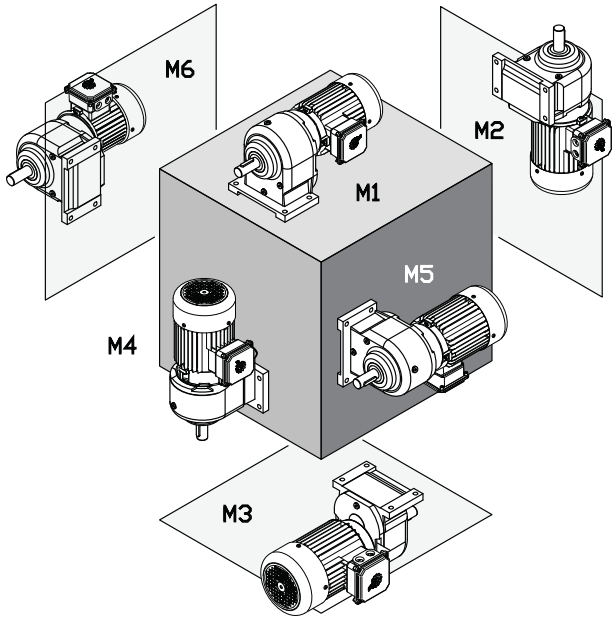

Type	M1		M2		M3		M4		M5		M6	
	Quarts	Liters	Quarts	Liters	Quarts	Liters	Quarts	Liters	Quarts	Liters	Quarts	Liters
SK0/SK05	0.140	0.130	0.230	0.220	0.140	0.130	0.230	0.220	0.140	0.130	0.140	0.130
SK000	0.250	0.240	0.430	0.410	0.250	0.240	0.430	0.410	0.250	0.240	0.250	0.240
SK01/SK015	0.230	0.220	0.400	0.380	0.230	0.220	0.400	0.380	0.230	0.220	0.230	0.220
SK010/SK0105	0.400	0.380	0.630	0.600	0.400	0.380	0.630	0.600	0.400	0.380	0.400	0.380
SK20/SK205	0.580	0.550	1.06	1.000	0.580	0.550	1.06	1.000	0.580	0.550	0.580	0.550
SK200/SK2005	0.850	0.800	1.37	1.30	0.850	0.800	1.37	1.30	0.850	0.800	0.850	0.800
SK25/SK255	0.530	0.500	1.06	1.000	0.530	0.500	1.06	1.000	0.530	0.500	0.530	0.500
SK250/SK2505	1.48	1.40	1.59	1.50	1.48	1.40	1.59	1.50	1.48	1.40	1.48	1.40
SK30/SK305	0.740	0.700	1.48	1.40	0.740	0.700	1.48	1.40	0.740	0.700	0.740	0.700
SK300/SK3005	1.48	1.40	1.59	1.50	1.48	1.40	1.59	1.50	1.48	1.40	1.48	1.40
SK33/335	0.850	0.800	1.69	1.60	0.850	0.800	1.69	1.60	0.850	0.800	0.850	0.80
SK330/SK3305	1.59	1.50	1.67	1.58	1.59	1.50	1.67	1.58	1.59	1.50	1.59	1.50

STANDARD IN-LINE FLANGE MOUNTED OIL FILL QUANTITIES

Standard In-line foot mounted lubrication

All Standard In-line reducers are shipped from NORD with a pre-determined oil fill level in accordance to the specified reducer size and mounting position. When filling these gear units the oil must be measured and added until one establishes the proper fill quantity. For additional information please refer to the "Oil & vent plug locations" documentation for your specified gear unit

HARMFUL SITUATION

For mounting orientations other than shown please consult NORD Gear. Reducer modifications may be required.

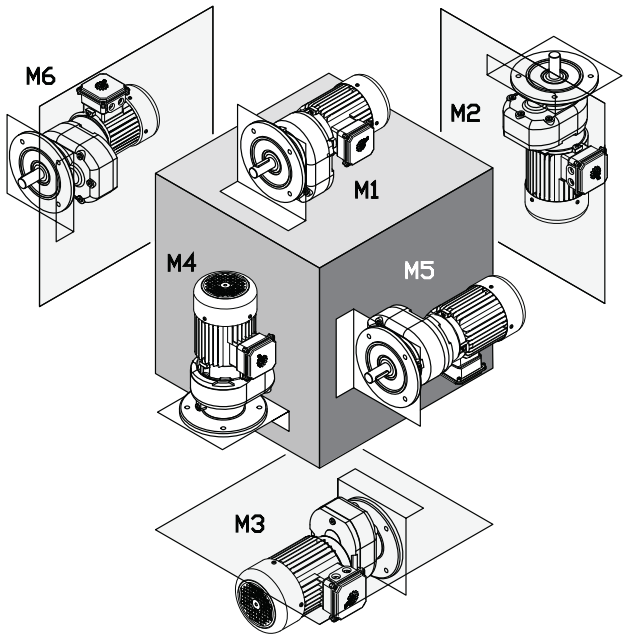

Type	M1		M2		M3		M4		M5		M6	
	Quarts	Liters	Quarts	Liters	Quarts	Liters	Quarts	Liters	Quarts	Liters	Quarts	Liters
SK0/SK05 F	0.140	0.130	0.230	0.220	0.140	0.130	0.230	0.220	0.140	0.130	0.140	0.130
SK000 F	0.250	0.240	0.430	0.410	0.250	0.240	0.430	0.410	0.250	0.240	0.250	0.240
SK01/SK015 F	0.230	0.220	0.400	0.380	0.230	0.220	0.400	0.380	0.230	0.220	0.230	0.220
SK010/SK0105 F	0.400	0.380	0.630	0.600	0.400	0.380	0.630	0.600	0.400	0.380	0.400	0.380
SK20/SK205 F	0.370	0.350	0.630	0.600	0.370	0.350	0.630	0.600	0.370	0.350	0.370	0.350
SK200/SK2005 F	0.630	0.600	1.10	1.04	0.630	0.600	1.10	1.04	0.630	0.600	0.630	0.600
SK25/SK255 F	0.530	0.500	1.06	1.000	0.530	0.500	1.06	1.000	0.530	0.500	0.530	0.500
SK250/SK2505 F	1.48	1.40	1.59	1.50	1.48	1.40	1.59	1.50	1.48	1.40	1.48	1.40
SK30/SK305 F	0.740	0.700	1.48	1.40	0.740	0.700	1.48	1.40	0.740	0.700	0.740	0.700
SK300/SK3005 F	1.48	1.40	1.59	1.50	1.48	1.40	1.59	1.50	1.48	1.40	1.48	1.40
SK33/335 F	0.850	0.800	1.69	1.60	0.850	0.800	1.69	1.60	0.850	0.800	0.850	0.800
SK330/SK3305 F	1.59	1.50	1.67	1.58	1.59	1.50	1.67	1.58	1.59	1.50	1.59	1.50

HELICAL IN-LINE FOOT MOUNTED OIL FILL QUANTITIES

Helical In-line foot mounted lubrication

The following NORD Gear reducers are shipped from the factory with a pre-determined oil fill level in accordance to the specified reducer size and mounting position. For additional information, please refer to the "Oil Plug & Vent Locations" documentation for your gear unit.

HARMFUL SITUATION

Actual oil volume can vary slightly depending upon the gear case size, mounting and ratio. Prior to commissioning the reducer, check the oil-fill level using the reducer's oil level plug and drain or add addition oil as needed.

For mounting orientations other than shown please consult NORD Gear. Reducer modifications may be required.

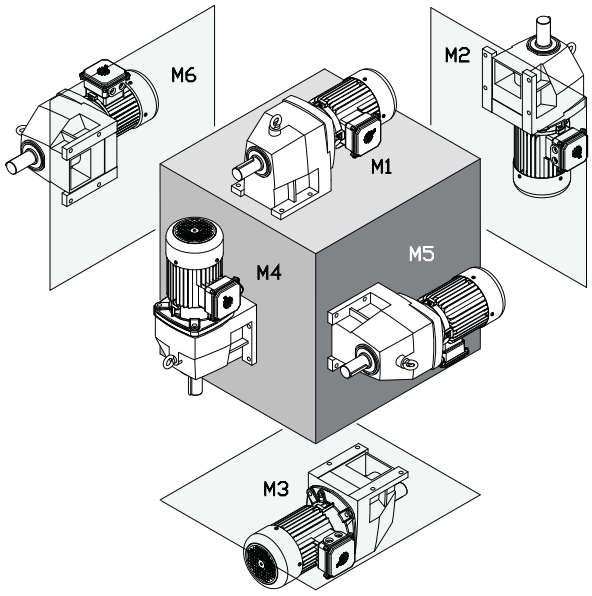

Type	M1		M2		M3		M4		M5		M6	
	Quarts	Liters	Quarts	Liters	Quarts	Liters	Quarts	Liters	Quarts	Liters	Quarts	Liters
SK02	0.160	0.150	0.630	0.600	0.740	0.700	0.630	0.600	0.420	0.400	0.420	0.400
SK03	0.320	0.300	1.06	1.000	0.850	0.800	0.950	0.900	0.630	0.600	0.630	0.600
SK11E	0.260	0.250	0.530	0.500	0.580	0.550	0.420	0.400	0.370	0.350	0.370	0.350
SK12	0.260	0.250	0.790	0.750	0.900	0.850	0.790	0.750	0.530	0.500	0.530	0.500
SK13	0.630	0.600	1.32	1.25	1.16	1.10	1.27	1.20	0.740	0.700	0.740	0.700
SK21E	0.630	0.600	1.27	1.20	1.27	1.20	1.06	1.000	1.06	1.000	1.06	1.000
SK22	0.530	0.500	1.90	1.80	2.11	2.00	1.90	1.80	1.43	1.35	1.43	1.35
SK23	1.37	1.30	2.54	2.40	2.43	2.30	2.48	2.35	1.69	1.60	1.69	1.60
SK31E	1.16	1.10	2.85	2.70	2.33	2.20	2.43	2.30	1.80	1.70	1.80	1.70
SK32	0.950	0.900	2.64	2.50	3.17	3.00	3.07	2.90	2.11	2.00	2.11	2.00
SK33N	1.69	1.60	3.07	2.90	3.38	3.20	3.91	3.70	2.43	2.30	2.43	2.30
SK41E	1.80	1.70	2.75	2.60	3.49	3.30	2.64	2.50	2.75	2.60	2.75	2.60
SK42	1.37	1.30	4.76	4.50	4.76	4.50	4.55	4.30	3.38	3.20	3.38	3.20
SK43	3.17	3.00	5.92	5.60	5.50	5.20	6.98	6.60	3.81	3.60	3.81	3.60
SK51E	2.33	2.20	4.65	4.40	4.97	4.70	4.23	4.00	3.59	3.40	3.59	3.40
SK52	2.64	2.50	7.40	7.00	7.19	6.80	7.19	6.80	5.39	5.10	5.39	5.10
SK53	4.76	4.50	9.20	8.70	8.14	7.70	9.20	8.70	6.34	6.00	6.34	6.00
SK62	6.87	6.50	15.86	15.00	13.74	13.00	16.91	16.00	15.86	15.00	15.86	15.00
SK63	13.74	13.00	15.32	14.50	15.32	14.50	16.91	16.00	13.74	13.00	13.74	13.00
SK72	10.57	10.00	24.31	23.00	19.03	18.00	27.48	26.00	24.31	23.00	24.31	23.00
SK73	21.66	20.50	21.14	20.00	23.78	22.50	28.53	27.00	21.14	20.00	21.14	20.00
SK82	14.80	14.00	37.00	35.00	28.54	27.00	46.51	44.00	33.82	32.00	33.82	32.00
SK83	31.71	30.00	32.76	31.00	35.93	34.00	39.10	37.00	34.88	33.00	34.88	33.00
SK92	26.43	25.00	77.16	73.00	49.68	47.00	80.33	76.00	54.96	52.00	54.96	52.00
SK93	56.02	53.00	73.99	70.00	62.04	59.00	76.10	72.00	51.79	49.00	51.79	49.00
SK102	38.05	36.00	83.50	79.00	69.76	66.00	107.81	102.00	75.05	71.00	75.05	71.00
SK103	78.19	74.00	75.05	71.00	78.21	74.00	102.52	97.00	70.82	67.00	70.82	67.00

HELICAL IN-LINE FLANGE MOUNTED OIL FILL QUANTITIES

Helical In-line flange mounted lubrication

The following NORD Gear reducers are shipped from the factory with a pre-determined oil fill level in accordance to the specified reducer size and mounting position. For additional information, please refer to the "Oil Plug & Vent Locations" documentation for your gear unit.

HARMFUL SITUATION

Actual oil volume can vary slightly depending upon the gear case size, mounting and ratio. Prior to commissioning the reducer, check the oil-fill level using the reducer's oil level plug and drain or add addition oil as needed.

For mounting orientations other than shown please consult NORD Gear. Reducer modifications may be required.

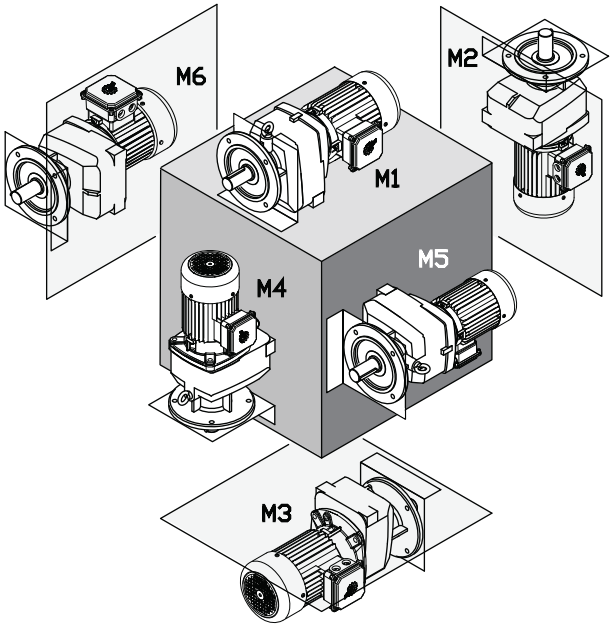

Type	M1		M2		M3		M4		M5		M6	
	Quarts	Liters	Quarts	Liters	Quarts	Liters	Quarts	Liters	Quarts	Liters	Quarts	Liters
SK02 F	0.260	0.250	0.630	0.600	0.630	0.600	0.630	0.600	0.530	0.500	0.530	0.500
SK03 F	0.530	0.500	0.850	0.800	0.950	0.900	1.16	1.10	0.850	0.800	0.850	0.800
SK11E F	0.320	0.300	0.370	0.350	0.530	0.500	0.320	0.300	0.420	0.400	0.420	0.400
SK12 F	0.370	0.350	0.900	0.850	0.950	0.900	0.950	0.900	0.630	0.600	0.630	0.600
SK13 F	0.900	0.850	1.27	1.20	1.27	1.20	1.27	1.20	1.000	0.950	1.000	0.950
SK21E F	0.530	0.500	1.48	1.40	1.16	1.10	0.740	0.700	0.950	0.900	0.950	0.900
SK22 F	0.740	0.700	2.11	2.00	2.11	2.00	1.90	1.80	1.64	1.55	1.64	1.55
SK23 F	1.59	1.50	2.75	2.60	2.64	2.50	2.96	2.80	2.96	2.80	2.96	2.80
SK31E F	0.850	0.800	1.37	1.30	1.74	1.65	1.16	1.10	2.11	2.00	2.11	2.00
SK32 F	1.37	1.30	3.07	2.90	3.49	3.30	3.28	3.10	2.54	2.40	2.54	2.40
SK33N F	2.01	1.90	3.59	3.40	3.70	3.50	4.65	4.40	2.75	2.60	2.75	2.60
SK41E F	1.06	1.000	2.75	2.60	2.96	2.80	1.69	1.60	3.49	3.30	3.49	3.30
SK42 F	1.90	1.80	4.65	4.40	4.76	4.50	4.23	4.00	3.91	3.70	3.91	3.70
SK43 F	3.70	3.50	6.02	5.70	5.29	5.00	6.45	6.10	4.33	4.10	4.33	4.10
SK51E F	1.90	1.80	3.70	3.50	4.33	4.10	3.17	3.00	4.02	3.80	4.02	3.80
SK52 F	3.17	3.00	7.19	6.80	6.55	6.20	7.82	7.40	5.92	5.60	5.92	5.60
SK53 F	5.50	5.20	8.88	8.40	7.40	7.00	9.41	8.90	7.08	6.70	7.08	6.70
SK62 F	7.40	7.00	15.86	15.00	14.80	14.00	19.55	18.50	16.91	16.00	16.91	16.00
SK63 F	14.26	13.50	14.80	14.00	16.38	15.50	19.02	18.00	14.80	14.00	14.80	14.00
SK72 F	10.57	10.00	24.31	23.00	19.55	18.50	29.60	28.00	24.31	23.00	24.31	23.00
SK73 F	23.25	22.00	23.78	22.50	24.31	23.00	29.06	27.50	21.14	20.00	21.14	20.00
SK82 F	15.86	15.00	39.11	37.00	30.65	29.00	47.57	45.00	36.47	34.50	36.47	34.50
SK83 F	32.76	31.00	35.93	34.00	36.99	35.00	42.28	40.00	35.93	34.00	35.93	34.00
SK92 F	27.48	26.00	77.16	73.00	49.68	47.00	82.45	78.00	54.96	52.00	54.96	52.00
SK93 F	56.02	53.00	73.99	70.00	62.04	59.00	78.21	74.00	51.79	49.00	51.79	49.00
SK102 F	42.28	40.00	85.62	81.00	69.76	66.00	109.93	104.00	76.10	72.00	76.10	72.00
SK103 F	72.93	69.00	82.44	78.00	82.44	78.00	104.64	99.00	70.82	67.00	70.82	67.00

CLINCHER™ OIL FILL QUANTITIES

CLINCHER™ lubrication

Unless otherwise noted below, the following NORD Gear reducers are shipped from the factory with a pre-determined oil fill level in accordance to the specified reducer size and mounting position. For additional information, please refer to the "Oil Plug & Vent Locations" documentation for your gear unit.

STOP ***HARMFUL SITUATION*** **STOP**

Actual oil volume can vary slightly depending upon the gear case size, mounting and ratio. Prior to commissioning the reducer, check the oil-fill level using the reducer's oil level plug and drain or add addition oil as needed.

For mounting orientations other than shown please consult NORD Gear. Reducer modifications may be required.

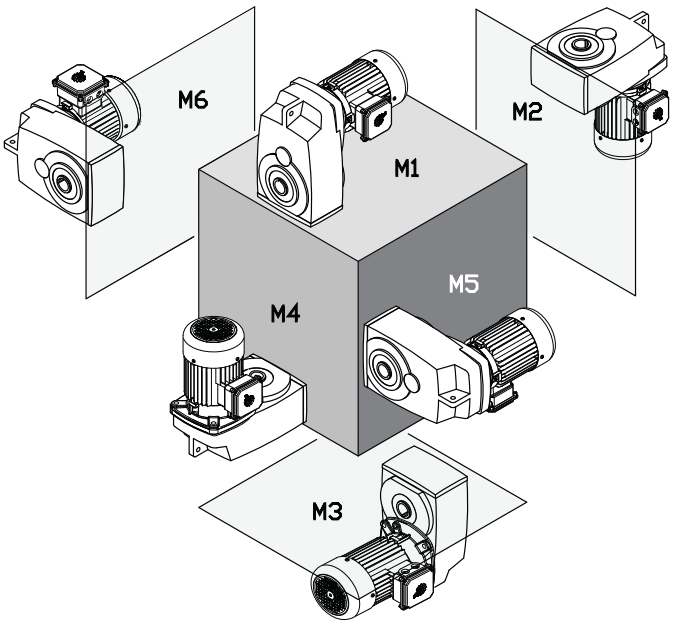

Type	M1		M2		M3		M4		M5		M6	
	Quarts	Liters	Quarts	Liters	Quarts	Liters	Quarts	Liters	Quarts	Liters	Quarts	Liters
SK 0182NB	0.420	0.400	0.580	0.550	0.630	0.600	0.580	0.550	0.370	0.350	0.370	0.350
SK 0282NB	0.740	0.700	1.06	1.000	0.850	0.800	1.16	1.10	0.950	0.900	0.950	0.900
SK 1282	0.950	0.900	1.37	1.30	0.950	0.900	1.27	1.20	1.000	0.950	1.000	0.950
SK 1382NB	1.37	1.30	2.43	2.30	1.48	1.40	2.22	2.10	2.11	2.00	2.01	1.90
SK 2282	1.74	1.65	2.54	2.40	2.01	1.90	2.11	2.00	1.90	1.80	1.90	1.80
SK 2382	1.80	1.70	2.75	2.60	2.01	1.90	3.28	3.10	1.59	1.50	1.59	1.50
SK 3282	3.33	3.15	4.33	4.10	3.44	3.25	4.33	4.10	3.33	3.15	3.33	3.15
SK 3382	4.33	4.10	5.18	4.90	3.49	3.30	5.92	5.60	3.49	3.30	3.49	3.30
SK 4282	4.97	4.70	6.45	6.10	5.02	4.75	5.71	5.40	4.97	4.70	4.97	4.70
SK 4382	6.24	5.90	7.19	6.80	5.18	4.90	8.77	8.30	5.18	4.90	5.18	4.90
SK 5282	7.93	7.50	9.30	8.80	7.93	7.50	9.30	8.80	7.61	7.20	7.61	7.20
SK 5382	13.21	12.50	12.68	12.00	7.08	6.70	14.80	14.00	8.77	8.30	8.77	8.30
SK 6282	17.97	17.00	14.80	14.00	12.68	12.00	18.50	17.50	10.57	10.00	14.80	14.00
SK 6382	17.44	16.50	13.74	13.00	10.15	9.60	19.03	18.00	14.80	14.00	13.21	12.50
SK 7282	26.42	25.00	22.20	21.00	21.14	20.00	28.54	27.00	16.91	16.00	22.20	21.00
SK 7382	23.25	22.00	21.14	20.00	16.91	16.00	26.42	25.00	24.31	23.00	20.08	19.00
SK 8282	39.11	37.00	34.88	33.00	31.71	30.00	43.34	41.00	32.77	31.00	32.77	31.00
SK 8382	35.94	34.00	33.82	32.00	26.42	25.00	40.17	38.00	37.00	35.00	31.71	30.00
SK 9282	78.22	74.00	73.99	70.00	58.14	55.00	76.10	72.00	63.42	60.00	62.36	59.00
SK 9382	77.16	73.00	73.99	70.00	47.56	45.00	78.22	74.00	68.70	65.00	63.42	60.00
SK 10282*	95.13	90.00	95.13	90.00	42.28	40.00	95.13	90.00	63.42	60.00	86.67	82.00
SK 10382*	89.84	85.00	105.67	100.00	77.16	73.00	105.70	100.00	84.56	80.00	84.56	80.00
SK 11282*	174.40	165.00	169.12	160.00	153.26	145.00	206.12	195.00	105.70	100.00	147.98	140.00
SK 11382*	169.12	160.00	163.84	155.00	147.98	140.00	221.97	210.00	163.84	155.00	142.70	135.00
SK 12382*	169.12	160.00	163.84	155.00	147.98	140.00	221.97	210.00	163.84	155.00	142.70	135.00

*** For shipping purposes the larger Clincher™ gear units are supplied without oil.**

90.1 HELICAL-BEVEL FOOT MOUNT OIL FILL QUANTITIES

90.1 Helical-bevel foot mount lubrication

Unless otherwise noted below, the following NORD Gear reducers are shipped from the factory with a pre-determined oil fill level in accordance to the specified reducer size and mounting position. For additional information, please refer to the "Oil Plug & Vent Locations" documentation for your gear unit.

STOP ***HARMFUL SITUATION*** **STOP**

Actual oil volume can vary slightly depending upon the gear case size, mounting and ratio. Prior to commissioning the reducer, check the oil-fill level using the reducer's oil level plug and drain or add addition oil as needed.

For mounting orientations other than shown please consult NORD Gear. Reducer modifications may be required.

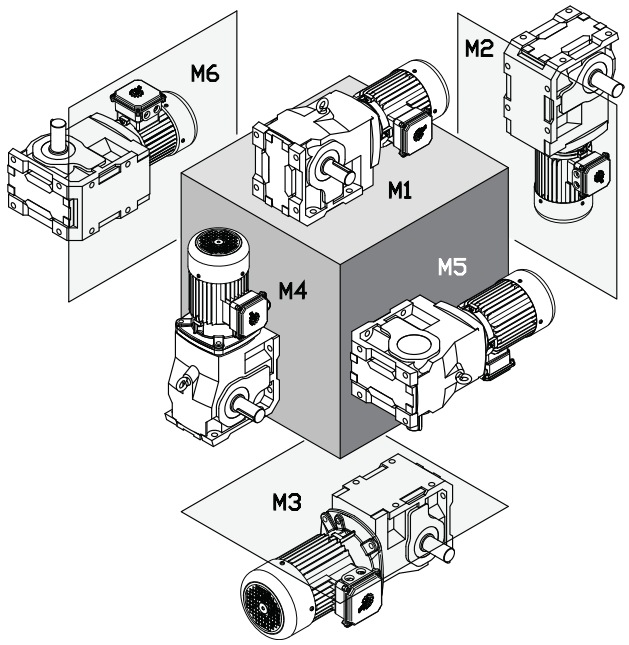

Type	M1		M2		M3		M4		M5		M6	
	Quarts	Liters	Quarts	Liters	Quarts	Liters	Quarts	Liters	Quarts	Liters	Quarts	Liters
SK 9012.1	0.740	0.700	1.69	1.60	2.01	1.90	2.54	2.40	1.27	1.20	1.80	1.70
SK 9013.1	1.27	1.20	2.11	2.00	2.32	2.20	3.17	3.00	1.48	1.40	2.01	1.90
SK 9016.1	0.740	0.700	1.69	1.60	2.01	1.90	2.54	2.40	1.27	1.20	1.80	1.70
SK 9017.1	1.27	1.20	2.11	2.00	2.32	2.20	3.17	3.00	1.48	1.40	2.01	1.90
SK 9022.1	1.37	1.30	2.75	2.60	3.70	3.50	4.44	4.20	2.11	2.00	2.96	2.80
SK 9023.1	2.54	2.40	3.17	3.00	4.02	3.80	5.60	5.30	2.32	2.20	3.28	3.10
SK 9032.1	1.80	1.70	5.07	4.80	6.76	6.40	7.08	6.70	4.33	4.10	5.39	5.10
SK 9033.1	3.49	3.30	6.97	6.60	7.40	7.00	8.24	7.80	4.54	4.30	5.39	5.10
SK 9042.1	4.65	4.40	9.19	8.70	10.57	10.00	10.36	9.80	7.19	6.80	7.93	7.50
SK 9043.1	4.86	4.60	10.78	10.20	11.31	10.70	13.53	12.80	5.49	5.20	7.08	6.70
SK 9052.1	6.87	6.50	16.91	16.00	20.08	19.00	22.72	21.50	11.62	11.00	16.38	15.50
SK 9053.1	10.57	10.00	17.96	17.00	21.13	20.00	25.57	24.20	12.15	11.50	17.44	16.50
SK 9062.1	10.57	10.00	29.06	27.50	33.81	32.00	38.04	36.00	19.02	18.00	25.36	24.00
SK 9072.1	10.57	10.00	29.06	27.50	33.81	32.00	38.04	36.00	19.02	18.00	25.36	24.00
SK 9082.1	17.96	17.00	54.42	51.50	66.04	62.50	75.55	71.50	34.87	33.00	49.14	46.50
SK 9086.1	30.64	29.00	77.14	73.00	89.82	85.00	107.78	102.00	50.72	48.00	65.51	62.00
SK 9092.1	43.32	41.00	165.90	157.00	179.64	170.00	181.75	172.00	84.54	80.00	95.10	90.00
SK 9096.1*	73.97	70.00	197.60	187.00	205.00	194.00	268.40	254.00	115.18	109.00	160.62	152.00

Oil Levels shown apply to base models and gear units ending in LX, AX, & VX.

*** For shipping purposes, the larger Helical-bevel gear units are supplied without oil.**

90.1 HELICAL-BEVEL FLANGE/SHAFT MOUNT OIL FILL QUANTITIES

90.1 Helical-bevel flange/shaft mount lubrication

Unless otherwise noted below, the following NORD Gear reducers are shipped from the factory with a pre-determined oil fill level in accordance to the specified reducer size and mounting position. For additional information, please refer to the "Oil Plug & Vent Locations" documentation for your gear unit.

HARMFUL SITUATION

Actual oil volume can vary slightly depending upon the gear case size, mounting and ratio. Prior to commissioning the reducer, check the oil-fill level using the reducer's oil level plug and drain or add addition oil as needed.

For mounting orientations other than shown please consult NORD Gear. Reducer modifications may be required.

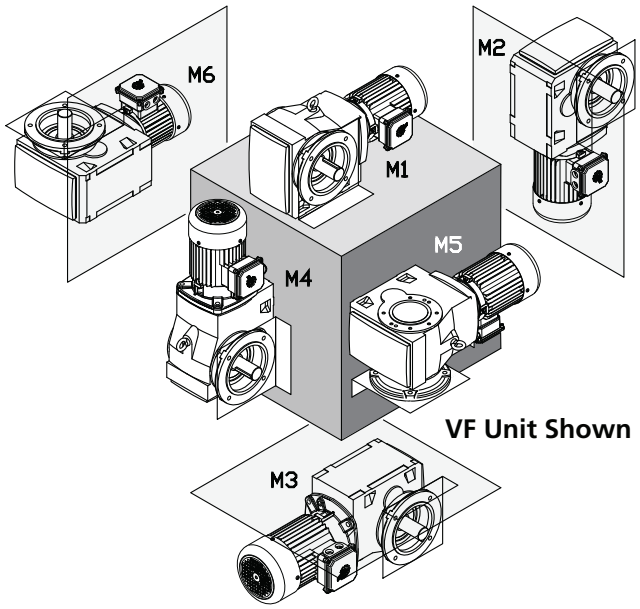

VF Unit Shown

Type	M1		M2		M3		M4		M5		M6	
	Quarts	Liters	Quarts	Liters	Quarts	Liters	Quarts	Liters	Quarts	Liters	Quarts	Liters
SK 9012.1	0.740	0.700	2.01	1.90	2.01	1.90	2.54	2.40	1.27	1.20	1.80	1.70
SK 9013.1	1.27	1.20	2.43	2.30	2.32	2.20	3.17	3.00	1.48	1.40	2.01	1.90
SK 9016.1	0.740	0.700	2.01	1.90	2.01	1.90	2.54	2.40	1.27	1.20	1.80	1.70
SK 9017.1	1.27	1.20	2.43	2.30	2.32	2.20	3.17	3.00	1.48	1.40	2.01	1.90
SK 9022.1	1.37	1.30	2.75	2.60	3.70	3.50	4.44	4.20	2.11	2.00	2.96	2.80
SK 9023.1	2.54	2.40	3.17	3.00	4.02	3.80	5.60	5.30	2.32	2.20	3.28	3.10
SK 9032.1	2.01	1.90	5.49	5.20	6.76	6.40	7.71	7.30	3.49	3.30	5.39	5.10
SK 9033.1	4.02	3.80	6.02	5.70	7.29	6.90	8.98	8.50	3.80	3.60	5.92	5.60
SK 9042.1	3.80	3.60	10.25	9.70	12.05	11.40	12.15	11.50	6.87	6.50	8.66	8.20
SK 9043.1	6.02	5.70	10.78	10.20	15.53	14.70	15.53	14.70	6.97	6.60	10.14	9.60
SK 9052.1	7.93	7.50	17.44	16.50	21.13	20.00	23.78	22.50	12.15	11.50	19.02	18.00
SK 9053.1	13.21	12.50	19.02	18.00	22.72	21.50	28.00	26.50	13.74	13.00	17.96	17.00
SK 9062.1	12.68	12.00	29.06	27.50	34.87	33.00	40.68	38.50	20.08	19.00	27.47	26.00
SK 9072.1	12.68	12.00	29.06	27.50	34.87	33.00	40.68	38.50	20.08	19.00	27.47	26.00
SK 9082.1	22.19	21.00	57.06	54.00	69.74	66.00	84.54	80.00	40.15	38.00	54.95	52.00
SK 9086.1	38.04	36.00	82.42	78.00	96.16	91.00	106.73	101.00	56.00	53.00	80.31	76.00
SK 9092.1	42.27	40.00	137.37	130.00	162.73	154.00	184.92	175.00	86.65	82.00	96.16	91.00
SK 9096.1*	84.54	80.00	197.60	187.00	203.94	193.00	271.57	257.00	119.41	113.00	164.84	156.00

Oil Levels shown apply to base models and gear units ending in AZ, AF, VZ, & VF.

*** For shipping purposes, the larger Helical-bevel gear units are supplied without oil.**

92 HELICAL-BEVEL FOOT MOUNT OIL FILL QUANTITIES

92 Helical-bevel foot mount lubrication

The following NORD Gear reducers are shipped from the factory with a pre-determined oil fill level in accordance to the specified reducer size and mounting position. For additional information, please refer to the "Oil Plug & Vent Locations" documentation for your gear unit.

HARMFUL SITUATION

Actual oil volume can vary slightly depending upon the gear case size, mounting and ratio. Prior to commissioning the reducer, check the oil-fill level using the reducer's oil level plug and drain or add addition oil as needed.

For mounting orientations other than shown please consult NORD Gear. Reducer modifications may be required.

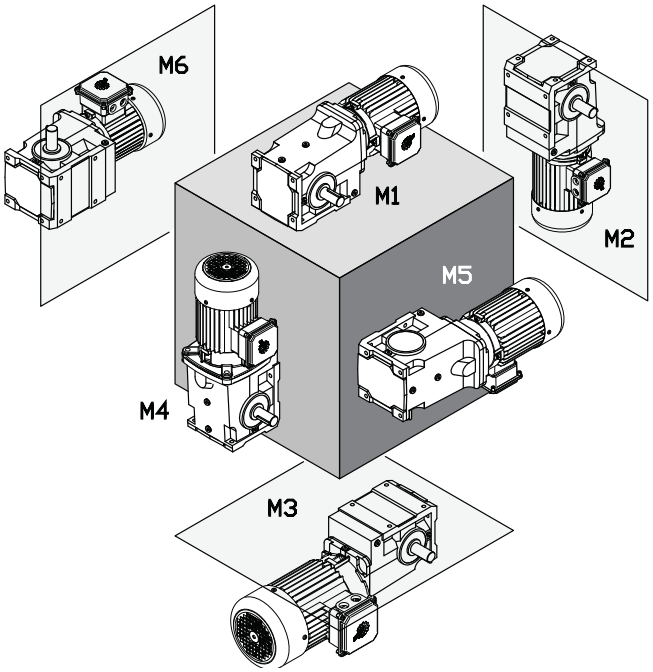

Type	M1		M2		M3		M4		M5		M6	
	Quarts	Liters	Quarts	Liters	Quarts	Liters	Quarts	Liters	Quarts	Liters	Quarts	Liters
SK 92072	0.420	0.400	0.630	0.600	0.530	0.500	0.530	0.500	0.420	0.400	0.420	0.400
SK 92172	0.580	0.550	0.950	0.900	1.000	0.950	1.16	1.10	0.790	0.750	0.660	0.620
SK 92372	0.950	0.900	1.37	1.30	1.53	1.45	1.69	1.60	1.27	1.20	1.27	1.20
SK 92672	1.90	1.80	3.70	3.50	3.38	3.20	3.59	3.40	2.75	2.60	2.75	2.60
SK 92772	2.43	2.30	4.76	4.50	4.86	4.60	5.60	5.30	4.33	4.10	4.33	4.10

Oil Levels shown apply to base models and gear units ending in LX, AX, & VX.

92 HELICAL-BEVEL FLANGE/SHAFT MOUNT OIL FILL QUANTITIES

92 Helical-bevel flange/shaft mount lubrication

The following NORD Gear reducers are shipped from the factory with a pre-determined oil fill level in accordance to the specified reducer size and mounting position. For additional information, please refer to the "Oil Plug & Vent Locations" documentation for your gear unit.

HARMFUL SITUATION

Actual oil volume can vary slightly depending upon the gear case size, mounting and ratio. Prior to commissioning the reducer, check the oil-fill level using the reducer's oil level plug and drain or add addition oil as needed.

For mounting orientations other than shown please consult NORD Gear. Reducer modifications may be required.

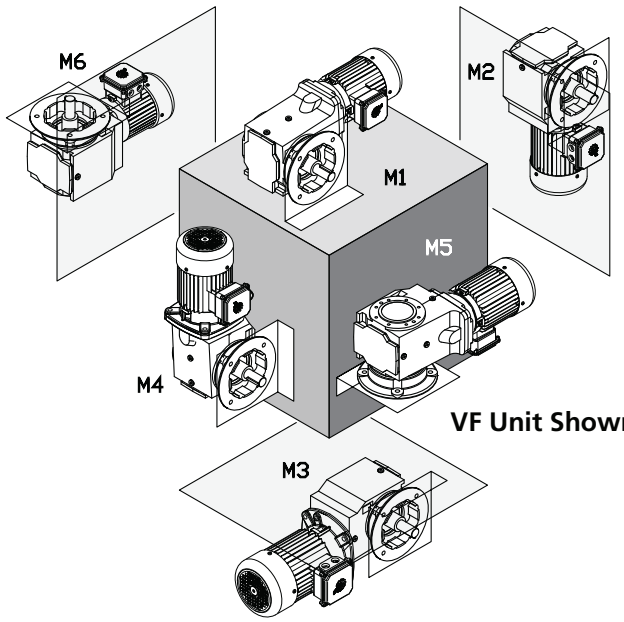

VF Unit Shown

Type	M1		M2		M3		M4		M5		M6	
	Quarts	Liters	Quarts	Liters	Quarts	Liters	Quarts	Liters	Quarts	Liters	Quarts	Liters
SK 92072	0.420	0.400	0.630	0.600	0.530	0.500	0.530	0.500	0.420	0.400	0.420	0.400
SK 92172	0.530	0.500	0.970	0.920	0.920	0.870	1.11	1.05	0.790	0.750	0.690	0.650
SK 92372	1.22	1.15	1.59	1.50	1.27	1.20	1.80	1.70	1.22	1.15	1.22	1.15
SK 92672	1.64	1.55	2.96	2.80	2.64	2.50	3.49	3.30	2.54	2.40	2.54	2.40
SK 92772	2.91	2.75	4.65	4.40	4.76	4.50	5.81	5.50	3.70	3.50	3.70	3.50

Oil Levels shown apply to gear units ending in AZ, AF, VZ, & VF.

HELICAL-WORM FOOT MOUNT OIL FILL QUANTITIES

Helical-worm foot mount lubrication

The following NORD Gear reducers are shipped from the factory with a pre-determined oil fill level in accordance to the specified reducer size and mounting position. For additional information, please refer to the "Oil Plug & Vent Locations" documentation for your gear unit.

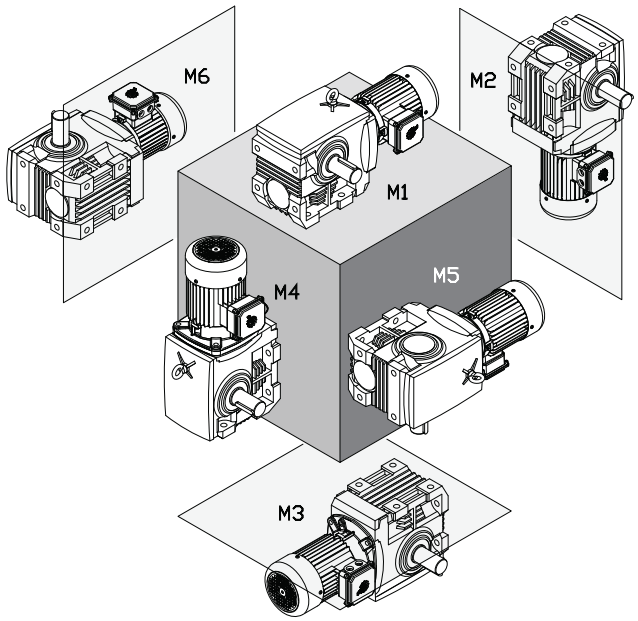

STOP ***HARMFUL SITUATION*** **STOP**

Actual oil volume can vary slightly depending upon the gear case size, mounting and ratio. Prior to commissioning the reducer, check the oil-fill level using the reducer's oil level plug and drain or add addition oil as needed.

For mounting orientations other than shown please consult NORD Gear. Reducer modifications may be required.

Type	M1		M2		M3		M4		M5		M6	
	Quarts	Liters	Quarts	Liters	Quarts	Liters	Quarts	Liters	Quarts	Liters	Quarts	Liters
SK 02040	0.480	0.450	0.630	0.600	0.630	0.600	0.630	0.600	0.530	0.500	0.530	0.500
SK 02050	0.420	0.400	1.27	1.20	0.740	0.700	1.22	1.15	0.740	0.700	0.740	0.700
SK 13050	1.000	0.950	1.64	1.55	1.16	1.10	1.53	1.45	1.000	0.950	1.000	0.950
SK 12063	0.630	0.600	1.80	1.70	1.27	1.20	1.64	1.55	1.06	1.000	1.06	1.000
SK 13063	0.900	0.850	2.43	2.30	1.69	1.60	2.11	2.00	1.32	1.25	1.32	1.25
SK 12080	0.850	0.800	2.75	2.60	1.80	1.70	2.85	2.70	1.80	1.70	1.80	1.70
SK 13080	1.80	1.70	3.38	3.20	2.22	2.10	3.59	3.40	2.06	1.95	2.06	1.95
SK 32100	1.69	1.60	5.81	5.50	3.59	3.40	5.71	5.40	3.38	3.20	3.38	3.20
SK 33100	2.22	2.10	8.03	7.60	4.23	4.00	7.19	6.80	3.91	3.70	3.91	3.70
SK 42125	2.96	2.80	11.63	11.00	6.55	6.20	10.89	10.30	6.13	5.80	6.13	5.80
SK 43125	8.24	7.80	14.80	14.00	7.61	7.20	14.27	13.50	7.08	6.70	7.08	6.70

HELICAL-WORM SOLID SHAFT/FLANGE MOUNT OIL FILL QUANTITIES

Helical-worm solid shaft/flange mount lubrication

The following NORD Gear reducers are shipped from the factory with a pre-determined oil fill level in accordance to the specified reducer size and mounting position. For additional information, please refer to the "Oil Plug & Vent Locations" documentation for your gear unit.

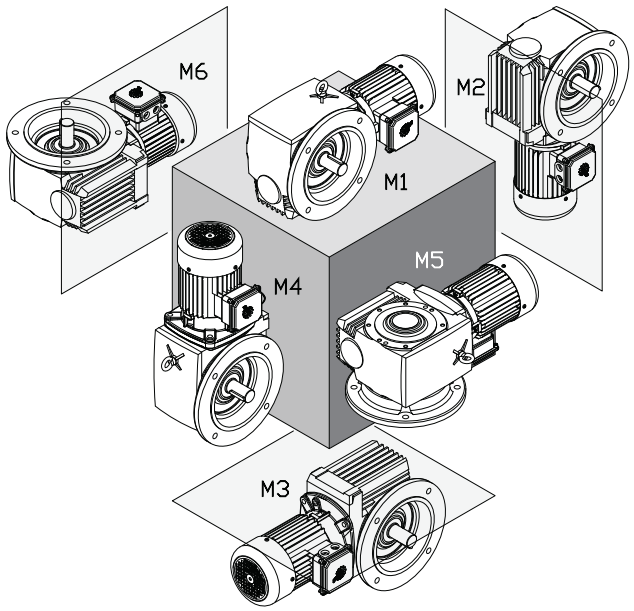

STOP ***HARMFUL SITUATION*** **STOP**

Actual oil volume can vary slightly depending upon the gear case size, mounting and ratio. Prior to commissioning the reducer, check the oil-fill level using the reducer's oil level plug and drain or add addition oil as needed.

For mounting orientations other than shown please consult NORD Gear. Reducer modifications may be required.

Type	M1		M2		M3		M4		M5		M6	
	Quarts	Liters	Quarts	Liters	Quarts	Liters	Quarts	Liters	Quarts	Liters	Quarts	Liters
SK 02040 VF	0.530	0.500	0.850	0.800	0.790	0.750	0.630	0.600	0.530	0.500	0.530	0.500
SK 02050 VF	0.480	0.450	1.48	1.40	0.950	0.900	1.32	1.25	1.06	1.000	1.06	1.000
SK 13050 VF	0.950	0.900	1.90	1.80	1.22	1.15	1.85	1.75	1.32	1.25	1.32	1.25
SK 12063 VF	0.530	0.500	1.69	1.60	1.48	1.40	1.90	1.80	1.59	1.50	1.59	1.50
SK 13063 VF	1.000	0.950	2.22	2.10	1.74	1.65	2.27	2.15	1.85	1.75	1.85	1.75
SK 12080 VF	1.000	0.950	3.38	3.20	3.28	3.10	3.91	3.70	2.64	2.50	2.64	2.50
SK 13080 VF	1.48	1.40	4.44	4.20	3.54	3.35	4.44	4.20	2.91	2.75	2.91	2.75
SK 32100 VF	1.59	1.50	7.50	7.10	5.18	4.90	7.50	7.10	4.65	4.40	4.65	4.40
SK 33100 VF	2.43	2.30	8.03	7.60	5.81	5.50	8.24	7.80	5.12	4.85	5.12	4.85
SK 42125 VF	3.49	3.30	11.83	11.20	6.45	6.10	10.99	10.40	7.19	6.80	7.19	6.80
SK 43125 VF	4.54	4.30	13.63	12.90	7.50	7.10	12.79	12.10	8.14	7.70	8.14	7.70

HELICAL-WORM HOLLOW SHAFT OIL FILL QUANTITIES

Helical-worm hollow shaft lubrication

The following NORD Gear reducers are shipped from the factory with a pre-determined oil fill level in accordance to the specified reducer size and mounting position. For additional information, please refer to the "Oil Plug & Vent Locations" documentation for your gear unit.

STOP ***HARMFUL SITUATION*** **STOP**

Actual oil volume can vary slightly depending upon the gear case size, mounting and ratio. Prior to commissioning the reducer, check the oil-fill level using the reducer's oil level plug and drain or add addition oil as needed.

For mounting orientations other than shown please consult NORD Gear. Reducer modifications may be required.

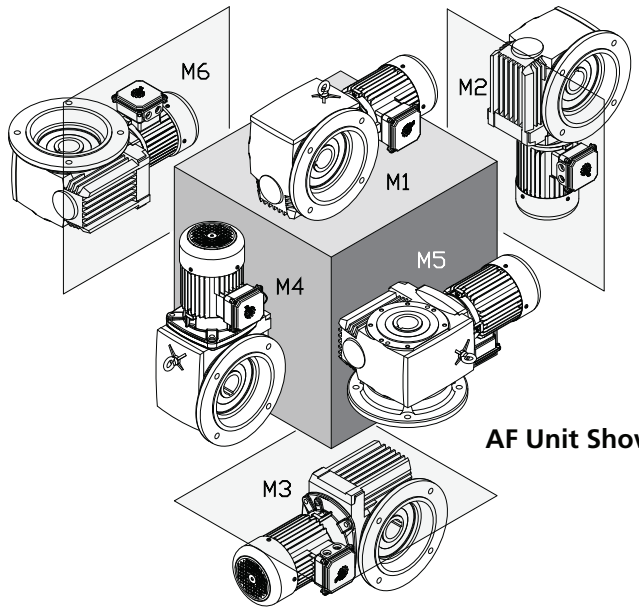

AF Unit Shown

Type	M1		M2		M3		M4		M5		M6	
	Quarts	Liters	Quarts	Liters	Quarts	Liters	Quarts	Liters	Quarts	Liters	Quarts	Liters
SK 02040	0.420	0.400	0.850	0.800	0.690	0.650	0.630	0.600	0.530	0.500	0.530	0.500
SK 02050	0.480	0.450	1.16	1.10	0.950	0.900	1.16	1.10	0.850	0.800	0.850	0.800
SK 13050	0.900	0.850	1.85	1.75	1.32	1.25	1.43	1.35	1.22	1.15	1.22	1.15
SK 12063	0.530	0.500	1.53	1.45	1.27	1.20	1.48	1.40	1.16	1.10	1.16	1.10
SK 13063	0.950	0.900	2.22	2.10	1.64	1.55	2.22	2.10	1.53	1.45	1.53	1.45
SK 12080	0.950	0.900	3.28	3.10	3.17	3.00	3.17	3.00	2.33	2.20	2.33	2.20
SK 13080	1.80	1.70	3.96	3.75	3.80	3.60	3.80	3.60	2.69	2.55	2.69	2.55
SK 32100	1.59	1.50	5.49	5.20	4.02	3.80	5.60	5.30	4.02	3.80	4.02	3.80
SK 33100	2.22	2.10	6.45	6.10	5.07	4.80	6.97	6.60	4.44	4.20	4.44	4.20
SK 42125	3.38	3.20	13.63	12.90	6.45	6.10	11.10	10.50	6.66	6.30	6.66	6.30
SK 43125	5.07	4.80	14.27	13.50	7.82	7.40	15.32	14.50	8.45	8.00	8.45	8.00

Oil Levels shown apply to gear units ending in AZ, AF.

NORDBLOC® FOOT MOUNTED OIL FILL QUANTITIES

NORDBLOC® foot mounted lubrication

The following NORD Gear reducers are shipped from the factory with a pre-determined oil fill level in accordance to the specified reducer size and mounting position. For additional information, please refer to the "Oil Plug & Vent Locations" documentation for your gear unit.

HARMFUL SITUATION

Actual oil volume can vary slightly depending upon the gear case size, mounting and ratio. Prior to commissioning the reducer, check the oil-fill level using the reducer's oil level plug and drain or add addition oil as needed.

For mounting orientations other than shown please consult NORD Gear. Reducer modifications may be required.

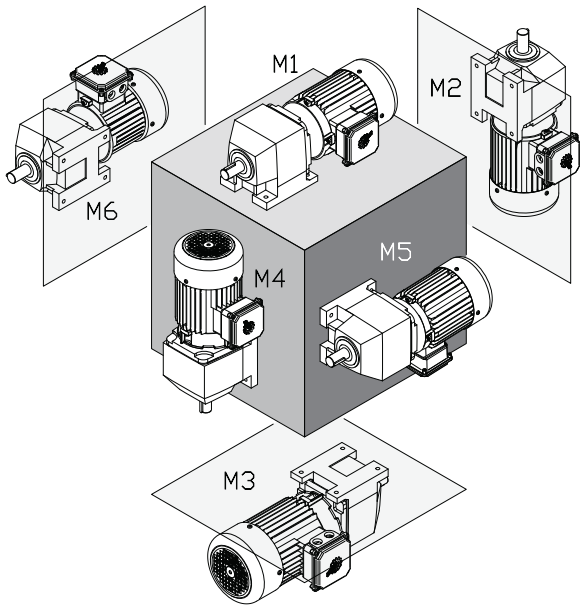

Type	M1		M2		M3		M4		M5		M6	
	Quarts	Liters	Quarts	Liters	Quarts	Liters	Quarts	Liters	Quarts	Liters	Quarts	Liters
SK 172	0.370	0.350	0.530	0.500	0.530	0.500	0.530	0.500	0.530	0.500	0.530	0.500
SK 272	0.630	0.600	1.06	1.000	1.06	1.000	1.06	1.000	1.06	1.000	1.06	1.000
SK 273	0.660	0.620	1.16	1.10	1.16	1.10	1.16	1.10	1.16	1.10	1.16	1.10
SK 372	0.630	0.600	1.06	1.000	1.06	1.000	1.06	1.000	1.06	1.000	1.06	1.000
SK 373	0.580	0.550	1.16	1.10	1.16	1.10	1.16	1.10	1.16	1.10	1.16	1.10
SK 472	1.06	1.000	2.01	1.90	2.01	1.90	2.11	2.00	1.90	1.80	1.90	1.80
SK 473	1.37	1.30	2.64	2.50	2.22	2.10	2.54	2.40	2.22	2.10	2.22	2.10
SK 572	1.06	1.000	2.01	1.90	2.01	1.90	2.11	2.00	1.90	1.80	1.90	1.80
SK 573	1.37	1.30	2.64	2.50	2.22	2.10	2.54	2.40	2.22	2.10	2.22	2.10
SK 672	1.48	1.40	3.59	3.40	3.28	3.10	3.33	3.15	1.53	1.45	3.33	3.15
SK 673	1.90	1.80	4.02	3.80	3.38	3.20	3.59	3.40	3.06	2.90	3.17	3.00
SK 772	2.11	2.00	3.49	3.30	3.70	3.50	4.44	4.20	2.85	2.70	3.49	3.30
SK 773	2.64	2.50	4.76	4.50	3.91	3.70	4.86	4.60	3.49	3.30	3.49	3.30
SK 872	3.91	3.70	10.14	9.60	9.62	9.10	7.71	7.30	4.97	4.70	8.46	8.00
SK 873	6.60	6.20	8.88	8.40	7.93	7.50	9.62	9.10	7.93	7.50	7.93	7.50
SK 972	6.87	6.50	16.91	16.00	16.59	15.70	15.53	14.70	8.98	8.50	14.80	14.00
SK 973	11.63	11.00	16.70	15.80	13.74	13.00	16.91	16.00	14.06	13.30	13.74	13.00

NORDBLOC® FLANGE MOUNTED OIL FILL QUANTITIES

NORDBLOC® flange mounted lubrication

The following NORD Gear reducers are shipped from the factory with a pre-determined oil fill level in accordance to the specified reducer size and mounting position. For additional information, please refer to the "Oil Plug & Vent Locations" documentation for your gear unit.

HARMFUL SITUATION

Actual oil volume can vary slightly depending upon the gear case size, mounting and ratio. Prior to commissioning the reducer, check the oil-fill level using the reducer's oil level plug and drain or add addition oil as needed.

For mounting orientations other than shown please consult NORD Gear. Reducer modifications may be required.

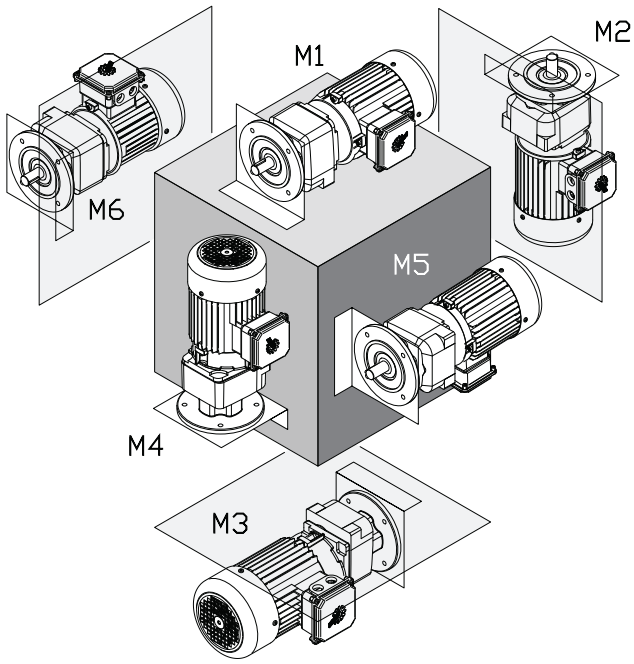

Mounting Position	M1		M2		M3		M4		M5		M6	
	Quarts	Liters	Quarts	Liters	Quarts	Liters	Quarts	Liters	Quarts	Liters	Quarts	Liters
SK 172 F	0.370	0.350	0.530	0.500	0.530	0.500	0.530	0.500	0.530	0.500	0.530	0.500
SK 272 F	0.630	0.600	1.06	1.000	1.06	1.000	1.06	1.000	1.06	1.000	1.06	1.000
SK 273 F	0.660	0.620	1.16	1.10	1.16	1.10	1.16	1.10	1.16	1.10	1.16	1.10
SK 372 F	0.630	0.600	1.06	1.000	1.06	1.000	1.06	1.000	1.06	1.000	1.06	1.000
SK 373 F	0.580	0.550	1.16	1.10	1.16	1.10	1.16	1.10	1.16	1.10	1.16	1.10
SK 472 F	1.06	1.000	2.01	1.90	2.01	1.90	2.01	1.90	2.01	1.90	1.59	1.50
SK 473 F	1.32	1.25	2.54	2.40	2.22	2.10	2.64	2.50	2.22	2.10	2.22	2.10
SK 572 F	1.06	1.000	2.01	1.90	2.01	1.90	2.01	1.90	2.01	1.90	1.59	1.50
SK 573 F	1.32	1.25	2.54	2.40	2.22	2.10	2.64	2.50	2.22	2.10	2.22	2.10
SK 672 F	1.22	1.15	3.59	3.40	2.85	2.70	2.96	2.80	1.32	1.25	2.85	2.70
SK 673 F	1.80	1.70	4.02	3.80	3.17	3.00	3.38	3.20	3.17	3.00	3.17	3.00
SK 772 F	1.69	1.60	3.49	3.30	3.70	3.50	3.49	3.30	3.28	3.10	3.28	3.10
SK 773 F	2.43	2.30	5.29	5.00	3.81	3.60	4.76	4.50	4.12	3.90	4.12	3.90
SK 872 F	3.70	3.50	9.51	9.00	8.35	7.90	8.14	7.70	4.12	3.90	7.61	7.20
SK 873 F	5.29	5.00	9.30	8.80	8.03	7.60	8.46	8.00	8.46	8.00	8.46	8.00
SK 972 F	6.87	6.50	15.86	15.00	13.74	13.00	14.27	13.50	6.87	6.50	12.68	12.00
SK 973 F	10.89	10.30	17.44	16.50	13.74	13.00	16.91	16.00	14.80	14.00	14.80	14.00

NORDBLOC®.1 FOOT MOUNTED OIL FILL QUANTITIES

NORDBLOC®.1 foot mounted lubrication

The following NORD Gear reducers are shipped from the factory with a pre-determined oil fill level in accordance to the specified reducer size and mounting position. For additional information, please refer to the "Oil Plug & Vent Locations" documentation for your gear unit.

HARMFUL SITUATION

Actual oil volume can vary slightly depending upon the gear case size, mounting and ratio. Prior to commissioning the reducer, check the oil-fill level using the reducer's oil level plug and drain or add addition oil as needed.

For mounting orientations other than shown please consult NORD Gear. Reducer modifications may be required.

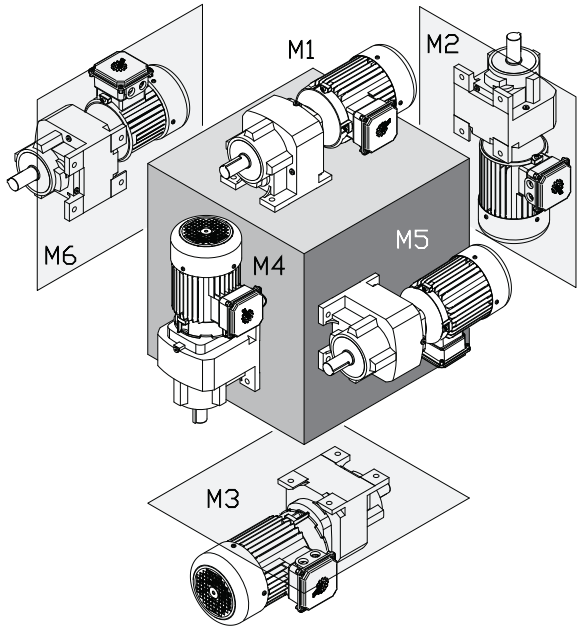

Type	M1		M2		M3		M4		M5		M6	
	Quarts	Liters	Quarts	Liters	Quarts	Liters	Quarts	Liters	Quarts	Liters	Quarts	Liters
SK 072.1	0.169	0.160	0.338	0.320	0.222	0.210	0.243	0.230	0.190	0.180	0.210	0.200
SK 172.1	0.285	0.270	0.624	0.590	0.444	0.420	0.529	0.450	0.338	0.320	0.412	0.390
SK 372.1	0.480	0.450	1.11	1.05	0.790	0.750	1.06	1.000	0.630	0.600	0.690	0.650
SK 373.1	0.480	0.450	1.11	1.05	0.791	0.750	1.06	1.000	0.630	0.600	0.690	0.650
SK 572.1	0.790	0.750	2.01	1.90	1.59	1.50	2.11	2.00	1.16	1.10	1.22	1.15
SK 573.1	0.790	0.750	2.00	1.90	1.59	1.50	2.11	2.00	1.16	1.10	1.22	1.15
SK 672.1	1.16	1.10	2.75	2.60	2.27	2.15	2.85	2.70	1.64	1.55	1.74	1.65
SK 673.1	1.16	1.10	2.75	2.60	2.27	2.15	2.85	2.70	1.64	1.55	1.74	1.65
SK 772.1	1.22	1.15	3.86	3.65	2.38	2.25	3.33	3.15	1.43	1.35	2.27	2.15
SK 773.1	2.06	1.95	3.70	3.50	3.38	3.20	3.06	2.90	2.38	2.25	3.12	2.95
SK 872.1	2.75	2.60	8.45	8.00	5.60	5.30	7.40	7.00	2.96	2.80	4.86	4.60
SK 873.1	4.28	4.05	8.03	7.60	7.24	6.85	6.92	6.55	5.28	5.00	6.92	6.55
SK 972.1	4.76	4.50	13.63	12.90	8.56	8.10	13.42	12.70	4.86	4.60	8.24	7.80
SK 973.1	7.82	7.40	12.89	12.20	11.73	11.10	12.26	11.60	8.45	8.00	11.52	10.90

NORDBLOC®.1 FLANGE MOUNTED OIL FILL QUANTITIES

NORDBLOC®.1 flange mounted lubrication

The following NORD Gear reducers are shipped from the factory with a pre-determined oil fill level in accordance to the specified reducer size and mounting position. For additional information, please refer to the "Oil Plug & Vent Locations" documentation for your gear unit.

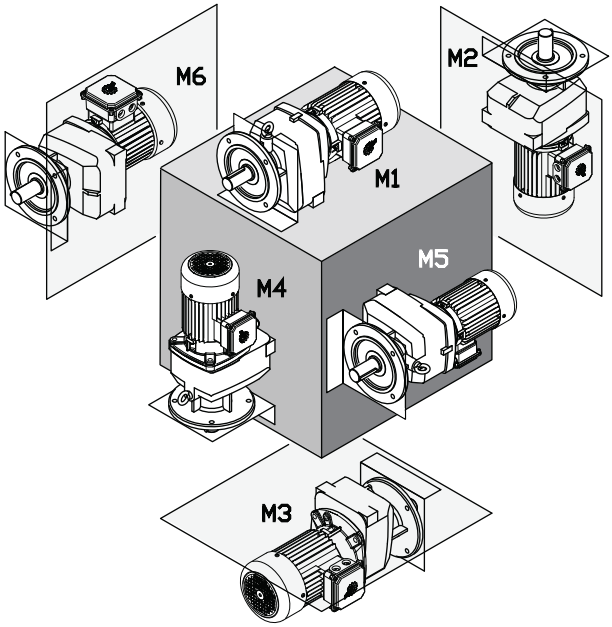

STOP ***HARMFUL SITUATION*** **STOP**

Actual oil volume can vary slightly depending upon the gear case size, mounting and ratio. Prior to commissioning the reducer, check the oil-fill level using the reducer's oil level plug and drain or add addition oil as needed.

For mounting orientations other than shown please consult NORD Gear. Reducer modifications may be required.

Type	M1		M2		M3		M4		M5		M6	
	Quarts	Liters	Quarts	Liters	Quarts	Liters	Quarts	Liters	Quarts	Liters	Quarts	Liters
SK 072.1 F	0.169	0.160	0.338	0.320	0.222	0.210	0.243	0.230	0.190	0.180	0.210	0.200
SK 172.1 F	0.285	0.270	0.624	0.590	0.444	0.420	0.529	0.450	0.338	0.320	0.412	0.390
SK 372.1 F	0.480	0.450	1.11	1.05	0.790	0.750	1.06	1.000	0.630	0.600	0.690	0.650
SK 373.1 F	0.480	0.450	1.11	1.05	0.791	0.750	1.06	1.000	0.630	0.600	0.690	0.650
SK 572.1 F	0.790	0.750	2.01	1.90	1.59	1.50	2.11	2.00	1.16	1.10	1.22	1.15
SK 573.1 F	0.790	0.750	2.00	1.90	1.59	1.50	2.11	2.00	1.16	1.10	1.22	1.15
SK 672.1 F	1.16	1.10	2.75	2.60	2.27	2.15	2.85	2.70	1.64	1.55	1.74	1.65
SK 673.1 F	1.16	1.10	2.75	2.60	2.27	2.15	2.85	2.70	1.64	1.55	1.74	1.65
SK 772.1 F	1.22	1.15	3.86	3.65	2.38	2.25	3.33	3.15	1.43	1.35	2.27	2.15
SK 773.1 F	2.06	1.95	3.70	3.50	3.38	3.20	3.06	2.90	2.38	2.25	3.12	2.95
SK 872.1 F	2.75	2.60	8.45	8.00	5.60	5.30	7.40	7.00	2.96	2.80	4.86	4.60
SK 873.1 F	4.28	4.05	8.03	7.60	7.24	6.85	6.92	6.55	5.28	5.00	6.92	6.55
SK 972.1 F	4.76	4.50	13.63	12.90	8.56	8.10	13.42	12.70	4.86	4.60	8.24	7.80
SK 973.1 F	7.82	7.40	12.89	12.20	11.73	11.10	12.26	11.60	8.45	8.00	11.52	10.90

MINICASE® FOOT MOUNT OIL FILL QUANTITIES

MINICASE® foot mount lubrication

All MINICASE® worm-gear reducers are shipped from NORD with a pre-determined oil fill level in accordance to the specified reducer size and mounting position. The MINICASE® series of worm gear reducers are completely sealed. The unit's lubrication is suitable for the life of the product so it is inherently maintenance free.

All MINICASE® worm-gear reducers are filled with a synthetic hydrocarbon or polyalphaolefin (SHC/PAO) oil and utilize synthetic bearing and seal grease. This ensures proper operation throughout the full lifetime of the units.

STOP ***HARMFUL SITUATION*** **STOP**

For mounting orientations other than shown please consult NORD Gear. Reducer modifications may be required.

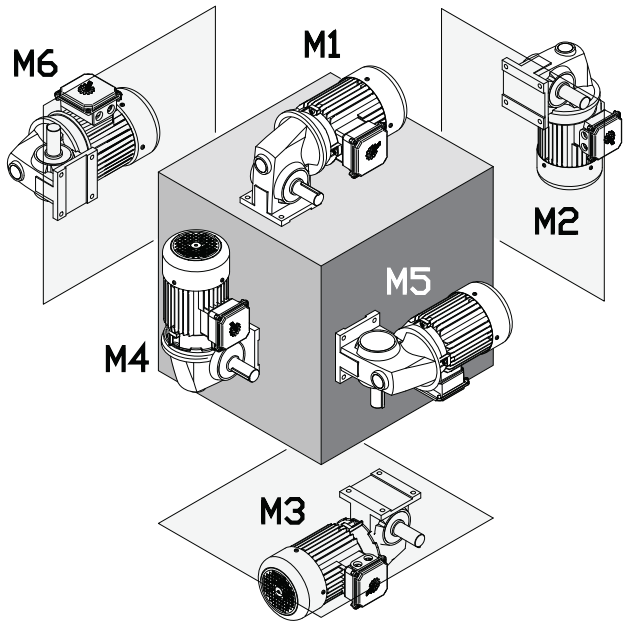

Type	M1		M2		M3		M4		M5		M6	
	Quarts	Liters	Quarts	Liters	Quarts	Liters	Quarts	Liters	Quarts	Liters	Quarts	Liters
SK 1SM31	0.130	0.120	0.130	0.120	0.130	0.120	0.130	0.120	0.130	0.120	0.130	0.120
SK 1SM40	0.230	0.220	0.230	0.220	0.230	0.220	0.230	0.220	0.230	0.220	0.230	0.220
SK 2SM40	0.350	0.330	0.350	0.330	0.350	0.330	0.380	0.360	0.350	0.330	0.350	0.330
SK 1SM50	0.260	0.250	0.260	0.250	0.260	0.250	0.260	0.250	0.260	0.250	0.260	0.250
SK 2SM50	0.370	0.350	0.370	0.350	0.370	0.350	0.440	0.420	0.370	0.350	0.370	0.350
SK 1SM63	0.440	0.420	0.440	0.420	0.440	0.420	0.440	0.420	0.440	0.420	0.440	0.420
SK 2SM63	0.560	0.530	0.560	0.530	0.560	0.530	0.670	0.630	0.560	0.530	0.560	0.530

MINICASE® FLANGE MOUNT OIL FILL QUANTITIES

MINICASE® flange mount lubrication

All MINICASE® worm-gear reducers are shipped from NORD with a pre-determined oil fill level in accordance to the specified reducer size and mounting position. The MINICASE® series of worm gear reducers are completely sealed. The unit's lubrication is suitable for the life of the product so it is inherently maintenance free.

All MINICASE® worm-gear reducers are filled with a synthetic hydrocarbon or polyalphaolefin (SHC/PAO) oil and utilize synthetic bearing and seal grease. This ensures proper operation throughout the full lifetime of the units.

STOP ***HARMFUL SITUATION*** **STOP**

For mounting orientations other than shown please consult NORD Gear. Reducer modifications may be required.

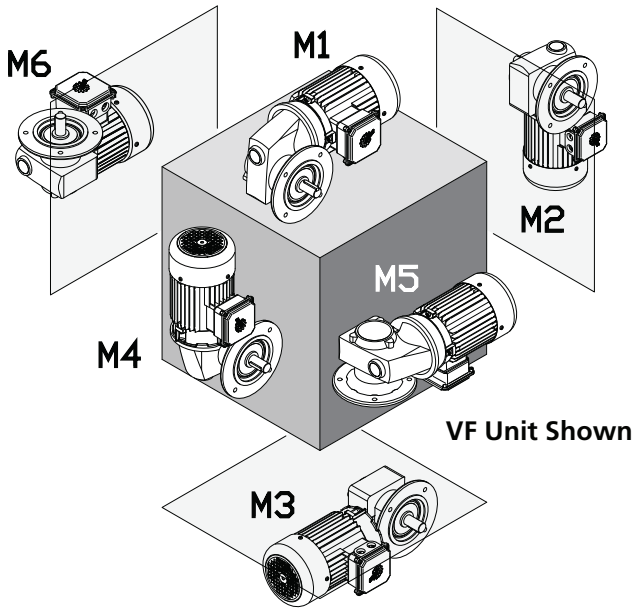

VF Unit Shown

Type	M1		M2		M3		M4		M5		M6	
	Quarts	Liters	Quarts	Liters	Quarts	Liters	Quarts	Liters	Quarts	Liters	Quarts	Liters
SK 1SM31	0.140	0.130	0.140	0.130	0.140	0.130	0.140	0.130	0.140	0.130	0.140	0.130
SK 1SM40	0.250	0.240	0.250	0.240	0.250	0.240	0.250	0.240	0.250	0.240	0.250	0.240
SK 2SM40	0.360	0.340	0.360	0.340	0.360	0.340	0.400	0.380	0.360	0.340	0.360	0.340
SK 1SM50	0.290	0.270	0.290	0.270	0.290	0.270	0.290	0.270	0.290	0.270	0.290	0.270
SK 2SM50	0.390	0.370	0.390	0.370	0.390	0.370	0.480	0.450	0.390	0.370	0.390	0.370
SK 1SM63	0.480	0.450	0.480	0.450	0.480	0.450	0.480	0.450	0.480	0.450	0.480	0.450
SK 2SM63	0.630	0.600	0.630	0.600	0.630	0.600	0.770	0.730	0.630	0.600	0.630	0.600

Oil Levels shown apply to gear units ending in VF, VZ, AF, & AZ.

FLEXBLOC™ OIL FILL QUANTITIES

FLEXBLOC™ lubrication

The following FLEXBLOC™ worm gear modules are designed to be maintenance-free and are typically supplied completely sealed. They are factory oil filled for any mounting configuration with a pre-determined oil level. The unit's lubrication is suitable for the life of the product so it is inherently maintenance free.

- FLEXBLOC™ inch hollow-bore modules are factory-filled with a food grade synthetic polyglycol lubricant (suitable for NSF-H1 incidental contact).
- FLEXBLOC™ metric hollow-bore modules are factory-filled with a standard polyglycol lubricant (unless special ordered).

NORD can provide a field installable vent option for most all FLEXBLOC™ Gear units, with exception to the SK1SI31 unit. For additional information, please refer to the "FLEXBLOC™ Oil Plug & Vent Locations" documentation.

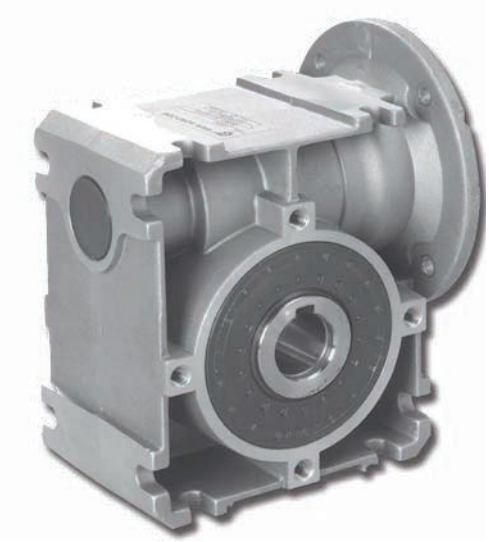

Lubricant synthetic: CLP PG 220					
Type	SK 1SI31	SK 1SI40	SK 1SI50	SK 1SI63	SK 1SI75
Quantity	30 ml 1.0 oz	55 ml 1.9 oz	95 ml 3.2 oz	180 ml 6.0 oz	500 ml 17 oz

Temperature Range -20°F to +60°F (-4°C to +140°C)

STANDARD IN-LINE OIL PLUG & VENT LOCATIONS

Oil plug connections

All reducers are shipped from the factory with a pre-determined oil fill level in accordance to the specified reducer size and mounting position. ***For mounting orientations other than shown please consult NORD Gear. New plug locations may be required.***

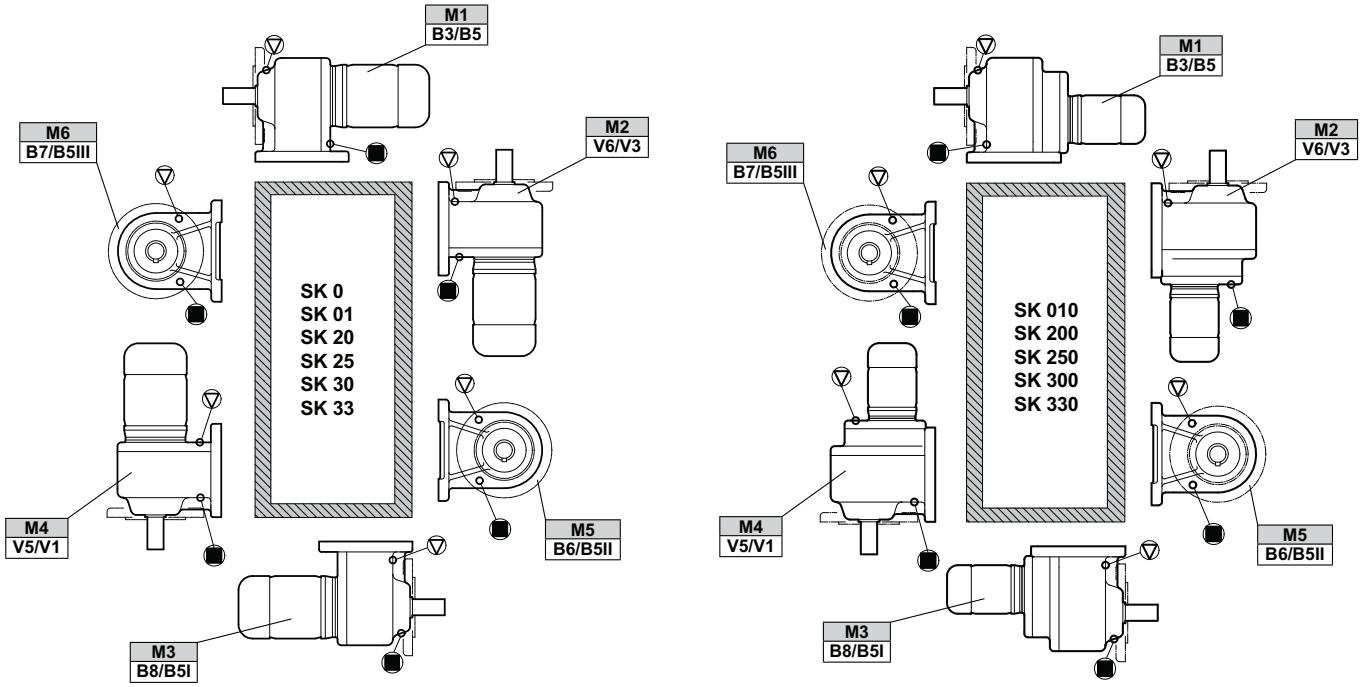

▽ = Vent

■ = Oil Drain

HELICAL IN-LINE OIL PLUG & VENT LOCATIONS

Oil plug connections

Prior to commissioning the reducer, check the oil-fill level using the reducer's oil-level plug and drain or add additional oil as needed. ***For mounting orientations other than shown please consult NORD Gear. New plug locations may be required.***

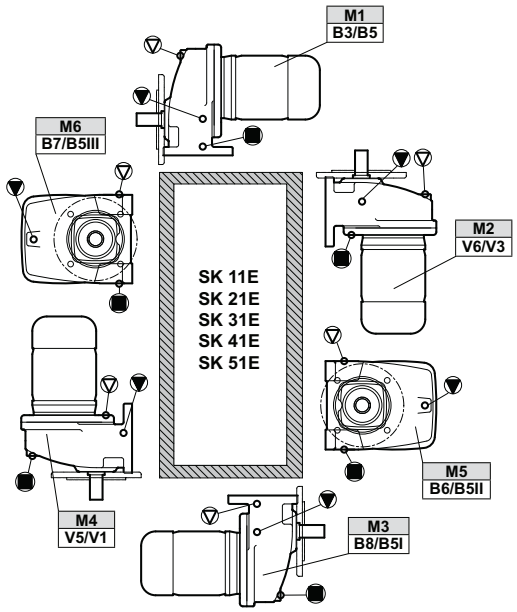

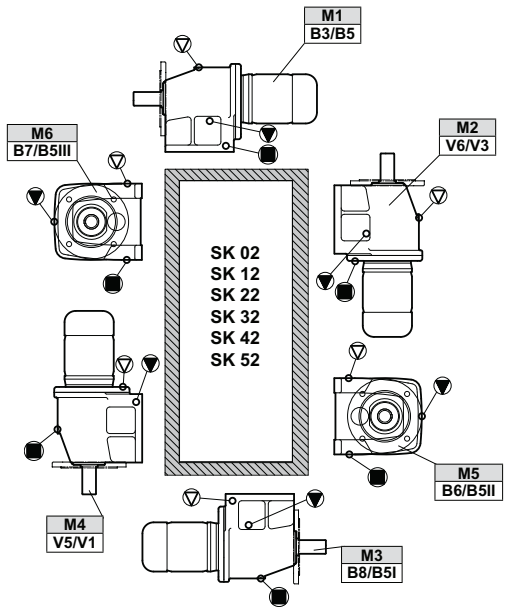

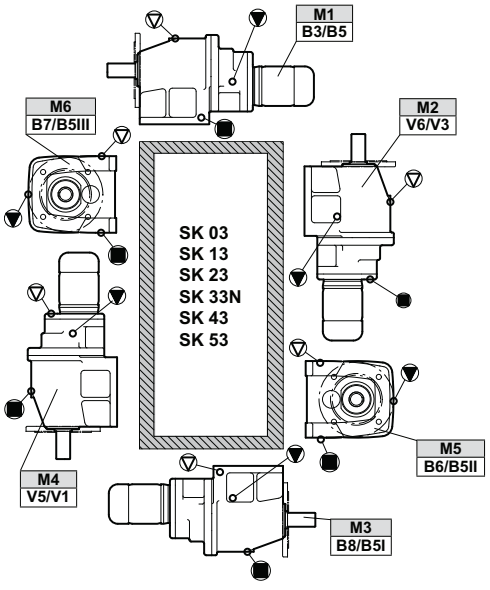

▽ = Vent

▼ = Oil Level

■ = Oil Drain

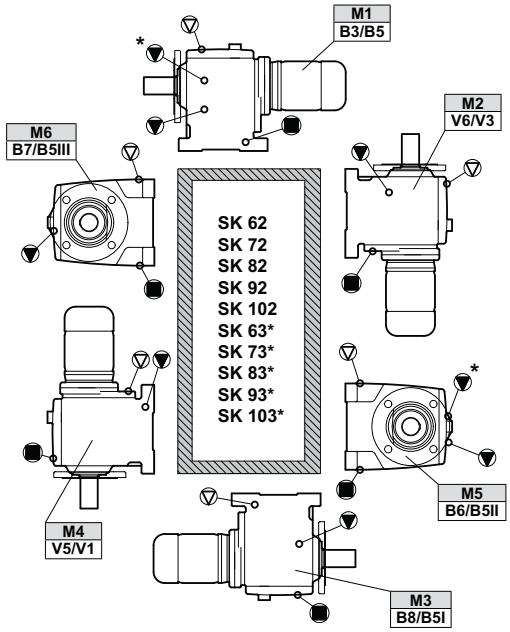

*** Oil level for 3 stage gear units.**

CLINCHER™
OIL PLUG & VENT LOCATIONS

Oil plug connections

Prior to commissioning the reducer, check the oil-fill level using the reducer's oil-level plug and drain or add additional oil as needed. ***For mounting orientations other than shown please consult NORD Gear. New plug locations may be required.***

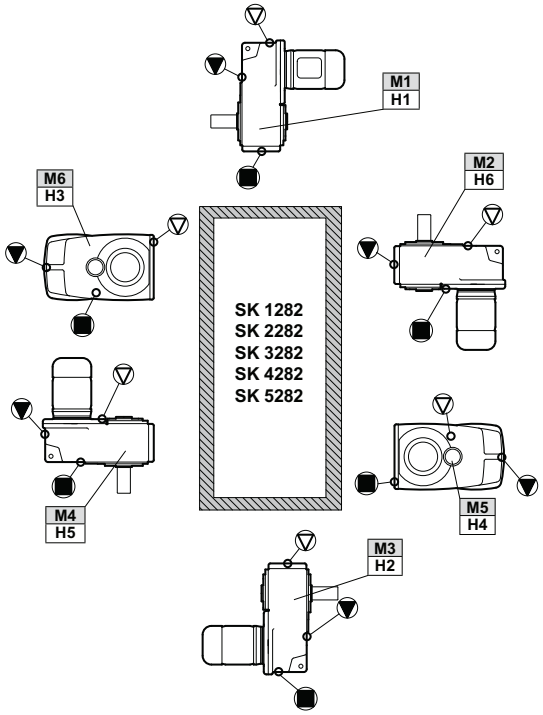

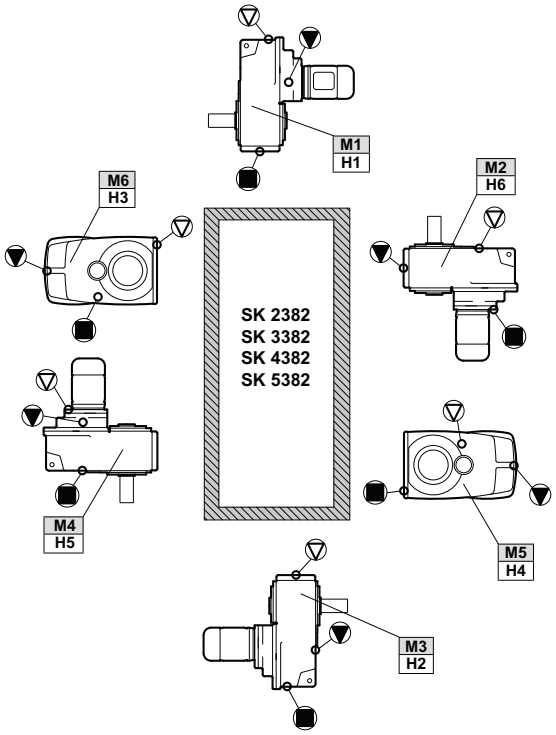

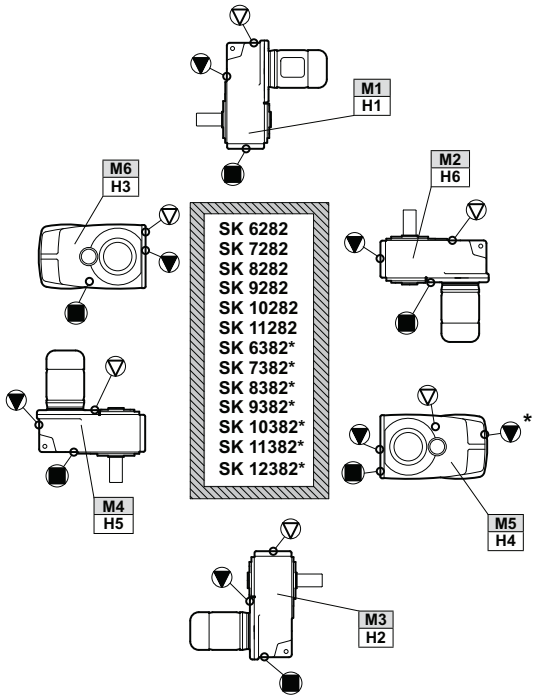

▽ = Vent

▼ = Oil Level

■ = Oil Drain

*** Oil level for 3 stage gear units.**

92 SERIES HELICAL-BEVEL OIL PLUG & VENT LOCATIONS

Oil plug connections

Prior to commissioning the reducer, check the oil-fill level using the reducer's oil-level plug and drain or add additional oil as needed. ***For mounting orientations other than shown please consult NORD Gear. New plug locations may be required.***

Foot Mount

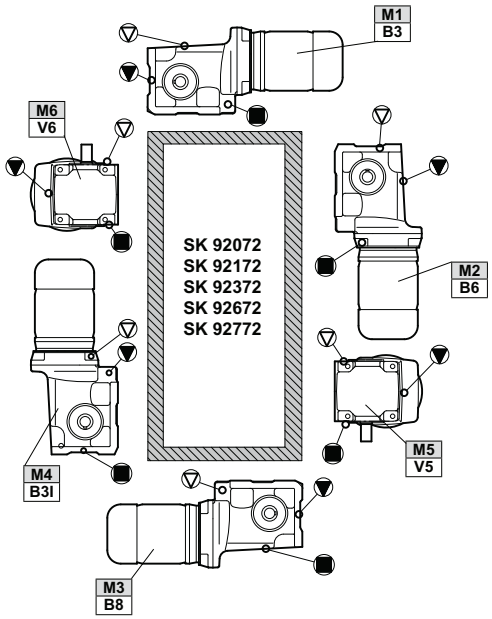

Shaft/Flange Mount

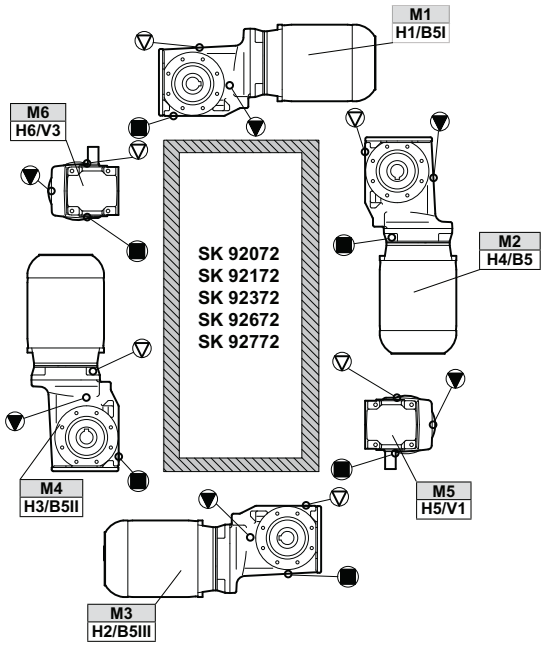

▽ = Vent

▼ = Oil Level

■ = Oil Drain

90.1 HELICAL-BEVEL OIL PLUG & VENT LOCATIONS

Oil plug connections

Prior to commissioning the reducer, check the oil-fill level using the reducer's oil-level plug and drain or add additional oil as needed. ***For mounting orientations other than shown please consult NORD Gear. New plug locations may be required.***

Foot Mount

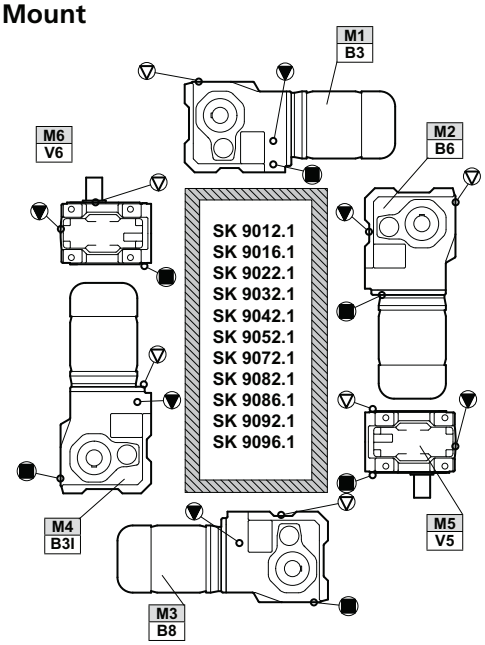

Foot Mount

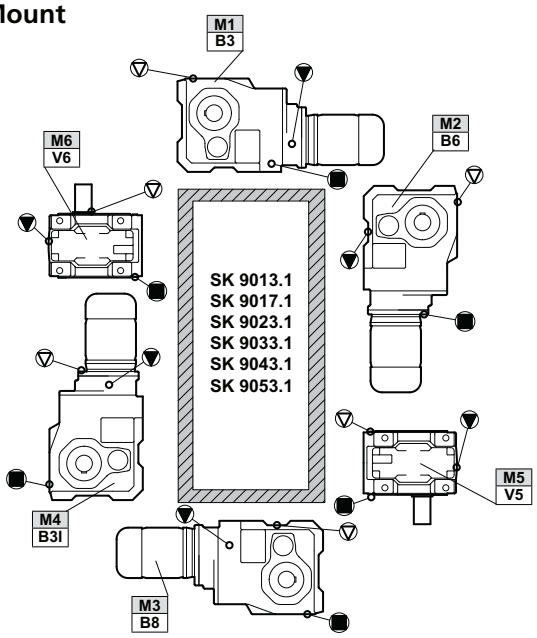

Shaft/Flange Mount

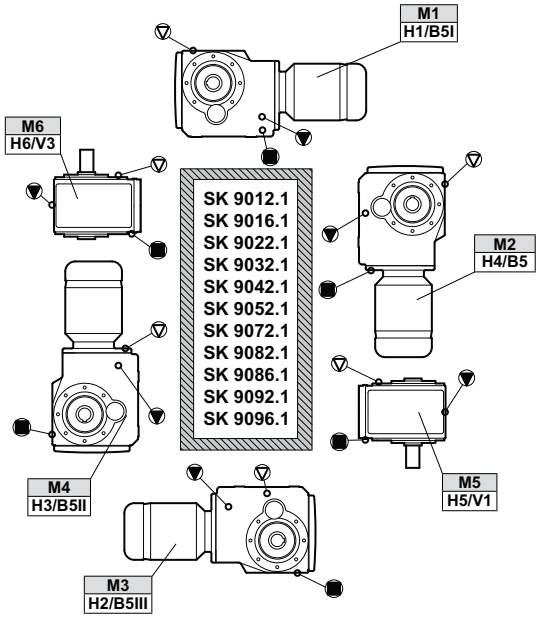

Shaft/Flange Mount

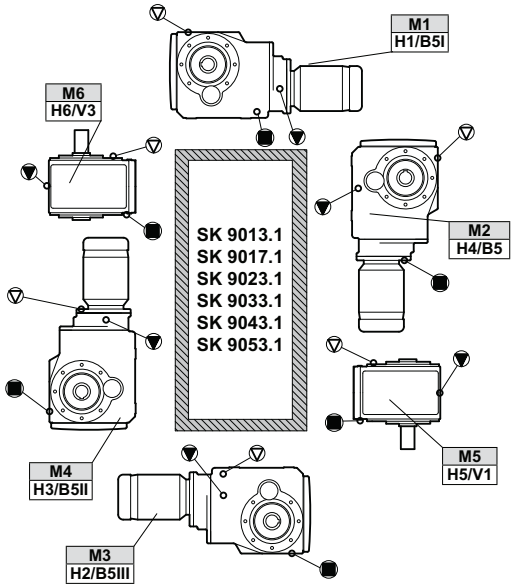

▽ = Vent

▼ = Oil Level

■ = Oil Drain

NORD Gear Limited
Toll Free in Canada: 800.668.4378

NORD Gear Corporation
Toll Free in the United States: 888.314.6673

HELICAL-WORM
OIL PLUG & VENT LOCATIONS

Oil plug connections

Prior to commissioning the reducer, check the oil-fill level using the reducer's oil-level plug and drain or add additional oil as needed. ***For mounting orientations other than shown please consult NORD Gear. New plug locations may be required.***

Foot Mount

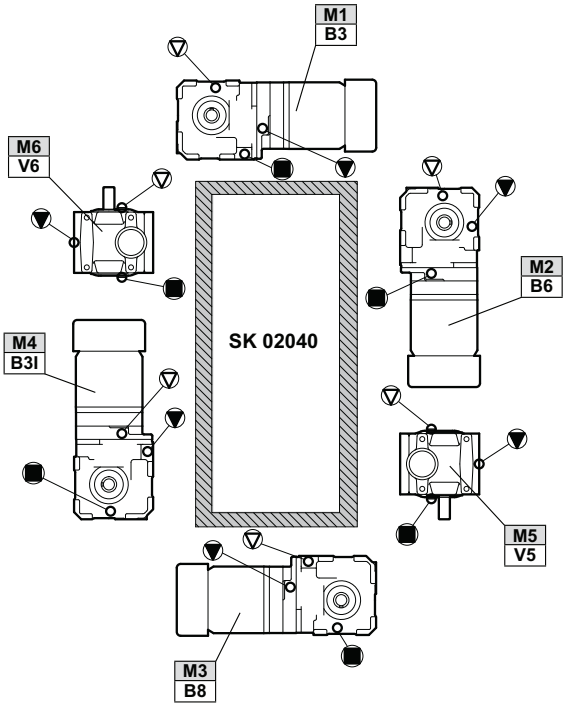

Shaft/Flange Mount

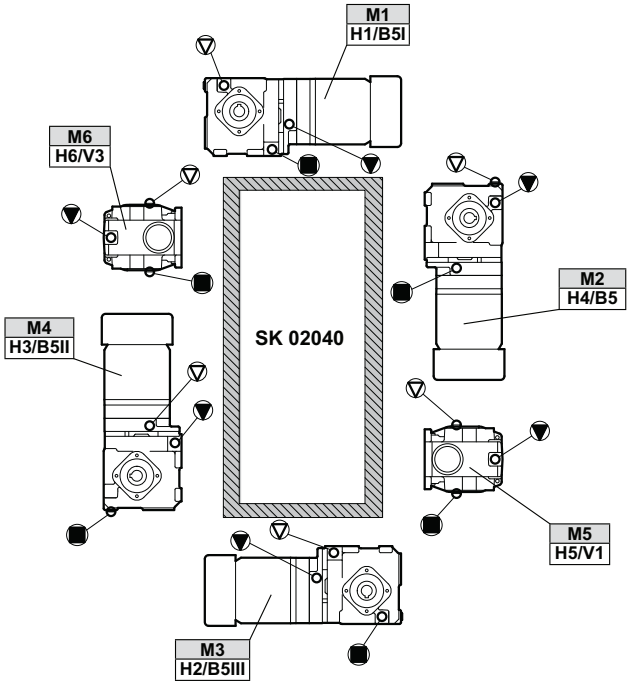

▽ = Vent

▼ = Oil Level

■ = Oil Drain

HELICAL-WORM
OIL PLUG & VENT LOCATIONS

Foot Mount

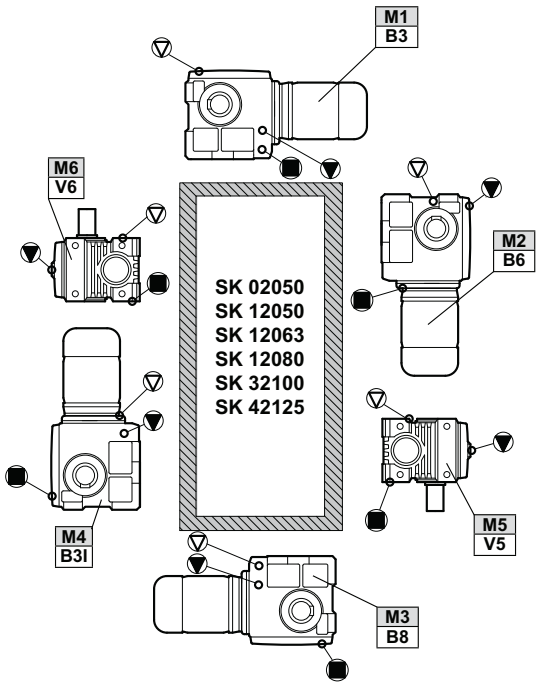

Foot Mount

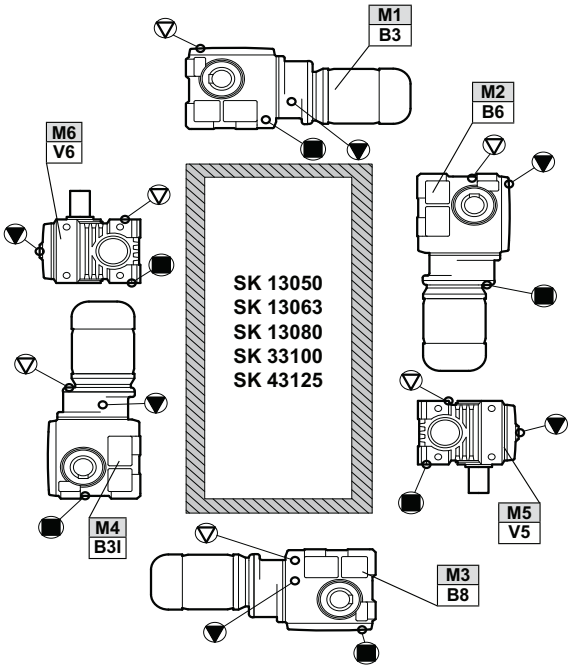

Shaft/Flange Mount

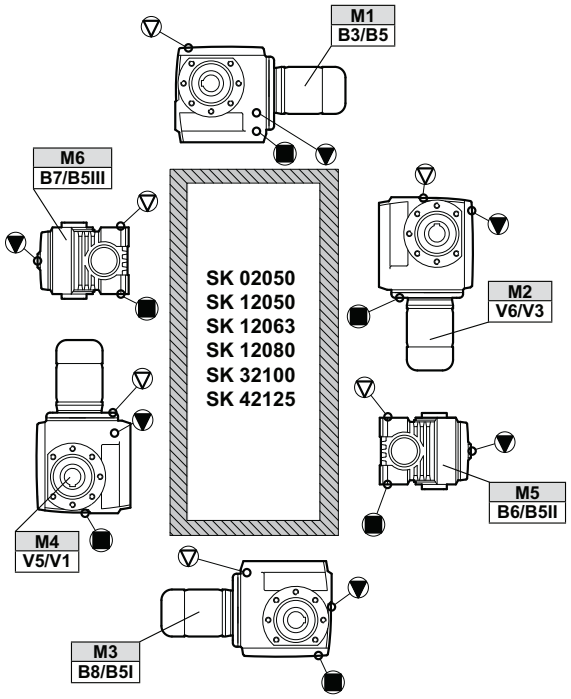

Shaft/Flange Mount

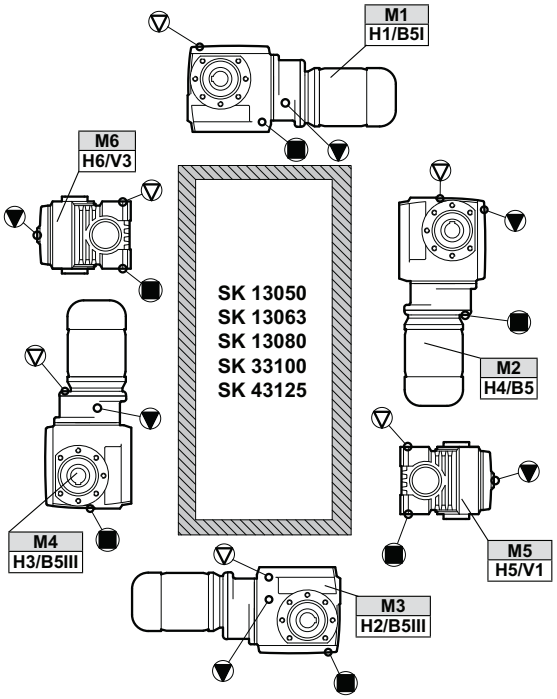

▽ = Vent

▼ = Oil Level

■ = Oil Drain

NORD Gear Limited
Toll Free in Canada: 800.668.4378

NORD Gear Corporation
Toll Free in the United States: 888.314.6673

NORDBLOC®
OIL PLUG & VENT LOCATIONS

Oil plug connections

Prior to commissioning the reducer, check the oil-fill level using the reducer's oil-level plug and drain or add additional oil as needed. ***For mounting orientations other than shown please consult NORD Gear. New plug locations may be required.***

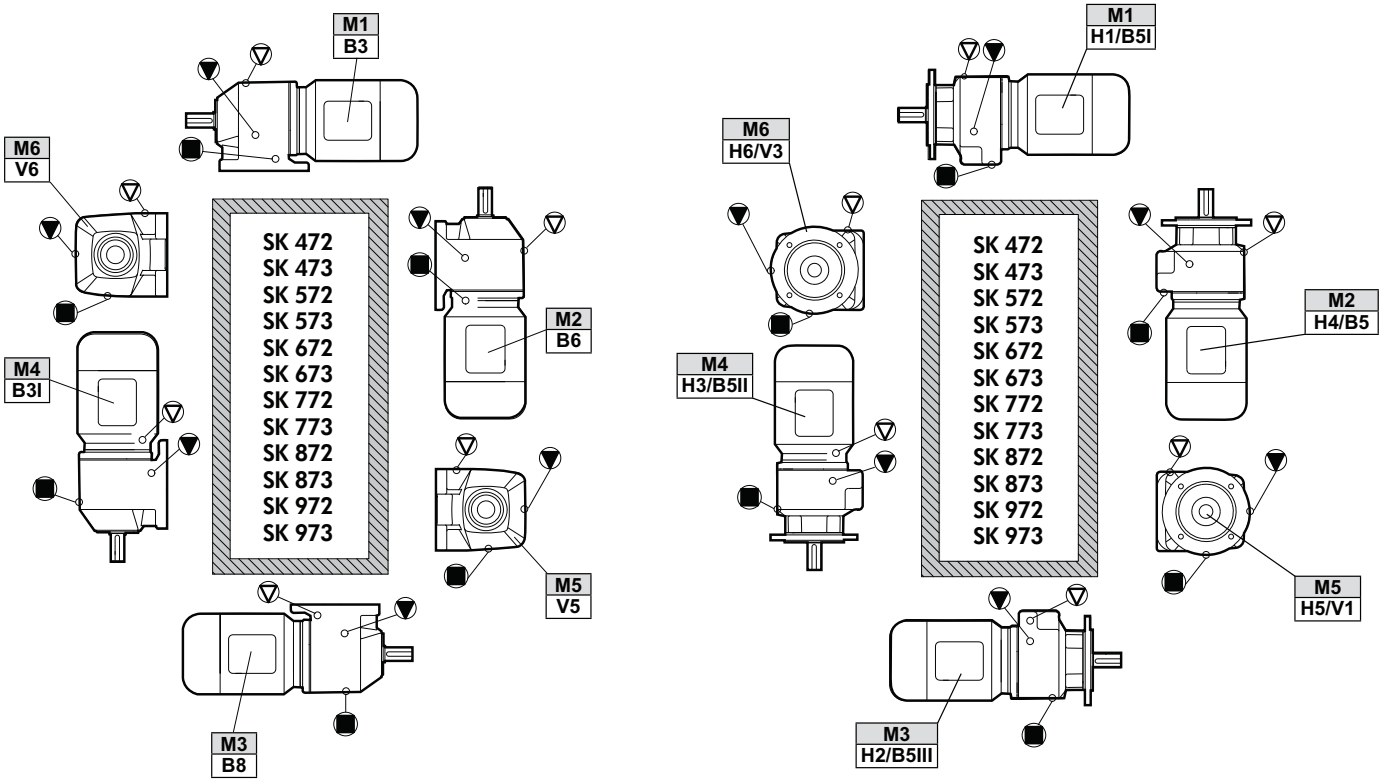

▽ = Vent

▼ = Oil Level

■ = Oil Drain

NORDBLOC®.1
OIL PLUG & VENT LOCATIONS

Oil plug connections

Prior to commissioning the reducer, check the oil-fill level using the reducer's oil-level plug and drain or add additional oil as needed. ***For mounting orientations other than shown please consult NORD Gear. New plug locations may be required.***

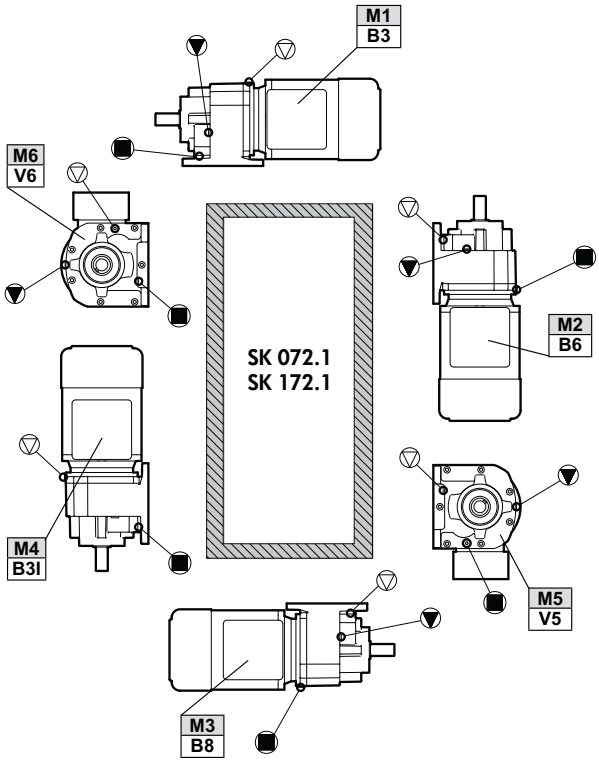

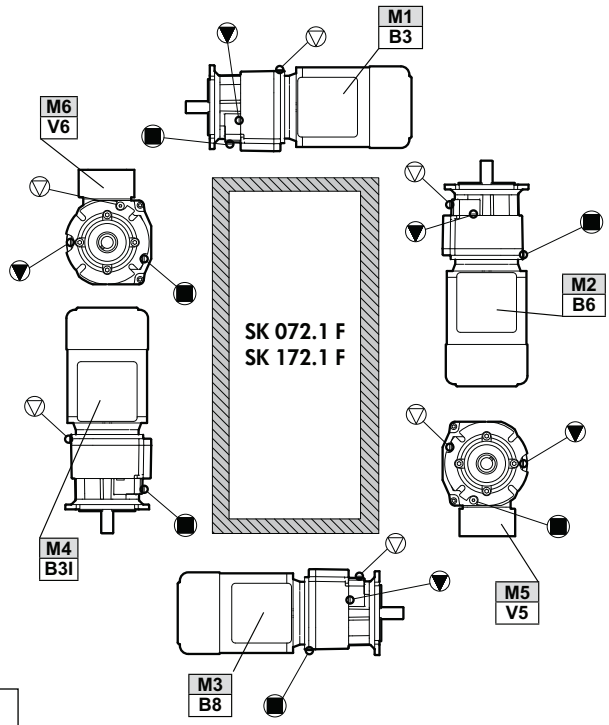

▽ = Vent

▼ = Oil Level

■ = Oil Drain

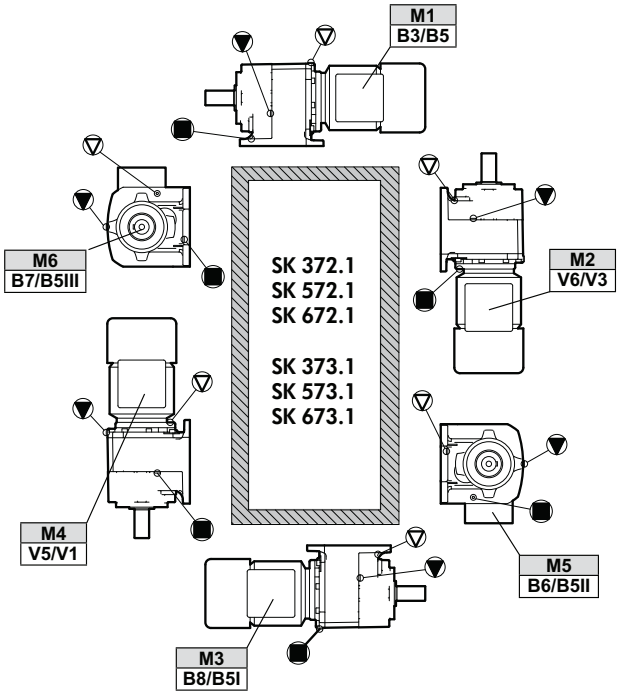

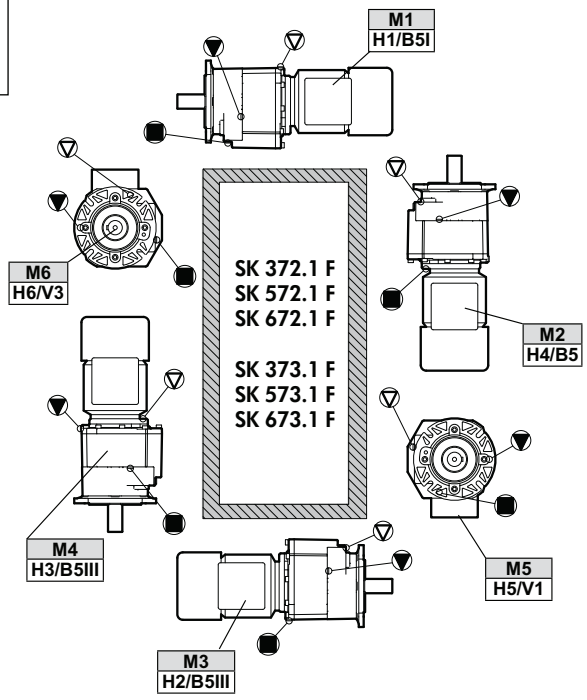

NORD Gear Limited
Toll Free in Canada: 800.668.4378

NORD Gear Corporation
Toll Free in the United States: 888.314.6673

FLEXBLOC™ VENT LOCATIONS

Vent locations

When ordered, NORD can provide a vent kit option for most FLEXBLOC™ gear units, with exception to the smallest SK1S31 unit.

Open Vent Kit	P/N 60693500 (Includes gasket)
AUTOVENT™	P/N 22008005 (vent) + P/N 25308120 (gasket)

The FLEXBLOC™ vent kits are field installable in accordance to the mounting positions as shown below.

STOP ***HARMFUL SITUATION*** **STOP**

The FLEXBLOC™ worm gear unit is intended to be mounted in oune of six positions as shown. For mounting positions other than shown, please consult NORD Gear prior to comissioning the gear drive unit.

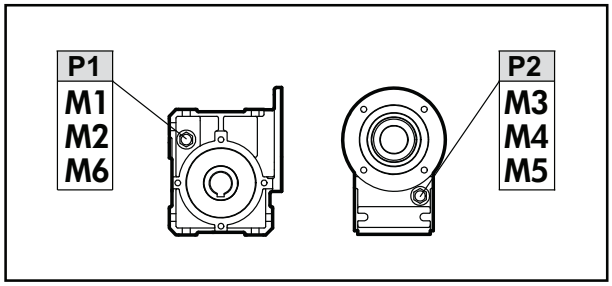

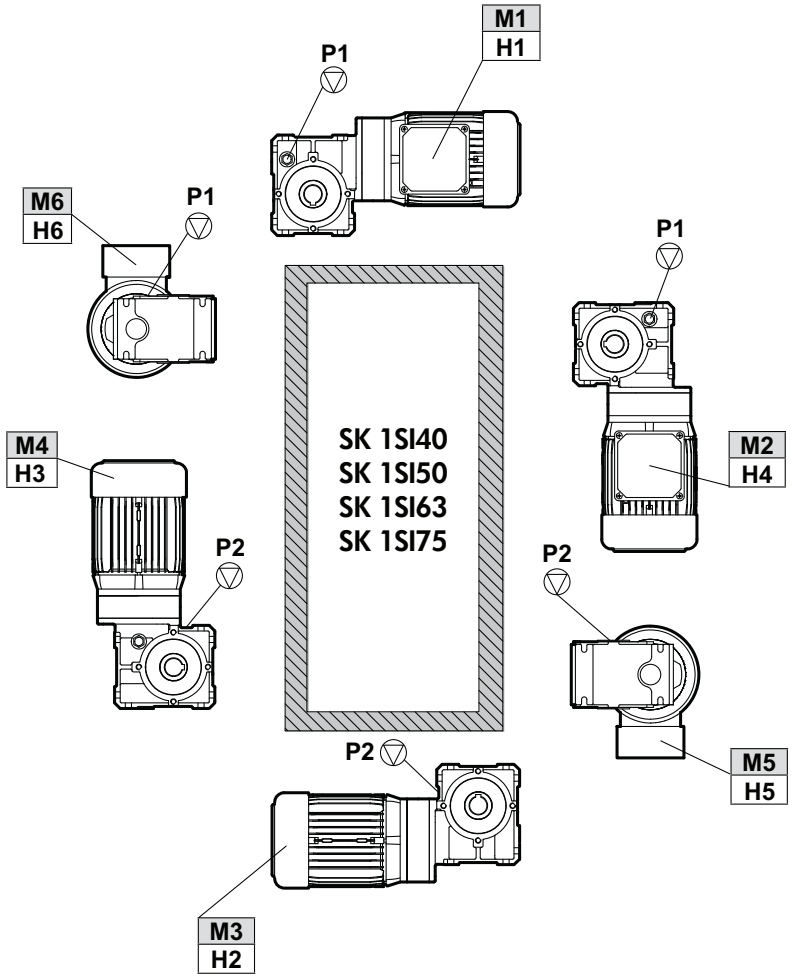

▽ = Vent

NORD Gear Limited
Toll Free in Canada: 800.668.4378

NORD Gear Corporation
Toll Free in the United States: 888.314.6673

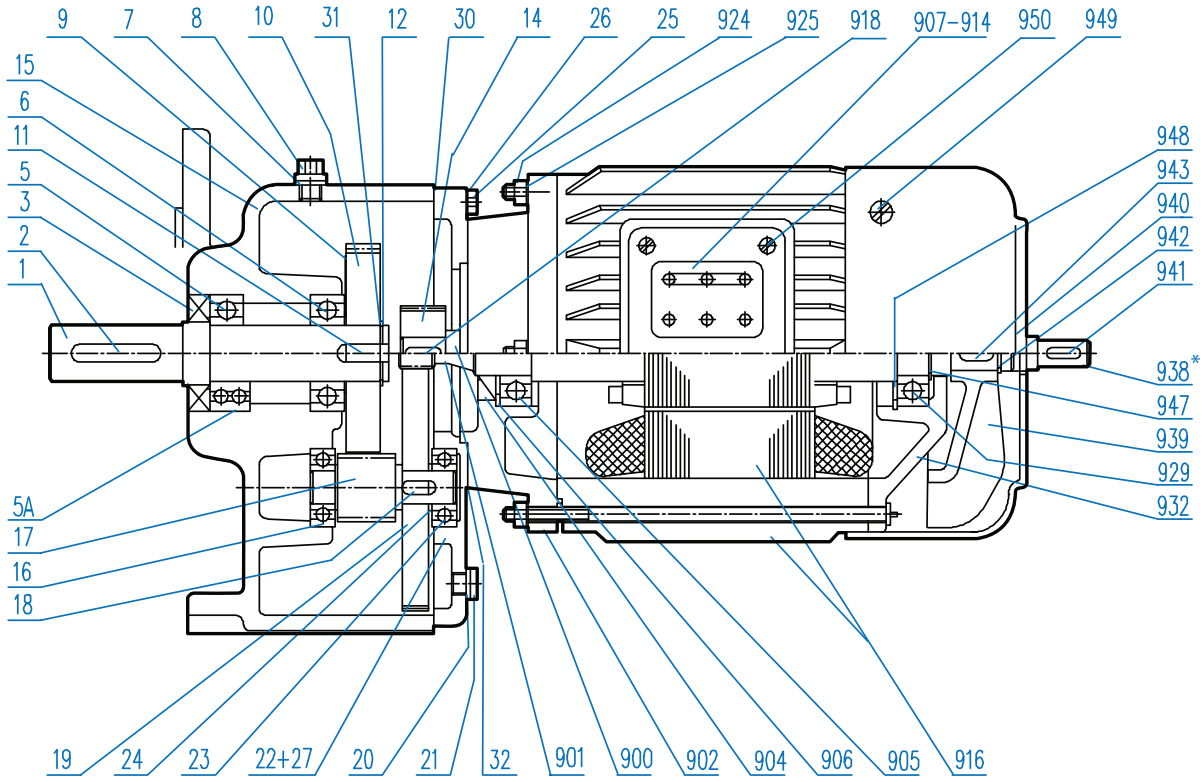

SK 0 - SK 33 Helical Gear Unit

1	Output shaft	21	Plug	910	Terminal box cover gasket
2	Key	22	Gear case cover	911	Terminal board
3	Shaft seal	23	Pinion shaft bearing	914	Cable entry gland
5	Output shaft bearing, normal	24	Shim	916	Stator case
5A	Output shaft bearing, reinforced	25	Hexagon bolt	918	Key
6	Output shaft bearing	26	Washer	924	Collar bolt
7	Seal	27	Spiral pin	925	Hexagonal nut
8	Vent screw	30	Seal	929	Bearing B
9	Shim	31	Shim	932	Endshield B
10	Driven gear	32	Seal	938	Second motor shaft end*
11	Key	900	Rotor with shaft,plain	939	Fan
12	Circlip	901	Rotor with shaft,gearcut	940	Fan cover
14	Driving pinion	902	End shield A	941	Key
15	Gear case	904	Shaft seal	942	Circlip
16	Pinion shaft, bearing	905	Bearing A	943	Key
17	Driven pinion	906	Bearing shim	947	Circlip
18	Key	907	Terminal box frame	948	Circlip
19	Driving gear	908	Terminal box cover	949	Oval flat-head bolt
20	Seal	909	Terminal box frame gasket	950	Oval flat-head bolt

* Optional Part

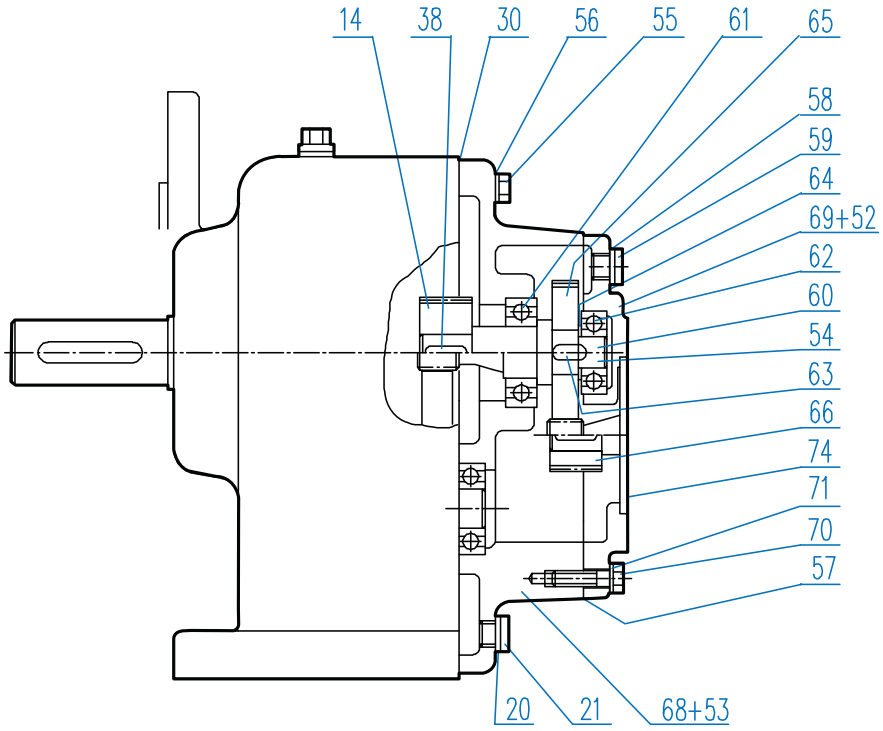

SK 010 - SK 330 Third Stage Reduction Gear

14	Driving pinion	55	Hexagon bolt	64	Shim
20	Seal	56	Washer	65	Driving gear
21	Plug	57	Seal	66	Driving pinion
27	Spiral pin	58	Seal	68	Gear case 3rd.-red.
30	Seal	59	Plug	69	Gear case cover
38	Key	60	Intermediate shaft, plain	70	Hexagon bolt
52	Spiral pin	61	Grooved ball bearing	71	Washer
53	Spiral pin	62	Grooved ball bearing	74	Seal
54	Intermediate shaft, gearcut	63	Key		

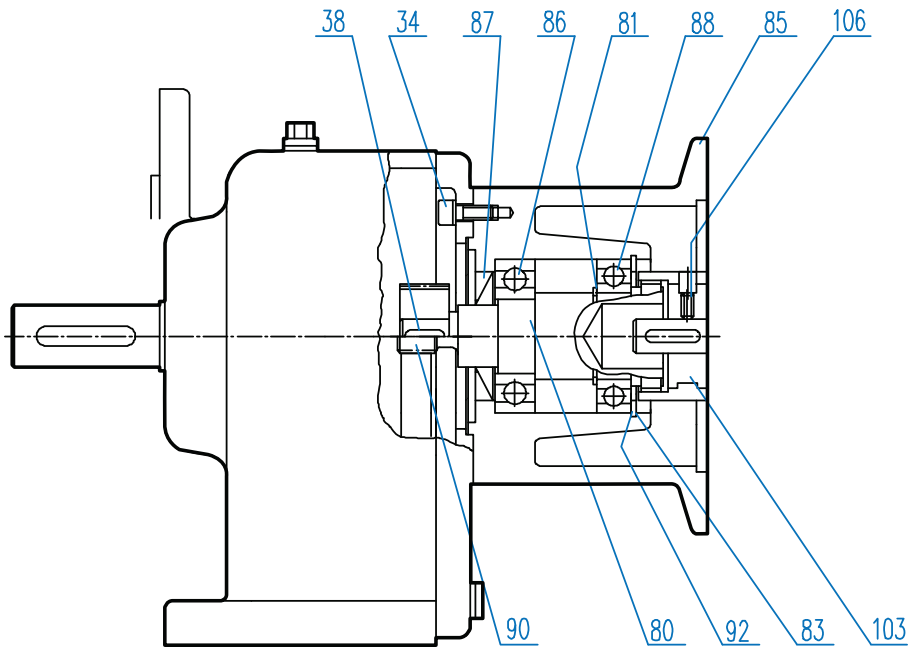

SK 0 - SK 330 IEC Input

34	Socket head bolt	85	IEC adaptor	92	Shim
38	Key	86	Input shaft bearing	103	Coupling
80	Input shaft	87	Shaft seal	106	Set screw
81	Circlip	88	Input shaft bearing		
83	Circlip	90	Pinion shaft		

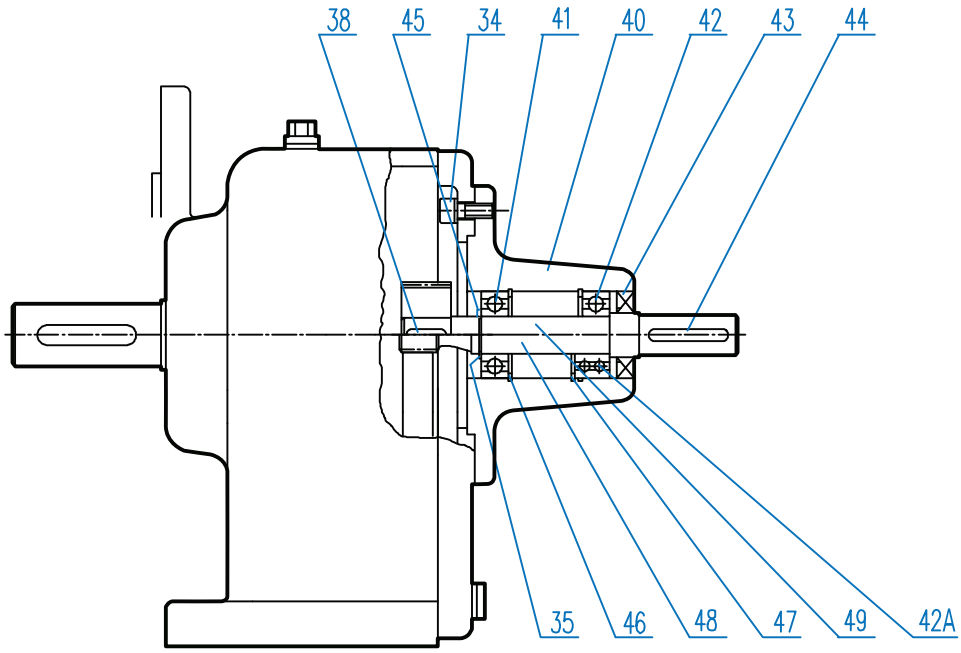

SK 0 - SK 330 Solid Shaft Input (W)

34	Socket head bolt	42	Grooved ball bearing, normal	46	Circlip
35	Shim	42A	Grooved ball bearing, reinforced	47	Circlip
38	Key	43	Shaft seal	48	Input shaft, gearcut
40	Input bearing housing	44	Key	49	input shaft, plain
41	Grooved ball bearing	45	Circlip		

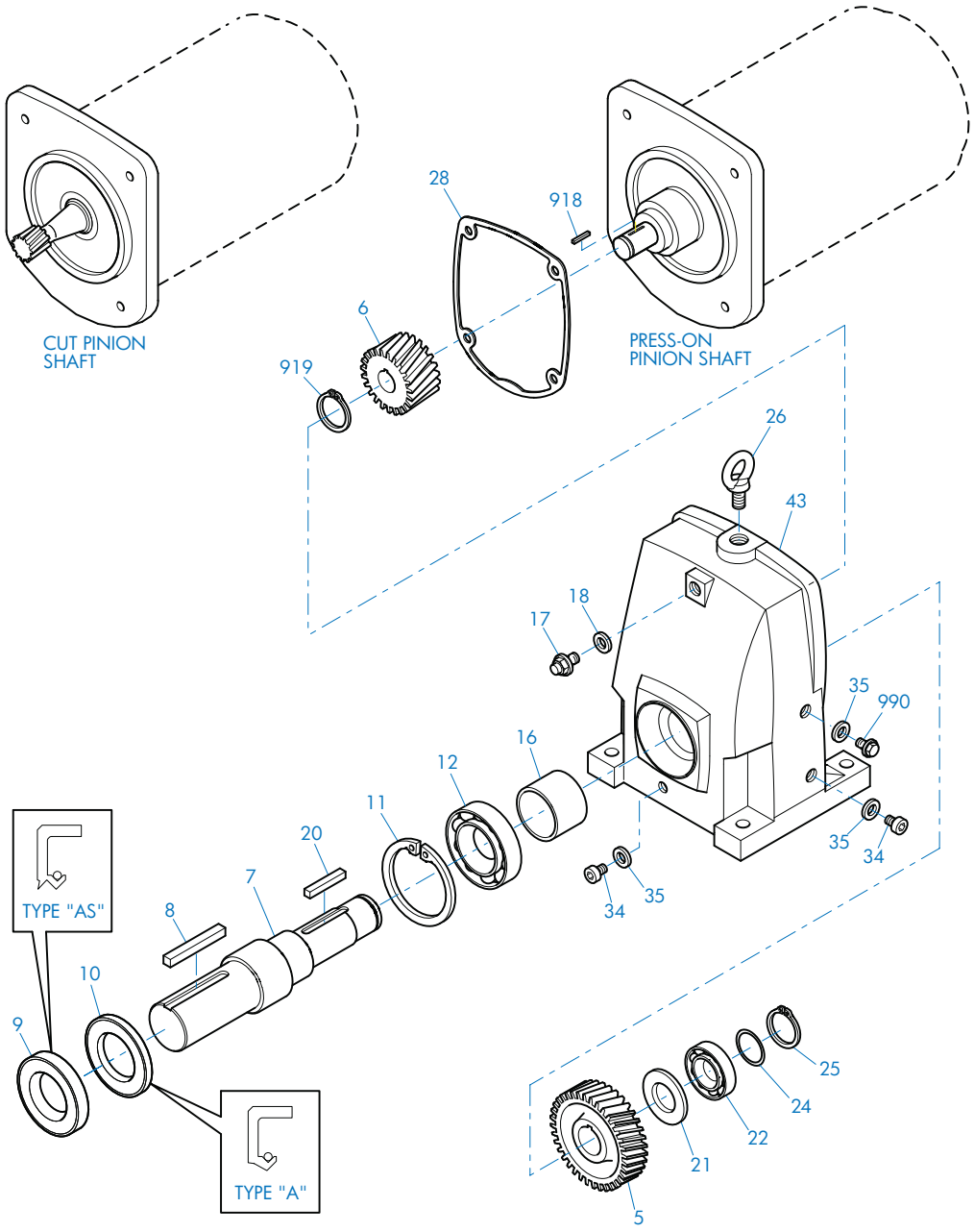

SK 11E - SK 51E Foot Mount

5	Gear	16	Spacer	26	Flanged Eye Bolt
6	Pinion	17	Vent Plug	28	Gasket
7	Output Shaft	18	Seal	34	Drain Plug
8	Key	20	Key	35	Gasket
9	Oil Seal	21	Spacer	43	Gearcase
10	Oil Seal	22	Anti-Friction Bearing	918	Key
11	Snap Ring	24	Shim	919	Snap Ring
12	Anti-Friction Bearing	25	Snap Ring	990	Oil Level Plug

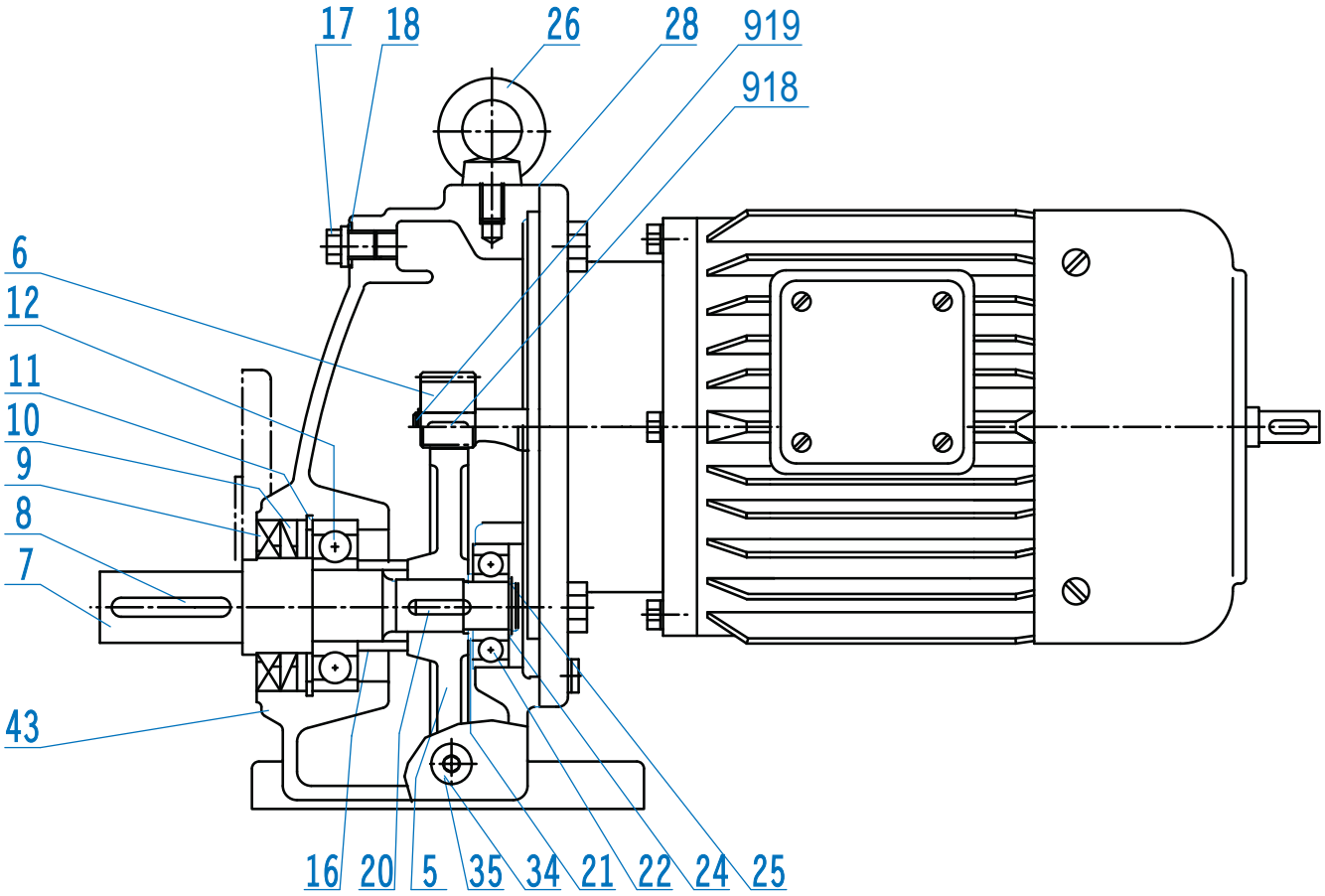

SK 11E - SK 51E Foot Mount

5	Gear	16	Spacer	26	Flanged Eye Bolt
6	Pinion	17	Vent Plug	28	Gasket
7	Output Shaft	18	Seal	34	Drain Plug
8	Key	20	Key	35	Gasket
9	Oil Seal	21	Spacer	43	Gearcase
10	Oil Seal	22	Anti-Friction Bearing	918	Key
11	Snap Ring	24	Shim	919	Snap Ring
12	Anti-Friction Bearing	25	Snap Ring		

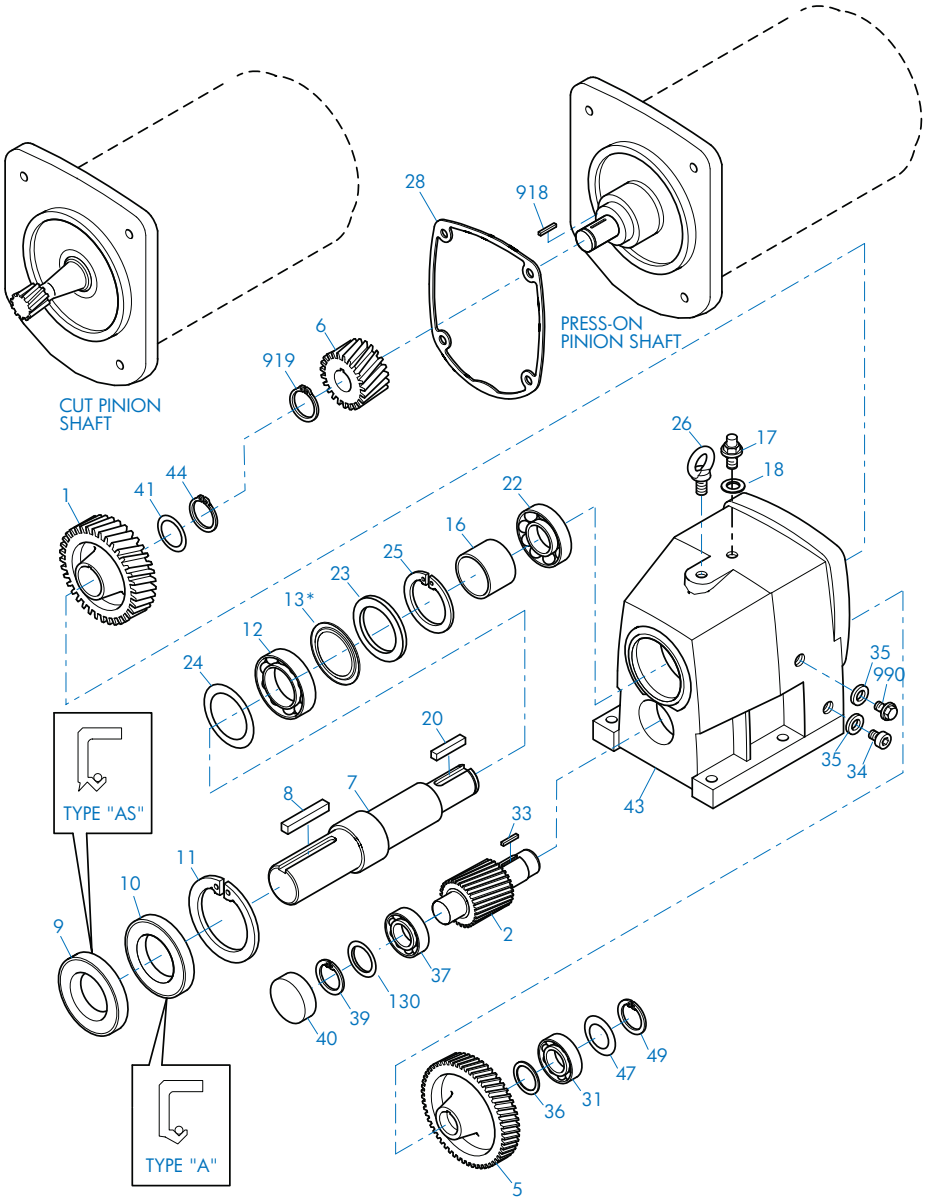

SK02 - SK52 Foot Mount

1	Gear	18	Seal	37	Anti-Friction Bearing
2	Pinion Shaft	20	Key	39	Snap Ring
5	Gear	22	Anti-Friction Bearing	40	Bore Plug
6	Pinion	23	Thrust Washer	41	Shim
7	Output Shaft	24	Shim	43	Gearcase
8	Key	25	Snap Ring	44	Snap Ring
9	Oil Seal	26	Flanged Eye Bolt	47	Shim
10	Oil Seal	28	Gasket	49	Snap Ring
11	Snap Ring	31	Anti-Friction Bearing	130	Shim
12	Anti-Friction Bearing	33	Key	918	Key
13	NILOS Ring*	34	Drain Plug	919	Snap Ring
16	Spacer	35	Gasket	990	Oil Level Plug
17	Vent Plug	36	Spacer		

* Conditionally used part

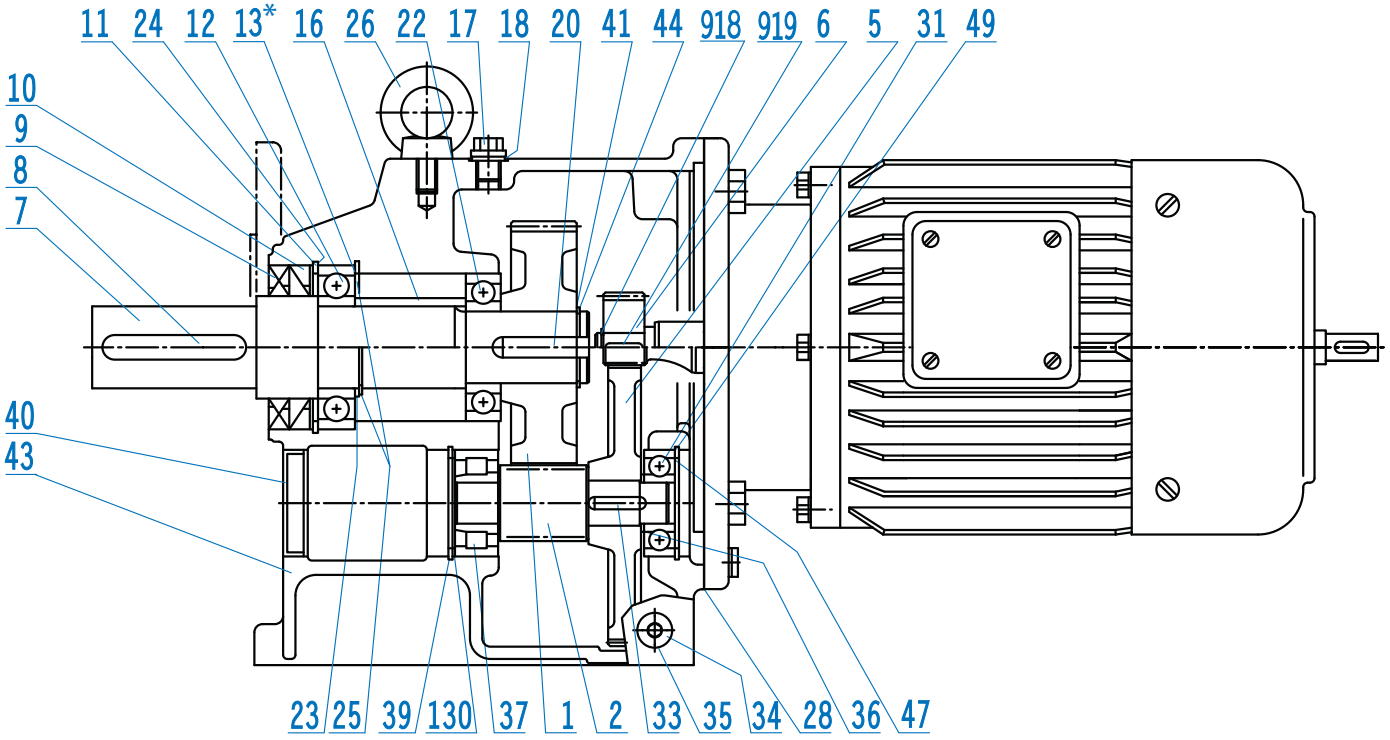

SK02 - SK52 Foot Mount

1	Gear	18	Seal	37	Anti-Friction Bearing
2	Pinion Shaft	20	Key	39	Snap Ring
5	Gear	22	Anti-Friction Bearing	40	Bore Plug
6	Pinion	23	Thrust Washer	41	Shim
7	Output Shaft	24	Shim	43	Gearcase
8	Key	25	Snap Ring	44	Snap Ring
9	Oil Seal	26	Flanged Eye Bolt	47	Shim
10	Oil Seal	28	Gasket	49	Snap Ring
11	Snap Ring	31	Anti-Friction Bearing	130	Shim
12	Anti-Friction Bearing	33	Key	918	Key
13	NILOS Ring*	34	Drain Plug	919	Snap Ring
16	Spacer	35	Gasket		
17	Vent Plug	36	Spacer		

* Conditionally used part

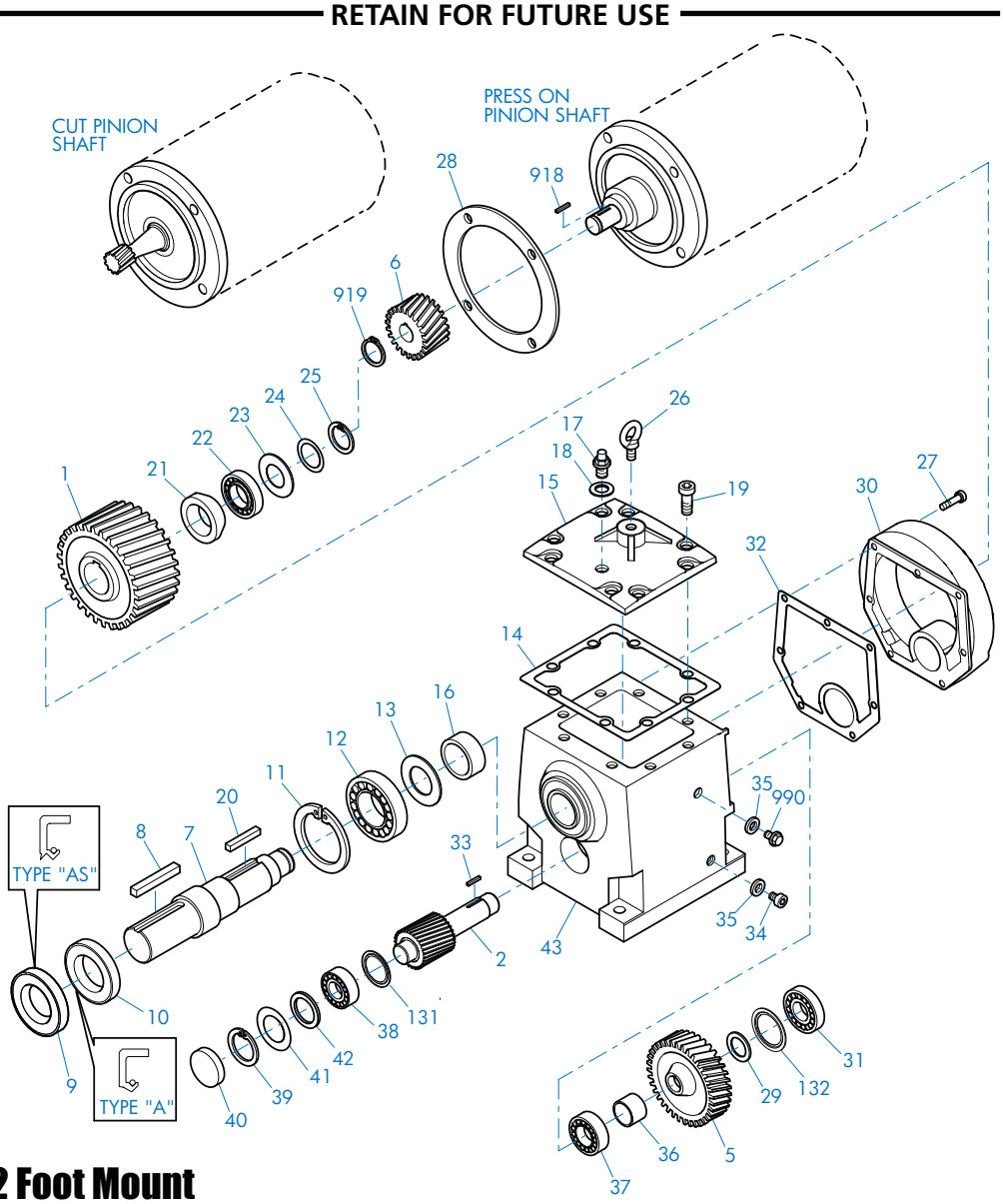

SK62 - SK102 Foot Mount

1	Gear	19	Bolt	35	Gasket
2	Pinion Shaft	20	Key	36	Spacer
5	Gear	21	Spacer	37	Anti-Friction Bearing
6	Pinion	22	Anti-Friction Bearing	38	Anti-Friction Bearing
7	Output Shaft	23	Thrust Washer	39	Snap Ring
8	Key	24	Shim	40	Bore Plug
9	Oil Seal	25	Snap Ring	41	Shim
10	Oil Seal	26	Flanged Eye Bolt	42	Thrust Washer
11	Snap Ring	27	Bolt	43	Gearcase
12	Anti-Friction Bearing	28	Gasket	131	NILOS Ring
13	NILOS ring	29	Spacer	132	NILOS Ring
14	Gasket	30	Input Cover	918	Key
15	Inspection Cover	31	Anti-Friction Bearing	919	Snap Ring
16	Spacer	32	Gasket	990	Oil Level Plug
17	Vent Plug	33	Key		
18	Seal	34	Drain Plug		

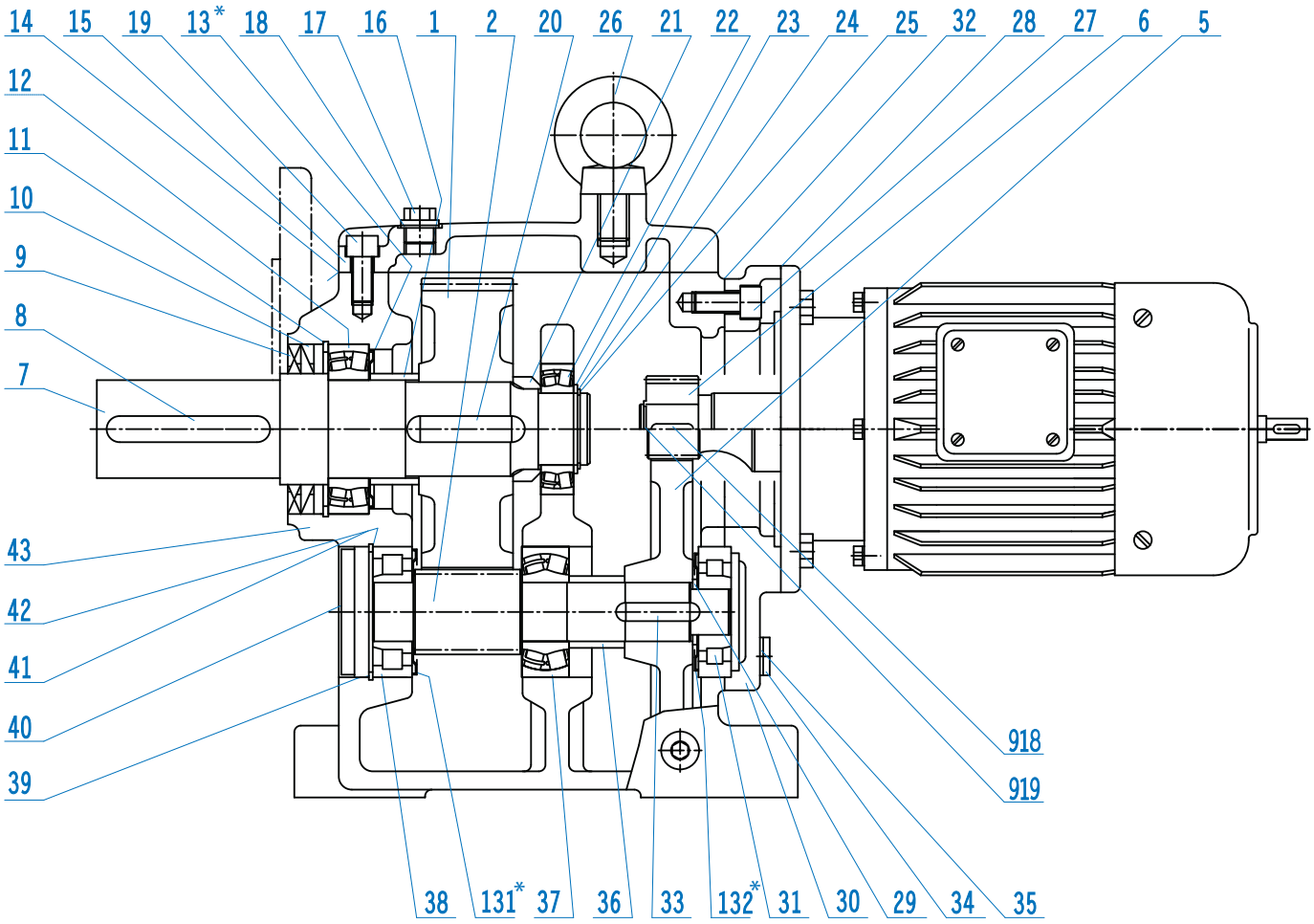

SK62 - SK102 Foot Mount

1	Gear	18	Seal	33	Key
2	Pinion Shaft	19	Bolt	34	Drain Plug
5	Gear	20	Key	35	Gasket
6	Pinion	21	Spacer	36	Spacer
7	Output Shaft	22	Anti-Friction Bearing	37	Anti-Friction Bearing
8	Key	23	Thrust Washer	38	Anti-Friction Bearing
9	Oil Seal	24	Shim	39	Snap Ring
10	Oil Seal	25	Snap Ring	40	Bore Plug
11	Snap Ring	26	Flanged Eye Bolt	41	Shim
12	Anti-Friction Bearing	27	Bolt	42	Thrust Washer
13	NILOS ring*	28	Gasket	43	Gearcase
14	Gasket	29	Spacer	131	NILOS Ring*
15	Inspection Cover	30	Input Cover	132	NILOS Ring*
16	Spacer	31	Anti-Friction Bearing	918	Key
17	Vent Plug	32	Gasket	919	Snap Ring

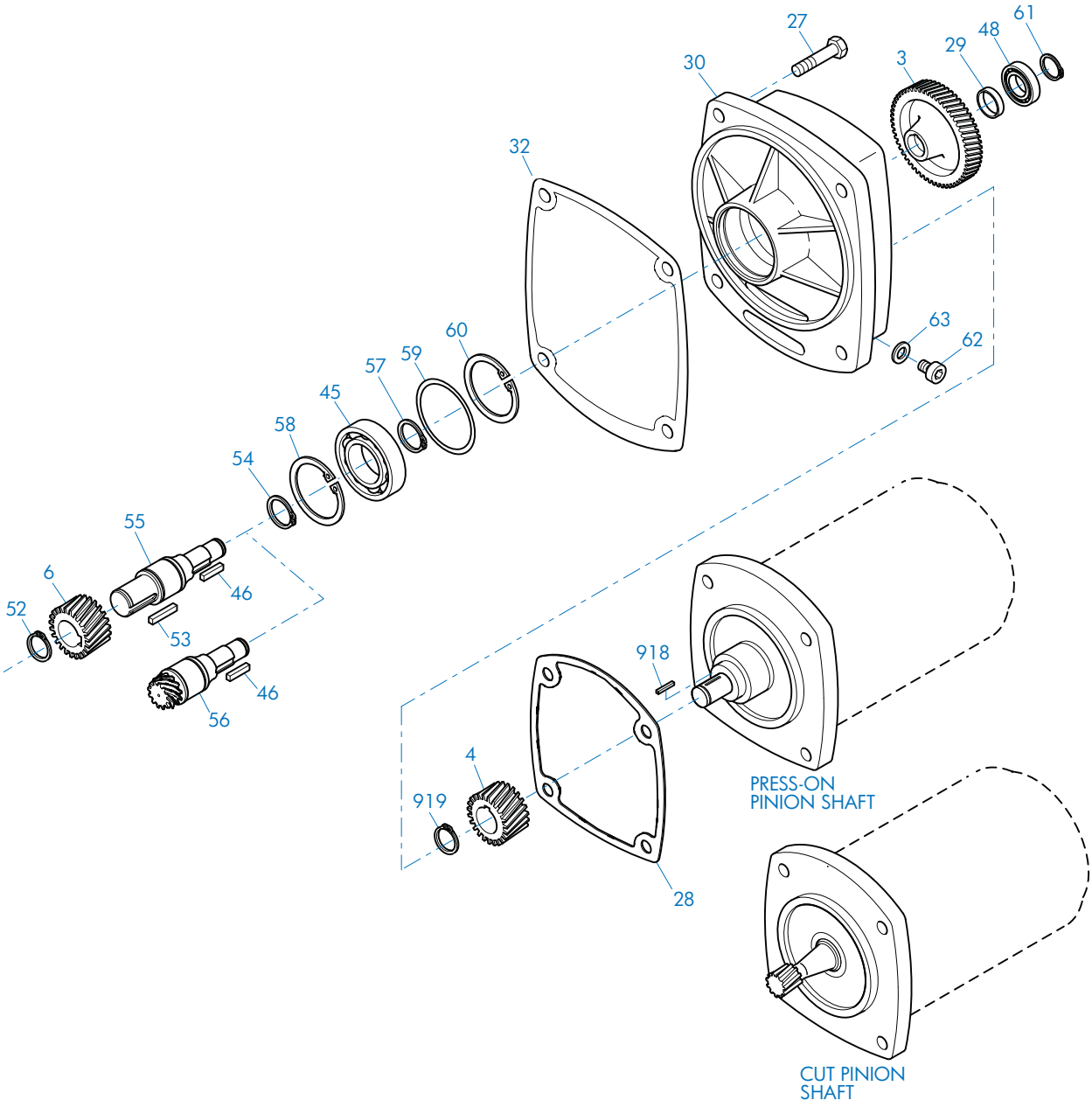

SK03 - SK53 Third Stage Reduction Gear

3	Gear	46	Key	59	Shim
4	Pinion	48	Anti-Friction Bearing	60	Snap Ring
6	Pinion	52	Snap Ring	61	Snap Ring
27	Bolt	53	Key	62	Oil Plug
28	Gasket	54	Snap Ring	63	Gasket
29	Spacer	55	Intermediate Shaft, Plain	918	Key
30	Third Reduction Gearcase	56	Intermediate Shaft, Gearcut	919	Snap Ring
32	Gasket	57	Snap Ring		
45	Anti-Friction Bearing	58	Snap Ring		

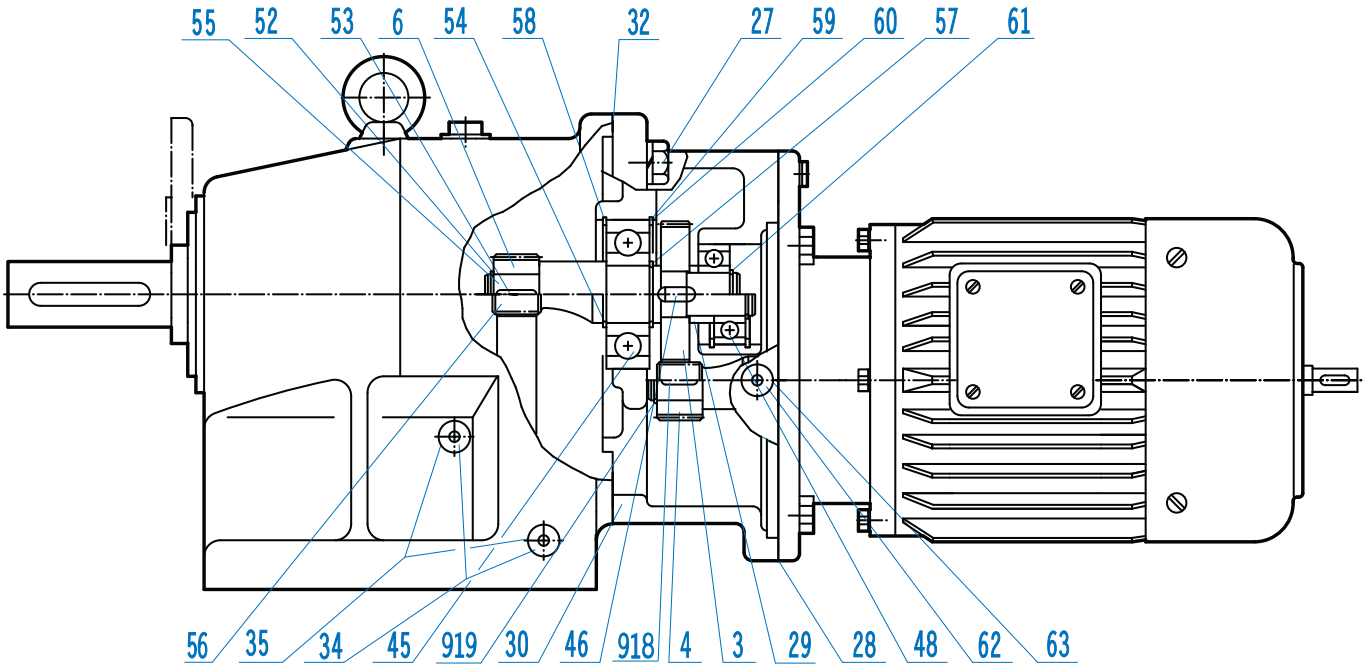

SK03 - SK53 Using Third Stage Reduction Gear

3	Gear	46	Key	59	Shim
4	Pinion	48	Anti-Friction Bearing	60	Snap Ring
6	Pinion	52	Snap Ring	61	Snap Ring
27	Bolt	53	Key	62	Oil Plug
28	Gasket	54	Snap Ring	63	Gasket
29	Spacer	55	Intermediate Shaft, Plain	918	Key
30	Third Reduction Gearcase	56	Intermediate Shaft, Gearcut	919	Snap Ring
32	Gasket	57	Snap Ring		
45	Anti-Friction Bearing	58	Snap Ring		

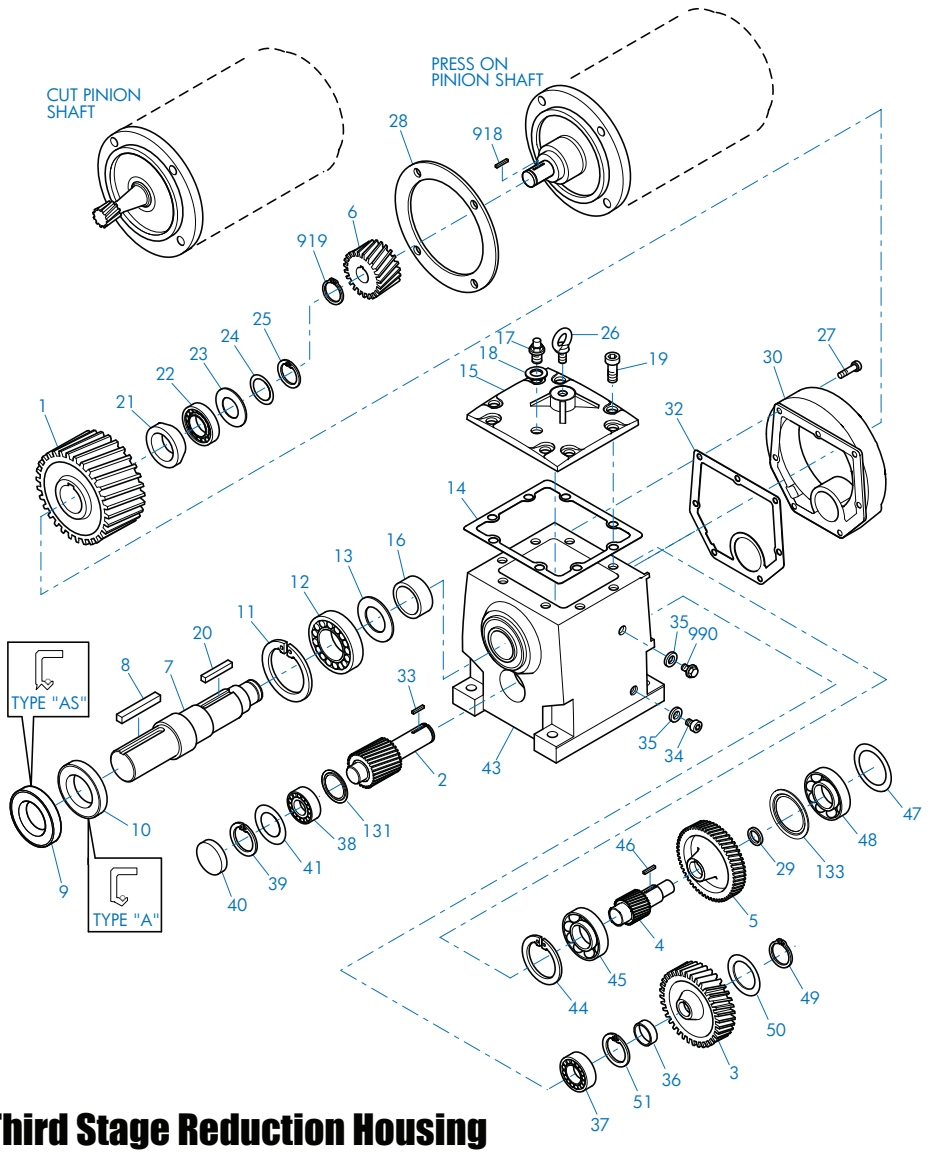

SK63 - SK103 Third Stage Reduction Housing

1	Gear	19	Bolt	38	Anti-Friction Bearing
2	Pinion Shaft	20	Key	39	Snap Ring
3	Gear	21	Spacer	40	Bore Plug
4	Pinion Shaft	22	Anti-Friction Bearing	41	Shim
5	Gear	23	Thrust Washer	43	Gearcase
6	Pinion	24	Shim	44	Snap Ring
7	Output Shaft	25	Snap Ring	45	Anti-Friction Bearing
8	Key	26	Flanged Eye Bolt	46	Key
9	Oil Seal	27	Bolt	47	Shim
10	Oil Seal	28	Gasket	48	Bearing
11	Snap Ring	29	Spacer	49	Snap Ring
12	Anti-Friction Bearing	30	Input Cover	50	Thrust Washer
13	NILOS Ring	32	Gasket	51	Snap Ring
14	Gasket	33	Key	131	NILOS Ring
15	Inspection Cover	34	Drain plug	133	NILOS Ring
16	Spacer	35	Gasket	918	Key
17	Vent Plug	36	Spacer	919	Snap Ring
18	Seal	37	Anti-Friction Bearing	990	Oil Level Plug

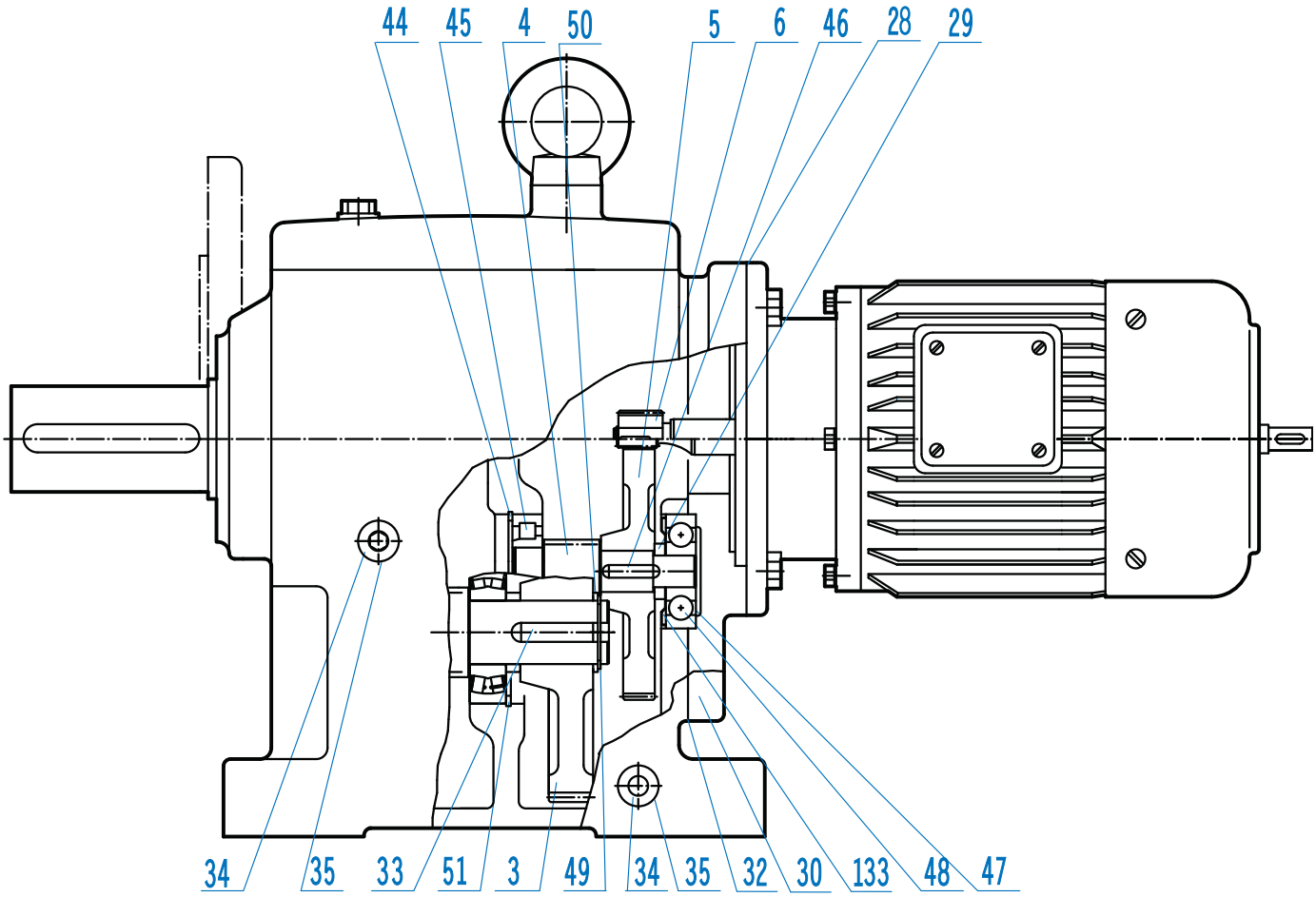

SK63 - SK103 Foot Mount

3	Gear	32	Gasket	47	Shim
4	Pinion Shaft	33	Key	48	Bearing
5	Gear	34	Drain plug	49	Snap Ring
6	Pinion	35	Gasket	50	Thrust Washer
28	Gasket	44	Snap Ring	51	Snap Ring
29	Spacer	45	Anti-Friction Bearing	133	NILOS Ring
30	Input Cover	46	Key		

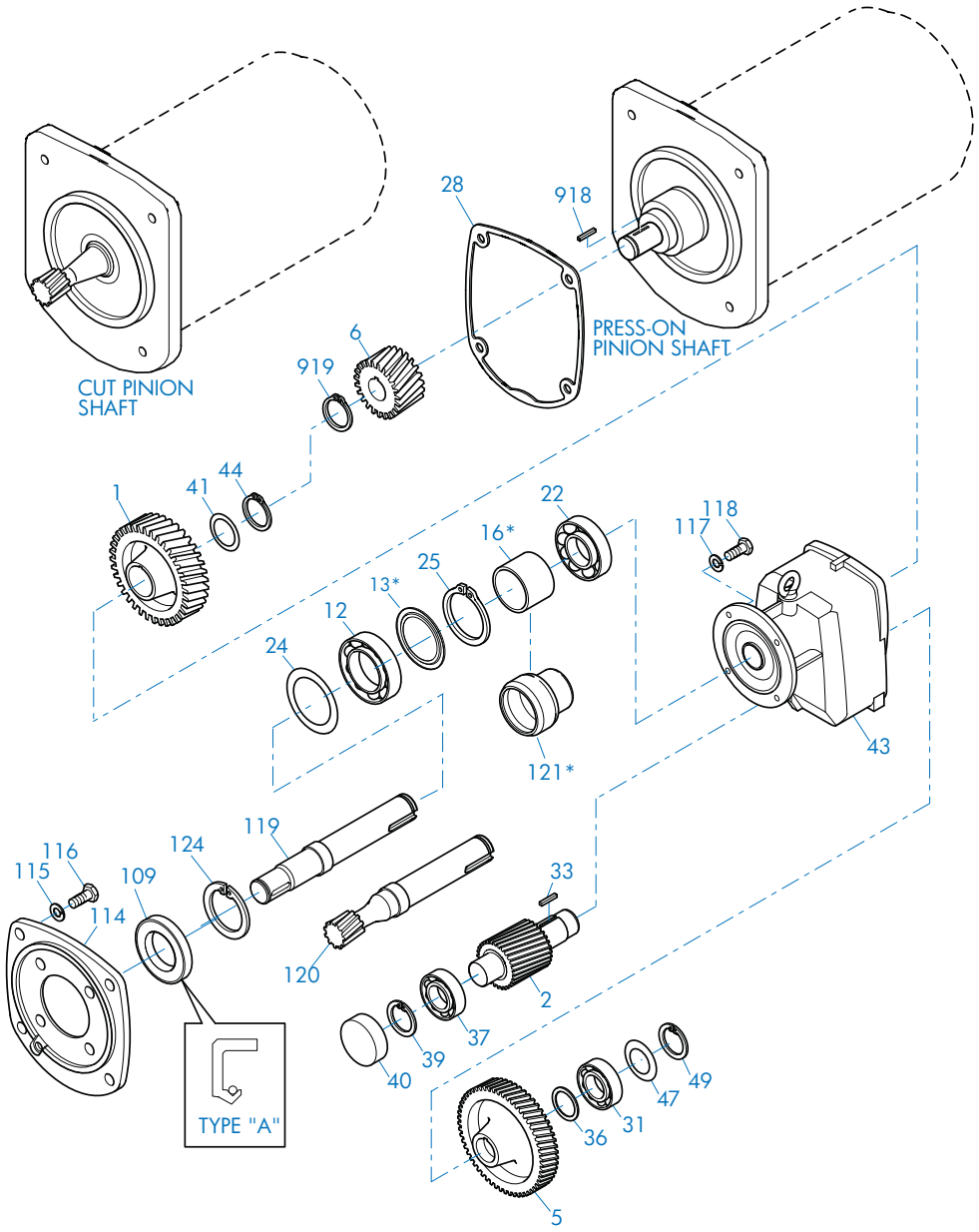

SK12/02 - SK103/52 Input Compound Reduction

1	Gear	33	Key	115	Lock Washer
2	Pinion Shaft	36	Spacer	116	Bolt
5	Gear	37	Anti-Friction Bearing	117	Lock Washer
6	Pinion	39	Snap Ring	118	Bolt
12	Anti-Friction Bearing	40	Bore Plug	119	Intermediate Shaft, Plain
13	Nilos Ring*	41	Shim	120	Intermediate Shaft, Gearcut
16	Spacer*	43	Gearcase	121	Bearing Sleeve*
22	Anti-Friction Bearing	44	Snap Ring	124	Snap Ring
24	Shim	47	Shim	918	Key
25	Snap Ring	49	Snap Ring	919	Snap Ring
28	Gasket	109	Oil Seal		
31	Anti-Friction Bearing	114	Intermediate Flange		

* Conditionally used part

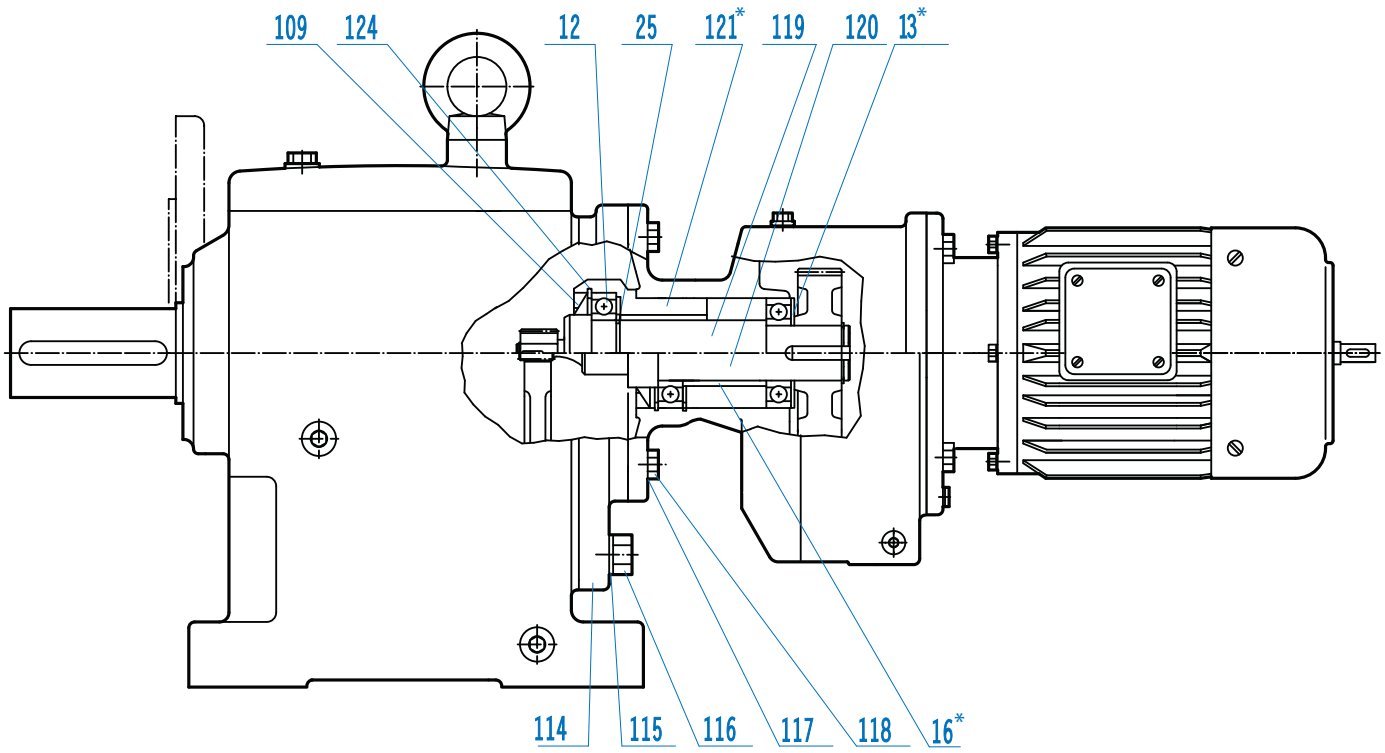

SK12/02 - SK103/52 Input Compound Reduction

12	Anti-Friction Bearing	115	Lock Washer	120	Intermediate Shaft, Gearcut
13	Nilos Ring*	116	Bolt	121	Bearing Sleeve*
16	Spacer*	117	Lock Washer	124	Snap Ring
25	Snap Ring	118	Bolt		
109	Oil Seal	119	Intermediate Shaft, Plain		
114	Intermediate Flange				

* Conditionally used part

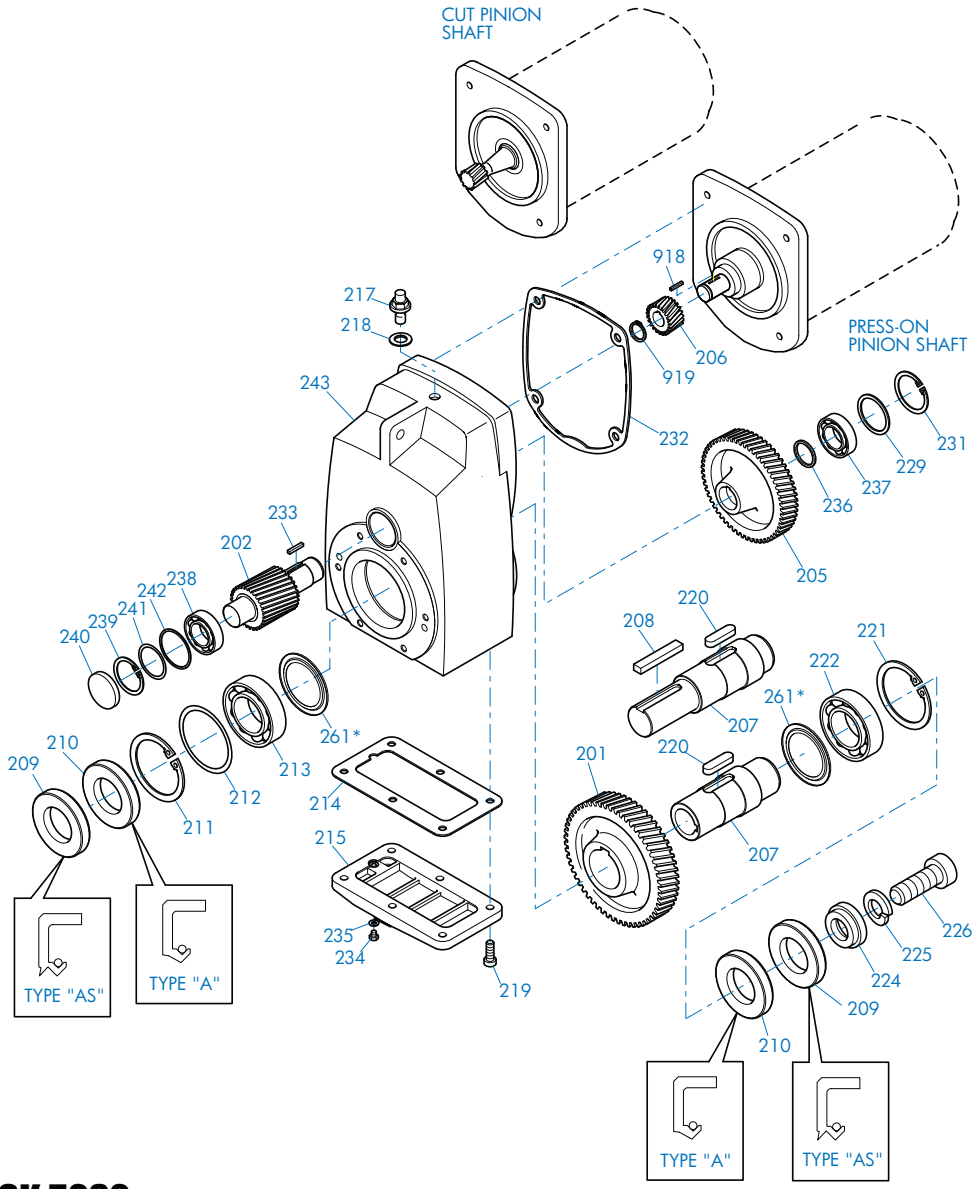

SK 0182NB - SK 5282

201 Gear	217 Vent Plug	234 Drain Plug
202 Pinion Shaft	218 Gasket	235 Gasket
205 Gear	219 Bolt	236 Thrust Washer
206 Pinion	220 Key	237 Anti-Friction Bearing
207 Output Shaft	221 Snap Ring	238 Anti-Friction Bearing
208 Key	222 Anti-Friction Bearing	239 Snap Ring
209 Oil Seal	224 Retaining Washer	240 Bore Plug
210 Oil Seal	225 Lock Washer	241 Shim
211 Snap Ring	226 Bolt	242 Thrust Washer
212 Shim	229 Thrust Washer	243 Gearcase
213 Anti-Friction Bearing	231 Snap Ring	261 Nilos Ring*
214 Gasket	232 Gasket	918 Key
215 Inspection Cover	233 Key	919 Snap Ring

* Conditionally used part

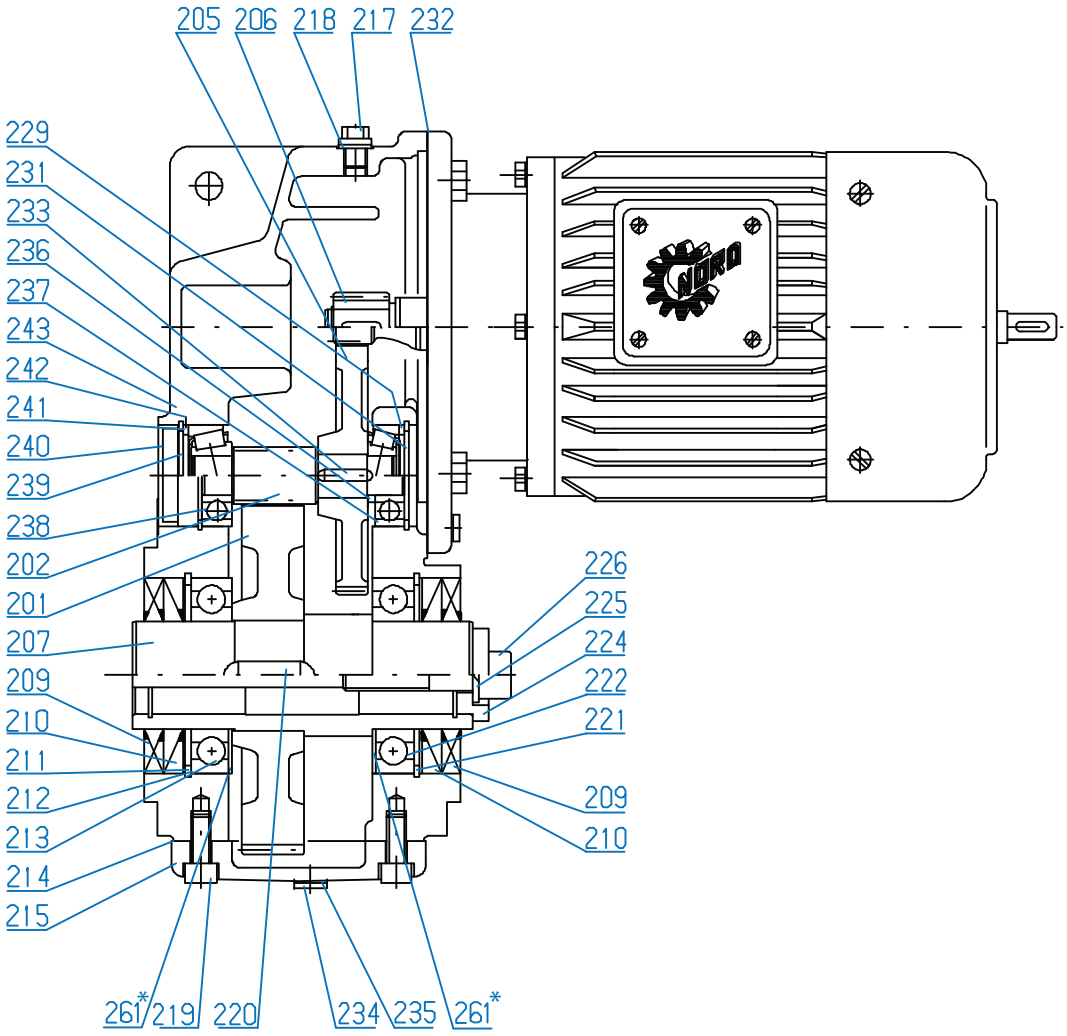

SK 0182NB - SK 5282

201 Gear	217 Vent Plug	233 Key
202 Pinion Shaft	218 Gasket	234 Drain Plug
205 Gear	219 Bolt	235 Gasket
206 Pinion	220 Key	236 Thrust Washer
207 Output Shaft	221 Snap Ring	237 Anti-Friction Bearing
209 Oil Seal	222 Anti-Friction Bearing	238 Anti-Friction Bearing
210 Oil Seal	224 Retaining Washer	239 Snap Ring
211 Snap Ring	225 Lock Washer	240 Bore Plug
212 Shim	226 Bolt	241 Shim
213 Anti-Friction Bearing	229 Thrust Washer	242 Thrust Washer
214 Gasket	231 Snap Ring	243 Gearcase
215 Inspection Cover	232 Gasket	261 Nilos Ring*

* Conditionally used part

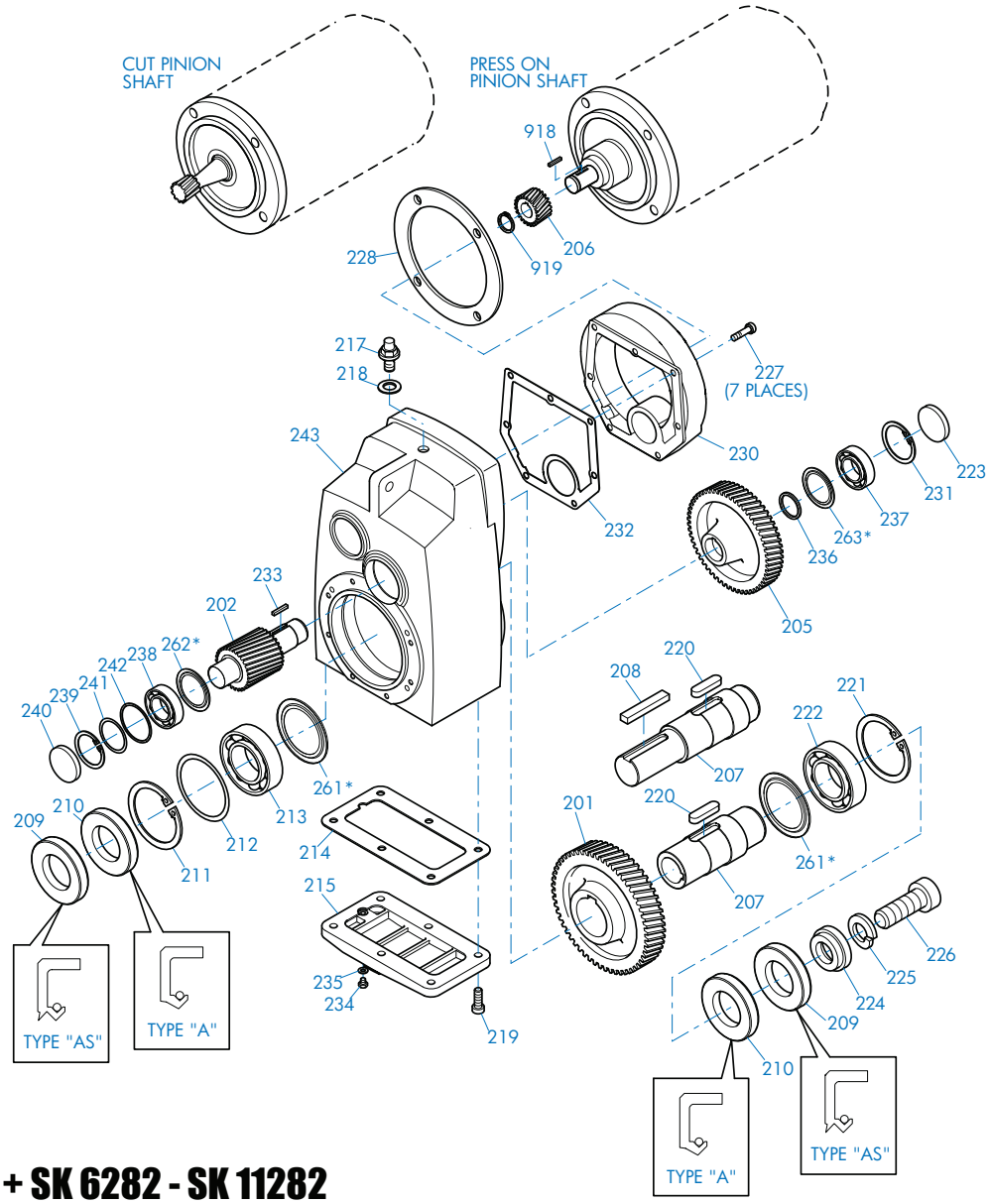

SK 0282NB + SK 6282 - SK 11282

201 Gear	219 Bolt	236 Thrust Washer
202 Pinion Shaft	220 Key	237 Anti-Friction Bearing
205 Gear	221 Snap Ring	238 Anti-Friction Bearing
206 Pinion	222 Anti-Friction Bearing	239 Snap Ring
207 Output Shaft	224 Retaining Washer	240 Bore Plug
208 Key	225 Lock Washer	241 Shim
209 Oil Seal	226 Bolt	242 Thrust Washer
210 Oil Seal	227 Bolt	243 Gear case
211 Snap Ring	228 Gasket	261 Nilos Ring*
212 Shim	230 Input Cover	262 Nilos Ring*
213 Anti-Friction Bearing	231 Snap Ring	263 Nilos Ring*
214 Gasket	232 Gasket	918 Key
215 Inspection Cover	233 Key	919 Snap Ring
217 Vent Plug	234 Drain Plug	
218 Gasket	235 Gasket	

* Conditionally used part

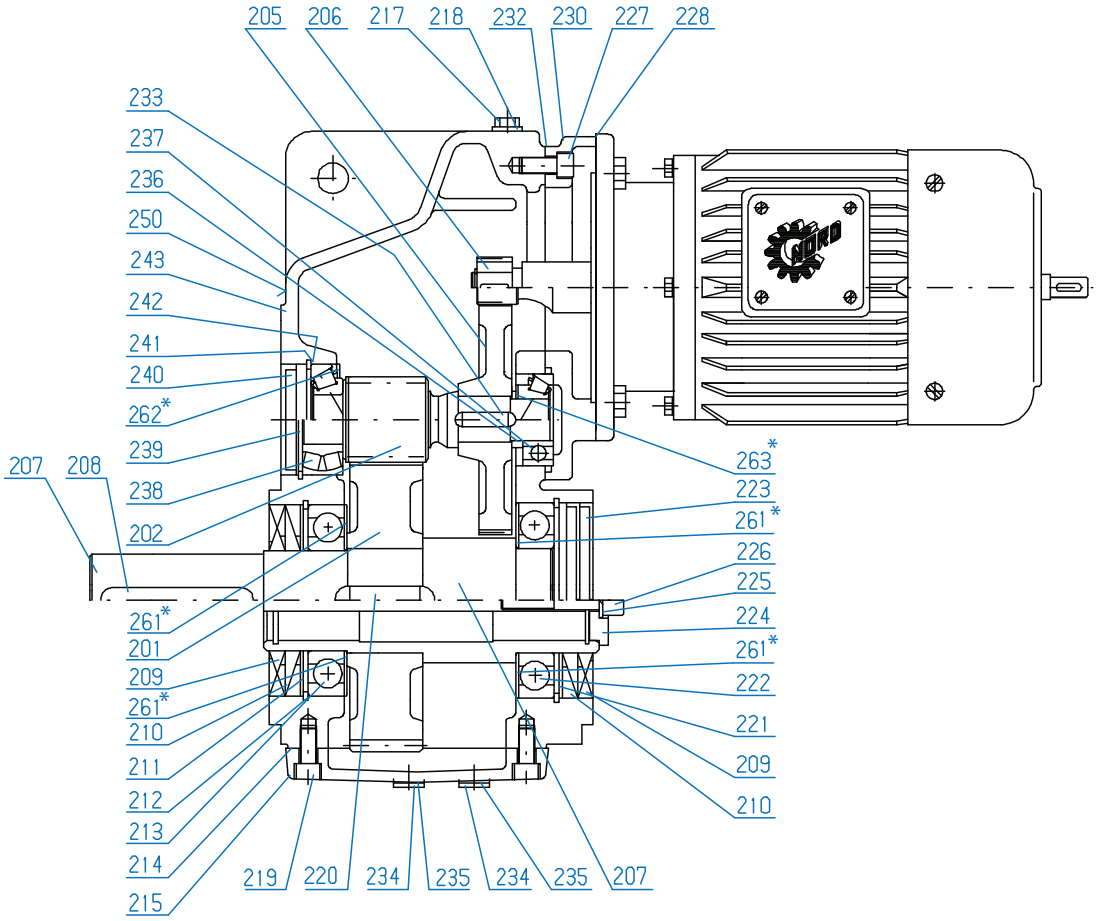

SK 0282NB + SK 6282 - SK 11282

201 Gear	218 Gasket	234 Drain Plug
202 Pinion Shaft	219 Bolt	235 Gasket
205 Gear	220 Key	236 Thrust Washer
206 Pinion	221 Snap Ring	237 Anti-Friction Bearing
207 Output Shaft	222 Anti-Friction Bearing	238 Anti-Friction Bearing
208 Key	223 Bore Plug	239 Snap Ring
209 Oil Seal	224 Retaining Washer	240 Bore Plug
210 Oil Seal	225 Lock Washer	241 Shim
211 Snap Ring	226 Bolt	242 Thrust Washer
212 Shim	227 Bolt	243 Gear case
213 Anti-Friction Bearing	228 Gasket	250 Bore Plug
214 Gasket	230 Input Cover	261 Nilos Ring*
215 Inspection Cover	232 Gasket	262 Nilos Ring*
217 Vent Plug	233 Key	263 Nilos Ring*

* Conditionally used part

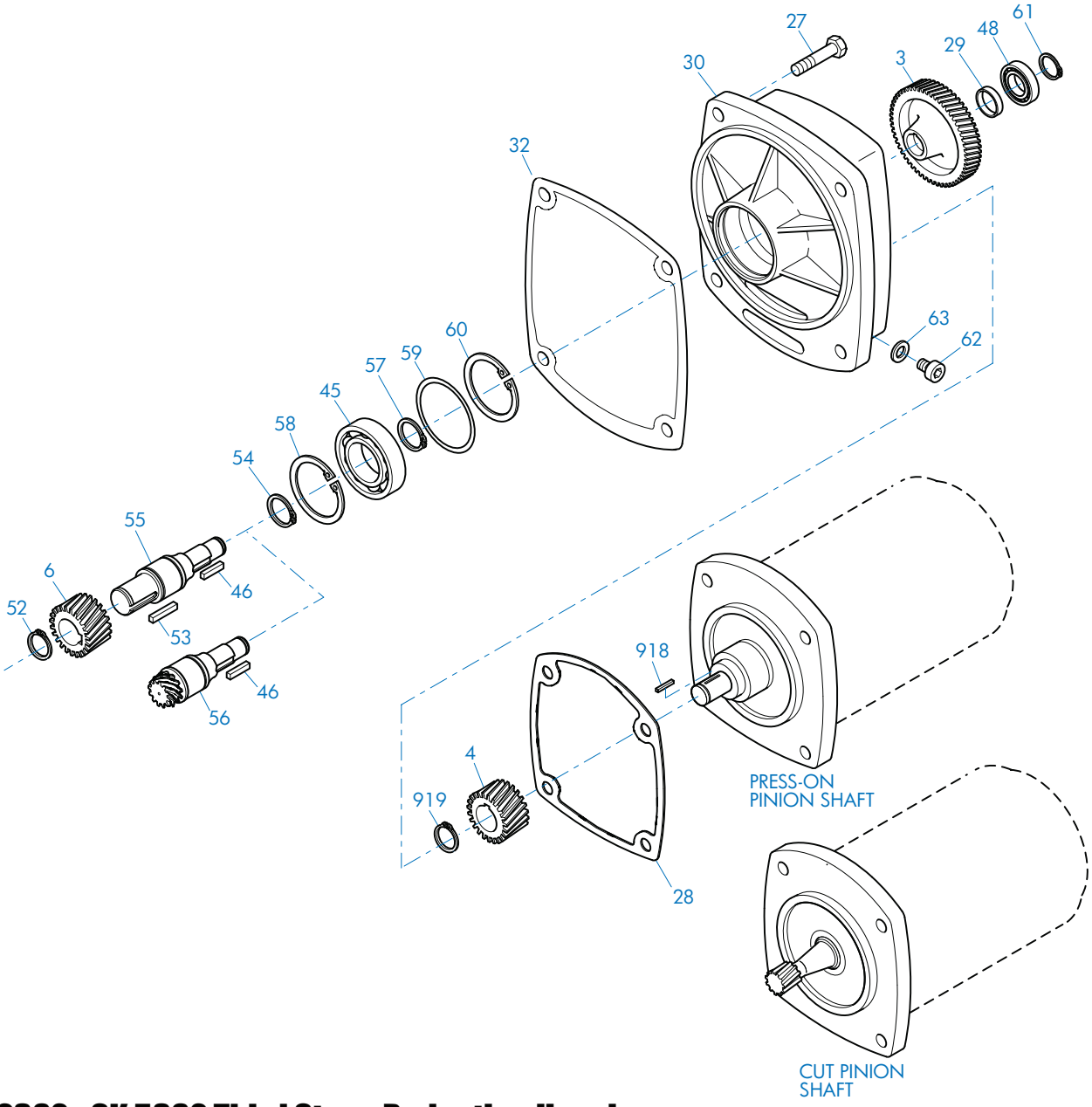

SK 2382 - SK 5382 Third Stage Reduction Housing

3	Gear	46	Key	59	Shim
4	Pinion	48	Anti-Friction Bearing	60	Snap Ring
6	Pinion	52	Snap Ring	61	Snap Ring
27	Bolt	53	Key	62	Oil Plug
28	Gasket	54	Snap Ring	63	Gasket
29	Spacer	55	Intermediate Shaft, Plain	918	Key
30	Third Reduction Gearcase	56	Intermediate Shaft, Gearcut	919	Snap Ring
32	Gasket	57	Snap Ring		
45	Anti-Friction Bearing	58	Snap Ring		

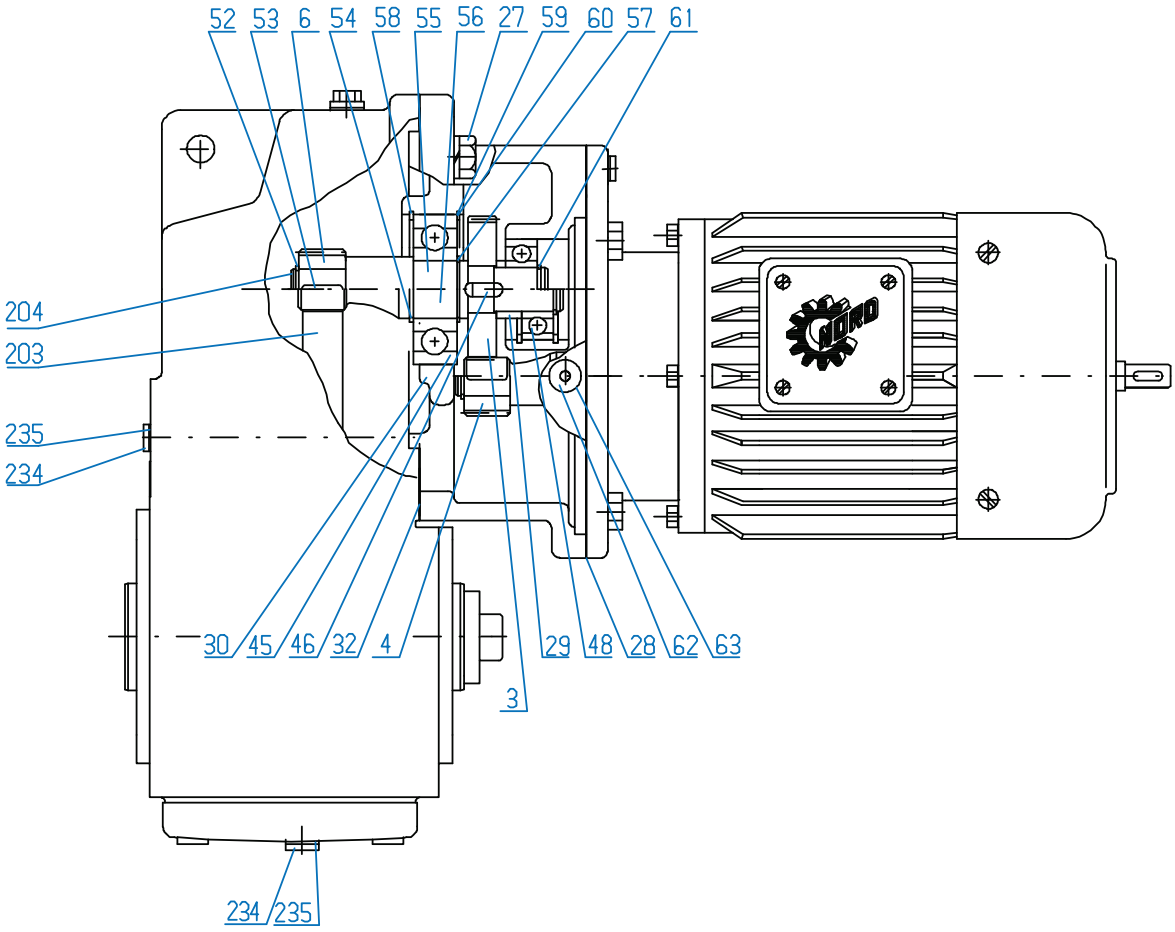

SK 2382 - SK 5382 Third Stage Reduction Housing

3	Gear	46	Key	59	Shim
4	Pinion	48	Anti-Friction Bearing	60	Snap Ring
6	Pinion	52	Snap Ring	61	Snap Ring
27	Bolt	53	Key	62	Oil Plug
28	Gasket	54	Snap Ring	63	Gasket
29	Spacer	55	Intermediate Shaft, Plain	203	Gear
32	Gasket	56	Intermediate Shaft, Gearcut	204	Pinion Shaft
30	Third Reduction Gearcase	57	Snap Ring	234	Oil Plug
45	Anti-Friction Bearing	58	Snap Ring	235	Gasket

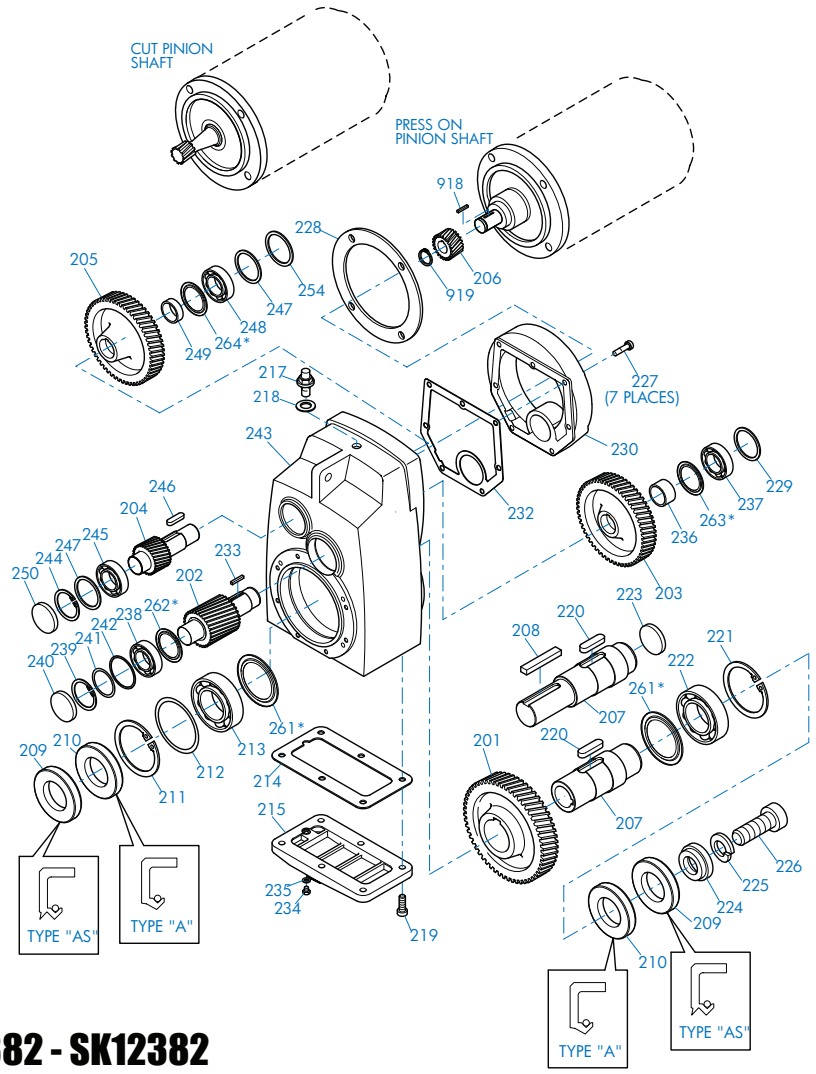

SK 1382 NB + SK 6382 - SK12382

201 Gear
202 Pinion Shaft
203 Gear
204 Pinion Shaft
205 Gear
206 Pinion
207 Output Shaft
208 Key
209 Oil Seal
210 Oil Seal
211 Snap Ring
212 Shim
213 Anti-Friction Bearing
214 Gasket
215 Inspection Cover
217 Vent Plug
218 Gasket
219 Bolt
220 Key
221 Snap Ring
222 Anti-Friction Bearing
223 Bore Plug
224 Retaining Washer
225 Lock Washer
226 Bolt
227 Bolt
228 Gasket
229 Thrust Washer
230 Input Cover
232 Gasket
233 Key
234 Drain Plug
235 Gasket
236 Thrust Washer
237 Anti-Friction Bearing
238 Anti-Friction Bearing
239 Snap Ring
240 Bore Plug
241 Shim
242 Thrust Washer
243 Gearcase
244 Snap Ring
245 Anti-Friction Bearing
246 Key
247 Shim
248 Anti-Friction Bearing
249 Spacer
250 Bore Plug
254 Thrust Washer
261 Nilos Ring*
262 Nilos Ring*
263 Nilos Ring*
264 Nilos Ring*
918 Key
919 Snap Ring

* Conditionally used part

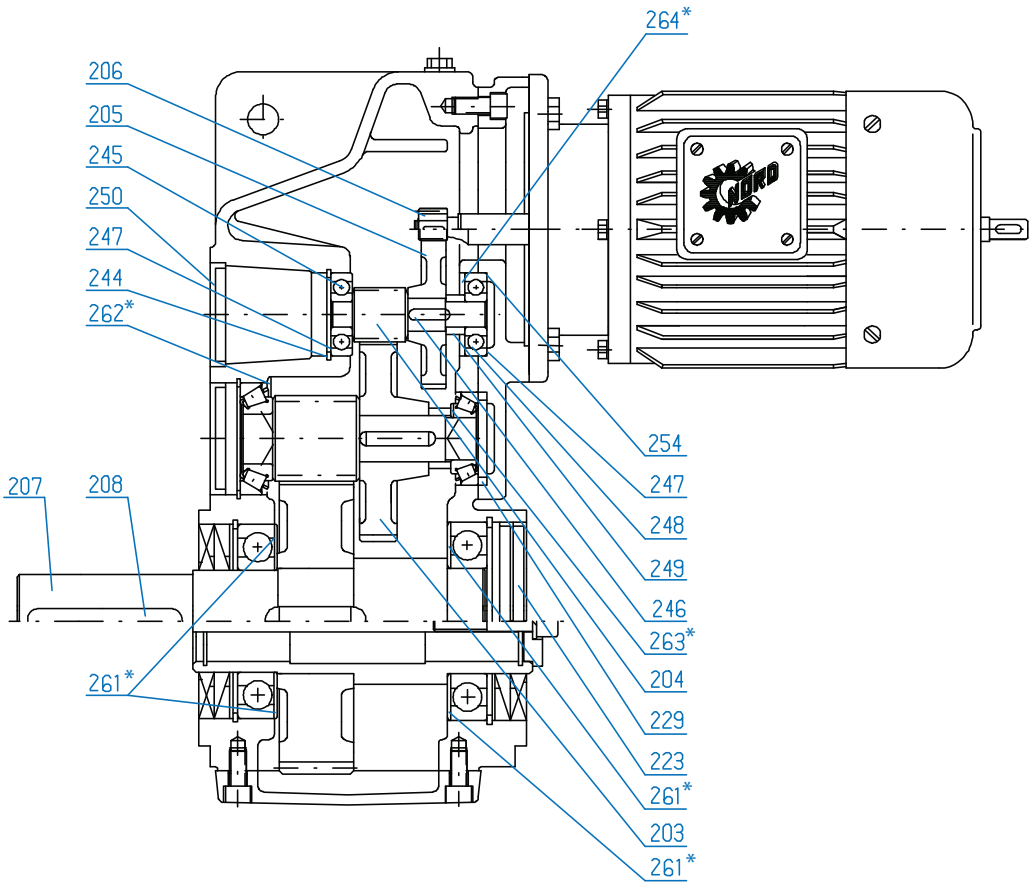

SK 1382 NB + SK 6382 - SK12382

203 Gear	229 Thrust Washer	250 Bore Plug
204 Pinion Shaft	244 Snap Ring	254 Thrust Washer
205 Gear	245 Anti-Friction Bearing	261 Nilos Ring*
206 Pinion	246 Key	262 Nilos Ring*
207 Output Shaft	247 Shim	263 Nilos Ring*
208 Key	248 Anti-Friction Bearing	264 Nilos Ring*
223 Bore Plug	249 Spacer	

* Conditionally used part

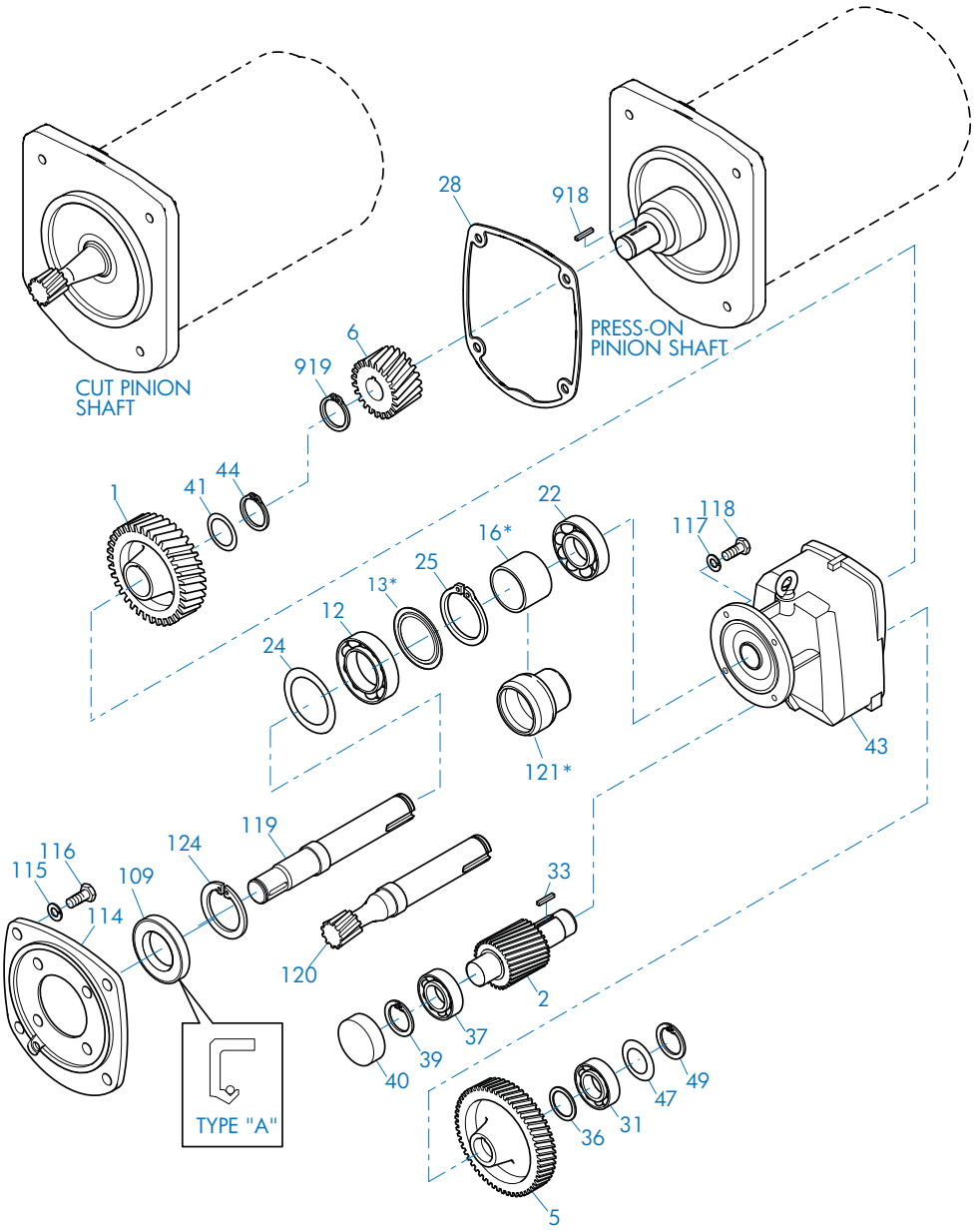

SK1282/02 - SK11382/52 Multi-stage Reduction Unit

1	Gear	33	Key	115	Lock Washer
2	Pinion Shaft	36	Spacer	116	Bolt
5	Gear	37	Anti-Friction Bearing	117	Lock Washer
6	Pinion	39	Snap Ring	118	Bolt
12	Anti-Friction Bearing	40	Bore Plug	119	Intermediate Shaft, Plain
13	Nilos Ring*	41	Shim	120	Intermediate Shaft, Gearcut
16	Spacer*	43	Gearcase	121	Bearing Sleeve*
22	Anti-Friction Bearing	44	Snap Ring	124	Snap Ring
24	Shim	47	Shim	918	Key
25	Snap Ring	49	Snap Ring	919	Snap Ring
28	Gasket	109	Oil Seal		
31	Anti-Friction Bearing	114	Intermediate Flange		

* Conditionally used part

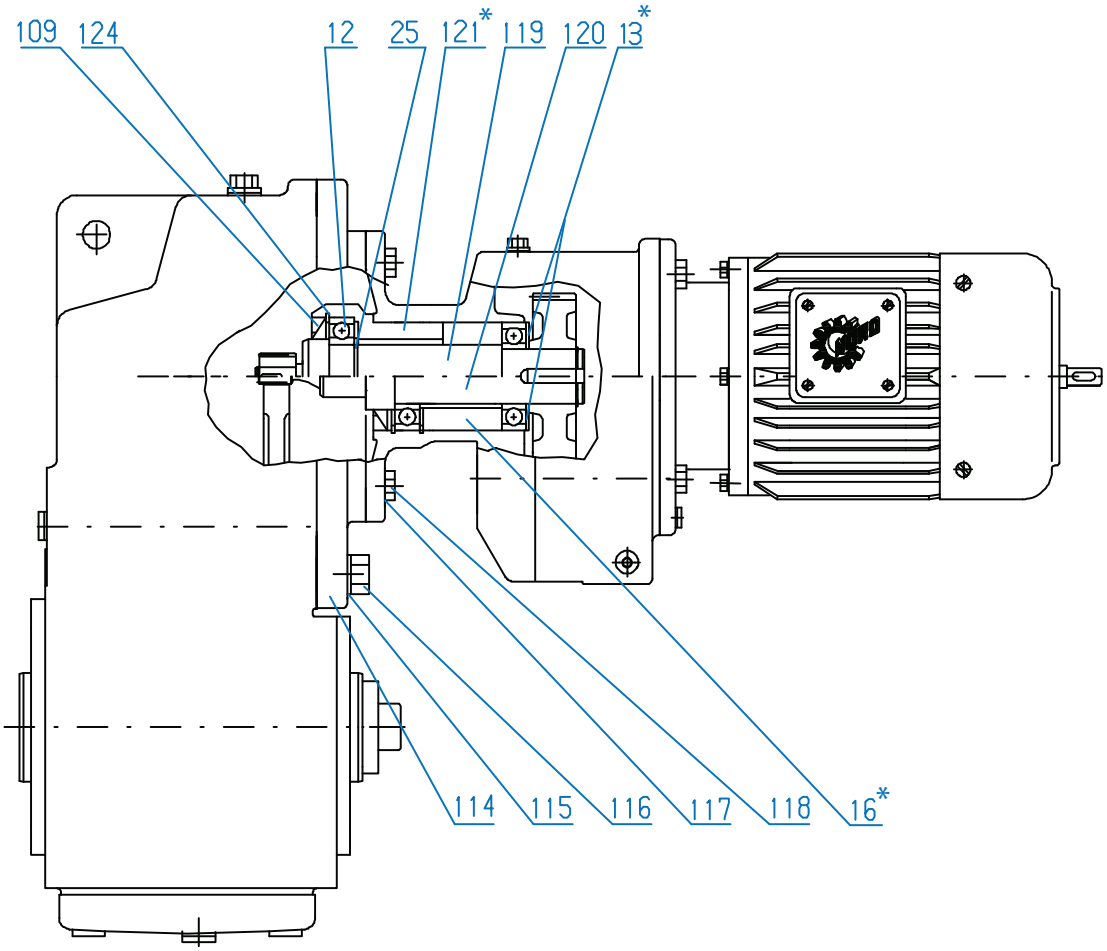

SK 1282/02 - SK 11382/52

12 Anti-friction Bearing	114 Intermediate Flange	119 Intermediate Shaft, Plain
13 Nilos Ring*	115 Lock Washer	120 Intermediate Shaft, Gearcut
16 Spacer	116 Bolt	121 Bearing Sleeve
25 Snap Ring	117 Lock Washer	124 Snap Ring
109 Oil Seal	118 Bolt	

* Conditionally used part

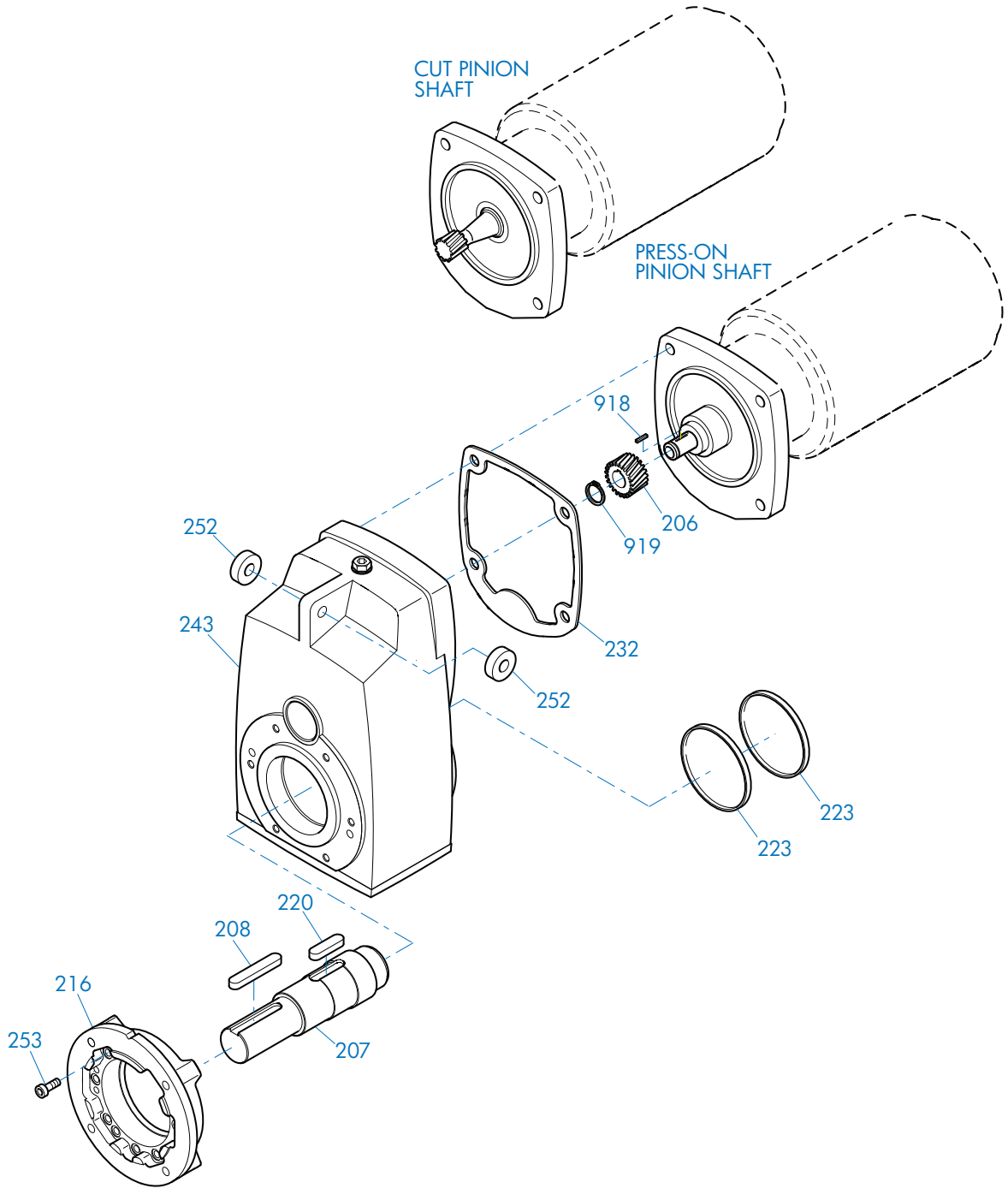

SK 0182NB - SK 11282 & SK 1382 - SK 11382

206 Pinion	220 Key	252 Rubber Buffer
207 Output Shaft	223 Bore Plug	253 Bolt
208 Key	232 Gasket	918 Key
216 Flange	243 Gearcase	919 Snap Ring

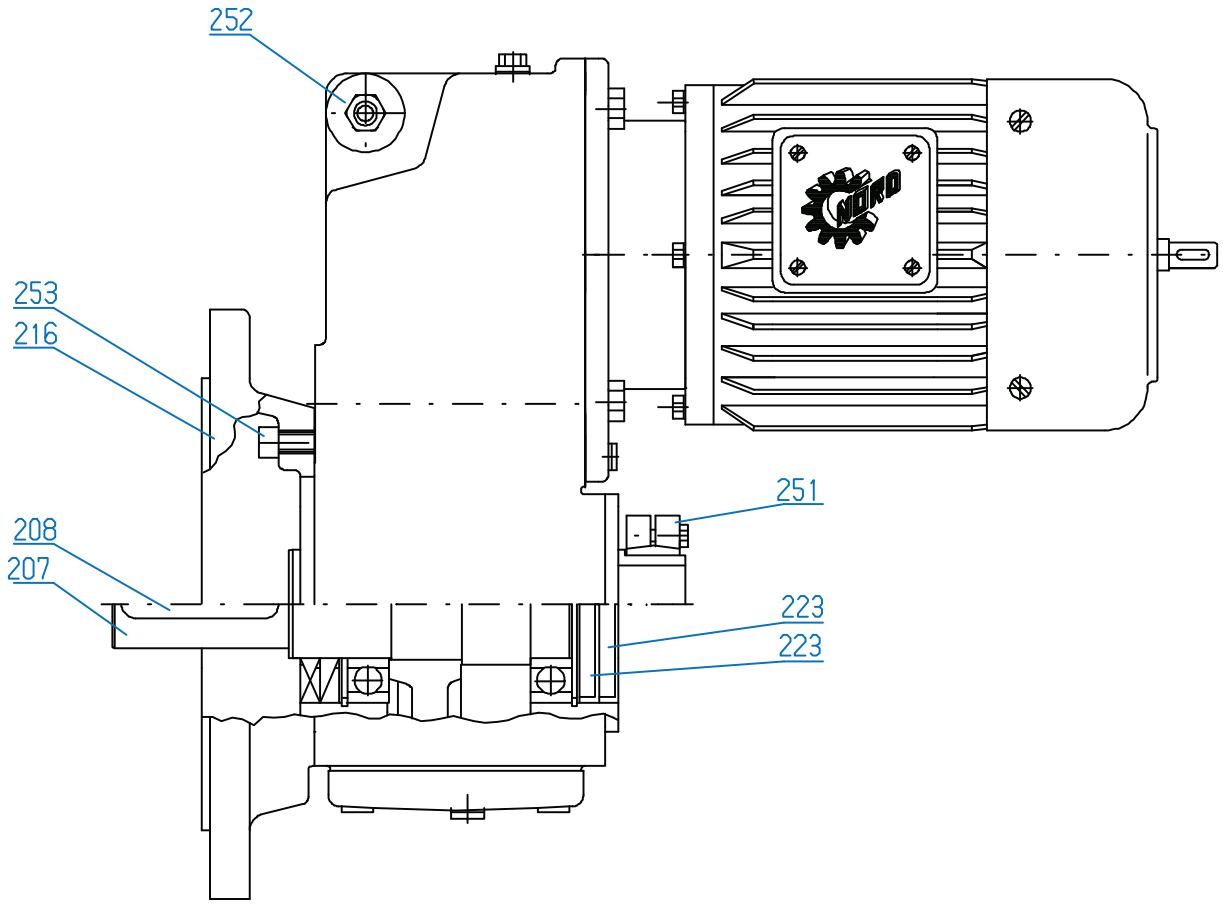

SK 0182NB - SK 11282 & SK 1382 - SK 11382

207 Output Shaft	223 Bore Plug	253 Bolt
208 Key	251 Shrink Disc	
216 Flange	252 Rubber Buffer	

90.1 SERIES HELICAL-BEVEL PARTS LIST DRAWINGS

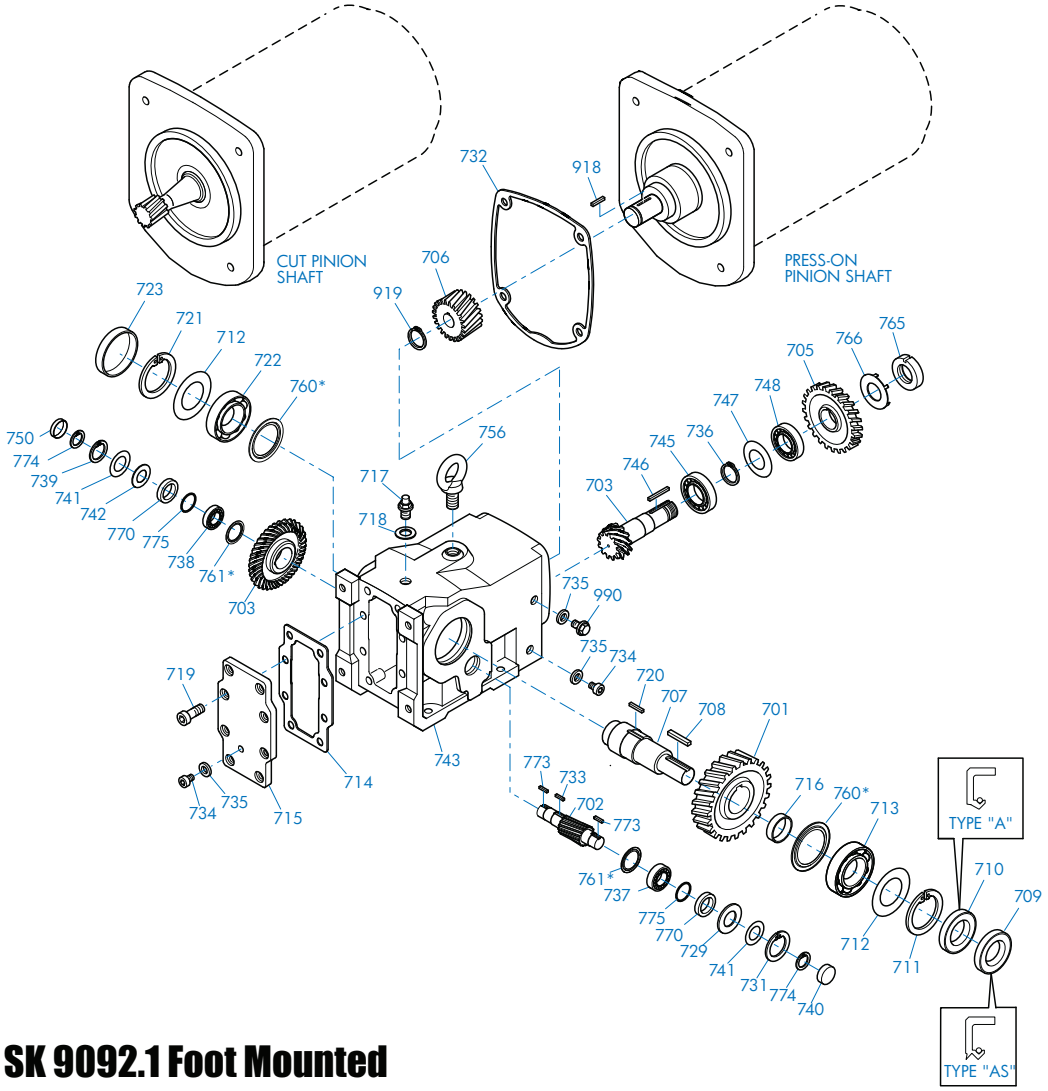

SK 9012.1 - SK 9092.1 Foot Mounted

701 Output Gear	721 Snap Ring	747 Shim
702 Pinion Shaft	722 Anti-Friction Bearing	748 Anti-Friction Bearing
703 Bevel Gearset	723 Bore Plug	750 Bore Plug
705 Gear	729 Thrust Washer	756 Flanged Eye Bolt
706 Pinion	731 Snap Ring	760 Nilos Ring*
707 Output Shaft	732 Gasket	761 Nilos Ring*
708 Key	733 Key	765 Slotted Round Nut
709 Oil Seal	734 Oil Plug	766 Tab Lock Washer
710 Oil Seal	735 Gasket	770 Backstop (If Equipped)
711 Snap Ring	736 Snap Ring	773 Key (w/Backstop)
712 Shim	737 Anti-Friction Bearing	774 Snap Ring (w/Backstop)
713 Anti-Friction Bearing	738 Anti-Friction Bearing	775 Thrust Washer (w/Backstop)
714 Gasket	739 Snap Ring	918 Key
715 Inspection Cover	740 Bore Plug	919 Snap Ring
716 Spacer	741 Shim	990 Oil Level Plug
717 Vent screw	742 Thrust Washer	
718 Gasket	743 Gearcase	
719 Bolt	745 Anti-Friction Bearing	
720 Key	746 Key	

* Conditionally used part

NORD Gear Limited
Toll Free in Canada: 800.668.4378

NORD Gear Corporation
Toll Free in the United States: 888.314.6673

90.1 SERIES HELICAL-BEVEL PARTS LIST DRAWINGS

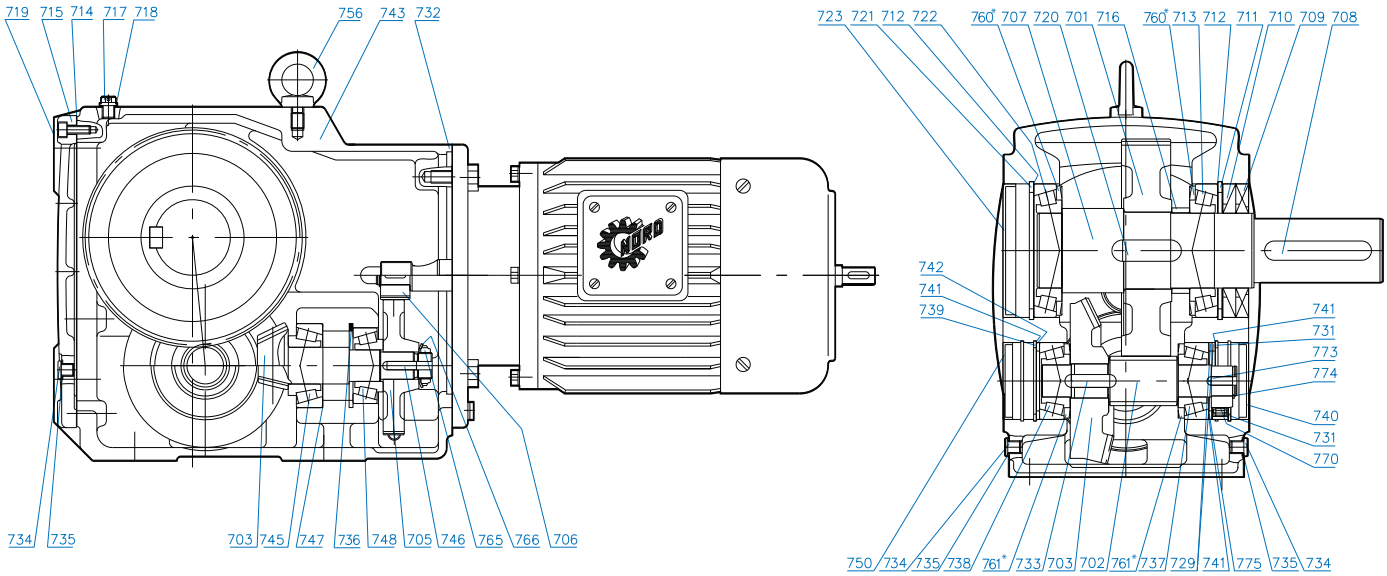

SK 9012.1 - SK 9092.1 Foot Mounted

701 Output Gear
702 Pinion Shaft
703 Bevel Gearset
705 Gear
706 Pinion
707 Output Shaft
708 Key
709 Oil Seal
710 Oil Seal
711 Snap Ring
712 Shim
713 Anti-Friction Bearing
714 Gasket
715 Inspection Cover
716 Spacer
717 Vent
718 Gasket
719 Bolt
720 Key
721 Snap Ring
722 Anti-Friction Bearing
723 Bore Plug
729 Thrust Washer
731 Snap Ring
732 Gasket
733 Key
734 Oil Plug
735 Gasket
736 Snap Ring
737 Anti-Friction Bearing
738 Anti-Friction Bearing
739 Snap Ring
740 Bore Plug
741 Shim
742 Thrust Washer
743 Gearcase
745 Anti-Friction Bearing
746 Key
747 Shim
748 Anti-Friction Bearing
750 Bore Plug
756 Flanged Eye Bolt
760 Nilos Ring*
761 Nilos Ring*
765 Slotted Round Nut
766 Tab Lock Washer
770 Backstop (If Equipped)
773 Key (w/Backstop)
774 Snap Ring (w/Backstop)
775 Thrust Washer (w/Backstop)

* Conditionally used part

NORD Gear Limited
Toll Free in Canada: 800.668.4378

NORD Gear Corporation
Toll Free in the United States: 888.314.6673

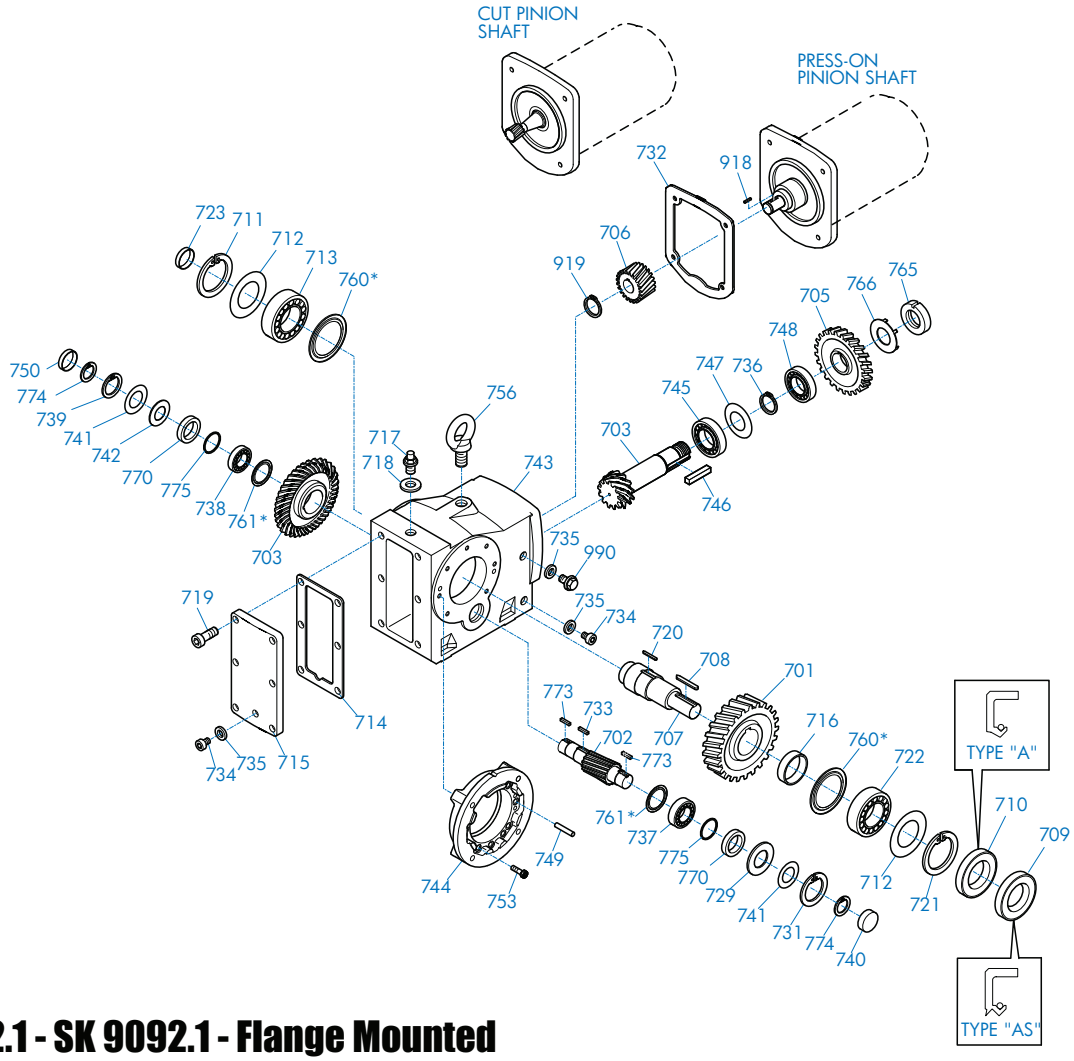

SK 9012.1 - SK 9092.1 - Flange Mounted

701 Output Gear
702 Pinion Shaft
703 Bevel Gearset
705 Gear
706 Pinion
707 Output Shaft
708 Key
709 Oil Seal
710 Oil Seal
711 Snap Ring
712 Shim
713 Anti-Friction Bearing
714 Gasket
715 Inspection Cover
716 Spacer
717 Vent Plug
718 Gasket
719 Bolt
720 Key
721 Snap Ring
722 Anti-Friction Bearing
723 Bore Plug
729 Thrust Washer
731 Snap Ring
732 Gasket
733 Key
734 Oil plug
735 Gasket
736 Snap Ring
737 Anti-Friction Bearing
738 Anti-Friction Bearing
739 Snap Ring
740 Bore Plug
741 Shim
742 Thrust Washer
743 Gearcase
744 Flange
745 Anti-Friction Bearing
746 Key
747 Shim
748 Anti-Friction Bearing
749 Dowel Pin
750 Bore Plug
753 Bolt
756 Flanged Eye Bolt
760 Nilos Ring*
761 Nilos Ring*
765 Slotted Round Nut
766 Tab Lock Washer
770 Backstop (If Equipped)
773 Key (w/Backstop)
774 Snap Ring (w/Backstop)
775 Thrust Washer (w/Backstop)
918 Key
919 Snap Ring
990 Oil Level Plug

* Conditionally used part

NORD Gear Limited
Toll Free in Canada: 800.668.4378

NORD Gear Corporation
Toll Free in the United States: 888.314.6673

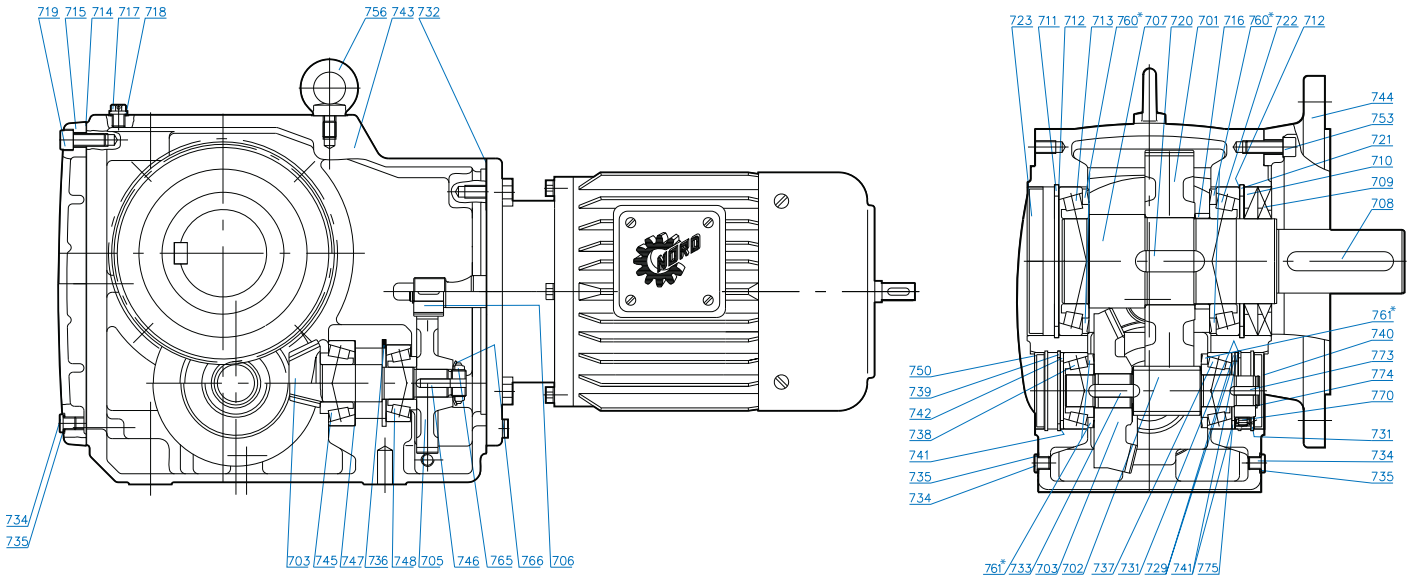

SK 9012.1 - SK 9092.1 - Flange Mounted

701 Output Gear
702 Pinion Shaft
703 Bevel Gearset
705 Gear
706 Pinion
707 Output Shaft
708 Key
709 Oil Seal
710 Oil Seal
711 Snap Ring
712 Shim
713 Anti-Friction Bearing
714 Gasket
715 Inspection Cover
716 Spacer
717 Vent Plug
718 Gasket
719 Bolt
720 Key
721 Snap Ring
722 Anti-Friction Bearing
723 Bore Plug
729 Thrust Washer
731 Snap Ring
732 Gasket
733 Key
734 Oil plug
735 Gasket
736 Snap Ring
737 Anti-Friction Bearing
738 Anti-Friction Bearing
739 Snap Ring
740 Bore Plug
741 Shim
742 Thrust Washer
743 Gearcase
744 Flange
745 Anti-Friction Bearing
746 Key
747 Shim
748 Anti-Friction Bearing
750 Bore Plug
753 Bolt
756 Flanged Eye Bolt
760 Nilos Ring*
761 Nilos Ring*
765 Slotted Round Nut
766 Tab Lock Washer
770 Backstop*
773 Key (w/Backstop)
774 Snap Ring (w/Backstop)
775 Thrust Washer (w/Backstop)

* Conditionally used part

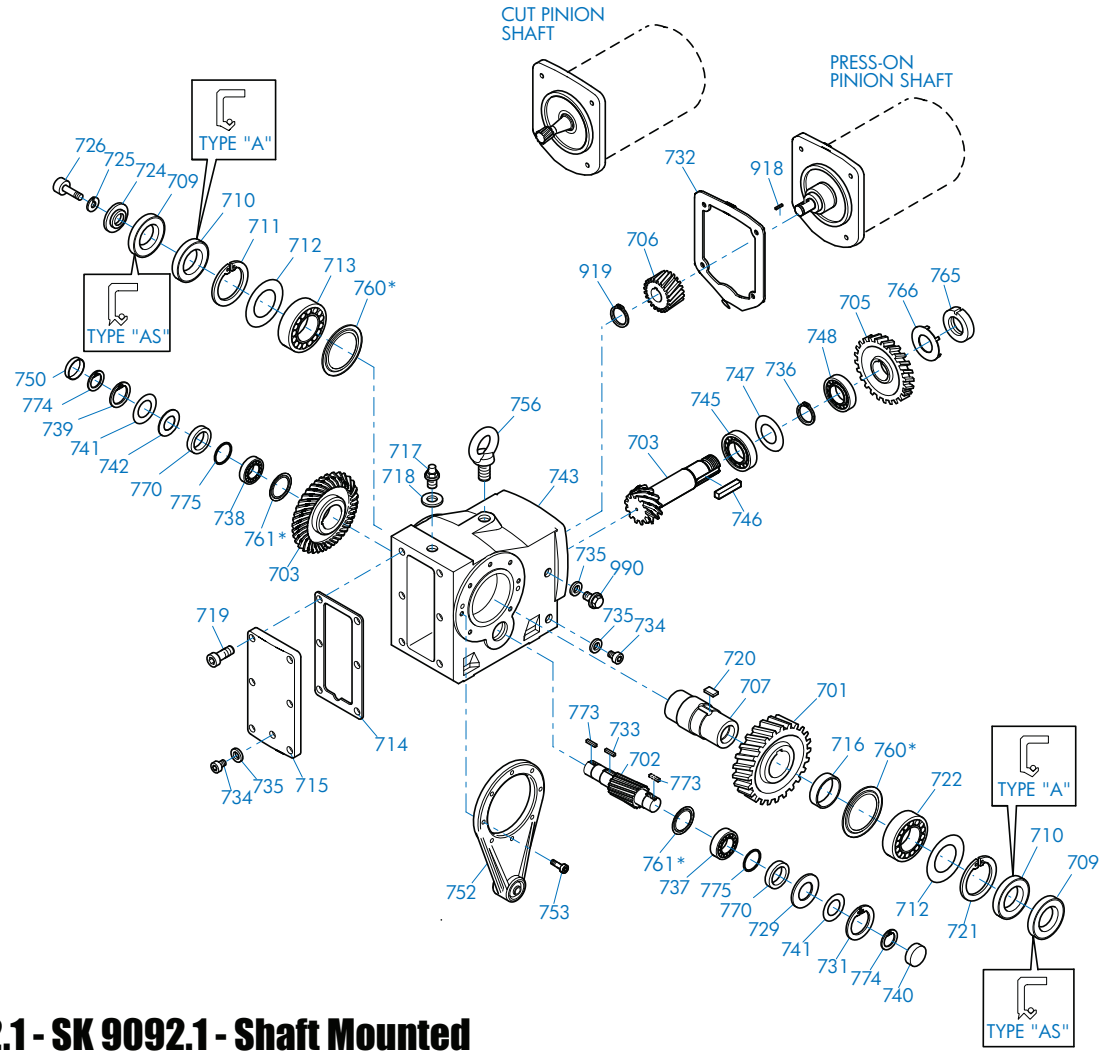

SK 9012.1 - SK 9092.1 - Shaft Mounted

701 Gear
702 Pinion Shaft
703 Bevel Gearset
705 Gear
706 Pinion
707 Output Shaft
709 Oil Seal
710 Oil Seal
711 Snap Ring
712 Shim
713 Anti-Friction Bearing
714 Gasket
715 Inspection Cover
716 Spacer
717 Vent Plug
718 Gasket
719 Bolt
720 Key
721 Snap Ring
722 Anti-Friction Bearing
724 Retaining Washer
725 Lock Washer
726 Bolt
729 Thrust Washer
731 Snap Ring
732 Gasket
733 Key
734 Oil plug
735 Gasket
736 Snap Ring
737 Anti-Friction Bearing
738 Anti-Friction Bearing
739 Snap Ring
740 Bore Plug
741 Shim
742 Thrust Washer
743 Gearcase
745 Anti-Friction Bearing
746 Key
747 Shim
748 Anti-Friction Bearing
750 Bore Plug
752 Torque Arm
753 Bolt
756 Flanged Eye Bolt
760 Nilos Ring*
761 Nilos Ring*
765 Slotted Round Nut
766 Tab Lock Washer
770 Backstop (If Equipped)
773 Key (w/Backstop)
774 Snap Ring (w/Backstop)
775 Thrust Washer (w/Backstop)
918 Key
919 Snap Ring
990 Oil Level Plug

* Conditionally used part

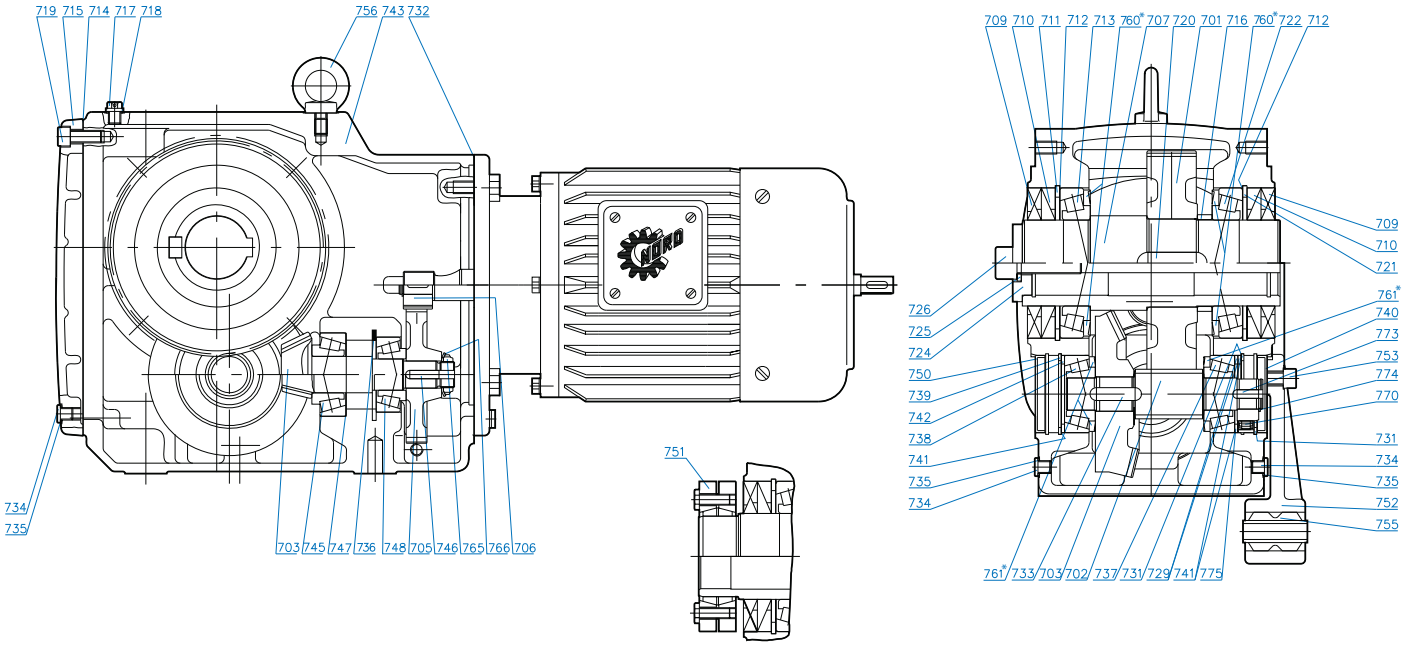

SK 9012.1 - SK 9092.1 - Shaft Mounted

701 Gear
702 Pinion Shaft
703 Bevel Gearset
705 Gear
706 Pinion
707 Output Shaft
709 Oil Seal
710 Oil Seal
711 Snap Ring
712 Shim
713 Anti-Friction Bearing
714 Gasket
715 Inspection Cover
716 Spacer
717 Vent Plug
718 Seal
719 Bolt
720 Key
721 Snap Ring
722 Anti-Friction Bearing
724 Washer
725 Lock Washer
726 Bolt
729 Thrust Washer
731 Snap Ring
732 Gasket
733 Key
734 Oil plug
735 Gasket
736 Snap Ring
737 Anti-Friction Bearing
738 Anti-Friction Bearing
739 Snap Ring
740 Bore Plug
741 Shim
742 Thrust Washer
743 Gearcase
745 Anti-Friction Bearing
746 Key
747 Shim
748 Anti-Friction Bearing
750 Bore Plug
751 Shrink Disc
752 Torque Arm
753 Bolt
755 Rubber Buffer
756 Flanged Eye Bolt
760 Nilos Ring*
761 Nilos Ring*
765 Slotted Round Nut
766 Tab Lock Washer
770 Backstop*
773 Key (w/Backstop)
774 Snap Ring (w/Backstop)
775 Thrust Washer (w/Backstop)

* Conditionally used part

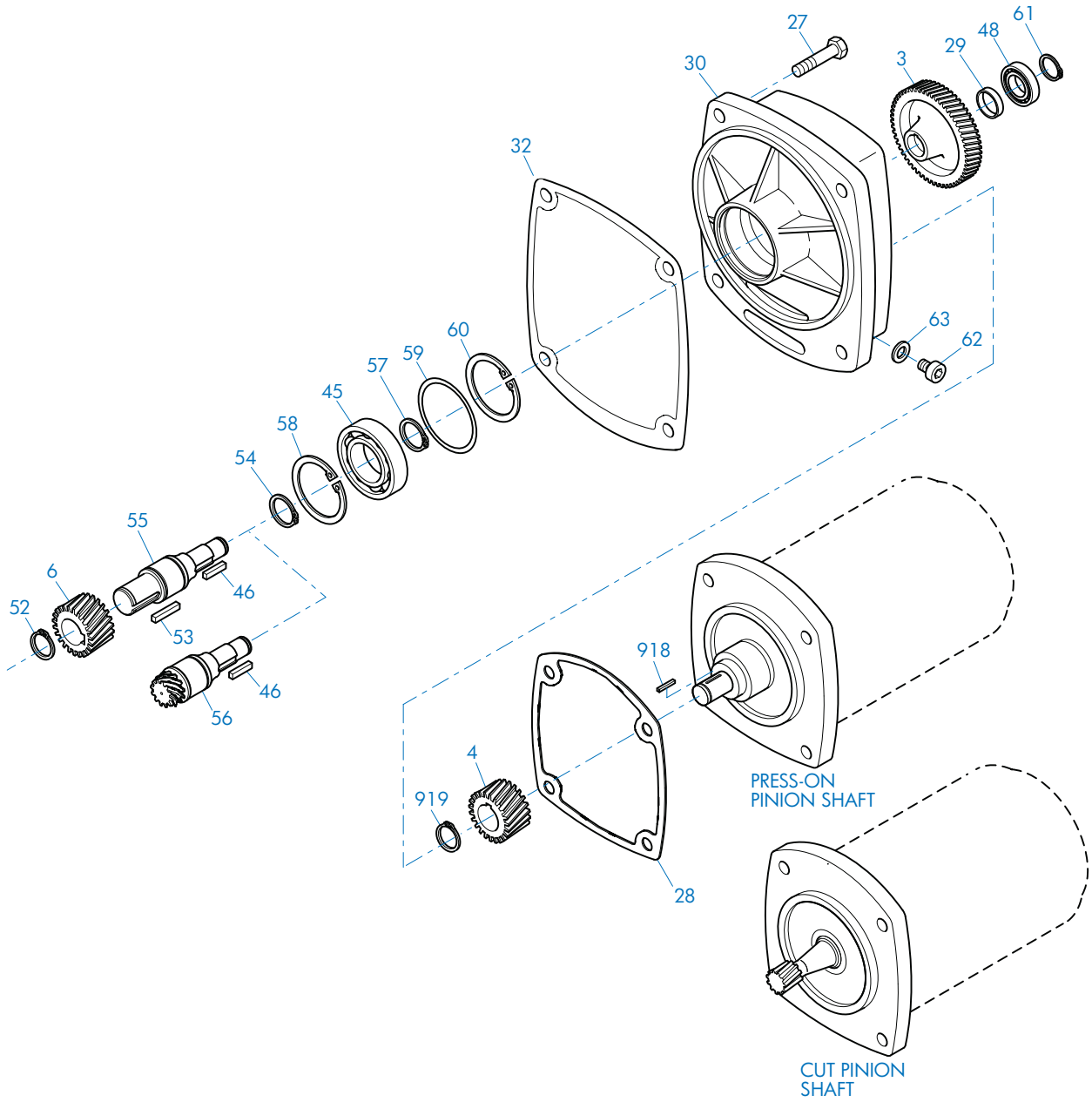

SK9013.1 - SK9053.1 Third Stage Reduction Gear

3	Gear	46	Key	59	Shim
4	Pinion	48	Anti-Friction Bearing	60	Snap Ring
6	Pinion	52	Snap Ring	61	Snap Ring
27	Bolt	53	Key	62	Oil Plug
28	Gasket	54	Snap Ring	63	Gasket
29	Spacer	55	Intermediate Shaft, Plain	918	Key
30	Third Reduction Gearcase	56	Intermediate Shaft, Gearcut	919	Snap Ring
32	Gasket	57	Snap Ring		
45	Anti-Friction Bearing	58	Snap Ring		

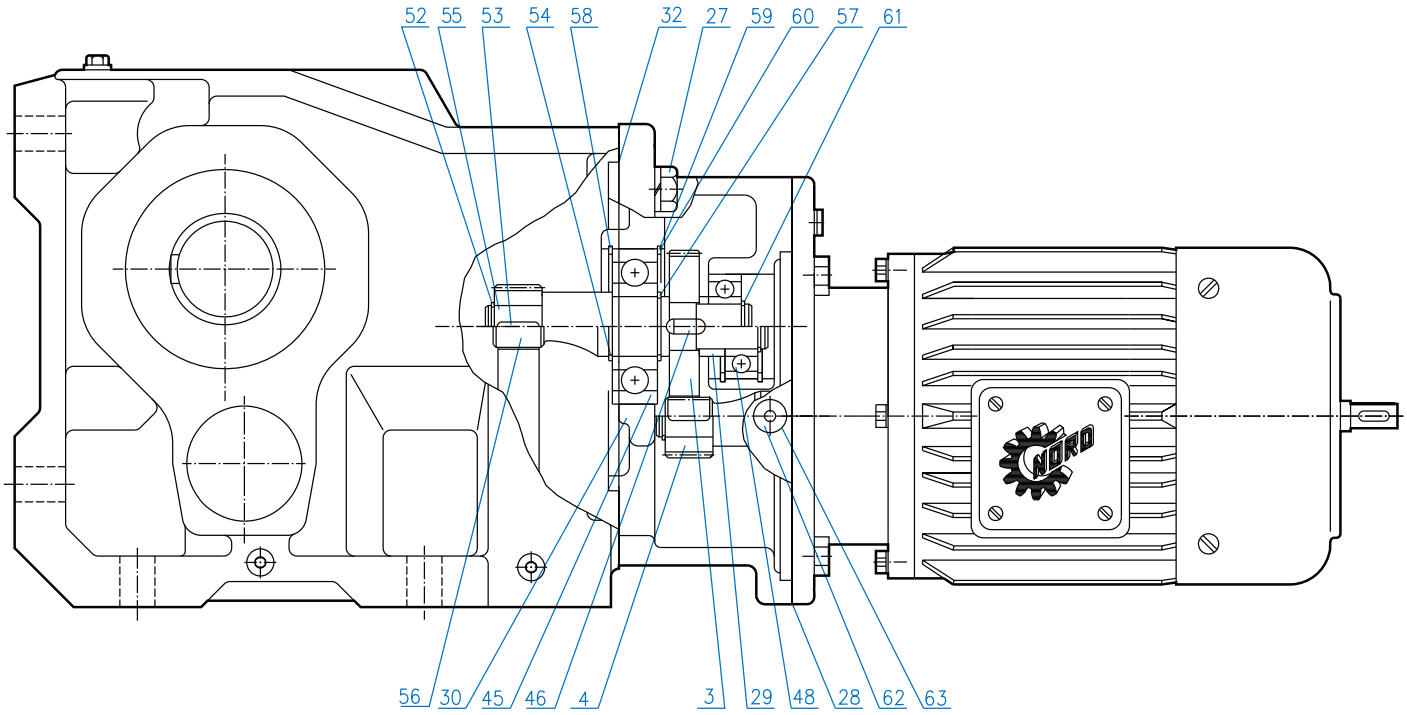

SK9013.1 - SK9053.1 Third Stage Reduction Gear

3	Gear	46	Key	58	Snap Ring
4	Pinion	48	Anti-Friction Bearing	59	Shim
27	Bolt	52	Snap Ring	60	Snap Ring
28	Gasket	53	Key	61	Snap Ring
29	Spacer	54	Snap Ring	62	Oil Plug
30	Third Reduction Gearcase	55	Intermediate Shaft, Plain	63	Gasket
32	Gasket	56	Intermediate Shaft, Gearcut		
45	Anti-Friction Bearing	57	Snap Ring		

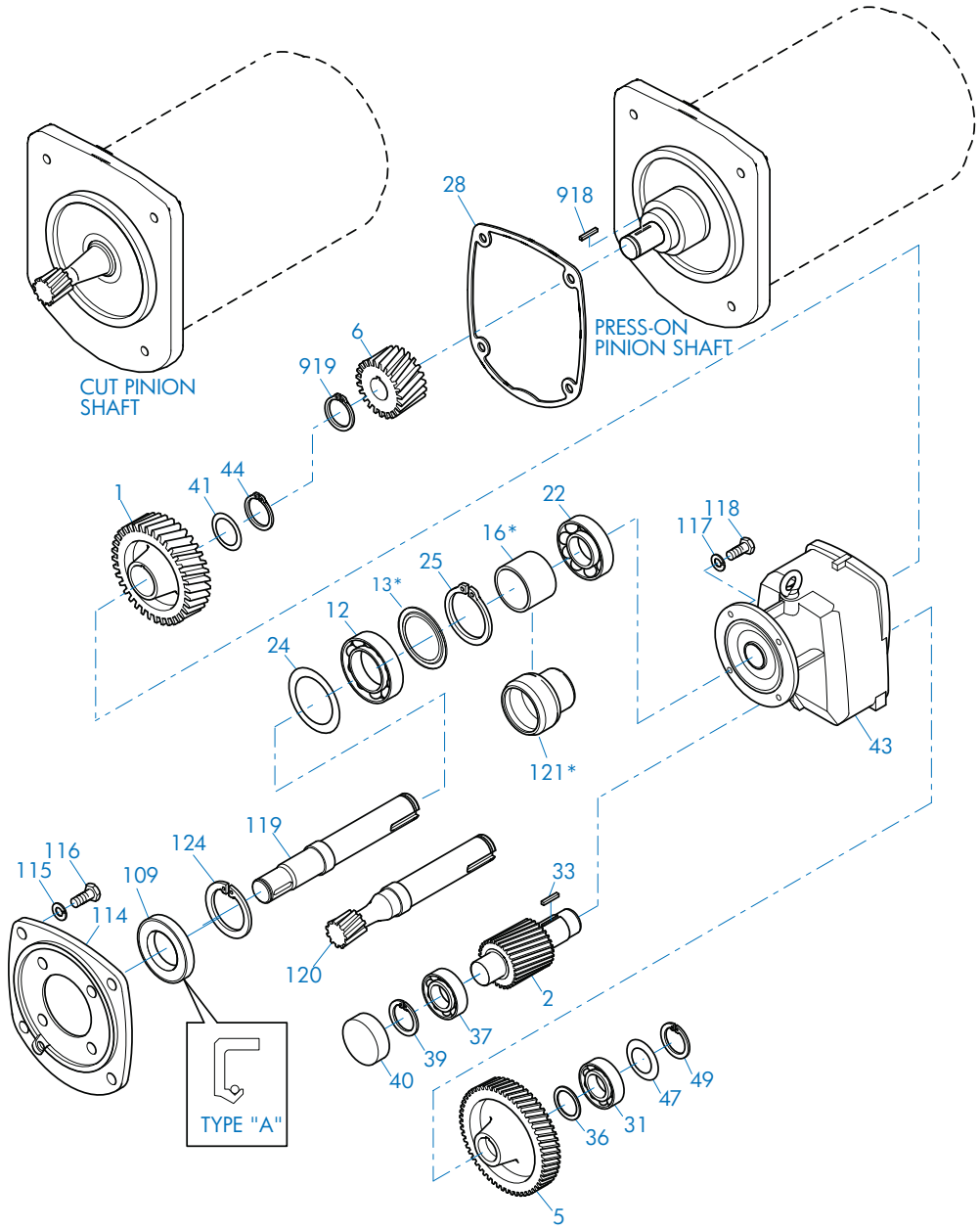

SK9062.1/32 - SK9092.1/52 Input Compound Reduction

1	Gear	33	Key	115	Lock Washer
2	Pinion Shaft	36	Spacer	116	Bolt
5	Gear	37	Anti-Friction Bearing	117	Lock Washer
6	Pinion	39	Snap Ring	118	Bolt
12	Anti-Friction Bearing	40	Bore Plug	119	Intermediate Shaft, Plain
13	Nilos Ring*	41	Shim	120	Intermediate Shaft, Gearcut
16	Spacer*	43	Gearcase	121	Bearing Sleeve*
22	Anti-Friction Bearing	44	Snap Ring	124	Snap Ring
24	Shim	47	Shim	918	Key
25	Snap Ring	49	Snap Ring	919	Snap Ring
28	Gasket	109	Oil Seal		
31	Anti-Friction Bearing	114	Intermediate Flange		

* Conditionally used part

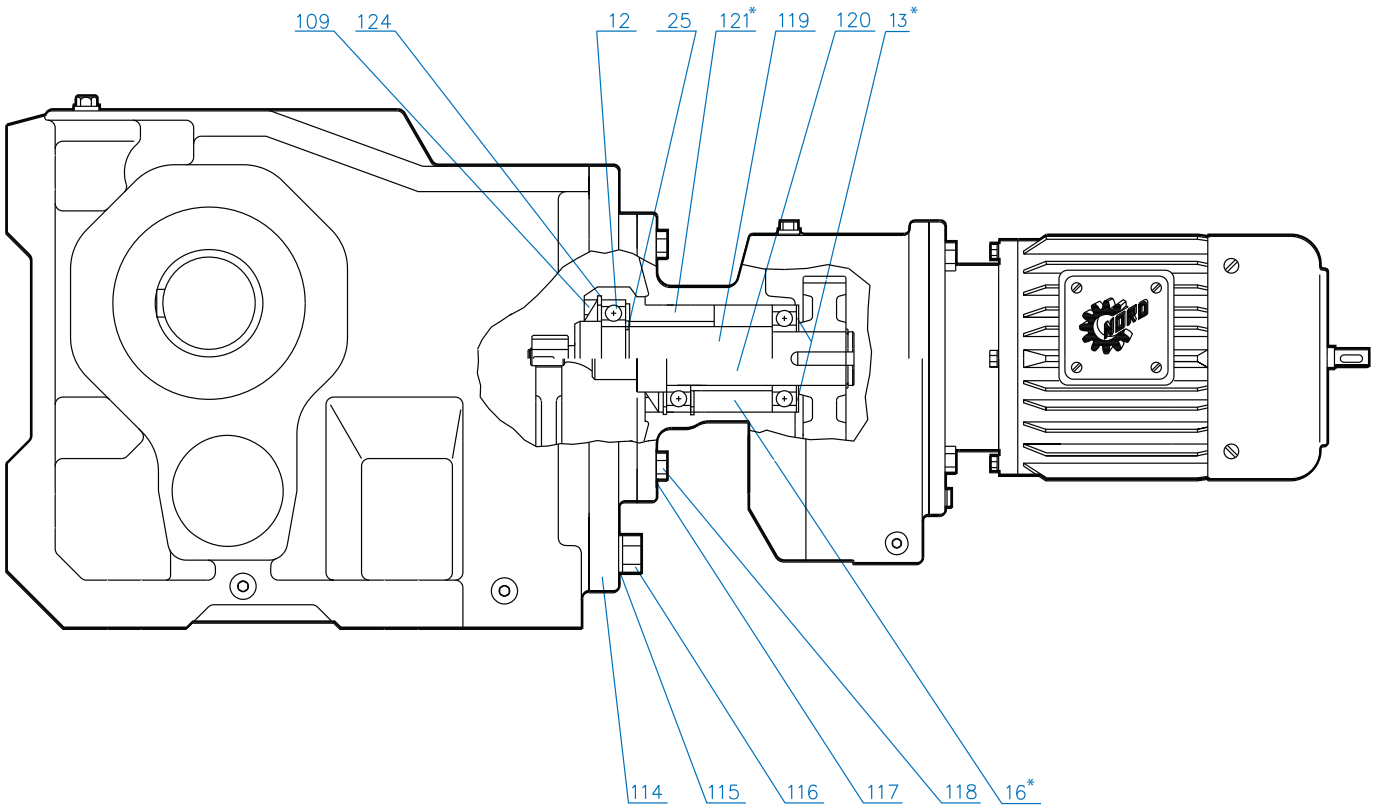

SK9062.1/32 - SK9092.1/52 Input Compound Reduction

11 Bearing	114 Intermediate Flange	119 Intermediate Shaft, Plain
13 Nilos Ring*	115 Lock Washer	120 Intermediate Shaft, Gearcut
16 Spacer*	116 Bolt	121 Bearing Sleeve *
25 Snap Ring	117 Lock Washer	124 Snap Ring
109 Oil Seal	118 Bolt	

* Conditionally used part

92 SERIES BEVEL PARTS LIST DRAWINGS

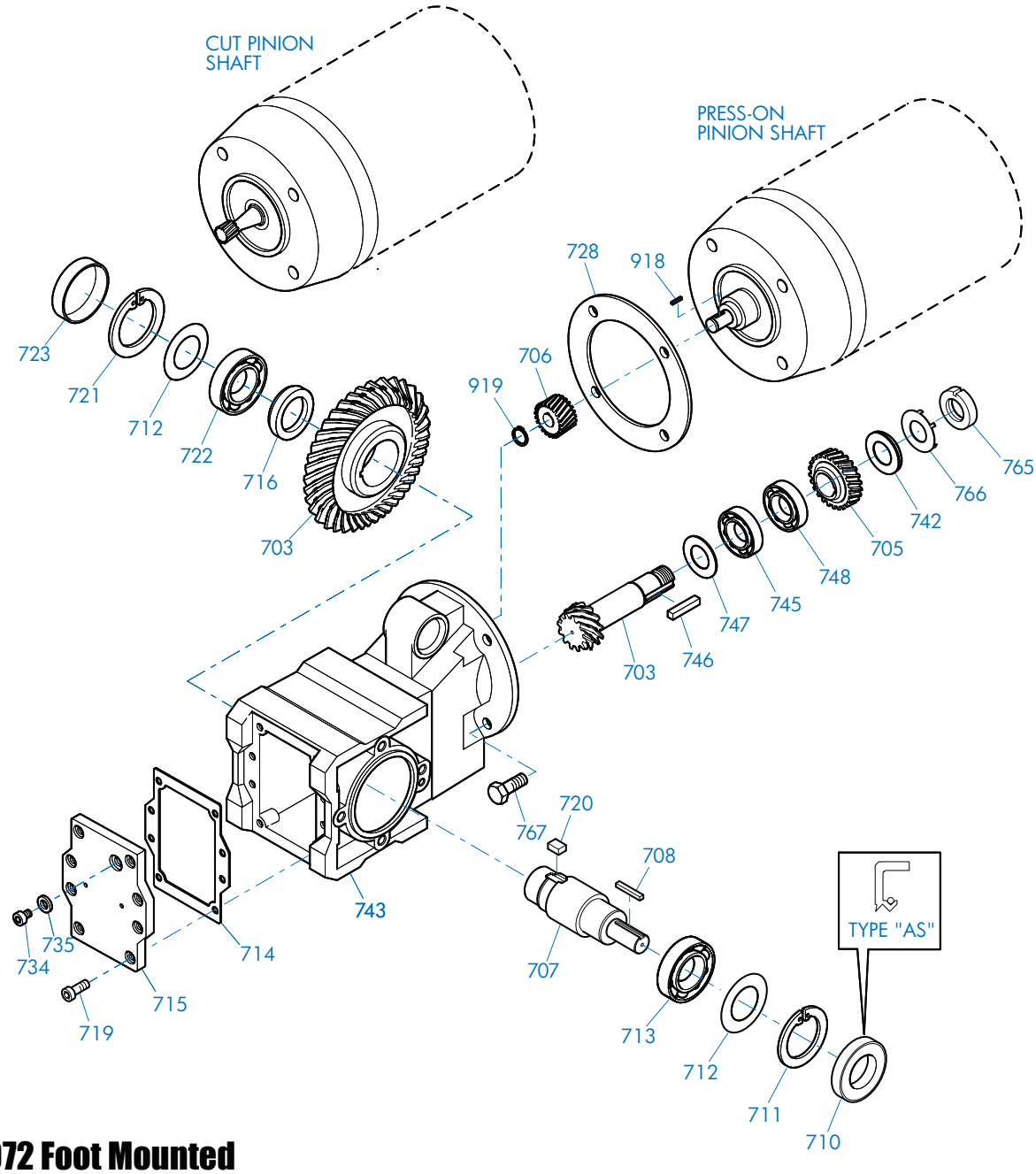

SK 92072 Foot Mounted

703 Bevel Gearset	716 Spacer	745 Anti-Friction Bearing
705 Gear	719 Bolt	746 Key
706 Pinion	720 Key	747 Shim
707 Output Shaft	721 Snap Ring	748 Anti-Friction Bearing
708 Key	722 Anti-Friction Bearing	765 Slotted Nut
710 Oil Seal	723 Bore Plug	766 Tab Lock Washer
711 Snap Ring	728 Gasket	767 Bolt
712 Shim	734 Oil Plug	918 Key
713 Anti-Friction Bearing	735 Gasket	919 Snap Ring
714 Gasket	742 Thrust Washer	
715 Inspection Cover	743 Gear case	

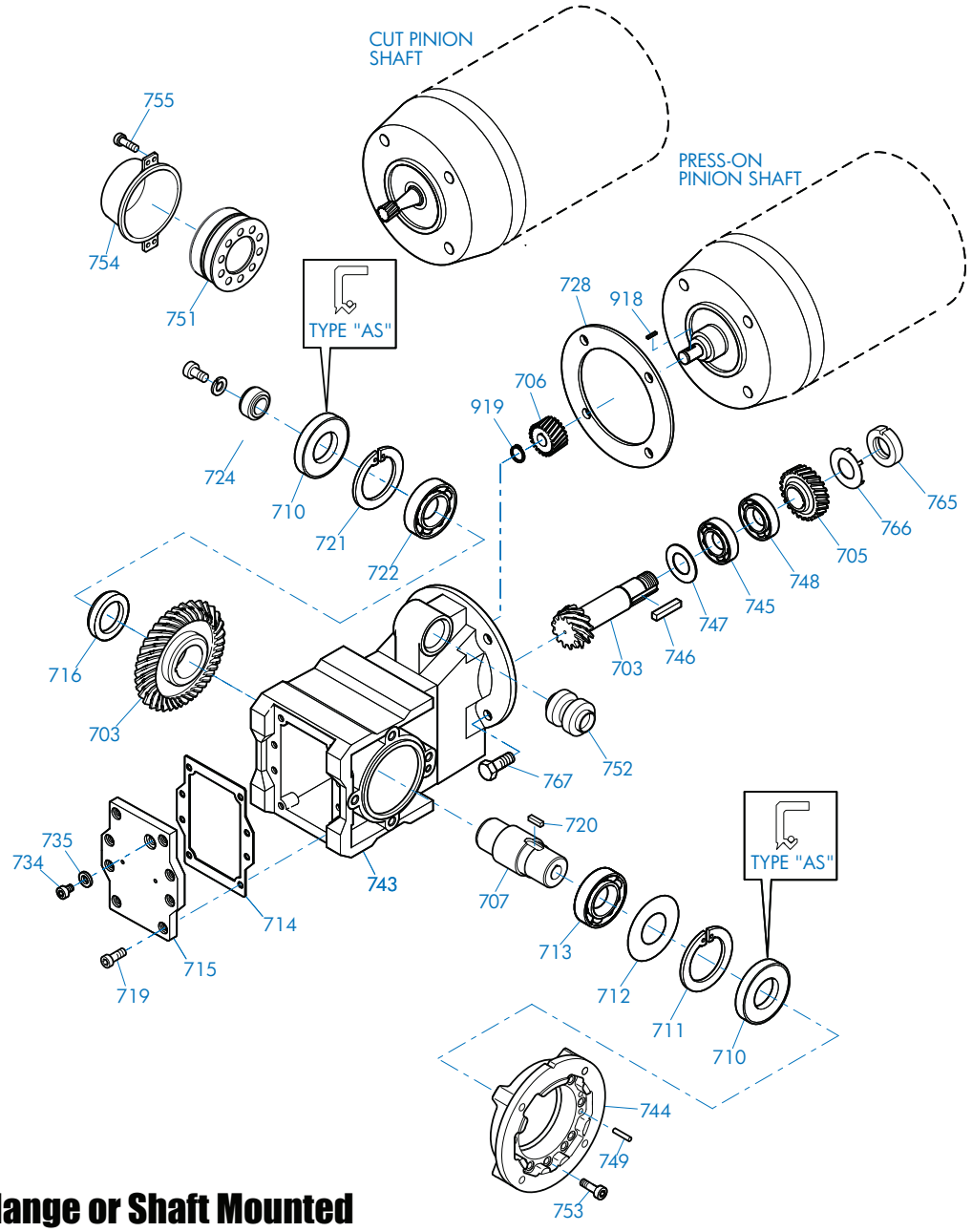

SK 92072 Flange or Shaft Mounted

703 Bevel Gearset
705 Gear
706 Pinion
707 Output Shaft
710 Oil Seal
711 Snap Ring
712 Shim
713 Anti-Friction Bearing
714 Gasket
715 Inspection Cover
716 Spacer
719 Bolt
720 Key
721 Snap Ring
722 Anti-Friction Bearing
724 Fixing Element Kit
728 Gasket
734 Oil Plug
735 Gasket
743 Gearcase
744 Flange
745 Anti-Friction Bearing
746 Key
747 Shim
748 Anti-Friction Bearing
749 Grooved Pin
751 Shrink Disc
752 Rubber Buffer
753 Bolt
754 Cover
755 Bolt
765 Slotted Round Nut
766 Tab Lock Washer
767 Bolt
918 Key
919 Snap Ring

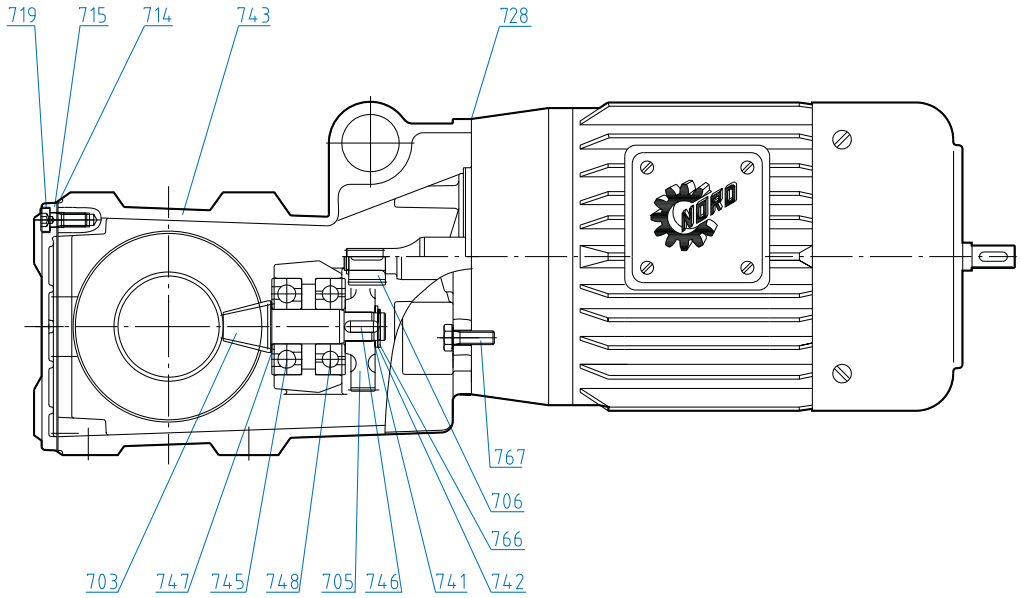

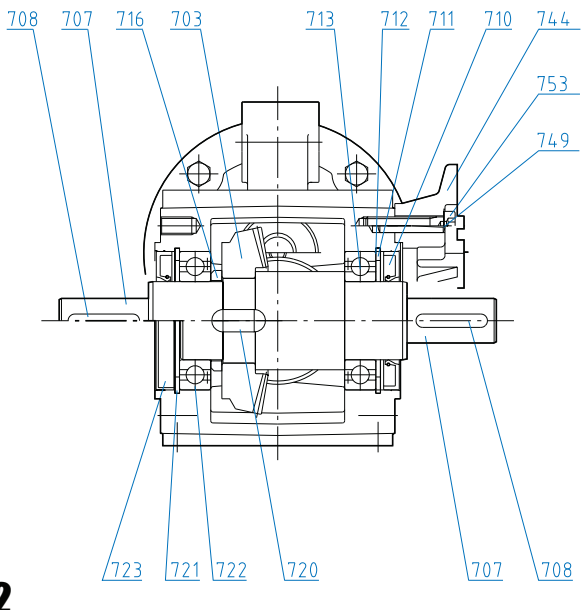

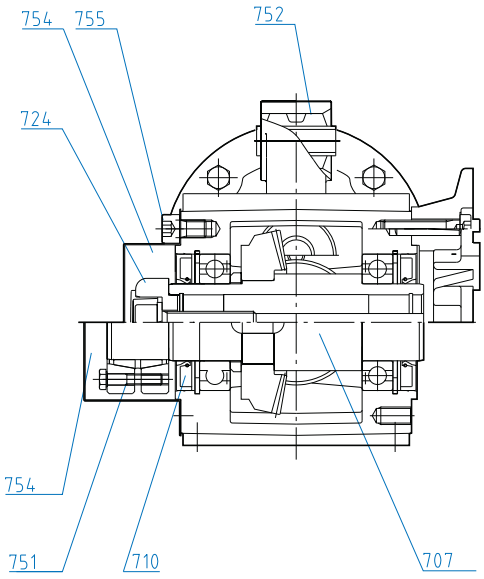

SK 92072

703 Bevel Gearset
705 Gear
706 Pinion
707 Output Shaft
708 Key
710 Oil Seal
711 Snap Ring
712 Shim
713 Anti-Friction Bearing
714 Gasket
715 Inspection Cover
716 Spacer
719 Bolt
720 Key
721 Snap Ring
722 Anti-Friction Bearing
723 Bore Plug
724 Fixing Element Kit
728 Gasket
741 Shim
742 Thrust Washer
743 Gear case
744 Flange
745 Anti-Friction Bearing
746 Key
747 Shim
748 Anti-Friction Bearing
749 Grooved Pin
751 Shrink Disc Connector
752 Rubber Buffer
753 Socket Head Screw
754 Shrink Disc Cover
755 Socket Head Screw
766 Tab Lock Washer
767 Bolt

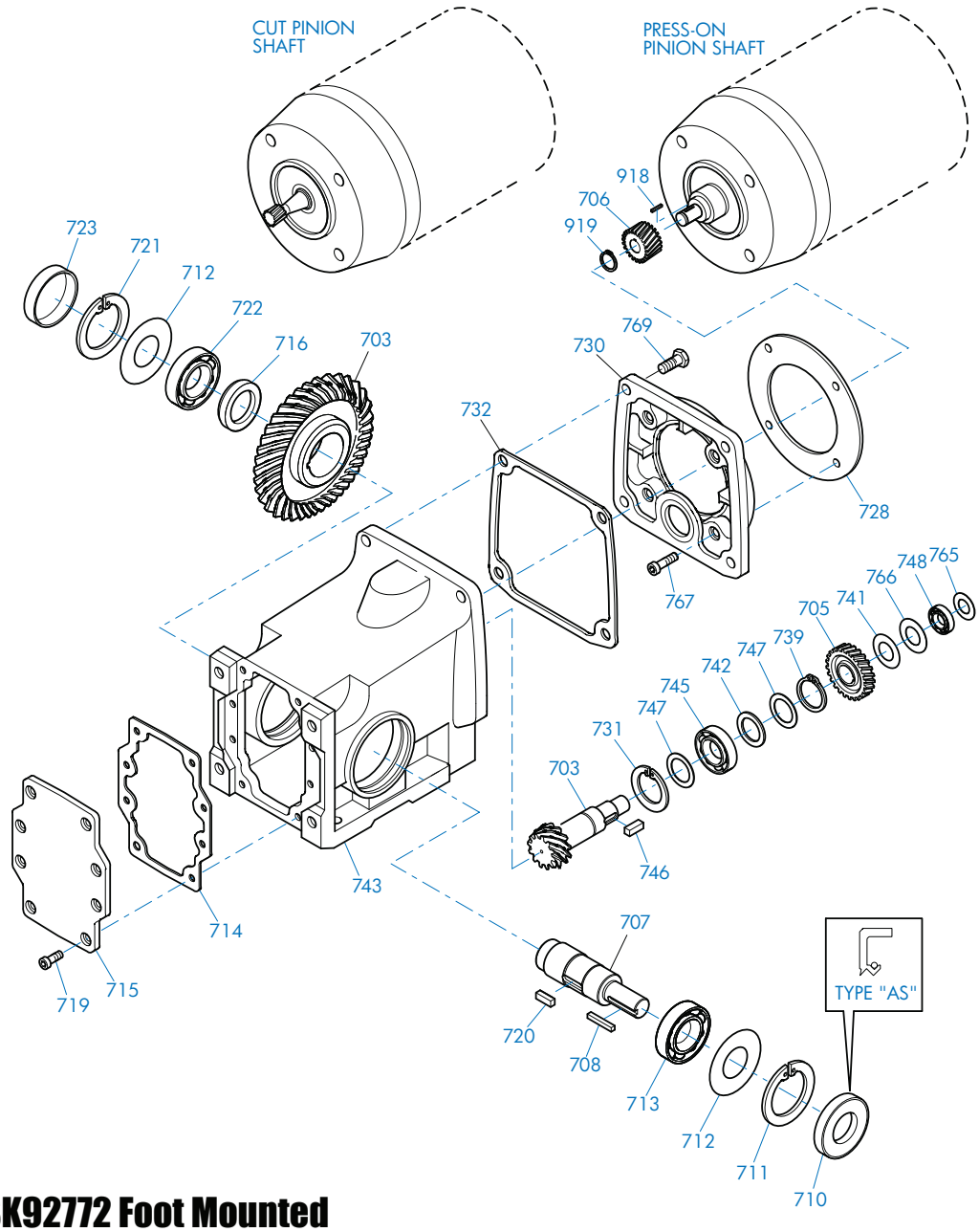

SK 92172 - SK92772 Foot Mounted

703 Bevel Gearset
705 Gear
706 Pinion
707 Output Shaft
708 Key
710 Oil Seal
711 Snap Ring
712 Shim
713 Anti-Friction Bearing
714 Gasket
715 Inspection Cover
716 Spacer
719 Bolt
720 Key
721 Snap Ring
722 Anti-Friction Bearing
723 Bore Plug
728 Gasket
730 Input Cover
731 Snap Ring
732 Gasket
739 Snap Ring
741 Shim
742 Thrust Washer
743 Gearcase
745 Anti-Friction Bearing
746 Key
747 Shim
748 Anti-Friction Bearing
765 Shim
766 Snap Ring
767 Bolt
769 Bolt
918 Key
919 Snap Ring

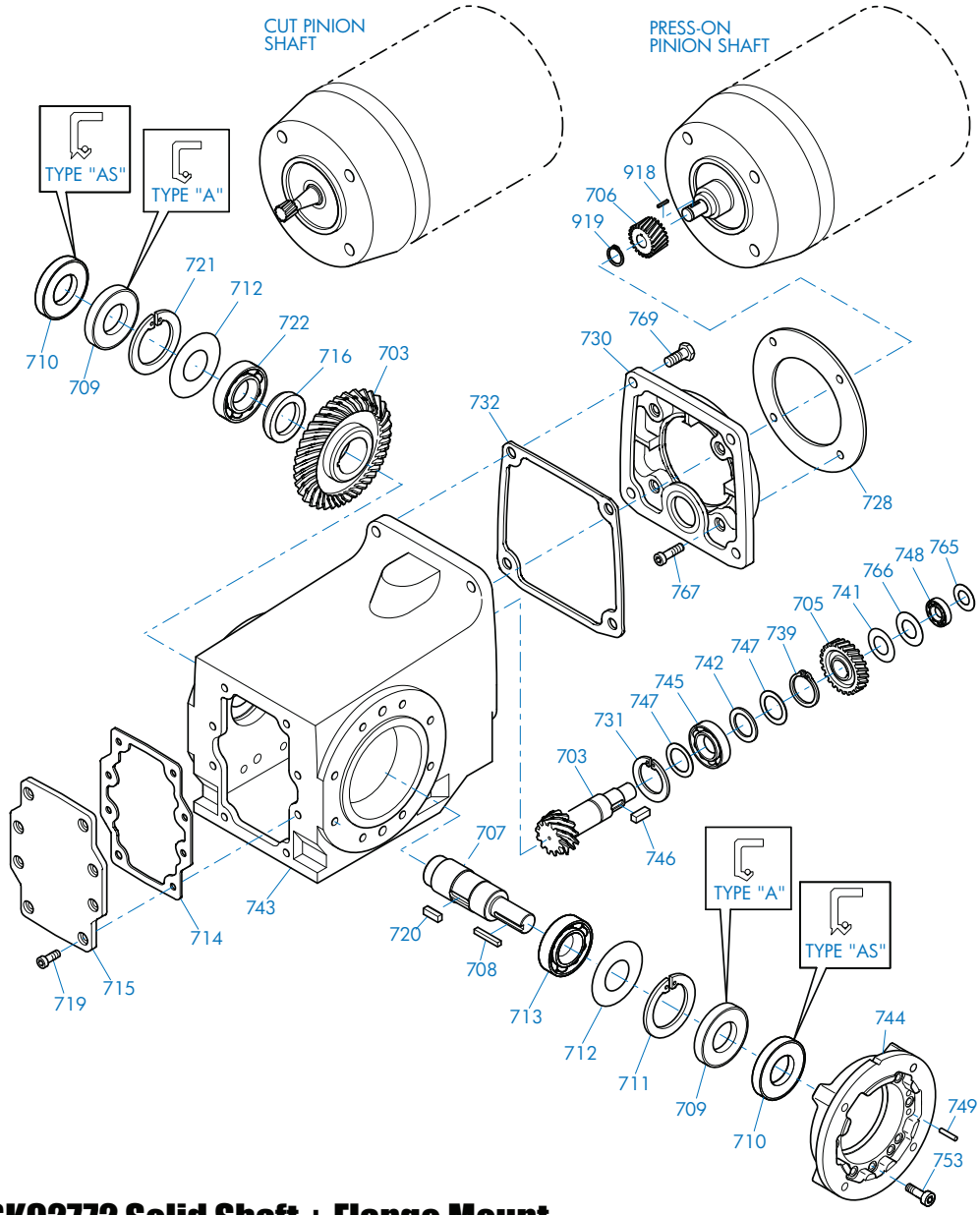

SK 92172 - SK92772 Solid Shaft + Flange Mount

703 Bevel Gearset
705 Gear
706 Pinion
707 Output Shaft
708 Key
709 Oil Seal
710 Oil Seal
711 Snap Ring
712 Shim
713 Anti-Friction Bearing
714 Gasket
715 Inspection Cover
716 Spacer
719 Bolt
720 Key
721 Snap Ring
722 Anti-Friction Bearing
728 Gasket
730 Input Cover
731 Snap Ring
732 Gasket
739 Snap Ring
741 Shim
742 Thrust Washer
743 Gearcase
744 Flange
745 Anti-Friction Bearing
746 Key
747 Shim
748 Anti-Friction Bearing
749 Grooved Pin
753 Bolt
765 Shim
766 Snap Ring
767 Bolt
769 Bolt
918 Key
919 Snap Ring

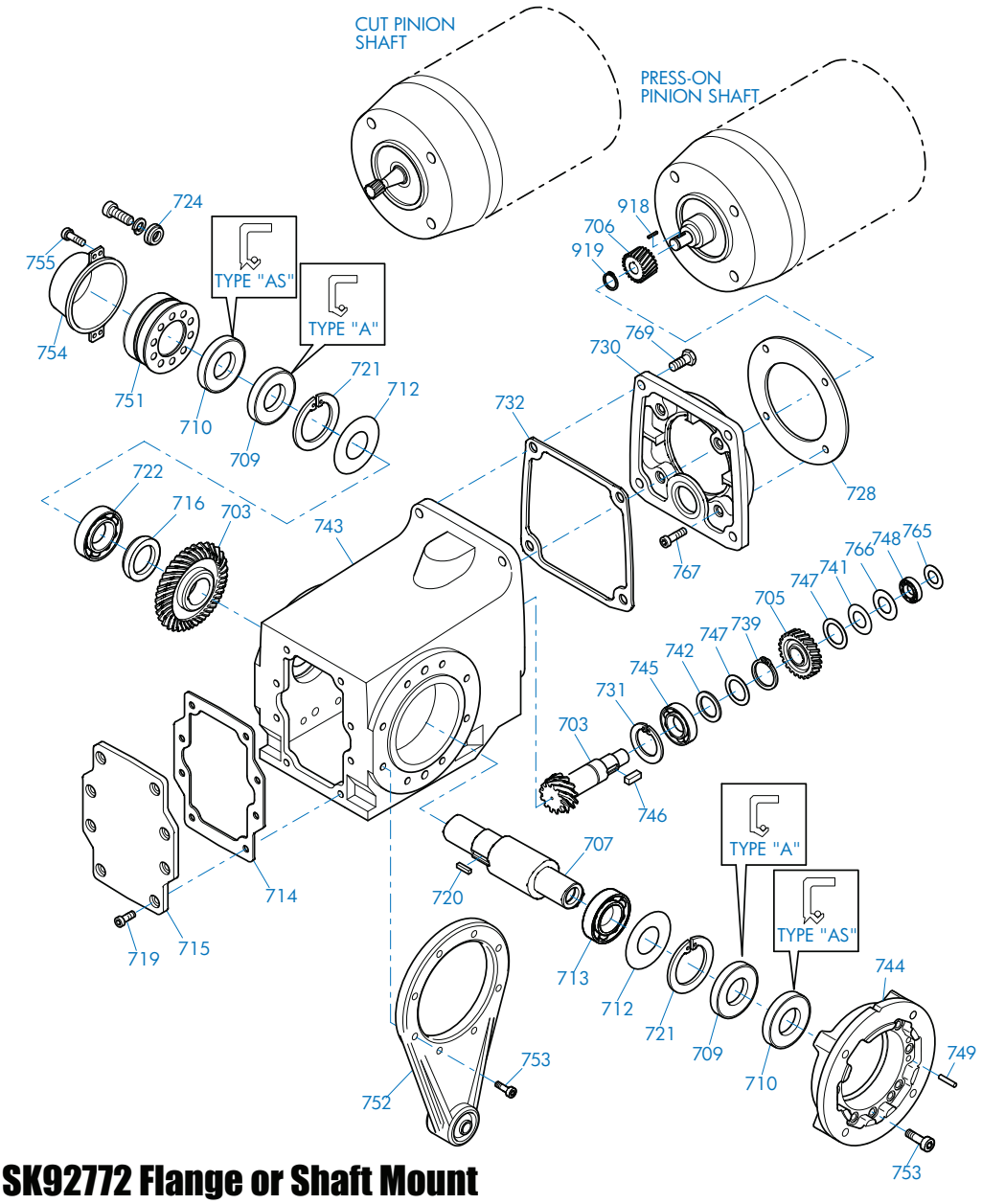

SK 92172 - SK92772 Flange or Shaft Mount

703 Bevel Gearset	722 Anti-Friction Bearing	748 Anti-Friction Bearing
705 Gear	724 Fixing Element Kit	749 Grooved Pin
706 Pinion	728 Gasket	751 Shrink Disc Connector
707 Output Shaft	730 Input Cover	752 Torque Arm
709 Oil Seal	731 Snap Ring	753 Bolt
710 Oil Seal	732 Gasket	754 Cover
712 Shim	739 Snap Ring	755 Bolt
713 Anti-Friction Bearing	741 Shim	765 Shim
714 Gasket	742 Thrust Washer	766 Snap Ring
715 Inspection Cover	743 Gearcase	767 Bolt
716 Spacer	744 Flange	769 Bolt
719 Bolt	745 Anti-Friction Bearing	918 Key
720 Key	746 Key	919 Snap Ring
721 Snap Ring	747 Shim	

92 SERIES BEVEL PARTS LIST DRAWINGS

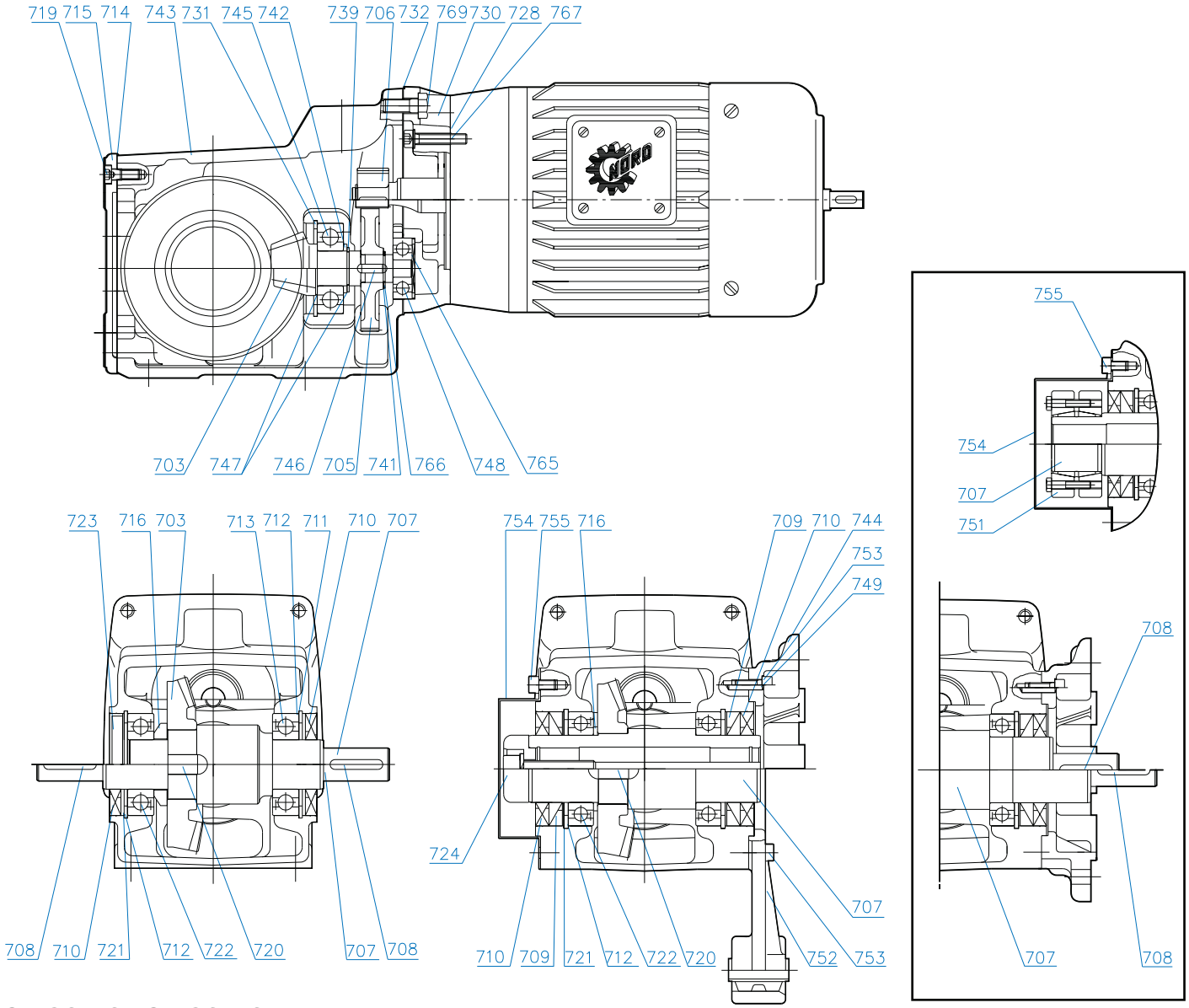

SK 92172 - SK 92772

703 Bevel Gearset
705 Gear
706 Pinion
707 Output Shaft
708 Key
709 Oil Seal
710 Oil Seal
711 Snap Ring
712 Shim
713 Anti-Friction Bearing
714 Gasket
715 Inspection Cover
716 Spacer
719 Bolt
720 Key
721 Snap Ring
722 Anti-Friction Bearing
723 Sealing Plug
724 Fixing Element Kit
728 Gasket
730 Gearbox Cover
731 Snap Ring
732 Gasket
739 Snap Ring
741 Shim
742 Thrust Washer
743 Gearcase
744 Flange
745 Anti-Friction Bearing
746 Key
747 Shim
748 Anti-Friction Bearing
749 Grooved Pin
751 Shrink Disc Connector
752 Torque Arm
753 Bolt
754 Cover
755 Bolt
765 Slotted Round Nut
766 Tab Lock Washer
767 Bolt
769 Hexagonal Screw

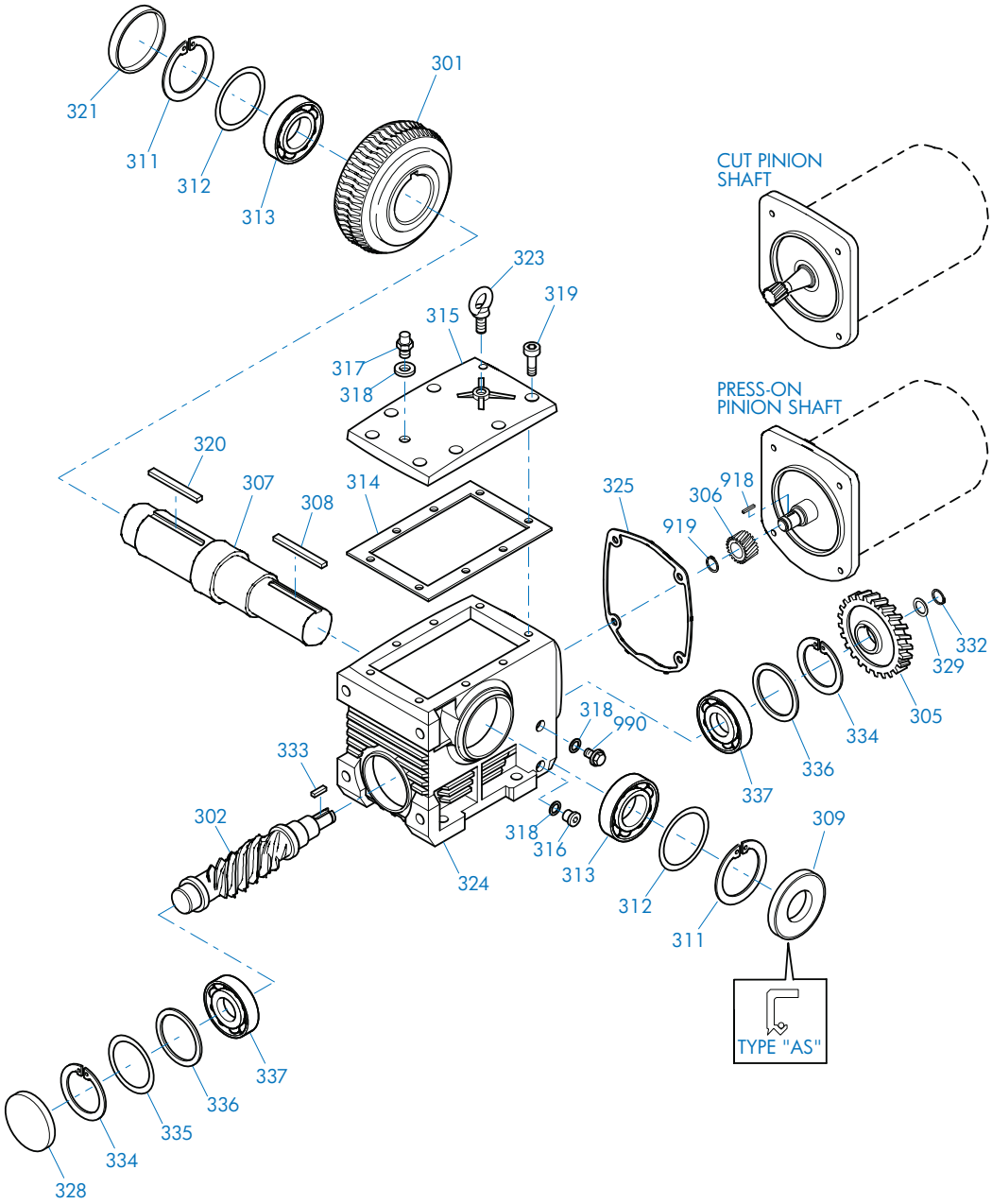

SK 02040 - SK 42125 Foot Mounted

301 Worm Wheel	315 Inspection Cover	329 Thrust Washer
302 Worm	316 Drain Plug	332 Snap Ring
305 Gear	317 Vent Plug	333 Key
306 Pinion	318 Gasket	334 Snap Ring
307 Output Shaft	319 Socket Head Screw	335 Shim
308 Key	320 Key	336 Thrust Washer
309 Oil Seal	321 Bore Plug	337 Anti-Friction Bearing
311 Snap Ring	323 Flanged Eye Bolt	918 Key
312 Shim	324 Gearcase	919 Snap Ring
313 Anti-Friction Bearing	325 Gasket	990 Oil Level Plug
314 Gasket	328 Bore Plug	

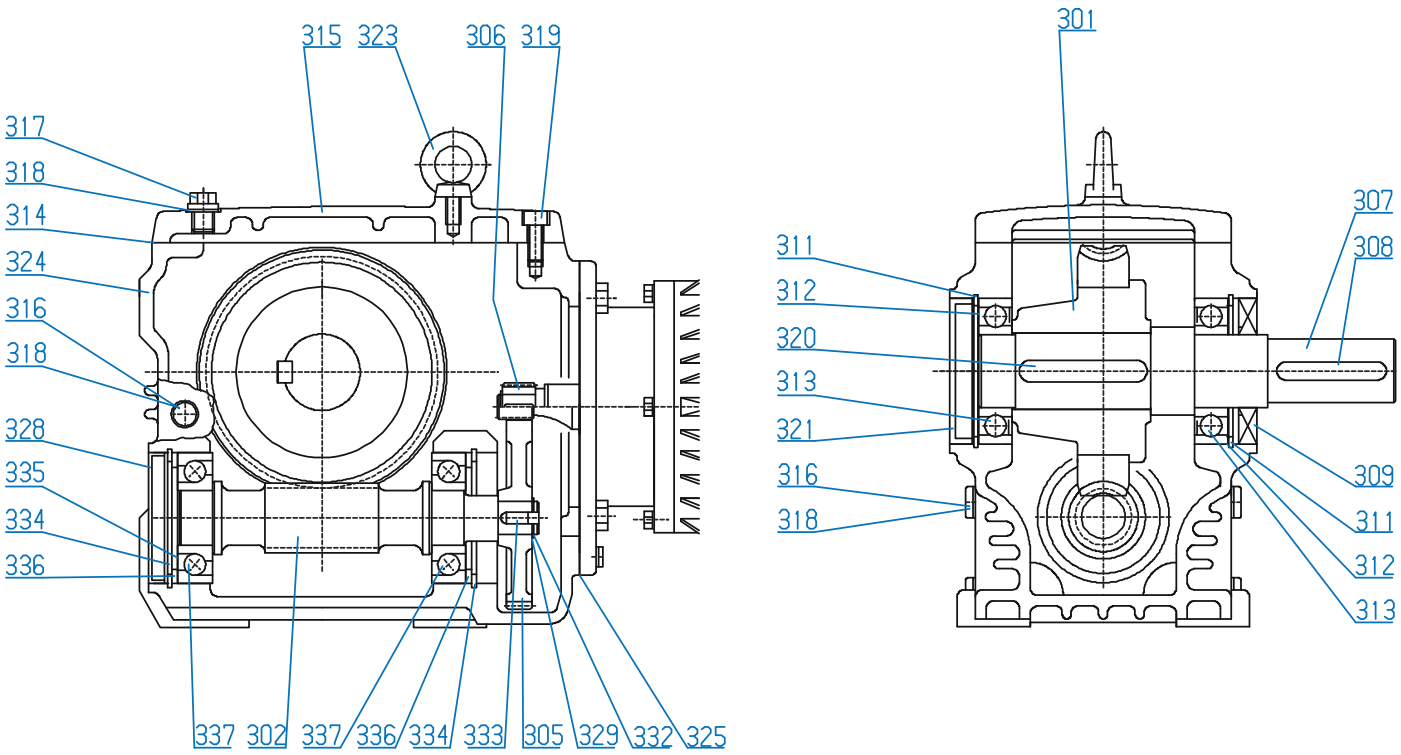

SK 02040 - SK 42125 Foot Mounted

301 Worm Wheel	314 Gasket	325 Gasket
302 Worm	315 Inspection Cover	328 Bore Plug
305 Gear	316 Drain Plug	329 Thrust Washer
306 Pinion	317 Vent Plug	332 Snap Ring
307 Output Shaft	318 Gasket	333 Key
308 Key	319 Socket Head Screw	334 Snap Ring
309 Oil Seal	320 Key	335 Shim
311 Snap Ring	321 Bore Plug	336 Thrust Washer
312 Shim	323 Flanged Eye Bolt	337 Anti-Friction Bearing
313 Anti-Friction Bearing	324 Gearcase	

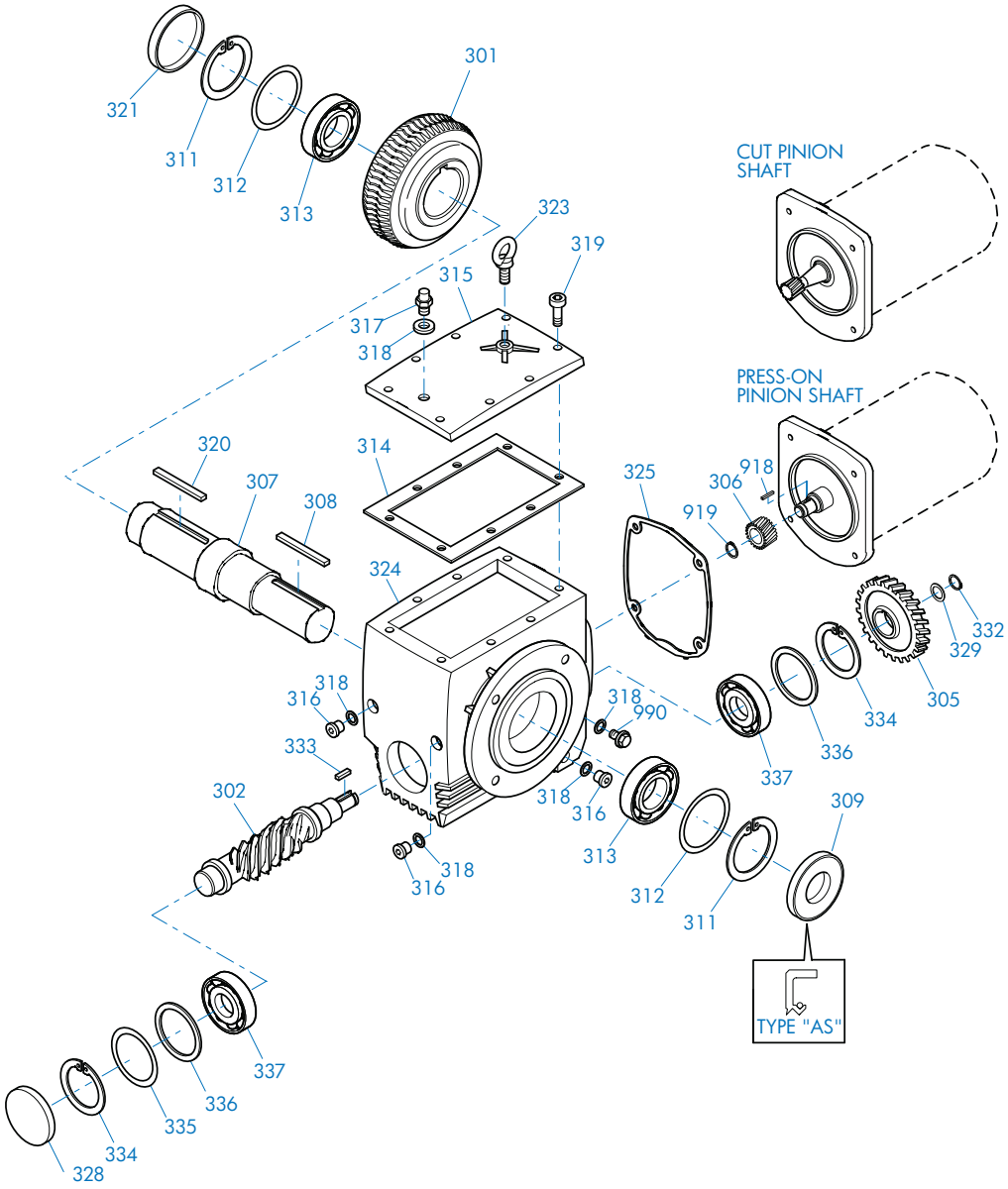

SK 02040 - SK 42125 Flange Mounted

301 Worm Wheel	315 Inspection Cover	329 Thrust Washer
302 Worm	316 Drain Plug	332 Snap Ring
305 Gear	317 Vent Plug	333 Key
306 Pinion	318 Gasket	334 Snap Ring
307 Output Shaft	319 Socket Head Screw	335 Shim
308 Key	320 Key	336 Thrust Washer
309 Oil Seal	321 Bore Plug	337 Anti-Friction Bearing
311 Snap Ring	323 Flanged Eye Bolt	918 Key
312 Shim	324 Gearcase	919 Snap Ring
313 Anti-Friction Bearing	325 Gasket	990 Oil Level Plug
314 Gasket	328 Bore Plug	

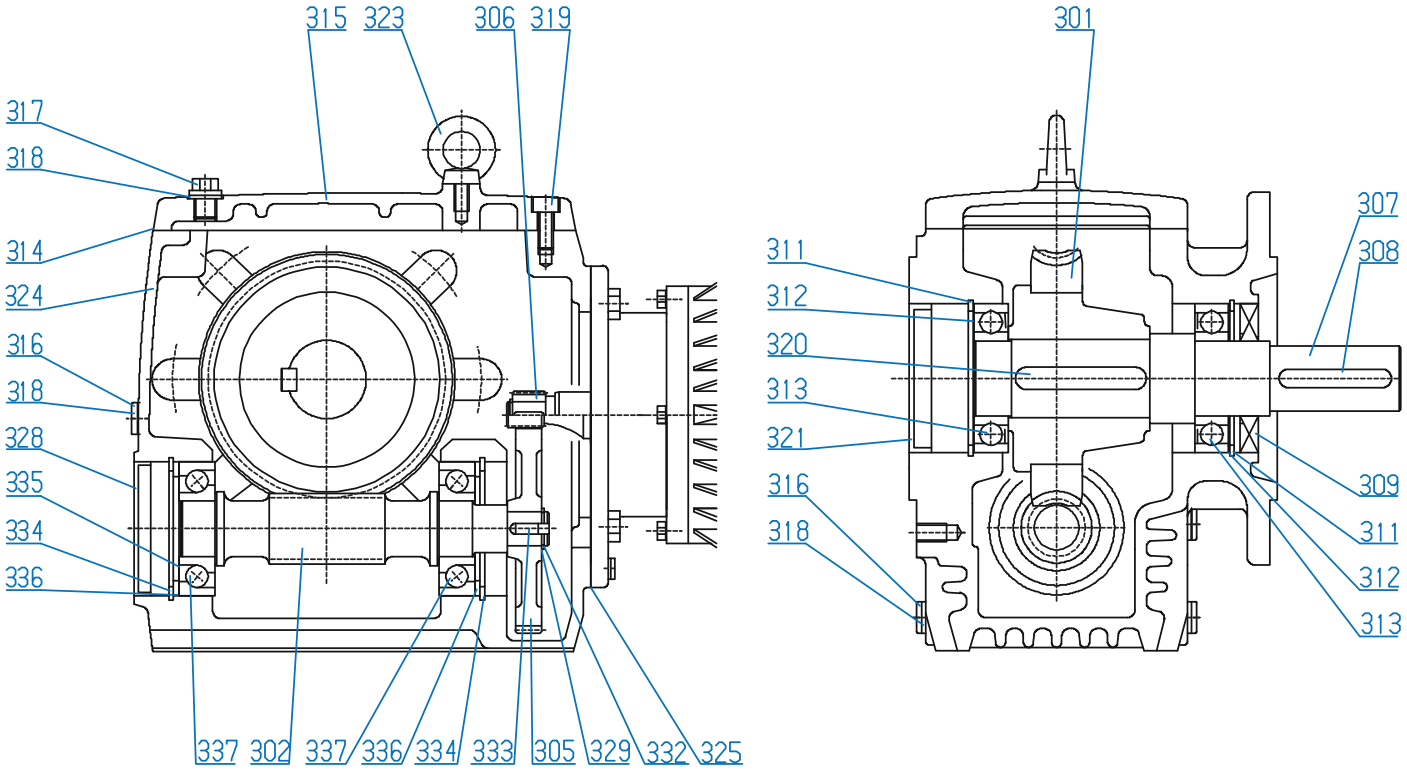

SK 02040 - SK 42125 Flange Mounted

301 Worm Wheel	314 Gasket	325 Gasket
302 Worm	315 Inspection Cover	328 Bore Plug
305 Gear	316 Drain Plug	329 Thrust Washer
306 Pinion	317 Vent Plug	332 Snap Ring
307 Output Shaft	318 Gasket	333 Key
308 Key	319 Socket Head Screw	334 Snap Ring
309 Oil Seal	320 Key	335 Shim
311 Snap Ring	321 Bore Plug	336 Thrust Washer
312 Shim	323 Flanged Eye Bolt	337 Anti-Friction Bearing
313 Anti-Friction Bearing	324 Gearcase	

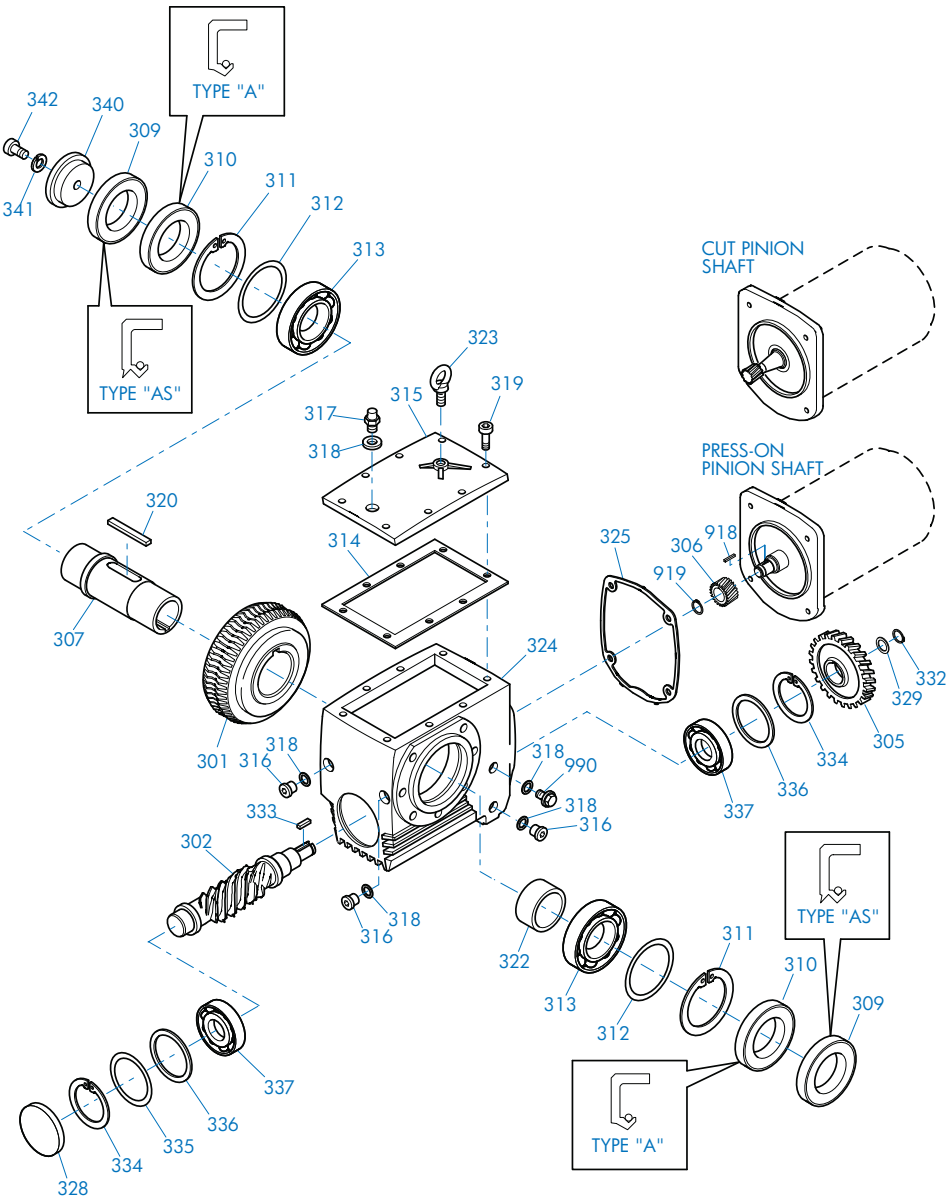

SK 02040 - SK 42125 Shaft Mounted

301 Worm Wheel
302 Worm
305 Gear
306 Pinion
307 Output Shaft
309 Oil Seal
310 Oil Seal
311 Snap Ring
312 Shim
313 Anti-Friction Bearing
314 Gasket
315 Inspection Cover
316 Drain Plug
317 Vent Plug
318 Gasket
319 Socket Head Screw
320 Key
322 Spacer
323 Flanged Eye Bolt
324 Gearcase
325 Gasket
328 Bore Plug
329 Thrust Washer
332 Snap Ring
333 Key
334 Snap Ring
335 Shim
336 Thrust Washer
337 Anti-Friction Bearing
340 Retaining Washer
341 Lock Washer
342 Bolt
350 Flange
351 Bolt
918 Key
919 Snap Ring
990 Oil Level Plug

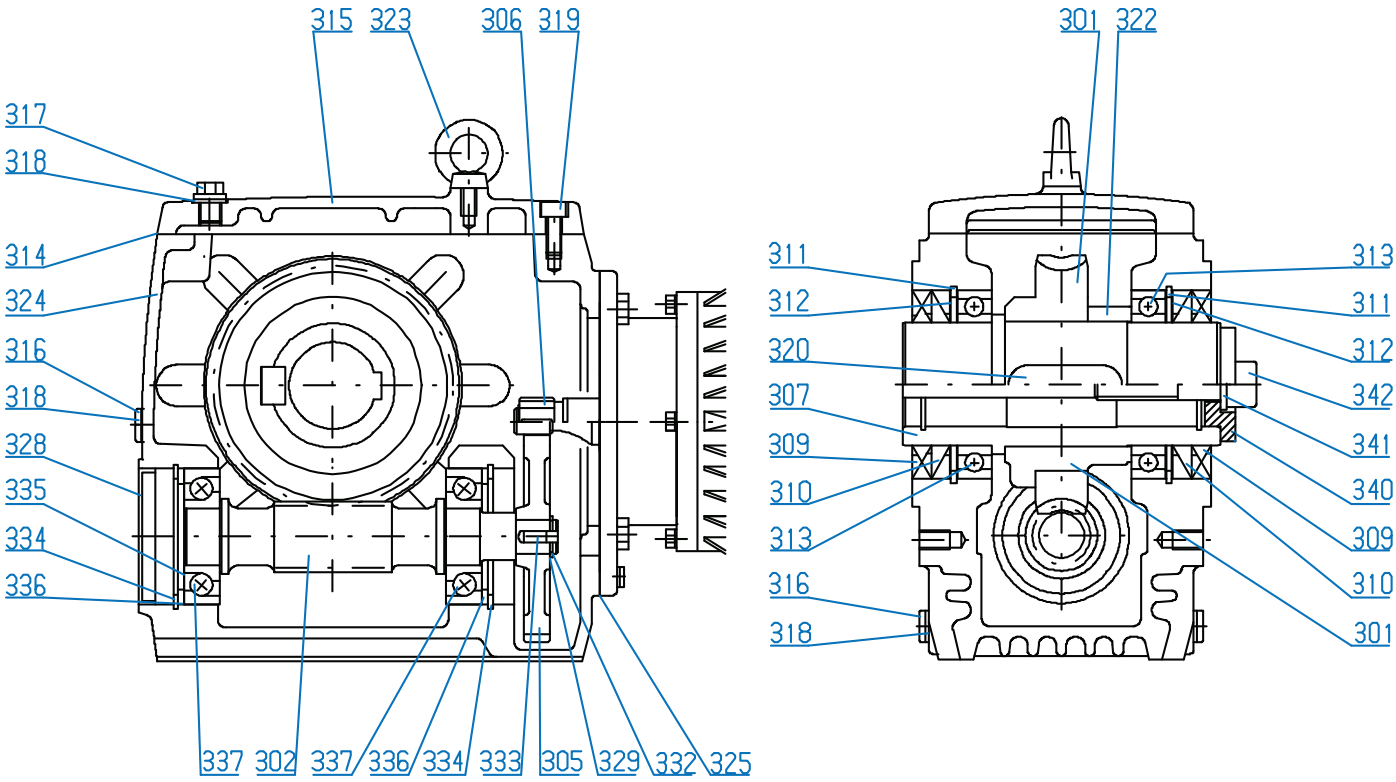

SK 02040 - SK 42125 Shaft Mounted

301 Worm Wheel	316 Drain Plug	333 Key
302 Worm	317 Vent Plug	334 Snap Ring
305 Gear	318 Gasket	335 Shim
306 Pinion	319 Socket Head Screw	336 Thrust Washer
307 Output Shaft	320 Key	337 Anti-Friction Bearing
309 Oil Seal	322 Spacer	340 Retaining Washer
310 Oil Seal	323 Flanged Eye Bolt	341 Lock Washer
311 Snap Ring	324 Gearcase	342 Bolt
312 Shim	325 Gasket	350 Flange
313 Anti-Friction Bearing	328 Bore Plug	351 Bolt
314 Gasket	329 Thrust Washer	
315 Inspection Cover	332 Snap Ring	

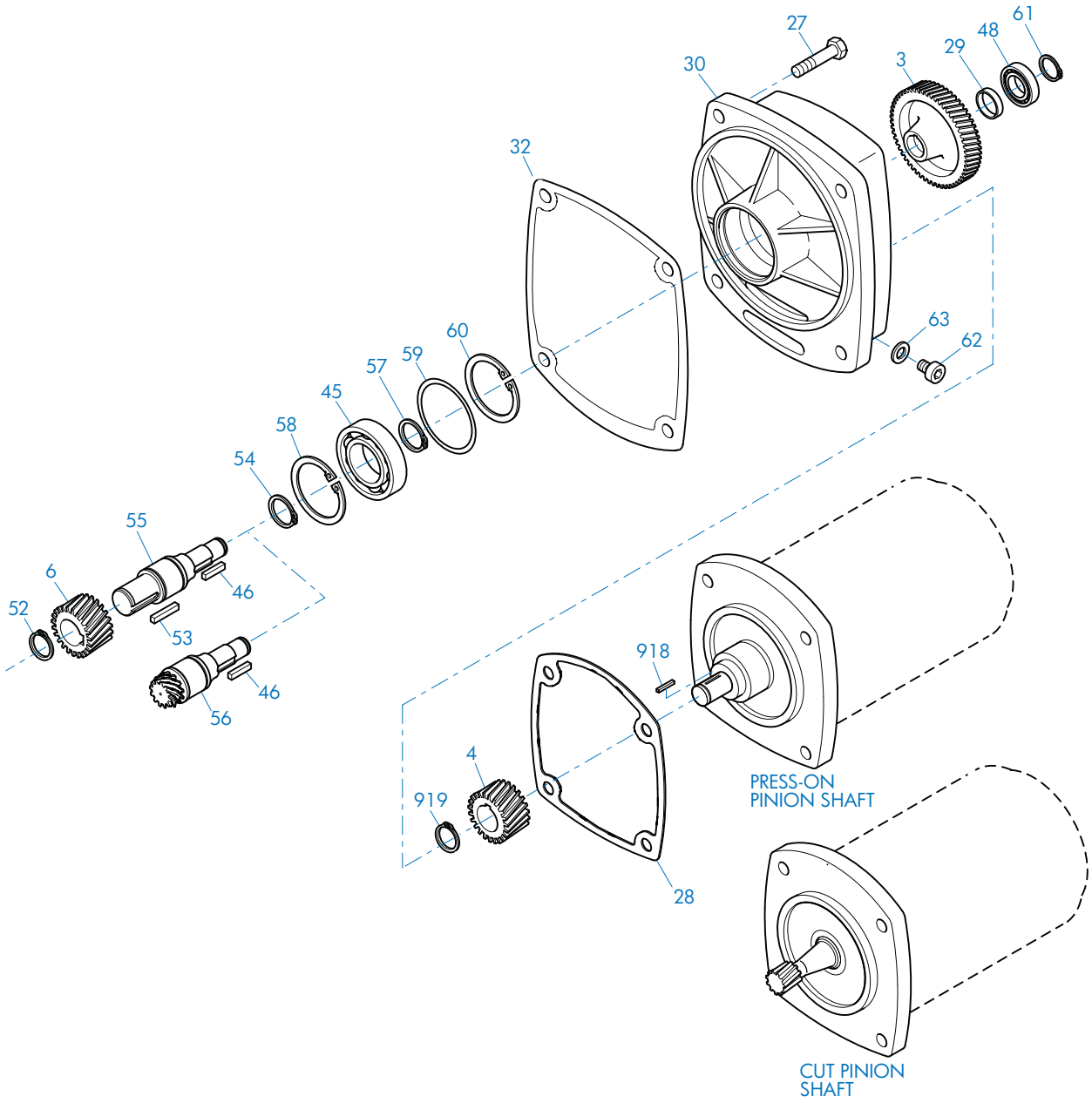

SK13050 - SK43125 Third Stage Reduction Gear

3	Gear	46	Key	59	Shim
4	Pinion	48	Anti-Friction Bearing	60	Snap Ring
6	Pinion	52	Snap Ring	61	Snap Ring
27	Bolt	53	Key	62	Oil Plug
28	Gasket	54	Snap Ring	63	Gasket
29	Spacer	55	Intermediate Shaft, Plain	918	Key
30	Third Reduction Gearcase	56	Intermediate Shaft, Gearcut	919	Snap Ring
32	Gasket	57	Snap Ring		
45	Anti-Friction Bearing	58	Snap Ring		

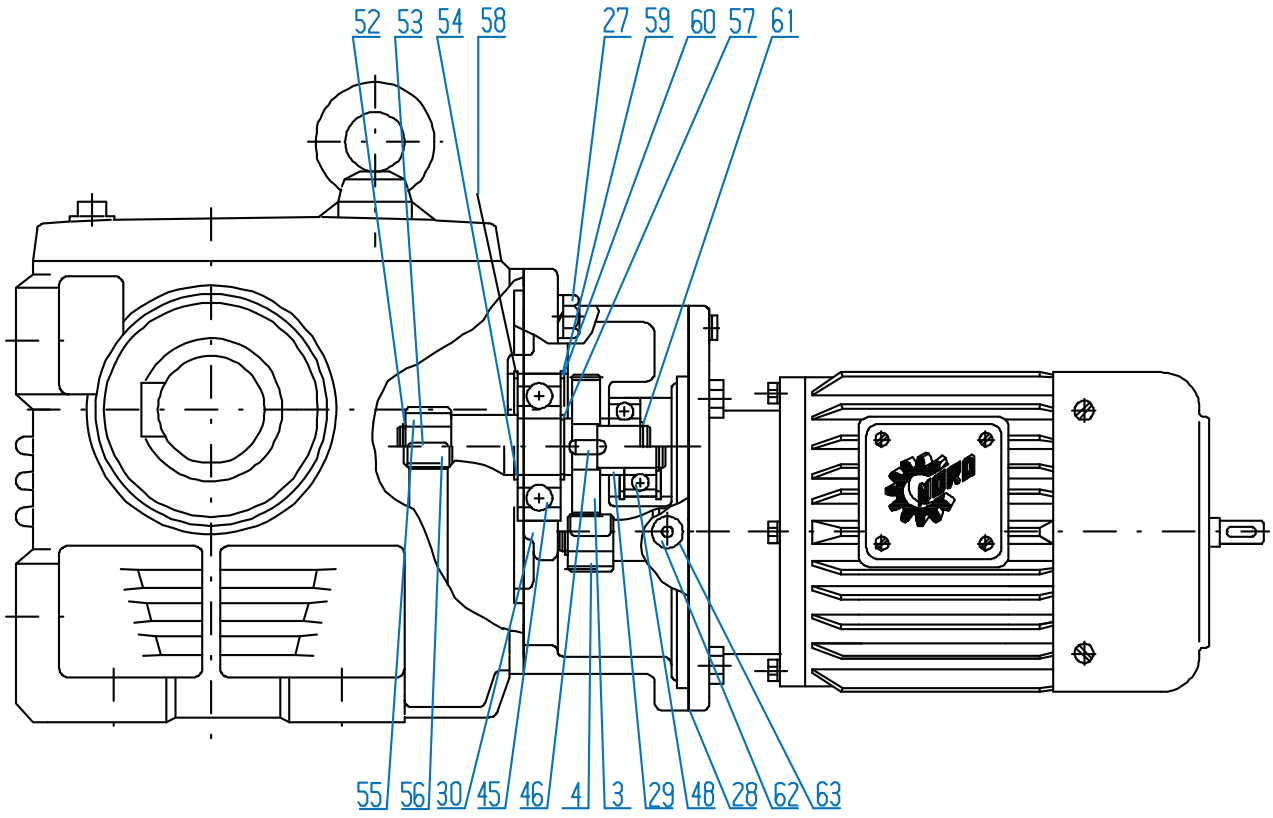

SK13050 - SK43125 Third Stage Reduction Gear

3	Gear	46	Key	58	Snap Ring
4	Pinion	48	Anti-Friction Bearing	59	Shim
27	Bolt	52	Snap Ring	60	Snap Ring
28	Gasket	53	Key	61	Snap Ring
29	Spacer	54	Snap Ring	62	Oil Plug
30	Third Reduction Gearcase	55	Intermediate Shaft, Plain	63	Gasket
32	Gasket	56	Intermediate Shaft, Gearcut		
45	Anti-Friction Bearing	57	Snap Ring		

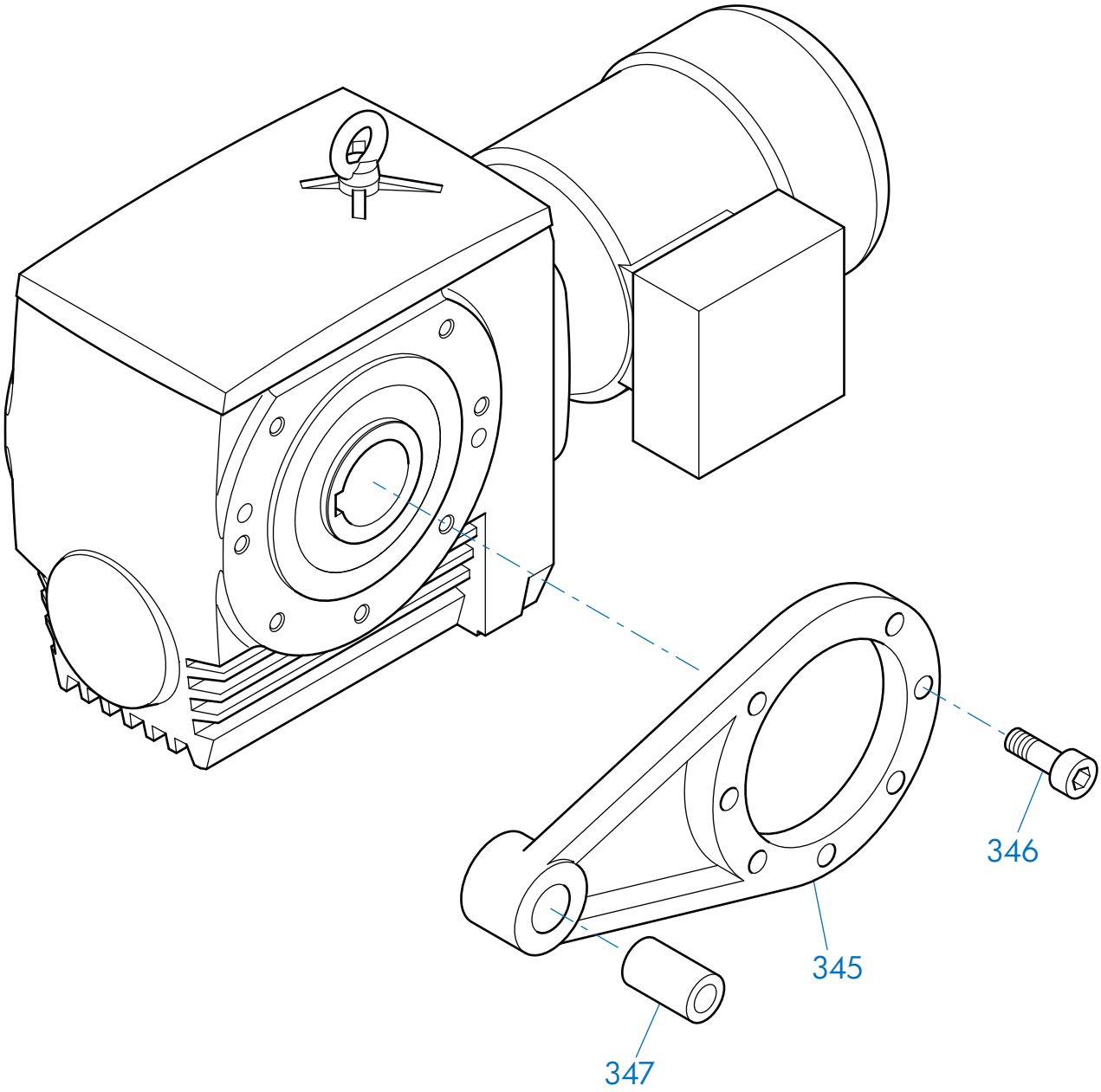

SK13050 - SK43125 Torque Arm

345 Torque Arm	346 Bolt	347 Bushing

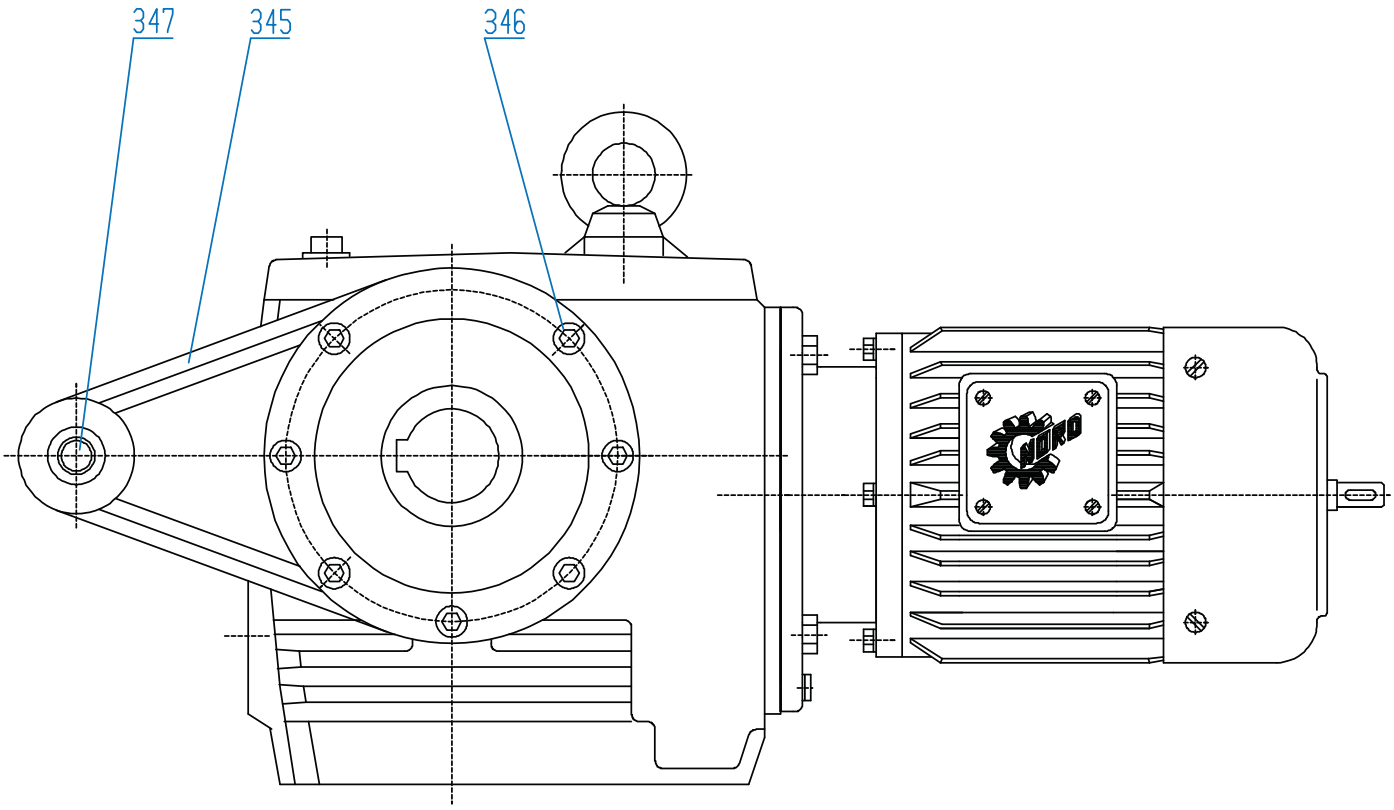

SK13050 - SK43125 Torque Arm

345 Torque Arm	346 Bolt	347 Bushing

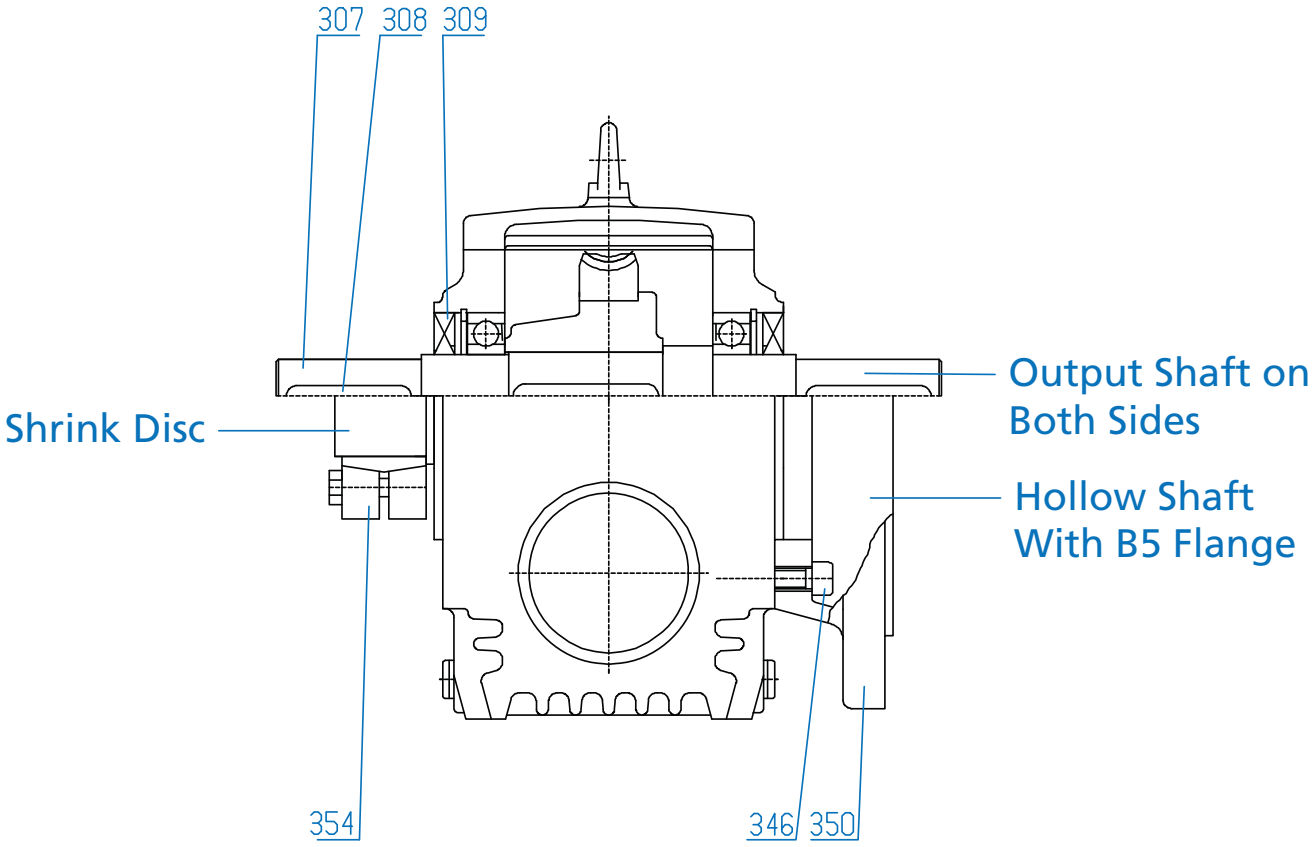

SK13050 - SK43125

307 Output Shaft	309 Oil Seal	350 Flange
308 Key	346 Screw	354 Shrink Disc Connector

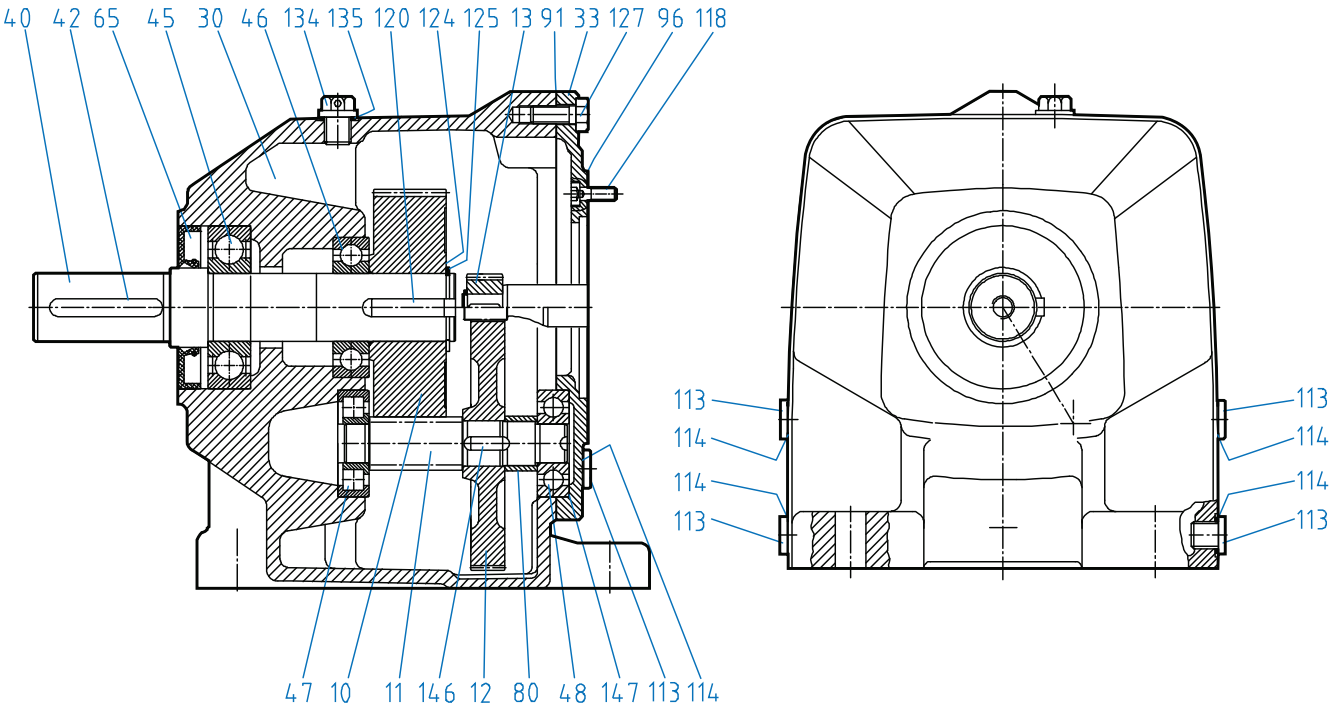

SK 172 - SK 972 Foot Mounted

10	Driven gear	46	Output shaft bearing	118	Bolt
11	Pinion shaft	47	Pinion shaft bearing	120	Key
12	Driving gear	48	Pinion shaft bearing	124	Shim
13	Driving pinion	65	Shaft seal	125	Snap ring
30	Gearcase	80	Spacer	127	Bolt
33	Input cover	91	Gasket	134	Vent plug
40	Output shaft	96	Gasket	135	Gasket
42	Key	113	Oil plug	146	Key
45	Output shaft bearing	114	Gasket	147	Shim

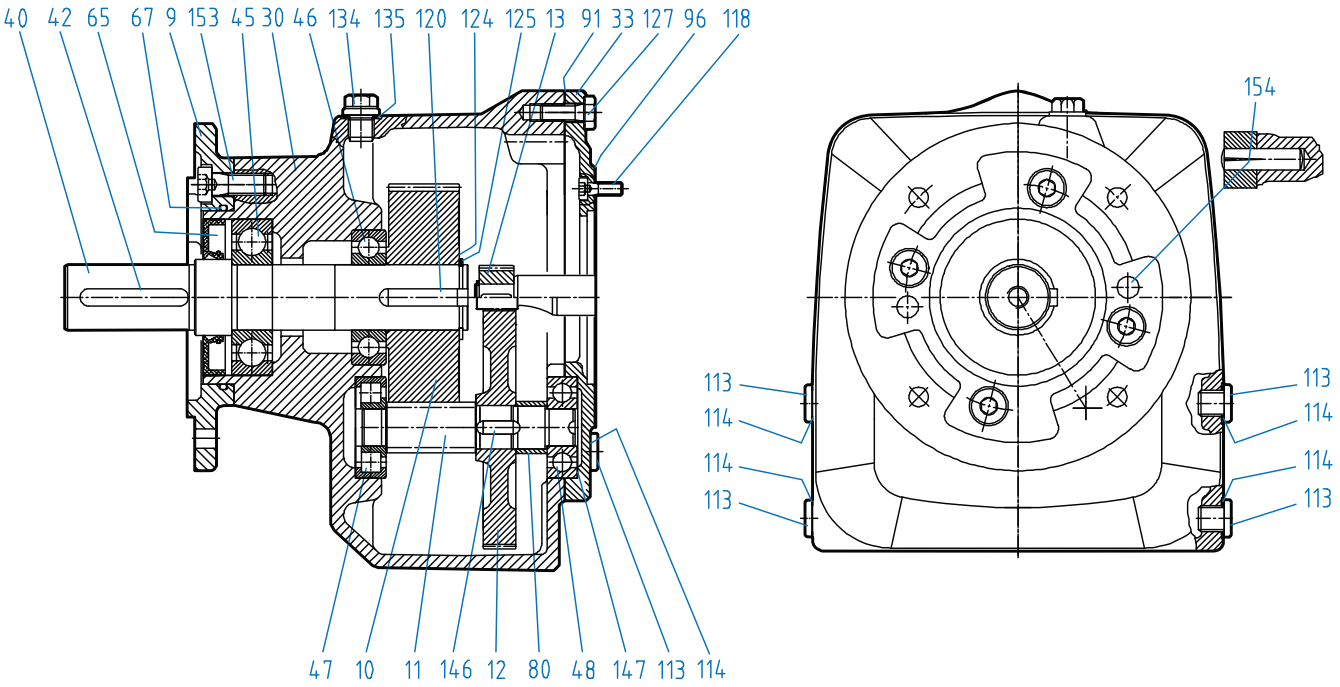

SK 172 - SK 972 Flange Mounted

9	Flange	47	Pinion shaft bearing	124	Shim
10	Driven gear	48	Pinion shaft bearing	125	Snap ring
11	Pinion shaft	65	Shaft seal	127	Bolt
12	Driving gear	67	O-Ring	134	Vent plug
13	Driving pinion	80	Spacer	135	Gasket
30	Gearcase	91	Gasket	146	Key
33	Input cover	96	Gasket	147	Shim
40	Output shaft	113	Oil plug	153	Bolt
42	Key	114	Gasket	154	Grooved dowel pin
45	Output shaft bearing	118	Bolt		
46	Output shaft bearing	120	Key		

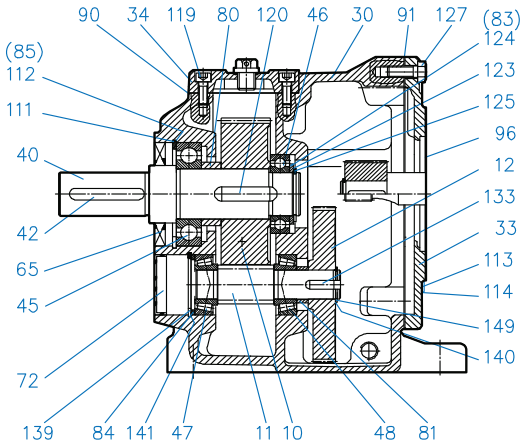

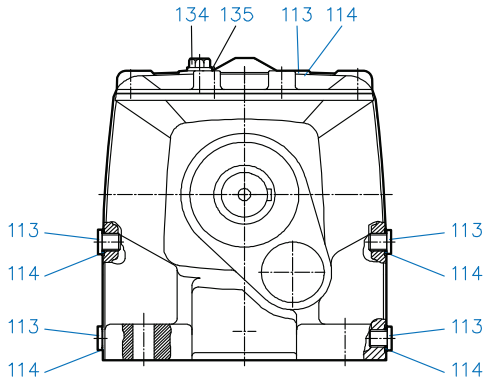

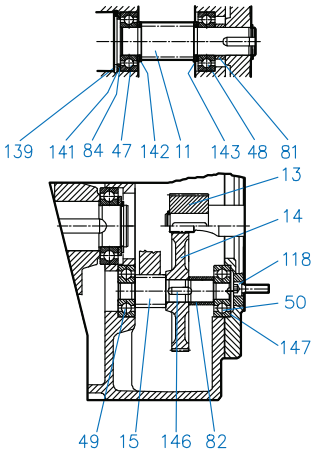

SK 273 - SK 973 Foot Mounted

10	Driven gear	65	Shaft seal	120	Key
11	Pinion shaft	72	Bore plug	123	Thrust washer
12	Driving gear	80	Spacer	124	Shim
13	Driving pinion	81	Spacer	125	Snap ring
14	Driving gear	82	Spacer	127	Bolt
15	Pinion shaft	83	Thrust washer	133	Key
30	Gearcase	84	Thrust washer	134	Vent plug
33	Input cover	85	Thrust washer	135	Gasket
34	Gear case cover	90	Gasket	139	Snap ring
40	Output shaft	91	Gasket	140	Shim
42	Key	96	Gasket	141	Shim
45	Output shaft bearing	111	Snap ring	142	Thrust washer
46	Output shaft bearing	112	Shim	143	Thrust washer
47	Pinion shaft bearing	113	Oil plug	146	Key
48	Pinion shaft bearing	114	Gasket	147	Shim
49	Pinion shaft bearing	118	Bolt	149	Snap ring
50	Pinion shaft bearing	119	Bolt		

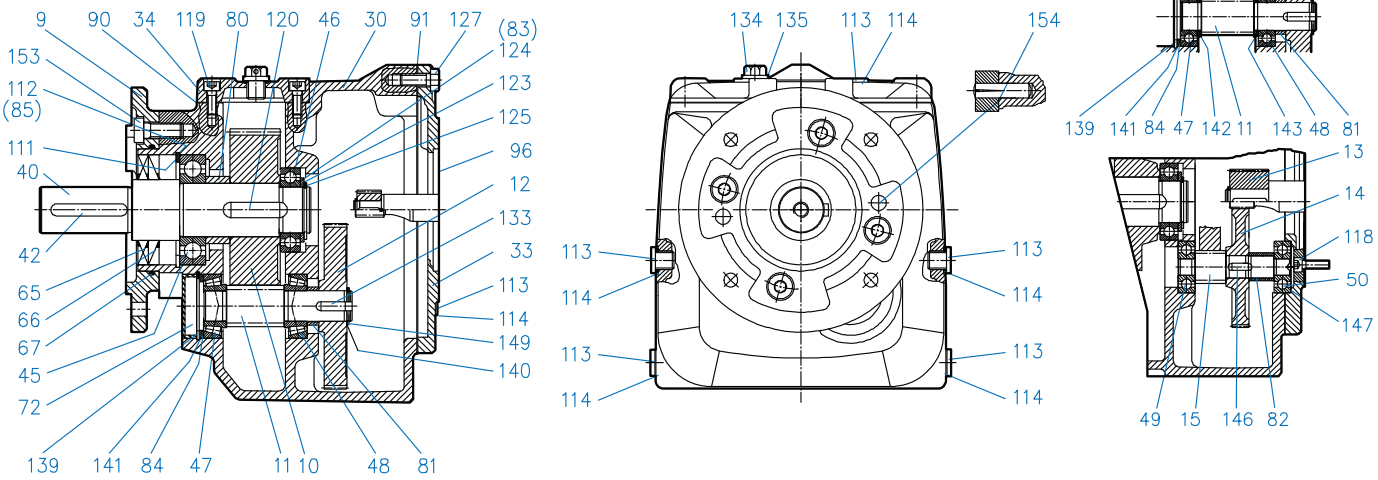

SK 273 - SK 973 Flange Mounted

9	Flange	66	Shaft seal	123	Thrust washer
10	Driven gear	67	O-Ring	124	Shim
11	Pinion shaft	72	Bore plug	125	Snap ring
12	Driving gear	80	Spacer	127	Bolt
13	Driving pinion	81	Spacer	133	Key
14	Driving gear	82	Spacer	134	Vent plug
15	Pinion shaft	83	Thrust washer	135	Gasket
30	Gearcase	84	Thrust washer	139	Snap ring
33	Input cover	85	Thrust washer	140	Shim
34	Gearcase cover	90	Gasket	141	Shim
40	Output shaft	91	Gasket	142	Thrust washer
42	Key	96	Gasket	143	Thrust washer
45	Output shaft bearing	111	Snap ring	146	Key
46	Output shaft bearing	112	Shim	147	Shim
47	Pinion shaft bearing	113	Oil plug	149	Snap ring
48	Pinion shaft bearing	114	Gasket	153	Bolt
49	Pinion shaft bearing	118	Bolt	154	Grooved dowel pin
50	Pinion shaft bearing	119	Bolt		
65	Shaft seal	120	Key		

Troubleshooting

This section identifies some of the most common issues involved with NORD Gear speed reducers , and provides recommendations to assist you in defining and answering your questions as you work with our products. You may also contact our Engineering/Application departments if your questions are not answered in the table below.

Problem With the Reducer		Possible Causes	Suggested Remedy
Runs Hot	Overloading	Load exceeds the capacity of the reducer	Check rated capacity of reducer, replace with unit of sufficient capacity or reduce the load.
	Improper lubrication	Insufficient lubrication	Check lubricant level and adjust up to recommended levels
		Excessive lubrication	Check lubricant level and adjust down to recommended levels.
		Wrong lubrication	Flush out and refill with correct lubricant as recommended
Runs Noisy	Loose foundation bolts	Weak mounting structure	Inspect mounting of reducer. Tighten loose bolts and/or reinforce mounting and structure.
		Loose hold down bolts	Tighten bolts
	Failure of bearings	May be due to lack of lubricant	Replace bearing. Clean and flush reducer and fill with recommended lubricant.
		Overload	Check rated capacity of reducer.
	Insufficient lubricant	Level of lubricant in reducer not properly maintained.	Check lubricant level and adjust to factory recommended level.
Output shaft does not turn	Internal parts are broken or missing	Overloading of reducer can cause damage	Replace broken parts. Check rated capacity of reducer.
		Key missing or sheared off on input shaft.	Replace key.
		Coupling loose or disconnected	Properly allign reducer and coupling. Tighten coupling.
Oil Leakage	Worn seals	Caused by dirt or grit entering seal.	Replace seals. Autovent may be clogged. Replace or clean.
	Unit runs hot or leaks	Overfilled reducer	Check lubricant level and adjust to recommended level.
		Vent clogged.	Clean or replace, being sure to prevent any dirt from falling into the reducer.
	Incorrect fill level	Improper mounting position, such as wall or ceiling mount of horizontal reducer.	Check mounting position on the name tag & verify with mounting chart in manual.

NORD GEAR CORPORATION

DRIVESYSTEMS — CONDITIONS OF SALE — WWW.NORD.COM

1. CONTRACT

Any contract between Nord Gear Corporation, hereinafter designated as Seller, and the Buyer is subject to the terms and conditions of sale hereinafter set forth. Any deviation from such terms and conditions must be specifically set forth in writing and consented to by Seller. Accordingly, the Buyer and Seller acknowledge and agree that the terms and conditions set forth below and on the face hereof shall govern Buyer's purchase of the goods described on the face hereof and shall take precedence over and represents the final agreement between Buyer and Seller, notwithstanding any inconsistent, contradictory or other prior or further conditions contained in any oral or written request or purchase order issued by Buyer or any other document furnished by Buyer in connection with its purchase of the Goods, regardless of whether such document or documents are exchanged simultaneously with this Invoice or prior or subsequent thereto. Any additional or different terms or conditions which may appear in any communicaiton, oral or written, from Seller, its officers, employees, agents or representatives, are hereby expressly rejected and shall not be effective or binding upon the Seller, unless specifically hereafter agreed to in writing by Seller and no such additional or different terms or conditions in any document submitted to Seller by Buyer shall become part of the contract between Buyer and Seller, unless such written acceptance by Seller specifically recognizes and assents to their inclusion. Any objection by Buyer to the terms and conditions hereof shall be ineffective unless Seller is advised in writing thereof within two (2) days of the date of this Invoice.

2. CONFIRMATION

An order shall be deemed accepted only when duly confirmed by Seller, at Nord Gear Corporation's home office in Waunakee, Wisconsin, and upon such confirmation the order shall become a contract binding upon the parties hereto, their successors and assigns.

3. PRICES

Prices shown are list prices and may be subject to applicable discounts. Unless otherwise agreed upon in writing, prices are FOB factory Waunakee, Wisconsin. Prices and discounts are subject to change without notice until order is accepted. Seller's prices do not include cost of any inspection permits required.

4. LIMITED WARRANTY

Seller warrants the goods sold hereunder to be free from defects in material and workmanship under normal use and service not arising from misuse, negligence, or accident, including but not limited to the use, installation, and transportation of the goods by the Buyer, its agents, servants, employees, or by carriers. Such obligations under this warranty are limited to remedying any deficiencies in the goods at Waunakee, Wisconsin, or at such place or places in the United States of America as may be designated by Seller. THIS WARRANTY SHALL PERTAIN TO ANY PART OR PARTS OF ANY GOODS TO WHICH BUYER OR ITS ASSIGNS HAS GIVEN WRITTEN NOTICE OF CLAIMED DEFECTS TO SELLER. NORD GEAR CORP. WARRANTS ITS PRODUCTS AGAINST DEFECTS IN MATERIAL AND WORKMANSHIP FOR A PERIOD OF 12 MONTHS FROM DATE OF INSTALLATION OR 18 MONTHS FROM DATE OF SHIPMENT WHICHEVER COMES FIRST ON ALL COMPONENTS. 36 MONTHS FROM DATE OF INVOICE OR 24 MONTHS FROM DATE OF INSTALLATION WHICHEVER COMES FIRST ON GEARS AND HOUSINGS ONLY. PARTS WHICH ARE SUBJECT TO OPERATIONAL WEAR AND TEAR, SUCH AS BELTS & TRACTION DISCS, ARE NOT COVERED BY THE LIMITED WARRANTY. Buyer shall be required to furnish Seller with details of such defects and this warranty shall be effective as to such goods which Seller's examination shall disclose to its satisfaction to have been defective and which at Seller's option shall promptly thereafter be returned to Seller or its nominees. THE LIMITED WARRANTY SET FORTH HEREIN IS IN LIEU OF ALL OTHER WARRANTIES, EXPRESS OR IMPLIED. EXCEPT FOR THE EXPRESS WARRANTIES SET FORTH HEREIN, SELLER HAS MADE AND MAKES NO OTHER WARRANTIES, EXPRESS OR IMPLIED, AS TO THE GOODS SOLD HEREUNDER, INCLUDING, BUT NOT LIMITED TO, THEIR MERCHANTABILITY OR FITNESS FOR ANY PARTICULAR PURPOSE. ANY DESCRIPTION OR MODEL OF THE GOODS IS FOR IDENTIFICATION OR ILLUSTRATIVE PURPOSES ONLY AND SHALL NOT BE DEEMED TO CREATE ANY WARRANTY, EXPRESS OR IMPLIED. SELLER MAKES NO REPRESENTATIONS AS TO THE CAPACITY OR PERFORMANCE OF THE GOODS SOLD HEREUNDER, EXCEPT AS SET FORTH IN THE INVOICE'S SPECIFICATIONS OR OTHER VALID AGREEMENT OR CONDITION AGREED TO BETWEEN THE PARTIES, AND ANY SUCH REPRESENTATIONS ARE EXPRESSLY CONDITIONED UPON THE CORRECTNESS OF THE DATA AND INFORMATION FURNISHED BY THE BUYER AND UPON THE GOODS BEING PROPERLY INSTALLED AND MAINTAINED. THE REMEDIES OF THE BUYER PROVIDED HEREUNDER ARE EXCLUSIVE. In no event shall the Seller be liable to the Buyer or to any other person for any loss or damage, direct or indirect, arising out of or caused by the use or operation of the goods, or for the loss of profits, business, or good will, or for any incidental, special or consequential damages. Seller shall in no event be liable to any person or firm (including any assignee or Buyer) except Buyer and its successors. Unless specifically authorized by Seller in writing, Seller shall not become responsible for any repair work done by Buyer or any other party on any goods sold. Any and all costs of the return to the Seller of such goods and all related costs to remove and re-install such goods, shall be borne by Buyer. Goods sold but not manufactured by the Seller are being warranted as to defects in material and workmanship consistent with the limited warranty policy of the original manufacturer of the goods and if there is not such a limited warranty policy, the warranty shall be limited to the provision of the preceding paragraph of Article 4 herein. Standards for the operating characteristics of the gearboxes and the gearmotors are in conformity with Seller's tests.

5. SHORTAGE AND NONCONFORMITY

Any claim of shortage or that the goods do not conform with the specifications of the order or model must be made in writing within ten (10) days after delivery of the goods (as to which such claim is made) to Buyer or its nominees, but in no event shall the claim be later than within the time limit provided by the carrier or insurance company, otherwise such claim shall be deemed waived. Buyer may not return any goods claimed to be in non-conformity without Seller's prior written authorization. Goods returned without permission will not be accepted, including for credit, and will be returned to Buyer, F.O.B. Sellter's plant. Any claim based on the receipt of damaged Goods must be filed with the carrier which delivered the goods. The samples, measurements, dimensions and weights contained in the Seller's catalogs, sales manuals, photographs and drawings constitute only an approximate guide. The Seller reserves the right to make any change which the Seller, in its absolute discretion, considers necessary. While the goods will be delivered principally according to specifications or standards or quantities agreed upon, insignificant deviations or insignificant changes in construction are permissible. The same applies to partial deliveries, In the event that Buyer has a verified claim of shortage or nonconformity of the goods to the specifications of the order or the model, and if such claim has been submitted within the required time limit as set forth above, the Seller shall, at its own expense, make up for the shortage of the goods, or replace or repair the goods, as the case may be, but in no event shall Seller be or become liable to Buyer or to any other person or persons for any loss in damage, direct or indirect, arising out of or caused by such incidents or for the loss of profits, business or good will. The liability of the Seller to Buyer, if any hereunder, for breach of warranty, contract, negligence or otherwise, shall in no event exceed the amount of the purchase price of the goods sold with respect to which any damages are claimed. Shipping dates are estimates unless parties expressly agree on time of the essence.

6. FORCE MAJEURE

The obligation of the Seller shall be modified or excused, as the case may be, for reasons of Acts of God, war, governmental law regulations, strikes or lock-outs, fire, breakdown of machinery, whether in its own business enterprise, or if for any other cause beyond Seller's control, the goods cannot be delivered or their delivery becomes delayed in whole or in part. In the above instances time for delivery shall be extended for the period of the delay caused, with the proviso, however, that either party may cancel in writing the undelivered portion of the order or contract if the delay exceeds six (6) months from the delivery date originally confirmed by Seller. In no event shall Seller become liable in the aforesaid instances to Buyer or any third party for consequential damages or business loss.

7. SHIPMENT AS UNIT

Each shipment by Seller shall be treated as a separate and distinct unit with respect, but only with respect to forwarding, terms of payment, and the making of claims by the Buyer: provided, however, that if the Buyer defaults in the payment of any obligation to Seller or any installments thereof, under any agreement between Buyer and Seller, or if Buyer refuses to accept any goods when tendered for delivery, the Seller may, on fifteen (15) days written notice to the Buyer, without prejudice to Seller's other lawful remedies, either defer further performance until the defaulted payments are made in full, or make future deliveries for cash in advance only, or treat the entire contract or contracts with Buyer as breached by the Buyer and pursue its remedies for breach.

8. BUYER'S REFUSAL OF DELIVERY

If Buyer refuses to accept delivery of any goods tendered for delivery, then Seller, without prejudice to Seller's other lawful remedies, may either store or cause such goods to be stored in a warehouse, for buyer's account and at Buyer's cost, risk and expense, or sell such goods (without notice) to any purchases at public or private sale, and hold the Buyer liable for any difference between (a) the contract price of the goods, and (b) the price at which goods are resold less the costs and expense of such resale including brokerage commissions, or restocking charges.

9. GOODS IN TRANSIT

If prior to delivery or while the goods are in transit, Buyer or Seller becomes bankrupt or insolvent, or any petition in bankruptcy or for the reorganization or for a state court receivership is filed against Buyer or Seller, as the case may be, then the other party hereto may forthwith terminate this contract by giving written notice of such termination. Such termination shall not affect any claim for damages available to the Buyer, provided that if Buyer is then indebted to Seller, the amount of any such damage claim shall be abated to the extent that the indebtedness of Buyer to Seller, as actually paid in money, is abated by any order of judgement entered or any plan adopted in any bankruptcy, reorganization, receivership, or similar proceeding. Such termination shall not prejudice the Seller's rights to any amounts then due under the contract. If Buyer becomes bankrupt or insolvent or any petition in bankruptcy or for reorganizing or if a state court receivership is filed against Buyer, then, at its option Seller may take possession of any goods theretofore sold to Buyer, in connection with which the full purchase price has not been paid, analogous to the terns and provisions set forth in Paragraphs 11 and 12 hereinafter.

10. DELIVERY

(a) Any indicated dates of delivery are approximate only, but NORD Gear will attempt to meet them whenever possible. (b) NORD Gear will not be liable for any penalty clausess contained in any specifications or order submitted unless agreed to in writing by an authorized officer of NORD Gear Corporation. (c) Unless otherwise agreed, delivery of the goods to any carrier shall constitute delivery to the Buyer, and thereafter the risk of loss or damage to the goods shall be upon the Buyer. (d) If the Buyer does not give delivery instructions to the Seller at least (10) days prior to the delivery date ex factory confirmed by the Seller, the Seller may deliver the goods to a carrier of its own choosing, at Buyer's cost and risk, or, at Seller's option, may store the goods on the pier or any warehouse, at Buyer's cost and risk. Any purchase price in such event becomes due and payable within ten (10) days of such storage.

11. PAYMENT OF PURCHASE PRICE

Time of payment is of the essence under the contract. Unless otherwise provided, terms of payment are 30 days net from the date of invoice with a 1% discount if paid within 10 days of date of invoice. Upon default in any of the terms of the contract, or failure to comply with any of the conditions thereof, or upon seizure of the property under execution or other legal process, or if the Buyer becomes bankrupt or insolvent, or any petition for reorganization or for a state court receivership is filed against Buyer, or if the Buyer makes any assignment for the benefit of it's creditors or otherwise sells, encumbers or disposes of the goods, or if for any other reason the Seller should deem itself insecure, the full amount of the purchase price then remaining unpaid shall at once become due and payable at the option of the Seller.

12. BUYER'S DEFAULT

Upon the Buyer's default, the Seller may dispose of the merchandise in any manner that it deems fit and, if it desires to resell same, may do so at private or public sale, with or without notice, and with or without the property being at the place of sale, subject, however, to applicable laws. The Seller or its assigns shall have the right to bid at such sale and may become the purchaser of the property. The proceeds of the sale shall first be applied to the expenses incurred in retaking, repairing, storing and selling the goods, reasonable attorney's fees included, and then shall be applied to the payment of the balance due under the contract. Any surplus amount shall be paid to the Buyer. If a deficiency results after the resale, the Buyer agrees to pay such forthwith, together with reasonable attorney's fees, for the recovery of the goods incurred by the Seller. If upon the Buyer's default, the Seller elects not to resell any goods which it may repossess, then the cost of repossession, including reasonable attorney's fees, shall forthwith be due and payable from Buyer to Seller. Buyer agrees to pay all reasonable costs and reasonable attorneys' fees incurred by Seller in enforcing Seller's rights against Buyer, including Seller's right to payment of the purchase price of the goods and Buyer's payment of all other amounts owing to Seller required under this Invoice and Conditions of Sale.

13. SECURITY INTEREST AND TITLE

In states and localities which are governed by the Uniform Commercial Code, this contract shall serve as security agreement, reserving in Seller a security interest until full payment of purchase price. The provisions of the Uniform Commercial Code regarding security interest shall have preference and apply if inconsistent with other terms of the conditions of sale. In states and localities where the Uniform Commercial Code does not apply, title to the goods shall remain in the Seller or its assigns until full payment of the purchase price. Buyer agrees to execute forthwith any and all documents in such a way and form as Seller may need for filing or recording the security interest under the Uniform Commercial Code with the proper registers or offices, or for filing or recording the conditional sales contract.

14. SALES AND USE TAX

Buyer agrees to bear and pay any sales or use tax in connection with the purchase herein, and to hold the Seller harmless from payment. At the option the Seller, Buyer shall give evidence of payment or of exemption certificate.

15. INSURANCE

The Buyer shall keep the goods insured against damage by fire, water or other casualty as required by Seller, with a company acceptable to Seller, with loss payable to Seller for the total purchase price until the Seller is fully paid. Seller, if it so elects, may place said insurance at Buyer's expense; Seller may cancel such insurance at any time and without notice and may receive the return premium, if any.

16. MODIFICATION BY SELLER

Any contract may be assigned or transferred by the Seller, or the time for the making of any payment due by Buyer may be extended by Seller without derogation of any of the rights of the Seller or its assigns. Waiver by any party of any default shall not be deemed a waiver of any subsequent default.

17. RETURNED GOODS

No goods will be accepted for return unless authorized in writing by Seller. In all cases, transportation and restocking charges will be borne by Buyer.

18. PACKING

The Buyer will be charged for export packaging or other special packing desired. Cost for cartage to ship or transfer express will be added to the invoice. No credit will be allowed if no packing is required.

19. CHANGES/CANCELLATION

NORD Gear will not accept changes in specifications to a confirmed order unless such changes are requested in writing and confirmed back in writing. In addition, the purchaser must to agree to any additional charges that may arise from the change. Placing orders on hold or cancellation of orders require Seller's written approval, and are subject to cancellation and/or restocking charges.

20. BUYER'S RESPONSIBILITY AS TO MAINTENANCE

Buyer shall use and shall require its employees and agents to use all safety devices and guards and shall maintain the same in proper working order. Buyer shall use and require its employees and agents to use safe operation procedures in operating the equipment and shall further obey and have its employees and agents obey safety instructions given by Seller. If Buyer fails to meet the obligations herein, Buyer agrees to defend, indemnify and save Seller harmless from any liability or obligation with regard to any personal injuries or property damages directly or indirectly connected with the operation of the equipment. Buyer further agrees to notify Seller promptly and in any event not later than ten (10) days after notice or knowledge of any accident or malfunction involving Seller's equipment which has caused personal injury or property damages and to cooperate fully with Seller in investigating and determining the causes of such accident and malfunction. In the event that Buyer fails to give such notice to Seller or to cooperate with Seller, Buyer shall be obligated to defend, indemnify and save Seller harmless from any such claims arising from such accident.

21. MISCELLANEOUS PROVISIONS

(a) If for any reason a provision of a contract is legally invalid, then in such event the rest of the contract shall remain in full force and affect, except that the parties shall try to replace such invalid provision closest to their original mutual intentions. (b) This Invoice and these Conditions of Sale constitute the entire agreement between the parties regarding the subject matter hereof and supercedes all prior agreements, understandings and statements, whether oral or written, regarding such subject matter. No modification to, change in or departure from, the provisions of this Invoice and Conditions of Sale shall be valid or binding on Seller, unless approved in writing by Seller. No course of dealing or usage of trade shall be applicable unless expressly incorporated into this Invoice and Conditions of Sale. Any amendments to any contract or contracts between the parties shall be valid only upon the written consent of both parties.

22. NON ASSIGNMENT BY BUYER

Contract or contracts may not be assigned by the Buyer without prior written consent of the Seller.

23. APPLICABLE LAW AND VENUE

All contracts and their interpretation are governed by the applicable, substantive laws of the State of Wisconsin. Any litigation brought by the Buyer regarding this Invoice or goods purchased hereunder may only be brought in the Circuit Court for Dane County, Wisconsin.

NORD GEAR LIMITED

DRIVESYSTEMS — TERMS & CONDITIONS OF SALE — WWW.NORD.COM

1. CONTRACT

Any contract between Nord Gear Limited, hereinafter designated as Seller, and the Buyer is subject to the terms and conditions of sale hereinafter set forth. Any deviation from such terms and conditions must be specifically set forth in writing and consented to by Seller.

2. CONFIRMATION

An order shall be deemed accepted only when duly confirmed by Seller, at Nord Gear Limited's home office in Brampton, Ontario, and upon such confirmation the order shall become a contract binding upon the parties hereto, their successors and assigns.

3. PRICES

Prices shown are list prices and may be subject to applicable discounts. Unless otherwise agreed upon in writing, prices are FOB factory Bramton, Ontario. Prices and discounts are subject to change without notice until order is accepted. Seller's prices do not include cost of any inspection permits required.

4. LIMITED WARRANTY

Seller warrants the goods sold hereunder to be free from defects in material and workmanship under normal use and service not arising from misuse, negligence, or accident, including but not limited to the use, installation, and transportation of the goods by the Buyer, its agents, servants, employees, or by carriers. Such obligations under this warranty are limited to remedying any deficiencies in the goods at Brampton, Ontario, or at such place or places in Canada as may be designated by Seller. This warranty shall pertain to any part or parts of any goods to which Buyer or its assigns has, within one year from date of original factory invoice, given written notice of claimed defects to Seller. Buyer shall be required to furnish Seller with details of such defects and this warranty shall be effective as to such goods which Seller's examination shall disclose to its satisfaction to have been defective and which at Seller's option shall promptly thereafter be returned to Seller or its nominees. EXCEPT FOR THE EXPRESS WARRANTIES SET FORTH ABOVE, SELLER HAS MADE NO WARRANTIES, EXPRESS, IMPLIED OR STATUTORY, AS TO THE GOODS SOLD HEREUNDER, INCLUDING, BUT NOT LIMITED TO THEIR MERCHANTABILITY OR FITNESS FOR ANY PARTICULAR PURPOSE. ANY DESCRIPTION OR MODEL OF THE GOODS IS FOR IDENTIFICATION OR ILLUSTRATIVE PURPOSES ONLY AND SHALL NOT BE DEEMED TO CREATE AN EXPRESS WARRANTY. THE REMEDIES OF THE BUYER SET FORTH IN THIS SECTION ARE EXCLUSIVE. In no event shall the Seller be liable to the Buyer or to any other person for any loss or damage, direct or indirect, arising out of or caused by the use or operation of the goods, or for the loss of profits, business, or good will, or for any incidental, special or consequential damages. Seller shall in no event be liable to any person or firm (including any assignee or Buyer) except Buyer and its successors. Unless specifically authorized by Seller in writing, Seller shall not become responsible for any repair work done by Buyer or any other party on any goods sold. Any costs of the return of such goods to Seller shall be borne by Buyer. Goods sold but not manufactured by the Seller are being warranted as to defects in material and workmanship consistent with the limited warranty policy of the original manufacturer of the goods and if there is not such a limited warranty policy, the warranty shall be limited to the provisions of the preceding paragraph of Article 4 herein. Standards for the operating characteristics of the gearboxes and the gearmotors are in conformity with Seller's test. THIS WARRANTY IS IN LIEU OF ALL OTHER EXPRESS OR IMPLIED WARRANTIES, INCLUDING ANY IMPLIED WARRANTY OF MERCHANTABILITY OR FITNESS FOR ANY PARTICULAR PURPOSE THE SELLER DOES NOT ASSUME, NOR DOES IT AUTHORIZE ANY PERSON TO ASSUME, ON ITS BEHALF, ANY OTHER OBLIGATION OR LIABILITY.

5. SHORTAGE AND NONCONFORMITY

Any claim of shortage or that the goods do not conform with the specifications of the order or model must be made in writing within ten (10) days after delivery of the goods (as to which such claim is made) to Buyer or its nominees, but in no event shall the claim be later than within the time limit provided by the carrier or insurance company, otherwise such claim shall be deemed waived. The samples, measurements, dimensions and weights contained in the Seller's catalogs, sales manuals, photographs and drawings constitute only an approximate guide. The Seller reserves the right to make any changes which the Seller, in its absolute discretion, considers necessary. While the goods will be delivered principally according to specifications or standards or quantities agreed upon, insignificant deviations or insignificant changes in construction are permissible. The same applies to partial deliveries. In the event that Buyer has a verified claim of shortage or noncomformity of the goods to the specifications of the order or the model, and if such claim has been submitted within the required time limit as set forth above, the Seller shall, at its own expense, make up for the shortage of the goods, or replace or repair the goods, as the case may be, but in no event shall Seller be or become liable to Buyer or to any other person or persons for any loss in damage, direct or indirect, arising out of or caused by such incidents or for the loss of profits, business or good will. Shipping dates are estimates unless parties expressly agree on time of the essence.

6. FORCE MAJEURE

The obligation of the Seller shall be modified or excused, as the case may be, for reasons of Acts of God, war, governmental law regulations, strikes or lock-outs, fire, breakdown of machinery, whether in its own business enterprise, or if for any other cause beyond Seller's control, the goods cannot be delivered or their delivery becomes delayed in whole or in part. In the above instances time for delivery shall be extended for the period of the delay caused, with the proviso, however, that either party may cancel in writing the undelivered portion of the order or contract if the delay exceeds six (6) months from the delivery date originally confirmed by Seller. In no event shall Seller become liable in the aforesaid instances to Buyer or any third party for consequential damages or business loss.

7. SHIPMENT AS UNIT

Each shipment by Seller shall be treated as a separate and distinct unit with respect, but only with respect to forwarding, terms of payment, and the making of claims by the Buyer; provided, however, that if the Buyer defaults in the payment of any obligation to Seller or any installments thereof, under any agreement between Buyer and Seller, or if Buyer refuses to accept any goods when tendered for delivery, the Seller may, on fifteen (15) days' written notice to the Buyer, without prejudice to Seller's other lawful remedies, either defer further performance until the defaulted payments are made in full, or make future deliveries for cash in advance only, or treat the entire contract or contracts with Buyer as breached by the Buyer and pursue its remedies for breach.

8. BUYER'S REFUSAL OF DELIVERY

If Buyer refuses to accept delivery of any goods tendered for delivery, then Seller, without prejudice to Seller's other lawful remedies, may either store or cause such goods to be stored in a warehouse, for Buyer's account and at Buyer's cost, risk and expense, or sell such goods (without notice) to any purchaser at public or private sale, and hold Buyer liable for any difference between (a) the contract price of the goods, and (b) the price at which goods are resold less the costs and expense of such resale including brokerage commissions, or restocking charges.

9. GOODS IN TRANSIT

If prior to delivery or while the goods are in transit, Buyer or Seller becomes bankrupt or insolvent, or any petition in bankruptcy or for the reorganization or for appointment of a receiver is filed against Buyer or Seller, as the case may be, then the other party hereto may forthwith terminate this contract by giving written notice of such termination. Such termination shall not affect any claim for damages available to the Buyer, provided that if Buyer is then indebted to Seller, the amount of any such damage claim shall be abated to the extent that the indebtedness of Buyer to Seller, as actually paid in money, is abated by any order or judgment entered or any plan adopted in any bankruptcy, reorganization, receivership, or similar proceeding. Such termination shall not prejudice the Seller's rights to any amounts then due under the contract. If Buyer becomes bankrupt or insolvent or any petition in bankruptcy or for reorganization or if a state court receivership is filed against Buyer, then, at its option, Seller may take possession of any goods theretofore sold to Buyer, in connection with which the full purchase price has not been paid, analogous to the terms and provisions set forth in Paragraphs 11 and 12 hereinafter.

10. DELIVERY

(a) Unless otherwise agreed, delivery of the goods to any carrier shall constitute delivery to the Buyer, and thereafter the risk of loss or damage to the goods shall be upon the Buyer. (b) If the Buyer does not give delivery instructions to the Seller at least (10) days prior to the delivery date *ex factory confirmed* by the Seller, the Seller may deliver the goods to a carrier of its own choosing, at Buyer's cost and risk, or, at Seller's option, may store the goods on the pier or on any warehouse, at Buyer's cost and risk. Any purchase price in such event becomes due and payable within ten (10) days of such storage.

11. PAYMENT OF PURCHASE PRICE

Time of payment is of the essence under the contract. Upon default in any of the terms of the contract, or failure to comply with any of the conditions thereof, or upon seizure of the property under execution or other legal process, or if the Buyer becomes bankrupt or insolvent, or any petition for reorganization or for appointment of a receiver is filed against Buyer, or if the Buyer makes any assignment for the benefit of its creditors or otherwise sells, encumbers or disposes of the goods, or if for any other reason the Seller should deem itself insecure, the full amount of the purchase price then remaining unpaid shall at once become due and payable at the option of the Seller.

12. BUYER'S DEFAULT

Upon the Buyer's default, the Seller may dispose of the merchandise in any manner that it deems fit and, if it desires to resell same, may do so at private or public sale, with or without notice, and with or without the property being at the place of sale, subject, however, to applicable laws. The Seller or its assigns shall have the right to bid at such sale and may become the purchaser of the property. The proceeds of the sale shall first be applied to the expenses incurred in retaking, repairing, storing and selling the goods, reasonable solicitor's fees included, and then shall be applied to the payment of the balance due under the contract. Any surplus amount shall be paid to the Buyer. If a deficiency results after the resale, the Buyer agrees to pay such forthwith, together with reasonable solicitor's fees, for the recovery of the goods incurred by the Seller. If upon the Buyer's default, the Seller elects not to resell any goods which it may repossess, then the cost of repossession, including reasonable solicitor's fees, shall forthwith be due and payable from Buyer to Seller.

13. SECURITY INTEREST AND TITLE

In provinces which are governed by a Personal Property Security Act, this contract shall serve as Security Agreement, reserving in Seller a security interest until full payment of purchase price. The provisions of the Personal Property Security Act regarding security interest shall have preference and apply if inconsistent with other terms of the conditions of sale herein. In provinces where a Personal Property Security Act does not apply, title to the goods shall remain in the Seller or its assigns until full payment of the purchase price. Buyer agrees to execute forthwith any and all documents in such a way and form as Seller may need for filing or recording the security interest under a Personal Property Security Act with the proper registers or offices, or for filing or recording the Conditional Sales Contract herein.

14. SALES AND USE TAX

The Seller's prices do not include sales, use, excise or other taxes payable to any governmental authority in respect of the sale of Seller's goods. The Buyer shall pay, in addition to the Seller's price the amount of any such taxes or shall reimburse the Seller for the amount thereof that the Seller may be required to pay. At the option of the Seller, Buyer shall give evidence of payment or of exemption certificate.

15. INSURANCE

The Buyer shall keep the goods insured against damage by fire, water or other casualty as required by Seller, with a company acceptable to Seller, with loss payable to Seller for the total purchase price until the Seller is fully paid. Seller, if it so elects, may place said insurance at Buyer's expense; Seller may cancel such insurance at any time and without notice and may receive the return premium, if any.

16. MODIFICATION BY SELLER

Any contract may be assigned or transferred by the Seller, or the time for the making of any payment due by Buyer may be extended by Seller without derogation of any of the rights of the Seller or its assigns. Waiver by any party of any default shall not be deemed a waiver of any subsequent default.

17. RETURNED GOODS

No goods will be accepted for return unless authorized in writing by Seller. In all cases, transportation and restocking charges will be borne by Buyer.

18. PACKING

The Seller does not charge for standard packaging for domestic shipment. The Buyer will be charged, however, for export packaging or other special packing desired. Cost for cartage to ship or transfer express will be added to the invoice. No credit will be allowed if no packing is required.

19. EXPORT ORDER

Export orders are to be accompanied by a confirmed irrevocable Letter of Credit in Seller's favor, in Canadian currency, with an accredited Canadian bank, subject to Seller's draft, with shipping documents attached.

20. CANCELLATION

Placing orders on hold or cancellation of orders require Seller's written approval, and are subject to cancellation and/or restocking charges.

21. BUYER'S RESPONSIBILITY AS TO MAINTENANCE

Buyer shall use and shall require its employees and agents to use all safety devices and guards and shall maintain the same in proper working order. Buyer shall use and require its employees and agents to use safe operating procedures in operating the equipment and shall further obey and have its employees and agents obey safety instructions given by Seller. If Buyer fails to meet the obligations herein, Buyer agrees to indemnify and save Seller harmless from any liability or obligation with regard to any personal injuries or property damages directly or indirectly connected with the operation of the equipment. Buyer further agrees to notify Seller promptly and in any event not later than ten (10) days after notice or knowledge of any accident or malfunction involving Seller's equipment which has caused personal injury or property damages and to cooperate fully with Seller in investigating and determining the causes of such accident and malfunction. In the event that Buyer fails to give such notice to Seller or to cooperate with Seller, Buyer shall be obligated to indemnify and save Seller harmless from any such claims arising from such accident.

22. MISCELLANEOUS PROVISIONS

(a) If for any reason a provision of a contract is legally invalid, then in such event the rest of the contract shall remain in full force and affect, except that the parties shall try to replace such invalid provision with a provision closest to their original mutual intentions. (b) Any amendments to any contract or contracts require the consent in writing by both parties.

23. NON ASSIGNMENT BY BUYER

Contract or contracts may not be assigned by the Buyer without prior written consent of the Seller.

24. APPLICABLE LAW

All contracts are governed by the applicable laws of Ontario.

25. This instrument sets forth the entire understanding and agreement of the parties hereto in respect of the subject matter hereof, and all prior undertakings between the parties hereto, together with all representations and obligations of such parties in respect of such subject matter, shall be superceded by and merged into this instrument.

26. The provisions of this agreement shall bind and enure to the benefit of the parties hereto and their respective heirs, executors, administrators, successors and (subject to any restrictions or assignment herein above set forth) assigns, as the case may be.

27. The parties acknowledge that they have requested this Contract and all notices or other documents relating thereto be drafted in the English language.

Les parties reconnaisent qu'ils ont requis que ce contrat et tous les avis ou autres documents qui s y rapportent soient rediges en langue anglaise.

"Terms and Conditions in French available upon request."

Product Overview

We can match our NORDAC AC vector drives with our Inverter/Vector Duty Motors and UNICASE™ Speed Reducers to provide a total AC Motor Drive solution from one trusted source.

UNICASE™ SPEED REDUCERS



HELICAL IN-LINE
- Foot or Flange Mount
- Torque up to 205,000 lb-in
- Gear ratios – 1.82:1 to over 300,000:1



NORDBLOC® HELICAL IN-LINE
- Foot or Flange Mount
- Torque up to 26,550 lb-in
- Gear ratios – 1.88:1 to over 370:1



PARALLEL HELICAL CLINCHER™
- Shaft, Flange or Foot Mount
- Torque up to 797,000 lb-in
- Gear ratios – 4.26:1 to over 300,000:1



RIGHT ANGLE HELICAL-BEVEL 2-STAGE
- Foot, Flange or Shaft Mount
- Torque up to 5,840 lb-in
- Gear ratios – 4.1:1 to 72:1



RIGHT ANGLE HELICAL-BEVEL
- Foot, Flange or Shaft Mount
- Torque up to 283,000 lb-in
- Gear ratios – 8.04:1 to over 300,000:1



RIGHT ANGLE HELICAL-WORM
- Foot, Flange or Shaft Mount
- Torque up to 27,585 lb-in
- Gear ratios – 4.40:1 to over 300,000:1



MINICASE™ RIGHT ANGLE WORM
- Foot, Flange or Shaft Mount
- Torque up to 3,540 lb-in
- Gear ratios – 5:1 to 500:1



FLEXBLOC™ WORM
- Modular bolt-on options
- Torque up to 4,683 lb-in
- Gear ratios – 5:1 to 3,000:1

HIGH PERFORMANCE MOTORS & BRAKEMOTORS



INVERTER/VECTOR DUTY
- Standard or Energy Efficient
- Integral, NEMA or Metric IEC
- 1/6 to 250 hp

NORDAC AC VECTOR DRIVES



TRIO SK300E
- Motor or remote mounted
- IP55 – washdown
- 380-460V, 3-phase, to 5hp
- 200-240V, 3-phase, to 3hp



SK500/520/530E
- Compact, high performance
- 380-480V, 3-phase, to 10hp
- 200-240V, 3-phase, to 5hp
- 200-240V, 1-phase, to 3hp
- 110-120V, 1-phase, to 1.5hp



SK700E
- Flexible high performance
- 380-460V, 3-phase, to 200hp

DRIVESYSTEMS

www.nord.com

NORD Gear Corporation
National Customer Service Toll-Free: 888.314.6673
info.us@nord.com

NORD Gear Limited
Toll-Free in Canada: 800.668.4378
info.ca@nord.com

WEST
Corona, CA (Los Angeles)
Phone: 608.849.0190

MIDWEST
Waunakee, WI (Madison)
Phone: 608.849.7300

EAST
Charlotte, NC
Phone: 608.849.0140

CANADA
Brampton, ON (Toronto)
Phone: 905.796.3606

10020010 4/0909

LEFT BLANK

MOTORS - AC INDUCTION, SINGLE & POLYPHASE

1. Overview

This user manual applies to NORD Motor products and it provides general information for motor operation, installation, maintenance, inspection, repair, and trouble shooting, which is relevant to most of the motor products shipped by NORD. Information and instructions provided in this manual, safety and commissioning information and all other manuals applicable to any items supplied by NORD must be observed.

This instruction manual is not intended to include comprehensive details and information related to all possible design variations or accessories options available with NORD motors. If there is any uncertainty about specific procedures, instructions or motor details, then please refer these questions to NORD for additional information or clarification.

Before installing, operating, or performing maintenance on any electrical motor become familiar with the following:

- The detailed operating instructions and wiring diagrams.
- All applicable national, local and system-specific regulations, codes and practices.
- The national / regional regulations governing safety and accident prevention.
- The proper use of any tools, transportation or hoisting equipment, and safety equipment needed to complete the installation.
- To avoid serious injury or possible damage to the equipment or machine, compliance with all safety and information notes is mandatory!

> ⚠ *WARNING*
>
> All work involved in the transport, connection, commissioning and maintenance of any NORD product must be carried out by qualified and responsible technicians. All applicable national, regional, and local work regulations and safety requirements must also be complied with. NORD assumes no liability for personal injury, accidental death, or equipment damage and malfunctions resulting from failure to comply with installation or operating instructions, safety notes, or any work regulations and laws!

> ⚠ *DANGER*
>
> To avoid electrocution, injury or death, make certain the motor is properly grounded, completely de-energized and brought to a no-voltage condition prior to working on any electrical connections.

2. Motor Types

NORD AC electric induction motors described in this manual generally include the following types:

- Single speed or two-speed design.
- Three phase alternating current or single phase design.
- Enclosure types: TEFC, TENV, and TEBC.

3. Enclosure Types

Totally enclosed fan cooled (TEFC).

TEFC motor designs rely on fan that is mounted on the motor's rotor shaft so the cooling capacity can vary based upon the motor's operating speed.

Totally enclosed, non-ventilated (TENV)

The TENV motor designs rely purely on convection cooling and they have no fan. Often TENV designs are labeled for intermittent or periodic duty or at a lower power rating than is typical for the given motor frame size.

Totally enclosed, blower cooled (TEBC)

The TEBC design uses separate blower or ventilator fan, with its own low wattage motor and a separate power supply, to provide continuous airflow and cooling. The blower can be used to extend the speed range of the motor and allow extreme slow speed operation without causing a concern for overheating. Blower data is provided in Table 6, page 11.

4. Voltage and Frequency Variation

Voltage and frequency variations are based upon the assumption that the nameplate horsepower will not be exceeded and that the motor temperature may increase. Standard allowable deviations are based upon the type of motor labeling.

NEMA and CSA Labeled Motors

Variations are based upon the nominal utilization voltage, and not the service (supply) voltage as per ANSI C84.1.

Service Voltages	Utilization Voltages
120V, 208V, 240V, 480V, 600V	115V, 200V, 230V, 460V, 575V

- Voltage variation at rated frequency = ±10%.
- Frequency variations at rated voltage = ±5%.
- Combined voltage/frequency variation = ±5%.

CE Labeled Motors

Per IEC 60038, allowable service voltage variations on in the current system, compared to the previous system, are as indicated.

Previous Service Voltages	Current Service Voltages
220V, 380V, 660V	230V, 400V, 690V +6/-10%
240V, 415V	230V, 400V +10/-6%

- Per EN 60034-1 a ±5% voltage variation and a ±2% frequency variation can be tolerated.
- The allowed variations are based upon the voltage (or voltage range) indicated on the motor nameplate.

5. Motor Nameplate Information

The motor nameplate and the display of technical information may vary slightly depending upon the global standard/s that the motor conforms to and the efficiency level. Please reference the examples below.

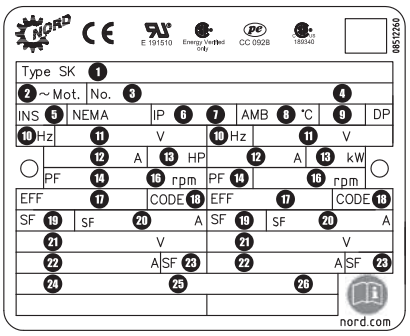

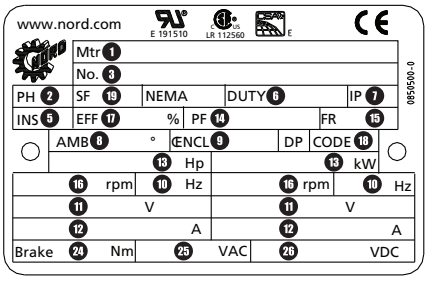

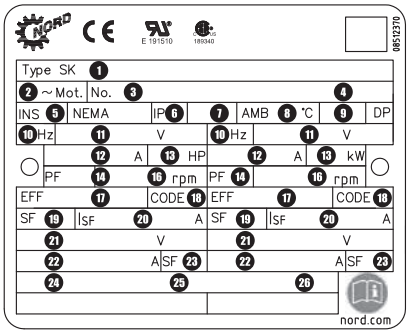

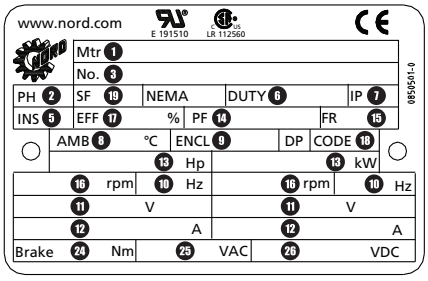

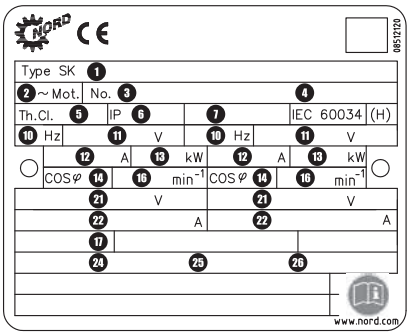

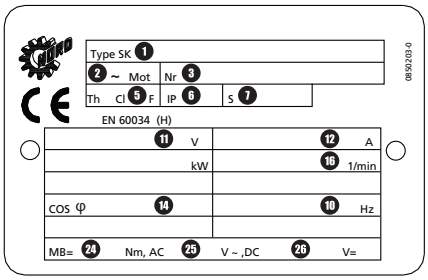

Table 1. Nameplate Data

Field	Definition
1	Model / Type
2	Number of Phases
3	Order Number
4	Serial Number
5	Insulation Class
6	IP (Ingress Protection) Enclosure Rating
7	Duty Cycle
8	Ambient Temperature Rating (°C)
9	Enclosure Type
10	Motor Frequency (Hz)
11	Voltage Rating (V)
12	Current Rating (A)
13	Rated Power (HP or kW)

Field	Definition
14	Power Factor
15	Motor Frame Size
16	Full Load Speed (rpm or 1/min^2)
17	Efficiency
18	NEMA Code Letter
19	Service Factor
20	Current Rating (If Service Factor ≥ 1.15)
21	Operating Voltage Rage (A)
22	Current Rating at Operating Voltage Range (A)
23	Service Factor at Operating Voltage Range (A)
24	Brake Rating (Nm)
25	Brake Supply Voltage (VAC)
26	Brake Coil Voltage (VDC)

6. Motor Options And Nomenclature

NORD offers many options for its motors. The option code will be shown in the motor nomenclature. Below are commonly used options.

Code	Description
AICM	Additional Internal Insulation Coating Applied
BRE	With Brake
EAR	Single Phase, Start Cap/Run Cap
ECR	Single Phase, Start Cap/Run Cap Increased SF
EHB	Single Phase, Run Capacitor Only
EP	Epoxy Dipped Windings
F	Blower Cooling Fan - 3ph & 1ph
FC	Blower Cooling Fan - 1ph
FHL	Brake – Lockable Manual Release
H	Energy Efficient
HL	Brake – Manual Hand Release
IG	Incremental Encoder
IP66	IP66 Environmental Protection
IR	Brake – Current Sensing Relay
KB	Condensation Holes - Removable Plugs
KD	Condensation Holes - Open
MIK	Brake – Microswitch
MS	Power Plug Connector

Code	Description
OL	TENV Motor – Without Fan / With Cover
OL/H	TENV Motor - Without Fan & Cover
P	Premium Efficient Motors
RD	Canopy Cover
RDD	Double Canopy Cover
RG	Brake – Corrosion Protected
RLS	Backstop
SH	Motor Space Heater
SR	Brake – Dust Protected
TF	Thermistor
TW	Thermostat
VN	10:1 Constant Torque Rated Motor
VR	5:1 Constant Torque Rated Motor
VW	20:1 Constant Torque Rated Motor
VZ-F	1000+:1 Constant Torque Rated Motor
WE	2nd Motor Shaft End
WU	High Slip Rotor
Z	High Inertia Motor Fan

Motor Nomenclature

100LP / 4 BRE 40 ...

- ... — Other Options
- 40 — Brake Size Nm
- BRE — Brake
- 4 — Number of Poles
- 100LP — Frame Size

Ordering Examples

100LP / 4 BRE 100 HL RG

- RG — Corrosion Protection
- HL — Hand Release Lever
- 100 — 100 Nm Brake Torque
- BRE — Brake
- 4 — 4 Poles
- 100LP — Motor Frame Size

100 Frame Motor with 4 poles, Brake, 100 Nm with a hand release lever, corrosion protected brake, and a current sensing relay.

63L / 4 BRE 40 FHL SR

- SR — Dust & Corrosion Prot.
- FHL — Locking Hand Release Lever
- 40 — 40 Nm Brake Torque
- BRE — Brake
- 4 — 4 Poles
- 63L — Motor Frame Size

63 Frame motor with 4 poles, a 40 Nm Brake with a locking hand release lever and dust & corrosion protection.

7. Application Conditions

Standard NORD motors are designed to operate in dusty or moist environments and have anti-fungal, thermal class F insulation.

- Enclosure Protection Rating = IP55 (minimum).
- Maximum Installation Height = 3300 ft (1000 m).
- Ambient Temperature = -4 to 104°F (-20 to 40 °C).
- Tropical-proof, Thermal Class F insulation.

The protection level and maximum ambient temperature are stated on the motor nameplate.

IMPORTANT NOTE

NORD can provide motors for an expanded range of applications and service conditions including higher protection levels, extreme ambient conditions and, higher altitudes.

IMPORTANT NOTE

Consult NORD for recommendations if motors are operated under extreme loading conditions, exposed to high inertia loads, or need to operate under unusually high cycling conditions with high starting and stopping frequency.

DANGER

Special design and assembly considerations are needed if NORD motors are subject to any of the following conditions. Environmental conditions may lead to premature damage and/or failure without the proper protective features. Consult NORD for design considerations:

- Outdoor installation with motor in a vertical position.
- Direct contact with aggressive or corrosive materials (acids, bases, salts, certain gases, etc.).
- Exposure to extreme high or low temperatures, high relative humidity, condensation moisture or very wet environments.
- Subject to extreme material build-up on the unit (dirt, dust, sand, etc.).
- Hazardous Locations (risk of fire or explosion).

8. Transportation

During transportation observe the following:

- Make sure that all eyebolts and lifting lugs are tight and firmly against their supporting surface.
- Use all the lifting eyes that are intentionally supplied with the motor.
- Lift only at designed points.
- Protect the mounting surface from possible damage during transportation.
- Always use sufficiently rated handling equipment, lift mechanisms and lifting straps.
- With heavier objects or unbalanced loads, it may be appropriate to use more than one lifting point or an additional strap or sling to assure safe transportation of the assembly. This is especially true of assembled gearmotors and motorized reducers.
- Once the NORD motor or assembly is properly installed, remove the transportation fixtures completely or make certain they are properly re-secured and tightened.

WARNING

Transportation – Use of Lifting Devices

To avoid death, serious injury or equipment damage…

- Hoisting lugs or lifting eyes attached to the motor are designed for the weight of the motor only! Do not attach any additional loads!
- The motor must only be transported and lifted using the lifting eyes, in a position that is appropriate for its type of construction. Otherwise, it could fall over or slip in the lifting tackle.
- During suspended transport, two straps must be able to carry the entire load weight safely.
- When required use additional, suitable means of support for transportation, installation or removal.
- Always secure the support equipment to prevent it from slipping.

9. Storage

If the motor is not in service, store it according to the following conditions:

- Store the motor in a clean, dry, dirt-free, vibration free area.
- Storage temperatures of 10°C (50°F) to 50°C (120°F) must be maintained.
- Relative humidity must not exceed 60%.
- If vibration in the area exceeds 0.002 inch (0.05 mm) at 60 hertz, then vibration isolation pads are suggested to prevent brinelling of the bearings.
- Treat the unprotected shaft end and mating flange surfaces with a corrosion inhibitor that can be cleaned off prior to commissioning.
- Before placing the motor into service, visually inspect the motor exterior for evidence of deterioration during storage. Turn the motor shaft by hand to make sure the shaft turns freely.
- Motor space heaters, when provided, are to be connected and energized whenever there is a possibility that the storage ambient conditions will reach the dew point. Space heaters are optional. Remove motor from the storage container when the heater is energized.
- If the motor needs to be stored for extended periods, or if it is stored in less than favorable conditions, it is recommend that the winding insulation resistance be checked prior to commissioning (page 7).
- Even if stored in favorable conditions, the antifriction motor bearings and motor shaft seals may need to be replaced if the storage period is more than 4 years.

10. Safety Considerations

When installing, servicing or replacing electric motors it is important to be working in a “voltage-free” state. Observe the following safety rules.

Safety Rules

1. Disconnect the system. Disconnect the auxiliary circuits (brakes, space heaters, etc.).
2. Prevent reconnection (follow safe lock-out/tag-out practices).
3. Make sure that the equipment is at zero voltage.
4. Make certain the equipment is properly grounded and short-circuited.
5. Cover or isolate nearby components that are still electrically live.

To energize the system, apply the measures in reverse order.

Qualified Personnel

All work involved in the transport, connection, commissioning and maintenance of any NORD product must be carried out by qualified and responsible technicians.

For the purpose of this documentation, a qualified personnel is taken to mean a person or people who fulfill the following requirements:

- Through appropriate training and experience, they are able to recognize and avoid risks and potential dangers in their particular field of activity.
- They have been instructed to carry out work on the machine by the appropriate person responsible.
- They are responsible for knowing and complying with all applicable national, regional, and local work regulations and safety requirements.

10. Safety Considerations Ctd.

General Warnings and Cautions

⚠ *DANGER*

To avoid electrocution, injury or death, make certain all electrical devices (motors, brakes, variable frequency drives, etc.) are properly grounded, completely de-energized, and brought to a no-voltage condition prior to working on any electrical connections. Remember that most of these devices carry potentially dangerous energy levels for a period of time after power is removed. Always follow proper lock-out/tag-out procedures.

⚠ *DANGER*

Electrical machines contain dangerous voltage levels, electrically live parts, rotating surfaces and hot surfaces. To prevent injury, death or possible equipment damage always observe the following:

- Keep all safety covers and guards in place during operation. Remove and replace covers in compliance with the applicable safety regulations.
- Allow the machine to cool down before starting any work on it.
- Operate the machines properly.
- Perform regular maintenance on the machine.
- Secure and guard free-standing shaft extensions.

⚠ *DANGER*

Electrically Live Parts

Electrical machines contain electrically live parts. Fatal or severe injuries and substantial material damage can occur if the required covers are removed or if the machines are not handled, operated, or maintained properly.

⚠ *WARNING*

Rotating Parts

Electrical machines contain dangerous rotating parts. Fatal or severe injuries and substantial material damage can occur if the required covers are removed or if the machines are not handled, operated, or maintained properly.

⚠ *WARNING*

Hot Surfaces

Electrical machines have hot surfaces. Fatal or severe injuries and substantial material damage can occur if the required covers are removed or if the machines are not handled, operated, or maintained properly. Allow the machine to cool down before starting any work on it.

⚠ *WARNING*

Maintain Proper Cooling

Operating the motor without the intended cooling fan may cause overheating and result in very hot surfaces, personal injury and material damage. Never commission a motor intended to be fan cooled when it is missing the shaft-driven fan or external blower assembly.

⚠ *DANGER*

Condensation Drain Holes (Optional)

Inserting objects into the condensation drain holes can damage the winding and can result in death, serious injury and damage to property!

- Before opening sealed drain holes, make sure the motor is in a no-voltage condition. Close the condensation drain holes before re-commissioning.
- Exercise caution around drain holes that are intended to be left open, especially when the motor is energized.

IMPORTANT NOTE

Before start-up check the following:

- All electrical connections are secure, well grounded and properly made.
- The motor is rotating in the correct direction (when de-coupled from the driven load).
- There are no temperature-sensitive parts (cables etc.), in contact with motor enclosure.
- Condensation drain holes are always located at the lowest point of the motor.

11. Checking the Insulation

Before putting the motor into operation for the first time, after a lengthy period of storage or standstill (approx. 6 months), the insulation resistance of the winding should be checked.

⚠ WARNING

During or directly after measurement the motor connection terminals carry hazardous voltages. Fatal or severe injuries and substantial material damage can occur if the required covers are removed or if the machines are not handled, operated, or maintained properly.

A. Control

The insulation resistance of new, cleaned, or repaired motor windings against the grounded housing and against one another should be > 200 Mega-Ohms.

B. Measurement

Using a Mega-Ohm meter apply a DC voltage of 500 VDC to the motor winding for a period of 60 seconds and record the winding insulation resistance compared to ground.

- The 500 VDC test voltage is applicable to low voltage motors up to 1000 VAC.
- When performing this test the temperature of the windings should be 25°C ± 15°C (77°F ± 27°F).

C. Verification

- If the insulation resistance of the winding is less than 50 Mega-Ohms, the cause may be moisture. The windings should be dried and the test should be repeated.
- After any lengthy period of operation the insulation resistance may drop. So long as the measured value does not fall below the critical value of 50 Mega-Ohm, the motor may continue to be operated.
- If the measured value falls below the critical 50 Mega-Ohm level, the cause must be established and the windings or winding sections must be cleaned, dried, repaired, or replaced as needed.

12. Bearing Lubrication

NORD motor frame sizes 63 up to and including 225 are normally supplied with internally grease lubricated bearings and require no lubrication during normal operation.

NORD motor frame sizes 250 and larger are supplied with grease fittings for re-greasing the motor bearings.

IMPORTANT NOTE

Motors with grease fittings are normally supplied with a label indicating the grease type used, the suggested re-lubrication interval, and the amount of new grease to be applied. General bearing maintence guidelines are listed in Table 3.

Typical motor bearing grease is an NLGI No. 2 consistency, high grade product with a polyurea base thickener, synthetic or blended mineral/synthetic oil, and stabilizing agents to protect against heat and oxidation.

Table 3 – Motor Bearing Maintence Guidelines

Frame Size	Power	Poles	Re-greasing Interval
63-225	0.16-60 HP (0.12-45 kW)	All	Maintence Free
250 to 280	75-125 HP (55-75 kW)	2	4000 h
		4 to 8	8000 h
315	150-250 HP (132-200 kW)	2	3000 h
		4 to 8	6000 h

NOTICE

When re-greasing motor bearings do not to mix different greases without verifying the compatibility with a reputable grease lubrication supplier. Mixing incompatible products can lead to bearing failure.

13. Mechanical Installation

Integral motors, NEMA C-face motors, and IEC flange mounted motors must be rigidly secured to their mating connection surface using all fastening screws tightened to the proper bolt torque. It is good practice to apply a medium strength thread- locking agent (Loctite® 242) to the mounting screws.

Foot mounted motors must be securely installed to a rigid and level foundation or mounting surface to minimize vibration and maintain alignment between the motor and shaft load. All mounting hole locations must be utilized. Tighten all hold down screws or bolts to the proper bolt torque.

NOTICE

Failure to provide a proper mounting surface may cause vibration, misalignment and bearing damage.

Accurate alignment and proper balancing of output devices (couplings, belts, pulleys, etc.) is required to assure quite, low vibration, trouble free operation. When the motor is directly coupled to a gear drive or a driven machine make sure that the motor shaft and driven machine shaft are aligned with one another axially.

NOTICE

Inaccurate alignment may lead to bearing damage, excessive vibrations and shaft breakage.

IMPORTANT NOTE

For motor replacement guidelines see section 20 on page 15 and section 21 on page 16.

14. Electrical Connections

⚠ DANGER

To avoid electrocution, injury or death, make certain all electrical devices (motors, brakes, variable frequency drives, etc.) are properly grounded, completely de-energized, and brought to a no-voltage condition prior to working on any electrical connections. Remember that most of these devices potentially dangerous energy levels for a period of time after power is removed. Always follow proper lock-out/tag-out procedures.

IMPORTANT NOTE

External motor brakes have their own connection requirements as indicated in the appropriate brake instruction manuals.

⚠ WARNING

If the motor has an integral brake, make certain there is no load connected to the driven equipment before releasing the brake. Otherwise serious injury, death, or damage to the equipment may result.

- The supply voltage and frequency must agree with the motor nameplate data.
- Always feed the connecting leads into the terminal box using appropriate mating cable glands. The mating connection cables and cable glands should be suitable for temperatures ≥ 194°F (90°C).
- Provide the ends of the connecting leads and ground lead with cable lugs or curved ring eyelets before connecting them to the terminal board.
- Make certain that the wiring connections and arrangement of the terminal board jumpers conform to the appropriate wiring diagram as provided in the motor terminal box and/or page 9 of this manual.
- Tighten the terminal board screw connections on the on the main terminal board per the table below.

Table 4 – Tightening Torque: Terminal Board and Grounding Screws

Thread Size	Nut Size [mm]	Tightening Torque [lb-ft]	Tightening Torque [Nm]
M4	7	0.6-0.9	0.8-1.2
M5	8	1.3-1.8	1.8-2.5
M6	10	2.0-3.0	2.7-4
M8	13	4.0-5.9	5.5-8
M10	17	6.6-9.6	9-13
M12	19	11.8-14.8	16-20

- Upon final assembly, the terminal box cover must be sealed so that it is dust-tight and water-tight.

Table 5 – Tightening Torque: Terminal Box Cover Screws

Thread Size	Tightening Torque [lb-ft]	Tightening Torque [Nm]
M4	0.6-0.9	0.8-1.2
M5	0.9-1.3	1.2-1.8
M6	1.1-1.8	1.5-2.5
M8	2.2-3.7	3.0-5.0

15. Direction of Rotation

The motor shaft rotation is defined per IEC 600034, Part 8. The motor shaft rotation can be controlled by the way the incoming line power is connected. When connecting the incoming line power in phase order to the terminal block posts, T1 (U1), T2 (V1), and T3 (W1) respectively, the motor shaft rotation will be clockwise when viewing the motor shaft at the drive-end.

15. Wiring Diagrams - Motor & Motor Option Connection Diagrams

NORD Frames 63-225
230 / 460V, 60Hz, 3Ø | 200 / 400V, 50Hz, 3Ø

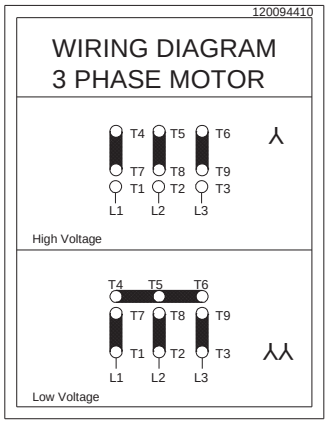

NORD Mfg by Siemens - Frames 200+
230 / 460V, 60Hz, 3Ø | 200 / 400V, 50Hz, 3Ø
190 / 380V, 60Hz, 3Ø

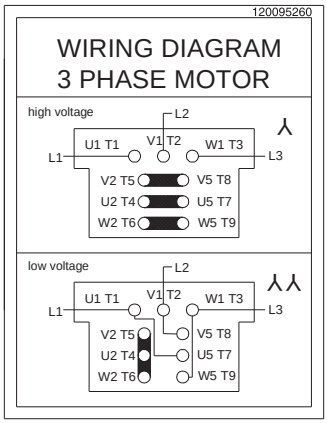

NORD Mfg by Siemens - Frames 200+
230 / 460V, 60Hz, 3Ø | 200 / 400V, 50Hz, 3Ø
190 / 380V, 60Hz, 3Ø

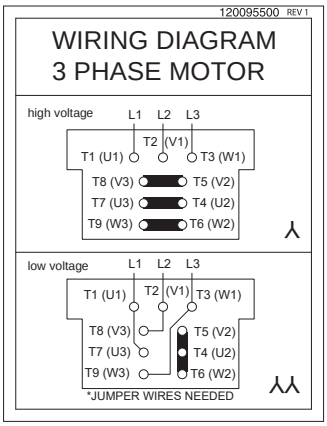

NORD Frames 63-225
460 / 800V, 60Hz, 3Ø | 230 / 400V, 50Hz, 3Ø
208 / 360V, 60Hz, 3Ø | 400 / 690V, 50Hz, 3Ø
332 / 575V, 60Hz, 3Ø

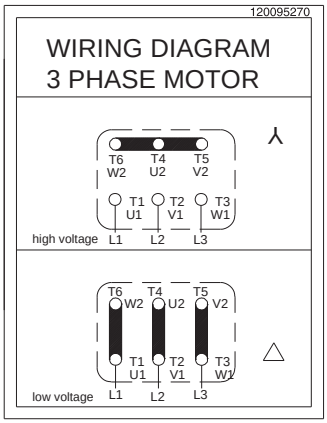

NORD 2 - SPEED MOTORS
SINGLE WINDING (4-2 & 8-4 POLE)

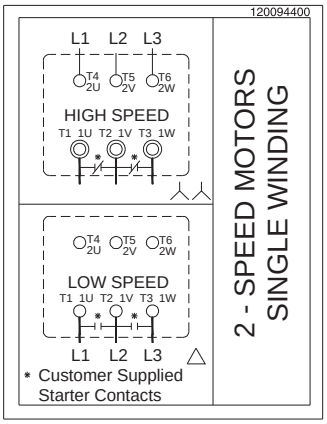

NORD 2 - SPEED MOTORS
DUAL WINDING (8-2 POLE)

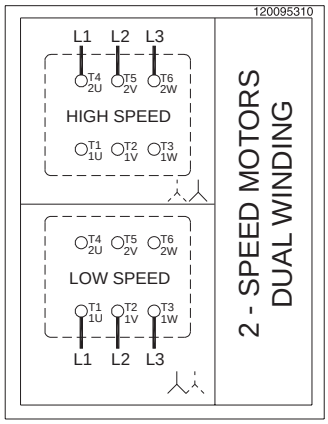

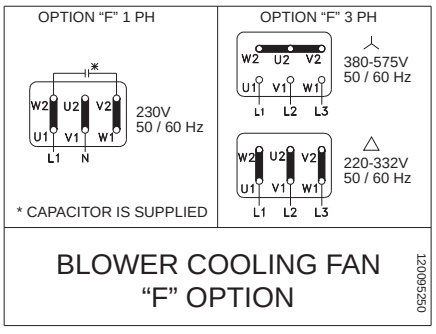

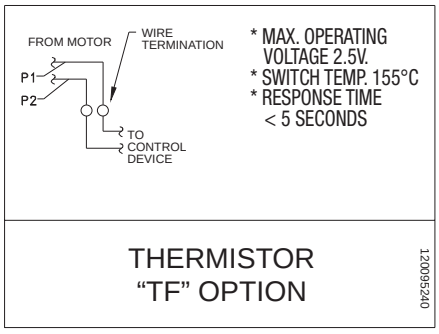

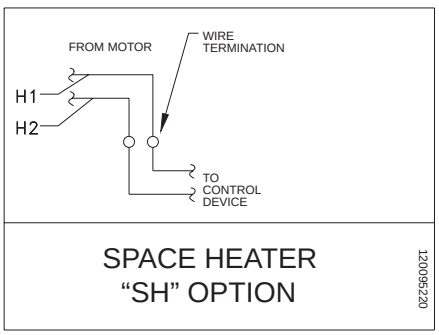

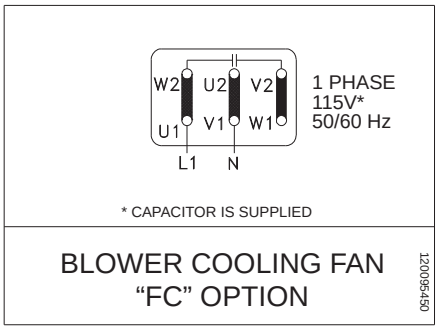

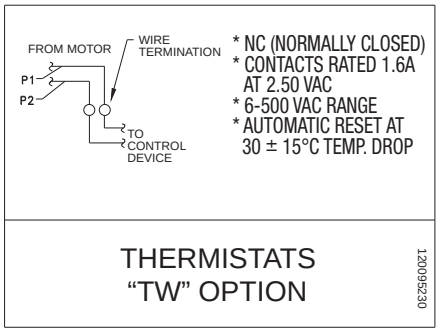

15. Wiring Diagrams Ctd. - Single Phase Motor Connection Diagrams

Motor Frame Sizes 63-90
230V, 50Hz, 1Ø

SINGLE PHASE MOTOR EHB1

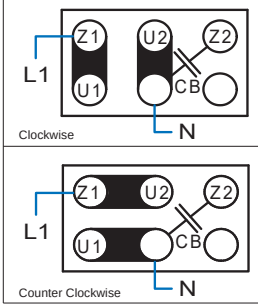

Motor Frame Sizes 63-90
230V, 50Hz, 1Ø

SINGLE PHASE MOTOR EAR1

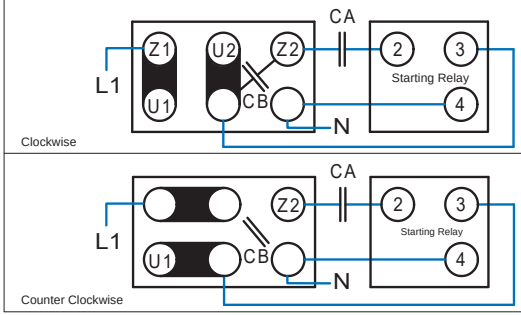

Motor Frame Sizes 63-90
230V, 50Hz, 1Ø

SINGLE PHASE MOTOR - EST

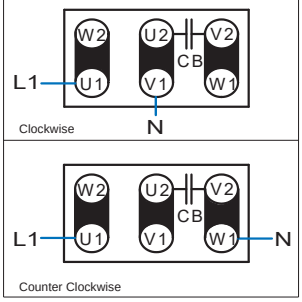

Motor Frame Sizes 63-90
115 / 230, 60Hz, 1Ø

SINGLE PHASE MOTOR WITH STANDARD RELAY
ECR - NEMA 115/230V

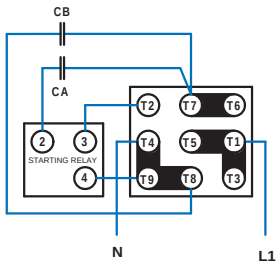

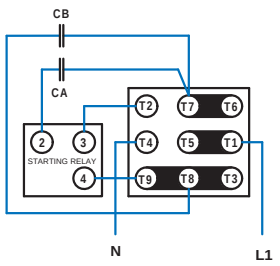

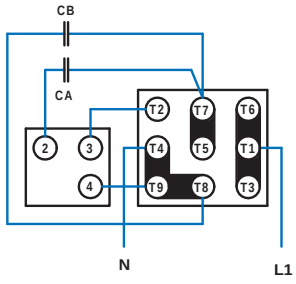

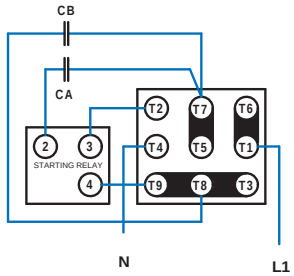

Motor Frame Sizes 63-90
115 / 230, 60Hz, 1Ø

08506980

SINGLE PHASE MOTOR WITH SINPAC RELAY
ECR - NEMA 115/230V

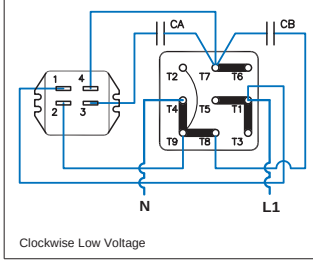

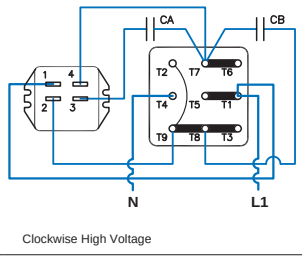

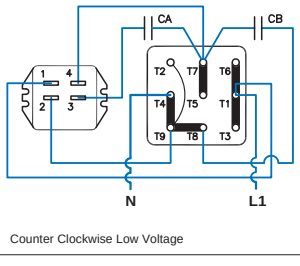

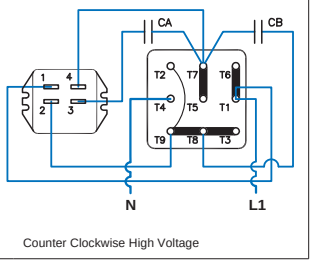

16. Motor Accessories

Blower Cooling Fan (Option F & FC)

- Connection Diagram Shown on page 10
- Option FC is 1-phase, 115V
- Option F has capability of 1 phase by connecting a supplied capacitor

Table 6 – Option F & FC

Option F – 3ph & 1ph 220-575V 50/60Hz

Motor Frame	60Hz Ratings			50Hz Ratings		
	Voltage [V]	Current [A]	Power [W]	Voltage [V]	Current [A]	Power [W]
Single phase connection - ⊥ (Δ Delta)						
63	230 – 277	0.11	38	230 – 277	0.10	27
71	230 – 277	0.12	41	230 – 277	0.10	28
80	230 – 277	0.13	44	230 – 277	0.11	29
90	230 – 277	0.25	88	230 – 277	0.26	72
100	230 – 277	0.28	88	230 – 277	0.26	70
112	230 – 277	0.31	107	230 – 277	0.26	73
132	230 – 277	0.27	89	230 – 277	0.29	82
160 - 225	230 – 277	0.41	140	230 – 277	0.45	128
Three phase low-voltage connection - (Δ Delta)						
63	220 – 332	0.08	23	220 – 290	0.10	27
71	220 – 332	0.08	24	220 – 290	0.10	30
80	220 – 332	0.08	25	220 – 290	0.01	29
90	220 – 332	0.21	64	220 – 290	0.28	86
100	220 – 332	0.21	66	220 – 290	0.27	86
112	220 – 332	0.23	70	220 – 290	0.27	85
132	220 – 332	0.25	74	220 – 290	0.32	96
160 - 225	220 – 322	0.49	165	220 – 290	0.52	155
Three phase high-voltage connection - (Y)						
63	380 – 575	0.04	23	380 – 500	0.05	29
71	380 – 575	0.04	25	380 – 500	0.05	30
80	380 – 575	0.04	26	380 – 500	0.05	29
90	380 – 575	0.12	62	380 – 500	0.16	82
100	380 – 575	0.12	66	380 – 500	0.16	83
112	380 – 575	0.13	70	380 – 500	0.16	82
132	380 – 575	0.14	75	380 – 500	0.18	96
160 - 225	380 – 575	0.28	165	380 – 500	0.29	155

Option FC – 115V 50/60Hz 1ph

Motor Frame	60Hz Ratings			50Hz Ratings		
	Voltage [V]	Current [A]	Power [W]	Voltage [V]	Current [A]	Power [W]
Single Phase Connection - ⊥ (Δ Delta)						
63	100 – 135	0.23	42	100 – 135	0.30	42
71	100 – 135	0.23	47	100 – 135	0.30	44
80	100 – 135	0.27	57	100 – 135	0.30	43
90	100 – 135	0.46	102	100 – 135	0.57	78
100	100 – 135	0.53	105	100 – 135	0.54	78
112	100 – 135	0.60	115	100 – 135	0.55	80

16. Motor Acc. Ctd. - Motors with Thermal Protection

Effective July 15th, 2016 many newly manufactured NORD motors that require a thermal protection device will use WAGO® Series 221 Series Compact Splicing Connectors. These connectors will be used for splicing the leads of the thermal protection option supplied by NORD to the customer supplied control device.

- The WAGO® connector will facilitate assembly of NORD 63-132 frame, 60Hz, CUS approved motors
- An oversized brake terminal box and secondary 2-post wire termination strip will no longer be required.
- NORD will supply (2) Wago® Series 221, 2 conductor splicing connectors for each motor requiring thermal protection (NORD P/N 18251607)

Table 7 – Motors Receiving the WAGO® Connector

Motor Supplier	NORD
Frame Size	63 to 132
Type	CUS
Thermal Protection Option	TW, TF, PT100, KTY
Motor Connection	Wye-Wye/Wye (YY/Y)
Voltage – Hz	230/460V – 60 Hz
Brake Motors Affected	No
EKK Small Terminal Box	Not possible (space limited

Table 8 – WAGO® Series 221 Connector Ratings

Wire Size	12-24 AWG (solid stranded or fine stranded) 0.14 - 4mm² (fine stranded) 0.2 - 2mm² (solid stranded)
Rated Voltage	600V
Rated Current	20A
Operating Temp.	105°C (221°F)
Global Approvals	cULus, ENC 05, EAC, PSE

UL Certificate E69654

Operation of WAGO® Series 221 Connector

1. Strip the wire/s to be connected to 11 mm (0.43 in).
2. Open up the lever of the lever-nut, place the wire in the receptical and close the clamp.
3. Repeat for the additional wires being joined.

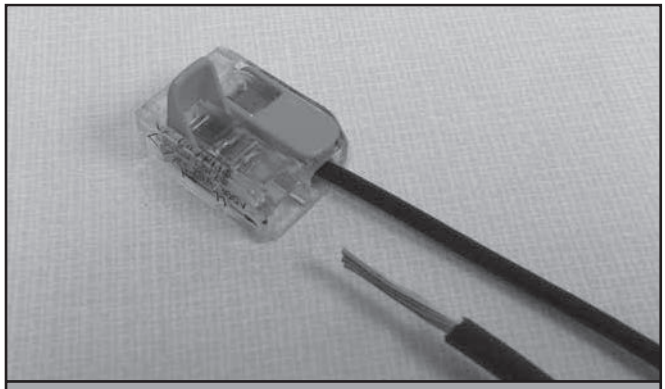

WAGO® receptical in the open position

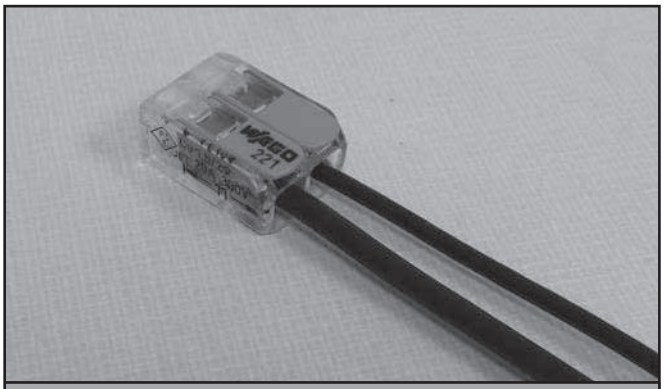

WAGO® receptical in the closed position

The WAGO Connector remains optional for the following NORD motors:

Brake Motors - An oversized conduit box is utilized with a secondary 2-post wire termination block for the thermal protection option

Delta/Wye (Δ/Y) Connected Motors - These utilize an 8 post terminal box (6 primary posts for the supply power and 2 auxillary posts for thermal protection)

Motors 160 Frame and Larger - The terminal box is large enough to allow the use of a secondary 2-post wire termination block for your thermal protection device.

Thermostats (TW & 2TW)

Table 9. TW & 2TW options, Thermostats

Standard connection	Series connected, one per phase
Contact	NC (Normally Closed)/ Auto Re-setting
Response Temperature (Option TW)	311 °F (155 °C) Shut-Off Device
Response Temperature (Option 2TW)	311 °F (155 °C) Shut-Off Device + 266°F (130 °C) Alarm Device
Nominal Current	1.6 Amp at 250 V
Resistance	< 50 mΩ
Switch Rebound	< 1ms
Insulation Rating	2000 VAC
Cycles	10,000 max
Lead Identification (inside terminal box)	P1 and P2 or TB1 and TB2 / 2TB1 and 2TB2

Motor thermostats or bi-metallic switches can be wired directly into the control circuit without a separate control module or tripping device. Thermostats operate on a relatively high control voltage so they are less sensitive to voltage interference from the main power supply. Often one can run thermostat leads and motor power leads next to each other when using the appropriate shielded cable. The installer is responsible to wire the thermostats into the motor control circuit. The leads may be labeled as indicated below.

Thermistors (TF)

Table 10. TF option, Thermistors

Standard Connection	Three devices, series connected, one per phase
Type	Positive temperature coefficient (PTC)
Transition Temperature	150°C±5 °C
Resistance	20… 500Ω (below transition) > 4 kΩ (above transition)
Reed Current	< 1mA
Max Voltage	30V
Lead Identification (inside terminal box)	P1 and P2 or TP1 and TP2

With a separate control module or tripping device (ex. Kirwan INT69) thermistors are used to sense motor overload/ over temperature conditions by converting the critical operating temperature limit into large internal resistance change. Due to their small size, heat sink construction, and high change in resistance value, minor resistance variations caused by relatively long lead runs can be tolerated. This feature also allows for one controller to be used for several temperature sensing locations. Many variable frequency drives come with on-board thermistor inputs. NORD does not supply the thermistor control module.

IMPORTANT NOTE

- Thermostats and Thermistors will automatically reset.
- All wiring must be completed by qualified personal and adhere to all local codes.

16. Motor Acc. Ctd. - Space Heaters (Option SH)

- Connection Diagram shown on Page 9
- Space Heaters are mounted directly on the motor winding
- The leads are brought into the terminal box and labeled H1 and H2
- They require a separate voltage supply and must not be energized when the motor is energized
- The heaters will keep the winding of the motor approximately 5°C above the surrounding ambient

Table 11. Space Heater Data

Frame Size	Wattage	Voltages	Heater Strips/MTR
63 & 71	18W	110V	1
		230V	
		460V	
80	25W	110V	1
		230V	
		460V	
90 – 112	50W	110V	2
		230V	
		460V	
132-180	100W	110V	2
		230V	
		460V	
200 & 225	120W	110V	2
		230V	
		460V	

Encoder (Option IG)

- Most standard encoders will be enclosed inside the fan cover
- Incremental, Quadrature, Differential, Marker Channel
- IP66 Protection
- IG1 = 1024PPR, IG2 = 2048PPR, IG4 = 4096PPR
- TTL/RS422, HTL/Push-Pull, Line Driver.
- 5V or 10-30V available.
- Absolute encoders also available.
- Seperate encoder wiring instructions are provided by NORD.

17. Inspection

Inspect the motor after every 500 operating hours. Please use table 12 below for inspection guidelines.

> ⚠ *CAUTION*
>
> If it is necessary to clean the motor exterior, do not use shop air. Shop air can force contaminents into the motor and may cause parts damage or result in blowing debris causing injury.

Table12. - Motor Inspection Guidelines

Inspect	Check	Action
Motor Exterior	Check the external surfaces for contamination. Accumulation of dirt and fibrous deposits must be removed.	Clean the motor external surfaces using clean, lint-free cloths.
		Clean deposits from between cooling fins using a vacuum cleaner and a stiff-bristled nylon brush.
	Check the external surfaces for oil film and greasy deposits.	Clean the oil film and greasy deposits from the motor surface using clean, lint-free cloths.
		If necessary, moisten the cloth with an approved non-flammable, residue-free solvent. Do not pour solvent on the motor.
	Check for evidence of damage or overheating.	If the motor has physical damage, replace the motor.
Motor Mountings	Make sure the mounting hardware is secure.	If the mounting hardware is not secure, check the motor/gearbox alignment, and tighten the mounting hardware.
Motor Electrical Connections	Check that all electrical connections are secure.	If the electrical connections are not secure, tighten them.
	Check the electrical connections for evidence of arcing.	Loose electrical connections can cause arcing, which is evident by discoloration and charring. If you find evidence of arcing, replace the damaged connections.
Insulation Resistance	Using an ohmmeter, check and record the resistance of motor winding insulation.	Compare the current resistance reading to previous readings. If the resistance drops significantly, perform an internal inspection for insulation damage or deterioration.
Motor Brake	On motors that have a brake, use a feeler gauge to check the air gap in between the brake pad and the rotor according to the appropriate user manual.	If the air gap exceeds the maximum allowed for that brake configuration provided in the manual, adjust the air gap or replace the brake pad according to user manual U35000.

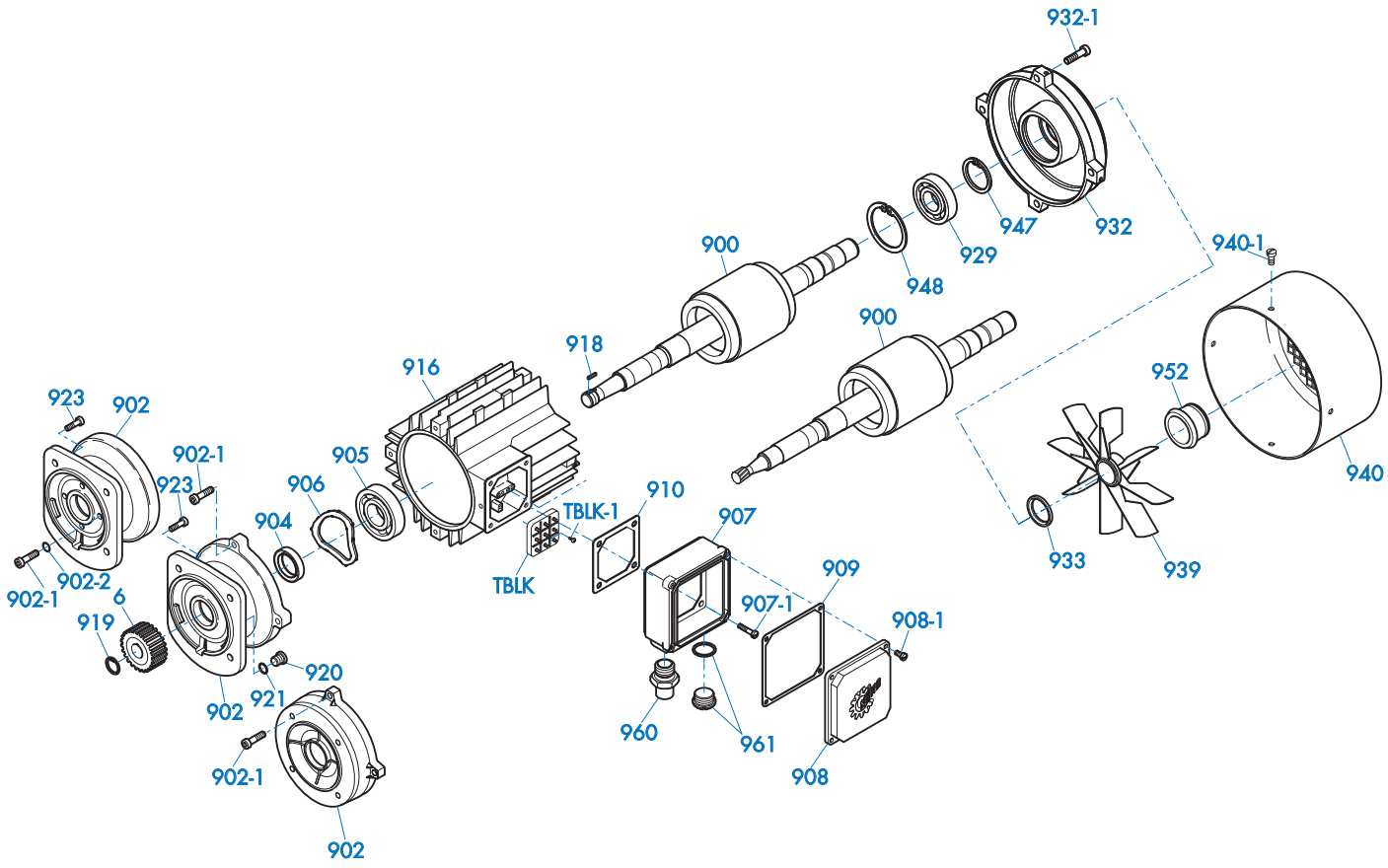

Part Number	Part Description	Qty per Assembly
6	Input Pinion	1
900	Rotor Assembly	1
902	A-Endbell	1
902-1	Screw	4
902-2	Dubo Seal	4
904	Oil Seal	1
905	Bearing	1
906	Preload Spring	1
907	Terminal Box Frame	1
907-1	Screw	4
908	Terminal Box Cover	1
908-1	Screw	4
909	Gasket - Terminal Box Frame	1
910	Gasket - Terminal Box Cover	1
916	Stator	1
918	Key	1
919	Retaining Ring	1
920	Oil Plug	1

Part Number	Part Description	Qty per Assembly
921	Gasket	1
923	Screw	4
929	Bearing	1
932	B-Endbell	1
932-1	Screw	4
933	Oil Seal	1
939	Fan	1
940	Fan Cover	1
940-1	Screw	4
947	Retaining Ring	1
948	Retaining Ring	1
952	Fan Clip	1
960	NPT Thread Adapter	1
961	Plug (includes O-ring)	1
TBLK	Terminal Block	1
TBLK-1	Screw, Terminal Block Mounting	2
	Jumper Bar (not illustrated)	AR

19. Repair

Reference the parts list drawing on page 14 for clarification.

A. Disassemble the motor according to the general exploded view in PARTS INFORMATION. Disassemble only as far as necessary to replace the failed parts.

B. Whenever the motor is disassembled, clean all dust and contamination from the motor interior using a vacuum cleaner and a soft-bristled nylon brush.

C. The following parts must be replaced if they are removed:

- Oil seal (904), Oil seal (933)
- Gasket (909), Gasket (910), Gasket (921)
- Gasket on plug (961)
- Self-locking screws (907-1, 908-1, 923, 932-1, 940-1)
- Dubo Seals (902-2)

D. If the following parts are removed, inspect them, and replace them if they are deformed or damaged:

- Retaining ring (919), Retaining ring (947), Retaining ring (948)
- Fan clip (952)

20. Removing and Replacing Integral Motors

Reference the parts list on Page 14 for clarification.

A. Disconnect the power to the electric motor. Make certain the motor is properly grounded, de-energized and secured with a lock-out/tag-out device.

B. Drain the oil from the mating gearbox, or rotate the motor/gearbox assembly so that the motor is up, to prevent oil from spilling from the gearbox when the motor is removed.

C. Support the motor and prepare it for removal. Steady the motor and support it. For larger motors, use of mechanical lifting or support devices to may be appropriate.

D. Remove the fastening screws that hold the motor to the reducer input.

IMPORTANT NOTE

Most integral motor installations have mounting bolts accessible from the motor exterior. If the bolts are not clearly visible, unbolt the input flange from the gearbox. Remove the bolts securing the motor to the reducer input flange, and discard the old DUBO sealing rings that were under the screw heads.

E. Maintain motor shaft alignment and move the motor directly away from its mounting surface until the motor shaft and mating input gear clear both the internal gear mesh and reducer input.

F. Remove and discard the old flange gasket.

G. Clean the gasket faces on the motor and gearbox, making sure no cleaning debris enters the gearbox.

H. Check the replacement motor to make sure the motor flange, motor shaft, and motor pinion are identical to the motor that was removed.

I. Place a new gasket between the gearbox and new motor.

J. Position the motor on the gearbox, making sure the input pinion meshes with the input gear. Rotate the motor as necessary to align the bolt holes and seat the motor flange. Make sure the gasket remains properly aligned and seated

K. Apply a medium strength thread locking compound to the bolt threads. Install the bolts and tighten them to the appropriate torque.

IMPORTANT NOTE

If the motor/gearbox installation uses an input flange, first mount the input flange to the motor using the four mounting bolts and NEW DUBO sealing rings under the head of each fastening screw. Make sure the fastening screws are clean and apply new thread sealant if necessary.

L. Check the gearbox oil level in accordance with the appropriate User Manual/s. If necessary fill or add oil to the gearbox.

NOTICE

Do not mix oil types. Mixing oil types may lead to component damage and diminished performance. Consult NORD for assistance or reference oil type listed on gearbox tag.

M. Re-establish the electrical connection to the motor.

N. Observe the subsequent start-up closely to make certain the equipment is operating properly and there are no seal or gasket leaks.

21. Removing and Replacing NEMA C-Face or IEC Fange-Mounted Motors

For further clarification of these instructions, reference the parts list on Page 14 of this manual.

A. Disconnect the power to the electric motor. Make certain the motor is properly grounded, de-energized and secured with a lock-out/tag-out device.

B. Support the motor and prepare it for removal. Steady the motor and support it. For larger motors, use of mechanical lifting or support devices to may be appropriate.

C. Remove the fastening screws that hold the motor to the C-face or IEC mounting flange.

D. Maintain motor shaft alignment, and move the motor directly away from its mounting surface until the motor shaft and mating coupling clear the mounting flange surface of the driven equipment.

E. Measure and record the proper placement of the motor shaft coupling prior to removing it from the old motor.

F. Make sure the new motor shaft, key and key slot are free of all nicks, burrs, and lubrication or grease.

G. Install the new shaft key on the new motor. If the shaft key is not captured or if an open-ended key slot is utilized it is good practice to secure the key into the key slot with a medium strength thread locking agent or alternatively one may stake the key in place.

H. Re-install the coupling on the new motor shaft, making sure the placement of the coupling is in the same location as it was on the old motor (See Step E).

I. Clean all old gasket material, sealants, contamination, and corrosion from the flange surface on the driven equipment.

J. If the motor is utilized in a wet or wash down environment apply a sealing gasket or gasket eliminating compound to the mating flange surface, as would seem most appropriate for the application.

K. Support the new motor and mount it flush against the mating flange surface of the driven equipment.

L. Apply a medium strength thread locking agent to the bolt threads.

M. Install the bolts and tighten them to the appropriate torque.

N. Re-establish the electrical connection to the motor.

O. Observe the subsequent start-up closely to make certain the equipment is operating properly.

22. Testing

IMPORTANT NOTE

NORD electric motors do not require periodic testing. However, if a motor is removed from its installation, NORD recommends that the motor be checked according to the following static and dynamic testing procedures before it is reinstalled. Finding a condition that will require future repair before the motor is reinstalled decreases the overall maintenance time.

This section provides general test information and functional checks for the types of motors covered by this manual. Read and understand the tests and checks before performing them on your motor.

Record and date all measurements taken.

If the motor fails any of the test procedures provided below, use the troubleshooting guide to determine the motor problem.

Static Testing

A. The motor can only be static tested if it is disconnected from the component it drives and securely mounted on a fixture or mounting plate. These tests are usually conducted when a motor has been removed for any reason other than failure

B. Turn the motor shaft slowly by hand. Feel and listen for evidence of a failed bearing, which is indicated by a rough feel as the shaft rotates, and by noise.

C. Check for smooth rotation, with no evidence of binding or catching. If the shaft does not rotate smoothly, or binds or catches, the bearings are worn or failing, lack lubrication, or are contaminated.

D. Check the motor shaft for side play by applying pressure at right angles to the shaft in several places around the circumference. If the shaft moves perceptibly, the front bearing may be worn.

Dynamic Testing

A. Find the motor voltage and rated load current values as listed on the motor nameplate.

B. Using a volt-ohmmeter, verify that the motor power supply is in the correct range.

C. Run the motor with no load. As the motor is operating, listen for unusual motor noise and check for excessive vibration. Vibration and motor noise are indications of bearing contamination, lack of lubrication, damage, or failure.

D. Use an ammeter to measure the no-load current. Record the no-load current for comparison with previous readings, and for reference during future testing.

E. If the motor passes the no-load test, operate the motor at rated load and check and record the current.

F. Check the motor operating temperature at rated load. If the motor operates at a higher than normal temperature, the motor may be damaged, overloaded or failing.

23. Troubleshooting

Fault	Likely Cause	Corrective Action
Motor fails to start.	• Motor is mis-wired • Brake is may not be releasing. • Fan guard damaged and contacting fan. • Motor protection device has tripped or does not switch • 1-Ph Capacitor or start switch has failed.	• Verify and correct motor wiring. • Troubleshoot brake per User Manual U35000. • Replace damaged fan guard. • Check motor protection device for correct setting and correct error. • Discharge capacitor and use a volt-ohm meter to check the capacitor for an open circuit - replace if needed. Inspect switch and connections. Replace if contacts look burned or pitted.
Fuses blow or motor protection faults immediately.	• Short circuit in line. • Lines connected incorrectly. • Fuse or circuit breaker tripped. • Motor is overloaded or equipment jammed. • Stator is shorted or went to ground.	• Rectify short circuit. • Check circuit diagram and make corrections. • Replace fuse or circuit breaker. • Make sure load is free. Verify motor amp draw compared to nameplate rating. • A damaged or blown stator will show a burn mark. Stator must be repaired or replaced.
Motor hums and has high current consumption	• Brake may not be releasing. • Rotor may be rubbing stator. • Defective or incorrect stator winding.	• Troubleshoot brake per User Manual U35000. • Send motor to a repair specialist.
Severe speed loss under load or excessive acceleration time.	• Overload. • Excessive voltage drop. • Damaged or failing motor bearings. • Damaged or worn gear unit. • 1-Ph Capacitor or start switch has failed.	• Check load conditions and make certain system is unobstructed. Reduce load or consider a larger motor. • Verify service voltage is within specification. Check if nearby equipment is affecting incoming power. Make sure connection harness and wiring is adequate. • Replace motor bearings. • Replace or repair damaged gear unit. • See instructions under "Motor fails to start".
Motor runs the incorrect direction.	• Incorrect wiring.	• Rewire motor according to system schematic and/or switch two incoming motor phases.
Motor heats up excessively or thermal overload protection trips	• Overload. • Ambient temperature is too high. • Inadequate cooling. • Operation is outside the allowed duty cycle. • Motor protection device may be defective. • Excessive supply voltage. • System short or damaged stator.	• Make sure load is free. Verify motor amp draw compared to nameplate rating. Reduce load or consider a larger motor. • Do not operate above the rated conditions. • Correct cooling air supply. Open and clear cooling air passages. Retrofit with forced ventilator fan if needed. • Adjust operating duty cycle or contact a specialist to select a suitable motor or drive. • Replace motor protection device. • Adapt motor supply voltage. • Check for loose, cut or damaged wires. Check stator winding for defects or burn damage.
Excessive Noise or Vibration	• Motor bearings contaminated or damaged. • Excessive motor shaft end play. • Misaligned or imbalanced load.	• Test motor by itself. If bearings are bad noise may be heard or roughness detected. Replace bearings. Add lubrication if bearings have grease fittings. • Check shaft endplay with motor and system power disconnected. If shaft movement is excessive replace motor shaft bearings. • Check all mating shaft connections for proper alignment and correct all imbalanced load conditions.
1 Ph Start Capacitor Failures	• Motor is not coming up to speed quickly enough. • Motor is being cycled frequently • Start switch is defective or damaged.	• Verify motor size to load conditions. Motor should come up to speed in no more than 2-3 seconds. • Verify duty cycle and consult specialist for recommendations. • Replace start switch.
1 Ph Run Capacitor Failures	• Possible power surge to motor caused by transient voltage or lightening. • Excessive ambient temperature.	• Install proper surge protection. • Verify ambient conditions do not exceed nameplate value.

PRATT

MODEL 611A-E1-L, BALLCENTRIC PLUG VALVE

LEFT BLANK

PRATT®

a MUELLER brand

OPERATION/MAINTENANCE MANUAL

Ballcentric® Plug Valve

TABLE OF CONTENTS	PAGE
General Information	2
Installation	2-3
Operation	4-5
Maintenance	6
Troubleshooting	7
Parts Information	8-9

WARNING:

1. Read all applicable directions and instructions prior to any maintenance, troubleshooting or installation.

2. Personnel involved in the installation or maintenance of valves should be constantly alert to potential emission of pipeline material and take appropriate safety precautions. Always wear suitable protection when dealing with hazardous pipeline materials.

3. Order parts from your local Pratt sales representative or directly from Pratt. When ordering parts, please include the serial number located on the valve tag.

NOTE: "WARNING" and "CAUTION" messages (flagged with an exclamation symbol) indicate procedures that must be followed exactly to avoid equipment damage, physical injury, or death.

F 13810 11/18

MUELLER

FUNCTIONAL DESCRIPTION

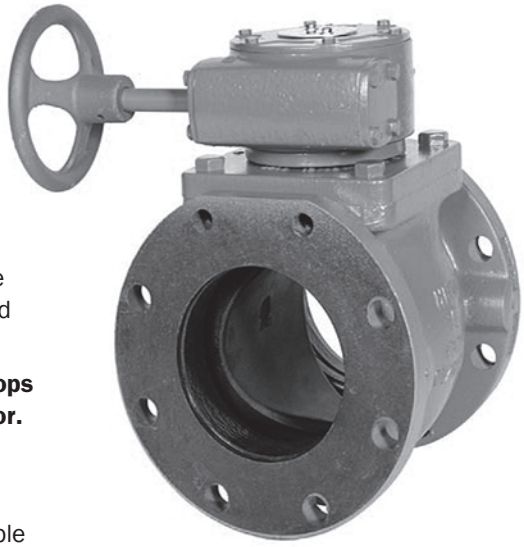

Plug valves are designed with eccentric rubber disc seating surfaces. The plug rotates 1/4 turn to provide shutoff in pipes. The eccentric seating action provides for tighter shutoff as the actuator is adjusted to provide for more rotation. The valve can be adjusted to a maximum of 10 degrees over travel. The valves can be used to regulate flow rate by positioning the plug between 15 and 90 degrees open.

Manually operated plug valves are powered with one of the following: 2" direct nut, lever handle or gear actuators, which convert multiple handwheel, chainwheel, or nut input turns into 1/4 turn valve operation. The travel of the valve plug is limited by physical stops in the torque collar for wrench operated valves.

⚠ CAUTION: Forcing the handwheel, chainwheel or nut against the stops will not provide tighter shutoff of the valve and may damage the actuator. Only actuator adjustments will affect valve shutoff.

Motor Operated Valve

Motor operated valves are powered with gear actuators, which convert multiple motor input turns into 1/4 turn valve operation. The travel of the valve plug is limited by limit switches in the motor housing and physical stop in the actuator housing. Valve shutoff is affected by limit switch and physical stop settings.

⚠ CAUTION: Improperly set limit switches and/or physical stops may damage the motor and/or actuator.

Hydraulically operated valves are powered with a gear box and double acting cylinder. The linear stroke of the cylinder is converted to 1/4 turns operation by the gear box. Auxiliary controls are provided to direct hydraulic power to the cylinder and to control the operating speed of the cylinder.

INSTALLATION

When installing the plug valves, the seat end should be noted. The seat end of the valve is cast in raised letters on the appropriate flange of the valve. Generally, straightway valves should be installed with the highest pressure applied from the opposite end from the seat. This will tend to push the plug into the seat On pump discharge installations the seat end should be towards the pump.

In cases where shut-off is required in both directions, the valve should be installed so that the highest differential pressure at shut-off is opposite the seat end.

When the service is of a clogging type, with suspended solids likely to build up in the valve body, it is recommended that the valve be installed with the media entering the seat end first. In extreme cases, the valve should be installed with the plug horizontal and rotating upward into the top portion of the valve body cavity to open. See Page 6 for recommended installation options.

Class 125 flanged end valves have ANSI B16.1 flat faced 125/150 flanges. Standard ANSI B16.21 flanges and gaskets should be used to install the valves in the pipeline.

Certain size valves utilize tapped holes on the top and bottom of the flange where a backing nut is not possible. Please check specific drawings for detailed information on sizes and quantities of hexagon head screws required on these valves.

Prior to installing valves, they should be cycled open and closed several times to ensure they are in good working order and have not been damaged during shipment or storage.

INSTALLATION OPTIONS

The type of materials carried in the pipeline and the location of the valve determine the correct installation orientation.

Liquids Without Suspended Solids

Valve may be installed with plug shaft vertical or horizontal. For vertical pipe installations, install valve with seat facing downstream.

Before installation, blow out pipeline to remove all foreign materials.

Suspended Solids and Dirty Gases

Install valve with plug facing upstream. Ensure plug rotates up to the fully open position thus preventing plug from sweeping through settled debris.

NOTE: For pump isolation service install the discharge valve with the seat downstream from the pump and with the plug rotating to the top of the pipeline in the open position.

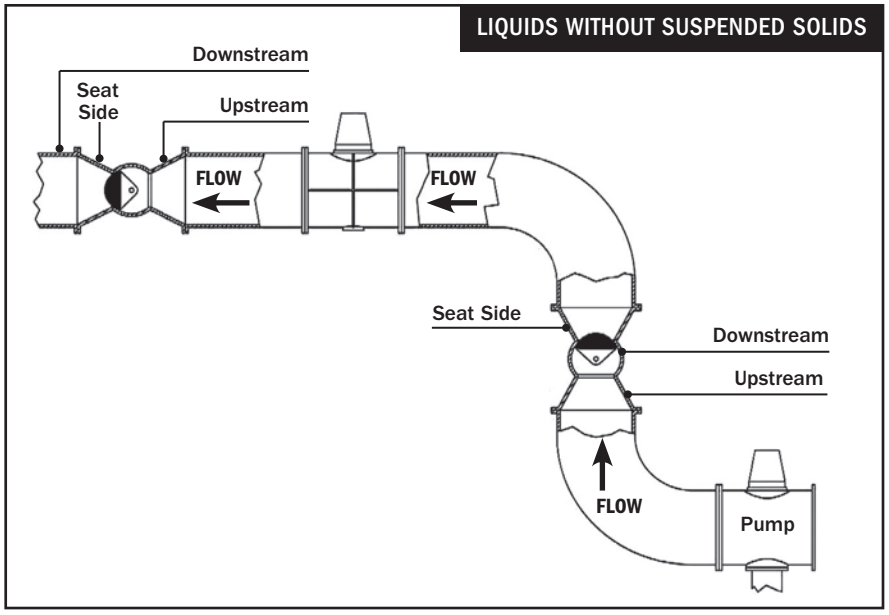

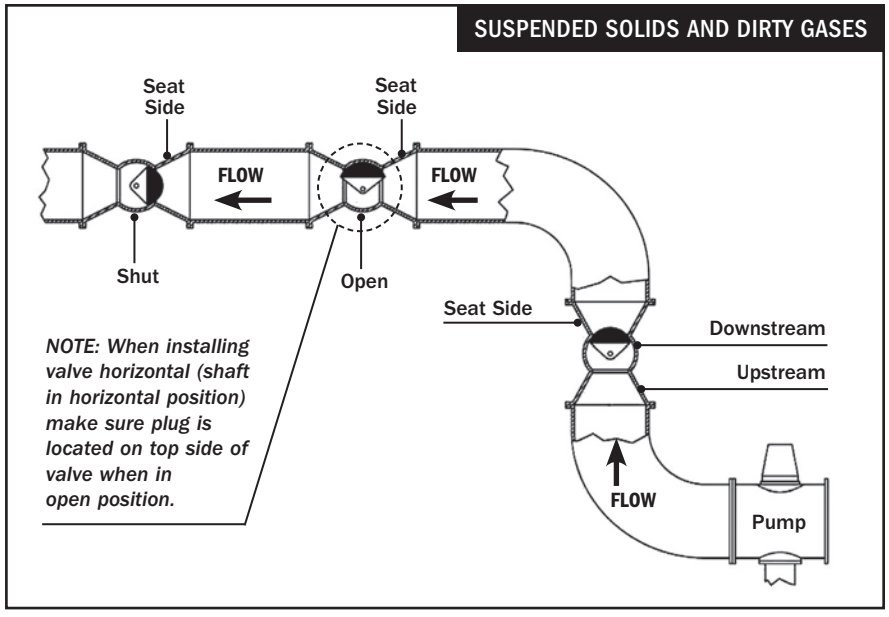

WRENCH OPERATED PLUG VALVES

Wrench operated eccentric plug valves close by turning the valve 90 degrees **clockwise**. All wrench operated eccentric valves are equipped with a multifunction device referred to here as a torque collar. This device serves as:

1. Wrench Adapter – 2" Square
2. Position Indicator
3. Open Memory Stop
4. Closed Memory Stop
5. Running Torque Adjustment

Position Indicator: The top of the plug has an indicator plate to show the approximate plug position. Cast onto the torque collar is an indicator mark which corresponds to a graduated scale cast on the bonnet of the valve. This scale is divided into 15 degree lines and indicates the exact valve opening from full open to full closed.

Open Memory Stop: The torque collar also incorporates an open memory stop feature. The plug can be set by tightening the open memory stop adjustment bolt after the correct flow is achieved. The valve can then be closed for maintenance and reopened to the proper position without resetting the flow.

WRENCH OPERATED VALVE WITH TORQUE COLLAR

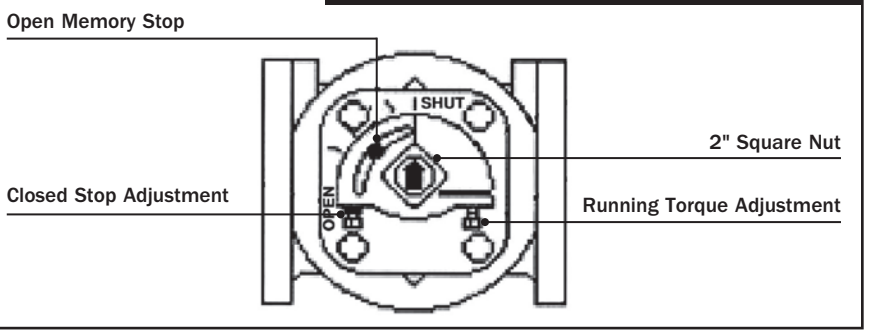

Closed Memory Stop: The closed memory stop is provided to allow for adjustment to compensate for wear of either the plug coating or the seat. The closed stop is pre-set at the factory and should not require readjustment unless wear occurs.

To adjust the plug for excess plug or seat wear simply rotate the closed stop two turns **counter-clockwise** then rotate the plug (**clockwise**) further into the seat and check the flow. Should this movement fail to shut off the flow repeat the above step. Afterward re-set the lock nut to prevent the position from being altered.

Running Torque Adjustment: The nature of eccentric plug valves "camming" action eliminates the majority of the torque prior to seating. To prevent the plug from creeping open or slamming closed, the torque collar maintains a constant drag on the shoulder of the valve bonnet. This component is factory adjusted. However, once the valve has been installed, it is recommended that the torque adjustment nut be further tightened to assure proper friction exists to prevent unwanted closure.

To prevent the plug from unnecessary movement, rotate the hex head bolt **clockwise** until there is a substantial drag on the plug but not so much as to prevent the movement of the plug with the supplied wrench.

GEAR OPERATED PLUG VALVES

Gear operated eccentric valves close by turning the gear input shaft **clockwise** until closed.

Position Indicator (above ground units only): The top of the gear operator has an indicator plate to show the plug position. This scale, cast onto the gear housing, is divided into 15 degree lines and indicates the exact valve opening from full open to full closed. Buried service units are totally enclosed and sealed for use below grade.

Open and Closed Memory Stops: The closed memory stop is provided to allow for adjustment to compensate for wear of either the plug coating or the seat. The closed stop is pre-set at the factory and should not require readjustment unless wear occurs.

GEAR OPERATED PLUG VALVES

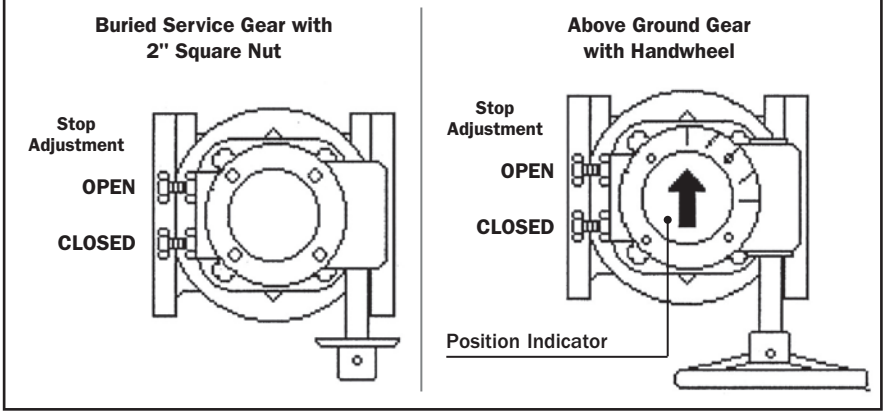

To adjust the plug for excess plug or seat wear simply rotate the closed stop two turns **counter-clockwise** then rotate the handwheel or nut (**clockwise**) to move the plug further into the seat and check the flow.

Should movement fail to shut off the flow repeat the above step. Afterward re-set the lock nut to prevent the position from being altered.

ACTUATED PLUG VALVES

Described below are the operating instructions for an eccentric plug valve equipped with an electric motor actuator. General arrangement drawings are provided in conjunction with this manual to illustrate the fitup and installation of the valve and wiring of the motor. Specific wiring details are contained in the electric motor actuator manual. As with any plug valve, the actuator will cause the valve plug to rotate through 1/4 turn to open or close the valve.

The output motion of the actuator is limited to about 100 degrees of output rotation by mechanical stops in the gearing. These are factory set and should not need adjustment. The actual positioning of the valve plug will be done by limit switches in the motor actuator. The switches are also set at the factory, but adjustment is sometimes required if the motor unit is installed on a separate mounting base or floor stand. Detailed procedures are given in the motor manual if adjustment is needed for the mechanical stops or the limit switches. The wiring and power requirements are noted on the wiring diagrams included with this instruction manual.

MAINTENANCE

The eccentric valve is designed and manufactured to be a long life valve under normal circumstances. It does not require any routine maintenance. Cycling the valve from full open to full closed on an annual basis will increase the life of the valve and operator components. However, if maintenance is required due to unusual wear or service conditions, the following procedure should be followed:

⚠ CAUTION: Valve should be depressurized for all maintenance activities

Disassembly Procedure

Body: The plug valve is a top entry valve; therefore the body can remain in line during this operation.

Gear Operated Valves: Remove the bolts holding the gear operator housing cover in place. Remove the housing cover and the internal bolts holding the gear operator to the valve body. Remove the gear operator and set aside.

Wrench Operated Valves: Remove the star washer fastening the torque collar to the plug stem. Remove the torque collar and set aside. With the valve de-pressurized, remove the hexagonal head cap screws that hold the bonnet to the valve body. Remove the bonnet, leaving the plug in the body. At this point, the plug, PTFE thrust washers, journal bearings and bonnet stem seals are accessible and can be removed and replaced.

Reverse the above process for reassembling the valve only. For stem seal replacement follow procedure below.

Stem Seals: With the valve de-pressurized, using internal snap ring pliers, remove the snap ring and thrust washer. The "U" cup seals can now be pried out of the seal cavity. To replace, reverse the above process.

"U" Cup Seals: To replace "U" cup seals on actuated eccentric plug valves, depressurize the valve, remove the actuator, and remove internal bolts fastening the actuator to the valve body. Remove the actuator and set aside. Remove the internal snap ring using snap ring pliers. Remove thrust washer. The "U" cup seals are now visible. Using a screwdriver, pry out the old seals. Apply a small amount of silicone or grease to the new "U" cup seals. This will help them slide in the packing cavity. Put a piece of shim stock into the cavity and put the "U" cup over it. Slide the "U" cup over the stem with shim stock against the stem. This will let any trapped air out of the packing cavity. Now, using two screwdrivers, coax the outer lip of the "U" cup into the cavity while pressing down on the top of the "U" cup with the other screwdriver (see above diagram). Continue to do this all the way around until the "U" cup is at the bottom of the packing cavity.

"U" CUP SEAL DIAGRAM

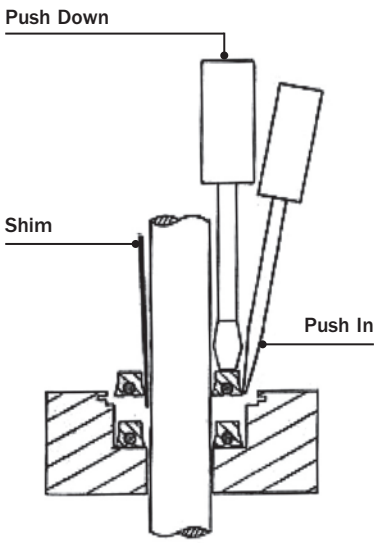

Repeat the procedure with the second "U" cup, and replace the thrust washer and snap ring. Now you can remount the actuator on the valve.

TROUBLESHOOTING

Wrench Operated Plug Valve

PROBLEM	CAUSE	SOLUTION
Valve will not open	• broken or misadjusted torque collar • obstruction in line • excessive line pressure • elastomer damage	• adjust or replace torque collar • remove obstruction • reduce pressure • replace plug
Valve will not close	• broken or misadjusted torque collar • obstruction in line • excessive line pressure • elastomer damage	• adjust or replace torque collar • remove obstruction • reduce pressure • replace plug
Valve will not shutoff flow	• improper stop adjustment • obstruction in line • excessive line pressure • elastomer damage	• adjust closed stop • remove obstruction • reduce pressure • replace plug
Valve leaks at plug stem	• damaged “U” cup seal	• replace “U” cups

Gear Operated Plug Valve

PROBLEM	CAUSE	SOLUTION
Valve will not open	• bent input shaft • obstruction in line • excessive line pressure • elastomer damage	• replace worn shaft • remove obstruction • reduce pressure • replace plug
Valve will not close	• bent input shaft • obstruction in line • excessive line pressure • elastomer damage	• replace worn shaft • remove obstruction • reduce pressure • replace plug
Valve will not shut off flow	• improper stop adjustment • obstruction in line • excessive line pressure • elastomer damage	• adjust closed stop • remove obstruction • reduce pressure • replace plug
Valve leaks at plug stem	• damaged “U” cup seal	• replace “U” cups

Actuated Plug Valve

PROBLEM	CAUSE	SOLUTION
Valve will not close/open	• no power source • improper signal • burned out or impaired component	• check incoming power source and/or replace fuses • check actuating signal sequence • check and repair or replace motor or relay devices
Valve will not shut off flow	• improper stop adjustment • actuator torques out	• re-set limit switch • check for obstructions in valve

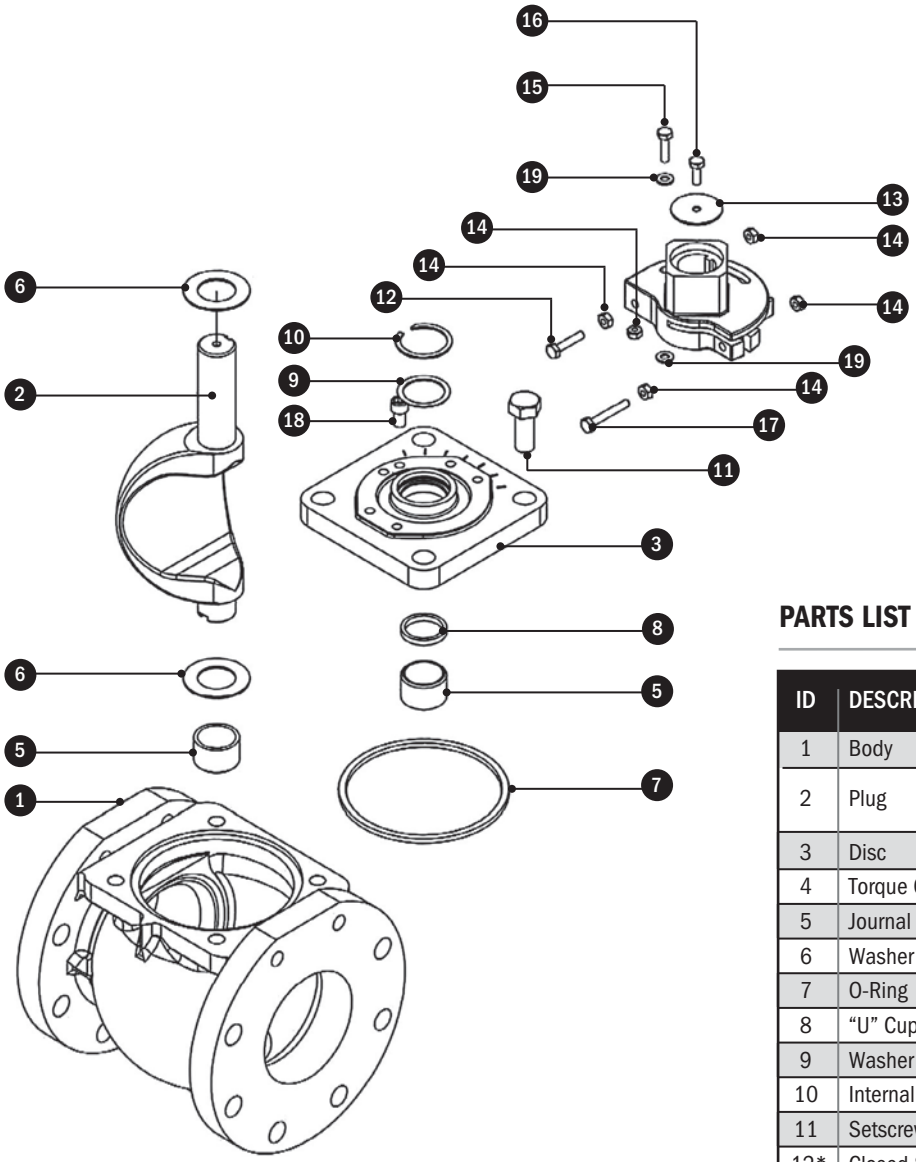

PARTS LIST

ID	DESCRIPTION	MATERIAL
1	Body	Cast Iron ASTM A-126 Class B
2	Plug	Rubber Coated Ductile Iron ASTM A-536
3	Disc	Cast Iron ASTM A-126 Class B
4	Torque Collar	Ductile Iron ASTM A-536
5	Journal Bearing	303 Stainless Steel
6	Washer (Grit Seal)	PTFE
7	O-Ring	Elas. as Spec.
8	"U" Cup Seal	Elas. as Spec.
9	Washer	Brass – ASTM B138-675
10	Internal Snap Ring	Spring Steel
11	Setscrew	Steel (Zinc Plated)
12*	Closed Stop	Steel (Zinc Plated)
13*	Locking Washer	Steel
14*	Nut	Steel (Zinc Plated)
15*	Open Stop	Steel (Zinc Plated)
16*	Set Screw	Steel (Zinc Plated)
17*	Torque Bolt	Steel (Zinc Plated)
18*	Travel Stop	Steel
19*	Washer	Steel

*Torque Collar Assembly on 8" and Smaller

TO ORDER: Contact our Parts Department.
Pratt
401 South Highland Avenue
Aurora, IL 60506-5563
630.844.4000

When ordering parts, please include the serial number located on the valve tag and the part description.

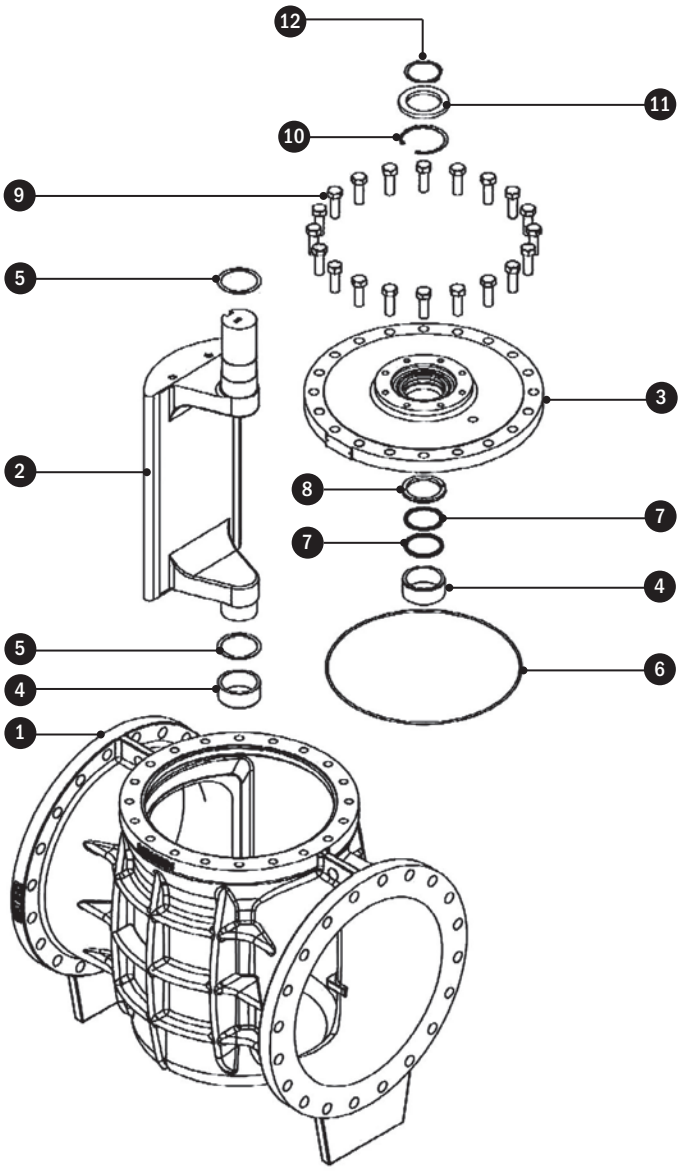

PARTS LIST

ID	DESCRIPTION	MATERIAL
1	Body	Cast Iron ASTM A-126 Class B
2	Plug	Rubber Coated Ductile Iron ASTM A-536
3	Cap	Cast Iron ASTM A-126 Class B
4	Sleeve Bearing	303 Stainless Steel
5	Washer (Grit Seal)	PTFE
6	Cap O-Ring	Elas. as Spec.
7	"U" Cup Seal	Elas. as Spec.
8	Seal Retaining Ring	(See Note 1)
9	Cap Screw	Steel (Zinc Plated)
10	Internal Snap Ring	Spring Steel
11	Support Collar	Steel
12	Internal Snap Ring	Spring Steel

NOTE 1: Seal Retaining Ring: Brass – ASTM B-138-675 on 14" – 20", Steel on 24" and larger.

TO ORDER: Contact our Parts Department.
Pratt
401 South Highland Avenue
Aurora, IL 60506-5563
630.844.4000

When ordering parts, please include the serial number located on the valve tag and the part description.

MUELLER® | ECHOLOGICS® | HYDRO GATE® | HYDRO-GUARD® | JONES® | MI.NET® | MILLIKEN® | PRATT® | SINGER® | U.S. PIPE VALVE & HYDRANT

1.800.423.1323 - www.prattvalve.com - moreinfo@muellercompany.com
INTERNATIONAL - 1.423.490.9555 - www.mueller-international.com - international@muellercompany.com

Mueller refers to one or more of Mueller Water Products, Inc., a Delaware corporation ("MWP"), and its subsidiaries. MWP and each of subsidiaries are legally separate and independent entities when providing products and services. MWP does not provide products or services to third parties. MWP and each of its subsidiaries are liable only for their own acts and omissions and not those of each other. MWP brands include Mueller®, Echologics®, Hydro Gate®, Hydro-Guard®, Jones®, Mi.Net®, Milliken®, Pratt®, Singer®, and U.S. Pipe Valve & Hydrant. Please see www.muellerwp.com/about to learn more.

MUELLER

Copyright © 2018 Henry Pratt Company, LLC. All Rights Reserved. All Rights Reserved. The trademarks, logos and service marks displayed in this document are the property of Mueller Water Products, Inc., its affiliates or other third parties. Products above marked with a section symbol (§) are subject to patents or patent applications. For details, visit www.mwppat.com. These products are intended for use in potable water applications. Please contact your Mueller Sales or Customer Service Representative concerning any other application(s).

PRIMARY FLUID SYSTEM

ACCUDRAW PVC SERIES, CALIBRATION CYLINDER

LEFT BLANK

ACCUDRAW® PVC Calibration Instructions

Note: Before starting either of the calibration procedures below, ensure that the pump is primed and void of any trapped air.

Using the USGPH scale: (scale is based on **time**, in one (1) minute volume discharge)

1. Fill the calibration to the top "0" mark on the USGPH scale.
2. Close isolation valve (#2) from supply tank, open isolation valve (#1) below cylinder and start the pump.
3. Use a stopwatch to measure the time of one (1) minute (60 seconds) and record the volume dispensed by the metering pump, using the draw down scale.
4. Adjust the pump volume control higher or lower to meet with your desired output.
5. Repeat above steps 1 through 4, until the desired output is met.
6. Divide the measured USGPH number by 60 to determine the **USGPM volume**, if required.

If you wish to shorten the time of dispensing for calibration by one half (1/2) or one quarter (1/4), you must multiply the measured volume by the same number used to divide the time by.

e.g. 10 USGPH in 1 minute equals
5 USGPH X 2 in 30 seconds or
2.5 USGPH X 4 in 15 seconds

Using the ml scale: (scale is based on **volume** pumped, over any given time)

1. Fill the calibration cylinder to the top "0" mark on the ml scale.
2. Close isolation valve (#2) from supply tank, open isolation valve (#1) below cylinder and start the pump.
3. Use a stopwatch to measure the time it takes to pump down a given volume (ml) in 60 seconds.
4. Multiply the volume by 60 to determine the **ml per hour** volume, if required.
5. Adjust the pump volume control higher or lower to meet with your desired output.
6. Repeat above steps 1 through 5, until the desired output is met.

If you wish to shorten the time of dispensing for calibration by one half (1/2) or one quarter (1/4), you must multiply the volume by the same number used to divide the time by to determine ml per minute or hour.

e.g. 100 ml in 60 seconds equals
50 ml X 2 in 30 seconds or
25 ml X 4 in 15 seconds

Typical Installations ("A" and "B")

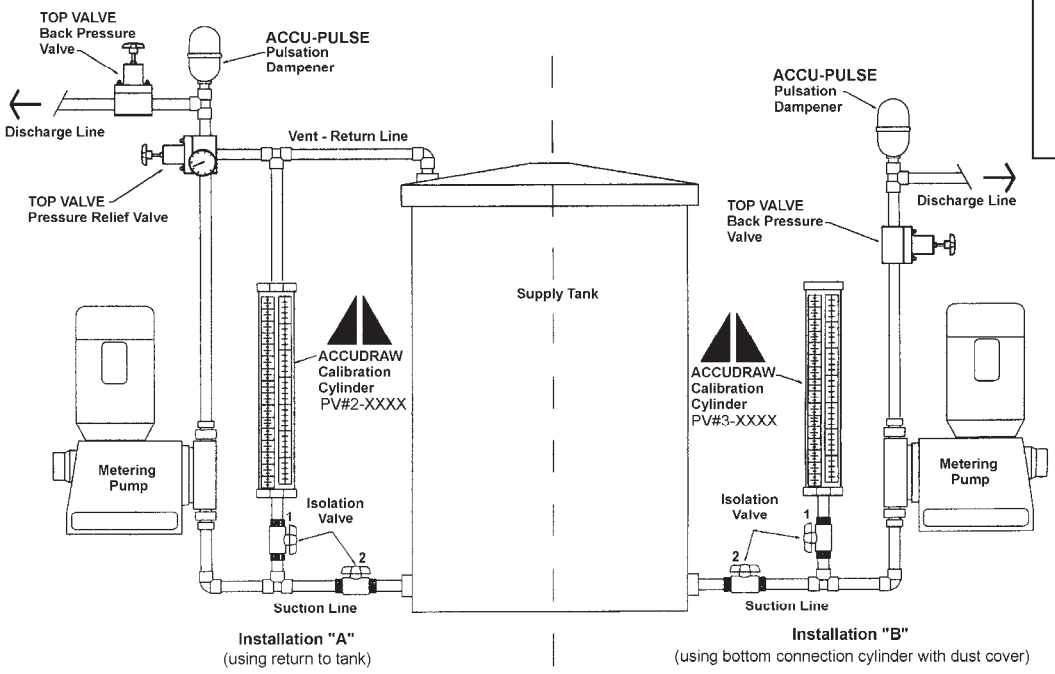

Conversion Factors
1ml = 1 cc
1000 ml – 1 liter
ml/sec x 60 = ml/min
1 US gal/min x 0.063 = liters/sec
1 US gal = 3.786 liters

Caution:
Do not use as a Pressure Vessel.

PRIMARY FLUID SYSTEMS INC.

Call Toll Free 1-800-776-6580
Tel: (905) 333-8743 Fax: (905) 333-8746

E-Mail: primary@ primaryfluid.com
www.primaryfluid.com

® Registered Trade Mark of Primary Fluid Systems Inc.

Metering Pump Accessories Save $$$$

Prevent unsafe and inefficient systems by design.

ACCUDRAW Calibration Cylinders

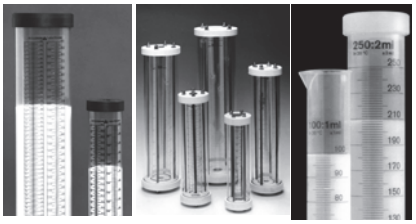

PVC **Glass** **Poly**

- *PVC, glass, polypropylene*
- *translucent, chemical resistant*
- *coloured graduations and lettering*
- *threaded or socket connections*
- *standard sizes 100 ml to 20,000 ml*

Custom built in other sizes and materials.

TOP VALVE Back Pressure/Pressure Relief



- *long life diaphragm*
- *range of 0 – 150 PSIG*
- *air release, optional gauge port*
- *PVC, CPVC, PVDF, Teflon, polypropylene, stainless, Alloy 20 and Hastelloy C*
- *7 sizes ¼" – 2" NPT*
- *colour coded handles indicate size*

Designed to enhance the <u>accuracy</u> and <u>safety</u> of your metering pumps.

ACCU-PULSE
Pulsation Dampeners



Designed to remove pulsating flows from positive displacement pumps.

- *increase system efficiency and pump life*
- *decrease maintenance and costs*
- *protect pipes, meters, valves and instrumentation from pulsation and vibration*
- *ensure meter accuracy, longevity and repeatability*
- *prevent foaming and splashing*
- *extensive range of materials and sizes*
- *lightweight, compact design*

Typical Metering Pump System

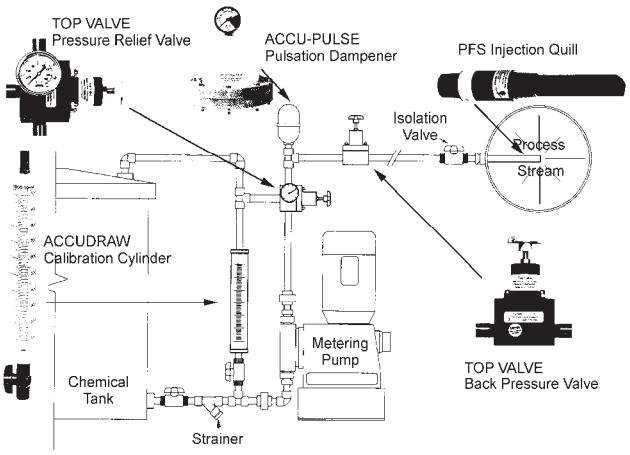

AutoCad drawings available from our web site.
Visit www.primaryfluid.com

PFS Injection Quills



Designed to inject chemical into the center stream of process.

- *provides for a more homogenous mix in the pipeline*
- *built-in checks to prevent back siphoning*
- *2 sizes 6" and 8" length*
- *PVC, CPVC, PVDF, polypropylene, stainless and Hastelloy C*
- *pressure to 3000 PSIG*
- *temperature to 260°C (500°F)*

Custom built in other sizes and materials.

Accu-Vent

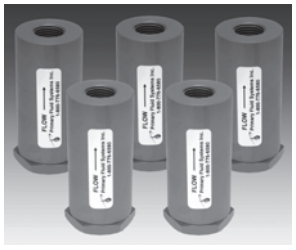

Designed to automatically vent gases and vapours.

- *vents gases and vapors released from Sodium Hypochlorite, Sulfuric Acid & Hydrogen Peroxide*
- *CPVC (Corzan) and Viton corrosion resistant wetted materials of construction*
- *specially designed float material automatically vents built up gases on system start up and under working pressure*
- *standard 1/2" or 3/4" NPT threaded connections or optional socket weld*
- *available in other materials*

PFS Corporation Stops



Designed to inject chemical into the center stream of process.

- *isolation valve allows for ease of maintenance*
- *available in 6 materials of construction*
- *wetted components have comparable or greater chemical resistance than quill construction material*
- *standard and custom lengths available*
- *connection in NPT, metric or flanged*

Custom built in other sizes & materials.

Call Toll Free 1-800-776-6580
Tel: (905) 333-8743 Fax: (905) 333-8746

RITE CORPORATION

MODEL V0415XEZ205, CHECK VALVE

LEFT BLANK

Ritepro Corporation

A SUBSIDIARY OF / UNE FILIALE DE BRAY INTERNATIONAL INC.

INSTALLATION AND MAINTENANCE MANUAL

FOR

CHECK RITE WAFER TYPE SWING CHECK VALVES

MI-200

SIZES 1½" - 42"

ANSI SERIES: 125 - 2500

MODELS 201, 202, 203, 205, 210, 211, 212, 260, 262

10 August 2005

Ritepro Corporation, 12200 Albert Hudon, Montreal, Quebec, Canada, H1G 3K7
Tel: (514) 324-8900 ! Fax: (514) 324-9525
Web Site: www.ritepro.com ! Email: sales@ritepro.com

Table of Contents

Subject		***Page***
1.0	Introduction to Check Rite Wafer Type Swing Check Valves	2
2.0	Description of Check Rite Valves	2
3.0	Dis-Assembly and Assembly Instructions for Check Rite Wafer Type Swing Check Valves	4
4.0	Installation Instructions	6
5.0	Maintenance Requirements and Information	7
6.0	Check Rite and Spool Installation	8
7.0	Nameplates	8
	Serial Number	8
	Figure Number	8
8.0	Safety Warnings	9
9.0	Non Shock Pressure -Temperature Ratings	10
	Cast Iron (ASTM A126-CLB)	10
	Ductile Iron (ASTM A395)	10
	Carbon Steel (ASTM A216-WCB)	10
	Stainless Steel (ASTM A351-CF8M)	11

Illustrations

2" - 12" Series 125/150/300 Model 210		12
14" - 42" Series 125/150 Model 210		13
Stud Dimensions E-8 ANSI Series 125 - 1500		14
Spool Dimensions E-9 ANSI Series 125 / 150 / 300		15
2" - 12" Series 150 / 300 Model 262... .		16

1.0 Introduction to Check Rite Wafer Type Swing Check Valves

Modern piping applications demand better features, performance and economy in a check valve.

Features:

- Simplicity
- Compactness
- Minimum Weight

Performance Characteristics:

- Silent operation
- Non Slamming
- Rapid Response
- Low Pressure Drop
- Bubble Tight Shut-Off

A combination of these features and performance characteristics ensure long service life as characterized by Check Rite.

2.0 Description of Check Rite Valves.

Check Rite valves consist of a compact Body (1) with a single plate Disc (12) attached to a Hinge (2) which in turn is supported by a Hinge Pin (7) inside an off-center body cavity.

The Disc is mechanically biased to the closed position by a torsional Spring (5) located between the two hinge lugs. The Hinge Pin (7) is retained by two NPT Pipe Plugs (8) inside the Body (1). The Seat (3) can be:

- Metal to Metal
- Metal to Buna, Viton or Teflon

An Eyebolt (10) located on the top of the Check Rite valve aids for easy installation.

The Nameplate (11) located on the top pad specifies:

- Size
- Serial Number
- Figure Number (Pressure Class and Materials)
- Ritepro Corporation

Check Rite valves are designed to open when a pressure of less than 1 psi (.07 bar) is applied across the face of the Disc (12).

Check Rite valves are provided for installation inside the bolt circle and between standard flanges, using flat faced asbestos gaskets or as specified.

Check Rite valves are normally installed with the Eyebolt pointing vertically upwards in a horizontal run of pipe, with the arrow on the Body pointing in the direction of flow.

> For vertical pipe run applications, the flow direction is the only orientation required in a straight length of pipe.

All Check Rite valves are hydrostatically tested in accordance with MSS-SP-61 test procedures and zero leakage criteria.

In addition a "Zero Head Leakage" test is performed, where the Check Rite valves are placed in a horizontal position (see sketch) with the flow direction pointing vertically upwards.

An internal hydrostatic pressure equivalent to the head of water which can be retained within the downstream portion of the valve body is applied. During this one hour test, no leakage is allowed.

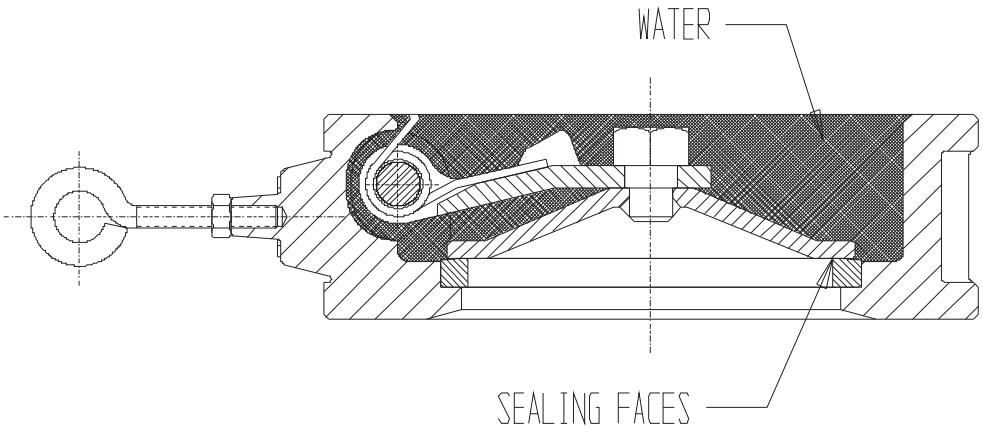

Check Rite valves are manufactured to high quality levels as specified in the applicable standards such as ANSI, MSS, API and CSA.

Check Rite valves in sizes 14" to 42" in classes 125 to 300 and all sizes in the higher pressure classes have a different Hinge-Disc connection which is illustrated on the applicable Specification Sheets.

The standard connection for small valves 2" to 12" classes 125 to 300 is a welded assembly, by means of a Shoulder Pin (4) passing through the Hinge (2) and Seal-welded to the Disc (12). In the larger sizes and higher pressure classes, the Disc (12) is assembled to the Hinge (2) with a Nut (15) and secured by welding.

A heavy duty Hinge (2) is available for valves sizes 2" to 24" in which the Disc (12) is attached to the Hinge (2) with a Nut (15) and a weld is used to secure the components. This is the Model 260-262 valve. All other dimensions, maintenance procedures, and O-Ring sizes apply as stated in this manual.

3.0 Dis-Assembly and Assembly Instructions for Check Rite Wafer Type Swing **Check Valves**

The simple design of the Check Rite valve permits for easy assembly and disassembly.

The following assembly procedure applies to all Check Rite valves.

To Dis-assemble the valve:

a) Place the Body (1) in a horizontal position with the disc assembly showing.
b) Remove the Plugs (8) on either side of the Body (1).
c) Hold the Spring (5) in position and slide the Pin (7) out of the Body (1).
d) Slowly release the pressure on the Spring (5) and remove it from the valve.
e) The Hinge-Disc Assembly can now be lifted from the Body (and disassembled, if required, on large sizes).
f) Remove the Spacers (6).
g) Remove the O-Ring (14) if required.

To re-assemble the valve:

a) Clean all parts with Varsol or other acceptable solvent.
b) Place the Body (1) in a horizontal position with the seating face pointing upwards.
c) If required, insert O-Ring (14) in the seat groove. (See next page for installation instructions).
d) Place the Hinge-Disc Assembly (2,12) in the body cavity.
e) Insert the Pin (7) through the plug hole on either side of the Body and slide a Spacer (6) in between the Body (1) and adjacent hinge lug.
f) Press Torsion Spring (5) between the hinge lugs and body cavity, then advance the Pin (7) through the Spring (5) and the second hinge lug.
g) Slide the second Spacer (6) between the Body and hinge lug and advance the Pin (7) into the Body (1).

Position the Hinge Pin (7) central to the valve body prior to the installation of the retaining Plugs (8).

h) Check that the torsion spring ends are seated properly.
i) Apply Teflon tape or sealing compound on retaining Plugs (8), install Plugs and tighten both sides with an Allen key.

j) **Check:**

aa) that the valve opens and closes freely.

bb) that adequate freedom of movement of the Shoulder Pin-Disc connection is provided for the disc to adapt a self-aligning position with the seat.

IMPORTANT-INSERT O-RING AS FOLLOWS

aa) Place O-Ring (14) on top of seat groove.

bb) To prevent looping, insert the O-Ring as shown by pressing the O-Ring into the groove in the following numerical sequence.

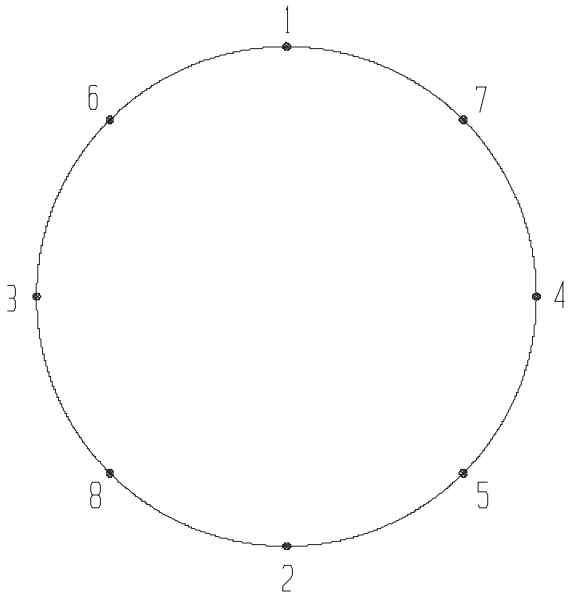

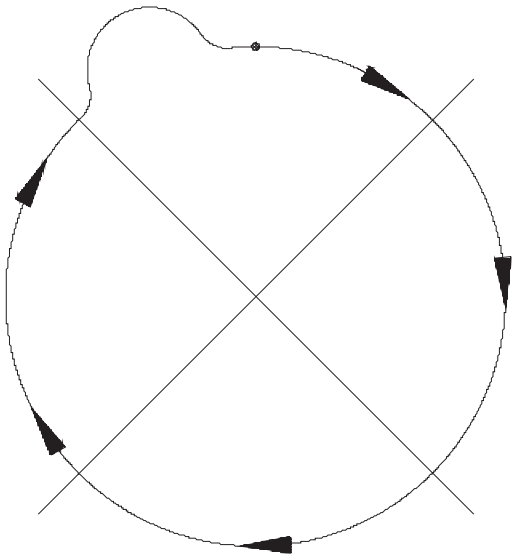

Right Wrong

cc) Having engaged the O-Ring in the groove according to the above illustration, proceed to smooth out the O-Ring using thumb pressure.

It is important to smooth out the O-Ring so that there are no visible ripples or loops.

It should be noted that the O-Ring groove is slightly larger than the O-Ring and it follows that the O-Ring must be hoop stretched to engage the groove.

4.0 Installation Instructions

The stud selection sheet (Specification Sheet E-8) shows the ease with which Check Rite valves are installed.

The valve is inserted between two companion flanges with gaskets on the contact faces. Studs are installed, which will span the valve, and tightened in the same manner as any flange connection.

The Check Rite valve outside diameter is designed to locate the valve in the same centerline as the companion flanges when mounted inside the studs.

The normal installation of a Check Rite valve is for horizontal flow with the hinge pin (7) in the horizontal upper position, or for vertical flow, with the flow direction upwards.

When removing a Check Rite valve from the line, only one half of the studs need to be removed and the others loosened.

IMPORTANT:

1) Check the flow arrow on the body before inserting the Check Rite valve between the flanges.

2) Pipeline flanges must be parallel and have the same pressure class rating as the valve.

3) There must be no obstructions in the flange or pipe bore as this would prevent the valve from opening fully.

If slip-on flanges are used, make sure that no weld projects into the pipe bore.

5.0 Maintenance Requirements and Information

No periodical maintenance work is required for Check Rite valves. For replacement of O-Rings refer to Section 3.0, "Assembly and Dis-assembly of Check Rite Valves".

The standard O-Ring numbers, Plug sizes and Allen key sizes for class 125/150/300 are listed below for valves 2"-42". For other classes, contact the factory.

Valve Size	*O-Ring Size S/N 82*	*O-Ring Size S/N 88*	*Plug Size NPT*	*Allen Key Size*
2"	127	128	1/4"	1/4"
2.5"	133	133	1/4"	1/4"
3"	141	141	3/8"	5/16"
4"	235	235	3/8"	5/16"
5"	243	242	3/8"	5/16"
6"	249	248	3/8"	5/16"
8"	260	259	1/2"	3/8"
10"	368	368	1/2"	3/8"
12"	448	447	3/4"	9/16"
14"	449		3/4"	9/16"
16"	453		3/4"	9/16"
18"	455		3/4"	9/16"
20"	458		1"	5/8"
24"	462		1"	5/8"
30"	471		1 1/2" *	1 1/4" *
36"	473		1 1/2" *	1 1/4" *
42"	3/8 x110"		2" *	1 5/16" *

* Square Head Plug

6.0 Check Rite and Spool Installation

As shown on Specification Sheet E-9, when a standard flanged valve is replaced with a wafer valve, a spool piece can be inserted with the Check Rite valve to obtain the required face to face dimension.

The installation instructions in Section 4.0 above apply.

7.0 Nameplates

Serial Number

The serial number gives the style of the valve internals and the date of manufacture of the valve.

The valve internals are based on either model 210 or 212. The first two digits of the serial number give the model.

82	Model 210
88	Model 212

For standard valves, the date of assembly is included in the Serial Number stamped on the nameplate attached to the valve. The last four digits of the serial number are the month and year of manufacture.

For UL/FM valves, the serial number is specified by UL and can be any numeric value. These valves are identified by the red paint and a special nameplate is used which includes the UL and FM logos. These valves are always based on Model 212.

A unique serial number is given to all special valves (not UL/FM). For special valves (including UL/FM) the month and year of manufacture are either stamped on the nameplate or on the exterior diameter of the flange, depending on valve size.

Figure Number

The figure number consists of at least five alphanumeric characters. The first two give the class of the valve. The next three give the principle materials of construction.

If the valve has a special model number, ie Model 260, this is stamped at the end of the code or if space prohibits this, then either underneath the code or on the outside diameter of the flange. The table on the following page explains the codes used.

UL/FM valves have either 212 or 312 for a figure number. The materials of construction are always cast iron body, buna seat, stainless internals and Teflon spacer. The applicable specification sheet gives more detailed information.

Valve Class	125	150	300	600	900	1500
Code	12	15	30	60	90	150

Body Material	Cast Iron	Ductile Iron	Steel	Stainless Steel
Code	C	D	S	X

Seat Material	Buna N	EPDM	Stainless Steel	Viton
Code	B	E	M	V

Spacer Material	Teflon	Bronze	Stainless Steel
Code	T	Y	Z

For example a class 150 check valve with a ductile iron body, stainless steel seat and Teflon spacers would be stamped: **15DMT**

8.0 Safety Warnings

1. The valve must be installed in the correct line size between flanges of the correct class.
2. The valve materials of construction must be compatible with the fluids being handled.
3. Pressures and temperatures must be kept within the limits specified by the appropriate ANSI standard, ie: B16.1, B16.34, B16.42, or within the limits specified by the particular design. These values are given on the following pages.
4. An arrow on the body indicates the direction of flow through the valve. The valve must be installed with the arrow pointing in the correct direction.
5. For flow in the horizontal direction, the valve shall be installed with the Pin in the horizontal upper position with the eye bolt pointing vertically upwards.
6. The valve must be installed in the correct location in the pipeline. The disc must not open into or against other piping components such as valves, elbows, or tees. For the best performance and life of the valve, a minimum of 10 pipe diameters of straight pipe upstream and downstream of the valve is suggested. Any reduction in this length upstream of the valve reduces the life of the valve proportionally.
7. Plugs must not be removed from the valve while the pipeline is under pressure.
8. Flow rates must be within acceptable limits. Too high a rate may cause extreme pressure drops and erosion of the components. Too low a flow may cause the disc assembly to oscillate and cause wear which may lead to premature failure of the internals.
9. Care should be taken in handling the valve. Mishandling may lead to damage of the sealing components or damage to the externals.
10. Disturbed flow will reduce greatly the life of the valve. Best practice should have 5 straight pipe diameter upstream and 3 downstream.

9.0 Non Shock Pressure -Temperature Ratings

All temperatures in °F and pressures in psi.

Cast Iron (ASTM A126-CLB) **Ratings from ANSI B16.1.**
Class 125

	Temperature											
Size	**-20 to 150**	**200**	**225**	**250**	**275**	**300**	**325**	**353**	**375**	**406**	**425**	**450**
1"-12"	200	190	180	175	170	165	155	150	145	140	130	125
14"-24"	150	135	130	125	120	110	105	100				
28" to 48"	150	115	100	85	65	50						

Ductile Iron *(ASTM A395)* ***Ratings from ANSI B16.42.***
Class 150

	Temperature						
Size	**-20 to 100**	**200**	**300**	**400**	**500**	**600**	**650**
2"-42"	250	235	215	200	170	140	125

Carbon Steel *(ASTM A216-WCB)*
Ratings from ANSI B16.34.
Permissible, but not recommended for prolonged usage above about 800°F.

	Pressure Class				
Temperature	**150**	**300**	**600**	**900**	**1500**
-20 to 100	285	740	1480	2220	3705
200	260	675	1350	2025	3375
300	230	655	1315	1970	3278
400	200	635	1270	1900	3170
500	170	600	1200	1795	2995
600	140	550	1095	1640	2735
650	125	535	1075	1610	2685
700	110	535	1065	1600	2665
750	95	505	1010	1510	2520
800	80	410	825	1235	2060
850	65	270	535	805	1340
900	50	170	345	515	860
950	35	105	205	310	515
1000	20	50	105	155	260

Stainless Steel *(ASTM A351-CF8M)*
Ratings from ANSI B16.34.

	Pressure Class				
Temperature	***150***	***300***	***600***	***900***	***1500***
-20 to 100	*275*	*720*	*1440*	*2160*	*3600*
200	*240*	*620*	*1240*	*1860*	*3095*
300	*215*	*560*	*1120*	*1680*	*2795*
400	*195*	*515*	*1030*	*1540*	*2570*
500	*170*	*480*	*955*	*1435*	*2390*
600	*140*	*450*	*905*	*1355*	*2255*
650	*125*	*445*	*890*	*1330*	*2220*
700	*110*	*430*	*865*	*1295*	*2160*
750	*95*	*425*	*845*	*1270*	*2110*
800	*80*	*415*	*830*	*1245*	*2075*
850	*65*	*405*	*810*	*1215*	*2030*
900	*50*	*395*	*790*	*1180*	*1970*
950	*35*	*385*	*775*	*1160*	*1930*
1000	*20*	*365*	*725*	*1090*	*1820*
1050		*360*	*720*	*1080*	*1800*
1100		*325*	*645*	*965*	*1610*
1150		*275*	*550*	*825*	*1370*
1200		*205*	*410*	*620*	*1030*
1250		*180*	*365*	*545*	*910*
1300		*140*	*275*	*410*	*685*
1350		*105*	*205*	*310*	*515*
1400		*75*	*150*	*225*	*380*
1450		*60*	*115*	*175*	*290*
1500		*40*	*85*	*125*	*205*

Illustrations

2" - 12" Series 125/150/300 Model 210
14" - 42" Series 125/150 Model 210
Stud Dimensions E-8 ANSI Series 125 - 1500
Spool Dimensions E-9 ANSI Series 125 / 150 / 300
ANSI Series 150/300 Model 262

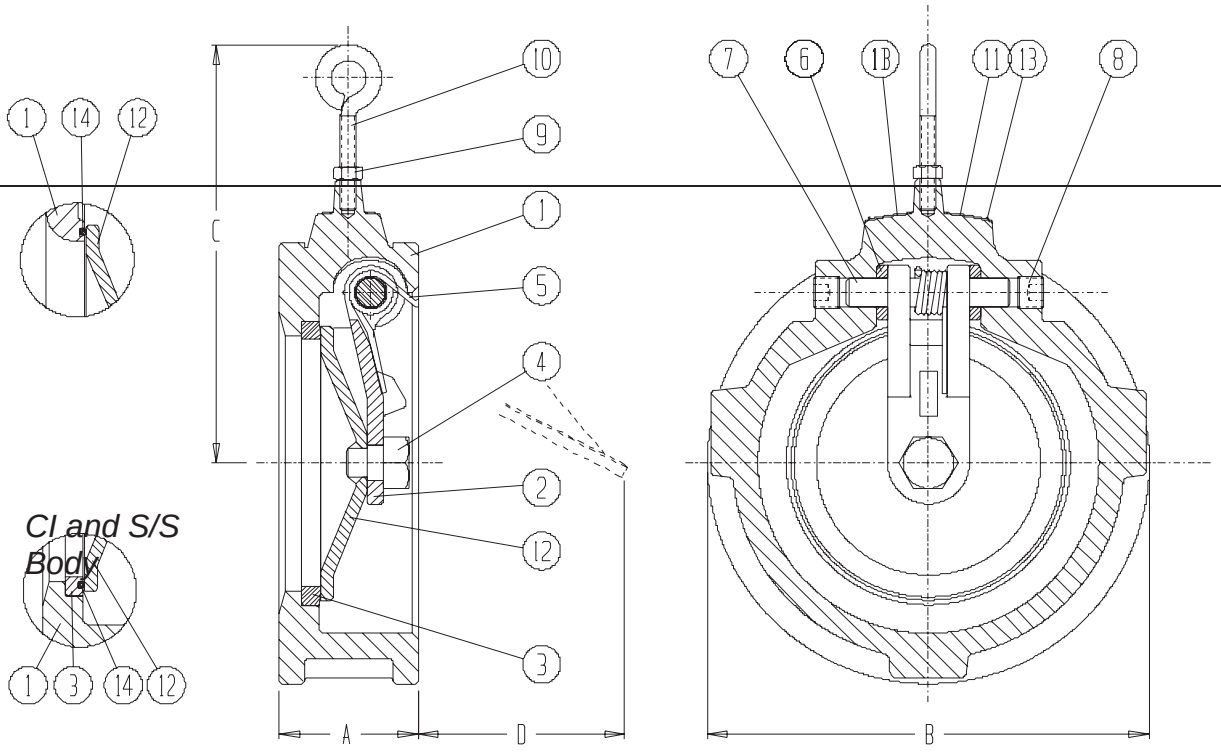

CI and S/S Body

DI and Steel Body

Item	Description	Standard Material
1	Body	ASTM A216-WCB
2	Hinge	ASTM A351-CF8M
3	Seat	ASTM A351-CF8
4	Shoulder Pin	ASTM A479-316
5	Spring	ASTM A313-316
6	Spacer	ASTM A479-316, Teflon
7	Pin	ASTM A479-316

Item	Description	Standard Material
8	Plug	Steel
9	Lock Nut	Steel Zinc Plated
10	Eye Bolt	Steel Zinc Plated
11	Name Plate	Aluminium
12	Disc	ASTM A240-316
13	Rivet	Steel Cad. Plated
14	O-Ring	Buna N, Viton, Teflon

Other body materials available: A126-CLB, A395, A351-CF8M, Monel, Alloy 20, Hastelloy, 254SMO.

Nominal Pipe Size		A		B Class 125/150		B Class 300		C		D		Weight	
Inch	mm	Inch	mm	Inch	mm	Inch	mm	Inch	mm	Inch	mm	lbs	kg
2	50	1.75 *	44.5	4.13	104.8	4.38	111.1	4.25	108	1.19	30	3.5	1.6
2 1/2	65	1.88 *	47.6	4.88	123.8	5.13	130.2	4.50	114	1.50	38	5.0	2.3
3	80	2.00 *	50.8	5.38	136.5	5.88	149.2	5.00	127	1.69	43	6.5	2.9
4	100	2.25	57.2	6.88	174.6	7.13	181.0	5.75	146	2.44	62	11	5.0
5	125	2.50	63.5	7.75	196.9	8.50	215.9	6.50	165	3.38	86	15	6.8
6	150	2.75	69.9	8.75	222.3	9.88	250.8	7.25	184	4.25	108	20	9.0
8	200	2.88	73.0	11.00	279.4	12.13	308.0	8.25	210	5.38	136	30	13.6
10	250	3.13	79.4	13.38	339.7	14.25	362.0	9.63	244	7.00	178	47	21.3
12	300	3.38	85.7	16.13	409.6	16.63	422.3	10.75	273	8.13	206	70	32

* Face to face for Cast Iron Class 125: 2": 2.13"
2½": 2.38"
3": 2.63"

Ritepro Corporation
A Subsidiary of Bray International, Inc

STANDARD SPECIFICATION SHEET
Check Rite Wafer Check Valves A-5
Series 125/150 Model 210
Date: 28 August 2001

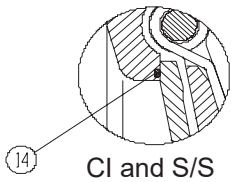

CI and S/S Body

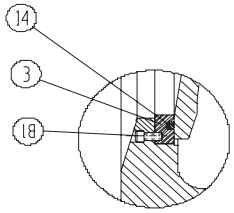

DI and Steel Body

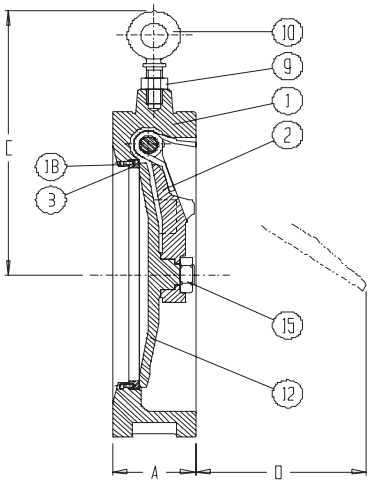

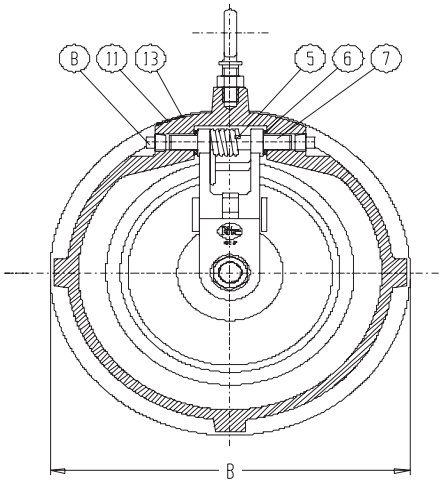

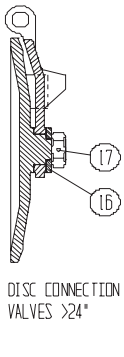

Item	Description	Standard Material
1	Body	ASTM A216-WCB *
2	Hinge	ASTM A216-WCB
3	Seat	ASTM A240-304
5	Spring	17-7PH Stainless
6	Spacer	ASTM A479-316
7	Pin	ASTM A479-316
8	Plug	Steel
9	Lock Nut	Steel Zinc Plated
10	Eye Bolt	Steel Zinc Plated

Item	Description	Standard Material
11	Name Plate	Aluminium
12	Disc	ASTM A351-CF8 **
13	Rivet	Steel Cad. Plated
14	O-Ring	Buna N, Viton, Teflon
15	Disc Nut	Steel
16	Disc Washer	Steel
17	Dowel Pin	Steel
18	SHCS	Steel

** 32" & Larger: A216-WCB with 304 overlay.

*Other body materials available: A126-CLB, A395, A351-CF8M, Monel, Alloy 20, Hastelloy, 254SMO.

Nominal Pipe Size		A		B		C		D		Weight	
Inch	*mm*	*Inch*	*mm*	*Inch*	*mm*	*Inch*	*mm*	*Inch*	*mm*	*lbs*	*kg*
14	*350*	*4.25*	*108.*	*17.6*	*447.*	*13.0*	*330*	*7.25*	*184*	*115*	*52*
16	*400*	*4.25*	*108.*	*20.1*	*511.*	*14.5*	*368*	*8.25*	*210*	*130*	*59*
18	*450*	*4.25*	*108.*	*21.5*	*546.*	*15.2*	*387*	*10.5*	*267*	*170*	*77*
20	*500*	*5.50*	*139.*	*23.7*	*603.*	*18.7*	*476*	*11.0*	*280*	*230*	*104*
24	*600*	*6.00*	*152.*	*28.1*	*714.*	*20.5*	*520*	*15.0*	*381*	*415*	*188*
28	*700*	*6.50*	*165.*	*32.5*	*825.*	*26.1*	*664*	*17.7*	*451*	*519*	*235*
30	*750*	*9.00*	*228.*	*34.6*	*879.*	*27.5*	*698*	*16.2*	*412*	*965*	*438*
32	*800*	*11.0*	*279.*	*36.7*	*933.*	*28.2*	*718*	*14.0*	*356*	*1150*	*522*
36	*900*	*11.5*	*292.*	*41.1*	*1044*	*30.0*	*762*	*18.2*	*464*	*1525*	*692*
42	*1050*	*12.0*	*304.*	*47.8*	*1216*	*33.2*	*844*	*28.0*	*712*	*2235*	*1014*

Ritepro Corporation
A Subsidiary of Bray International, Inc

STANDARD SPECIFICATION SHEET
Stud Dimensions E-8
ANSI Series 125 - 1500
Date: 20 April 2001

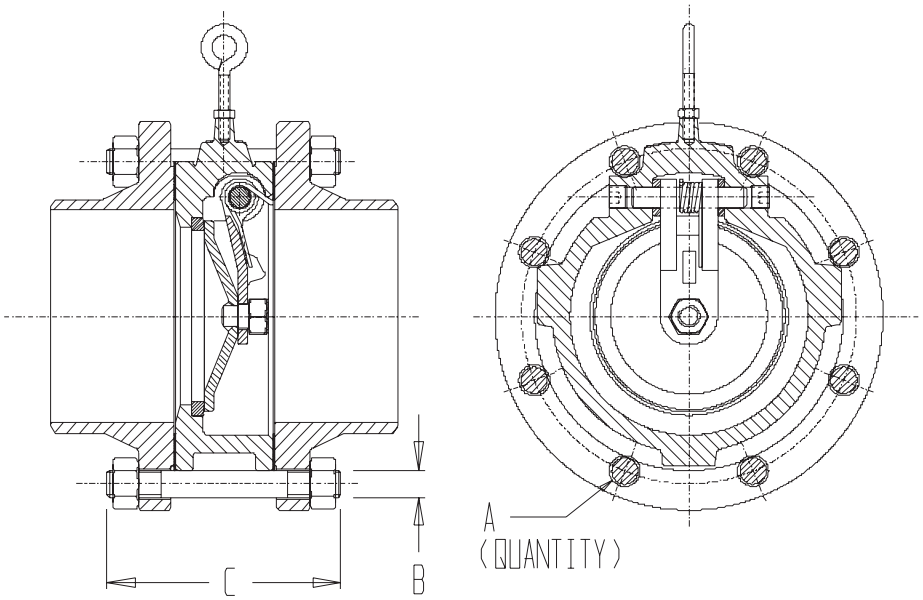

Nominal Pipe Size		Series 125 & 150			Series 250 & 300			Series 400		
		A	Stud Size B*C		A	Stud Size B*C		A	Stud Size B*C	
Inch	mm	Studs	Inch	mm	Studs	Inch	mm	Studs	Inch	mm
2	50	4	5/8*4.75	16*20	8	5/8*5.00	16*130	8	5/8*6.50	16*165
2 1/2	65	4	5/8*5.25	16*135	8	3/4*5.75	20*145	8	3/4*7.25	20*185
3	80	4	5/8*5.50	16*140	8	3/4*6.00	20*155	8	3/4*7.75	20*200
4	100	8	5/8*5.75	16*145	8	3/4*6.50	20*165	8	7/8*8.50	22*220
5	125	8	3/4*6.25	20*160	8	3/4*7.00	20*180			
6	150	8	3/4*6.50	20*165	12	3/4*7.50	20*190	12	7/8*11 .25	22*285
8	200	8	3/4*7.00	20*180	12	7/8*8.25	22*210	12	1*13.00	24*330
10	250	12	7/8*7.75	22*200	16	1*9.25	24*235	16	1 1/8*15.75	28*400
12	300	12	7/8*8.00	22*205	16	1 1/8*10.00	28*255	16	1 1/4*17.00	32*435
14	350	12	1*9.25	24*235	20	1 1/8*14.00	28*280			
16	400	16	1*9.50	24*245	20	1 1/4*14.75	32*295			
18	450	16	1 1/8*10.25	28*260	24	1 1/4*15.50	32*300			
20	500	20	1 1/8*11.50	28*295	24	1 1/4*16.75	32*345			
24	600	20	1 1/4*12.75	32*325	24	1 1/2*17.75	38*385			
30	750	28	1 1/4*18.00	32*460						
36	900	32	1 1/2*19.50	38*495						
42	1050	36	1 1/2*20.50	38*520						

Nominal Pipe Size		Series 600			Series 900			Series 1500		
		A	Stud Size B*C		A	Stud Size B*C		A	Stud Size B*C	
Inch	mm	Studs	Inch	mm	Studs	Inch	mm	Studs	Inch	mm
2	50	8	5/8*6.50	16*165	8	7/8*9.50	22*245	8	7/8*9.50	22*245
2 1/2	65	8	3/4*7.25	20*185	8	1*9.50	24*245	8	1*9.50	24*245
3	80	8	3/4*7.75	20*200	8	7/8*9.00	22*230	8	1 1/8*10.25	28*260
4	100	8	7/8*8.75	22*225	8	1 1/8*10.75	28*275	8	1 1/4*11.75	32*300
6	150	12	1*12.00	24*305	12	1 1/8*14.00	28*360	12	1 3/8*16.50	35*420
8	200	12	1 1/8*14.00	28*360	12	1 3/8*16.75	35*425	12	1 5/8*19.50	35*495
10	250	16	1 1/4*16.75	32*425	16	1 3/8*18.75	35*480	12	1 7/8*23.50	48*600
12	300	20	1 1/4*17.50	32*435	20	1 3/8*21.50	35*545	16	2*27.00	50*685

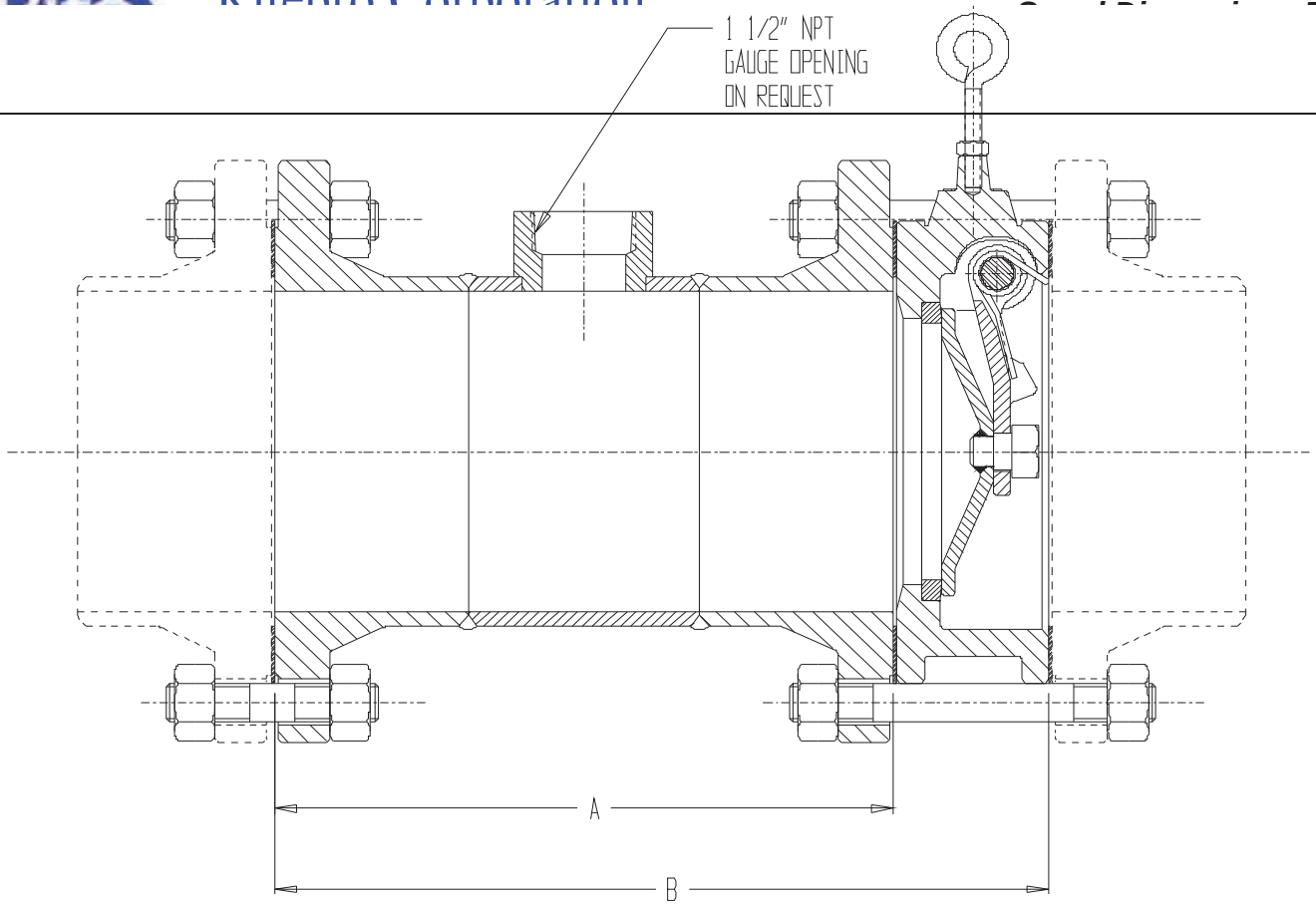

Nominal Pipe Size		Series 150				Series 300			
		A		B		A		B	
Inch	mm	Inch	mm	Inch	mm	Inch	mm	Inch	mm
2	50	6.19*	157*	8.0	203	8.69	221	10.5	267
2 1/2	65	6.56*	167*	8.5	216	9.56	243	11.5	292
3	80	7.44*	189*	9.5	241	10.44	265	12.5	318
4	100	9.19	233	11.5	292	11.69	297	14.0	356
5	125	10.44	265	13.0	330	13.19	335	15.75	400
6	150	11.19	284	14.0	356	14.69	373	17.5	445
8	200	16.56	421	19.5	495	18.06	459	21.0	533
10	250	21.31	541	24.5	622	21.31	541	24.5	622
12	300	24.06	611	27.5	699	24.56	624	28.0	711
14	350	26.69	678	31.0	787	25.69	652	33.0	838
16	400	29.69	754	34.0	864	26.44	672	34.0	864
18	450	34.19	868	38.5	978	30.44	773	38.5	978
20	500	32.94	837	38.5	978	31.31	795	40.0	1016
24	600	44.96	1141	51.0	1295	44.18	1122	53.0	1346
30	750	50.94	1294	60.0	1524				
36	900	65.44	1662	77.0	1956				

Dimension "B" corresponds to ANSI B16.10.

Nominal Pipe Size	Series 125	
	A	
Inch	Inch	mm
2	5.81	148
2 1/2	6.06	154
3	6.81	173

Remaining dimensions same as Series 150.

Ritepro Corporation
A Subsidiary of Bray International, Inc

STANDARD SPECIFICATION SHEET
Check Rite Wafer Type Swing Check Valve
ANSI Series 150/300 Model 262
Date: 21 April 2005

Designed to meet ANSI 16.34.

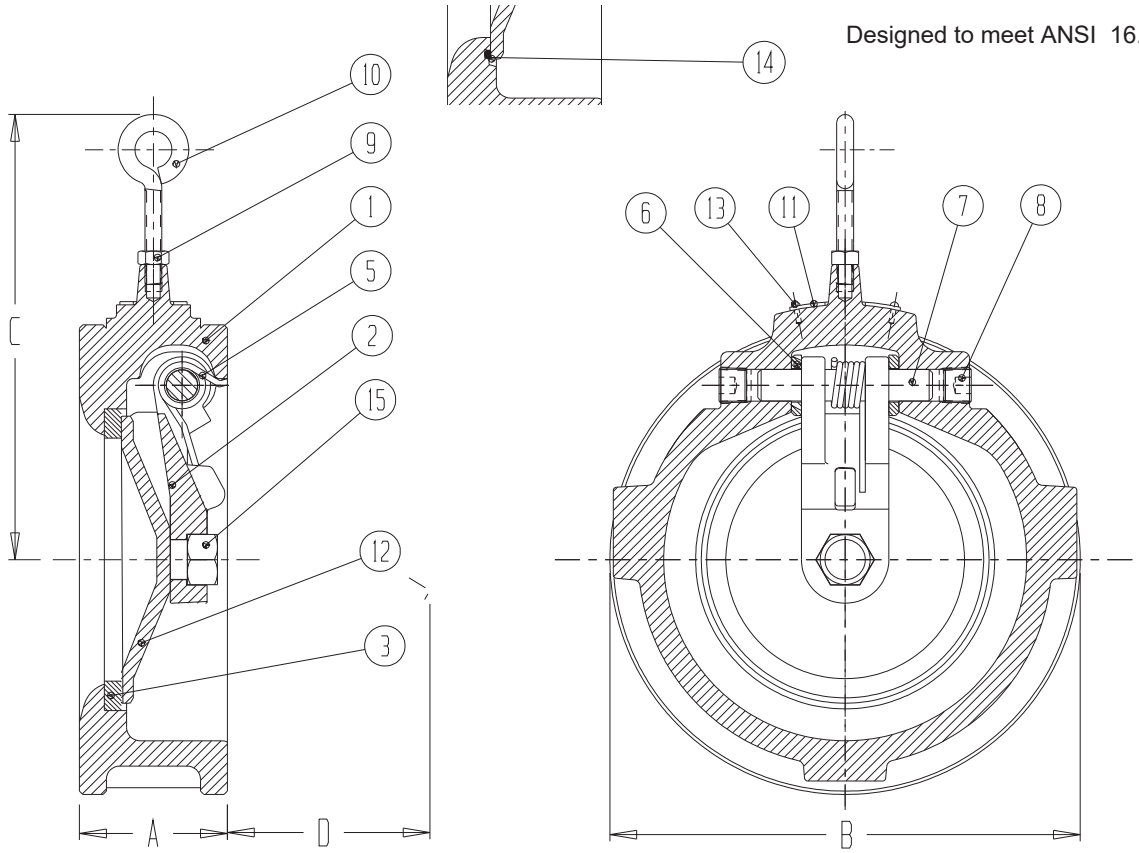

Item	Description	Standard Material
1	Body	ASTM A216-WCB
		ASTM A351-CF8M
		ASTM A395
2	Hinge	ASTM A351-CF8M
3	Seat	ASTM A240-304
5	Spring	ASTM A313-316
6	Spacer	ASTM A479-316
		TEFLON
7	Pin	ASTM A479-316

Item	Description	Standard Material
8	Plug	Steel
9	Lock Nut	Steel Zinc Plated
10	Eye Bolt	Steel Zinc Plated
11	Name Plate	Aluminium
12	Disc	ASTM A351-CF8M
13	Rivet	Steel Cad. Plated
14	O'ring	Buna, Viton , Teflon
15	Disc Nut	Stainless Steel

Nominal Pipe Size		A		B Class 150		B Class 300		C		D		Weight	
Inch	mm	Inch	mm	Inch	mm	Inch	mm	Inch	mm	Inch	mm	lbs	kg
2	50	1.75	44.5	4.13	104.8	4.38	111.1	4.25	108	1.19	30	3.5	1.6
2 1/2	65	1.88	47.6	4.88	123.8	5.13	130.2	4.50	114	1.50	38	5.0	2.3
3	80	2.00	50.8	5.38	136.5	5.88	149.2	5.00	127	1.69	43	6.5	2.9
4	100	2.25	57.2	6.88	174.6	7.13	181.0	5.75	146	2.44	62	11.6	5.3
5	125	2.50	63.5	7.75	196.9	8.50	215.9	6.50	165	3.38	86	15.5	7.0
6	150	2.75	69.9	8.75	222.3	9.88	250.8	7.25	184	4.25	108	20.6	9.4
8	200	2.88	73.0	11.00	279.4	12.13	308.0	8.25	210	5.38	136	33.0	15.0
10	250	3.13	79.4	13.38	339.7	14.25	362.0	9.63	244	7.00	178	48.5	22.0
12	300	3.38	85.7	16.13	409.6	16.63	422.3	10.75	273	8.13	206	72.8	33

SCHUTTE & KOERTING

FIGURE 264, EDUCTOR

LEFT BLANK

Schutte & Koerting

Water Jet Eductors

Introduction

The Water Jet Eductor is a type of ejector which utilizes the kinetic energy of a pressurized liquid to entrain another liquid, mix the two, and discharge the mixture against a counter pressure. Ejectors of this type are used throughout industry for pumping and mixing operations.

Application

Water jet eductors have numerous uses in the plant such as lifting, pumping, mixing and agitation of liquids, granular solids and slurries. Some specific applications are: draining flooded areas, emptying tanks and sumps, pumping and mixing operations in oil treating systems, dewatering sand and coal barges, introducing anti-knock agents and coloring additives into gasoline, continuous blending, acidifying, causticizing of oils, producing emulsions, pumping food products, pumping sand and filter clay, tank mixing, and various proportioning operations. As an example of eductor performance in a typical use, a jet eductor measuring 8½" in length will empty a 500 gallon water tank in less than half an hour, using water at 60 psig, as the sole source of motive power.

Features

Self Priming Eductors require no priming and can be used for either continuous or intermittent operation.
Simple and Reliable Since the basic eductor has no moving parts to wear or break, only periodic inspection is required.
Corrosion and Erosion Resistant Because they can be made from most materials, or coated with corrosion resistant materials, eductors can be made resistant to the corrosive effects of the liquids handled and the environment.
Automatic Control Units can be adapted for automatic operation by means of a regulating spindle or a snap valve and float arrangement.
Non-Electrical Eductors can be used in hazardous locations where electrically operated alternatives would require expensive explosion-proofing.
Easy to Install Either threaded or flanged connections are available. Units are compact, relatively light and can be adapted to a variety of piping configurations.
Low Cost Water eductors are inexpensive in relation to the work they do.

Construction

Water Jet Eductors consist of only three basic components: a converging nozzle, a diffuser (or venturi) and a body to hold these parts in their proper relative positions and provide a suction chamber.



Converging Nozzle | Diffuser (or Venturi) | Body - holds diffuser and nozzle in position

Jet ejectors can be made from most workable materials, such as: cast iron, bronze, stainless steel, aluminum, polyvinyl chloride, polyester fiberglass, Phenolic Fiberglass Reinforced Plastic (FRP), Teflon[2] and Hastelloy[3].

A variety of types and sizes are available as noted on the following pages. Certain variables such as pressure, temperature, viscosity, density, operating conditions of suction and discharge fluids, and desired results must be considered in determining the type of eductor best suited to your needs. S&K engineers will work with you to select the proper eductor for your application.

Request Performance Data Supplement 2M for operating characteristics of water jet eductors.

Index

Description	Page
Fig. 264 Water Jet Eductor	2
Fig. 266 Water Jet Eductor	2
Fig. 264 PVC and Kynar Water Jet Eductor	3
Fig. 2645 Automatic Eductor	4
Fig. 265 Liquid Jet Eductor	5
Fig. 242 Condensate and Mixing Eductor	6
Fig. 258 Tank Mixing Eductor	7
Fig. 268 Tank Mixing Eductor	7
Fig. 254 Hopper-Equipped Eductor	9
Fig. 267 Hopper-Equipped Eductor	9
Fig. 227 Hopper-Equipped Eductor	9
Fig. 224 Water Jet Sand and Mud Eductor	10
Fig. 235 Annular Multi-Nozzle Water Jet Eductor	11
Fig. 222 Portable Eductor	12
Fig. 212 Corrosion Resistant Eductor	12
Typical Applications of S&K Water Jet Eductors	12

Fig. 264 and Fig. 266 Water Jet Eductors

S&K Fig. 264 and Fig. 266 Water Jet Eductors are designed for liquid pumping and mixing operations and for the handling of some solids where requirements do not necessitate capacities greater than those obtained with sizes up to and including 6". They are considered the standard eductors within this size range. Typical applications begin on page 12.

In operation, pressure liquid enters the eductor through the pressure nozzle and produces a high velocity jet. This jet action creates a vacuum in the line which causes the suction liquid to flow up into the body of the eductor where it is entrained by the pressure liquid. Both liquids are thoroughly mixed in the throat of the eductor and are discharged against back pressure. The streamlined body with no pockets permits the pressure liquid to move straight through the eductor and reduces the possibility of solids in the suction material collecting and clogging. In addition, pressure drop in the suction chamber is held to a minimum.

Accompanying Bulletin 2M Supplement Performance Data provides performance information.

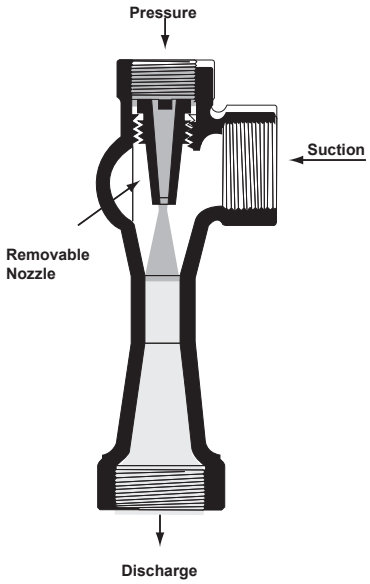

Fig 1. FIG. 264 EDUCTOR
Eductors of this type have streamlined bodies with threaded pipe connections. They are made in sizes ranging from 1/2" to 3" and are stocked in these sizes in ductile iron and bronze and Fig. 316 stainless steel. They are stocked in sizes from 1/2", 2", and 3" in PVC. Other materials are available on order.



Fig. 2. FIG. 264 EDUCTOR

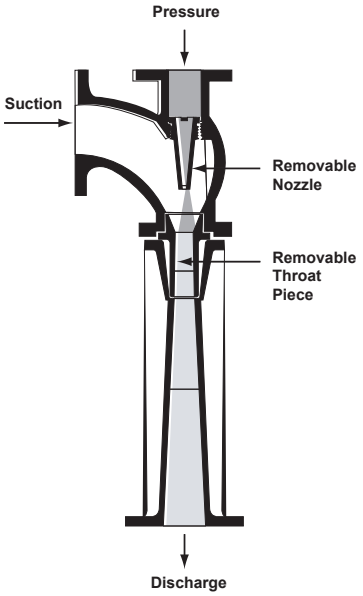

Fig. 3. FIG. 266 EDUCTOR.
These eductors are similar to Fig. 264 Eductors except that they have flanged connections and removable throat bushings along with removable nozzles. They are supplied in cast iron, bronze-mounted in 4" and 6" sizes. Other materials can be supplied on special order.

Table 1. Sizes and Dimensions, Fig. 264 and Fig. 266 Water Jet Eductors

Size In Inches	Connections In Inches		Wgt. In Lbs.	Working Pressures						Dimensions in Inches			Max. Round Particle Size In Inches
	Suction Disch.	Pressure		Cast Iron		Bronze		Stainless Steel		A	B	C	
				Motive psi	Body psi	Motive psi	Body psi	Motive psi	Body psi				
Fig. 264 Eductor													
1/2	1/2	3/8	3/4	150	125	125	100	600	500	1 1/16	2 9/16	1 1/8	1/16
3/4	3/4	1/2	1 1/4	125	125	100	100	500	500	1 3/8	3 3/8	1 1/4	1/8
1	1	3/4	2	150	150	150	125	600	600	1 1/2	4 3/16	1 5/8	5/32
1 1/2	1 1/2	1	4	150	100	125	90	600	400	2	6 1/2	2	5/16
2	2	1 1/4	6	150	100	125	85	600	400	2 1/4	7 5/8	2 1/4	3/8
2 1/2	2 1/2	1 1/2	11	200	150	200	125	600	300	2 11/16	9 1/4	3 1/8	3/8
3	3	2	20	250	150	225	125	600	400	3 1/8	11 1/4	3 1/2	13/16
Fig. 266 Eductor													
4	4	2 1/2	100	125	125	-	-	-	-	4 3/8	19 1/4	7 13/16	1
6	6	4	180	125	125	-	-	-	-	6 1/16	28 3/8	9 1/8	1 1/8

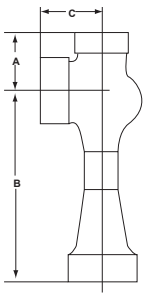

Fig. 264

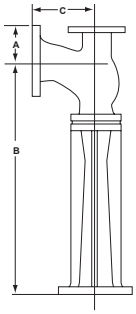

Fig. 266

Fig. 264 PVC and Kynar Water Jet Eductors

Fig. 264 PVC and Kynar Eductors offer resistance to many corrosive media. PVC Eductors are not recommended, however, for acetone, ketones, ether, esters, aromatic hydrocarbons or chlorinated hydrocarbons. A table of recommended uses is available on request. Maximum temperature rating is 150°F. Kynar Eductors will handle PVC applications including those mentioned above. Kynar's temperature limitation is 250°F. Pressure ratings are given in Table 2.

Fig. 264 PVC and Kynar Eductors operate on the same principle as do all other S&K Eductors. Performance characteristics with water are shown in Bulletin 2M Supplement Technical Data. For performance with other liquids, contact S&K.

Nozzles and diffusers are not removable on these eductors. Sizes 1" and smaller are of molded construction.

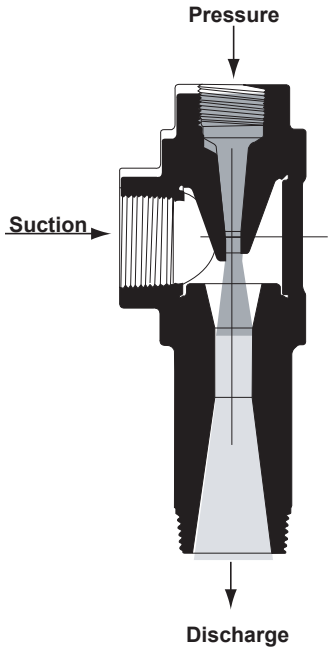

Fig. 4. FIG. 264 PVC EDUCTOR.
Sizes from 1 1/2" up are designed as shown here and in Fig. 5. On these sizes, the pressure and suction connections are female and the discharge connection is male. All connections are threaded.



Fig. 5. FIG. 264 PVC EDUCTOR.

Table 2. Sizes, Dimensions, and Particle Size Data, Fig. 264 Water Jet Eductor

Size in Inches	Connections in Inches		Wgt. In Lbs.	Dimensions in Inches			Working Pressure (psig) at 75°F	Max. Round Particle Sizes (in inches) Eductors will Handle
	Suction Disch.	Pressure		A	B	C		
1/2s	1/2s	3/8s	1/2	1 7/16	3 1/4	1 7/16	325	1/16
1/2	1/2	3/8	1/2	1 7/16	3 1/4	1 7/16	325	1/16
3/4	3/4	1/2	1/2	1 11/16	3 1/2	1 11/16	275	1/8
1	1	3/4	1/2	1 7/8	3 11/16	1 7/8	250	5/32
1 1/2	1 1/2	1	1 1/2	2 9/16	5 11/32	2 1/16	200	5/16
2	2	1 1/4	2 1/2	3 1/32	6 21/32	2 5/32	185	3/8
3	3	2	6 3/4	4 1/8	9 1/2	3 7/8	165	13/16

s = denotes smaller internals.

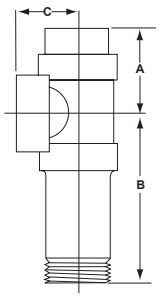



Fig. 6. FIG. 264 KYNAR EDUCTOR.
1/2" to 1" Design. Sizes 1/2", 3/4", and 1" look like this. All connections are female and are threaded.

Fig. 2645 Automatic Eductor

Fig. 2645 Automatic Water Jet Eductors are used to pump out sumps (pits, tanks, etc.) where liquid accumulates slowly but must be evacuated when it reaches a predetermined level.

As the liquid in the sump (basin, tank, cellar, bilge, etc.) accumulates, it raises the ball float until the upward action of the float opens the snap-acting valve, admitting motive fluid into the pressure connection of the eductor.

The jet action of the motive fluid creates a vacuum in the eductor and entrains the suction fluid, discharging both fluids under pressure. As the suction fluid is thus pumped out, the sump level drops to a point where the snap-acting valve shuts off. No further pumping action takes place until the sump again fills to the operating level.

Operation of the Fig. 2645 Eductor is completely automatic. It is self-operated, requires no electrical connections or any external power other than the motive fluid. The snap-acting valve and ball float are the only moving parts. The full assembly is so compact it can be installed in tanks as small as 13 1/2" diameter.

For performance information, see accompanying Bulletin 2M Supplement Performance Data.

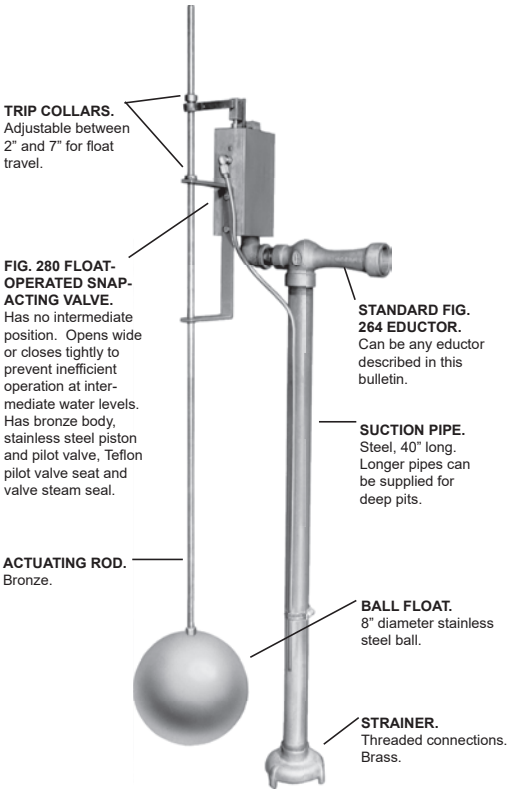

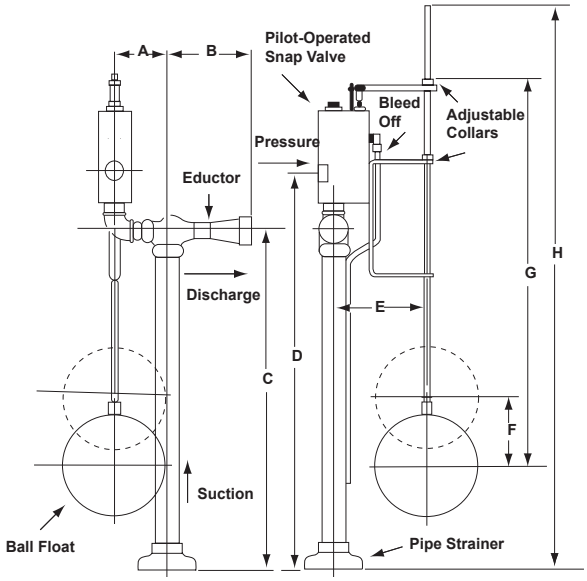

Table 3. Sizes and Dimensions, Fig. 2645 Automatic Eductor

Eductor Size In Inches	Connections In Inches N.P.T.		Wgt. In Lbs.	Working Pressure (Bronze)		Dimensions in Inches							
	Suc.-Disch.	Pressure (Snap-Valve)		Motive* (psig)	Body (psig)	A	B	C	D	E	F	G	H
3/4	3/4	1	24	100	100	3 11/16	3 3/8	41	44 7/8	7 5/6	5 3/8	47 1/8	60
1	1	1	26	150	125	4 5/16	4 3/16	41	44 7/8	7 5/6	5 3/8	47 1/8	60
1 1/2	1 1/2	1	32	125	90	4 1/8	6 1/2	41	44 7/8	7 5/6	5 3/8	47 1/8	60
2	2	2	43	125	85	6 1/4	7 5/8	38 3/8	43 15/16	7 7/16	5 3/8	47 1/8	60
2 1/2	2 1/2	2	65	200	125	6 11/16	9 1/4	38 3/8	43 15/16	7 7/16	5 3/8	47 1/8	60
3	3	2	81	200	125	6 3/8	11 1/4	38 3/8	43 15/16	7 7/16	5 3/8	47 1/8	60

*Minimum motive pressure for all Fig. 2645 Eductors: 40 psig

Fig. 265 Liquid Jet Eductor

Fig. 265 Liquid Jet Eductor is similar in design to the Fig. 264 Water Jet Eductor and is made for liquid pumping and mixing operations and for handling some solids where requirements do not necessitate capacities greater than those obtained with sizes up to and including 3". Typical applications begin on page 12.

The Fig. 265 Liquid Jet Eductor provides higher discharge pressures and higher suction flow capacities than other standard eductors.

In operation, pressure liquid enters the eductor through the pressure nozzle and produces a high velocity jet. This jet action creates a vacuum in the line which causes the suction liquid to flow up into the body of the eductor where it is entrained by the pressure liquid. Both liquids are thoroughly mixed in the throat of the eductor and are discharged against back pressure. The streamlined body with no pockets permits the pressure liquid to move straight through the eductor and reduces the possibility of solids in the suction material collecting and clogging. In addition, pressure drop in the suction chamber is held to a minimum.

Accompanying Bulletin 2M Supplement Performance Data provides performance information.

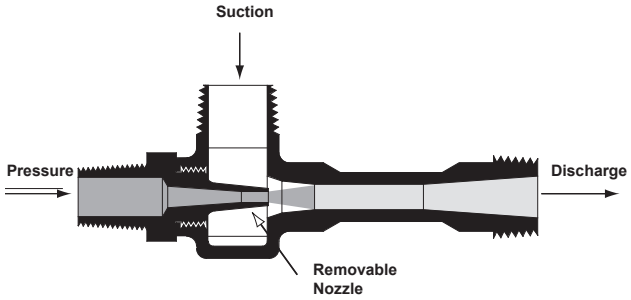

Fig 8. FIG. 265 LIQUID JET EDUCTOR
Eductors of this type have streamlined investment cast bodies with threaded NPT male pipe connections. They are made in sizes ranging from 3/4" to 3" and are stocked in these sizes in Fig. 316 stainless steel. Other materials are available on order.



Fig. 9. FIG. 265 EDUCTOR.

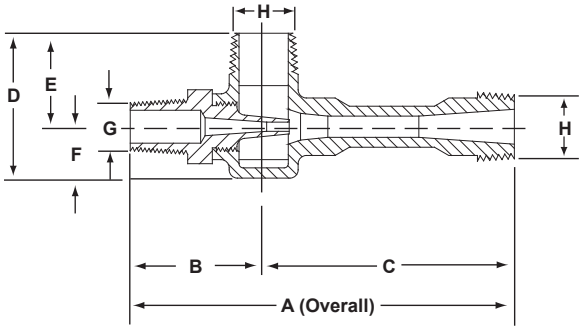

Table 265. Sizes and Dimensions, Fig. 265 Liquid Jet Eductor

Size (In Inches)	Wgt.	Dimensions						Connections	
		A	B	C	D	E	F	G	H
3/4	1	5 7/8	2	3 7/8	2 1/4	1 1/2	3/4	3/8	3/4
1	2	7 1/8	2 1/4	4 7/8	2 3/4	1 3/4	1	1/2	1
1 1/2	4	11	2 3/4	8 1/4	3 21/32	2 1/2	1 5/16	1	1 1/2
2	8	14 3/8	3 1/8	11 1/4	5	2 7/8	2 1/8	1 1/4	2
3	30	23 7/8	4	19 7/8	8	5	3	2	3

Fig. 242 Condensate and Mixing Eductor

Fig. 242 Water Jet Eductors are designed to mix two liquids intimately in various proportions in operations where the pressure liquid is the greater proportion of the mixture. Typical applications include: removal of condensate; mixing gasoline with acid; blending and proportioning chemical solutions; and diluting acids and alkali.

In operation, the pressure liquid issues from the nozzle at high velocity and entrains the suction liquid. The extreme turbulence in the throat of the eductor mixes the two liquids, blending and emulsifying thoroughly and completely. Colloidal suspensions can also be produced.

Entrainment ratio is dependent upon the eductor design. Close regulation within the design limits is usually obtained by a valve in the suction liquid line.

The pressure drop between the pressure liquid and the discharge should be at least 10 psi to give adequate mixing, and the difference between the discharge pressure and the suction pressure should not exceed 75% of the difference between the operating pressure and the suction pressure.

When used for removal of condensate, the eductor should be installed three feet below the condensate level at the drain of the condenser. For performance information, see Technical Data Supplement to Bulletin 2M.



Fig. 10. FIG. 242 EDUCTOR.

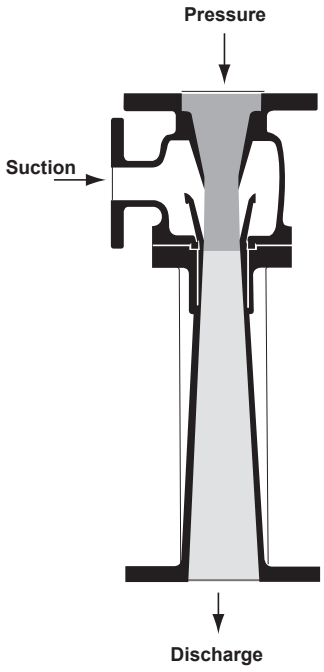

Fig. 11. FIG. 242 EDUCTOR.
The 242 is the flanged type Condensate and Mixing Eductor. This style, too, is made in bronze or cast iron, bronze mounted, but can be supplied in other materials. Nozzles and throat bushings are removable.

Table 4. Sizes and Dimensions, Fig. 242 Condensate and Mixing Eductor

Size No.	Connection in Inches			Dimensions in Inches			Weight in Lbs.
	Pressure	Suction*	Discharge	A	B	C	
2	2	1 - 2	2	4 3/4	11 3/4	3 3/4	50
2 1/2	2 1/2	1 1/4 - 2 1/2	2 1/2	3 1/2	15 1/4	4	60
3	3	2 - 3	3	4	17 15/16	4 5/8	70
4	4	2 - 4	4	5 9/16	20 3/8	5 1/2	80
6	6	3 - 6	6	6 1/4	29	6	270
8	8	4 - 8	8	14 1/16	35 1/2	7 13/16	450

*Note: Suction connection may vary to suit conditions.

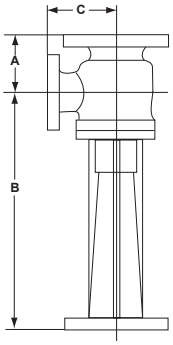

Fig. 258 and Fig. 268 Tank Mixing Eductors

Fig. 258 and Fig. 268 Tank Mixing Eductors are used to agitate liquid, dissolve powdered solids in liquid, and to mix two or more liquids intimately within a tank or other vessel without the use of baffles or moving parts inside the tank. These units take the place of mechanical agitators.

The 268 is used in preference to the 258 in operations where it is desirable to start mixing from a shallow level or where uniform local agitation is required over large, shallow tank area. Typical applications of each are shown in the application section beginning on page 12.

Fig. 258 and 268 Eductors are operated by a flow of pressure liquid through the nozzle. As shown in the sectional drawings, the motive liquid entrains suction liquid, the two are mixed intimately in the venturi, and the mixture is discharged into the tank. Pressure liquid can be taken from the tank by means of a pump or it can be a new liquid. Standard, stock units are designed to entrain 3 gallons of suction fluid for each gallon of motive fluid. (Special designs of the 258 Eductor can be made to give 1 to 1 ratio.)

Normally, the tank is filled by means of the eductors. Mixing occurs as soon as the level of liquid in the tank covers the suction of the eductor. In addition to the mixing obtained between suction and motive fluids in the eductor, the jet action of the discharge from the eductor serves to agitate the tank and prevents stratification.

If a drawing or sketch of the mixing tank is furnished, S&K will recommend and quote on the proper type of distribution system.

Performance information is given in accompanying Performance Data, Bulletin 2M Supplement. Similar units using steam as motive fluid for heating, circulating and mixing are described in Bulletin 3A as “Fig. 314” units.

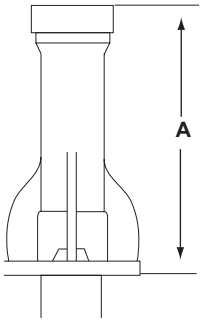

Table 5. Sizes and Dimensions, Fig. 258 Tank Mixing Eductor

Size in Inches	Connections in Inches		Wgt. in Lbs.	Dimensions in Inches
	Disch.	Pressure		A
1/2	1	1/2	2	5 1/2
3/4	1 1/2	3/4	6	8 1/2
1	2	1	22 1/2	12 5/16
1 1/4	2 1/2	1 1/4	29	11 1/8
1 1/2	3	1 1/2	36 1/2	15 7/8
2	4*	2	78	19 5/8
3	6*	3	ON APPL.	28 13/16
4	†	4*		†
5	†	5*		†
6	†	6*		†

*Flanged Connection
† Varies with performance and application
Note: A discharge flange is not supplied on large fabricated units unless required by the application.
(See Fig. 16 for dimensions of Fig. 268 Eductor).

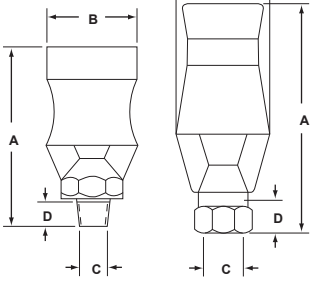

Sizes 3/8, 3/4 Sizes 1 1/2, 2, 3

Table 5-A. Sizes and Dimensions, Fig. 268 Tank Mixing Eductor

Size in Inches	A	B	C	D	Wgt. in Lbs.
3/8	3 3/4	1 3/4	3/8	7/16	3/4
3/4	5 1/4	2 3/8	3/4	9/16	2 1/2
1 1/2	8 13/16	4 1/16	1 1/2	13/16	6 1/4
2	12 1/4	5 13/16	2	45/64	22
3	17	8 1/8	3	15/16	48

Fig. 258 and Fig. 268 Tank Mixing Eductors



Fig. 12. FIG. 258 TANK MIXING EDUCTOR.

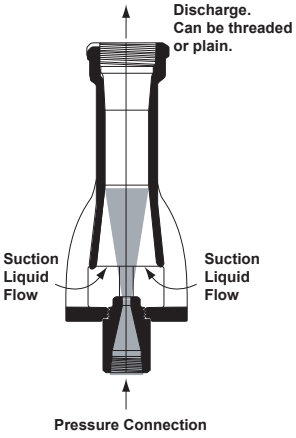

Fig. 13. FIG. 258 TANK MIXING EDUCTOR.
Standard units are made in cast iron and bronze but can be made in many other materials on special order. Large sizes can be fabricated instead of cast.



Fig. 14. FIG. 268 TANK MIXING EDUCTOR. 3/8" and 3/4" sizes.

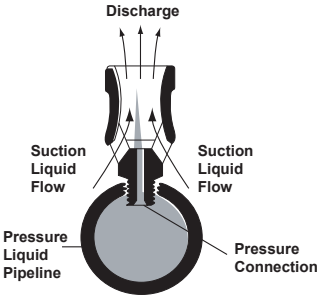

Fig. 15. FIG. 268 TANK MIXING EDUCTOR.
This design is used for 3/8" (3 3/4" overall length and 1 3/4" overall width), and 3/4" (5 1/4" overall length and 2 3/8" overall width) pressure connection sizes. It is threaded directly into threads tapped into the 1 1/2" diameter or larger pressure liquid pipeline. It is cast in one piece and is stocked in cast iron, bronze and 316 stainless steel. Other materials can be supplied on special order.



Fig. 17. FIG. 268 TANK MIXING EDUCTOR. 1 1/2" size and over.

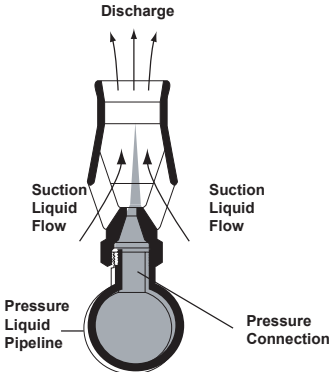

Fig. 16. FIG. 268 TANK MIXING EDUCTOR.
This design is used for 1 1/2" (8 7/8" overall length x 4 1/8" overall width), 2" (12 1/4" overall length x 5 7/8" overall width) and 3" (17" overall length x 8 1/8" overall width) pressure connection sizes. All are cast in one piece and have female thread connections for installation on nipples welded into the pressure liquid piping. The 1 1/2" and 2" sizes are stocked in cast iron, bronze, and 316 stainless steel. The 3" size is stocked in cast iron and stainless steel only. Other materials can be supplied on special order.

Fig. 254 and Fig. 267 and Fig. 227 Hopper-Equipped Eductors

Fig. 254 and Fig. 267 Hopper-Type Eductors are made for handling slurries or dry solids in granular form and are used extensively for ejecting sludges from tank bottoms, for pumping sand from filter beds and for washing and conveying granular materials. Typical materials handled include: borax, charcoal, diatomaceous earth, lime, mash, fly ash, rosin, rock and granulated salt, sand, dry sawdust, light soda ash, dry sodium nitrate, powdered sulphur, wheat and many others.

A typical application of Fig. 254 Eductor is shown in the application section of this bulletin, beginning on page 12. the material from adhering to the sides of the hopper and keep it moving down into the eductor. Pressure water, passing through the eductor nozzle, entrains the sand, sludge or other materials and discharges into the piping system.

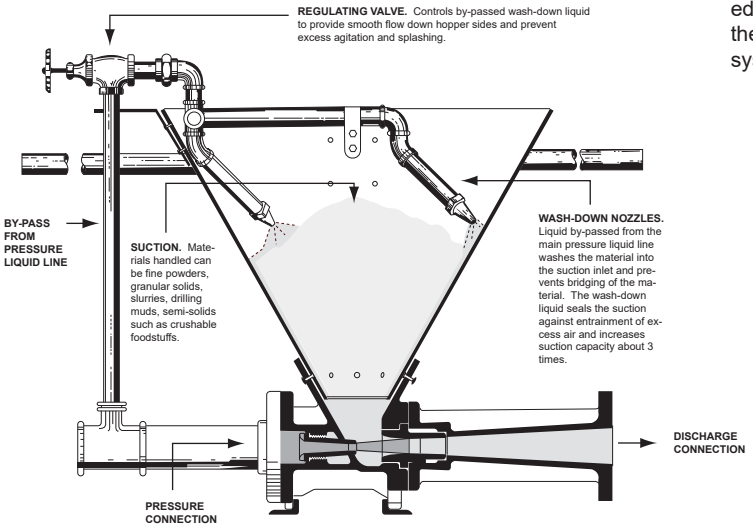

Fig. 18. FIG. 254 HOPPER-EQUIPPED EDUCTOR.
Standard units are made in cast iron and have hardened steel nozzles and throat bushings. Special materials are also available on special order. Both nozzles and throat pieces are removable and pressure and discharge connections can be fitted for hose where maximum portability is desired. Handles and supporting feet are optional.

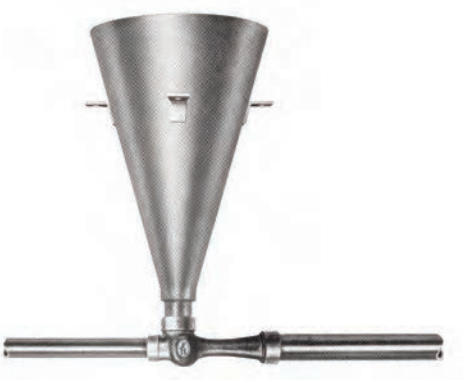

Fig. 19. FIG. 267 HOPPER-EQUIPPED EDUCTOR.
This economical unit is available from stock with body and nozzle in cast iron, bronze, 316 stainless steel, Kynar and PVC. Hoppers are stocked in Type 304 stainless steel (1, 1 1/2 & 2" sizes) and are also available in galvanized steel, brass, aluminum and PVC.

Table 6. Sizes and Dimensions, Fig. 254(1) and Fig. 267(2) Hopper-Equipped Eductors

Size in Inches	Connection (Inches)		Dimension (Inches)			
	Disch.	Press.	A	B	C	D
FIG. 254(1)						
1 1/2	1 1/2	1 1/2	13 1/4	11 1/2	18	15 1/4
2	2	2	14 1/2	13 3/4	21	17 3/4
3	3	2 1/2	17 3/4	17 1/2	23 3/8	19 3/4
4	4	4	19 5/8	24 3/16	27	22 1/2
6	6	6	28 1/16	36 7/16	38	28 5/16
FIG. 267(2)						
1	1	3/4	1 1/2	4 3/16	24	42
1 1/2	1 1/2	1	2	6 1/2	24	41 1/2
2	2	1 1/4	2 1/4	7 5/8	24	41
2 1/2	2 1/2	1 1/2	2 11/16	9 1/4	24	41 1/4
3	3	2	3 1/8	11 1/4	24	40 3/4

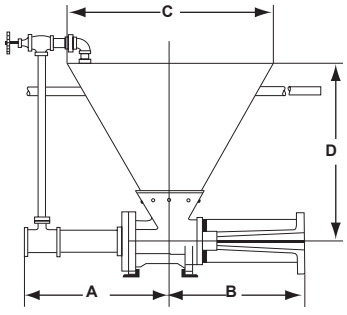

Fig. 254(1)

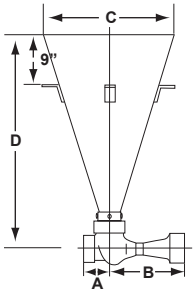

Fig. 267(2)

Fig. 227 Hopper-Equipped Eductor

Furnished with a stainless steel funnel, the eductor can be made of any machinable material. Bronze units up to and including 3" and cast iron units up to and including 4" sizes are available from stock. Prices, delivery or a sectional outline drawing 67-XS-081-J will be furnished on request. Stainless steel funnels are stocked in 1-1/4", 1-1/2" and 2" sizes.

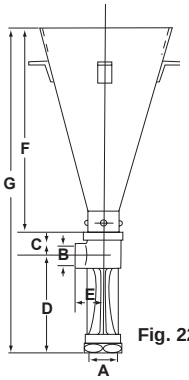

Fig. 227

Table 227. Sizes and Dimensions of Fig. 227 Hopper-Equipped Eductor

Dimensions in Inches							Wgt. (Lbs)
A	B	C	D	E	F	G	
1 1/4	3/4	1 9/16	6 7/16	1 13/16	39 5/8	47 5/8	31
1 1/2	3/4	2	8 13/16	2	39 1/4	50	36
2	1	2 1/2	9 1/8	2 1/4	38 1/2	49 7/8	45
2 1/2	1 1/4	2 3/4	11 1/4	2 3/8	37 7/8	51 7/8	51
3	1 1/2	3 1/16	13 5/16	2 3/4	37	53 3/8	58
4	2	3 5/8	17 1/16	3 3/16	35 1/2	56 3/16	70

Fig. 224 Water Jet Sand and Mud Eductor

Fig. 224 Water Jet Sand and Mud Eductors are used in pumping out wells, pits, tanks, or sumps where there is an accumulation of sand, mud, or other material not easily handled by the standard eductor. They are ideal for handling the heavy sludge residue from refining operations. A typical application of a Fig. 224 Eductor is shown in the application section beginning on page 12.

These eductors have an open suction and are designed to be submerged in the material being handled. The pressure liquid, passing through the nozzle, produces a high velocity jet which entrains the sludge or mud. This mixture is then discharged through a vertical pipe or hose. For performance information, see Bulletin 2M Supplement.

Similar units which use steam as the motive power are described in Bulletin 2A under “Fig. 225 Syphons”.

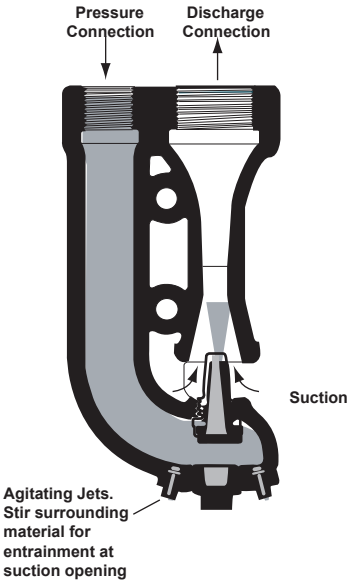

Fig. 20. FIG. 224 WATER JET SAND AND MUD EDUCTOR.
Standard units are made of cast iron with bronze pressure nozzles. Other corrosion-resistant materials are available on special order.



Fig. 21. FIG. 224 EDUCTOR.

Table 7. Sizes and Dimensions, Fig. 224 Sand and Mud Eductor

Size in Inches	Connections in Inches		Wgt in Lbs.	Dimensions in Inches	
	Disch.	Pressure		A	B
1 1/2	1 1/2	1	8	9 3/8	4 5/8
2 1/2	2 1/2	2	42	16 3/4	7 7/8
3	3	2 1/2	87	21 7/8	10 1/4
4	4	3	130	25 1/2	11
5*	5	4	-	30 1/4	17 3/8
6*	6	4	-	35 5/16	18

*Flanged Connections.

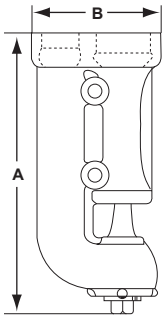

Fig. 235 Annular Multi-Nozzle Water Jet Eductor

Fig. 235 Annular Multi-Nozzle Water Jet Eductors are designed to handle solids and semi-solids. They operate at highest efficiency in large sizes and at low discharge heads. Because these eductors have high air handling capacities, they are particularly well suited for priming large pumps such as dredging pumps which frequently encounter air pockets.

Nozzles on the periphery of the throat introduce the pressure water. The pressure water creates a vacuum which draws in and entrains the material being handled and all flow discharges through the discharge connection. All suction flow is in a straight line through the eductor. For performance information, see Bulletin 2M Supplement.

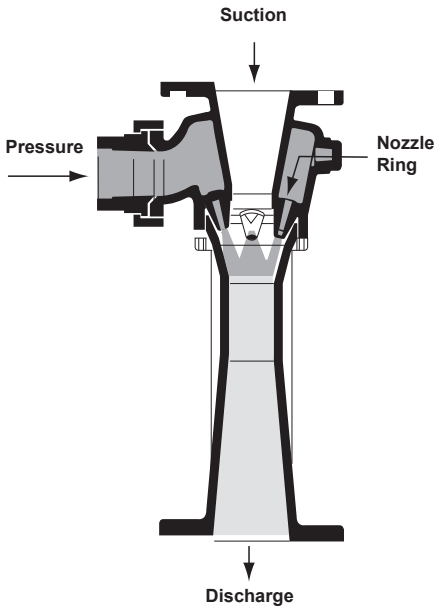

Fig. 22. FIG. 235 ANNULAR MULTI-NOZZLE WATER JET EDUCTOR.
These eductors are made to order from any workable material. Sizes from 1 1/2" to 6" are cast with flanged suction, discharge and pressure connections, except 2" size which has sil-brazed pressure connection. Sizes above 6" (to 28" and up) are generally fabricated.

Table 8. Sizes and Dimensions, Fig. 235 Annular Multi-Nozzle Water Jet Eductor

Size in Inches	Connections in Inches		Wgt. In Lbs.	Dimensions in Inches		
	Suction Disch.	Pressure		A	B	C
1 1/2	1 1/2	1	16	2 7/8	8 7/16	3 3/8
2	2	1 1/4	22	3 1/8	11 7/8	3 3/4
2 1/2	2 1/2	1 1/2	27	3 1/4	12 5/16	4
4	4	2 1/2	65	4 1/8	18 11/16	5 1/8
5	5	3	100	4 5/8	24 7/16	6
6	6	4	150	5 1/4	30	7 1/4

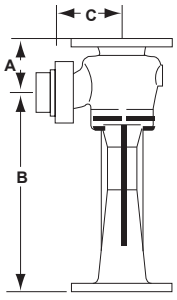



Fig. 23. FIG. 235 EDUCTOR.
(2" size with sil-brazed connection).

Special Purpose Eductors

The special-purpose eductors illustrated here are similar in operation to the basic Fig. 264 Eductor described on page 3.



Fig. 24. FIG. 222 PORTABLE EDUCTOR.
Is designed for use as an auxiliary with a pump where the suction lift is too great for the pump alone. Made of anodized aluminum, bronze or other materials as required.



Fig. 25. FIG. 212 CORROSION RESISTANT EDUCTOR.
Is made of Phenolic Fiberglass Reinforced Plastic (FRP). Body is of one-piece construction.

TYPICAL APPLICATIONS OF S&K WATER JET EDUCTORS

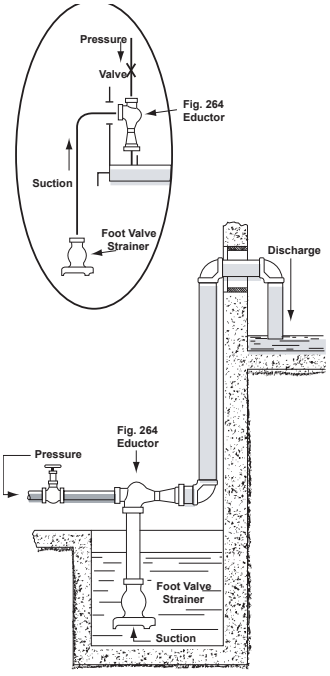

Fig. 26. FIG. 264 EDUCTOR USED TO EMPTY TANKS.
Water jet eductors are often used to empty tanks or to pump out sumps, penstocks, cellars, and the like. The pressure line should be fitted with a regulating stop valve and a pressure gauge while the suction line should be provided with an S&K Strainer. Discharge lines should be sealed for a positive pick-up of the liquid by turning the discharge line up or by submerging the end of the discharge line. It is recommended that the eductor be installed a short distance above the liquid to be handled and that short suction lines be used. Eductors will operate with long suction lines, as shown in the line drawing, however, with suction lifts greater than 15', capacities are reduced considerably. When handling hot liquid the eductor must be arranged with a short suction line or must be submerged.

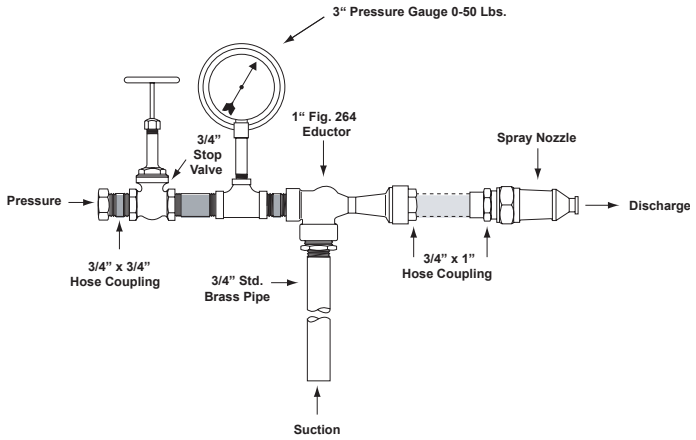

Fig. 27. FIG. 264 EDUCTOR USED IN MIXING LIQUIDS.
This illustration shows a typical arrangement used in mixing liquids such as chemicals or fertilizers in proportion for spraying. The solution to be applied is mixed in a container in approximately twice the strength at which it is to be used. The water jet proportioning apparatus is operated by a jet of high pressure water and is controlled by a 3/4" stop valve. A 3" pressure gauge indicates pressure. The jet action of the pressure water draws the solution from the container and the water and solution are mixed in the throat of the eductor and are discharged through a standard 3/4" hose to a spray nozzle. Solids can be handled and sprayed through a non-clogging type spray nozzle.

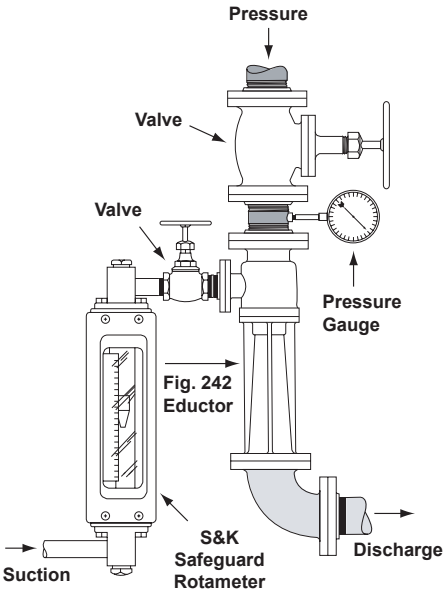

Fig. 28. FIG. 242 EDUCTOR USED IN TYPICAL PROPORTIONING SYSTEM.
This shows a typical proportioning system using a Fig. 242 Eductor. Rate of flow is measured by a Rotameter and is controlled by a valve in the line. A valve in the pressure line and orifice of the eductor nozzle control the flow of the pressure liquid. Fluids are thoroughly mixed in the desired proportions and are then discharged.

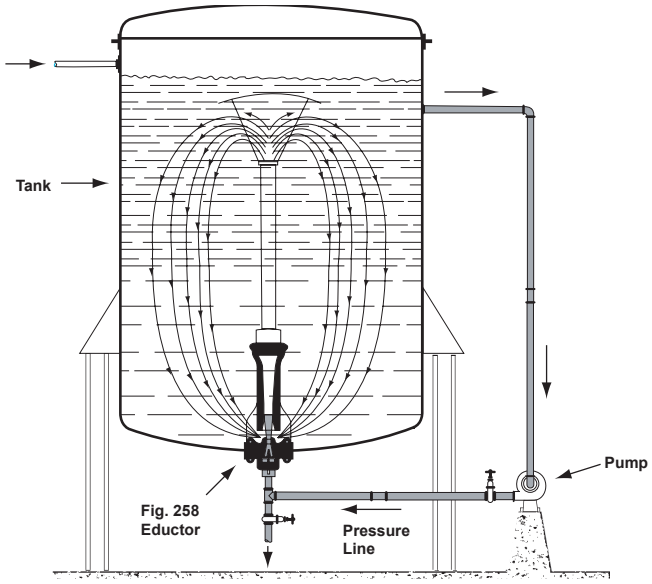

Fig. 30. FIG. 258 EDUCTOR IN BATCH MIXING APPLICATION.
This illustrates the batch mixing of two or more liquids with an S&K Fig. 258 Eductor. The pressure liquid, taken from the top of the tank is passed through a pump to the eductor. The jet action of this fluid entrains the liquid at the bottom of the tank and proper mixing results.

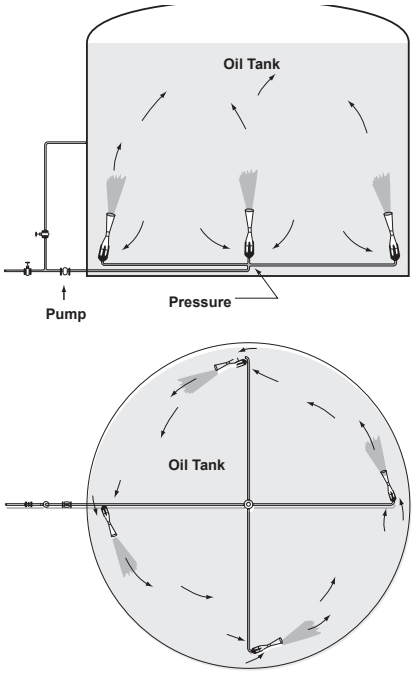

Fig. 29. FIG. 258 EDUCTORS FOR TANK BLENDING OF OILS.
For the tank blending of oils, the arrangement shown has proved highly satisfactory. In this particular installation five 8" Fig. 258 Eductors are used in a 100' tank. Initially, the eductors are used to fill the tank during which time they provide continuous agitation. After the tank is filled, the oil is drawn off and recirculated by means of the same pumps. Oil from the top of the tank issues through the eductor nozzle and entrains oil from the bottom of the tank. The two are mixed in the throat of the eductor and are discharged with sufficient force to maintain constant agitation and further blending in the tank.

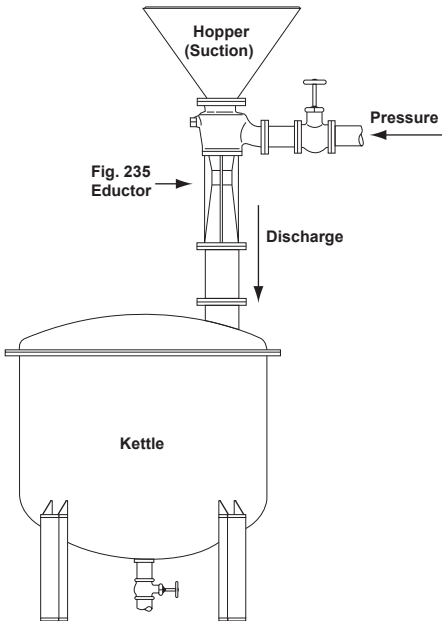

Fig. 31. FIG. 235 EDUCTOR USED IN MIXING DRY POWDER.
Mixing dry powder and a liquid prior to discharge into a tank is accomplished through the use of a Fig. 235 Eductor as shown here.
Pressure liquid enters the eductor, entrains the powder, mixes the two in the venturi of the eductor and discharges the mixture into a receptacle. The streamline eductor design provides maximum efficiency in this operation.

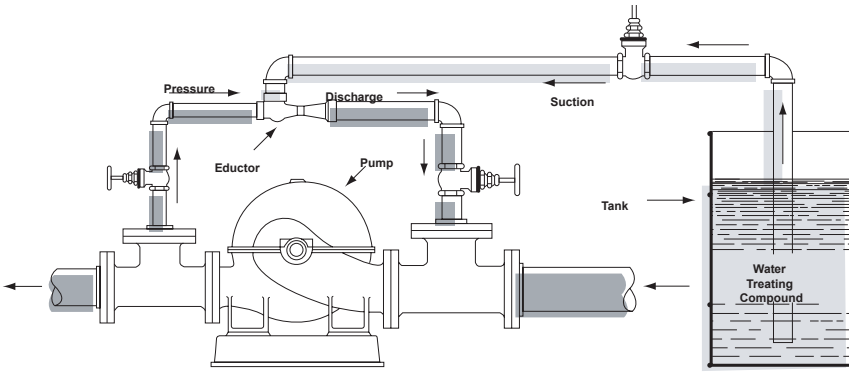

Fig. 32. FIG. 264 OR FIG. 265 WATER JET EDUCTORS USED TO ENTRAIN ANOTHER LIQUID.
This illustration shows a Fig. 264 or Fig. 265 Eductor being used to introduce a water treating compound into boiler feed water. A portion of the water issuing from the pump is bypassed into the eductor where it acts as the pressure medium to draw in and entrain the water treating compound.

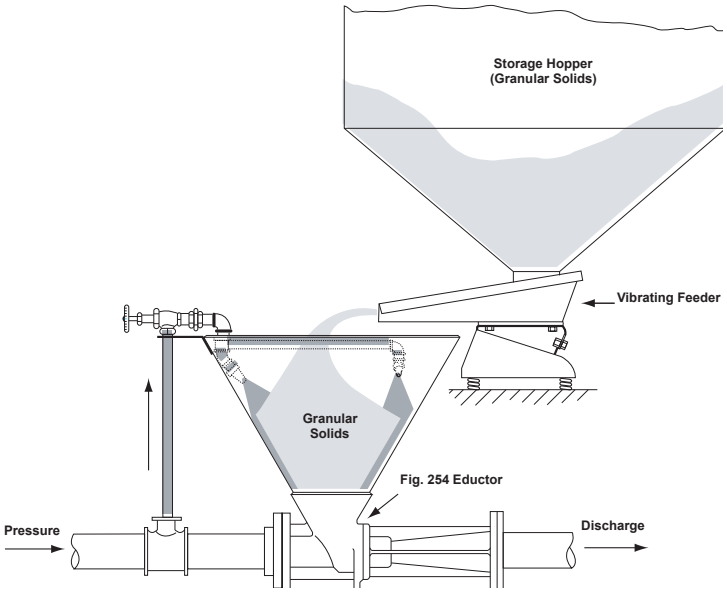

Fig. 33. APPLICATION OF FIG. 254 SOLIDS/LIQUID HOPPER EDUCTOR.
One arrangement for handling granular solids with the Fig. 254 Eductor is illustrated here. In this installation, granular solids drop from a storage hopper into a vibrating feeder which feeds the solids into the eductor hopper at a controlled rate. Water, bypassed from the pressure line, flows through nozzles located in the hopper and washes the solids into the eductor. There they are entrained by the jet action of the pressure water and are discharged. Although the material can be placed in the hopper manually, this system reduces handling and controls the flow of solids.

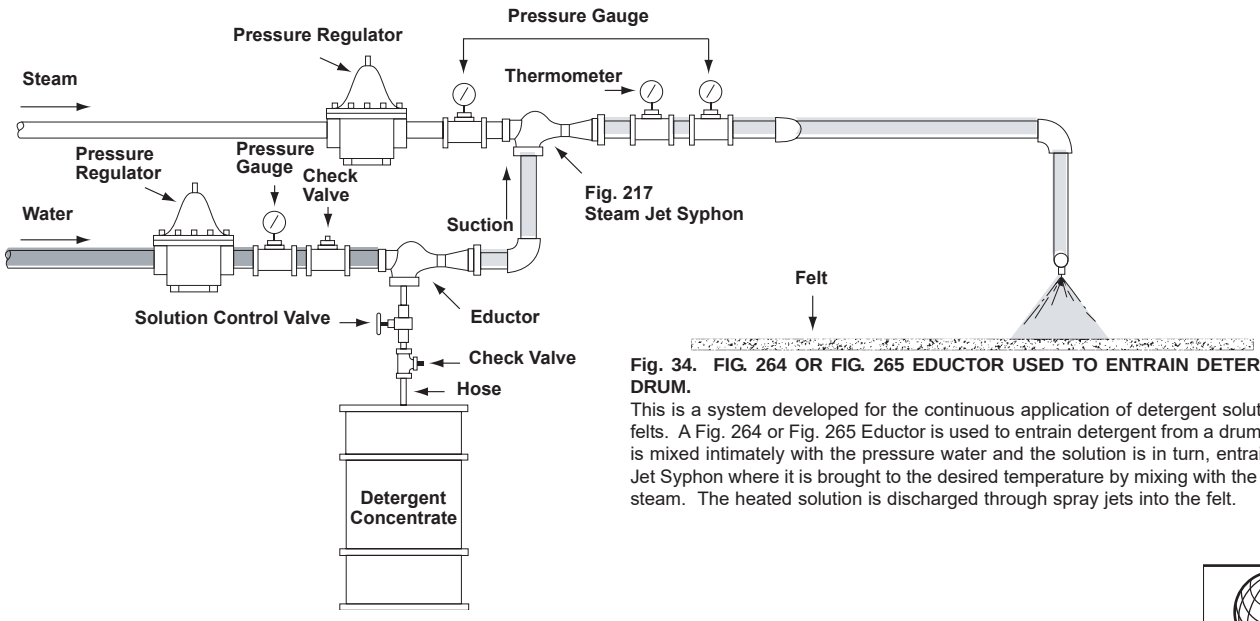

Fig. 34. FIG. 264 OR FIG. 265 EDUCTOR USED TO ENTRAIN DETERGENT FROM A DRUM.
This is a system developed for the continuous application of detergent solution to paper mill felts. A Fig. 264 or Fig. 265 Eductor is used to entrain detergent from a drum. This detergent is mixed intimately with the pressure water and the solution is in turn, entrained by a Steam Jet Syphon where it is brought to the desired temperature by mixing with the syphon's motive steam. The heated solution is discharged through spray jets into the felt.

ISO 9001 Certified

SHARPE

SERIES 45114, GLOBE VALVE

LEFT BLANK

SMITH-COOPER® INTERNATIONAL

SHARPE®
Valves, Automation & Controls

Series 45114
150# Flanged Cast Steel Globe Valve

Design Features

- Outside screw and yoke
- Bolted bonnet
- Welded Seat
- Yoke Integrated with Bonnet
- Loose Disc
- Rising stem and non-rising hand-wheel

Applicable Standards

• Steel valves	ANSI B16.34
• Face to face	ANSI B16.10
• End flanges	ANSI B16.5
• Butt-weld ends	ANSI B16.25
• Inspection and test	API 598
• NACE	MR-0175



USA 800-766-0076
Fax 323-890-4456
www.smithcooper.com
Los Angeles, CA
Chicago, IL
Atlanta, GA
Vancouver, WA
Houston, TX

SHARPE
Valves, Automation & Controls

Series 45114
150# Flanged Cast Steel Globe Valve

2"- 6" Dimensions, Parts & Materials

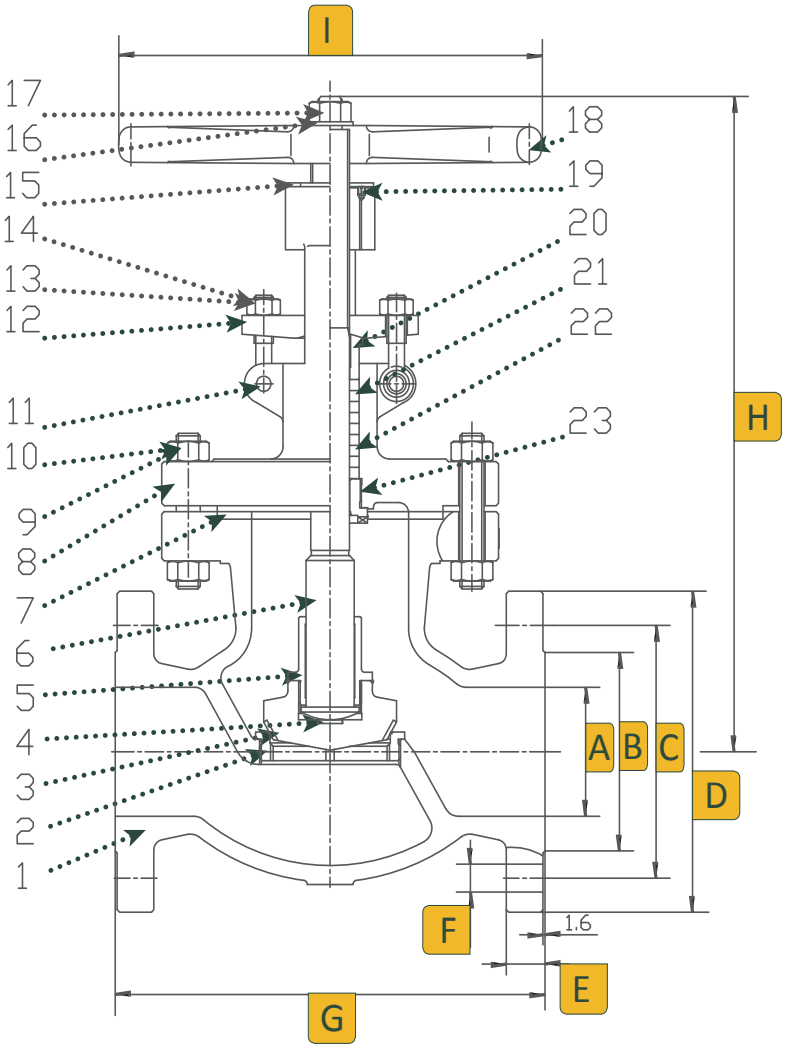

No.	Part Name	Material
1	Body	Carbon Steel ASTM A216 - WCB
2	Seat	A105 & STL.6
3	Disc	A105 & 410 Stainless Steel
4	Thrust Plate	410 Stainless Steel
5	Disc Cover	410 Stainless Steel
6	Stem	A182 F6a
7	Gasket	304 Stainless Steel & Flexible Graphite
8	Bonnet	Carbon Steel ASTM A216 - WCB
9	Stud	B7 Steel A193
10	Nut	2H Steel A194
11	Pin	Carbon Steel
12	Gland Flange	Carbon Steel
13	Eye Bolt	B7 Steel A193
14	Eye Nut	2H Steel A194
15	Stem Nut	D-2
16	Gasket	410 Stainless Steel
17	Nut	Carbon Steel
18	Hand-wheel	Ductile Iron
19	Screw	Carbon Steel
20	Gland	410 Stainless Steel
21	Packing	Flexable Graphite
22	Packing	Flexible Graphite
23	Back Seat	410 Stainless Steel

Dimensions (Inches)

Size	A	B	C	D	E	F	G	H	I	Num of Bolt Holes
2	2.01	3.62	4.76	6.00	0.75	0.75	8.00	13.43	7.87	4
2-1/2	2.52	4.13	5.51	7.00	0.88	0.75	8.50	14.45	9.84	4
3	2.99	5.00	6.00	7.50	0.94	0.75	9.50	14.76	9.84	4
4	4.02	6.18	7.50	9.00	0.94	0.75	11.50	19.02	11.81	8
6	5.98	8.50	9.50	11.00	1.00	0.875	16.00	20.35	13.78	8

SHARPE®
Valves, Automation & Controls

Series 45114
150# Flanged Cast Steel Globe Valve

8"- 16" Dimensions, Parts & Materials

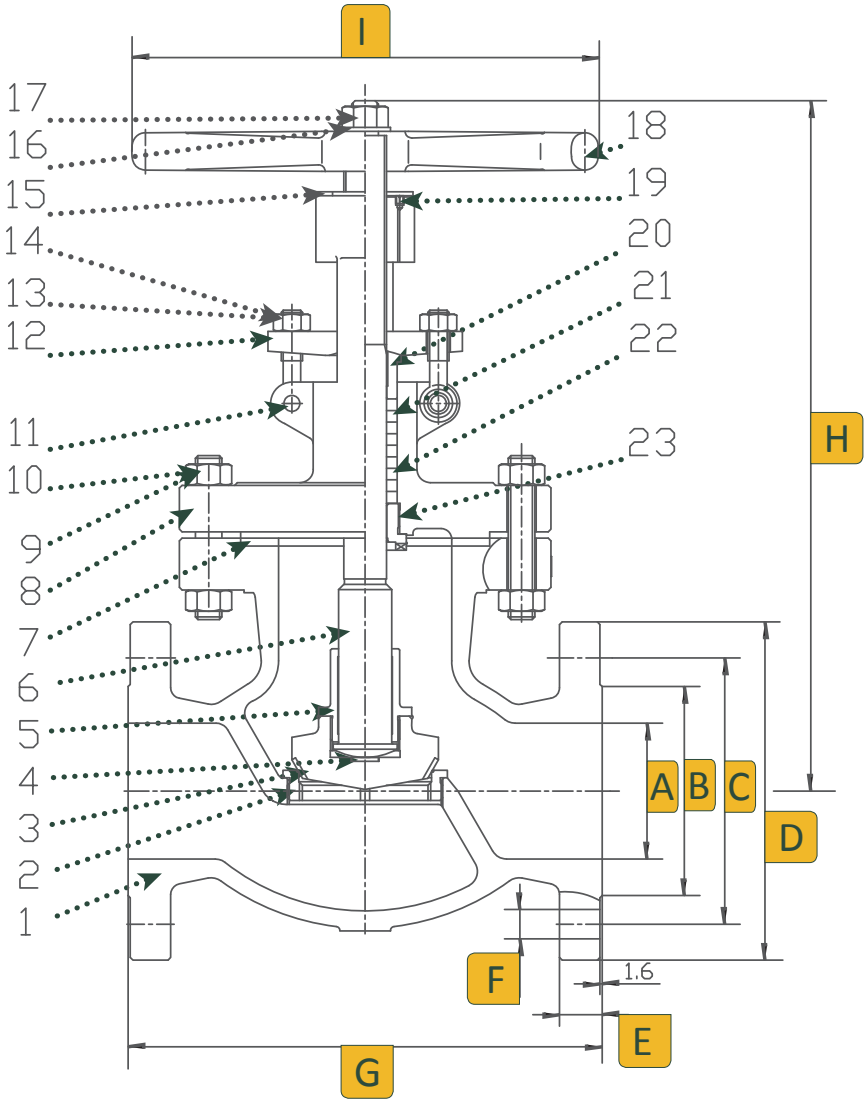

No.	Part Name	Material
1	Body	Carbon Steel ASTM A216 - WCB
2	Seat	A105 & STL.6
3	Disc	A105 & 410 Stainless Steel
4	Thrust Plate	410 Stainless Steel
5	Disc Cover	410 Stainless Steel
6	Stem	A182 F6a
7	Gasket	304 Stainless Steel & Flexible Graphite
8	Bonnet	Carbon Steel ASTM A216 - WCB
9	Stud	B7 Steel A193
10	Nut	2H Steel A194
11	Pin	Carbon Steel
12	Gland Flange	Carbon Steel
13	Eye Bolt	B7 Steel A193
14	Eye Nut	2H Steel A194
15	Stem Nut	D-2
16	Gasket	410 Stainless Steel
17	Nut	Carbon Steel
18	Hand-wheel	Ductile Iron
19	Screw	Carbon Steel
20	Gland	410 Stainless Steel
21	Packing	Flexible Graphite
22	Packing	Flexible Graphite
23	Back Seat	410 Stainless Steel

Dimensions (Inches)

Size	A	B	C	D	E	F	G	H	I	Num of Bolt Holes
8	8.00	10.62	11.75	13.50	1.12	0.875	19.50	23.23	15.75	8
10	10.00	12.75	14.25	16.00	1.18	1.00	24.50	29.70	17.72	12
12	12.00	15.00	17.00	19.00	1.25	1.00	27.50	37.10	22.05	12
14	13.27	16.25	18.75	21.00	1.37	1.125	31.00	37.40	22.05	12
16	15.21	18.50	21.25	23.50	1.44	1.125	36.00	38.00	25.20	16

Series 45114
150# Flanged Cast Steel Globe Valve

Technical Information

Temperature °F	Working Pressure psi
-20 to 100	285
200	260
300	230
400	200
500	170
600	140
650	125
700	110
750	95
800	80
850	65
900	50
950	35
1000	20

How to Order

Size	Series	Class	Ends	Body Material	Options
2 2-1/2 3 4 6 8 10 12 14* 16*	45	1 150	1 Flange 2 Butt-weld*	4 Carbon Steel	

*POA

Example: 8 - 45 - 1 - 1 - 4 = 8-45-1-1-4

Due to continuous development of our product range, we reserve the right to change the dimensions and information for this product as required.

MANUFACTURER INSTALLATION OPERATION AND MAINTENANCE MANUAL

IQALUIT – WWTP UPGRADE – NUNAVUT

VEOLIA PROJECT: 5000 218 036

TIGER-VAC

MODEL EC-12, VACUUM POWERHEAD

LEFT BLANK

OPERATION AND MAINTENANCE MANUAL

Industrial vacuum cleaner powerhead assembly
for dry recovery only

MODEL:

EC-12

C US

File number: LR 060825

CSA Certified for ordinary areas/locations

**READ ALL INSTRUCTIONS BEFORE OPERATING,
CLEANING OR SERVICING
IMPORTANT - SAVE THESE INSTRUCTIONS**

Table of Contents

1.0 INSPECTION 3

2.0 IMPORTANT SAFETY INSTRUCTIONS 3

3.0 GROUNDING INSTRUCTIONS 4

4.0 OPERATING INSTRUCTIONS FOR DRY RECOVERY 5

March 5, 2018

1.0 INSPECTION

Carefully unpack and inspect your industrial vacuum cleaner powerhead assembly for shipping damage. Each unit is tested and thoroughly inspected before being shipped; therefore, any damage is the responsibility of the delivering carrier, who should be notified.

2.0 IMPORTANT SAFETY INSTRUCTIONS

WARNING: To reduce the risk of fire, electrical shock, or Injury:

a. Do not leave vacuum cleaner when plugged in. Unplug from outlet when not in use and before servicing.

b. Do not allow vacuum cleaner to be used by children. Close attention is necessary when used near children.

c. Use only as described in this manual.

d. Use only with recommended attachments.

e. Do not use with damaged cord or plug.

f. If vacuum cleaner is not working as it should, has been dropped, damaged, left outdoors, or dropped into water, return it to a service center.

g. Do not: pull or carry by cord, use cord as a handle, close a door on cord, or pull cord around sharp edges or corners.

h. Do not run vacuum cleaner over cord.

i. Keep cord away from heated surfaces.

j. Do not unplug by pulling on cord. To unplug, grasp the plug, not the cord.

k. Do not handle plug or appliance with wet hands.

l. Do not put any object into openings.

m. Do not use with any openings blocked; keep free of dust, lint, hair and anything that may reduce air flow. Poor ventilation will result in overheating of motor.

n. Keep hair, loose clothing, fingers and all parts of body away from openings and moving parts.

o. Do not pick-up anything that is burning or smoking such as: cigarettes, matches or hot ashes., etc.

p. Do not use without appropriate filters in place.

q. Turn of all controls before unplugging.

r. Use extra care when cleaning on stairs.

s. Do not recover flammable or combustible liquids such as gasoline, or use in areas where they may be present.

t. Never operate unit unless the power-head is securely fastened to the recovery tank with latches.

u. Connect to a properly grounded outlet only. See grounding instructions.

NOTE: **Any health hazard associated with the use of this vacuum cleaner in conjunction with the recovery of toxic / nuisance dust has not been investigated by CSA.**

3.0 GROUNDING INSTRUCTIONS

This vacuum cleaner must be grounded. If it should malfunction or breakdown, grounding provides a path of least resistance for electric current to reduce the risk of electric shock. This vacuum cleaner is equipped with a cord having an equipment-grounding conductor and grounding plug. The plug must be plugged into an appropriate outlet that is properly installed and grounded in accordance with all local codes and ordinances.

WARNING: Improper connection of the equipment-grounding conductor can result in a risk of electric shock. Check with a qualified electrician or service person if you are in doubt as to whether an outlet is properly grounded. Do not modify the plug provided with the vacuum cleaner. If it will not fit the outlet, have a proper outlet installed by a qualified electrician. No adaptor should be used with this vacuum cleaner.

4.0 OPERATING INSTRUCTIONS FOR DRY RECOVERY

1. Place the main cloth filter on the recovery tank. Make sure that the filter's gasket covers the circumference of the recovery tank lip.

2. Place the power head on the recovery tank

3. Plug the power cord into a grounded electrical outlet.

4. Use the on / off switch on the power head to operate the unit.

WARNING: **This Industrial vacuum cleaner powerhead assembly is not equipped with an absolute HEPA Filter. An absolute HEPA Filter is available as an option.**

Two Year Warranty

Tiger-Vac warrants that its equipment will be free of defects in workmanship or material for a period of Two years from the date of delivery. Should any failure to conform to this warranty appear Tiger-Vac shall upon notification within such time period, correct such non-conformity, at its option, either by repairing any defective part or parts, or by replacing a part or parts provided that the equipment is returned to an authorized Tiger-Vac service facility. In all cases freight both ways will be at the expense of the customer. Equipment shall not be returned without advance notice to, and consent of Tiger-Vac.

Except as specifically set forth herein, Tiger-Vac makes no warranties, either expressed or implied as to any matter whatsoever, including without limitation any and all warranties of merchantability, fitness for purpose, or other warranties, all of which are expressly disclaimed and excluded. Neither party shall be liable to the other for special, indirect, incidental or consequential damages, including but not limited to loss of production, loss of time, loss of profits or any other similar indirect losses which might occur as a result of defects partial or total failure of the product to perform as specified.

Correction of non-conformities or defects in the manner and for the period of time provided above, shall constitute fulfillment of all liabilities of Tiger-Vac to the customer whether based on contract, negligence or otherwise with respect to, or arising out of such equipment. The remedies set forth herein are exclusive, and the liability of Tiger-Vac with respect to this sale or anything done in connection therewith, whether in contract, in tort, under any warranty, or otherwise, shall not, except as expressly provided herein, exceed the price of the equipment or part on which such liability is based.

This warranty does not cover repairs due to normal wear and tear, accident, neglect, misuse or abuse, incorrect installation or use other than as described in the instruction booklet. Breaks in hoses and cables are not covered. This warranty is rendered void if the motor plate is removed or defaced or if repairs are made or attempted by persons not authorized by Tiger-Vac.

Some states do not allow exclusions of implied warranties or limitation on how long an implied warranty lasts so the above exclusions or limitation of implied warranties may not apply. Some states do not allow exclusion or limitation of incidental or consequential damages so the above exclusion or limitation of incidental or consequential damages may not apply. Limited warranties set forth above give specific legal rights. Customer may have other rights which vary from state to state.

Tiger-Vac Inc. **11 SW 12th Ave #112** **Dania, FL 33004, USA** **Tel: (954) 925-3625** **Fax: (954) 925-3626**	**Tiger-Vac International Inc.** **2020 Dagenais West** **Laval, Qc H7L 5W2 Canada** **Tel: (450) 622-0100** **Fax: (450) 625-3388**

e-mail: support@tiger-vac.com
web-site: www.tiger-vac.com

WAM

MODEL MBF, FEEDER

LEFT BLANK

WAM®

WAMGROUP

2

MAINTENANCE

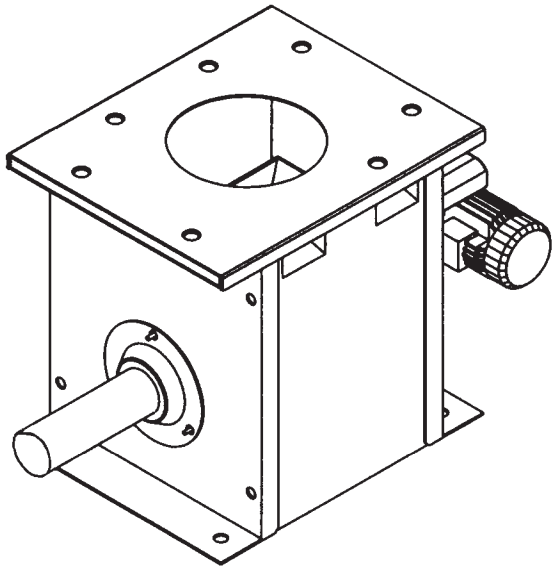

MBF

- ***MICRO-BATCH FEEDERS***
  INSTALLATION, OPERATION AND MAINTENANCE
- ***MIKRODOSIERER***
  EINBAU-, BETRIEBS- UND WARTUNGSANLEITUNG
- ***MICRODOSEURS***
  INSTALLATION, UTILISATION ET ENTRETIEN
- ***MICRODOSATORI***
  INSTALLAZIONE, USO E MANUTENZIONE

All rights reserved © WAMGROUP S.p.A.

CATALOGUE No. **VAL.062.--.M.4L**			
ISSUE **A13**	CIRCULATION **100**	LATEST UPDATE **01.10**	

All the products described in this catalogue are manufactured according to **WAMGROUP S.p.A. Quality System procedures**. The Company's Quality System, certified in July 1994 according to International Standards **UNI EN ISO 9002** and extended to the latest release of **UNI EN ISO 9001**, ensures that the entire production process, starting from the processing of the order to the technical service after delivery, is carried out in a controlled manner that guarantees the quality standard of the product.

*Alle in diesem Katalog beschriebenen Produkte werden gemäß dem **Qualitätssystem der WAMGROUP S.p.A.** hergestellt. Das im Juli 1994 gemäß der internationalen Norm **UNI EN ISO 9002** und auf die neueste Version der **UNI EN ISO 9001** erweiterte, zertifizierte Qualitätssystem der Firma gewährleistet, dass der gesamte Produktionsprozess von der Auftragsbearbeitung bis zum technischen Kundendienst nach Lieferung in kontrollierter Art und Weise erfolgt, so dass der Qualitätsstandard des Produkts gewährleistet ist.*

Tous les produits décrits dans ce catalogue sont fabriqués selon les procédures du **Système de Qualité de WAMGROUP S.p.A.**, certifié en Juillet 1994 selon les normes internationales **UNI EN ISO 9002** et étendu à la dernière version de la norme **UNI EN ISO 9001**. Cela garantit que le processus de production, à partir de la gestion de la commande au service technique après-vente, est effectué de manière contrôlée garantissant la norme de qualité du produit.

*Tutti i prodotti descritti nel catalogo sono stati realizzati secondo le **procedure del Sistema Qualità di WAMGROUP S.p.A.** Il Sistema Qualità aziendale, certificato dal luglio 1994 in conformità alle normative internazionali **UNI EN ISO 9002** e successivamente esteso all' ultima versione delle normative **UNI EN ISO 9001**, garantisce che l'intero processo produttivo, dalla formulazione dell'ordine fino all'assistenza tecnica dopo la consegna, si svolga secondo modalità controllate che garantiscono lo standard qualitativo del prodotto.*

This publication cancels and replaces any previous edition and revision.
We reserve the right to implement modifications without notice.
This catalogue cannot be reproduced, even partially, without prior consent.

Diese Veröffentlichung storniert und ersetzt alle früheren Ausgaben und überarbeiteten Fassungen.
Wir behalten uns das Recht vor, Änderungen ohne vorherige Information durchzuführen.
Dieser Katalog darf ohne vorherige Genehmigung weder ganz noch teilweise vervielfältigt werden.

Cette publication annule et remplace toute édition et révision antérieure.
Nous nous réservons le droit de mettre en place des modifications sans préavis.
Ce catalogue ne peut être reproduit, même partiellement, sans notre consentement préalable.

Questa pubblicazione annulla e sostituisce le edizioni e revisioni precedenti.
Ci riserviamo la facoltà di apportare modifiche senza preavviso.
Il presente catalogo non può essere riprodotto, nemmeno parzialmente, senza previo consenso.

2 **MAINTENANCE CATALOGUE** **WARTUNGSKATALOG**

OPERATION AND MAINTENANCE.....BETRIEBS- UND WARTUNGSANLEITUNG.....**M. 4 → .24**
DECLARATION OF CONFORMITY.....KONFORMITÄTSERKLÄRUNG..... **25 → .28**

2

CATALOGUE D'ENTRETIEN **CATALOGO DI MANUTENZIONE**

UTILISATION ET ENTRETIEN.....USO E MANUTENZIONE.....**M. 4 → .24**
DECLARATION DE CONFORMITE.....DICHIARAZIONE DI CONFORMITA'..... **25 → .28**

ADDRESS OF LOCAL DEALER OR LOCAL SERVICE POINT	ANSCHRIFT DES HÄNDLERS ODER DES KUNDENDIENSTES	ADRESSE DU REVENDEUR OU DU SERVICE APRES-VENTE LOCAL	INDIRIZZO RIVENDITORE O PUNTO DI ASSISTENZA LOCALE

EQUIPMENT IDENTIFICATION	IDENTIFIKATION	PLAQUE D'IDENTIFICATION	INTERPRETAZIONE DELLA TARGHETTA
Refer to order code in acknowledgement of order, in invoice and on packaging to identify equipment.	Zur korrekten Identifikation auf den Bestellcode in der Auftragsbestätigung, in der Rechnung und auf der Verpackung Bezug nehmen.	Pour identifier correctement l'équipement, vous devez vous référer au code qui se trouve sur la confirmation de commande, sur la facture et sur la plaque qui se trouve sur l'emballage.	Per una corretta identificazione della macchina, bisogna fare riferimento al codice che si trova sulla conferma d'ordine, sulla fattura e sulla targhetta posta sull'imballo.
CONTRA-INDICATIONS If the user observes normal precaution (typical of this type of machine) together with the indications of this manual, work is safe. NOTE FOR FOOD GRADE MICRO-FEEDERS Clean micro-batch feeder with water from time to time. Cleaning frequency depends on type of product and plant. In cleaning certain feeder parts such as the body, the metering screw, the outlet pipe and the protections, special care must be taken. Before using any other than water for cleaning, contact a WAM® sales office. If material is acid or temperature is extremely high or low also contact a WAM® sales office.	**KONTRA-INDIKATIONEN** Sofern der Betreiber die für Geräte dieser Art typischen Vorsichtsmaßnahmen zusammen mit den in dieser Dokumentation enthaltenen Vorschriften beachtet, ist die Betriebssicherheit gewährleistet. BETRIFFT MIKRODOSIERER FÜR NAHRUNGSMITTEL Dosierer regelmäßig mit Wasser abwaschen (Häufigkeit abhängig von Produkt und Anlagentyp). Besonders bei der Reinigung von Gehäuse, Dosierwerkzeug, Ablaufrohr und Schutzvorrichtungen mit Vorsicht vorgehen. Bevor Reinigungsmittel egal welcher Art verwendet werden, bei einem WAM®-Verkaufsbüro Informationen in bezug auf die Verträglichkeit einholen. Ist das Produkt säurehaltig oder dessen Temperatur entweder sehr hoch oder sehr niedrig, ebenfalls mit einem WAM®-Verkaufsbüro Kontakt aufnehmen.	**CONTRE-INDICATIONS** Si l'utilisateur observe les précautions normales pour ce type de machine et les instructions contenues dans ce catalogue l'utilisation est sûre. NOTE POUR MICRODOSEURS ALIMENTAIRES Nettoyer le microdoseur périodiquement avec de l'eau (fréquence dépend du type de matériau et du type d'installation). Utilisez du soin particulier pour le corps, l'outil de dosage, la sortie verticale et les protections. Avant d'utiliser des autres produits au lieu de l'eau contactez un bureau de vente WAM®. Le même vaut si le matériau est acide ou sa température est trop élevée ou trop basse.	**CONTROINDICAZIONE** Se l'utilizzatore osserva le precauzioni normali tipiche per questo tipo di macchina insieme alle indicazioni date in questo catalogo l'utilizzo è sicuro. NOTE PER MICRODOSATORI PER USO ALIMENTARE Lavare il microdosatore periodicamente con acqua. La frequenza dipende dal tipo di materiale e della natura dell'impianto. Certe parti come il corpo, l'utensile di dosaggio, lo scarico verticale e le protezioni vanno puliti con particolare cura. Prima di utilizzare altri prodotti per la pulizia contattare il ns. Ufficio Vendite. Anche se il materiale da dosare fosse acido o avesse una temperatura troppo alta o troppo bassa, contattare il ns. Ufficio Vendite.
The equipment must not be put into service before the machine or plant it has been fitted to has been declared in conformity with the regulations of the directive 14/06/1982 (89/392/ECC).	Das Gerät darf nicht in Betrieb genommen werden, bevor die Anlage oder Maschine, in die er eingebaut wurde mit den Vorschriften der Bestimmungen vom 14.06.1982 (89/392/ECC) als konform erklärt wurden.	Il est interdit de mettre en fonction la machine avant que l'installation dans laquelle elle doit etre installée soit déclarée conforme aux dispositions de la directive 14/06/1982 (89/392/ECC).	E' inoltre vietato mettere in funzione la macchina prima che la macchina/ impianto nel quale devono essere installate sia dichiarato conforme alle disposizioni della direttiva 14/06/1982 (89/392/EEC).
For dangerous materials, i.e. those that must not get in contact with the human body or be inhaled, for flammable, explosive and bacteriologically dangerous materials the plant manufacturer or fitter must provide for the required safety devices and measures.	Für Gefahrenprodukte, bzw. solche, die nicht mit dem menschlichen Körper in Kontakt geraten oder eingeatmet werden dürfen, für leicht entzündbare, explosive sowie bakteriologisch gefährliche Medien muß der Anlagenbauer bzw. –errichter die für die Sicherheit erforderlichen Vorrichtungen vorsehen und Maßnahmen treffen.	Pour des produits dangereux, nuisibles au contact et/ou à l'inhalation, inflammables, explosifs et dangereux du point de vue bactériologique et/ou viral, le constructeur de l'installation ou l'installateur devront prévoir des dispositifs appropriés au besoin.	Per prodotti pericolosi, nocivi al contatto e/o all'inalzione, infiammabili, esplosivi e pericolosi dal punto di vista batteriologico e/o virale, l'impiantista e/o l'installatore, dovranno prevedere idonei dispositivi all'uopo.
It is the plant designer's / plant fitter's responsibility to design and install all necessary protection in order to avoid that breaking and/or yielding of the equipment or of parts of it might damage people and/or parts of the plant (e.g. adequate protection against falling down of the motor etc.).	Es liegt in der Verantwortung des Anlagenplaners bzw. –aufstellers, alle notwendigen Schutzvorrichtungen vorzusehen, welche es verhindern, dass durch einen Geräte- oder Teiledefekt Personen- und/oder Sachschäden verursacht werden (z.B. geeigneter Schutz gegen das Herunterfallen des Motors etc.).	Dans ce cadre il est la responsabilité du constructeur de l'installation ou de l'installateur de projeter et d'installer tout équipement de protection nécessaire afin d'éviter que des ruptures et/ou des tassements de la machine et/ou des parties d'elle puissent causer de dégâts à des personnes et/ou des choses (par ex.: des protections appropriées contre la chute du moteur etc.).	In quest'ambito è cura dell'impiantista/ installatore predisporre ed installare tutti gli accorgimenti/protezioni al fine di evitare danni a cose o persone in caso di rotture e conseguente caduta di pezzi della macchina (ad es: rottura del motore).

RECEIPT OF GOODS / PACKAGING DATA

On arrival, prior to unloading, check if nature and quantity of the goods comply with the contents of the delivery note, the invoice and the acknowledgement of order.

If any parts are damaged through transport immediately state your claims in writing on the consignment note (waybill). The driver is obliged to accept this and to leave you a copy. Send off your claims without hesitation to us if you received goods free destination or to your shipping agent. Failure to state your claims on arrival of the goods may later invalidate your claim.
Avoid any kind of damage to goods during unloading and handling.
Always handle goods with care.

N. B.: The weights given below do not include any additional packaging such as pallets or similar.

KOLLIMASSE UND GEWICHTE

Bei Wareneingang vor dem Ab-Laden prüfen, ob Ware in Be-schaffenheit und Menge mit den Angaben auf Lieferschein, Rechnung und Auftragsbestätigung übereinstimmt. Eventuelle Schäden sofort schriftlich im Frachtbrief reklamieren, da spätere Ansprüche nicht mehr geltend gemacht werden können. Der Fahrer ist dazu verpflichtet, die Reklamation entgegen zu nehmen und dem Empfänger eine
Kopie dieser zu überlassen. Bei Lieferung frei Haus Reklamation an den Lieferanten schicken, in allen anderen Fällen an den Spediteur. Beim Abladen Ware nicht beschädigen. Berücksichtigen, daß es sich um mechanische Teile handelt, die mit Vorsicht zu behandeln sind.

N.B.: Gewichte beinhalten keine zusätzlichen Verpackungen wie Paletten o.ä.

EMBALLAGES - POIDS

Au moment où Vous recevez la marchandise, vérifiez bien que le modèle et la quantité correspondent aux données indiquées sur le bulletin de livraison, sur la facture et sur la confirmation de commande.
Si vous constatez des dommages, vous devez immédiatement le faire savoir en l'écrivant dans l'emplacement prévu à cet effet sur la lettre de voiture. Le chauffeur a l'obligation d'accepter votre réclamation et de vous en laisser une copie. Si la fourniture a été livrée franco destination, envoyez-nous votre réclamation, sinon, envoyez-la directement au transporteur. Si vous ne réclamez les dommages immédiatement après avoir reçu la marchandise, votre réclamation risque de ne pas être acceptée. Veillez à ne pas endommager la marchandise durant le déchargement et la manutention. Faites toujours extrèmement attention quand vous la deplacez.

N.B.: Les données ci-dessous ne comprennent pas le poids d'un éventuel emballage supplémentaire (palette ou autre).

TRASPORTO E RICEVIMENTO

Al ricevimento della merce controllare se la tipologia e la quantità corrispondono con i dati di bolla di consegna, fattura e conferma d'ordine.
Eventuali danni devono essere fatti presenti immediatamente per iscritto nell'apposito spazio della lettera di vettura. L'autista è obbligato ad accettare un tale reclamo e lasciarne una copia a Voi.
Se la fornitura è franco destino, inviate il Vs. reclamo a noi, altrimenti direttamente allo spedizioniere.
Se non richiederete i danni immediatatamente all'arrivo della merce, la vostra richiesta potrebbe non essere accolta.
Evitate ogni tipo di danneggiamento durante lo scarico e le movimentazioni.
Movimentate sempre la merce con cura.

N.B.: I dati riportati non comprendono il peso di un eventuale imballo cumulativo (pallet o altro).

	WEIGHTS - *GEWICHTE* - POIDS - *PESI* (kg)			
Type	Without speed variator *Ohne Regelgetriebe* Sans variateur *Senza motorizzazione*	With speed variator *Mit Regelgetriebe* Avec variateur *Con motovariatore*	Max. weight of accessories *Maximalgewicht Zubehör* Poids max. accessoires *Peso max. accessori*	Packing *Verpackung* Emballage *Imballo*
MBF 042	20	26	25	20
MBF 073	60	80	50	30
MBF 114	65	85	50	30

Total weight is given by weight of micro-batch feeder (with or without speed variator) plus accessories and packaging.

Gesamtgewicht = Gewicht des Mikrodosierers (mit oder ohne Regelgetriebemotor) + Zubehör + Verpackung.

Le poids total est donné du poids du microdoseur (avec ou sans motovariateur) plus les accessoires éventuels et l'emballage.

Il peso complessivo è dato dal peso del microdosatore (con o senza motovariatore) più gli eventuali accessori e l'imballo.

RECEIPT OF GOODS / PACKAGING DATA

KOLLIMASSE UND GEWICHTE

EMBALLAGES - POIDS

IMBALLI E PESI

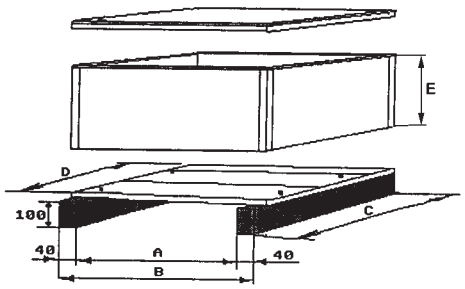

Suitable for - *Passend zu* Pour type - *Idoneo* MBF	**A**	**B**	**C**	**D**	**E**	**kg***
42	570	650	450	440	350	50
73	820	900	600	500	600	125
114	820	900	600	590	600	140

(*) Weight with standard MBF
Gewicht mit Standard MBF
Poids avec MBF std.
Peso con MBF std.

INSTALLATION
The micro-batch feeder is ready for operation. Prior to delivery, it has been tested at the factory.

PREPARATION
Remove equipment from packaging.

ASSEMBLY
The MBF units are despatched with the following parts not assembled:
- motors
- metering screws
- blending tools
- accessories

Procedure:
• unpack
• check supply is complete and in compilance with the order
• assemble metering screw

EINBAU
Der Dosierer ist bereits betriebsbereit und wurde vor der Auslieferung im Werk einem vollständigen Funktionstest unterzogen.

VORBEREITUNG
Gerät auspacken und zusammenbauen.

MONTAGE
Folgende Teile werden unmontiert geliefert:
- E-Motoren
- Dosierwerkzeuge
- Homogenisierwerkzeuge
- Zubehör

Vorgehensweise:
• Gerät auspacken
• Sicherstellen, daß Lieferung vollständing ist
• Dosierwerkzeug montieren

INSTALLATION
Le doseur ne nécessite d'aucun contrôle particulier, puisqu'il est fourni déjà complet et testé dans l'usine.

PREPARATION
Enlevez le doseur de l'emballage et commencez l'assemblage.

ASSEMBLAGE
Les microdoseurs sont fournis avec les éléments suivants non assemblés:
- moteurs
- outil de dosage
- homogénéisateur
- accessoires

Opérations à effectuer:
• enlever le microdoseur de l'emballage
• vérifier et contrôler la correspondance de tous les composants commandés
• monter l'outil de dosage

INSTALLAZIONE
I dosatori non richiedono particolari accorgimenti, in quanto la macchina viene fornita già completa e collaudata prima della consegna

PREPARAZIONE
Togliere il dosatore dall'imballo e provvedere all'imballaggio

ASSEMBLAGGIO
I dosatori vengono consegnati con le seguenti parti non montate:
- motore
- utensile dosaggio
- accessori

Operazioni da effettuarsi per un corretto assembiaggio:
• togliere il dosatore dall'imballo
• verificare presenza e corrispondenza di tutti i componenti ordinati.
• montaggio utensile dosaggio

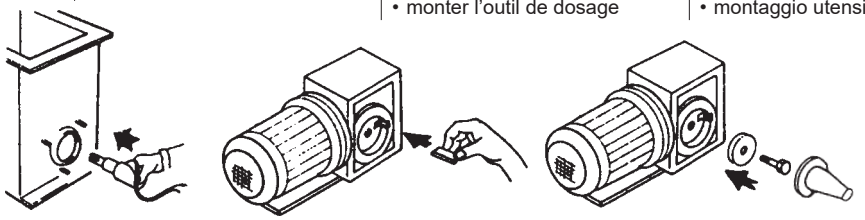

• ASSEMBLE FEEDER PIPE | **• DOSIERROHR MONTIEREN** | **• MONTER LA SORTIE** | **• MONTAGGIO SCARICO**

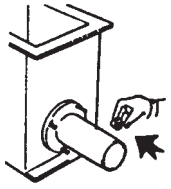

• ASSEMBLE BLENDING TOOL | **• HOMOGENISIERWERKZEUG MONTIEREN** | **• MONTER L'HOMOGÉNÉISATEUR** | **• MONTAGGIO UTENSILE DI OMOGENEIZZAZIONE**

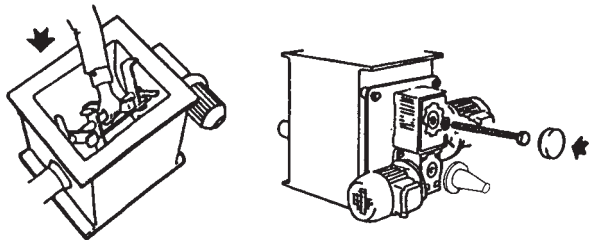

• ASSEMBLE MOTORS (SPEED VARIATORS) | **• E-MOTOREN UND, SOFERN VORHANDEN, REGELANTRIEB MONTIEREN** | **• MONTER LES MOTEURS (ÉVENTUELS VARIATEURS)** | **• MONTAGGIO MOTORI (EVENTUALI VARIATORI)**

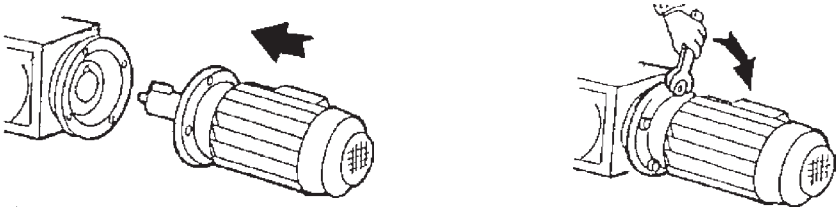

ASSEMBLE ACCESSORIES
- Fix micro-batch feeder to the ground or to a support structure using bolts.
- Check metering screw has been assembled correctly.
- Connect the electrical components to the central control panel or fit it in situ.
- Check sense of rotation of metering screw is ANTI-CLOCKWISE seen from be-hind the drive unit and the blending tool clockwise.
- Once carried out the above-mentioned steps, the micro-batch feeder is ready for the final check.

ZUBEHÖR MONTIEREN.
- Den Dosierer am Boden oder an der Rahmenkonstruktion mittels Schrauben befestigen.
- Prüfen, ob Dosierwerkzeug ordnungsgemäß montiert ist.
- Die elektrischen Komponenten an die zentrale Steuerungseinheit anschließen oder vor Ort einpassen.
- Sicherstellen, daß sich von hinter dem Antrieb stehend geshen das Dosierwerkzeug GEGEN DEN UHRZEIGERSINN dreht und dass das Homogenisierwerkzeug im Uhrzeigersinn drehen.
- Nach erfolgter Durchführung der vorgenannten Arbeiten ist der Dosierer bereit für eine letzte Kontrolle.

MONTER LES ACCESSOIRES
- Fixez le doseur à la structure de soutien au moyen de boulons à travers les trous prévus à ce propos.
- Contrôlez l'assemblage de l'outil de dosage.
- Connecter les composants électriques au panneau de commande central ou situé sur place.
- Contrôlez que vu de derrière la motorisation l'outil de dosage tourne AU SENS INVERSE DES AIGUILLES D'UNE MONTRE et l'outil de mélange dans le sens horaire.
- Exécutées les opérations indiquées ci-dessus, le microdoseur est prêt pour le contrôle final.

MONTAGGIO ACCESSORI
- Fissare il dosatore alla struttura di sostegno mediante viti da applicarsi nelle apposite sedi.
- Controllare il montaggio dell'utensile omogeneizzatore e dell'utensile dosaggio.
- Collegare le parti elettriche al quadro di comando centrale o posizionato in loco.
- Controllare che, rispetto ad un osservatore posto al lato del carico della macchina (retro), l'utensile di dosaggio ruoti in senso ANTIORARIO e l'utensile di omogenizzazione in senso orario.
- Eseguite le suddette operazioni, il dosatore è pronto per il collaudo finale.

ELECTRICAL CONNECTION
Connection between the feeder motor and mains supply, as well as all work on the open terminal box must be carried out by qualified personnel only.
PRIOR TO ANY KIND OF MAINTENANCE OR REPAIR WORK, DISCONNECT FEEDER MOTOR FROM THE MAINS!
Prior to connection ensure voltage supply and motor plate data match.
The protection of the junction box of the electric motor is IP 55.
Check the earthing connections of the machine.
The installer shall connect the machine to the earthing of the plant by means of a copper braid (not included in the standard supply) fitted to the fixing bolt; check the effectiveness of the earthing between the machine and the components of the plant connected to it. Always follow the safety standards.

ELEKTRISCHER ANSCHLUSS
Der Anschluß des Dosierermo-tors an das Netz sowie Arbeiten am Klemmenkasten des Dosierermotors im allgemeinen dürfen nur vom Elektriker ausgeführt werden.
VOR WARTUNGS- UND REPARATURARBEITEN IMMER DIE HAUPTSTROMZUFUHR UNTERBRECHEN!
Vor dem elektrischen Anschluß sicherstellen, daß die Netzspannung mit den Typenschildangaben des Dosierermotors übereinstimmen.
Die Schutzart des Elektromotor-Klemmenkastens ist IP 55.
Die Erdung der Maschine überprüfen.
Der Installateur sollte die Maschine unter Verwendung eines Kupfergeflechts (nicht im Standard-Lieferumfang enthalten), das an einem Schraubbolzen befestigt ist, an die Erdung der Anlage anschließen.
Die Funktion der Erdung zwischen Maschine und den anderen Anlagenkomponenten überprüfen, mit denen die Maschine verbunden ist. Dabei immer die Sicherheitsrichtlinien einhalten.
In jedem Fall die Allgemeinen Arbeitssicherheitsbestimmungen befolgen.

BRANCHEMENTS
La connexion entre le moteur et le réseau et, en tout cas, tout travail sur la boîte à bornes du moteur doit être effectué par du personnel spécialisé.
AVANT DE CHAQUE INTERVENTION DETACHER L'ALIMENTATION DE COURRANT!
Avant le branchement s'assurer que le voltage du réseau coïncide avec celui indiqué sur la plaquete du moteur.
La protection de la boîte a bornes du moteur électrique est IP 55.
Vérifier les connexions de mise à la terre de la machine.
L'installateur doit brancher la machine à la mise à la terre de l'installation au moyen d'une tresse en cuivre (non comprise dans la fourniture standard) inserée dans le boulon de fixation; avant de démarrer la machine, vérifier l'efficacité de la mise à la terre entre la machine et les composants de l'installation branchés sur celle-ci.
Faire toujours attention aux normes de sécurité.

COLLEGAMENTI
Il collegamento tra i motori del microdosatore e la rete elettrica e in ogni caso qualsiasi lavoro sulla scatola morsettiera dei motori, devono essere eseguiti da personale specializzato.
PRIMA DI QUALSIASI OPERAZIONE STACCARE L'ALIMENTAZIONE DI CORRENTE!
Prima del collegamento assicurasi che il voltaggio di rete coincida con quello indicato sulla targhetta del motore.
La protezione della morsettiera motore elettrico è IP55.
Verificare l'equipotenzialità della macchina.
L'installatore dovrà collegare la macchina al circuito di terra dell'impianto utilizzando una treccia di rame, non in dotazione, inserita nel bullone di fissaggio e verificarne l'effettiva equipotenzialità tra macchina e i componenti dell'impianto a contatto con le sue parti prima di avviare la macchina.
Fare sempre attenzione alle eventuali norme di sicurezza.

SAFETY NOTICE
Never introduce hands into a running micro-batch feeder.
Never open the inspection hatch when the feeder is running.
It is however necessary fitting upstream the machine a fix safety grid or a hopper high enough to prevent damages to limbs according to the Machine Directive in force. The same approach is necessary for the outlet: it is required using a vertical outlet or similar systems meant to prevent foreign bodies from entering the machine and cause damage to it, to persons or to their limbs. Always ensure the Machine Directive in force is being followed.

SICHERHEITS-HINWEIS
Niemals mit den Händen in den laufenden Mikrodosierer greifen.
Niemals die Inspektionsklappe öffnen, wenn der Dosierer in Betrieb ist.
Es ist notwendig, vor der Maschine ein Sicherheitsgitter oder ein Behälter mit adäquater Höhe zu installieren, um entsprechend der geltenden Maschinenrichtlinie Verletzungen an Gliedmaßen vorzubeugen.
Gleiches gilt auch für die Absicherung des Auslaufs: Es ist notwendig einen vertikalen Auslauf oder ähnliches zu verwenden, um zu verhindern, dass Fremdkörper in die Maschine gelangen können, die die Maschine schädigen oder das Personal verletzen könnten.
Stellen Sie zu jeder Zeit sicher, dass die momentan geltende Maschinenrichtlinie stets eingehalten wird.

PRECAUTIONS GENERALES
Jamais mettre les mains à l'intérieur du microdoseur pendant qu'il est en fonction.
Jamais ouvrir la trappe de visite quand le doseur est en fonction.
Il est toutefois nécessaire de monter au-dessus de la machine une grille de sécurité fixe ou une trémie suffisamment haute pour prévenir les dommages aux membres inférieurs, selon la directive européenne en vigueur. La même approche est nécessaire pour la bouche de sortie: il faut utiliser une sortie verticale ou des systèmes similaires destinés à empêcher les corps étrangers d'entrer dans la machine et causer des dommages à celle-ci ou blesser les personnes. Assurez-vous que la directive européenne en vigueur est respectée.

PRECAUZIONE GENERALI
Mai mettere le mani all'interno del microdosatore mentre è in funzione. Mai aprire lo sportello di ispezione quando il dosatore è in funzione.
In ogni caso é necessario che sopra la macchina venga montata una griglia di sicurezza fissa o una tramoggia che sia di altezza sufficiente ad impedire che gli arti di una persona vengano danneggiati nel rispetto della Direttiva Macchine Vigente
Lo stesso discorso vale per lo scarico: é necessario usare lo scarico verticale o un sistema equivalente che protegga da eventuali intrusioni che possano pregiudicare il funzionamento della macchina o danneggiare persone o loro arti.
Verificare idoneità dei sistemi in accordo alla Direttiva Macchine in vigore.

START-UP
Check whether foreign substances or water have entered the micro-batch feeder. In such a case clean thoroughly.
Avoid any friction between the metering screw and the body.
Check sense of rotation of metering screw is ANTICLOCKWISE seen from behind the drive unit.
Check oil level in gear reducer is correct.
Check to ensure, with batch feeder in stainless steel, that the inspection hatch is closed.
First start-up must be carried out with empty micro-batch feeder. If feeder operates correctly add material and proceed with regular operation.

INBETRIEBNAHME
Prüfen, ob Fremdkörper oder Wasser ins Innere des Dosierers gedrungen sind. Ist dem so, gründlich säubern.
Jede übermäßige Reibung zwischen Dosierwerkzeug und Gehäuse vermeiden.
Sicherstellen, daß sich das Dosierwerkzeug gegen den Uhrzeigersinn dreht (aus der Sicht hinter dem Antrieb). Bei falscher Drehrichtung Kabeldrähte umklemmen.
Ölstand im Getriebe prüfen.
Sicherstellen, dass beim Dosierer aus Edelstahl die Inspektionsklappe verschlossen ist.
Probelauf mit leerem Dosierer durchführen. Material zugeben und regulären Betrieb aufnehmen.

MISE EN MARCHE
Vérifiez qu'aucune substance externe ou de l'eau ne soient entrées dans le microdoseur. S'il y en a, nettoyez.
Evitez absolument toute friction entre l'outil de dosage et le corps.
Contrôlez le sens de rotation de l'outil de dosage (sens inverse de celui des aiguilles d'une montre); si erronné, invertir le branchement des fils dans la boîte à bornes du moteur.
S'assurer que le niveau d'huile dans le réducteur soit correct. S'assurer, dans le doseur en inox, que la trappe de visite est fermée.
La première épreuve de mise en marche doit être faite à microdoseur vide. Si tout fonctionne régulière-ment, alimenter le doseur avec du matériau et procéder normalement.

AVVIAMENTO
Verificare se sostanze esterne o acqua sono entrate nel microdosatore. Se così fosse, pulire.
Evitate assolutamente ogni frizione tra spirale e dosatrice e dell'omogeneizzatore contro la parte esterna.
Controllare il senso di rotazione dell'utensile di dosaggio (antiorario visto dal carico); se errato, invertire i poli del motore.
Assicurarsi che l'olio del riduttore sia al livello giusto. Accertarsi, nel dosatore in AISI, che sia chiuso lo sportello d'ispezione.
La prima prova di avviamento deve essere fatta a microdosatore vuoto; se tutto funziona regolarmente, alimentare con il materiale e procedere normalmente.

OPERATION

I Depending on the type of plant, operation of the micro-feeder is controlled by a central control panel or by a local starter.
It is essential having knowledge regarding the weight of the product laid on the top of the micro-batch feeder as the former cannot exceed the max. resistance of the inner casing and also it must not generate abnormal flexion of the blending tool.
The maximum weight in case of the 042 and 73/144 machine sizes is 120 respectively 240 kg.
As it can be difficult measure the actual weight that rests on it due to the unpredictable behavior of the various material, we consider that the volume of our standard hoppers will not generate problems for material having their specific weight up to 1.3 t/m3. Otherwise, please contact our Sales Department.
In case the weight laid on the micro-batch feeder exceeds the indicated limits there has to be provided a safety system upstream the machine.

N.B.: Life of the micro-batch feeder increases considerably if it is emptied at the end of each working day. This becomes even more important with materials which, through longer storage, tend to harden or pack.

ASSEMBLY / DISMANTLING FASTENING

The bottom part of the micro-batch feeder must be firmly fastened to the ground or to a support structure using nuts and bolts.
If on top of the standard hopper another loading system is installed the connection must be flexible in order to avoid vibrations.
In any case, vibrations must be avoided.
The micro-batch feeders cannot be used as a external support for the machines downstream it (eg. there cannot be hanged screw conveyors, belt conveyors and so on).

IMPORTANT: to prevent accidents it is necessary that the hopper for manual loading is equipped with fixed (bolted) protection grille.
Standard manual loading hoppers are always supplied complete with a protection grille.
Accident prevention laws require that this grille is correctly assembled and that the user does not remove it. If the user provides a different loading system or different types of mobile protection the protection must be able to stop the feeder instantaneously if protection is removed or opened.

This device is also meant to prevent machine start-up if the protection is not closed.

BETRIEB

Je nach Anlagentyp wird der Mikrodosierer über eine zentrale Steuerung oder einen Vor-Ort-Schaltkasten in Betrieb genommen.
Es ist unbedingt erforderlich das spezifische Gewicht des Produktes zu kennen, das auf dem Mikrodosierer aufliegt, da das Gewicht die max. Belastbarkeit des inneren Gehäuse nicht überschreiten darf. Des Weiteren könnte durch ein zu hohes Produktgewicht das Mischwerkzeug überbeansprucht bzw. verbogen werden.
Das Maximalgewicht bei den Maschinengrößen 042 und 73/144 ist 120 bzw. 240 kg.
Da das Verhalten verschiedener Materialien oft unvorhersehbar ist, kann es schwierig sein, das momentane Gewicht des auf der Maschine lastenden Materials zu messen. Ausgehend vom Volumen unseres Standardbehälters können wir jedoch einschätzen, das bei Materialien mit einem spezifischen Gewicht bis 1,3 t/m^3 keine Probleme entstehen. Andernfalls bitte unsere Vertriebsabteilung kontaktieren.
Für den Fall, dass das aufliegende Produkt das maximale Gewicht überschreitet, sind vor der Maschine entsprechende Schutzvorrichtungen zu installieren.

N.B.: Die Lebensdauer des Mikrodosierers erhöht sich merklich, wenn er täglich nach Feierabend geleert wird. Besonders wichtig ist dies bei der Dosierung von Medien, die nach längerer Lagerung zum Aushärten oder Anbacken neigen.

MONTAGE / DEMONTAGE BEFESTIGUNG

Der Mikrodosierer muß an seiner Unterseite bündig am Boden oder auf einem Rahmen mittels Schrauben befestigt werden.
Falls über dem Trichter ein weiteres Befüllsystem vorgesehen ist, muß zwischen diesem und dem Trichter des Dosierers eine flexible Verbindung vorgesehen werden, um zu verhindern, daß sich Vibrationen übertragen.
Vibrationen sind im allgemeinen zu vermeiden.
Die Mikrodosierer können nicht als äußere Halterung nachgelagerter Maschinen eingesetzt werden (z.B. können keine Schnecken- oder Gurtförderer etc. angebaut werden).

WICHTIG: zur Unfallverhütung muß der Trichter zur manuellen Aufgabe mit einem fest installierten (verschraubten) Schutzgitter versehen werden.
Die manuellen Aufgabetrichter werden immer mit Schutzgitter geliefert. Im Interesse der Unfallverhütung ist es wichtig, dass das Schutzgitter ordnungsgemäß montiert ist und nicht entfernt wird. Falls der Betreiber ein anderes Befüllsystem oder bewegliche Schutzvorrichtungen vorsieht, so müssen diese Schutzvorrichtungen so ausgeführt sein, daß das Gerät augenblicklich abschaltet, sobald die Schutzvorrichtung entfernt oder geöffnet wird.

Diese Vorrichtung darf es außerdem nicht gestatten, dass die Maschine eingeschaltet werden kann, wenn das Schutzgitter sich nicht in der geschlossenen Position befindet.

FONCTIONNEMENT

Selon le type d'installation, le fonctionnement du microdoseur est contrôle ou par un pupitre de commande ou par starter sur place.
Il faut connaître le poids du produit qui se trouve sur le corps du microdoseur, puisqu'il ne doit pas dépasser la résistance maximale du boîtier interne et aussi il ne doit pas générer une flexion anormale de l'outil d'homogénéisation.
Le poids maximum pour les tailles 042 et 73/144 est de 120 et respectivement de 240 kg.
Comme il est difficile de mesurer le poids réel en raison du comportement imprévisible des différents matériaux, nous estimons que le volume de nos trémies standards ne génèrent pas de problèmes pour les matières avec poids spécifique jusqu'à 1,3 t/m^3. Dans le cas contraire, veuillez contacter notre département des ventes.
Dans le cas où le poids visé sur le microdoseur excède les limites indiquées, il faut prévoir un système de sécurité sur la machine.

N.B.: La durée du microdoseur augmente sensiblement si on le vide à la fin de la journée.
Ceci est particulièrement important quand le matériau dosé tend à durcir ou à se compacter s'il reste ferme pour une certaine période de temos.

MONTAGE / DEMONTAGE FIXAGE

Le microdoseur doit être bien fixé dans la partie inférieure à une structure de support au moyen de boulons dans les trous prévus à ce propos.
Si au-dessus de la trémie est prévu un autre système de chargement, la connexion doit être flexible afin d'éviter des vibrations.
En tout cas il faut éviter toute vibration.
Les microdoseurs ne peuvent pas être utilisés comme support externe pour les machines en aval (par exemple vous ne pouvez pas pendre des convoyeurs à vis, convoyeurs à bande et ainsi de suite).

IMPORTANT: pour respecter les dispositions en vigueur en ce qui concerne la prévention d'accidents, il est nécessaire que la trémie de chargement manuel soit toujours munie d'une protection fixe (boulonnée).
Les trémies à chargement manuel sont toujours fournies dotées de grille de protection. Il est d'une importance fondamentale, dans le respect des normes de sécurité contre les accidents du travail, que cette protection soit assemblée correctement et ne soit pas enlevée. Au cas où le client utilise un autre système de chargement ou prévoit des protections de type mobile, il est obligatoire de doter l'appareillage d'un dispositif qui provoque son arrêt immédiat quand la protection est enlevée ou ouverte.

En outre ce dispositif ne doit pas permettre le démarrage de la machine quand la protection n'est pas dans la position correcte de fermeture.

FUNZIONAMENTO

In base al tipo di impianto, il funzionamento del microdosatore è controllato o da un quadro centrale di comando o da un comando in loco.
E molto importante conoscere il peso del prodotto che grava sul corpo del microdosatore: esso non deve mai superare la massima resistenza della cassa interna e non deve portare a flessioni anomale dell'utensile di omogenizzazione.
Considerare rispettivamente 120kg e 240kg come peso massimo per le taglie 042 e 73/114.
Poichè è molto difficile quantificare il peso che realmente viene a gravare a causa della imprevedibilità del comportamento dei vari prodotti, riteniamo che i volumi delle nostre tramogge standard con prodotti di peso specifico fino a 1,3 t/m^3 non abbiano problemi, in caso contrario consultare il ns. Uff. Tecnico Comm.le.
Qualora il peso sopra il microdosatore sia superiore ai limiti riportati sopra, è necessario prevedere un sistema di protezione nella tramoggia posto sopra il microdosatore.

N.B.: Si aumenta notevolmente la durata del microdosatore svuotandolo al termine di ogni giorno lavorativo.
Questo è particolarmente importante quando il materiale trasportato tende ad indurirsi o a compattarsi se rimane fermo per un certo periodo di tempo.

MONTAGGIO / SMONTAGGIO FISSAGGIO

Il microdosatore deve essere fissato saldamente nella parte inferiore a una struttura di sostegno mediante viti da applicarsi nelle apposite sedi.
Se sopra una tramoggia viene posto un altro sistema di carico questa connessione deve essere flessibile per evitare la propagazione di vibrazioni.
In ogni caso l'importante è che siano evitate vibrazioni.
I microdosatori non possono essere impiegate da sostegno esterno per macchine sottostanti (per es. non si possono appendere coclee, nastri trasportatori, canalette, etc.).

IMPORTANTE: per rispettare le vígenti disposizioni in materia di prevenzione, è necessario che l'eventuale tramoggia di carico manuale sia sempre munita di protezione fissa (imbullonata).
Le tramogge a caricamento manuale sono fornite sempre complete di griglia di protezione, è di fondamentale importanza, per il rispetto delle norme antinfortunistiche, che tale protezione sia correttamente assemblata, e non venga rimossa. Qualora il cliente usi un altro sistema di carico o preveda protezioni. di tipo mobile, è obbligatorio dotare l'apparecchiatura di un dispositivo che ne provochi l'arresto immediato all'atto della rimozione o apertura della protezione.

Tale dispositivo, inoltre, non deve consentire l'avviamento della macchina se la protezione non è nella posizione di chiusura.

Particular attention must be paid to the feeder outlet. Either a vertical outlet must be fitted (see catalogue chapter on “accessories”) or the area around the outlet must be made inaccessible to the operator because the metering screw runs freely.

Am Auslauf des Dosierers besteht besondere Verletzungsgefahr. Entweder muß ein vertikales Ablaufrohr verwendet werden (siehe Katalog “Zubehör”) oder der gesamte Bereich muß dem Bedienungspersonal wegen der sich frei drehenden Dosierspirale unzugänglich gemacht werden.

Il faut faire attention particulière à la sortie du microdoseur: ou il faut utiliser la sortie verticale (v. catalogue “accessoires”), ou cette partie doit être inaccessible au personnel parceque dans ce point la spire peut tourner librement.

Particolare attenzione deve poi essere posta al lato uscita del microdosatore: o si deve usare lo scarico verticale (vedi catalogo accessori) oppure questa parte del microdosatore deve essere inaccessibile al personale, in quanto in quel punto la spirale può ruotare a ciclo libero.

DISMANTLING

ATTENTION:
PRIOR TO DISASSEMBLING ANY PART OF THE MICRO-BATCH FEEDER, ENSURE FEEDER MOTOR IS DISCONNECTED FROM MAINS SUPPLY.

MAINTENANCE
Failure to follow the following instructions may cause problems and invalidate the warranty on the supplied equipment.
Once every day, when operation finishes, empty the micro-batch feeder.
Once every week check outlet is free from material residues. If not clean thoroughly to avoid any kind of obstruction to material flow.
With the batch feeder in 304 stainless steel open the inspec-tion hatch.
Obviously lubrication and maintenance intervals depend on the use and on the type of metered material.

In case of feeders with MBTT type shaft seals grease once a month.
If the machine uses MBTX, MBTN or MBTT type seals, check these on a monthly basis to make sure they are intact.
For more heavy-duty applications, such as with particularly abrasive material and/or high tool rotation speed, increase the maintenance frequency.

SUBSTITUTION OF WEAR PARTS
Follow the following instructions (see appendix).

DEMONTAGE

ACHTUNG:
VOR DEM AUSBAU IRGENDWELCHE TEILE AUS DEM DOSIERER SICHERSTELLEN, DASS DIE HAUPTSTROMZUFUHR ZUM MOTOR DES DOSIERERS UNTERBROCHEN IST.

WARTUNG
Das Nichtbefolgen der nachfolgenden Vorschriften kann zu Störungen führen und die Gewährleistung auf das gelieferte Gerät außer kraft setzen.
Jeden Tag nach Feierabend den Mikrodosierer leer fahren.
Einmal die Woche prüfen, ob Auslauf frei von Materialrück-ständen ist und ggfls. gründlich säubern, um einen freien Produktfluß zu gewährleisten.
Beim Dosierer aus Edelstahl 1.4301 die Inspektionsklappe öffnen.
Es ist klar, daß die Schmier- und Wartungsintervalle sowohl von der Betriebsart, als auch vom Dosiergut abhängen.

Bei Dosierern mit Wellenabdichtungen vom Typ MBTT ein mal monatlich abschmieren.
Falls die Maschine Dichtungen vom Typ MBTX, MBTN oder MBTT vorsieht, sind diesen Dichtungen einmal im Monat auf Unversehrtheit zu prüfen.
Bei Anwendungen unter schwierigen Verhältnissen, wie beispielsweise mit besonders abrasiv wirkendem Material und/oder hoher Drehgeschwindigkeit des Werkzeugs sind die Wartungsintervalle zu verkürzen.

AUSTAUSCH DER VERSCHLEISSTEILE
Nachfolgende Anleitungen befolgen (siehe Anhang).

DEMONTAGE

ATTENTION:
AVANT DE DEMONTER DES PIECES DU MICRODOSEUR S’ASSURER QUE L’ALIMENTATION DE COURANT AU MOTEUR ELECTRIQUE SOIT DETACHE !

ENTRETIEN
Le ne pas respecter rigoureusement les instructions suivantes peut causer des problèmes et peut invalider la garantie sur les machines fournies.
Tous les jours, à la fin du travail, vider le microdoseur.
Toutes les semaines vérifier si la sortie est libre de résidus de matériau; sinon, la nettoyer soigneusement afin d’éviter toute obstruction au passage du matériau.
Dans le doseur en inox 304 ouvrir la trappe de visite.
Il est évident que les intervalles de lubrification et de remplacement des pièces dépend et de l’utilisation et du type de matériau dosé.

Au cas où la machine est prévue d’étanchéités de type MBTT graisser une fois par mois.
Au cas où la machine prévoit des étanchéités type MBTX, MBTN ou MBTT contrôler chaque mois l’intégrité du joint d’étanchéité.
En cas d’applications particulièrement contraignantes, par exemple des matériaux abrasifs et/ou une vitesse élevée de rotation de l’outil, réduire les intervalles de maintenance.

SUBSTITUTION DES PIECES D’USURE
Suivez les instructions suivantes (Voir annexe).

SMONTAGGIO

ATTENZIONE:
PRIMA DI SMONTARE QUALSIASI PEZZO DEL MICRODOSATORE, ASSICURARSI CHE L’ALIMENTAZIONE DI CORRENTE AL MOTORE ELETTRICO SIA STACCATA !

MANUTENZIONE
Il non attenersi strettamente alle seguenti istruzioni può causare problemi ed invalidare la garanzia sulle macchine fornite.
Ogni giorno, alla fine del lavoro vuotare il microdosatore.
Ogni settimana, verificare se lo scarico è libero da residui di materiale: se non lo è pulire accuratamente per evitare ogni ostruzione al passaggio di materiale.
Nel dosatore in AISI 304 aprire lo sportello d’ispezione.
E’ chiaro che il tempo di lubrificazione e di sostituzione dei pezzi dipende sia dall’uso del dosatore che dal tipo di prodotto trasportato.

Nel caso in cui la macchina preveda tenute tipo MBTT procedere mensilmente all’ingrassaggio.
Nel caso la macchina prevede tenute tipo MBTX, MBTN o MBTT procedere mensilmente al controllo dell’integrità della tenuta stessa.
In caso di applicazioni più gravose, per esempio materiale particolarmente abrasivo e/o elevata velocità di rotazione dell’utensile, accorciare gli intervalli di manutenzione.

SOSTITUZIONE DEI PEZZI DI USURA
Seguire le seguenti istruzioni (Vedi allegati).

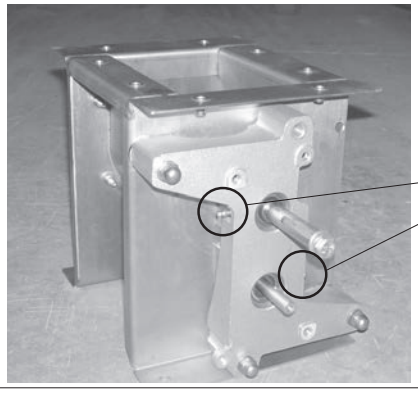

Greasing points
Schmierstellen
Points de graissage
Punti di ingrassaggio

METERING SCREW REPLACEMENT OF SINT® MBF - *AUSTAUSCH DES DOSIERWERKZEUGS VON SINT® MBF*
REMPLACEMENT OUTIL DE DOSAGE DE MBF DANS SINT® - *SOSTITUZIONE UTENSILE DOSAGGIO DELL' MBF IN SINT®*

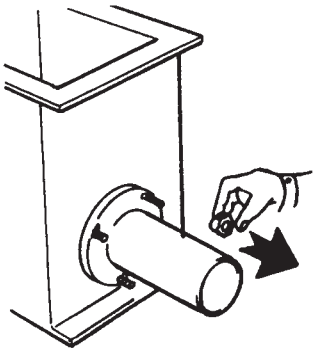
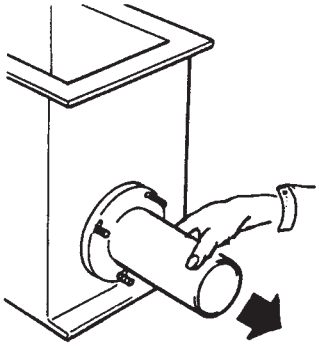
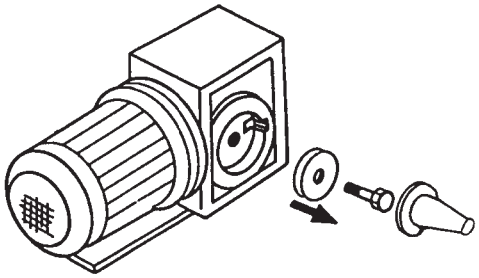
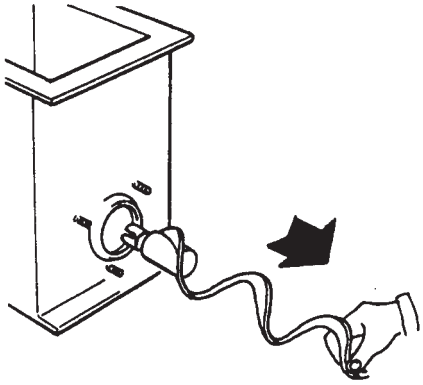
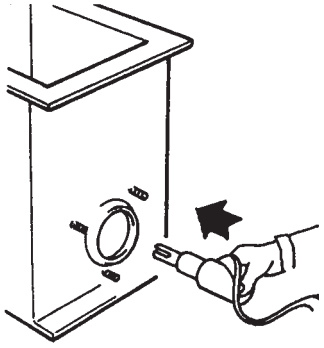
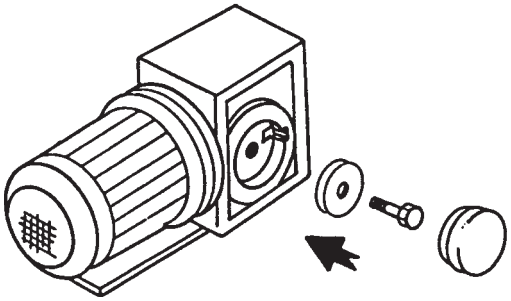
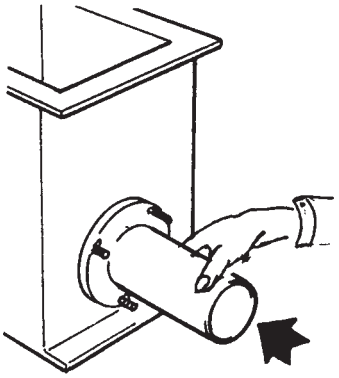

N.B.: DISCONNECT MOTOR FROM MAINS SUPPLY

1 - Unscrew nuts
2 - Take off feeder pipe
3 - Remove protection cover
4 - Unscrew metering screw
5 - Remove metering screw
6 - Insert new metering screw
7 - Screw on new metering screw
8 - Fix protection cover
9 - Reassemble feeder pipe

N.B.: HAUPTSTROMZUFUHR ZU DEN MOTOREN UNTERBRECHEN

1 - Muttern lösen
2 - Dosierrohr entfernen
3 - Abdeckungschutz entfernen
4 - Dosierwerkz. herausdrehen
5 - Dosierwerkz. herausziehen
6 - Neues Dosierw. einsetzen
7 - Neues Dosierw. eindrehen
8 - Abdeckungschutz befestigen
9 - Dosierrohr montieren

N.B.: DEBRANCHER LES CONNEXIONS ELECTRIQUES!

1 - Dévisser les écrous
2 - Emporter tube de dosage
3 - Enlever le couvercle de protection
4 - Dévisser (sens droit)
5 - Enlever outil de dosage
6 - Monter nouvel outil
7 - Visser (sens gauche)
8 - Fixer le couvercle de protection
9 - Rimontare la proboscide

N.B.: DISINSERIRE I COLLEGAMENTI ELETTRICI!

1 - Svitare i dadi
2 - Asportare proboscide
3 - Togliere coperchio di protezione
4 - Svitare filetto sinistro
5 - Estrarre utensile
6 - Inserire nuovo utensile
7 - Avvitare filetto sinistro
8 - Montare coperchio di protezione
9 - Rimontare proboscide

METERING SCREW REPLACEMENT OF AISI MBF - *AUSTAUSCH DES DOSIERWERKZEUGS VON EDELSTAHL MBF*
REMPLACEMENT OUTIL DE DOSAGE DE MBF DANS AISI - *SOSTITUZIONE UTENSILE DOSAGGIO DELL' MBF IN AISI*

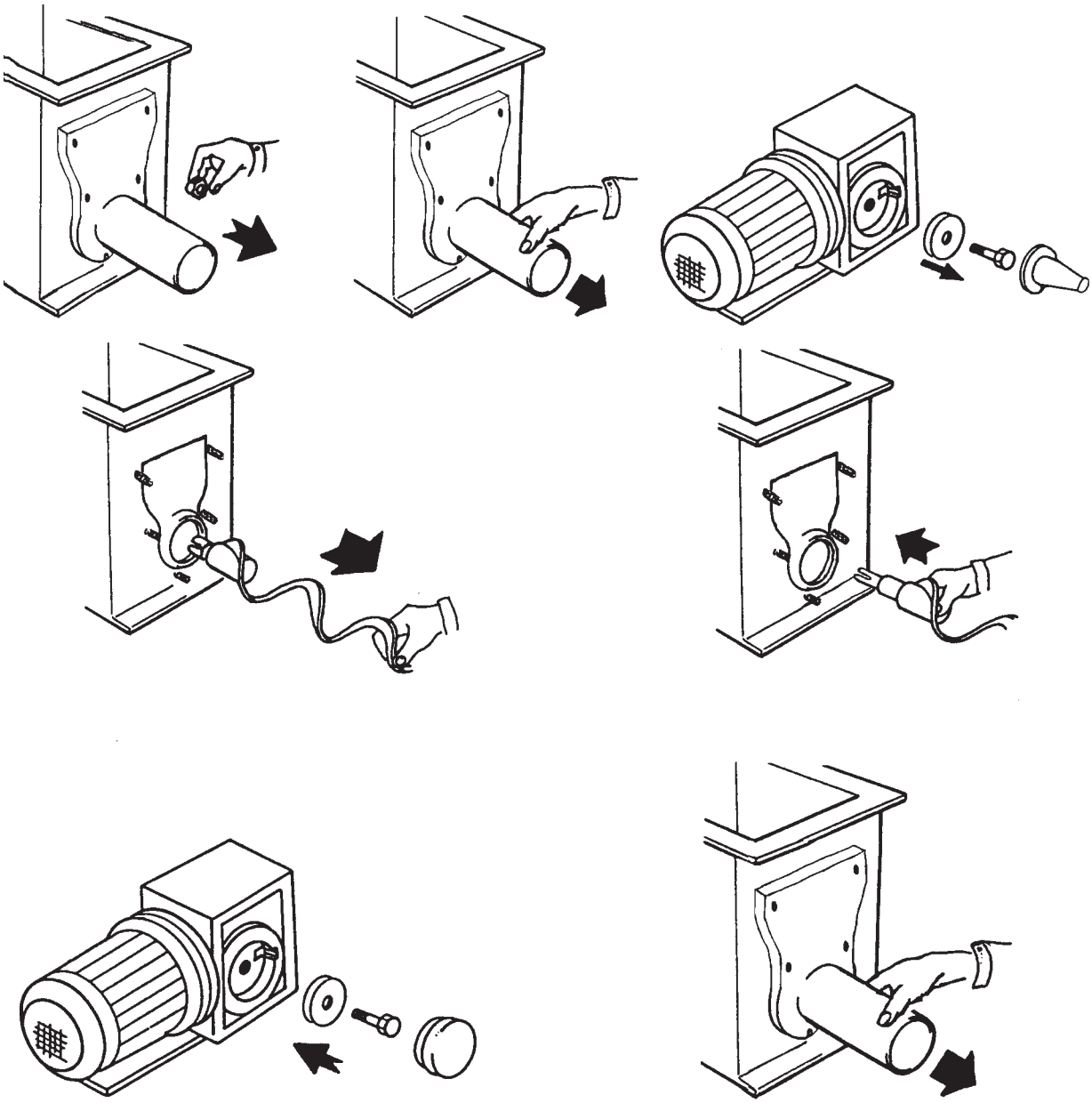

N.B.: DISCONNECT MOTOR FROM MAINS SUPPLY

1 - Unscrew safety nut
2 - Slacken threaded knobs
3 - Take off inspection hatch
4 - Remove protection cover
5 - Unscrew feeder screw
6 - Remove feeder screw
7 - Insert new feeder screw
8 - Screw on new feeder screw
9 - Fix protection cover
10- Reassemble threaded knobs
11- Fit inspection hatch
12- Tighten safety nut

N.B.: HAUPTSTROMZUFUHR ZU DEN MOTOREN UNTERBRECHEN

1 - Sicherungsmutter lösen
2 - Drehverschlüsse lösen
3 - Inspektionsklappe entfernen
4 - Schutzabdeckung entfernen
5 - Dosierwerkz. herausdrehen
6 - Dosierwerkz. herausziehen
7 - Neues Dosierw. einsetzen
8 - Neues Dosierw. eindrehen
9 - Schutzabdeckung befestigen
10- Drehverschlüsse eindrehen
11- Inspektionsklappe montieren
12- Sicherungsmutter anziehen

N.B.: DEBRANCHER LES CONNEXIONS ELECTRIQUES!

1 - Dévisser les écrous
2 - Dévisser les boulons
3 - Enlever la trappe de visite
4 - Enlever le couvercle de protection
5 - Dévisser (sens droit)
6 - Enlever outil de dosage
7 - Monter nouvel outil
8 - Visser (sens gauche)
9 - Fixer le couvercle de protection
10-Visser les boulons
11- Remonter la trappe de visite
12- Visser l'écrou de sécurité

N.B.: DISINSERIRE I COLLEGAMENTI ELETTRICI!

1 - Svitare il dado di sicurezza
2 - Svitare i pomelli
3 - Asportare il portello d'ispezione
4 - Togliere coperchio di protezione
5 - Svitare filetto sinistro
6 - Estrarre utensile
7 - Inserire nuovo utensile
8 - Avvitare filetto sinistro
9 - Montare coperchio di protezione
10 - Avvitare i pomelli
11 - Rimontare il portello d'ispezione
12 - Avvitare il dado di sicurezza

BLENDING TOOL REPLACEMENT - *AUSTAUSCH HOMOGENISIERWERKZEUG*
REMPLACEMENT HOMOGENEISATEUR - *SOSTITUZIONE UTENSILE OMOGENEIZZATORE*

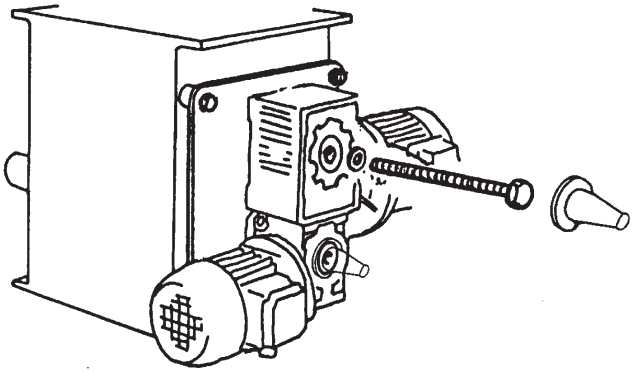

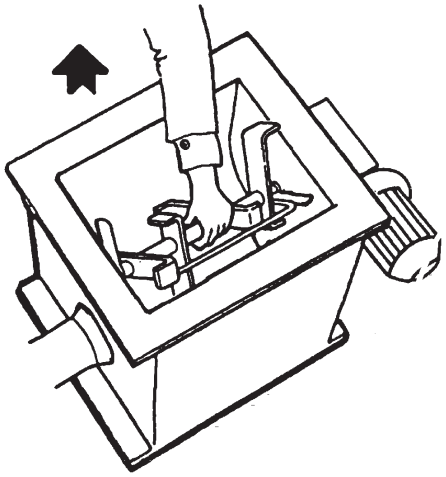

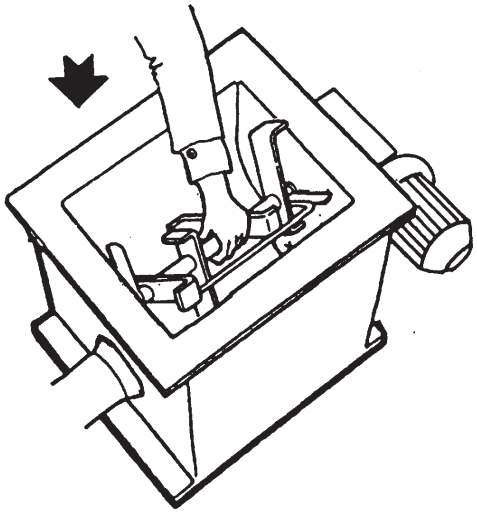

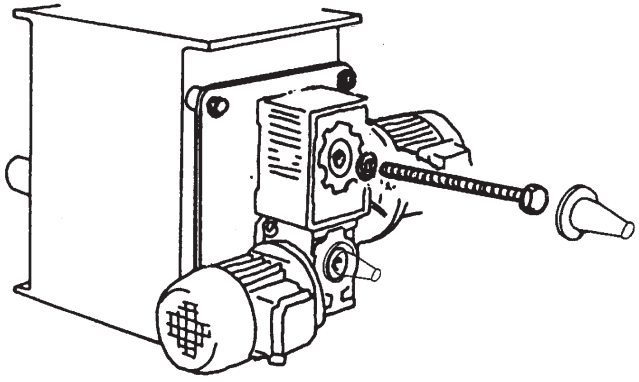

N.B.: DISCONNECT MOTORS FROM MAINS SUPPLY	**N.B.: HAUPTSTROMZUFUHR ZU DEN MOTOREN UNTERBRECHEN!**	**N.B.: DEBRANCHER LES CONNEXIONS ELECTRIQUES!**	**N.B.: DISINSERIRE I COLLEGAMENTI ELETTRICI!**
1 - Remove protection cover	1 - Abdeckungschutz entfernen	1 - Enlever couvercle de protection	1 - Togliere coperchio di protezione
2 - Unscrew gear rducer bolt	2 - Getriebeschraube lösen	2 - Dévisser boulon postérieur	2 - Agire sulla vite posteriore
3 - Remove bolt	3 - Schraube entfernen	3 - Enlever boulon	3 - Estrarre vite posteriore
4 - Remove blending tool	4 - Homogenisierwerkzeug von oben herausnehmen	4 - Enlever homogénéisateur	4 - Estrarre omogeneizzatore
5 - Insert new blending tool	5 - Neues Werkzeug einführen	5 - Introduire homogénéisateur	5 - Introdurre omogeneizzatore
6 - Insert gear reducer bolt	6 - Getrebeschraube einführen	6 - Insérer boulon postérieur	6 - Inserire vite posteriore
7 - Fasten gear reducer bolt	7 - Getriebeschraube anziehen	7 - Visser boulon postérieur	7 - Agire sulla vite posteriore
8 - Fix protection cover	8 - Abdeckungschutz befestigen	8 - Fixer couvercle de protection	8 - Fissare coperchio di protezione

SHAFT SEALS REPLACEMENT - *AUSTAUSCH WELLENABDICHTUNGEN*
REMPLACEMENT ETANCHEITES - *SOSTITUZIONE TENUTE*

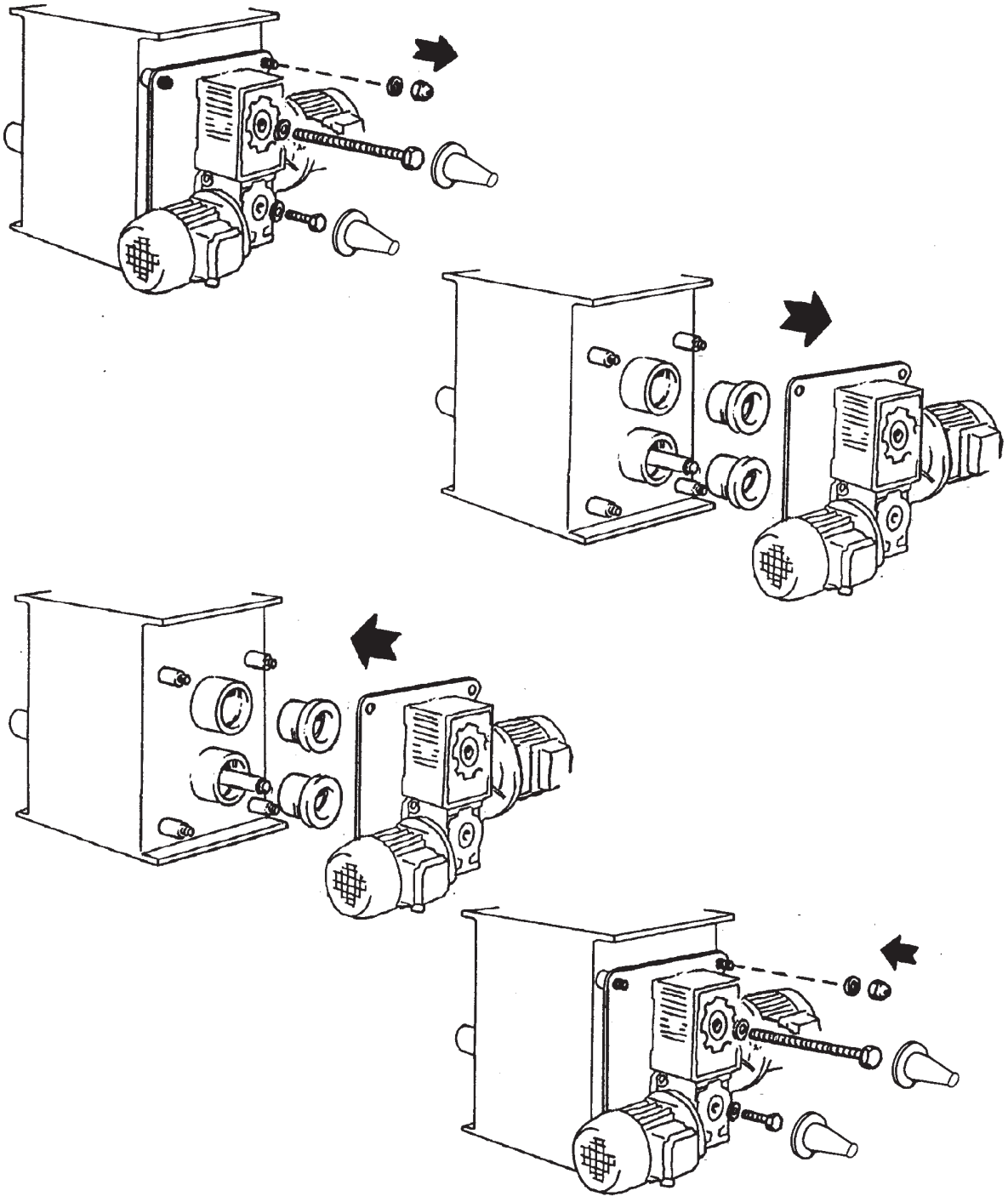

N.B: DISCONNECT MOTORS FROM MAINS SUPPLY	N.B: HAUPTSTROMZUFUHR ZU DEN MOTOREN UNTERBRECHEN !	N.B: DEBRANCHER LES CONNEXIONS ELECTRIQUES !	N.B: DISINSERIRE I COLLEGAMENTI ELETTRICI !

SHAFT SEALS REPLACEMENT AISI MBF - *AUSTAUSCH WELLENABDICHTUNGEN*
REMPLACEMENT ETANCHEITES MBF EN INOX - *SOSTITUZIONE TENUTE MICRODOSATORE IN AISI 304*

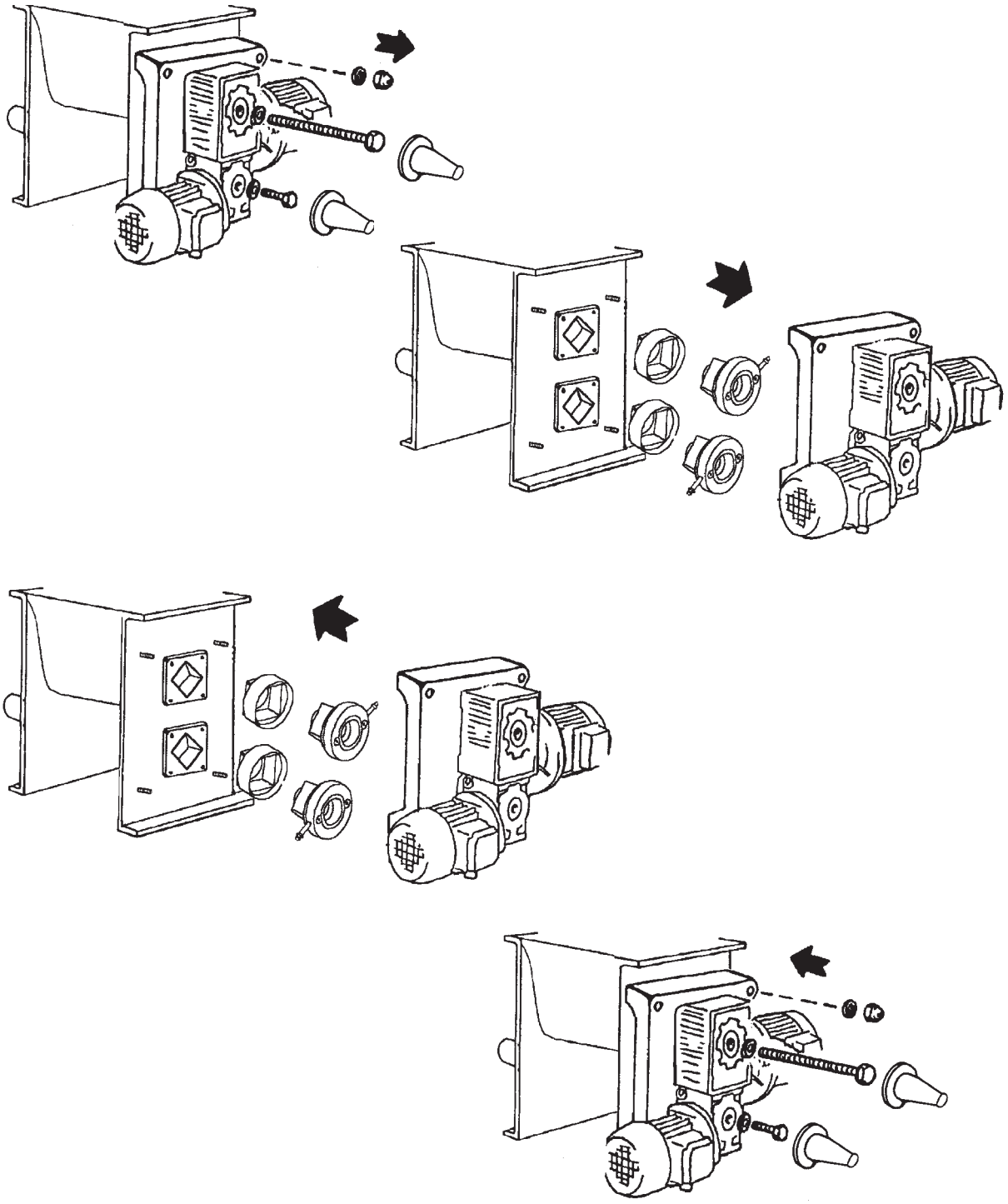

N.B: DISCONNECT MOTORS FROM MAINS SUPPLY	N.B: HAUPTSTROMZUFUHR ZU DEN MOTOREN UNTER-BRECHEN !	N.B: DEBRANCHER LES CONNEXIONS ELECTRIQUES !	N.B: DISINSERIRE I COLLEGA-MENTI ELETTRICI !

LUBRICATION

Micro-batch feeder MBW 042

The installed gear reducer is filled with long life grease and does, therefore, not require any maintenance.

Micro-batch feeders MBF 073-114

VARVEL REDUCERS
are sealed for life and, therefore, need no extra lubrification.

SPEED VARIATOR (MOTOVARIO)
Oil splash lubricated. For this reason it is particularly important to perform the following checks before starting them up:
- ensure that oil plugs are in right place and tight;
- ensure unit is topped up with oil to the, correct level. Oil must come up to about midpoint of the oil level plug according to mounting position.
  Units are supplied without breather plugs.
  Use only reccomended oils (see lable).

SCHMIERUNG

Mikrodosierer MBF 042

Das installierte Getriebe ist wartungsfrei dank einer Lebensdauer-Fettschmierung.

Mikrodosierer MBF 073-114

VARVEL-GETRIEBE
Erfordern keinerlei Wartung dank einer Lebensdauer-Fettschmierung.

REGELGETRIEBE (MOTOVARIO)
Da spritzgeschmiert, vor Inbetriebnahme unbedingt folgende Kontrollen vornehmen:
- Lage der Ölschrauben muß der jeweiligen Bauform entsprechen;
- Den ordnungsgemäßen Füllstand überprüfen; Am Schauglas muß ca. halber Füllstand anstehen. Regelgetriebe werden ohne Entlüftungsschrauben geliefert. Zum Nachfüllen die in der Tabelle genannten Ölsorten verwenden.

LUBRIFICATION

Microdoseur MBF 042

Le réducteur monté sur ce type de doseur est muni d'une graisse spéciale à vie.

Microdoseurs MBF 073-114

REDUCTEURS VARVEL
Aucune intervention nécessaire (lubrification à vie).

La lubrification du VARIATEUR (MOTOVARIO) se faisant par barbotage, on ne saurait trop recommander avant la mise en marche:
- de s'assurer de la position correcte des bouchons;
- de s'assurer du bon niveau du lubrifiant: l'huile doit être visible approximativement à mi-indicateur du niveau. Ils sont fournis sans bouchons de soupirail. Pour les appoints éventuels, utiliser uniquement les lubrifiants préconisés (voir tableau).

LUBRIFICAZIONE

Microdosatore MBF 042

Il riduttore montato con questo tipo di macchina è dotato di uno speciale grasso che ne mantiene la lubrificazione a vita.

Microdosatori MBF 073-114

RIDUTTORI VARVEL
Non necessitano di alcun intervento essendo lubrificati a vita.

La lubrificazione del VARIATORE (MOTOVARIO) avviene per sbattimento, quindi è molto importante, prima della messa in opera, eseguire le seguenti verifiche:
- assicurarsi che la posizione dei tappi olio sia corretta;
- verificare che il livello dell'olio sia corretto: olio visibile a circa metà della spia di livello. Sono forniti senza tappo di sfiato. Per gli eventuali rabbocchi attenersi ai tipi di olio raccommandati nella tabella.

Oil Quantity - *Ölfüllung*
Quantité d'huile - *Quantità d'olio*

TKF	l
002	0.12
005	0.15

Reccomended oils - *Empfohlene Ölsorten*
Type de lubrificants préconisés - *Tipi di olio raccomandati*

AGIP	A.T.F. DEXRON	**FINA**	A.T.F. DEXRON
BP	BP AUTRAN DX	**IP**	IP DEXRON
CHEVRON	A.T.F. DEXRON	**MOBIL**	A.T.F. 220
ELF	MATIC G2	**SHELL**	A.T.F. DEXRON
ESSO	A.T.F. DEXRON		

N.B.: The trade marks of lubrificants are in alphabetic order which does not refer to the quality of the products.
N.B.: Die Reihenfolge der Marken ist alphabetisch und sagt nichts über die Qualität der Produkte aus.
N.B.: Les marques de lubrificants sont par ordre alphabétique sans aucune référence en ce qui concerne la qualité du produit.
N.B.: Le marche di lubrificanti sono in ordine alfabetico senza alcun riferimento alla qualità del prodotto.

AUTOMATIC LUBRICATOR | **AUTOMATISCHE SCHMIERVORRICHTUNG** | **GRAISSEUR AUTOMATIQUE** | **LUBRIFICATORE AUTOMATICO**

CARTRIDGE GREASE NIPPLE LIT - *SCHMIERPATRONENSATZ*
KIT GRAISSEUR CARTOUCHE - *KIT INGRASSATORE CARTUCCIA*

M D X I 125

- 125 — Capacity - *Kapazität* - Capacité - *Capacità*
- I — Grease nipple - *Schmiernippel* - Graisseur - *Ingrassatore*
- X — Micro-batch feeders accessories - *Mikrodosierer zubehör* Accessoires microdoseurs - *Accessori microdosatore*

TECHNICAL SPECIFICATIONS	
Capacity	125 ml
Operating period	Adjustable at 1-12 months
Operating temperature	-20°C a + 55°C°
Max. operating pressure	5 bar**
Activation mechanism	Hydrogen gas release battery (H2)
Threading	G 1/4
Recommended storage temperature	+20°C
Storage period	2 years***
Weight	Approx. 190g (including grease)
Appellative	LAGD 125/WA (filled with SKF LGWA 2 grease) LAGD 125/"lubricant"

TECHNISCHE DATEN	
Kapazität	125 ml
Betriebsdauer	Von 1 bis 12 Monate einstellbar
Betriebstemperatur	-20°C bis + 55°C°
Max. Betriebsdruck	5 bar**
Einschaltmechanismus	Wasserstoff freisetzende Batterie (H2)
Gewinde	G 1/4
Empfohlene Lagerhaltungstemperatur	+20°C
Lagerzeit	2 Jahre ***
Gewicht	circa 190 g (Fett inbegriffen)
Bezeichnung	LAGD 125/WA (mit Fett SKF LGWA 2 gefüllt) LAGD 125/"Schmierstoff"

CARACTÉRISTIQUES TECHNIQUES	
Capacité	125 ml
Période de fonctionnement	Réglable de 1 à 12 mois
Température de fonctionnement	-20°C a + 55°C°
Pression max. de fonctionnement	5 bar**
Mécanisme d'activation	Batterie à dégagement de gaz hydrogène (H2)
Filetage	G 1/4
Température conseillée pour le stockage	+20°C
Période de stockage	2 ans***
Poids	Env. 190jj (graisse incluse)
Désignation	LAGD 125/WA (avec le plein de graisse SKF LGWA 2 grease) LAGD 125/"lubrifiant"

DATI TECNICI	
Capacità	125 ml
Periodo di funzionamento	Regolabile da 1 a 12 mesi
Temperatura di funzionamento	-20°C a + 55°C°
Pressione max. di funzionamento	5 bar**
Meccanismo di attivazione	Batteria a sviluppo di gas idrogeno (H_2)
Filettatura	G 1/4
Temperatura consigliata per lo stoccaggio	+20°C
Periodo di stoccaggio	2 anni***
Peso	Circa 190g (grasso incluso)
Appellativo	LAGD 125/WA (riempito con grasso SKF LGWA 2) LAGD 125/"lubrificante"

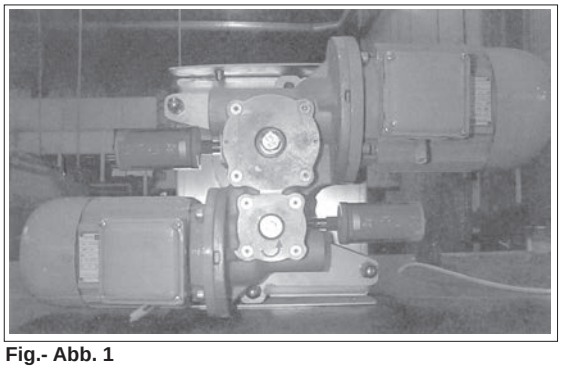

Fig.- Abb. 1
SKF assembly on Batch feeder - *Montage SKF auf Dosierer*
Montage SKF sur doseur - *Montaggio SKF su dosatore*

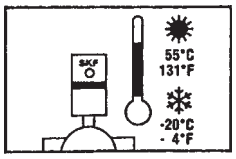

Operatin temperature - *Betriebstemperatur*
Température de fonctionnement - - *Temperatura di funzionamento*

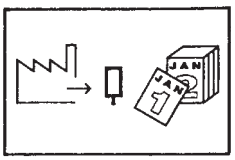

Production date - *Produktionsdatum*
Date de production - *Data di produzione*



Code MDXI125 grease nipple kit with 125 ml cartridge for greased MBTT seals

For assembly on new plants:

1. Make sure the grease used in System 24 is of the right type.
2. Make sure the grease supplied can be used with the one already present.
3. Check to ensure that the environmental temperature remains constant between -20ºC and + 55ºC.
4. Check to make sure the grease reaches the components to be lubricated.
5. Protect the unit from heat and temperature variations.

Note:
- The lubricator can be temporarily made inactive by setting the selector on 0.
- The unit can be mounted anywhere; it is airtight and can therefore also be installed immersed inside water.
- The oil lubricators are provided with a connector fitted with a check valve. Cut the tip before installation. Do not remove the connector.

Installation
1- Mark the installation date on the unit with an indelible ink marker pen.
2- Open the lubricant intake by cutting the tip or removing the cap (Fig. 3).
3- To activate the lubricator, turn the selector using a 3mm Allen wrench (Fig. 4).
4- Clean the area around the lubrication point.
5- Fit the new unit with the connector ready and tighten manually (Fig.6 - Fig.1).

Bestell-Nr.MDXI125 Schmierpatronensatz 125 ml für mit MBTT geschmierte Dichtungen

Für die Montage auf neuen Anlagen:
1. Sicherstellen, dass das im System 24 benutzte Fett der richtigen Sorte entspricht.
2. Sicherstellen, dass das Fett, das man benutzt, zusammen mit dem vorher vorhandenen benutzt werden kann.
3. Sicherstellen, ob die Umgebungstemperatur konstant zwischen -20°C und +55°C liegt.
4. Sicherstellen, dass das Fett die zu schmierenden Bestandteile erreicht.
5. Die Einheit vor Hitze und Temperatursprüngen schützen.

Anm.:
- Die Schmiervorrichtung kann vorübergehend abgestellt werden, wenn man den Schalthebel auf die Stellung 0 bringt.
- Das Gerät ist wasserdicht und kann daher überall installiert werden, auch in Wasser eingetaucht.
- Die Schmiervorrichtungen mit Öl werden mit einem Anschluss geliefert, der mit einem Rückschlagventil versehen ist. Vor der Installation das Ende absägen. Den Stutzen nicht entfernen.

Installation
1- Das Installationsdatum mit einem unauslöschlichen Filzstift auf der Einheit vermerken (Abb. 2).
2- Die Schmierstoffabgabe öffnen, indem man die Versiegelung durchschneidet oder den Stopfen abnimmt (Abb. 3).
3- Zum Aktivieren der Schmiervorrichtung den Wahlschalter um 3 mm drehen, und zwar mit einem Steckschlüssel (Abb. 4).
4- Den Bereich rings um die Schmierstelle reinigen.
5- Die neue Einheit mit dem vorhandenen Anschluss montieren und von Hand anziehen (Abb. 6 - Abb. 1)

Code MDXI125 kit graisseur à cartouche 125 ml pour étanchéités MBTT graissées

Pour le montage sur installations neuves:
1. S'assurer que la graisse utilisée dans le System 24 est du type approprié.
2. S'assurer que la graisse administrée peut être utilisée ensemble à celle existante.
3. Contrôle que la température ambiante se maintient constante entre -20°C et +55°C.
4. Vérifier que la graisse atteint les composants à lubrifier.
5. Protéger l'unité contre la chaleur et les écarts de température.

Remarques:
- Le graisseur peut temporairement être rendu inactif en tournant le sélecteur sur la position 0.
- L'unité peut être montée de partout, elle est étanche et peut donc être aussi installée immergée dans l'eau.
- Les graisseur à huile sont fournis avec un raccord doté de clapet antiretour. Avant de les monter couper l'extrémité. Ne pas enlever le raccord.

Mise en place
1- Marquer la date de mise en place sur l'unité avec un marqueur à encre indélébile (fig. 2).
2- Ouvrir la prise du lubrifiant en coupant le sceau ou en enlevant le bouchon (Fig. 3).
3- Pour activer le graisseur tourner le sélecteur de 3 mm en utilisant une clé d'Allen (Fig. 4).
4- Nettoyer toute la partie autour du point de lubrification.
5- Monter la nouvelle unité avec le raccord prévu et serrer à la main (Fig.6 - Fig.1).

Codice MDXI125 kit ingrassatore a cartuccia 125 ml per tenute MBTT ingrassate

Per il montaggio su impianti nuovi:

1- Assicurarsi che il grasso usato nel System 24 sia del tipo adatto.
2- Assicurarsi che il grasso somministrato possa essere usato insieme a quello preesistente.
3- Controllare se la temperatura ambientale si mantiene costante tra -20°C e +55°C.
4- Verificare che il grasso raggiunga i componenti da lubrificare.
5- Proteggere l'unità dal calore e dagli sbalzi di temperatura

Note:
- il lubrificatore può essere temporaneamente inattivato settando il selettore sulla posizione 0.
- L'unità può essere montata ovunque, è a tenuta stagna e può quindi essere installata anche sommersa in acqua.
- I lubrificatori ad olio sono forniti con un raccordo dotato di valvola di non ritorno. Prima di installarli tagliare l'estremità. Non rimuovere il raccordo.

Installazione
1- Marcare la data di installazione sull'unità con un pennarello ad inchiostro indelebile (fig.2).
2- Aprire la presa del lubrificante tagliando il sigillo o estraendo il tappo. (fig.3)
3- Per attivare il lubrificatore girare il selettore di 3 mm usando una chiave a brugola (fig. 4).
4- Pulire l'area intorno al punto di lubrificazione.
5- Montare la nuova unità con il raccordo predisposto e stringerla a mano (Fig.6 - Fig.1)

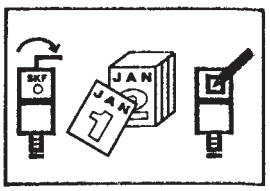

Fig.- Abb. 2

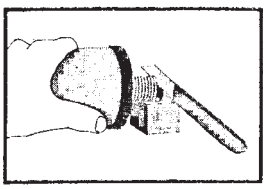
Fig.- Abb. 3

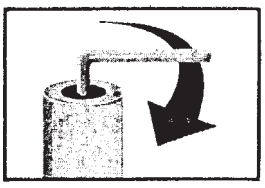
Fig.- Abb. 4

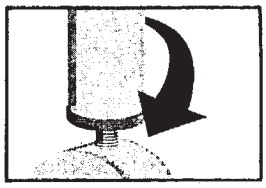
Fig.- Abb. 5

Selection on the basis of experience
If the previous results acquired on the basis of experience have been satisfactory, retain the same criteria.

Wahl aufgrund der Erfahrung
Wenn die vorher erhaltenen Resultate aufgrund der Erfahrung zufriedenstellend waren, die gleichen Kriterien beibehalten.

Sélection en fonction de l'expérience
Si les résultats acquis en fonction de l'expérience sont satisfaisants, maintenir les mêmes critères.

Selezione in base all'esperienza
Se i precedenti risultati acquisiti in base all'esperienza sono soddisfacenti, mantenere gli stessi criteri.

Selection on the basis of lubrication using manual grease nipple
Set the lubricator emptying period in such a way as to guarantee the same quantity of lubricant as that supplied using a manual grease nipple.
For example:
- Bearing "X" receives 10 grease pump cycles by means of the grease injector (SKF 1077600) per month.
- The quantity of grease per pump cycle is 2.0 cm3.

Wahl aufgrund der Neuschmierung mit Schmieren von Hand
Den Zeitraum für die Entleerung des Schmierstoffvorrats so einstellen, dass die gleiche Menge der vorher von Hand verabreichten Schmierstoffmenge gewährleistet wird. z.B.:
- Das Lager „X" erhält 10 Einspritzungen Fett pro Monat mittels des Schmiernippels (SKF 1077600).
- Die Fettmenge jeder einzelnen Einspritzung beträgt 2,0 cm^3.

Sélection en fonction de la lubrification effectuée par graisseur manuel
Régler la période de vidage du graisseur de manière à garantir la même quantité de lubrifiant fourni précédemment avec un graisseur manuel.
Par exemple:
- Le roulement "X" reçoit 10 coups de pompe à travers l'injecteur de graisse (SKF 1077600) par mois.
- La quantité de graisse pour chaque coup de pompe est de 2,0 cm3.

Selezione in base alla rilubrificazione effettuata tramite ingrassatore manuale
Settare il periodo di svuotamento del lubrificatore in modo da garantire lo stesso quantitativo di lubrificante precedentemente fornito con un ingrassatore manuale.
es.:
- il cuscinetto"X" riceve 10 pompate tramite l'iniettore di grasso (SKF 1077600) al mese.
- Il quantitativo di grasso per ogni pompata è di 2.0 cm^3.

LAGD 125
- The quantity of grease inside the LAGD 125 lubricator is 125 cm^3.
- Therefore 125 cm^3/2.0 cm^3 = 62 pump cycles.
- 62/10 (pump cycles per month) equivalent to 6.2 months.

Position the selector on 6 months using the 3mm Allen wrench.

LAGD 125
- Die Fettmenge, die sich innerhalb der Schmiervorrichtung LAGD befindet, beträgt 125 cm^3.
- Also 125 cm^3/2,0 cm^3=62 Einspritzungen.
- 62/10 (Einspritzungen pro Monat) entspricht 6,2 Monaten.

Den Wahlschalter daher auf 6 Montage stellen, wozu man die Inbusschraube von 3 mm benutzt.

LAGD 125
- La quantité de graisse à l'intérieur du graisseur LAGD 125 est de 125 cm^3.
- Donc 125 cm^3/2,0 cm^3 = 62 coups de pompe.
- 62/10 (coups de pompe par mois) équivaut à 6,2 mois.

Placer le sélecteur sur 6 mois à l'aide de la clé d'Allen de 3 mm.

LAGD 125
- Il quantitativo di grasso all'interno del lubrificatore LAGD 125 è di 125 cm^3.
- Dunque 125 cm^3/2.0 cm^3=62 pompate.
- 62/10 (pompate per mese) equivale a 6.2 mesi.

Posizionare allora il selettore su 6 mesi con l'ausilio della brugola da 3 mm.

Activation period
A period of activation is necessary before the lubricator can start supplying grease. This period is variable, depending on the selected emptying time and the temperature. At normal room temperatures, the grease delivery will start within a week. Two weeks are required for temperatures of -20ºC. Therefore, check the bearing to make sure it has enough grease to last this period.

Aktivierungszeit
Bevor die Schmiervorrichtung in der Lage ist, Fett abzugeben, braucht sie eine Aktivierungszeit. Diese Zeit hängt von der gewählten Entleerungszeit und der Temperatur ab. Bei normaler Umgebungstemperatur beginnt die Fettabgabe innerhalb einer Woche. Bei -20°C sind zwei Wochen erforderlich. Sicherstellen, dass das Lager ausreichend mit Schmierstoff versehen ist, um diese Zeit zu überstehen.

Période d'activation
Une période d'activation est nécessaire avant que le lubrificateur ne soit en mesure de fournir la graisse. Cette période est variable selon la période de vidage choisie et de la température. A une température ambiante normale, la graisse sera débitée au bout d'une semaine. Deux semaines sont nécessaires à la température de -20ºC. Vérifier donc que le roulement a suffisamment de lubrifiant pour couvrir cette période.

Periodo di attivazione
Prima che il lubrificatore sia in grado di fornire il grasso è necessario un periodo di attivazione. Questo tempo è variabile a seconda del periodo di svuotamento prescelto e della temperatura. A temperatura ambiente normale comincerà ad erogare il grasso entro una settimana. A -20°C necessiteranno due settimane. Verificare quindi che il cuscinetto abbia lubrificante a sufficienza per coprire questo periodo.

Influence on selection of duration
The emptying time can be influenced by the resistance offered by the lubrication channels and the room temperature. If the temperature is less than -10ºC, the emptying time will be approximately double that indicated on the lubricator.
On the other hand, if the room temperature is over 40ºC, the time will be halved.

Einfluss auf der Wahl der Dauer
Die Entleerungszeit kann durch den Widerstand beeinflusst werden, den die Schmierkanäle bieten, wie auch die durch Umgebungstemperatur. Bei Temperaturen unter -10°C beträgt die Entleerungszeit circa das doppelte im Bezug zu der Abgabe auf der Schmiervorrichtung. Bei Umgebungstemperaturen über 40°C wird die Zeit dagegen halbiert.

Influence sur la sélection de la durée
Le temps de vidage peut être influencé par la résistance offerte par les canaux de lubrification et par la température ambiante. Si la température ambiante est inférieure à -10ºC, le temps de vidage sera approximativement le double par rapport à ce qui est indiqué sur le graisseur.
Au contraire avec une température ambiante de plus de 40ºC, le temps sera diminué de moitié.

Influenza sulla selezione della durata
Il tempo di svuotamento può essere influenzato dalla resistenza offerta dai canali di lubrificazione e dalla temperatura ambiente. Se la temperatura è inferiore a -10°C il tempo di svuotamento sarà approssimativamente il doppio rispetto a quanto indicato sul lubrificatore.
Al contrario con temperatura ambiente di oltre 40°C il tempo sarà dimezzato.

NOISE
Operation noise depends on different factors. The most important ones are material properties and the application. The noise values in the following table were measured in one metre distance in the worst possible position.

BETRIEBSGERÄUSCHE
Betriebsgeräusche sind von verschiedenen Faktoren abhängig. Davon sind die wichtigsten die Produkteigenschaften und die Anwendung.
Die Geräuschwerte in der nachstehenden Tabelle wurden in einem Meter Entfernung in der ungünstigsten Position gemessen.

BRUIT
Le niveau de bruit des appareils dépend de différents facteurs. Les plus importants sont les caractéristiques du matériau dosé et l'application.
La valeur de bruit dans le tableau ci-dessous est mesurée à la distance de 1 m, dans la position plus défavoravble.

RUMORE
Il livello di rumorosità delle macchine dipende da diversi fattori tra cui principalmente la natura del materiale dosato e applicazione.
Il valore di rumorosità riportato nella tabella sottostante, è misurato alla distanza di 1 m, nella posizione più sfavorevole.

Type	dB(A)
MBF 042	56
MBF 073	60
MBF 114	62

DISAMNTLING AND DISPOSAL
Storage of equipement for longer periods:
- clean the equipment thoroughly.
- store the equipment in a container.

Scrapping:
- recycle plastic materials (e.g. seals, coatings etc.) and dispose according to regulations.
- Dispose of metal parts at the scrap yard.

DEMONTAGE UND VERSCHROTTUNG
Lagerung des Geräts über längere Zeiträume:
- Gerät gründlich säubern.
- Gerät in einem Behälter lagern.

Verschrottung:
- Kunststoffteile (z.B. Dichtungen, Beschichtungen etc.) gemäß den Vorschriften recyclen.
- Metallteile beim Schrotthändler abgeben.

DEMONTAGE ET DEMOLITION
Mise en entrepôt de la machine pendant une longue période:
- nettoyez soigneusement la machine;
- protégez-la en la mettant dans un conteneur.

Démolition:
- récupérez les pièces en matière plastique (par ex. revêtements, joints, etc.) et remettez les aux centres de récolte spécialisés;
- remettez les autres pièces en acier aux centres de récupération des métaux.

SMANTELLAMENTO E DEMOLIZIONE
Immagazinaggio della macchina per periodo prolungato:
- pulire accuratamente la macchina.
- immagazinare la macchina dentro un contenitore.

Rottamazione:
- riciclare i pezzi in plastica (per es. guarnizioni, rivestimenti etc.) a norma di legge.
- Consegnare i pezzi in metallo ai centri di raccolta.

FAULT FINDING
Minor problems can be resolved without consulting a specialist. Here are a few examples of possibles causes and solutions.

BETRIEBSSTÖRUNGEN UND ABHILFE
Kleinere Störungen können ohne die Einschaltung eines Fachmanns behoben werden. Im folgenden einige Beispiele möglicher Ursachen und Abhilfen.

PROBLEMES EVENTUELS
Vous pouvez résoudre vous-même les petits problèmes sans devoir consulter un spécialiste. De suite on donne quelques exemples des cuses éventuelles et des solutions possibles.

POSSIBILI INCONVENIENTI
I problemi minori possono essere risolti senza consultare uno specialista. Diamo qui di seguito un elenco degli incovenienti più comuni con le eventuali cause e possibili rimedi.

FAULT	POSSIBLE REASON	ACTION
Screw or agitator is damaged	Foreign body inside feeder	Remove foreign body and replace damaged components
Screw or agitator stops	Hygroscopic material inside feeder has absorbed humidity	Unload feeder completely when shutting down for longer periods
Rotating components unscrewed, no material handled	Motor incorrectly wired	Rewire (metering screw must turn anticlockwise viewed from behind drive unit)
Sticking of hygroscopic products **Agglomeration of viscous materials** **Contamination of the product**	Long shutdown period	Unload feeder completely when shutting down for longer periods

STÖRUNG	MÖGLICHE URSACHE	ABHILFE
Beschädigung des Dosier- oder Homogenisierwerkzeugs	Eindringen von Fremdkörpern	Fremdkörper entfernen und beschädigte Teile austauschen.
Blockierung von Dosier- oder Homogenisierwerkzeug	Verkleben von hygroskopischen Produkten bei längerer Verweilzeit. Viskose oder zum Anbacken neigende Medien mit hierfür ungeeigneten Werkzeugen.	Bei längeren Stilistandzeiten Gerät leeren. Geeignetes Dosierwerkzeug mit Innenrohr verwenden.
Dosierwerkzeug hat sich gelöst, keine Dosierung	E-Motor falsch angeschlossen.	E-Motor umklemmen; stellt man sich hinter den Antrieb, muß sich das Dosierwerkzeug gegen den Uhrzeigersinn, das Homogenisierwerkzeug im Uhrzeigersinn drehen.
Kompression hygroskopischer Medien **Verklumpen viskoser Medien** **Produktkontamination**	Längere Stillstandzeiten.	Bei längeren Stillstandzeiten das Gerät leeren.

PROBLEME	CAUSE POSSIBLE	SOLUTION
Défaut sur hélices ou rotors	Pénétration de corps étrangers dans la machine.	Retirer le corps étranger, remplacer les éléments endommagés.
Blocage de l'hélice ou du rotor	Empâtement de produits hygroscopiques demeurant dans la machine en milieux humides. Produits visqueux ou compressés traités au moyen de doseurs non adaptés.	Toujours vider la machine en cas de longues périodes de non utilisation. Utiliser des doseurs adaptés avec tube interne.
Dévissage organes roulants, Absence de flux	Connexion erronée des moteurs électriques.	Inversion de phases des moteurs: un observateur au chargement voit l'instrument de dosage tourner dans le sens trigonométrique, pendant que l'instrument d'homogénéisation tourne dans le sens horaire.
Compression de produits hygroscopiques **Colmatage de produits visqueux** **Contamination de oroduits périssables**	Périodes d'inactivité.	Vider la machine en prévision de longues périodes d'inactivité.

PROBLEMA	POSSIBILE MOTIVO	SOLUZIONE
Attorcigliamento eliche e rotori	Penetrazioni di corpi estranei entro la macchina.	Rimuovere il corpo estraneo; sostituire gli elementi danneggiati.
Blocco eliche	Appesantimento dei materiali igroscopici che permangono entro la macchina in ambienti umidi. Prodotti viscosi e impaccanti.	Svuotare sempre la macchina in caso di lunghi periodi di non utilizzo. Utilizzare utensili idonei.
Svitamento organi rotanti, assenza di flusso.	Erroneo collegamento delle fasi dei motori elettrici.	Inversioni fasi dei motori: un osservatore al carico vede l'utensile di dosaggio ruotare in senso antiorario.
Impaccamento prodotti igroscopici. **Solidificazione prodotti viscosi.** **Contaminazione prodotti deperibili**	Periodi di inattività.	Svuotare la macchina in previsione di lunghi periodi di inattività.

	List of hazards *Gefährdungsliste* Liste des risques *Lista dei rischi*	Safety Measures *Sicherheitsmaßnahmen* Consignes de sécurité *Misure di sicurezza*	Norm Reference *Bezugsnormen* Normes de référence *Norme di Riferimento*	Operating Instruction Ref. *Bez. Betriebsanleitung* Réf. instructions de fonctionnement *Rif. istruzioni operative*	Residual Risk *Restrisiken* Risque résiduel *Rischio residuo*
1.	**Mechanical Hazards - *Mechanische Gefährdungenen* - Risques mécaniques - *Rischi meccanici***				
1.1	Crushing - *Quetschen* Ecrasement - *Schiacciamento*	Protection (grid, robust flexible sock...) to keep the valve out of reach of the personnel. If the protection is movable a limit switch has to be fitted to stop the valve if the protection is removed. *Schutzvorrichtungen (Gitter, robuste Verbindungsmanschetten etc.) um zu verhindern, daß das Bedienungspersonal mit beweglichen Klappenteilen in Kontakt kommt. Bei beweglichen Schutzvorrichtungen ist ein Endschalter vorzusehen, der die Klappe abschaltet, sobald die Schutzvorrichtung entfernt wird.* Protection (grille, manchon flexible robuste etc.) pour éviter que le personnel entre en contact avec les pièces mobiles de la vanne. Si la protection est mobile, un dispositif de fin de course doit être installé qui arrête la vanne au moment où la protection est enlevée. *Protezione (griglia, robusto calzone flessibile ecc...) onde evitare che il personale entri in contatto con le parti mobili della valvola. Con protezioni mobili occorre installare un dispositivo fine corsa che arresti la valvola al momento in cui la protezione viene rimossa.*	EN 292 - 1 EN 294 EN 349	02515 M.6 02515 M.7	NO - *NEIN* NON - *NO*
1.2	Shearing - *Scheren* Troncature - *Troncamento*				
1.3	Cutting - *Schneiden* Coupe - *Taglio*				
1.4	Entanglement *Erfassen - Aufwickeln* Entortillement *Attorcigliamento*				
1.5	Drawing-in - Trapping *Einziehen - Fangen* Entraînement - Encastrement *Trascinamento - Intrappolamento*				
1.6	Impact - *Stoß* Impact - *Impatto*	Not applicable - *Nicht anwendbar* Non applicable - *Non applicabile*			
1.7	Stabbing - puncture *Stich* Perforation - perçage *Perforazione - foratura*				
1.8	Friction - abrasion *Reibung - Abrieb* Frottement - abrasion *Frizione - abrasione*				
1.9	High pressure fluid injection *Flüssigkeiten unter Druck* Injection de fluide à haute pression *Iniezione fluido ad alta pressione*				
1.10	Ejection of parts *Ausstoßung von Teilen* Ejection des pièces *Espulsione di pezzi*				
1.11	Loss of stability *Stabilitätsverlust* Perte de stabilité *Perdita di stabilità*	Fix correctly the machine to the ground or to a strong structure *Die maschine am Boden oder an einer soliden Struktur richtig verankern* Ancrer correctement la machine au sol ou à une structure solide *Ancorare correttamente la macchina al suolo o a una struttura solida*	EN 292-1	02515 M.6 02515 M.7	NO- *NEIN* NON - *NO*
1.12	Slip Trip and fall *Rutschen oder Fallen* Glissement et chute *Scivolamento e caduta*	Not applicable - *Nicht anwendbar* Non applicable - *Non applicabile*			

	List of hazards *Gefährdungsliste* Liste des risques *Lista dei rischi*	Safety Measures *Sicherheitsmaßnahmen* Consignes de sécurité *Misure di sicurezza*	Norm Reference *Bezugsnormen* Normes de référence *Norme di Riferimento*	Operating Instruction Ref. *Bez. Betriebsanleitung* Réf. instructions de fonctionnement *Rif. istruzioni operative*	Residual Risk *Restrisiken* Risque résiduel *Rischio residuo*
2.	**Electrical Hazard - *Elektrische Gefährdungen* - Risques électriques - *Rischi elettrici***				
2.1	Electrical contact *Elektrischer Kontakt* Contact électrique *Contatto elettrico*	Minimum protection of terminal box is IP 55 and suitable thermal fuse for the electrical motors has to be fitted. Only qualified personnel has to work on electrical connections. *Die kleinste Schutzart der Abzweigdose beträgt IP 55 und für die Elektromotoren sind geeignete thermosicherungen zu installieren.* *Die elektrischen Arbeiten dürfen ausschließlich durch qualifiziertes Personal ausgeführt werden.* La protection minimum du boîtier de dérivation est IP 55 et il faut prévoir des fusibles thermiques appopriés pour les moteurs électriques. Les opérations concernant les raccordements électriques doivent être réalisés exclusivement par du personnel qualifié. *La protezione minima della scatola di derivazione è IP 55 ed è necessario installare adeguati fusibili termici per i motori elettrici.* *Le operazioni riguardanti i collegamenti elettrici devono essere eseguite esclusivamente da personale qualificato.*	EN 292-1	02515 M.8 02515 M.9	NO - *NEIN* NON - *NO*
2.2	Electrostatic phenomena *Elektrostatische Erscheinungen* Phénomènes électrostatiques *Fenomeni elettrostatici*	Not applicable - *Nicht anwendbar* Non applicable - *Non applicabile*			
2.3	Thermal radiation *Wärmestrahlung* Radiation thermique *Radiazione termica*				
2.4	External influence on equipment *Äußere Einwirkungen auf die Geräte* Influence extérieure sur les appareillages *Influenza esterna sulle apparecchiature*				
3.	**Thermal Hazards - *Thermische Gefährdungen* - Risques thermiques - *Rischi termici***				
3.1	Burns and scalds *Verbrennungen und Branwunden* Brûlures et lésions *Bruciature e ustioni*	Not applicable - *Nicht anwendbar* Non applicable - *Non applicabile*			
3.2	Health -damaging effects by hot/cold environment *Gesundheitsschädliche Auswirkungen infolge warmer/kalter Umgebungen* Effets nocifs pour la santé dus aux environnement chauds/froids *Effetti dannosi per la salute dovuti ad ambienti caldi/freddi*				

	List of hazards *Gefährdungsliste* Liste des risques *Lista dei rischi*	Safety Measures *Sicherheitsmaßnahmen* Consignes de sécurité *Misure di sicurezza*	Norm Reference *Bezugsnormen* Normes de référence *Norme di Riferimento*	Operating Instruction Ref. *Bez. Betriebsanleitung* Réf. instructions de fonctionnement *Rif. istruzioni operative*	Residual Risk *Restrisiken* Risque résiduel *Rischio residuo*
4.	**Hazard generated by noise - *Gefährdungen durch Lärm* - Risque dérivant de la pollution acoustique - *Rischio da inquinamento acustico***				
4.1	Hearing losses *Gehörverlust* Pertes de l'ouïe *Perdite dell'udito*	Not applicable - *Nicht anwendbar* Non applicable - *Non applicabile*			
4.2	Interference with speech *Verständigungsschwierigkeiten* Difficulté de communication *Difficoltà di comunicazione*				
5.	**Hazard generated by vibration - *Gefährdungen durch Schwingungen* - Risque dû aux vibrations - *Rischio dovuto alle vibrazioni***				
		Fix correctly the machine to a strong structure *Die maschine am Boden oder an einer soliden Struktur richtig verankern* Ancrer correctement la machine au sol ou à une structure solide *Ancorare correttamente la macchina al suolo o a una struttura solida*	EN 292-1	02515 M.6 02515 M.7	NO - *NEIN* NON - *NO*
6.	**Radiation Hazards - *Gefährdungen durch Strahlung* - Risques de radiation - *Rischi di radiazione***				
		Not applicable - *Nicht anwendbar* Non applicable - *Non applicabile*			
7.	**Hazards generated by materials processed - *Gefährdungen duch die behandelten Materialien*** **Risques dus aux matériaux traités - *Rischi dovuti ai materiali trattati***				
7.1	Contact or inhalation *Berühren oder Einatmen* Contact ou inhalation *Contatto o inalazione*	For such a kind of materials the plant manufacturer and/or the installator has to fit suitable special device *Für diese Art Material ist der Anlagenhersteller oder der Installateurangehalten, passende Spezialeinrichtungen bereitzustellen.* Pour ce type de matériaux le constructeur de l'installation ou le personnel responsable est tenu de prévoir des dispositifs spéciaux. *Per questo tipo di materiali il costruttore dell'impianto o l'addetto all'installazione è tenuto a predisporre opportuni dispositivi speciali*	EN 292-1	02515 T.6 02515 M.4	NO - *NEIN* NON - *NO*
7.2	Fire and explosion *Brand oder Explosion* Incendie et explosion *Incendio ed esplosione*				
7.3	Biological (viral/bacterial) *Biologisch (durch Viren/Bakterien)* Biologique (viral/bactérien) *Biologico (virale/batterico)*				
8.	**H.generated by neglecting ergonomic principles - *Gefährdungen durch die Nichtbeachtung der ergonomischen Richtlinien*** **Risques dus à l'inobservation des principes ergonomiques - *Rischi dovuti all'inosservanza dei principi ergonomici***				
		Not applicable - *Nicht anwendbar* Non applicable - *Non applicabile*			
9.	**Hazards combination - *Kombination der Gefährdungen* - Combinaison de risques - *Combinazione di rischi***				
		Not applicable - *Nicht anwendbar* Non applicable - *Non applicabile*			
10.	**H. generated by failure of energy supply - *Gefährdungen durch eine Störung der Energieversorgung*** **Risques produits par une panne du secteur d'alimentation - *Rischi generati da un guasto nella rete di alimentazione***				
10.1	Failure of energy supply *Störung im Versorgungsnetz* Panne dans le secteur d'alimentation *Guasto nella rete di alimentazione*	Not applicable - *Nicht anwendbar* Non applicable - *Non applicabile*			
10.2	Unexpected ejection of parts *Unerwartetes Ausstoßen von Teilen* Ejection inattendue de pièces *Espulsione inaspettata di pezzi*				
10.3	Failure of control system *Störung des Steuersystems* Avarie du système de contrôle *Avaria del sistema di controllo*				
10.4	Errors of fitting - *Passungsfehler* Erreurs d'accouplement - *Errori di accoppiamento*				
11.	**H. generated by missing of safety related measures - *Gefährdungen durch die Nichtbeachtung der entsprechenden Sicherheitsnaßnahmen*** **Risques dus à l'absence de mesures concernant la sécurité - *Rischi dovuti alla mancanza di misure legate alla sicurezza***				
		Not applicable - *Nicht anwendbar* Non applicable - *Non applicabile*			

CHECK LIST IN CASE OF TROUBLE

GENERAL QUESTIONS
a) Does metering screw start without problems even after longer down periods?
b) Does it seem that atmospheric conditions contribute to malfunctioning?
c) Feeder must work in perfectly horizontal position.
d) Outlet must be free.

HOPPER CHECK
a) Hopper capacity must be less than 100 litres.
b) Is hopper equipped with bridge breaking deflector?
c) Is hopper equipped with fluidization, vibrator or knocker?

ELECTRIC MOTOR CHECK
a) Are voltage drops possible due to contemperary starting of different machines?
b) Is the plant equipped with a power generator ?
c) Check if motor receives power.
d) Check motor is correctly connected and wires are fixed properly to terminals.
e) Check power cut-out in main controls is correctly set and compare to motor plate data.
f) Check correct sense of rotation of electric motor.

MICRO-BATCH FEEDER CHECK
a) Does material stick to metering screw?
b) Are there any lumps of material hindering material transport?
c) Is the tecnopolymer body damaged?
d) Ensure shaft seals do not loose material.
e) During transport metering screw must not touch feeder pipe.

MATERIAL CHECK
a) Material description?
b) Bulk density? (kg/dm^3)
c) Particle size? (µm/mm)
d) Humidity? (%)
e) Flowability? (make material slide down a metal plate by varying the angle from low to steep)
f) Compressible material? (can you make a “snowball”?)
g) Abrasive material? (does it hurt when rubbing it between fingers?)

CHECKLISTE BEI BETRIEBSSTÖRUNGEN

ALLGEMEINE FRAGEN
a) Läuft Dosierwerkzeug auch nach längeren Betriebsunterbrechungen problemlos an?
b) Scheint Fehlfunktion durch Witterung begünstigt ?
c) Gerät muß sich in exakt horizontaler Lage befinden.
d) Auslauf muß frei sein.

KONTROLLE DES TRICHTERS
a) Trichterinhalt muß weniger als 100 l betragen.
b) Ist Trichter mit Entlastungsvorrichtung ausgestattet?
c) Ist Trichter mit Luftauflockerung, Rüttler oder Klopfer ausgestattet?

KONTROLLE E-MOTOR
a) Sind aufgrund gleichzeitigen Einschaltens mehrerer Geräte Spannungsschwankungen möglich?
b) Ist Anlage mit einem Stromgenerator ausgerüstet?
c) Prüfen, ob am Motor Strom anliegt.
d) Prüfen, ob Motor korrekt angeschlossen ist und ob Klemmenmuttern fest angezogen sind.
e) Prüfen, ob Überstromschalter des Motors in der Hauptsteuerung richtig eingestellt ist und mit Typenschilddaten vergleichen.
f) Motordrehrichtung prüfen.

KONTROLLE DES MIKRO-DOSIERERS
a) Haftet Dosiergut am Dosierwerkzeug?
b) Behindern Produktklumpen die Dosierung?
c) Ist der polymerverkleidung beschädigt?
d) Sicherstellen, daß durch die Wellenabdichtungen kein Produkt austritt.
e) Während der Dosierung darf das Dosierwerkzeug das Förderrohr nicht berühren.

PRÜFUNG DES DOSIERGUTS
a) Materialbezeichnung?
b) Schüttgewicht? (kg/dm^3)
c) Körnung? (µm/mm)
d) Feuchte? (%)
e) Fließfähigkeit ? (Materialprobe auf einem geneigten Blech zum Fließen bringen)
f) Komprimierbarkeit? (Kann ein “Schneeball” geformt wer-den?)
g) Abrasivität? (Schmerzt es, wenn man Material zwischen den Fingern reibt?)

CHECK-LIST EN CAS DE VIS EN PANNE

DEMANDES GENERALES
a) L’outil de dosage démarre sans problèmes même après des longues périodes d’inactivité?
b) Il semble que les conditions atmosphériques contribuisent au malfonctionnement?
c) Il faut que le doseur travaille de manière parfaitement horizontale.
d) Il faut que la bouche de sortie soit libre.

CONTROLE DE LA TREMIE
a) La trémie doit être plus petite que 100 litres.
b) La trémie est équipée d’un déflecteur casse-voûte?
c) La trémie est équipée d’un système de fluidification, d’un vibrateur ou d’un percuteur?

CONTROLE MOTEUR ELECTRIQUE
a) Est-ce qu’il y a la possibilité de variations de courant d’alimentation à cause d’un démarrage de divers appareils au même temps?
b) L’installation est équipée d’un générateur de courant?
c) Contrôler si le moteur reçoit du courant!
d) Contrôler si le moteur est connecté correctement et si les fils sont fixés bien aux bornes.
e) Contrôler le réglage thermique du moteur dans le pupitre général et le confronter avec les données sur la plaque du moteur.
f) Verificare il giusto senso di rotazione del motore elettrico!

CONTROLE DU MICRODOSEUR
a) Le matériau a adhéré à l’outil de dosage?
b) Est-ce qu’il y a des blocs de matériau qui obstruisent le dosage?
c) Est-ce que le corps en polymèr technique est ruiné?
d) S’assurer que les joints d’étanchéité ne perdent pas de matériau.
e) Durant le transport l’outil de dosage ne doit pas toucher le tube de décharge.

3) CONTROLE DU MATERIAU
a) Désignation du matériau
b) Densité? (kg/dm^3)
c) Granulométrie? (µm/mm)
d) Humidité? (%)
e) Fluidité? (faites couler le matériau sur une tôle en augmentant l’inclinaison de la même)
f) Compressibilité? (est-il possible de faire une “boule de neige”?)
g) Abrasivité? (est ce qu’il fait mal quand on frotte le matériau dans les doigts?)

CHECK-LIST IN CASO DI GUASTO

DOMANDE GENERALI
a) L’utensile di dosaggio parte senza problemi anche dopo lunghi periodi di sosta ?
b) Pare che le condizioni atmosferiche contribuiscano al malfunzionamento?
c) La macchina deve lavorare in modo perfettamente orizzontale.
d) La bocca di scarico deve essere libera.

CONTROLLO DELLA TRAMOGGIA
a) La tramoggia deve essere inferiore a 100 litri.
b) La tramoggia è equipaggiata con un deflettore rompiponte?
c) La tramoggia è equipaggiata con un impianto di fluidificazione, di un vibratore o martellatore ?

CONTROLLO MOTORE ELETTRICO
a) Sono possibili sbalzi di corrente di alimentazione a causa dell’avviamento contemporaneo di diverse macchine ?
b) L’impianto è equipaggiato con un generatore di corrente ?
c) Controllare se il motore riceve corrente!
d) Controllare se il motore è collegato correttamente e se i fili sono fissati bene ai morsetti!
e) Controllare la regolazione della termica del motore nel quadro generale e confrontarla con i dati sulla targhetta del motore!
f) Verificare il giusto senso di rotazione del motore elettrico!

CONTROLLO DEL MICRODOSATORE
a) Il materiale si è attaccato all’elica di dosaggio?
b) Ci sono dei blocchi di materiale che ostruiscono il trasporto?
c) Il corpo in tecnopolimero si è rovinato?
d) Accertarsi che le tenute non perdano materiale.
e) Durante il trasporto l’elica non deve toccare il tubo di scarico.

CONTROLLO DEL PRODOTTO
a) denominazione del prodotto ?
b) densità ? (kg/dm^3)
c) granulometria ? (µm/mm)
d) umidità? (%)
e) scorrevolezza ? (fare scorrere il materiale su una lamiera aumentando lentamente l’inclinazione!)
f) comprimibilità ‘ (è possibile fare una “palla di neve”?)
g) abrasività ? (fa male quando si sfrega il prodotto tra le dita ?)

WAM®

WAMGROUP

The manufacturer:

WAMGROUP S.p.A.

located in

Strada degli Schiocchi, 12 - I-41100 Modena (Mo) - Italy

under its own responsibility declares that:

MBF

Declaration Of Incorporation Of Partly Completed Machinery Annex II B 2006/42/CE Directive

comply with the RES Directive 2006/42/EC
of the European Parliament and the Council of 17 May 2006 on machinery

1.1.1. - Definitions
1.1.2. - Principles of safety integration
1.1.3. - Materials and products
1.1.5. - Design of machinery to facilitate its handling
1.3.1. - Risk of loss of stability
1.3.2. - Risk of break-up during operation
1.3.3. - Risks due to falling or ejected objects
1.3.4. - Risks due to surfaces, edges or angles
1.3.7. - Risks related to moving parts
1.3.8. - Choice of protection against risks arising from moving parts
1.3.9. - Risks of uncontrolled movements
1.5.4. - Errors of fitting
1.5.5. - Extreme temperatures
1.5.6. - Fire
1.5.7. - Explosion
1.5.8. - Noise
1.5.9. - Vibrations
1.5.13. - Emissions of hazardous materials and substances
1.5.15. - Risk of slipping, tripping or falling
1.6.1. - Machinery maintenance
1.6.2. - Access to operating positions and servicing points
1.6.4. - Operator intervention
1.6.5. - Cleaning of internal parts
1.7.1. - Information and warnings on the machinery
1.7.2. - Warning of residual risks
1.7.4. - Instructions

and, where applicable, the requirements imposed by the following EC Directives
Directive 2004/108/EC of the European Parliament and the Council of 15 December 2004 on the approximation of the laws of the Member States relating to electromagnetic compatibility.
Directive 2006/95/EC of the European Parliament and the Council of 12 December 2006 on the approximation of the laws of the Member States relating to electrical equipment designed for use within certain voltage limits.

The relevant technical documentation is compiled in accordance with Annex VII B of the Machinery Directive 2006/42/EC
Harmonized standards, national standards and technical regulations in question:
EN ISO 12100-1: 2005 EN ISO 12100-2: 2005

The signing company is committed to provide, in response to a reasoned request by national authorities, relevant information on products covered by this declaration, without prejudice to the rights of intellectual property of the manufacturer. The information will be transmitted directly to the national authorities having requested.

It's forbidden to operate all these products before the machine, in which they will be installed, is declared in conformity with 2006/42/EEC AND SUBSEQUENT AMENDMENTS

Strada degli Schiocchi, 12 - I-41100 Modena (Mo) - Italy, 01.01.2010

The person authorized to provide the technical documentation:
Vainer Marchesini

The legal representative:
Vainer Marchesini

WAM®

WAMGROUP

Der Hersteller:

WAMGROUP S.p.A.

mit Sitz in

Strada degli Schiocchi, 12 - I-41100 Modena (Mo) - Italien

erklärt unter eigener Verantwortung wie folgt:

MBF

EINBAUERKLÄRUNG für unvollständige Maschinen gem. Anhang II B der MRL 2006/42/EG

Diese Produkte entsprechen den Anforderungen der Maschinenrichtlinie 2006/42/EG
des europäischen Parlamentes und des Rates vom 17. Mai 2006

1.1.1. - Begriffsbestimmungen
1.1.2. - Grundsätze für die Integration der Sicherheit
1.1.3. - Materialien und Produkte
1.1.5. - Konstruktion der Maschine im Hinblick auf die Hanhabung
1.3.1. - Risiko des Verlustes der Standsicherheit
1.3.2. - Bruchrisiko beim Betrieb
1.3.3. - Risiken durch herabfallende oder herausgeschleuderte Gegenstände
1.3.4. - Risiken durch Oberflächen, Kanten und Ecken
1.3.7. - Risiken durch bewegliche Teile
1.3.8. - Wahl der Schutzeinrichtungen gegen Risiken durch bewegliche Teile
1.3.9. - Risiko unkontrollierter Bewegungen
1.5.4. - Montagefehler
1.5.5. - Extreme Temperaturen
1.5.6. - Brand
1.5.7. - Explosion
1.5.8. - Lärm
1.5.9. - Vibrationen
1.5.13. - Emission gefährlicher Werkstoffe und Substanzen
1.5.15. - Ausrutsch-, Stolper- und Sturzrisiko
1.6.1. - Wartung der Maschine
1.6.2. - Zugang zu den Bedienungsständen und den Eingriffspunkten für die Instandhaltung
1.6.4. - Eingriffe des Bedienungspersonals
1.6.5. - Reinigen innen liegender Maschinenteile
1.7.1. - Informationen und Warnhinweise an der Maschine
1.7.2. - Warnung vor Restrisiken
1.7.4. - Betriebsanleitung

Wo anwendbar wurden die Anforderungen folgender EG Richtlinien erfüllt
Richtlinie 2004/108/EG des Europäischen Parlaments und des Rates vom 15. Dezember 2004 zur Angleichung der Rechtsvorschriften der Mitgliedstaaten über die elektromagnetische Verträglichkeit.
Richtlinie 2006/95/EG des Europäischen Parlaments und des Rates vom 12. Dezember 2006 zur Angleichung der Rechtsvorschriften der Mitgliedstaaten betreffend elektrische Betriebsmittel zur Verwendung innerhalb bestimmter Spannungsgrenzen.

Die speziellen technischen Unterlagen gem. Anhang VII B der MRL 2006/42/EG wurden erstellt.
Folgende harmonisierte Normen, nationale Normen und technische Vorschriften fanden Anwendung:
EN ISO 12100-1: 2005 EN ISO 12100-2: 2005

Das ausstellende Unternehmen ist verpflichtet, die technischen Unterlagen für diese Produkte auf begründetes Verlangen den Marktaufsichtsbehörden, unbeschadet der Rechte am geistigen Eigentum des Herstellers, zur Verfügung zu stellen. Die Unterlagen werden direkt an die anfordernde Behörde gesandt.

Es ist verboten diese Produkte in Betrieb zu nehmen, bevor die Maschine, in welche diese eingebaut werden, den Anforderungen der MRL entspricht und die EG Konformitätserklärung gem. MRL 2006/42/EG und nachfolgenden Änderungen vorliegt.

Strada degli Schiocchi, 12 - I-41100 Modena (Mo) - Italien, 01.01.2010

Bevollmächtigter für die Zusammenstellung
der relevanten Technischen Unterlagen:
Vainer Marchesini

Für den Hersteller:
Vainer Marchesini

WAMGROUP S.p.A. - Strada degli Schiocchi, 12 - I-41100 Modena (Mo) - Italien

Le fabricant:

WAMGROUP S.p.A.

son siège social à

Strada degli Schiocchi, 12 - I-41100 Modena (Mo) - Italie

déclare sous sa propre responsabilité que

les machines type MBF

Déclaration d'Incorporation des machines partiellement construites - Directive 2006/42/CE Annexe II B

sont en conformité avec la Directive RES 2006/42/EC
du Parlement Européen et du conseil du 17 mai 2006 sur les machines

1.1.1. - Definitions
1.1.2. - Principes d'intégration en sécurité
1.1.3. – Matériels et produits
1.1.5. – Conception des machines pour faciliter leur manipulation
1.3.1. – Risque de perte de stabilité
1.3.2. – Risque de casse pendant fonctionnement
1.3.3. – Risques causés par la chute ou l'éjection d'objets
1.3.4. – Risques liés aux surfaces, aux bords et aux angles
1.3.7. – Risques liés aux pièces en mouvement
1.3.8. – Choix de protection contre les risques résultant de pièces mobiles
1.3.9. – Risques de mouvements non désirés
1.5.4. – Erreurs de montage
1.5.5. – Températures extrêmes
1.5.6. – Feu
1.5.7. – Explosion
1.5.8. – Bruit
1.5.9. – Vibrations
1.5.13. – Emission de matières et substances dangereuses
1.5.15. – Risque de glisser, trébucher ou tomber
1.6.1. – Maintenance des machines
1.6.2. – Accès aux postes de travail et aux points d'intervention
1.6.4. – Intervention de l'opérateur
1.6.5. – Nettoyage des parties internes
1.7.1. – Informations et avertissements sur la machine
1.7.2. – Avertissements sur les risques résiduels
1.7.4. – Notices de fonctionnement

et, quand applicable, avec les exigences imposées par les directives européennes suivantes
La **Directive 2004/108/CE** du Parlement européen et du Conseil du 15 Décembre 2004 sur le rapprochement des législations des États membres concernant la compatibilité électromagnétique.
La **Directive 2006/95/CE** du Parlement européen et du Conseil du 12 Décembre 2006 sur le rapprochement des législations des États membres concernant le matériel électrique destiné à être employé dans certaines limites de tension.

La documentation technique appropriée est constituée conformément à l'annexe VII B de la Directive Machines 2006/42/CE
Les normes harmonisées, les normes et règles techniques nationales en question:
EN ISO 12100-1: 2005 EN ISO 12100-2: 2005

La société signataire s'engage à fournir, en réponse à une demande motivée par les autorités nationales, toute information sur les produits couverts par cette déclaration, sans préjudice des droits de propriété intellectuelle du fabricant. Les informations seront transmises directement aux autorités nationales demanderesses.

Il est interdit d'utiliser tous ces produits avant que la machine, dans laquelle ils seront installés, soit déclarée conforme à la Directive 2006/42/CEE et ses amendements successifs.

Strada degli Schiocchi, 12 - I-41100 Modena (Mo) - Italie, 01.01.2010

La personne autorisée à fournir
la documentation technique:
Vainer Marchesini

Le représentant légal:

Vainer Marchesini

WAM®

WAMGROUP

Il sottoscritto fabbricante:

WAMGROUP S.p.A.

con sede legale in

Strada degli Schiocchi, 12 - I-41100 Modena (Mo) - Italia

dichiara sotto la propria responsabilità che:

le quasi macchine serie MBF

ai sensi dell'Allegato II B della Direttiva Macchine 2006/42/CE (DICHIARAZIONE DI INCORPORAZIONE)

risultano conformi ai RES della Direttiva 2006/42/CE

del Parlamento Europeo e del Consiglio del 17 maggio 2006 relativa alle macchine

1.1.1. - Definizioni
1.1.2. - Principi di integrazione della sicurezza
1.1.3. - Materiali e prodotti
1.1.5. - Progettazione della macchina ai fini della movimentazione
1.3.1. - Rischio di perdita di stabilità
1.3.2. - Rischio di rottura durante il funzionamento
1.3.3. - Rischi dovuti alla caduta o alla proiezione di oggetti
1.3.4. - Rischi dovuti a superfici, spigoli ed angoli
1.3.7. - Rischi dovuti agli elementi mobili
1.3.8. - Scelta di una protezione contro i rischi dovuti agli elementi mobili
1.3.9. - Rischi di movimenti incontrollati
1.5.4. - Errori di montaggio
1.5.5. - Temperature estreme
1.5.6. - Incendio
1.5.7. - Esplosione
1.5.8. - Rumore
1.5.9. - Vibrazioni
1.5.13. - Emissioni di materie e sostanze pericolose
1.5.15. - Rischio di scivolamento, inciampo o caduta
1.6.1. - Manutenzione della macchina
1.6.2. - Accesso ai posti di lavoro e ai punti d'intervento utilizzati per la manutenzione
1.6.4. - Intervento dell'operatore
1.6.5. - Pulitura delle parti interne
1.7.1. - Informazioni e avvertenze sulla macchina
1.7.2. - Avvertenze in merito ai rischi residui
1.7.4. - Istruzioni

e, qualora applicabili, alle esigenze imposte dalle seguenti Direttive Comunitarie

Direttiva 2004/108/CE del Parlamento Europeo e del Consiglio del 15 dicembre 2004 concernente il riavvicinamento delle legislazioni degli Stati membri relative alla compatibilità elettromagnetica.

Direttiva 2006/95/CE del Parlamento Europeo e del Consiglio del 12 dicembre 2006 concernente il riavvicinamento delle legislazioni degli Stati membri relative al materiale elettrico destinato ad essere adoperato entro taluni limiti di tensione.

La documentazione tecnica pertinente è stata compilata in conformità dell'Allegato VII B della Direttiva Macchine 2006/42/CE

Norme armonizzate, norme nazionali e regole tecniche considerate:

UNI EN ISO 12100-1: 2005 UNI EN ISO 12100-2: 2005

L'azienda firmataria della presente si impegna a trasmettere, in risposta a una richiesta adeguatamente motivata delle autorità nazionali, informazioni pertinenti sui prodotti oggetto della presente dichiarazione, fatti salvi i diritti di proprietà intellettuale del fabbricante. Le informazioni verranno trasmesse direttamente all'autorità nazionale che le ha richieste.

AVVERTENZA IMPORTANTE. E' vietato mettere in servizio la quasi macchina oggetto della presente dichiarazione finché la macchina finale in cui deve essere incorporata non è stata dichiarata conforme, se del caso, alle disposizioni della Direttiva Macchine 2006/42/CE.

Strada degli Schiocchi, 12 - I-41100 Modena (MO) - Italia, 01.01.2010

La persona autorizzata
a costituire il fascicolo tecnico:
Vainer Marchesini

Il rappresentante legale:

Vainer Marchesini

N.B. Rights reserved to modify technical specifications
N.B. Angaben ohne Gewähr. Änderungen können ohne Vorankündigung vorgenommen werden.
N.B. Toutes données portées dans le présent catalogue n'engagent pas le fabricant. Elles peuvent être modifiéès à tout moment.
N.B. Tutti i dati riportati nel presente catalogo non sono impegnativi e possono subire variazioni in qualsiasi momento.

WAMGROUP S.p.A.
Via Cavour, 338
I - 41030 Ponte Motta
Cavezzo (MO) - ITALY

☎ +39 / 0535 / 618111
fax +39 / 0535 / 618226
e-mail info@wamgroup.it
internet www.wamgroup.com
videoconference + 39 / 0535 / 49032

LEFT BLANK

WAM®

WAMGROUP

3

SPARE PARTS

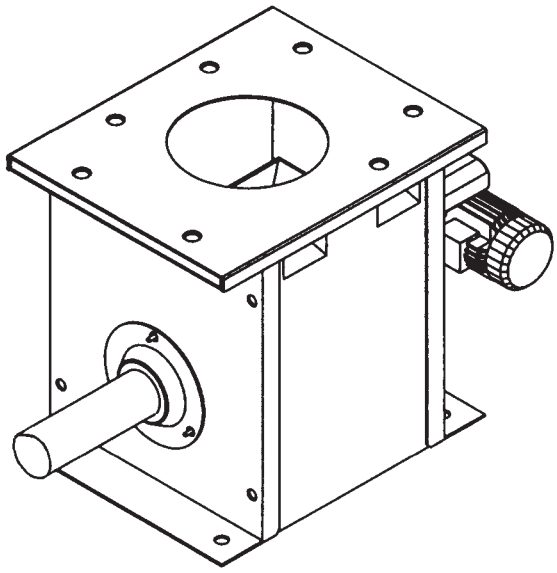

MBF

- ***MICRO-BATCH FEEDERS***
  SPARE PARTS CATALOGUE
- ***MIKRODOSIERER***
  ERSATZTEILKATALOG
- ***MICRODOSEURS***
  PIECES DE RECHANGE
- ***MICRODOSATORI***
  PEZZI DI RICAMBIO

All rights reserved © WAMGROUP S.p.A.

CATALOGUE No.		VAL.062.-.R.4L	CREATION DATE
ISSUE **A12**	CIRCULATION **100**	DATE OF LATEST UPDATE **05.14**	**03 - 2000**

All the products described in this catalogue are manufactured according to **WAMGROUP S.p.A. Quality System procedures**. The Company's Quality System, certified in July 1994 according to International Standards **UNI EN ISO 9002** and extended to the latest release of **UNI EN ISO 9001**, ensures that the entire production process, starting from the processing of the order to the technical service after delivery, is carried out in a controlled manner that guarantees the quality standard of the product.

*Alle in diesem Katalog beschriebenen Produkte werden gemäß dem **Qualitätssystem der WAMGROUP S.p.A.** hergestellt. Das im Juli 1994 gemäß der internationalen Norm **UNI EN ISO 9002** und auf die neueste Version der **UNI EN ISO 9001** erweiterte, zertifizierte Qualitätssystem der Firma gewährleistet, dass der gesamte Produktionsprozess von der Auftragsbearbeitung bis zum technischen Kundendienst nach Lieferung in kontrollierter Art und Weise erfolgt, so dass der Qualitätsstandard des Produkts gewährleistet ist.*

Tous les produits décrits dans ce catalogue sont fabriqués selon les procédures du **Système de Qualité de WAMGROUP S.p.A.**, certifié en Juillet 1994 selon les normes internationales **UNI EN ISO 9002** et étendu à la dernière version de la norme **UNI EN ISO 9001**. Cela garantit que le processus de production, à partir de la gestion de la commande au service technique après-vente, est effectué de manière contrôlée garantissant la norme de qualité du produit.

*Tutti i prodotti descritti nel catalogo sono stati realizzati secondo le **procedure del Sistema Qualità di WAMGROUP S.p.A.** Il Sistema Qualità aziendale, certificato dal luglio 1994 in conformità alle normative internazionali **UNI EN ISO 9002** e successivamente esteso all' ultima versione delle normative **UNI EN ISO 9001**, garantisce che l'intero processo produttivo, dalla formulazione dell'ordine fino all'assistenza tecnica dopo la consegna, si svolga secondo modalità controllate che garantiscono lo standard qualitativo del prodotto.*

This publication cancels and replaces any previous edition and revision.
We reserve the right to implement modifications without notice.
This catalogue cannot be reproduced, even partially, without prior written consent by the Manufacturer.

Diese Veröffentlichung storniert und ersetzt alle früheren Ausgaben und überarbeiteten Fassungen.
Wir behalten uns das Recht vor, Änderungen ohne vorherige Information durchzuführen.
Dieser Katalog darf selbst auszugsweise nicht ohne das schriftliche Einverständnis der Herstellers vervielfältigt werden.

Cette publication annule et remplace toute édition et révision antérieure.
Nous nous réservons le droit de mettre en place des modifications sans préavis.
Aucune reproduction, partielle ou intégrale du catalogue, ne pourra être faite sans l'accord préalable et écrit du Fabricant.

Questa pubblicazione annulla e sostituisce le edizioni e revisioni precedenti.
Ci riserviamo la facoltà di apportare modifiche senza preavviso.
Il presente catalogo non può essere riprodotto, nemmeno parzialmente, senza previo consenso scritto del Costruttore.

1 TECHNICAL CATALOGUE — **TECHNISCHER KATALOG**

DESCRIPTION AND TECHNICAL CHARACTERISTICS ... BESCHREIBUNG UND TECHNISCE MERKMALE ... **T. 6 → .23**
ORDER CODES ... BESTELLCODES ... **24 → .27**
ACCESSORIES ... ZUBEHÖR ... **28 → .41**
OPERATION AND MAINTENANCE ... BETRIEBS- UND WARTUNGSANLEITUNG ... **42**
INQUIRY AND ORDER FORM ... ANFRAGE- UND BESTELLBLATT ... **43**

1 CATALOGUE TECNIQUE — **CATALOGO TECNICO**

DESCRIPTION ET CARACTERISTIQUES TECHNIQUES ... DESCRIZIONE E CARATTERISTICHE TECNICHE ... **T. 6 → .23**
CODES DE COMMANDE ... CODICI DI ORDINAZIONE ... **24 → .27**
ACCESSOIRES ... ACCESSORI ... **28 → .41**
UTILISATION ET ENTRETIEN ... USO E MANUTENZIONE ... **42**
QUESTIONNAIRE ... MODULO DI RICHIESTA ... **43**

2 MAINTENANCE CATALOGUE — **WARTUNGSKATALOG**

OPERATION AND MAINTENANCE ... BETRIEBS- UND WARTUNGSANLEITUNG ... **M. 4 → .24**

2 CATALOGUE D'ENTRETIEN — **CATALOGO DI MANUTENZIONE**

UTILISATION ET ENTRETIEN ... USO E MANUTENZIONE ... **M. 4 → .24**

3 SPARE PARTS CATALOGUE — **ERSAITZTEILKATALOG**

SPARE PARTS ... ERSATZTEIL ... **R. 4 → .12**

3 CATALOGUE PIECES DE RECHANGE — **CATALOGO RICAMBI**

PIECES DE RECHANGE ... PEZZI DI RICAMBIO ... **R. 4 → .12**

ORDERING OF SPARE PARTS
To identify the spare parts refer to the following tables.
To order spare part either indicate the part code or the microdoseur, the item number and part description, as well as the required quantity.
Kits and sets are only supplied entirely.
For any further information plase.

ERSATZTEILBESTELLUNGEN
Zur Identifikation der Ersatzteile auf nachfolgende Tabelle Bezug nehmen.
Zur Ersatzteilbestellung ist es ausreichend, die Produktionsnummer des Mikrodosierers, die Position des Teils in der Ersatzteilliste und die gewünschte stückzahl.

COMMANDE DE PIECES DE RECHANGE
Pour identifier les pièces de rechange voyez le tableau suivant.
Pour commander des pièces de rechange il est suffisant d'indiquer le numéro matriculaire du microdoseur, la position de la pièce et la quantité désidérée.
Les groupes composants du microdoseur normalement sont vendus intégralement.
Les pièces sont aussi disponibles séparément. En tel cas s'adresser à notre Bureau de Service de Pièces de Rechange.

ORDINAZIONE DEI PEZZI DI RICAMBIO
Per l'identificazione dei pezzi di ricambio vedi tabelle riportate qui a seguito.
Per l'ordinazione dei pezzi di ricambio è sufficiente indicare il numero di matricola del microdosatore, la posizione del pezzo e la quantità voluta.
I gruppi componenti del microdosatore sono normalmente venduti integralmente.
Sono comunque disponibili separatamente i particolari :in tale caso rivolgersi al ns. Uff. Ricambi.

A) Steel fabricated parts and bearing assemblies.
Please indicate serial No. of the MBW, wich you read on side wall, and copy page No. and item No. (or letter) as well as the description of the part from the catalogue.

A) Stahlbauteile und Lagereinheiten.
Folgende Angaben sind hierfür erforderlich: die Produktions- Nr. der MBF; die Seitenzahl und die entsprechende Positionsnummer, bzw. der Positionsbuchstabe und die Teilebezeichnung; die Mengenangabe, wobei auf die in der Preisliste angegebene, jeweilige Mindest-Abnahmemenge zu achten ist.

A) Pièces de charpente et paliers
Quand passez une commande de pìeces de rechange, nous vous prions de comuniquer le N. de fabrication du MBF, le N. de la page, de la position et la désignation de la pièce, la quantitè désirée et tenant compte de la quantité minimum dans la liste de prix.

A) Pezzi di carpenteria e di supporteria
All'ordine sono da comunicare il N° matricolare del MBF, il N° di pagina, il N° o la lettera di posizione e la descrizione del pezzo nonchè la quantità richiesta tenendo conto delle quantità minime riportate nel listino.

B) Gear Reduction Units and Eletric Motors
Instead of the serial No. of the MBW indicate the serial No. of the gear reduction unit or of the electric motor and add the information requested under item A.
Parts not included in the price list cannot be supplied. These are:
1) Norm parts if not included in the kids
2) Item numbers in brackets ( )i. e. single parts of the kits.

Indicate the quantity of parts required (see minimum supply in the price list).

B) Getriebeeinheiten und Elektro Motoren
Anstelle der Produktions- Nr. der MBF ist die Produktions-Nr. des Getribes bzw. des E- Motors anzugeben.
Ansonsten sind die unter Punkt A bereits genannten Angaben hinzuzufügen. In der Preisliste nicht aufgeüfhrte Positionen sind nicht lieferbar. Im einzelnen sind dies:
1) Normteile, sofern die Montagesätze diese nicht beinhalten
2) in Klammern gesetzte Positionen ( ), bzw. Einzelteile zu den Montagesätzen.

B) Reducteurs et moteurs électriques
Au lieu du N. de fabrication du MBF il faut indiquer celui du reducteur ou du moteur. Ensuite ajoutez l'information demande sous la lettre A. Les pièces qui ne sont pas comprises dans la liste de prix ne peuvent pas être fournies. En particulier ce sont:
1) Les pièces commerciales à normes européenes si pas comprises dans les kits
2) Les positions entre parenthsès ( ), c' est à dire les composants des kits.

Avant le passage d'une commande vérifier les quantités minimum dans la liste de prix.

B) Testate motrici e motori elettrici
Al posto del N° matricolare del MBF, indicare quello della testata motrice o del motore elettrico. Quindi aggiungere le altre informazioni richieste sotto la lettera A.
I pezzi non compresi nel listino prezzi non possono essere forniti.
In particolare sono:
1) pezzi a norme se non compresi nei kits
2) numeri di posizione tra parentesi ( ), cioè singoli componenti dei kits.

Prima di passare un ordine verificare la quantità minima indicata nel listino prezzi.
Sono valide le ns Condizioni Generali di vendita.

SPARE PARTS	SERIES
ERSATZTEIL	SERIE
PIECES DE RECHANGE	SERIE
RICAMBI	SERIE

MBF 042 in SINT®

MBF made of AISI
Mikrodosierer aus Edelstahl
Microdoseurs construit dans AISI
Microdosatore in AISI

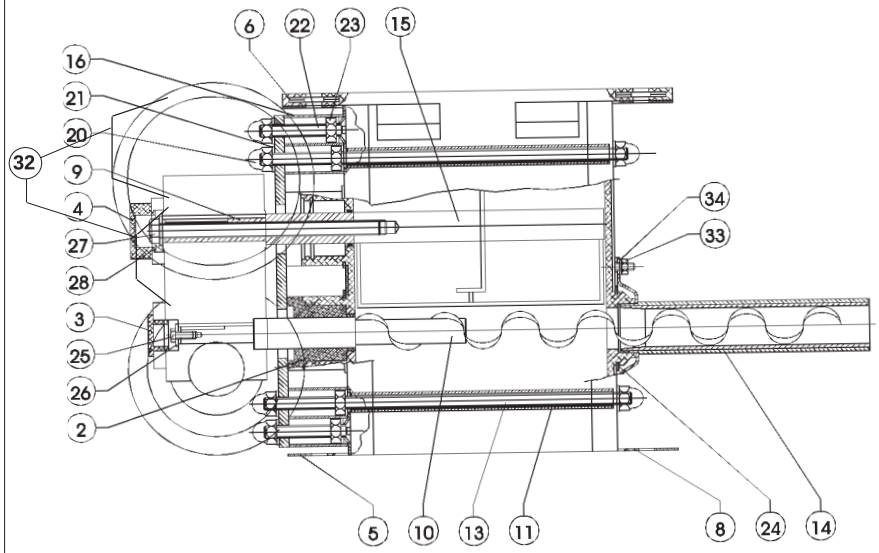

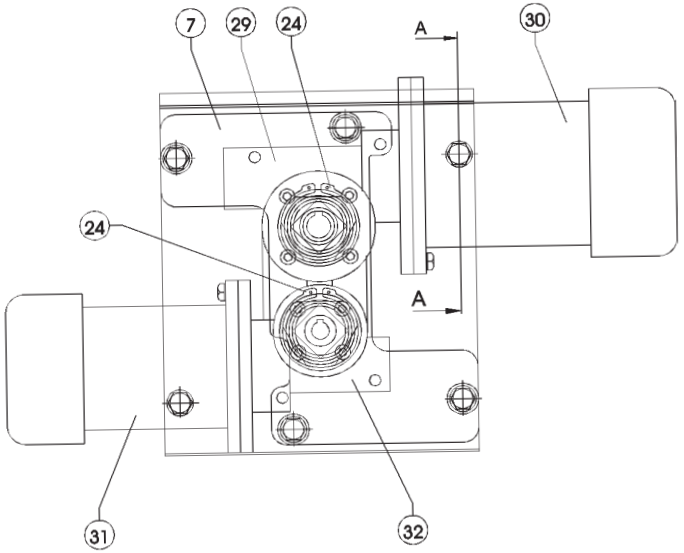

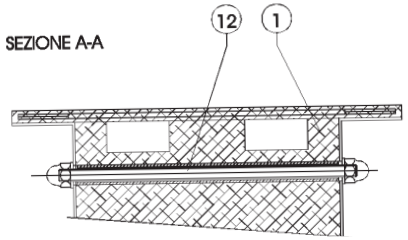

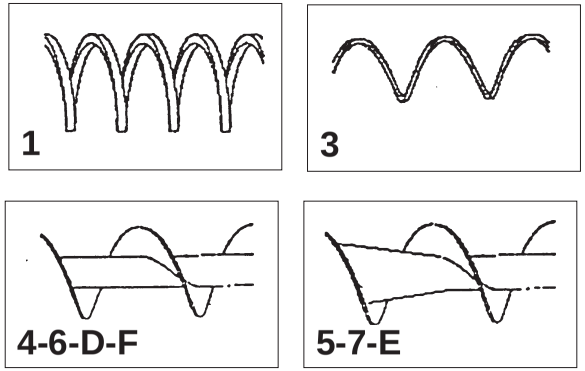

SPARE PARTS	SERIES
ERSATZTEILE	SERIE
PIECES DE RECHANGE	SERIE
RICAMBI	SERIE

MBF 042

*1

Type	Code
1	**UTD212**
3	**UTD232**
4	**UTD242**
5	**UTD254 (SINT®ER)**
	UTD255 (SINT®AL)
7	**UTD274 (SINT®ER)**
	UTD275 (SINT®AL)
D	**UTD2D2**
G	**UTD2G4 (SINT®ER)**
	UTD2G5 (SINT®AL)

*2

Type	Code
Normal *Normale*	**20640832/A**
Extended *Verlängert* Rallongé *Prolungato*	**20640842/A**

*3

Type	Code
1	**20642542/A**
2	**20642562/A**

*4

Type	Code
Cast - *Guß* Fonte - *Di fusione*	**20674161/A**
Welded *Geschweißt* Soudée *Saldata*	**20673351/A**

*5

Type	Code
TPU Yellow - *Gelb* Jaune - *Giallo*	**2099828HA**
TPU Food products *Nahrungsmitteln* Alimentaires *Alimentare*	**2099830HA**

*6

Type	Code
SINT®ER	**20689271A**
SINT®AL	**20689272A**

Pos	Q.	Norms	Description	Benennung	Désignation	Descrizione	Code
1	1		Body	Gehäuse	Corps	Corpo dosatore	***6**
2	2		Seal TPU	Dichtung TPU	Etanchéité TPU	Tenuta TPU	***5**
3	1		Shaft cover metering reduce	Wellenschutzdeckel Dos.	Protection arbre dos.	Capuccio x rid. D1 lato dosatore	**2099826-A**
4	1		Shaft cover blender reducer	Wellenschutzdeckel Hom.	Protection arbre hom.	Capuccio x rid. D1 lato omogeneiz.	**2099827-A**
5	1		End plate drive end	Endschild Antriebesseite	Plaque côté mot.	Facciata lato motorizzazione	**206F3E22/A**
7	1		Drive mount	Antriebskonsole	Support motorisation	Piastra supporto motorizzazione	*** 4**
8	1		End plate outlet end	Endschild Auslaufseite	Plaque coté sortie	Facciata lato scarico	**206F3E32/A**
9	1		Agitator shaft	Wellenzapfen	Arbre comm. rotor omogénéisateur	Albero comando utensile omog.	**20945101/A**
10	1		Metering screw	Dosierwerkzeug	Vis de dosaqe	Utensile dosatore	***1**
11	4		Spacer	Distanzring	Entretoise	Distanziale	**20989581/A**
12	2	DIN 975	Threaded bar M10x238	Gewindestange M 10x238	Barre filetée M 10x238	Barra fil. M10x238	**20689571/A**
13	2	DIN 975	Threaded bar M10x293	Gewindestange M 10x293	Barre filetée Ml 10x293	Barra fil. M10x293	**20689581/A**
14	1		Tubular housing outlet side	Auslaufrohr	Tube décharge	Tubo di scarico	***2**
15	1		Blending tool	Homogenisierwerkzeug	Homogénéisateur	Utensile omogeneizzatore	***3**
16	4		Spacer	Distanzring	Entretoise	Distanziale	**20986851/A**
17	3	DIN 934	Nut M6	Sechskantmutter M6	Ecrou M6	Dado M6	
18	3	DIN 433	Washer Ø 6	Unterlegscheibe Ø 6	Rondelle Ø 6	Rondella Ø 6	
19	1	DIN 913	Screw M 10x70	Schraube M10x70	Vis M10x70	Vite TE M 10x70	
20	16	DIN 15187	Cap nut M10	Hutmutter M 10	Ecrou borgne M10	Dado cieco M 10	
21	30	DIN 433	Washer Ø 10	Unterlegscheibe Ø 10	Rondelle Ø 10	Rondella Ø 10	
21	1	DIN 7991	Screw TSEI M10x70	Schraube TSEI M10x70	Vis TSEI M10x70	Vite TSEI M10x70	
23	12	DIN 934	Nut M10	Sechskantmutter M 10	Ecrou M10	Dado M10	
24	1	DIN 471	Shaft Ø60 retaining ring	Wellensicherungsring Ø 60	Criclip pour arbre Ø 60	Seeger x albero Ø 60	
25	1	DIN 91311	Hexagonal bolt M6x20	Sechskantschraube M6x20	Vis TE M6x20	Vite TE M6x20	
26	1	DIN 433	Washer Ø 6	Unterlegscheibe Ø 6	Rondelle Ø 6	Rondella Ø 6	
27	1	DIN 9311	Hexagonal bolt M12x190	Sechskantschraube M12x190	Vis TE M12x190	Vite TE M12x190	
28	1	DIN 433	Washer Ø 12	Unterlegscheibe Ø12	Rondelle Ø 12	Rondella Ø 12	
29	1		Gear box type “D1”	Getriebe Type “D1”	Réducteur type “D1”	Riduttore “D1”	
30	1		E-Motor “63”	E-Motor “63”	Moteur “63”	Motore “63”	
31	1		E-Motor “63”	E-Motor “63”	Moteur “63“	Motore “63”	
32	2		Protection cover	Abdeckungschutz	Couvercle de protection	Coperchio di protezione	

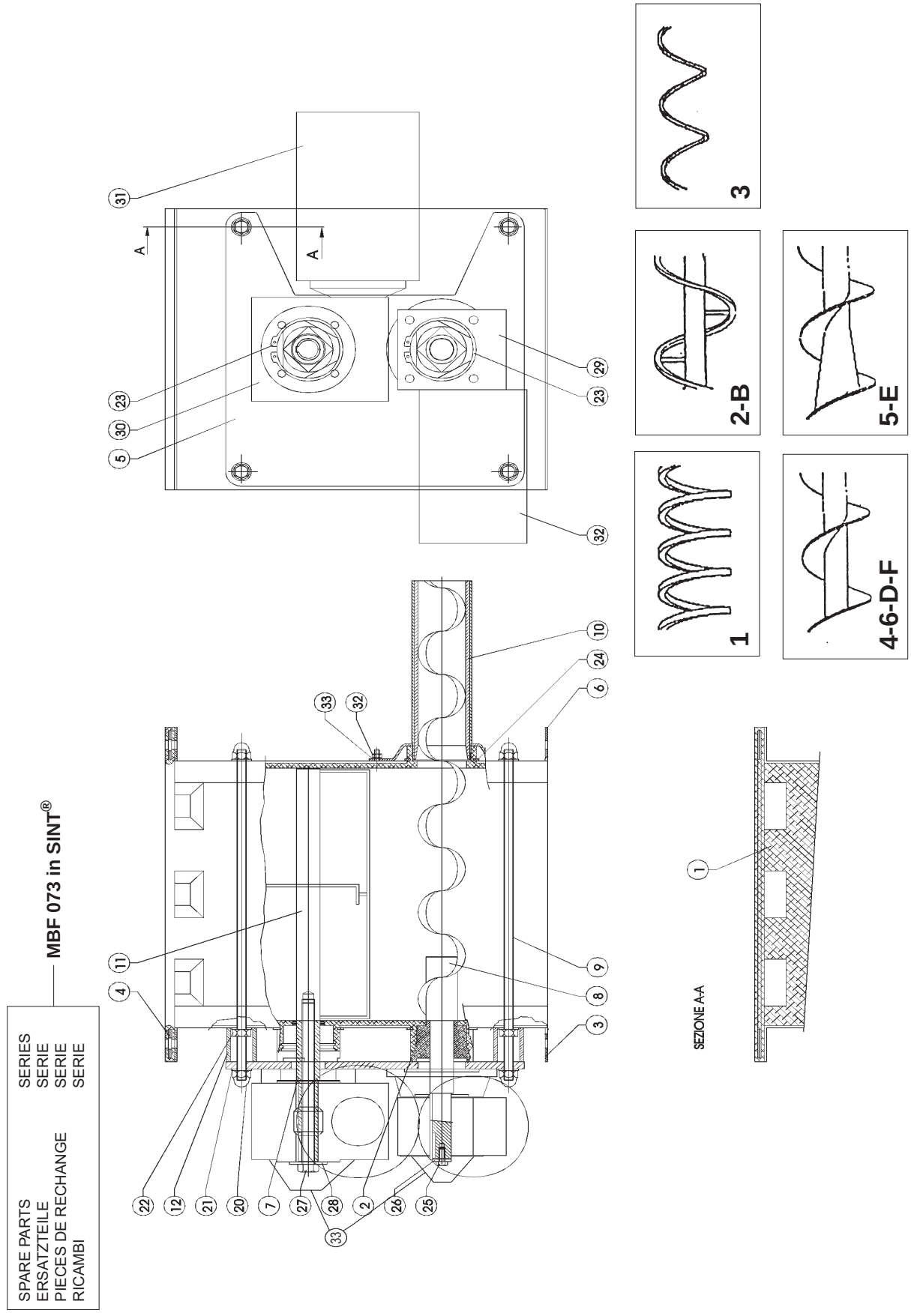
MBF 073 in SINT®
SPARE PARTS SERIES
ERSATZTEILE SERIE
PIECES DE RECHANGE SERIE
RICAMBI SERIE
A
A
SEZIONE A-A
1
2-B
3
4-6-D-F
5-E

SPARE PARTS	SERIES
ERSATZTEILE	SERIE
PIECES DE RECHANGE	SERIE
RICAMBI	SERIE

MBF 073

*1	Type	Code
	Cast - *Guß* Fonte - *Di fusione*	**20674171/A**
	Welded *Geschweißt* Soudée *Saldata*	**20674141/A**

*2	Type	Code
	1	**UTD312**
	2	**UTD322**
	3	**UTD332**
	4	**UTD342**
	5	**UTD354 (SINT®ER)**
		UTD355 (SINT®AL)
	B	**UTD3B2**
	D	**UTD3D2**
	E	**UTD3E4 (SINT®ER)**
		UTD3E5 (SINT®AL)

*3	Type	Code
	Normal *Normale*	**2064085½/A**
	Extended *Verlängert* Rallongé *Prolungato*	**2064086½/A**

*4	Type	Code
	1	**20642572/A**
	2	**20642552/A**

*5	Type	Code
	TPU Yellow - *Gelb* Jaune - *Giallo*	**2099843HA**
	TPU Food products *Nahrungsmitteln* Alimentaires *Alimentare*	**2099831HA**

*6	Type	Code
	SINT®ER	**20689281A**
	SINT®AL	**20689282A**

Pos	Q.	Norms	Description	Benennung	Désignation	Descrizione	Code
1	1		Body	Gehäuse	Corps	Corpo dosatore	***6**
2	2		Seal TPU	Dichtung TPU	Etanchéité TPU	Tenuta TPU	***5**
3	1		End plate drive end	Endschild Antriebesseite	Plaque côté mot.	Facciata lato motorizzazione	**206F3E42/A**
5	1		Drive mount	Antriebskonsole	Support motorisation	Piastra supporto motorizzazione	***1**
6	1		End plate outlet end	Endschild Auslaufseite	Plaque coté sortie	Facciata lato scarico	**206F3E52/A**
7	1		Agitator shaft	Wellenzapfen	Arbre com. rotor homogénéisateur	Albero comando utensile omog.	**20947371/A**
8	1		Metering screw	Dosierwerkzeug	Vis de dosage	Utensile-dosatore	***2**
9	4	DIN 975	Threaded bar M12x459	Gewindestange M12x459	Barre filetée M12x459	Barra fil. M12x459	**20689591/A**
10	1		Tubular housinq outlet side	Auslaufrohr	Tube décharqe	Tubo di scarico	***3**
11	1		Blending tool	Homogenisierwerkzeug	Homogénéisateur	Utensile omogeneizzatore	***4**
12	4		Spacer	Distanzring	Entretoise	Distanziale	**20987771/A**
18	3	DIN 433	Washer Ø 6	Unterlegscheibe Ø 6	Rondelle Ø 6	Rondella Ø6	
19	3	DIN 934	Nul M6	Sechskantmutter M6	Ecrou M6	Dado M6	
20	8	DIN 1587	Cap nul M12	Hut mutter M12	Ecrou borqne M12	Dado cieco M12	
21	12	DIN 433	Washer Ø 12	Unterlegscheibe Ø 12	Rondelle Ø 12	Rondella Ø12	
22	4	DIN 934	Nut M12	Sechskantmutter M12	Ecrou M12	Dado M12	
23	2	DIN 471	Shaft Ø 80 retaining ring	Wellensicherungsring Ø 80	Cnclip pour arbre Ø 80	Seeger x albero Ø80	
24	1	DIN 471	Shaft Ø 88 retaining ring	Wellensicherungsring Ø 88	Criclip pour arbre Ø 88	Seeger x albero Ø88	
25	1	DIN 931	Hexaqonal bolt M8x35	Sechskantschraube M8x35	Vis TE M8x35	Vite TE M8x35	
26	1	DIN 433	Washer Ø 8	Unterlegscheibe Ø 8	Rondelle Ø 8	Rondella Ø8	
27	1	DIN 931	Hexagonal bolt M16x240	Sechskantschraube M16x240	Vis TE Ml 6x240	Vite TE M16x240	
28	1		Washer ØI6	Unterlegscheibe Ø 16	Rondelle Ø 16	Rondella Ø16	
29	1		Gearbox	Getriebe	Réducteur	Riduttore	
30	1		Gearbox	Getriebe	Réducteur	Riduttore	
31	1		E-Motor “71”	E-Motor “71”	Moteur “71”	Motore”71”	
32	1		E-Motor “80”	E-Motor “80”	Moteur “80”	Motore “80”	
33	2		Cover	Abdeckungschutz	Couvercle de protection	Coperchio di protezione	

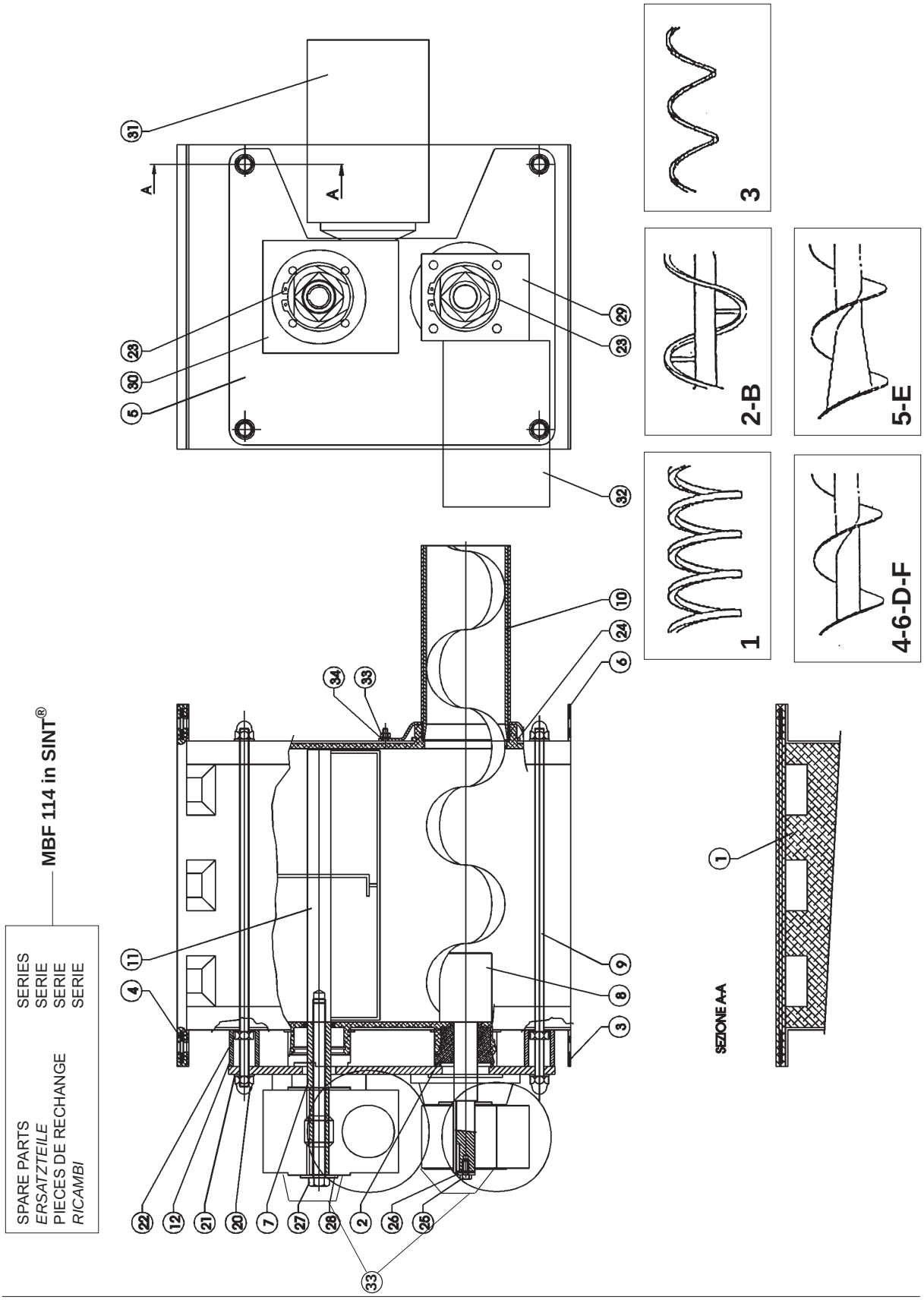
MBF 114 in SINT®
SPARE PARTS SERIES
ERSATZTEILE SERIE
PIECES DE RECHANGE SERIE
RICAMBI SERIE
A
A
SEZIONE A-A
1
2-B
3
4-6-D-F
5-E

SPARE PARTS SERIES
ERSATZTEILE SERIE
PIECES DE RECHANGE SERIE
RICAMBI SERIE

MBF 114

	Type	Code
*1	Cast - *Guß* Fonte - *Di fusione*	**20674181/A**
	Welded *Geschweißt* Soudée *Saldata*	**20674151/A**

	Type	Code
*2	1	**UTD412**
	2	**UTD422**
	3	**UTD432**
	4	**UTD442**
	5	**UTD454 (SINT®ER)**
		UTD455 (SINT®AL)
	B	**UTD4B2**
	D	**UTD4D2**
	E	**UTD4E4 (SINT®ER)**
		UTD4E5 (SINT®AL)

	Type	Code
*3	Normal *Normale*	**2064087½/A**
	Extended *Verlängert* Rallongé *Prolungato*	**2064088½/A**

	Type	Code
*4	1	**20642572/A**
	2	**20642552/A**

	Type	Code
*5	**TPU** Yellow - *Gelb* Jaune - *Giallo*	**2099843HA**
	TPU Food products *Nahrungsmitteln* Alimentaires *Alimentare*	**2099831HA**

	Type	Code
*6	SINT®ER	**20689281A**
	SINT®AL	**20689282A**

Pos.	Q.	Norms	Description	Benennung	Désignation	Descrizione	Code
1	1		Body	Gehäuse	Corps	Corpo dosatore	***6**
2	2		Seal TPU	Dichtung TPU	Etanchéité TPU	Tenuta TPU	***5**
3	1		End plate drive end	Endschild Antriebesseite	Plaque coté mot.	Facciata lato motorizzazione	**206F3E72/A**
5	1		Drive mount	Antriebskonsole	Support motorisation	Piastra supporto motorizzazione	***1**
6	1		End plate outlet end	Endschild Auslaufseite	Plaque côté sorbe	Facciata lato scarico	**206F3E52/A**
7	1		Agitator shaft	Wellenzapfen	Arbre com. rotor homogénéisateur	Albero comando utensile omog.	**20947371/A**
8	1		Metering screw	Dosierwerkzeug	Vis de dosage	Utensile dosatore	***2**
9	4	DIN 975	Threaded bar M12x459	Gewindestange M12x459	Barre filetée M12x459	Barra fil. M 12x459	**20689591/A**
10	1		Tubular housing outlet side	Auslaufrohr	Tube décharge	Tubo di scarico	***3**
11	1		Blending tool	Homogenisierwerkzeug	Homogénéisateur	Utensile omogeneizzatore	***4**
12	4		Spacer	Distanzring	Entretoise	Distanziale	**20987771/A**
18	3	DIN 433	Washer Ø6	Unterlegscheibe Ø6	Rondelle Ø6	Rondella Ø6	
19	3	DIN 934	Nut M6	Sechskantmutter M6	Ecrou M6	Dado M6	
20	8	DIN 1587	Cap nut M12	Hut mutter M12	Ecrou borqne M12	Dado cieco M12	
21	12	DIN 433	Washer Ø12	Unterlegscheibe Ø12	Rondelle Ø12	Rondella Ø12	
22	4	DIN 934	Nut M12	Sechskantmutter M 12	Ecrou M12	Dado M12	
23	2	DIN 471	Shaft Ø80 retaining ring	Wellensicherungsring Ø80	Criclip pour arbre Ø80	Seeger x albero Ø80	
24	1	DIN 471	Shaft Ø130 retaining ring	Wellensicherungsring Ø130	Criclip pour arbre Ø130	Seeger x albero Ø130	
25	1	DIN 931	Hexaqonal bolt M8x35	Sechskantschraube M8x35	Vis TE M8x35	Vite TE M8x35	
26	1	DIN 433	Washer Ø8	Unterlegscheibe Ø8	Rondelle Ø8	Rondella Ø8	
27	1	DIN 931	Hexagonal bolt M16x240	Sechskantschraube M16x240	Vis TE Ml 6x240	Vite TE M16x240	
28	1		Washer Ø16	Unterlegscheibe Ø16	Rondelle Ø16	Rondella Ø16	
29	1		Gearbox	Getriebe	Réducteur	Riduttore	
30	1		Gearbox	Getriebe	Réducteur	Riduttore	
31	1		E-Motor “71”	E-Motor “71”	Moteur “71”	Motore “71”	
32	1		E-Motor “80”	E-Motor “80”	Moteur “80”	Motore “80”	
33	2		Cover	Abdeckungschutz	Couvercle de protection	Coperchio di protezione	

For electric motors see Sint® version
Fur elektromotoren sieke Sint® version
Pour les moteurs electriques voir version in Sint®
Per le motorizzazioni vedi la versione in Sint®

SPARE PARTS	SERIES
ERSATZTEILE	SERIE
PIECES DE RECHANGE	SERIE
RICAMBI	SERIE

MBF 042 AISI
MBF 073 AISI
MBF 114 AISI

SPARE PARTS	SERIES
ERSATZTEILE	SERIE
PIECES DE RECHANGE	SERIE
RICAMBI	SERIE

MBF 042 AISI

MBF 073 AISI

MBF 114 AISI

For electric motors see Sint® version
Fur elektromotoren sieke Sint® version
Pour les moteurs electriques voir version in Sint®
Per le motorizzazioni vedi la versione in Sint®

	Type	Code
*2a	1	UTD212000
	2	UTD222000
	3	UTD232000
	4	UTD242000
	B	UTD2B2000
	D	UTD2D2000

	Type	Code
*2b	1	UTD312000
	2	UTD322000
	3	UTD332000
	4	UTD342000
	B	UTD3B2000
	D	UTD3D2000

	Type	Code
*2c	1	UTD412000
	2	UTD422000
	3	UTD432000
	4	UTD442000
	B	UTD4B2000
	D	UTD4D2000

Item Pos.	Q.	Norms	Description	Benennung	Désignation	Descrizione	Code		
							MBF-042	MBF-073	MBF-114
1	1		Body	Gehäuse	Corps	Corpo dosatore	2068A79_A	2068A81_A	2068A83_A
2	1		STD Inspection hatch	STD Inspektionstür	Trappe de visite STD	Portello di Ispesione STD	MBPI2	MBPI3	MBPI4
2a	1		Inspection hatch with extended tube	Inspektionstür mit langlichrohr	Trappe de visite avec tube prolonge	Portello di ispezione con tubo prolungato	MBPIP2	MBPIP3	MBPIP4
3	1		Agitator shaft	Wellenzapfen	Arbre comm. rotor omogénéisateur	Albero comando utensile omogeneizzatore	20945101A	20947371A	20947371A
4	1		Seal	Dichtung	Entachéité	Tenuta	MBTT2	MBTT3	MBTT4
5	2		Seal mount	Montierung fur dichtung	Support pour entachéité	Supporto per tenuta	-	-	-
6	2		Metering screw	Dosierwerkzeug	Vis de dosage	Utensile dosatore	2a*	2b*	2c*
7	1		Blending tool	Homogenisierwerkzeug	Homogénéisateur	Utensile omogenizzatore	UTO12 UTO22	UTO13 UTO23	UTO14 UTO24

N.B. Rights reserved to modify technical specifications
N.B. Angaben ohne Gewähr. Änderungen können ohne Vorankündigung vorgenommen werden.
N.B. Toutes données portées dans le présent catalogue n'engagent pas le fabricant. Elles peuvent être modifiéès à tout moment.
N.B. Tutti i dati riportati nel presente catalogo non sono impegnativi e possono subire variazioni in qualsiasi momento.

WAM®

WAMGROUP S.p.A.
Via Cavour, 338
I - 41030 Ponte Motta
Cavezzo (MO) - ITALY

☎ +39 / 0535 / 618111
fax +39 / 0535 / 618226
e-mail info@wamgroup.it
internet www.wamgroup.com
videoconference + 39 / 0535 / 49032

LEFT BLANK

WEG

MODEL FC25504W01, MOTOR
MODEL 02036ET3H256TC-W22, MOTOR

LEFT BLANK

INSTALLATION AND MAINTENANCE MANUAL FOR NEMA LOW VOLTAGE ELECTRIC MOTORS

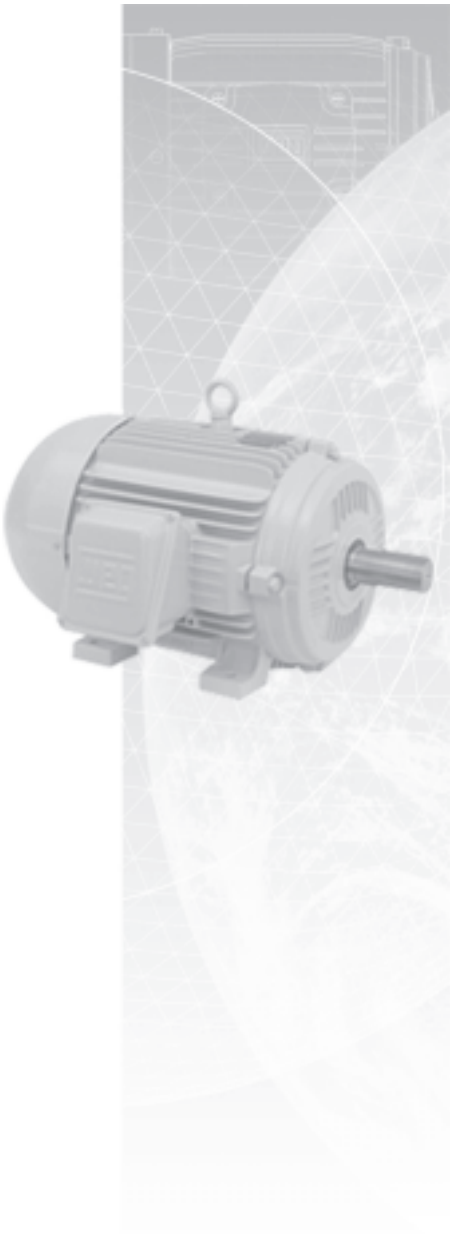

The electric motor is the item of equipment most widely used by man in his pursuit of progress, as virtually all machines and many renowned inventions depend upon it.
By virtue of the prominent role the electric motor plays in the comfort and welfare of mankind, it must be regarded and treated as a prime power unit embodying features that merit special attention, including its installation and maintenance.
This means that the electric motor should receive proper attention.
Its installation and routine maintenance require specific care to ensure perfect operation and longer life of the unit.
THE WEG ELECTRIC MOTOR INSTALLATION AND MAINTENANCE MANUAL provides the necessary information to properly install, maintain and preserve the most important component of all equipment:

THE ELECTRIC MOTOR!

WEG

Contents

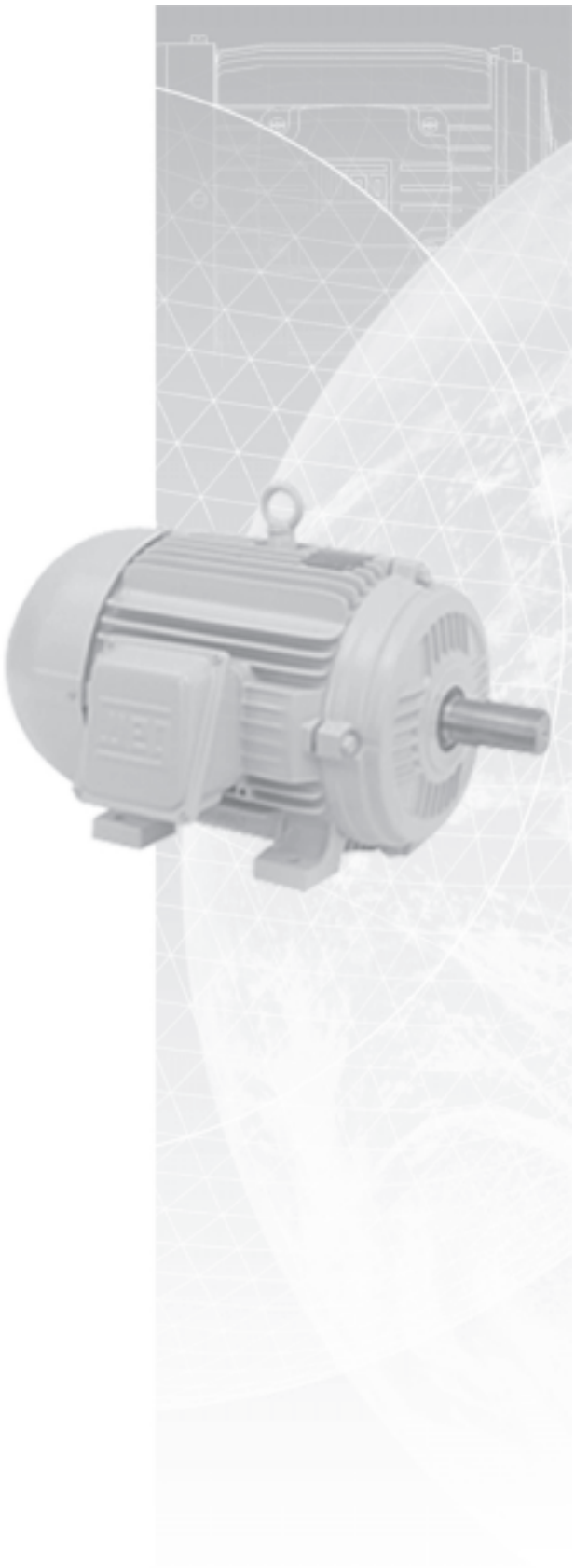

1 - Introduction 04

2 - Basic Instructions 05
2.1 Safety Instructions 05
2.2 Delivery 05
2.3 Storage 05
2.3.1 Drying the Windings 06

3 - Installation 07
3.1 Mechanical Aspects 07
3.1.1 Foundation 07
3.1.2 Types of bases 07
3.1.3 Alignment 08
3.1.4 Coupling 08
3.2 Electrical Aspects 16
3.2.1 Feed System 16
3.2.2 Starting of Electric Motors 16
3.2.3 Motor Protection 18
3.3 Start-up 18
3.3.1 Preliminary Inspection 18
3.3.2 The First Start-up 18
3.3.3 Operation 18
3.3.4 Stopping 18

4 - Maintenance 23
4.1 Cleanliness 23
4.2 Lubrication 23
4.2.1 Periodical Lubrication 23
4.2.2 Quality and Quantity of Grease 23
4.2.3 Lubricating Instructions 23
4.2.4 Replacement of Bearings 24
4.3 Air Gap Checking 24
4.4 Explosion Proof Motor Repair Steps 24
4.4.1 Objective 24
4.4.2 Repair Procedure and Precautions 24
4.4.3 Miscellaneous Recommendations 25

5 - Malfunctioning 26
5.1 Standard Three-phase Motor Failures 26
5.1.1 Short Circuits Between Turns 26
5.1.2 Winding Failures 26
5.1.3 Rotor Failures 27
5.1.4 Bearing Failures 27
5.1.5 Shaft Fractures 27
5.1.6 Unbalanced V-Belt Drives 27
5.1.7 Damage Arising from Poorly Fitted Transmission Parts or Improper Motor Alignment 27
5.2 Troubleshooting Chart 28

6 - Spare Parts and Component Terminology 29

1. Introduction

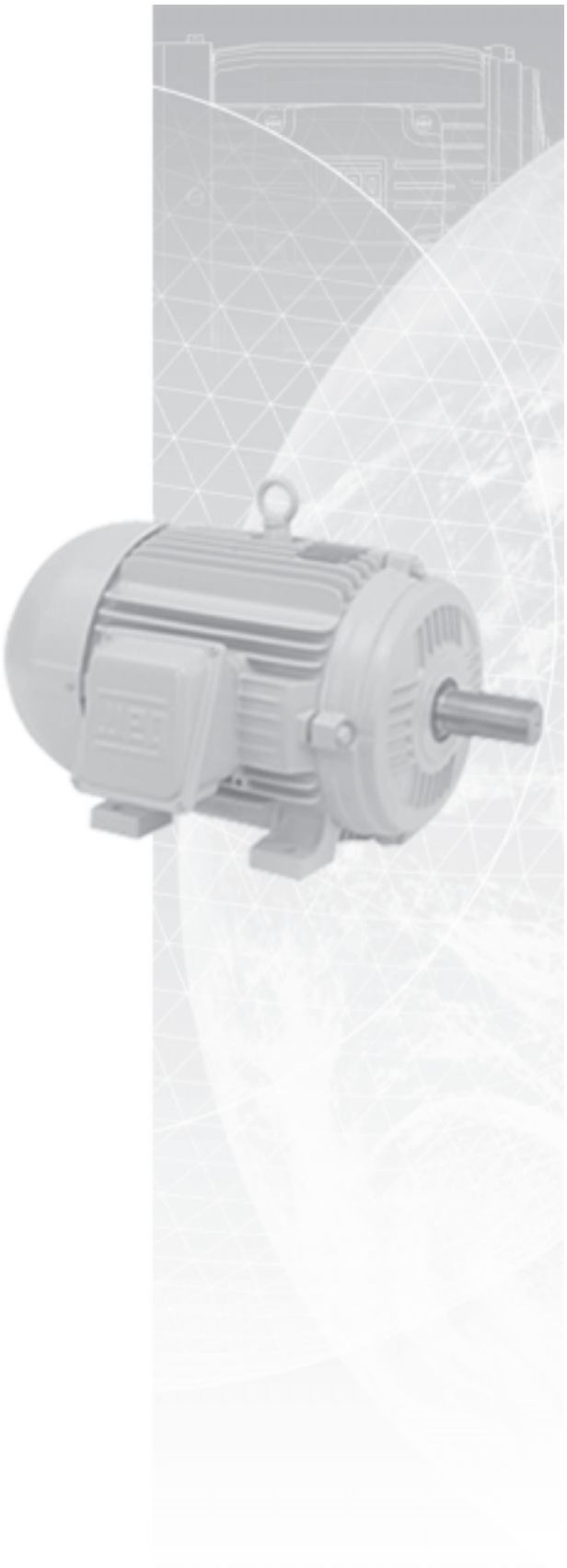

This manual covers all the three-phase and single-phase asynchronous squirrel-cage induction motors, from 140T to 580T frame sizes.

The motors described in this manual are subject to continuous improvement and all information is subject to change without notice.
For further details, please consult WEG.

2. Basic Instructions

2.1 Safety Instructions

All personnel involved with electrical installations, either handling, lifting, operation and maintenance, should be well-informed and up-to-date concerning the safety standards and principles that govern the work and carefully follow them.
Before work commences, it is the responsibility of the person in charge to ascertain that these have been duly complied with and to alert his personnel of the inherent hazards of the job in hand.
It is recommended that these tasks be undertaken only by qualified personnel and they should be instructed to:

- avoid contact with energized circuits or rotating parts,
- avoid by-passing or rendering inoperative any safeguards or protective devices,
- avoid extended exposure in close proximity to machinery with high noise levels,
- use proper care and procedures in handling, lifting, installing, operating and maintaining the equipment, and
- follow consistently any instructions and product documentation supplied when they do such work.

Before initiating maintenance procedures, be sure that all power sources are disconnected from the motor and accessories to avoid electric shock.
Fire fighting equipment and notices concerning first aid should not be lacking at the job site; these should be visible and accessible at all times.

2.2 Delivery

Prior to shipment, motors are factory-tested and balanced. They are packed in boxes or bolted to a wooden base.
Upon receipt, we recommend careful handling and a physical examination for damage which may have occurred during transportation.
In the event of damage and in order to guaranty insurance coverage, both the nearest WEG sales office and the carrier should be notified without delay.

2.3 Storage

Motors should be raised by their eyebolts and never by their shafts. It is important that high rating three-phase motors be raised by their eyebolts. Raising and lowering must be steady and joltless, otherwise bearings may be harmed.
When motors are not immediately installed, they should be stored in their normal upright position in a dry even temperature place, free of dust, gases and corrosive atmosphere.
Other objects should not be placed on or against them.
Motors stored over long periods are subject to loss of insulation resistance and oxidation of bearings.

Bearings and lubricant deserve special attention during prolonged periods of storage. Depending on the length and conditions of storage it may be necessary to regrease or change rusted bearings. The weight of the rotor in an inactive motor tends to expel grease from between the bearing surfaces thereby removing the protective film that impedes metal-to-metal contact.
As a preventive measure against the formation of corrosion by contact, motors should not be stored near machines which cause vibrations, and every 3 month their shafts should be rotated manually.

Insulation resistance fluctuates widely with temperature and humidity variations and the cleanliness of components. When a motor is not immediately put into service it should be protected against moist, high temperatures and impurities, thus avoiding damage to insulation resistance.
If the motor has been in storage more than six month or has been subjected to adverse moisture conditions, it is best to check the insulation resistance of the stator winding with a megohmeter.
If the resistance is lower than ten megohms the windings should be dried in one of the two following ways:

1) Bake in oven at temperatures not exceeding 194 degrees F until insulation resistance becomes constant.
2) With rotor locked, apply low voltage and gradually increase current through windings until temperature measured with thermometer reaches 194 degrees F. Do not exceed this temperature.

If the motor is stored for an extensive period, the rotor must be periodically rotated.
Should the ambient conditions be very humid, a periodical inspection is recommended during storage. It is difficult to prescribe rules for the true insulation resistance value of a machine as resistance varies according to the type, size and rated voltage and the state of the insulation material used, method of construction and the machine's insulation antecedents. A lot of experience is necessary in order to decide when a machine is ready or not to be put into service. Periodical records are useful in making this decision.

The following guidelines show the approximate values that can be expected of a clean and dry motor, at 40°C test voltage in applied during one minute.

Insulation resistance Rm is obtained by the formula:

$$Rm = Vn + 1$$

Where: Rm - minimum recommended insulation resistance in MΩ with winding at 40°C
Vn - rated machine voltage in kV

In case the test is carried out at a temperature other than 40°C, the value must be corrected to 40°C using an approximated curve of insulation resistance v.s temperature of the winding with the aid of Figure 2.1; it's possible verify that resistance practically doubles every 10°C that insulating temperature is lowered.

Example:

Ambient temperature = 50°C
Motor winding resistence at 50°C = 1.02 MΩ
Correction to 40°C

$$R_{40°C} = R_{50°C} \times K_{50°C}$$

$$R_{40°C} = 1.02 \times 1.3$$

$$R_{40°C} = 1.326\ M\Omega$$

The minimum resistence Rm will be:

$$Rm = Vn + 1$$
$$Rm = 0.440 + 1$$
$$Rm = 1.440\ M\Omega$$

On new motors, lower values are often attained due to solvents present in the insulating varnishes that later evaporate during normal operation. This does not necessarily mean that the motor is not operational, since insulating resistance will increase after a period of service.
On motors which have been in service for a period of time much larger values are often attained. A comparison of the values recorded in previous tests on the same motor under similar load, temperature and humidity conditions, serves as a better indication of insulation condition than that of the value derived from a single test. Any substantial or sudden reduction is suspect and the cause determined and corrective action taken.
Insulation resistance is usually measured with a MEGGER.
In the event that insulation resistance is inferior to the values derived from the above formula, motors should be subjected to a drying process.

2.3.1 Drying the windings

This operation should be carried out with maximum care, and only by qualified personnel. The rate of temperature rise should not exceed 5°C per hour and the temperature of the winding should not exceed 105°C. An overly high final temperature as well as a fast temperature increase rate can each generate vapour harmful to the insulation.
Temperature should be accurately controlled during the drying process and the insulation resistance measured at regular intervals.
During the early stages of the drying process, insulation resistance will decrease as a result of the temperature increase, but the resistance will increase again when the insulation becomes dryer.
The drying process should be extended until sucessive measurements of insulation resistance indicate that a constant value above the minimum acceptable value has been attained. It is extremely important that the interior of the motor be well ventilated during the drying operation to ensure that the dampness is really removed.
Heat for drying can be obtained from outside sources (an oven), energization of the space heater (optional), or introducing a current through the actual winding of the motor being dried.

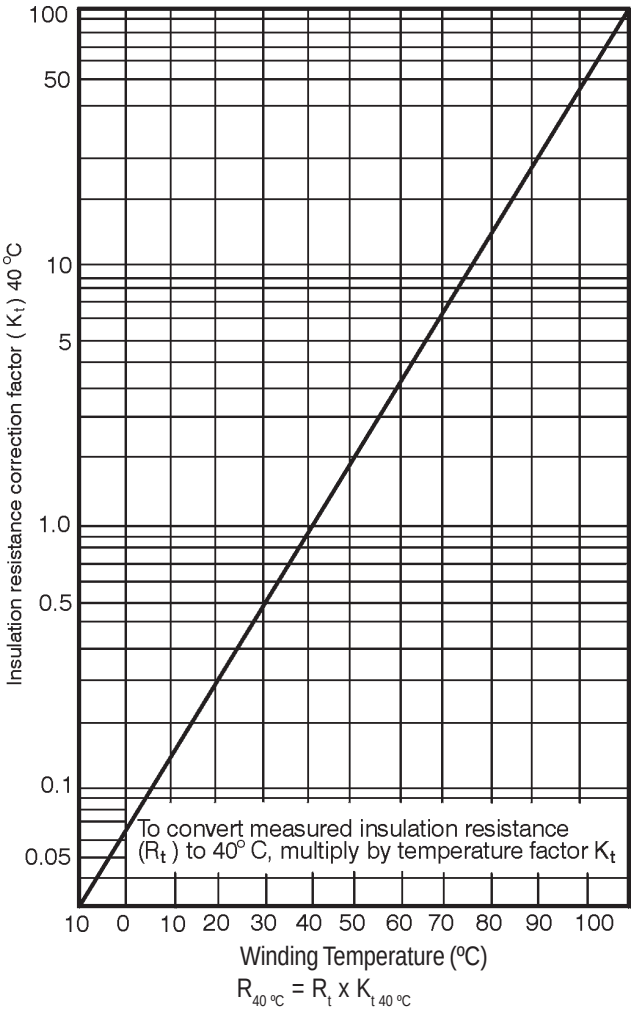

Figure 2.1

3. Installation

Electric machines should be installed in order to allow an easy access for inspection and maintenance. Should the surrounding atmosphere be humid, corrosive or contain flammable substances or particles, it is essential to ensure an adequate degree of protection.
The installation of motors in environments where there are vapours, gases or dusts, flammable or combustible materials, subject to fire or explosion, should be undertaken according to appropriate and governing codes, such as NEC Art. 500 (National Electrical Code) and UL-674 (Underwriters Laboratories, Inc.) Standards.
Under no circumstances can motors be enclosed in boxes or covered with materials which may impede or reduce the free circulation of ventilating air. Machines fitted with external ventilation should be at least 50cm from the wall to permit the passage of air.
The opening for the entry and exit of air flow should never be obstructed or reduced by conductors, pipes or other objects.
The place of installation should allow for air renewal at a rate of 700 cubic feet per minute for each 75 HP motor capacity.

3.1 Mechanical Aspects

3.1.1 Foundation

The motor base must be levelled and as far as possible free of vibrations. A concrete foundation is recommended for motors over 100 HP. The choice of base will depend upon the nature of the soil at the place of erection or of the floor capacity in the case of buildings.
When dimensioning the motor base, keep in mind that the motor may occasionally be run at a torque above that of the rated full load torque.
Based upon Figure 3.1, foundation stresses can be calculated by using the following formula:

$$F1 = 0.2247\ (0.009\ x\ g\ x\ G - 213\ Tmáx/A)$$

$$F2 = 0.2247\ (0.009\ x\ g\ x\ G + 213\ Tmax/A\ )$$

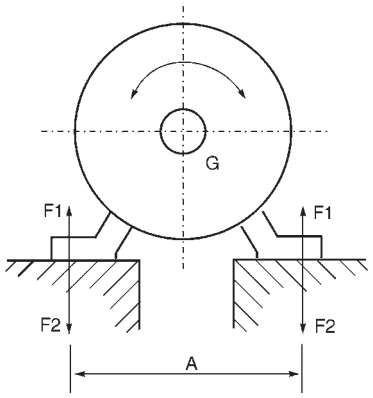

Figure 3.1 - Base stresses

Where:

F1 and F2 - Lateral stress (Lb)
g - Force of gravity (32.18 ft/s^2)
G - Weight of motor (Lb)
Tmax - Maximum torque (Lb . Ft)
A - Obtained from the dimensional drawing of the motor (in)

Sunken bolts or metallic base plates should be used to secure the motor to the base.

3.1.2 Types of Bases

a) Slide Rails

When motor drive is by pulleys the motor should be mounted on slide rails and the lower part of the belt should be pulling.
The rail nearest the drive pulley is positioned in such a manner that the adjusting bolt be between the motor and the driven machine.
The other rail should be positioned with the bolt in the opposite position, as shown in Figure 3.2.
The motor is bolted to the rails and set on the base. The drive pulley is aligned such that its center is on a plane with the center of the driven pulley and the motor shaft and that of the machine be parallel.

The belt should not be overly stretched, see Figure 3.11.
After the alignment, the rails are fixed.

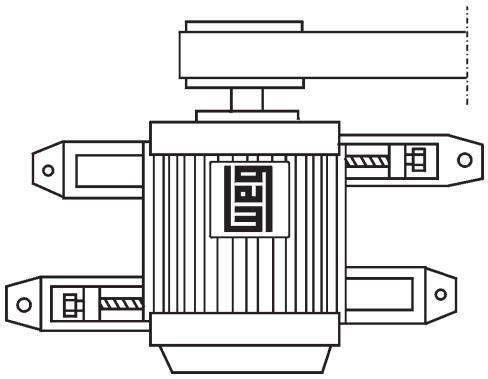

Figure 3.2 - Positioning of slide rails for motor alignment

b) Foundation Studs

Very often, particularly when drive is by flexible coupling the motor is anchored directly to the base with foundation studs.
It is recommended that shim plates of approximately 0.8 inches be used between the foundation studs and the feet of the motor for replacement purposes. These shim plates are useful when exchanging one motor for another of larger shaft height due to variations allowed by standard tolerances.
Foundation studs should neither be painted nor rusted as both interfere with to the adherence of the concrete, and bring about loosening.
After accurate alignment and levelling of the motor, the foundation studs are cemented and their screws tightened to secure the motor.

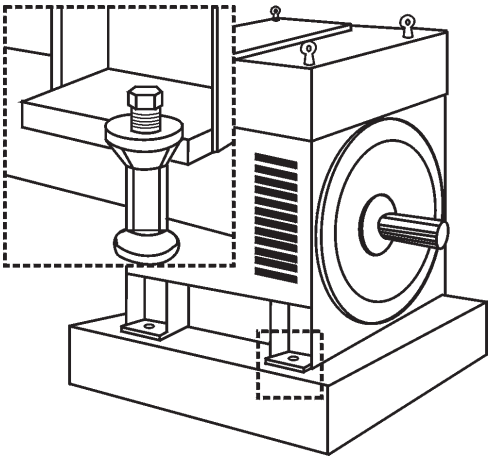

Figure 3.3 - Motor mounted on a concrete base with foundation studs

3.1.3 Alignment

The electric motor should be accurately aligned with the driven machine, particularly in cases of direct coupling. An incorrect alignment can cause bearing failure vibrations and even shaft rupture.
The best way to ensure correct alignment is to use dial gauges placed on each coupling half, one reading radially and the other exially - Figure 3.5.

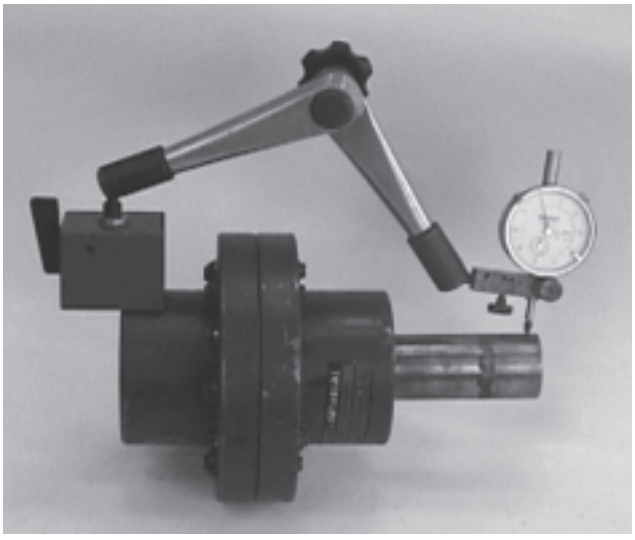

Figure 3.5 - Alignment with dial gauges

Thus, simultaneous readings are possible and allow for checking for any parallel (Figure 3.6a) and concentricity deviations (Figure 3.6b) by rotating the shafts one turn.
Gauge readings should not exceed 0.02 inches. If the installer is sufficiently skilled, he can obtain alignment with feeler gauges and a steel ruler, providing that the couplings are perfect and centered - Figure 3.6c.

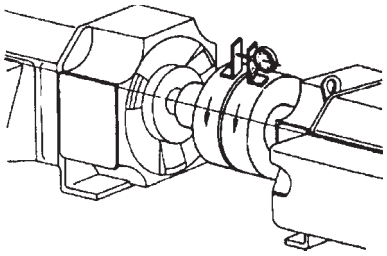

Figure 3.6a - Deviation from parallel

Figure 3.6b - Deviation from concentricity

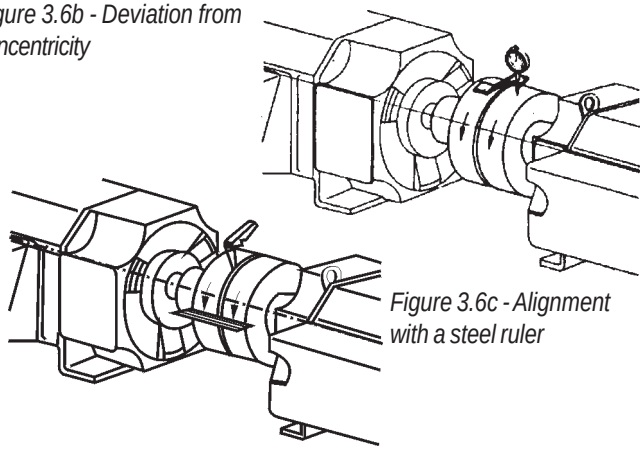

Figure 3.6c - Alignment with a steel ruler

3.1.4 Coupling

a) Direct Coupling

Direct coupling is always preferable due to its lower cost, space economy, no belt slippage and lower accident risk.
In the case of speed ratio drives, it is also common to use a direct coupling with a reducer (gear box).

CAUTION: Carefully align the shaft ends using, whenever feasible, a flexible coupling.

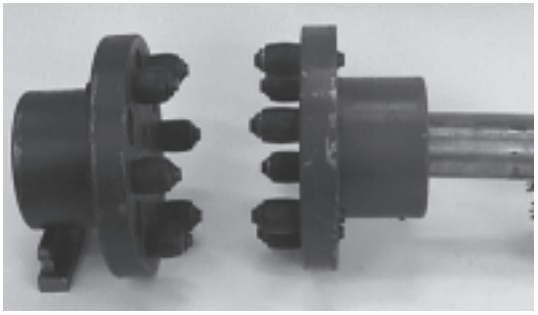

Figure 3.7 - A type of direct coupling

b) Gear Coupling

Poorly aligned gear couplings are the cause of jerking motions which bring about the vibration of the actual drive and vibrations within the motor.

Therefore, due care must be given to perfect shaft alignment: exactly parallel in the case of straight gears, and at the correct angle for bevel or helical gears.
Perfect gear engagement can be checked by the insertion of a strip of paper on which the teeth marks will be traced after a single rotation.

c) Belt and Pulley Coupling

Belt coupling is most commonly used when a speed ratio is required.
Assembly of Pulleys: To assemble pulleys on shaft ends with a keyway and threaded end holes the pulley should be inserted halfway up the keyway merely by manual pressure.
On shafts without threaded end holes the heating of the pulley to about 80°C is recommended, or alternatively, the devices illustrated in Figure 3.8 may be employed.

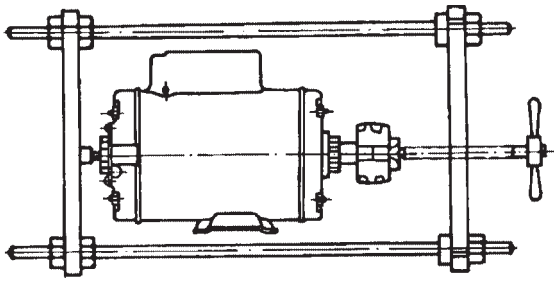

Figure 3.8 - Pulley mounting device

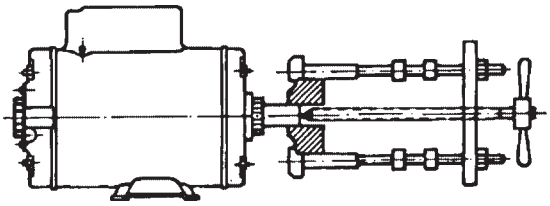

Figure 3.8a - Pulley extractor

Hammers should be avoided during the fitting of pulleys and bearings. The fitting of bearings with the aid of hammers leaves blemishes on the bearing races. These initially small flaws increase with usage and can develop to a stage that completely impairs the bearing.
The correct positioning of a pulley is shown in Figure 3.9.

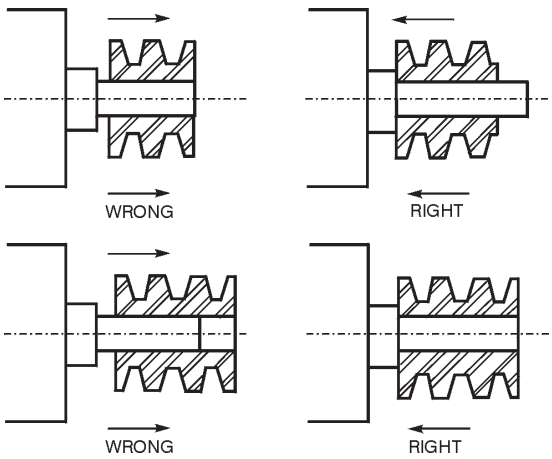

Figure 3.9 - Correct positioning of pulley on the shaft

RUNNING: To avoid needless radial stresses on the bearings it is imperative that shafts are parallel and the pulleys perfectly aligned. (Figure 3.10).

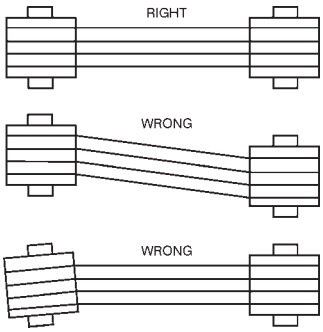

Figure 3.10 - Correct pulley alignment

Laterally misaligned pulleys, when running, transmit alternating knocks to the rotor and can damage the bearing housing. Belt slippage can be avoided by applying a resin (rosin for example).
Belt tension should be sufficient to avoid slippage during operation (Figure 3.11).
Pulleys that are too small should be avoided; these cause shaft flexion because belt traction increases in proportion to a decrease in the pulley size. Table 1 determines minimum pulley diameters, and Tables 2 and 3 refer to the maximum stresses acceptable on motor bearings up to frame 580. Beyond frame size 600, an analysis should be requested from the WEG engineering.

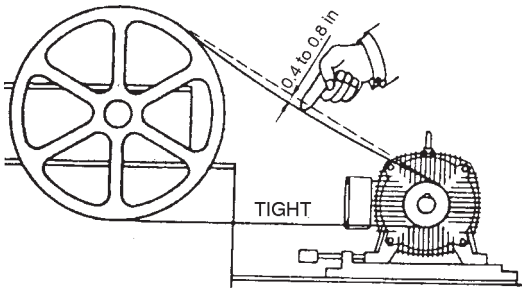

Figure 3.11 - Belt tensions

***Table 1** - Minimum pitch diameter of pulleys*

Frame	Ball bearings						
	Bearing	Size X Inches					
		0.79	1.57	2.36	3.15	3.94	4.72
140	6205-Z	1.7	1.85	2			
W 180	6206-Z	3.03	3.23	3.46			
180	6307-Z	1.69	1.81	1.93			
W 210	6308-Z		2.86	3.00	3.16		
210	6308-Z		2.90	3.06	3.22		
W 250	6309 C3		4.37	4.54	4.72	4.92	
250	6309 C3		4.41	4.59	4.77	4.97	
280	6311 C3			5.08	5.19	5.47	5.65
320	6312 C3			7.44	7.76	7.94	8.18
360	6314 C3			8.73	9.00	9.28	9.57

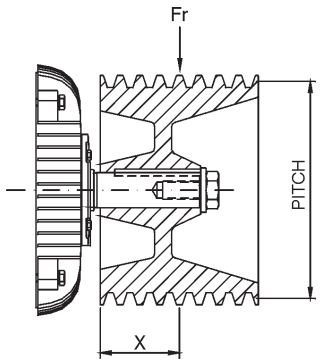

Frame	Poles		Ball Bearing					Roller Bearing					
		Bearing	Size X Inches				Bearing	Size X Inches					
			1.97	3.15	4.33	5.51		1.97	3.15	4.33	5.51	6.69	8.27
400	II	6314 C3	7.3	7.62	7.94	8.24		-	-	-	-	-	-
	IV-VI-VII	6314 C3					NU 316	4.13	4.31	4.49	4.67	4.85	-
440	II	6314 C3	11.75	12.16	12.61	13.08		-	-	-	-	-	-
	IV-VI-VIII	6319 C3					NU 319	4.02	4.17	4.32	4.47	4.62	4.82
500	II	6314 C3	23.54	24.34	25.12	25.87		-	-	-	-	-	-
	IV-VI-VIII	6319 C3					NU 319	6.52	6.73	6.95	7.17	7.39	7.67
5008	II	6314 C3	44.66	45.79	46.98	48.23		-	-	-	-	-	-
	IV-VI-VIII	6322 C3					NU 322	8.73	8.95	9.96	11.34	12.87	14.82
580	II	6314 C3	57	58	59	60		-	-	-	-	-	-
	IV-VI-VIII	6322 C3					NU 322	10.72	10.91	11.11	11.31	11.50	11.76

Important: 1) Peripheral speeds for solid grey cast iron pulleys FC 200 is V = 115 ft/s.
2) Use steel pulleys when peripheral speed is higher than 115 ft/s.
3) V-belt speed should not exceed 115 ft/s.

***Table 2** - Maximum acceptable radial load (Lbf)*

Nema 56 Motors				
Frame	Radial Force (Lbf)			
	Poles	Distance X		
		1	1,18	2
56A	II	88	-	59
	IV	88	-	59
56B	II	88	-	59
	IV	86	-	59
56D	II	127	-	70
	IV	141	-	70

Saw Arbor Motors				
80 LMS	II	-	355	-
80 MMS	II	-	359	-
80 SMS	II	-	357	-
90 LMS	II		427	-
	IV	-	555	-

Table 3 *- Maximum acceptable axial load (Lbf)*

IP55 Totally Enclosed Motors - 60Hz
Position / Construction Form

FRAME	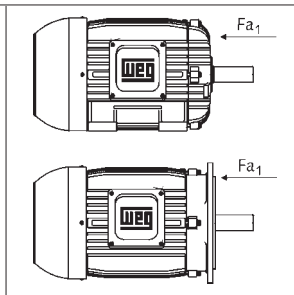				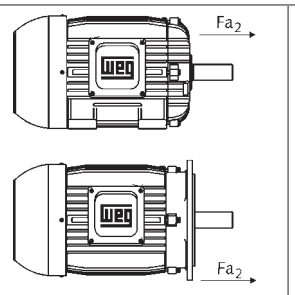				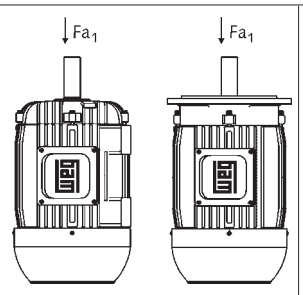				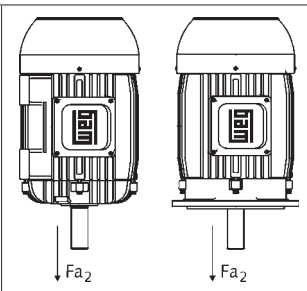			
	II	IV	VI	VIII	II	IV	VI	VIII	II	IV	VI	VIII	II	IV	VI	VIII
140	103	141	167	187	112	152	185	207	99	132	158	178	105	143	174	198
W 180	108	145	180	202	154	209	255	286	94	130	165	183	141	194	240	269
180	149	207	249	286	269	370	443	500	136	189	229	266	253	352	421	480
W 210	196	264	326	368	329	447	544	610	176	238	297	339	310	421	518	582
210	189	257	315	357	324	443	533	599	160	220	275	310	295	405	493	553
W 250	282	372	443	485	471	620	734	811	240	317	394	414	430	564	685	743
250	273	368	436	485	463	615	727	813	220	310	379	421	410	557	672	749
280	355	480	551	624	621	826	959	1,082	275	388	427	502	540	736	838	961
320	374	498	588	668	703	930	1,091	1,232	266	366	432	511	597	793	937	1,078
360	890	1,181	1,144	1,323	890	1,181	1,375	1,552	745	985	1,144	1,323	745	985	1,144	1,323
400	877	1,148	1,347	1,521	877	1,148	1,347	1,521	705	890	1,060	1,241	705	890	1,060	1,241
440	842	1,303	1,563	1,821	842	1,303	1,563	1,821	568	884	1,109	1,488	568	884	1,109	1,488
500	769	1,250	1,481	1,728	769	1,250	1,481	1,728	355	721	844	1,190	355	721	844	1,109
5008	791	1624	1909	2137	791	1624	1909	2137	728	1548	1808	2029	728	1548	1808	2029
580	679	1,406	1,649	1,865	679	1,406	1,649	1,865	033	474	549	597	033	474	549	597

Open Motors - NEMA 56 Frames - 60Hz
Position / Construction Form

FRAME	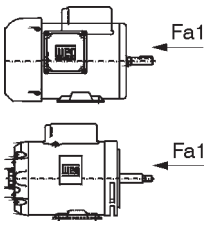		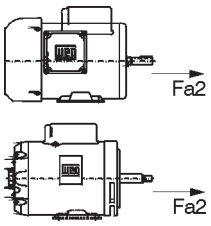		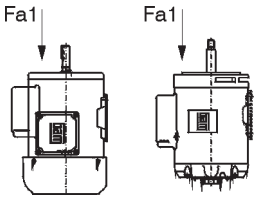		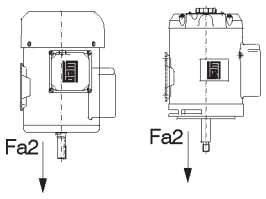	
	II	IV	II	IV	II	IV	II	IV
56 A	68	90	83	112	63	85	79	108
56 B	66	90	81	110	63	83	77	105
56 D	63	88	105	145	59	81	101	138

The maximum radial load for each frame are determined, by graphs.

INSTRUCTIONS ON HOW TO USE THE GRAPHS

1 - Maximum radial load on shaft.
2 - Maximum radial load on bearings.

Where: X - Half of pulley width (inches)
Fr- Maximum radial load in relation to the diameter and pulley width.

Example:
Verify whether a 2HP motor, II Pole, 60Hz withstands a radial load of 110Lb, considering a pulley width of 4 inches.

Frame: 145T
Fr: 110Lb
X: 2 inches

1 - Mark the distance X
2 - Find out line N = 3600 for bearing
Based on the above, this bearing withstands a radial load of 130Lb.

Frame 180T

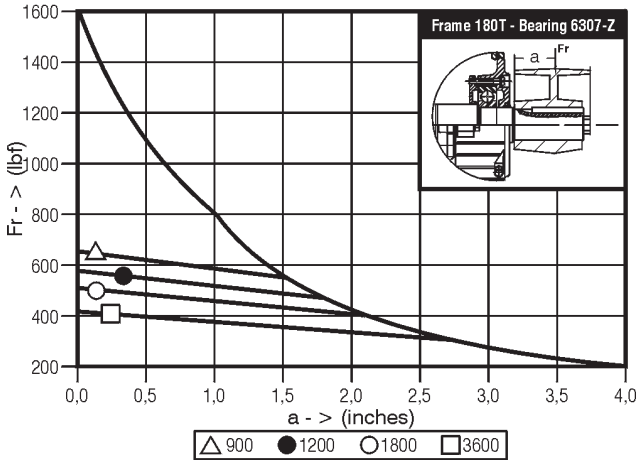

Frame 140T

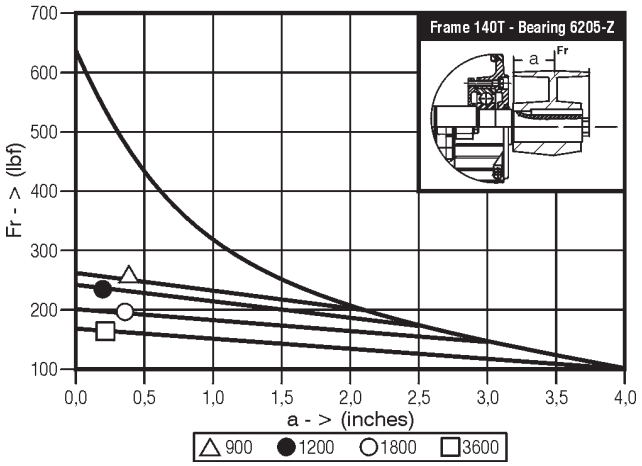

Frame W210T

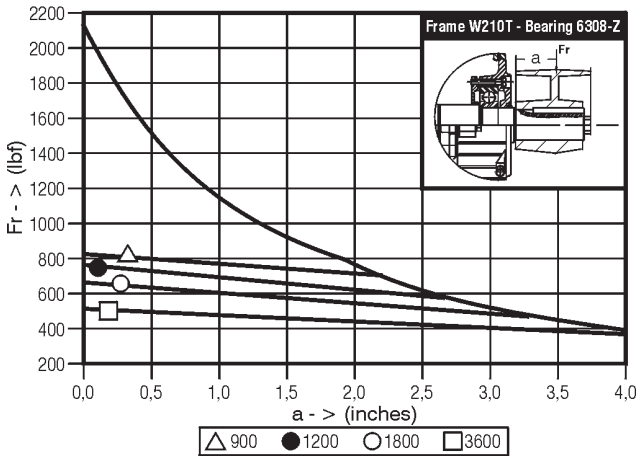

Frame W180T

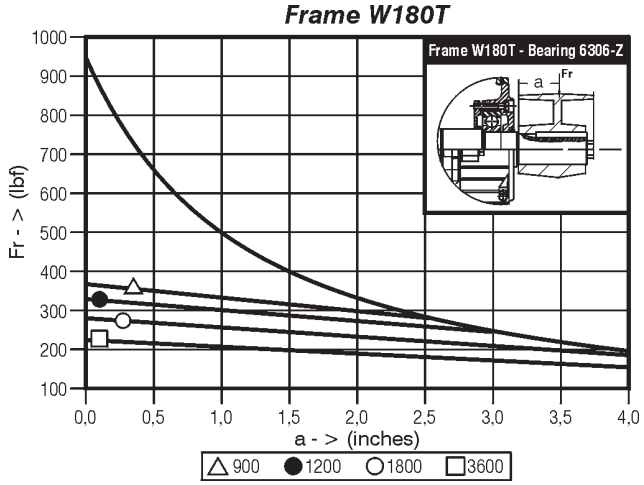

Frame 210T

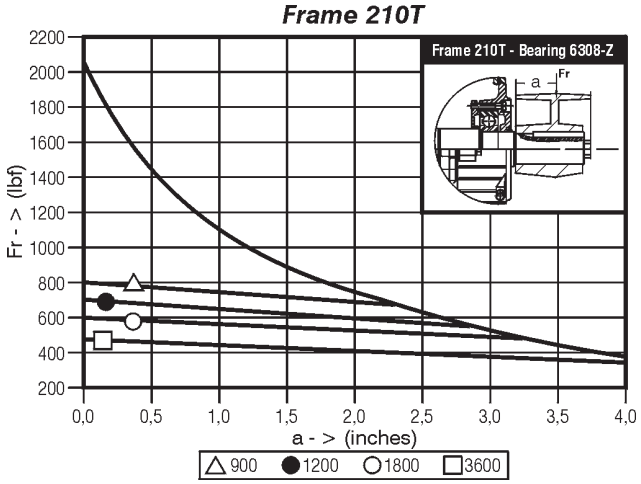

Frame W250T

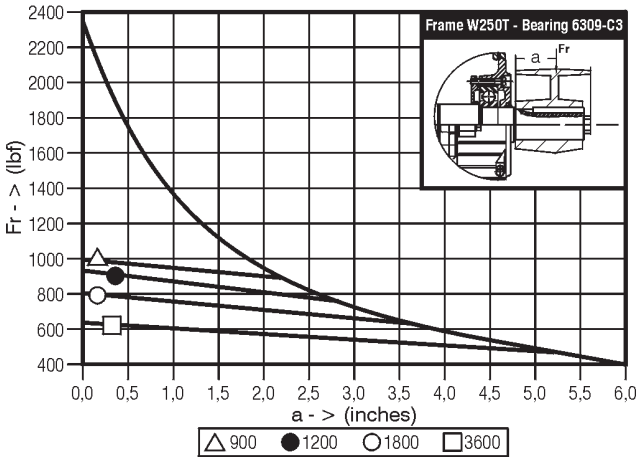

Frame 280T

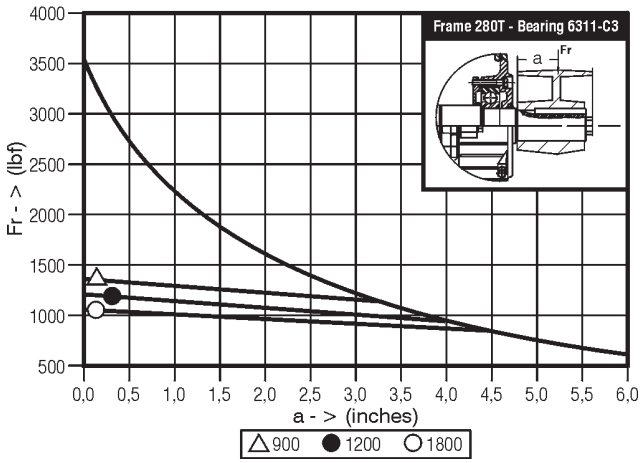

Frame 250T

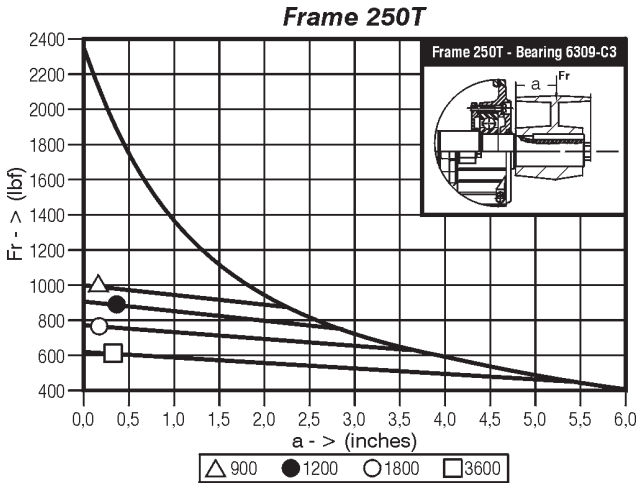

Frame 320TS

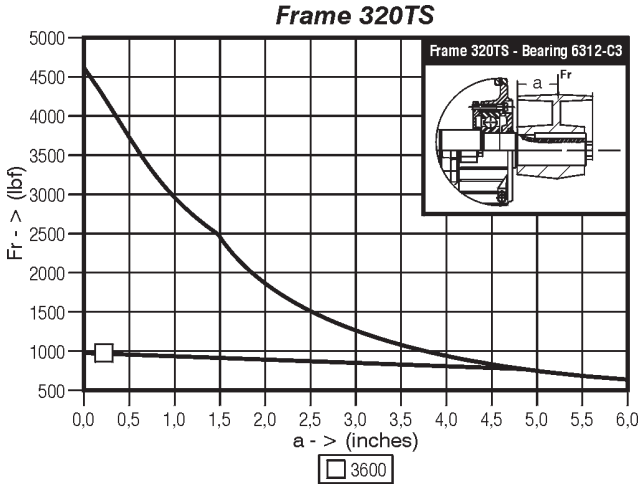

Frame 280TS

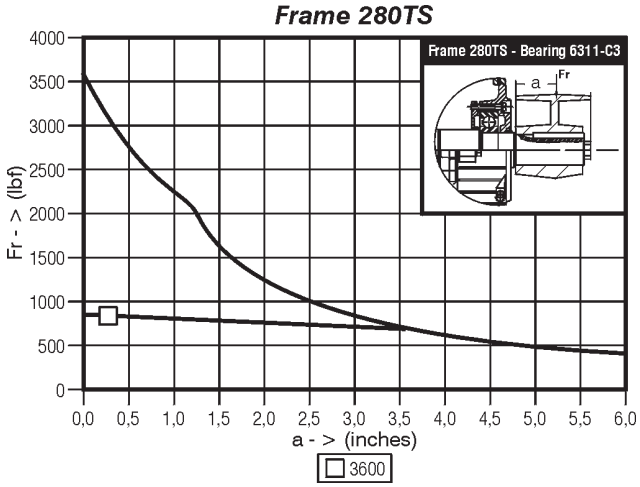

Frame 320T

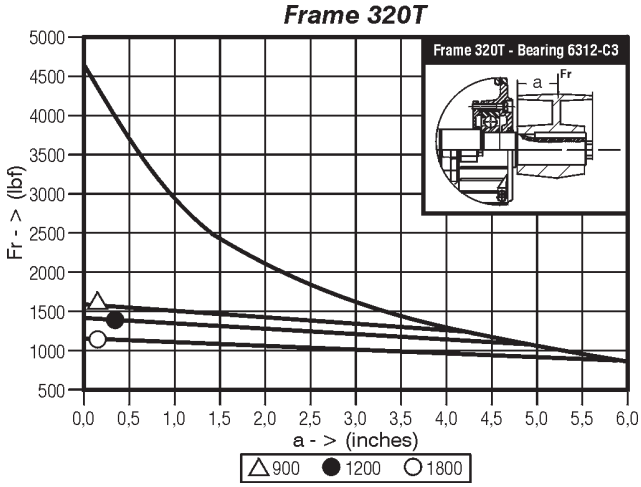

Frame 360TS

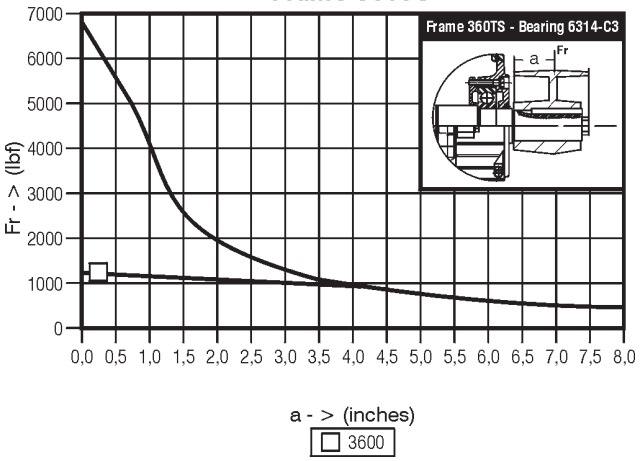

Frame 400T

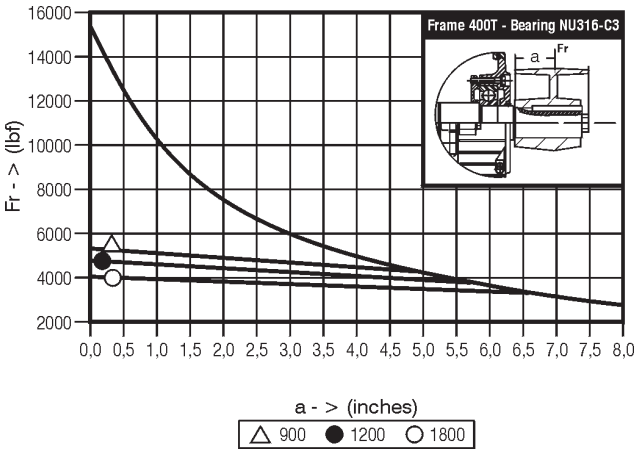

Frame 360T

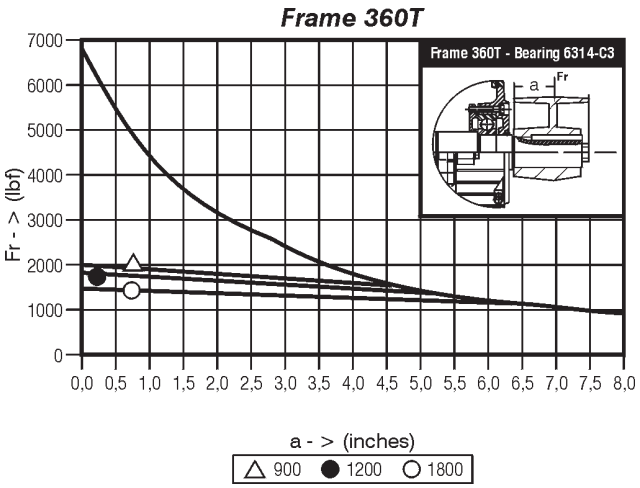

Frame 440TS

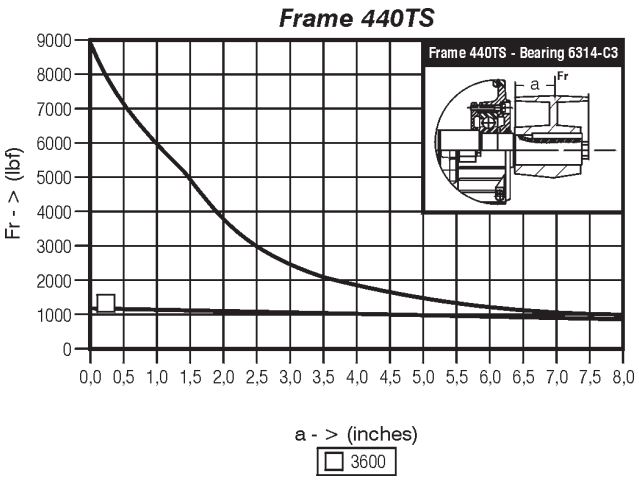

Frame 400TS

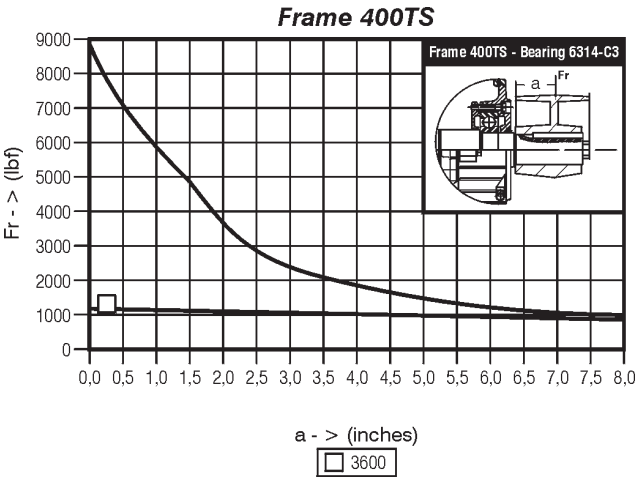

Frame 440T

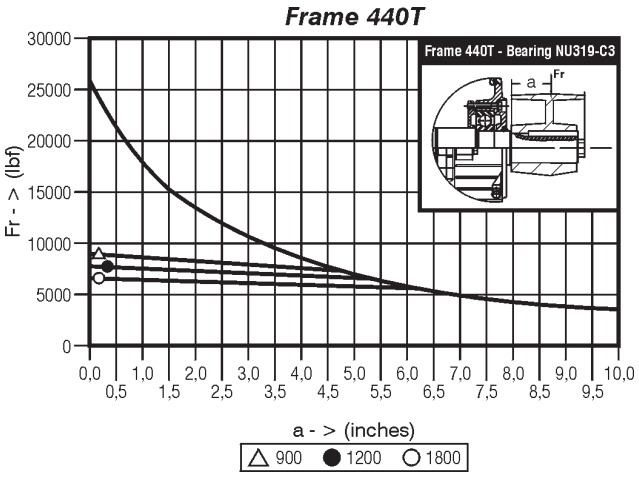

Frame 500TS

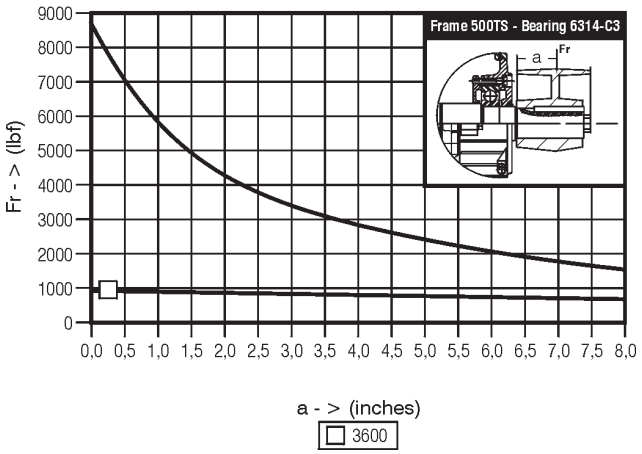

Frame 5008T

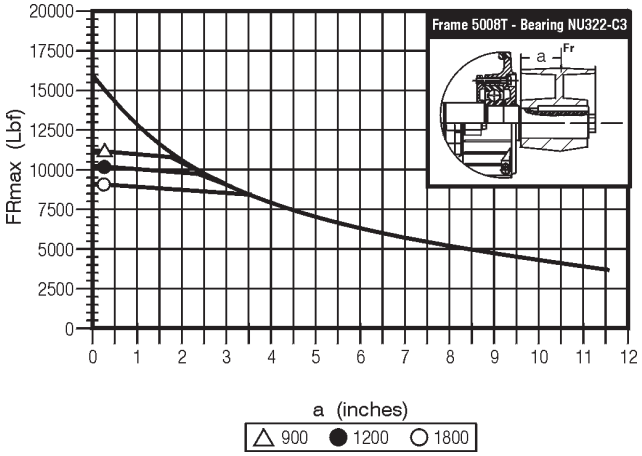

Frame 500T

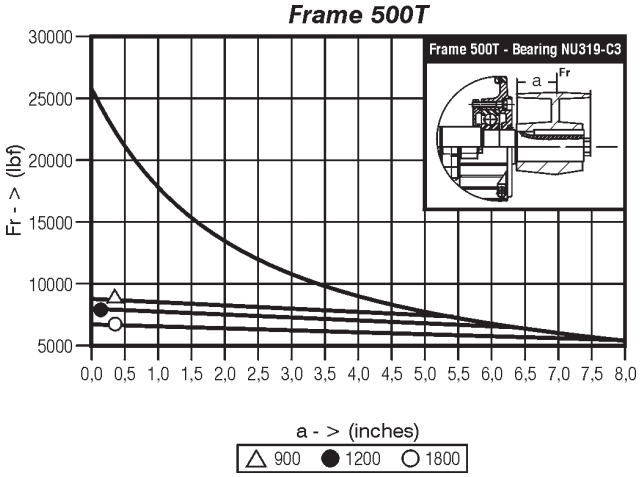

Frame 580TS

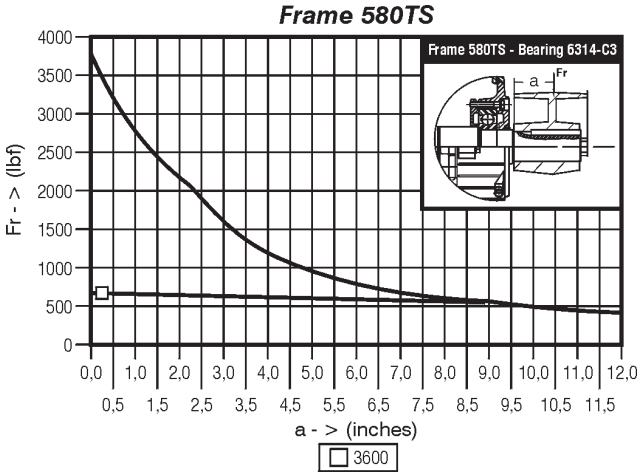

Frame 5008TS

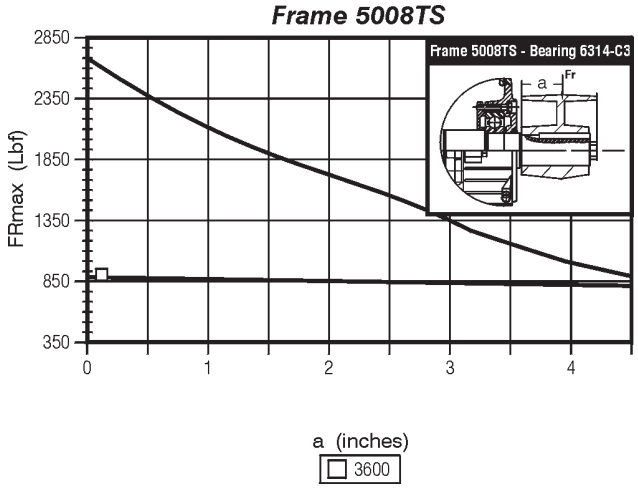

Frame 580T

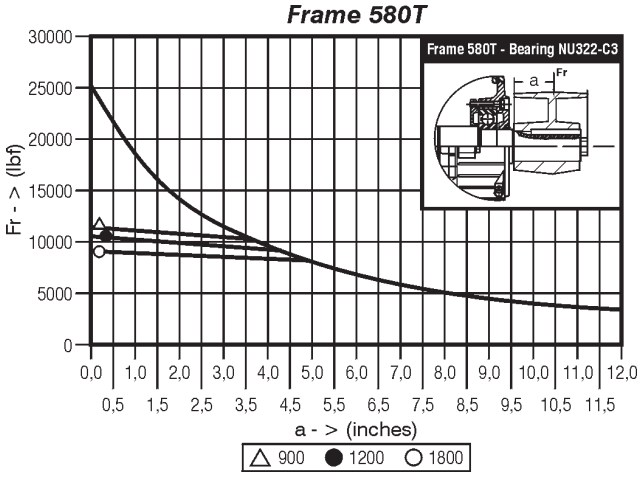

Note: For frames 600 and above, consult your engineering representative.

3.2 Electrical Aspects

3.2.1 Feed System

Proper electric power supply is very important. The choice of motor feed conductors, whether branch or distribution circuits, should be based on the rated current of the motors as per NFPA-70 Standard article 430.
Tables 4, 5 and 6 show minimum conductor gauges sized according to maximum current capacity and maximum voltage drop in relation to the distance from the distribution center to the motor, and to the type of installation (Overhead or in ducts).

To determine the conductor gauge proceed as follows:

a) Determine the current by multiplying the current indicated on the motor nameplate by 1.25 and then locate the resulting value on the corresponding table.
If the conductor feeds more than one motor, the value to be sought on the table should be equal 1.25 times the rated current of the largest motor plus the rated current of the other motors.
In the case of variable speed motors, the highest value among the rated currents should be considered.
When motor operation is intermittent, the conductors should have a current carrying capacity equal or greater, to the product of the motor rated current times the running cycle factor shown on Table 7.

***Table 7** - Running cycle factor*

Motor Short

Motor short time rating / Duty Classification	5min	15min	30 at 60min	Continuos
Short (operating valves, activating contacts etc)	1.10	1.20	1.50	-
Intermittent (passenger or freight elevators, tools, pumps, rolling bridges etc)	0.85	0.85	0.90	1.40
Cyclic (rolling mills,mining machines etc)	0.85	0.90	0.95	1.40
Variable	1.10	1.20	1.50	2.00

b) Locate the rated voltage of the motor and the feed network distance in the upper part of the corresponding table. The point of intersection of the distance column and the line referring to current will indicate the minimum required gauge of the conductor.

Example:
Size the conductors for a 15 HP, three-phase, 230V, 42A, motor located 200 feet from the main supply with cables laid in conduits.

a) Current to be located: 1.25 x 42A = 52.5A
b) Closest value on table 6:55A
c) Minimum gauge: 6 AWG

3.2.2 Starting of Electric Motor

Induction motors can be started by the following methods:

Direct Starting

Whenever possible a three-phase motor with a squirrel cage rotor should be started directly at full supply voltage by means of a contactor (Connection diagram a). This method is called Direct-on-Line (DOL) starting.
There are DOL starter assemblies available combining a three-pole contactor, a bimetal relay (overload protection device), and a fuse (short circuit protection on branch circuit).
DOL starting is the simplest method, only feasible however, when the locked rotor current (LRC) does not influence the main electric supply lines.
Initial locked rotor current (LRC) in induction motors reach values six to eight times the value of the full load current. During starting by the DOL method, starting current can reach these high levels. The main electrical supply should be rated sufficiently, such that during the starting cycle no supply disturbance to others on the power network is caused by the voltage drop in the main supply.
This can be achieved under one of the following situations:

a) The rated main supply current is high enough for the locked rotor current not to be proportionally high.
b) Motor locked rotor current is low with no effect on the networks.
c) The motor is started under no-load conditions with a short starting cycle and, consequently, a low locked rotor current with a transient voltage drop tolerable to other consumers.

Starting with a compensating switch (auto-transformer starting)

Should direct on line starting not be possible, either due to restrictions imposed by the power supply authority or due to the installation itself, reduced voltage indirect starting methods can be employed to lower the locked rotor current. The single line connection diagram (C) shows the basic components of a compensating switch featuring a transformer (usually an auto-transformer) with a series of taps corresponding to the different values of the reduced voltage. Only three terminals of the motor are connected to the switch, the other being interconnected as per diagram, for the indicated voltage.

Star-Delta starting

It is fundamental to star-delta starting that the three-phase motor has the necessary numbers of leads for both connections:

6 leads for Y/Δ
or 12 leads for YY/ΔΔ

All the connections for the various voltages are made through terminals in the terminal box in accordance with the wiring diagram that accompanies the motor. This diagram may be shown on the nameplate or in the terminal box.
The star-delta connection is usually used only in low-voltage motors due to normally available control and protection devices. In this method of starting the locked rotor current is approximately 30% of the original LRC. The locked rotor torque is reduced proportionally as well. For this reason, it is very important before deciding to use

***Table 4** - Wire and cable gauges for single-phase motor installation (voltage drop < 5%) (in conduits)*

Supply Voltage	Distance of motor from distribution centre (feet)													
115	34	51	69	85	102	137	171	205	240	273	308	342	428	514
230	69	102	138	170	204	274	342	410	480	546	616	684	856	1028
460	138	204	276	340	408	548	684	820	960	1092	1232	1368	1712	2056
575	170	250	338	420	501	670	840	1010	1181	1342	1515	1680	2105	2530
Current (A)	Cable gauge (conductor)													
5	14	14	14	14	14	14	14	12	12	12	12	10	10	8
10	14	14	14	14	12	12	10	10	10	8	8	8	6	6
15	12	12	12	12	12	10	8	8	6	6	6	6	4	2
20	12	12	12	10	10	8	8	6	6	6	4	4	4	2
30	10	10	10	8	8	6	6	6	4	4	2	2	2	1/0
40	8	8	8	8	6	6	4	4	2	2	2	2	1/0	2/0
55	6	6	6	6	6	4	4	2	2	1/0	1/0	1/0	1/0	2/0
70	4	4	4	4	4	2	2	2	1/0	1/0	2/0	2/0	2/0	2/0
95	2	2	2	2	2	2	1/0	1/0	1/0	2/0	3/0	3/0	4/0	250M

***Table 5** - Wire and cable gauges for three-phase motor installation - aerial conductors with 25cm spacing (voltage drop < 5%)*

Supply Voltage	Distance of motor from distribution centre (feet)													
115	51	69	85	102	137	171	205	240	273	308	342	428	514	685
230	102	138	170	204	274	342	410	480	546	616	684	856	1028	1370
460	204	276	340	408	547	684	820	960	1092	1232	1368	1712	2056	2740
575	250	338	420	501	670	840	1010	1181	1342	1515	1680	2105	2530	3350
Current (A)	Cable gauge (conductor)													
15	14	14	14	12	12	10	10	10	8	8	8	6	6	4
20	14	14	12	12	10	10	8	8	8	6	6	4	4	2
30	14	12	10	8	8	8	6	6	4	4	4	2	2	1/0
40	12	10	10	8	8	6	4	4	4	2	2	2	1/0	2/0
55	10	10	8	8	6	4	4	2	2	2	1/0	2/0	3/0	--
70	8	8	6	6	4	2	2	2	1/0	1/0	2/0	3/0	--	--
100	6	6	4	4	2	2	1/0	2/0	3/0	4/0	4/0	--	--	--
130	4	4	4	2	1/0	1/0	2/0	4/0	--	--	--	--	--	--
175	2	2	2	1/0	2/0	3/0	--	--	--	--	--	--	--	--
225	1/0	1/0	1/0	2/0	3/0	--	--	--	--	--	--	--	--	--
275	2/0	2/0	2/0	4/0	--	--	--	--	--	--	--	--	--	--
320	3/0	3/0	3/0	4/0	--	--	--	--	--	--	--	--	--	--

***Table 6** - Wire and cable gauges for three-phase motor installation (voltage drop < 5%) (in conduits)*

Supply Voltage	Distance of motor from distribution centre (feet)											
115	85	102	120	137	171	205	240	273	308	342	428	514
230	170	204	240	274	342	410	480	546	616	684	856	1028
460	340	408	480	548	684	820	960	1092	1232	1368	1712	2056
575	420	501	590	670	840	1010	1181	1342	1515	1680	2105	2530
Current (A)	Cable gauge (conductor)											
15	12	12	12	10	10	8	8	8	6	6	6	4
20	12	10	10	10	8	8	6	6	6	6	4	4
30	10	8	8	8	6	6	6	4	4	4	2	2
40	8	8	6	6	6	4	4	4	2	2	2	1/0
55	6	6	6	4	4	4	2	2	2	1/0	1/0	1/0
70	4	4	4	4	2	2	2	1/0	1/0	1/0	2/0	2/0
95	2	2	2	2	2	1/0	1/0	1/0	1/0	2/0	3/0	4/0
125	1/0	1/0	1/0	1/0	1/0	1/0	2/0	2/0	3/0	3/0	4/0	250M
145	2/0	2/0	2/0	2/0	2/0	2/0	2/0	3/0	3/0	4/0	250M	300M
165	3/0	3/0	3/0	3/0	3/0	3/0	3/0	3/0	4/0	4/0	250M	350M
195	4/0	4/0	4/0	4/0	4/0	4/0	4/0	4/0	250M	250M	300M	350M
215	250M	250M	250M	250M	250M	250M	250M	250M	250M	300M	350M	400M
240	300M	300M	300M	300M	300M	300M	300M	300M	300M	300M	400M	500M
265	350M	350M	350M	350M	350M	350M	350M	350M	350M	350M	500M	500M
280	400M	400M	400M	400M	400M	400M	400M	400M	400M	400M	400M	--
320	500M	500M	500M	500M	500M	500M	500M	500M	500M	500M	500M	--

Note: The above indicated values are orientative. For guaranteed values, contact the Local Power Company.

star-delta starting to verify if the reduced locked rotor torque in "STAR" connection is enough to accelerate the load.

3.2.3 Motor Protection

Motor circuits have, in principle, two types of protection: motor overload, locked rotor and protection of branch circuit from short circuits. Motors in continuous use should be protected from overloading by means of a device incorporated into the motor, or by an independent device, usually a fixed or adjustable thermal relay equal or less than to the value derived from multiplying the rated feed current at full load by:

- 1.25 for motors with a service factor equal or superior to 1.15 or;

- 1.15 for motors with service factor equal to 1.0.

Some motors are optionally fitted with overheating protective detectors (in the event of overload, locked rotor, low voltage, inadequate motor ventilation) such as a thermostat (thermal probe), thermistor (PTC), RTD type resistance which dispense with independent devices.

THERMOSTAT (THERMAL PROBE)**:** Bimetallic thermal detectors with normally closed silver contacts. These open at pre-determined temperatures. Thermostats are series connected directly to the contactor coil circuit by two conductors.

THERMISTORS: Semi-conductor heat detectors positive temperature coeficient (PTC) that sharply change their resistance upon reaching a set temperature. Thermistors, depending upon the type, are series or parallel-connected to a control unit that cuts out the motor feed, or actuates an alarm system, in response to the thermistors reaction.

RESISTANCE TEMPERATURE DETECTORS (RTD) - PT 100:The resistance type heat detector (RTD) is a resistance element usually manufactured of copper or platinum.
The RTD operates on the principle that the electrical resistance of a metallic conductor varies linearly with the temperature. The detector terminals are connected to a control panel, usually fitted with a temperature gauge, a test resistance and a terminal changeover switch.

Subject to the desired degree of safety and the client's specification, three (one per phase) or six (two per phase) protective devices can be fitted to a motor for the alarm stems, circuit breaker or combined alarm and circuit breaker, with two leads from the terminal box to the alarm or circuit breaker system and four for the combined system (alarm and circuit breaker).
Table 9 compares the two methods of protection.

3.3 Start-up

3.3.1 Preliminary Inspection

Before starting a motor for the first time, it will be necessary to:

a) Remove all locking devices and blocks used in transit and check that the motor rotates freely;

b) Check that the motor is firmly secured and that coupling elements are correctly mounted and aligned.;

c) Ascertain that voltage and frequency correspond to those indicated on the nameplate. Motor performance will be satisfactory with main supply voltage fluctuation within ten per cent of the value indicated on the nameplate or a frequency fluctuation within five per cent or, yet, with a combined voltage and frequency variance within ten per cent;

d) Check that connections are in accordance with the connection diagram shown on the nameplate and be sure that all terminal screws and nuts are tight;

e) Check the motor for proper grounding. Providing that there are no specifications calling for ground-insulated installation, the motor must be grounded in accordance with prevalent standard for grounding electrical machines. The screw identified by the symbol ⏚ should be used for this purpose.
This screw is generally to be found in the terminal box or on one foot of the frame;

f) Check that motor leads connecting with the mains, as well as the control wires and the overload protection device, are in accordance with Nema Standards;

g) If the motor has been stored in a damp place, or has been stopped for some time, measure the insulating resistance as recommended under the item covering storage instructions;

h) Start the motor uncoupled to ascertain that it is turning in the desired direction. To reverse the rotation of a three-phase motor, invert two terminal leads of the mains supply.
High voltage motors bearing an arrow on the frame indicating rotation direction can only turn in the direction shown.

3.3.2 The First Start-up

Three-Phase Motor with Cage Rotor:
After careful examination of the motor, follow the normal sequence of starting operations listed in the control instructions for the initial start-up.

3.3.3 Operation

Drive the motor coupled to the load for a period of at least one hour while watching for abnormal noises or signs of overheating.
Compare the line current with the value shown on the nameplate.
Under continuous running conditions without load fluctuations this should not exceed the rated current times the service factor, also shown on the nameplate.
All measuring and control instruments and apparatus should be continuously checked for anomalies, and any irregularities corrected.

3.3.4 Stopping

Warning:

To touch any moving part of a running motor, even though

disconnected, is a danger to life and limb.

Three-phase motor with cage rotor:
Open the stator circuit switch. With the motor at a complete stop, reset the auto-transformer, if any, to the "start" position.

Caption: ◯ unprotected
◑ partially protected
● totally protected

***Table 9** - Comparison between motor protection system*

Causes of overheating	Current-based protection		Protection with probe thermistor in motor
	Fuse only	Fuse and thermal protector	
	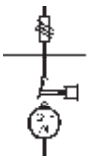	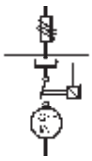	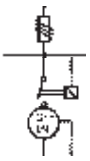
1. Overload with 1.2 times rated current	◯	●	●
2. Duty cycles S1 to S8 IEC 34, EB 120	◯	◑	●
3. Brakings, reversals and frequent starts	◯	◑	●
4. Operating with more than 15 starts p/hour	◯	◑	●
5. Locked rotor	◑	◑	●
6. Fault on one phase	◯	◑	●
7. Execessive voltage fluctuation	◯	●	●
8. Frequency fluctuation on main supply	◯	●	●
9. Excessive ambient temperature	◯	●	●
10. External heating caused by bearings, belts, pulleys etc.	◯	◯	●
11. Obstructed ventilation	◯	◯	●

CONNECTION DIAGRAMS

a) Direct starting

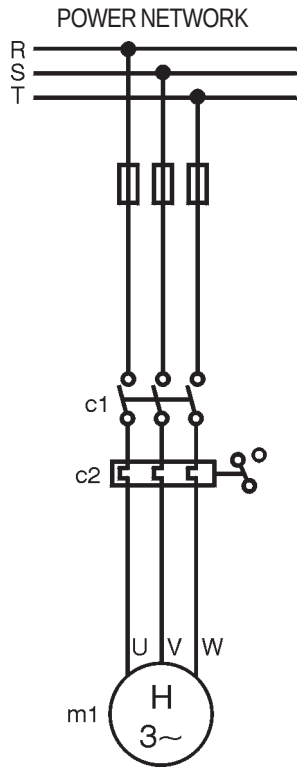

b) Star-Delta starting

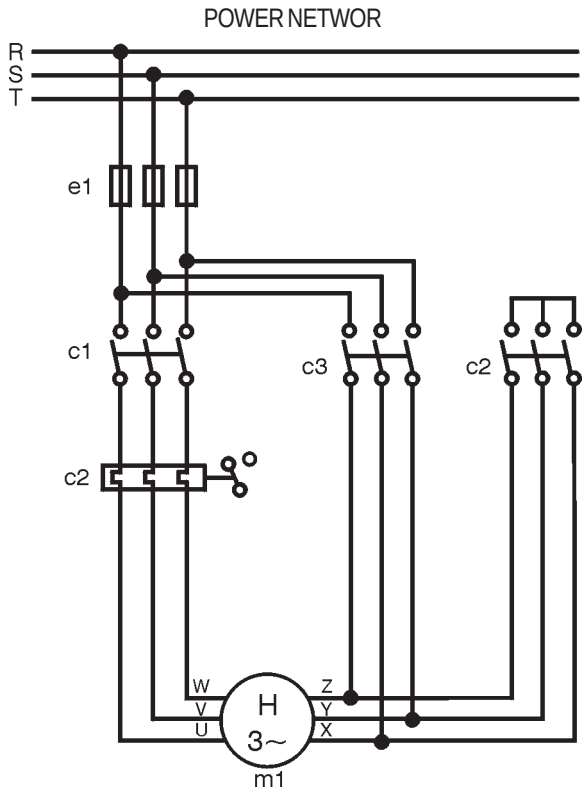

c) Auto-transformer starting

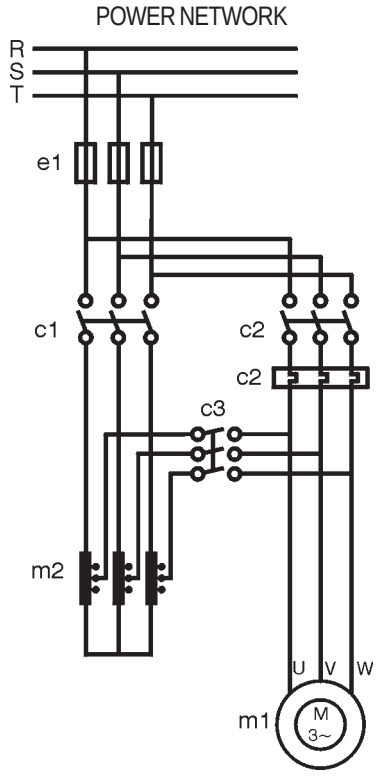

***Table 11** - Bearing specifications by type of motor*

NEMA Frames	Mounting	Bearings	
		Front (D.E.)	Rear (O.D.E.)
Open drip proof motors			
B48 and C48	ALL FORMS	6203 Z	6202 Z
56 and A56		6203 Z	6202 Z
B56 and C56		6203 Z	6202 Z
D56 and F56H/G56H		6204 Z	6202 Z / 6203 Z
Totally enclosed fan cooled motors			
143 T	ALL FORMS	6205 ZZ	6204 ZZ
145 T		6205 ZZ	6204 ZZ
182 T		6307 ZZ	6206 ZZ
184 T		6307 ZZ	6206 ZZ
W 182 T		6206 ZZ	6205 ZZ
W 184 T		6206 ZZ	6205 ZZ
213 T		6308 ZZ	6207 ZZ
215 T		6308 ZZ	6207 ZZ
W 213 T		6308 ZZ	6207 ZZ
W 215 T		6308 ZZ	6207 ZZ
254 T		6309-C3	6209 Z-C3
256 T		6309-C3	6209 Z-C3
W 254 T		6309-C3	6209 Z-C3
W 256 T		6309-C3	6209 Z-C3
284 T and TS		6311-C3	6211 Z-C3
286 T and TS		6311-C3	6211 Z-C3
324 T and TS		6312-C3	6212 Z-C3
326 T and TS		6312-C3	6212 Z-C3
364 T and TS		6314-C3	6314-C3
365 T and TS		6314-C3	6314-C3
404 T		NU 316-C3	6314-C3
404 TS		6314-C3	6314-C3
405 T		NU 316-C3	6314-C3
405 TS		6314-C3	6414-C3
444 T		NU 319-C3	6316-C3
444 TS		6314-C3	6314-C3
445 T		NU 319-C3	6316-C3
445 TS		6314-C3	6314-C3
447 T		NU 319-C3	6316-C3
447 TS		6314-C3	6314-C3
449 T		NU 322-C3	6319-C3
449 TS		6314-C3	6314-C3
504 T		NU 319-C3	6316-C3
504 TS		6314-C3	6314-C3
505 T		NU 319-C3	6316-C3
505 TS		6314-C3	6314-C3
5008 T		NU 322-C3	6319-C3
5008TS		6314-C3	6314-C3
586 T		NU 322-C3	6319-C3
586 TS		6314-C3	6314-C3
587 T		NU 322-C3	6319-C3
587 TS		6314-C3	6314-C3

Saw Arbor motor frame	Mounting	Bearings	
		Front (D.E.)	Rear (O.D.E.)
80 S MS	B3	6307 ZZ	6207 ZZ
80 M MS		6307 ZZ	6207 ZZ
80 L MS		6307 ZZ	6207 ZZ
90 L MS		6308 ZZ	6208 ZZ

ODP Motors Nema-T frames	Mounting	Bearings	
		Front (D.E.)	Rear (O.D.E.)
E143/5T	HORIZONTAL MOUNTING ONLY	6205 ZZ	6204 ZZ
F143/5T		6205 ZZ	6204 ZZ
182 T		6206 ZZ	6205 ZZ
184 T		6202 ZZ	6205 ZZ
213/5T		6208 ZZ	6206 ZZ
254 T		6309 Z-C3	6209 Z-C3
256 T		6309 Z-C3	6209 Z-C3
284 T		6311 Z-C3	6211 Z-C3
284 TS		6311 Z-C3	6211 Z-C3
286 T		6311 Z-C3	6211 Z-C3
286 TS		6311 Z-C3	6211 Z-C3
324 T		6312 Z-C3	6212 Z-C3
324 TS		6312 Z-C3	6212 Z-C3
326 T		6312 Z-C3	6212 Z-C3
326 TS		6312 Z-C3	6212 Z-C3
364 T		6314 C3	6314 C3
364 TS		6314 C3	6314 C3
365 T		6314 C3	6314 C3
365 TS		6314 C3	6314 C3
404 T		NU 316 C3	6314 C3
404 TS		6314 C3	6314 C3
405 T		NU 316 C3	6314 C3
405 TS		6314 C3	6314 C3
444 T		NU 319 C3	6316 C3
444 TS		6314 C3	6314 C3
445 T		NU 319 C3	6316 C3
445 TS		6314 C3	6314 C3

IEC frame	Mounting	Bearings	
		Front (D.E.)	Rear (O.D.E.)
Totally enclosed fan cooled motors			
63	B3	6201 ZZ	6201 ZZ
71		6203 ZZ	6202 ZZ
80		6204 ZZ	6203 ZZ
90 S - L		6205 ZZ	6204 ZZ
100 L		6206 ZZ	6205 ZZ
112 M		6307 ZZ	6206 ZZ
132 S - M		6308 ZZ	6207 ZZ
160 M - L		6309-C3	6209 Z-C3
180 M - L		6311-C3	6211 Z-C3
200 M - L		6312-C3	6212 Z-C3
225 S/M		6314-C3	6314-C3
250 S/M		6314-C3	6314-C3
280 S/M		6314-C3	6314-C3
		6316-C3	6316-C3
315 S/M		6314-C3	6314-C3
		6319-C3	6316-C3
355 M/L		6314-C3	6314-C3
		NU 322-C3	6319-C3

***Table 12** – Bearing lubrication intervals and amount of grease*

BALL BEARINGS - Series 62/63													
Relubrication intervals (running hours – horizontal position)													
	II pole		IV pole		VI pole		VIII pole		X pole		XII pole		Amount of grease
Serie 62													
Bearing	60Hz	50Hz	60Hz	50Hz	60Hz	50Hz	60Hz	50Hz	60Hz	50Hz	60Hz	50Hz	(g)
6209	18400	20000	20000	20000	20000	20000	20000	20000	20000	20000	20000	20000	9
6211	14200	16500	20000	20000	20000	20000	20000	20000	20000	20000	20000	20000	11
6212	12100	14400	20000	20000	20000	20000	20000	20000	20000	20000	20000	20000	13
Serie 63													
Bearing	60Hz	50Hz	60Hz	50Hz	60Hz	50Hz	60Hz	50Hz	60Hz	50Hz	60Hz	50Hz	(g)
6309	15700	18100	20000	20000	20000	20000	20000	20000	20000	20000	20000	20000	13
6311	11500	13700	20000	20000	20000	20000	20000	20000	20000	20000	20000	20000	18
6312	9800	11900	20000	20000	20000	20000	20000	20000	20000	20000	20000	20000	21
6314	3600	4500	9700	11600	14200	16400	17300	19700	19700	20000	20000	20000	27
6316	-	-	8500	10400	12800	14900	15900	18700	18700	20000	20000	20000	34
6319	-	-	7000	9000	11000	13000	14000	17400	17400	18600	18600	20000	45
6322	-	-	5100	7200	9200	10800	11800	15100	15100	15500	15500	19300	60

Table 13 – Bearing lubrication intervals and amount of grease

BALL BEARINGS - Series NU3													
Relubrication intervals (running hours – horizontal position)													
	II pole		IV pole		VI pole		VIII pole		X pole		XII pole		Amount of grease
Bearing	60Hz	50Hz	60Hz	50Hz	60Hz	50Hz	60Hz	50Hz	60Hz	50Hz	60Hz	50Hz	(g)
NU 309	9800	13300	20000	20000	20000	20000	20000	20000	20000	20000	20000	20000	13
NU 311	6400	9200	19100	20000	20000	20000	20000	20000	20000	20000	20000	20000	18
NU 312	5100	7600	17200	20000	20000	20000	20000	20000	20000	20000	20000	20000	21
NU 314	1600	2500	7100	8900	11000	13100	15100	16900	16900	19300	19300	20000	27
NU 316	-	-	6000	7600	9500	11600	13800	15500	15500	17800	17800	20000	34
NU 319	-	-	4700	6000	7600	9800	12200	13700	13700	15700	15700	20000	45
NU 322	-	-	3300	4400	5900	7800	10700	11500	11500	13400	13400	17300	60
NU 324	-	-	2400	3500	5000	6600	10000	10200	10200	12100	12100	15000	72

Notes:
- The ZZ bearings from 6201 to 6307 do not require relubrication as its life time is about 20,000 hours.
- Tables 1 and 2 are intended for the lubrication period under bearing temperature of 70ºC (for bearings up to 6312 and NU 312) and temperature of 85ºC (for bearings 6314 and NU 314 and larger).
- For each 15ºC of temperature rise, the relubrication period is reduced by half.
- The relubrication periods given above are for those cases applying Polyrex® EM grease.
- When motors are used on the vertical position, their relubrication interval is reduced by half if compared to horizontal position motors.

Compatibility of Polyrex® EM grease with other types of grease:

Containing polyurea thickener and mineral oil, the Polyrex® EM grease is compatible with other types of grease that contain:
- Lithium base or complex of lithium or polyurea and highly refined mineral oil.
- Inhibitor additive against corrosion, rust and anti-oxidant additive.

Notes:
- Although Polyrex® EM is compatible with types of grease given above, we do no recommended to mix it with any other greases.
- If you intend to use a type of grease different than those recommended above , first contact WEG.
- On applications (with high or low temperatures, speed variation, etc), the type of grease and relubrification interval are given on an additional nameplate attached to the motor.

4. Maintenance

A well-designed maintenance program for electric motors can be summed up as: periodical inspection of insulation levels, temperature rise, wear, bearing lubrication and the occasional checking of fan air flow.
Inspection cycles depend upon the type of motor and the conditions under which it operates.

4.1 Cleanliness

Motors should be kept clean, free of dust, debris and oil. Soft brushes or clean cotton rags should be used for cleaning. A jet of compressed air should be used to remove non-abrasive dust from the fan cover and any accumulated grime from the fan and cooling fins.
Oil or damp impregnated impurities can be removed with rags soaked in a suitable solvent.
Terminal boxes fitted to motors with IP55 protection should be cleaned; their terminals should be free of oxidation, in perfect mechanical condition, and all unused space dust-free.
Motors with IPW 55 protection are recommended for use under unfavourable ambient conditions.

4.2 Lubrication

Proper lubrication extends bearing life.

Lubrication Maintenance Includes:

a) Attention to the overall state of the bearings;
b) Cleaning and lubrication;
c) Critical inspection of the bearings.

Motor noise should be measured at regular intervals of one to four months. A well-tuned ear is perfectly capable of distinguishing unusual noises, even with rudimentary tools such as a screw driver, etc., without recourse to sophisticated listening aids or stethescopes that are available on the market.
A uniform hum is a sign that a bearing is running perfectly. Bearing temperature control is also part of routine maintenance.
Constant temperature control is possible with the aid of external thermometers or by embedded thermal elements. WEG motors are normally equipped with grease lubricated ball or roller bearings.
Bearings should be lubricated to avoid metallic contact of the moving parts, and also for protection against corrosion and wear. Lubricant properties deteriorate in the course of time and mechanical operation: furthermore, all lubricants are subject to contamination under working conditions.
For this reason lubricants must be renewed and any lubricant consumed needs replacing from time to time.

4.2.1 Periodical Lubrication

WEG motors are supplied with sufficient grease for a long running period. Lubrication intervals, the amount of grease and the type of bearing used in frames 140T to 580T are to be found in Tables 11, 12 and 13.
Lubrication intervals depend upon the size of the motor, speed, working conditions and the type of grease used.

4.2.2 Quality and Quantity of Grease

Correct lubrication is important!
Grease must be applied correctly and in sufficient quantity as both insufficient or excessive greasing are harmful.
Excessive greasing causes overheating brought about by the greater resistance encountered by the rotating parts and, in particular, by the compacting of the lubricant and its eventual loss of lubricating qualities.
This can cause seepage with the grease penetrating the motor and dripping on the coils.

GREASES FOR MOTOR BEARINGS

For operating temperatures from -30 to 170°C	
Type	**Supplier**
Polyrex® EM	Esso

4.2.3 Lubricating Instructions

a) Frame 140T to 210T motors
Frame 140T to 210T size motors are not fitted with grease nipples. Lubrication is carried out during periodical overhauls when the motor is taken apart.

Cleaning and Lubrication of Bearings

With the motor dismantled and without extracting the bearings from the shaft, all existing grease should be removed and the bearings cleaned with Diesel oil, kerosene or other solvent, until thoroughly clean.
Refill the spaces between the balls or rollers and the bearing cages with grease immediately after washing. Never rotate bearings in their dry state after washing.
For inspection purposes apply a few drops of machine oil. During these operations maximum care and cleanliness is recommended to avoid the penetration of any impurities or dust that could harm the bearings. Clean all external parts prior to reassembly.

b) Frame 360T to 580T Motors
Motors above 360T frame size are fitted with regreasable bearing system.
The lubrication system from this frame size upwards was designed to allow the removal of all grease from the bearing races through a bleeder outlet which at the same time impedes the entry of dust or other contaminants harmful to the bearing.
This outlet also prevents injury to the bearings from the well-known problem of over-greasing.

It is advisable to lubricate while the motor is running, to allow the renewal of grease in the bearing case.
Should this procedure not be possible because of rotating parts in the proximity of the nipple (pulleys, coupling sleeves, etc.) that are hazardous to the operator the following procedure should be followed:
- Inject about half the estimated amount of grease and run the motor at full speed for approximately a minute; switch off the motor and inject the remaining grease.
The injection of all the grease with the motor at rest could cause penetration of a portion of the lubricant through the internal seal of the bearing case and hence into the motor.

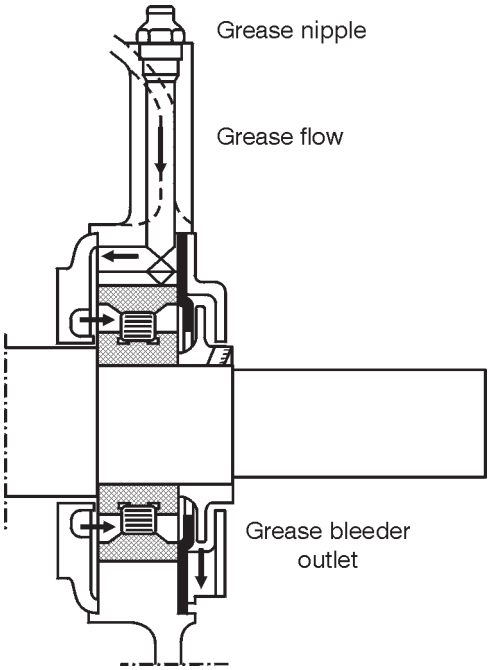

Figure 4.1 - Bearings and lubrication system

Nipples must be clean prior to introduction of grease to avoid entry of any alien bodies into the bearing.
For lubricating use only a manual grease gun.

Bearing Lubrication Steps

1. Cleanse the area around the grease nipples with clean cotton fabric.
2. With the motor running, add grease with a manual grease gun until the lubricant commences to be expelled from the bleeder outlet, or until the quantity of grease recommended in Tables 12 or 13 has been applied.
3. Allow the motor to run long enough to eject all excess grease.

4.2.4 Replacement of Bearings

The opening of a motor to replace a bearing should only be carried out by qualified personnel.
Damage to the core after the removal of the bearing cover can be avoided by filling the gap between the rotor and the stator with stiff paper of a proper thickness.

Providing suitable tooling is employed, disassembly of a bearing is not difficult.
The extractor grips should be applied to the sidewall of the inner ring to be stripped, or to an adjacent part.
To ensure perfect functioning and to prevent injury to the bearing parts, it is essential that the assembly be undertaken under conditions of complete cleanliness and by competent personnel.
New bearings should not be removed from their packages until the moment of assembly.
Prior to fitting a new bearing, ascertain that the shaft has no rough edges or signs of hammering.

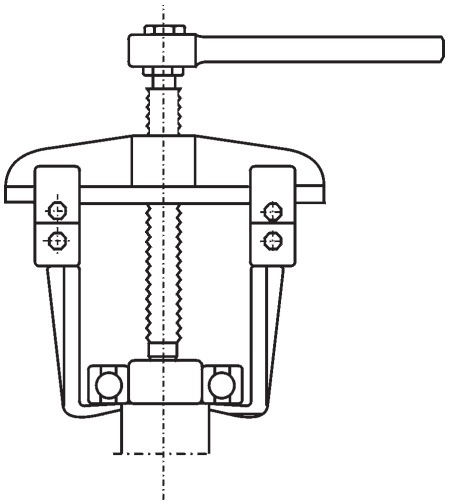

Figure 4.2 - A bearing extractor

During assembly bearings cannot be subjected to direct blows.
The aid used to press or strike the bearing should be applied to the inner ring.

4.3 Air Gap Checking (Large Rating Open Motors)

Upon the completion of any work on the bearings check the gap measurement between the stator and the rotor using the appropriate gazes.
The gap variation at any two vertically opposite points must be less than 10% of the average gap measurement.

4.4 Explosion Proof Motor Repair Steps

4.4.1 Objective

In view of the heavy liability associated with burning of motors of this type, this product has been designed and manufactured to high technical standards, under rigid controls. In addition, in many areas it is required that explosion proof motors ONLY be repaired by licensed personnel or in licensed facilities authorized to do this type of work.
The following general procedures, safeguards, and guidelines must be followed in order to ensure repaired explosion proof motors operate as intended.

4.4.2 Repair Procedure and Precautions

Dismantle the damaged motor with appropriate tools without hammering and/or pitting machined surfaces such as enclosure joints, fastening

holes, and all joints in general.
The position of the fan cover should be suitably marked prior to removal so as to facilitate reassembly later on.
Examine the motor's general condition and, if necessary, disassemble all parts and clean them with kerosene. Under no circumstances should scrapers, emery papers or tools be used that could affect the dimensions of any part during cleaning.
Protect all machined parts against oxidation by applying a coating of vaseline or oil immediately after cleaning.

STRIPPING OF WINDINGS
This step requires great care to avoid knocking and/or denting of enclosure joints and, when removing the sealing compound from the terminal box, damage or cracking of the frame.

IMPREGNATION
Protect all frame threads by inserting corresponding bolts, and the joint between terminal box and frame, by coating it with a non-adhesive varnish (ISO 287 - ISOLASIL).
Protective varnish on machined parts should be removed soon after treating with impregnating varnish. This operation should be carried out manually without using tools.

ASSEMBLY
Inspect all parts for defects, such as cracks, joint incrustations, damaged threads and other potential problems.
Assemble using a rubber headed mallet and a bronze bushing after ascertaining that all parts are perfectly fitted.
Bolts should be positioned with corresponding spring washers and evenly tightened.

TESTING
Rotate the shaft by hand while examining for any drag problems on covers or fastening rings.
Carry out running tests as for standard motors.

MOUNTING THE TERMINAL BOX
Prior to fitting the terminal box all cable outlets on the frame should be sealed with a sealing compound (Ist layer) and an Epoxy resin (ISO 340) mixed with ground quartz (2nd layer) in the following proportions:

340A resin	50 parts
340B resin	50 parts
Ground quartz	100 parts

Drying time for this mixture is two hours during which the frame should not be handled and cable outlets should be upwards.
When dry, see that the outlets and areas around the cables are perfectly sealed.
Mount the terminal box and paint the motor.

4.4.3 Miscellaneous Recommendations

- Any damaged parts (cracks, pittings in machined surfaces, defective threads) must be replaced and under no circumstances should attempts be made to recover them.
- Upon reassembling explosion proof motors IPW55 the substitution of all seals is mandatory.
- Should any doubts arise, consult WEG.

5. Malfunctioning

Most malfunctions affecting the normal running of electric motors can be prevented by maintenance and the appropriate precautions.
While ventilation, cleanliness and careful maintenance are the main factors ensuring long motor life, a further essential factor is the prompt attention to any malfunctioning as signalled by vibrations, shaft knock, declining insulation resistance, smoke or fire, sparking or unusual slip ring or brush wear, sudden changes of bearing temperatures.
When failures of an electric or mechanical nature arise, the first step to be taken is to stop the motor and subsequent examination of all mechanical and electrical parts of the installation.
In the event of fire, the installation should be isolated from the mains supply, which is normally done by turning off the respective switches.
In the event of fire within the motor itself, steps should be taken to restrain and suffocate it by covering the ventilation vents.
To extinguish a fire, dry chemical or $C0_2$ extinguishers should be used - never water.

5.1 Standard Three-Phase Motor Failures

Owing to the widespread usage of asynchronous three-phase motors in industry which are more often repaired in the plant workshops, there follows a summary of possible failures and their probable causes, detection and repairs.
Motors are generally designed to Class B or F insulation and for ambient temperatures up to 40°C.
Most winding defects arise when temperature limits, due to current overload, are surpassed throughout the winding or even in only portions thereof. These defects are identified by the darkening or carbonizing of wire insulation.

5.1.1 Short Circuits Between Turns

A short circuit between turns can be a consequent of two coinciding insulation defects, or the result of defects arising simultaneously on two adjacent wires. As wires are randomly tested, even the best quality wires can have weak spots. Weak spots can, on occasion, tolerate a voltage surge of 30% at the time of testing for shorting between turns, and later fail due to humidity, dust or vibration.
Depending on the intensity of the short, a magnetic hum becomes audible.
In some cases, the three-phase current imbalance can be so insignificant that the motor protective device fails to react. A short circuit between turns, and phases to ground due to insulation failure is rare, and even so, it nearly always occurs during the early stages of operation.

5.1.2 Winding Failures

a) One burnt winding phase

This failure arises when a motor runs wired in delta and current fails in one main conductor.
Current rises from 2 to 2.5 times in the remaining winding with a simultaneous marked fall in speed. If the motor stops, the current will increase from 3.5 to 4 times its rated value.
In most instances, this defect is due to the absence of a protective switch, or else the switch has been set too high.

b) Two burnt winding phases

This failure arises when current fails in one main conductor and the motor winding is star-connected. One of the winding phases remains currentless while the others absorb the full voltage and carry an excessive current.
The slip almost doubles.

c) Three burnt winding phases

Probable cause 1
Motor only protected by fuses; an overload on the motor will be the cause of the trouble.
Consequently, progressive carbonizing of the wires and insulation culminate in a short circuit between turns, or a short against the frame occurs.
A protective switch placed before the motor would easily solve this problem.

Probable cause 2
Motor incorrectly connected. For example: A motor with windings designed for 230/400V is connected through a star-delta switch to 400V connection.
The absorted current will be so high that the winding will burn out in a few seconds if the fuses or a wrongly set protective switch fail to react promptly.

Probable cause 3
The star-delta switch is not commutated and the motor continues to run for a time connected to the star under overload conditions.
As it only develops 1/3 of its torque, the motor cannot reach rated speed. The increased slip results in higher ohmic losses arising from the Joule effect. As the stator current, consistent with the load, may not exceed the rated value for the delta connection, the protective switch will not react.
Consequent to increased winding and rotor losses the motor will overheat and the winding burn out.

Probable cause 4
Failures from this cause arise from thermal overload, due to too many starts under intermittent operation or to an overly long starting cycle.
The perfect functioning of motor operating under these conditions is only assured when the following values are heeded:
a) number of starts per hour;
b) starting with or without load;
c) mechanical brake or current inversion;
d) acceleration of rotating masses connected to motor shaft;
e) load torque vs. speed during acceleration and braking.

The continuous effort exerted by the rotor during intermittent starting brings about heavier losses which provoke overheating.
Under certain circumstances with the motor idle there is a possibility that the stator winding is subjected to damage as a result of the

heating of the motor. In such a case, a slip ring motor is recommended as a large portion of the heat (due to rotor losses) is dissipated in the rheostat.

5.1.3 Rotor Failures

If a motor running under load conditions produces a noise of varying intensity and decreasing frequency while the load is increased, the reason, in most cases, will be an unsymmetrical rotor winding.
In squirrel-cage motors the cause will nearly always be a break in one or more of the rotor bars; simultaneously, periodical stator current fluctuations may be recorded. As a rule, this defect appears only in molded or die cast aluminum cages.
Failures due to spot heating in one or another of the bars in the rotor stack are identified by the blue coloration at the affected points.
Should there be failures in various contiguous bars, vibrations and shuddering can occur as if due to an unbalance, and are often interpreted as such. When the rotor stack acquires a blue or violet coloration, it is a sign of overloading.
This can be caused by overly high slip, by too many starts or overlong starting cycles. This failure can also arise from insufficient main voltage.

5.1.4 Bearing Failures

Bearing damage is a result of overloading brought about by an overly taut belt or axial impacts and stresses.
Underestimating the distance between the drive pulley and the driven pulley is a common occurrence.
The arc of contact of the belt on the drive pulley thus becomes inadmissibly small and thereby belt tension is insufficient for torque transmission.
In spite of this it is quite usual to increase belt tension in order to attain sufficient drive.
Admittably, this is feasible with the latest belt types reinforced by synthetic materials.
However, this practice fails to consider the load on the bearing and the result is bearing failure within a short time.
Additionally there is the possibility of the shaft being subjected to unacceptably high loads when the motor is fitted with a pulley that is too wide.

5.1.5 Shaft Fractures

Although bearings traditionally constitute the weaker part, and the shafts are designed with wide safety margins, it is not beyond the realm of possibility that a shaft may fracture by fatigue from bending stress brought about by excessive belt tension.
In most cases, fractures occur right behind the drive end bearing.
As a consequence of alternating bending stress induced by a rotating shaft, fractures travel inwards from the outside of the shaft until the point of rupture is reached when resistance of the remaining shaft cross-section no longer suffices.
Avoid additional drilling the shaft (fastening screw holes) as such operations tend to cause stress concentration.

5.1.6 Unbalanced V-Belt Drives

The substitution of only one of a number of other parallel belts on a drive is frequently the cause of shaft fractures, as well as being malpractice.
Any used, and consequently stretched belts retained on the drive, especially those closest to the motor, while new and unstretched belts are placed on the same drive turning farther from the bearing, can augment shaft stress.

5.1.7 Damage Arising from Poorly Fitted Transmission Parts or Improper Motor Alignment

Damage to bearing and fracture in shafts often ensue from inadequate fitting of pulleys, couplings or pinions. There parts “knock” when rotating. The defect is recognized by the scratches that appear on the shaft or the eventual scalelike flaking of the shaft end.
Keyways with edges pitted by loosely fitted keys can also bring about shaft failures.
Poorly aligned couplings cause knocks and radial and axial shaking to shaft and bearings.
Within a short while these malpractices cause the deterioration of the bearings and the enlargement of the bearing cover bracket located on the drive end side.
Shaft fracture can occur in more serious cases.

5.2 Troubleshooting chart

FAILURE	PROBABLE CAUSE	CORRECTIVE MEASURES
Motor fails to start	• No voltage supply • Low voltage supply • Wrong control connections • Loose connection at some terminal lug • Overload	• Check feed connections to control system and from this to motor. • Check voltage supply and ascertain that voltage remains within 10% of the rated voltage shown on the motor nameplate. • Compare connections with the wiring diagram on the motor nameplate. • Tighten all connections. • Try to start motor under no-load conditions. If it starts, there may be an overload condition or a blocking of the starting mechanism. Reduce load to rated load level and increase torque.
High noise level	• Unbalance • Distorted shaft • Incorrect alignment • Uneven air gap • Dirt in the air gap • Extraneous matter stuck between fan and motor casing • Loose motor foundation • Worn bearings	• Vibrations can be eliminated by balancing rotor. If load is coupled directly to motor shaft, the load can be unbalanced. • Shaft key bent; check rotor balance and eccentricity. • Check motor aligment with machine running. • Check shaft for warping or bearing wear. • Dismantle motor and remove dirt or dust with jet of dry air. • Dismantle motor and clean. Remove trash or debris from motor vicinity. • Tighten all foundation studs. If necessary, realign motor. • Check lubrication. Replace bearing if noise is excessive and continuous.
Overheating of bearings	• Excessive grease • Excessive axial or radial strain on belt • Deformed shaft • Rough bearing surface • Loose or poorly fitted motor end shields • Lack of grease • Hardened grease cause locking of balls • Foreign material in grease	• Remove grease bleeder plug and run motor until excess grease is expelled. • Reduce belt tension. • Have shaft straightened and check rotor balance. • Replace bearings before they damage shaft. • Check end shields for close fit and tightness around circumference. • Add grease to bearing. • Replace bearings. • Flush out housings and relubricate.
Intense bearing vibration	• Unbalanced rotor • Dirty or worn bearing • Bearing rings too tight on shaft and/or bearing housing • Extraneous solid particles in bearing	• Balance rotor statically and dynamically. • If bearing rings are in perfect condition, clean and relubricate the bearing, otherwise, replace bearing. • Before altering shaft or housing dimensions, it is advisable to ascertain that bearing dimensions correspond to manufacturer's specifications. • Take bearing apart and clean. Reassemble only if rotating and support surfaces are unharmed.
Overheating of motor	• Obstructed cooling system • Overload • Incorrect voltages and frequecies • Frequent inversions • Rotor dragging on stator • Unbalanced electrical load (burnt fuse, incorrect control)	• Clean and dry motor; inspect air vents and windings periodically. • Check application, measuring voltage and current under normal running conditions. • Compare values on motor nameplate with those of mains supply. Also check voltage at motor terminals under full load. • Exchange motor for another that meets needs. • Check bearing wear and shaft curvature. • Check for unbalanced voltages or operation under single-phase condition.

6. Spare Parts and Component Terminology

THREE-PHASE MOTORS IP55 NEMA
Frames 140T - W180T - 180T - 210T and W210T

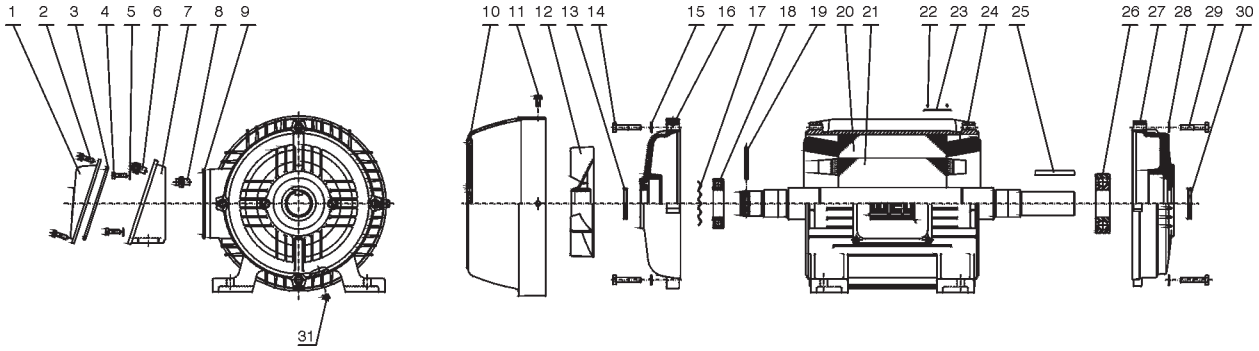

Part Nr.	Description
1	Terminal box cover
2	Terminal box cover fixing bolt
3	Terminal box cover gasket
4	Terminal box fixing bolt
5	Terminal box fixing washer
6	Terminal box grounding lug
7	Terminal box
8	Frame grounding lug
9	Terminal box o'ring gasket
10	Fan cover
11	Fan cover fixing bolt
12	Fan

Part Nr.	Description
13	V'Ring
14	Non-drive end endshield fixing bolt
15	Non-drive end endshield washer
16	Non-drive endshield
17	Spring washer
18	Non-drive bearing
19	Fan fixing pin
20	Wound stator
21	Rotor / shaft assembly
22	Nameplate fixing rivet
23	Nameplate
24	Frame

Part Nr.	Description
25	Shaft key
26	Drive end bearing
27	Drive endshield
28	Drive endshield washer
29	Drive end endshield fixing bolt
33	V'Ring
31	Drain plug

THREE-PHASE MOTORS IP55 NEMA
Frames 250T - W250T - 280T and 320T

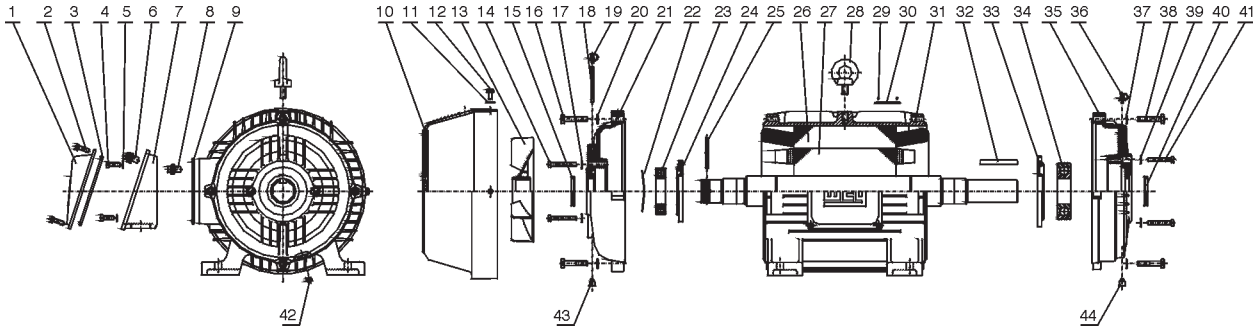

Part Nr.	Description
1	Terminal box cover
2	Terminal box cover fixing bolt
3	Terminal box cover gasket
4	Terminal box fixing bolt
5	Terminal box fixing washer
6	Terminal box grounding lug
7	Terminal box
8	Frame grounding lug
9	Terminal box o'ring gasket
10	Fan cover
11	Fan cover washer
12	Fan cover fixing bolt
13	Fan
14	Non-drive end bearing cap bolt
15	V'Ring

Part Nr.	Description
16	Non-drive end endshield fixing bolt
17	Non-drive end bearing cap washer
18	Non-drive end grease nipple
19	Non-drive end grease nipple cover
20	Non-drive end endshield washer
21	Non-drive endshield
22	Spring washer
23	Non-drive end bearing
24	Non-drive end bearing cap
25	Fan fixing pin
26	Wound stator
27	Rotor and shaft
28	Eyebolt
29	Nameplate fixing rivet

Part Nr.	Description
30	Nameplate
31	Frame
32	Shaft key
33	Drive end bearing cap
34	Drive end bearing
35	Drive andshield
36	Drive end grease nipple cover
37	Drive endshield washer
38	Drive end endshield fixing bolt
39	Drive end bearing cap washer
40	V'Ring
41	Drive end bearing cap fixing bolt
42	Drain plug
43	Non-drive and grease relief
44	Drive end grease relief

THREE-PHASE MOTORS IP55 NEMA T
Frames 360T - 400T - 440T - 500T and 580T

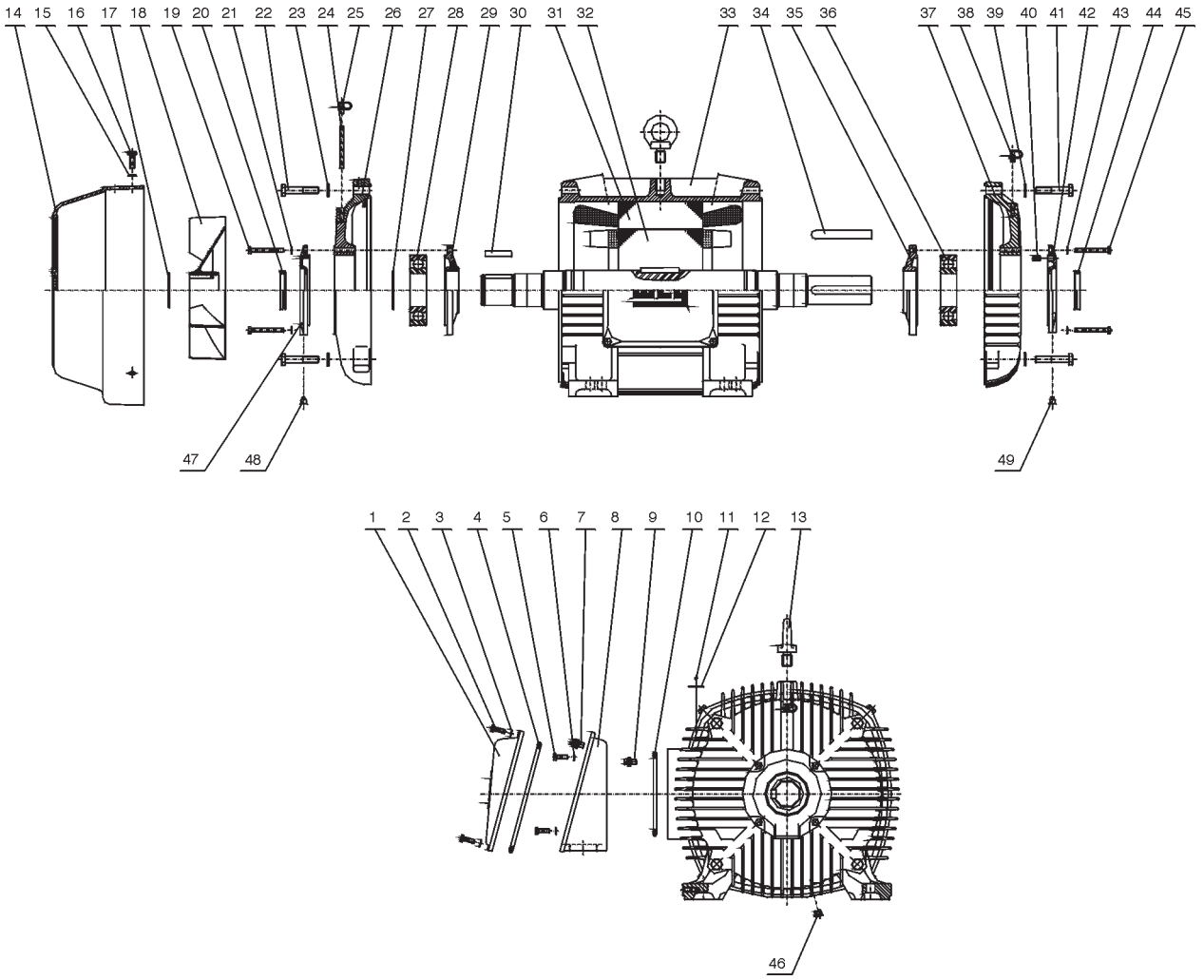

Part Nr.	Description
1	Terminal box cover
2	Terminal box cover fixing bolt
3	Terminal box cover washer
4	Terminal box cover gasket
5	Terminal box fixing bolt
6	Terminal box fixing washer
7	Terminal box grounding lug
8	Terminal box
9	Frame grounding lug
10	Terminal box o'ring gasket
11	Nameplate fixing rivet
12	Nameplate
13	Eyebolt
14	Fan cover
15	Fan cover washer
16	Fan cover fixing bolt
17	Fan fixing ring

Part Nr.	Description
18	Fan
19	Non-drive end bearing cap bolt
20	V'Ring
21	Non-drive end bearing cap washer
22	Non-drive end endshield fixing bolt
23	Non-drive end endshield washer
24	Non-drive end grease nipple
25	Non-drive end grease nipple cover
26	Non-drive enshield
27	Bearing cap
28	Non-drive bearing
29	Internal non-drive end bearing cap
30	Fan fixing key
31	Wound stator
32	Rotor / shaft assembly
33	Frame

Part Nr.	Description
34	Shaft key
35	Internal drive end bearing cap
36	Drive end bearing
37	Drive endshield
38	Drive end grease nipple cover
39	Drive endshield washer
40	Pre-load spring
41	Drive end endshield fixing bolt
42	External drive end bearing cap
43	Drive end bearing cap washer
44	V'Ring
45	Drive end bearing cap fixing bolt
46	Drain plug
47	External non-drive end bearing cap
48	Non drive end grease relief
49	Non-drive end grease relief

THREE-PHASE MOTORS NEMA 56
Frames A56 - B56 - D56 - F56H and G56H

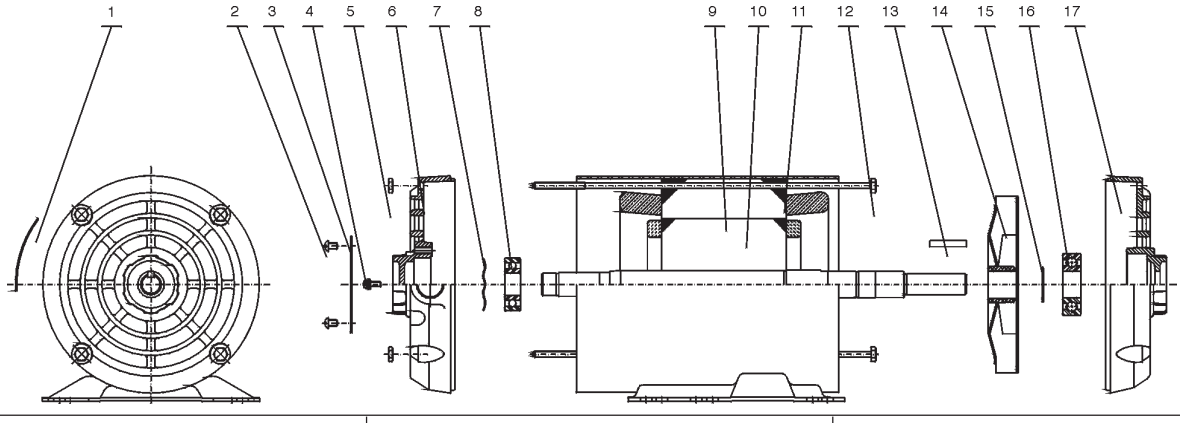

Part Nr.	Description
1	Sticker
2	Terminal box cover fixing bolt
3	Terminal box cover
4	Grounding lug
5	Through bolt fastening nut
6	Non-drive endshield
7	Spring washer
8	Non-drive end bearing
9	Wound stator
10	Rotor / shaft assembly
11	Frame
12	Through bolt
13	Shaft key
14	Fan
15	Drive end bearing fastening washer
16	Drive end bearing
17	Drive endshield

SINGLE-PHASE MOTORS NEMA 56
Frames B48 - C48 - C56 - A56 - B56 - D56 - F56H - G56H

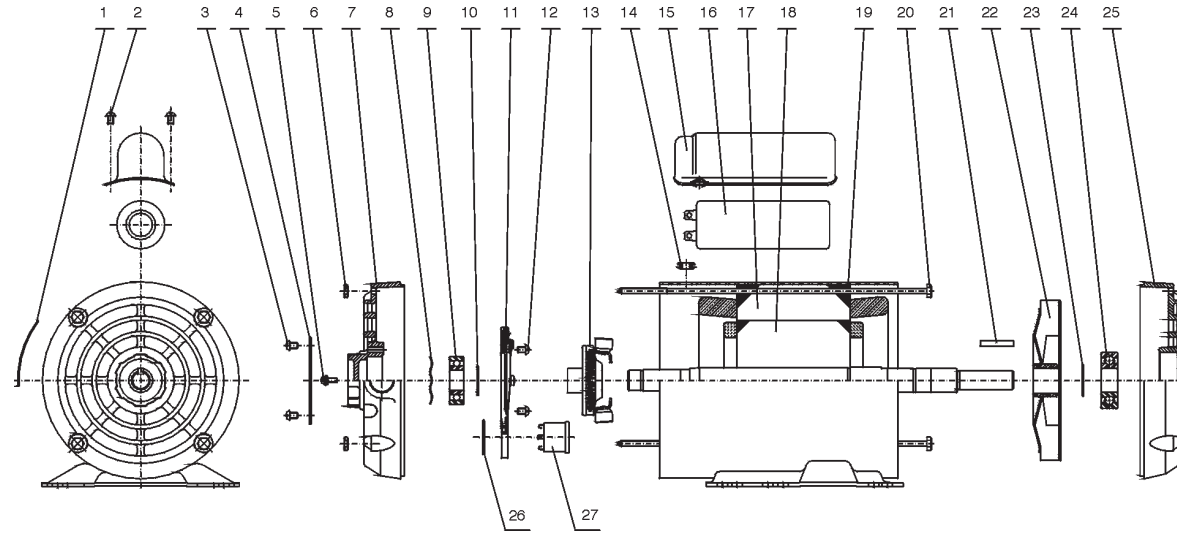

Part Nr.	Description
1	Sticker
2	Capacitor cover fixing bolt
3	Terminal box cover fixing bolt
4	Terminal box cover
5	Grounding lug
6	Through bolt fastening nut
7	Non-drive endshield
8	Spring washer
9	Non-drive and bearing
10	Non-drive and bearing fastening washer
11	Stationary switch
12	Stationary switch fastening bolt
13	Centrifugal switch
14	Rubber ring for lead passing hole to capacitor
15	Capacitor cover
16	Capacitor
17	Wound stator
18	Rotor / shaft assembly
19	Frame
20	Through bolt
21	Shaft key
22	Fan
23	Drive end bearing fastening washer
24	Drive end bearing
25	Drive endshield
26	Overload thermal protector fixing ring
27	Overload thermal protector

Note: *For F56H and G56H frame motors: 1) Part nr. 2 = 3 pieces; 2) Part nr. 15 and 16 = 2 pieces*

N O T E S :

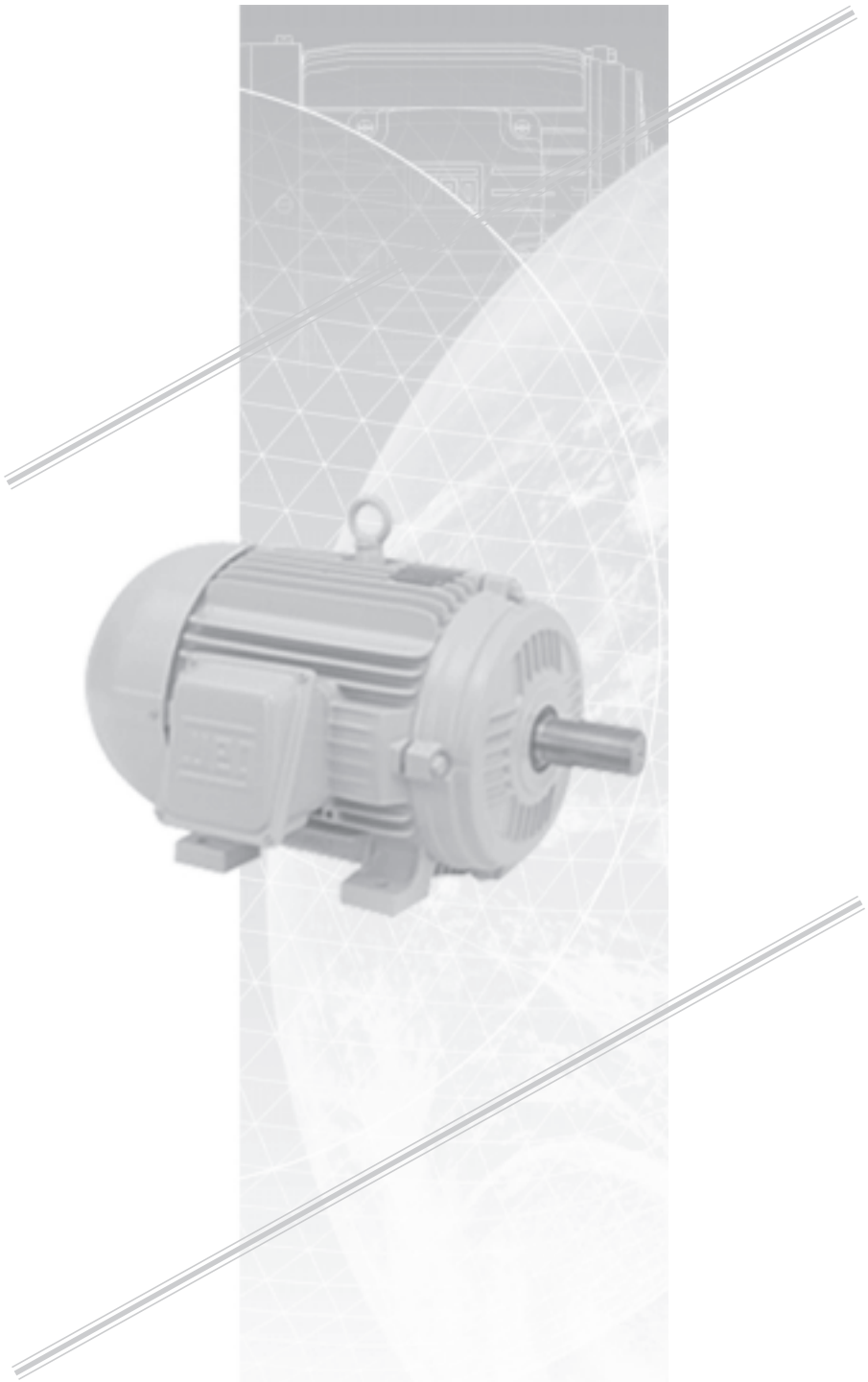

WEG EXPORTADORA S.A.
Av. Prefeito Waldemar Grubba, 3000
89256-900 - Jaraguá do Sul - SC - Brazil
Phone: +55 (47) 372-4002 - Fax: +55(47) 372-4060
www.weg.com.br

SANITAIRE®

Coarse Bubble Aeration System

Stainless Steel Headers - No Manifold, Replacement
LP Dual Pod diffusers

INSTALLATION, OPERATION AND MAINTENANCE MANUAL

TABLE OF CONTENTS

Page No.

INTRODUCTION ii

INSTALLATION AND START-UP
Receiving and Site Storage 1
Physical Inventory. 1
FIXED HEADER 1
Dropleg Installation 1
Manifold Installation 2
Header Installation 6
Header Installation Without Manifold 6
Header Installation With Manifold 9
9" Dual LP Diffuser Assembly 10
Purge System Installation. 11
Diffuser Assembly Installation and Leveling 12
Diffuser Installation 13
Aeration System Start-up Procedure 15

Page No.

PLANT OPERATION
Principles 18
Diffuser Operating Air Flow Range 18
Mixing. 19
Diffuser Fouling. 19

PREVENTATIVE MAINTENANCE
Moisture Purge. 21
Air Bumping. 21
Power Failures and Loss of Air Supply 21
Visual Inspection. 22
Air Main Inspection. 22
Aeration System Troubleshooting Guide 23

YEARLY MAINTENANCE AND CLEANING
Maintenance Schedule. 25
Lubrication Schedule. 25
Cleaning. 25

LONG TERM STORAGE PROCEDURES 27

INTRODUCTION

This manual covers the Installation, Start-up, Plant Operation, Maintenance and Repair of SANITAIRE Coarse Bubble Aeration Systems.

This manual is used for SANITAIRE Fixed and Removable Header Coarse Bubble Aeration Systems. The format and text of this manual have not been edited for specific projects or specification requirements.

Distinct sections are included for the installation of both system types. The installing Contractor should follow the instructions for the supplied system.

Before beginning the installation process, the installing Contractor should make sure the Sanitaire Erection “E” drawings are in their possession. The “E” drawings have the required component part number designations and are essential for proper installation.
Submittal “S” drawings do not contain the detailed information necessary to install the equipment properly. **DO NOT** use “S” drawings to lay out or install the equipment.



The Safety Alert Symbol means ATTENTION! BECOME ALERT! YOUR SAFETY IS INVOLVED!

! CAUTION

This symbol and signal word indicate a potentially hazardous situation which, if not avoided, MAY result in minor or moderate injury. This symbol MAY also be used to alert against unsafe practices.

CAUTION

This signal word indicates a situation which if not avoided, MAY result in product or property damage.

The precautions listed in this manual are not all-inclusive. If a procedure, method, tool or part is not specifically recommended, you must satisfy yourself that it is safe for you and others, and that the system will not be damaged or made unsafe as a result of your decision.

This material may not be copied, reproduced or stored in an electronic retrieval system without prior written approval from Sanitaire.

© Copyright Sanitaire 1999

INSTALLATION AND START-UP

RECEIVING AND SITE STORAGE

The equipment is delivered by flat bed trailer trucks. Before the arrival of the truck, select a dry, level area to temporarily store the equipment.

The aeration headers, manifolds and droplegs are shipped in maximum lengths of 41'-0". The diffusers, supports, support hardware and ancillary equipment are packed in boxes, if possible, according to item and size and shipped to the jobsite on pallets. The diffusers are shipped in cardboard boxes on wooden pallets. The diffusers should not be removed from the original packaging until final installation on the headers.

Unload the piping system components using a forklift or crane with a minimum 2000 lb. lifting capacity. Care must be taken during handling to avoid damage, particularly to the flanged ends and diffuser connectors. Nylon straps should be used to lift the piping off the truck. All equipment should be stored on blocks in a level position to avoid damage before installation.

DO NOT stack shipping units.

DO NOT store the units where snow removal or other heavy equipment could cause damage.

PHYSICAL INVENTORY

Sanitaire provides shipping lists for all components used for the SANITAIRE Coarse Bubble Aeration System as part of the project I, O & M manual. In addition, each shipment has a packing list of all items delivered.

Before installation, take a physical inventory of all components (by comparing the shipping and packing lists) and immediately report any missing or damaged items to the Sanitaire Production Department.

FIXED HEADER

CAUTION

Completely read the following instructions and review all Sanitaire Erection "E" drawings before beginning installation.

Definitions

- DROPLEG - The pipe that connects the airmain to the manifold.
- MANIFOLD - The pipe that connects the dropleg to the headers. There are no diffusers on this pipe.
- HEADER - The pipe that connects the manifolds to the diffusers. The diffuser connectors and diffusers are mounted on this pipe.
- DIFFUSER - The device attached to the header that distributes the air to the liquid.

Dropleg Installation (Fixed Header)

CAUTION

Before installing the upper dropleg section, all dirt and debris must be removed from the air main. The air blowers are normally used for this operation. The air filtration equipment should be installed and operating before blowing out the air main. Blowers may require a minimum back pressure when operating. Be sure to follow the blower manufacturer's requirements.

If dropleg supports are not installed, the air main must be capable of supporting the full weight of the upper stainless steel portion of the dropleg during system installation. If the air main is not capable of supporting the full weight of the upper stainless steel portion of the dropleg during system installation, temporary dropleg supports must be installed to prevent damage to the air main.

1. Locate the proper dropleg. All droplegs have a part number marked on the piece. This part number also appears on the Erection drawings for identification. Remove the protective plastic or wooden end plugs from the dropleg.

2. Using the Erection drawings, locate the dropleg connection point and mark the centerline location of the dropleg on the tank floor. Before connecting the upper portion of the dropleg to the air main, install any dropleg wall supports which may be required.

3. Attach the upper portion of the dropleg to the air main.

NOTE

When the upper dropleg is installed properly, it should be vertical with its centerline location as shown on the Erection drawings.

4. Use the installed stainless steel upper dropleg and the Erection drawings to locate and lay out the centerline of the manifold or header. All components of the system are referenced from the dropleg location.

NOTE

The manifold centerline may be located directly under the dropleg or offset from it. Review the Erection drawings before manifold or header layout. If the system does not have a manifold, proceed to the Header Installation section.

Manifold Installation (Fixed Header)

Use the Erection drawings and shipping lists to locate all manifold anchors and supports.

Sanitaire manufactures two types of manifold assemblies. They are the **in-line** manifold and the **raised** manifold. The manifold installation procedure covers both types.

The **in-line** manifold attaches to the headers with flanges or clamp couplings. Either the centerline or invert elevations of the manifold and headers are the same.

The **raised** manifold attaches to the headers with an adjustable support connection and clamp coupling. See Figure 1. The centerline elevation of the raised manifold is approximately 2'-0" higher than the centerline of the air header.

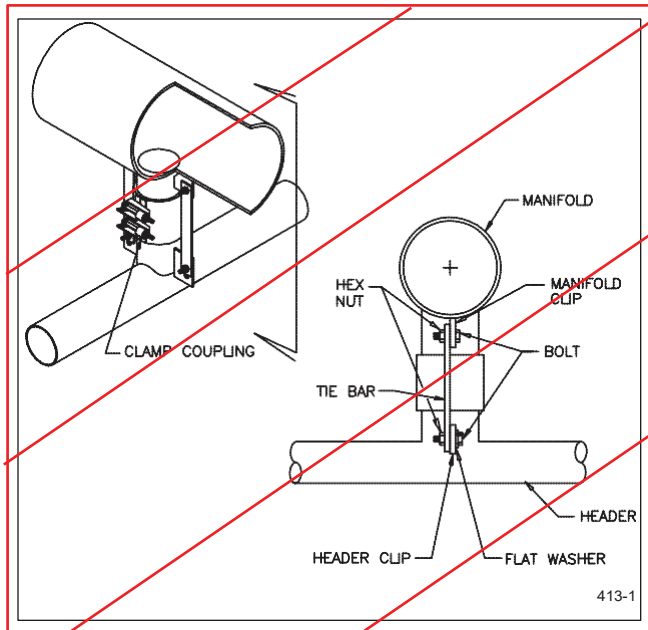

Figure 1. Adjustable Support Connection

1. The manifold layout centerline should be already established by the dropleg installation. Using the Erection drawings, mark the locations of the manifold supports. These locations are indexed from the centerline of the dropleg.

2. Following the Erection drawings, mark the manifold anchor locations at the specific support locations.

NOTE

Anchor spacings, sizes and embedments vary according to pipe size and support design. Be sure to accurately follow the anchor bolt settings and size information shown on the Erection drawings. Follow the anchor manufacturer's edge distance guidelines at sumps, construction joints and expansion joints.

3. Locate the proper manifold sections and lower them into the tank. Remove the protective end plugs and orient the pieces in the correct position. All sections have a part number marked on the piece. This part number also appears on the Erection drawings for identification. Before installing the anchors, lay the manifold section next to the anchor layout to check for possible interference with manifold connections.

NOTE

If interference does occur, the supports can be relocated providing the maximum support spacing does not exceed 17'-6".

CAUTION

Sanitaire supplies stainless steel materials only. The use of carbon steel anchors, hardware or support materials on SANITAIRE equipment is not acceptable. Installation of non-stainless materials will cause equipment failure.

4. Drill and set all manifold anchors according to the anchor manufacturer's installation instructions. The required anchor projection and embedment distances are shown on the Erection drawings.

NOTE

Sanitaire most frequently supplies expansion or adhesive type drill and set anchor bolts. Make sure you know which type your system incorporates and review the anchor bolt installation information provided in the project I, O & M manual. If your system incorporates a concrete pedestal support with embedded stainless steel "L" bolt anchors, follow the pedestal design and anchor locations shown on the Erection drawings. See Figure 2.

5. Located all floor mounted manifold supports and support hardware supplied by Sanitaire. See Figure 3.

NOTE

Sanitaire manufactures various types of supports depending on the piping configuration, size and field conditions. Job specific support details and hardware sizes are shown on the Erection drawing support details. Support assembly and hardware quantities are listed on the shipping and bolt usage lists in the project I, O & M manual.

6. Place each support assembly and hardware set at its designated location on the tank floor as shown on the Erection drawings.

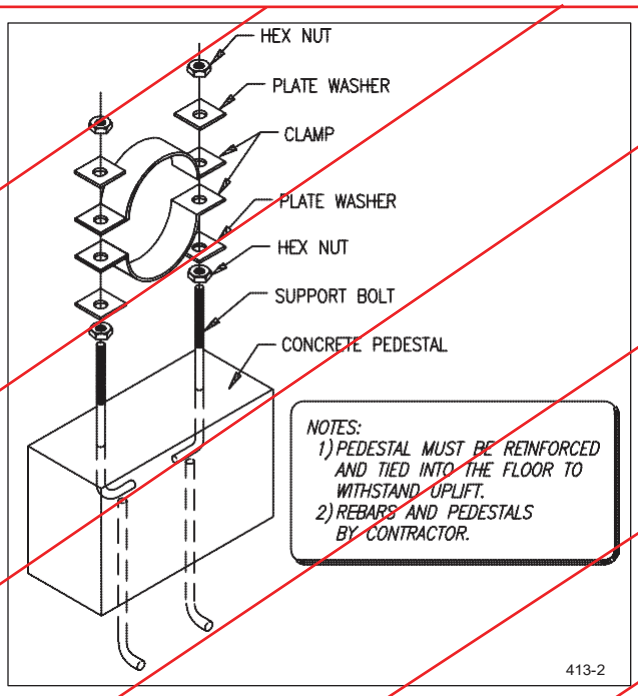

Figure 2. Concrete Pedestal Support

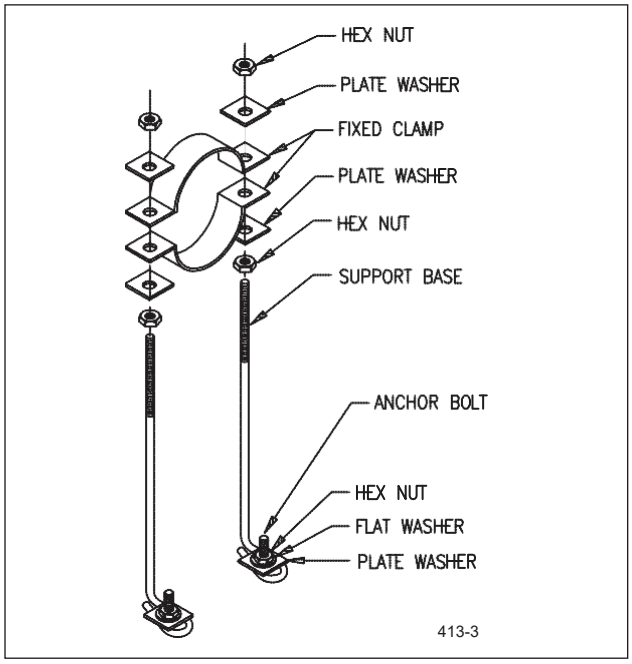

Figure 3. Simple Support

INSTALLATION AND START-UP

7. Place the support bases on the anchor bolts. Secure the support base to the anchor bolts with the stainless steel washers and nuts provided by Sanitaire. **Tighten the anchor bolts to the torque values listed in the anchor manufacturer's installation instructions.** Rod type bases must have a plate washer installed on the anchor bolt above the support base before installation of the anchor flat washer and nut.

CAUTION

Failure to properly torque expansion anchor bolts at installation reduces their load carrying capacity. Normal buoyant loads on the piping may then cause support assembly failure with resultant piping damage.

NOTE

For rod type support bases with diagonal struts, mount the strut on the support base above the plate washer before placement of the anchor bolt flat washer and nut.

8. Install the lower pipe support vertical adjusting nuts, washers and bottom band clamp or crosstree. Using a laser leveling system, adjust the lower support assembly to the correct elevation. If a band clamp support is used, the elevation of the clamp flange is the same as the manifold centerline elevation shown on the Erection drawings. If a crosstree style support is used, the crosstree elevation is the manifold centerline elevation shown on the Erection drawings minus one half the outside diameter of the pipe.

9. Place the stainless steel manifold piping on the support bottom band clamp or crosstree per the Erection drawings. Install the piece at the dropleg connection first and work away from the dropleg location. The clamp coupling for the dropleg to manifold connection should be temporarily installed at this time. See Figure 4. Installation instructions for the clamp coupling are included in the project I, O & M manual.

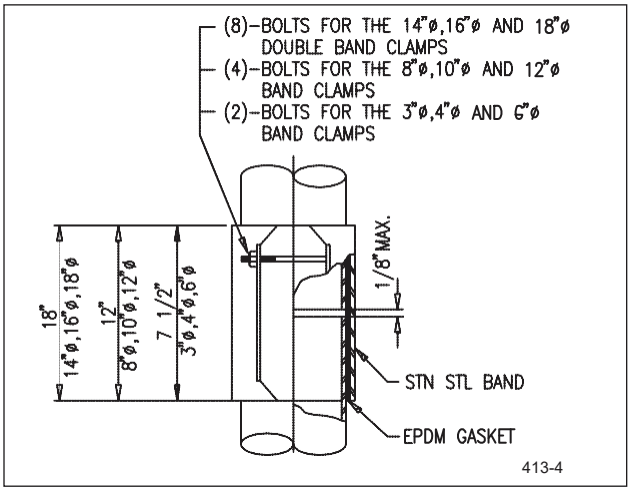

Figure 4. Clamp Coupling

NOTE

The following must be considered when setting the manifold pieces on the support bases:

A) Manifold piping flanges should be no closer than six inches to a support assembly.

B) SANITAIRE Fixed Header Coarse Bubble Aeration Systems normally have a fixed support at some point in the system. The fixed support may be floor or wall mounted. See Figures 5 and 6. If your system has a floor mounted frame or pedestal fixed support, be sure the fixing clip that is welded to the invert of the pipe mates up with the fixing link of the support base. If your system has a wall or floor mounted "T" bracket fixed support, make sure that the welded fin on the manifold is close enough to mate with the mounted "T" bracket. Do not mount the "T" bracket until the manifold leveling procedure is completed.

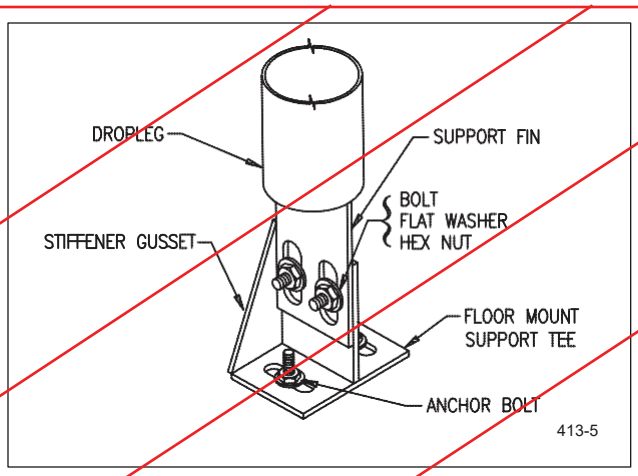

Figure 5. Floor Mount Fixed Support

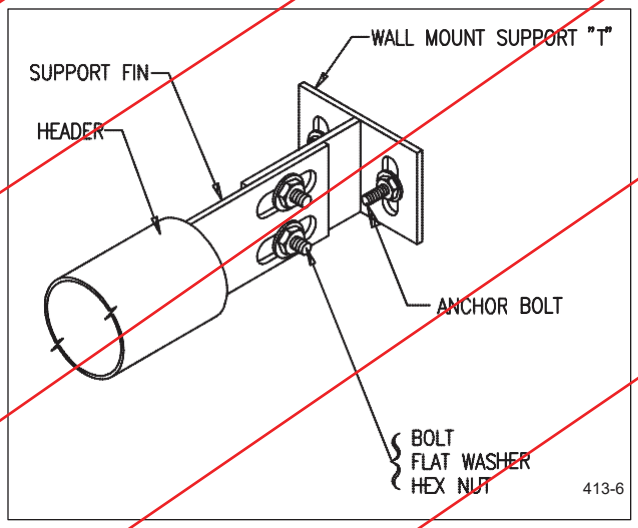

Figure 6. Wall Mount Fixed Support

10. Assemble all manifold joints. Sanitaire provides two types of manifold joints; flanged and expansion. Make sure all gaskets and O-rings are in place.

NOTE

Assemble, but do not fully tighten the joints until all necessary piping rotation for leveling purposes is complete.

11. Loosely install the top band clamp or "U" bolt on the proper support bases. Use the correct quantity, size and type of hardware on each support. Refer to the bolt usage list and Erection drawing support details.

12. Check all manifold sections for level. Start at the dropleg and adjust the piping heights as required using the **BOTTOM** vertical adjusting nuts. The manifold section which connects to the dropleg must be rotated as required so that any inclusive header connection ports are level horizontally for **in-line** manifolds or plumb vertically for **raised** manifolds. Install and tighten the **TOP** nuts on the band clamps or crosstrees **ONLY** on the support closest to the dropleg.

NOTE

If your system has "U" bolt type supports, tighten the bottom nuts on the "U" bolt only until light contact is made between the "U" bolt and manifold. Lock the "U" bolt in place by tightening the top nut.

13. Wall or floor mounted "T" bracket fixed supports, if supplied with your system, must be mounted now before continuing with the rest of the installation. Their installation is accomplished as follows:

A) Locate the "T" bracket as shown on the Erection drawings.

B) Set the "T" bracket on the tank wall or floor to match up with the fin welded on the manifold.

C) Mark the required anchor bolt locations.

D) Drill and set the anchors according to the anchor manufacturer's installation instructions. The required anchor projection and embedment distances are shown on the Erection drawings.

NOTE

A manifold section which connects to the "T" bracket may need to be removed in order to drill the anchor bolt holes. Place the manifold section back on the support stands when the anchors are set.

A) Secure the "T" bracket to the wall or floor using the anchor hardware. **Tighten the anchor bolts to the torque values listed in the anchor manufacturer's installation instructions.**

CAUTION

Failure to properly torque expansion anchor bolts at installation reduces their load carrying capacity. Normal buoyant loads on the piping may then cause support assembly failure with resultant piping damage.

B) Install the connecting hardware between the fixing fin and the "T" bracket.

14. If your system has a floor mounted frame or pedestal fixing support, install the fixing links and draw the hardware down tight. See the Erection drawings for fixed support details.

15. Rotate any remaining manifold sections per step 9. Tighten down all manifold flange or expansion joints using an alternating sequence pattern to provide equal torque distribution across the flange face. Make sure all gaskets and O-rings are in place. Expansion joint bolts must be double nutted. See Figures 7 and 8.

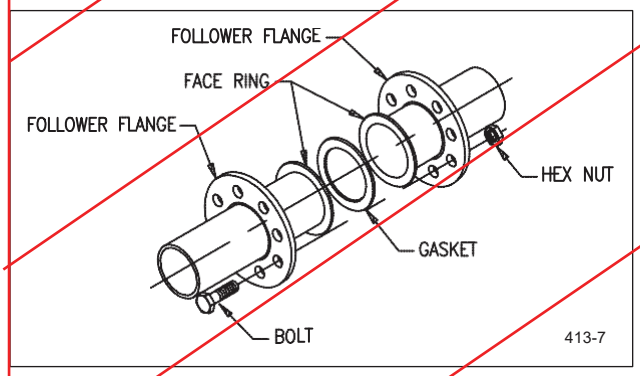

Figure 7. Sanitaire Flange

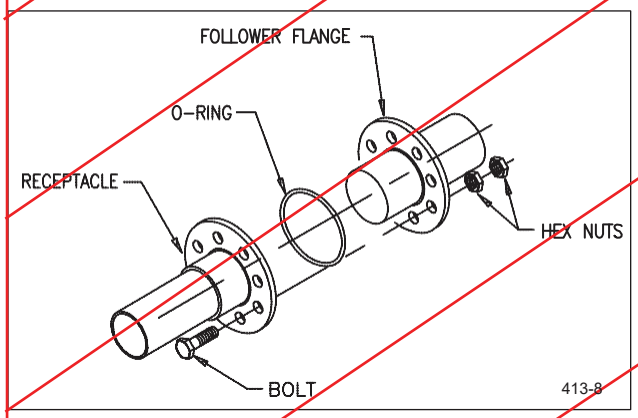

Figure 8. Expansion Joint

16. All manifold band clamps or "U" bolts can now be fully tightened as described in step 12.

17. Check the bolt on each removable end cap and tighten as required.

18. Fully tighten the dropleg clamp coupling hardware to the installation torque shown on the Erection drawings.

Header Installation (Fixed Header)

The following sections cover the installation of the air headers. Sanitaire manufactures headers for use without manifolds, headers attached to an inline manifold and headers attached to a raised manifold.

Header Installation Without Manifold (Fixed Header)

1. The air header centerline is set by the dropleg centerline. Using the Erection drawings, mark the locations of the header supports. These locations are indexed from the centerline of the dropleg.

2. Using the Erection drawings, mark the anchor locations at each support location.

NOTE

Anchor spacings, sizes and embedments vary according to pipe size and support design. Be sure to accurately follow the anchor bolt settings and size information shown on the Erection drawings. Follow the anchor manufacturer's edge distance guidelines at sumps, construction joints and expansion joints.

3. Locate the proper air header sections and lower them into the tank. Remove the protective end plugs and orient the pieces in the correct position. All sections have a part number marked on the piece. This part number also appears on the Erection drawings for identification. Before installing the anchors, lay the air header section next to the anchor layout to check for possible interference with joints or diffuser connectors.

NOTE

If interference does occur, the supports can be relocated providing the maximum support spacing does not exceed 17'-6".

CAUTION

Sanitaire supplies stainless steel materials only. The use of carbon steel anchors, hardware or support materials on SANITAIRE equipment is not acceptable. Installation of non-stainless materials will cause equipment failure.

4. Drill and set all header anchors according to the anchor manufacturer's installation instructions. The required anchor projection and embedment distances are shown on the Erection drawings.

NOTE

Sanitaire most frequently supplies expansion or adhesive type drill and set anchor bolts. Make sure you know which type your system incorporates and review the anchor bolt installation information provided in the project I, O & M manual. ~~If your system incorporates a concrete pedestal support with embedded stainless steel "L" bolt anchors, follow the pedestal design and anchor locations shown on the Erection drawings. Refer to Figure 2.~~

5. Locate all floor mounted header supports and support hardware supplied by Sanitaire. Refer to Figure 3.

NOTE

Sanitaire manufactures various types of supports depending on the piping configuration, size and field conditions. Job specific support details and hardware sizes are shown on the Erection drawing support details. Support assembly and hardware quantities are listed on the shipping and bolt usage lists in the project I, O & M manual.

6. Place each support assembly and hardware set at its designated location on the tank floor as shown on the Erection drawings.

7. Place the support bases on the anchor bolts. Secure the support base to the anchor bolts with the stainless steel washers and nuts provided by Sanitaire. **Tighten the anchor bolts to the torque values listed in the anchor manufacturer's installation instructions.** Rod type bases must have a plate washer installed on the anchor bolt above the support base before installation of the anchor flat washer and nut.

CAUTION

Failure to properly torque expansion anchor bolts at installation reduces their load carrying capacity. Normal buoyant loads on the piping may then cause support assembly failure with resultant piping damage.

NOTE

For rod type support bases with diagonal struts, mount the strut on the support base above the plate washer before placement of the anchor bolt flat washer and nut.

8. Install the lower pipe support vertical adjusting nuts, washers and bottom band clamp or crosstree. Using a laser leveling system, adjust the lower support assembly to the correct elevation. If a band clamp support is used, the elevation of the clamp flange is the same as the header centerline elevation shown on the Erection drawings. ~~If a crosstree style support is used, the crosstree elevation is the header centerline elevation shown on the Erection drawings minus one half the outside diameter of the pipe.~~

9. Place the stainless steel header piping on the support bottom band clamp ~~or crosstree~~ per the Erection drawings. Install the piece at the dropleg connection first and work out from there. The clamp coupling for the dropleg / header connection should be temporarily installed at this time. Refer to Figure 4. Installation instructions for the clamp coupling are included in the project I, O & M manual.

NOTE

The following must be considered when setting the header pieces on the support bases:

A) Header pipe flanges and diffuser connectors should be no closer than six inches to a support assembly.

B) SANITAIRE Fixed Header Coarse Bubble Aeration Systems have a fixed support at some point in the system. The fixed support may be floor or wall mounted. Refer to Figures 5 and 6. If your system has a floor mounted frame or pedestal fixed support, make sure the fixing clip that is welded to the invert of the pipe mates up with the fixing link of the support base. If your system has a wall or floor mounted "T" bracket fixed support , make sure that the welded fin on the header is close enough to mate with the mounted "T" bracket. Do not mount the "T" bracket until the header leveling procedure is completed.

10. Assemble all header joints. Sanitaire provides two types of header joints; flanged and expansion. Make sure all gaskets and O-rings are in place.

NOTE

Assemble, but do not fully tighten the joints until all necessary piping rotation for leveling purposes is complete.

11. Loosely install the top band clamp or "U" bolt on the proper support bases. Use the correct quantity, size and type of hardware on each support. Refer to the bolt usage list and Erection drawing support details.

12. Install and level the SANITAIRE diffusers. Refer to the Diffuser Installation and Leveling section.

13. Check all header pipe sections and diffusers again for level. Start at the dropleg and adjust the piping heights as required using the **BOTTOM** vertical adjusting nuts. Install and tighten the **TOP** nuts on the clamps or crosstrees **ONLY** on the support closest to the dropleg.

NOTE

If your system has "U" bolt type supports, tighten the bottom nuts on the "U" bolt only until light contact is made between the "U" bolt and manifold. Lock the "U" bolt in place by tightening the top nut.

14. Wall or floor mounted "T" bracket fixed supports, if supplied with your system, must be mounted now before continuing with the rest of the installation. Their installation is accomplished as follows:

A) Locate the "T" bracket as shown on the Erection drawings.

B) Set the "T" bracket on the tank wall or floor to match up with the fin welded on the header.

C) Mark the required anchor bolt locations.

D) Drill and set the anchors according to the anchor manufacturer's installation instructions. The required anchor projection and embedment distances are shown on the Erection drawings.

NOTE

A header section may need to be removed in order to drill the anchor bolt holes. Place the header section back on the support stands when the drilling is complete. Reassemble the removed header section.

E) Secure the "T" bracket to the wall or floor using the anchor hardware. **Tighten the anchor bolts to the torque values listed in the anchor manufacturer's installation instructions.**

CAUTION

Failure to properly torque expansion anchor bolts at installation reduces their load carrying capacity. Normal buoyant loads on the piping may then cause support assembly failure with resultant piping damage.

F) Install the connecting hardware between the fixing fin and the "T" bracket.

15. If your system has a floor mounted frame or pedestal fixing support, install the fixing links and draw the hardware down tight. See the Erection drawings for fixed support details.

16. Tighten down all header flange or expansion joints using an alternating sequence pattern to provide equal torque distribution across the flange face. Make sure all gaskets and O-rings are in place. Expansion joint bolts must be double nutted. Refer to Figures 7 and 8.

17. All header support band clamps or "U" bolts can now be fully tightened as described in step 13.

18. Fully tighten the dropleg clamp coupling hardware to the installation torque shown on the Erection drawings.

19. Check the bolt on each removable end cap and tighten as required. See Figure 9.

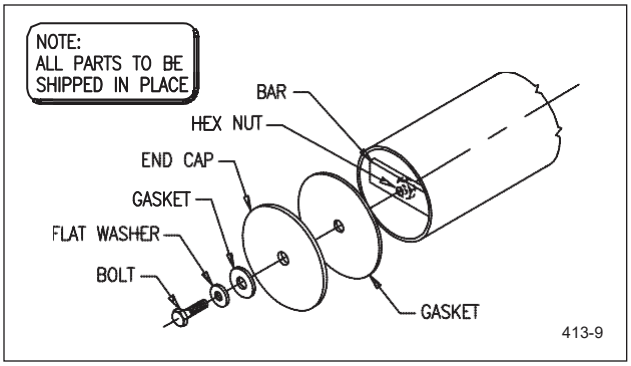

Figure 9. Removable End Cap

20. Proceed to the Aeration System Start-up Procedure section.

Header Installation With Manifold (Fixed Header)

1. The air header centerlines are set by the manifold connection centerlines. Using the Erection drawings, mark the locations of the header supports. These locations are indexed from the centerline of the manifold.

2. Using the Erection drawings, mark the anchor locations at each support location.

NOTE

Anchor spacings, sizes and embedments vary according to pipe size and support design. Be sure to accurately follow the anchor bolt settings and size information shown on the Erection drawings. Follow the anchor manufacturer's edge distance guidelines at sumps, construction joints and expansion joints.

3. Locate the proper air header sections and lower them into the tank. Remove the protective end plugs and orient the pieces in the correct position. All sections have a part number marked on the piece. This part number also appears on the Erection drawings for identification. Before installing the anchors, lay the air header section next to the anchor layout to check for possible interference with joints or diffuser connectors.

NOTE

If interference does occur, the supports can be relocated providing the maximum support spacing does not exceed 17'-6".

CAUTION

Sanitaire supplies stainless steel materials only. The use of carbon steel anchors, hardware or support materials on SANITAIRE equipment is not acceptable. Installation of non-stainless materials will cause equipment failure.

4. Drill and set all header anchors according to the anchor manufacturer's installation instructions. The required anchor projection and embedment distances are shown on the Erection drawings.

NOTE

Sanitaire most frequently supplies expansion or adhesive type drill and set anchor bolts. Make sure you know which type your system incorporates and review the anchor bolt installation information provided in the project I, O & M manual. If your system incorporates a concrete pedestal support with embedded stainless steel "L" bolt anchors, follow the pedestal design and anchor locations shown on the Erection drawings. Refer to Figure 2.

INSTALLATION AND START-UP

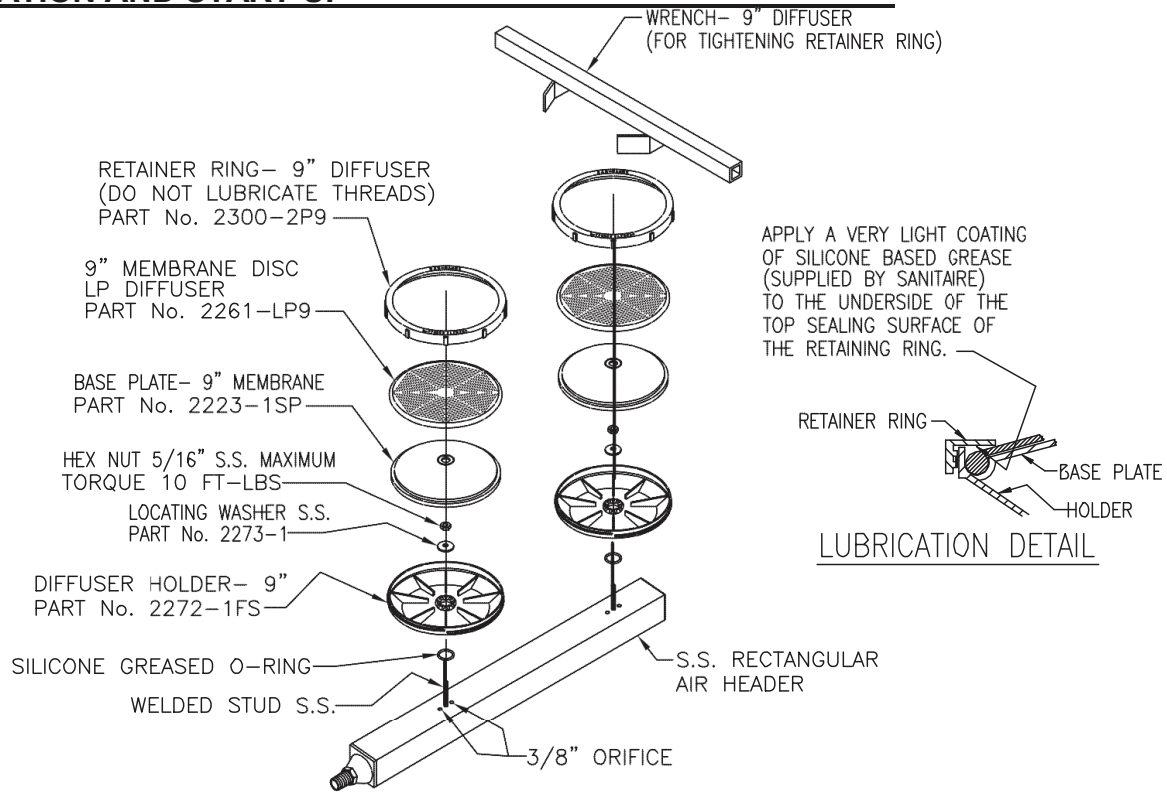

9"ø DUAL LP DIFFUSER ASSEMBLY
DETAIL FB–9B

Sanitaire a xylem brand BROWN DEER, WISCONSIN 53223	THIS DRAWING IS THE PROPERTY OF XYLEM AND IS SUBMITTED IN CONFIDENCE. IT IS NOT TO BE DISCLOSED, USED OR DUPLICATED WITHOUT PERMISSION OF XYLEM.	DIFFUSER ASSEMBLY 9" DUAL LP DETAIL	DRAWN BY	DATE	EQUIP.	STANDARD NO. FB–9B	JOB	
			CHKD BY	DATE	REV.	SHEET OF	DWG NO.	
			APPVD BY	DATE				

REV 1				REV 3			
REV 2				REV 4			

7. Install the lower pipe clamp sections on all air distributor and drainline supports.

   Use the same technique as described in paragraph 6 of the dropleg and manifold installation section. The air distributor centerline elevation is shown in the erection drawings.

   The air distributor centerline elevation tolerance is ± 1/4" (6 mm).

8. Starting from the manifold, assemble the remaining air distributors in the support stands. Refer to step #3 of the air distributor and drainline installation section for joint assembly instructions.

9. Install the top half of the pipe clamp on each support and loosely install the top hex nuts.

10. Again, starting near the manifold, place a hand level on the top of diffuser holder perpendicular to the centerline of the distributor pipe. See Figure 28.



Figure 28

11. Rotate the distributor section until the pod is level.

12. Hold the pipe section level and tighten all fixed joints and/or anchor support clamps on sections which have an expansion joint.

13. After tightening, recheck for level both perpendicular and parallel to the distributor section.

14. Continue this procedure for all distributor and drainline sections.

15. Tighten all guide support nuts.

CAUTION

The guide support will be loose around the pipe – this is a design feature. Do not attempt to wrap anything around the pipe to pull the clamps tight against the pipe. See Figure 29.

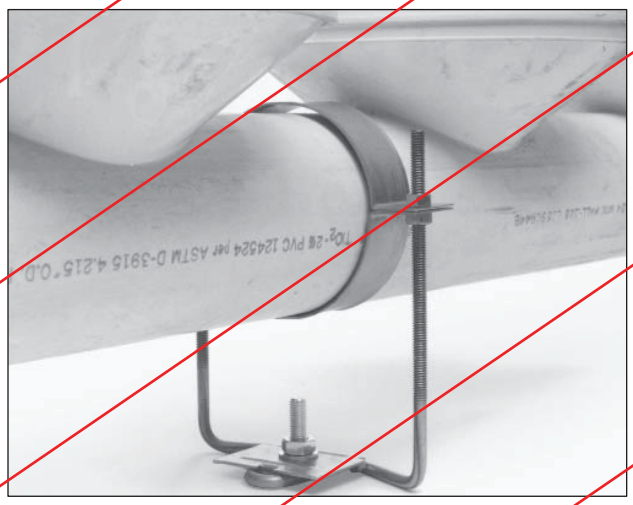

Figure 29

PURGE SYSTEM INSTALLATION

Sanitaire provides two types of purge system.

The most commonly used purge system consists of a sump and evacuation pipe.

- The sump for systems using in-line manifolds is built into the manifold pipe as shown in Figure 30A.

DIFFUSER INSTALLATION AND LEVELING

1. SANITAIRE coarse bubble stainless steel D-24 and D-12 diffusers are manufactured with 3/4" dia. NPT male connectors. See Figure 14. Various process applications require smaller diameter orifices to provide enough back pressure to evenly distribute the air flow throughout the system. Sanitaire has developed the following color coded factory installed orifice inserts:

COLOR	DIAMETER
Black	5/16"
White	3/8"
Gold	7/16"
Green	1/2"
Red	9/16"
Yellow	5/8"

NOTE

The 3/4" diameter orifice requires no insert. Check the equipment data sheets and shipping list in the project I, O & M manual to insure that the correct inserts have been installed.

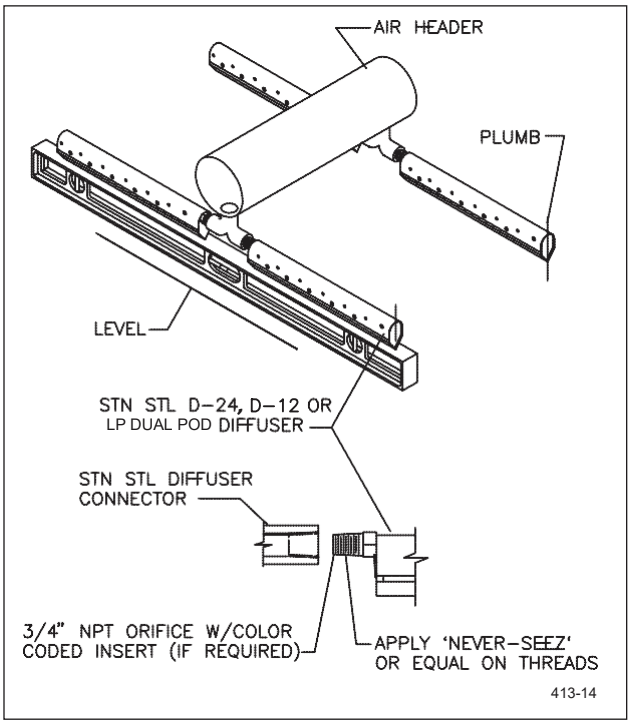

Figure 14. Diffuser Installation

2. See the Erection drawings for proper diffuser installation location. The number (1 or 2) of diffusers per connector varies from system to system depending on the process and available air rates. Threaded plugs are supplied for single diffuser installations.

3. A commercial thread compound such as NEVER-SEEZ, manufactured by Never-Seez Compound Corporation in Broadview, Illinois, or equal must be applied to the male diffuser connector threads before diffuser installation. Sanitaire does not supply any thread compound.

CAUTION

Failure to use a thread lubricant will cause the stainless steel threads to gall or strip.

NOTE

If diffusers are removed following the initial installation, thread compound must be applied upon reinstallation.

4. The diffusers should be screwed on by hand as far as possible. Wrench tighten the stainless steel D-24 and D-12 diffusers until the “V” shaped bottom deflector is pointed directly toward the floor. Make at least one complete turn after hand tightening to insure proper thread engagement.

5. After the diffusers are installed, the diffusers should be leveled as close as possible to a common horizontal plane. This can be accomplished by rotating the header pipe at the joint. Following this initial leveling, return to the appropriate header installation section for your system.

NOTE

Sanitaire's fabrication tolerances allow ± 3/8" variation in elevation from diffuser to diffuser along a header's length as measured at the threaded diffuser connection. Angular variations of the threaded connection may cause the outboard ends of the diffuser to vary by an additional ± 3/8" for a total range of outboard diffuser tip elevation variation of ± 3/4". For proper air distribution, the diffuser levels should be adjusted around an average elevation for all the diffusers in an assembly.

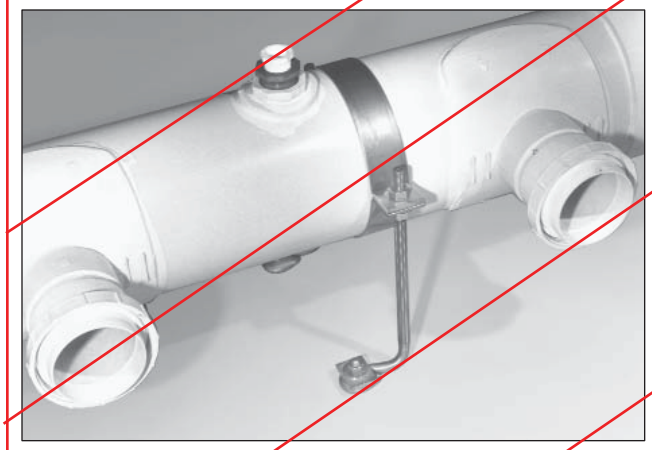

Figure 30A

- The sumps for systems using the raised manifold is attached to an air distributor or drainline section as shown in Figure 30B.

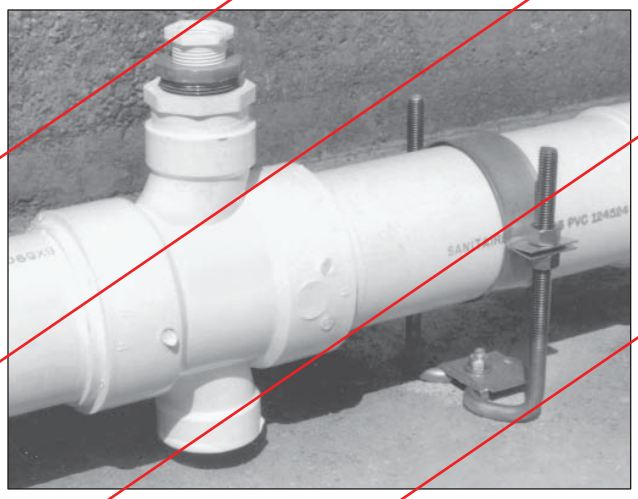

Figure 30B

- The evacuation pipe consists of 3/4" Ø (20 mm) Schedule 80 PVC pipe, fittings, and a valve mounted to the tank wall. See erection drawings for installation details.

The second type of purge system is the continuous purge system as shown in Figure 31. The manifold or an air distributor section is tapped at a low point and a membrane tube is attached. The membrane tube is placed at an elevation lower than the manifold or air distributor section.

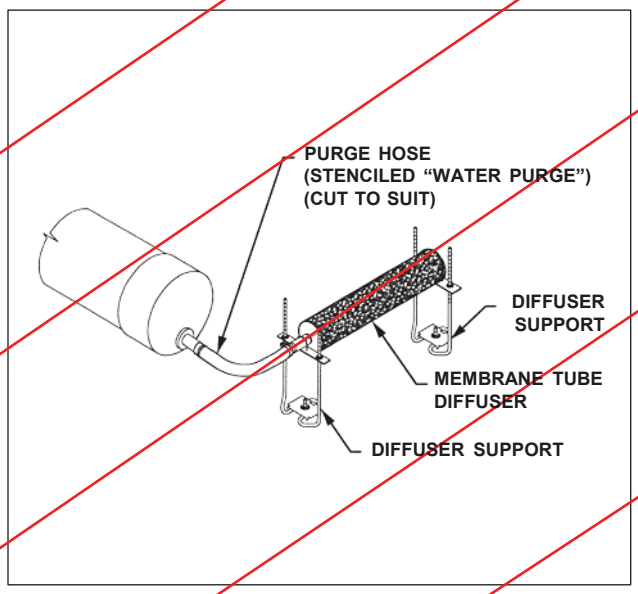

Figure 31

DIFFUSER INSTALLATION

Sanitaire manufacturers ~~two (2) types of~~ fine bubble disc diffusers. These are the ~~Ceramic Disc or the~~ Rubber Membrane Disc.

Some general installation guidelines, are as follows:

1. Install the diffusers just prior to the scheduled start-up of the aeration basin.

2. The diffuser holder must be cleaned prior to diffuser installation. See Figure 32.

3. Check the erection drawings for the location of possible blank diffuser sites and plug the orifice hole in accordance with Figure 37 and the installation instructions found on page 15.



Figure 32

To Install CERAMIC DISC diffusers:

1. Set the diffuser disc in the holder with the dished side and peripheral stepped edge up.

2. Lubricate the diffuser "O"-ring with a small amount of the lubricant provided by Sanitaire.

3. Place the diffuser "O"-ring in the slot or void between the diffuser holder vertical wall and the raised portion of the diffuser disc. See Figure 33.

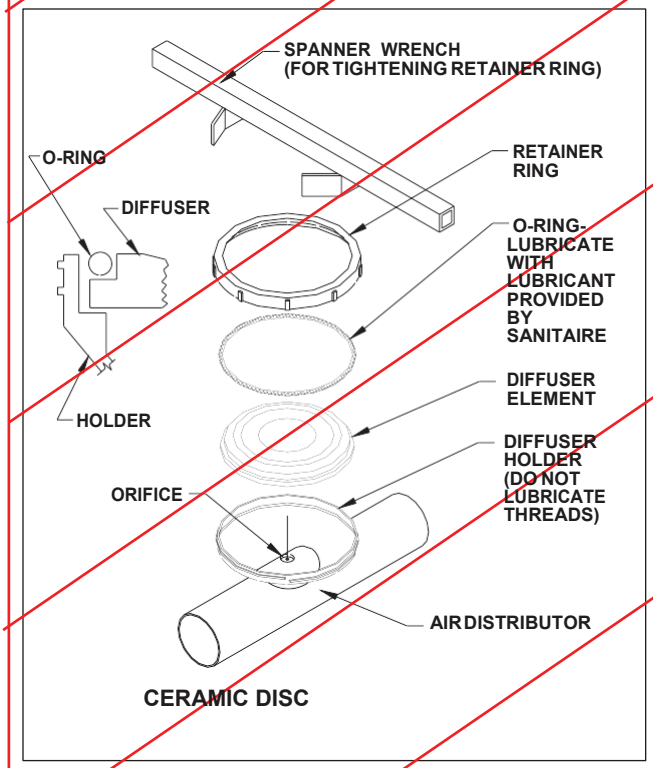

Figure 33

4. Turn the retaining ring to a hand-tight position making sure the "O"-ring stays in place.

5. Using the retaining ring spanner wrench, turn the retaining ring an additional 1/4 turn. See Figure 34.



Figure 34

To Install MEMBRANE DISC diffusers:

1. Set the diffuser PVC subplate in the diffuser holder with the flat side up. See Figure 35.



Figure 35

2. Place the membrane disc over the subplate. The integral "O"-ring should naturally fit down into the void created between the diffuser holder vertical wall and subplate.

3. Lubricate the diffuser retaining ring with a small amount of lubricant provided by Sanitaire by turning the ring upside down and swabbing the lubricant on the underside of the top surface of the retaining ring. See Figure 36.

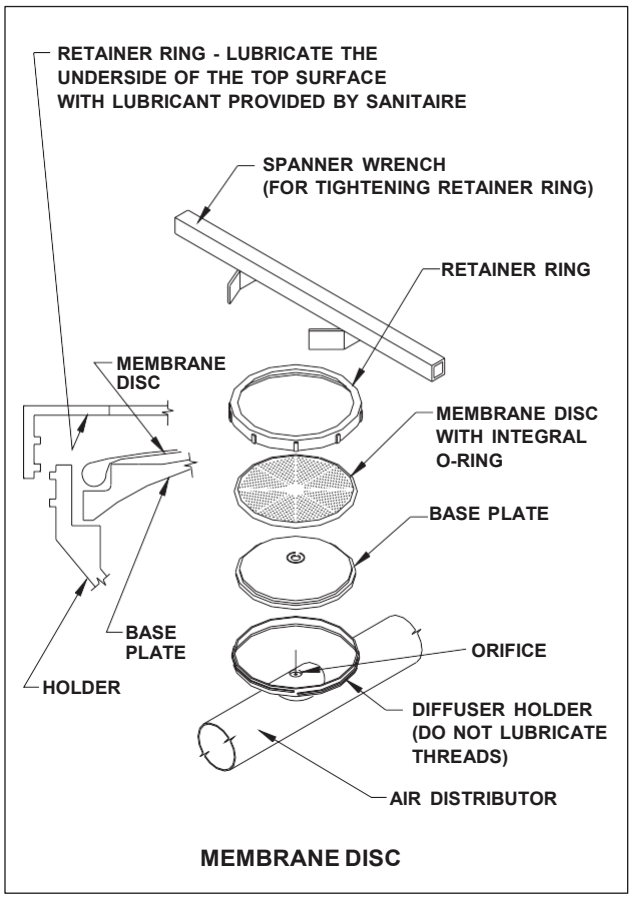

Figure 36

4. Turn the retaining ring to a hand-tight position.

5. Using the retaining ring spanner wrench, turn the retaining ring an additional 1/4 turn. See Figure 34.

BLANK DIFFUSER SITE ORIFICE PLUG INSTALLATION

Some projects will call for some of the diffusers to be initially not put into operation or left “BLANK”. These diffusers may be put into operation as process demand dictates.

Locate “BLANK” diffuser sites and plug the orifice as shown in Figure 37 and described on the erection drawings.

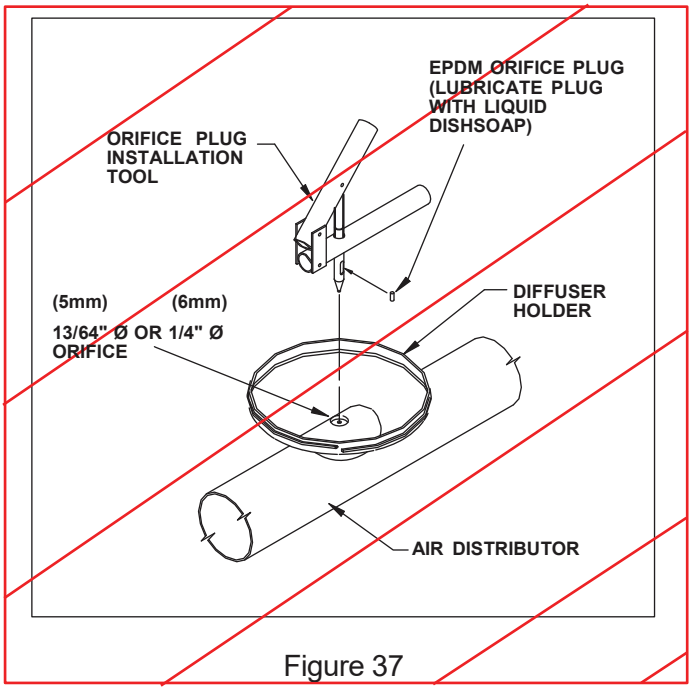

Figure 37

AERATION SYSTEM START-UP PROCEDURE

Once the aeration system is installed, perform a final tank inspection and look for loose nuts, missing or improperly placed hardware, missing retaining rings, non-connected joints, etc.; and make any repairs prior to following this start-up procedure.

NOTE

The start-up procedure should be completed prior to the site visit by Sanitaire service personnel or an authorized representative. This practice will save time for all parties involved.

The start-up procedure is as follows:

1. Fill the aeration tank with clean water to a level 1" (25 mm) below the top of the diffusers. While filling, proceed with steps 2-5. Step 6 will require a visual level inspection with the water level 1" (25 mm) below the top of the diffuser.

CAUTION

Water should be introduced to the basin at a rate and direction so that no abnormal stresses are imposed on the aeration pipe network that could cause damage.

2. While filling, disconnect each of the purge hoses from the sumps (not required on continuous purge systems).

3. When the water level reaches a point just over the top of the air distributor pipe, turn the air on at a low air flow rate of approximately 0.5 scfm/diffuser (0.85 m^3/hr/diffuser).

4. Check all submerged fixed, flanged, or expansion joints for air bubbles, which indicate leaks, and repair as required.

NOTE

Leaking at fixed and expansion joints is generally due to one of three conditions:

- *"O"-ring pinched or out of place (most common).*
- *Joint retaining ring cross threaded on spigot.*
- *Joint not tight.*

! CAUTION

When repairing pipe joints, turn off the air supply to the grid being worked on.

5. With the air ON, check each purge sump operation. Any water trapped in the pipe should be discharging from the sump assembly.

   If neither air or water is being discharged, check the sump eductor tube air orifice hole (see Figure 38). This hole may be plugged with debris or possibly glued over during manufacturing. Redrill or clean out as required and reassemble.

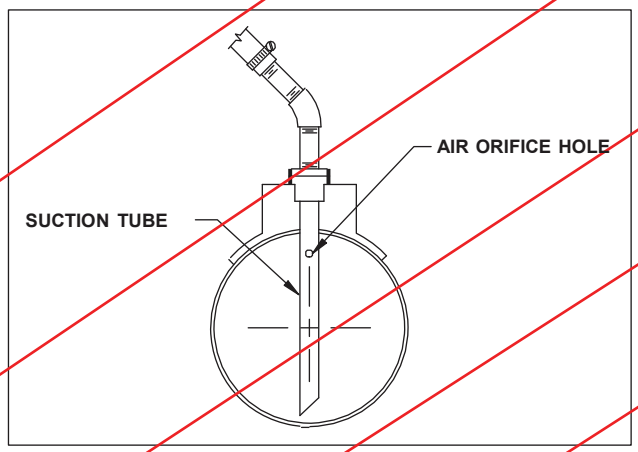

Figure 38

6. Turn the water supply OFF as it approaches a level 1" (25 mm) below the top of the diffusers. With the water OFF check the level of the aeration system. The distance from the top of the perimeter of the diffuser measured to the static water level should be relatively constant ± 1/4" (6 mm) for all diffuser heads. Raise, lower, or rotate the air distributor sections as required in order to level the aeration system.

7. Increase the air rate to about 1-1.5 scfm/diffuser (1.7 - 2.6 m^3/hr/diffuser) and turn the water supply back on.

8. Fill the basin to a maximum water level of 2" - 3" (50-75 mm) over the diffusers.

9. Check all diffuser units for uniform air distribution. Air should be discharging uniformly across the diffuser surface. See Figure 39.

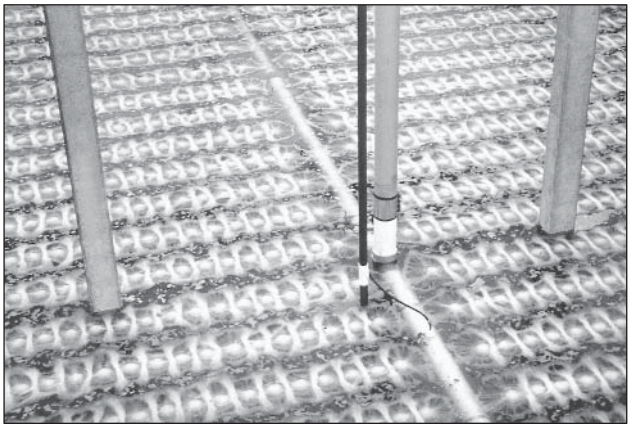

Figure 39

Excessive air discharge as indicated by large coarse bubbles around the perimeter or "halo" of the diffuser indicates a loose retaining ring or improperly seated "O"-ring (see Figure 40). To correct this situation use the retaining ring spanner wrench to back off the retaining ring. Then reseat the "O"-ring and retighten to a hand-tight plus 1/4 turn position.

If no air is discharging from the diffuser surface, the air control orifice may be plugged with debris. To correct this situation, remove the diffuser assembly, clear the orifice (a welding rod or nail works well), and reinstall the diffuser.



Figure 40

10. Once the system is leak free and is purged of all entrapped water, reattach the purge hoses to the purge sumps.

11. Use a soap solution to check for leaks at the clamp coupling or flange joint which joins the PVC and stainless steel portions of the drop-leg.

12. Continue filling the basin to a point 3'-4' (1 m) over the diffusers.

NOTE

If your system has a raised manifold (ref. Figure 4), check for manifold flanged or fixed joint connection leaks as the water level rises and repair as required.

13. Allow the system to operate 3-4 hours in this mode prior to introducing the mixed liquor.

PLANT OPERATION

PRINCIPLES

The removal of carbonaceous BOD, the coagulation of non-settable colloidal solids, and the stabilization of organic matter are accomplished biologically using a variety of microorganisms (principally bacteria) in the activated sludge process. The microorganisms convert the colloidal and dissolved carbonaceous organic matter into various gases and cell tissue through synthesis.

Aerobic systems require the presence of molecular oxygen to maximize the conversion of the organic matter through a complex series of Biochemical Oxidation and Reduction Reactions.

Oxygen needed by the microorganisms is transferred to the mixed liquor by aeration. The fine bubble aeration system takes compressed atmospheric air and passes it through the diffuser element forming millions of fine bubbles that pass through the mixed liquor. Diffusion makes the oxygen in the compressed air accessible to the microorganisms.

Typically, fine bubble aeration systems are twice as efficient as coarse bubble systems. This translates to a 50% reduction in the required air volume to treat the same waste. Fine bubble systems are more efficient due to the increase in contact surface area between the air bubble and wastewater which makes the diffusion of the oxygen quicker/unit volume.

The drawback to the increased efficiency is that overtime fine bubble aeration systems may foul and require cleaning.

DIFFUSER OPERATING AIR FLOW RANGE

For CERAMIC DISC (air flow per diffuser):

SIZE	MIN	MAX
9" (230 mm)	0.5 scfm. (0.85 m^3/hr)	3.0 scfm (5.0 m^3/hr)
7" (178 mm)	0.35 scfm (0.6 m^3/hr)	2.0 scfm (3.5 m^3/hr)

NOTE

Above listed air flow rates are general design standards. Actual project design may vary.

Ceramic disc operating requirements:

1. Do not operate below the minimum air flow requirements. Solids settling will occur which results in a loss in oxygen transfer efficiency and possible diffuser fouling.

2. Non-operating ceramic discs allow mixed liquor to enter the pipe network. Do not intentionally shut off the air flow to the ceramic discs in a submerged state.

For MEMBRANE DISC (air flow per diffuser):

SIZE	MIN	MAX
9" (230 mm)	~~0.5 scfm (0.85 m^3/hr)~~	~~Short term: 7 scfm (11.9 m^3/hr) Long term: 4 scfm (6.8 m^3/hr)~~
7" (178 mm)	0.35 scfm (0.6 m^3/hr)	Short term: 4.8 scfm (8.1 m^3/hr) Long term: 3.0 scfm (5.0 m^3/hr)

NOTE

Above listed air flow rates are general design standards. Actual project design may vary.

9" DIA. SSII LP MEMBRANE DISC

MIN AIR RATE: 1.0 SCFM
SHORT TERM MAX AIR RATE: 25.0 SCFM
LONG TERM MAX AIR RATE: 12.0 SCFM

Membrane disc operating requirements:

1. When operating, do not reduce the air flow rate below the recommended minimums. Solids settling will occur which results in a loss of oxygen transfer efficiency and possible diffuser fouling.

2. Membrane disc systems are designed for continuous or intermittent submerged process use. Idle systems should be supplied with an alternate source of mixing.

NOTE

Solids will settle on the diffuser surface of idle systems and may promote diffuser fouling. The results of intermittent use are as follows:

- *A higher airflow and pressure may be required to lift the membrane disc off the subplate and start the grid.*
- *The diffuser may have to be cleaned if a sufficient loss in Oxygen Transfer efficiency is observed.*

General notes regarding air flow range

- The most common design average air flow range is 1 to 2 scfm/Diffuser (1.7 to 3.5 m^3/hr/Diffuser).
- Operating above this range results in a lower oxygen transfer efficiency and increased diffuser headloss.
- It may be necessary to operate at a higher airflow rate in order to meet the oxygen demand.
- Operating below this range will yield a slightly higher oxygen transfer efficiency, however, mixing requirements must be considered.

MIXING, D.O. LEVELS AND MINIMUM DIFFUSER AIR FLOW RATES

The generally accepted activated sludge plant mixing air rate standard is 0.12 scfm/$Ft.^2$ (2.2 m^3/hr/m^2) of tank surface area.

Often times conservative design will specify more diffusers with a higher minimum air flow requirement than is required by the process demand or mixing in a specific area. This is most common at the end of long plug flow reactors. The result of this is a high area D.O. level.

If the operator feels this D.O. level is not needed, the simplest solution is to take some of the diffuser units out of service by plugging the orifice as shown in the installation instructions. See Figure 37.

NOTE

Minimum mixing requirements must still be adhered to.

DIFFUSER FOULING

Operating experience shows that all fine bubble disc diffusers may foul or become clogged with continuous operation.

The rate of fouling, type of foulant, and strength of foulant depends primarily on the constituents in the wastewater.

The results of diffuser fouling include:

- loss of oxygen transfer efficiency due to bubble coalescence and coarse bubbling
- increased pressure requirements
- increased air demand.
- increased operating costs.

Diffuser fouling is divided into two categories: water side and air side. Air side fouling is very rare but does warrant some consideration. Water or mixed liquor side fouling is most common.

Causes of diffuser fouling include:

on WATER side:

- Fibrous material adhering to the edges of the diffuser units.
- Oils and greases in the wastewater.
- Precipitated deposits of iron and carbonates.
- Biological growths of slime.

SANITAIRE®

on AIR side:

- Dust and dirt from unfiltered or inadequately filtered air.
- Rust and scale from air main corrosion.
- Oxidation and subsequent flaking of bituminous air main coatings.
- Construction debris
- Mixed liquor solids entering through system leaks or cracks.

Several ways of determining if the diffusers are fouled are discussed in the preventative maintenance section of this manual.

The corrective action for fouled diffusers is cleaning. This is discussed in the yearly maintenance and diffuser cleaning section of this manual.

PREVENTATIVE MAINTENANCE

MOISTURE PURGE

Moisture enters the pipe system in three ways:

- Condensate build-up inside the pipe system due to high blower discharge temperatures and moist or humid air (primary cause).
- Minor leaks in the pipe system.
- Back flow through ceramic diffusers caused by a loss of air.

NOTE

Membrane diffusers are designed to seal on the subplate and prevent moisture from entering the system.

The effects of entrapped moisture are:

- Increased air velocity and headloss.
- Poor air distribution.

Sanitaire manufactures two types of purge systems: a standard, manually operated system (most common) and a continuous purge system.

The standard system uses a sump with an eductor line that extends from the grid to above the water surface and ends with a manual ball valve. To operate this system simply open the ball valve and the trapped liquid will be purged from the system. Close the valve when the water flow stops and a mist appears.

NOTE

For maximum purge results, lower the air flow to the grid. The air velocity will be reduced and more of the liquid will be forced to the sump.

The purge frequency is site determined; however, once a week is a good rule of thumb.

The second type of purge system is the continuous purge system which employs a diffuser unit attached to the bottom of the manifold or drainline. The entrapped moisture is continuously purged from the system.

The continuous purge systems are used on grids where it is not possible to reach a purge valve safely from a walkway.

AIR BUMPING

Air bumping is a technique that can be employed by operators to temporarily reduce back pressure in the system. Air bumping is the act of increasing the air flow rate per diffuser for 20-30 minutes once per week. An air rate per diffuser of 3 Scfm (5 m^3/hr) is generally used.

This practice will aid in sloughing off settled debris and may extend the period between diffuser cleanings.

POWER FAILURES AND LOSS OF AIR SUPPLY

The results of a power failure (loss of air supply) on each diffuser type are as follows:

for CERAMIC DISC diffusers:

- Solids settle on diffuser surface.
- Filtered mixed liquor penetrates the diffuser and enters the pipe network.
- Short term affect: none.
- Long term affect: fouling may occur on the surface and within the diffuser disc.

When the air supply is restored, the air pressure will build and the flow will reduce until sufficient water is pushed out of the system to allow air to be released through the diffusers.

NOTE

It is suggested that the operator open the purge valves as soon as possible after a power outage and evacuate the system. If the liquid is left in the system the flow will be reduced and the operating pressure will be higher than normal.

for MEMBRANE DISC diffusers:

- Solids settle on diffuser surface.
- Short term affect: none.
- Long term affect: the potential of surface fouling is possible and the diffusers may require a cleaning. This is generally the case for long term intermittently used membrane disc systems (i.e., Anoxic Zones, Batch Reactors).
- May require operator to shut off adjacent grids or turn on additional blowers to increase the air flow rate and force the membrane off the subplate surface. This is again generally the case for long term intermittently used membrane disc aeration systems.

VISUAL INSPECTION

Visually inspect the aeration basin surface pattern. The flow should be, for the most part, a nice quiescent pattern. Some coarse bubbling at the basin inlet may occur due to surfactants in the wastewater and is generally dispersed shortly downstream.

Excessive coarse bubbling throughout the tank indicates the diffusers may be fouling.

Large boiling in an isolated area indicates a failure in the submerged pipe system.

Visual inspection is an ongoing preventative maintenance step and can be done while taking routine samples, dissolved oxygen readings, etc.

AIR MAIN INSPECTION

Air main leaks are easily identified and usually are caused by loose joints or degraded gaskets. These types of leaks should be repaired quickly in order to prevent loss of system efficiency.

OPERATING PRESSURE AND AIRFLOW

Most blower systems are equipped with discharge pressure gauges. The operator should keep a regular log of pressure readings. A continuous increase in operating pressure indicates diffuser fouling. Likewise, a continuous increase in air demand without a change in the aeration basin loading indicates diffuser fouling.

SANITAIRE®

Fine Bubble Grid Aeration System
TROUBLESHOOTING GUIDE

Problem	Cause	Action
VISUAL INSPECTION		
Poor air distribution	Diffusers not level	Level system
	Grid flooded	Operate grid purge system
	Plugged orifice	Clean orifice
	Insufficient air	Provide more air
	Solids settling	Provide more air to grid
Visible mounding of air in one location	Broken pipe	Repair (see repair procedures)
Coarse bubbling (large bubbles)	Diffuser fouling	Clean diffusers (see cleaning procedure)
Air discharge from air main	Loose joints, degraded gaskets, or degraded air main	Repair as required
OPERATIONAL PROBLEMS		
Low D.O. Concentration	Too little air	Increase air flow
High D.O. Concentration	Too much air	Decrease air flow
		Decrease quantity of diffusers in service
Increased operating pressure	Diffuser fouling	Clean diffusers (see cleaning procedure)
	Line blockage or valve closed	Check air lines and valves
Increased air requirement/ no load change	Diffuser fouling	Clean diffusers (see cleaning procedure)
	Leak in air system	Inspect and repair as required

WARNING:

Prior to draining a tank, please READ these instructions carefully to minimize the potential for heat related damage to the Aeration System.

BASIN DRAINING PROCEDURE

Before draining a basin for diffuser inspection, tank cleaning or other maintenance operations, do the following:

- Place the basin in a manual mode to override any automatic 0.0./blower control systems.
- Adjust the grid(s) air control valve(s) to deliver an air flow rate equivalent to 0.5 scfm per diffuser or to a 25% open position if air flow metering is not available.
- AERATION TANK - Stop RAS flow to the basin.
- AEROBIC DIGESTER - Stop WAS flow to the basin.
- Tum off the air completely to the basin when the liquid level reaches 1 to 2 Ft. above the diffusers.
- When cleaning diffusers, the air can be turned on for short periods of time for the grid being cleaned.

NOTE: As the basin is draining, monitor the amount of air flowing to che submerged grid(s). THE AIR FLOW SHOULD BE KEPT TO A MINIMUM. THIS WILL PREVENT EXCESS HEAT BUILD-UP FROM DAMAGING THE PVC OR CPVC PIPING SYSTEM WHILE KEEPING THE SOLIDS IN SUSPENSION.

Refer to pages 27 and 28 for Diffuser Cleaning Procedure.

YEARLY MAINTENANCE AND DIFFUSER CLEANING

MAINTENANCE SCHEDULE

Sanitaire recommends the following maintenance schedule be observed at least once per year.

1. Drain down each tank.
2. Remove excess settled solids if any have accumulated.
3. Clean diffusers.
4. Inspect support hardware to ensure all components are intact and tight.
5. Inspect diffuser retaining rings to make sure all rings are in place and tight.
6. Inspect fixed and expansion joint retaining rings to make sure all rings are tight.

NOTE

For items 4-6, refer to the Installation Instructions.

LUBRICATION SCHEDULE

Since there are no moving parts on the SANITAIRE Fine Bubble Aeration Systems, a formal lubrication schedule is not required.

Three components require lubrication at the time of initial installation and future repairs. These components are:

- Ceramic Disc Diffuser "O"-Ring
- Membrane Disc Diffuser Retaining Ring
- ~~Expansion Barrel, 4" Ø black "O" Ring~~

Lubricate these items with the lubricants provided by Sanitaire and in accordance with the Installation Instructions.

CERAMIC DISC DIFFUSER CLEANING METHOD

1. Drain aeration basin (the air should remain on as basin is drained).
2. With the air left on – at approximately 1 scfm (1.7 m^3/hr) per diffuser – hose off each disc for twenty seconds with clean water at a nozzle pressure of 60 psig. Turn off the air supply when completed.
3. Put on the following safety equipment: eye goggles, rubber gloves, boots, sleeves, and apron. A breathing apparatus should be available in the event it is needed.

! CAUTION

Acid can be harmful if misused. Follow all manufacturers precautions and directions. Wear appropriate safety equipment. Do not breath acid vapors. Do not allow acid to make contact with eyes, skin or hair.

4. Carefully prepare a 50% by volume solution of 18˚ baume muriatic acid. Always add the acid to water.
5. Using an acid resistant compression sprayer, apply a uniform covering of the acid solution to all diffuser elements.

NOTE

Do not spray the acid solution on the stainless steel supports and hardware.

6. Allow the acid solution to sit on the diffusers for 30 minutes.
7. Turn the air back on at a rate of 1 scfm (1.7 m^3/hr) per diffuser and repeat the hosing procedure for 10 seconds per diffuser.
8. Inspect the aeration system to determine if any hardware was loosened or broken during the cleaning.

9. ~~Review and follow the start-up procedure as found in the Installation and Start-up Section of this manual.~~

MEMBRANE DISC DIFFUSER CLEANING METHOD

1. Drain aeration basin (the air should remain on as basin is drained).

2. With the air left on at approximately 1 scfm (1.7 m^3/hr) per diffuser, hose off each disc for twenty seconds with a clean water source at a nozzle pressure of 60 psig.

3. Turn off the air flow to the aeration grid being cleaned.

4. If required, use a rag or soft bristle brush to scrub each diffuser to remove stubborn slime growth, chemical precipitates, or oils. Do not use acids or aggressive cleaners.

5. Turn the air back on at a rate of 1 scfm (1.7 m^3/hr) per diffuser and repeat the hosing procedure for 10 seconds per diffuser.

6. Visually inspect the aeration system to determine if any hardware was loosened or broken during cleaning.

7. Review and follow the start-up procedure as found in the Installation and Start-up Section of this manual.

SANITAIRE®

LONG TERM STORAGE PROCEDURES

The procedure below was developed to protect the piping and diffusers from environmental damage.

NOTE

It must be understood that Sanitaire assumes no responsibility for damage or cleaning requirements as a result of long term storage.

For use when the aeration system is not in use, air is not available and flooding is undesirable.

1. Drain the tank dry and clean out solids and debris.

NOTE

The floor drains should remain open to prevent water from standing in the pipe system and tank. Equipment flooded by overflows or misdirected sewage flows will probably require cleaning before being placed in service.

CAUTION

Standing water allowed to freeze around the pipe may crush the pipe.

2. Before bringing the system on line, check all hardware for tightness. Check the gaskets and O-ring seals for deterioration or leakage. Replace as required.

NOTES



SANITAIRE

a xylem brand

wwwsanitaire.com

Corporate Office:
9333 N. 49th Street
Brown Deer, WI 53223
Tel 414 365 2200
Fax 414 365 2210

Branch Office:
71 Elm Street
Worcester, MA 01609
Tel 508 752 0998
Fax 508 754 7377

KCC 25M 9/2001

Printed in U.S.A.

Volume 1
For LC-1200LS

Installation, Operation & Maintenance Manual

IQALUIT (NUNAVUT) WWTP

CITY OF IQALUIT

NUNAVUT, CANADA X0A 0H0

PHOENIX BELT FILTER PRESS
Model No.: LC-1200LS
PHOENIX Job # 0418377

PHOENIX Process Equipment Co.
2402 Watterson Trail
Louisville, KY 40299
(502) 499-6198
(502) 499-1079
www.dewater.com
Email: phoenix@dewater.com

Volume
1

TABLE OF CONTENTS

PHOENIX Process Equipment Co.

Final Installation, Operation & Maintenance Manual

Introduction

SECTION 1 Overview

- Precautions 1
- Requirements.....2
- LC-1200L Press Layout (Figure 1.) 3
- General Functions 4
- Mechanical Information 7
- Shipment & Storage 8

SECTION 2 Equipment Operation

- Start Up Sequence 9
- Optimization 11
- Shutdown Sequence 13

Section 3 Electrical /Controls

- Electrical Controls 14

Enclosures 3-1

Pneumatics 3-2

Operators 3-3

Digital Meter 3-4

PLC 3-5

Starters 3-6

Transformer/Power Supply/UPS 3-7

Horn 3-8

Surge Suppressor 3-9

Variable Frequency Drives 3-10

Water Pressure Switch 3-11

Belt Break Detect Laser Switch 3-12

Drawings 3-13

- Cover Sheet / Drawing Index ..... 0418377D800, Rev. D
- 600 V/120V Schematic ..... 0418377D801, Rev A
- 120 V/24VDC Schematic ..... 0418377D802, Rev. A
- I/O Schematic ..... 0418377D803, Rev. 0
- I/O Schematic ..... 0418377D804, Rev. A
- Device Setup Parameters ..... 0418377D807, Rev. A
- Enclosure Layout ..... 0418377D809, Rev. D
- Tag Layout ..... 0418377D810, Rev. 0
- Pneumatic Schematic ..... 0418377D811, Rev. 0
- Bill of Materials ..... 0418377D812, Rev. D

Section 4 Components

- Polymer Mixing (Vortex) 15
- Polymer Mixing Vortex Mixer (Figure 2.) 16
- Polymer Mixing Injection Ring (Figure 3.) 17

- Belt Tensioning (Figure 4) 18
- Belt Tensioning 19
- Tracking Switch & Air Cylinder (Figure 5. & 6.) 20
- Tracking Setup 21
- Tracking System Operation (Figures 7., 8., 9.,) 22
- 4-1 Tracking Cylinder Control Valve & Limit Switch Specs 23
- 4-2 Tracking Air Cylinder Specifications 24
- 4-3 Belt Tensioning 25
- 4-3 Tensioning (Figure 10.) 26
- 4-3 Tensioning (Figure 11) 27
- 4-4 Variable Speed Drive Specifications-Press Drive 28
- 4-5 Tension Regulator Specifications 29
- 4-6 Safety Stop Switch 30
- 4-7 Bearing Specifications 31
- 4-8 Booster Pump 32
- 4-9 Air Compressor 33
- 4-10 Spray Bars 34

Section 5 Maintenance

- Gear Box Assembly/Installation 35
- Drive Mount (Figure 12) 37
- Belt Installation 38
- Lower Belt Installation (Figure 13) 41
- Clipper Seam (Figure 13A) 42
- Upper Belt Installation (Figure 14) 43
- Replacement Belt Installation 44
- Lubrication Instructions 45

- Daily Visual Checks 46
- Lubrication Locations (Figure 15) 47

Section 6 Troubleshooting

- Miscellaneous Problems 48
- Cylinder Control Valve Maintenance 52
- Troubleshooting Chart

Section 7 Spare Part Information

- Ordering 53
- Recommended Spare Parts (LC-1200LS) 54

Section 8 Drawings

- LC1200-L Belt Filter Press .....18377LC-GA, Rev. 0
- LC1200LS Filter Press General Skid System .....18377LC-SK01, Rev. 0
- LC1200-LS Lifting Diagram..... 18377LC-LD, Rev. 0

PHOENIX Process Equipment Co.

2402 Watterson Trail
Louisville, KY 40299
502-499-6198
502-499-1079
e-mail: phoenix@dewater.com
www.dewater.com

Valued PHOENIX Customer

We at PHOENIX appreciate your selecting us to provide your new equipment. PHOENIX equipment is known and respected throughout many industries for its durability and reliability. Our employees take great pride in the products and services that we offer.

This installation, operation and maintenance manual provides procedures for installation, regular maintenance, operation and servicing of your PHOENIX equipment. In order to realize efficient and safe operation, it is important to read and fully understand the information in this manual prior to installation and start up of the equipment. Our service technician will be available during start up to offer assistance and training to prepare your operating staff.

Additionally, experienced PHOENIX personnel are available to assist with questions and problems, which may arise. Direct any service needs to:

PHOENIX Process Equipment Co.
2402 Watterson Trail
Louisville, KY 40299
Phone: (502) 499-6198 Ext. 127
Fax: (502) 499-1079

New After Hours Parts Orders and Service Number: **(502) 548-7763**

We share a common interest with our customers to see that PHOENIX products produce to your highest expectations. We appreciate any feedback you can offer from your operational experience to assist us in our efforts to continually improve our products.

We hope you will be happy with your new PHOENIX equipment and look forward to developing a long, mutually beneficial relationship.

Sincerely,

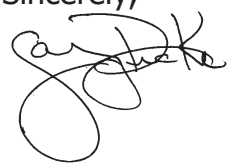

Gary L. Drake
President

Company History

PHOENIX Process Equipment Co. was established in Pompano Beach, Florida in 1984. A Department of Energy grant helped fund the development of the company's initial technology, the separation of clean coal from coal refuse. The development of this process technology fostered the company's development of its first commercially successful product, a high capacity dewatering filter (belt filter press) capable of efficiently dewatering fine particle slurries.

The success of this dewatering technology established the foundation that has led the company to become an international leader in the supply of liquid/solid separation and residuals dewatering technology.

With its initial customer base primarily bituminous coal producers, the company relocated its early operations to Louisville, Kentucky in 1986 to better service the industry.

From PHOENIX's international headquarters in Louisville, the company quickly expanded its markets and technologies, being recognized in 1989 by *Inc. Magazine* as one of America's 500 fastest growing private companies.

Through internal development and a series of strategic partnering relationships and joint ventures, PHOENIX has established a broad base of products and liquid/solid separation process technologies targeted at residuals and sludge dewatering and thickening, water clarification and filtration, and solids classification and separation.

PHOENIX products include belt filter presses, gravity belt thickeners, filter presses, screw presses, high rate circular thickeners, hydrocyclone/screen separators, sand filters, reverse osmosis units, fluid bed density separators, and jigs.

Other services offered by PHOENIX include: automation and control design, electrical systems design, facilities engineering, field support services, installation, operator training, replacement parts, start-up services, and turnkey systems.

The company sells its products and services through a worldwide network of sales representatives. For additional information, please visit our website at www.dewater.com.

PHOENIX

Rising to Meet the Need

PHOENIX Belt Filter Presses

PHOENIX Model WX Belt Filter Press dewaters slurry of pre-thickened solids from a pumpable, liquid state to a solid, belt conveyable and stackable cake. Model WX is available in several different configurations, each suited to the specific application. Design includes fully welded mainframe, oversized bearings, and unique corrosion protection features. Several different compression zone arrangements are available.



PHOENIX Model WX
Belt Filter Press

Model WX is available in several design configurations from Economy to High Performance with belt widths up to 3m. Options include Dual Gravity Zone, Independent Gravity Zone, Enclosure Panels and more.

For lower flow applications up to 65 gpm, **Model LC** is available in belt widths of 800mm and 1200mm.

We're All About The Process

APPLICATIONS

- Aggregate Tailings
- Coal Refuse
- Scrubber Effluent
- Pulp & Paper Effluent
- Municipal & Textile Wastewater
- Dredging Slurries
- Water Treatment Sludge
- Domestic Biological Waste
- Chemical, Food Process & Grease Trap Waste



On-site field demonstrations available. Contact PHOENIX at 502-499-6198.

FEATURES & BENEFITS

- Heavy-duty all-welded main frame assures component alignment
- Modular construction allows variable roller configuration for maximum process flexibility
- Designed for continuous automatic operation which requires minimal operator attention & low maintenance
- Open design provides easy access to all components
- Epoxy over zinc coated frame provides maximum corrosion resistance
- Pneumatic belt tracking/tensioning provides clean, safe operation with maximum reliability
- Standard, extended, independent or dual gravity zone for versatile, effective dewatering performance

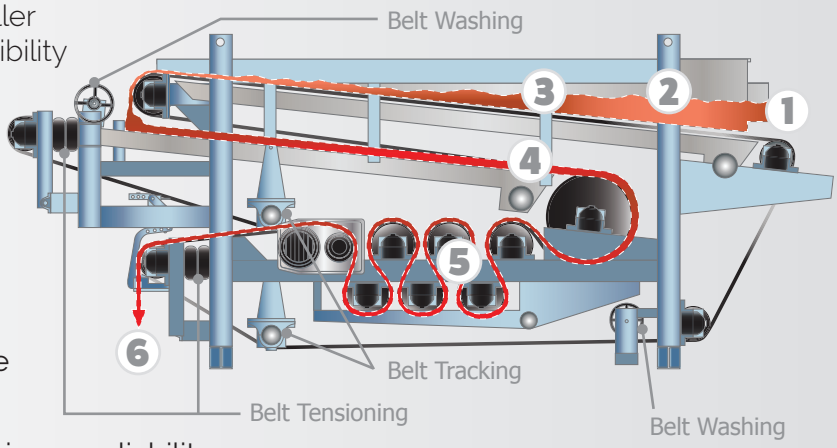

1 Preconditioning (Flocculation): Most applications require the addition of polymers to the slurry prior to dewatering. The addition of these flocculants results in the agglomeration of solids, releasing free moisture. An inline mixer is provided for proper dispersal of polymer into the feed.

2 Feed Distribution: Slurry is fed to a specially designed head box, where the material is evenly distributed for more efficient use of the filtering area.

3 Gravity Drainage: Free moisture is separated from the solids by drainage through the moving filter belt.

4 Wedge Pressure: Material advancing from the drainage zone is deposited into the adjustable wedge zone. Pressure is gradually applied as the upper and lower belts converge to form a ***cake sandwich***.

5 Compression/Shear: The belts follow an ***S*** path through a series of compression rollers. Surface pressure created by belt tension squeezes additional moisture from the solids. Simultaneous shearing of material opens additional voids for moisture release. The belts part, leaving a dry cake.

6 Solids Discharge: Cake is separated from the belts by doctor blades and is discharged.






Contact PHOENIX at 502-499-6198 for complete systems tailored to your requirements including:
Classification, Separation, Scrubbing, Effluent Treatment, Water Recovery, Fines and Tailings Dewatering & Disposal.

Authorized representative:

PHOENIX

www.dewater.com

PHOENIX Process Equipment 2402 Watterson Trail Louisville, KY 40299
p. 502-499-6198 f. 502-499-1079 e. phoenix@dewater.com

PH_BFP0617
© PHOENIX Process Equipment 2017

SECTION 1



PHOENIX Process Equipment Company
2402 Watterson Trail
Louisville, KY 40299
(502) 499-6198
(502) 499-1079 Fax

SECTION 1 OVERVIEW

PRECAUTIONS

1.) Do not apply air pressure to the air filter regulator supplying the control panel until the banding straps are removed from the tension assemblies and until the belts have been installed. If air has been supplied to the control panel and the air regulators supplying the tension cylinder are not fully closed, the air must be turned off and the cylinder must be fully extended before belt installation can take place.

2.) All three phase motors must be checked to be sure the wiring is connected for the proper voltage and checked for rotation before operation.

3.) Care must be taken when working around any piece of equipment involving moving parts such as belts, motors, gears, etc.

4.) The belt over travel, e-stop switches and any other system safety devices must be checked for proper operation prior to starting the Belt Filter Press.

5.) All piping must be water tight before pressurizing any line.

6.) The slurry feed pipe must be connected to the Belt Filter Press Feed Containment Box inlet using a flexible connector to permit adjustment of the box. PHOENIX supplies a FERNCO flexible connector for this purpose.

7.) DO NOT climb on the Belt Filter Press to perform maintenance, to clean, to observe the process or to adjust any components whether the Belt Filter Press is operating or not. Use installed walkways and catwalks or use authorized roll around platforms and ladders.

8.) Prior to performing any maintenance on the Belt Filter Press, all mechanical and electrical safety precautions should be strictly followed. Breaker lockout, danger tags and valve locking device procedures ACCORDING TO THE CUSTOMERS'S POLICY OR APPLICABLE OSHA REGULATIONS MUST BE IMPLEMENTED.

9.) If AC voltage power provided for the variable frequency drive is not and does not always remain within +/- 10% of the rated voltage of the variable frequency drive, an isolation transformer must be supplied to prevent drive failures. Failure to observe this requirement could result in damage or destruction of the variable frequency drive.

PHOENIX Process Equipment Company
2402 Watterson Trail
Louisville, KY 40299
(502) 499-6198
(502) 499-1079 Fax

SECTION 1 OVERVIEW

REQUIREMENTS

1.) ACCESS: PHOENIX recommends at least a 4'-0" wide access area on the drive side of the PHOENIX Belt Filter Press. Allow approximately 36" wide access area on the opposite side for roller removal should that be required.

2.) WATER: Wash water for belt cleaning with clarity of less than 200 ppm of suspended solids at 30 psig and 52 GPM must be delivered to the booster pump at the Belt Filter Press.

3.) ELECTRICAL: The Belt Filter Press drive, the air compressor, the belt wash booster pump, the sludge pump and master control panel require three phase 575 volt AC power. All motors are supplied from the master control panel. Control power is provided by means of a transformer in the control panel.

4.) CHEMICAL: The Belt Filter Press will require the use of polymers for dewatering. PHOENIX will test a sample of the solids and recommend a polymer and a dosage; however, you may wish to consult your polymer supplier for any special requirements.

5.) AIR: The PHOENIX Belt Filter Press tracking and tension systems are pneumatic. The Belt Filter Press requires 3 scfm at 100 psig from the air compressor.

6.) MIXING: PHOENIX will supply an in-line mixer to mix the slurry and polymer prior to Belt Filter Press.

7.) ASSEMBLY: The PHOENIX Belt Filter Press is shipped with the drive and integral motor installed. The belts are also removed to prevent damage during shipment. The belts will be installed at start-up with the assistance from a PHOENIX Service Technician.

8.) ENCLOSURES: The customer shall fabricate and install any guards and safety enclosures required by Federal, State or local regulations.

9.) No special tools are required.

10.) No local service representative or installer. For service see Section 7.

11.) No warranty bond documentation provided on this equipment order.

PHOENIX Process Equipment Company
2402 Watterson Trail
Louisville, KY 40299
(502) 499-6198
(502) 499-1079 Fax

SECTION 1 OVERVIEW

LC-1200L PRESS LAYOUT

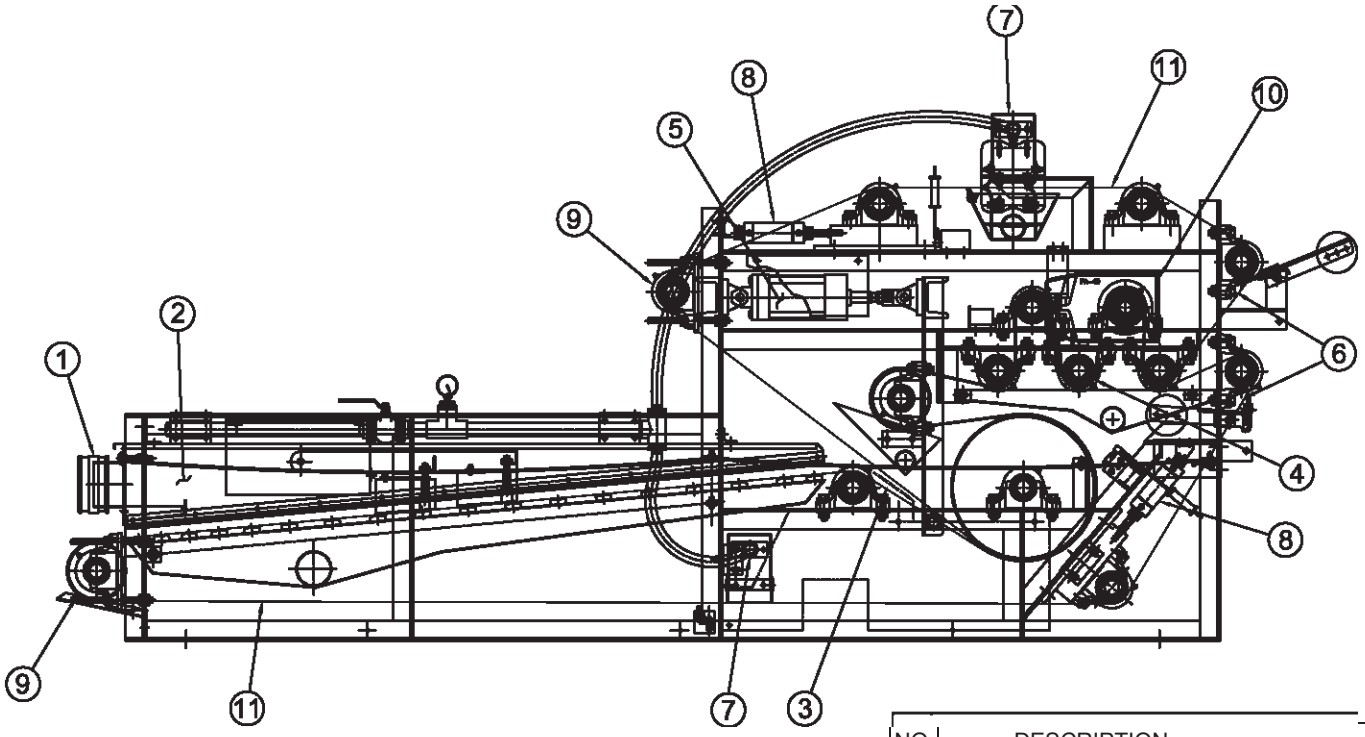

FIGURE 1.

NO	DESCRIPTION
1	FEED DISTRIBUTOR PIPE
2	GRAVITY DRAINAGE ZONE
3	WEDGE COMPRESSION ZONE
4	HIGH PRESSURE/HIGH SHEAR ZONE
5	BELT TENSION DEVICE
6	DOCTOR BLADES
7	BELT WASHING STATIONS
8	BELT TRACKING
9	BELT LENGTH ADJUSTMENT
10	DRIVE REDUCER
11	DEWATERING BELTS

PHOENIX Process Equipment Company
2402 Watterson Trail
Louisville, KY 40299
(502) 499-6198
(502) 499-1079 Fax

SECTION 1 OVERVIEW

GENERAL FUNCTIONS (refer to Figure 1 for the following descriptions)

1.) **FEED DISTRIBUTOR**: The stainless steel feed distribution box receives the slurry delivered to the Belt Filter Press. The feed distribution box extends for the length of the gravity zone of the Belt Filter Press.

IMPORTANT: In order to ensure the mechanical and process stability of the dewatering operation, the solids must be distributed evenly across the width of the belt. Bare spots or striping on the belt must be avoided or wrinkling and creasing of the belts may occur. The weir gate can be adjusted to distribute the flow more evenly. Insufficiently diluted slurry will not flow properly and must be diluted enough to permit flow through the feed distribution nozzle.

2.) **GRAVITY ZONE**: The Gravity Zone is the primary dewatering section within the Belt Filter Press. The Gravity Zone generally determines the capacity of the Belt Filter Press as over 50% of the liquid is removed in this zone. Properly flocculated slurry will usually exhibit a "black cottage cheese" appearance. Flocculation is required to permit efficient separation of the liquids from the solids and allow drainage through the belt. No mechanical pressure is applied in the Gravity Zone except plows are used to divert the solids and allow additional free water to drain.

Problems that might occur in the Gravity Zone:

IMPROPER FLOCCULATION: Check the polymer feed system and adjust polymer flow if required. Check polymer injection and the mixing action.

HIGH LEVEL IN THE FEED DISTRIBUTION BOX: Check the solids feed pump and reduce the flow as required or increase the belt speed to increase solids handling capacity.

FAILURE TO DRAIN: Check for blinded belts then check the wash water flow and pressure. Clean nozzles as required.

3.) **WEDGE ZONE:** The wedge zone starts at the discharge from the gravity zone as the two belts start to converge and continues to the entrance of the compression/shear zone. As the belts converge they gently squeeze free water from the solids. Extrusion from the edges of the belts is possible in this zone especially if flocculation is inadequate or the tons per hour of solids is high relative to the capacity of the Belt Filter Press.

4.) **COMPRESSION/SHEAR ZONE**: The pressure and shear on the solids increases to the maximum in the Compression/Shear Zone. The belts progress from largest roller through

SECTION 1 OVERVIEW

GENERAL FUNCTIONS Continued

the smaller rollers in a serpentine fashion. The pressure is highest on the smallest diameter rollers. The outside belt at any one-roller slips relative to the inside belt and causes shear in the solids. The direction of shear is reversed as the inside belt becomes the outside belt on the adjacent roller. This high pressure and high shear releases all the remaining free water from the solids. Improper flocculation, blinded belts, system overload, a low belt speed and high belt tension can also cause extrusion in this section. Check the belt tension pressure first and reduce the pressure, if necessary. Check for proper flocculation and blinded belts in the Gravity Zone. Speed up the belts to increase the capacity and create a thinner cake then measure the flow to determine if the capacity of the Belt Filter Press is being exceeded.

5.) **UNIVERSAL BELT TENSION**: An air cylinder attached to a pivoting arm with a roller bearing on it is used to maintain proper belt tension. This cylinder tensions both belts simultaneously. The maximum pressure for the Belt press is 62 PSI.

6.) Both the upper and lower belts have individual **PNEUMATIC TRACKING SYSTEMS**. The tracking systems keep the belts centered on the press. A tracking roller is activated by pneumatic cylinders slides to adjust the belt alignment. Tracking lever arms constantly monitor the position of the belt and trigger the pneumatic cylinders to maintain the belts on center.

7.) The top belt travels over the Belt Filter Press, into the wedge zone, through the high pressure/high shear zone, over the doctor blade roller & through the upper belt wash station before completing the circuit.

8.) The lower belt travels through the gravity zone, into the wedge zone, through high pressure/high shear zone, over the doctor blade roller & through the lower belt wash station before completing the circuit to the gravity zone.

9.) **BELT LENGTH ADJUSTMENT**: There is a separate mechanical adjustment for each belt to compensate for actual belt lengths. This adjustment permits the belts to be adjusted so the universal belt tensioning system will properly tension the belts. Normally the adjustment will not have to be changed after the belts are installed & tensioned by the PHOENIX technical representative.

10.) **PRESS GEAR DRIVE:** The 1.0 HP Eurodrive hollow shaft gear reducer is an integral motor-drive assembly. Both the upper and lower belts are positively driven by the single

PHOENIX Process Equipment Company
2402 Watterson Trail
Louisville, KY 40299
(502) 499-6198
(502) 499-1079 Fax

drive through a gear assembly. The speed of the press is varied by a remotely located V.F.D., which is controlled by a digital speed control located in the control panel.

11.) **DEWATERING BELTS**: The PHOENIX Belt Filter Press uses (2) woven; clipper seamed polyester belts referred to as the upper and lower belt. (The lower belt travels through the gravity drainage zone.)

12.) **BELT WASHING**: Belt spray wash stations are located on both the upper and lower belts. Their purpose is to clean off any solids that may adhere to the belt during operation. Residual materials on the belt or unwashed sections may indicate nozzle clogging, therefore, nozzle cleaning and the flushing procedure should be performed immediately. Generally, infrequent cleaning is required, if the wash water solids content is less than 200 PPM

Important: An improperly cleaned belt will cause a decrease in solids handling capability of the Belt Filter Press and may lead to permanent belt damage.

13.) **DOCTOR BLADES**: Doctor blades are scrapers that remove the dewatered cake from the belts. Both upper and lower belts have a doctor blade that should be adjusted to a light contact with the belts. The dewatered cake should peel away from the belts evenly across the width of the press. In certain applications the cake will peel away from the belt without the need for firm contact between the doctor blade and the belt. This condition is normally not exhibited until a steady state operating condition has been reached. Although many materials can be used for doctor blades, PHOENIX recommends the use of Ultra High Molecular Weight (UHMW) polyester type for its light wearing characteristics on the belts.

PHOENIX Process Equipment Company
2402 Watterson Trail
Louisville, KY 40299
(502) 499-6198
(502) 499-1079 Fax

SECTION 1 OVERVIEW

MECHANICAL INFORMATION

UTILITY

Drive Motor: FA47/GDRN80M4/DH 1 HP

Belt Wash Water: 52 GPM at 30 PSI boost to 100 psi

Potable water is not necessary; however, wash water must contain less than 200-ppm solids, no solids greater than 20 mesh. An in-line 20 mesh, "Y" strainer is installed in the wash water line, and will require cleaning as dictated by solids in the water supply.

Air Compressor: K2A-30V
2 HP, 575V, 60Hz, 3Ph, 8 CFM @ 125 PSI

Belts: Clear Edge Clipper Seam HF7-7040
Upper belt length – 225"
Lower belt length – 344"
Belt width – 47.75"

Note: 30 PSI at 52 GPM supply to inlet, booster pump will increase to 100 PSI

PHOENIX Process Equipment Company
2402 Watterson Trail
Louisville, KY 40299
(502) 499-6198
(502) 499-1079 Fax

SECTION 1 OVERVIEW

SHIPMENT & STORAGE

Shipment and receiving

The PHOENIX Belt Filter Press is thoroughly inspected, tested and prepared for shipment at the factory.

Receiving: When the Belt Filter Press arrives at the site it must be carefully checked for damage or missing items. In the event of either damage or missing parts, write the information on the Bill of Lading and have the carrier acknowledge the damage or missing parts by signing the Bill of Lading. Retain the signed copy in order to file a claim to correct the damage or obtain the missing parts. Failure to properly execute this procedure may result in the carrier denying a valid claim for lack of proper documentation. Notify the PHOENIX Service Department (Tel: (502)-499-6198 Ext. 127) about any problem as soon as it is discovered.

Storing: Observe the following procedures if storage of the PHOENIX equipment is necessary:

1.) Store motors and drive equipment in a dry well ventilated area.

2.) Any surfaces subject to rust such as unpainted steel surfaces and shafts should be coated with a suitable corrosion-inhibiting agent such as Techtyl or LPS #3. If any rust develops, it should be removed immediately and the rust inhibitor reapplied.

3.) Rubber covered parts must be protected from physical damage and kept covered to prevent exposure to the sun. The parts should be stored inside if possible.

4.) If drives are to be stored or there is a shutdown of over 20 days, arrange to turn the input shaft sufficiently or run the drive to move the oil over the internal parts.

5.) Inspect painted surfaces for nicks and or rusting. If damage occurs, clean and repaint the surfaces as required.

SECTION 2



PHOENIX Process Equipment Company
2402 Watterson Trail
Louisville, KY 40299
(502) 499-6198
(502) 499-1079 Fax

Refer to Section 1, pg. 3 for functional names of components.

SECTION 2 EQUIPMENT OPERATION

The air pressure for belt tensioning referenced in this section are preliminary recommendations. Proper tensioning will help avoid damage to the belts by creasing and folding. Adjustments may be required to optimize the dewatering capacity of the PHOENIX Belt Filter Press because of the solids being processed. If there are questions about belt tensioning, contact the PHOENIX Process Equipment Co. Service Department at 502-499-6198 Ext. 127.

STARTUP SEQUENCE

Before starting the PHOENIX Belt Filter Press, the following controls must work properly:

1.) Tracking Sensors must be in proper alignment with the dewatering belts and the tracking arm rollers must not be worn.

2.) The belt tracking and belt tension systems must be leak free. Use soap and water to check for leaks at all the connections.

3.) The Belt Wash piping must be leak free.

4.) All bearings must be properly lubricated and the drive reducer must be filled to the proper level with the manufacturer's recommended lubricant. Both the bearings and the drive are lubricated in the factory prior to shipment.

5.) The doctor blades must be properly adjusted to the belts and must not be worn excessively. The doctor blades are reversible if one side becomes worn.

6.) All emergency and automatic controls must be functioning properly to shut down the Belt Filter Press. Test these controls:

a.) Main air pressure low switch
b.) Belt over travel switch for both the upper and lower belts
c.) Belt break laser switch

If all controls are working properly, commence the initial startup operations as follows:

1. Open the air supply to the control panel and any other air valves in the system. Start the air compressor.

2. Start the belt wash system by starting the belt wash booster pump or by opening the solenoid feeding the belt wash system.

PHOENIX Process Equipment Company
2402 Watterson Trail
Louisville, KY 40299
(502) 499-6198
(502) 499-1079 Fax

SECTION 2 EQUIPMENT OPERATION

STARTUP SEQUENCE

3. Set the pneumatic tension on the universal tension cylinder to 40 PSIG initially.

4. Start the press drive at half speed 50% (30 Hz). This speed may be increased once the process is stable to increase the capacity of the Belt Filter Press.

5. IMPORTANT: The press must run with the belt wash spray systems operating until both belts have passed through the stations at least two times or for two (2) minutes, whichever is longer, so the belts can be thoroughly wet prior to receiving solids. In the automatic mode, a timer will ensure the belts are adequately wetted prior to starting the solids feed.

6. Begin operating the slurry feed pump and set the flow to 50% of the design flow.

7. Begin polymer addition. The polymer feed must be adjusted as required to match the solids feed rate.

8. Monitor the conditions in Gravity Zone to ensure adequate drainage is occurring; the solids should have a "cottage cheese' appearance and the solids must be evenly distributed across the belt.

    a.) Increase the drive speed if the liquid level is rising and drainage is good to increase solids handling capacity.

    b.) Increase the slurry pumps speed gradually in ten-minute intervals until full operation is achieved.

    c.) Increase or decrease the polymer flow rate as required ensuring good flocculation.

PHOENIX Process Equipment Company
2402 Watterson Trail
Louisville, KY 40299
(502) 499-6198
(502) 499-1079 Fax

SECTION 2 EQUIPMENT OPERATION

OPTIMIZATION

After stable operation is established the performance of the Belt Filter Press can be optimized to improve the process.

To Increase Capacity of the Belt Filter Press in Tons/Hour:

1.) Increase the slurry feed flow in 5 GPM intervals and adjust the polymer feed rate until full operating flow is achieved. The belt speed may also have to be increased as flow increases. A higher belt speed will result in a cake with a higher moisture percentage. Maintain a cake thickness of not more than ½" thick at the discharge of the press.

2.) As the solids flow is increased, the level in the feed containment box must be monitored carefully. The possibility of extrusion from the edges of the belts increases as the thickness of the cake increases, the polymer flow is decreased or the tension on the belts is increased.

To Decrease Cake Moisture

1.) Increase belt tension in 5-psi steps. Wait fifteen (15) minutes between adjustments. Do not exceed 62 psi.

2.) Watch for slurry extrusion from the edges of the belts. Increasing belt tension may also cause higher penetration of fine solids into the fabric of the belts. Higher doctor pressure may be required and a slight loss of solids recovery can be expected if this occurs.

3.) Decrease the Belt Filter Press speed in small increments until the liquid level in the Feed Containment Box starts to rise. A slower belt speed usually results in a slightly dryer cake.

.

PHOENIX Process Equipment Company
2402 Watterson Trail
Louisville, KY 40299
(502) 499-6198
(502) 499-1079 Fax

SECTION 2 EQUIPMENT OPERATION

OPTIMIZATION

Optimizing polymer consumption:

1.) Reduce Polymer dosage by 5% at 15-minute intervals.

2.) Watch the flocculation conditions in the gravity zone

3.) If the gravity zone level increases, flocculation is reduced, extrusion from the belts starts occurring or the solids recovery drops below an acceptable level, the polymer must be restored to the previous level.

PHOENIX Process Equipment Company
2402 Watterson Trail
Louisville, KY 40299
(502) 499-6198
(502) 499-1079 Fax

SECTION 2 EQUIPMENT OPERATION

SHUTDOWN SEQUENCE

1.) Reduce feed to the press and begin diluting the solids feed with water. This is required to maintain an even distribution across the width of the belt as the solids percentage drops and to flush the system of retained solids.

IMPORTANT: If the feed is not diluted during the shutdown process, a ridge of solids may form due to unequal distribution and can result in permanent belt damage.

2.) Shut off the polymer pump(s) 10 to 15 seconds prior to stopping solids feed to press.

3.) Shut off the slurry feed pump to the Belt Filter Press. Continue dilution water to flush the remaining solids from the line. Solids remaining in a feed line can cause plugging problems on startup.

4.) Continue to operate the Belt Filter Press with the belt wash sprays operating for 15 minutes or for longer if the belts are not clean.

5.) Reduce the Belt Filter Press drive speed and use the hose to wash down and clean the rollers. Wash down the Belt Filter Press from top to bottom. Be sure to flush out the collection pans and any solids accumulated on any structural members. The cleaner the Belt Filter Press is maintained, the better it will operate.

6.) Shut off the belt wash water.

7.) Stop the Belt Filter Press drive.

8.) Shut off the air isolation valve supplying the press or shut down the air compressor if the Belt Filter Press is not going to be used for an extended period of time.

SECTION 3



PHOENIX Process Equipment Company
2402 Watterson Trail
Louisville, KY 40299
(502) 499-6198
(502) 499-1079 Fax

SECTION 3 ELECTRICAL/CONTROLS

Iqaluit WWTP #0418377

SSUCP-48 (Stainless Steel Universal Control Panel) for Model LC1200LS

1) GENERAL CONTROLS DESCRIPTION

a) Pneumatic/Electric Universal Control Panel (UCP) for a single Belt Filter Press
b) NEMA 4/4X Stainless Skid-Mounted Enclosure
c) 575VAC/3ϕ/60Hz 4-wire Power Service Three phases with isolated ground
d) Fused Safety Disconnect w/lockout
e) IEC Motor Protectors, Contactors, and thermal overload protection
f) Installed controls for the following devices:
    i) Air Compressor FVNR starter
    ii) Belt Wash Water FVNR starter
    iii) Belt Filter Press Variable Frequency Drive
    iv) Sludge Feed Pump Variable Frequency Drive
    v) Polymer Pump SCR Controller
    vi) Cake Conveyor FVNR Starter
    vii) Conveyor Thumper FVNR Starter
g) Circuit Breaker Protection for 575VAC-115VAC Control Power Transformer
h) Master Control Relay
i) Master Control Relay ON Illuminated Push Button
j) Master Emergency Stop Push Button
k) Alarm Horn
l) Alarm Reset Push Button
m) Alarm Silence Push Button
n) Alarm Indicating Lights – 120VAC
o) Surge Suppressor 120VAC for PLC
p) Allen-Bradley Micrologix 1400 PLC
q) AUTO START/STOP Push buttons
r) PRE/POSTWASH Mode Cycle Indicators
s) HAND/OFF/AUTO Selector switches
t) Illuminated RUNNING/HAND START Push Buttons
u) BELT PRESS MAINTENANCE CONTROL - JOG/RUN Selector Switch
v) BELT PRESS MAINTENANCE JOG - REV/OFF/FWD Selector Switch

w) Main air coalescing filter/regulator for belt tracking, tension, and pneumatic control circuit

x) Belt tension pressure adjustment controls with Phoenix gauges

y) Main “LOW AIR” pressure detection switch

z) Belt “TRACKING FAULT” pressure detection switch

aa) Belt "BREAK" laser detection switches

bb) Belt Wash Water “FAULT” pressure detection switch

2) STANDARD PROCESS CONTROL SEQUENCE

a) Visually inspect the press area to be sure it is safe to energize the Universal Control Panel (UCP).

b) Energize the UCP by turning the master disconnect switch to the ON position.

c) At the UCP press the CONTROL POWER - illuminated push button to energize the control power to the panel. The push button will remain illuminated when the MCR is energized. If the MCR fails to energize, check to see that the Emergency Stop push button is pulled out and the pull cords at the Belt Filter Press are pushed in to the reset position.

d) The UCP has HAND/OFF/AUTO control of the Polymer Feed Pump, Belt Wash Water pump, Belt Filter Press, Sludge Feed Pump, and Cake Conveyor.

e) Perform the following steps for AUTO startup routine:

i) Place the Air Compressor selector switch in the ENABLED position. When the air pressure reaches 100 PSI, press the alarm RESET push button to clear the low air pressure fault as indicated by the red MAIN AIR PRESS LOW ALARM light on the front of the enclosure. When this fault is cleared and no other fault conditions exist, you may proceed to the next step.

ii) Place the Belt Wash Water selector switch in the AUTO position.

iii) Place the Belt Filter Press selector switch in the AUTO position.

iv) Place the Sludge Feed Pump selector switch in the AUTO position.

v) Place the Polymer Feed Pump selector switch in the AUTO position.

vi) Place the Cake Conveyor selector switch in the AUTO position.

vii) Place the BELT FILTER PRESS MAINTENANCE - JOG/RUN selector switch in the RUN position.

3) **To Initiate an Auto Start Press the AUTO START push button. The system will begin a cascade start in the following order**

   a) The Alarm Horn will pulse for 10 seconds signaling an automatic startup is in progress.

   b) The BELT WASH WATER PUMP will start running after the horn stops.

   c) The CAKE CONVEYOR will start.

   d) The BELT FILTER PRESS (BFP) will start.

   e) The system will be in PREWASH MODE. This should be set for approximately two minutes to allow for pre-wetting of the filter belts and allow the tracking and tension systems to stabilize. The PREWASH CYCLE - PRESS TO TEST PILOT LIGHT will flash during this cycle and remain on when PREWASH CYCLE is complete. (See OPERATOR ADJUSTMENTS to adjust the length of this cycle)

   f) The SLUDGE FEED PUMP and POLYMER FEED PUMP will start after the PREWASH CYCLE is complete and sludge will be delivered to the BFP. The system will continue to dewater sludge as long as sludge is delivered to the BFP, the polymer dosage is correct and there are no faults.

4) **To Initiate an Auto Stop Press the AUTO STOP push button. The system will begin a cascade stop in the following order**

   a) The SLUDGE FEED PUMP and POLYMER FEED PUMP signals will stop immediately.

   b) The POSTWASH CYCLE - PRESS TO TEST PILOT LIGHT will flash during the POSTWASH CYCLE.

   c) The POSTWASH CYCLE should be set for 30 minutes or greater, to allow the remaining SLUDGE to be processed through the BELT FILTER PRESS.

   d) The BELT WASH WATER PUMP will continue running to continue cleaning the belts during this cycle.

   e) The OPERATOR may hose down and clean up the area during this cycle. All material should be cleaned from the BFP. The cleaner a BFP is, the better it runs.

   f) After the PRESS has stopped the BELT WASH WATER PUMP and the CAKE CONVEYOR will stop.

g) POSTWASH CYCLE is now complete and the system is ready to begin a new cycle.

5) FAULTS

a) When an alarm occurs in the system, pressing the ALARM SILENCE PushButton can silence it. If the alarm is not corrected, the system will sound a nuisance alarm chirp of the horn. This will chirp every 5 minutes until he alarm is cleared. Once the fault has been corrected, the operator presses the ALARM RESET pushbutton to clear the fault and then presses the AUTO START pushbutton to initiate a restart of the BFP. The system alarm horn will sound with each new system alarm. Each new alarm must be silenced and the operator must take the necessary steps to correct the alarm.

b) In the event the Belt Filter Press has a belt tracking or belt tension fault, the belt press will stop, causing the Sludge Feed Pump and Polymer Feed Pump to stop. The Belt Wash Water will continue running. If the fault will be cleared quickly, the Belt Wash Pump may continue running. However, if the fault will take some time to correct, the pump should be shut down to avoid damaging the belts by continuously impinging the belt wash water at a single spot on the belt.

   i) To correct a belt tracking fault, the operator must place the BELT PRESS MAINTENANCE CONTROL - JOG/RUN selector switch in the JOG position, then jog the belts forward and/or reverse using the BELT PRESS MAINTENANCE BELT JOG - REV/OFF/FWD selector switch until tracking is restored. Reverse jogging of the belt must be done slowly (12 Hz recommended) and carefully since the tracking mechanism works in reverse when running backwards. The operator then places the JOG/RUN selector switch in the RUN position. The operator must press the ALARM RESET pushbutton to clear the fault and then press AUTO START. This will restart the cycle of operation and the Prewash cycle should be long enough to clean up residual sludge left on the belts when the fault occurred.

c) Each piece of equipment may be started by placing the HOA switch in HAND and pressing the START pushbutton. The START pushbuttons have no effect in AUTO mode. The safety interlocks will remain operational to protect the operator and/or the equipment but the process interlocks are overridden in this mode. While the entire system can be run in HAND all devices must be in AUTO to run the system in AUTO mode. To fully run the system an operator would start the Compressor, the Belt Filter Press, and the Booster Pump. After the belts are wetted and the tracking system has stabilized the operator would start the sludge feed pump and the polymer system. The speed of the Press, the Sludge Pump, and Polymer Pump would then be adjusted to meet process requirements.

6) OPERATOR ADJUSTMENTS

a) The PLC uses timers for Pre-wash, Post-wash, and conveyor cascade start delays.

b) The times are preset to typical application values. However, these values may be changed using the control panel touchscreen system if necessary. The values are listed in the table below:

TIME VALUES
PRE-WASH Time Delay = 120
POST-WASH Time Delay = 600
CONVEYOR Time Delay = 10

7) STANDARD SPECIFICATIONS

a) Power requirements are 460Vac 3Φ 60Hz. The three Φ power and an isolated ground must be provided to the line side of the main disconnect from a four-wire connection. This four wire connection should originate from a customer supplied isolated transformer power supply and should be free from noise, surges, and brownouts to ± 10%. Failure to supply power with these characteristics can lead to failure of the VFD drives.

b) A master disconnect rated for the full load current expected in normal service will be installed on the cabinet front. The operating handle is interlocked to the door so that the power must be off to gain entry to the cabinet interior.

c) A mushroom head Emergency Stop palm switch will be provided in a prominent place on the cabinet face. This switch is of the maintained position type and requires manual reset.

Actuation of the switch will result in a loss of control power, which will stop all equipment controlled from this panel.

d) All operator devices will be, 30mm, NEMA 4X rated devices.

e) All wiring will be done in a neat and professional manner and will be run between devices in Panduit or equivalent wire duct. Where space limitations prohibit duct, all wires will be laced into neat bundles with the bundles and tied to the enclosure with panel cleats to prevent movement of the harness in service. All wires will have computer generated label numbers on each end of the conductor agreeing with the diagram supplied with the control in accordance with JIC Industrial Control specifications. All wiring in the UCP will be a minimum AWG #16 stranded copper conductors with type MTW insulation and will terminate at screw and pressure plate connectors. All terminal points will have a computer engraved marking strip showing the wire number and corresponding tie point. The owner shall provide Twenty percent spare terminals for use.

f) All work shall be in full compliance with the latest version of the National Electric Code and Local and State Codes and will be accomplished using only UL/CUL listed components. When a conflict between codes exists, the NEC will prevail.

g) All pilot operator devices will have engraved ring tags affixed under the mounting ring. These tags shall be white lamacoid with computer engraved black phenolic letters except for the Emergency Stop pushbutton which will have be a red background with white letters.

h) A set of schematic diagrams will be provided in each enclosure describing the Wiring and Layout for the UCP enclosure. The drawing will show wiring and function for all components associated with the system using Standard JIC drafting symbols.

i) All equipment will be completely checked out and tested prior to shipment. This will include a test of all safety devices, switches, lights, relays and other components. A re-check of the safety devices should be performed after installation of the equipment on site to verify proper operation.

TAB 1



PHOENIX

PHOENIX

5/14/2019 10:23 AM

MANUFACTURER'S DATA FOR BFP SKID

1) ENCLOSURE

i) Hoffman Stainless Steel Enclosure 48” x 36” x 12”

Hoffman®
A Pentair Company

Stainless Steel Type 4X Enclosures



Application

Provides unmatched protection for housing electrical components in highly corrosive environments. This enclosure is used in indoor and outdoor settings that are frequently wet or have constant exposure to water, other liquids, or contaminants.

A wide variety of Type 316L stainless steel enclosures are available specifically for applications in food processing plants and offshore oil exploration.

Construction

- 14 gauge Type 304 or Type 316L stainless steel bodies and doors
- Seams continuously welded and ground smooth, no holes or knockouts
- Seamless foam-in-place gasket assures watertight and dust-tight seal
- Body stiffener in larger enclosures for extra rigidity
- Rolled lip around three sides of door and all sides of enclosure opening excludes liquids and contaminants
- Stainless steel door clamp assembly assures watertight seal
- Hasp and staple for padlocking
- Door removed by pulling stainless steel continuous hinge pin
- Data pocket is high impact thermoplastic
- Collar studs provided for mounting optional panels
- Exterior hardware on Type 316L stainless steel enclosures matches enclosure material

Finish

Enclosures are unpainted. Cover, sides, top, and bottom have smooth brushed finish.

Industry Standards

UL 508, File No. E61997: Type 4, Type 4X, and Type 12
NEMA/EEMAC Type 3, Type 4, Type 4X, Type 12, and Type 13
JIC standard EGP-1-1967
CSA File No. LR42186: Type 4, Type 4X, and Type 12
IEC 60529, IP66

Accessories

See General Accessories index

Electrical Interlocks
Fast Operating Clamp Assembly
Lighting Packages
Panel Support Kit
Panels (See order number table)
Rack Mounting Angle Kit
Swing-Out Panel Kit
Terminal Kit Assembly
Window Kit

Modification Services™ Program

You can customize this product to your unique requirements by specifying from these options:

- Enclosure height, width, depth
- Holes and cutouts in body, doors, subpanels
- Tapped holes, fasteners, mounting channel in enclosure and subpanel
- Mounting (adds and deletes)
- Doors
- Subpanels
- Thermal management (louvers, fans, filters)
- Windows
- Standard accessories
- Drip shield

For details, see Modification Services at hoffmanonline.com.
To order, contact your local Hoffman sales representative.

©2000 Hoffman Enclosures Inc.

Stainless Steel Type 4X Enclosures

Standard Sizes Stainless Steel Type 4X Enclosures (Cont.)

Catalog Number Type 304	Catalog Number Type 316L	Enclosure Size A x B x C	* Steel Panel Catalog Number	* Stainless Steel Panel Catalog Number	Panel Size D x E	F	Clamps qty	Data Pocket	Stiffener Body
A-36H2408SSLP	A-36H2408SS6LP	36.00 x 24.00 x 8.00 (914 x 610 x 203)	A-36P24	◊ A-36P24SS6	33.00 x 21.00 (838 x 533)	3.00 (76)	5	Large	—
A-36H3008SSLP	A-36H3008SS6LP	36.00 x 30.00 x 8.00 (914 x 762 x 203)	A-36P30	A-36P30SS6	33.00 x 27.00 (838 x 686)	3.00 (76)	7	Large	—
A-42H3608SSLP	A-42H3608SS6LP	42.00 x 36.00 x 8.00 (1067 x 914 x 203)	A-42P36	◊ A-42P36SS6	39.00 x 33.00 (991 x 838)	3.00 (76)	8	Large	1
A-48H3608SSLP	A-48H3608SS6LP	48.00 x 36.00 x 8.00 (1219 x 914 x 203)	A-48P36	A-48P36SS6	45.00 x 33.00 (1143 x 838)	3.00 (76)	8	Large	1
A-20H1610SSLP	A-20H1610SS6LP	20.00 x 16.00 x 10.00 (508 x 406 x 254)	A-20P16	A-20P16SS6	17.00 x 13.00 (432 x 330)	3.00 (76)	4	Small	—
A-24H2010SSLP	A-24H2010SS6LP	24.00 x 20.00 x 10.00 (610 x 508 x 254)	A-24P20	A-24P20SS6	21.00 x 17.00 (533 x 432)	3.00 (76)	5	Small	—
—	A-30H2410SS6LP	30.00 x 24.00 x 10.00 (762 x 610 x 254)	A-30P24	A-30P24SS6	27.00 x 21.00 (686 x 533)	3.00 (76)	5	Large	—
A-36H2410SSLP	A-36H2410SS6LP	36.00 x 24.00 x 10.00 (914 x 610 x 254)	A-36P24	◊ A-36P24SS6	33.00 x 21.00 (838 x 533)	3.00 (76)	5	Large	—
A-36H3010SSLP	A-36H3010SS6LP	36.00 x 30.00 x 10.00 (914 x 762 x 254)	A-36P30	A-36P30SS6	33.00 x 27.00 (838 x 686)	3.00 (76)	7	Large	1
A-42H3010SSLP	A-42H3010SS6LP	42.00 x 30.00 x 10.00 (1067 x 762 x 254)	A-42P30	◊ A-42P30SS6	39.00 x 27.00 (991 x 686)	3.00 (76)	8	Large	1
—	A-48H3610SS6LP	48.00 x 36.00 x 10.00 (1219 x 914 x 254)	A-48P36	A-48P36SS6	45.00 x 33.00 (1143 x 838)	3.00 (76)	8	Large	1
A-24H2412SSLP	A-24H2412SS6LP	24.00 x 24.00 x 12.00 (610 x 610 x 305)	A-24P24	A-24P24SS6	21.00 x 21.00 (533 x 533)	3.00 (76)	5	Small	—
A-30H2412SSLP	A-30H2412SS6LP	30.00 x 24.00 x 12.00 (762 x 610 x 305)	A-30P24	A-30P24SS6	27.00 x 21.00 (686 x 533)	3.00 (76)	5	Large	—
A-36H3012SSLP	A-36H3012SS6LP	36.00 x 30.00 x 12.00 (914 x 762 x 305)	A-36P30	A-36P30SS6	33.00 x 27.00 (838 x 686)	3.00 (76)	7	Large	1
A-36H3612SSLP	A-36H3612SS6LP	36.00 x 36.00 x 12.00 (914 x 914 x 305)	A-36P36	◊ A-36P36SS6	33.00 x 33.00 (838 x 838)	3.00 (76)	7	Large	1
A-48H3612SSLP	A-48H3612SS6LP	48.00 x 36.00 x 12.00 (1219 x 914 x 305)	A-48P36	A-48P36SS6	45.00 x 33.00 (1143 x 838)	3.00 (76)	8	Large	1
A-60H3612SSLP	A-60H3612SS6LP	60.00 x 36.00 x 12.00 (1524 x 914 x 305)	A-60P36	◊ A-60P36SS6	57.00 x 33.00 (1448 x 838)	3.00 (76)	9	Large	1
A-30H2416SSLP	A-30H2416SS6LP	30.00 x 24.00 x 16.00 (762 x 610 x 406)	A-30P24	A-30P24SS6	27.00 x 21.00 (686 x 533)	3.00 (76)	5	Large	—
A-36H3016SSLP	A-36H3016SS6LP	36.00 x 30.00 x 16.00 (914 x 762 x 406)	A-36P30	A-36P30SS6	33.00 x 27.00 (838 x 686)	3.00 (76)	7	Large	1
A-48H3616SSLP	A-48H3616SS6LP	48.00 x 36.00 x 16.00 (1219 x 914 x 406)	A-48P36	A-48P36SS6	45.00 x 33.00 (1143 x 838)	3.00 (76)	8	Large	1
—	A-60H3616SS6LP	60.00 x 36.00 x 16.00 (1524 x 914 x 406)	A-60P36	◊ A-60P36SS6	57.00 x 33.00 (1448 x 838)	3.00 (76)	9	Large	1

Millimeter dimensions ( ) are for reference only; do not convert metric dimensions to inch.

* Panels must be ordered separately. Optional aluminum and composite panels are available for many sizes. See General Accessories.

©2000 Hoffman Enclosures Inc.

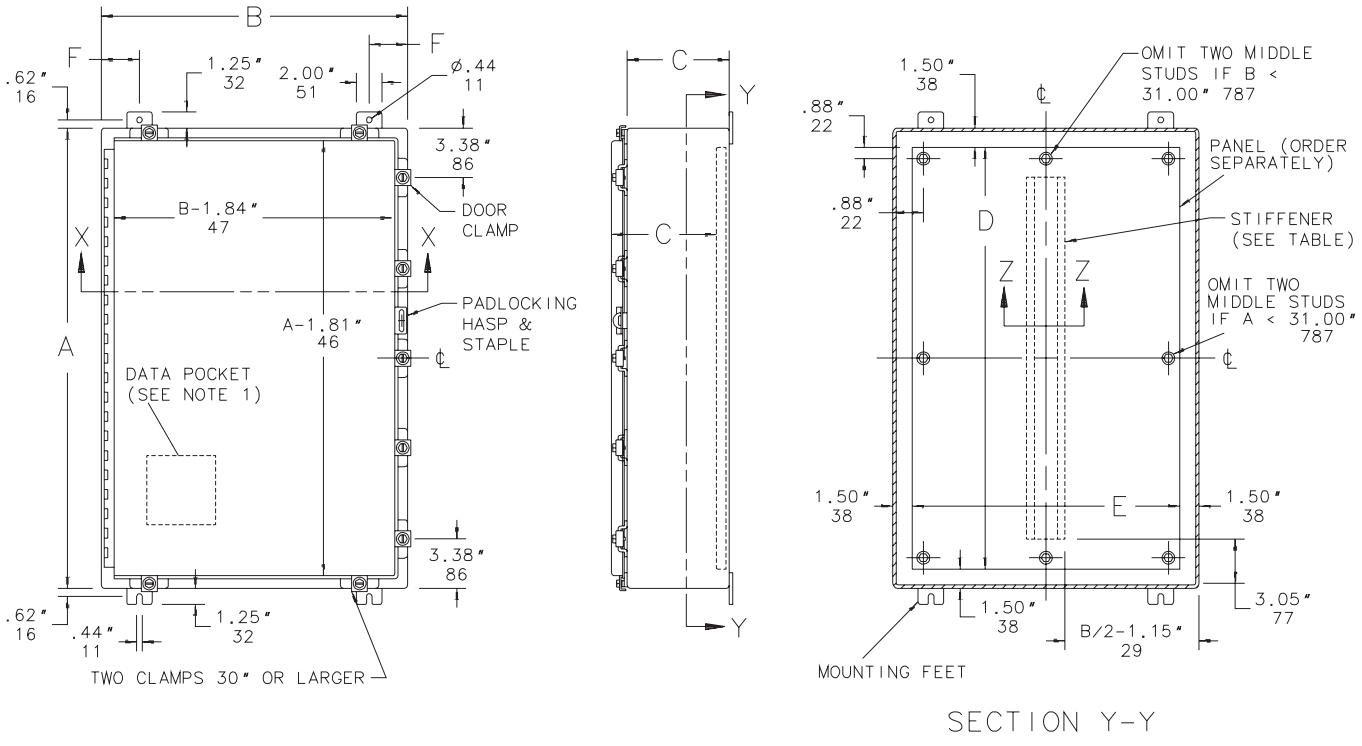

NOTE:
1. Removable data pocket included (see table for size). Large data pocket 12.00x1200 (305x305); small data pocket 6.00x6.00 (152x152). Large data pocket furnished if A=30.00 (762) or more and B=20.00 (508) or more.
2. Maximum spacing between door clamps is 15.00 inches (382mm).
3. Panels more than 21.00 inches (533mm) long have flanges along sides, except A-24P20 which has flanges on two sides.

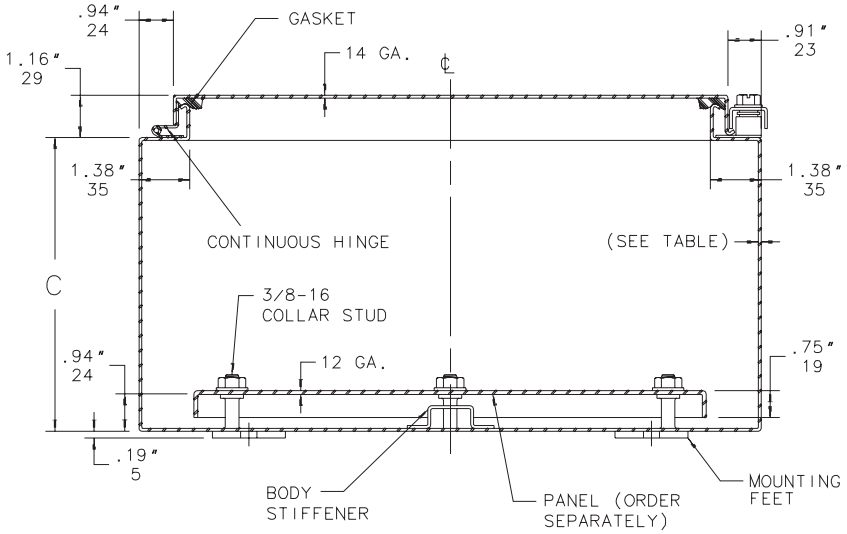

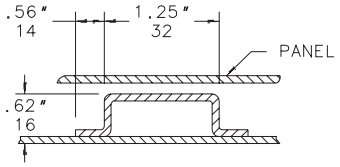

C2542

Inch
Millimeter

 ©2000 Hoffman Enclosures Inc.

TAB 2



PHOENIX

2) PNEUMATICS

i) Coalescing Filter
ii) Panel Regulator
iii) Gauges
iv) Lubricator
v) Pressure Switches



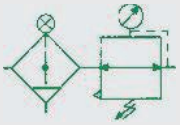

ANSI SYMBOL

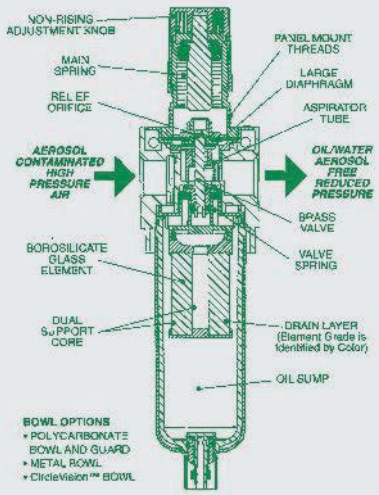

Coalescing Filter/Regulator

C14, C22, C32, C42 Series

- Four convenient sizes
- Cartridge element design
- Inner/outer support cores prevent element from crushing in either flow direction
- Connects easily to FLEXIBLOK® Modular system
- Four element grades available

Recommended Uses

C grade element, identified by its blue drain layer, is a coarse filter for large amounts of water, rust, pipe scale, and liquid hydrocarbons. Excellent for environments that have severe contamination. Can be used for lubricated or 'dry' systems. Ideal for mainline filtration of plant air.
D grade element, identified by its green drain layer, is a fine filter for cylinder or valves - especially when the circuit is being run without lubrication ('dry'). Excellent filter for desiccant or regenerative style dryers.
E grade element, identified by its red drain layer, is an ultra fine filter for oil-free instrumentation air, blow molding, food and drug packaging, electronics applications, and other applications requiring maximum contamination removal.
F grade element, identified by its white drain layer, is an adsorbing filter that utilizes activated carbon to capture hydrocarbon vapor and deodorize compressed air. Typically it is used to protect worker environments, food and drug applications, breathing air, and instrumentation for analytical instruments. Life expectancy is approximately 3 months at rated flow.

Specifications

BOWL	POLYCARBONATE BOWL	CIRCLEVISION™ BOWL	METAL BOWL
Temperature Range (°F)	40-120	40-120	40-120
Temperature Range (°C)	4-50	4-50	4-50
Max. Pressure (PSIG)	150	250	200
Max. Pressure (BAR)	10	17	14
14 Series (Weight, lbs.)	0.80	0.95	0.85
14 Series (Weight, kg)	0.35	0.43	0.38
22 Series (Weight, lbs.)	0.92	1.20	1.60
22 Series (Weight, kg)	0.42	0.55	0.73
32 Series (Weight, lbs.)	1.82	2.35	2.95
32 Series (Weight, kg)	0.83	1.07	1.34
42 Series (Weight, lbs.)	5.05	5.50	6.15
42 Series (Weight, kg)	2.29	2.49	2.79

How to Order

C 32 C - 06 AGNQ

Model
C = Coalescer/Regulator

Series
14 = 1.5 oz Bowl
22 = 3.8 oz Bowl
32 = 8.5 oz Bowl
42 = 8.5 oz Bowl

Element
C = 0.7 Micron Coarse Coalescer
D = 0.3 Micron Fine Coalescer
E = 0.01 Micron Ultra Fine Coalescer
F = Vapor Adsorber

Threads
- = NPTF
G = G Tap (BSPP) (Conforms to ISO Standards 1179-1 and 228-1)
R = PT (BSPT)

Port Size
01 = 1/8 (14 series only)
02 = 1/4 (14 or 22 series only)
03 = 3/8 (22 series only)
04 = 1/2 (22 or 32 series only)
06 = 3/4 (32 or 42 series only)
08 = 1 (42 series only)

Options
A* = Auto Drain (22, 32, and 42 series)
B = Flexible Drain
C = CircleVision™ Sight Bowl
D = 3 Micron, Internal Pleated Filter
G = Gauge
H* = 0-200 PSIG Output
I = 0-25 PSIG Output
J = External Pulse Drain
L = 0-60 PSIG Output
M = Metal Bowl with Sight Glass
N = Non-Relieving
P = Panel Mount Nut
Q = Metal Manual Drain
R = Manual Lever Drain
S = Steel T Handle (42 Series)
T = Tamper Resistant
V = Shut Off Valve

*'A' and 'H' options cannot be used together.

Note: To order a piston style coalescing/regulator, add "P" to the model number. (ie: C32CP-06AGQ)

NEED MORE PARTS AND INFORMATION?

• *See page 36 for* more information on available drain options.
• *See pages 37 & 38 for information on ordering replacement parts.*

Information subject to change without notice. For ordering information or regarding your local sales office visit www.numatics.com.

Miniature General Purpose Regulators

R07, R46

R07 General purpose

Snap action knob locks pressure setting when pushed in

Standard relieving models allow reduction of outlet pressure even when the system is dead-ended

R46 Non-repairable

Wrench flats for easy installation

Relieving piston design allows reduction of downstream pressure when the system is dead-ended

Choice of left to right or right to left flow



R07



R46

Technical data

R07

Fluid:

Compressed air

Maximum pressure:

300 psig (20 bar)

Operating temperature:

-34° to 150°F (-35° to 65°C) *

* Air supply must be dry enough to avoid ice formation at temperatures below 2°C (35°F).

R46

Fluid:

Compressed air

Maximum pressure:

250 psig (17 bar)

Operating temperature*:

-30° to 150°F (-34° to 65°C)

*Air supply must be dry enough to avoid ice formation at temperatures below 35°F (2°C).

Materials

R07

Body: zinc

Bonnet: acetal

Knob: Acetal

Valve seat: acetal

Elastomers: nitrile

R46

Body: zinc

Knob: nylon

Valve: nitrile compound

Valve seat: acetal

Elastomers: nitrile

ISO Symbols

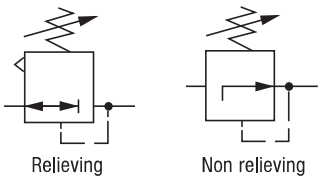

Relieving Non relieving

Ordering Information

Port Size	Model	Flow† scfm (dm3/s)	Weight lb (kg)
1/8"	R07 100 RGKA	14 (6.5)	0.31 (0.19)
1/4"	R07 200 RGKA	15 (7)	0.31 (0.19)
1/4"	R46 200 RGLA	13 (6)	0.2 (0.09)

* Air supply must be dry enough to avoid ice formation at temperatures below 35°F (2°C)

† Typical flow with 150 psig (10 bar) inlet pressure, 90 psig (6.3 bar) set pressure and 15 psig (1 bar) droop from set.

Alternative Models

R07 ★00 ★★★★

Port Size	Substitute
1/8"	1
1/4"	2

Diaphragm	Substitute
Relieving	R
Non relieving	N

Gauges	Substitute
With	G
Without	N

Threads	Substitute
PTF	A
ISO G parallel	G

Outlet Pressure Adjustment Ranges*	Substitute
1 to 10 psig (0,1 to 0,7 bar)	A
5 to 50 psig (0,3 to 3,5 bar)	E
5 to 100 psig (0.3 to 7 bar)	K
5 to 125 psig (0.3 to 8.6 bar)	L

R46-★★★-R★★★

Port Size	Substitute
1/4"	2

Flow Direction With Knob Up and Gauge Visible	Substitute
Left to Right	00
Right to Left	02

Gauges	Substitute
With	G
Without	N

Threads	Substitute
PTF	A
ISO G parallel	G

Outlet Pressure Adjustment Ranges*	Substitute
5 to 50 psig (0.3 to 3.5 bar)	E
5 to 125 psig (0.3 to 8.5 bar)	L
5 to 150 psig (0.3 to 10 bar)	M

* Outlet pressure can be adjusted to pressures in excess of, and less than, those specified. Do not use these units to control pressures outside of the specified ranges.

Miniature General Purpose Regulators

R07, R46

Dimensions in inches (mm).

Panel mounting hole diameter 1.19" (30 mm)
Maximum panel thickness 0.25" (6 mm)

R07

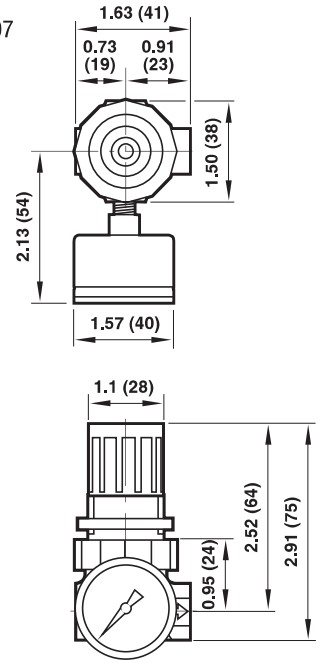

All Dimensions in Inches (mm)

Typical Performance Characteristics

R07

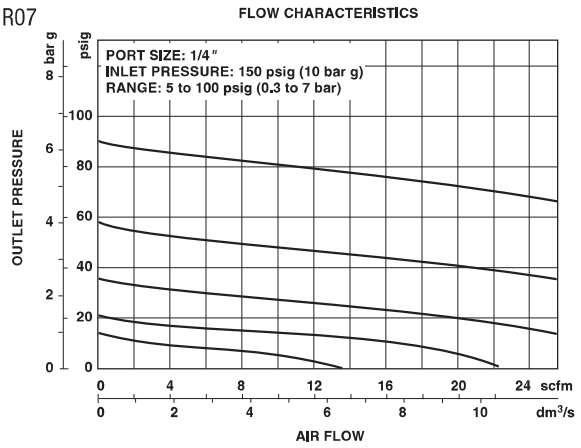

R07 Service Kits

Item	Type	Part number
Service kit	Relieving	3407-02
	Non relieving	3407-01

Service kit includes slip ring, diaphragm, standard valve seat with o-ring, valve, valve spring.

R46

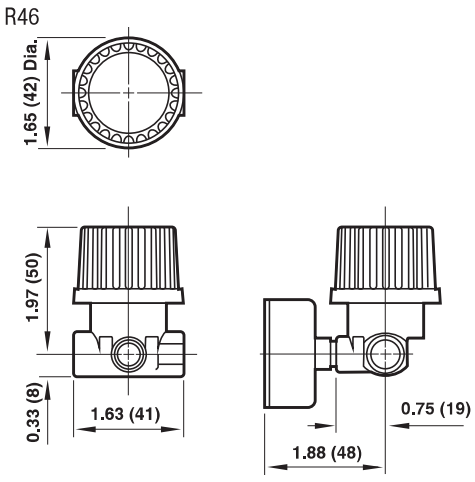

Typical Performance Characteristics

R46

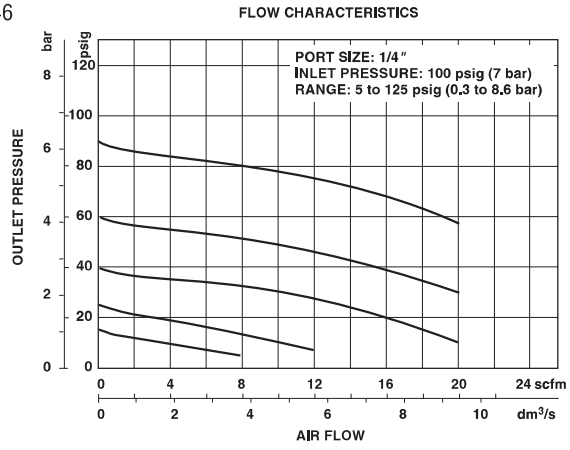

NOSHOK Selection, Installation & Maintenance Guide

Pressure Gauge Series 100, 200, 300, 400, 500, 600, 700, 800 and 900

Installation

Prior to pressure gauge installation, the following conditions should be considered: temperature, humidity, vibration, pulsation, shock, and other climatic and environmental conditions of the application, as well as the potential need for protective accessories and/or special installation requirements.

Always use a wrench on the gauge socket when installing a NOSHOK pressure gauge into position; never use force on the gauge case to tighten into position. This may result in a loss of accuracy, excessive friction and/or mechanical damage to the measuring element and case of the NOSHOK pressure gauge. When surface or panel mounting a gauge, be sure the surface is flat and the panel cutout and/or the mounting hole configuration is correct (please refer to the NOSHOK Pressure Gauge catalog NK95G for these specifications). If the surface is uneven or the panel cutout is larger than the gauges diameter, use an adapter ring to remove mounting strain and/or adapt the gauge to the larger diameter panel cutout. When connecting a gauge to a rigid pipe service, use flexible tubing where possible as a connector to eliminate plumbing strain. Rapid pressure pulsation and extreme mechanical vibration may be damaging to some NOSHOK pressure gauge movement gearing, bushings, and linkage. In extreme cases, steps should be taken to dampen these forces. In pressure ranges over 600 psi, a NOSHOK orifice is recommended for pulsation dampening, but in extreme pulsation applications a NOSHOK Piston Type Pressure Snubber may be required.

When installing a gauge into a corrosive situation be sure to select a pressure gauge or pressure gauge and diaphragm seal combination suitable for your application. Gauges to be used on high temperature service should have a five foot or longer leg of pipe or tubing connecting the gauge to dissipate heat and protect the gauge measuring element from damage. A gauge to be used on steam pressure service should be installed with a water filled NOSHOK pigtail steam syphon between the gauge and the steam line.

Maintenance

Apart from occasional calibration, NOSHOK pressure gauges require little or no maintenance. Some applications may be more aggressive than others, resulting in an increased frequency in the need for calibration. The environmental limitations for the specific NOSHOK pressure gauge series should be observed in all cases, and gauges applied in situations outside these requirements may result in premature wear and/or failure of the gauge.

Warranty

All NOSHOK pressure gauges carry a one or three year warranty. NOSHOK warrants for three years our 300, 500, 600, and 700 series liquid filled pressure gauges to be free from defects in materials and workmanship, to remain within the cataloged accuracy and performance specifications, and to maintain the integrity of the hermetically sealed case preventing leakage. NOSHOK warrants for one year our 100, 200, 400, 600, 700, 800, and 900 series non-liquid filled pressure gauge. Certain limitations do apply; for more information please consult page three of the NOSHOK Pressure Gauges catalog (NK95G).

Please do not hesitate to contact us with any additional questions.

The Instrumentation Company

NOSHOK INCORPORATED

1010 WEST BAGLEY ROAD
BEREA, OHIO 44017
440/243-0888 FAX 440/243-3472
E-MAIL: noshok@noshok.com
WEBSITE: www.noshok.com

CAUTION:

Operating conditions including, but not limited to, system pressure, media compatibility and ambient conditions must be considered when selecting gauges and accessories. Improper selections and use of gauges could possibly cause gauge failure and lead to possible property damage or person injury Refer to American National Standard ANSI B40.1 for the correct selection and use of gauges. A copy of this standard may be obtained from the American Society of Mechanical Engineers, United Engineering Center 345 East 47th Street, New York, NY 10017.

WARNING:

Glycerine or silicone could result in a spontaneous chemical reaction or explosion when combined with strong oxidizing agents including (but not limited to) chlorine, hydrochloric or nitric acid and hydrogen peroxide. Do not use glycerine or silicone filled gauges or accessories in these types of service. Consult factory for application assistance.

In keeping with and for the purposes of product and/or manufacturing improvements, NOSHOK, INC. reserves the right to make design changes without prior notice.



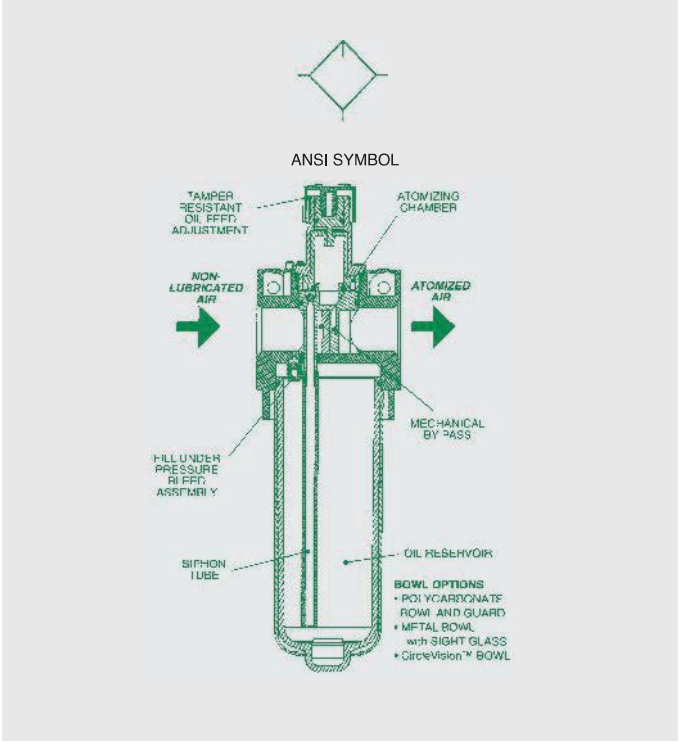

Lubricator

L14L, L22L, L32L, L42L Series

- Four convenient sizes
- Lubrication to begin at 2 SCFM
- Can be filled under pressure (32 and 42 series only)
- Tamper-resistant knob standard
- Optional CircleVision™ sight bowl
- Optional metal bowl with sight glass
- Can be mounted as individual or modular unit
- Button head fill optional on all sizes
- Atomizing chamber develops longer life aerosols

Specifications

	14 SERIES	22 SERIES	32 SERIES	42 SERIES
Temperature Range (°F)	40-120	40-120	40-120	40-120
Temperature Range (°C)	4-50	4-50	4-50	4-50
Max. Pressure (PSIG)	200	200	200	200
Max. Pressure (BAR)	14	14	14	14
Weight (lbs.)	0.60	0.69	1.37	4.15
Weight (kg)	0.27	0.31	0.62	2.18
Body Material	Zinc	Aluminum	Aluminum	Aluminum

How to Order

L 22 L - 02 CF

Model
L = Lubricator

Series
14 = 1.5 oz Bowl
22 = 3.8 oz Bowl
32 = 8.5 oz Bowl
42 = 8.5 oz Bowl

Style
L = Standard Lubricators

Threads
- = NPTF
G = G Tap (BSPP) (Conforms to ISO Standards 1179-1 and 228-1)
R = PT (BSPT)

Options
C = CircleVision Sight Bowl
F = Button Head Fill
K = Drain on Bowl
M = Metal Bowl with Sight Glass

Port Size
01 = 1/8 (14 series only)
02 = 1/4 (14 or 22 series only)
03 = 3/8 (22 series only)
04 = 1/2 (22 or 32 series only)
06 = 3/4 (32 or 42 series only)
08 = 1 (42 series only)

Note: F and K options cannot be used together.

NEED MORE PARTS AND INFORMATION?
- *See pages 37 & 38* for information on ordering replacement parts.

Information subject to change without notice. For ordering information or regarding your local sales office visit www.numatics.com.



14 Series Lubricator



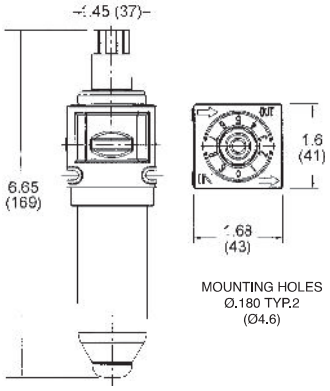

L14L-02 (14 Series Lubricator)

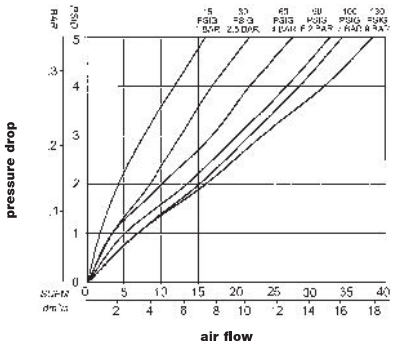

22 Series Lubricator



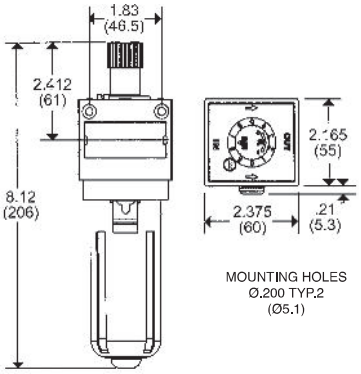

L22L-04 (22 Series Lubricator)

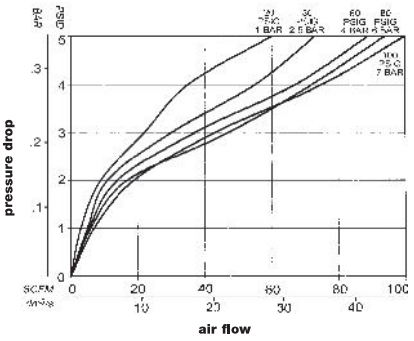

32 Series Lubricator



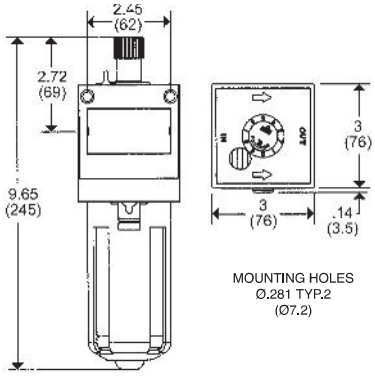

L32L-06 (32 Series Lubricator)

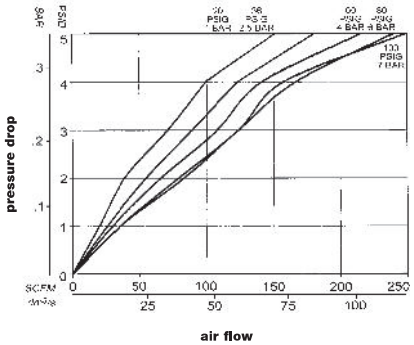

42 Series Lubricator



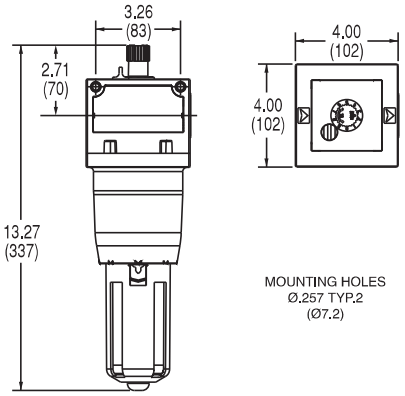

L42L-06 (42 Series Lubricator)

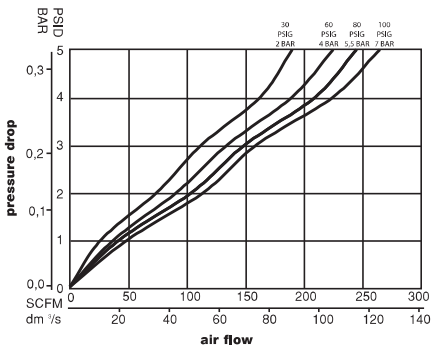

Figure M - 1/8" NPT 9/16" - 18 Mounting Thread

- Pressure Switch
- Vacuum Switch
- Mount: Use 9/16" - 18 Nut
- Thread and body are plastic
- SPDT, DPDT

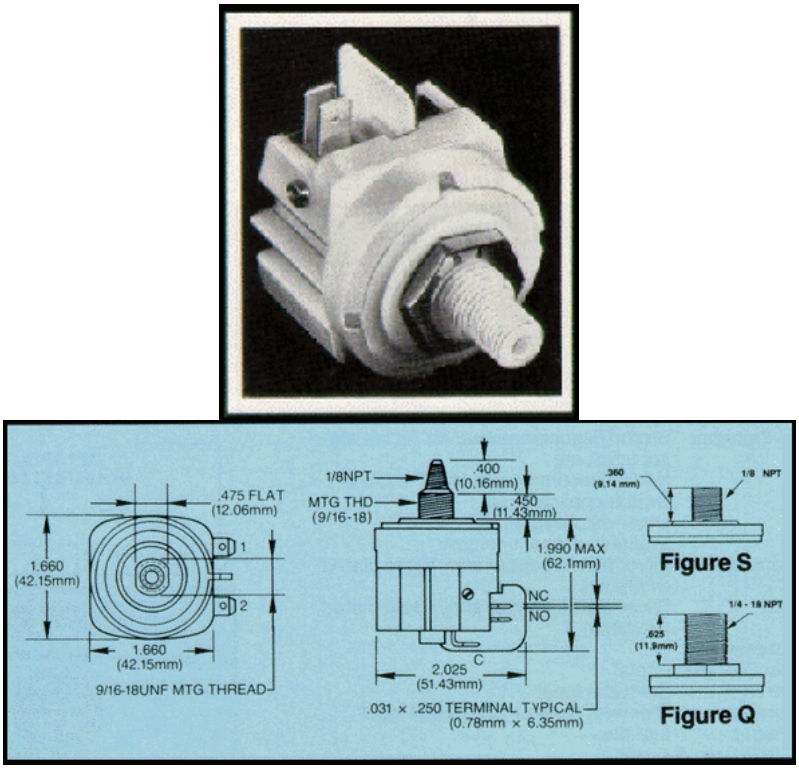

PRESSURE SWITCHES

Pressure Switch - ("P" Series) Microswitches are in the open state before actuation point is reached.

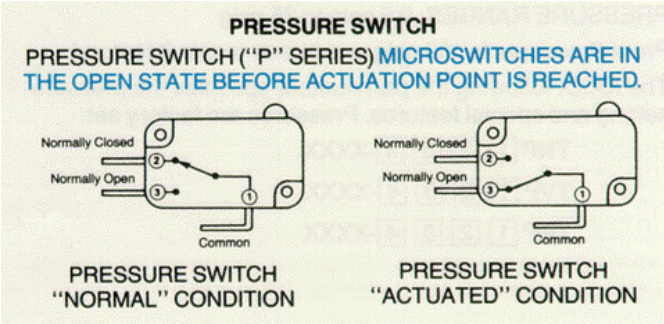

TAB 3



PHOENIX

3) OPERATORS

i) Allen-Bradley 800H series (IOM only)



Bulletin 800T/800H 30.5 mm Push Buttons

- 30.5 mm Mounting Hole
- Type 4/13 Watertight/Oiltight (800T)
- Type 4/4X/13 Corrosion-Resistant/Watertight/Oiltight (800H)
- Heavy Industrial Stations and Operators

Table of Contents

Specifications 17
Product Selection 19
Modifications and Accessories 46
Approx. Dimensions 65

Certifications

- UL Listed — File: E14840, E10314, Guide: NKCR, NOIV
- CSA Certified: LR1234, LR11924
- CE Compliant IEC: 60947-5-1

Specifications ❶

Electrical Ratings		
Contact ratings		Refer to the contact ratings tables below.
Dielectric strength		2200V for one minute, 1300V for one minute (Logic Reed)
Electrical design life cycles		1,000,000 at max. rated load, 200,000 at max. rated load (Logic Reed)
Mechanical Ratings		
Vibration		10…2000 Hz 1.52 mm displacement (peak-to-peak) max./10 G max. (except Logic Reed)
Shock		1/2 cycle sine wave for 11 ms ≥ 25 G (contact fragility) and no damage at 100 G
Degree of protection		Type 1/4/12/13 (800T); Type 1/4/4X/12/13 (800H); IEC 529 IP66/65
Mechanical design life cycles		
Push buttons	(Momentary, non-illuminated)	10,000,000 min.
	(Momentary, illuminated)	250,000 min.
	(Push-pull/twist-to-release)	250,000 min.
Selector switches	(Non-illuminated)	1,000,000 min.
	(Illuminated, key-operated)	200,000 min.
Potentiometers		100,000 min.
All other devices		200,000 min.
Contact operation		Shallow, mini, and low voltage contact blocks: Slow, double make and break Logic Reed and sealed switch contact blocks: Single break magnetic
Wire guage/Terminal screw torque		#18-12 AWG/6…8 lb-in
Typical operating forces		
Operators without contact blocks		Flush, extended, standard mushroom, jumbo plastic mushroom button: 2 lbs max. Jumbo and extended aluminum mushroom head: 3.95 lbs max. Maintained selector switch: 3.6 in. lbs max.
Spring return selector switches		3.6 in.-lbs to stop, 0.2 in.-lbs to return
Illuminated push buttons and push-to-test pilot lights		5 lbs max.
2-position push-pull		7.5 lbs max. push or pull
3-position push-pull		8 lbs max. push to **in** position or pull to **center** position (15 lbs max. pull to **out** position)
Twist-to-release or push-pull		9 lbs max. push or pull 30 in. oz. max. twist, 6 in. oz. minimum return
Potentiometer		Rotational torque 3…12 in.-oz.; stopping torque 12 in.-lbs (minimum)
Contact blocks	Standard	1 lb
	Logic Reed	1 lb max.
	Sealed switch	3 lbs max. at 0.205" plunger travel
	Stackable sealed switch	1 lb max.
Environment		
Temperature range	Operating	–40…+131°F (–40…+55°C)
	Storage	–40…+185°F (–40…+85°C)
Note: Operating temperatures below freezing are based on the absence of moisture and liquids. Consult your local Allen-Bradley Sales Office for use in lower temperature applications.		
Humidity		50% at +104°F (+40°C)

❶ Performance Data — See Industrial Controls Catalog, page Important-2.

Standard Contact Ratings

Maximum thermal continuous current I_{th} 10 A AC/2.5 A DC. Bulletin 800T units with 800T-XA contacts have ratings as follows:

Max. Opertnl. Volts Ue	Utilization Category		Rated Operational Currents		
	IEC	NEMA	Volts Ue	Make	Break
AC 600	AC-15	A600	120…600 72…120 24…72	7200 VA 60 A 60 A	720 VA 720 VA 10 A
DC 600	DC-13	Q600	28…600 24…28 ❶	69 VA 2.5 A	

❶ For applications below 24V/24 mA, Pen*TUFF*™ or Logic Reed contacts are recommended.

Sealed Switch Contact Ratings

Maximum continuous current I_{th} 5 A. Bulletin 800T units have control circuit ratings with sealed switch contact blocks as follows:

Max. Opertnl. Volts Ue	Utilization Category		Rated Operational Currents		
	IEC	NEMA	Volts Ue	Make	Break
AC 600	AC-15	B600	120…600 0…120	3600 VA 30 A	360 VA 3 A
DC 300	DC-13	P300	24…300 0…24	138 VA 5.0 A	

Stackable Sealed Switch Contact Ratings

Maximum continuous current I_{th} 2.5 A. Bulletin 800T units have control circuit ratings with sealed switch contact blocks as follows:

Max. Oprtnl. Volts Ue	Utilization Category		Rated Operational Currents		
	IEC	NEMA	Volts Ue	Make	Break
AC 300	AC-15	C300	120…300 0…120	1800 VA 15 A	180 VA 1.5 A
DC 150	DC-13	Q150	24…150 0…24	69 VA 2.5 A	

Logic Reed Contact Ratings

Minumum — DC: 5V, 1 mA
Maximum — DC: 30V, 0.06 A, AC: 150V, 0.15 A
Should only be used with resistive loads.

Materials Used in 800H Type 4X Operators

Thermoplastic Polyester (Fiberglass Reinforced)

- Bushings
- Mounting rings
- Sockets

Thermoplastic Polyester

- Non-illuminated button caps

Transparent Amorphous Nylon

- Pilot light lens cap
- Illuminated button caps

Glass Filled Crystalline Nylon

- Thrust washer

Mineral Filled Nylon

- Trim washer

Nitrile (Synthetic Rubber)

- Gaskets and internal seals

Pen*TUFF*™ (Low Voltage) Contact Ratings

Minimum DC: 5V, 1 mA
Maximum thermal continuous current I_{th} 2.5 A AC/1.0 A DC. Bulletin 800T units with 800T-XAV contacts have ratings as follows:

Max. Opertnl. Volts Ue	Utilization Category		Rated Operational Currents		
	IEC	NEMA	Volts Ue	Make	Break
AC 300	AC-15	C300	120…300 0…120	1800 VA 15 A	180 VA 1.5 A
DC 150	DC-13	R150	24…150 0…24	28 VA 1.0 A	

Snap Action Contact Ratings

Max. Opertnl. Volts Ue	Contact Rating Designation	Rated Operational Currents		
		Volts Ue	Make	Break
AC 300	A300	120…300 24…72	7200 VA 60 A	720 VA 10 A
DC 250	—	230…250 115…125	0.2 A 0.4 A	

MaxDuty Contact Rating

Maximum thermal continuous current I_{th} 24 A.
Pilot Duty — 120V AC, 12 A; 24V DC
Motor Ratings — 120V AC, 1.5 Hp; 240V AC, 3 Hp; 24V DC, 10A FLA/60 A LRA

Time Delay Contacts

Max. Opertnl. Volts Ue	Contact Rating Designation	Rated Operational Currents		
		Volts Ue	Make	Break
AC 120	B150	120	3600 VA	360 VA

Note: This device is not rated for DC applications.
Adjustment range: 0.5…15 s ± 25% I_{th} = 5 A

30.5 mm Push Buttons

Push Button Operators

Momentary Contact Push Button Units, Non-Illuminated

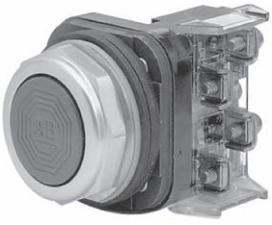

Flush Head Unit
Cat. No. 800T-A1A

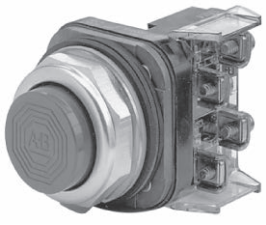

Extended Head Unit
Cat. No. 800T-B6A



Booted Unit
Cat. No. 800H-R2A



Bootless Flush Head Unit
Cat. No. 800H-AR1A

Contact Type	Button Color	Type 4/13		Type 4/4X/13	
		Flush Head	Extended Head	Booted ❶	Bootless Flush Head
		Cat. No.	Cat. No.	Cat. No.	Cat. No.
No Contact	Green	800T-A1	800T-B1	800H-R1	800H-AR1
	Black	800T-A2	800T-B2	800H-R2	800H-AR2
	Red	800T-A6	800T-B6	800H-R6	800H-AR6
1 N.O.	Green	800T-A1D1	800T-B1D1	800H-R1D1	800H-AR1D1
	Black	800T-A2D1	800T-B2D1	800H-R2D1	800H-AR2D1
	Red	800T-A6D1	800T-B6D1	800H-R6D1	800H-AR6D1
1 N.C.	Green	800T-A1D2	800T-B1D2	800H-R1D2	800H-AR1D2
	Black	800T-A2D2	800T-B2D2	800H-R2D2	800H-AR2D2
	Red	800T-A6D2	800T-B6D2	800H-R6D2	800H-AR6D2
1 N.O. - 1 N.C.	Green	800T-A1A	800T-B1A	800H-R1A	800H-AR1A
	Black	800T-A2A	800T-B2A	800H-R2A	800H-AR2A
	Red	800T-A6A	800T-B6A	800H-R6A	800H-AR6A

800 T — – A 1 — A

a b c d e f

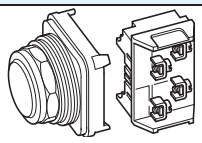

a

Protection Rating	
Code	Description
T	Metal, Type 4/13
H	Plastic, Type 4/4X/13

b

Finger-Safe Guards	
Code	Description
Blank	No Guards
C	Guards on Terminals

c

Operator Type		
800T Type 4/13 Code	Description	800H Type 4/4X/13 Code
A	Flush Head	AR
B	Extended Head	BR
D	Mushroom Head	DR
DX	Mushroom Head less Color Cap	DRX
—	Bootless Guarded Head	GR
—	Booted Head	R ❶

d

Color Cap	
Code	Description
Blank	Used only when ordering Operator Type DX/DRX
1	Green
2	Black
3	Orange ❷
4	Gray ❷
5	White ❷

d (cont'd)

Color Cap	
Code	Description
6	Red
7	Blue
9	Yellow

e

Special Mushroom Head	
Code	Description
Blank	No Special Head
J	Jumbo Mushroom Head—Plastic ❹
L	Jumbo Mushroom Head—Metal ❹

Note: Special Mushroom Head options only apply to Mushroom Head operator Type Code **D/DR**.

f

Contact Block(s)	
Code	Description
Blank	No Contacts on operator
Standard	
D1	1 N.O.
D2	1 N.C.
D3	1 N.O.E.M.
D4	1 N.C.L.B.
D5	1 N.O. (Mini)
D6	1 N.C. (Mini)
A1	1 N.C.L.B. - 1 N.O.
A2	2 N.O. ❸
A4	2 N.C.
A7	1 N.C.L.B. - 1 N.C.
A	1 N.O. - 1 N.C.
B	2 N.O. - 2 N.C.

f (cont'd)

Contact Block(s)	
Code	Description
Blank	No Contacts on operator
Pen*TUFF* (Low Voltage)	
D1V	1 N.O.
D2V	1 N.C.
D3V	1 N.O.E.M.
D4V	1 N.C.L.B.
AV	1 N.O. - 1 N.C.
BV	2 N.O. - 2 N.C.
Time Delay	
T	1 N.O. Depress close, delayed opening
S	1 N.C. Depress open, delayed closure
Snap Action	
M	1 N.O. - 1 N.C.
N	2 N.O. - 2 N.C.
Class 1, Div. 2/Zone 2	
Logic Reed	
D1R	1 N.O.
D2R	1 N.C.
A2R	2 N.O. ❸
A4R	2 N.C.
AR	1 N.O. - 1 N.C.
BR	2 N.O. - 2 N.C.

f (cont'd)

Contact Block(s)	
Code	Description
Blank	No Contacts on operator
Class 1, Div. 2/Zone 2	
Sealed Switch	
D1P	1 N.O.
D2P	1 N.C.
A2P	2 N.O.
A4P	2 N.C.
AP	1 N.O. - 1 N.C.
BP	2 N.O. - 2 N.C
Stackable Sealed Switch	
D1Y	1 N.O.
D2Y	1 N.C.
A2Y	2 N.O.
A4Y	2 N.C.
AY	1 N.O. - 1 N.C.
BY	2 N.O. - 2 N.C

Time Delay Contacts

Series C field installable kits can only be used with Series T or later operators. Adjustable range of 0.5 to 15 s + 25%. Maximum continuous current I_{th} 5 A.

Snap Action Contacts

Snap action contacts feature a quick make, quick break snap-action mechanism that is only available on factory assembled units. Maximum continuous current I_{th} 10 A.

❶ Underlying operators are "flush head" type, except red which are "extended head." Boot material is hypalon with brass threaded-insert. See page 51 for additional boot materials.
❷ Not available for booted operators.
❸ A2 and A2R contact blocks cannot be stacked upon, but can stack on other contact blocks.
❹ Jumbo Mushroom heads are not available in white.

Accessories — Page 46
Legend Plates — Page 59
Approximate Dimensions — Page 65

30.5 mm Push Buttons

Push Button Operators

Momentary Contact Push Button Units, Non-Illuminated



Flush Head Unit
Cat. No. 800T-A1A

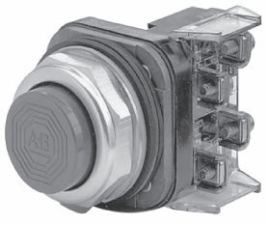

Extended Head Unit
Cat. No. 800T-B6A



Booted Unit
Cat. No. 800H-R2A



Bootless Flush Head Unit
Cat. No. 800H-AR1A

Contact Type	Button Color	Type 4/13		Type 4/4X/13	
		Flush Head	Extended Head	Booted ❶	Bootless Flush Head
		Cat. No.	Cat. No.	Cat. No.	Cat. No.
No Contact	Green Black Red	800T-A1 800T-A2 800T-A6	800T-B1 800T-B2 800T-B6	800H-R1 800H-R2 800H-R6	800H-AR1 800H-AR2 800H-AR6
1 N.O.	Green Black Red	800T-A1D1 800T-A2D1 800T-A6D1	800T-B1D1 800T-B2D1 800T-B6D1	800H-R1D1 800H-R2D1 800H-R6D1	800H-AR1D1 800H-AR2D1 800H-AR6D1
1 N.C.	Green Black Red	800T-A1D2 800T-A2D2 800T-A6D2	800T-B1D2 800T-B2D2 800T-B6D2	800H-R1D2 800H-R2D2 800H-R6D2	800H-AR1D2 800H-AR2D2 800H-AR6D2
1 N.O. - 1 N.C.	Green Black Red	800T-A1A 800T-A2A 800T-A6A	800T-B1A 800T-B2A 800T-B6A	800H-R1A 800H-R2A 800H-R6A	800H-AR1A 800H-AR2A 800H-AR6A

800 T – A 1 A

a b c d e f

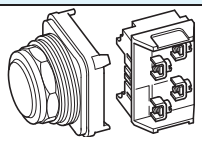

a

Protection Rating	
Code	Description
T	Metal, Type 4/13
H	Plastic, Type 4/4X/13

b

Finger-Safe Guards	
Code	Description
Blank	No Guards
C	Guards on Terminals

c

Operator Type		
800T Type 4/13 Code	Description	800H Type 4/4X/13 Code
A	Flush Head	AR
B	Extended Head	BR
D	Mushroom Head	DR
DX	Mushroom Head less Color Cap	DRX
—	Bootless Guarded Head	GR
—	Booted Head	R ❶

d

Color Cap	
Code	Description
Blank	Used only when ordering Operator Type DX/DRX
1	Green
2	Black
3	Orange ❷
4	Gray ❷
5	White ❷

d (cont'd)

Color Cap	
Code	Description
6	Red
7	Blue
9	Yellow

e

Special Mushroom Head	
Code	Description
Blank	No Special Head
J	Jumbo Mushroom Head—Plastic ❹
L	Jumbo Mushroom Head—Metal ❹

Note: Special Mushroom Head options only apply to Mushroom Head operator Type Code **D/DR**.

f

Contact Block(s)	
Code	Description
Blank	No Contacts on operator
Standard	
D1	1 N.O.
D2	1 N.C.
D3	1 N.O.E.M.
D4	1 N.C.L.B.
D5	1 N.O. (Mini)
D6	1 N.C. (Mini)
A1	1 N.C.L.B. - 1 N.O.
A2	2 N.O. ❸
A4	2 N.C.
A7	1 N.C.L.B. - 1 N.C.
A	1 N.O. - 1 N.C.
B	2 N.O. - 2 N.C.

f (cont'd)

Contact Block(s)	
Code	Description
Blank	No Contacts on operator
Pen*TUFF* (Low Voltage)	
D1V	1 N.O.
D2V	1 N.C.
D3V	1 N.O.E.M.
D4V	1 N.C.L.B.
AV	1 N.O. - 1 N.C.
BV	2 N.O. - 2 N.C.
Time Delay	
T	1 N.O. Depress close, delayed opening
S	1 N.C. Depress open, delayed closure
Snap Action	
M	1 N.O. - 1 N.C.
N	2 N.O. - 2 N.C.
Class 1, Div. 2/Zone 2	
Logic Reed	
D1R	1 N.O.
D2R	1 N.C.
A2R	2 N.O. ❸
A4R	2 N.C.
AR	1 N.O. - 1 N.C.
BR	2 N.O. - 2 N.C.

f (cont'd)

Contact Block(s)	
Code	Description
Blank	No Contacts on operator
Class 1, Div. 2/Zone 2	
Sealed Switch	
D1P	1 N.O.
D2P	1 N.C.
A2P	2 N.O.
A4P	2 N.C.
AP	1 N.O. - 1 N.C.
BP	2 N.O. - 2 N.C
Stackable Sealed Switch	
D1Y	1 N.O.
D2Y	1 N.C.
A2Y	2 N.O.
A4Y	2 N.C.
AY	1 N.O. - 1 N.C.
BY	2 N.O. - 2 N.C

Time Delay Contacts

Series C field installable kits can only be used with Series T or later operators. Adjustable range of 0.5 to 15 s + 25%. Maximum continuous current I_{th} 5 A.

Snap Action Contacts

Snap action contacts feature a quick make, quick break snap-action mechanism that is only available on factory assembled units. Maximum continuous current I_{th} 10 A.

❶ Underlying operators are "flush head" type, except red which are "extended head." Boot material is hypalon with brass threaded-insert. See page 51 for additional boot materials.
❷ Not available for booted operators.
❸ A2 and A2R contact blocks cannot be stacked upon, but can stack on other contact blocks.
❹ Jumbo Mushroom heads are not available in white.

Accessories — Page 46
Legend Plates — Page 59
Approximate Dimensions — Page 65

30.5 mm Push Buttons

Push Button Operators

Momentary Contact Push Button Units, Non-Illuminated

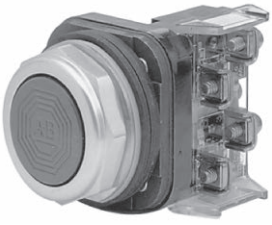

Flush Head Unit
Cat. No. 800T-A1A

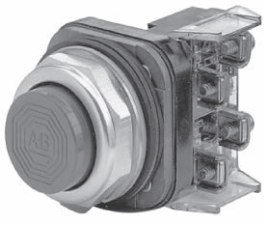

Extended Head Unit
Cat. No. 800T-B6A



Booted Unit
Cat. No. 800H-R2A



Bootless Flush Head Unit
Cat. No. 800H-AR1A

Contact Type	Button Color	Type 4/13		Type 4/4X/13	
		Flush Head	Extended Head	Booted ❶	Bootless Flush Head
		Cat. No.	Cat. No.	Cat. No.	Cat. No.
No Contact	Green Black Red	800T-A1 800T-A2 800T-A6	800T-B1 800T-B2 800T-B6	800H-R1 800H-R2 800H-R6	800H-AR1 800H-AR2 800H-AR6
1 N.O.	Green Black Red	800T-A1D1 800T-A2D1 800T-A6D1	800T-B1D1 800T-B2D1 800T-B6D1	800H-R1D1 800H-R2D1 800H-R6D1	800H-AR1D1 800H-AR2D1 800H-AR6D1
1 N.C.	Green Black Red	800T-A1D2 800T-A2D2 800T-A6D2	800T-B1D2 800T-B2D2 800T-B6D2	800H-R1D2 800H-R2D2 800H-R6D2	800H-AR1D2 800H-AR2D2 800H-AR6D2
1 N.O. - 1 N.C.	Green Black Red	800T-A1A 800T-A2A 800T-A6A	800T-B1A 800T-B2A 800T-B6A	800H-R1A 800H-R2A 800H-R6A	800H-AR1A 800H-AR2A 800H-AR6A

800 T – A 1 A

a b c d e f

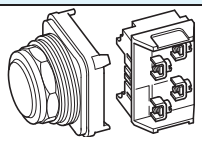

a

Protection Rating	
Code	Description
T	Metal, Type 4/13
H	Plastic, Type 4/4X/13

b

Finger-Safe Guards	
Code	Description
Blank	No Guards
C	Guards on Terminals

c

Operator Type		
800T Type 4/13 Code	Description	800H Type 4/4X/13 Code
A	Flush Head	AR
B	Extended Head	BR
D	Mushroom Head	DR
DX	Mushroom Head less Color Cap	DRX
—	Bootless Guarded Head	GR
—	Booted Head	R ❶

d

Color Cap	
Code	Description
Blank	Used only when ordering Operator Type DX/DRX
1	Green
2	Black
3	Orange ❷
4	Gray ❷
5	White ❷

d (cont'd)

Color Cap	
Code	Description
6	Red
7	Blue
9	Yellow

e

Special Mushroom Head	
Code	Description
Blank	No Special Head
J	Jumbo Mushroom Head—Plastic ❹
L	Jumbo Mushroom Head—Metal ❹

Note: Special Mushroom Head options only apply to Mushroom Head operator Type Code **D/DR**.

f

Contact Block(s)	
Code	Description
Blank	No Contacts on operator
Standard	
D1	1 N.O.
D2	1 N.C.
D3	1 N.O.E.M.
D4	1 N.C.L.B.
D5	1 N.O. (Mini)
D6	1 N.C. (Mini)
A1	1 N.C.L.B. - 1 N.O.
A2	2 N.O. ❸
A4	2 N.C.
A7	1 N.C.L.B. - 1 N.C.
A	1 N.O. - 1 N.C.
B	2 N.O. - 2 N.C.

f (cont'd)

Contact Block(s)	
Code	Description
Blank	No Contacts on operator
Pen*TUFF* (Low Voltage)	
D1V	1 N.O.
D2V	1 N.C.
D3V	1 N.O.E.M.
D4V	1 N.C.L.B.
AV	1 N.O. - 1 N.C.
BV	2 N.O. - 2 N.C.
Time Delay	
T	1 N.O. Depress close, delayed opening
S	1 N.C. Depress open, delayed closure
Snap Action	
M	1 N.O. - 1 N.C.
N	2 N.O. - 2 N.C.
Class 1, Div. 2/Zone 2	
Logic Reed	
D1R	1 N.O.
D2R	1 N.C.
A2R	2 N.O. ❸
A4R	2 N.C.
AR	1 N.O. - 1 N.C.
BR	2 N.O. - 2 N.C.

f (cont'd)

Contact Block(s)	
Code	Description
Blank	No Contacts on operator
Class 1, Div. 2/Zone 2	
Sealed Switch	
D1P	1 N.O.
D2P	1 N.C.
A2P	2 N.O.
A4P	2 N.C.
AP	1 N.O. - 1 N.C.
BP	2 N.O. - 2 N.C
Stackable Sealed Switch	
D1Y	1 N.O.
D2Y	1 N.C.
A2Y	2 N.O.
A4Y	2 N.C.
AY	1 N.O. - 1 N.C.
BY	2 N.O. - 2 N.C

Time Delay Contacts

Series C field installable kits can only be used with Series T or later operators. Adjustable range of 0.5 to 15 s + 25%. Maximum continuous current I_{th} 5 A.

Snap Action Contacts

Snap action contacts feature a quick make, quick break snap-action mechanism that is only available on factory assembled units. Maximum continuous current I_{th} 10 A.

❶ Underlying operators are "flush head" type, except red which are "extended head." Boot material is hypalon with brass threaded-insert. See page 51 for additional boot materials.
❷ Not available for booted operators.
❸ A2 and A2R contact blocks cannot be stacked upon, but can stack on other contact blocks.
❹ Jumbo Mushroom heads are not available in white.

Accessories — Page 46
Legend Plates — Page 59
Approximate Dimensions — Page 65

30.5 mm Push Buttons

Push Button Operators

Momentary Contact Push Button Units, Non-Illuminated

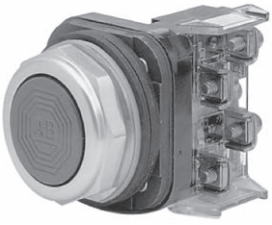

Flush Head Unit
Cat. No. 800T-A1A

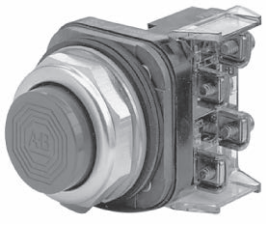

Extended Head Unit
Cat. No. 800T-B6A



Booted Unit
Cat. No. 800H-R2A



Bootless Flush Head Unit
Cat. No. 800H-AR1A

Contact Type	Button Color	Type 4/13		Type 4/4X/13	
		Flush Head	Extended Head	Booted ❶	Bootless Flush Head
		Cat. No.	Cat. No.	Cat. No.	Cat. No.
No Contact	Green	800T-A1	800T-B1	800H-R1	800H-AR1
	Black	800T-A2	800T-B2	800H-R2	800H-AR2
	Red	800T-A6	800T-B6	800H-R6	800H-AR6
1 N.O.	Green	800T-A1D1	800T-B1D1	800H-R1D1	800H-AR1D1
	Black	800T-A2D1	800T-B2D1	800H-R2D1	800H-AR2D1
	Red	800T-A6D1	800T-B6D1	800H-R6D1	800H-AR6D1
1 N.C.	Green	800T-A1D2	800T-B1D2	800H-R1D2	800H-AR1D2
	Black	800T-A2D2	800T-B2D2	800H-R2D2	800H-AR2D2
	Red	800T-A6D2	800T-B6D2	800H-R6D2	800H-AR6D2
1 N.O. - 1 N.C.	Green	800T-A1A	800T-B1A	800H-R1A	800H-AR1A
	Black	800T-A2A	800T-B2A	800H-R2A	800H-AR2A
	Red	800T-A6A	800T-B6A	800H-R6A	800H-AR6A

800 T – A 1 A

a b c d e f

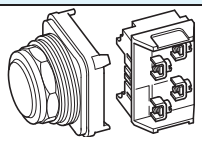

a

Protection Rating	
Code	Description
T	Metal, Type 4/13
H	Plastic, Type 4/4X/13

b

Finger-Safe Guards	
Code	Description
Blank	No Guards
C	Guards on Terminals

c

Operator Type		
800T Type 4/13 Code	Description	800H Type 4/4X/13 Code
A	Flush Head	AR
B	Extended Head	BR
D	Mushroom Head	DR
DX	Mushroom Head less Color Cap	DRX
—	Bootless Guarded Head	GR
—	Booted Head	R ❶

d

Color Cap	
Code	Description
Blank	Used only when ordering Operator Type DX/DRX
1	Green
2	Black
3	Orange ❷
4	Gray ❷
5	White ❷

d (cont'd)

Color Cap	
Code	Description
6	Red
7	Blue
9	Yellow

e

Special Mushroom Head	
Code	Description
Blank	No Special Head
J	Jumbo Mushroom Head—Plastic ❹
L	Jumbo Mushroom Head—Metal ❹

Note: Special Mushroom Head options only apply to Mushroom Head operator Type Code **D/DR**.

f

Contact Block(s)	
Code	Description
Blank	No Contacts on operator
Standard	
D1	1 N.O.
D2	1 N.C.
D3	1 N.O.E.M.
D4	1 N.C.L.B.
D5	1 N.O. (Mini)
D6	1 N.C. (Mini)
A1	1 N.C.L.B. - 1 N.O.
A2	2 N.O. ❸
A4	2 N.C.
A7	1 N.C.L.B. - 1 N.C.
A	1 N.O. - 1 N.C.
B	2 N.O. - 2 N.C.

f (cont'd)

Contact Block(s)	
Code	Description
Blank	No Contacts on operator
Pen*TUFF* (Low Voltage)	
D1V	1 N.O.
D2V	1 N.C.
D3V	1 N.O.E.M.
D4V	1 N.C.L.B.
AV	1 N.O. - 1 N.C.
BV	2 N.O. - 2 N.C.
Time Delay	
T	1 N.O. Depress close, delayed opening
S	1 N.C. Depress open, delayed closure
Snap Action	
M	1 N.O. - 1 N.C.
N	2 N.O. - 2 N.C.
Class 1, Div. 2/Zone 2	
Logic Reed	
D1R	1 N.O.
D2R	1 N.C.
A2R	2 N.O. ❸
A4R	2 N.C.
AR	1 N.O. - 1 N.C.
BR	2 N.O. - 2 N.C.

f (cont'd)

Contact Block(s)	
Code	Description
Blank	No Contacts on operator
Class 1, Div. 2/Zone 2	
Sealed Switch	
D1P	1 N.O.
D2P	1 N.C.
A2P	2 N.O.
A4P	2 N.C.
AP	1 N.O. - 1 N.C.
BP	2 N.O. - 2 N.C
Stackable Sealed Switch	
D1Y	1 N.O.
D2Y	1 N.C.
A2Y	2 N.O.
A4Y	2 N.C.
AY	1 N.O. - 1 N.C.
BY	2 N.O. - 2 N.C

Time Delay Contacts

Series C field installable kits can only be used with Series T or later operators. Adjustable range of 0.5 to 15 s + 25%. Maximum continuous current I_{th} 5 A.

Snap Action Contacts

Snap action contacts feature a quick make, quick break snap-action mechanism that is only available on factory assembled units. Maximum continuous current I_{th} 10 A.

❶ Underlying operators are "flush head" type, except red which are "extended head." Boot material is hypalon with brass threaded-insert. See page 51 for additional boot materials.
❷ Not available for booted operators.
❸ A2 and A2R contact blocks cannot be stacked upon, but can stack on other contact blocks.
❹ Jumbo Mushroom heads are not available in white.

Accessories — Page 46
Legend Plates — Page 59
Approximate Dimensions — Page 65

30.5 mm Push Buttons

Selector Switches, Continued

3-Position Selector Switch Units, Non-Illuminated

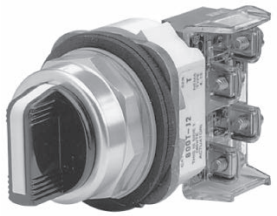

Standard Knob Operator
Cat. No. 800T-J2A



Knob Lever Operator
Cat. No. 800T-J17A



Standard Knob Operator
Cat. No. 800H-JR2A

Contact Type	Operator Position			Operator Type M = Maintained S = Spring Return	Type 4/13 Standard Knob Cat. No.	Type 4/13 Knob Lever Cat. No.	Type 4/4X/13 Standard Knob Cat. No.
				M M M	800T-J2	800T-J17	800H-JR2
No Contacts	—	—	—	S→M M	800T-J4	800T-J18	800H-JR4
				M M←S	800T-J5	800T-J19	800H-JR5
				S→M←S	800T-J91	800T-J20	800H-JR91
				M M M	800T-J2A	800T-J17A	800H-JR2A
1 N.O. - 1 N.C.	O X	O O	X O	S→M M	800T-J4A	800T-J18A	800H-JR4A
				M M←S	800T-J5A	800T-J19A	800H-JR5A
				S→M←S	800T-J91A	800T-J20A	800H-JR91A

Note: X = Closed/O = Open

800 H ___ - J 2 ___ C

a b c d e f

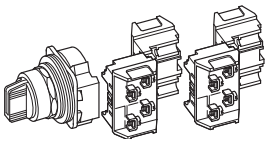

a

Protection Rating	
Code	**Description**
T	Metal, Type 4/13
H	Plastic, Type 4/4X/13

b

Finger-Safe Guards	
Code	**Description**
Blank	No Guards
C	Guards on Terminals

c

Knob Insert Colors		
800T Type 4/13 Code	**Description**	**800H Type 4/4X/13 Code**
J	White	JR
JA	Red	JRA
JB	Green	JRB
JC	Blue	JRC
JE	Yellow	JRE
JF	Orange	JRF
JX	Packet of Colored Inserts ❶	JRX
Metal Wing Lever Colors ❷		
Code	**Color**	**Code**
JA	Red	—
JG	Gray	—

d

Knob/Lever Type Operators	
Standard Knob	
Code	**Operator Function**
2	Maintained
4	Spring Return from Left
5	Spring Return from Right
91	Spring Return from Both
Knob Lever ❷	
Code	**Operator Function**
17	Maintained
18	Spring Return from Left
19	Spring Return from Right
20	Spring Return from Both
Metal Wing Lever ❷	
Code	**Operator Function**
11	Maintained
15	Spring Return from Left
16	Spring Return from Right
141	Spring Return from Both
Coin Slot ❷	
Code	**Operator Function**
10	Spring Return from Both

e

Cam Option ❸	
Code	**Description**
Blank	KB7 Cam (Std.)
KA1	KA1 Cam
KA7	KA7 Cam

Note: See Table 1 for cam selections.

e (cont'd)

Cam Option ❸	
Code	**Description**
KC1	KC1 Cam
KC7	KC7 Cam
KD7	KD7 Cam
KE7 ❹	KE7 Cam
KQ1	KQ1 Cam
KQ7	KQ7 Cam
KR1 ❹	KR1 Cam
KR7 ❹	KR7 Cam
KT1 ❹	KT1 Cam
KT7 ❹	KT7 Cam
KU7 ❹	KU7 Cam

Note: See Table 1 for cam selections.

f

Contact Blocks	
Code	**Description**
Blank	No Contacts on operator
Standard	
A	1 N.O. - 1 N.C. 1-**800T-XA** on white side
B	2 N.O. - 2 N.C. 2-**800T-XA**s — 1 on white side/1 on black side
Pen*TUFF* (Low Voltage)	
AV	1 N.O. - 1 N.C. 1-**800T-XAV** on white side
BV	2 N.O. - 2 N.C. 2-**800T-XAV**s — 1 on white side/1 on black side

f (cont'd)

Contact Blocks	
Code	**Description**
Class 1, Div. 2/Zone 2	
Logic Reed	
AR	1 N.O. - 1 N.C. 1-**800T-XAR** on white side
BR	2 N.O. - 2 N.C. 2-**800T-XAR**s — 1 on white side/1 on black side
Sealed Switch	
AP	1 N.O. - 1 N.C. 1-**800T-XAP** on white side
BP	2 N.O. - 2 N.C. 2-**800T-XAP**s — 1 on white side/1 on black side
Stackable Sealed Switch	
AY	1 N.O. - 1 N.C. 1-**800T-XAY** on white side
BY	2 N.O. - 2 N.C. 2-**800T-XAY**s — 1 on white side/1 on black side

Note: Associated targets shown in Table 1.

❶ Packet of colored inserts, one of each color.
❷ Only available on 800T, Type 4/13 operators.
❸ If an overlapping cam is required, consult factory.
❹ Wing levers are not suitable with these cam codes.

Table 1. Cam and Contact Block Functionality Table (**Note:** X = Closed/O = Open)

Contact Block Suffix Code	Contact Block Side	Ckts	Cam Codes: KB7 (Std.)	KA1	KA7	KC1	KC7	KD7	KE7	KQ1	KQ7	KR1	KR7	KT1	KT7	KU7
C_, H_, B_, A_	White	A	X O O	X O O	O O X	O X O	X O O	O O X	X O O	O X O	X O X	X O X	X O X	O O X	X O O	X O O
		B	O O X	O X O	O X O	O X O	O X O	O X O	O X X	O X O	O X O	O X O	O X O	O X O	O O X	O X O
	Black	A	X O O	X O O	O O X	O X O	X O O	X O O	O O X	X O O	X O O	O X O	O X X	O O X	X O O	O O X
		B	O O X	O X O	O X O	X O O	O X O	O X O	X X O	O X X	O X O	O X X	X X O	O X X	O X O	X X O
	White	A	X O O	X O O	O O X	O X O	X O O	O O X	X O O	X O X	X O X	X O X	X O X	O O X	X O O	X O O
		B	O O X	O X O	O X O	O X O	O X O	O X O	O X X	O X O	O X O	O X O	O X O	O X O	O O X	O X O
	Black	A	X O O	X O O	O O X	O X O	X O O	X O O	O O X	X O O	X O O	O X O	O X X	O O X	X O O	O O X
		B	O O X	O X O	O X O	X O O	O X O	O X O	X X O	O X X	O X O	O X X	X X O	O X X	O X O	X X O

30.5 mm Push Buttons

Selector Switches, Continued

3-Position Selector Switch Units, Non-Illuminated

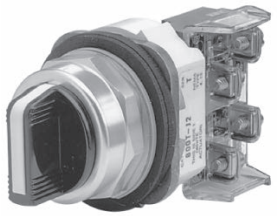

Standard Knob Operator
Cat. No. 800T-J2A



Knob Lever Operator
Cat. No. 800T-J17A

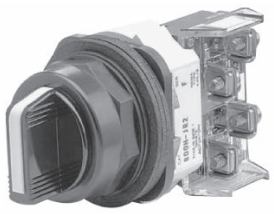

Standard Knob Operator
Cat. No. 800H-JR2A

Contact Type	Operator Position			Operator Type M = Maintained S = Spring Return	Type 4/13 Standard Knob Cat. No.	Type 4/13 Knob Lever Cat. No.	Type 4/4X/13 Standard Knob Cat. No.
				M M M	800T-J2	800T-J17	800H-JR2
				S→M M	800T-J4	800T-J18	800H-JR4
No Contacts	—	—	—	M M←S	800T-J5	800T-J19	800H-JR5
				S→M←S	800T-J91	800T-J20	800H-JR91
				M M M	800T-J2A	800T-J17A	800H-JR2A
				S→M M	800T-J4A	800T-J18A	800H-JR4A
1 N.O. - 1 N.C.	O X	O O	X O	M M←S	800T-J5A	800T-J19A	800H-JR5A
				S→M←S	800T-J91A	800T-J20A	800H-JR91A

Note: X = Closed/O = Open

800 T – J 2 C

a b c d e f

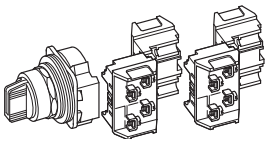

a

Protection Rating	
Code	**Description**
T	Metal, Type 4/13
H	Plastic, Type 4/4X/13

b

Finger-Safe Guards	
Code	**Description**
Blank	No Guards
C	Guards on Terminals

c

Knob Insert Colors		
800T Type 4/13 Code	**Description**	**800H Type 4/4X/13 Code**
J	White	JR
JA	Red	JRA
JB	Green	JRB
JC	Blue	JRC
JE	Yellow	JRE
JF	Orange	JRF
JX	Packet of Colored Inserts ❶	JRX
Metal Wing Lever Colors ❷		
Code	**Color**	**Code**
JA	Red	—
JG	Gray	—

d

Knob/Lever Type Operators	
Standard Knob	
Code	**Operator Function**
2	Maintained
4	Spring Return from Left
5	Spring Return from Right
91	Spring Return from Both
Knob Lever ❷	
Code	**Operator Function**
17	Maintained
18	Spring Return from Left
19	Spring Return from Right
20	Spring Return from Both
Metal Wing Lever ❷	
Code	**Operator Function**
11	Maintained
15	Spring Return from Left
16	Spring Return from Right
141	Spring Return from Both
Coin Slot ❷	
Code	**Operator Function**
10	Spring Return from Both

e

Cam Option ❸	
Code	**Description**
Blank	KB7 Cam (Std.)
KA1	KA1 Cam
KA7	KA7 Cam

Note: See Table 1 for cam selections.

e (cont'd)

Cam Option ❸	
Code	**Description**
KC1	KC1 Cam
KC7	KC7 Cam
KD7	KD7 Cam
KE7 ❹	KE7 Cam
KQ1	KQ1 Cam
KQ7	KQ7 Cam
KR1 ❹	KR1 Cam
KR7 ❹	KR7 Cam
KT1 ❹	KT1 Cam
KT7 ❹	KT7 Cam
KU7 ❹	KU7 Cam

Note: See Table 1 for cam selections.

f

Contact Blocks	
Code	**Description**
Blank	No Contacts on operator
Standard	
A	1 N.O. - 1 N.C. 1-**800T-XA** on white side
B	2 N.O. - 2 N.C. 2-**800T-XA**s — 1 on white side/1 on black side
Pen*TUFF* (Low Voltage)	
AV	1 N.O. - 1 N.C. 1-**800T-XAV** on white side
BV	2 N.O. - 2 N.C. 2-**800T-XAV**s — 1 on white side/1 on black side

f (cont'd)

Contact Blocks	
Code	**Description**
Class 1, Div. 2/Zone 2	
Logic Reed	
AR	1 N.O. - 1 N.C. 1-**800T-XAR** on white side
BR	2 N.O. - 2 N.C. 2-**800T-XAR**s — 1 on white side/1 on black side
Sealed Switch	
AP	1 N.O. - 1 N.C. 1-**800T-XAP** on white side
BP	2 N.O. - 2 N.C. 2-**800T-XAP**s — 1 on white side/1 on black side
Stackable Sealed Switch	
AY	1 N.O. - 1 N.C. 1-**800T-XAY** on white side
BY	2 N.O. - 2 N.C. 2-**800T-XAY**s — 1 on white side/1 on black side

Note: Associated targets shown in Table 1.

❶ Packet of colored inserts, one of each color.
❷ Only available on 800T, Type 4/13 operators.
❸ If an overlapping cam is required, consult factory.
❹ Wing levers are not suitable with these cam codes.

Table 1. Cam and Contact Block Functionality Table (**Note:** X = Closed/O = Open)

Contact Block Suffix Code	Contact Block Side	Ckts	Cam Codes: KB7 (Std.)	KA1	KA7	KC1	KC7	KD7	KE7	KQ1	KQ7	KR1	KR7	KT1	KT7	KU7
C_ H_ B_ A_	White	A	X O O	X O O	O O X	O O X	X O O	O O X	X O O	O O X	X O X	X O X	X O X	O O X	X O O	X O O
		B	O O X	O X O	O X O	O X O	O X O	O X O	O X X	O X O	O X O	O X O	O X O	O X O	O O X	O X O
	Black	A	X O O	X O O	O O X	O O X	X O O	X O O	O O X	O O X	X O O	O O X	O O X	X O O	X O O	O O X
		B	O O X	O X O	O X O	X O O	O O X	O X O	O X X	O X O	O X O	O X O	X X O	O X X	X X O	X X O
	White	A	X O O	X O O	O O X	O O X	X O O	O O X	X O O	X O X	X O X	X O X	X O X	O O X	X O O	X O O
		B	O O X	O X O	O X O	O X O	O X O	O X O	O X X	O X O	O X O	O X O	O X O	X O O	O O X	O X O
	Black	A	X O O	X O O	O O X	O O X	X O O	X O O	O O X	X O X	X O O	O X O	O O X	O O X	X O O	O O X
		B	O O X	O X O	O X O	X O O	O O X	O X O	O X X	O X O	O X O	X X O	O X X	X X O	O X X	X X O

30.5 mm Push Buttons

Selector Switches

2-Position Selector Switch Units, Non-Illuminated



Standard Knob Operator
Cat. No. 800T-H2A



Knob Lever Operator
Cat. No. 800T-H17A



Standard Knob Operator
Cat. No. 800H-HR2A

Contact Type	Side	Contact	Operator Position		Operator Type M = Maintained S = Spring Return	Type 4/13 Standard Knob Cat. No.	Type 4/13 Knob Lever Cat. No.	Type 4/4X/13 Standard Knob Cat. No.
No Contacts	—	—	—	—	M M	800T-H2	800T-H17	800H-HR2
					S→M	800T-H4	800T-H18	800H-HR4
					M←S	800T-H5	800T-H19	800H-HR5
1 N.O.	White	A	O	X	M M	800T-H2D1	800T-H17D1	800H-HR2D1
					S→M ❶	800T-H4D1	800T-H18D1	800H-HR4D1
					M←S	800T-H5D1	800T-H19D1	800H-HR5D1
1 N.O. - 1 N.C.	White	A B	O X	X O	M M	800T-H2A	800T-H17A	800H-HR2A
					S→M ❶	800T-H4A	800T-H18A	800H-HR4A
					M←S	800T-H5A	800T-H19A	800H-HR5A

Note: X = Closed/O = Open

❶ Target tables are reversed from those shown.

800 T — – HA 2 A

a b c d e

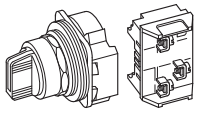

e

a

Protection Rating	
Code	**Description**
T	Metal, Type 4/13
H	Plastic, Type 4/4X/13

b

Finger-Safe Guards	
Code	**Description**
Blank	No Guards
C	Guards on Terminals

c

Knob Insert Colors		
800T Type 4/13 Code	**Description**	**800H Type 4/4X/13 Code**
H	White	HR
HA	Red	HRA
HB	Green	HRB
HC	Blue	HRC
HE	Yellow	HRE
HF	Orange	HRF
HX	Packet of Colored Inserts ❷	HRX
Metal Wing Lever Colors ❹		
Code	**Color**	**Code**
HA	Red	—
HG	Gray	—

d

Operator Type and Function	
Standard Knob	
Code	**Operator Function**
2	Maintained
4	Spring Return From Left ❸
5	Spring Return From Right
Knob Lever ❹	
Code	**Operator Function**
17	Maintained
18	Spring Return From Left ❸
19	Spring Return From Right
Metal Wing Lever ❹	
Code	**Operator Function**
11	Maintained
15	Spring Return From Left ❸
16	Spring Return From Right
Coin Slot ❹	
Code	**Operator Function**
6	Maintained
7	Spring Return From Left
8	Spring Return From Right

e

Contact Block(s)			
Code	**Description**		
	Contact Configuration	**2-Position**	
Blank	No Contacts on operator	—	—
Standard			
D1	1 N.O.	O	X
D2	1 N.C.	X	O
A	1 N.O. - 1 N.C.	O	X
		X	O
B	2 N.O. - 2 N.C.	O	X
		X	O
		O	X
		X	O
Max Duty (Horsepower Rated) ❺			
D1M	1 N.O.		
D2M	1 N.C.		
Pen*TUFF* (Low Voltage) ❺			
D1V	1 N.O.		
D2V	1 N.C.		
AV	1 N.O. - 1 N.C.		
BV	2 N.O. - 2 N.C.		
Class1, Div. 2/Zone 2			
Logic Reed ❺			
D1R	1 N.O.		
D2R	1 N.C.		
AR	1 N.O. - 1 N.C.		
BR	2 N.O. - 2 N.C.		
Sealed Switch ❺			
D1P	1 N.O.		
D2P	1 N.C.		
AP	1 N.O. - 1 N.C.		
BP	2 N.O. - 2 N.C.		
Stackable Sealed Switch ❺			
D1Y	1 N.O.		
D2Y	1 N.C.		
AY	1 N.O. - 1 N.C.		
BY	2 N.O. - 2 N.C.		

❷ Packet of colored inserts, one of each color.
❸ Target tables are reversed from those shown.
❹ Only available on 800T, Type 4/13 operators.
❺ Contact target tables same as those listed for standard contact blocks.

2-Position Push-Pull and Push-Pull/Twist Release Units, Non-Illuminated

Note: A jumbo or large legend plate is recommended, if space allows.

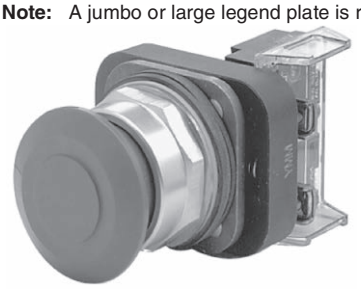

2-Position Push-Pull
Cat. No. 800T-FX6D4



2-Position Push-Pull/Twist
Cat. No. 800T-FXT6D4



2-Position Push-Pull/Twist
Cat. No. 800H-FRXT6D4

Contact Type	Operator Position: Maintained Out	Operator Position: Maintained In	Button Color	Type 4/13: Push-Pull Cat. No.	Type 4/13: Push-Pull/Twist Release Cat. No.	Type 4/4X/13: Push-Pull/Twist Release Cat. No.
N.C.L.B.	X	O	Red	800T-FX6D4 ❷	800T-FXT6D4 ❷	800H-FRXT6D4 ❷
N.O. - N.C.L.B. ❶	O X	X O		800T-FX6A1 ❷	800T-FXT6A1 ❷	800H-FRXT6A1 ❷
N.C.L.B. - N.C.L.B. ❶	X X	O O		800T-FX6A5 ❷	800T-FXT6A5 ❷	800H-FRXT6A5 ❷

Note: X = Closed/O = Open

❶ Normally closed late break contact. When button is pushed from the OUT to IN position, the mechanical detent action of the operator occurs before electrical contacts change state. When the button is pulled from the IN to the OUT position, the electrical contacts change state before the mechanical detent occurs.

❷ Meets EN-418 and IEC 60947-5-5 standards for emergency stop applications.

800 T — – FX 1 A1
a b c d e

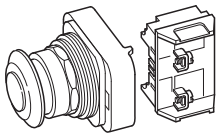

a

Protection Rating	
Code	**Description**
T	Metal, Type 4/13
H	Plastic, Type 4/4X/13

b

Finger-Safe Guards	
Code	**Description**
Blank	No Guards
C	Guards on Terminals

c

Head Type ❸		
800T Type 4/13 Code	**Description**	**800H Type 4/4X/13 Code**
FX	Mushroom Head (Push-Pull)	—
FXJ	Jumbo Mushroom Head (Push-Pull)	—
FXT	Push-Pull/Twist to Release	FRXT
FXJT	Jumbo Head Push-Pull w/ Twist to Release	FRXJT

d

Color Cap	
Code	**Color**
Blank	No Cap ❹
1	Green
2	Black
3	Orange
4	Gray
5	White
6	Red
7	Blue
9	Yellow

e

Contact Block(s)			
Code	**Operator Position: Out**	**Operator Position: In**	**Description**
Blank	—	—	No Contacts on operator
Standard			
D1	O	X	1 N.O.
D2	X	O	1 N.C.
D4	X	O	1 N.C.L.B.
A	O X	X O	1 N.O. - 1 N.C.
A1	O X	X O	1 N.O. - 1 N.C.L.B.
A5	X X	O O	2 N.C.L.B.

e (cont'd)

Contact Block(s)			
Code	**Operator Position: Out**	**Operator Position: In**	**Description**
Blank	—	—	No Contacts on operator
Pen*TUFF* (Low Voltage)			
D1V	O	X	1 N.O.
D2V	X	O	1 N.C.
D4V	X	O	1 N.C.L.B.
AV	O X	X O	1 N.O. - 1 N.C.
Class 1, Div. 2/Zone 2 Logic Reed			
D1R	O	X	1 N.O.
D2R	X	O	1 N.C.
AR	O X	X O	1 N.O. - 1 N.C.
Sealed Switch			
D1P	O	X	1 N.O.
D2P	X	O	1 N.C.
AP	O X	X O	1 N.O. 1 N.C.
Stackable Sealed Switch			
D1Y	O	X	1 N.O.
D2Y	X	O	1 N.C.
AY	O X	X O	1 N.O. - 1 N.C.

Note: X = Closed/O = Open

❸ 2-position push-pull and push-pull/twist-to-release devices with N.C.L.B. contacts meet EN-418 and IEC 60947-5-5 standards for emergency stop applications.

❹ Not valid with head Type **J** or **JT**.

Accessories — Page 46
Legend Plates — Page 59
Approximate Dimensions — Page 65

Potentiometer Units ❶



Potentiometer Unit
Cat. No. 800T-U24



Potentiometer Unit
Cat. No. 800H-UR4

Resistance	Type 4/13 Potentiometer ❷ Cat. No.	Type 4/4X/13 Potentiometer ❷ Cat. No.	Resistance	Type 4/13 Potentiometer ❷ Cat. No.	Type 4/4X/13 Potentiometer ❷ Cat. No.
Operator Only (Without Resistive Element)	800T-N37 ❸	800H-N102 ❸	25 kΩ	800T-U37	800H-UR37
			50 kΩ	800T-U41	800H-UR41
150 Ω	800T-U4	800H-UR4	75 kΩ	800T-U46	800H-UR46
500 Ω	800T-U12	800H-UR12	0.1 MΩ	800T-U49	800H-UR49
1000 Ω	800T-U13	800H-UR13	0.15 MΩ	800T-U50	800H-UR50
1500 Ω	800T-U16	800H-UR16	0.4 MΩ	800T-U54	800H-UR54
2500 Ω	800T-U19	800H-UR19	0.5 MΩ	800T-U55	800H-UR55
5000 Ω	800T-U24	800H-UR24	1 MΩ	800T-U57	800H-UR57
10 kΩ	800T-U29	800H-UR29	2 MΩ	800T-U59	800H-UR59
15 kΩ	800T-U34	800H-UR34	3 MΩ	800T-U62	800H-UR62
20 kΩ	800T-U35	800H-UR35	4 MΩ	800T-U64	800H-UR64

❶ Single turn operation with 312 degree rotation.
❷ Rated for 300V AC/DC 2 W maximum. Specify Bulletin 800TC or 800HC for finger-safe potentiometers. Example: **Cat. No. 800T-U29** becomes **800TC-U29**.
❸ For use with Type J potentiometers having a shaft length of 7/8" (22.2 mm) and a shaft diameter of 1/4" (6.3 mm).

Mechanically Interlocked Maintained Push Button Units



Cat. No. 800T-FA22A



Cat. No. 800T-FB16A



Cat. No. 800T-FC16F



Cat. No. 800H-CRA22A

Contact Arrangement		Type 4/13 Button Position: Button Type/Color			Type 4/4X/13		
					Booted ❹	Bootless	
Type	Configuration/ Position	Upper: Flush/Black Lower: Flush/Black	Upper: Flush/Green Lower: Extended/ Red	Upper: Flush/Green Lower: Mushroom/ Red	Upper: Flush/Black Lower: Flush/Black	Upper: Flush/Green Lower: Extended/ Red	Upper: Flush/Black Lower: Flush/Black
		Cat. No.	Cat. No.	Cat. No.	Cat. No.	Cat. No.	Cat. No.
1 N.O. - 1 N.C.		800T-FA22A	800T-FB16A	800T-FC16A	800H-FRA22A	800H-CRB16A	800H-CRA22A
2 N.O. - 2 N.C.	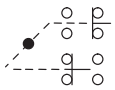	800T-FA22F	800T-FB16F	800T-FC16F	800H-FRA22F	800H-CRB16F	800H-CRA22F
No Contact	—	800T-FA22	800T-FB16	800T-FC16	800H-FRA22	800H-CRB16	800H-CRA22

❹ Boot material is hypalon with brass thredded-insert. See page 51for additional boot materials.

30.5 mm Push Buttons

Pilot Lights

Pilot Light Units❸


Transformer Type Pilot Light
Cat. No. 800T-P16R


Push-to-Test Pilot Light
Cat. No. 800T-PT16R


Transformer Type Pilot Light
Cat. No. 800H-PR16R


Push-to-Test Pilot Light
Cat. No. 800H-PRT16R

Type	Lamp	Volts	Color	Type 4/13		Type 4/4X/13	
				Pilot Light Cat. No.	Push-to-Test ❶ Cat. No.	Pilot Light Cat. No.	Push-to-Test ❶ Cat. No.
Operator Only ❷				800T-S00	800T-SB00XX	800H-SR00	800H-SRB00XX
Full Voltage	Incandescent	24 AC/DC	Red	800T-Q24R	800T-QT24R	800H-QR24R	800H-QRT24R
			Green	800T-Q24G	800T-QT24G	800H-QR24G	800H-QRT24G
			Amber	800T-Q24A	800T-QT24A	800H-QR24A	800H-QRT24A
	LED	120 AC	Red	800T-QH10R	800T-QTH10R	800H-QRH10R	800H-QRTH10R
			Green	800T-QH10G	800T-QTH10G	800H-QRH10G	800H-QRTH10G
			Amber	800T-QH10A	800T-QTH10A	800H-QRH10A	800H-QRTH10A
		24 AC/DC	Red	800T-QH24R	800T-QTH24R	800H-QRH24R	800H-QRTH24R
			Green	800T-QH24G	800T-QTH24G	800H-QRH24G	800H-QRTH24G
			Amber	800T-QH24A	800T-QTH24A	800H-QRH24A	800H-QRTH24A
	No Lamp	0…250 AC/DC	No Lens	800T-QN25	800T-QTN25	800H-QRN25	800H-QRTN25
Transformer	Incandescent	120 AC 50/60 Hz	Red	800T-P16R	800T-PT16R	800H-PR16R	800H-PRT16R
			Green	800T-P16G	800T-PT16G	800H-PR16G	800H-PRT16G
			Amber	800T-P16A	800T-PT16A	800H-PR16A	800H-PRT16A
	LED		Red	800T-PH16R	800T-PTH16R	800H-PRH16R	800H-PRTH16R
			Green	800T-PH16G	800T-PTH16G	800H-PRH16G	800H-PRTH16G
			Amber	800T-PH16A	800T-PTH16A	800H-PRH16A	800H-PRTH16A
	No Lamp		No Lens	800T-PN16	800T-PTN16	800H-PRN16	800H-PRTN16

❶ Includes one standard 800T-XA (1 N.O. - 1 N.C.) contact block. For typical pilot light wiring diagrams, see page 65.
❷ Operator only supplied without power module, lamp, lens cap, or contact blocks.
❸ All pilot lights, except push-to-test without sealed contacts and dual input transformer relay, are rated for Class 1, Division 2 applications.

	a	b	c	d	e	f	g	h	
800	T		– P			16	R		*(Pilot Lights)*
800	T		– Q	T		24	G	AR	*(Push-to-Test)*

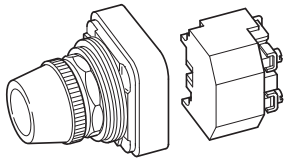

a

Protection Rating	
Code	Description
T	Metal, Type 4/13
H	Plastic, Type 4/4X/13

b

Finger-Safe Guards	
Code	Description
Blank	No Guards
C	Guards on Terminals

c

Power Module Type		
800T Type 4/13 Code	Description	800H Type 4/4X/13 Code
P	Transformer (or Dual Input)	PR
Q	Full Voltage (or Resistor)	QR
R	Neon ❹	RR

❹ Neon is only available in amber or clear.
❺ Diode type dual input provides circuit isolation via opposing diodes. Not recommended for use with solid-state outputs and neon indicators.
❻ Flashing lamps are only available in 6V full voltage units and all transformer units.

d

Lamp Test Options	
Code	Description
Blank	No Test Option
T	Push-to-Test
D	Dual Input — Diode ❺
DT	Dual Input — Transformer Relay
Note: Push-to-Test Pilot Light is supplied with a factory jumpered 800T-XA, 1 N.O.-1 N.C. Contact Block.	

e

Illumination Options	
Transformer/Full Voltage	
Code	Description
Blank	Incandescent
F	Flashing Incandescent ❻
H	LED ❼
Resistor/Neon	
Blank	No Options
Dual Input	
Blank	Incandescent
H	LED ❼

❼ LEDs available in red, green, amber, blue, and white. White LEDs only available in 6V, 24V, 120V, and 130V full voltage and all transformer units. LED color matches lens color, except clear lens supplied with white LED and white lens supplied with amber LED. All LEDs except 120V have an internal shunt resistor for use with solid-state outputs.

f

Voltage	
Transformer	
Code	Description
36	48V AC 50/60 Hz
16	120V AC 50/60 Hz
26	240V AC 50/60 Hz
76	277V AC 50/60 Hz
46	480V AC 50/60 Hz
56	600V AC 50/60 Hz
Full Voltage	
06	6V AC/DC
12	12V AC/DC
24	24V AC/DC
32	32V AC/DC ❽
48	48V AC/DC
10	120V AC/DC ❾
13	130V AC/DC ❽
20	240V AC/DC ❽
Resistor	
11	120V AC/DC Resistor
Neon	
10	120V AC/DC
20	240V AC/DC
Dual Input	
16	120V AC
24	24V AC/DC (Dual input diode only)

❽ 32V and 130V are LED only. 240V is incandescent only.
❾ 120V LED is AC only and does not contain internal shunt resistor. For AC/DC and internal shunt resistor, order 130V AC/DC LED (Code 13).

g

Lens Color		
Plastic Code	Color	Glass Code ❿
Blank	No Lens	Blank
A	Amber	D
B	Blue	E
C	Clear	F
G	Green	H
R	Red	J
W	White	K

h

Contact Blocks (Push-to-test units only)	
Code	Description
Standard	
Blank	1 N.O. - 1 N.C.
Pen *TUFF* (Low Voltage)	
AV	1 N.O. - 1 N.C.
Class 1, Div. 2/Zone 2	
Logic Reed	
AR	1 N.O. - 1 N.C.
Sealed Switch	
AP	1 N.O. - 1 N.C.
Stackable Sealed Switch	
AY	1 N.O. - 1 N.C.

❿ Glass lens available on 800T pilot lights only. Not available on 800T push-to-test units oro on 800H devices.

30.5 mm Push Buttons

Pilot Lights

Pilot Light Units❸


Transformer Type Pilot Light
Cat. No. 800T-P16R


Push-to-Test Pilot Light
Cat. No. 800T-PT16R


Transformer Type Pilot Light
Cat. No. 800H-PR16R


Push-to-Test Pilot Light
Cat. No. 800H-PRT16R

Type	Lamp	Volts	Color	Type 4/13		Type 4/4X/13	
				Pilot Light	Push-to-Test ❶	Pilot Light	Push-to-Test ❶
				Cat. No.	Cat. No.	Cat. No.	Cat. No.
Operator Only ❷				800T-S00	800T-SB00XX	800H-SR00	800H-SRB00XX
Full Voltage	Incandescent	24 AC/DC	Red	800T-Q24R	800T-QT24R	800H-QR24R	800H-QRT24R
			Green	800T-Q24G	800T-QT24G	800H-QR24G	800H-QRT24G
			Amber	800T-Q24A	800T-QT24A	800H-QR24A	800H-QRT24A
	LED	120 AC	Red	800T-QH10R	800T-QTH10R	800H-QRH10R	800H-QRTH10R
			Green	800T-QH10G	800T-QTH10G	800H-QRH10G	800H-QRTH10G
			Amber	800T-QH10A	800T-QTH10A	800H-QRH10A	800H-QRTH10A
		24 AC/DC	Red	800T-QH24R	800T-QTH24R	800H-QRH24R	800H-QRTH24R
			Green	800T-QH24G	800T-QTH24G	800H-QRH24G	800H-QRTH24G
			Amber	800T-QH24A	800T-QTH24A	800H-QRH24A	800H-QRTH24A
	No Lamp	0…250 AC/DC	No Lens	800T-QN25	800T-QTN25	800H-QRN25	800H-QRTN25
Transformer	Incandescent	120 AC 50/60 Hz	Red	800T-P16R	800T-PT16R	800H-PR16R	800H-PRT16R
			Green	800T-P16G	800T-PT16G	800H-PR16G	800H-PRT16G
			Amber	800T-P16A	800T-PT16A	800H-PR16A	800H-PRT16A
	LED		Red	800T-PH16R	800T-PTH16R	800H-PRH16R	800H-PRTH16R
			Green	800T-PH16G	800T-PTH16G	800H-PRH16G	800H-PRTH16G
			Amber	800T-PH16A	800T-PTH16A	800H-PRH16A	800H-PRTH16A
	No Lamp		No Lens	800T-PN16	800T-PTN16	800H-PRN16	800H-PRTN16

❶ Includes one standard 800T-XA (1 N.O. - 1 N.C.) contact block. For typical pilot light wiring diagrams, see page 65.
❷ Operator only supplied without power module, lamp, lens cap, or contact blocks.
❸ All pilot lights, except push-to-test without sealed contacts and dual input transformer relay, are rated for Class 1, Division 2 applications.

	a	b	c	d	e	f	g	h	
800	T		– P			16	R		*(Pilot Lights)*
800	T		– Q	T		24	G	AR	*(Push-to-Test)*

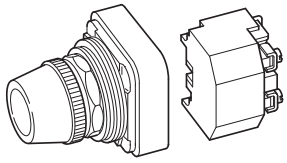

a

Protection Rating	
Code	Description
T	Metal, Type 4/13
H	Plastic, Type 4/4X/13

b

Finger-Safe Guards	
Code	Description
Blank	No Guards
C	Guards on Terminals

c

Power Module Type		
800T Type 4/13 Code	Description	800H Type 4/4X/13 Code
P	Transformer (or Dual Input)	PR
Q	Full Voltage (or Resistor)	QR
R	Neon ❹	RR

❹ Neon is only available in amber or clear.
❺ Diode type dual input provides circuit isolation via opposing diodes. Not recommended for use with solid-state outputs and neon indicators.
❻ Flashing lamps are only available in 6V full voltage units and all transformer units.

d

Lamp Test Options	
Code	Description
Blank	No Test Option
T	Push-to-Test
D	Dual Input — Diode ❺
DT	Dual Input — Transformer Relay
Note: Push-to-Test Pilot Light is supplied with a factory jumpered 800T-XA, 1 N.O.-1 N.C. Contact Block.	

e

Illumination Options	
Transformer/Full Voltage	
Code	Description
Blank	Incandescent
F	Flashing Incandescent ❻
H	LED ❼
Resistor/Neon	
Blank	No Options
Dual Input	
Blank	Incandescent
H	LED ❼

❼ LEDs available in red, green, amber, blue, and white. White LEDs only available in 6V, 24V, 120V, and 130V full voltage and all transformer units. LED color matches lens color, except clear lens supplied with white LED and white lens supplied with amber LED. All LEDs except 120V have an internal shunt resistor for use with solid-state outputs.

f

Voltage	
Transformer	
Code	Description
36	48V AC 50/60 Hz
16	120V AC 50/60 Hz
26	240V AC 50/60 Hz
76	277V AC 50/60 Hz
46	480V AC 50/60 Hz
56	600V AC 50/60 Hz
Full Voltage	
06	6V AC/DC
12	12V AC/DC
24	24V AC/DC
32	32V AC/DC ❽
48	48V AC/DC
10	120V AC/DC ❾
13	130V AC/DC ❽
20	240V AC/DC ❽
Resistor	
11	120V AC/DC Resistor
Neon	
10	120V AC/DC
20	240V AC/DC
Dual Input	
16	120V AC
24	24V AC/DC (Dual input diode only)

❽ 32V and 130V are LED only. 240V is incandescent only.
❾ 120V LED is AC only and does not contain internal shunt resistor. For AC/DC and internal shunt resistor, order 130V AC/DC LED (Code 13).

g

Lens Color		
Plastic Code	Color	Glass Code ❿
Blank	No Lens	Blank
A	Amber	D
B	Blue	E
C	Clear	F
G	Green	H
R	Red	J
W	White	K

h

Contact Blocks (Push-to-test units only)	
Code	Description
Standard	
Blank	1 N.O. - 1 N.C.
Pen *TUFF* (Low Voltage)	
AV	1 N.O. - 1 N.C.
Class 1, Div. 2/Zone 2	
Logic Reed	
AR	1 N.O. - 1 N.C.
Sealed Switch	
AP	1 N.O. - 1 N.C.
Stackable Sealed Switch	
AY	1 N.O. - 1 N.C.

❿ Glass lens available on 800T pilot lights only. Not available on 800T push-to-test units oro on 800H devices.

30.5 mm Push Buttons

Pilot Lights

Pilot Light Units❸


Transformer Type Pilot Light
Cat. No. 800T-P16R


Push-to-Test Pilot Light
Cat. No. 800T-PT16R


Transformer Type Pilot Light
Cat. No. 800H-PR16R


Push-to-Test Pilot Light
Cat. No. 800H-PRT16R

Type	Lamp	Volts	Color	Type 4/13		Type 4/4X/13	
				Pilot Light	Push-to-Test ❶	Pilot Light	Push-to-Test ❶
				Cat. No.	Cat. No.	Cat. No.	Cat. No.
Operator Only ❷				800T-S00	800T-SB00XX	800H-SR00	800H-SRB00XX
Full Voltage	Incandescent	24 AC/DC	Red	800T-Q24R	800T-QT24R	800H-QR24R	800H-QRT24R
			Green	800T-Q24G	800T-QT24G	800H-QR24G	800H-QRT24G
			Amber	800T-Q24A	800T-QT24A	800H-QR24A	800H-QRT24A
	LED	120 AC	Red	800T-QH10R	800T-QTH10R	800H-QRH10R	800H-QRTH10R
			Green	800T-QH10G	800T-QTH10G	800H-QRH10G	800H-QRTH10G
			Amber	800T-QH10A	800T-QTH10A	800H-QRH10A	800H-QRTH10A
		24 AC/DC	Red	800T-QH24R	800T-QTH24R	800H-QRH24R	800H-QRTH24R
			Green	800T-QH24G	800T-QTH24G	800H-QRH24G	800H-QRTH24G
			Amber	800T-QH24A	800T-QTH24A	800H-QRH24A	800H-QRTH24A
	No Lamp	0…250 AC/DC	No Lens	800T-QN25	800T-QTN25	800H-QRN25	800H-QRTN25
Transformer	Incandescent	120 AC 50/60 Hz	Red	800T-P16R	800T-PT16R	800H-PR16R	800H-PRT16R
			Green	800T-P16G	800T-PT16G	800H-PR16G	800H-PRT16G
			Amber	800T-P16A	800T-PT16A	800H-PR16A	800H-PRT16A
	LED		Red	800T-PH16R	800T-PTH16R	800H-PRH16R	800H-PRTH16R
			Green	800T-PH16G	800T-PTH16G	800H-PRH16G	800H-PRTH16G
			Amber	800T-PH16A	800T-PTH16A	800H-PRH16A	800H-PRTH16A
	No Lamp		No Lens	800T-PN16	800T-PTN16	800H-PRN16	800H-PRTN16

❶ Includes one standard 800T-XA (1 N.O. - 1 N.C.) contact block. For typical pilot light wiring diagrams, see page 65.
❷ Operator only supplied without power module, lamp, lens cap, or contact blocks.
❸ All pilot lights, except push-to-test without sealed contacts and dual input transformer relay, are rated for Class 1, Division 2 applications.

	a	b	c	d	e	f	g	h	
800	T		– P			16	R		*(Pilot Lights)*
800	T		– Q	T		24	G	AR	*(Push-to-Test)*

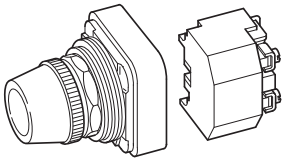

a

Protection Rating	
Code	Description
T	Metal, Type 4/13
H	Plastic, Type 4/4X/13

b

Finger-Safe Guards	
Code	Description
Blank	No Guards
C	Guards on Terminals

c

Power Module Type		
800T Type 4/13 Code	Description	800H Type 4/4X/13 Code
P	Transformer (or Dual Input)	PR
Q	Full Voltage (or Resistor)	QR
R	Neon ❹	RR

❹ Neon is only available in amber or clear.
❺ Diode type dual input provides circuit isolation via opposing diodes. Not recommended for use with solid-state outputs and neon indicators.
❻ Flashing lamps are only available in 6V full voltage units and all transformer units.

d

Lamp Test Options	
Code	Description
Blank	No Test Option
T	Push-to-Test
D	Dual Input — Diode ❺
DT	Dual Input — Transformer Relay
Note: Push-to-Test Pilot Light is supplied with a factory jumpered 800T-XA, 1 N.O.-1 N.C. Contact Block.	

e

Illumination Options	
Transformer/Full Voltage	
Code	Description
Blank	Incandescent
F	Flashing Incandescent ❻
H	LED ❼
Resistor/Neon	
Blank	No Options
Dual Input	
Blank	Incandescent
H	LED ❼

❼ LEDs available in red, green, amber, blue, and white. White LEDs only available in 6V, 24V, 120V, and 130V full voltage and all transformer units. LED color matches lens color, except clear lens supplied with white LED and white lens supplied with amber LED. All LEDs except 120V have an internal shunt resistor for use with solid-state outputs.

f

Voltage	
Transformer	
Code	Description
36	48V AC 50/60 Hz
16	120V AC 50/60 Hz
26	240V AC 50/60 Hz
76	277V AC 50/60 Hz
46	480V AC 50/60 Hz
56	600V AC 50/60 Hz
Full Voltage	
06	6V AC/DC
12	12V AC/DC
24	24V AC/DC
32	32V AC/DC ❽
48	48V AC/DC
10	120V AC/DC ❾
13	130V AC/DC ❽
20	240V AC/DC ❽
Resistor	
11	120V AC/DC Resistor
Neon	
10	120V AC/DC
20	240V AC/DC
Dual Input	
16	120V AC
24	24V AC/DC (Dual input diode only)

❽ 32V and 130V are LED only. 240V is incandescent only.
❾ 120V LED is AC only and does not contain internal shunt resistor. For AC/DC and internal shunt resistor, order 130V AC/DC LED (Code 13).

g

Lens Color		
Plastic Code	Color	Glass Code ❿
Blank	No Lens	Blank
A	Amber	D
B	Blue	E
C	Clear	F
G	Green	H
R	Red	J
W	White	K

h

Contact Blocks (Push-to-test units only)	
Code	Description
Standard	
Blank	1 N.O. - 1 N.C.
Pen *TUFF* (Low Voltage)	
AV	1 N.O. - 1 N.C.
Class 1, Div. 2/Zone 2	
Logic Reed	
AR	1 N.O. - 1 N.C.
Sealed Switch	
AP	1 N.O. - 1 N.C.
Stackable Sealed Switch	
AY	1 N.O. - 1 N.C.

❿ Glass lens available on 800T pilot lights only. Not available on 800T push-to-test units oro on 800H devices.

30.5 mm Push Buttons

Pilot Lights

Pilot Light Units❸


Transformer Type Pilot Light
Cat. No. 800T-P16R


Push-to-Test Pilot Light
Cat. No. 800T-PT16R


Transformer Type Pilot Light
Cat. No. 800H-PR16R


Push-to-Test Pilot Light
Cat. No. 800H-PRT16R

Type	Lamp	Volts	Color	Type 4/13		Type 4/4X/13	
				Pilot Light	Push-to-Test ❶	Pilot Light	Push-to-Test ❶
				Cat. No.	Cat. No.	Cat. No.	Cat. No.
Operator Only ❷				800T-S00	800T-SB00XX	800H-SR00	800H-SRB00XX
Full Voltage	Incandescent	24 AC/DC	Red	800T-Q24R	800T-QT24R	800H-QR24R	800H-QRT24R
			Green	800T-Q24G	800T-QT24G	800H-QR24G	800H-QRT24G
			Amber	800T-Q24A	800T-QT24A	800H-QR24A	800H-QRT24A
	LED	120 AC	Red	800T-QH10R	800T-QTH10R	800H-QRH10R	800H-QRTH10R
			Green	800T-QH10G	800T-QTH10G	800H-QRH10G	800H-QRTH10G
			Amber	800T-QH10A	800T-QTH10A	800H-QRH10A	800H-QRTH10A
		24 AC/DC	Red	800T-QH24R	800T-QTH24R	800H-QRH24R	800H-QRTH24R
			Green	800T-QH24G	800T-QTH24G	800H-QRH24G	800H-QRTH24G
			Amber	800T-QH24A	800T-QTH24A	800H-QRH24A	800H-QRTH24A
	No Lamp	0…250 AC/DC	No Lens	800T-QN25	800T-QTN25	800H-QRN25	800H-QRTN25
Transformer	Incandescent	120 AC 50/60 Hz	Red	800T-P16R	800T-PT16R	800H-PR16R	800H-PRT16R
			Green	800T-P16G	800T-PT16G	800H-PR16G	800H-PRT16G
			Amber	800T-P16A	800T-PT16A	800H-PR16A	800H-PRT16A
	LED		Red	800T-PH16R	800T-PTH16R	800H-PRH16R	800H-PRTH16R
			Green	800T-PH16G	800T-PTH16G	800H-PRH16G	800H-PRTH16G
			Amber	800T-PH16A	800T-PTH16A	800H-PRH16A	800H-PRTH16A
	No Lamp		No Lens	800T-PN16	800T-PTN16	800H-PRN16	800H-PRTN16

❶ Includes one standard 800T-XA (1 N.O. - 1 N.C.) contact block. For typical pilot light wiring diagrams, see page 65.
❷ Operator only supplied without power module, lamp, lens cap, or contact blocks.
❸ All pilot lights, except push-to-test without sealed contacts and dual input transformer relay, are rated for Class 1, Division 2 applications.

	a	b	c	d	e	f	g	h	
800	T		– P			16	R		*(Pilot Lights)*
800	T		– Q	T		24	G	AR	*(Push-to-Test)*

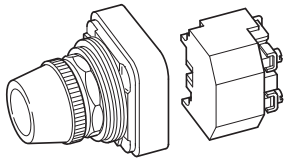

a

Protection Rating	
Code	Description
T	Metal, Type 4/13
H	Plastic, Type 4/4X/13

b

Finger-Safe Guards	
Code	Description
Blank	No Guards
C	Guards on Terminals

c

Power Module Type		
800T Type 4/13 Code	Description	800H Type 4/4X/13 Code
P	Transformer (or Dual Input)	PR
Q	Full Voltage (or Resistor)	QR
R	Neon ❹	RR

❹ Neon is only available in amber or clear.
❺ Diode type dual input provides circuit isolation via opposing diodes. Not recommended for use with solid-state outputs and neon indicators.
❻ Flashing lamps are only available in 6V full voltage units and all transformer units.

d

Lamp Test Options	
Code	Description
Blank	No Test Option
T	Push-to-Test
D	Dual Input — Diode ❺
DT	Dual Input — Transformer Relay
Note: Push-to-Test Pilot Light is supplied with a factory jumpered 800T-XA, 1 N.O.-1 N.C. Contact Block.	

e

Illumination Options	
Transformer/Full Voltage	
Code	Description
Blank	Incandescent
F	Flashing Incandescent ❻
H	LED ❼
Resistor/Neon	
Blank	No Options
Dual Input	
Blank	Incandescent
H	LED ❼

❼ LEDs available in red, green, amber, blue, and white. White LEDs only available in 6V, 24V, 120V, and 130V full voltage and all transformer units. LED color matches lens color, except clear lens supplied with white LED and white lens supplied with amber LED. All LEDs except 120V have an internal shunt resistor for use with solid-state outputs.

f

Voltage	
Transformer	
Code	Description
36	48V AC 50/60 Hz
16	120V AC 50/60 Hz
26	240V AC 50/60 Hz
76	277V AC 50/60 Hz
46	480V AC 50/60 Hz
56	600V AC 50/60 Hz
Full Voltage	
06	6V AC/DC
12	12V AC/DC
24	24V AC/DC
32	32V AC/DC ❽
48	48V AC/DC
10	120V AC/DC ❾
13	130V AC/DC ❽
20	240V AC/DC ❽
Resistor	
11	120V AC/DC Resistor
Neon	
10	120V AC/DC
20	240V AC/DC
Dual Input	
16	120V AC
24	24V AC/DC (Dual input diode only)

❽ 32V and 130V are LED only. 240V is incandescent only.
❾ 120V LED is AC only and does not contain internal shunt resistor. For AC/DC and internal shunt resistor, order 130V AC/DC LED (Code 13).

g

Lens Color		
Plastic Code	Color	Glass Code ❿
Blank	No Lens	Blank
A	Amber	D
B	Blue	E
C	Clear	F
G	Green	H
R	Red	J
W	White	K

h

Contact Blocks (Push-to-test units only)	
Code	Description
Standard	
Blank	1 N.O. - 1 N.C.
Pen *TUFF* (Low Voltage)	
AV	1 N.O. - 1 N.C.
Class 1, Div. 2/Zone 2	
Logic Reed	
AR	1 N.O. - 1 N.C.
Sealed Switch	
AP	1 N.O. - 1 N.C.
Stackable Sealed Switch	
AY	1 N.O. - 1 N.C.

❿ Glass lens available on 800T pilot lights only. Not available on 800T push-to-test units oro on 800H devices.

Potentiometer Units ❶



Potentiometer Unit
Cat. No. 800T-U24



Potentiometer Unit
Cat. No. 800H-UR4

Resistance	Type 4/13 Potentiometer ❷ Cat. No.	Type 4/4X/13 Potentiometer ❷ Cat. No.	Resistance	Type 4/13 Potentiometer ❷ Cat. No.	Type 4/4X/13 Potentiometer ❷ Cat. No.
Operator Only (Without Resistive Element)	800T-N37 ❸	800H-N102 ❸	25 kΩ	800T-U37	800H-UR37
			50 kΩ	800T-U41	800H-UR41
150 Ω	800T-U4	800H-UR4	75 kΩ	800T-U46	800H-UR46
500 Ω	800T-U12	800H-UR12	0.1 MΩ	800T-U49	800H-UR49
1000 Ω	800T-U13	800H-UR13	0.15 MΩ	800T-U50	800H-UR50
1500 Ω	800T-U16	800H-UR16	0.4 MΩ	800T-U54	800H-UR54
2500 Ω	800T-U19	800H-UR19	0.5 MΩ	800T-U55	800H-UR55
5000 Ω	800T-U24	800H-UR24	1 MΩ	800T-U57	800H-UR57
10 kΩ	800T-U29	800H-UR29	2 MΩ	800T-U59	800H-UR59
15 kΩ	800T-U34	800H-UR34	3 MΩ	800T-U62	800H-UR62
20 kΩ	800T-U35	800H-UR35	4 MΩ	800T-U64	800H-UR64

❶ Single turn operation with 312 degree rotation.
❷ Rated for 300V AC/DC 2 W maximum. Specify Bulletin 800TC or 800HC for finger-safe potentiometers. Example: **Cat. No. 800T-U29** becomes **800TC-U29**.
❸ For use with Type J potentiometers having a shaft length of 7/8" (22.2 mm) and a shaft diameter of 1/4" (6.3 mm).

Mechanically Interlocked Maintained Push Button Units



Cat. No. 800T-FA22A



Cat. No. 800T-FB16A



Cat. No. 800T-FC16F



Cat. No. 800H-CRA22A

Contact Arrangement		Type 4/13 Button Position: Button Type/Color			Type 4/4X/13		
					Booted ❹	Bootless	
Type	Configuration/ Position	Upper: Flush/Black Lower: Flush/Black	Upper: Flush/Green Lower: Extended/ Red	Upper: Flush/Green Lower: Mushroom/ Red	Upper: Flush/Black Lower: Flush/Black	Upper: Flush/Green Lower: Extended/ Red	Upper: Flush/Black Lower: Flush/Black
		Cat. No.	Cat. No.	Cat. No.	Cat. No.	Cat. No.	Cat. No.
1 N.O. - 1 N.C.		800T-FA22A	800T-FB16A	800T-FC16A	800H-FRA22A	800H-CRB16A	800H-CRA22A
2 N.O. - 2 N.C.	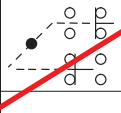	800T-FA22F	800T-FB16F	800T-FC16F	800H-FRA22F	800H-CRB16F	800H-CRA22F
No Contact	—	800T-FA22	800T-FB16	800T-FC16	800H-FRA22	800H-CRB16	800H-CRA22

❹ Boot material is hypalon with brass thredded-insert. See page 51for additional boot materials.

TAB 4



PHOENIX

4) DIGITAL METER

i) Red Lion #CUB7 hour meter

Tel +1 (717) 767-6511
Fax +1 (717) 764-0839
www.redlion.net

Bulletin No. CUB7N-D
Drawing No. LP0825
Released 09/12

MODEL CUB7 – MINIATURE ELECTRONIC 8 DIGIT COUNTER or TIMER



c UL US LISTED
3RSD
PROCESS CONTROL EQUIPMENT

- 0.35" (8.9 mm) *HIGH LCD DIGITS, REFLECTIVE OR TRANSMISSIVE WITH YELLOW/GREEN OR RED BACKLIGHTING (6-26 VDC power supply required for version with LED backlighting)*
- *INTERNAL LITHIUM BATTERY PROVIDES UP TO 7 YEARS OF TYPICAL UNINTERRUPTED OPERATION*
- *COUNT SPEEDS UP TO 10KHZ*
- *9 PROGRAMMABLE TIME RANGES*
- *CONTACT, LOGIC, OPEN COLLECTOR, OR HIGH VOLTAGE INPUTS*
- *STANDARD WIRE CONNECTIONS OR OPTIONAL PLUG-IN TERMINAL BLOCK*
- *NEMA 4X/IP65 SEALED FRONT BEZEL THAT FITS 1/32 DIN CUT-OUT*

DESCRIPTION

The CUB7 series is an 8-digit lithium battery powered miniature counter or timer with large 0.35" (8.9 mm) high digits. It has an LCD read-out available in Positive Imagine Reflective, Negative Image Transmissive with yellow/green or red backlighting. The backlight versions require an external 6-26 VDC power supply. The CUB7 series is housed in a lightweight, high impact plastic case with a clear viewing window. The sealed front panel with silicon rubber keypad meets NEMA 4X/IP65 specification for wash-down and/or dusty environments, when properly installed with supplied panel gasket and mounting clip.

Both counter and timer CUB7 models are available with a low voltage input (28 VDC max) or an isolated high voltage input (50-250 VDC/VAC). The low voltage input has DIP switch selections for SINKING or SOURCING along with a HIGH/LOW FREQUENCY selection (low frequency for contact inputs). Both units have front panel keypads that can be used to reset the display. The keypad can be enabled/disabled via a single DIP switch. The standard unit uses 22 gauge wires for external connections, an optional plug-in terminal block is available.

SAFETY SUMMARY

All safety related regulations, local codes and instructions that appear in the literature or on equipment must be observed to ensure personal safety and to prevent damage to either the instrument or equipment connected to it. If equipment is used in a manner not specified by the manufacturer, the protection provided by the equipment may be impaired.

CAUTION: Risk of Danger.
Read complete instructions prior to installation and operation of the unit.

CAUTION: Risk of electric shock.

SPECIFICATIONS

1. **DISPLAY**: 8-digit LCD, 0.35" (8.90 mm) high digits
2. **POWER**: Non-replaceable internal 3.6 VDC lithium battery provides 7 years of typical continuous operation (high count speeds in SNK mode & extreme ambient temperatures will decrease battery life, use of SRC mode can extend battery life)
   OPTIONAL LED BACKLIGHT POWER: 6-26 VDC @ 25 mA max.
   Must use an NEC Class 2 or Limited Power Source (LPS) rated power supply.
   Note: External power shall incorporate disconnecting device (switch or circuit breaker) and provide Double/Reinforced isolation from MAINS supply.
3. **LOW VOLTAGE INPUT**:
   COUNTERS: CUB7CCS0, CUB7CCR0, CUB7CCG0
   SNK mode (DIP switch 1 off, internal pull-up to battery)
   V_{IN} High Min = 1.25 VDC; V_{IN} Low Max = 0.45 VDC
   I_{IN} Max = 8 µA; V_{IN} Max = 3.6 VDC
   Count Speed: (count on negative edge)
   High freq mode (DIP switch 2 off): max 5 kHz @ 50% duty cycle
   Low freq mode (DIP switch 2 on): max 30 Hz @ 50% duty cycle
   Note: The three models listed above may be used for count inputs with 10-50 VAC signals when using a VCM10000 converter module. DIP switches must be set for SNK and Low frequency.
   SRC mode (DIP switch 1 on, internal 20 kΩ pull-down to common)
   V_{IN} High Min = 1.25 VDC; V_{IN} Low Max = 0.45 VDC
   I_{IN} Max = 5 mA; V_{IN} Max = 28 VDC
   Count Speed: (count on negative edge)
   High freq mode (DIP switch 2 off): max 10 kHz @ 50% duty cycle
   Low freq mode (DIP switch 2 on): max 50 Hz @ 50% duty cycle
   TIMERS:
   Models: CUB7TCS0, CUB7TCR0, CUB7TCG0 **For these models, the unit will time when the CUB7 input is low.**
   SNK mode (DIP switch 1 off, internal pull-up to battery)
   V_{IN} High Min = 1.25 VDC; V_{IN} Low Max = 0.45 VDC
   I_{IN} Max = 8 µA; V_{IN} Max = 3.6 VDC
   Note: The three models listed above may be used with 10-50 VAC

DIMENSIONS In inches (mm)

Note: Recommended minimum clearance (behind the panel) for mounting clip installation is 2.1" (53.4) H x 5.5" (140) W.

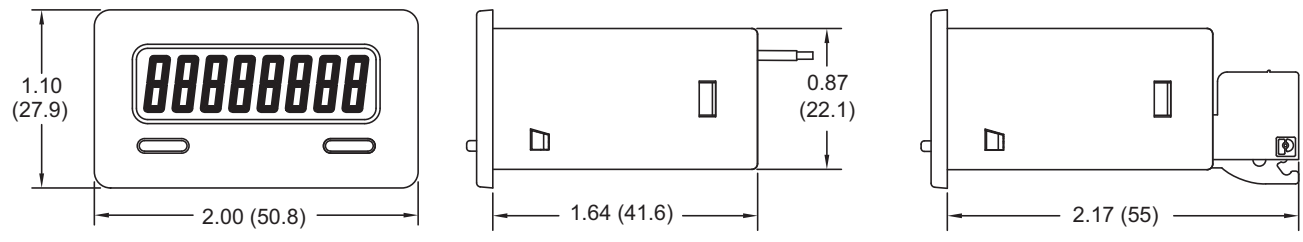

With Wires

With Terminal Block

signals when using a VCM10000 converter module.
SRC mode (DIP switch 1 on, internal 20 kΩ pull-down to common)
V_{IN} High Min = 1.25 VDC; V_{IN} Low Max = 0.45 VDC
I_{IN} Max = 5 mA; V_{IN} Max = 28 VDC
Models: CUB7TCS1, CUB7TCR1, CUB7TCG1 **For these models, the unit will time when the CUB7 input is high.**
SNK mode (DIP switch 1 off - **DO NOT USE**)
SRC mode (DIP switch 1 on, internal 20 kΩ pull-down to common)
V_{IN} High Min = 1.25 VDC; V_{IN} Low Max = 0.45 VDC
I_{IN} Max = 5 mA; V_{IN} Max = 28 VDC

4. **HIGH VOLTAGE INPUT**:
COUNTERS: CUB7CVS0, CUB7CVR0, and CUB7CVG0
The unit adds one count with voltage present
V_{IN} Range = 50-250 VDC/VAC 50/60 Hz, 5 mA max
Isolation: 2500 VAC 1 min
TIMERS: CUB7TVS0, CUB7TVR0, and CUB7TVG0
Unit will time with voltage present
V_{IN} Range = 50-250 VDC/VAC 50/60 Hz, 5 mA max
Isolation: 2500 VAC 1 min
5. **RESET INPUT**:
V_{IN} Low Max = 1.5 VDC (internal pull-up to battery)
I_{IN} Max = 20 µA
5 msec min (active low)
Note: Reset input is active low to clear display to zero
6. **TIMER ACCURACY**:
CUB7TV: 0.03% +100 msec per RUN terminal activation
CUB7TC low freq/snk setup: 0.03% +1 msec per RUN terminal activation
CUB7TC high freq/snk setup: 0.03% -1 msec per RUN terminal activation
7. **ENVIRONMENTAL CONDITIONS**:
Operating Temperature: 0 to 50 °C
Storage Temperature: -30 to 80 °C
Vibration according to IEC 68-2-6: Operational 5 to 500 Hz, in X, Y, Z direction for 1.5 hours, 5 g.
Shock according to IEC 68-2-27: Operational 30 g, 11 msec in 3 directions.
Operating and Storage Humidity: 85% max. (non-condensing)
8. **CONNECTIONS**: 22 gauge wire; wire length minimum 10"
OPTIONAL TERMINAL BLOCKS: Wire clamping terminals
Wire Strip Length: 0.275" (7 mm)
Wire Gage: 24-16 AWG copper wire
9. **CONSTRUCTION**: High impact plastic case with clear viewing window. The front panel meets NEMA 4X/IP65 requirements for outdoor use when properly installed. Installation Category II, Pollution Degree 2. Panel gasket and mounting clip are included.
10. **CERTIFICATIONS AND COMPLIANCES**:
SAFETY
UL Listed, File # E179259, UL508
Type 4X Outdoor Enclosure rating (Face only), UL50
IEC 61010-1, EN 61010-1: Safety requirements for electrical equipment for measurement, control, and laboratory use, Part 1.
IP65 Enclosure rating (Face only), IEC 529
ELECTROMAGNETIC COMPATIBILITY
Emissions and Immunity to EN 61326:2006: Electrical Equipment for Measurement, Control and Laboratory use.

Immunity to Industrial Locations:

Electrostatic discharge	EN 61000-4-2	Criterion A 4 kV contact discharge 8 kV air discharge
Electromagnetic RF fields	EN 61000-4-3	Criterion A 10 V/m (80 MHz to 1 GHz) 3 V/m (1.4 GHz to 2 GHz) 1 V/m (2 GHz to 2.7 GHz)
Fast transients (burst)	EN 61000-4-4	Criterion A 2 kV power 1 kV I/O signal
Surge	EN 61000-4-5	Criterion A power 1 kV L to L, 2 kV L to G
RF conducted interference	EN 61000-4-6	Criterion A 3 Vrms
Power freq magnetic fields	EN 61000-4-8	Criterion A 30 A/m
AC power	EN 61000-4-11	
Voltage dip		Criterion A 0% during 1 cycle 40% during 10/12 cycle 70% during 25/30 cycle
Short interruptions		Criterion B 0% during 250/300 cycles

Emissions:

Emissions	EN 55011	Class B

Notes:
1. Criterion A: Normal operation within specified limits.
2. Criterion B: Temporary loss of performance from which the unit self-recovers.

Refer to the EMC Installation Guidelines section of the bulletin for additional information.

11. **WEIGHT**: 0.11 lbs. (0.05 Kg)

ORDERING INFORMATION

COUNTERS

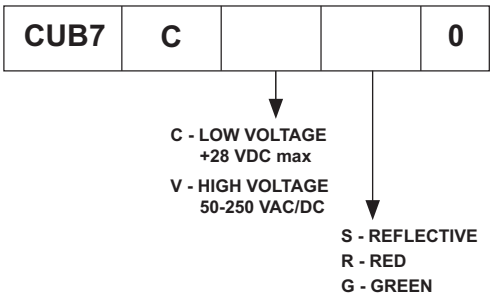

TIMERS

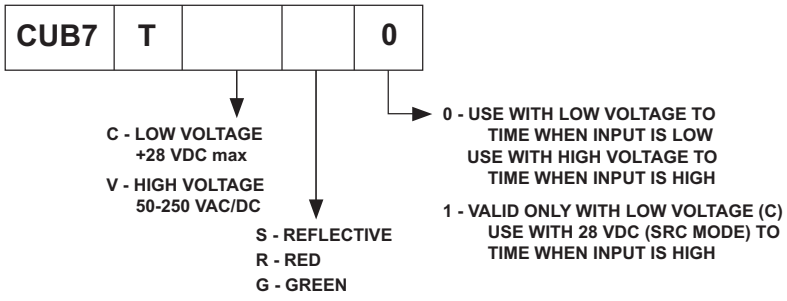

Accessories Part Numbers

TYPE	DESCRIPTION	PART NUMBER	USED WITH
Plug-in Terminal Block	3 Position Terminal Block	TB100003	CUB7CCS0, CUB7TCS0, CUB7TCS1
	4 Position Terminal Block	TB100004	CUB7CCG0, CUB7TCG0, CUB7TCG1, CUB7CCR0, CUB7TCR0, CUB7TCR1, CUB7CVS0, CUB7TVS0
	5 Position Terminal Block	TB100005	CUB7CVG0, CUB7TVG0, CUB7CVR0, CUB7TVR0
Enclosure *	CUB7 Enclosure	ENC13000	
Base Mount *	CUB7 Base Mount	BMK80000	

See Wiring the Meter section to determine the terminal block needed.
** Enclosure and base mount will NOT function with plug-in terminal block option.*

1.0 Installing the Meter

INSTALLATION ENVIRONMENT

The unit should be installed in a location that does not exceed the maximum operating temperature and provides good air circulation. Placing the unit near devices that generate excessive heat should be avoided.

The bezel should be cleaned only with a soft cloth and neutral soap product. Do NOT use solvents.

Continuous exposure to direct sunlight may accelerate the aging process of the bezel. Do not use tools of any kind (screwdrivers, pens, pencils, etc.) to operate the keypad of the unit.

Installation

The CUB7 series of products meets NEMA 4X/IP65 requirements for outdoor use, when properly installed. The units are intended to be mounted into an enclosed panel. The viewing window and reset button are factory sealed for a washdown environment. A sponge rubber gasket and mounting clip are provided for installing the unit in the panel cut-out.

The following procedure assures proper installation:

1. Cut panel opening to specified dimensions. Remove burrs and clean around panel opening.
2. Carefully remove and discard the center section of the gasket. Slide the panel gasket over the rear of the unit to the back of the bezel. Insert the mounting screws onto both sides of mounting clip. The tip of the screw should **NOT** project from the hole in the mounting clip.
3. Install the CUB7 unit through the panel cut-out until the front bezel flange contacts the panel.
4. Slide the mounting clip over the rear of the unit until the clip is against the back of the panel. The mounting clip has latching features which engage into mating features on the CUB7 housing.

Note: It is necessary to hold the unit in place when sliding mounting clip into position.

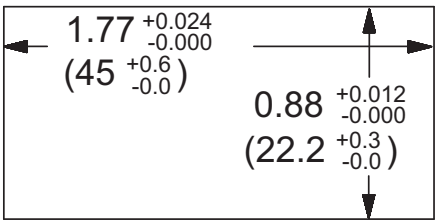

5. Alternately tighten each screw to ensure uniform gasket pressure. Visually inspect the front panel gasket. The gasket should be compressed to about 75 to 80% of its original thickness. If not, gradually turn mounting screws to further compress gasket.
6. If gasket is not adequately compressed and the mounting screws can no longer be turned, loosen mounting screws, and check that mounting clip is latched as close as possible to the panel.
7. Repeat from step #5 for tightening mounting screws.

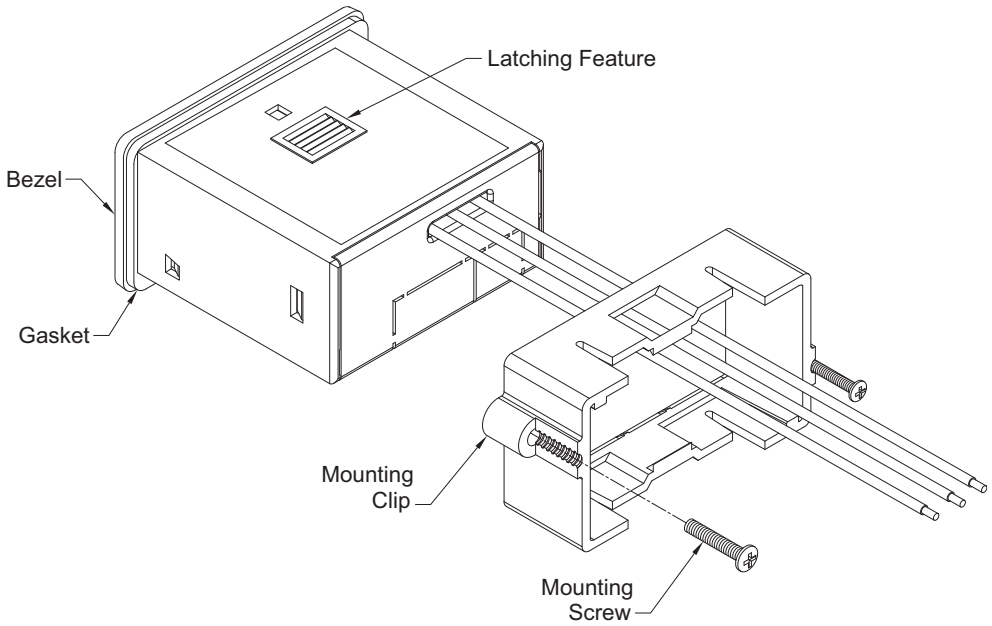

2.0 Setting the DIP Switches

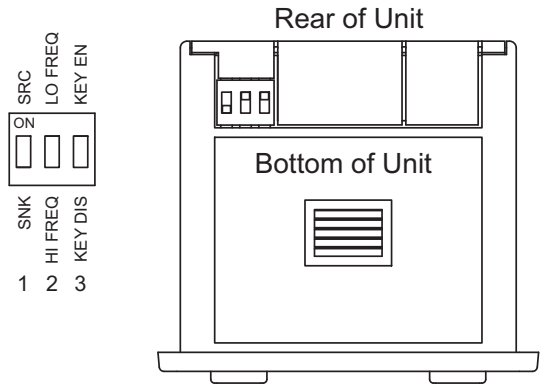

Low Voltage Input Unit

Low voltage input units have 3 DIP switches that must be positioned appropriately prior to wiring.

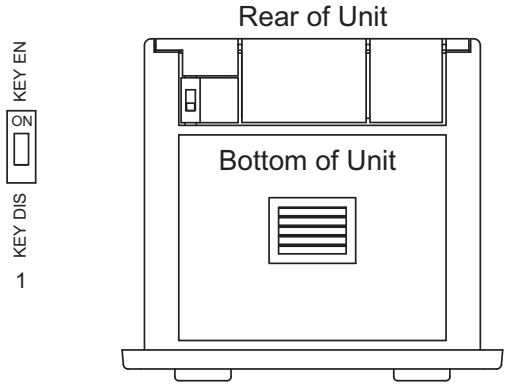

High Voltage Input Unit

High voltage input units have 1 DIP switch to enable or disable the front bezel keypad.

Note: Placing the KEY DISABLE/ENABLE DIP switch in the OFF position, disables all front panel keys.

3.0 Programming The Time Range

The CUB7 Timer has 9 time ranges. To change ranges, enable the front keypad with the DIP switch and press the SEL key. The currently programmed time range will be displayed (example 2222222.2 = time range 2). To change the range, press the RST key. The ranges will cycle from 0-8 and back to 0. To enter your time range, press the SEL key and the unit will retain the current time range and return back to normal.

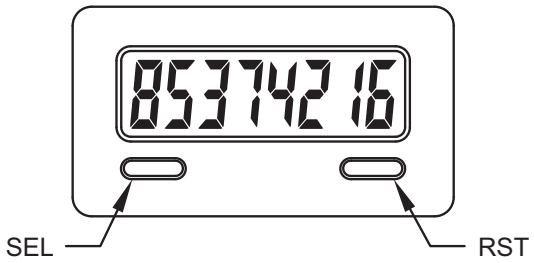

DISPLAY DURING PROGRAMMING	TIMER RANGE
00000.000	0.001 SEC
111111.11	0.01 SEC
2222222.2	0.1 SEC
333333333	1 SEC
4444444.4	0.1 MIN
555555555	1 MIN
666666.66	0.01 HR
7777777.7	0.1 HR
88888888	1 HR

4.0 Resetting The Display

The display may be reset to zero via the front RST key, the remote reset input or both.

The front RST key must be enabled for front panel reset. DIP switch # 3 on the low voltage input units or the single DIP switch on the high voltage input units. (See 2.0 Setting the DIP Switches for switch location)

The remote reset is activated via an external momentary contact closure between the reset input (blue wire) and the common (black wire). When the optional terminal blocks are used, see 5.0 Wiring The Meter, for the appropriate reset input terminal and the common terminal.

5.0 Wiring The Meter

WIRING OVERVIEW

Electrical connections are made to the #22 AWG colored wires protruding from the rear of the unit. When using the optional terminal block, the #22 AWG colored wires are cut off and electrical connections are made via screwless type terminal block. All conductors should conform to the meter's voltage and current ratings. All cabling and wire terminations should conform to appropriate standards of good installation, local codes and regulations. It is recommended that the backlight power supplied to the meter (DC or AC) be protected by a fuse or circuit breaker.

EMC INSTALLATION GUIDELINES

Although this meter is designed with a high degree of immunity to Electro-Magnetic Interference (EMI), proper installation and wiring methods must be followed to ensure compatibility in each application. The type of the electrical noise, source or coupling method into the meter may be different for various installations. The meter becomes more immune to EMI with fewer I/O connections. Cable length, routing, and shield termination are very important and can mean the difference between a successful or troublesome installation. Listed below are some EMC guidelines for successful installation in an industrial environment.

1. The meter should be mounted in a metal enclosure, which is properly connected to protective earth.
2. Use shielded (screened) cables for all Signal and Control inputs. The shield (screen) pigtail connection should be made as short as possible. The connection point for the shield depends somewhat upon the application. Listed below are the recommended methods of connecting the shield, in order of their effectiveness.
   a. Connect the shield only at the panel where the unit is mounted to earth ground (protective earth).
   b. Connect the shield to earth ground at both ends of the cable, usually when the noise source frequency is above 1 MHz.
   c. Connect the shield to common of the meter and leave the other end of the shield unconnected and insulated from earth ground.
3. Never run Signal or Control cables in the same conduit or raceway with AC power lines, conductors feeding motors, solenoids, SCR controls, and heaters, etc. The cables should be ran in metal conduit that is properly grounded. This is especially useful in applications where cable runs are long and portable two-way radios are used in close proximity or if the installation is near a commercial radio transmitter.
4. Signal or Control cables within an enclosure should be routed as far as possible from contactors, control relays, transformers, and other noisy components.
5. In extremely high EMI environments, the use of external EMI suppression devices, such as ferrite suppression cores, is effective. Install them on Signal and Control cables as close to the unit as possible. Loop the cable through the core several times or use multiple cores on each cable for additional protection. Install line filters on the power input cable to the unit to suppress power line interference. Install them near the power entry point of the enclosure. The following EMI suppression devices (or equivalent) are recommended:
   Ferrite Suppression Cores for signal and control cables:
   Fair-Rite # 0443167251 (RLC# FCOR0000)
   TDK # ZCAT3035-1330A
   Steward # 28B2029-0A0
   Line Filters for input power cables:
   Schaffner # FN610-1/07 (RLC# LFIL0000)
   Schaffner # FN670-1.8/07
   Corcom # 1 VR3
   Note: Reference manufacturer's instructions when installing a line filter.
6. Long cable runs are more susceptible to EMI pickup than short cable runs. Therefore, keep cable runs as short as possible.
7. Switching of inductive loads produces high EMI. Use of snubbers across inductive loads suppresses EMI.
   Snubber: RLC# SNUB0000.

USING THE COLOR CODED WIRES

The low voltage input units will contain three or four color coded wires depending on the backlight power requirements.

The high voltage input units will contain (2) orange wires and an additional two or three wires depending on the backlight power requirements.

The tables define the function of each colored wire.

LOW VOLTAGE INPUT
Wire Colors

WHITE	BLUE	BLACK	RED
Low Voltage Input	Reset	Common	+Backlight Power

HIGH VOLTAGE INPUT
Wire Colors

ORANGE	ORANGE	BLUE	BLACK	RED
High Voltage Input	High Voltage Input	Reset	Common	+Backlight Power

TERMINAL BLOCK OPTION

CONNECTIONS: Wire clamping terminals
Wire Strip Length: 0.275" (7 mm)
Wire Gage: 24-16 AWG copper wire

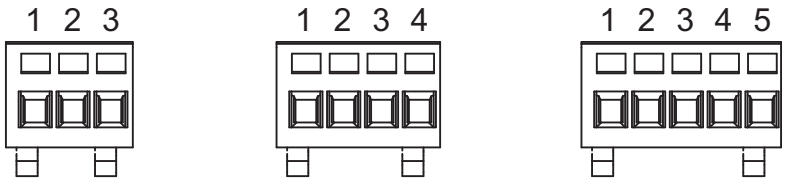

USING THE OPTIONAL TERMINAL BLOCK

1. Remove the rear cover. Refer to Figure 1. A small slotted screwdriver is required to release the side latches. Insert the screwdriver tip between the rear cover and the side of the unit. Leverage the screwdriver away from the case to unlatch the side latch and slightly lift the rear cover. Pinch the corners to hold the rear cover in place. Remove the screwdriver and repeat the same procedure on the other side of the rear cover. When both side latches are released, slide the rear cover from the unit and the wires.
2. For safety concerns, the wires should be cut off completely flush with the PC board to prevent a short.
3. Break out the break away tab(s) as required. Remove the left tab only for 3 position terminal block or both tabs for 4 and 5 position terminal blocks.
4. Reinstall the rear cover into CUB7 unit.
5. Mount the CUB7 into the panel (refer to 1.0 Installing The Meter)
6. Push the keyed terminal block onto the exposed PC board. The left most terminal, next to the DIP switch(s) is terminal #1.

Note: Wire sizes 16-24 AWG may be used with 0.25" length exposed. The screwless type terminal block requires a small slotted screwdriver engaged in the upper slot to open the wire clamp in the lower larger slot. Removing the screwdriver will lock the wire clamp unto the wire.

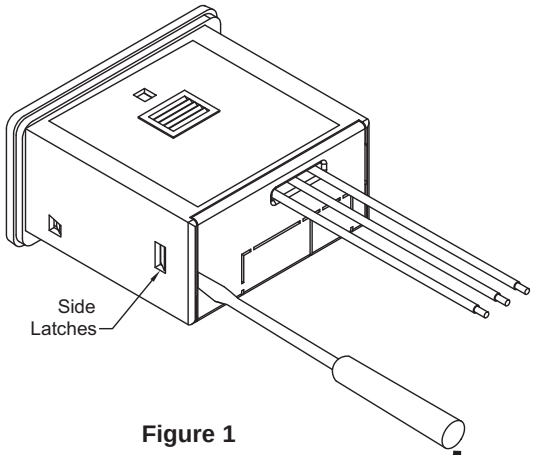

Figure 1

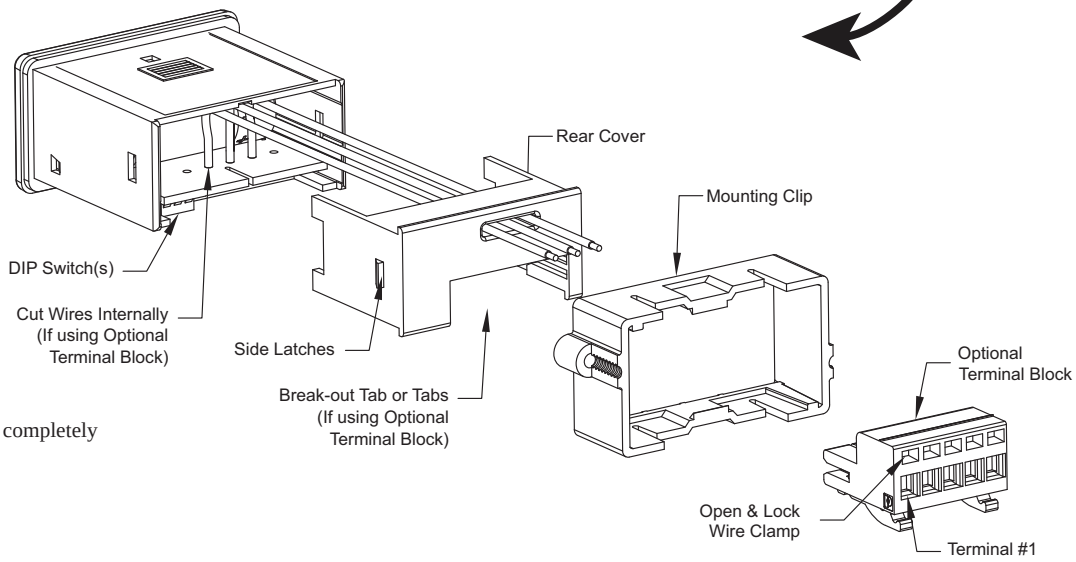

Wires must be cut off completely flush with PC board.

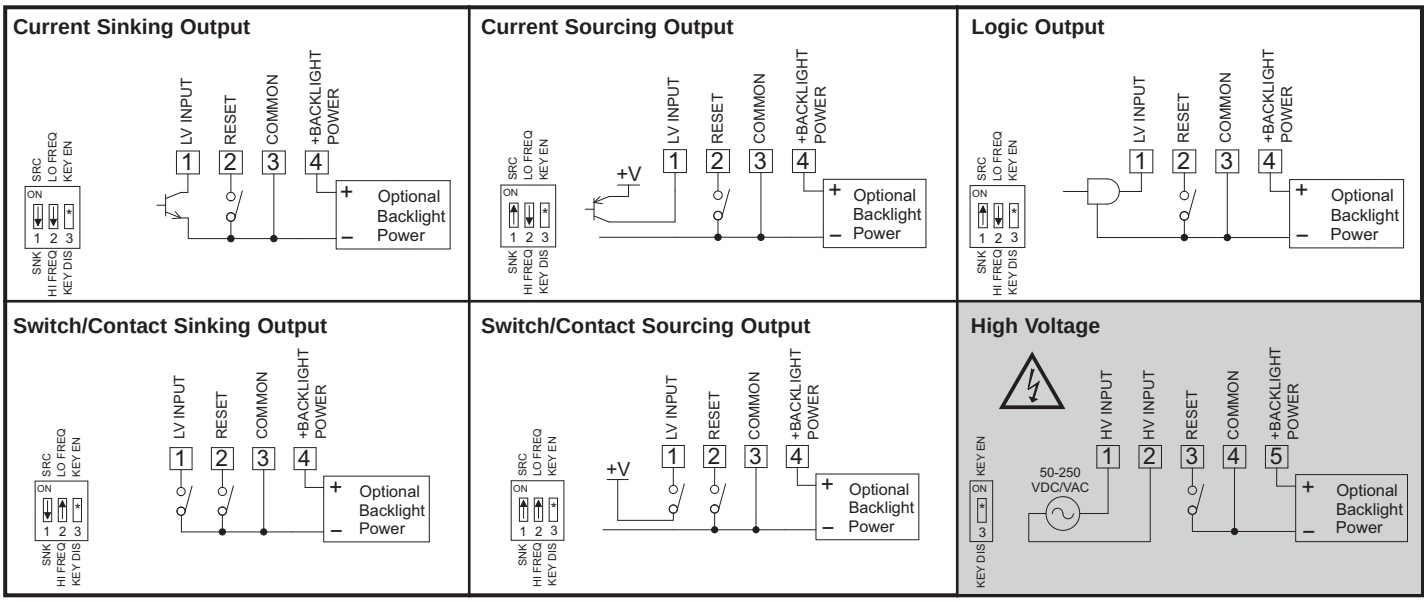

* *Switch position is application dependent.*

Shaded area for high voltage applications.

This page intentionally left blank.

LIMITED WARRANTY

The Company warrants the products it manufactures against defects in materials and workmanship for a period limited to two years from the date of shipment, provided the products have been stored, handled, installed, and used under proper conditions. The Company's liability under this limited warranty shall extend only to the repair or replacement of a defective product, at The Company's option. The Company disclaims all liability for any affirmation, promise or representation with respect to the products.

The customer agrees to hold Red Lion Controls harmless from, defend, and indemnify RLC against damages, claims, and expenses arising out of subsequent sales of RLC products or products containing components manufactured by RLC and based upon personal injuries, deaths, property damage, lost profits, and other matters which Buyer, its employees, or sub-contractors are or may be to any extent liable, including without limitation penalties imposed by the Consumer Product Safety Act (P.L. 92-573) and liability imposed upon any person pursuant to the Magnuson-Moss Warranty Act (P.L. 93-637), as now in effect or as amended hereafter.

No warranties expressed or implied are created with respect to The Company's products except those expressly contained herein. The Customer acknowledges the disclaimers and limitations contained herein and relies on no other warranties or affirmations.

Red Lion Controls
Headquarters
20 Willow Springs Circle
York PA 17406
Tel +1 (717) 767-6511
Fax +1 (717) 764-0839

Red Lion Controls
Europe
Printerweg 10
NL - 3821 AD Amersfoort
Tel +31 (0) 334 723 225
Fax +31 (0) 334 893 793

Red Lion Controls
India
201-B, 2nd Floor, Park Centra
Opp 32 Mile Stone, Sector-30
Gurgaon-122002 Haryana, India
Tel +91 984 487 0503

Red Lion Controls
China
Unit 101, XinAn Plaza
Building 13, No.99 Tianzhou Road
ShangHai, P.R. China 200223
Tel +86 21 6113-3688
Fax +86 21 6113-3683

TAB 5



PHOENIX

5) PLC

i) MicroLogix1400 PLC

ii) MicroLogix1200 I/O Modules

Rockwell Automation

MICROLOGIX 1400 CONTROLLERS



Combining the features you demand from the MicroLogix 1100 controller, such as EtherNet/IP, online editing and a built-in LCD, plus adding enhanced features, such as increased I/O, faster High Speed Counter/PTO and communication capabilities, the MicroLogix 1400 controller allows you to meet even greater application needs.

Use the embedded LCD to set the Ethernet network configuration, display floating point values on user-configurable display, set OEM logos, change file addresses, and increase the LCD data wiring capability to support a whole file.

Benefits

- Ethernet port provides web server and e-mail capability.
- Built-in LCD with backlight allows you to view controller and I/O status, and provides a simple interface for messages, bit/integer monitoring and manipulation.
- Expand your application capabilities through support of up to seven expansion I/O modules (1762 I/O) with 256 digital I/O.

Target Applications

- Material Handling
- Packaging Applications
- General Industrial Machinery
- Printing
- Food and Beverage
- Pharmaceutical
- Water Wastewater / SCADA
- Clutch/Brake control
- Position Control — Pick-and-place / Conveyor

Product Design

The MicroLogix 1400 system offers higher I/O count, faster high-speed counter/PTO, and enhanced network capabilities. MicroLogix 1400 controllers without embedded analog come with 32 digital I/O count, while analog versions have 32 digital I/O and 6 analog I/O. All versions can be expanded using up to seven 1762 I/O modules — the same I/O modules that MicroLogix 1100 and 1200 controllers utilize.

The MicroLogix 1400 controller houses embedded inputs, outputs, power supply, and communication ports. It also

provides the interface to expansion I/O when required by an application.

Features

- Up to six embedded 100 kHz high-speed counters (on controllers with DC inputs).
- Two serial ports with DF1/DH-485/Modbus RTU/DNP3/ASCII protocol support.
- Embedded 10/100 Mbps Ethernet port with EtherNet/IP, Modbus TCP/IP and DNP3 over IP support
- 10K words user program memory and 10K words user data memory.
- Up to 128 KB for data logging and 64 KB for recipe.
- Program with RSLogix 500 or RSLogix Micro programming software.

Communication

The MicroLogix 1400 controllers provide an isolated RS-232C/RS-485 port, an RJ45 Ethernet port, and a non-isolated RS-232C port. The ports can be used for the following types of communication.

Communication	Description
Communication channel 0 Isolated RS-232C and RS-485 electrical compatibility (on separate pins)	• Use the RS-485 cable (1763-NC01) to interface directly to RS-485 networks. • DF1 full-duplex, DF1 half-duplex master and slave, DF1 radio modem. • DH-485; If you use RS-232C port and existing cables, an Advanced Interface Converter (1761-NET-AIC) and external power is required for networking. DH-485 is also supported directly using the RS-485 cable (1763-NC01) on this port. • Modbus RTU master and RTU slave; If you use RS-232C port and existing cables, an Advanced Interface Converter (1761-NET-AIC) and external power is required for networking. Modbus RTU networking is also supported directly using the RS-485 cable (1763-NC01) on this port. • DNP3 slave. • ASCII.
Communication channel 1 RJ45 port supports EtherNet/IP for peer-to-peer messaging	• 10/100 Mbps port with support for BOOTP, DHCP, and SNMP capability directly from the controller. • Automatically assign IP address through DHCP or BOOTP, or configure using RSLogix 500 programming software. • Monitor your IP address through the LCD Display (or use the write-on nameplate). • Supports CIP as well as DNP3 over IP and Modbus TCP/IP. • Allows controllers to exchange data with other controllers through messaging; does not support scanning of I/O on Ethernet adapters.
Communication channel 2 Non-isolated RS-232C port	• DF1 full-duplex, DF1 half-duplex master and slave, DF1 radio modem. • DH-485; an Advanced Interface Converter (1761-NET-AIC) and external power is required for networking. • Modbus RTU master and RTU slave; an Advanced Interface Converter (1761-NET-AIC) and external power is required for networking. • DNP3 slave. • ASCII.

Specifications

General Specifications

Specification	1766 Controllers
Operating Temperature	-20…60 °C (-4…140 °F)
Nonoperating Temperature	-40…85 °C (-40…185 °F)

Relative Humidity	5…95% noncondensing
Vibration	3 g at 10... 500 Hz
Operating Shock	30 g
Nonoperating Shock	Panel mount: 50 g DIN mount: 40 g
Certifications✶	UL Listed Industrial Control Equipment for use in Class 1, Division 2, Hazardous Locations, Groups A, B, C, D CE marked for all applicable directives C-Tick marked for all applicable acts

✶ When product is marked. See the Product Certification link at www.ab.com for declarations of Conformity, Certificates, and other certification details

MicroLogix 1400 Controllers

	MicroLogix 1400 Controllers with Digital I/O			MicroLogix 1400 Controllers with Digital and Analog I/O		
	1766-L32BWA	**1766-L32AWA**	**1766-L32BXB**	**1766-L32BWAA**	**1766-L32AWAA**	**1766-L32BXBA**
Line Voltage	120/240V AC		24V DC	120/240V AC		24V DC
Memory Size and Type	20 KB battery-backed RAM: 10 KB user program 10 KB user data					
Data Elements	configurable, user-defined file structure, 10 KB max. data size					
Data Logging	128 KB (without recipe), 64 KB recipe storage					
Battery Backup	Yes					
Number of Inputs	(12) Fast 24V DC (8) Normal 24V DC	(20) 120V AC	(12) Fast 24V DC (8) Normal 24V DC	(12) Fast 24V DC (8) Normal 24V DC (4) Analog Voltage Inputs	(20) 120V AC (4) Analog Voltage Inputs	(12) Fast 24V DC (8) Normal 24V DC (4) Analog Voltage Inputs
Number of Outputs	(12) Relay	(12) Relay	(6) Relay (3) Fast DC (3) Normal DC	(12) Relay (2) Analog Voltage Outputs	(12) Relay (2) Analog Voltage Outputs	(6) Relay (3) Fast DC (3) Normal DC (2) Analog Voltage Outputs
Serial Port	(1) RS-232C/RS-485‡ (1) RS-232C§					
Serial Protocols	DF1 full-duplex DF1 half-duplex master/slave DF1 radio modem DH-485 Modbus RTU master/slave ASCII DNP3 slave					
Ethernet Port	(1) 10/100 EtherNet/IP port					
Ethernet Protocols	EtherNet/IP messaging only Modbus TCP/IP DNP3 Over IP					
Trim Potentiometers	2 digital					
High-Speed Inputs (Pulse Catch)	Up to 6 channels @ 100 kHz	—	Up to 6 channels @ 100 kHz	Up to 6 channels @ 100 kHz	—	Up to 6 channels @ 100 kHz
Real-time Clock	Yes, embedded					
PID	Yes (limited by loop and stack memory)					
Pulse Width Modulated	—		3 channels @ 40 kHz	—		3 channels @ 40 kHz

Pulse Train Outputs	–	3 channels @ 100 kHz	–	3 channels @ 100 kHz
Dual Axis Servo Control	–	Through embedded PTO	–	Through embedded PTO
Embedded LCD	Yes			
Floating Point Math	Yes			
Online Editing	Yes			

✶ Isolated RS-232C/RS-485 combo port.
❄ Nonisolated RS-232C with standard D-sub connector.

Copyright © 2011 Rockwell Automation, Inc. All Rights Reserved.

1762 MICROLOGIX EXPANSION I/O

Expansion I/O Modules

The 1762 MicroLogix expansion I/O modules are compatible with MicroLogix 1100, MicroLogix 1200, and MicroLogix 1400 controllers. If your application requires more I/O than the built-in I/O provided by the controller, add expansion I/O modules.

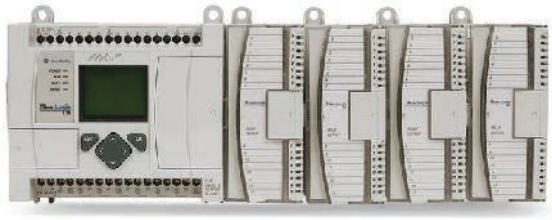

MicroLogix 1100 controller with four expansion I/O modules

Install the expansion I/O modules to the right of the controller, either on a panel with two mounting screws or on a DIN rail. You can use digital and analog I/O modules in many combinations, up to the maximum supported by the controller. The current loading capacity of the controller's built-in power supply may limit the actual number of I/O modules that can be connected to the controller.

Features

- Integrated high-performance I/O bus
- Software keying to prevent incorrect positioning within the system
- Finger-safe terminal blocks for I/O wiring
- Label to record I/O terminal designations
- Network support includes EtherNet/IP, DeviceNet, and DH-485 (local only)
- Digital, analog, and specialty I/O modules available

Maximum 1762 Expansion I/O Modules per Controller

Controller	Number I/O Modules, Max.
MicroLogix 1100	4
MicroLogix 1200	6
MicroLogix 1400	7

Copyright © 2011 Rockwell Automation, Inc. All Rights Reserved.

1762 MICROLOGIX EXPANSION I/O

Environmentals and Certifications

Environmental Specifications

	1762 MicroLogix Expansion I/O Modules
Operating Temperature	-20…65 °C (-4…149 °F) (on selected modules)
Operating Humidity	5…95% (without condensation)
Operating Altitude, Max.	2,000 m (6,561 ft)
Vibration, Operating	10…500 Hz, 5 g, 0.015 in peak-to-peak
Vibration, Relay Operation	2 g
Shock, Operating	30 g panel mounted, 20 g DIN-rail mounted
Shock, Relay Operation	7.5 g panel mounted, 5 g DIN rail mounted
Shock, Nonoperating	40 g panel mounted, 30 g DIN rail mounted
Dimensions (HxWxD), Approx.	90 x 40 x 87mm (3.543 x 1.575 x 3.425 in.)✶
Radiated and Conducted Emissions	EN50081-2 Class A
ESD Immunity (IEC 1000-4-2)	4 kV contact, 8 kV air, 4 kV indirect
Radiated Immunity (IEC 1000-4-3)	10V/m, 80-1000 MHz, 80% amplitude modulation, +900 MHz keyed carrier
Fast Transient Burst (IEC 1000-4-4)	2 kV, 5 kHz
Surge Immunity (IEC 1000-4-5)	2 kV common mode, 1 kV differential mode
Conducted Immunity (IEC 1000-4-6)	10V, 0.15…80 MHz❄

✶ Height including mounting tabs is 110 mm (4.33 in.).
❄ Conducted immunity frequency range may be 150 kHz…30 MHz if the radiated immunity frequency range is 30 MHz…1000 MHz.

Certifications

Certifications: C-UL certified (under CSA C22.2 No. 142), UL 508 Listed, CE compliant for all applicable directives. Hazardous Environment Class: Class I, Division 2, Hazardous Location, Groups A, B, C, D (UL1604, C-UL under CSA C22.2 No. 213).

When product is marked. See the Product Certification link at www.ab.com for Declarations of Conformity, Certificates, and other certification details.

Copyright © 2011 Rockwell Automation, Inc. All Rights Reserved.

Rockwell Automation

1762 MICROLOGIX EXPANSION I/O

Digital I/O Modules

Digital Output Modules

Cat. No.	Outputs	Voltage Category	Operating Voltage Range	Continuous Current per Output, Max.	Continuous Current per Module, Max.	Off-State Leakage Current, Max.	Bus Current Load, Max.
1762-OA8	8 (4 points/group)	100...240V AC	85...265V AC at 47...63 Hz	0.25 A at 55 °C (131° F) 0.5 A at 30 °C (86 °F)	2.0 A (1.0 A per common) at 55 °C (131 °F) 4.0 A (2.0 A per common) at 30 °C (86 °F)	2 mA at 132V AC 2.5 mA at 265V AC	115 mA at 5V DC (0.575 W)
1762-OB8	8	24V DC source	20...26.4V DC	0.5 A at 55 °C (131°F) 1.0 A at 30 °C (86 °F)	4.0 A at 55 °C (131°F) 8.0 A at 30 °C (86 °F)	1.0 mA	115 mA at 5V DC (0.575 W)
1762-OB16	16	24V DC source	20...26.4V DC	0.5 A at 55 °C (131°F) 1.0 A at 30 °C (86 °F)	4.0 A at 55 °C (131°F) 8.0 A at 30 °C (86 °F)	1 mA	175 mA at 5V DC (0.88 W)
1762-OW8	8 (4 points/group)	AC/DC N.O. contact	5...265V AC 5...125V DC	2.5 A✶	16.0 A (8.0 A per common)	0 mA	80 mA at 5V DC (0.40 W) 90 mA at 24V DC (2.16 W)
1762-OW16	16 (8 points/group)	AC/DC N.O. contact	5...265V AC 5...125V DC	2.5 A✶	16.0 A (8.0 A per common)	0 mA	140 mA at 5V DC (0.7 W)❄ 180 mA at 24V DC (4.32 W)❄
1762-OX6I	6 N.C., N.O.	AC/DC Type C Relay	5...265V AC 5...125V DC	7.0 A✶	30.0 A (7.0 A per common✶)	0 mA	110 mA at 5V DC (0.55 W) 110 mA at 24V DC (2.64 W)
1762-OV32T	32 (16 points/group)	24V DC sink	10.2...26.4V DC	0.5 A at 60 °C (140 °F)	4.0 A (2.0 A per common) at 60 °C (140 °F)	0.1 mA at 26.4V DC	175 mA at 5V DC
1762-OB32T	32 (16 points/group)	24V DC source	10.2...26.4V DC	0.5 A at 60 °C (140 °F)	4.0 A (2.0 A per common) at 60 °C (140 °F)	0.1 mA at 26.4V DC	175 mA at 5V DC

✶ See MicroLogix Programmable Controllers Family Selection Guide, publication 1761-SG001, for complete information on relay contact ratings.
❄ Only applicable for series B.

Digital Input Modules

Cat. No.	Inputs	Voltage Category	Operating Voltage Range	On-State Current, Max.	Impedance, Nom.	Signal Delay, Max.	Off-State Voltage and Current, Max.	Bus Current Draw, Max.
1762-IA8	8	100/120V AC	79...132V AC at 47...63 Hz	16 mA at 132V AC, 63 Hz	12 kΩ at 50 Hz 10 KΩ at 60 Hz	On/Off: 20 ms	20V AC 2.5 mA	50 mA at 5V DC (0.25 W)
1762-IQ8	8	24V DC sink/source	10...26.4V DC at 55 °C (131 °F) 10...30V DC at 30 °C (86 °F)	12 mA at 30V DC	3 kΩ	On/Off: 8 ms	5V DC 1.5 mA	50 mA at 5V DC (0.25 W)

1762-IQ16	16 (8 points/group)	24V DC sink/source	10…26.4V DC 10…30V DC✶ ❄	12 mA at 30V DC	3 kΩ	On/Off: 8 ms	5V DC 1.5 mA	70 mA at 5V DC (0.35 W)❄
1762-IQ32T	32 (8 points/group)	24V DC sink/source	10…26.4V DC 10…30V DC‡	6.5 mA at 30.0V DC	4.7 kΩ	On/Off: 8.0 ms	5V DC 1 mA	170 mA at 5V DC

✶ See MicroLogix 1762-IQ16 DC Input Module Installation Instructions, publication 1762-IN010, for derating chart.
‡ See MicroLogix 1762-IQ32T DC Input Module Installation Instructions, publication 1762-IN019, for derating chart.
❄ Only applicable for series B.

Digital Combination Modules

Cat. No.	Inputs/Outputs	Voltage Category	Operating Voltage Range	On-State Current, Max.	Continuous Current per Output, Max.	Off-State Voltage and Current, Max.	Off-State Leakage Current, Max.	Impedance, Nom.	Signal Delay, Max.	Bus Current, Max.
1762-IQ8OW6	8 inputs	24V DC sink/source	10…26.4V DC at 65 °C 10…30V DC at 30 °C	10 mA at 5V DC	—	5V DC 1.5 mA	—	3 kΩ	On/Off: 8 ms	110 mA at 5V DC (0.25 W) 80 mA at 24V DC
	6 outputs	AC/DC N.O. contact	5…265V AC 5…125V DC	—	2.5 A (8.0 A per module, max.)	—	0 mA	—	—	110 mA at 5V DC (0.40 W) 80 mA at 24V DC (2.16 W)

Copyright © 2011 Rockwell Automation, Inc. All Rights Reserved.

Rockwell Automation

1762 MICROLOGIX EXPANSION I/O

Analog I/O Modules

Cat. No.	Inputs/Outputs	Analog Ranges	Bus Current Draw, Max.	Overall Accuracy *	Resolution Across Full Range	Typical Update Period
1762-IF4	4 differential inputs (bipolar)	Voltage: ±10V Current: 4...20 mA	40 mA at 5V DC 50 mA at 24V DC	±0.32% full scale at -20...65° C (-4...149° F) ❄ ±0.24% full scale at 25° C (77° F)	15 bits (bipolar)❄	130, 250, 290, 450, 540 ms (selectable)
1762-OF4	4 single-ended outputs (unipolar)❄	Voltage: 0...10V Current: 4...20 mA	40 mA at 5V DC 165 mA at 24V DC	±1.17% full scale at -20...65° C (-4...149° F) ❄ ±0.5% full scale at 25° C (77° F)	12 bits (unipolar)	2.5 ms
1762-IF2OF2	2 differential inputs (unipolar) 2 single-ended outputs (unipolar)	Voltage: 0...10V Current: 4...20 mA	40 mA at 5V DC 105 mA at 24V DC	±0.55% full scale at -20...65° C (-4...149° F) ❄ ±0.3% full scale at 25° C (77° F)	12 bits (unipolar)	2.5 ms (inputs) 4.5 ms (outputs)

* Includes offset, gain, non-linearity, and repeatability error terms.
❄ Only applicable for series B.

Copyright © 2011 Rockwell Automation, Inc. All Rights Reserved.

TAB 6



PHOENIX

6) STARTERS

i) Allen Bradley 100C Contactors

ii) Allen Bradley 140M Motor Circuit Protectors





Bulletin 100-C/104-C — IEC Contactors

- Compact sizes from 4...55 kW/5...75 Hp (9...97 A)
- AC and DC coil control
- Common accessories for all contactor sizes
- Front and side mounting of auxiliary contacts
- Electronic and pneumatic timing modules
- Space-saving coil-mounted control modules
- Reversible coil terminations (line or load side)
- All devices can be attached to 35 mm DIN mounting Rail
- Environmentally friendly materials

The Bulletin 100-C/104-C IEC contactor family, along with a wide range of common accessories and Bulletin 193 solid-state overload relays, provides the most compact and flexible starter component system available.

Your order must include: cat. no. of the contactor specified with coil voltage code and, if required, cat. no. of any accessories and/or replacement coils.

Table of Contents

Product Selection ..... this page
Accessories 2-142
Approximate Dimensions 2-194

Standards Compliance

EN/IEC 60947-4-1, 60947-5-1
IEC 60947 Type "2" Coordination
CSA C22.2 No. 14
UL 508
Meets the material restrictions for European Directive 2002/95/IEC-EU-RoHS

Certifications

CE Marked
cULus Listed (File No. E3125; Guide NLDX, NLDX7)
CCC

2

Product Selection
3-Pole AC- and DC-Operated Contactors

/e [A]		Ratings for Switching AC Motors — AC-2, AC-3, AC-4										Aux. Contacts		
		3-Phase kW (50 Hz)				Hp (60 Hz)								
						1-Phase		3-Phase						
AC-3	AC-1	230V	400V/415V	500V	690V	115V	230V	200V	230V	460V	575V	N.O.	N.C.	Cat. No.
9	32	3	4	4	4	1/2	1-1/2	2	2	5	7-1/2	1	0	‡ 100-C09⊗10
												0	1	‡ 100-C09⊗01
12	32	4	5.5	5.5	5.5	1/2	2	3	3	7-1/2	10	1	0	‡ 100-C12⊗10
												0	1	‡ 100-C12⊗01
16	32	5.5	7.5	7.5	7.5	1	3	5	5	10	15	1	0	‡ 100-C16⊗10
												0	1	‡ 100-C16⊗01
23	32	7.5	11	13	10	2	3	5	7-1/2	15	15	1	0	100-C23⊗10
												0	1	100-C23⊗01
30	65	10	15	15	15	2	5	7-1/2	10	20	25	0	0	100-C30⊗00
												1	0	100-C30⊗10
												0	1	100-C30⊗01
37	65	11	18.5/20	20	18.5	3	5	10	10	25	30	0	0	100-C37⊗00
												1	0	100-C37⊗10
												0	1	100-C37⊗01
43	85	13	22	25	22	3	7-1/2	10	15	30	30	0	0	100-C43⊗00
												1	0	100-C43⊗10
												0	1	100-C43⊗01
60	100	18.5	32	37	32	5	10	15	20	40	50	0	0	100-C60⊗00
												1	0	100-C60⊗10
												0	1	100-C60⊗01
72	100	22	40	45	40	5	15	20	25	50	60	0	0	100-C72⊗00
												1	0	100-C72⊗10
												0	1	100-C72⊗01
85	100	25	45	55	45	7-1/2	15	25	30	60	60	0	0	100-C85⊗00
												1	0	100-C85⊗10
												0	1	100-C85⊗01
97	130	30	55	55	55	10	15	30	30	75	75	0	0	**100-C97⊗00**
												1	0	**100-C97⊗10**
												0	1	**100-C97⊗01**

‡ For screwless terminals, add an "R" after the letter "C" in the catalog number. Example: **Cat. No. 100-C09⊗10** becomes **Cat. No. 100-CR09⊗10.**

⊗ Coil voltage code and terminal position—see page 2-131



Bulletin 140M Motor Protection Circuit Breakers

- Current Range 0.1…630 A
- UL Listed for Motor Loads
  - Short Circuit Protection
  - Overload Protection
- Visible Trip Indication
- High Current Limiting
- High Switching Capacity

The Bulletin 140M Motor Protection Circuit Breakers provide short circuit and overload protection for individual motor loads. Factory-installed internal accessories make installation and wiring easy.

Table of Contents

Product Selection — Motor Protection Circuit Breakers..... 2-8
Approximate Dimensions..... 2-51

Standards Compliance

IEC/EN 60947-1, -2, -4-1, -5-1
IEC/EN 60204-1
CSA, C22.2 No.14
UL 508
UL 489 (I-, J-, L-Frame)

Certifications

CE Marked
cULus Listed (File No. E54612, NLRV(7); E205542, NKJH(7); E197878, DIVQ(7);)
CCC
CSA Certified
ATEX

2

General Information

Motor Protection Circuit Breakers may provide the following protective and control functions.

- Disconnect for Motor Branch Circuit
- Branch-Circuit, Short-Circuit Protection (Magnetic Protection)
- Overload Protection (Thermal Protection)
- Switching (Manual)

In North America, electrical codes require that an individual Motor Branch Circuit be protected by a UL/CSA Listed Fuse, Circuit Breaker or Self-Protected Combination Motor Controller.

140M-C, D and F Frames:

The 140M-C, D and F frame Motor Protection Circuit Breakers may have 2 cULus Listings – as Manual, Self-Protected Combination Motor Controllers and as Manual Motor Controllers (with optional approvals for Motor Disconnect and Group Installation).

When UL/CSA listed as Manual, Self-Protected Combination Motor Controllers, the 140M Motor Protection Circuit Breakers provide all of the necessary NEC/CEC requirements for the protection and control of individual Motor Branch Circuits without additional protective devices.

At some higher voltages and currents (particularly at 600V), a few of the 140M-C, D and F frame devices are only UL/CSA Listed as Manual Motor Controllers (with optional approvals for Motor Disconnect and Group Installation). In NEC/CEC Group Installations, these devices must be applied per the appropriate rules which require the use of an upstream Branch-Circuit, Short-Circuit Protective Device (BCPD). See the table on page 2-18 for the specific ratings of each Motor Protection Circuit Breaker.

140-CMN Frame:

The 140-CMN frame Motor Protection Circuit Breakers are UL Listed/CSA Certified as Manual Motor Controllers (with optional approvals for Motor Disconnect and Group Installation). In NEC/CEC Group Installations, these devices must be applied per the appropriate rules which require the use of an upstream Branch-Circuit, Short-Circuit Protective Device (BCPD). See the table on page 2-18 for the specific ratings of each Motor Protection Circuit Breaker.

140M-I, J and L Frames:

The 140M-I, J and L frame Motor Protection Circuit Breakers are cULus Listed as Circuit Breakers as shown in the table on page 2-9. In these cases, the 140M Motor Protection Circuit Breakers provide all of the necessary NEC/CEC requirements for the protection and control of individual Motor Branch Circuits without additional protective devices.

For further details on the proper application of Motor Protection Circuit Breakers, please see the diagrams on the following pages.

							
	C-Frame	**D-Frame**	**F-Frame**	**CMN-Frame**	**I-Frame**	**J-Frame**	**L-Frame**
Max. Current I_e	32 A	32 A	45 A	90 A	205 A	250 A	630 A
Current Rating	0.1…32 A	1.6…32 A	6.3…45 A	16…90 A	40…205 A	20…250 A	100…630 A
Short Circuit Protection	✓	✓	✓	✓	✓	✓	✓
Standard Magnetic Trip	✓	✓	✓	✓	✓	✓	✓
High Magnetic Trip	✓	✓	✓	✓	—	—	—
Magnetic Only Trip (MCP)	✓	✓	✓	—	—	✓	✓
Overload Protection	✓	✓	✓	✓	✓	✓	✓
Trip Class	10	10	10	10	5…20	10…30	10…30
Standards Compliance:							
CSA 22.2, No. 14	✓	✓	✓	✓	✓	✓	✓
CSA 22.2, No. 5	—	—	—	—	✓	✓	✓
UL 508 (Group Install.)	✓ (see ratings)	✓ (see ratings)	✓ (see ratings)	✓ (see ratings)	—	—	—
UL 508 Manual, Self Protected (Type E)	✓ (see ratings)	✓ (see ratings)	✓ (see ratings)	—	—	—	—
UL 508 (Overload Protection)	✓	✓	✓	✓	✓	✓	✓
UL 489	—	—	—	—	✓	✓	✓
IEC 60947-1, -2	✓	✓	✓	✓	✓	✓	✓
IEC 60947-4-1	✓	✓	✓	—	✓	✓	✓
CE	✓	✓	✓	✓	✓	✓	✓
ATEX (IEC 60079-14)	✓ (up to 25 A)	✓ (up to 25 A)	—	—	—	—	—
CCC	✓ (up to 25 A)	✓ (up to 25 A)	✓	—	—	—	—
Accessories							
Ext. Rotary Operator	✓	✓	✓	✓	✓	✓	✓
Flex Cable Operator	—	—	—	—	✓	✓	✓
Auxiliary Contacts	✓	✓	✓	✓	✓	✓	✓
Trip Indication Contacts	✓	✓	✓	✓	✓	✓	✓

Motor Protection Circuit Breakers

- Short Circuit Protection — Standard Magnetic Trip (13…14 x I_e)
- Motor Overload Protection — Trip Class 10



Cat. No. 140M-C



Cat. No. 140M-D



Cat. No. 140M-F



Cat. No. 140-CMN

Rated Operational Current (I_e) [A]	Motor Current Adjustment Range [A]	Magnetic Trip Current [A]	Max. Short Circuit Current [kA]		Max. 3-phase Hp Ratings*				Max. kW, 3-Phase — AC-3*				Cat. No.
			400V (I_{cu})	480V (group motor)	200V	230V	460V	575V	230V	400/415V	500V	690V	
C-Frame													
0.16	0.10…0.16	2.1	100	65	—	—	—	—	—	0.02	0.06	0.06	140M-C2E-A16
0.25	0.16…0.25	3.3	100	65	—	—	—	—	—	0.04	0.09	0.09	140M-C2E-A25
0.4	0.25…0.40	5.2	100	65	—	—	—	0.25	0.06	0.09	0.12	0.18	140M-C2E-A40
0.63	0.40…0.63	8.2	100	65	—	—	0.25	0.33	0.09	0.18	0.18	0.25	140M-C2E-A63
1	0.63…1.0	13	100	65	—	—	0.5	0.75	0.18	0.25	0.37	0.55	140M-C2E-B10
1.6	1.0…1.6	21	100	65	0.25	0.33	1	1	0.25	0.55	0.75	1.1	140M-C2E-B16
2.5	1.6…2.5	33	100	65	0.5	0.75	1.5	2	0.37	0.75	1.1	1.8	140M-C2E-B25
4	2.5…4.0	52	100	65	1	1	3	3	0.75	1.5	2.2	3	140M-C2E-B40
6.3	4.0…6.3	82	100	65	1.5	2	5	5	1.5	2.2	3	4	140M-C2E-B63
10	6.3…10	130	100	65	3	3	7.5	10	2.2	4	6.3	7.5	140M-C2E-C10
16	10…16	208	65	30	5	5	10	15	4	7.5	10	13	140M-C2E-C16
20	14.5…20	260	50	30	5	7.5	15	20	5.5	10	11	17	140M-C2E-C20
25	18…25	325	15	25	7.5	7.5	20	20	5.5	11	15	22	140M-C2E-C25
29	24…29	406	15	25	7.5	10	20	25	7.5	13	18.5	25	140M-C2E-C29
32	27…32	448	15	25	7.5	10	25	30	7.5	15	20	25	140M-C2E-C32
D-Frame													
2.5	1.6…2.5	33	100	65	0.5	0.75	1.5	2	0.37	0.75	1.1	1.8	140M-D8E-B25
4	2.5…4.0	52	100	65	1	1	3	3	0.75	1.5	2.2	3	140M-D8E-B40
6.3	4.0…6.3	82	100	65	1.5	2	5	5	1.5	2.2	3	4	140M-D8E-B63
10	6.3…10	130	100	65	3	3	7.5	10	2.2	4	6.3	7.5	140M-D8E-C10
16	10…16	208	100	65	5	5	10	15	4	7.5	10	13	140M-D8E-C16
20	14.5…20	260	100	65	5	7.5	15	20	5.5	10	11	17	140M-D8E-C20
25	18…25	325	65	30	7.5	7.5	20	20	5.5	11	15	22	140M-D8E-C25
29	24…29	406	50	30	7.5	10	20	25	7.5	13	18.5	25	140M-D8E-C29
32	27…32	448	50	30	7.5	10	25	30	7.5	15	20	25	140M-D8E-C32
F-Frame													
10	6.3…10	130	100	65	3	3	7.5	10	2.2	4	6.3	7.5	140M-F8E-C10
16	10…16	208	100	65	5	5	10	15	4	7.5	10	13	140M-F8E-C16
20	14.5…20	260	100	65	5	7.5	15	20	5.5	10	11	17	140M-F8E-C20
25	18…25	325	100	65	7.5	10	20	25	6.3	11	15	22	140M-F8E-C25
32	23…32	416	65	65	7.5	10	25	30	7.5	15	20	30	140M-F8E-C32
45	32…45	585	65	65	10	15	30	40	13	22	30	40	140M-F8E-C45
CMN-Frame													
25	16…25	350	65	65	5	7.5	15	20	7.5	13	15	22	140-CMN-2500
40	25…40	560	65	65	10	10	30	30	11	22	25	30	140-CMN-4000
63	40…63	882	65	42	20	20	40	60	20	32	40	55	140-CMN-6300
90	63…90	1260	50	35	25	30	60	75	25	45	55	75	140-CMN-9000

* Horsepower/kW ratings shown in the table above are for reference. **The final selection of the MPCB depends on the actual motor full load current.**

TAB 7



PHOENIX

7) TRANSFORMER/POWER SUPPLY

i) Sola/Hevi-Duti Transformer

ii) Sola 24VDC Power Supply

SMT Series - Aluminum Wound, Open Style Design

The SMT series is economical and compact with traditional open wound varnished coils. Ratings are from 1 KVA through 5 KVA with Class 180°C insulation system and 115°C rise under full load. SMT transformers provide excellent cost benefits with NEMA regulation characteristics and electrical performance specifications.

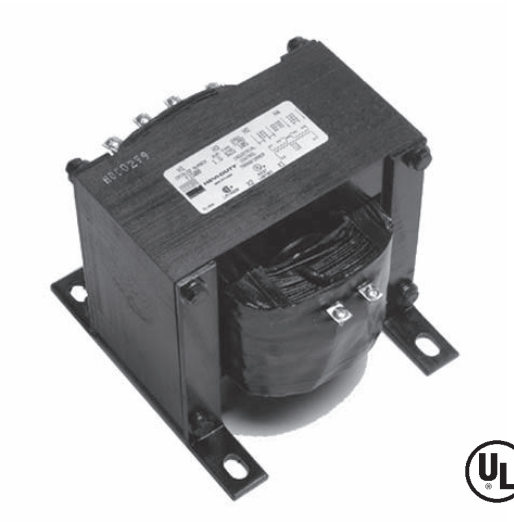

Features

- Available from 1000–5000 VA, 60 Hz unless noted
- Meets or exceeds electrical requirements of NEMA, ANSI, NMTBA and JIC
- UL Listed (File #E77014)
- CSA Certified (File #LR-14328-12)

Related Products

- Linear Power Supplies
- DIN Rail DC Power Supplies
- Constant Voltage Transformers
- Line Reactors

SMT Design Style

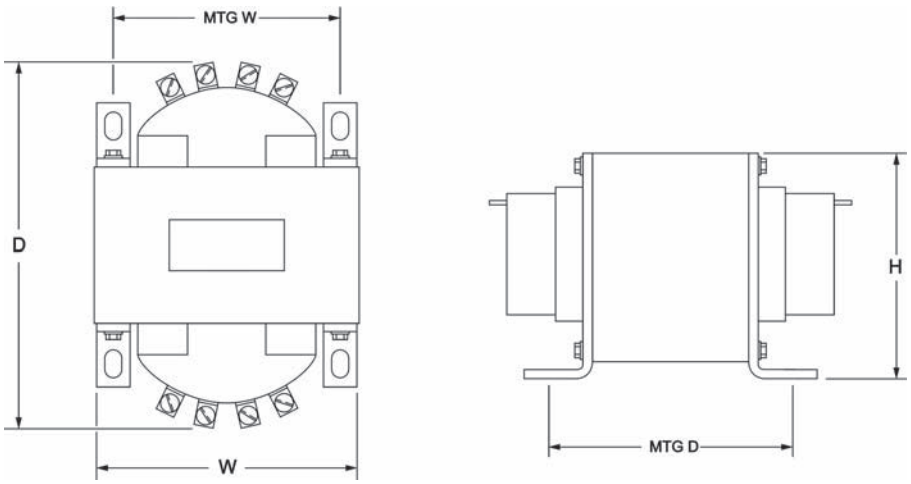

SMT Selection Tables

Group 1 – 240 x 480 Volt Primary, 120 Volt Secondary, 60 Hz

VA	Catalog Number	Height (inch)	Width (inch)	Depth (inch)	Mtg Width	Mtg Depth	Slot Size	Approx. Ship Weight (lbs)
1500	T1500	6.25	6.75	8.25	5.75	5.63	.44 x .69	28.3
2000	T2000	6.25	6.75	9.13	5.75	6.63	.44 x .69	38.5
3000	T3000	8	9	9.3	8	5.81	.44 x .69	55
5000	T5000	8	9	11.3	8	7.5	.44 x .69	91

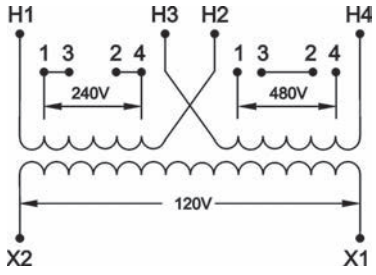

Note: Fuse holders are not available for this voltage configuration.

Group 2 – 240/480/600 Volt Primary, 120/99 Volt Secondary, 60 Hz
230/460/575 Volt Primary, 115/95 Volt Secondary, 60 Hz

VA	Catalog Number	Height (inch)	Width (inch)	Depth (inch)	Mtg Width	Mtg Depth	Slot Size	Approx. Ship Weight (lbs)
1500	T1500A	6.25	6.75	8.3	5.75	5.63	.44 x .69	30
2000	T2000A	8	10	7.8	5.75	6.63	.44 x .69	38.5
3000	T3000A	8	9	8.2	8	5.81	.44 x .69	49.5
5000	T5000A	8	9	10.5	8	7.5	.44 x .69	81

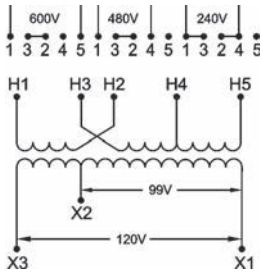

Note: Fuse holders are not available for this voltage configuration.

Group 3 – Universal Voltage Primary and Secondary, 50/60 Hz

VA	Catalog Number	Height (inch)	Width (inch)	Depth (inch)	Mtg Width	Mtg Depth	Slot Size	Approx. Ship Weight (lbs)
1000	T1000N	6.25	6.75	8.25	5.75	5.63	.44 x .69	28.1
1500	T1500N	6.25	6.75	9.5	5.75	6.63	.44 x .69	39
2000	T2000N	8	9	9.5	8	5.81	.44 x .69	50
3000	T3000N	8	9	11.38	8	7.5	.44 x .69	83.1
5000	T5000N	11	12	11.6	10.5	5.38	.44 x .69	92

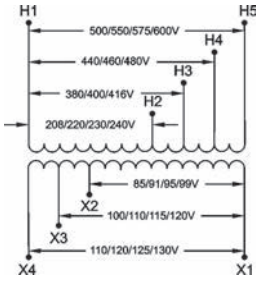

Note: Fuse holders are not available for this voltage configuration.

Universal Voltage Models – Primary and Secondary Voltage Chart

Primary Voltage				Secondary Voltage		
H1-H2	H1-H3	H1-H4	H1-H5	X1-X2	X1-X3	X1-X4
240	416	480	600	99	120	130
230	400	460	575	95	115	125
220	380	440	550	91	110	120
208	346	400	500	85	100	110

SDN DIN Rail Series

The SDN family of DIN Rail power supplies have industry leading performance with a true industrial grade design and high quality that meets difficult industrial environmental conditions including high shock, vibration, and wide temperature ranges over the long life cycle of industrial equipment.



UL 508 Listed IND. CONT. EQ. 18 WM, EI91000 | UL 1950 E137632 | CUL/CSA-C22.2 No. 234-M90 | EMC and Low Volt. Directive

Features

- Industrial grade design.
  - -10°C to 60°C operation without derating. Indefinite short circuit, overvoltage and overtemperature protection.
  - Powers high inrush loads without shutdown or foldback.
  - Rugged metal case and DIN connector.
- Class 2 Limited Power Source rating on SDN4-24-100 and SDN2.5-24-100.
- Narrow width on rail for space critical applications.
- User-friendly front panel.
  - Large, rugged, accessible multiple connection screw terminations.
  - Easy to mount and connect.
- Broad range of product to fit almost any application – 2.5 A through 40 A.
- Single and three phase inputs available.
- Highly efficient >90% switching technology.
- High MTBF and reliability
  - High grade and low stress design components.
  - Low inrush current.
  - No fans used or required.
  - Minimal use of electrolytic capacitors.
- Redundant versions with pluggable connectors available.
- Three year warranty.

Related Products

- SDP Series
- SFL Series
- SCP Series
- SCL Series

Applications

- Industrial control
- Process control
- Machine control
- DeviceNet™

SDN Specifications (Single Phase)

Description	Catalog Number					
	SDN 8-5-24	SDN 2.5-24-100	SDN 4-24-100	SDN 5-24-100	SDN 10-24-100	SDN 20-24-100
Input						
Nominal Voltage	24 VDC	115/230 VAC user select	Refer to the DeviceNet™ Section	115/230 VAC user select		115/230 VAC auto select
-AC Range	18-32 VDC	85-132/176-264 VAC		85-132/176-264 VAC		
-DC Range		160-375 VDC		210 - 375 VDC	240 - 375 VDC	N/A
-Frequency	N/A	47 - 63 Hz		47 - 63 Hz		
Nominal Current[1]	1.5 A. / 2.9 A	1.3 A. / 0.7 A		2.6 A. / 1.4 A	6 A / 2.8 A typical	12 A/6 A
-Inrush current max.	typ. < 5.1 A	typ. < 25 A		typ. < 15 A	typ. < 30 A	typ. < 85 A
Efficiency (Losses[2]**)**	80% typ (8 W)	> 87.5% typ (8.6 W)		> 90% typ (13 W)	> 90% typ (26.7 W)	> 90% typ (48 W)
Output						
Nominal Voltage	5 VDC	24 VDC			24 - 28 VDC Adj.	
-Tolerance	< 1% overall	<±2% overall			<±2% overall	
-Ripple[3]	< 50 mVpp	< 25 mVpp			< 30 mVpp	< 20 mVpp
Nominal Current	8 A (40 W)	2.5 A (60 W)	4 A (100 W) Class 2	5 A (120 W)	10 A (240 W)10 A 60 °C 12 amps at 45 °C	20 A (480 W)
-Peak Power[4]	N/A	2x Nominal Current < 2 sec.	4.2 A max	6 A (1 minute @ 45ºC) 2x Nominal Current < 2 sec.	12 A 2x Nominal Current < 2 sec.	25 A (1 minute @ 45ºC) 2x Nominal Current < 2 sec.
-Current Limit	Foldback	Fold Forward. Class 2 Limited Power Source	4.2 A max Class 2 Limited Power Source	Fold Forward		Fold Forward until Hiccup off at <14 V, auto-reset. (Switch for Constant Current)
Holdup Time	> 10 ms	> 20 ms				>16 ms
Parallel Operation	SDN 2.5; SDN 5 and SDN 10 may be paralleled by brute force – see the RED options on the preceeding pages. The SDN 20 and 30 may be paralleled by selecting the "P" position of the switch on the bottom of the unit.					
General						
EMC						
-Emissions	EN50081-1,-2 Class B EN55011, EN55022 Radiated and Conducted including Annex A.					
-Immunity	EN50082-1, -2; EN61000-4-2 Level 4, EN61000-4-3 Level 3; EN61000-4-6 Level 3; EN61000-4-4 Level 4 input and Level 3 output; EN61000-4-5 Isolation Class 4 (SDN8-5-24 is Class 3), EN61000-4-11; Transient resistance according to VDE 0160/W2 over entire load range.					
Approvals	EN60950; EN50178; EN60204; UL508 Listed, cULus; UL1950, cRUus, SDN4 & 2.5 - Class 2 LPS; CE (LVD 73/23 & 93/68/EWG, EMC 89/336 & 93/68/EWG; Transient Handling VDE 0160/W2. SDN 8-5-24 is CE marked with SE>V<42 V only.					
Temperature	Storage: -25°C...+85°C Operation. -10°-60°C full power with operation to 70°C possible with a linear derating to half power from 60°C to 70°C. The relative humidity is 95% maximum non condensing.					
Warranty	3 years					
General Protection/Safety	Protected against short-circuit, overload, open-circuit. Overvoltage protection (OVP) for output set @32 V ±10%. Protection class I (IEC536), degree of protection: IP20 (VDE 0470, IEC 529) Safe low voltage: SELV (acc. EN60950).					
Status Indicators	Green LED on when V_{out} = "OK". See SDN–RED series for DC or Relay Contact.					
Installation						
Fusing						
-Input	Internally fused, however external 10 A slow acting fusing for the input is recommended. SDN20 requires a 20A/10 A slow acting fuse or B-type circuit breaker.					
-Output	Outputs are capable of providing high currents for short periods of time for inductive load startup or switching. Fusing may be required for wire/loads if 2x Nominal O/P current rating cannot be tolerated. Continuous current overload allows for reliable fuse tripping.					
Mounting	Simple snap-on system for DIN Rail TS35/7.5 or TS35/15 or chassis-mounted (optional screw mounting set SDN-PMBRK required).					
Connections	Input: screw terminals, connector size range: 16-10 AWG (1.5-6 mm²) for solid conductors. 16-12 AWG (0.5-4 mm²) for flexible conductors. Output: two connectors per output, current handling capacity 30 A each.					
Case	Fully enclosed metal housing with fine ventilation grid to keep out small parts.					
-Free Space	25 mm above and below 10 mm in front		25 mm above and below 15 mm in front			70 mm above and below 25 mm left and right 15 mm in front
H x W x D (inches/mm)	4.88 x 1.97 x 4.04 (124 x 50 x 103)		4.88 x 2.56 x 4.04 (124 x 65 x 103)		4.88 x 4.80 x 4.04 (124 x 122 x 103)	4.88 x 8.94 x 4.04 (124 x 227 x 103)
Weight (lbs/g)	1 lb (460g)		1.5 lbs (620g)		2.2 lbs (1100g)	3 lbs (1520g)

[1] Input current ratings are conservatively specified with low input, line conditions, worst case efficiency values and power factor spikes. Input current at nominal input line settings will be typically half these values.
[2] Losses are heat dissipation in watts at full load, nominal input line.
[3] Ripple/noise is stated as typical values when measured with a 20 MHz, bandwidth scope and 50 Ohm resistor.
[4] All peak power is calculated at 24 Volt levels.

TAB 8



PHOENIX

8) HORN

i) Federal Signal



Vibratone® Horns

Models 350 and 450

DESIGNED FOR ROUTINE SIGNALING USES

- Effective range of 200 feet (61m)
- Reproduces coded or sustained tones
- Model 350 – 12, 24, 120 and 240VAC and produces 100dB @ 10' (110dB @ 1m)
- Model 450 – 12, 24, 125 and 250VDC and produces 99dB @ 10' (109dB @ 1m)
- UL Listed, cUL Listed, CSA Approved
- NEMA 4 with gasket; NEMA 3R, IP55 with weatherproof backbox (WB)

The Models 350 (AC current) and 450 (DC current) Vibratone® horns produce sound by the electro-mechanical vibration of a diaphragm. The horn mechanism with diaphragm is attached to the grille. Indoor or outdoor use depends on the back box used. Both models may be fitted with a single projector (Model PR) or a double projector (Model PR2).

Model 350 is available in 12, 24, 120 or 240VAC for 50/60Hz. Its sound output level is 100dB nominal at ten feet (110dB @ 1 meter); the 12VAC model is rated for 94dB at ten feet (104dB @ 1 meter).

Model 450 is available in 12, 24, 125 and 250VDC – the 250VDC model is excellent for coding and alarm usage. The 24VDC, 125VDC and 250VDC versions are rated at 99dB at ten feet (109dB @ 1m); the 12VDC version is rated at 93dB at 10' (103dB @ 1m).

These Federal Signal horns accommodate surface, flush or semi-flush mounting on walls, panels, in cabinets, or on 4-inch square outlet boxes (not included with signal). **For NEMA Type 4 applications,** an optional gasket kit is available for surface or flush panel mounting. The 350 and 450 models are made of die-cast zinc with gray enamel finish. Both outer housings measure 4" x 4" x 2½" and resist vandalism without reducing sound output. Model 350 has a stainless steel diaphragm; Model 450 has an aluminum alloy diaphragm and heavy-duty contacts. Both are UL Listed (Underwriters Laboratories) and CSA (Canadian Standards Association) approved. When used with the weatherproof back box (Model WB), these horns also meet NEMA 3 requirements.

Capable of reproducing coded blasts or sustained tones, Federal Signal's Vibratone horns are excellent for general alarm, start/dismissal, coded paging and process control signaling in areas where their sound output exceeds ambient noise levels. Compact size and a variety of installation options make them ideal for institutional use. These horns are not rated for continuous duty.

Model	Voltage	Operating Current	Decibels @ 10'	1m
350	12VAC 50/60Hz	0.90 amps	94	104
350	24VAC 50/60Hz	0.90 amps	100	110
350	120VAC 50/60Hz	0.18 amps	100	110
350	240VAC 50/60Hz	0.09 amps	100	110
450	12VDC	0.13 amps	93	103
450	12VDC	0.50 amps	99	109
450	24VDC	0.25 amps	99	109
450	125VDC	0.05 amps	99	109
450	250VDC	0.03 amps	99	109

VIBRATONE® HORNS (350/450)

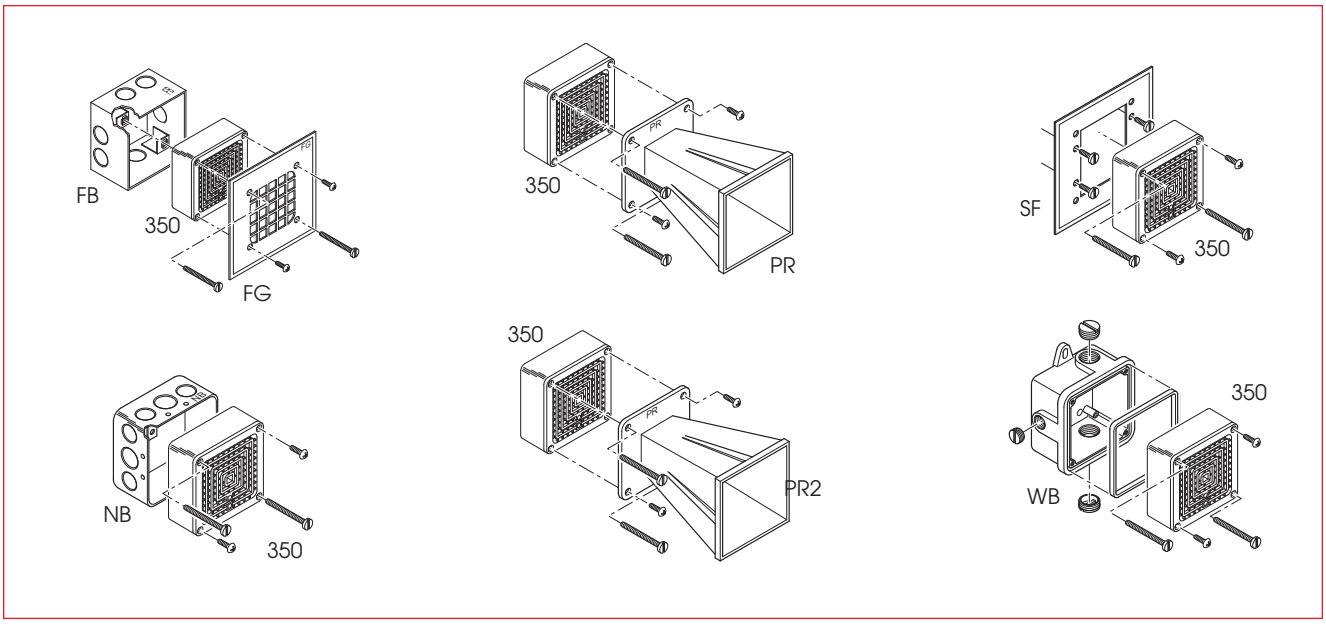

ACCESSORIES

FB	Wall box for flush mounting the Vibratone® horn in stud, 4" block, or other shallow wall construction; 4 3/8" square box; 2 7/8" deep; shipping weight 2 lbs. (0.91 kg)
FBL	Same as FB, but 3 5/8" deep for 6" x 8" concrete block, cinder block or other deep wall construction; shipping wt. 3 lbs. (1.36 kg)
FG	Flush grille which attaches to the basic unit and serves as the cover of the plastered-in FB flush box; 6" H x 6" W x 1/8" D; shipping wt. 1 lb. (0.45 kg)
K8435666A	Optional Panel Mounting Gasket Kit includes a gasket and hardware for surface or flush mounting the horn for NEMA Type 4 applications.
NB	4" square box with 1/2" & 3/4" knockouts for interior mountings; 1 1/2" deep; shipping weight 1 lb. (0.45 kg)
PR	Projector which concentrates sound into a basic area when attached to the basic model 350/450 units; 4" H x 4" W x 6" D; shipping weight 1 lb. (0.45 kg)
PR2	Double projector directs sounds to both sides when attached to the basic model 350/450 units; ideal for use in hallways; 4" H x 11 1/2" W x 4" D; shipping weight 2 lbs. (0,91 kg)
SF	Stamped surface plate used for installations on plastered-in 4" outlet switch boxes for semi-flush mountings; 6"H x 6" W x 1/2" D; shipping weight 1 lb. (0.45 kg)
WB	Cast aluminum neoprene-gasketed weatherproof housing for outside use, complete with mounting lugs; tapped for 1/2" conduit; 4 3/8" square box; 2" deep mounting lugs on 4 1/2" centers; shipping weight 1 lb. (0.45 kg)

RATINGS

- UL and cUL Listed and CSA Approved
- Rated for NEMA Type 4 applications when used with Gasket Kit (K8435666A); NEMA Type 3R when used with weatherproof backbox (Model WB)
- Constructed to IP55
- Model 350 is FM Approved
- Model 450 is FM Approved in 12 and 24VDC

HOW TO ORDER

- Specify model and voltage
- Specify optional accessories (see list at left)

SPECIFICATIONS

Operating Temp.:	-65° F to 150°F	-54° C to 66° C
Net Weight:	1.4 lbs.	0.6 kg
Shipping Weight:	1.5 lbs.	0.7 kg
Height:	4.0"	102 mm
Width:	4.0"	102 mm
Depth:	2.5"	64 mm

REPLACEMENT PARTS

Description	***Part Number***
Panel Mount Gasket Kit	K8435666A
Coil (120VAC only)	KFC1516C

TAB 9



PHOENIX

9) SURGE SUPPRESSOR

i) Transtector DR 120

TRANSTECTOR®
SUPERIOR SURGE SUPPRESSION

DR Series

Silicon Surge Suppression for High Speed, High Current DIN Rail Mounting AC Power Equipment

1451-021 Rev. A

Configurations

DR Model	120	240	120-1	240-1
Nominal Service Voltages	120V	240V	120V	240V
Voltage Protection Levels	330V	500V	330V	500V
Surge Current Ratings 8/20 µs	500A	500A	1500A	1200A
IEEE Location Category & Exposure Rating	A3	A3	B1	B1

Operating Temperature	-30 ° C to +65 ° C
Dimensions	3.5"H X 1"W X 2.95"D 8 cm X 2.5 cm X 7.5 cm
Service Frequency	50/60 Hz
Response Time (Max.)	<5 Nanoseconds

Features

Fits into standard EN50022 type DIN-rail.

Designed for quick removal from separate mounting base.

Plug-and-play and hot swappable.

Touch-safe connectors.

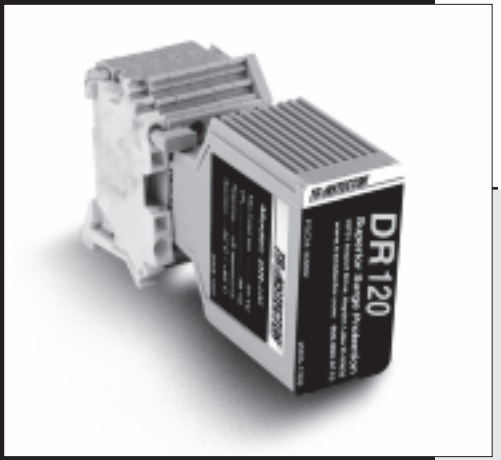

Actual Applications

Numerous 15 or 20 Amp DIN Mount Applications
Including, but not limited to the following:

- Control Cabinets
- Industrial Controls

c UL us

ISO9001 Certified

Warranty Five (5) year unconditional warranty
Ten (10) year manufacturer warranty

www.transtector.com 208.772.8515 800.882.9110 sales@transtector.com

TAB 10



PHOENIX

10) VARIABLE FREQUENCY DRIVES

i) Allen-Bradley 523 Series (IOM Only)

User Manual

Allen-Bradley

PowerFlex 520-Series Adjustable Frequency AC Drive

PowerFlex 523 Catalog Number 25A
PowerFlex 525 Catalog Number 25B









Original Instructions

Allen-Bradley • Rockwell Software

Rockwell Automation

Important User Information

Solid-state equipment has operational characteristics differing from those of electromechanical equipment. Safety Guidelines for the Application, Installation and Maintenance of Solid State Controls (publication SGI-1.1 available from your local Rockwell Automation® sales office or online at http://www.rockwellautomation.com/literature/) describes some important differences between solid-state equipment and hard-wired electromechanical devices. Because of this difference, and also because of the wide variety of uses for solid-state equipment, all persons responsible for applying this equipment must satisfy themselves that each intended application of this equipment is acceptable.

In no event will Rockwell Automation, Inc. be responsible or liable for indirect or consequential damages resulting from the use or application of this equipment.

The examples and diagrams in this manual are included solely for illustrative purposes. Because of the many variables and requirements associated with any particular installation, Rockwell Automation, Inc. cannot assume responsibility or liability for actual use based on the examples and diagrams.

No patent liability is assumed by Rockwell Automation, Inc. with respect to use of information, circuits, equipment, or software described in this manual.

Reproduction of the contents of this manual, in whole or in part, without written permission of Rockwell Automation, Inc., is prohibited.

Throughout this manual, when necessary, we use notes to make you aware of safety considerations.

	**WARNING:** Identifies information about practices or circumstances that can cause an explosion in a hazardous environment, which may lead to personal injury or death, property damage, or economic loss.
	**ATTENTION:** Identifies information about practices or circumstances that can lead to personal injury or death, property damage, or economic loss. Attentions help you identify a hazard, avoid a hazard, and recognize the consequence.
	**SHOCK HAZARD:** Labels may be on or inside the equipment, for example, a drive or motor, to alert people that dangerous voltage may be present.
	**BURN HAZARD:** Labels may be on or inside the equipment, for example, a drive or motor, to alert people that surfaces may reach dangerous temperatures.
	**ARC FLASH HAZARD:** Labels may be on or inside the equipment, for example, a motor control center, to alert people to potential Arc Flash. Arc Flash will cause severe injury or death. Wear proper Personal Protective Equipment (PPE). Follow ALL Regulatory requirements for safe work practices and for Personal Protective Equipment (PPE).
IMPORTANT	Identifies information that is critical for successful application and understanding of the product.

Allen-Bradley, Rockwell Automation, Rockwell Software, PowerFlex, Connected Components Workbench, Studio 5000, Studio 5000 Logix Designer, DriveTools SP, AppView, CustomView, QuickView, MainsFree Programming, PointStop, and TechConnect are trademarks of Rockwell Automation, Inc.

Trademarks not belonging to Rockwell Automation are property of their respective companies.

This manual contains new and updated information.

New and Updated Information

This table contains the changes made to this revision.

Topic	Page
Added Warning table for Motor Cable Length Restrictions	32
Updated Maximum Control Wire Recommendations information on noise immunity	36
Updated Start Method and Stop Method tables for PowerFlex 523 drives	37
Updated Start Method and Stop Method tables for PowerFlex 525 drives	40
Added Important table for EMC category C3 installation information	52
Updated Additional Installation Requirements table for meeting EMC	53
Updated Recommended Placement of EMC Cores table	54
Added software version requirement for Automatic Device Configuration (ADC) support	60
Added new parameter d392 [RdyBit Mode Act]	67, 106, 142
Added new parameter A574 [RdyBit Mode Cfg]	67, 129, 142
Updated descriptions of options for parameter P040 [Autotune]	78
Updated description of PointStop for option 10 and 11 of parameter P045 [Stop Mode]	79
Added Important table to parameter P046, P048, P050 [Start Source x]	80
Updated entries for Maximum Output column of parameter t088 [Analog Out Sel] from “200% Drive Rated FLA” to “200% Drive Rated Current”	89
Added table of recommended minimum Encoder PPR to parameter A536 [Encoder PPR]	122
Updated Intermittent Overload specification for PowerFlex 523	158
Added catalog numbers for replacement EMC cores	170
Updated I/O Terminals C1 and C2 wiring information on noise immunity	190
Added recommended Ethernet cables to description of Appendix H	235
General maintenance updates	Throughout manual

Notes:

Preface

Overview

Who Should Use this Manual 9
Recommended Documentation 9
Manual Conventions 10
Drive Frame Sizes 11
General Precautions 12
Catalog Number Explanation 13

Chapter 1

Installation/Wiring

Mounting Considerations. 15
AC Supply Source Considerations 19
General Grounding Requirements 20
Fuses and Circuit Breakers 22
Power and Control Module 27
Control Module Cover 30
Power Module Terminal Guard 30
Power Wiring. 31
Power Terminal Block 34
Common Bus/Precharge Notes 35
I/O Wiring 35
Control I/O Terminal Block 36
Start and Speed Reference Control 46
CE Conformity 49

Chapter 2

Start Up

Prepare for Drive Start-Up 55
Display and Control Keys 58
Viewing and Editing Parameters 59
Drive Programming Tools 60
Language Support 60
Smart Start-Up with Basic Program Group Parameters 61
LCD Display with QuickView 63
Using the USB Port 63

Chapter 3

Programming and Parameters

About Parameters 65
Parameter Groups 66
Basic Display Group 71
Basic Program Group 76
Terminal Block Group. 82
Communications Group 94
Logic Group 100
Advanced Display Group 103
Advanced Program Group 107
Network Parameter Group 130

Modified Parameter Group 130
Fault and Diagnostic Group 130
AppView Parameter Groups 138
CustomView Parameter Group 139
Parameter Cross Reference by Name 140

Chapter 4

Troubleshooting

Drive Status 145
Faults 145
Fault Descriptions 147
Common Symptoms and Corrective Actions 150

Appendix A

Supplemental Drive Information

Certifications 155
Environmental Specifications 156
Technical Specifications 157
Power Specifications 160

Appendix B

Accessories and Dimensions

Product Selection 163
Product Dimensions 173
Optional Accessories and Kits 186

Appendix C

RS485 (DSI) Protocol

Network Wiring 189
Parameter Configuration 190
Supported Modbus Function Codes 191
Writing (06) Logic Command Data 191
Writing (06) Comm Frequency Command 193
Reading (03) Logic Status Data 193
Reading (03) Drive Error Codes 195
Reading (03) Drive Operational Values 196
Reading (03) and Writing (06) Drive Parameters 196
Additional Information 196

Appendix D

Velocity StepLogic, Basic Logic and Timer/Counter Functions

Velocity StepLogic Using Timed Steps 198
Velocity StepLogic Using Basic Logic Functions 198
Timer Function 199
Counter Function 200
Velocity StepLogic Parameters 201

Appendix E

Encoder/Pulse Train Usage and Position StepLogic Application

Encoder and Pulse Train Usage 203
Wiring Notes 204
Positioning Overview 205
Common Guidelines for All Applications 205
Positioning Operation 206
Homing Routine 210
Encoder and Position Feedback 211
Use Over Communications 212
Setup Notes 213

Appendix F

PID Set Up

PID Loop 215
PID Reference and Feedback 217
Analog PID Reference Signals 218

Appendix G

Safe-Torque-Off Function

PowerFlex 525 Safe-Torque-Off Overview 223
EC Type Examination Certification 224
EMC Instructions 224
Using PowerFlex 525 Safe-Torque-Off 224
Safety Concept 225
Enabling PowerFlex 525 Safe-Torque-Off 227
Wiring 227
PowerFlex 525 Safe-Torque-Off Operation 227
Verify Operation 228
Connection Examples 229
PowerFlex 525 Certification for Safe-Torque-Off 233

Appendix H

EtherNet/IP

Establishing A Connection With EtherNet/IP 235

Appendix I

Control Diagrams

Induction Motor Tuning Diagrams 237
Adjusting Speed Control Parameters 238

Notes:

Overview

The purpose of this manual is to provide you with the basic information needed to install, start-up and troubleshoot the PowerFlex® 520-Series Adjustable Frequency AC Drive.

For information on…	See page…
Who Should Use this Manual	9
Recommended Documentation	9
Manual Conventions	10
Drive Frame Sizes	11
General Precautions	12
Catalog Number Explanation	13

Who Should Use this Manual

This manual is intended for qualified personnel. You must be able to program and operate Adjustable Frequency AC Drive devices. In addition, you must have an understanding of the parameter settings and functions.

Recommended Documentation

All the recommended documentation listed in this section is available online at http://www.rockwellautomation.com/literature/.

The following publications provide general drive information:

Title	Publication
Wiring and Grounding Guidelines for Pulse Width Modulated (PWM) AC Drives	DRIVES-IN001
Preventive Maintenance of Industrial Control and Drive System Equipment	DRIVES-TD001
Safety Guidelines for the Application, Installation and Maintenance of Solid State Control	SGI-1.1
A Global Reference Guide for Reading Schematic Diagrams	100-2.10
Guarding Against Electrostatic Damage	8000-4.5.2

The following publications provide specific PowerFlex 520-Series information on drive installation, features, specifications, and service:

Title	Publication
PowerFlex 520-Series AC Drive Specifications	520-TD001
PowerFlex Dynamic Braking Resistor Calculator	PFLEX-AT001
PowerFlex AC Drives in Common Bus Configurations	DRIVES-AT002

The following publications provide specific Network Communications information:

Title	Publication
PowerFlex 525 Embedded EtherNet/IP Adapter	520COM-UM001
PowerFlex 25-COMM-D DeviceNet Adapter	520COM-UM002
PowerFlex 25-COMM-E2P Dual-Port EtherNet/IP Adapter	520COM-UM003
PowerFlex 25-COMM-P PROFIBUS DPV1 Adapter	520COM-UM004

Manual Conventions

- In this manual we refer to PowerFlex 520-Series Adjustable Frequency AC Drive as; drive, PowerFlex 520-series, PowerFlex 520-series drive or PowerFlex 520-series AC drive.
- Specific drives within the PowerFlex 520-series may be referred to as:
  – PowerFlex 523, PowerFlex 523 drive or PowerFlex 523 AC drive.
  – PowerFlex 525, PowerFlex 525 drive or PowerFlex 525 AC drive.
- Parameter numbers and names are shown in this format:

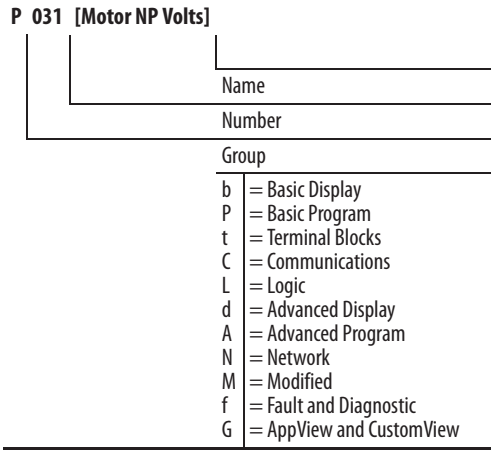

- The following words are used throughout the manual to describe an action:

Words	Meaning
Can	Possible, able to do something
Cannot	Not possible, not able to do something
May	Permitted, allowed
Must	Unavoidable, you must do this
Shall	Required and necessary
Should	Recommended
Should Not	Not Recommended

- The Studio 5000® Engineering and Design Environment combines engineering and design elements into a common environment. The first element in the Studio 5000 environment is the Logix Designer application. The Studio 5000 Logix Designer™ application is the rebranding of RSLogix™ 5000 software and will continue to be the product to program Logix 5000 controllers for discrete, process, batch, motion, safety, and drive-based solutions. The Studio 5000 environment is the foundation for the future of Rockwell Automation engineering design tools and capabilities. It is the one place for design engineers to develop all the elements of their control system.

Drive Frame Sizes

Similar PowerFlex 520-series drive sizes are grouped into frame sizes to simplify spare parts ordering, dimensioning, etc. A cross reference of drive catalog numbers and their respective frame sizes is provided in Appendix B.

General Precautions



ATTENTION: The drive contains high voltage capacitors which take time to discharge after removal of mains supply. Before working on drive, ensure isolation of mains supply from line inputs [R, S, T (L1, L2, L3)]. Wait three minutes for capacitors to discharge to safe voltage levels. Failure to do so may result in personal injury or death.
Darkened display LEDs is not an indication that capacitors have discharged to safe voltage levels.

ATTENTION: Only qualified personnel familiar with adjustable frequency AC drives and associated machinery should plan or implement the installation, start-up and subsequent maintenance of the system. Failure to comply may result in personal injury and/or equipment damage.

ATTENTION: This drive contains ESD (Electrostatic Discharge) sensitive parts and assemblies. Static control precautions are required when installing, testing, servicing or repairing this assembly. Component damage may result if ESD control procedures are not followed. If you are not familiar with static control procedures, reference A-B publication 8000-4.5.2, "Guarding Against Electrostatic Damage" or any other applicable ESD protection handbook.

ATTENTION: An incorrectly applied or installed drive can result in component damage or a reduction in product life. Wiring or application errors, such as undersizing the motor, incorrect or inadequate AC supply, or excessive ambient temperatures may result in malfunction of the system.

ATTENTION: The bus regulator function is extremely useful for preventing nuisance overvoltage faults resulting from aggressive decelerations, overhauling loads, and eccentric loads. However, it can also cause either of the following two conditions to occur.
1. Fast positive changes in input voltage or imbalanced input voltages can cause uncommanded positive speed changes;
2. Actual deceleration times can be longer than commanded deceleration times
However, a "Stall Fault" is generated if the drive remains in this state for 1 minute. If this condition is unacceptable, the bus regulator must be disabled (see parameter A550 [Bus Reg Enable]). In addition, installing a properly sized dynamic brake resistor will provide equal or better performance in most cases.

ATTENTION: Risk of injury or equipment damage exists. Drive does not contain user-serviceable components. Do not disassemble drive chassis.

Catalog Number Explanation

1-3	4	5	6-8	9	10	11	12	13	14
25B	**–**	**B**	**2P3**	**N**	**1**	**1**	**4**	**–**	**–**
Drive	Dash	Voltage Rating	Rating	Enclosure	Reserved	Emission Class	Reserved	Dash	Dash

Code	Type
25A	PowerFlex 523
25B	PowerFlex 525

Code	Voltage	Phase
V	120V AC	1
A	240V AC	1
B	240V AC	3
D	480V AC	3
E	600V AC	3

Code	Enclosure
N	IP20 NEMA / Open

Code	Interface Module
1	Standard

Code	EMC Filter
0	No Filter
1	Filter

Code	Braking
4	Standard

Output Current @ 1 Phase, 100...120V Input						
Code	Amps	Frame	ND		HD	
			HP	kW	HP	kW
1P6(1)	1.6	A	0.25	0.2	0.25	0.2
2P5	2.5	A	0.5	0.4	0.5	0.4
4P8	4.8	B	1.0	0.75	1.0	0.75
6P0	6.0	B	1.5	1.1	1.5	1.1

Output Current @ 1 Phase, 200...240V Input						
Code	Amps	Frame	ND		HD	
			HP	kW	HP	kW
1P6(1)	1.6	A	0.25	0.2	0.25	0.2
2P5	2.5	A	0.5	0.4	0.5	0.4
4P8	4.8	A	1.0	0.75	1.0	0.75
8P0	8.0	B	2.0	1.5	2.0	1.5
011	11.0	B	3.0	2.2	3.0	2.2

Output Current @ 3Phase, 200...240V Input						
Code	Amps	Frame	ND		HD	
			HP	kW	HP	kW
1P6(1)	1.6	A	0.25	0.2	0.25	0.2
2P5	2.5	A	0.5	0.4	0.5	0.4
5P0	5.0	A	1.0	0.75	1.0	0.75
8P0	8.0	A	2.0	1.5	2.0	1.5
011	11.0	A	3.0	2.2	3.0	2.2
017	17.5	B	5.0	4.0	5.0	4.0
024	24.0	C	7.5	5.5	7.5	5.5
032	32.2	D	10.0	7.5	10.0	7.5
048(2)	48.3	E	15.0	11.0	10.0	7.5
062(2)	62.1	E	20.0	15.0	15.0	11.0

Output Current @ 3 Phase, 380...480V Input						
Code	Amps	Frame	ND		HD	
			HP	kW	HP	kW
1P4	1.4	A	0.5	0.4	0.5	0.4
2P3	2.3	A	1.0	0.75	1.0	0.75
4P0	4.0	A	2.0	1.5	2.0	1.5
6P0	6.0	A	3.0	2.2	3.0	2.2
010	10.5	B	5.0	4.0	5.0	4.0
013	13.0	C	7.5	5.5	7.5	5.5
017	17.0	C	10.0	7.5	10.0	7.5
024	24.0	D	15.0	11.0	15.0	11.0
030(2)	30.0	D	20.0	15.0	15.0	11.0
037(2)	37.0	E	25.0	18.5	20.0	15.0
043(2)	43.0	E	30.0	22.0	25.0	18.5

Output Current @ 3 Phase, 525...600V Input						
Code	Amps	Frame	ND		HD	
			HP	kW	HP	kW
0P9	0.9	A	0.5	0.4	0.5	0.4
1P7	1.7	A	1.0	0.75	1.0	0.75
3P0	3.0	A	2.0	1.5	2.0	1.5
4P2	4.2	A	3.0	2.2	3.0	2.2
6P6	6.6	B	5.0	4.0	5.0	4.0
9P9	9.9	C	7.5	5.5	7.5	5.5
012	12.0	C	10.0	7.5	10.0	7.5
019	19.0	D	15.0	11.0	15.0	11.0
022(2)	22.0	D	20.0	15.0	15.0	11.0
027(2)	27.0	E	25.0	18.5	20.0	15.0
032(2)	32.0	E	30.0	22.0	25.0	18.5

(1) This rating is only available for PowerFlex 523 drives.

(2) Normal and Heavy Duty ratings are available for this drive.

Notes:

Installation/Wiring

This chapter provides information on mounting and wiring the PowerFlex 520-series drives.

For information on...	See page...
Mounting Considerations	15
AC Supply Source Considerations	19
General Grounding Requirements	20
Fuses and Circuit Breakers	22
Power and Control Module	27
Control Module Cover	30
Power Module Terminal Guard	30
Power Wiring	31
Power Terminal Block	34
Common Bus/Precharge Notes	35
I/O Wiring	35
Control I/O Terminal Block	36
Start and Speed Reference Control	46
CE Conformity	49

Most start-up difficulties are the result of incorrect wiring. Every precaution must be taken to assure that the wiring is done as instructed. All items must be read and understood before the actual installation begins.

ATTENTION: The following information is merely a guide for proper installation. Rockwell Automation cannot assume responsibility for the compliance or the noncompliance to any code, national, local or otherwise for the proper installation of this drive or associated equipment. A hazard of personal injury and/or equipment damage exists if codes are ignored during installation.

Mounting Considerations

- Mount the drive upright on a flat, vertical and level surface.

Frame	Screw Size	Screw Torque
A	M5 (#10...24)	1.56...1.96 Nm (14...17 lb-in.)
B	M5 (#10...24)	1.56...1.96 Nm (14...17 lb-in.)
C	M5 (#10...24)	1.56...1.96 Nm (14...17 lb-in.)
D	M5 (#10...24)	2.45...2.94 Nm (22...26 lb-in.)
E	M8 (5/16 in.)	6.0...7.4 Nm (53...65 lb-in.)

- Protect the cooling fan by avoiding dust or metallic particles.

- Do not expose to a corrosive atmosphere.
- Protect from moisture and direct sunlight.

Minimum Mounting Clearances

See Appendix B for mounting dimensions.

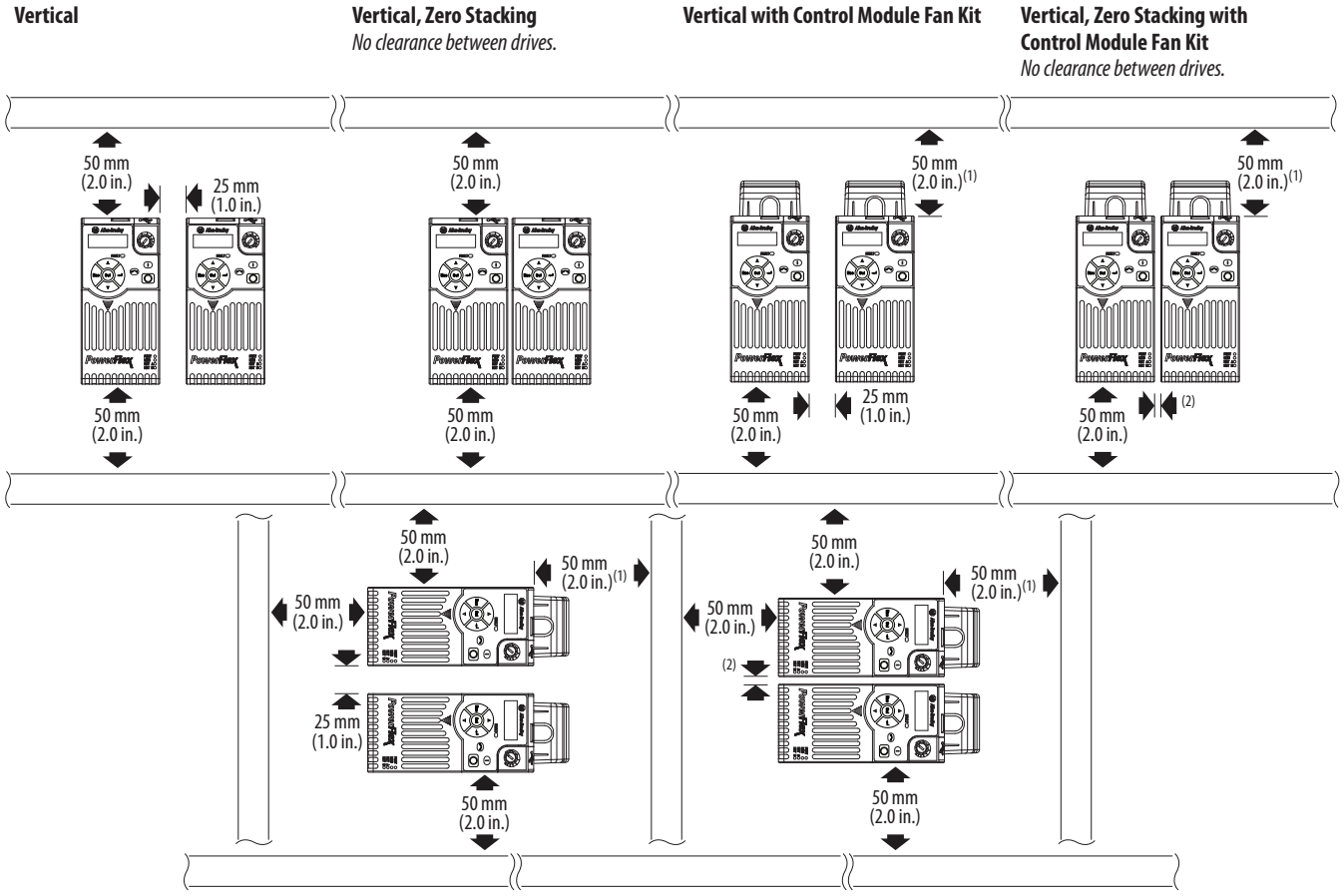

(1) For Frame E with Control Module Fan Kit only, clearance of 95 mm (3.7 in.) is required.
(2) For Frame E with Control Module Fan Kit only, clearance of 12 mm (0.5 in.) is required.

Ambient Operating Temperatures

See Appendix B for option kits.

Mounting	Enclosure Rating[1]	Ambient Temperature			
		Minimum	Maximum (No Derate)	Maximum (Derate)[2]	Maximum with Control Module Fan Kit (Derate)[3][5]
Vertical	IP 20/Open Type	-20 °C (-4 °F)	50 °C (122 °F)	60 °C (140 °F)	70 °C (158 °F)
	IP 30/NEMA 1/UL Type 1		45 °C (113 °F)	55 °C (131 °F)	–
Vertical, Zero Stacking	IP 20/Open Type		45 °C (113 °F)	55 °C (131 °F)	65 °C (149 °F)
	IP 30/NEMA 1/UL Type 1		40 °C (104 °F)	50 °C (122 °F)	–
Horizontal with Control Module Fan Kit[4][5]	IP 20/Open Type		50 °C (122 °F)	–	70 °C (158 °F)
Horizontal, Zero Stacking with Control Module Fan Kit[4][5]	IP 20/Open Type		45 °C (113 °F)	–	65 °C (149 °F)

(1) IP 30/NEMA 1/UL Type 1 rating requires installation of the PowerFlex 520-Series IP 30/NEMA 1/UL Type 1 option kit, catalog number 25-JBAx.
(2) For catalogs 25x-D1P4N104 and 25x-E0P9N104, the temperature listed under the Maximum (Derate) column is reduced by 5 °C (9 °F) for all mounting methods.
(3) For catalogs 25x-D1P4N104 and 25x-E0P9N104, the temperature listed under the Maximum with Control Module Fan Kit (Derate) column is reduced by 10 °C (18 °F) for vertical and vertical with zero stacking mounting methods only.
(4) Catalogs 25x-D1P4N104 and 25x-E0P9N104 cannot be mounted using either of the horizontal mounting methods.
(5) Requires installation of the PowerFlex 520-Series Control Module Fan Kit, catalog number 25-FANx-70C.

Current Derating Curves

Vertical Mounting

Single Drive

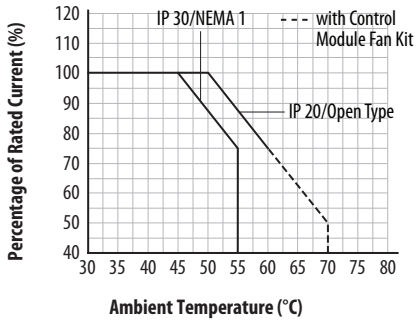

Zero Stacking

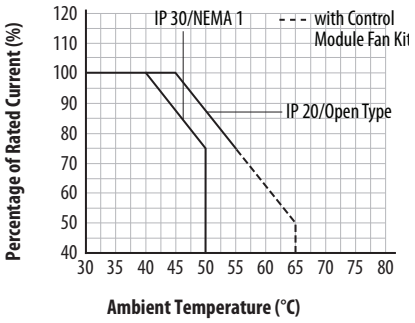

Horizontal/Floor Mounting

Single Drive

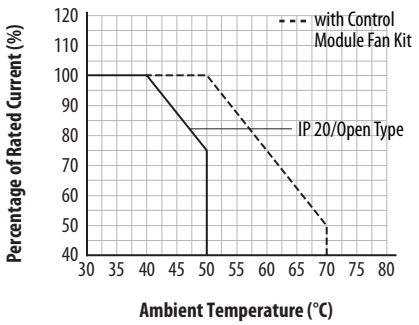

Zero Stacking

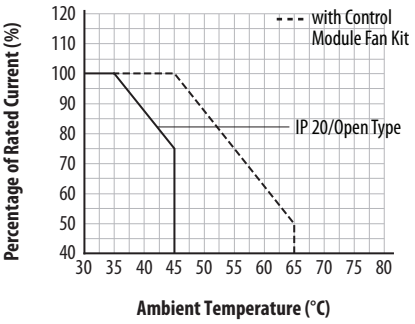

Derating Guidelines for High Altitude

The drive can be used without derating at a maximum altitude of 1000 m (3300 ft). If the drive is used above 1000 m (3300 ft):

- Derate the maximum ambient temperature by 5 °C (9 °F) for every additional 1000 m (3300 ft), subject to limits listed in the Altitude Limit (Based on Voltage) table below.
  Or
- Derate the output current by 10% for every additional 1000 m (3300 ft), up to 3000 m (9900 ft), subject to limits listed in the Altitude Limit (Based on Voltage) table below.

Altitude Limit (Based on Voltage)

Drive Rating	Center Ground (Wye Neutral)	Corner Ground, Impedance Ground, or Ungrounded
100...120V 1-Phase	6000 m	6000 m
200...240V 1-Phase	2000 m	2000 m
200...240V 3-Phase	6000 m	2000 m
380...480V 3-Phase	4000 m	2000 m
525...600V 3-Phase	2000 m	2000 m

High Altitude

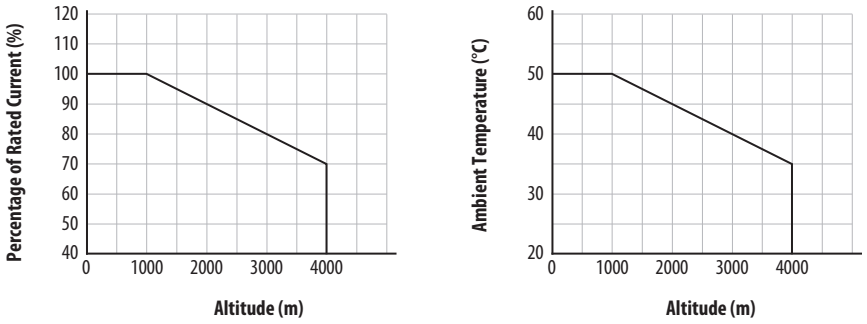

Debris Protection

Take precautions to prevent debris from falling through the vents of the drive housing during installation.

Storage

- Store within an ambient temperature range of -40...85°C(1).
- Store within a relative humidity range of 0...95%, noncondensing.
- Do not expose to a corrosive atmosphere.

(1) The maximum ambient temperature for storing a Frame E drive is 70 °C.

AC Supply Source Considerations

Ungrounded Distribution Systems

ATTENTION: PowerFlex 520-series drives contain protective MOVs that are referenced to ground. These devices must be disconnected if the drive is installed on an ungrounded or resistive grounded distribution system.

ATTENTION: Removing MOVs in drives with an embedded filter will also disconnect the filter capacitor from earth ground.

Disconnecting MOVs

To prevent drive damage, the MOVs connected to ground shall be disconnected if the drive is installed on an ungrounded distribution system (IT mains) where the line-to-ground voltages on any phase could exceed 125% of the nominal line-to-line voltage. To disconnect these devices, remove the jumper shown in the diagrams below.

1. Turn the screw counterclockwise to loosen.
2. Pull the jumper completely out of the drive chassis.
3. Tighten the screw to keep it in place.

Jumper Location (Typical)

Power Module

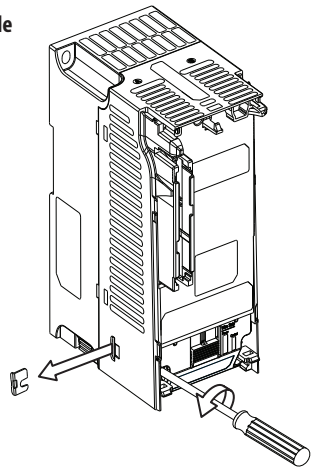

IMPORTANT Tighten screw after jumper removal.

Phase to Ground MOV Removal

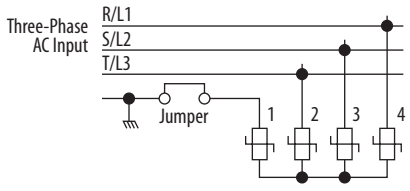

Input Power Conditioning

The drive is suitable for direct connection to input power within the rated voltage of the drive (see page 157). Listed in the Input Power Conditions table below are certain input power conditions which may cause component damage or reduction in product life. If any of these conditions exist, install one of the devices listed under the heading Corrective Action on the line side of the drive.

IMPORTANT Only one device per branch circuit is required. It should be mounted closest to the branch and sized to handle the total current of the branch circuit.

Input Power Conditions

Input Power Condition	Corrective Action
Low Line Impedance (less than 1% line reactance)	• Install Line Reactor(2) • or Isolation Transformer
Greater than 120 kVA supply transformer	
Line has power factor correction capacitors	• Install Line Reactor(2) • or Isolation Transformer
Line has frequent power interruptions	
Line has intermittent noise spikes in excess of 6000V (lightning)	
Phase to ground voltage exceeds 125% of normal line to line voltage	• Remove MOV jumper to ground. • or Install Isolation Transformer with grounded secondary if necessary.
Ungrounded distribution system	
240V open delta configuration (stinger leg)(1)	• Install Line Reactor(2)

(1) For drives applied on an open delta with a middle phase grounded neutral system, the phase opposite the phase that is tapped in the middle to the neutral or earth is referred to as the "stinger leg," "high leg," "red leg," etc. This leg should be identified throughout the system with red or orange tape on the wire at each connection point. The stinger leg should be connected to the center Phase B on the reactor. See Bulletin 1321-3R Series Line Reactors on page 171 for specific line reactor part numbers.

(2) See Appendix B for accessory ordering information.

General Grounding Requirements

The drive Safety Ground - ⏚ (PE) must be connected to system ground. Ground impedance must conform to the requirements of national and local industrial safety regulations and/or electrical codes. The integrity of all ground connections should be periodically checked.

Typical Grounding

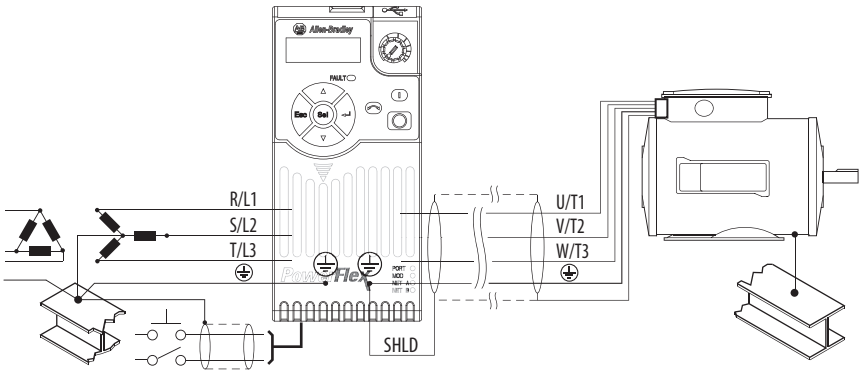

Ground Fault Monitoring

If a system ground fault monitor (RCD) is to be used, only Type B (adjustable) devices should be used to avoid nuisance tripping.

Safety Ground - ⏚ (PE)

This is the safety ground for the drive that is required by code. One of these points must be connected to adjacent building steel (girder, joist), a floor ground rod or bus bar. Grounding points must comply with national and local industrial safety regulations and/or electrical codes.

Motor Ground

The motor ground must be connected to one of the ground terminals on the drive.

Shield Termination - SHLD

Either of the safety ground terminals located on the power terminal block provides a grounding point for the motor cable shield. The **motor cable** shield connected to one of these terminals (drive end) should also be connected to the motor frame (motor end). Use a shield terminating or EMI clamp to connect the shield to the safety ground terminal. The earthing plate or conduit box option may be used with a cable clamp for a grounding point for the cable shield.

When shielded cable is used for **control and signal wiring**, the shield should be grounded at the source end only, not at the drive end.

RFI Filter Grounding

Using a drive with filter may result in relatively high ground leakage currents. Therefore, the **filter must only be used in installations with grounded AC supply systems and be permanently installed and solidly grounded** (bonded) to the building power distribution ground. Ensure that the incoming supply neutral is solidly connected (bonded) to the same building power distribution ground. Grounding must not rely on flexible cables and should not include any form of plug or socket that would permit inadvertent disconnection. Some local codes may require redundant ground connections. The integrity of all connections should be periodically checked.

Fuses and Circuit Breakers

The PowerFlex 520-series drive does not provide branch short circuit protection. This product should be installed with either input fuses or an input circuit breaker. National and local industrial safety regulations and/or electrical codes may determine additional requirements for these installations.

The tables found on pages 23...26 provide recommended AC line input fuse and circuit breaker information. See Fusing and Circuit Breakers below for UL and IEC requirements. Sizes listed are the recommended sizes based on 40 °C (104 °F) and the U.S. N.E.C. Other country, state or local codes may require different ratings.

Fusing

The recommended fuse types are listed in the tables found on pages 23...26. If available current ratings do not match those listed in the tables provided, choose the next higher fuse rating.

- IEC – BS88 (British Standard) Parts 1 & 2(1), EN60269-1, Parts 1 & 2, type GG or equivalent should be used.
- UL – UL Class CC, T, RK1, or J should be used.

Circuit Breakers

The "non-fuse" listings in the tables found on pages 23...26 include inverse time circuit breakers, instantaneous trip circuit breakers (motor circuit protectors) and 140M self-protected combination motor controllers. If one of these is chosen as the desired protection method, the following requirements apply:

- IEC – Both types of circuit breakers and 140M self-protected combination motor controllers are acceptable for IEC installations.
- UL – Only inverse time circuit breakers and the specified 140M self-protected combination motor controllers are acceptable for UL installations.

Bulletin 140M (Self-Protected Combination Controller)/UL489 Circuit Breakers

When using Bulletin 140M or UL489 rated circuit breakers, the guidelines listed below must be followed in order to meet the NEC requirements for branch circuit protection.

- Bulletin 140M can be used in single motor applications.
- Bulletin 140M can be used up stream from the drive **without** the need for fuses.

(1) Typical designations include, but may not be limited to the following; Parts 1 & 2: AC, AD, BC, BD, CD, DD, ED, EFS, EF, FF, FG, GF, GG, GH.

Fuses and Circuit Breakers for PowerFlex 520-Series Drives

100...120V 1-Phase Input Protection Devices – Frames A...B

Catalog No.		Output Ratings					Input Ratings		Frame Size	Contactor Catalog No.	IEC Applications (Non-UL)				UL Applications			
PF 523	PF 525	ND		HD		Amps	kVA	Max Amps(1)			Fuses (Rating)		Circuit Breakers		Fuses (Max. Rating)	Circuit Breakers		Min. Enclosure Vol. (in.3)
		HP	kW	HP	kW						Min.	Max.	140U/140G	140M	Class / Catalog No.	140U/140G	140M(2)(3)(4)	
25A-V1P6N104	–	0.25	0.2	0.25	0.2	1.6	0.8	6.4	A	100-C09	10	16	140U-D6D2-B80	140M-C2E-B63	CLASS RK5, CC, J, or T / DLS-R-15	140U-D6D2-B80	140M-C2E-B63	–
25A-V2P5N104	25B-V2P5N104	0.5	0.4	0.5	0.4	2.5	1.3	9.6	A	100-C12	16	20	140U-D6D2-C12	140M-C2E-C10	CLASS RK5, CC, J, or T / DLS-R-20	140U-D6C2-C12	140M-C2E-C10	–
25A-V4P8N104	25B-V4P8N104	1.0	0.75	1.0	0.75	4.8	2.5	19.2	B	100-C23	25	40	140U-D6D2-C25	140M-D8E-C20	CLASS RK5, CC, J, or T / DLS-R-40	140U-D6D2-C25	140M-D8E-C20	–
25A-V6P0N104	25B-V6P0N104	1.5	1.1	1.5	1.1	6.0	3.2	24.0	B	100-C23	32	50	140U-D6D2-C30	140M-F8E-C25	CLASS RK5, CC, J, or T / DLS-R-50	140U-D6D2-C30	140M-F8E-C25	–

200...240V 1-Phase Input Protection Devices – Frames A...B

Catalog No.		Output Ratings					Input Ratings		Frame Size	Contactor Catalog No.	IEC Applications (Non-UL)				UL Applications			
PF 523	PF 525	ND		HD		Amps	kVA	Max Amps(1)			Fuses (Rating)		Circuit Breakers		Fuses (Max. Rating)	Circuit Breakers		Min. Enclosure Vol. (in.3)
		HP	kW	HP	kW						Min.	Max.	140U/140G	140M	Class / Catalog No.	140U/140G	140M(2)(3)(4)	
25A-A1P6N104	–	0.25	0.2	0.25	0.2	1.6	1.4	5.3	A	100-C09	6	10	140U-D6D2-C10	140M-C2E-B63	CLASS RK5, CC, J, or T / DLS-R-15	140U-D6D2-C10	140M-C2E-B63	–
25A-A1P6N114	–	0.25	0.2	0.25	0.2	1.6	1.4	5.3	A	100-C09	6	10	140U-D6D2-C10	140M-C2E-B63	CLASS RK5, CC, J, or T / DLS-R-15	140U-D6D2-C10	140M-C2E-B63	–
25A-A2P5N104	25B-A2P5N104	0.5	0.4	0.5	0.4	2.5	1.7	6.5	A	100-C09	10	16	140U-D6D2-C10	140M-C2E-C10	CLASS RK5, CC, J, or T / DLS-R-15	140U-D6D2-C10	140M-C2E-C10	–
25A-A2P5N114	25B-A2P5N114	0.5	0.4	0.5	0.4	2.5	1.7	6.5	A	100-C09	10	16	140U-D6D2-C10	140M-C2E-C10	CLASS RK5, CC, J, or T / DLS-R-15	140U-D6D2-C10	140M-C2E-C10	–
25A-A4P8N104	25B-A4P8N104	1.0	0.75	1.0	0.75	4.8	2.8	10.7	A	100-C12	16	25	140U-D6D2-C15	140M-C2E-C16	CLASS RK5, CC, J, or T / DLS-R-25	140U-D6D2-C15	140M-C2E-C16	–
25A-A4P8N114	25B-A4P8N114	1.0	0.75	1.0	0.75	4.8	2.8	10.7	A	100-C12	16	25	140U-D6D2-C15	140M-C2E-C16	CLASS RK5, CC, J, or T / DLS-R-25	140U-D6D2-C15	140M-C2E-C16	–
25A-A8P0N104	25B-A8P0N104	2.0	1.5	2.0	1.5	8.0	4.8	18.0	B	100-C23	25	40	140U-D6D2-C25	140M-F8E-C25	CLASS CC, J, or T / 40	140U-D6D2-C25	140M-F8E-C25	–
25A-A8P0N114	25B-A8P0N114	2.0	1.5	2.0	1.5	8.0	4.8	18.0	B	100-C23	25	40	140U-D6D2-C25	140M-F8E-C25	CLASS CC, J, or T / 40	140U-D6D2-C25	140M-F8E-C25	–
25A-A011N104	25B-A011N104	3.0	2.2	3.0	2.2	11.0	6.0	22.9	B	100-C37	32	50	140G-G6C3-C35	140M-F8E-C25	CLASS CC, J, or T / 50	–	140M-F8E-C25	–
25A-A011N114	25B-A011N114	3.0	2.2	3.0	2.2	11.0	6.0	22.9	B	100-C37	32	50	140G-G6C3-C35	140M-F8E-C25	CLASS CC, J, or T / 50	–	140M-F8E-C25	–

(1) When the drive is controlling motors with lower amp ratings, refer to the drive nameplate for drive input current rating.

(2) The AIC ratings of the Bulletin 140M Motor Protector Circuit Breakers may vary. See Bulletin 140M Motor Protection Circuit Breakers Application Ratings.

(3) Bulletin 140M with adjustable current range should have the current trip set to the minimum range that the device will not trip.

(4) Manual Self-Protected (Type E) Combination Motor Controller, UL listed for 480Y/277 and 600Y/347 AC input. Not UL listed for use on 480V or 600V Delta/Delta, corner ground, or high-resistance ground systems.

Fuses and Circuit Breakers for PowerFlex 520-Series Drives *(continued)*

200...240V 3-Phase Input Protection Devices – Frames A...E

Catalog No.(1)		Output Ratings					Input Ratings		Frame Size	Contactor Catalog No.	IEC Applications (Non-UL)				UL Applications			
PF 523	PF 525	ND		HD		Amps	kVA	Max Amps(2)			Fuses (Rating)		Circuit Breakers		Fuses (Max. Rating)	Circuit Breakers		Min. Enclosure Vol. (in.^{3})
		HP	kW	HP	kW						Min.	Max.	140U/140G	140M	Class / Catalog No.	140U/140G	140M(3)(4)(5)	
25A-B1P6N104	–	0.25	0.2	0.25	0.2	1.6	0.9	1.9	A	100-C09	3	6	140U-D6D3-B30	140M-C2E-B25	CLASS RK5, CC, J, or T / DLS-R-15	140U-D6D3-B30	140M-C2E-B25	–
25A-B2P5N104	25B-B2P5N104	0.5	0.4	0.5	0.4	2.5	1.2	2.7	A	100-C09	6	6	140U-D6D3-B40	140M-C2E-B40	CLASS RK5, CC, J, or T / DLS-R-6	140U-D6D3-B40	140M-C2E-B40	–
25A-B5P0N104	25B-B5P0N104	1.0	0.75	1.0	0.75	5.0	2.7	5.8	A	100-C09	10	16	140U-D6D3-B80	140M-C2E-B63	CLASS RK5, CC, J, or T / DLS-R-15	140U-D6D3-B80	140M-C2E-B63	–
25A-B8P0N104	25B-B8P0N104	2.0	1.5	2.0	1.5	8.0	4.3	9.5	A	100-C12	16	20	140U-D6D3-C10	140M-C2E-C10	CLASS RK5, CC, J, or T / DLS-R-20	140U-D6D3-C10	140M-C2E-C10	–
25A-B011N104	25B-B011N104	3.0	2.2	3.0	2.2	11.0	6.3	13.8	A	100-C23	20	32	140U-D6D3-C15	140M-C2E-C16	CLASS RK5, CC, J, or T / DLS-R-30	140U-D6D3-C15	140M-C2E-C16	–
25A-B017N104	25B-B017N104	5.0	4.0	5.0	4.0	17.5	9.6	21.1	B	100-C23	32	45	140U-D6D3-C25	140M-F8E-C25	CLASS CC, J, or T / 45	140U-D6D3-C25	140M-F8E-C25	–
25A-B024N104	25B-B024N104	7.5	5.5	7.5	5.5	24.0	12.2	26.6	C	100-C37	35	63	140G-G6C3-C35	140M-F8E-C32	CLASS CC, J, or T / 60	–	140M-F8E-C32	–
25A-B032N104	25B-B032N104	10.0	7.5	10.0	7.5	32.2	15.9	34.8	D	100-C43	45	70	140G-G6C3-C60	140M-F8E-C45	CLASS RK5, CC, J, or T / DLS-R-70	–	140M-F8E-C45	–
25A-B048N104	25B-B048N104	15.0	11.0	10.0	7.5	48.3	20.1	44.0	E	100-C60	63	90	140G-G6C3-C70	140M-F8E-C45	CLASS CC, J, or T / 90	–	140M-F8E-C45	1416.0(6)
25A-B062N104	25B-B062N104	20.0	15.0	15.0	11.0	62.1	25.6	56.0	E	100-C72	70	125	140G-G6C3-C90	–	CLASS CC, J, or T / 125	–	–	–

(1) Normal Duty (ND) and Heavy Duty (HD) ratings are available for this drive.

(2) When the drive is controlling motors with lower amp ratings, refer to the drive nameplate for drive input current rating.

(3) The AIC ratings of the Bulletin 140M Motor Protector Circuit Breakers may vary. See Bulletin 140M Motor Protection Circuit Breakers Application Ratings.

(4) Bulletin 140M with adjustable current range should have the current trip set to the minimum range that the device will not trip.

(5) Manual Self-Protected (Type E) Combination Motor Controller, UL listed for 480Y/277 and 600Y/347 AC input. Not UL listed for use on 480V or 600V Delta/Delta, corner ground, or high-resistance ground systems.

(6) When using a Manual Self-Protected (Type E) Combination Motor Controller with this drive power rating, the drive must be installed in a ventilated or non-ventilated enclosure with the minimum volume specified in this column. Application specific thermal considerations may require a larger enclosure.

Fuses and Circuit Breakers for PowerFlex 520-Series Drives *(continued)*

380...480V 3-Phase Input Protection Devices – Frames A...E

Catalog No.(1)		Output Ratings					Input Ratings		Frame Size	Contactor Catalog No.	IEC Applications (Non-UL)				UL Applications			
PF 523	PF 525	ND		HD		Amps	kVA	Max Amps(2)			Fuses (Rating)		Circuit Breakers		Fuses (Max. Rating)	Circuit Breakers		Min. Enclosure Vol. (in.^{3})
		HP	kW	HP	kW						Min.	Max.	140U/140G	140M	Class / Catalog No.	140U/140G	140M(3)(4)(5)	
25A-D1P4N104	25B-D1P4N104	0.5	0.4	0.5	0.4	1.4	1.7	1.9	A	100-C09	3	6	140U-D6D3-B30	140M-C2E-B25	CLASS RK5, CC, J, or T / DLS-R-6	–	140M-C2E-B25	–
25A-D1P4N114	25B-D1P4N114	0.5	0.4	0.5	0.4	1.4	1.7	1.9	A	100-C09	3	6	140U-D6D3-B30	140M-C2E-B25	CLASS RK5, CC, J, or T / DLS-R-6	–	140M-C2E-B25	–
25A-D2P3N104	25B-D2P3N104	1.0	0.75	1.0	0.75	2.3	2.9	3.2	A	100-C09	6	10	140U-D6D3-B60	140M-C2E-B40	CLASS RK5, CC, J, or T / DLS-R-10	–	140M-C2E-B40	–
25A-D2P3N114	25B-D2P3N114	1.0	0.75	1.0	0.75	2.3	2.9	3.2	A	100-C09	6	10	140U-D6D3-B60	140M-C2E-B40	CLASS RK5, CC, J, or T / DLS-R-10	–	140M-C2E-B40	–
25A-D4P0N104	25B-D4P0N104	2.0	1.5	2.0	1.5	4.0	5.2	5.7	A	100-C09	10	16	140U-D6D3-B60	140M-C2E-B63	CLASS RK5, CC, J, or T / DLS-R-15	–	140M-C2E-B63	–
25A-D4P0N114	25B-D4P0N114	2.0	1.5	2.0	1.5	4.0	5.2	5.7	A	100-C09	10	16	140U-D6D3-B60	140M-C2E-B63	CLASS RK5, CC, J, or T / DLS-R-15	–	140M-C2E-B63	–
25A-D6P0N104	25B-D6P0N104	3.0	2.2	3.0	2.2	6.0	6.9	7.5	A	100-C09	10	16	140U-D6D3-C10	140M-C2E-C10	CLASS RK5, CC, J, or T / DLS-R-15	–	140M-C2E-C10	–
25A-D6P0N114	25B-D6P0N114	3.0	2.2	3.0	2.2	6.0	6.9	7.5	A	100-C09	10	16	140U-D6D3-C10	140M-C2E-C10	CLASS RK5, CC, J, or T / DLS-R-15	–	140M-C2E-C10	–
25A-D010N104	25B-D010N104	5.0	4.0	5.0	4.0	10.5	12.6	13.8	B	100-C23	20	32	140U-D6D3-C15	140M-C2E-C16	CLASS RK5, CC, J, or T / DLS-R-30	–	140M-C2E-C16	–
25A-D010N114	25B-D010N114	5.0	4.0	5.0	4.0	10.5	12.6	13.8	B	100-C23	20	32	140U-D6D3-C15	140M-C2E-C16	CLASS RK5, CC, J, or T / DLS-R-30	–	140M-C2E-C16	–
25A-D013N104	25B-D013N104	7.5	5.5	7.5	5.5	13.0	14.1	15.4	C	100-C23	20	35	140U-D6D3-C25	140M-D8E-C20	CLASS CC, J, or T / 35	–	140M-D8E-C20	–
25A-D013N114	25B-D013N114	7.5	5.5	7.5	5.5	13.0	14.1	15.4	C	100-C23	20	35	140U-D6D3-C25	140M-D8E-C20	CLASS CC, J, or T / 35	–	140M-D8E-C20	–
25A-D017N104	25B-D017N104	10.0	7.5	10.0	7.5	17.0	16.8	18.4	C	100-C23	25	40	140U-D6D3-C25	140M-D8E-C20	CLASS CC, J, or T / 40	–	140M-D8E-C20	–
25A-D017N114	25B-D017N114	10.0	7.5	10.0	7.5	17.0	16.8	18.4	C	100-C23	25	40	140U-D6D3-C25	140M-D8E-C20	CLASS CC, J, or T / 40	–	140M-D8E-C20	–
25A-D024N104	25B-D024N104	15.0	11.0	15.0	11.0	24.0	24.1	26.4	D	100-C37	35	63	140G-G6C3-C40	140M-F8E-C32	CLASS CC, J, or T / 60	–	140M-F8E-C32	656.7(6)
25A-D024N114	25B-D024N114	15.0	11.0	15.0	11.0	24.0	24.1	26.4	D	100-C37	35	63	140G-G6C3-C40	140M-F8E-C32	CLASS CC, J, or T / 60	–	140M-F8E-C32	656.7(6)
25A-D030N104	25B-D030N104	20.0	15.0	15.0	11.0	30.0	30.2	33.0	D	100-C43	45	70	140G-G6C3-C50	140M-F8E-C45	CLASS CC, J, or T / 70	–	140M-F8E-C45	656.7(6)
25A-D030N114	25B-D030N114	20.0	15.0	15.0	11.0	30.0	30.2	33.0	D	100-C43	45	70	140G-G6C3-C50	140M-F8E-C45	CLASS CC, J, or T / 70	–	140M-F8E-C45	656.7(6)
25A-D037N114	25B-D037N114	25.0	18.5	20.0	15.0	37.0	30.8	33.7	E	100-C43	45	70	140G-G6C3-C50	140M-F8E-C45	CLASS CC, J, or T / 70	–	140M-F8E-C45	–
25A-D043N114	25B-D043N114	30.0	22.0	25.0	18.5	43.0	35.6	38.9	E	100-C60	50	80	140G-G6C3-C60	140M-F8E-C45	CLASS CC, J, or T / 80	–	140M-F8E-C45	–

(1) Normal Duty (ND) and Heavy Duty (HD) ratings are available for this drive.

(2) When the drive is controlling motors with lower amp ratings, refer to the drive nameplate for drive input current rating.

(3) The AIC ratings of the Bulletin 140M Motor Protector Circuit Breakers may vary. See Bulletin 140M Motor Protection Circuit Breakers Application Ratings.

(4) Bulletin 140M with adjustable current range should have the current trip set to the minimum range that the device will not trip.

(5) Manual Self-Protected (Type E) Combination Motor Controller, UL listed for 480Y/277 and 600Y/347 AC input. Not UL listed for use on 480V or 600V Delta/Delta, corner ground, or high-resistance ground systems.

(6) When using a Manual Self-Protected (Type E) Combination Motor Controller with this drive power rating, the drive must be installed in a ventilated or non-ventilated enclosure with the minimum volume specified in this column. Application specific thermal considerations may require a larger enclosure.

Fuses and Circuit Breakers for PowerFlex 520-Series Drives *(continued)*

525...600V 3-Phase Input Protection Devices – Frames A...E

Catalog No.[1]		Output Ratings					Input Ratings		Frame Size	Contactor Catalog No.	IEC Applications (Non-UL)				UL Applications			
PF 523	PF 525	ND		HD		Amps	kVA	Max Amps[2]			Fuses (Rating)		Circuit Breakers		Fuses (Max. Rating)	Circuit Breakers		Min. Enclosure Vol. (in.^{3})
		HP	kW	HP	kW						Min.	Max.	140U/140G	140M	Class / Catalog No.	140U/140G	140M[3][4][5]	
25A-E0P9N104	25B-E0P9N104	0.5	0.4	0.5	0.4	0.9	1.4	1.2	A	100-C09	3	6	140U-D6D3-B20	140M-C2E-B25	CLASS RK5, CC, J, or T / DLS-R-6	–	140M-C2E-B25	–
25A-E1P7N104	25B-E1P7N104	1.0	0.75	1.0	0.75	1.7	2.6	2.3	A	100-C09	3	6	140U-D6D3-B30	140M-C2E-B25	CLASS RK5, CC, J, or T / DLS-R-6	–	140M-C2E-B25	–
25A-E3P0N104	25B-E3P0N104	2.0	1.5	2.0	1.5	3.0	4.3	3.8	A	100-C09	6	10	140U-D6D3-B50	140M-C2E-B40	CLASS RK5, CC, J, or T / DLS-R-10	–	140M-C2E-B40	–
25A-E4P2N104	25B-E4P2N104	3.0	2.2	3.0	2.2	4.2	6.1	5.3	A	100-C09	10	16	140U-D6D3-B80	140M-C2E-B63	CLASS RK5, CC, J, or T / DLS-R-15	–	140M-D8E-B63	–
25A-E6P6N104	25B-E6P6N104	5.0	4.0	5.0	4.0	6.6	9.1	8.0	B	100-C09	10	20	140U-D6D3-C10	140M-C2E-C10	CLASS RK5, CC, J, or T / DLS-R-20	–	140M-D8E-C10	–
25A-E9P9N104	25B-E9P9N104	7.5	5.5	7.5	5.5	9.9	12.8	11.2	C	100-C16	16	25	140U-D6D3-C15	140M-C2E-C16	CLASS RK5, CC, J, or T / DLS-R-25	–	140M-D8E-C16[6]	–
25A-E012N104	25B-E012N104	10.0	7.5	10.0	7.5	12.0	15.4	13.5	C	100-C23	20	32	140U-D6D3-C20	140M-C2E-C16	CLASS RK5, CC, J, or T / DLS-R-30	–	140M-D8E-C16	–
25A-E019N104	25B-E019N104	15.0	11.0	15.0	11.0	19.0	27.4	24.0	D	100-C30	32	50	140G-G6C3-C30	140M-F8E-C25	CLASS CC, J, or T / 50	–	140M-F8E-C25	656.7[7]
25A-E022N104	25B-E022N104	20.0	15.0	15.0	11.0	22.0	31.2	27.3	D	100-C30	35	63	140G-G6C3-C35	140M-F8E-C32	CLASS CC, J, or T / 60	–	140M-F8E-C32	656.7[7]
25A-E027N104	25B-E027N104	25.0	18.5	20.0	15.0	27.0	28.2	24.7	E	100-C30	35	50	140G-G6C3-C35	140M-F8E-C32	CLASS CC, J, or T / 50	–	140M-F8E-C32	1416.0[7]
25A-E032N104	25B-E032N104	30.0	22.0	25.0	18.5	32.0	33.4	29.2	E	100-C37	40	63	140G-G6C3-C50	140M-F8E-C32	CLASS CC, J, or T / 60	–	140M-F8E-C32	1416.0[7]

(1) Normal Duty (ND) and Heavy Duty (HD) ratings are available for this drive.

(2) When the drive is controlling motors with lower amp ratings, refer to the drive nameplate for drive input current rating.

(3) The AIC ratings of the Bulletin 140M Motor Protector Circuit Breakers may vary. See Bulletin 140M Motor Protection Circuit Breakers Application Ratings.

(4) Bulletin 140M with adjustable current range should have the current trip set to the minimum range that the device will not trip.

(5) Manual Self-Protected (Type E) Combination Motor Controller, UL listed for 480Y/277 and 600Y/347 AC input. Not UL listed for use on 480V or 600V Delta/Delta, corner ground, or high-resistance ground systems.

(6) When used with the 140M circuit breaker, the 25A-E9P9104 must be installed in a ventilated or non-ventilated enclosure with the minimum size of 457.2 x 457.2 x 269.8 mm (18 x 18 x 10.62 in.).

(7) When using a Manual Self-Protected (Type E) Combination Motor Controller with this drive power rating, the drive must be installed in a ventilated or non-ventilated enclosure with the minimum volume specified in this column. Application specific thermal considerations may require a larger enclosure.

Power and Control Module

PowerFlex 520-series drives consist of a Power Module and Control Module.

Separating the Power and Control Module

ATTENTION: Perform this action only when drive is NOT powered.

1. Press and hold down the catch on both sides of the frame cover, then pull out and swing upwards to remove (Frames B...E only).

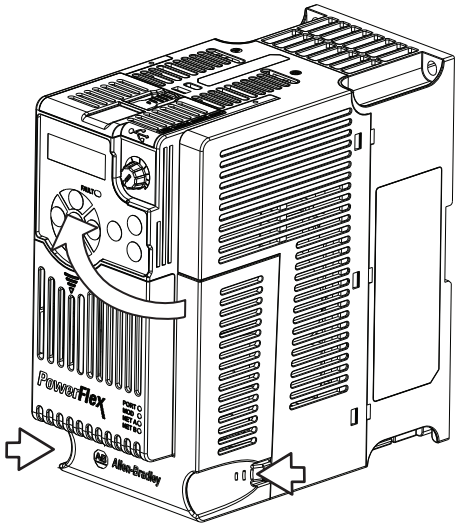

2. Press down and slide out the top cover of the Control Module to unlock it from the Power Module.

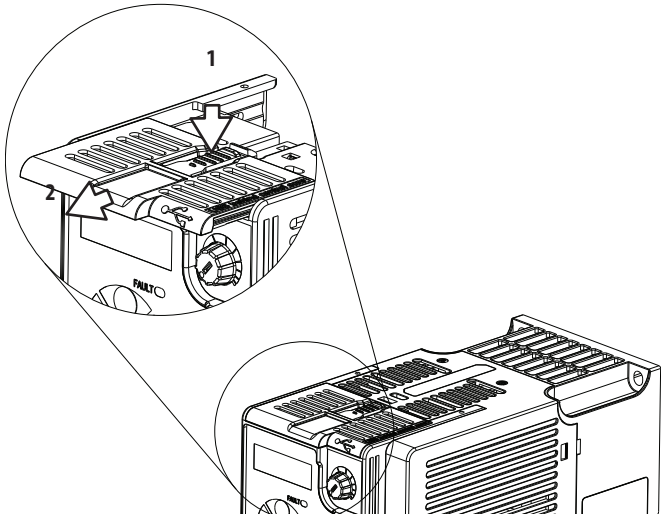

3. Hold the sides and top of the Control Module firmly, then pull out to separate it from the Power Module.

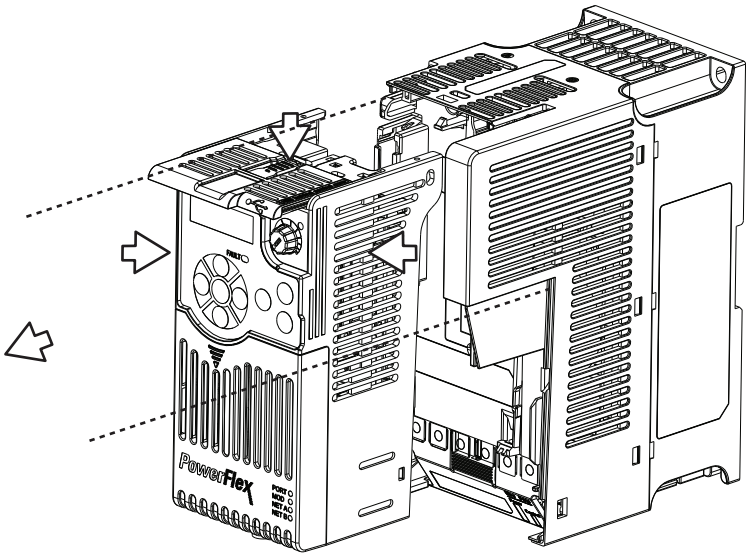

Connecting the Power and Control Module

1. Align the connectors on the Power Module and Control Module, then push the Control Module firmly onto the Power Module.

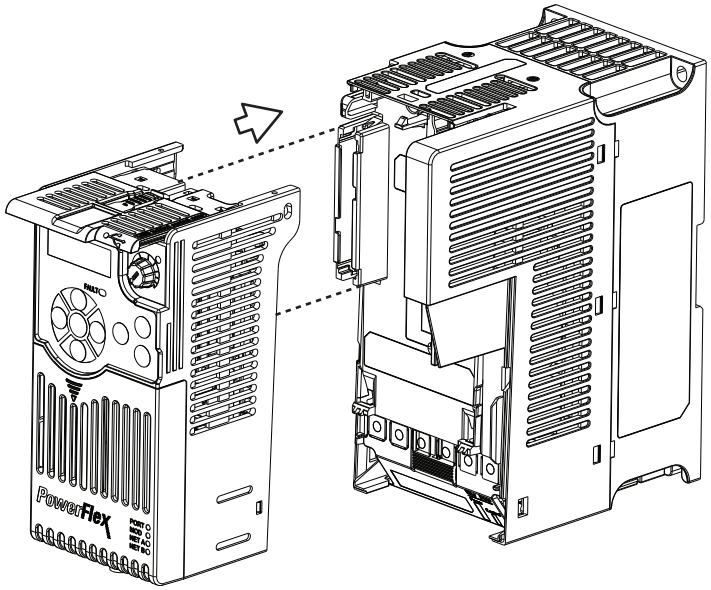

2. Push the top cover of the Control Module towards the Power Module to lock it.

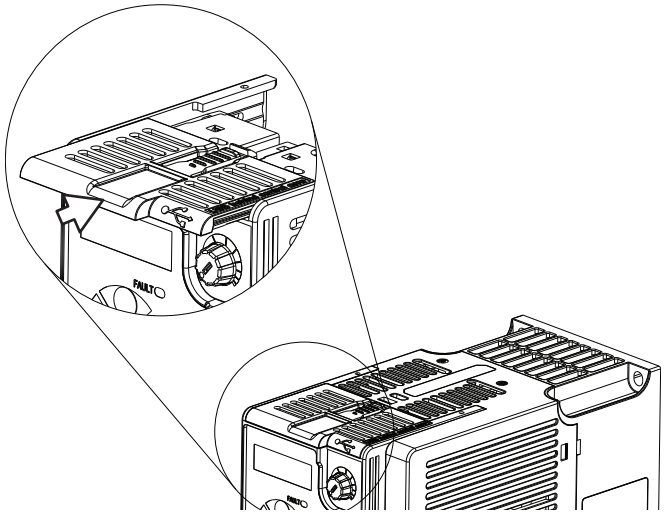

3. Insert the catch at the top of the frame cover into the Power Module, then swing the frame cover to snap the side catches onto the Power Module (Frames B...E only).

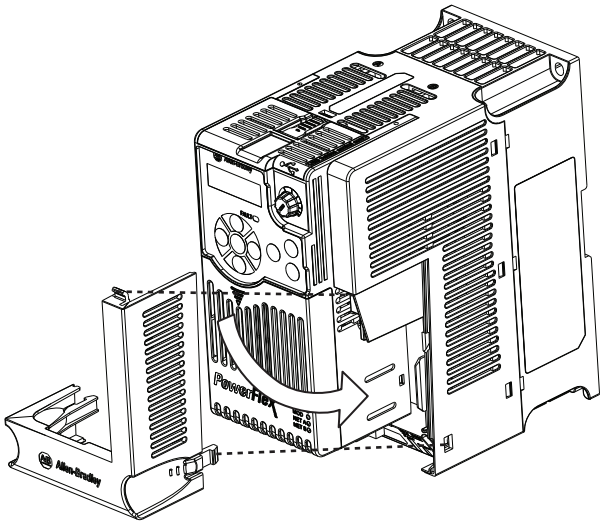

Control Module Cover

To access the control terminals, DSI port, and Ethernet port, the front cover must be removed. To remove:

1. Press and hold down the arrow on the front of the cover.
2. Slide the front cover down to remove from the Control Module.

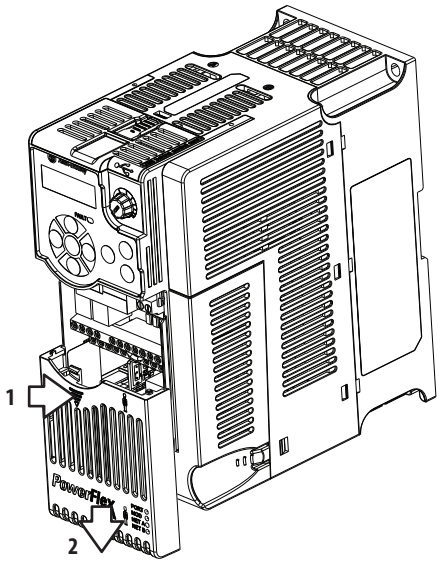

Re-attach the front cover when wiring is complete.

Power Module Terminal Guard

To access the power terminals, the terminal guard must be removed. To remove:

1. Press and hold down the catch on both sides of the frame cover, then pull out and swing upwards to remove (Frames B...E only).

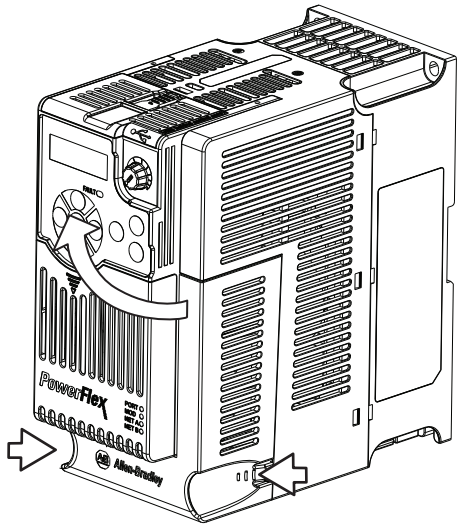

2. Press and hold down the locking tab on the terminal guard.
3. Slide the terminal guard down to remove from the Power Module.

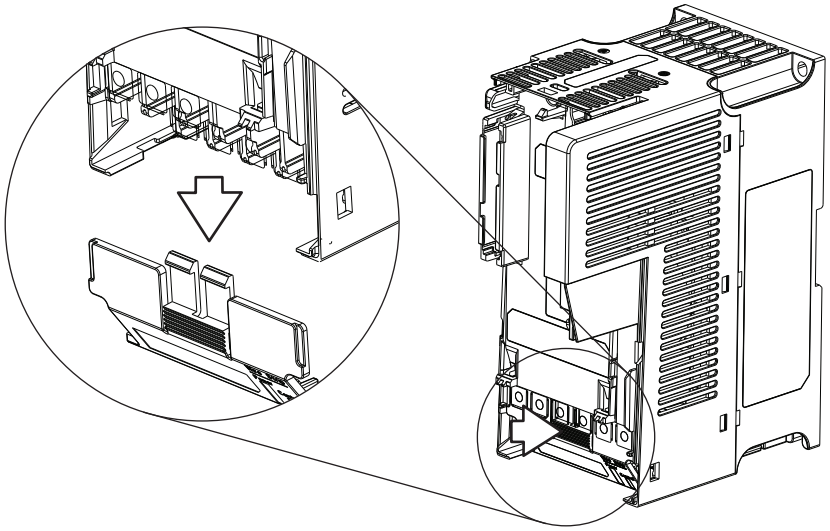

Re-attach the terminal guard when wiring is complete.

To access the power terminals for Frame A, you need to separate the Power and Control Modules. See Separating the Power and Control Module on page 27 for instructions.

Power Wiring

ATTENTION: National Codes and standards (NEC, VDE, BSI, etc.) and local codes outline provisions for safely installing electrical equipment. Installation must comply with specifications regarding wire types, conductor sizes, branch circuit protection and disconnect devices. Failure to do so may result in personal injury and/or equipment damage.

ATTENTION: To avoid a possible shock hazard caused by induced voltages, unused wires in the conduit must be grounded at both ends. For the same reason, if a drive sharing a conduit is being serviced or installed, all drives using this conduit should be disabled. This will help minimize the possible shock hazard from "cross coupled" power leads.

Motor Cable Types Acceptable for 100...600 Volt Installations

A variety of cable types are acceptable for drive installations. For many installations, unshielded cable is adequate, provided it can be separated from sensitive circuits. As an approximate guide, allow a spacing of 0.3 m (1 ft) for every 10 m (32.8 ft) of length. In all cases, long parallel runs must be avoided. Do not use cable with an insulation thickness less than 15 mils (0.4 mm/0.015 in.). Do not route more than three sets of motor leads in a single conduit to minimize "cross talk". If more than three drive/motor connections per conduit are required, shielded cable must be used.

UL installations above 50 °C ambient must use 600V, 90 °C wire.
UL installations in 50 °C ambient must use 600V, 75 °C or 90 °C wire.
UL installations in 40 °C ambient should use 600V, 75 °C or 90 °C wire.
Use copper wire only. Wire gauge requirements and recommendations are based on 75 °C. Do not reduce wire gauge when using higher temperature wire.



WARNING: The distance between the drive and motor must not exceed the maximum cable length stated in the Motor Cable Length Restrictions Tables in "Wiring and Grounding Guide, (PWM) AC Drives," publication DRIVES-IN001.

Unshielded

THHN, THWN or similar wire is acceptable for drive installation in dry environments provided adequate free air space and/or conduit fill rates limits are provided. Any wire chosen must have a minimum insulation thickness of 15 mils and should not have large variations in insulation concentricity.



ATTENTION: Do not use THHN or similarly coated wire in wet areas.

Shielded/Armored Cable

Shielded cable contains all of the general benefits of multi-conductor cable with the added benefit of a copper braided shield that can contain much of the noise generated by a typical AC Drive. Strong consideration for shielded cable should be given in installations with sensitive equipment such as weigh scales, capacitive proximity switches and other devices that may be affected by electrical noise in the distribution system. Applications with large numbers of drives in a similar location, imposed EMC regulations or a high degree of communications / networking are also good candidates for shielded cable.

Shielded cable may also help reduce shaft voltage and induced bearing currents for some applications. In addition, the increased impedance of shielded cable may help extend the distance that the motor can be located from the drive without the addition of motor protective devices such as terminator networks. Refer to Reflected Wave in "Wiring and Grounding Guide, (PWM) AC Drives," publication DRIVES-IN001.

Consideration should be given to all of the general specifications dictated by the environment of the installation, including temperature, flexibility, moisture characteristics and chemical resistance. In addition, a braided shield should be included and be specified by the cable manufacturer as having coverage of at least 75%. An additional foil shield can greatly improve noise containment.

A good example of recommended cable is Belden® 295xx (xx determines gauge). This cable has four (4) XLPE insulated conductors with a 100% coverage foil and an 85% coverage copper braided shield (with drain wire) surrounded by a PVC jacket.

Other types of shielded cable are available, but the selection of these types may limit the allowable cable length. Particularly, some of the newer cables twist 4 conductors of THHN wire and wrap them tightly with a foil shield. This construction can greatly increase the cable charging current required and reduce the overall drive performance. Unless specified in the individual distance tables as tested with the drive, these cables are not recommended and their performance against the lead length limits supplied is not known.

Recommended Shielded Wire

Location	Rating/Type	Description
Standard (Option 1)	600V, 90 °C (194 °F) XHHW2/RHW-2 Anixter B209500-B209507, Belden 29501-29507, or equivalent	• Four tinned copper conductors with XLPE insulation. • Copper braid/aluminum foil combination shield and tinned copper drain wire. • PVC jacket.
Standard (Option 2)	Tray rated 600V, 90 °C (194 °F) RHH/RHW-2 Anixter OLF-7xxxxx or equivalent	• Three tinned copper conductors with XLPE insulation. • 5 mil single helical copper tape (25% overlap min.) with three bare copper grounds in contact with shield. • PVC jacket.
Class I & II; Division I & II	Tray rated 600V, 90 °C (194 °F) RHH/RHW-2 Anixter 7V-7xxxx-3G or equivalent	• Three bare copper conductors with XLPE insulation and impervious corrugated continuously welded aluminum armor. • Black sunlight resistant PVC jacket overall. • Three copper grounds on #10 AWG and smaller.

Reflected Wave Protection

The drive should be installed as close to the motor as possible. Installations with long motor cables may require the addition of external devices to limit voltage reflections at the motor (reflected wave phenomena). Refer to Reflected Wave in "Wiring and Grounding Guide, (PWM) AC Drives," publication DRIVES-IN001.

The reflected wave data applies to all carrier frequencies 2...16 kHz.

For 240V ratings and lower, reflected wave effects do not need to be considered.

Output Disconnect

The drive is intended to be commanded by control input signals that will start and stop the motor. A device that routinely disconnects then reapplies output power to the motor for the purpose of starting and stopping the motor should not be used. If it is necessary to disconnect power to the motor with the drive outputting power, an auxiliary contact should be used to simultaneously disable drive (Aux Fault or Coast to Stop).

Power Terminal Block

Power Terminal Block

Frame A, B, C & D

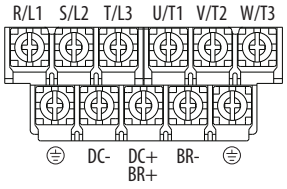

Frame E

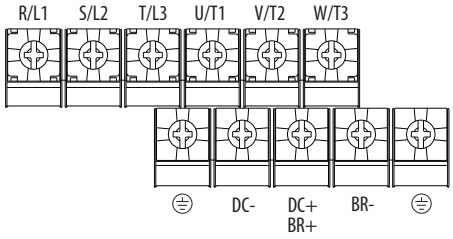

Terminal	Description
R/L1, S/L2	1-Phase Input Line Voltage Connection
R/L1, S/L2, T/L3	3-Phase Input Line Voltage Connection
U/T1, V/T2, W/T3	Motor Phase Connection = 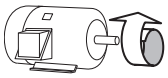 Switch any two motor leads to change forward direction.
DC+, DC-	DC Bus Connection (except for 110V 1-Phase)
BR+, BR-	Dynamic Brake Resistor Connection
⏚	Safety Ground - PE

IMPORTANT Terminal screws may become loose during shipment. Ensure that all terminal screws are tightened to the recommended torque before applying power to the drive.

Power Terminal Block Wire Specifications

Frame	Maximum Wire Size(1)	Minimum Wire Size(1)	Torque
A	5.3 mm^2 (10 AWG)	0.8 mm^2 (18 AWG)	1.76...2.16 Nm (15.6...19.1 lb-in.)
B	8.4 mm^2 (8 AWG)	2.1 mm^2 (14 AWG)	1.76...2.16 Nm (15.6...19.1 lb-in.)
C	8.4 mm^2 (8 AWG)	2.1 mm^2 (14 AWG)	1.76...2.16 Nm (15.6...19.1 lb-in.)
D	13.3 mm^2 (6 AWG)	5.3 mm^2 (10 AWG)	1.76...2.16 Nm (15.6...19.1 lb-in.)
E	26.7 mm^2 (3 AWG)	8.4 mm^2 (8 AWG)	3.09...3.77 Nm (27.3...33.4 lb-in.)

(1) Maximum/minimum sizes that the terminal block will accept – these are not recommendations.

Common Bus/Precharge Notes

If drives are used with a disconnect switch to the common DC bus, then an auxiliary contact on the disconnect must be connected to a digital input of the drive. The corresponding input (parameter t062, t063, t065...t068 [DigIn TermBlk xx]) must be set to 30, "Precharge En" This provides the proper precharge interlock, guarding against possible damage to the drive when connected to a common DC bus.

I/O Wiring

Motor Start/Stop Precautions



ATTENTION: A contactor or other device that routinely disconnects and reapplies the AC line to the drive to start and stop the motor can cause drive hardware damage. The drive is designed to use control input signals that will start and stop the motor. If used, the input device must not exceed one operation per minute or drive damage can occur.

ATTENTION: The drive start/stop control circuitry includes solid-state components. If hazards due to accidental contact with moving machinery or unintentional flow of liquid, gas or solids exist, an additional hardwired stop circuit may be required to remove the AC line to the drive. When the AC line is removed, there will be a loss of any inherent regenerative braking effect that might be present - the motor will coast to a stop. An auxiliary braking method may be required. Alternatively, use the drive's safety input function.

Important points to remember about I/O wiring:

- Always use copper wire.
- Wire with an insulation rating of 600V or greater is recommended.
- Control and signal wires should be separated from power wires by at least 0.3 m (1 ft).

IMPORTANT I/O terminals labeled "Common" are not referenced to the safety ground (PE) terminal and are designed to greatly reduce common mode interference.



ATTENTION: Driving the 4-20 mA analog input from a voltage source could cause component damage. Verify proper configuration prior to applying input signals.

Signal and Control Wire Types

Recommendations are for 50 °C ambient temperature.
75 °C wire must be used for 60 °C ambient temperature.
90 °C wire must be used for 70 °C ambient temperature.

Recommended Signal Wire

Signal Type/ Where Used	Belden Wire Type(s)[1] *(or equivalent)*	Description	Min. Insulation Rating
Analog I/O & PTC	8760/9460	0.750 mm^2 (18 AWG), twisted pair, 100% shield with drain[2]	300V, 60 °C (140 °F)
Remote Pot	8770	0.750 mm^2 (18 AWG), 3 conductor, shielded	
Encoder/Pulse I/O	9728/9730	0.196 mm^2 (24 AWG), individually shielded pairs	

(1) Stranded or solid wire.

(2) If the wires are short and contained within a cabinet which has no sensitive circuits, the use of shielded wire may not be necessary, but is always recommended.

Recommended Control Wire for Digital I/O

Type	Wire Type(s)	Description	Min. Insulation Rating
Unshielded	Per US NEC or applicable national or local code	–	300V, 60 °C (140 °F)
Shielded	Multi-conductor shielded cable such as Belden 8770 (or equivalent)	0.750 mm^2 (18 AWG), 3 conductor, shielded.	

Maximum Control Wire Recommendations

Do not exceed control wiring length of 30 m (100 ft). Control signal cable length is highly dependent on electrical environment and installation practices. To improve noise immunity, the I/O terminal block Common may be connected to ground terminal/protective earth.

Control I/O Terminal Block

Control I/O Terminal Block Wire Specifications

Frame	Maximum Wire Size[1]	Minimum Wire Size[1]	Torque
A...E	1.3 mm^2 (16 AWG)	0.13 mm^2 (26 AWG)	0.71...0.86 Nm (6.2...7.6 lb-in.)

(1) Maximum/minimum sizes that the terminal block will accept – these are not recommendations.

PowerFlex 523 Control I/O Terminal Block

PowerFlex 523 Control I/O Wiring Block Diagram

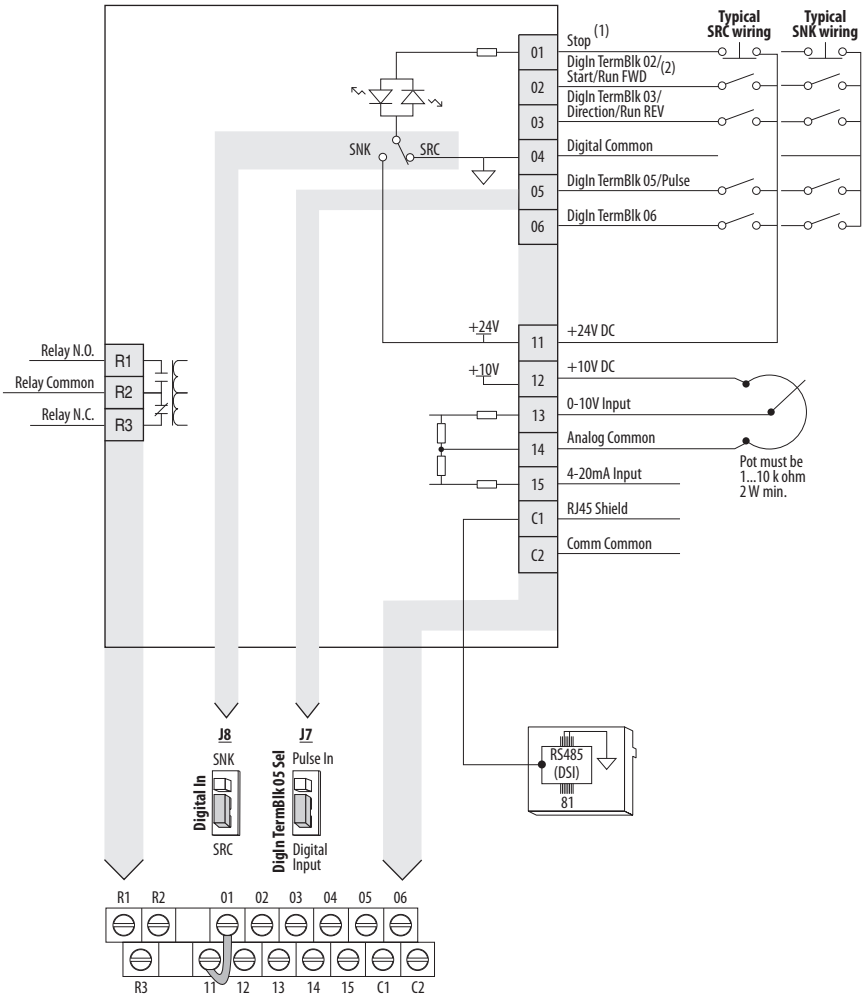

Control I/O Wiring Block Diagram Notes

(1) See Digital Input Selection for Start Source on page 47 for more information on configuring the digital inputs.

IMPORTANT I/O Terminal 01 is always a stop input. The stopping mode is determined by the drive setting. See the tables below for more information.

Start Method	Stop Method	
P046, P048, P050 [Start Source x]	**I/O Terminal 01 Stop**	**Normal Stop**
1 "Keypad"	Coast	Per P045 [Stop Mode]
2 "DigIn TrmBlk"	See t062, t063 [DigIn TermBlk xx] below	
3 "Serial/DSI"	Coast	
4 "Network Opt"	Coast	
5 "Ethernet/IP" (1)	Coast	

(1) Setting is specific to PowerFlex 525 drives only.

Start Method	Stop Method	
t062, t063 [DigIn TermBlk xx]	**I/O Terminal 01 Stop**	**Normal Stop**
48 "2-Wire FWD"	t064 [2-Wire Mode] is set to: • 0, 1, or 2 = Coast • 3 = per P045 [Stop Mode]	Per P045 [Stop Mode]
49 "3-Wire Start"	Per P045 [Stop Mode]	
50 "2-Wire REV"	t064 [2-Wire Mode] is set to: • 0, 1, or 2 = Coast • 3 = per P045 [Stop Mode]	
51 "3-Wire Dir"	Per P045 [Stop Mode]	

IMPORTANT The drive is shipped with a jumper installed between I/O Terminals 01 and 11. Remove this jumper when using I/O Terminal 01 as a stop or enable input.

(2) Two wire control shown. For three wire control use a momentary input on I/O Terminal 02 to command a start. Use a maintained input for I/O Terminal 03 to change direction.

Control I/O Terminal Designations

No.	Signal	Default	Description	Parameter
R1	Relay N.O.	Fault	Normally open contact for output relay.	t076
R2	Relay Common	Fault	Common for output relay.	
R3	Relay N.C.	Motor Running	Normally closed contact for output relay.	t081
01	Stop	Coast	Three wire stop. However, it functions as a stop under all input modes and cannot be disabled.	P045(2)
02	DigIn TermBlk 02/ Start/Run FWD	Run FWD	Used to initiate motion and also can be used as a programmable digital input. It can be programmed with t062 [DigIn TermBlk 02] as three wire (Start/Dir with Stop) or two wire (Run FWD/ Run REV) control. Current consumption is 6 mA.	P045, P046, P048, P050, A544, t062
03	DigIn TermBlk 03/ Dir/Run REV	Run REV	Used to initiate motion and also can be used as a programmable digital input. It can be programmed with t063 [DigIn TermBlk 03] as three wire (Start/Dir with Stop) or two wire (Run FWD/ Run REV) control. Current consumption is 6 mA.	t063
04	Digital Common	–	Return for digital I/O. Electrically isolated (along with the digital I/O) from the rest of the drive.	–
05	DigIn TermBlk 05/ Pulse In	Preset Freq	Program with t065 [DigIn TermBlk 05]. Also functions as a Pulse Train input for reference or speed feedback. The maximum frequency is 100 kHz. Current consumption is 6 mA.	t065
06	DigIn TermBlk 06	Preset Freq	Program with t066 [DigIn TermBlk 06]. Current consumption is 6 mA.	t066
11	+24V DC	–	Referenced to Digital Common. Drive supplied power for digital inputs. Maximum output current is 100 mA.	–
12	+10V DC	–	Referenced to Analog Common. Drive supplied power for 0...10V external potentiometer. Maximum output current is 15 mA.	P047, P049
13	0-10V In(1)	Not Active	For external 0-10V (unipolar) input supply or potentiometer wiper. Input impedance: Voltage source = 100 kΩ Allowable potentiometer resistance range = 1...10 kΩ	P047, P049, t062, t063, t065, t066, t093, A459, A471
14	Analog Common	–	Return for the analog I/O. Electrically isolated (along with the analog I/O) from the rest of the drive.	–

Control I/O Terminal Designations

No.	Signal	Default	Description	Parameter
15	4-20mA In(1)	Not Active	For external 4-20 mA input supply. Input impedance = 250 Ω	P047, P049, t062, t063, t065, t066, A459, A471
C1	C1	–	This terminal is tied to the RJ-45 port shield. Tie this terminal to a clean ground in order to improve noise immunity when using external communication peripherals.	–
C2	C2	–	This is the signal common for the communication signals.	–

(1) Only one analog frequency source may be connected at a time. If more than one reference is connected at the same time, an undetermined frequency reference will result.

(2) See Footnote (1) on page 37.

PowerFlex 525 Control I/O Terminal Block

PowerFlex 525 Control I/O Wiring Block Diagram

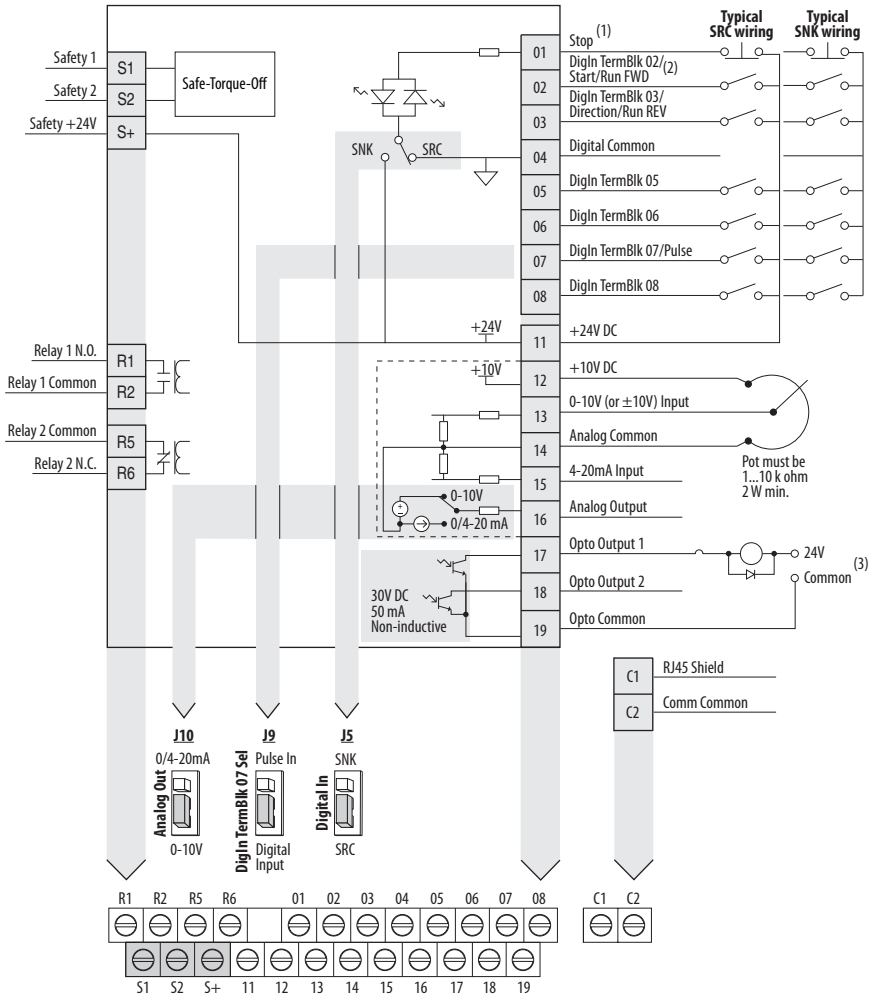

Control I/O Wiring Block Diagram Notes

(1) See Digital Input Selection for Start Source on page 47 for more information on configuring the digital inputs.

IMPORTANT I/O Terminal 01 is always a stop input. The stopping mode is determined by the drive setting. See the tables below for more information.

Start Method	Stop Method	
P046, P048, P050 [Start Source x]	**I/O Terminal 01 Stop**	**Normal Stop**
1 "Keypad"	Coast	Per P045 [Stop Mode]
2 "DigIn TrmBlk"	See t062, t063 [DigIn TermBlk xx] below	
3 "Serial/DSI"	Coast	
4 "Network Opt"	Coast	
5 "EtherNet/IP"	Coast	

Start Method	Stop Method	
t062, t063 [DigIn TermBlk xx]	**I/O Terminal 01 Stop**	**Normal Stop**
48 "2-Wire FWD"	t064 [2-Wire Mode] is set to: • 0, 1, or 2 = Coast • 3 = per P045 [Stop Mode]	Per P045 [Stop Mode]
49 "3-Wire Start"	Per P045 [Stop Mode]	
50 "2-Wire REV"	t064 [2-Wire Mode] is set to: • 0, 1, or 2 = Coast • 3 = per P045 [Stop Mode]	
51 "3-Wire Dir"	Per P045 [Stop Mode]	

IMPORTANT The drive is shipped with a jumper installed between I/O Terminals 01 and 11. Remove this jumper when using I/O Terminal 01 as a stop or enable input.

(2) Two wire control shown. For three wire control use a momentary input on I/O Terminal 02 to command a start. Use a maintained input for I/O Terminal 03 to change direction.

(3) When using an opto output with an inductive load such as a relay, install a recovery diode parallel to the relay as shown, to prevent damage to the output.

Control I/O Terminal Designations

No.	Signal	Default	Description	Parameter
R1	Relay 1 N.O.	Fault	Normally open contact for output relay.	t076
R2	Relay 1 Common	Fault	Common for output relay.	
R5	Relay 2 Common	Motor Running	Common for output relay.	t081
R6	Relay 2 N.C.	Motor Running	Normally closed contact for output relay.	
01	Stop	Coast	Three wire stop. However, it functions as a stop under all input modes and cannot be disabled.	P045(1)
02	DigIn TermBlk 02/ Start/Run FWD	Run FWD	Used to initiate motion and also can be used as a programmable digital input. It can be programmed with t062 [DigIn TermBlk 02] as three wire (Start/Dir with Stop) or two wire (Run FWD/ Run REV) control. Current consumption is 6 mA.	P045, P046, P048, P050, A544, t062
03	DigIn TermBlk 03/ Dir/Run REV	Run REV	Used to initiate motion and also can be used as a programmable digital input. It can be programmed with t063 [DigIn TermBlk 03] as three wire (Start/Dir with Stop) or two wire (Run FWD/ Run REV) control. Current consumption is 6 mA.	t063
04	Digital Common	–	Return for digital I/O. Electrically isolated (along with the digital I/O) from the rest of the drive.	–
05	DigIn TermBlk 05	Preset Freq	Program with t065 [DigIn TermBlk 05]. Current consumption is 6 mA.	t065

Control I/O Terminal Designations

No.	Signal	Default	Description	Parameter
06	DigIn TermBlk 06	Preset Freq	Program with t066 [DigIn TermBlk 06]. Current consumption is 6 mA.	t066
07	DigIn TermBlk 07/ Pulse In	Start Source 2 + Speed Reference2	Program with t067 [DigIn TermBlk 07]. Also functions as a Pulse Train input for reference or speed feedback. The maximum frequency is 100 kHz. Current consumption is 6 mA.	t067
08	DigIn TermBlk 08	Jog Forward	Program with t068 [DigIn TermBlk 08]. Current consumption is 6 mA.	t068
C1	C1	–	This terminal is tied to the RJ-45 port shield. Tie this terminal to a clean ground in order to improve noise immunity when using external communication peripherals.	–
C2	C2	–	This is the signal common for the communication signals.	–
S1	Safety 1	–	Safety input 1. Current consumption is 6 mA.	–
S2	Safety 2	–	Safety input 2. Current consumption is 6 mA.	–
S+	Safety +24V	–	+24V supply for safety circuit. Internally tied to the +24V DC source (Pin 11).	–
11	+24V DC	–	Referenced to Digital Common. Drive supplied power for digital inputs. Maximum output current is 100 mA.	–
12	+10V DC	–	Referenced to Analog Common. Drive supplied power for 0...10V external potentiometer. Maximum output current is 15 mA.	P047, P049
13	±10V In	Not Active	For external 0-10V (unipolar) or ±10V (bipolar) input supply or potentiometer wiper. Input impedance: Voltage source = 100 kΩ Allowable potentiometer resistance range = 1...10 kΩ	P047, P049, t062, t063, t065, t066, t093, A459, A471
14	Analog Common	–	Return for the analog I/O. Electrically isolated (along with the analog I/O) from the rest of the drive.	–
15	4-20mA In	Not Active	For external 4-20 mA input supply. Input impedance = 250 Ω	P047, P049, t062, t063, t065, t066, A459, A471
16	Analog Output	OutFreq 0-10	The default analog output is 0-10V. To convert a current value, change the Analog Output jumper to 0-20 mA. Program with t088 [Analog Out Sel]. Maximum analog value can be scaled with t089 [Analog Out High]. Maximum Load: 4-20 mA = 525 Ω (10.5V) 0-10V = 1 kΩ (10 mA)	t088, t089
17	Opto Output 1	Motor Running	Program with t069 [Opto Out1 Sel]. Each Opto-Output is rated 30V DC 50 mA (Non-inductive).	t069, t070, t075
18	Opto Output 2	At Frequency	Program with t072 [Opto Out1 Sel]. Each Opto-Output is rated 30V DC 50 mA (Non-inductive).	t072, t073, t075
19	Opto Common	–	The emitters of the Optocoupler Outputs (1 and 2) are tied together at Optocoupler Common. Electrically isolated from the rest of the drive.	–

(1) See Footnote (1) on page 37.

I/O Wiring Examples

<table>
<tr><th>I/O</th><th colspan="3">Connection Example</th></tr>
<tr><td>Potentiometer
1...10k Ω Pot. Recommended (2 W minimum)</td><td colspan="3">P047 [Speed Reference1] = 5 “0-10V Input”
 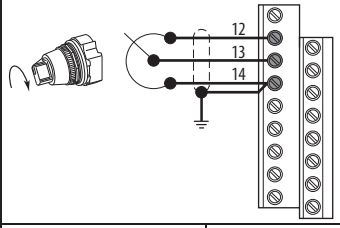
</td></tr>
<tr><td rowspan="2">Analog Input
0-10V, 100k Ω impedance
4-20 mA, 250 Ω impedance</td><td>Bipolar
P047 [Speed Reference1] = 5 “0-10V Input” and t093 [10V Bipolar Enbl] = 1 “Bi-Polar In”</td><td>Unipolar (Voltage)
P047 [Speed Reference1] = 5 “0-10V Input”</td><td>Unipolar (Current)
P047 [Speed Reference1] = 6 “4-20mA Input”</td></tr>
<tr><td> 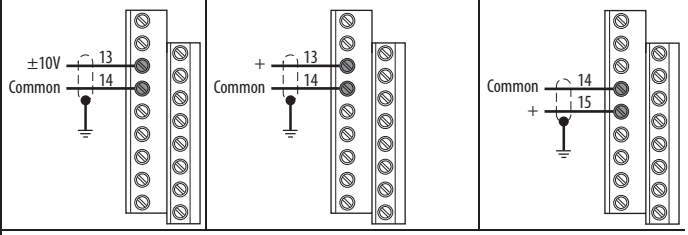
</td></tr>
<tr><td>Analog Input, PTC
For Drive Fault</td><td colspan="3">Wire the PTC and External Resistor (typically matched to the PTC Hot Resistance) to I/O Terminals 12, 13, 14.
Wire R2/R3 Relay Output (SRC) to I/O Terminals 5 & 11.
t065 [DigIn TermBlk 05] = 12 “Aux Fault”
t081 [Relay Out 2 Sel] = 10 “Above Anlg V”
t082 [Relay Out 2 Level] = % Voltage Trip
 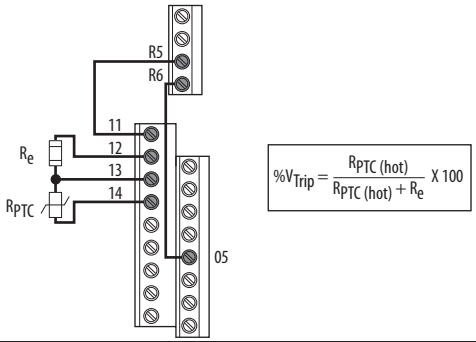
</td></tr>
<tr><td>Pulse Train Input
PowerFlex 523
t065 [DigIn TermBlk 05] = 52
PowerFlex 525
t067 [DigIn TermBlk 07] = 52

Use P047, P049 and P051 [Speed Referencex] to select pulse input.
Jumper for DigIn TermBlk 05 or 07 Sel must be moved to Pulse In.</td><td colspan="3">PowerFlex 523
PowerFlex 525
 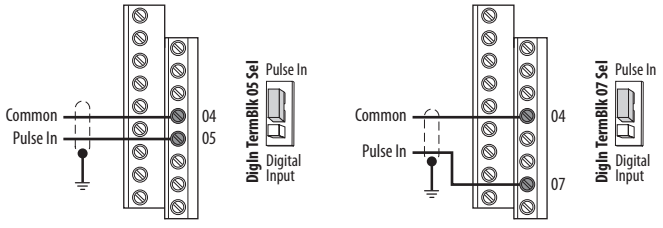
</td></tr>
</table>

I/O	Connection Example	
2 Wire SRC Control - Non-Reversing P046 [Start Source 1] = 2 and t062 [DigIn TermBlk 02] = 48 Input must be active for the drive to run. When input is opened, the drive will stop as specified by P045 [Stop Mode]. If desired, a User Supplied 24V DC power source can be used. Refer to the "External Supply (SRC)" example.	Internal Supply (SRC) 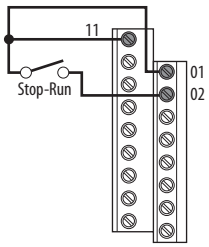	External Supply (SRC) 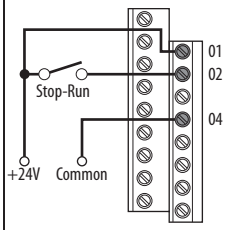 Each digital input draws 6 mA.
2 Wire SNK Control - Non-Reversing	Internal Supply (SNK) 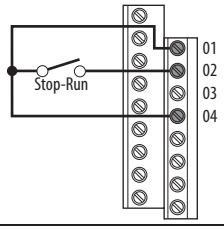	
2 Wire SRC Control - Run FWD/Run REV P046 [Start Source 1] = 2, t062 [DigIn TermBlk 02] = 48 and t063 [DigIn TermBlk 03] = 50 Input must be active for the drive to run. When input is opened, the drive will stop as specified by P045 [Stop Mode]. If both Run Forward and Run Reverse inputs are closed at the same time, an undetermined state could occur.	Internal Supply (SRC) 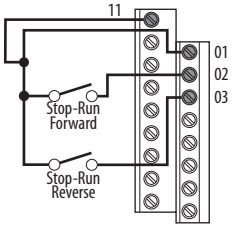	External Supply (SRC) 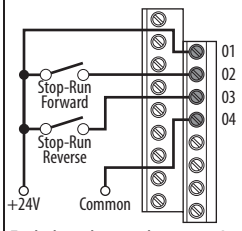 Each digital input draws 6 mA.
2 Wire SNK Control - Run FWD/Run REV	Internal Supply (SNK) 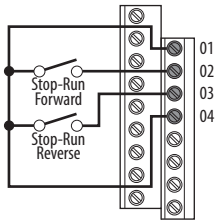	
3 Wire SRC Control - Non-Reversing P046 [Start Source 1] = 2, t062 [DigIn TermBlk 02] = 49 and t063 [DigIn TermBlk 03] = 51 A momentary input will start the drive. A stop input to I/O Terminal 01 will stop the drive as specified by P045 [Stop Mode].	Internal Supply (SRC) 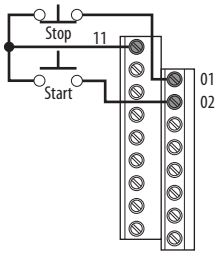	External Supply (SRC) 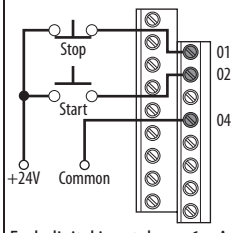 Each digital input draws 6 mA.

<table>
<tr><th>I/O</th><th colspan="2">Connection Example</th></tr>
<tr><td rowspan="2">3 Wire SNK Control - Non-Reversing</td><td colspan="2">Internal Supply (SNK)</td></tr>
<tr><td colspan="2"> 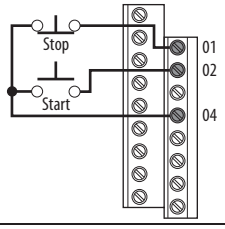
</td></tr>
<tr><td rowspan="2">3 Wire SRC Control - Reversing
P046 [Start Source 1] = 2, t062 [DigIn TermBlk 02] = 49 and t063 [DigIn TermBlk 03] = 51
A momentary input will start the drive. A stop input to I/O Terminal 01 will stop the drive as specified by P045 [Stop Mode]. I/O Terminal 03 determines direction.</td><td>Internal Supply (SRC)</td><td>External Supply (SRC)</td></tr>
<tr><td> 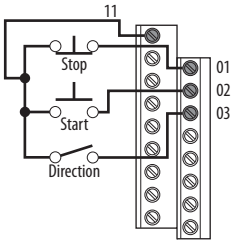
</td><td> 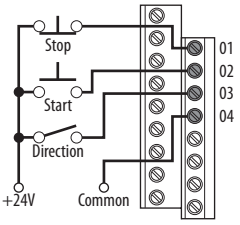

Each digital input draws 6 mA.</td></tr>
<tr><td rowspan="2">3 Wire SNK Control - Reversing</td><td colspan="2">Internal Supply (SNK)</td></tr>
<tr><td colspan="2"> 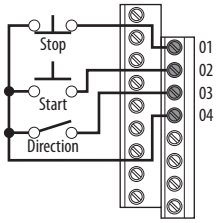
</td></tr>
<tr><td rowspan="2">Opto Output (1 & 2)[1]
t069 [Opto Out1 Sel] determines Opto-Output 1 (I/O Terminal 17) operation.
t072 [Opto Out2 Sel] determines Opto-Output 2 (I/O Terminal 18) operation.
When using Opto-Output with an inductive load such as a relay, install a recovery diode parallel to the relay as shown, to prevent damage to the output.</td><td colspan="2">Opto-Output 1</td></tr>
<tr><td colspan="2"> 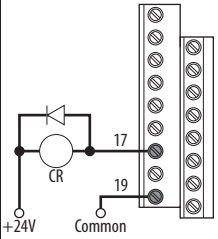

Each Opto-Output is rated 30V DC 50 mA (Non-inductive).</td></tr>
<tr><td rowspan="2">Analog Output[1]
t088 [Analog Out Sel] determines analog output type and drive conditions.
0-10V,
1k Ω minimum
0-20 mA/4-20 mA,
525 Ω maximum</td><td colspan="2">t088 [Analog Out Sel] = 0 through 23
The Analog Output Select jumper must be set to match the analog output signal mode set in t088 [Analog Out Sel].</td></tr>
<tr><td colspan="2"> 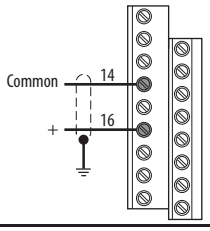
</td></tr>
</table>

(1) Feature is specific to PowerFlex 525 drives only.

Typical Multiple Drive Connection Examples

Input/Output	Connection Example
Multiple Digital Input Connections Customer Inputs can be wired per External Supply (SRC).	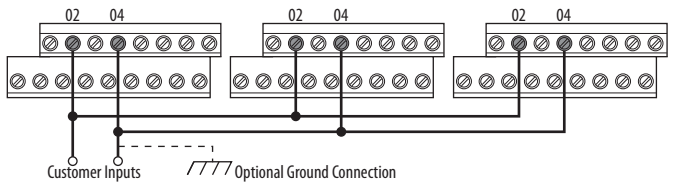 When connecting a single input such as Run, Stop, Reverse or Preset Speeds to multiple drives, it is important to connect I/O Terminal 04 common together for all drives. If they are to be tied into another common (such as earth ground or separate apparatus ground) only one point of the daisy chain of I/O Terminal 04 should be connected. **ATTENTION:** I/O Common terminals should **not** be tied together when using SNK (Internal Supply) mode. In SNK mode, if power is removed from one drive, inadvertent operation of other drives that share the same I/O Common connection may occur.
Multiple Analog Connections	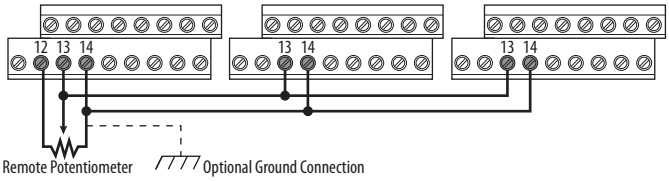 When connecting a single potentiometer to multiple drives it is important to connect I/O Terminal 14 common together for all drives. I/O Terminal 14 common and I/O Terminal 13 (potentiometer wiper) should be daisy-chained to each drive. All drives must be powered up for the analog signal to be read correctly.

Start and Speed Reference Control

Start Source and Speed Reference Selection

The start and drive speed command can be obtained from a number of different sources. By default, start source is determined by P046 [Start Source 1] and drive speed source is determined by P047 [Speed Reference1]. However, various inputs can override this selection, See below for the override priority.

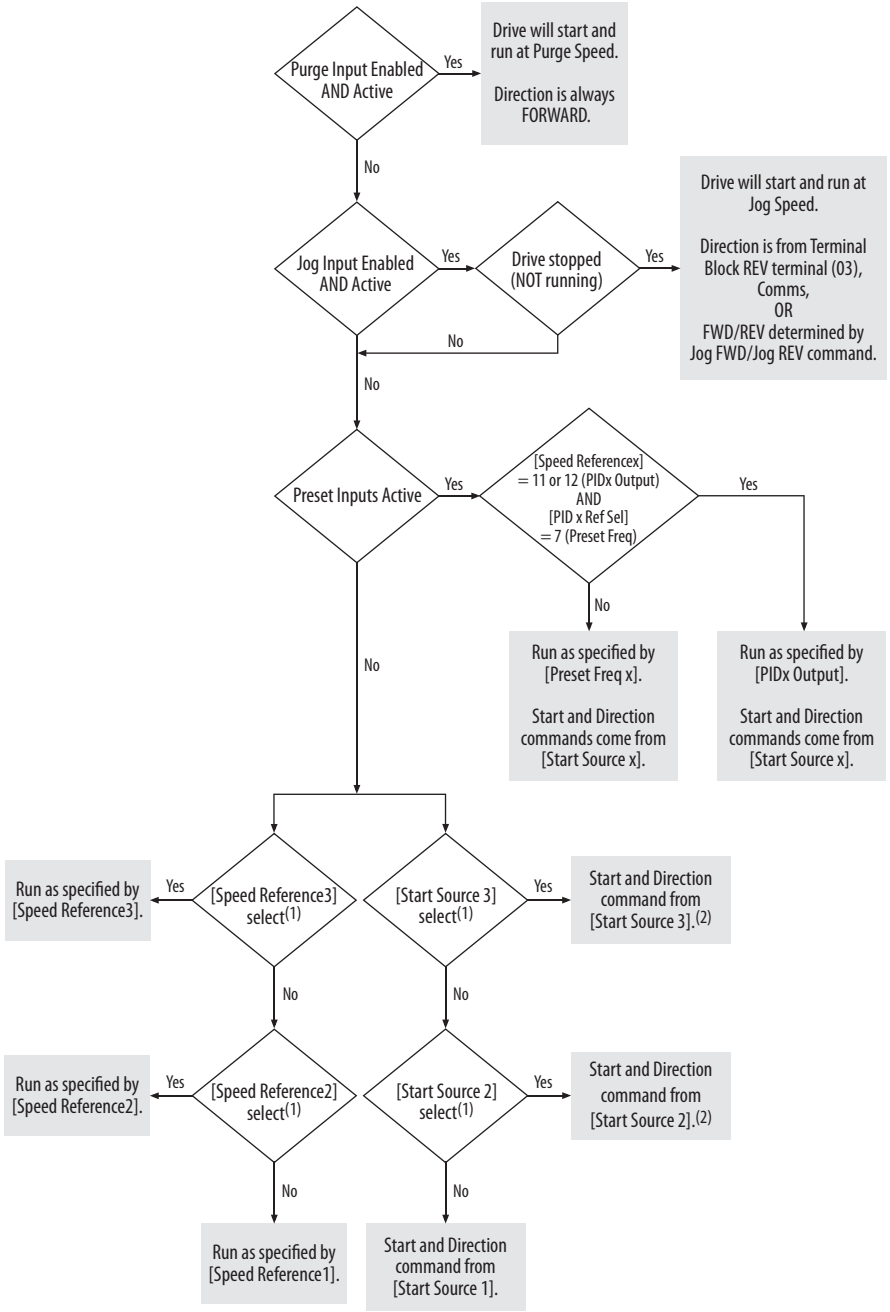

(1) [Start Source 2/3] and [Speed Reference2/3] can be selected by the control terminal block or communication commands.

(2) See Digital Input Selection for Start Source on page 47 for information on selecting the correct digital input.

Digital Input Selection for Start Source

If P046, P048 or P050 [Start Source x] has been set to 2, "DigIn TermBlk", then t062 and t063 [DigIn TermBlk xx] must be configured for 2-Wire or 3-Wire control for the drive to function properly.

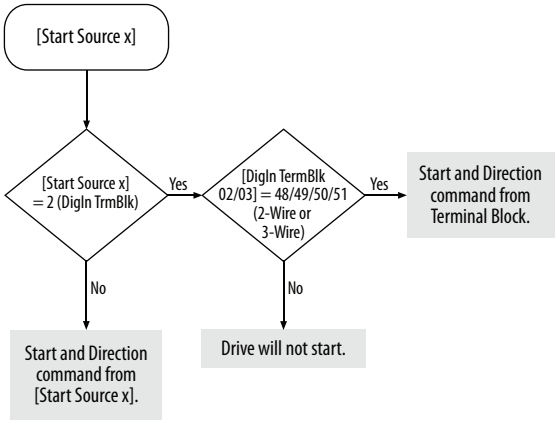

Accel/Decel Selection

The Accel/Decel rate can be obtained by a variety of methods. The default rate is determined by P041 [Accel Time 1] and P042 [Decel Time 1]. Alternative Accel/Decel rates can be made through digital inputs, communications and/or parameters. See below for the override priority.

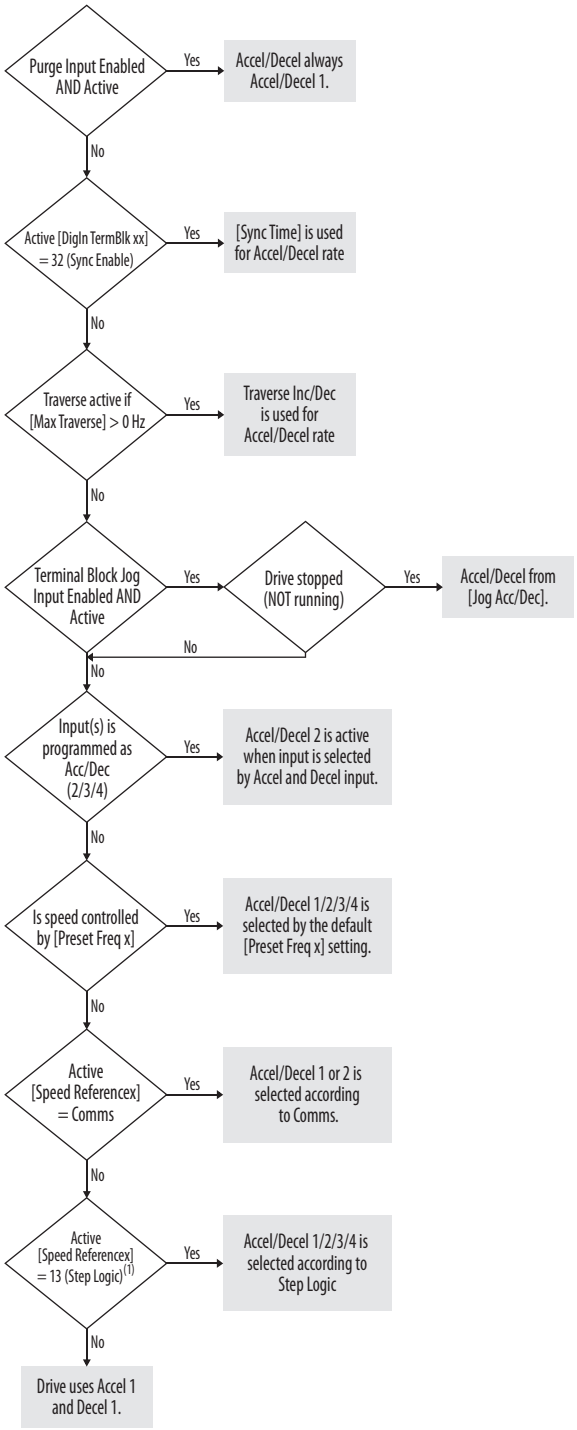

(1) Setting is specific to PowerFlex 525 drives only.

CE Conformity

Compliance with the Low Voltage Directive and Electromagnetic Compatibility Directive has been demonstrated using harmonized European Norm (EN) standards published in the Official Journal of the European Communities. PowerFlex 520-series drives comply with the EN standards listed below when installed according to the installation instructions in this manual.

CE Declarations of Conformity are available online at: http://www.rockwellautomation.com/products/certification/.

Low Voltage Directive (2006/95/EC)

- EN 61800-5-1 Adjustable speed electrical power drive systems – Part 5-1: Safety requirements – Electrical, thermal and energy.

Pollution Degree Ratings According to EN 61800-5-1

Pollution Degree	Description
1	No pollution or only dry, non-conductive pollution occurs. The pollution has no influence.
2	Normally, only non-conductive pollution occurs. Occasionally, however, a temporary conductivity caused by condensation is to be expected, when the drive is out of operation.

EMC Directive (2004/108/EC)

- EN 61800-3:2004 +A1:2012 – Adjustable speed electrical power drive systems - Part 3: EMC requirements and specific test methods

Machinery Directive (2006/42/EC)

- EN ISO 13849-1:2008 – Safety of machinery – Safety related parts of control systems -Part 1: General principles for design
- EN 62061:2005 – Safety of machinery – Functional safety of safety-related electrical, electronic and programmable electronic control systems
- EN 60204-1:2006 – Safety of machinery – Electrical equipment of machines - Part 1: General requirements
- EN 61800-5-2:2007 – Adjustable speed electrical power drive systems - Part 5-2: Safety requirement – Functional

Refer to Appendix G for installation consideration related to Machinery Directive.

General Considerations

- For CE compliance, drives must satisfy installation requirements related to both EN 61800-5-1 and EN 61800-3 provided in this document.
- PowerFlex 520-series drives must be installed in a pollution degree 1 or 2 environment to be compliant with the CE LV Directive. See Pollution Degree Ratings According to EN 61800-5-1 on page 49 for descriptions of each pollution degree rating.

- PowerFlex 520-series drives comply with the EMC requirements of EN 61800-3 when installed according to good EMC practices and the instructions provided in this document. However, many factors can influence the EMC compliance of an entire machine or installation, and compliance of the drive itself does not ensure compliance of all applications.
- PowerFlex 520-series drives are not intended to be used on public low-voltage networks which supply domestic premises. Without additional mitigation, radio frequency interference is expected if used on such a network. The installer is responsible for taking measures such as a supplementary line filter and enclosure (see Connections and Grounding on page 52) to prevent interference, in addition to the installation requirements of this document.



ATTENTION: NEMA/UL Open Type drives must either be installed in a supplementary enclosure or equipped with a "NEMA Type 1 Kit" to be CE compliant with respect to protection against electrical shock.

- PowerFlex 520-series drives generate harmonic current emissions on the AC supply system. When operated on a public low-voltage network it is the responsibility of the installer or user to ensure that applicable requirements of the distribution network operator have been met. Consultation with the network operator and Rockwell Automation may be necessary.
- If the optional NEMA 1 kit is not installed, the drive must be installed in an enclosure with side openings less than 12.5 mm (0.5 in.) and top openings less than 1.0 mm (0.04 in.) to maintain compliance with the LV Directive.
- The motor cable should be kept as short as possible in order to avoid electromagnetic emission as well as capacitive currents.
- Use of line filters in ungrounded systems is not recommended.
- In CE installations, input power must be a Balanced Wye with Center Ground configuration for EMC compliance.

Installation Requirements Related to EN 61800-5-1 and the Low Voltage Directive

- 600V PowerFlex 520-series drives can only be used on a "center grounded" supply system for altitudes up to and including 2000 m (6562 ft).
- When used at altitudes above 2000 m (6562 ft) up to a maximum of 4800 m (15,748 ft), PowerFlex 520-series drives of voltage classes up to 480V may not be powered from a "corner-earthed" supply system in order to maintain compliance with the CE LV Directive. See Derating Guidelines for High Altitude on page 18.

- PowerFlex 520-series drives produce leakage current in the protective earthing conductor which exceeds 3.5 mA AC and/or 10 mA DC. The minimum size of the protective earthing (grounding) conductor used in the application must comply with local safety regulations for high protective earthing conductor current equipment.



ATTENTION: PowerFlex 520-series drives produce DC current in the protective earthing conductor which may reduce the ability of RCD's (residual current-operated protective devices) or RCM's (residual current-operated monitoring devices) of type A or AC to provide protection for other equipment in the installation. Where an RCD or RCM is used for protection in case of direct or indirect contact, only an RCD or RCM of Type B is allowed on the supply side of this product.

Installation Requirements Related to EN 61800-3 and the EMC Directive

- The drive must be earthed (grounded) as described in Connections and Grounding on page 52. See General Grounding Requirements on page 20 for additional grounding recommendations.
- Output power wiring to the motor must employ cables with a braided shield providing 75% or greater coverage, or the cables must be housed in metal conduit, or equivalent shield must be provided. Continuous shielding must be provided from the drive enclosure to the motor enclosure. Both ends of the motor cable shield (or conduit) must terminate with a low-impedance connection to earth.
  Drive Frames A...E: At the drive end of the motor, either
  a. The cable shield must be clamped to a properly installed "EMC Plate" for the drive. Kit number 25-EMC1-Fx.
     or
  b. The cable shield or conduit must terminate in a shielded connector installed in an EMC plate, conduit box, or similar.
- At the motor end, the motor cable shield or conduit must terminate in a shielded connector which must be properly installed in an earthed motor wiring box attached to the motor. The motor wiring box cover must be installed and earthed.
- All control (I/O) and signal wiring to the drive must use cable with a braided shield providing 75% or greater coverage, or the cables must be housed in metal conduit, or equivalent shielding must be provided. When shielded cable is used, the cable shield should be terminated with a low impedance connection to earth at only one end of the cable, preferably the end where the receiver is located. When the cable shield is terminated at the drive end, it may be terminated either by using a shielded connector in conjunction with a conduit plate or conduit box, or the shield may be clamped to an "EMC plate."
- Motor cabling must be separated from control and signal wiring wherever possible.

- Maximum motor cable length must not exceed the maximum length indicated in PowerFlex 520-Series RF Emission Compliance and Installation Requirements on page 52 for compliance with radio frequency emission limits for the specific standard and installation environment.

Connections and Grounding

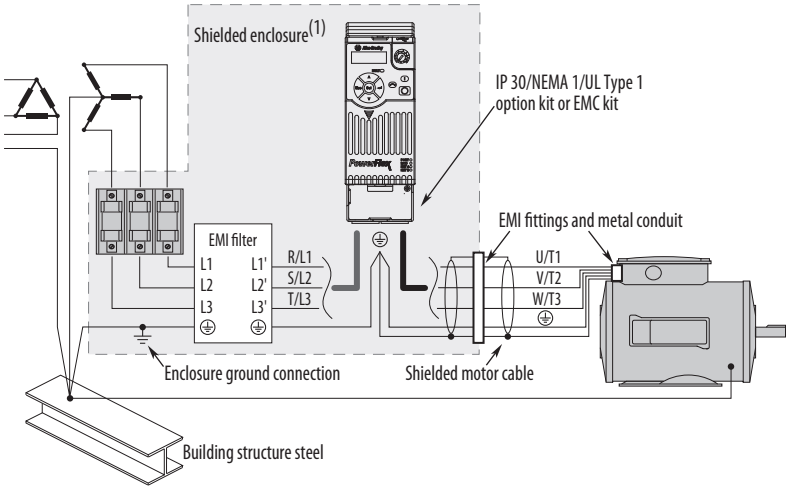

(1) Some installations require a shielded enclosure. Keep wire length as short as possible between the enclosure entry point and the EMI filter.

PowerFlex 520-Series RF Emission Compliance and Installation Requirements

Filter Type	Standard/Limits		
	EN61800-3 Category C1 EN61000-6-3 CISPR11 Group 1 Class B	**EN61800-3 Category C2 EN61000-6-4 CISPR11 Group 1 Class A (Input power ≤ 20 kVA)**	**EN61800-3 Category C3 (I ≤ 100 A) CISPR11 Group 1 Class A (Input power > 20 kVA)**
Internal	–	10 m (33 ft)	20 m (66 ft)
External(1)	30 m (16 ft)	100 m (328 ft)	100 m (328 ft)

(1) See Appendix B for more information on optional external filters.

Additional Installation Requirements

This section provides information on additional requirements for Class C1 and C2 installation, such as enclosures and EMC cores.

IMPORTANT EMC cores are included with:

- drives that have an internal EMC filter (25x-xxxxN114)
- external EMC filter accessory kit (25-RFxxx)

IMPORTANT An enclosure, shielded input cable, and EMC cores are not required to meet class C3 requirements.

Additional Installation Requirements

Frame Size	Class C1			Class C2		
	Enclosure	Conduit or Shielded Cable @ Input	EMC Cores Required (Included with product)	Enclosure	Conduit or Shielded Cable @ Input	EMC Cores Required (Included with product)
100...120V AC (-15%, +10%) – 1-Phase Input with External EMC Filter, 0...120V 1-Phase Output						
A	No	No	No	No	No	No
B	No	No	No	No	No	No
200...240V AC (-15%, +10%) – 1-Phase Input with External EMC Filter, 0...230V 3-Phase Output						
A	Yes	Yes	No	No	No	Input/Output
B	Yes	Yes	Output only	No	No	Input/Output
200...240V AC (-15%, +10%) – 1-Phase Input with Internal EMC Filter, 0...230V 3-Phase Output(1)						
A	*	*	*	Yes	No	No
B	*	*	*	Yes	No	No
200...240V AC (-15%, +10%) – 3-Phase Input with External EMC Filter, 0...230V 3-Phase Output						
A	Yes	Yes	Output only	No	No	Input/Output
B	Yes	Yes	Output only	No	No	Input/Output
C	Yes	Yes	Output only	No	No	Input/Output
D	Yes	Yes	No	No	No	Input only
E	Yes	Yes	Output only	No	No	Input only
380...480V AC (-15%, +10%) – 3-Phase Input with External EMC Filter, 0...460V 3-Phase Output						
A	Yes	Yes	No	No	No	Input/Output
B	Yes	Yes	No	No	No	Input/Output
C	Yes	Yes	No	No	No	Input only
D	Yes	Yes	Output only	No	No	Input/Output
E	Yes	Yes	No	Yes	No	Input/Output
380...480V AC (-15%, +10%) – 3-Phase Input with Internal EMC Filter, 0...460V 3-Phase Output(1)						
A	*	*	*	No	No	Input/Output
B	*	*	*	No	No	Input/Output
C	*	*	*	No	No	Input/Output
D	*	*	*	No	No	Input/Output
E	*	*	*	No	No	Input/Output
525...600V AC (-15%, +10%) – 3-Phase Input with External EMC Filter, 0...575V 3-Phase Output						
A	Yes	Yes	No	No	No	Input/Output
B	Yes	Yes	No	No	No	Input/Output
C	Yes	Yes	No	No	No	Input/Output
D	Yes	Yes	No	No	No	Input/Output
E	Yes	Yes	No	Yes	No	No

(1) An (*) indicates that EMC requirements are not met.

Recommended Placement of EMC Cores

Frame A	Frame B	Frame C	Frame D	Frame E
With optional EMC plate (25-EMC-Fx)				
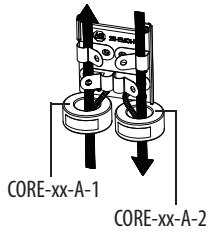	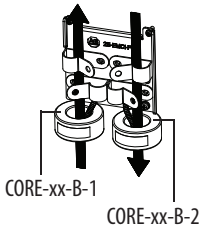	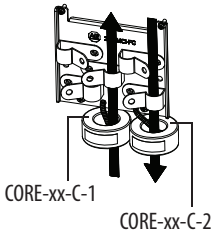	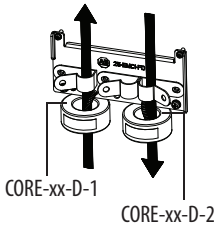	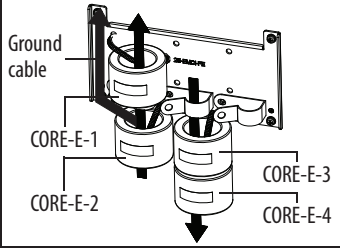
Without EMC plate				
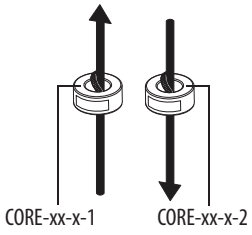				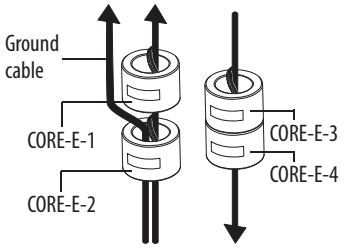

Input cable to drive (Shielded or Unshielded) Output cable from drive (Shielded)

 Shows contact to shielded layer

 Secure EMC core by using cable/zip ties

IMPORTANT The ground cable/shield for both input and output must pass through the EMC core(s), except for the following:

- Frame E drives with internal filters where the grounded input cable must not pass through EMC CORE-E-1.
- 600V drives with external filters where the grounded output cable must not pass through the EMC core(s).

Recommended Placement of EMC Cores Relative to External Filter

All Frame sizes

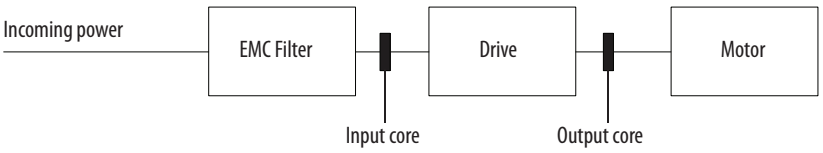

Start Up

This chapter describes how to start up the PowerFlex 520-series drive. To simplify drive setup, the most commonly programmed parameters are organized in a single Basic Program Group.

For information on...	See page...
Prepare for Drive Start-Up	55
Display and Control Keys	58
Viewing and Editing Parameters	59
Drive Programming Tools	60
Smart Start-Up with Basic Program Group Parameters	61
LCD Display with QuickView	63
Using the USB Port	63

IMPORTANT Read the *General Precautions* section before proceeding.



ATTENTION: Power must be applied to the drive to perform the following start-up procedures. Some of the voltages present are at incoming line potential. To avoid electric shock hazard or damage to equipment, only qualified service personnel should perform the following procedure. Thoroughly read and understand the procedure before beginning. If an event does not occur while performing this procedure, **Do Not Proceed. Remove All Power** including user supplied control voltages. User supplied voltages may exist even when main AC power is not applied to the drive. Correct the malfunction before continuing.

Prepare for Drive Start-Up

Drive Startup Task List

1. Disconnect and lock out power to the machine.
2. Verify that AC line power at the disconnect device is within the rated value of the drive.
3. If replacing a drive, verify the current drive's catalog number. Verify all options installed on the drive.
4. Verify that any digital control power is 24 volts.
5. Inspect grounding, wiring, connections, and environmental compatibility.

6. Verify that the Sink (SNK)/Source (SRC) jumper is set to match your control wiring scheme. See the PowerFlex 523 Control I/O Wiring Block Diagram on page 37 and PowerFlex 525 Control I/O Wiring Block Diagram on page 39 for location.

IMPORTANT The default control scheme is Source (SRC). The Stop terminal is jumpered to allow starting from the keypad or comms. If the control scheme is changed to Sink (SNK), the jumper must be removed from I/O Terminals 01 and 11 and installed between I/O Terminals 01 and 04.

7. Wire I/O as required for the application.
8. Wire the power input and output terminals.
9. Confirm that all inputs are connected to the correct terminals and are secure.
10. Collect and record motor nameplate and encoder or feedback device information. Verify motor connections.
    - Is the motor uncoupled?
    - What direction will the motor need to turn for the application?
11. Verify the input voltage to the drive. Verify if the drive is on a grounded system. Ensure the MOV jumpers are in the correct position. See AC Supply Source Considerations on page 19 for more information.
12. Apply power and reset the drive and communication adapters to factory default settings. To reset the drive, see parameter P053 [Reset to Defalts]. To reset the communication adapters, see the user manual of the adapter for more information.
13. Configure the basic program parameters related to the motor. See Smart Start-Up with Basic Program Group Parameters on page 61.
14. Complete the autotune procedure for the drive. See parameter P040 [Autotune] for more information.
15. If you are replacing a drive and have a backup of the parameter settings obtained using the USB utility application, use the USB utility application to apply the backup to the new drive. See Using the USB Port on page 63 for more information.

    Otherwise, set the necessary parameters for your application using the LCD keypad interface, Connected Components Workbench, or RSLogix or Logix Designer if using an Add-on Profile through EtherNet/IP.
    - Configure the communication parameters needed for the application (node number, IP address, Datalinks in and out, communication rate, speed reference, start source, and so on). Record these settings for your reference.
    - Configure the other drive parameters needed for the drive analog and digital I/O to work correctly. Verify the operation. Record these settings for your reference.

16. Verify the drive and motor perform as specified.
    - Verify that the Stop input is present or the drive will not start.

    IMPORTANT If I/O Terminal 01 is used as a stop input, the jumper between I/O Terminals 01 and 11 must be removed.

    - Verify the drive is receiving the speed reference from the correct place and that the reference is scaled correctly.
    - Verify the drive is receiving start and stop commands correctly.
    - Verify input currents are balanced.
    - Verify motor currents are balanced.
17. Save a backup of the drive settings using the USB utility application. See Using the USB Port on page 63 for more information.

Start, Stop, Direction and Speed Control

Factory default parameter values allow the drive to be controlled from the keypad. No programming is required to start, stop, change direction and control speed directly from the keypad.

IMPORTANT To disable reverse operation, see A544 [Reverse Disable].

If a fault appears on power up, see Fault Descriptions on page 147 for an explanation of the fault code.

Variable Torque Fan/Pump Applications

For improved motor tuning performance when using a premium efficient motor on a variable torque loading SVC mode, set A530 [Boost Select] to 2 “35.0, VT”.

Display and Control Keys

PowerFlex 523

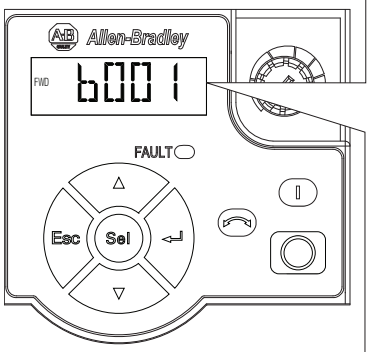

PowerFlex 525

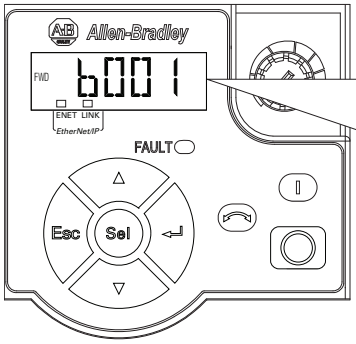

Menu	Parameter Group and Description
b	**Basic Display** Commonly viewed drive operating conditions.
P	**Basic Program** Commonly used programmable functions.
t	**Terminal Blocks** Programmable terminal functions.
C	**Communications** Programmable communication functions.
L	**Logic (PowerFlex 525 only)** Programmable logic functions.
d	**Advanced Display** Advanced drive operating conditions.
A	**Advanced Program** Remaining programmable functions.
N	**Network** Network functions that are shown only when a comm card is used.
M	**Modified** Functions from the other groups with values changed from default.
F	**Fault and Diagnostic** Consists of list of codes for specific fault conditions.
G	**AppView and CustomView** Functions from the other groups organized for specific applications.

Control and Navigation Keys

Display	Display State	Description
ENET (PowerFlex 525 only)	Off	Adapter is not connected to the network.
	Steady	Adapter is connected to the network and drive is controlled through Ethernet.
	Flashing	Adapter is connected to the network but drive is not controlled through Ethernet.
LINK (PowerFlex 525 only)	Off	Adapter is not connected to the network.
	Steady	Adapter is connected to the network but not transmitting data.
	Flashing	Adapter is connected to the network and transmitting data.

LED	LED State	Description
FAULT	Flashing Red	Indicates drive is faulted.

Key	Name	Description
	Up Arrow Down Arrow	Scroll through user-selectable display parameters or groups. Increment values.
	Escape	Back one step in programming menu. Cancel a change to a parameter value and exit Program Mode.
	Select	Advance one step in programming menu. Select a digit when viewing parameter value.
	Enter	Advance one step in programming menu. Save a change to a parameter value.

Key	Name	Description
	Reverse	Used to reverse direction of the drive. Default is active. Controlled by parameters P046, P048 and P050 [Start Source x] and A544 [Reverse Disable].
	Start	Used to start the drive. Default is active. Controlled by parameters P046, P048 and P050 [Start Source x].
	Stop	Used to stop the drive or clear a fault. This key is always active. Controlled by parameter P045 [Stop Mode].
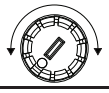	Potentiometer	Used to control speed of drive. Default is active. Controlled by parameters P047, P049 and P051 [Speed Referencex].

Viewing and Editing Parameters

The following is an example of basic integral keypad and display functions. This example provides basic navigation instructions and illustrates how to program a parameter.

Step	Key(s)	Example Display
1. When power is applied, the last user-selected Basic Display Group parameter number is briefly displayed with flashing characters. The display then defaults to that parameter's current value. (Example shows the value of b001 [Output Freq] with the drive stopped.)		
2. Press Esc to display the Basic Display Group parameter number shown on power-up. The parameter number will flash.		
3. Press Esc to enter the parameter group list. The parameter group letter will flash.		
4. Press the Up Arrow or Down Arrow to scroll through the group list (b, P, t, C, L, d, A, f and Gx).	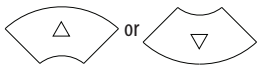	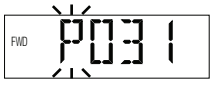
5. Press Enter or Sel to enter a group. The right digit of the last viewed parameter in that group will flash.	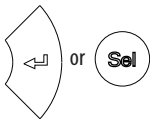	
6. Press the Up Arrow or Down Arrow to scroll through the parameter list.	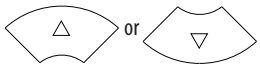	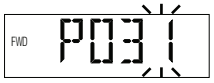
7. Press Enter to view the value of the parameter. Or Press Esc to return to the parameter list.	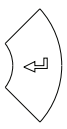	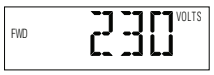
8. Press Enter or Sel to enter Program Mode and edit the value. The right digit will flash and the word Program on the LCD display will light up.	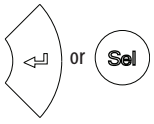	
9. Press the Up Arrow or Down Arrow to change the parameter value.	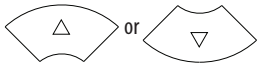	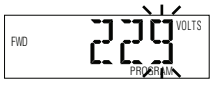

Step	Key(s)	Example Display
10. If desired, press Sel to move from digit to digit or bit to bit. The digit or bit that you can change will flash.	Sel	
11. Press Esc to cancel a change and exit Program Mode. Or Press Enter to save a change and exit Program Mode. The digit will stop flashing and the word Program on the LCD display will turn off.	Esc or ⏎	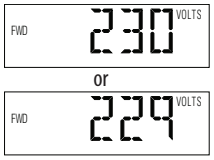
12. Press Esc to return to the parameter list. Continue to press Esc to back out of the programming menu. If pressing Esc does not change the display, then b001 [Output Freq] is displayed. Press Enter or Sel to enter the group list again.	Esc	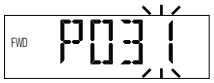

Drive Programming Tools

Some features in the PowerFlex 520-series drive are not supported by older configuration software tools. It is strongly recommended that customers using such tools migrate to RSLogix 5000 (version 17.0 or greater) or Logix Designer (version 21.0 or greater) with Add-On-Profile (AOP), or Connected Components Workbench (version 5.0 or greater) to enjoy a richer, full-featured configuration experience. For Automatic Device Configuration (ADC) support, RSLogix 5000 version 20.0 or greater is required.

Description	Catalog Number/Release Version
Connected Components Workbench(1)	Version 5.0 or greater
Logix Designer	Version 21.0 or greater
RSLogix 5000	Version 17.0 or greater
Built-in USB software tool	–
Serial Converter Module(2)	22-SCM-232
USB Converter Module(2)	1203-USB
Remote Panel Mount, LCD Display(2)	22-HIM-C2S
Remote Handheld, LCD Display(2)	22-HIM-A3

(1) Available as a free download at http://ab.rockwellautomation.com/programmable-controllers/connected-components-workbench-software.

(2) Does not support the new dynamic parameter groups (AppView, CustomView), and CopyCat functionality is limited to the linear parameter list.

Language Support

Language	Keypad/LCD Display	RSLogix 5000/ Logix Designer	Connected Components Workbench
English	Y	Y	Y
French	Y	Y	Y
Spanish	Y	Y	Y
Italian	Y	Y	Y
German	Y	Y	Y
Japanese	–	Y	–
Portuguese	Y	Y	–
Chinese Simplified	–	Y	Y
Korean	–	Y	–

Language	Keypad/LCD Display	RSLogix 5000/ Logix Designer	Connected Components Workbench
Polish(1)	Y	–	–
Turkish(1)	Y	–	–
Czech(1)	Y	–	–

(1) Due to a limitation of the LCD Display, some of the characters for Polish, Turkish, and Czech will be modified.

Smart Start-Up with Basic Program Group Parameters

The PowerFlex 520-series drive is designed so that start up is simple and efficient. The Basic Program Group contains the most commonly used parameters. See Programming and Parameters on page 65 for detailed descriptions of the parameters listed here, as well as the full list of available parameters.

= Stop drive before changing this parameter.
PF 525 = Parameter is specific to PowerFlex 525 drives only.

No.	Parameter	Min/Max	Display/Options	Default
P030	[Language]	1/15	1 = English 2 = Français 3 = Español 4 = Italiano 5 = Deutsch 6 = Reserved 7 = Português 8 = Reserved 9 = Reserved 10 = Reserved 11 = Reserved 12 = Polish 13 = Reserved 14 = Turkish 15 = Czech	1
	Selects the language displayed. **Important:** The setting takes effect after the drive is power cycled.			
P031	[Motor NP Volts]	10V (for 200V Drives), 20V (for 400V Drives), 25V (for 600V Drives)/Drive Rated Volts	1V	Based on Drive Rating
	Sets the motor nameplate rated volts.			
P032	[Motor NP Hertz]	15/500 Hz	1 Hz	60 Hz
	Sets the motor nameplate rated frequency.			
P033	[Motor OL Current]	0.0/(Drive Rated Amps x 2)	0.1 A	Based on Drive Rating
	Sets the motor nameplate overload current.			
P034	[Motor NP FLA]	0.0/(Drive Rated Amps x 2)	0.1 A	Drive Rated Amps
	Sets the motor nameplate FLA.			
P035	[Motor NP Poles]	2/40	1	4
	Sets the number of poles in the motor.			
P036	[Motor NP RPM]	0/24000 rpm	1 rpm	1750 rpm
	Sets the rated nameplate rpm of motor.			
P037	[Motor NP Power]	0.00/Drive Rated Power	0.01 kW	Drive Rated Power
PF 525	Sets the motor nameplate power. Used in PM regulator.			
P038	[Voltage Class]	2/3	2 = “480V” 3 = “600V”	3
	Sets the voltage class of 600V drives. Only applicable to 600V drives.			
P039	[Torque Perf Mode]	0/3	0 = “V/Hz” 1 = “SVC” 2 = “Economize” 3 = “Vector”(1)	1
	Selects the motor control mode. (1) Setting is specific to PowerFlex 525 drives only.			

= Stop drive before changing this parameter.
PF 525 = Parameter is specific to PowerFlex 525 drives only.

No.	Parameter	Min/Max	Display/Options	Default
P040	[Autotune]	0/2	0 = "Ready/Idle" 1 = "Static Tune" 2 = "Rotate Tune"	0
	Enables a static (not spinning) or dynamic (motor spinning) autotune.			
P041	[Accel Time 1]	0.00/600.00 s	0.01 s	10.00 s
	Sets the time for the drive to accel from 0 Hz to [Maximum Freq].			
P042	[Decel Time 1]	0.00/600.00 s	0.01 s	10.00 s
	Sets the time for the drive to decel from [Maximum Freq] to 0 Hz.			
P043	[Minimum Freq]	0.00/500.00 Hz	0.01 Hz	0.00 Hz
	Sets the lowest frequency the drive outputs.			
P044	[Maximum Freq]	0.00/500.00 Hz	0.01 Hz	60.00 Hz
	Sets the highest frequency the drive outputs.			
P045	[Stop Mode]	0/11	0 = "Ramp, CF"(1) 1 = "Coast, CF"(1) 2 = "DC Brake, CF"(1) 3 = "DCBrkAuto,CF"(1) 4 = "Ramp" 5 = "Coast" 6 = "DC Brake" 7 = "DC BrakeAuto" 8 = "Ramp+EM B,CF"(1) 9 = "Ramp+EM Brk" 10 = "PointStp,CF"(1) 11 = "PointStop"	0
	Stop command for normal stop. **Important:** I/O Terminal 01 is always a stop input. The stopping mode is determined by the drive setting. **Important:** The drive is shipped with a jumper installed between I/O Terminals 01 and 11. Remove this jumper when using I/O Terminal 01 as a stop or enable input. (1) Stop input also clears active fault.			
P046, P048, P050	[Start Source 1]	1/5	1 = "Keypad"(1) 2 = "DigIn TrmBlk"(2) 3 = "Serial/DSI" 4 = "Network Opt" 5 = "Ethernet/IP"(3)	P046 = 1 P048 = 2 P050 = 3 (PowerFlex 523) 5 (PowerFlex 525)
	Sets the default control scheme used to start the drive unless overriden by P048 [Start Source 2] or P050 [Start Source 3]. (1) When active, the Reverse key is also active unless disabled by A544 [Reverse Disable]. (2) If "DigIn TrmBlk" is selected, ensure that the digital inputs are properly configured. (3) Setting is specific to PowerFlex 525 drives only.			
P047, P049, P051	[Speed Reference1]	1/16	1 = "Drive Pot" 2 = "Keypad Freq" 3 = "Serial/DSI" 4 = "Network Opt" 5 = "0-10V Input" 6 = "4-20mA Input" 7 = "Preset Freq" 8 = "Anlg In Mult"(1) 9 = "MOP" 10 = "Pulse Input" 11 = "PID1 Output" 12 = "PID2 Output"(1) 13 = "Step Logic"(1) 14 = "Encoder"(1) 15 = "Ethernet/IP"(1) 16 = "Positioning"(1)	P047 = 1 P049 = 5 P051 = 3 (PowerFlex 523) 15 (PowerFlex 525)
	Sets the default speed command of the drive unless overridden by P049 [Speed Reference2] or P051 [Speed Reference3]. (1) Setting is specific to PowerFlex 525 drives only.			
P052	[Average kWh Cost]	0.00/655.35	0.01	0.00
	Sets the average cost per kWh.			
P053	[Reset To Defalts]	0/3	0 = "Ready/Idle" 1 = "Param Reset" 2 = "Factory Rset" 3 = "Power Reset"	0
	Resets parameters to their factory defaults values. After a Reset command, the value of this parameter returns to zero.			

LCD Display with QuickView

QuickView™ enables text to scroll across the LCD display of the PowerFlex 520-series drive. This allows you to easily configure parameters, troubleshoot faults and view diagnostic items without using a separate device.

Use parameter A556 [Text Scroll] to set the speed at which the text scrolls across the display. Select 0 "Off" to turn off text scrolling. See Language Support on page 60 for the languages supported by the PowerFlex 520-series drive.

Using the USB Port

The PowerFlex 520-series drive has a USB port that connects to a PC for the purpose of upgrading drive firmware or uploading/downloading a parameter configuration.

IMPORTANT To use the USB feature of the PowerFlex 520-series drive, Microsoft .Net Framework 2.0 and Windows XP or later is required.

MainsFree Programming

The MainsFree™ programming feature allows you to quickly configure your PowerFlex 520-series drive without having to power up the control module or install additional software. Simply connect the control module to your PC with a USB Type B cable and you can download a parameter configuration to your drive. You can also easily upgrade your drive with the latest firmware.

Connecting a PowerFlex 520-series drive to a PC

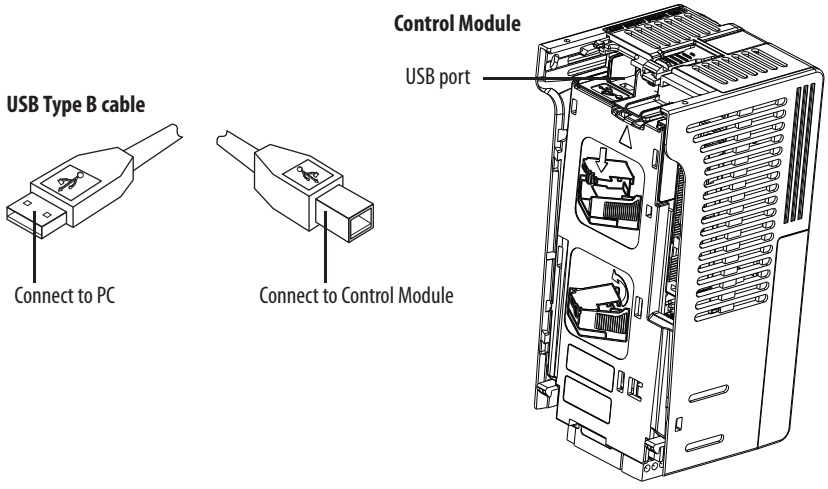

When connected, the drive appears on the PC and contains two files:

- GUIDE.PDF
  This file contains links to relevant product documentation and software downloads.
- PF52XUSB.EXE
  This file is an application to flash upgrade firmware or upload/download a parameter configuration.

  It is not possible to delete these files or add more to the drive.

Double-click on the PF52XUSB.EXE file to launch the USB utility application. The main menu is displayed. Follow the program instructions to upgrade the firmware or upload/download configuration data.

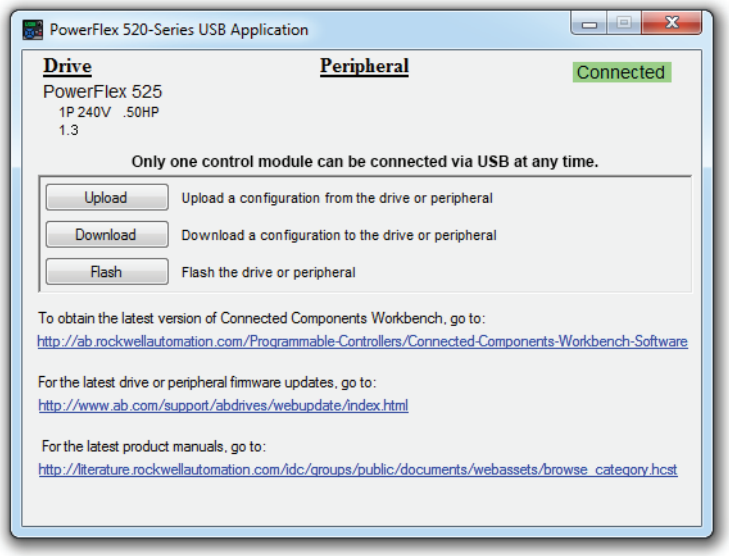

IMPORTANT Make sure your PC is powered by an AC power outlet or has a fully charged battery before starting any operation. This prevents the operation from terminating before completion due to insufficient power.

Limitation in Downloading .pf5 Configuration Files with the USB Utility Application

Before downloading a .pf5 configuration file using the USB utility application, parameter C169 [MultiDrv Sel] in the destination drive must match the incoming configuration file. If it does not, set the parameter manually to match and then cycle drive power.

This means you cannot apply a multi-drive configuration using the USB utility application to a drive in single mode (parameter C169 [MultiDrv Sel] set to 0 “Disabled”), or apply a single mode configuration to a drive in multi-drive mode.

Programming and Parameters

This chapter provides a complete listing and description of the PowerFlex 520-series drive parameters. Parameters are programmed (viewed/edited) using either the drive's built-in keypad, RSLogix 5000 version 17.0 or greater, Logix Designer version 21.0 or greater, or Connected Components Workbench version 5.0 or greater software. The Connected Components Workbench software can be used offline (through USB) to upload parameter configurations to the drive or online (through Ethernet connection).

Limited functionality is also available when using the Connected Components Workbench software online (through DSI and serial converter module), a legacy external HIM, or legacy software online (DriveTools SP™). When using these methods, the parameter list can only be displayed linearly, and there is no access to communications option card programming.

For information on...	See page...
About Parameters	65
Parameter Groups	66
Basic Display Group	71
Basic Program Group	76
Terminal Block Group	82
Communications Group	94
Logic Group	100
Advanced Display Group	103
Advanced Program Group	107
Network Parameter Group	130
Modified Parameter Group	130
Fault and Diagnostic Group	130
AppView Parameter Groups	138
CustomView Parameter Group	139
Parameter Cross Reference by Name	140

About Parameters

To configure a drive to operate in a specific way, drive parameters may have to be set. Three types of parameters exist:

- **ENUM**
  ENUM parameters allow a selection from 2 or more items. Each item is represented by a number.
- **Numeric Parameters**
  These parameters have a single numerical value (0.1V).

- **Bit Parameters**
  Bit parameters have five individual digits associated with features or conditions. If the digit is 0, the feature is off or the condition is false. If the digit is 1, the feature is on or the condition is true.

Some parameters are marked as follows.

= Stop drive before changing this parameter.

32 = 32 bit parameter. Parameters marked 32 bit will have two parameter numbers ([Step Units x] and [Step Units F x]) when using RS485 communications and programming software. The second parameter number is shown only in the Parameter Groups and Parameter Cross Reference by Name tables for reference.

PF 525 = Parameter is specific to PowerFlex 525 drives only.

Parameter Groups

For an alphabetical listing of parameters, see Parameter Cross Reference by Name on page 140.

Basic Display		Output Voltage	b004	Control Source	b012	Elapsed Run Time	b019	Accum CO2 Sav	b026
		DC Bus Voltage	b005	Contrl In Status	b013	Average Power	b020	Drive Temp	b027
		Drive Status	b006	Dig In Status	b014	Elapsed kWh	b021	Control Temp	b028
		Fault 1 Code	b007	Output RPM	b015	Elapsed MWh	b022	Control SW Ver	b029
Output Freq	b001	Fault 2 Code	b008	Output Speed	b016	Energy Saved	b023		
Commanded Freq	b002	Fault 3 Code	b009	Output Power	b017	Accum kWh Sav	b024		
Output Current	b003	Process Display	b010	Power Saved	b018	Accum Cost Sav	b025		
Basic Program		Motor NP Hertz	P032	Voltage Class	P038	Maximum Freq	P044	Start Source 3	P050
		Motor OL Current	P033	Torque Perf Mode	P039	Stop Mode	P045	Speed Reference3	P051
		Motor NP FLA	P034	Autotune	P040	Start Source 1	P046	Average kWh Cost	P052
		Motor NP Poles	P035	Accel Time 1	P041	Speed Reference1	P047	Reset To Defalts	P053
Language	P030	Motor NP RPM	P036	Decel Time 1	P042	Start Source 2	P048		
Motor NP Volts	P031	Motor NP Power	P037	Minimum Freq	P043	Speed Reference2	P049		
Terminal Blocks		DigIn TermBlk 07(1)	t067	Relay 1 On Time	t079	Analog Out High(1)	t089	Anlg Loss Delay	t098
		DigIn TermBlk 08(1)	t068	Relay 1 Off Time	t080	Anlg Out Setpt(1)	t090	Analog In Filter	t099
		Opto Out1 Sel(1)	t069	Relay Out2 Sel(1)	t081	Anlg In 0-10V Lo	t091	Sleep-Wake Sel	t100
		Opto Out1 Level(1)	t070	Relay Out2 Level(1)	t082	Anlg In 0-10V Hi	t092	Sleep Level	t101
DigIn TermBlk 02	t062	Opto Out2 Sel(1)	t072	Relay 2 On Time(1)	t084	10V Bipolar Enbl(1)	t093	Sleep Time	t102
DigIn TermBlk 03	t063	Opto Out2 Level(1)	t073	Relay 2 Off Time(1)	t085	Anlg In V Loss	t094	Wake Level	t103
2-Wire Mode	t064	Opto Out Logic(1)	t075	EM Brk Off Delay	t086	Anlg In4-20mA Lo	t095	Wake Time	t104
DigIn TermBlk 05	t065	Relay Out1 Sel	t076	EM Brk On Delay	t087	Anlg In4-20mA Hi	t096	Safety Open En(1)	t105
DigIn TermBlk 06	t066	Relay Out1 Level	t077	Analog Out Sel(1)	t088	Anlg In mA Loss	t097		
Communications		EN Addr Sel(1)	C128	EN Gateway Cfg 3(1)	C139	EN Data In 1(1)	C153	Opt Data In 4	C164
		EN IP Addr Cfg 1(1)	C129	EN Gateway Cfg 4(1)	C140	EN Data In 2(1)	C154	Opt Data Out 1	C165
		EN IP Addr Cfg 2(1)	C130	EN Rate Cfg(1)	C141	EN Data In 3(1)	C155	Opt Data Out 2	C166
		EN IP Addr Cfg 3(1)	C131	EN Comm Flt Actn(1)	C143	EN Data In 4(1)	C156	Opt Data Out 3	C167
Comm Write Mode	C121	EN IP Addr Cfg 4(1)	C132	EN Idle Flt Actn(1)	C144	EN Data Out 1(1)	C157	Opt Data Out 4	C168
Cmd Stat Select(1)	C122	EN Subnet Cfg 1(1)	C133	EN Flt Cfg Logic(1)	C145	EN Data Out 2(1)	C158	MultiDrv Sel	C169
RS485 Data Rate	C123	EN Subnet Cfg 2(1)	C134	EN Flt Cfg Ref(1)	C146	EN Data Out 3(1)	C159	Drv 1 Addr	C171
RS485 Node Addr	C124	EN Subnet Cfg 3(1)	C135	EN Flt Cfg DL 1(1)	C147	EN Data Out 4(1)	C160	Drv 2 Addr	C172
Comm Loss Action	C125	EN Subnet Cfg 4(1)	C136	EN Flt Cfg DL 2(1)	C148	Opt Data In 1	C161	Drv 3 Addr	C173
Comm Loss Time	C126	EN Gateway Cfg 1(1)	C137	EN Flt Cfg DL 3(1)	C149	Opt Data In 2	C162	Drv 4 Addr	C174
RS485 Format	C127	EN Gateway Cfg 2(1)	C138	EN Flt Cfg DL 4(1)	C150	Opt Data In 3	C163	DSI I/O Cfg	C175

(1) Parameter is specific to PowerFlex 525 drives only.

Logic[1]		Stp Logic 2	L182	Stp Logic Time 0	L190	Stp Logic Time 6	L196	Step Units 4	L208
		Stp Logic 3	L183	Stp Logic Time 1	L191	Stp Logic Time 7	L197	Step Units 5	L210
		Stp Logic 4	L184	Stp Logic Time 2	L192	Step Units 0	L200	Step Units 6	L212
		Stp Logic 5	L185	Stp Logic Time 3	L193	Step Units 1	L202	Step Units 7	L214
Stp Logic 0	L180	Stp Logic 6	L186	Stp Logic Time 4	L194	Step Units 2	L204		
Stp Logic 1	L181	Stp Logic 7	L187	Stp Logic Time 5	L195	Step Units 3	L206		
Advanced Display		Elapsed Time-hr	d362	Motor OL Level	d369	Torque Current	d382	Units Traveled H[1]	d388
		Elapsed Time-min	d363	Slip Hz Meter	d375	PID1 Fdbk Displ	d383	Units Traveled L[1]	d389
		Counter Status	d364	Speed Feedback	d376	PID1 Setpnt Disp	d384	Fiber Status	d390
		Timer Status	d365	Encoder Speed[1]	d378	PID2 Fdbk Displ	d385	Stp Logic Status[1]	d391
Analog In 0-10V	d360	Drive Type	d367	DC Bus Ripple	d380	PID2 Setpnt Disp	d386	RdyBit Mode Act[1]	d392
Analog In 4-20mA	d361	Testpoint Data	d368	Output Powr Fctr	d381	Position Status	d387		
Advanced Program		DB Resistor Sel	A437	PID 2 Trim Hi[1]	A468	Motor Lx[1]	A500	Compensation	A547
		DB Threshold	A438	PID 2 Trim Lo[1]	A469	Speed Reg Sel	A509	Power Loss Mode	A548
		S Curve %	A439	PID 2 Trim Sel[1]	A470	Freq 1	A510	Half Bus Enable	A549
		PWM Frequency	A440	PID 2 Ref Sel[1]	A471	Freq 1 BW	A511	Bus Reg Enable	A550
Preset Freq 0	A410	Droop Hertz@ FLA[1]	A441	PID 2 Fdback Sel[1]	A472	Freq 2	A512	Fault Clear	A551
Preset Freq 1	A411	Accel Time 2	A442	PID 2 Prop Gain[1]	A473	Freq 2 BW	A513	Program Lock	A552
Preset Freq 2	A412	Decel Time 2	A443	PID 2 Integ Time[1]	A474	Freq 3	A514	Program Lock Mod	A553
Preset Freq 3	A413	Accel Time 3	A444	PID 2 Diff Rate[1]	A475	Freq 3 BW	A515	Drv Ambient Sel	A554
Preset Freq 4	A414	Decel Time 3	A445	PID 2 Setpoint[1]	A476	Freq 1 Kp	A521	Reset Meters	A555
Preset Freq 5	A415	Accel Time 4	A446	PID 2 Deadband[1]	A477	Freq 1 Ki	A522	Text Scroll	A556
Preset Freq 6	A416	Decel Time 4	A447	PID 2 Preload[1]	A478	Freq 2 Kp	A523	Out Phas Loss En	A557
Preset Freq 7	A417	Skip Frequency 1	A448	PID 2 Invert Err[1]	A479	Freq 2 Ki	A524	Positioning Mode[1]	A558
Preset Freq 8[1]	A418	Skip Freq Band 1	A449	Process Disp Lo	A481	Freq 3 Kp	A525	Counts Per Unit[1]	A559
Preset Freq 9[1]	A419	Skip Frequency 2	A450	Process Disp Hi	A482	Freq 3 Ki	A526	Enh Control Word[1]	A560
Preset Freq 10[1]	A420	Skip Freq Band 2	A451	Testpoint Sel	A483	Boost Select	A530	Home Save[1]	A561
Preset Freq 11[1]	A421	Skip Frequency 3[1]	A452	Current Limit 1	A484	Start Boost	A531	Find Home Freq[1]	A562
Preset Freq 12[1]	A422	Skip Freq Band 3[1]	A453	Current Limit 2[1]	A485	Break Voltage	A532	Find Home Dir[1]	A563
Preset Freq 13[1]	A423	Skip Frequency 4[1]	A454	Shear Pin1 Level	A486	Break Frequency	A533	Encoder Pos Tol[1]	A564
Preset Freq 14[1]	A424	Skip Freq Band 4[1]	A455	Shear Pin 1 Time	A487	Maximum Voltage	A534	Pos Reg Filter[1]	A565
Preset Freq 15[1]	A425	PID 1 Trim Hi	A456	Shear Pin2 Level[1]	A488	Motor Fdbk Type[1]	A535	Pos Reg Gain[1]	A566
Keypad Freq	A426	PID 1 Trim Lo	A457	Shear Pin 2 Time[1]	A489	Encoder PPR[1]	A536	Max Traverse	A567
MOP Freq	A427	PID 1 Trim Sel	A458	Load Loss Level[1]	A490	Pulse In Scale	A537	Traverse Inc	A568
MOP Reset Sel	A428	PID 1 Ref Sel	A459	Load Loss Time[1]	A491	Ki Speed Loop[1]	A538	Traverse Dec	A569
MOP Preload	A429	PID 1 Fdback Sel	A460	Stall Fault Time	A492	Kp Speed Loop[1]	A539	P Jump	A570
MOP Time	A430	PID 1 Prop Gain	A461	Motor OL Select	A493	Var PWM Disable	A540	Sync Time	A571
Jog Frequency	A431	PID 1 Integ Time	A462	Motor OL Ret	A494	Auto Rstrt Tries	A541	Speed Ratio	A572
Jog Accel/Decel	A432	PID 1 Diff Rate	A463	Drive OL Mode	A495	Auto Rstrt Delay	A542	Mtr Options Cfg	A573
Purge Frequency	A433	PID 1 Setpoint	A464	IR Voltage Drop	A496	Start At PowerUp	A543	RdyBit Mode Cfg[1]	A574
DC Brake Time	A434	PID 1 Deadband	A465	Flux Current Ref	A497	Reverse Disable	A544		
DC Brake Level	A435	PID 1 Preload	A466	Motor Rr[1]	A498	Flying Start En	A545		
DC Brk Time@Strt	A436	PID 1 Invert Err	A467	Motor Lm[1]	A499	FlyStrt CurLimit	A546		

Network



This group contains parameters for the network option card that is installed.
See the network option card's user manual for more information on the available parameters.

Modified



This group contains parameters that have their values changed from the factory default.
When a parameter has its default value changed, it is automatically added to this group. When a parameter has its value changed back to the factory default, it is automatically removed from this group.

(1) Parameter is specific to PowerFlex 525 drives only.

Fault and Diagnostic		Fault 5 Time-min	F625	Fault10 Current[1]	F650	EN Rate Act[1]	F685	Drv 1 Reference	F710
		Fault 6 Time-min[1]	F626	Fault 1 BusVolts	F651	DSI I/O Act	F686	Drv 1 Logic Sts	F711
		Fault 7 Time-min[1]	F627	Fault 2 BusVolts	F652	HW Addr 1[1]	F687	Drv 1 Feedback	F712
		Fault 8 Time-min[1]	F628	Fault 3 BusVolts	F653	HW Addr 2[1]	F688	Drv 2 Logic Cmd	F713
Fault 4 Code	F604	Fault 9 Time-min[1]	F629	Fault 4 BusVolts	F654	HW Addr 3[1]	F689	Drv 2 Reference	F714
Fault 5 Code	F605	Fault10 Time-min[1]	F630	Fault 5 BusVolts	F655	HW Addr 4[1]	F690	Drv 2 Logic Sts	F715
Fault 6 Code	F606	Fault 1 Freq	F631	Fault 6 BusVolts[1]	F656	HW Addr 5[1]	F691	Drv 2 Feedback	F716
Fault 7 Code	F607	Fault 2 Freq	F632	Fault 7 BusVolts[1]	F657	HW Addr 6[1]	F692	Drv 3 Logic Cmd	F717
Fault 8 Code	F608	Fault 3 Freq	F633	Fault 8 BusVolts[1]	F658	EN IP Addr Act 1[1]	F693	Drv 3 Reference	F718
Fault 9 Code	F609	Fault 4 Freq	F634	Fault 9 BusVolts[1]	F659	EN IP Addr Act 2[1]	F694	Drv 3 Logic Sts	F719
Fault10 Code	F610	Fault 5 Freq	F635	Fault10 BusVolts[1]	F660	EN IP Addr Act 3[1]	F695	Drv 3 Feedback	F720
Fault 1 Time-hr	F611	Fault 6 Freq[1]	F636	Status @ Fault 1	F661	EN IP Addr Act 4[1]	F696	Drv 4 Logic Cmd	F721
Fault 2 Time-hr	F612	Fault 7 Freq[1]	F637	Status @ Fault 2	F662	EN Subnet Act 1[1]	F697	Drv 4 Reference	F722
Fault 3 Time-hr	F613	Fault 8 Freq[1]	F638	Status @ Fault 3	F663	EN Subnet Act 2[1]	F698	Drv 4 Logic Sts	F723
Fault 4 Time-hr	F614	Fault 9 Freq[1]	F639	Status @ Fault 4	F664	EN Subnet Act 3[1]	F699	Drv 4 Feedback	F724
Fault 5 Time-hr	F615	Fault10 Freq[1]	F640	Status @ Fault 5	F665	EN Subnet Act 4[1]	F700	EN Rx Overruns[1]	F725
Fault 6 Time-hr[1]	F616	Fault 1 Current	F641	Status @ Fault 6[1]	F666	EN Gateway Act 1[1]	F701	EN Rx Packets[1]	F726
Fault 7 Time-hr[1]	F617	Fault 2 Current	F642	Status @ Fault 7[1]	F667	EN Gateway Act 2[1]	F702	EN Rx Errors[1]	F727
Fault 8 Time-hr[1]	F618	Fault 3 Current	F643	Status @ Fault 8[1]	F668	EN Gateway Act 3[1]	F703	EN Tx Packets[1]	F728
Fault 9 Time-hr[1]	F619	Fault 4 Current	F644	Status @ Fault 9[1]	F669	EN Gateway Act 4[1]	F704	EN Tx Errors[1]	F729
Fault10 Time-hr[1]	F620	Fault 5 Current	F645	Status @ Fault10[1]	F670	Drv 0 Logic Cmd	F705	EN Missed IO Pkt[1]	F730
Fault 1 Time-min	F621	Fault 6 Current[1]	F646	Comm Sts - DSI	F681	Drv 0 Reference	F706	DSI Errors	F731
Fault 2 Time-min	F622	Fault 7 Current[1]	F647	Comm Sts - Opt	F682	Drv 0 Logic Sts	F707		
Fault 3 Time-min	F623	Fault 8 Current[1]	F648	Com Sts-Emb Enet[1]	F683	Drv 0 Feedback	F708		
Fault 4 Time-min	F624	Fault 9 Current[1]	F649	EN Addr Src[1]	F684	Drv 1 Logic Cmd	F709		

(1) Parameter is specific to PowerFlex 525 drives only.

AppView Parameter Groups

PowerFlex 520-series drives include various AppView™ parameter groups that groups certain parameters together for quick and easy access based on different types of applications. See AppView Parameter Groups on page 138 for more information.

Conveyor		Motor NP Volts	P031	Decel Time 1	P042	DigIn TermBlk 03	t063	Anlg In mA Loss	t097
		Motor NP Hertz	P032	Minimum Freq	P043	Opto Out1 Sel	t069	Slip Hz Meter	d375
		Motor OL Current	P033	Maximum Freq	P044	Relay Out1 Sel	t076	Preset Freq 0	A410
		Motor NP FLA	P034	Stop Mode	P045	Anlg In 0-10V Lo	t091	Jog Frequency	A431
Language	P030	Motor NP Poles	P035	Start Source 1	P046	Anlg In 0-10V Hi	t092	Jog Accel/Decel	A432
Output Freq	b001	Autotune	P040	Speed Reference1	P047	Anlg In4-20mA Lo	t095	S Curve %	A439
Commanded Freq	b002	Accel Time 1	P041	DigIn TermBlk 02	t062	Anlg In4-20mA Hi	t096	Reverse Disable	A544
Mixer		Commanded Freq	b002	Motor NP Poles	P035	Stop Mode	P045	Anlg In4-20mA Lo	t095
		Output Current	b003	Autotune	P040	Start Source 1	P046	Anlg In4-20mA Hi	t096
		Motor NP Volts	P031	Accel Time 1	P041	Speed Reference1	P047	Anlg In mA Loss	t097
		Motor NP Hertz	P032	Decel Time 1	P042	Relay Out1 Sel	t076	Preset Freq 0	A410
Language	P030	Motor OL Current	P033	Minimum Freq	P043	Anlg In 0-10V Lo	t091	Stall Fault Time	A492
Output Freq	b001	Motor NP FLA	P034	Maximum Freq	P044	Anlg In 0-10V Hi	t092		
Compressor		Motor NP Hertz	P032	Maximum Freq	P044	Anlg In 0-10V Lo	t091	Start At PowerUp	A543
		Motor OL Current	P033	Stop Mode	P045	Anlg In 0-10V Hi	t092	Reverse Disable	A544
		Motor NP FLA	P034	Start Source 1	P046	Anlg In4-20mA Lo	t095	Power Loss Mode	A548
		Motor NP Poles	P035	Speed Reference1	P047	Anlg In4-20mA Hi	t096	Half Bus Enable	A549
Language	P030	Autotune	P040	Relay Out1 Sel	t076	Anlg In mA Loss	t097		
Output Freq	b001	Accel Time 1	P041	Analog Out Sel	t088	Preset Freq 0	A410		
Commanded Freq	b002	Decel Time 1	P042	Analog Out High	t089	Auto Rstrt Tries	A541		
Motor NP Volts	P031	Minimum Freq	P043	Anlg Out Setpt	t090	Auto Rstrt Delay	A542		

Centrifugal Pump		Motor OL Current	P033	Start Source 1	P046	Anlg In4-20mA Hi	t096	PID 1 Diff Rate	A463
		Motor NP FLA	P034	Speed Reference1	P047	Anlg In mA Loss	t097	PID 1 Setpoint	A464
		Motor NP Poles	P035	Relay Out1 Sel	t076	Preset Freq 0	A410	PID 1 Deadband	A465
		Autotune	P040	Analog Out Sel	t088	PID 1 Trim Hi	A456	PID 1 Preload	A466
Language	P030	Accel Time 1	P041	Analog Out High	t089	PID 1 Trim Lo	A457	Auto Rstrt Tries	A541
Output Freq	b001	Decel Time 1	P042	Anlg Out Setpt	t090	PID 1 Ref Sel	A459	Auto Rstrt Delay	A542
Commanded Freq	b002	Minimum Freq	P043	Anlg In 0-10V Lo	t091	PID 1 Fdback Sel	A460	Start At PowerUp	A543
Motor NP Volts	P031	Maximum Freq	P044	Anlg In 0-10V Hi	t092	PID 1 Prop Gain	A461	Reverse Disable	A544
Motor NP Hertz	P032	Stop Mode	P045	Anlg In4-20mA Lo	t095	PID 1 Integ Time	A462		
Blower/Fan		Motor OL Current	P033	Start Source 1	P046	Anlg In4-20mA Hi	t096	PID 1 Diff Rate	A463
		Motor NP FLA	P034	Speed Reference1	P047	Anlg In mA Loss	t097	PID 1 Setpoint	A464
		Motor NP Poles	P035	Relay Out1 Sel	t076	Preset Freq 0	A410	PID 1 Deadband	A465
		Autotune	P040	Analog Out Sel	t088	PID 1 Trim Hi	A456	PID 1 Preload	A466
Language	P030	Accel Time 1	P041	Analog Out High	t089	PID 1 Trim Lo	A457	Auto Rstrt Tries	A541
Output Freq	b001	Decel Time 1	P042	Anlg Out Setpt	t090	PID 1 Ref Sel	A459	Auto Rstrt Delay	A542
Commanded Freq	b002	Minimum Freq	P043	Anlg In 0-10V Lo	t091	PID 1 Fdback Sel	A460	Start At PowerUp	A543
Motor NP Volts	P031	Maximum Freq	P044	Anlg In 0-10V Hi	t092	PID 1 Prop Gain	A461	Reverse Disable	A544
Motor NP Hertz	P032	Stop Mode	P045	Anlg In4-20mA Lo	t095	PID 1 Integ Time	A462	Flying Start En	A545
Extruder		Motor NP Hertz	P032	Stop Mode	P045	Anlg In4-20mA Lo	t095	Encoder PPR	A536
		Motor OL Current	P033	Start Source 1	P046	Anlg In4-20mA Hi	t096	Pulse In Scale	A537
		Motor NP FLA	P034	Speed Reference1	P047	Anlg In mA Loss	t097	Ki Speed Loop	A538
		Motor NP Poles	P035	Relay Out1 Sel	t076	Slip Hz Meter	d375	Kp Speed Loop	A539
Language	P030	Autotune	P040	Analog Out Sel	t088	Speed Feedback	d376	Power Loss Mode	A548
Output Freq	b001	Accel Time 1	P041	Analog Out High	t089	Encoder Speed	d378	Half Bus Enable	A549
Commanded Freq	b002	Decel Time 1	P042	Anlg Out Setpt	t090	Preset Freq 0	A410		
Output Current	b003	Minimum Freq	P043	Anlg In 0-10V Lo	t091	Stall Fault Time	A492		
Motor NP Volts	P031	Maximum Freq	P044	Anlg In 0-10V Hi	t092	Motor Fdbk Type	A535		
Positioning[1]		Stop Mode	P045	Stp Logic 5	L185	Step Units 6	L212	Jog Accel/Decel	A432
		Start Source 1	P046	Stp Logic 6	L186	Step Units 7	L214	DB Threshold	A438
		Speed Reference1	P047	Stp Logic 7	L187	Slip Hz Meter	d375	S Curve %	A439
		DigIn TermBlk 02	t062	Stp Logic Time 0	L190	Speed Feedback	d376	Motor Fdbk Type	A535
Language	P030	DigIn TermBlk 03	t063	Stp Logic Time 1	L191	Encoder Speed	d378	Encoder PPR	A536
Output Freq	b001	DigIn TermBlk 05	t065	Stp Logic Time 2	L192	Units Traveled H	d388	Pulse In Scale	A537
Commanded Freq	b002	DigIn TermBlk 06	t066	Stp Logic Time 3	L193	Units Traveled L	d389	Ki Speed Loop	A538
Motor NP Volts	P031	Opto Out1 Sel	t069	Stp Logic Time 4	L194	Preset Freq 0	A410	Kp Speed Loop	A539
Motor NP Hertz	P032	Opto Out2 Sel	t072	Stp Logic Time 5	L195	Preset Freq 1	A411	Bus Reg Enable	A550
Motor OL Current	P033	Relay Out1 Sel	t076	Stp Logic Time 6	L196	Preset Freq 2	A412	Positioning Mode	A558
Motor NP FLA	P034	EM Brk Off Delay	t086	Stp Logic Time 7	L197	Preset Freq 3	A413	Counts Per Unit	A559
Motor NP Poles	P035	EM Brk On Delay	t087	Step Units 0	L200	Preset Freq 4	A414	Enh Control Word	A560
Autotune	P040	Stp Logic 0	L180	Step Units 1	L202	Preset Freq 5	A415	Find Home Freq	A562
Accel Time 1	P041	Stp Logic 1	L181	Step Units 2	L204	Preset Freq 6	A416	Find Home Dir	A563
Decel Time 1	P042	Stp Logic 2	L182	Step Units 3	L206	Preset Freq 7	A417	Encoder Pos Tol	A564
Minimum Freq	P043	Stp Logic 3	L183	Step Units 4	L208	Preset Freq 8	A418	Pos Reg Filter	A565
Maximum Freq	P044	Stp Logic 4	L184	Step Units 5	L210	Jog Frequency	A431	Pos Reg Gain	A566
Textile/Fiber		Motor NP FLA	P034	DigIn TermBlk 02	t062	Slip Hz Meter	d375	Max Traverse	A567
		Motor NP Poles	P035	DigIn TermBlk 03	t063	Fiber Status	d390	Traverse Inc	A568
		Autotune	P040	Opto Out1 Sel	t069	Preset Freq 0	A410	Traverse Dec	A569
		Accel Time 1	P041	Opto Out2 Sel	t072	Jog Frequency	A431	P Jump	A570
Language	P030	Decel Time 1	P042	Relay Out1 Sel	t076	Jog Accel/Decel	A432	Sync Time	A571
Output Freq	b001	Minimum Freq	P043	Anlg In 0-10V Lo	t091	S Curve %	A439	Speed Ratio	A572
Commanded Freq	b002	Maximum Freq	P044	Anlg In 0-10V Hi	t092	Reverse Disable	A544		
Motor NP Volts	P031	Stop Mode	P045	Anlg In4-20mA Lo	t095	Power Loss Mode	A548		
Motor NP Hertz	P032	Start Source 1	P046	Anlg In4-20mA Hi	t096	Half Bus Enable	A549		
Motor OL Current	P033	Speed Reference1	P047	Anlg In mA Loss	t097	Bus Reg Enable	A550		

(1) This AppView parameter group is specific to PowerFlex 525 drives only.

CustomView Parameter Group

PowerFlex 520-series drives include a CustomView™ parameter group for you to store frequently used parameters for your application. See CustomView Parameter Group on page 139 for more information.

Custom Group	
	This group can store up to 100 parameters.

Basic Display Group

b001 [Output Freq] Related Parameter(s): b002, b010, P043, P044, P048, P050, P052

Output frequency present at T1, T2 & T3 (U, V & W). Does not include slip frequency.

Values	Default:	Read Only
	Min/Max:	0.00/[Maximum Freq]
	Display:	0.01 Hz

b002 [Commanded Freq] Related Parameter(s): b001, b013, P043, P044, P048, P050, P052

Value of the active frequency command even if the drive is not running.

IMPORTANT The frequency command can come from a number of sources. See Start and Speed Reference Control on page 46 for more information.

Values	Default:	Read Only
	Min/Max:	0.00/[Maximum Freq]
	Display:	0.01 Hz

b003 [Output Current]

Output current present at T1, T2 & T3 (U, V & W).

Values	Default:	Read Only
	Min/Max:	0.00/(Drive Rated Amps x 2)
	Display:	0.01 A

b004 [Output Voltage] Related Parameter(s): P031, A530, A534

Output voltage present at T1, T2 & T3 (U, V & W).

Values	Default:	Read Only
	Min/Max:	0.0/Drive Rated Volts
	Display:	0.1V

b005 [DC Bus Voltage]

Filtered DC bus voltage level of the drive.

Values	Default:	Read Only
	Min/Max:	0/1200VDC
	Display:	1VDC

b006 [Drive Status] Related Parameter(s): A544

Present operating condition of the drive.

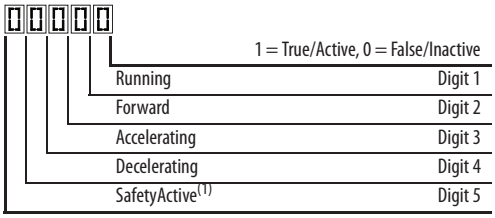

(1) Setting is specific to PowerFlex 525 drives only.

Values	Default:	Read Only
	Min/Max:	00000/11111
	Display:	00000

Basic Display Group *(continued)*

b007 [Fault 1 Code]
b008 [Fault 2 Code]
b009 [Fault 3 Code]

Related Parameter(s): F604-F610

A code that represents a drive fault. Codes appear in these parameters in the order they occur (b007 [Fault 1 Code] = the most recent fault). Repetitive faults are only recorded once. See Fault and Diagnostic Group for more information.

Values	Default:	Read Only
	Min/Max:	F0/F127
	Display:	F0

b010 [Process Display]

Related Parameter(s): b001, A481, A482

32 32 bit parameter.

Output frequency scaled by [Process Disp Hi] and [Process Disp Lo].

Values	Default:	Read Only
	Min/Max:	0/9999
	Display:	1

b012 [Control Source]

Related Parameter(s): P046, P047, P048, P049, P050, P051, t062, t063, t065-t068, L180-L187, A410-A425

Active source of the Start Command and Frequency Command. Normally defined by the settings of P046, P048, P050 [Start Source x] and P047, P049, P051 [Speed Referencex]. See Start and Speed Reference Control on page 46 for more information.

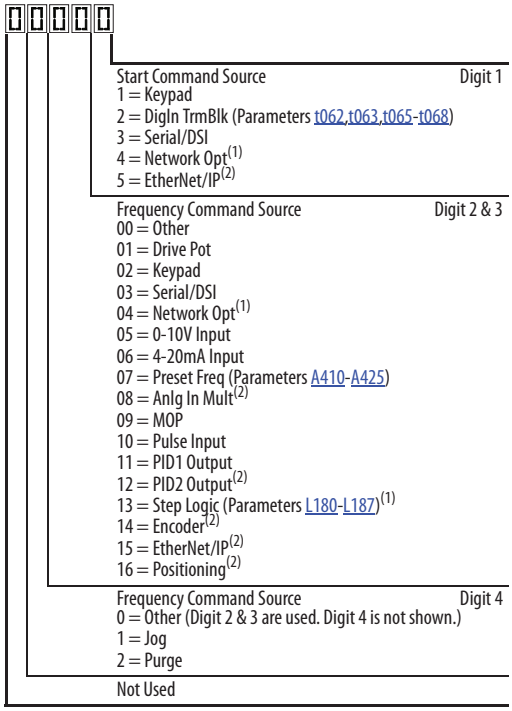

Example

Display reads...	Description
2004	Start source comes from Network Opt and Frequency source is Purge.
113	Start source comes from Serial/DSI and Frequency source comes from PID1 Output.
155	Start source and Frequency source comes from EtherNet/IP.
052	Start source comes from DigIn TrmBlk and Frequency source from 0-10V Input.
011	Start source comes from Keypad and Frequency source comes from Drive Pot.

(1) Select this setting if using the optional PowerFlex 25-COMM-E2P, 25-COMM-D, or 25-COMM-P adapters as the Start source and/or Frequency source.
(2) Setting is specific to PowerFlex 525 drives only.

Values	Default:	Read Only
	Min/Max:	0000/2165
	Display:	0000

Basic Display Group *(continued)*

b013 [Contrl In Status] Related Parameter(s): b002, P044, P045

State of the digital terminal blocks 1...3 and DB transistor.

IMPORTANT Actual control commands may come from a source other than the control terminal block.

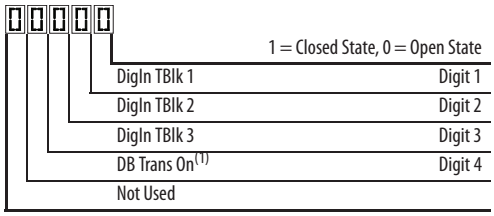

(1) The DB Transistor "on" indication must have a 0.5 s hysteresis. It will turn on and stay on for at least 0.5 s every time the DB transistor is turned on.

Values	Default:	Read Only
	Min/Max:	0000/1111
	Display:	0000

b014 [Dig In Status] Related Parameter(s): t065-t068

State of the programmable digital inputs.

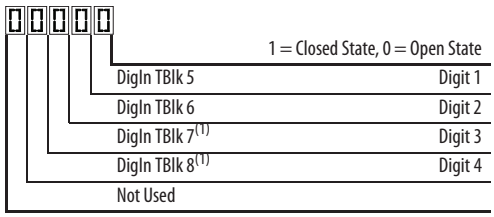

(1) Setting is specific to PowerFlex 525 drives only.

Values	Default:	Read Only
	Min/Max:	0000/1111
	Display:	0000

b015 [Output RPM] Related Parameter(s): P035

Current output frequency in rpm. Scale is based on P035 [Motor NP Poles].

Values	Default:	Read Only
	Min/Max:	0/24000 rpm
	Display:	1 rpm

b016 [Output Speed] Related Parameter(s): P044

Current output frequency in %. Scale is 0% at 0.00 Hz to 100% at P044 [Maximum Freq].

Values	Default:	Read Only
	Min/Max:	0.0/100.0%
	Display:	0.1%

b017 [Output Power] Related Parameter(s): b018

Output power present at T1, T2 & T3 (U, V & W).

Values	Default:	Read Only
	Min/Max:	0.00/(Drive Rated Power x 2)
	Display:	0.01 kW

Basic Display Group *(continued)*

b018 [Power Saved] Related Parameter(s): b017

Instantaneous power savings of using this drive compared to an across the line starter.

Values	Default:	Read Only
	Min/Max:	0.00/655.35 kW
	Display:	0.01 kW

b019 [Elapsed Run time] Related Parameter(s): A555

Accumulated time drive is outputting power. Time is displayed in 10 hour increments.

Values	Default:	Read Only
	Min/Max:	0/65535 x 10 hr
	Display:	1 = 10 hr

b020 [Average Power] Related Parameter(s): A555

Average power used by the motor since the last reset of the meters.

Values	Default:	Read Only
	Min/Max:	0.00/(Drive Rated Power x 2)
	Display:	0.01 kW

b021 [Elapsed kWh] Related Parameter(s): b022

Accumulated output energy of the drive. When the maximum value of this parameter is reached, it resets to zero and b022 [Elapsed MWh] is incremented.

Values	Default:	Read Only
	Min/Max:	0.0/100.0 kWh
	Display:	0.1 kWh

b022 [Elapsed MWh] Related Parameter(s): b021

Accumulated output energy of the drive.

Values	Default:	Read Only
	Min/Max:	0.0/6553.5 MWh
	Display:	0.1 MWh

b023 [Energy Saved] Related Parameter(s): A555

Total energy savings of using this drive compared to an across the line starter since the last reset of the meters.

Values	Default:	Read Only
	Min/Max:	0.0/6553.5 kWh
	Display:	0.1 kWh

b024 [Accum kWh Sav] Related Parameter(s): b025

Total approximate accumulated energy savings of the drive compared to using an across the line starter.

Values	Default:	Read Only
	Min/Max:	0.0/6553.5 kWh
	Display:	0.1 = 10 kWh

Basic Display Group *(continued)*

b025 [Accum Cost Sav] Related Parameter(s): b024, P052, A555

Total approximate accumulated cost savings of the drive compared to using an across the line starter.
[Accum Cost Sav] = [Average kWh cost] x [Accum kWh Sav]

Values	Default:	Read Only
	Min/Max:	0.0/6553.5
	Display:	0.1

b026 [Accum CO2 Sav] Related Parameter(s): A555

Total approximate accumulated CO2 savings of the drive compared to using an across the line starter.

Values	Default:	Read Only
	Min/Max:	0.0/6553.5 kg
	Display:	0.1 kg

b027 [Drive Temp]

Present operating temperature of the drive heatsink (inside module).

Values	Default:	Read Only
	Min/Max:	0/120 °C
	Display:	1 °C

b028 [Control Temp]

Present operating temperature of the drive control.

Values	Default:	Read Only
	Min/Max:	0/120 °C
	Display:	1 °C

b029 [Control SW Ver]

Current drive firmware version.

Values	Default:	Read Only
	Min/Max:	0.000/65.535
	Display:	0.001

Basic Program Group

P030 [Language]

Selects the language displayed. A reset or power cycle is required after selection is made.

			Language Support		
			Keypad/ LCD Display	RSLogix 5000/ Logix Designer	Connected Components Workbench
Options	1 English (Default)		Y	Y	Y
	2 Français		Y	Y	Y
	3 Español		Y	Y	Y
	4 Italiano		Y	Y	Y
	5 Deutsch		Y	Y	Y
	6 Japanese		–	Y	–
	7 Português		Y	Y	–
	8 Chinese	Chinese Simplified	–	Y	Y
	9 Reserved				
	10 Reserved				
	11 Korean		–	Y	–
	12 Polish(1)		Y	–	–
	13 Reserved				
	14 Turkish(1)		Y	–	–
	15 Czech(1)		Y	–	–

(1) Due to a limitation of the LCD Display, some of the characters for Polish, Turkish, and Czech will be modified.

P031 [Motor NP Volts] Related Parameter(s): b004, A530, A531, A532, A533

Stop drive before changing this parameter.

Sets the motor nameplate rated volts.

Values	Default:	Drive Rated Volts
	Min/Max:	10V (for 230V Drives), 20V (for 460V Drives), 25V (for 600V Drives)/Drive Rated Volts
	Display:	1V

P032 [Motor NP Hertz] Related Parameter(s): A493, A530, A531, A532, A533

Stop drive before changing this parameter.

Sets the motor nameplate rated frequency.

Values	Default:	60 Hz
	Min/Max:	15/500 Hz
	Display:	1 Hz

P033 [Motor OL Current] Related Parameter(s): t069, t072, t076, t081, A484, A485, A493

Sets the motor nameplate overload current. Used to determine motor overload conditions and can be set from 0.1 A to 200% of drive rated current.

IMPORTANT The drive will fault on an F007 "Motor Overload" if the value of this parameter is exceeded by 150% for 60 s.

Values	Default:	Drive Rated Amps
	Min/Max:	0.0/(Drive Rated Amps x 2)
	Display:	0.1 A

Basic Program Group *(continued)*

P034 [Motor NP FLA] Related Parameter(s): P040

Sets the motor nameplate FLA. Used to assist the Autotune routine and motor control.

Values	Default:	Based on Drive Rating
	Min/Max:	0.1/(Drive Rated Amps x 2)
	Display:	0.1 A

P035 [Motor NP Poles] Related Parameter(s): b015

Sets the number of poles in the motor.

Values	Default:	4
	Min/Max:	2/40
	Display:	1

P036 [Motor NP RPM]

Stop drive before changing this parameter.

Sets the rated nameplate rpm of the motor. Used to calculate the rated slip of the motor. To reduce the slip frequency, set this parameter closer to the motor synchronous speed.

Values	Default:	1750 rpm
	Min/Max:	0/24000 rpm
	Display:	1 rpm

P037 [Motor NP Power]

PF 525 PowerFlex 525 only.

Sets the motor nameplate power. Used in PM regulator.

Values	Default:	Drive Rated Power
	Min/Max:	0.00/Drive Rated Power
	Display:	0.01 kW

P038 [Voltage Class]

Stop drive before changing this parameter.

Sets the voltage class of 600V drives. Only applicable to 600V drives.

Options	2	"480V"
	3	"600V" (Default)

P039 [Torque Perf Mode] Related Parameter(s): P040, A530, A531, A532, A533

Stop drive before changing this parameter.

Selects the motor control mode.

Options	0	"V/Hz"
	1	"SVC" (Default)
	2	"Economize"
	3	"Vector"(1)

(1) Setting is specific to PowerFlex 525 drives only.

Basic Program Group *(continued)*

P040 [Autotune] Related Parameter(s): P034, P039, A496, A497

Stop drive before changing this parameter.

Enables a static (not spinning) or dynamic (motor spinning) autotune to automatically set the motor parameters. Start must be pressed to begin the routine. After the routine is complete the parameter resets to a zero. A failure (such as if a motor is not connected) results in an Autotune Fault.

IMPORTANT All motor parameters in the Basic Program group must be set before running the routine. If a start command is not given (or a stop command is given) within 30 s, the parameter automatically returns to a zero and an Autotune Fault occurs.

ATTENTION: Rotation of the motor in an undesired direction can occur during this procedure. To guard against possible injury and/or equipment damage, it is recommended that the motor be disconnected from the load before proceeding.

Options	0	"Ready/Idle" (Default)	
	1	"Static Tune"	A temporary command that initiates a non-rotational motor stator resistance test for the best possible automatic setting of A496 [IR Voltage Drop]. A start command is required following initiation of this setting. The parameter returns to 0 "Ready/Idle" following the test, at which time another start transition is required operate the drive in normal mode. Used when motor cannot be uncoupled from the load.
	2	"Rotate Tune"	A temporary command that initiates a "Static Tune" followed by a rotational test for the best possible automatic setting of A497 [Flux Current Ref]. A start command is required following initiation of this setting. The parameter returns to 0 "Ready/Idle" following the test, at which time another start transition is required to operate the drive in normal mode. Important: Used when motor is uncoupled from the load. Results may not be valid if a load is coupled to the motor during this procedure.

P041 [Accel Time 1] Related Parameter(s): P044, A439

Sets the time for the drive to accelerate from 0 Hz to P044 [Maximum Freq].

Accel Rate = [Maximum Freq] / [Accel Time x]

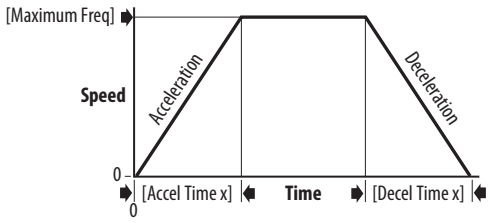

Values	Default:	10.00 s
	Min/Max:	0.00/600.00 s
	Display:	0.01 s

P042 [Decel Time 1] Related Parameter(s): P044, A439

Sets the time for the drive to decelerate from P044 [Maximum Freq] to 0 Hz.

Decel Rate = [Maximum Freq] / Decel Time x]

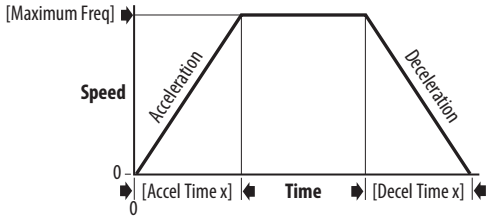

Values	Default:	10.00 s
	Min/Max:	0.00/600.00 s
	Display:	0.01 s

Basic Program Group *(continued)*

P043 [Minimum Freq] Related Parameter(s): b001, b002, b013, P044, A530, A531

Stop drive before changing this parameter.

Sets the lowest frequency the drive outputs.

Values	Default:	0.00 Hz
	Min/Max:	0.00/500.00 Hz
	Display:	0.01 Hz

P044 [Maximum Freq] Related Parameter(s): b001, b002, b013, b016, P043, A530, A531

Stop drive before changing this parameter.

Sets the highest frequency the drive outputs.

IMPORTANT This value must be greater than the value set in P043 [Minimum Freq].

Values	Default:	60.00 Hz
	Min/Max:	0.00/500.00 Hz
	Display:	0.01 Hz

P045 [Stop Mode] Related Parameter(s): t086, t087, A434, A435, A550

Determines the stopping mode used by the drive when a stop is initiated.

Options	0 "Ramp, CF" (Default)	Ramp to Stop. Stop command clears active fault.	
	1 "Coast, CF"	Coast to Stop. Stop command clears active fault.	
	2 "DC Brake, CF"	DC Injection Braking Stop. Stop command clears active fault.	
	3 "DC BrkAuto,CF"	DC Injection Braking Stop with Auto Shutoff. • Standard DC Injection Braking for value set in A434 [DC Brake Time]. OR • Drive shuts off if the drive detects that the motor is stopped. Stop command clears active fault.	
	4 "Ramp"	Ramp to Stop.	
	5 "Coast"	Coast to Stop.	
	6 "DC Brake"	DC Injection Braking Stop.	
	7 "DC BrakeAuto"	DC Injection Braking Stop with Auto Shutoff. • Standard DC Injection Braking for value set in A434 [DC Brake Time]. OR • Drive shuts off if the drive detects that the motor is stopped.	
	8 "Ramp+EM B,CF"	Ramp to Stop with EM Brake Control. Stop command clears active fault.	
	9 "Ramp+EM Brk"	Ramp to Stop with EM Brake Control.	
	10 "PointStp,CF"	PointStop. Stop command clears active fault.	Provides a method to stop at a constant distance instead of a fixed rate. When a Stop command is given, the distance required for the machine to travel to standstill based on the programmed maximum speed and deceleration time is calculated. If the drive is running slower than the maximum speed, the function will apply a calculated deceleration time that allows the machine to travel to standstill in the same distance based on the current speed. It is recommended to use braking resistors or set A550 [Bus Reg Enable] to 0 "Disabled" for better performance.
	11 "PointStop"	PointStop.	

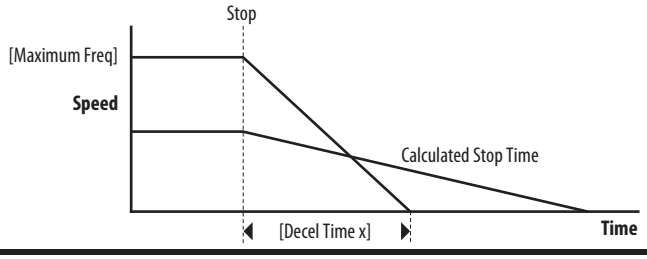

Basic Program Group *(continued)*

P046 [Start Source 1]
P048 [Start Source 2]
P050 [Start Source 3]

Related Parameter(s): b012, t064, C125

Stop drive before changing this parameter.

Configures the start source of the drive. Changes to these inputs take effect as soon as they are entered. P046 [Start Source 1] is the factory default start source unless overridden.
See Start and Speed Reference Control on page 46 for more information.

IMPORTANT For all settings except when t064 [2-Wire Mode] is set to 1 "Level Sense", the drive must receive a leading edge from the start input for the drive to start after a stop input, loss of power, or fault condition.

Options	1	"Keypad"	[Start Source 1] default
	2	"DigIn TrmBlk"	[Start Source 2] default
	3	"Serial/DSI"	[Start Source 3] default for PowerFlex 523
	4	"Network Opt"(1)	
	5	"EtherNet/IP"(2)	[Start Source 3] default for PowerFlex 525

(1) Select this setting if using the optional PowerFlex 25-COMM-E2P, 25-COMM-D, or 25-COMM-P adapters as the start source.
(2) Setting is specific to PowerFlex 525 drives only.

P047 [Speed Reference1]
P049 [Speed Reference2]
P051 [Speed Reference3]

Related Parameter(s): C125

Selects the source of speed command for the drive. Changes to these inputs take effect as soon as they are entered. P047 [Speed Reference1] is the factory default speed reference unless overridden.
See Start and Speed Reference Control on page 46 for more information.

Options	1	"Drive Pot"	[Speed Reference1] default
	2	"Keypad Freq"	
	3	"Serial/DSI"	[Speed Reference3] default for PowerFlex 523
	4	"Network Opt"(1)	
	5	"0-10V Input"	[Speed Reference2] default
	6	"4-20mA Input"	
	7	"Preset Freq"	
	8	"Anlg In Mult"(2)	
	9	"MOP"	
	10	"Pulse Input"	
	11	"PID1 Output"	
	12	"PID2 Output"(2)	
	13	"Step Logic"(2)	
	14	"Encoder"(2)	
	15	"EtherNet/IP"(2)	[Speed Reference3] default for PowerFlex 525
	16	"Positioning"(2)	Referencing from A558 [Positioning Mode]

(1) Select this setting if using the optional PowerFlex 25-COMM-E2P, 25-COMM-D, or 25-COMM-P adapters as the speed reference.
(2) Setting is specific to PowerFlex 525 drives only.

P052 [Average kWh Cost]

Related Parameter(s): b025

Sets the average cost per kWh.

Values	Default:	0.00
	Min/Max:	0.00/655.35
	Display:	0.01

Basic Program Group *(continued)*

P053 [Reset To Defalts]

Stop drive before changing this parameter.

Resets all parameters to their factory default values. After a Reset command, the value of this parameter returns to zero.

Parameters that are NOT Reset when P053 = 1

Parameter	Parameter	Parameter
P030 [Language]	C138 [EN Gateway Cfg 2]	C159 [EN Data Out 3]
C121 [Comm Write Mode]	C139 [EN Gateway Cfg 3]	C160 [EN Data Out 4]
C122 [Cmd Stat Select]	C140 [EN Gateway Cfg 4]	C161 [Opt Data In 1]
C123 [RS485 Data Rate]	C141 [EN Rate Cfg]	C162 [Opt Data In 2]
C124 [RS485 Node Addr]	C143 [EN Comm Flt Actn]	C163 [Opt Data In 3]
C124 [Comm Loss Action]	C144 [EN Idle Flt Actn]	C164 [Opt Data In 4]
C126 [Comm Loss Time]	C145 [EN Flt Cfg Logic]	C165 [Opt Data Out 1]
C127 [RS485 Format]	C146 [EN Flt Cfg Ref]	C166 [Opt Data Out 2]
C128 [EN Addr Sel]	C147 [EN Flt Cfg DL 1]	C167 [Opt Data Out 3]
C129 [EN IP Addr Cfg 1]	C148 [EN Flt Cfg DL 2]	C168 [Opt Data Out 4]
C130 [EN IP Addr Cfg 2]	C149 [EN Flt Cfg DL 3]	C169 [MultiDrv Sel]
C131 [EN IP Addr Cfg 3]	C150 [EN Flt Cfg DL 4]	C171 [Drv 1 Addr]
C132 [EN IP Addr Cfg 4]	C153 [EN Data In 1]	C172 [Drv 2 Addr]
C133 [EN Subnet Cfg 1]	C154 [EN Data In 2]	C173 [Drv 3 Addr]
C134 [EN Subnet Cfg 2]	C155 [EN Data In 3]	C174 [Drv 4 Addr]
C135 [EN Subnet Cfg 3]	C156 [EN Data In 4]	C175 [DSI I/O Cfg]
C136 [EN Subnet Cfg 4]	C157 [EN Data Out 1]	GC [Parameters in Custom Group]
C137 [EN Gateway Cfg 1]	C158 [EN Data Out 2]	

Parameters that are Reset when P053 = 3

Parameter Name
P031 [Motor NP Volts]
P033 [Motor OL] Current
P034 [Motor NP FLA]
P035 [Motor NP Poles]
P038 [Voltage Class]
A435 [DC Brake Level]
A484 [Current Limit 1]
A485 [Current Limit 2]
A486 [Shear Pin1 Level]
A488 [Shear Pin2 Level]
A490 [Load Loss Level]
A496 [IR Voltage Drop]
A497 [Flux Current Ref]
A530 [Boost Select]
A531 [Start Boost]
A532 [Break Voltage]
A533 [Break Frequency]
A534 [Maximum] Voltage

Options			
	0	"Ready/Idle" (Default)	
	1	"Param Reset"	Does not reset custom groups, parameter P030 [Language], and communication parameters.
	2	"Factory Rset"	Restore drive to factory condition.
	3	"Power Reset"	Resets only power parameters. Can be used when swapping power modules.

Terminal Block Group

t062	**[DigIn TermBlk 02]**	**t063**	**[DigIn TermBlk 03]**
t065	**[DigIn TermBlk 05]**	**t066**	**[DigIn TermBlk 06]**
t067	**[DigIn TermBlk 07]**	**t068**	**[DigIn TermBlk 08]**

PF 525 PowerFlex 525 only.

Related Parameter(s): b012, b013, b014, P045, P046, P048, P049, P050, P051, t064, t086, A410-A425, A427, A431, A432, A433, A434, A435, A442, A443, A488, A535, A560, A562, A563, A567, A571

Stop drive before changing this parameter.

Programmable digital input. Changes to these inputs takes effect as soon as they are entered. If a digital input is set for a selection that is only usable on one input, no other input can be set for the same selection.

Options	0	"Not Used"	Terminal has no function but can be read over network communications with b013 [Contrl In Status] and b014 [Dig In Status].
	1	"Speed Ref 2"	Selects P049 [Speed Reference2] as drive's speed command.
	2	"Speed Ref 3"	Selects P051 [Speed Reference3] as drive's speed command.
	3	"Start Src 2"	Selects P048 [Start Source 2] as control source to start the drive.
	4	"Start Src 3"	Selects P050 [Start Source 3] as control source to start the drive.
	5	"Spd + Strt 2"	[DigIn TermBlk 07] default. Selects combination of P049 [Speed Reference2] and P048 [Start Source 2] as speed command with control source to start the drive.
	6	"Spd + Strt 3"	Selects combination of P051 [Speed Reference3] and P050 [Start Source 3] as speed command with control source to start the drive.
	7	"Preset Freq" (PF523: only for DigIn TermBlk 03, 05, and 06) (PF525: only for DigIn TermBlk 05...08)	[DigIn TermBlk 05] and [DigIn TermBlk 06] default. • Selects a preset frequency in Velocity mode (P047, P049, P051 [Speed Referencex] = 1...15). See A410...A425 [Preset Freq x]. • Selects a preset frequency and position in Positioning mode (P047, P049, P051 [Speed Referencex] = 16). See L200...L214 [Step Units x] (only for PowerFlex 525 drives). **IMPORTANT** Digital Inputs have priority for frequency control when programmed as Preset Speed and are active. See Start Source and Speed Reference Selection on page 46 for more information.
	8	"Jog"	• When input is present, drive accelerates according to the value set in A432 [Jog Accel/Decel] and ramps to the value set in A431 [Jog Frequency]. • When input is removed, drive ramps to a stop according to the value set in A432 [Jog Accel/Decel]. • A valid Start command will override this input.
	9	"Jog Forward"	[DigIn TermBlk 08] default. Drive accelerates to A431 [Jog Frequency] according to A432 [Jog Accel/Decel] and ramps to a stop when input becomes inactive. A valid Start command will override this input.
	10	"Jog Reverse"	Drive accelerates to A431 [Jog Frequency] according to A432 [Jog Accel/Decel] and ramps to a stop when input becomes inactive. A valid Start command will override this input.
	11	"Acc/Dec Sel2"(1)	If active, determines which Accel/Decel time will be used for all ramp rates except jog. Can be used with option 29 "Acc/Dec Sel3" for additional Accel/Decel times. See A442 [Accel Time 2] for more information.
	12	"Aux Fault"	When enabled, an F002 "Auxiliary Input" fault will occur when the input is removed.
	13	"Clear Fault"	When active, clears an active fault.
	14	"RampStop,CF"	Causes drive to immediately ramp to a stop regardless of how P045 [Stop Mode] is set.
	15	"CoastStop,CF"	Causes drive to immediately coast to a stop regardless of how P045 [Stop Mode] is set.
	16	"DCInjStop,CF"	Causes drive to immediately begin a DC Injection stop regardless of how P045 [Stop Mode] is set.
	17	"MOP Up"	Increases the value of A427 [MOP Freq] at the rate set in A430 [MOP Time].
	18	"MOP Down"	Decreases the value of A427 [MOP Freq] at the rate set in A430 [MOP Time].
	19	"Timer Start"(1)	Clears and starts the timer function. May be used to control the relay or opto outputs.
	20	"Counter In"(1)	Starts the counter function. May be used to control the relay or opto outputs.
	21	"Reset Timer"	Clears the active timer.
	22	"Reset Countr"	Clears the active counter.
	23	"Rset Tim&Cnt"	Clear the active timer and counter.
	24	"Logic In 1"(1)(2)	Logic function input number 1. May be used to control the relay or opto outputs (t076, t081 [Relay Outx Sel] and t069, t072 [Opto Outx Sel], options 11...14). May be used in conjunction with StepLogic parameters L180...L187 [Stp Logic x].
	25	"Logic In 2"(1)(2)	Logic function input number 2. May be used to control the relay or opto outputs (t076, t081 [Relay Outx Sel] and t069, t072 [Opto Outx Sel], options 11...14). May be used in conjunction with StepLogic parameters L180...L187 [Stp Logic x].

Options

26 "Current Lmt2"[2]	When active, A485 [Current Limit 2] determines the drive current limit level.
27 "Anlg Invert"	Inverts the scaling of the analog input levels set in t091 [Anlg In 0-10V Lo] and t092 [Anlg In 0-10V Hi] or t095 [Anlg In4-20mA Lo] and t096 [Anlg In4-20mA Hi].
28 "EM Brk Rlse"	If EM brake function is enabled, this input releases the brake. See t086 [EM Brk Off Delay] for more information. **ATTENTION:** If a hazard of injury due to movement of equipment or material exists, an auxiliary mechanical braking device must be used.
29 "Acc/Dec Sel3"[1]	If active, determines which Accel/Decel time is used for all ramp rates except jog. Used with option 11 "Acc/Dec Sel2" for the Accel/Decel times listed in this table.
30 "Precharge En"	Forces drive into precharge state. Typically controlled by auxiliary contact on the disconnect at the DC input to the drive. If this input is assigned, it must be energized for the pre-charge relay to close and for the drive to run. If it is de-energized, the pre-charge relay opens and the drive coasts to a stop.
31 "Inertia Dcel"	Forces drive into Inertia Ride-Through state. The drive attempts to regulate the DC bus at the current level.
32 "Sync Enable"	Must be used in order to hold the existing frequency when Sync Time is set to enable speed synchronization. When this input is released the drive accelerates to the commanded frequency in A571 [Sync Time].
33 "Traverse Dis"	When an input is programmed the traverse function is disabled while this input is active. See A567 [Max Traverse].
34 "Home Limit"[2]	In Positioning mode, indicates the drive is at the home position. See Appendix E for more information on Positioning.
35 "Find Home"[2]	In Positioning mode, causes the drive to return to the Home position when a Start command is issued. Uses A562 [Find Home Freq] and A563 [Find Home Dir] until the "Home Limit" input is activated. If it passes this point, it then runs in the reverse direction at 1/10th the frequency of [Find Home Freq] until the "Home Limit" is activated again. As long as this input is active, any start command causes the drive to enter the homing routine. Only functions if in Positioning mode. Once the Find Home routine has finished, the drive stops. See Appendix E for more information on Positioning.
36 "Hold Step"[2]	In Positioning mode, overrides other inputs and causes the drive to remain at its current step (running at zero speed once it reaches its position) until released. While in "Hold", the drive ignores any input command which would normally result in a move to a new step. Timers continue to run. Therefore, when the Hold is removed, the drive must see any required digital inputs transition (even if they already transitioned during the hold), but it does not reset any timer. See Appendix E for more information on Positioning.
37 "Pos Redefine"[2]	In Positioning mode, resets the home position to the current position of the machine. See Appendix E for more information on Positioning.
38 "Force DC"	If the drive is not running, causes the drive to apply a DC Holding current (A435 [DC Brake Level], ignoring A434 [DC Brake Time]) while the input is applied.
39 "Damper Input"	When active, drive is allowed to run normally. When inactive, drive is forced into sleep mode and is prevented from accelerating to command speed.
40 "Purge"[1]	Starts the drive at A433 [Purge Frequency] regardless of the selected control source. Supersedes the keypad Control function as well as any other control command to take control of the drive. Purge can occur, and is operational, at any time whether the drive is running or stopped regardless of the selected logic source selection. If a valid stop (other than from comms or SW enable) is present, the drive will not start on the purge input transition. **ATTENTION:** If a hazard of injury due to movement of equipment or material exists, an auxiliary mechanical braking device must be used.
41 "Freeze-Fire"	When inactive, will cause an immediate F094 "Function Loss" fault. Use to safely bypass the drive with an external switching device.
42 "SW Enable"	Works like an interlock that has to be active for the drive to run.
43 "SherPin1 Dis"	Disables shear pin 1 but leaves shear pin 2 active. If A488 [Shear Pin 2 Level] is greater than 0.0 A, shear pin 2 is enabled.
44 Reserved	
45 Reserved	
46 Reserved	
47 Reserved	

Option		Description
29	11	
0	0	Acc/Dec 1
0	1	Acc/Dec 2
1	0	Acc/Dec 3
1	1	Acc/Dec 4

Options	48 "2-Wire FWD" (only for DigIn TermBlk 02)	[DigIn TermBlk 02] default. Select 2-Wire FWD for this input. Select this option and set P046, P048 or P050 [Start Source x] to 2 "DigIn TrmBlk" to configure [Start Source x] to a 2-wire run forward mode. Also see t064 [2-Wire Mode] for level trigger settings.
	49 "3-Wire Start" (only for DigIn TermBlk 02)	Select 3-Wire Start for this input. Select this option and set P046, P048 or P050 [Start Source x] to 2 "DigIn TrmBlk" to configure [Start Source x] to a 3-wire start mode.
	50 "2-Wire REV" (only for DigIn TermBlk 03)	[DigIn TermBlk 03] default. Select 2-Wire REV for this input. Select this option and set P046, P048 or P050 [Start Source x] to 2 "DigIn TrmBlk" to configure [Start Source x] to a 2-wire run reverse mode. Also see t064 [2-Wire Mode] for level trigger settings. For PowerFlex 523 drives, this setting will be disabled If [DigIn TermBlk 03] is set to 7 "Preset Freq".
	51 "3-Wire Dir" (only for DigIn TermBlk 03)	Select 3-Wire Dir for this input. Select this option and set P046, P048 or P050 [Start Source x] to 2 "DigIn TrmBlk" to change the direction of [Start Source x]. For PowerFlex 523 drives, this setting will be disabled If [DigIn TermBlk 03] is set to 7 "Preset Freq".
	52 "Pulse Train" (PF523: only for DigIn TermBlk 05) (PF525: only for DigIn TermBlk 07)	Select pulse train for this input. Use P047, P049 and P051 [Speed Referencex] to select pulse input. Jumper for DigIn TermBlk 05 or 07 Sel must be moved to Pulse In.

(1) This function may be tied to one input only.
(2) Setting is specific to PowerFlex 525 drives only.

t064 [2-Wire Mode]

Related Parameter(s): P045, P046, P048, P050, t062, t063

Stop drive before changing this parameter.

Programs the mode of trigger only for t062 [DigIn TermBlk 02] and t063 [DigIn TermBlk 03] when 2-wire option is being selected as P046, P048 or P050 [Start Source x].

Options	0 "Edge Trigger" (Default)	Standard 2-Wire operation.
	1 "Level Sense"	• I/O Terminal 01 "Stop" = Coast to stop. Drive will restart after a Stop command when: – Stop is removed and – Start is held active • I/O Terminal 03 "Run REV" **ATTENTION:** Hazard of injury exists due to unintended operation. When t064 [2-Wire Mode] is set to option 1, and the Run input is maintained, the Run inputs do not need to be toggled after a Stop input for the drive to run again. A Stop function is provided only when the Stop input is active (open).
	2 "Hi-Spd Edge"	**IMPORTANT** There is greater potential voltage on the output terminals when using this option. • Outputs are kept in a ready-to-run state. The drive will respond to a Start command within 10 ms. • I/O Terminal 01 "Stop" = Coast to stop. • I/O Terminal 03 "Run REV"
	3 "Momentary"	• Drive will start after a momentary input from either the Run FWD input (I/O Terminal 02) or the Run REV input (I/O Terminal 03). • I/O Terminal 01 "Stop" = Stop according to the value set in P045 [Stop Mode].

Terminal Block Group *(continued)*

t069 [Opto Out1 Sel]
t072 [Opto Out2 Sel]

Related Parameter(s): P046, P048, P050, t070, t073, t077, t082, t086, t087, t093, t094, t097, A541, A564

PF 525 PowerFlex 525 only.

Determines the operation of the programmable digital outputs.

Options	Setting Output Changes State When...	Hysteresis
0 "Ready/Fault"	Opto outputs are active when power is applied. Indicates that the drive is ready for operation. Opto outputs are inactive when power is removed or a fault occurs.	None
1 "At Frequency"	Drive reaches commanded frequency.	0.5 Hz above; 1.0 Hz below
2 "MotorRunning"	Motor is receiving power from the drive.	None
3 "Reverse"	Drive is commanded to run in reverse direction.	None
4 "Motor OverId"	Motor overload condition exists.	100 ms time delay on or off
5 "Ramp Reg"	Ramp regulator is modifying the programmed accel/decel times to avoid an overcurrent or overvoltage fault from occurring.	100 ms time delay on or off
6 "Above Freq"	Drive exceeds the frequency (Hz) value set in t070 or t073 [Opto Outx Level].	100 ms time delay on or off
7 "Above Cur"	Drive exceeds the current (% Amps) value set in t070 or t073 [Opto Outx Level]. **IMPORTANT** Value for t070 or t073 [Opto Outx Level] must be entered in percent of drive rated output current.	100 ms time delay on or off
8 "Above DCVolt"	Drive exceeds the DC bus voltage value set in t070 or t073 [Opto Outx Level].	100 ms time delay on or off
9 "Retries Exst"	Value set in A541 [Auto Rstrt Tries] is exceeded.	None
10 "Above Anlg V"	Analog input voltage (0-10V input) exceeds the value set in t070 or t073 [Opto Outx Level]. **IMPORTANT** Do not use if t093 [10V Bipolar Enbl] is set to 1 "Bi-Polar In".	100 ms time delay on or off
11 "Above PF Ang"	Power Factor angle exceeds the value set in t070 or t073 [Opto Outx Level].	100 ms time delay on or off
12 "Anlg In Loss"	Analog input loss has occurred. Program t094 [Anlg In V Loss] or t097 [Anlg In mA Loss] for desired action when input loss occurs.	On, 2 mA / ±1V Off, 3 mA / ±1.5V
13 "ParamControl"	Output is directly controlled by the state of the t070 or t073 [Opto Outx Level]. A value of 0 causes the output to turn off. A value of 1 or greater in this parameter causes the output to turn on.	None
14 "NonRec Fault"	• Value set in A541 [Auto Rstrt Tries] is exceeded or • A541 [Auto Rstrt Tries] is not enabled or • A non-resettable fault has occurred.	None
15 "EM Brk Cntrl"	EM Brake is energized. Program t087 [EM Brk On Delay] and t086 [EM Brk Off Delay] for desired action.	None
16 "Thermal OL"	Relay energizes when thermal Motor overload counter is above the value set in t077 or t082 [Relay Outx Level]. It also energizes if the drive is within 5 °C of the drive overheat trip point.	None
17 "Amb OverTemp"	Relay energizes when control module over temperature occurs.	None
18 "Local Active"	Active when drive P046, P048 or P050 [Start Source x] is in local keypad control.	None
19 "Comm Loss"	Active when communication is lost from any comm source with reference or control.	None
20 "Logic In 1"	An input is programmed as "Logic Input 1" and is active.	None
21 "Logic In 2"	An input is programmed as "Logic Input 2" and is active.	None
22 "Logic 1 & 2"	Both Logic inputs are programmed and active.	None
23 "Logic 1 or 2"	One or both Logic inputs are programmed and one or both is active.	None
24 "StpLogic Out"	Drive enters StepLogic step with Command Word set to enable Logic output.	None
25 "Timer Out"	Timer has reached the value set in t070 or t073 [Opto Outx Level] or not timing.	None
26 "Counter Out"	Counter has reached the value set in t070 or t073 [Opto Outx Level] or not counting.	None
27 "At Position"	Drive is in Positioning mode and has reached the commanded position. Tolerance is adjusted with A564 [Encoder Pos Tol].	–
28 "At Home"	Drive is in Positioning mode and has reached the home position. Tolerance is adjusted with A564 [Encoder Pos Tol].	–
29 "Safe-Off"	Both safe-off inputs are active.	–

Values		
	Default: Opto Out1 Sel: Opto Out2 Sel:	 2 1
	Min/Max:	0/29
	Display:	1

Terminal Block Group *(continued)*

t070 [Opto Out1 Level]
t073 [Opto Out2 Level]

Related Parameter(s): t069, t072

32 32 bit parameter.

PF 525 PowerFlex 525 only.

Determines the on/off point for the digital outputs when t069 or t072 [Opto Outx Sel] is set to the values shown below.

Min/Max Value Range Based On [Opto Outx Sel] Setting							
6:	0...500 Hz	10:	0...100%	16:	0.1...9999 s	20:	0/1
7:	0...180%	11	0/1	17:	1...9999 counts	26:	0...150%
8:	0...815V	13	0...800	18:	0...180°	–	

Values	Default:	0
	Min/Max:	0/9999
	Display:	1

t075 [Opto Out Logic]

PF 525 PowerFlex 525 only.

Determines the logic (Normally Open/NO or Normally Closed/NC) of the digital outputs only.

Setting	Digital Out 1 Logic	Digital Out 2 Logic
0	NO	NO
1	NC	NO
2	NO	NC
3	NC	NC

Values	Default:	0
	Min/Max:	0/3
	Display:	1

Terminal Block Group *(continued)*

t076 [Relay Out1 Sel]

t081 [Relay Out2 Sel]

PF 525 PowerFlex 525 only.

Related Parameter(s): P046, P048, P050, t070, t073, t077, t082, t086, t087, t093, t094, t097, A541, A564

Determines the operation of the programmable output relay.

Options	Output Relay Changes State When...	Hysteresis
0 "Ready/Fault"	Relay changes state when power is applied. Indicates that the drive is ready for operation. Relay returns drive to shelf state when power is removed or a fault occurs.	None
1 "At Frequency"	Drive reaches commanded frequency.	0.5 Hz above; 1.0 Hz below
2 "MotorRunning"	Motor is receiving power from the drive.	None
3 "Reverse"	Drive is commanded to run in reverse direction.	None
4 "Motor Overld"	Motor overload condition exists.	100 ms time delay on or off
5 "Ramp Reg"	Ramp regulator is modifying the programmed accel/ decel times to avoid an overcurrent or overvoltage fault from occurring.	100 ms time delay on or off
6 "Above Freq"	Drive exceeds the frequency (Hz) value set in t077 or t082 [Relay Outx Level].	100 ms time delay on or off
7 "Above Cur"	Drive exceeds the current (% Amps) value set in t077 or t082 [Relay Outx Level]. **IMPORTANT** Value for t077 or t082 [Relay Outx Level] must be entered in percent of drive rated output current.	100 ms time delay on or off
8 "Above DCVolt"	Drive exceeds the DC bus voltage value set in t077 or t082 [Relay Outx Level].	100 ms time delay on or off
9 "Retries Exst"	Value set in A541 [Auto Rstrt Tries] is exceeded.	None
10 "Above Anlg V"	Analog input voltage (0-10V input) exceeds the value set in t077 or t082 [Relay Outx Level]. **IMPORTANT** Do not use if t093 [10V Bipolar Enbl] is set to 1 "Bi-Polar In".	100 ms time delay on or off
11 "Above PF Ang"	Power Factor angle exceeds the value set in t077 or t082 [Relay Outx Level].	100 ms time delay on or off
12 "Anlg In Loss"	Analog input loss has occurred. Program t094 [Anlg In V Loss] or t097 [Anlg In mA Loss] for desired action when input loss occurs.	On, 2 mA / ±1V Off, 3 mA / ±1.5V
13 "ParamControl"	Output will be directly controlled by the state of the t077 or t082 [Relay Outx Level]. A value of 0 causes the output to turn off. A value of 1 or greater in this parameter causes the output to turn on.	None
14 "NonRec Fault"	• Value set in A541 [Auto Rstrt Tries] is exceeded or • A541 [Auto Rstrt Tries] is not enabled or • A non-resettable fault has occurred.	None
15 "EM Brk Cntrl"	EM Brake is energized. Program t087 [EM Brk On Delay] and t086 [EM Brk Off Delay] for desired action.	None
16 "Thermal OL"	Relay energizes when thermal Motor overload counter is above the value set in t077 or t082 [Relay Outx Level]. It also energizes if the drive is within 5°C of the drive overheat trip point.	None
17 "Amb OverTemp"	Relay energizes when control module over temperature occurs.	None
18 "Local Active	Active when drive P046, P048 or P050 [Start Source x] is in local keypad control.	None
19 "Comm Loss"	Active when communication is lost from any comm source with reference or control.	None
20 "Logic In 1"(1)	An input is programmed as "Logic Input 1" and is active.	None
21 "Logic In 2"(1)	An input is programmed as "Logic Input 2" and is active.	None
22 "Logic 1 & 2"(1)	Both Logic inputs are programmed and active.	None
23 "Logic 1 or 2"(1)	One or both Logic inputs are programmed and one or both is active.	None
24 "StpLogic Out"(1)	Drive enters StepLogic step with Command Word set to enable Logic output.	None
25 "Timer Out"	Timer has reached the value set in t077 or t082 [Relay Outx Level] or not timing.	None
26 "Counter Out"	Counter has reached the value set in t077 or t082 [Relay Outx Level] or not counting.	None
27 "At Position"(1)	Drive is in Positioning mode and has reached the commanded position. Tolerance is adjusted with A564 [Encoder Pos Tol].	–
28 "At Home"(1)	Drive is in Positioning mode and has reached the home position. Tolerance is adjusted with A564 [Encoder Pos Tol].	–
29 "Safe-Off"(1)	Both safe-off inputs are active.	–

Values		
	Default: Relay Out1 Sel: Relay Out2 Sel:	 0 2
	Min/Max:	0/29
	Display:	1

(1) Setting is specific to PowerFlex 525 drives only.

Terminal Block Group *(continued)*

t077 [Relay Out1 Level]

Related Parameter(s): t076, t081

t082 [Relay Out2 Level]

PF 525 PowerFlex 525 only.

32 32 bit parameter.

Determines the on/off point for the output relay when t076 or t081 [Relay Outx Sel] is set to the values shown below.

Min/Max Value Range Based On [Relay Outx Sel] Setting							
6:	0...500 Hz	10:	0...100%	16:	0.1...9999 s	20:	0/1
7:	0...180%	11:	0/1	17:	1...9999 counts	26:	0...150%
8:	0...815V	13:	0...800	18:	0...180°	–	

Values	Default:	0
	Min/Max:	0/9999
	Display:	1

t079 [Relay 1 On Time]

t084 [Relay 2 On Time]

PF 525 PowerFlex 525 only.

Sets the delay time before Relay energizes after required condition is met.

Values	Default:	0.0 s
	Min/Max:	0.0/600.0 s
	Display:	0.1 s

t080 [Relay 1 Off Time]

t085 [Relay 2 Off Time]

PF 525 PowerFlex 525 only.

Sets the delay time before Relay de-energizes after required condition ceases.

Values	Default:	0.0 s
	Min/Max:	0.0/600.0 s
	Display:	0.1 s

t086 [EM Brk Off Delay]

Related Parameter(s): P045

Sets the time the drive remains at minimum frequency before ramping up to the commanded frequency (and engaging the brake coil relay) if Electromechanical (EM) Brake Control Mode is enabled with P045 [Stop Mode].

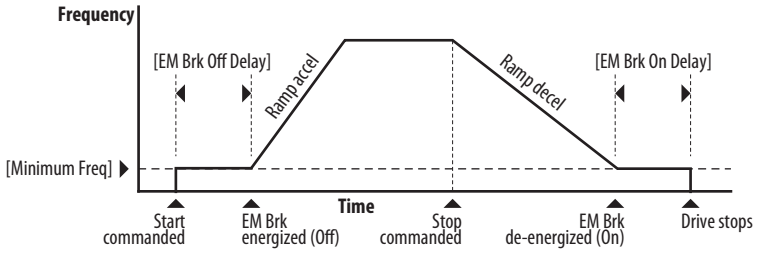

Values	Default:	2.00 s
	Min/Max:	0.00/10.00 s
	Display:	0.01 s

Terminal Block Group *(continued)*

t087 [EM Brk On Delay] Related Parameter(s): P045

Sets the time the drive remains at minimum frequency (after releasing the brake coil relay) before stopping if EM Brake Control Mode is enabled with P045 [Stop Mode].

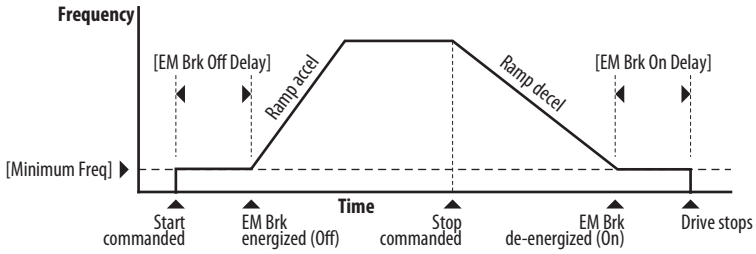

Values	Default:	2.00 s
	Min/Max:	0.00/10.00 s
	Display:	0.01 s

t088 [Analog Out Sel] Related Parameter(s): t090

PF 525 PowerFlex 525 only.

The 0-10V, 0-20 mA or 4-2 0 mA analog output can be used to provide a signal proportional to several drive conditions. This parameter also selects which analog calibration parameters to use.

Options	Output Range	Minimum Output Value	Maximum Output Value = t089 [Analog Out High]	Filter(1)	Related Parameter
0 "OutFreq 0-10"	0-10V	0V = 0 Hz	[Maximum Freq]	None	b001
1 "OutCurr 0-10"	0-10V	0V = 0 A	200% Drive Rated Current	Filter A	b003
2 "OutVolt 0-10"	0-10V	0V = 0 V	120% Drive Rated Output Volts	None	b004
3 "OutPowr 0-10"	0-10V	0V = 0 kW	200% Drive Rated Power	Filter A	b017
4 "OutTorq 0-10"	0-10V	0V = 0 A	200% Drive Rated Current	Filter A	d382
5 "TstData 0-10"	0-10V	0V = 0000	65535 (Hex FFFF)	None	–
6 "Setpnt 0-10"	0-10V	0V = 0%	100.0% Setpoint setting	None	t090
7 "DCVolt 0-10"	0-10V	0V = 0V	100.0% of trip value	None	b005
8 "OutFreq 0-20"	0-20 mA	0 mA = 0 Hz	[Maximum Freq]	None	b001
9 "OutCurr 0-20"	0-20 mA	0 mA = 0 A	200% Drive Rated Current	Filter A	b003
10 "OutVolt 0-20"	0-20 mA	0 mA = 0 V	120% Drive Rated Output Volts	None	b004
11 "OutPowr 0-20"	0-20 mA	0 mA = 0 kW	200% Drive Rated Power	Filter A	b017
12 "OutTorq 0-20"	0-20 mA	0 mA = 0 A	200% Drive Rated Current	Filter A	d382
13 "TstData 0-20"	0-20 mA	0 mA = 0000	65535 (Hex FFFF)	None	–
14 "Setpnt 0-20"	0-20 mA	0 mA = 0%	100.0% Setpoint setting	None	t090
15 "DCVolt 0-20"	0-20 mA	0 mA = 0V	100.0% of trip value	None	b005
16 "OutFreq 4-20"	4-20 mA	4 mA = 0 Hz	[Maximum Freq]	None	b001
17 "OutCurr 4-20"	4-20 mA	4 mA = 0 A	200% Drive Rated Current	Filter A	b003
18 "OutVolt 4-20"	4-20 mA	4 mA = 0 V	120% Drive Rated Output Volts	None	b004
19 "OutPowr 4-20"	4-20 mA	4 mA = 0 kW	200% Drive Rated Power	Filter A	b017
20 "OutTorq 4-20"	4-20 mA	4 mA = 0 A	200% Drive Rated Current	Filter A	d382
21 "TstData 4-20"	4-20 mA	4 mA = 0000	65535 (Hex FFFF)	None	–
22 "Setpnt 4-20"	4-20 mA	4 mA = 0%	100.0% Setpoint setting	None	t090
23 "DCVolt 4-20"	4-20 mA	4 mA = 0V	100.0% of trip value	None	b005

(1) Filter A is a single pole digital filter with a 162 ms time constant. Given a 0...100% step input from a steady state, the output of Filter A takes 500 ms to get to 95% of maximum, 810 ms to get to 99%, and 910 ms to get to 100%.

Values	Default:	0
	Min/Max:	0/23
	Display:	1

Terminal Block Group *(continued)*

t089 [Analog Out High]

PF 525 PowerFlex 525 only.

Scales the maximum output value (V or mA) when the source setting is at maximum.

Values	Default:	100%
	Min/Max:	0/800%
	Display:	1%

t090 [Anlg Out Setpt] Related Parameter(s): t088

PF 525 PowerFlex 525 only.

Sets the percentage of output desired when t088 [Analog Out Sel] is set to 6, 14 or 22 "Analog Setpoint".

Values	Default:	0.0%
	Min/Max:	0.0/100.0%
	Display:	0.1%

t091 [Anlg In 0-10V Lo] Related Parameter(s): P043, t092, t093

Stop drive before changing this parameter.

Sets the percentage (based on 10V) of input voltage applied to the 0-10V analog input used to represent P043 [Minimum Freq].
Analog inversion can be accomplished by setting this value larger than t092 [Anlg In 0-10V Hi].
If t093 [10V Bipolar Enbl] is set to 1 "Bi-Polar In", this parameter is ignored.

Values	Default:	0.0%
	Min/Max:	0.0/200.0%
	Display:	0.1%

t092 [Anlg In 0-10V Hi] Related Parameter(s): P044, t091, t093

Stop drive before changing this parameter.

Sets the percentage (based on 10V) of input voltage applied to the 0-10V analog input used to represent P044 [Maximum Freq].
Analog inversion can be accomplished by setting this value smaller than t091 [Anlg In 0-10V Lo].
If t093 [10V Bipolar Enbl] is set to 1 "Bi-Polar In", the same value applies to positive and negative voltage.

Values	Default:	100.0%
	Min/Max:	0.0/200.0%
	Display:	0.1%

t093 [10V Bipolar Enbl] Related Parameter(s): t091, t092

PF 525 PowerFlex 525 only.

Enables/disables bi-polar control. In bi-polar mode direction is commanded by the polarity of the voltage.
If bi-polar control is enabled, P043 [Minimum Freq] and t091 [Anlg In 0-10V Lo] are ignored.

Options	0 "Uni-Polar In" (Default)	0-10V only
	1 "Bi-Polar In"	±10V

Terminal Block Group *(continued)*

t094 [Anlg In V Loss] Related Parameter(s): P043, P044, A426, A427

Sets the response to a loss of input. When the 0-10V input (or −10 to +10V) is used for any reference, any input less than 1V is reported as a signal loss. Input must exceed 1.5V for the signal loss condition to end.

If enabled, this function affects any input that is being used as a speed reference, PID reference or PID setpoint in the drive.

Options	0	"Disabled" (Default)
	1	"Fault (F29)"
	2	"Stop"
	3	"Zero Ref"
	4	"Min Freq Ref"
	5	"Max Freq Ref"
	6	"Key Freq Ref"
	7	"MOP Freq Ref"
	8	"Continu Last"

t095 [Anlg In4-20mA Lo] Related Parameter(s): P043, t096

Stop drive before changing this parameter.

Sets the percentage (based on 4-20 mA) of input current applied to the 4-20 mA analog input used to represent P043 [Minimum Freq].

Analog inversion can be accomplished by setting this value larger than t096 [Anlg In4-20mA Hi].

Values	Default:	0.0%
	Min/Max:	0.0/100.0%
	Display:	0.1%

t096 [Anlg In4-20mA Hi] Related Parameter(s): P044, t095

Stop drive before changing this parameter.

Sets the percentage (based on 4-20 mA) of input current applied to the 4-20 mA analog input used to represent P044 [Maximum Freq].

Analog inversion can be accomplished by setting this value smaller than t095 [Anlg In4-20mA Lo].

Values	Default:	100.0%
	Min/Max:	0.0/200.0%
	Display:	0.1%

t097 [Anlg In mA Loss] Related Parameter(s): P043, P044, A426, A427

Sets the response to a loss of input. When the 4-20mA input is used for any reference, any input less than 2 mA is reported as a signal loss. Input must exceed 3 mA for the signal loss condition to end.

If enabled, this function affects any input that is being used as a speed reference or PID reference or PID setpoint in the drive.

Options	0	"Disabled" (Default)
	1	"Fault (F29)"
	2	"Stop"
	3	"Zero Ref"
	4	"Min Freq Ref"
	5	"Max Freq Ref"
	6	"Key Freq Ref"
	7	"MOP Freq Ref"
	8	"Continu Last"

Terminal Block Group *(continued)*

t098 [Anlg Loss Delay] Related Parameter(s): t094, t097

Sets the length of time after power-up during which the drive detects no analog signal loss.
Response to an analog signal loss is set in t094 or t097 [Analog In x Loss].

Values	Default:	0.0 s
	Min/Max:	0.0 /20.0 s
	Display:	0.1 s

t099 [Analog In Filter]

Sets the level of additional filtering of the analog input signals. A higher number increases filtering and decreases bandwidth. Each setting doubles the applied filtering (1 = 2x filter, 2 = 4x filter, and so on).

Values	Default:	0
	Min/Max:	0/14
	Display:	1

t100 [Sleep-Wake Sel] Related Parameter(s): t101, t102, t103

Drive "sleeps" if the appropriate analog input drops below the set t101 [Sleep Level] for the time set in t102 [Sleep Time] and the drive is running. When entering sleep mode the drive ramps to zero and the run indicator on the keypad display flashes to indicate the drive is in "sleep" mode.
When the appropriate analog input rises above the set [Wake Level], the drive "wakes" and ramps to the commanded frequency.
Inversion can be accomplished by setting [Sleep Level] to a higher setting than t103 [Wake Level].



ATTENTION: Enabling the Sleep-Wake function can cause unexpected machine operation during the Wake mode. Equipment damage and/or personal injury can result if this parameter is used in an inappropriate application. In addition, all applicable local, national and international codes, standards, regulations or industry guidelines must be considered.

Options	0	"Disabled" (Default)	
	1	"0-10V Input"	Sleep enabled from 0-10V Analog Input 1
	2	"4-20mA Input"	Sleep enabled from 4-20 mA Analog Input 2
	3	"Command Freq"	Sleep enabled based on drive commanded frequency

t101 [Sleep Level]

Sets the analog input level the drive must reach to enter sleep mode.

Values	Default:	10.0%
	Min/Max:	0.0/100.0%
	Display:	0.1%

t102 [Sleep Time]

Sets the analog input time the drive must stay below to enter sleep mode.

Values	Default:	0.0 s
	Min/Max:	0.0/600.0 s
	Display:	0.1 s

t103 [Wake Level]

Sets the analog input level the drive must reach to wake from sleep mode.

Values	Default:	15.0%
	Min/Max:	0.0/100.0%
	Display:	0.1%

Terminal Block Group *(continued)*

t104 [Wake Time]

Sets the analog input time the drive must stay above to wake from sleep mode.

Values	Default:	0.0 s
	Min/Max:	0.0/600.0 s
	Display:	0.1 s

t105 [Safety Open En]

PF 525 PowerFlex 525 only.

Sets the action when both safety inputs (Safety 1 and Safety 2) are disabled (de-energized – no power is applied).

Options	0	"FaultEnable" (Default)
	1	"FaultDisable"

Communications Group

C121 [Comm Write Mode]

Saves parameter values in active drive memory (RAM) or in drive non-volatile memory (EEPROM).



ATTENTION: If Automatic Drive Configuration (ADC) is used, this parameter must remain at its default value of 0 "Save".

IMPORTANT Parameter values set prior to setting 1 "RAM only" are saved in RAM.

Options	0	"Save" (Default)
	1	"RAM only"

C122 [Cmd Stat Select]

PF 525 PowerFlex 525 only.

Selects velocity-specific or position/fibers-specific Command and Status Word bit definitions for use over a communication network. See Writing (06) Logic Command Data on page 191 for more information. This parameter cannot be changed when an I/O connection is established through the communication adapter or the drive's embedded EtherNet/IP port.

Options	0	"Velocity" (Default)
	1	"Position"

C123 [RS485 Data Rate]

Sets the communications baud rate (bits/second) for the RS485 port. A reset or power cycle is required after selection is made.

Options	0	"1200"
	1	"2400"
	2	"4800"
	3	"9600" (Default)
	4	"19,200"
	5	"38,400"

C124 [RS485 Node Addr]

Sets the Modbus drive node number (address) for the RS485 port if using a network connection. A reset or power cycle is required after selection is made.

Values	Default:	100
	Min/Max:	1/247
	Display:	1

C125 [Comm Loss Action] Related Parameter(s): P045

Sets the drive's response to a loss of connection or excessive communication errors on the RS485 port.

Options	0	"Fault" (Default)	
	1	"Coast Stop"	Stops drive using "Coast to stop".
	2	"Stop"	Stops drive using P045 [Stop Mode] setting.
	3	"Continu Last"	Drive continues operating at communication commanded speed saved in RAM.

C126 [Comm Loss Time] Related Parameter(s): C125

Sets the time that the drive remains in communication loss with the RS485 port before taking the action specified in C125 [Comm Loss Action]. See Appendix C for more information.

IMPORTANT This setting is effective only if I/O that controls the drive is transmitted through the RS485 port.

Values	Default:	5.0 s
	Min/Max:	0.1/60.0 s
	Display:	0.1 s

Communications Group *(continued)*

C127 [RS485 Format]

Determines the details related to the specific Modbus protocol used by the drive. A reset or power cycle is required after selection is made.

Options	0	"RTU 8-N-1" (Default)
	1	"RTU 8-E-1"
	2	"RTU 8-O-1"
	3	"RTU 8-N-2"
	4	"RTU 8-E-2"
	5	"RTU 8-O-2"

C128 [EN Addr Sel]

Related Parameter(s): C129-C132, C133-C136, C137-C140

PF 525 PowerFlex 525 only.

Enables the IP address, subnet mask and gateway address to be set with a BOOTP server. Identifies the connections that would be attempted on a reset or power cycle. A reset or power cycle is required after selection is made.

Options	1	"Parameters"
	2	"BOOTP" (Default)

C129 [EN IP Addr Cfg 1]
C130 [EN IP Addr Cfg 2]
C131 [EN IP Addr Cfg 3]
C132 [EN IP Addr Cfg 4]

Related Parameter(s): C128

PF 525 PowerFlex 525 only.

Sets the bytes in the IP address. A reset or power cycle is required after selection is made.

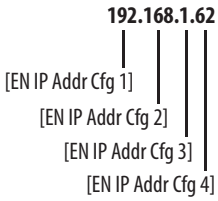

IMPORTANT C128 [EN Addr Sel] must be set to 1 "Parameters".

Values	Default:	0
	Min/Max:	0/255
	Display:	1

Communications Group *(continued)*

C133 [EN Subnet Cfg 1]
C134 [EN Subnet Cfg 2]
C135 [EN Subnet Cfg 3]
C136 [EN Subnet Cfg 4]

Related Parameter(s): C128

PF 525 PowerFlex 525 only.

Sets the bytes of the subnet mask. A reset or power cycle is required after selection is made.

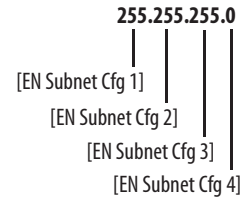

IMPORTANT C128 [EN Addr Sel] must be set to 1 "Parameters".

Values	Default:	0
	Min/Max:	0/255
	Display:	1

C137 [EN Gateway Cfg 1]
C138 [EN Gateway Cfg 2]
C139 [EN Gateway Cfg 3]
C140 [EN Gateway Cfg 4]

Related Parameter(s): C128

PF 525 PowerFlex 525 only.

Sets the bytes of the gateway address. A reset or power cycle is required after selection is made.

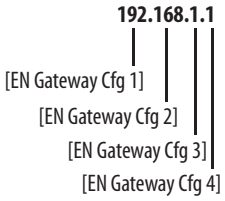

IMPORTANT C128 [EN Addr Sel] must be set to 1 "Parameters".

Values	Default:	0
	Min/Max:	0/255
	Display:	1

C141 [EN Rate Cfg]

PF 525 PowerFlex 525 only.

Sets the network data rate at which EtherNet/IP communicates. A reset or power cycle is required after selection is made.

Options	0	"Auto detect" (Default)
	1	"10Mbps Full"
	2	"10Mbps Half"
	3	"100Mbps Full"
	4	"100Mbps Half"

Communications Group *(continued)*

C143 [EN Comm Flt Actn] Related Parameter(s): P045, C145, C146, C147-C150

PF 525 PowerFlex 525 only.

Sets the action that the EtherNet/IP interface and drive takes if the EtherNet/IP interface detects that Ethernet communications have been disrupted.

IMPORTANT This setting is effective only if I/O that controls the drive is transmitted through the EtherNet/IP interface.

ATTENTION: Risk of injury or equipment damage exists. Parameter C143 [EN Comm Flt Actn] lets you determine the action of the EtherNet/IP interface and connected drive if communications are disrupted. By default, this parameter faults the drive. You can set this parameter so that the drive continues to run. Precautions should be taken to ensure that the setting of this parameter does not create a risk of injury or equipment damage. When commissioning the drive, verify that your system responds correctly to various situations (for example, a disconnected drive).

Options	0	"Fault" (Default)	
	1	"Stop"	Drive stops per P045 [Stop Mode] setting.
	2	"Zero Data"	Note: The Reference and Datalink values transmitted to the drive will be set to "0".
	3	"Hold Last"	Note: The Logic Command, Reference, and Datalink values transmitted to the drive will be held at their last value.
	4	"Send Flt Cfg"	Note: The Logic Command, Reference, and Datalink values will be transmitted to the drive as configured in C145, C146, and C147...C150.

C144 [EN Idle Flt Actn] Related Parameter(s): P045, C145, C146, C147-C150

PF 525 PowerFlex 525 only.

Sets the action that the EtherNet/IP interface and drive takes if the EtherNet/IP interface detects that the scanner is idle because the controller was switched to program mode.

ATTENTION: Risk of injury or equipment damage exists. Parameter C144 [EN Idle Flt Actn] lets you determine the action of the EtherNet/IP interface and connected drive if the scanner is idle. By default, this parameter faults the drive. you can set this parameter so that the drive continues to run. Precautions should be taken to ensure that the setting of this parameter does not create a risk of injury or equipment damage. When commissioning the drive, verify that your system responds correctly to various situations (for example, a disconnected drive).

Options	0	"Fault" (Default)	
	1	"Stop"	Drive stops per P045 [Stop Mode] setting.
	2	"Zero Data"	Note: The Reference and Datalink values transmitted to the drive will be set to "0".
	3	"Hold Last"	Note: The Logic Command, Reference, and Datalink values transmitted to the drive will be held at their last value.
	4	"Send Flt Cfg"	Note: The Logic Command, Reference, and Datalink values will be transmitted to the drive as configured in C145, C146, and C147...C150.

C145 [EN Flt Cfg Logic] Related Parameter(s): C143, C144

32 32 bit parameter.

PF 525 PowerFlex 525 only.

Sets the Logic Command data that is sent to the drive if any of the following is true:

– C143 [EN Comm Flt Actn] is set to 4 "Send Flt Cfg" and communications are disrupted.

– C144 [EN Idle Flt Actn] is set to 4 "Send Flt Cfg" and the scanner is put into Program or Test mode.

See Writing (06) Logic Command Data on page 191 for more information.

Values	Default:	0000
	Min/Max:	0000/FFFF
	Display:	0000

Communications Group *(continued)*

C146 [EN Flt Cfg Ref] Related Parameter(s): C143, C144

32 32 bit parameter.

PF 525 PowerFlex 525 only.

Sets the Reference data that is sent to the drive if any of the following is true:
– C143 [EN Comm Flt Actn] is set to 4 "Send Flt Cfg" and communications are disrupted.
– C144 [EN Idle Flt Actn] is set to 4 "Send Flt Cfg" and the scanner is put into Program or Test mode.

Values	Default:	0
	Min/Max:	0/50000
	Display:	1

C147 [EN Flt Cfg DL 1]
C148 [EN Flt Cfg DL 2]
C149 [EN Flt Cfg DL 3]
C150 [EN Flt Cfg DL 4]

PF 525 PowerFlex 525 only.

Sets the Ethernet Datalink Input data that is sent to the drive if any of the following is true:
– C143 [EN Comm Flt Actn] is set to 4 "Send Flt Cfg" and communications are disrupted.
– C144 [EN Idle Flt Actn] is set to 4 "Send Flt Cfg" and the scanner is put into Program or Test mode.

Values	Default:	0
	Min/Max:	0/65535
	Display:	1

C153 [EN Data In 1]
C154 [EN Data In 2]
C155 [EN Data In 3]
C156 [EN Data In 4]

PF 525 PowerFlex 525 only.

Datalink parameter number whose value is written from the embedded EtherNet/IP data table. This parameter cannot be changed when an I/O connection is established through the drive's embedded EtherNet/IP port.

Values	Default:	0
	Min/Max:	0/800
	Display:	1

C157 [EN Data Out 1]
C158 [EN Data Out 2]
C159 [EN Data Out 3]
C160 [EN Data Out 4]

PF 525 PowerFlex 525 only.

Datalink parameter number whose value is read from the embedded EtherNet/IP data table. This parameter cannot be changed when an I/O connection is established through the drive's embedded EtherNet/IP port.

Values	Default:	0
	Min/Max:	0/800
	Display:	1

Communications Group *(continued)*

C161 [Opt Data In 1]
C162 [Opt Data In 2]
C163 [Opt Data In 3]
C164 [Opt Data In 4]

Datalink parameter number whose value is written from the High Speed Drive Serial Interface (HSDSI) data table. This parameter cannot be changed when an I/O connection is established through the communication adapter.

Values	Default:	0
	Min/Max:	0/800
	Display:	1

C165 [Opt Data Out 1]
C166 [Opt Data Out 2]
C167 [Opt Data Out 3]
C168 [Opt Data Out 4]

Datalink parameter number whose value is read from the HSDSI data table. This parameter cannot be changed when an I/O connection is established through the communication adapter.

Values	Default:	0
	Min/Max:	0/800
	Display:	1

C169 [MultiDrv Sel]

Sets the configuration of the drive that is in multi-drive mode. A reset or power cycle is required after selection is made.

Options	0 "Disabled" (Default)	No multi-drive master from the internal network option module or embedded Ethernet port. The drive can still function as a multi-drive slave or as a single drive (no multi-drive used).
	1 "Network Opt"	Multi-drive is enabled with the internal network option as a multi-drive master. The host drive is "Drive 0" and up to four slave drives can be daisy-chained from its RS485 port.
	2 "EtherNet/IP"(1)	Multi-drive is enabled with the embedded Ethernet port as the multi-drive master. The host drive is "Drive 0" and up to four slave drives can be daisy-chained from its RS485 port.

(1) Setting is specific to PowerFlex 525 drives only.

C171 [Drv 1 Addr]
C172 [Drv 2 Addr]
C173 [Drv 3 Addr]
C174 [Drv 4 Addr]

Related Parameter(s): C169

Sets the corresponding node addresses of the daisy-chained drives when C169 [MultiDrv Sel] is set to 1 "Network Opt" or 2 "EtherNet/IP". A reset or power cycle is required after selection is made.

Values	Default: Drv 1 Addr: Drv 2 Addr: Drv 3 Addr: Drv 4 Addr:	 2 3 4 5
	Min/Max:	1/247
	Display:	1

C175 [DSI I/O Cfg]

Sets the configuration of the Drives that are active in the multi-drive mode. Identifies the connections that would be attempted on a reset or power cycle. A reset or power cycle is required after selection is made.

Options	0 "Drive 0" (Default)	
	1 "Drive 0-1"	
	2 "Drive 0-2"	
	3 "Drive 0-3"	
	4 "Drive 0-4"	

Logic Group

L180 [Stp Logic 0] **L181 [Stp Logic 1]**
L182 [Stp Logic 2] **L183 [Stp Logic 3]**
L184 [Stp Logic 4] **L185 [Stp Logic 5]**
L186 [Stp Logic 6] **L187 [Stp Logic 7]**

Related Parameter(s):

Stop drive before changing this parameter.

PF 525 PowerFlex 525 only.

Values	Default:	00F1
	Min/Max:	0000/FAFF
	Display	0001

See Appendix D and Appendix E for more information on applying Step Logic and Position StepLogic.

Parameters L180...L187 are only active if P047, P049, or P051 [Speed Referencex] is set to 13 "Step Logic" or 16 "Positioning". These parameters can be used to create a custom profile of frequency commands. Each "step" can be based on time, status of a Logic input or a combination of time and the status of a Logic input.

Digits 1...4 for each [Stp Logic x] parameter must be programmed according to the desired profile. A Logic input is established by setting a digital input, parameters t062, t063, t065...t068 [DigIn TermBlk xx] to 24 "Logic In 1" and/or 25 "Logic In 2" or by using Bits 6 and 7 of A560 [Enh Control Word].

A time interval between steps can be programmed using parameters L190...L197 [Stp Logic Time x]. See the table below for related parameters.

The speed for any step is programmed using parameters A410...A417 [Preset Freq x].

Step	StepLogic Parameter	Related Preset Frequency Parameter (Can be activated independent of StepLogic Parameters)	Related StepLogic Time Parameter (Active when L180...L187 Digit 1 or 2 are set to 1, b, C, d or E)
0	L180 [Stp Logic 0]	A410 [Preset Freq 0]	L190 [Stp Logic Time 0]
1	L181 [Stp Logic 1]	A411 [Preset Freq 1]	L191 [Stp Logic Time 1]
2	L182 [Stp Logic 2]	A412 [Preset Freq 2]	L192 [Stp Logic Time 2]
3	L183 [Stp Logic 3]	A413 [Preset Freq 3]	L193 [Stp Logic Time 3]
4	L184 [Stp Logic 4]	A414 [Preset Freq 4]	L194 [Stp Logic Time 4]
5	L185 [Stp Logic 5]	A415 [Preset Freq 5]	L195 [Stp Logic Time 5]
6	L186 [Stp Logic 6]	A416 [Preset Freq 6]	L196 [Stp Logic Time 6]
7	L187 [Stp Logic 7]	A417 [Preset Freq 7]	L197 [Stp Logic Time 7]

The position for any step is programmed using parameters L200...L214 [Step Units x].

Step	StepLogic Position Parameter
0	L200 [Step Units 0] & L201 [Step Units F 0]
1	L202 [Step Units 1] & L203 [Step Units F 1]
2	L204 [Step Units 2] & L205 [Step Units F 2]
3	L206 [Step Units 3] & L207 [Step Units F 3]
4	L208 [Step Units 4] & L209 [Step Units F 4]
5	L210 [Step Units 5] & L211 [Step Units F 5]
6	L212 [Step Units 6] & L213 [Step Units F 6]
7	L214 [Step Units 7] & L215 [Step Units F 7]

How StepLogic Works

The StepLogic sequence begins with a valid start command. A normal sequence always begins with L180 [Stp Logic 0].

Digit 1: Logic for next step

This digit defines the logic for the next step. When the condition is met the program advances to the next step. Step 0 follows Step 7. Example: Digit 1 is set to 3. When "Logic In 2" becomes active, the program advances to the next step.

Digit 2: Logic to jump to a different step

For all settings other than F, when the condition is met, the program overrides Digit 0 and jumps to the step defined by Digit 3.

Digit 3: Different step to jump

When the condition for Digit 2 is met, this digit setting determines the next step or to end the program.

Digit 4: Step settings

This digit defines additional characteristics of each step.

Any StepLogic parameter can be programmed to control a relay or opto output, but you can not control different outputs based on the condition of different StepLogic commands.

StepLogic Settings

The logic for each function is determined by the four digits for each StepLogic parameter. The following is a listing of the available settings for each digit. See Appendix D for more information.

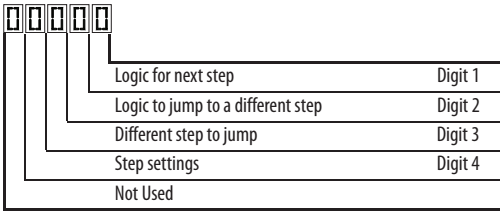

Velocity Control Settings (Digit 4)

Required Setting	Accel/Decel Param. Used	StepLogic Output State	Commanded Direction
0	Accel/Decel 1	Off	FWD
1	Accel/Decel 1	Off	REV
2	Accel/Decel 1	Off	No Output
3	Accel/Decel 1	On	FWD
4	Accel/Decel 1	On	REV
5	Accel/Decel 1	On	No Output
6	Accel/Decel 2	Off	FWD
7	Accel/Decel 2	Off	REV
8	Accel/Decel 2	Off	No Output
9	Accel/Decel 2	On	FWD
A	Accel/Decel 2	On	REV
b	Accel/Decel 2	On	No Output

Positioning Settings (Digit 4)

Required Setting	Accel/Decel Param. Used	StepLogic Output State	Direction From Home	Type of Command
0	Accel/Decel 1	Off	FWD	Absolute
1	Accel/Decel 1	Off	FWD	Incremental
2	Accel/Decel 1	Off	REV	Absolute
3	Accel/Decel 1	Off	REV	Incremental
4	Accel/Decel 1	On	FWD	Absolute
5	Accel/Decel 1	On	FWD	Incremental
6	Accel/Decel 1	On	REV	Absolute
7	Accel/Decel 1	On	REV	Incremental
8	Accel/Decel 2	Off	FWD	Absolute
9	Accel/Decel 2	Off	FWD	Incremental
A	Accel/Decel 2	Off	REV	Absolute
b	Accel/Decel 2	Off	REV	Incremental
C	Accel/Decel 2	On	FWD	Absolute
d	Accel/Decel 2	On	FWD	Incremental
E	Accel/Decel 2	On	REV	Absolute
F	Accel/Decel 2	On	REV	Incremental

Settings (Digit 3)

Setting	Description
0	Jump to Step 0
1	Jump to Step 1
2	Jump to Step 2
3	Jump to Step 3
4	Jump to Step 4
5	Jump to Step 5
6	Jump to Step 6
7	Jump to Step 7
8	End Program (Normal Stop)
9	End Program (Coast to Stop)
A	End Program and Fault (F2)

Settings (Digit 2 and 1)

Setting	Description
0	Skip Step (Jump Immediately)
1	Step Based on [Stp Logic Time x]
2	Step if “Logic In 1” is Active
3	Step if “Logic In 2” is Active
4	Step if “Logic In 1” is Not Active
5	Step if “Logic In 2” is Not Active
6	Step if either “Logic In 1” or “Logic In 2” is Active
7	Step if both “Logic In 1” and “Logic In 2” are Active
8	Step if neither “Logic In 1” nor “Logic In 2” is Active
9	Step if “Logic In 1” is Active and “Logic In 2” is Not Active
A	Step if “Logic In 2” is Active and “Logic In 1” is Not Active
b	Step after [Stp Logic Time x] and “Logic In 1” is Active
C	Step after [Stp Logic Time x] and “Logic In 2” is Active
d	Step after [Stp Logic Time x] and “Logic In 1” is Not Active
E	Step after [Stp Logic Time x] and “Logic In 2” is Not Active
F	Do Not Step/Ignore Digit 2 Settings

Logic Group *(continued)*

L190 [Stp Logic Time 0] **L191 [Stp Logic Time 1]**
L192 [Stp Logic Time 2] **L193 [Stp Logic Time 3]**
L194 [Stp Logic Time 4] **L195 [Stp Logic Time 5]**
L196 [Stp Logic Time 6] **L197 [Stp Logic Time 7]**

PF 525 PowerFlex 525 only.

Sets the time to remain in each step if the corresponding command word is set to "Step based on time".

Values	Default:	30.0 s
	Min/Max:	0.0/999.9 s
	Display:	0.1 s

L200 [Step Units 0] **L202 [Step Units 1]**
L204 [Step Units 2] **L206 [Step Units 3]**
L208 [Step Units 4] **L210 [Step Units 5]**
L212 [Step Units 6] **L214 [Step Units 7]**

32 32 bit parameter.

PF 525 PowerFlex 525 only.

Sets the position in user-defined units the drive must reach at each step.

Values	Default:	0
	Min/Max:	0/6400
	Display:	1

Advanced Display Group

d360 [Analog In 0-10V] Related Parameter(s): t091, t092

Displays the 0-10V analog input as a percent of full scale.

Values	Default:	Read Only
	Min/Max:	0.0/100.0%
	Display:	0.1%

d361 [Analog In 4-20mA] Related Parameter(s): t095, t096

Displays the 4-20 mA analog input as a percent of full scale.

Values	Default:	Read Only
	Min/Max:	0.0/100.0%
	Display:	0.1%

d362 [Elapsed Time-hr] Related Parameter(s): A555

Displays the total elapsed powered-up time (in hours) since timer reset. The timer stops when it reaches the maximum value.

Values	Default:	Read Only
	Min/Max:	0/32767 hr
	Display:	1 hr

d363 [Elapsed Time-min] Related Parameter(s): d362, A555

Displays the total elapsed powered-up time (in minutes) since timer reset. Resets to zero when maximum value is reached and increments d362 [Elapsed Time-hr] by one.

Values	Default:	Read Only
	Min/Max:	0.0/60.0 min
	Display:	0.1 min

d364 [Counter Status]

Displays the current value of the counter if enabled.

Values	Default:	Read Only
	Min/Max:	0/65535
	Display:	1

d365 [Timer Status]

32 32 bit parameter.

Displays the current value of the timer if enabled.

Values	Default:	Read Only
	Min/Max:	0/9999 s
	Display:	1 s

d367 [Drive Type]

Used by Rockwell Automation field service personnel.

Values	Default:	Read Only
	Min/Max:	0/65535
	Display:	1

Advanced Display Group *(continued)*

d368 [Testpoint Data] Related Parameter(s): A483

Displays the present value of the function selected in A483 [Testpoint Sel].

Values	Default:	Read Only
	Min/Max:	0/FFFF
	Display:	1

d369 [Motor OL Level]

Displays the motor overload counter.

Values	Default:	Read Only
	Min/Max:	0.0/150.0%
	Display:	0.1%

d375 [Slip Hz Meter] Related Parameter(s): P032

Displays the current amount of slip or droop (absolute value) being applied to the motor frequency. Drives applies slip based on the setting for P032 [Motor NP Hertz].

Values	Default:	Read Only
	Min/Max:	0.0/25.0 Hz
	Display:	0.1 Hz

d376 [Speed Feedback]

32 32 bit parameter.

Displays the value of the actual motor speed whether measured by encoder/pulse train feedback or estimated.

Values	Default:	Read Only
	Min/Max:	0/64000 rpm
	Display:	1 rpm

d378 [Encoder Speed]

32 32 bit parameter.

PF 525 PowerFlex 525 only.

Provides a monitoring point that reflects the speed measured from the feedback device. This shows the encoder or pulse train speed even if not used directly to control motor speed.

Values	Default:	Read Only
	Min/Max:	0/64000 rpm
	Display:	1 rpm

d380 [DC Bus Ripple]

Displays the real-time value of the DC bus ripple voltage.

Values	Default:	Read Only
	Min/Max:	0/410VDC for 230V AC drives; 820VDC for 460VAC drives; 1025VDC for 600VAC drives
	Display:	1V DC

d381 [Output Powr Fctr]

Displays the angle in electrical degrees between motor voltage and motor current.

Values	Default:	Read Only
	Min/Max:	0.0/180.0 deg
	Display:	0.1 deg

Advanced Display Group *(continued)*

d382 [Torque Current]

Displays the current value of the motor torque current measured by the drive.

Values	Default:	Read Only
	Min/Max:	0.00/(Drive Rated Amps x 2)
	Display:	0.01 A

d383 [PID1 Fdbk Displ]

d385 [PID2 Fdbk Displ]

PF 525 PowerFlex 525 only.

Displays the active PID Feedback value.

Values	Default:	Read Only
	Min/Max:	0.0/100.0%
	Display:	0.1%

d384 [PID1 Setpnt Disp]

d386 [PID2 Setpnt Disp]

PF 525 PowerFlex 525 only.

Displays the active PID Setpoint value.

Values	Default:	Read Only
	Min/Max:	0.0/100.0%
	Display:	0.1%

d387 [Position Status]

PF 525 PowerFlex 525 only.

Displays the present operating condition of the drive. When in Positioning mode, Bit 1 indicates positive or negative position in relation to Home.

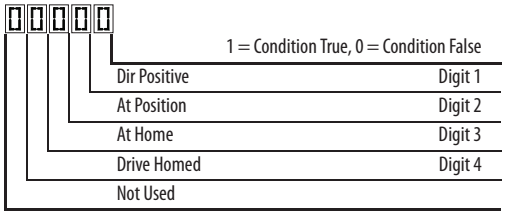

Values	Default:	Read Only
	Min/Max:	0000/1111
	Display:	0000

d388 [Units Traveled H]

Related Parameter(s): d387

Stop drive before changing this parameter.

32 bit parameter.

PF 525 PowerFlex 525 only.

Displays the number of user-defined units traveled from the home position. See d387 [Position Status] for direction of travel.

Values	Default:	Read Only
	Min/Max:	0/64000
	Display:	1

Advanced Display Group *(continued)*

d389 [Units Traveled L] Related Parameter(s): d387

Stop drive before changing this parameter.

PF 525 PowerFlex 525 only.

Displays the number of user-defined units traveled from the home position. See d387 [Position Status] for direction of travel.

Values	Default:	Read Only
	Min/Max:	0.00/0.99
	Display:	0.01

d390 [Fiber Status]

Present status of the Fibers features.

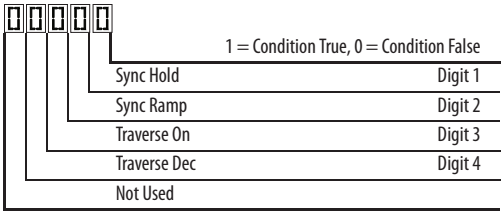

Values	Default:	Read Only
	Min/Max:	0000/1111
	Display:	0000

d391 [Stp Logic Status] Related Parameter(s): P047, L180-L187

32 32 bit parameter.

PF 525 PowerFlex 525 only.

Displays the current step of the Step Logic profile as defined by parameters L180...L187 [Step Logic x] when P047 [Speed Reference1] is set to 13 “Step Logic” or 16 “Positioning”.

Values	Default:	Read Only
	Min/Max:	0/8
	Display:	1

d392 [RdyBit Mode Act] Related Parameter(s): A574

PF 525 PowerFlex 525 only.

(With FRN 3.xxx and later.)
Displays the value of A574 [RdyBit Mode Cfg].

Values	Default:	Read Only
	Min/Max:	0/1
	Display:	1

Advanced Program Group

A410	**[Preset Freq 0]**	**A411**	**[Preset Freq 1]**
A412	**[Preset Freq 2]**	**A413**	**[Preset Freq 3]**
A414	**[Preset Freq 4]**	**A415**	**[Preset Freq 5]**
A416	**[Preset Freq 6]**	**A417**	**[Preset Freq 7]**
A418	**[Preset Freq 8]**	**A419**	**[Preset Freq 9]**
A420	**[Preset Freq 10]**	**A421**	**[Preset Freq 11]**
A422	**[Preset Freq 12]**	**A423**	**[Preset Freq 13]**
A424	**[Preset Freq 14]**	**A425**	**[Preset Freq 15]**

PF 525 PowerFlex 525 only.

Sets the frequency of the drive outputs to the programmed value when selected.

For PowerFlex 525

	Default Accel/Decel Used	Preset Input 1 (DigIn TermBlk 05)	Preset Input 2 (DigIn TermBlk 06)	Preset Input 3 (DigIn TermBlk 07)	Preset Input 4 (DigIn TermBlk 08)
Preset Setting 0[1]	1	0	0	0	0
Preset Setting 1	1	1	0	0	0
Preset Setting 2	2	0	1	0	0
Preset Setting 3	2	1	1	0	0
Preset Setting 4	1	0	0	1	0
Preset Setting 5	1	1	0	1	0
Preset Setting 6	2	0	1	1	0
Preset Setting 7	2	1	1	1	0
Preset Setting 8	1	0	0	0	1
Preset Setting 9	1	1	0	0	1
Preset Setting 10	2	0	1	0	1
Preset Setting 11	2	1	1	0	1
Preset Setting 12	1	0	0	1	1
Preset Setting 13	1	1	0	1	1
Preset Setting 14	2	0	1	1	1
Preset Setting 15	2	1	1	1	1

For PowerFlex 523

	Default Accel/Decel Used	Preset Input 1 (DigIn TermBlk 05)	Preset Input 2 (DigIn TermBlk 06)	Preset Input 3 (DigIn TermBlk 03)	–
Preset Setting 0[1]	1	0	0	0	–
Preset Setting 1	1	1	0	0	
Preset Setting 2	2	0	1	0	
Preset Setting 3	2	1	1	0	
Preset Setting 4	1	0	0	1	
Preset Setting 5	1	1	0	1	
Preset Setting 6	2	0	1	1	
Preset Setting 7	2	1	1	1	

(1) Preset Setting 0 is only available if P047, P049 or P051 [Speed Referencex] is set to 7 “Preset Freq”.

Values	Defaults:	
	Preset Freq 0:	0.00 Hz
	Preset Freq 1:	5.00 Hz
	Preset Freq 2:	10.00 HZ
	Preset Freq 3:	20.00 Hz
	Preset Freq 4:	30.00 Hz
	Preset Freq 5:	40.00 Hz
	Preset Freq 6:	50.00 Hz
	Preset Freq 7...15:	60.00 Hz
	Min/Max:	0.00/500.00 Hz
	Display:	0.01 Hz

Advanced Program Group *(continued)*

A426 [Keypad Freq] Related Parameter(s): P047, P049, P051

Provides the drive frequency command using the built-in keypad navigation. When P047, P049 or P051 [Speed Referencex] selects 2 "Keypad Freq", the value set in this parameter controls the frequency of the drive. The value of this parameter can also be changed when navigating with the keypad by pressing the Up or Down arrow keys.

Values	Default:	60.00 Hz
	Min/Max:	0.00/500.00 Hz
	Display:	0.01 Hz

A427 [MOP Freq]

Provides the drive frequency command using the built-in Motor Operated Potentiometer (MOP).

IMPORTANT Frequency is not written to non-volatile storage until drive is powered-down. If both MOP Up and MOP Down are applied at the same time, the inputs are ignored and the frequency is unchanged.

Values	Default:	60.00 Hz
	Min/Max:	0.00/500.00 Hz
	Display:	0.01 Hz

A428 [MOP Reset Sel]

Determines if the current MOP reference command is saved on power down.

Options	0 "Zero MOP Ref"	Resets the MOP frequency to zero on power down and stop.
	1 "Save MOP Ref" (Default)	

A429 [MOP Preload]

Determines the operation of the MOP function.

Options	0 "No preload" (Default)	
	1 "Preload"	Bumpless Transfer: whenever MOP mode is selected, the current output value of the speed is loaded.

A430 [MOP Time]

Sets the rate of change of the MOP reference.

Values	Default:	10.0 s
	Min/Max:	0.1/600.0 s
	Display:	0.1 s

A431 [Jog Frequency] Related Parameter(s): P044

Sets the output frequency when a jog command is issued.

Values	Default:	10.00 Hz
	Min/Max:	0.00/[Maximum Freq]
	Display:	0.01 Hz

A432 [Jog Accel/Decel]

Sets the acceleration and deceleration time used when in jog mode.

Values	Default:	10.00 s
	Min/Max:	0.01/600.00 s
	Display:	0.01 s

Advanced Program Group *(continued)*

A433 [Purge Frequency] Related Parameter(s): t062, t063, t065-t068

Provides a fixed frequency command value when t062, t063, t065-t068 [DigIn TermBlk xx] is set to 40 "Purge".

Values	Default:	5.00 Hz
	Min/Max:	0.00/500.00 Hz
	Display:	0.01 Hz

A434 [DC Brake Time] Related Parameter(s): P045, A435

Sets the length of time that DC brake current is "injected" into the motor.

Values	Default:	0.0 s
	Min/Max:	0.0/99.9 s
	Display:	0.1 s

A435 [DC Brake Level] Related Parameter(s): P045

Defines the maximum DC brake current, in amps, applied to the motor when P045 [Stop Mode] is set to either 4 "Ramp" or 6 "DC Brake".

Ramp-to-Stop Mode

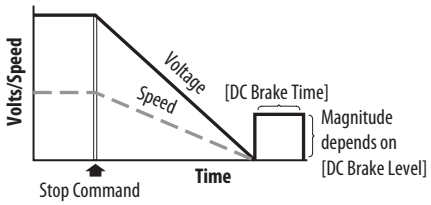

DC Injection Stop Mode

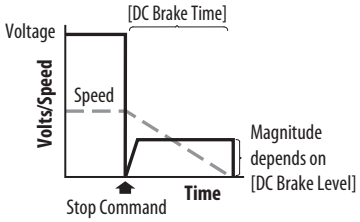

ATTENTION: If a hazard of injury due to movement of equipment or material exists, an auxiliary mechanical braking device must be used. This feature should not be used with synchronous motors. Motors may be demagnetized during braking.

Values	Default:	Drive Rated Amps x 0.05
	Min/Max:	0.00/(Drive Rated Amps x 1.80)
	Display:	0.01 A

A436 [DC Brk Time@Strt] Related Parameter(s): P045, A435

Sets the length of time that DC brake current is "injected" into the motor after a valid start command is received.

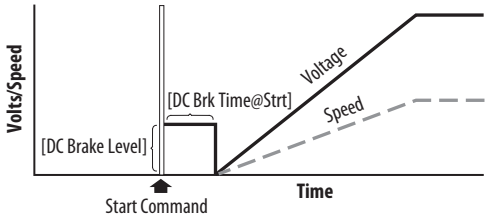

Values	Default:	0.0 s
	Min/Max:	0.0/99.9 s
	Display:	0.1 s

Advanced Program Group *(continued)*

A437 [DB Resistor Sel]

Stop drive before changing this parameter.

Enables/disables external dynamic braking and selects the level of resistor protection.

Options	0	"Disabled" (Default)	
	1	"Norml RA Res"	5%
	2	"NoProtection"	100%
	3...99	"3...99% DutyCycle"	

A438 [DB Threshold]

Related Parameter(s): A437

Sets the DC bus voltage threshold for Dynamic Brake operation. If DC bus voltage rises above this level, Dynamic Brake turns on. Lower values makes the dynamic braking function more responsive but may result in nuisance Dynamic Brake activation.

ATTENTION: Equipment damage may result if this parameter is set to a value that causes the dynamic braking resistor to dissipate excessive power. Parameter settings less than 100% should be carefully evaluated to ensure that the Dynamic Brake resistor's wattage rating is not exceeded. In general, values less than 90% are not needed. This parameter's setting is especially important if parameter A437 [DB Resistor Sel] is set to 2 "NoProtection".

Values	Default:	100.0%
	Min/Max:	10.0/110.0%
	Display:	0.1%

A439 [S Curve %]

Enables a fixed shape S-Curve that is applied to the acceleration and deceleration ramps (including jog).
S-Curve Time = (Accel or Decel Time) x (S-Curve Setting in percentage)

100% S-Curve

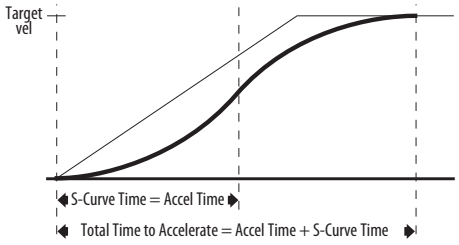

50% S-Curve

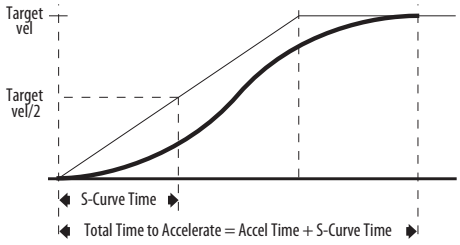

Example:
Accel Time = 10 s
S-Curve Setting = 30%
S-Curve Time = 10 x 0.3 = 3 s

Values	Default:	0%
	Min/Max:	0/100%
	Display:	1%

Advanced Program Group *(continued)*

A440 [PWM Frequency] Related Parameter(s): A540

Sets the carrier frequency for the PWM output waveform. The chart below provides derating guidelines based on the PWM frequency setting.

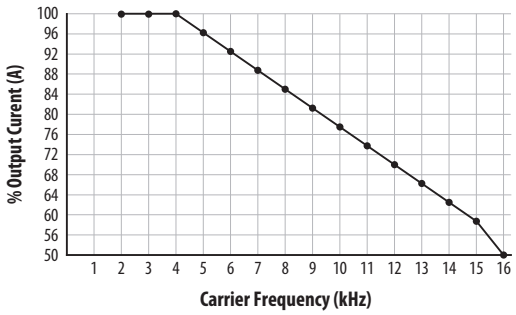

IMPORTANT Ignoring derating guidelines can cause reduced drive performance. The drive may automatically reduce the PWM carrier frequency at low output speeds, unless prevented from doing so by A540 [Var PWM Disable].

Values	Default:	4.0 kHz
	Min/Max:	2.0/16.0 kHz
	Display:	0.1 kHz

A441 [Droop Hertz@ FLA]

PF 525 PowerFlex 525 only.

Reduces the frequency based on current. This frequency is subtracted from the commanded output frequency. Generally Slip and Droop would not both be used, but if both are enabled they simply subtract from each other. Typically used in load sharing schemes.

Values	Default:	0.0 Hz
	Min/Max:	0.0/10.0 Hz
	Display:	0.1 Hz

A442 [Accel Time 2] Related Parameter(s): P044

Time for the drive to ramp from 0.0 Hz to P044 [Maximum Freq] if Accel Time 2 is selected.
Accel Rate = [Maximum Freq] / [Accel Time]

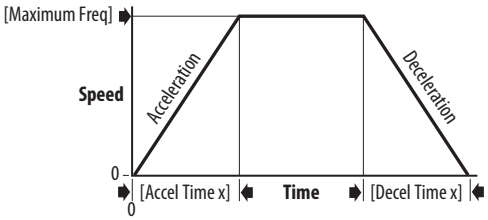

Values	Default:	10.00 s
	Min/Max:	0.00/600.00 s
	Display:	0.01 s

A443 [Decel Time 2] Related Parameter(s): P044

Time for the drive to ramp from P044 [Maximum Freq] to 0.0 Hz if Decel Time 2 is selected.
Decel Rate = [Maximum Freq] / [Decel Time]

Values	Default:	10.00 s
	Min/Max:	0.00/600.00 s
	Display:	0.01 s

Advanced Program Group *(continued)*

A444 [Accel Time 3]
A446 [Accel Time 4]

Sets the rate of acceleration for all speed increases when selected by digital inputs.

Values	Default:	10.00 s
	Min/Max:	0.00/600.00 s
	Display:	0.01 s

A445 [Decel Time 3]
A447 [Decel Time 4]

Sets the rate of deceleration for all speed decreases when selected by digital inputs.

Values	Default:	10.00 s
	Min/Max:	0.00/600.00 s
	Display:	0.01 s

A448 [Skip Frequency 1]
A450 [Skip Frequency 2]

A452 [Skip Frequency 3]
A454 [Skip Frequency 4]

PF 525 PowerFlex 525 only.

Related Parameter(s): A449, A451, A453, A455

Works in conjunction with A449, A451, A453 and A455 [Skip Freq Band x] creating a range of frequencies at which the drive does not operate continuously.

Values	Default:	0.0 Hz (Disabled)
	Min/Max:	0.0/500.0 Hz
	Display:	0.1 Hz

A449 [Skip Freq Band 1]
A451 [Skip Freq Band 2]

A453 [Skip Freq Band 3]
A455 [Skip Freq Band 4]

PF 525 PowerFlex 525 only.

Related Parameter(s): A448, A450, A452, A454

Determines the band around A448, A450, A452 and A454 [Skip Frequency x].

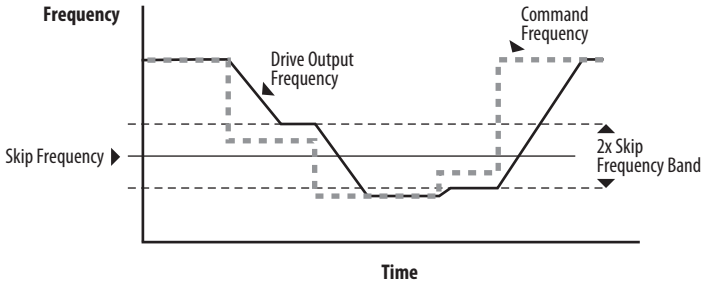

Values	Default:	0.0 Hz
	Min/Max:	0.0/30.0 Hz
	Display:	0.1 Hz

Advanced Program Group *(continued)*

A456 [PID 1 Trim Hi]

A468 [PID 2 Trim Hi]

PF 525 PowerFlex 525 only.

Scales the upper value of the trim frequency when trim is active.

Values	Default:	60.0 Hz
	Min/Max:	0.0/500.0 Hz
	Display:	0.1 Hz

A457 [PID 1 Trim Lo]

A469 [PID 2 Trim Lo]

PF 525 PowerFlex 525 only.

Scales the lower value of the trim frequency when trim is active.

Values	Default:	0.0 Hz
	Min/Max:	0.0/500.0 Hz
	Display:	0.1 Hz

A458 [PID 1 Trim Sel]

A470 [PID 2 Trim Sel]

PF 525 PowerFlex 525 only.

Stop drive before changing this parameter.

Sets the PID output as trim to the source reference.

Options	0	"Disabled" (Default)	PID Trim is disabled.
	1	"TrimOn Pot"	
	2	"TrimOn Keypd"	
	3	"TrimOn DSI"	
	4	"TrimOn NetOp"	
	5	"TrimOn 0-10V"	
	6	"TrimOn 4-20"	
	7	"TrimOn Prset"	
	8	"TrimOn AnMlt"(1)	
	9	"TrimOn MOP"	
	10	"TrimOn Pulse"	
	11	"TrimOn SIgic"(1)	
	12	"TrimOn Encdr"(1)	
	13	"TrimOn ENet"(1)	

(1) Setting is specific to PowerFlex 525 drives only.

Advanced Program Group *(continued)*

A459 [PID 1 Ref Sel]

A471 [PID 2 Ref Sel]

PF 525 PowerFlex 525 only.

Stop drive before changing this parameter.

Selects the source of the PID reference.

Options	0	"PID Setpoint" (Default)
	1	"Drive Pot"
	2	"Keypad Freq"
	3	"Serial/DSI"
	4	"Network Opt"
	5	"0-10V Input"
	6	"4-20mA Input"
	7	"Preset Freq"
	8	"AnIgIn Multi"(1)
	9	"MOP Freq"
	10	"Pulse Input"
	11	"Step Logic"(1)
	12	"Encoder"(1)
	13	"EtherNet/IP"(1)

(1) Setting is specific to PowerFlex 525 drives only.

A460 [PID 1 Fdback Sel]

A472 [PID 2 Fdback Sel]

PF 525 PowerFlex 525 only.

Selects the source of the PID feedback.

Options	0	"0-10V Input" (Default)	Note: PID does not function with bipolar input. Negative voltages are ignored and treated as zero.
	1	"4-20mA Input"	
	2	"Serial/DSI"	
	3	"Network Opt"	
	4	"Pulse Input"	
	5	"Encoder"(1)	
	6	"EtherNet/IP"(1)	

(1) Setting is specific to PowerFlex 525 drives only.

A461 [PID 1 Prop Gain]

Related Parameter(s): A459, A471

A473 [PID 2 Prop Gain]

PF 525 PowerFlex 525 only.

Sets the value for the PID proportional component when the PID mode is enabled.

Values	Default:	0.01
	Min/Max:	0.00/99.99
	Display:	0.01

Advanced Program Group *(continued)*

A462 [PID 1 Integ Time] Related Parameter(s): A459, A471

A474 [PID 2 Integ Time]
PF 525 PowerFlex 525 only.

Sets the value for the PID integral component when PID mode is enabled.

Values	Default:	2.0 s
	Min/Max:	0.0/999.9 s
	Display:	0.1 s

A463 [PID 1 Diff Rate] Related Parameter(s): A459, A471

A475 [PID 2 Diff Rate]
PF 525 PowerFlex 525 only.

Sets the value (in 1/second) for the PID differential component when PID mode is enabled.

Values	Default:	0.00
	Min/Max:	0.00/99.99
	Display:	0.01

A464 [PID 1 Setpoint] Related Parameter(s): A459, A471

A476 [PID 2 Setpoint]
PF 525 PowerFlex 525 only.

Provides an internal fixed value for process setpoint when PID mode is enabled.

Values	Default:	0.0%
	Min/Max:	0.0/100.0%
	Display:	0.1%

A465 [PID 1 Deadband]

A477 [PID 2 Deadband]
PF 525 PowerFlex 525 only.

Sets the lower limit of the PID output.

Values	Default:	0.0%
	Min/Max:	0.0/10.0%
	Display:	0.1%

A466 [PID 1 Preload]

A478 [PID 2 Preload]
PF 525 PowerFlex 525 only.

Sets the value used to preload the integral component on start or enable.

Values	Default:	0.0 Hz
	Min/Max:	0.0/500.0 Hz
	Display:	0.1 Hz

A467 [PID 1 Invert Err]

A479 [PID 2 Invert Err]
PF 525 PowerFlex 525 only.

Changes the sign of the PID error.

Options	0	"Normal" (Default)
	1	"Inverted"

Advanced Program Group *(continued)*

A481 [Process Disp Lo] Related Parameter(s): b010, P043

Sets the value displayed in b010 [Process Display] when the drive is running at P043 [Minimum Freq].

Values	Default:	0.00
	Min/Max:	0.00/99.99
	Display:	0.01

A482 [Process Disp Hi] Related Parameter(s): b010, P044

Sets the value displayed in b010 [Process Display] when the drive is running at P044 [Maximum Freq].

Values	Default:	0.00
	Min/Max:	0.00/99.99
	Display:	0.01

A483 [Testpoint Sel]

Used by Rockwell Automation field service personnel.

Values	Default:	400
	Min/Max:	0/FFFF
	Display:	1

A484 [Current Limit 1] Related Parameter(s): P033

Maximum output current allowed before current limiting occurs.

Values	Default:	Drive Rated Amps x 1.1 (Normal Duty); Drive Rated Amps x 1.5 (Heavy Duty)
	Min/Max:	0.0/Drive Rated Amps x 1.5 (Normal Duty); Drive Rated Amps x 1.8 (Heavy Duty)
	Display:	0.1 A

A485 [Current Limit 2] Related Parameter(s): P033

PF 525 PowerFlex 525 only.

Maximum output current allowed before current limiting occurs.

Values	Default:	Drive Rated Amps x 1.1
	Min/Max:	0.0/Drive Rated Amps x 1.5 (Normal Duty); Drive Rated Amps x 1.8 (Heavy Duty)
	Display:	0.1 A

A486 [Shear Pin1 Level] Related Parameter(s): A487, A489

A488 [Shear Pin2 Level]

PF 525 PowerFlex 525 only.

Sets the value of current at which the shear pin fault occurs after the time set in A487, A489 [Shear Pin x Time]. Setting the value at 0.0 A disables this function.

Values	Default:	0.0 A (Disabled)
	Min/Max:	0.0/(Drive Rated Amps x 2)
	Display:	0.1 A

A487 [Shear Pin 1 Time] Related Parameter(s): A486, A488

A489 [Shear Pin 2 Time]

PF 525 PowerFlex 525 only.

Sets the continuous time the drive must be at or above the value set in A486, A488 [Shear Pinx Level] before a shear pin fault occurs.

Values	Default:	0.00 s
	Min/Max:	0.00/30.00 s
	Display:	0.01 s

Advanced Program Group *(continued)*

A490 [Load Loss Level] Related Parameter(s): A491

PF 525 PowerFlex 525 only.

Provides a software trip (Load Loss fault) when the current drops below this level for the time specified in A491 [Load Loss Time].

Values	Default:	0.0 A
	Min/Max:	0.0/Drive Rated Amps
	Display:	0.1 A

A491 [Load Loss Time] Related Parameter(s): A490

PF 525 PowerFlex 525 only.

Sets the required time for the current to be below A490 [Load Loss Level] before a Load Loss fault occurs.

Values	Default:	0 s
	Min/Max:	0/9999 s
	Display:	1 s

A492 [Stall Fault Time]

Sets the time that the drive remains in stall mode before a fault is issued.

Options	0	"60 Seconds" (Default)
	1	"120 Seconds"
	2	"240 Seconds"
	3	"360 Seconds"
	4	"480 Seconds"
	5	"Flt Disabled"

A493 [Motor OL Select] Related Parameter(s): P032, P033

Drive provides Class 10 overload protection. Settings 0...2 select the derating factor for the I^2t overload function.

No Derate

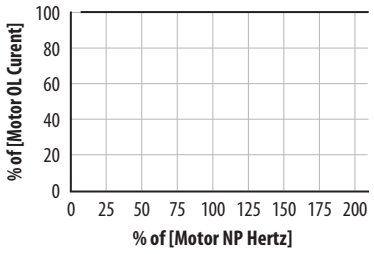

Min Derate

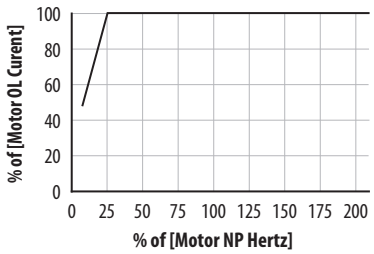

Max Derate

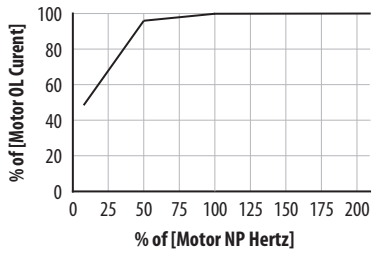

Options	0	"No Derate" (Default)
	1	"Min. Derate"
	2	"Max. Derate"

A494 [Motor OL Ret]

Selects whether the motor overload counter is saved on power-down or reset on power-up.

Options	0	"Reset" (Default)
	1	"Save"

Advanced Program Group *(continued)*

A495 [Drive OL Mode]

Determines how the drive handles overload conditions that would otherwise cause the drive to fault.

Options	0	"Disabled"
	1	"Reduce CLim"
	2	"Reduce PWM"
	3	"Both-PWM 1st" (Default)

A496 [IR Voltage Drop] Related Parameter(s): P040

Value of volts dropped across the resistance of the motor stator (autotune) for induction motor.

Values	Default:	Based on Drive Rating
	Min/Max:	0.0/600.0VAC
	Display:	0.1VAC

A497 [Flux Current Ref] Related Parameter(s): P040

This is the current necessary for full motor flux. The value should be set to the full speed no-load current of the motor.

Values	Default:	Based on Drive Rating
	Min/Max:	0.00/(Drive Rated Amps x 1.4)
	Display:	0.01 A

A498 [Motor Rr]

PF 525 PowerFlex 525 only.

Rotor resistance of induction motor.

Values	Default:	Based on Drive Rating
	Min/Max:	0.00/655.35 ohm
	Display:	0.01 ohm

A499 [Motor Lm]

PF 525 PowerFlex 525 only.

Mutual Inductance of induction motor.

Values	Default:	Based on Drive Rating
	Min/Max:	0.0/6553.5 mH
	Display:	0.1 mH

A500 [Motor Lx]

PF 525 PowerFlex 525 only.

Leakage Inductance of induction motor.

Values	Default:	Based on Drive Rating
	Min/Max:	0.0/6553.5 mH
	Display:	0.1 mH

A509 [Speed Reg Sel] Related Parameter(s): A521, A522, A523, A524, A525, A526

PF 525 PowerFlex 525 only.

Determines if PI gain of the "Vector" control mode speed regulator is set automatically or manually. Parameters A521...A526 are set automatically by this parameter.

Options	0	"Automatic" (Default)
	1	"Manual"

Advanced Program Group *(continued)*

A510 [Freq 1]
A512 [Freq 2]
A514 [Freq 3]

PF 525 PowerFlex 525 only.

Sets the "Vector" control mode frequency.

Values	Default:	
	Freq 1:	8.33%
	Freq 2:	15.00%
	Freq 3:	20.00%
	Min/Max:	0.00/200.00%
	Display:	0.01%

A511 [Freq 1 BW]
A513 [Freq 2 BW]
A515 [Freq 3 BW]

PF 525 PowerFlex 525 only.

Speed control loop bandwidth for "Vector" control mode.

Values	Default:	10 Hz
	Min/Max:	0/40 Hz
	Display:	1 Hz

A521 [Freq 1 Kp]
A523 [Freq 2 Kp]
A525 [Freq 3 Kp]

Related Parameter(s): A509, A510

PF 525 PowerFlex 525 only.

Sets P-gain of "Vector" control mode when in frequency region 1, 2 or 3 for faster speed response during dynamic-state where motor is still accelerating. If A509 [Speed Reg Sel] is set to 1 "Manual", these parameters can be changed.

Values	Default:	100.0%
	Min/Max:	0.0/500.0%
	Display:	0.1%

A522 [Freq 1 Ki]
A524 [Freq 2 Ki]
A526 [Freq 3 Ki]

Related Parameter(s): A509, A510

PF 525 PowerFlex 525 only.

Sets I-gain of "Vector" control mode when in frequency region 1, 2 or 3 for faster speed response during steady-state where motor is at its rated speed. If A509 [Speed Reg Sel] is set to 1 "Manual", these parameters can be changed.

Values	Default:	0.100 s
	Min/Max:	0.000/10.000 s
	Display:	0.001 s

Advanced Program Group *(continued)*

A530 [Boost Select]

Related Parameter(s): b004, P031, P032, P039

Sets the boost voltage (% of P031 [Motor NP Volts]) and redefines the V/Hz curve. Only used for V/Hz and SVC control modes.

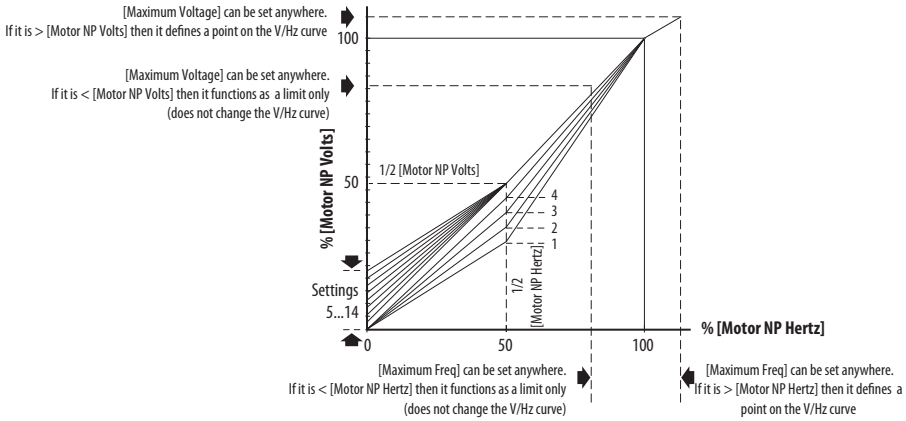

Options			
	0	"Custom V/Hz"	
	1	"30.0, VT"	Fan/Pump Curves (Variable Torque)
	2	"35.0, VT"	
	3	"40.0, VT"	
	4	"45.0, VT"	
	5	"0.0, no IR"	Boost Voltage (% of Base) (Constant Torque)
	6	"0.0" (Default for 400V and 600V drives, 5 HP and above)	
	7	"2.5, CT" (Default for 200V drives, 5 HP and above)	
	8	"5.0, CT" (Default for drives below 5 HP)	
	9	"7.5, CT"	
	10	"10.0, CT"	
	11	"12.5, CT"	
	12	"15.0, CT"	
	13	"17.5, CT"	
	14	"20.0, CT"	

Advanced Program Group *(continued)*

A531 [Start Boost] Related Parameter(s): P031, P032, P039, A530

Sets the boost voltage (% of P031 [Motor NP Volts]) and redefines the V/Hz curve when A530 [Boost Select] = 0 "Custom V/Hz" and P039 [Torque Perf Mode] = 0 "V/Hz".

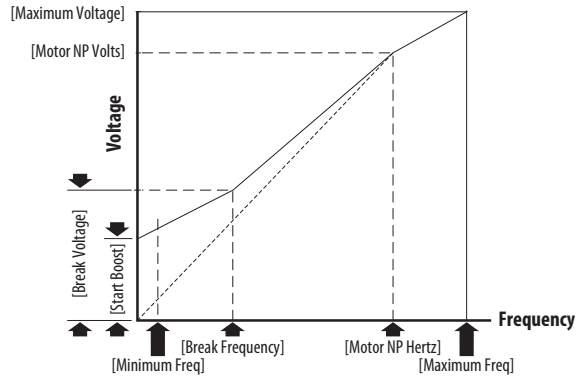

Values	Default:	2.5%
	Min/Max:	0.0/25.0%
	Display:	0.1%

A532 [Break Voltage] Related Parameter(s): P031, P032, P039, A530, A533

Sets the voltage (in percent of [Base Frequency]) at the A533 [Break Frequency] if A530 [Boost Select] is set to 0 "Custom V/Hz".

Values	Default:	25.0%
	Min/Max:	0.0/100.0%
	Display:	0.1%

A533 [Break Frequency] Related Parameter(s): P031, P032, P039, A530, A532

Sets the frequency where A532 [Break Voltage] is applied if A530 [Boost Select] is set to 0 "Custom V/Hz".

Values	Default:	15.0 Hz
	Min/Max:	0.0/500.0 Hz
	Display:	0.1 Hz

A534 [Maximum Voltage] Related Parameter(s): b004

Sets the highest voltage the drive outputs.

Values	Default:	Drive Rated Volts
	Min:	10V AC (on 230V AC Drives); 20V AC (on 460V AC Drives); 25V AC (on 600V AC Drives)
	Max:	255V AC (on 230V AC Drives); 510V AC (on 460V AC Drives); 637.5V AC (on 600V AC Drives)
	Display:	1V AC

Advanced Program Group *(continued)*

A535 [Motor Fdbk Type] Related Parameter(s): A537

Stop drive before changing this parameter.

PF 525 PowerFlex 525 only.

Selects the encoder type.

ATTENTION: The loss of analog input, encoder or other feedback may cause unintended speed or motion. Take appropriate precautions to guard against possible unintended speed or motion.

			Allowable Control Modes	Hardware Inputs
Options	0	"None" (Default)	For all motor types	–
	1	"Pulse Train"	All except Vector	[DigIn TermBlk 07]
	2	"Single Chan"	All except Vector	Optional incremental encoder card (catalog number 25-ENC-1)
	3	"Single Check"	All except Vector	
	4	"Quadrature"	For all motor types	
	5	"Quad Check"	For all motor types	

A536 [Encoder PPR]

PF 525 PowerFlex 525 only.

Specifies the encoder Pulses Per Revolution (PPR) when an encoder is used.

Motor Control Mode	Recommended Minimum Encoder PPR
Sensorless Vector Control (SVC)	42 x (number of poles/2) [Speed range 100:1] : 84 PPR (4 pole motor)
Velocity Vector Control (VVC)	500 x (number of poles/2) [Speed range 1000:1] : 1000 PPR (4 pole motor)
The maximum encoder pulse is 250 kHz.	

Values	Default:	1024 PPR
	Min/Max:	1/20000 PPR
	Display:	1 PPR

A537 [Pulse In Scale] Related Parameter(s): t065, t067, A535

Sets the scale factor/gain for the Pulse Input when t065 or t067 [DigIn TermBlk xx] is set to 52 "Pulse Train", or A535 [Motor Fdbk Type] is set to 1 "Pulse Train".
Input frequency (Hz) / Pulse in Scale = Output frequency (Hz)

Values	Default:	64
	Min/Max:	0/20000
	Display:	1

A538 [Ki Speed Loop]

PF 525 PowerFlex 525 only.

Sets the I-gain used in the PI calculation of the speed loop when feedback is used.

Values	Default:	2.0
	Min/Max:	0.0/400.0
	Display:	0.1

A539 [Kp Speed Loop]

PF 525 PowerFlex 525 only.

Sets the P-gain used in the PI calculation of the speed loop when feedback is used.

Values	Default:	5.0
	Min/Max:	0.0/200.0
	Display:	0.1

Advanced Program Group *(continued)*

A540 [Var PWM Disable] Related Parameter(s): A440

Stop drive before changing this parameter.

Enables/disables a feature that varies the carrier frequency for the PWM output waveform defined by A440 [PWM Frequency].

Options	0	"Enabled" (Default)
	1	"Disabled"

A541 [Auto Rstrt Tries] Related Parameter(s): A542

Sets the maximum number of times the drive attempts to reset a fault and restart. See Chapter 4 for more information on faults and fault codes.

Clear a Type 1 fault and restart the drive.
1. Set A541 [Auto Rstrt Tries] to a value other than "0".
2. Set A542 [Auto Rstrt Delay] to a value other than "0".

Clear an OverVoltage, UnderVoltage or Heatsink OvrTmp fault without restarting the drive.
1. Set A541 [Auto Rstrt Tries] to a value other than "0".
2. Set A542 [Auto Rstrt Delay] to "0".

ATTENTION: Equipment damage and/or personal injury may result if this parameter is used in an inappropriate application. Do not use this function without considering applicable local, national and international codes, standards, regulations or industry guidelines.

Values	Default:	0
	Min/Max:	0/9
	Display:	1

A542 [Auto Rstrt Delay] Related Parameter(s): A541

Sets the time between restart attempts if A541 [Auto Rstrt Tries] is not zero.

Values	Default:	1.0 s
	Min/Max:	0.0/120.0 s
	Display:	0.1 s

A543 [Start At PowerUp]

Stop drive before changing this parameter.

Enables/disables drive start on power up without a Start command being cycled. Requires a digital input configured for Run or Start and a valid start contact.

ATTENTION: Equipment damage and/or personal injury may result if this parameter is used in an inappropriate application. Do not use this function without considering applicable local, national and international codes, standards, regulations or industry guidelines.

Options	0	"Disabled" (Default)
	1	"Enabled"

A544 [Reverse Disable] Related Parameter(s): b006

Stop drive before changing this parameter.

Enables/disables the function that allows the direction of motor rotation to be changed.

Options	0	"Rev Enabled" (Default)
	1	"Rev Disabled"

A545 [Flying Start En]

Sets the condition that allows the drive to reconnect to a spinning motor at actual RPM.

Options	0	"Disabled" (Default)
	1	"Enabled" Catch and ramp to commanded speed at every drive start.

Advanced Program Group *(continued)*

A546 [FlyStrt CurLimit]

Used to determine when the drive has matched the motor frequency if flying start is enabled.

Values	Default:	150%
	Min/Max:	30/200%
	Display:	1%

A547 [Compensation]

Enables/disables correction options that may improve problems with motor instability.

Options	0	"Disabled"	No compensation.
	1	"Electrical" (Default)	Some drive/motor combinations have inherent instabilities which are exhibited as non-sinusodial motor currents. This setting attempts to correct this condition
	2	"Mechanical"	Some motor/load combinations have mechanical resonances which can be excited by the drive current regulator. This setting slows down the current regulator response and attempts to correct this condition.
	3	"Both"	

A548 [Power Loss Mode]

Sets the reaction to a loss of input power.

Options	0	"Coast" (Default)	Drive faults and motor coasts to a stop.
	1	"Decel"	Drive decelerates and attempts to keep the DC bus voltage above the undervoltage level.

A549 [Half Bus Enable]

Enables/disables the power ride through function which allows the drive to maintain power to the motor at 50% drive input voltage during short-term power sag conditions.



ATTENTION: To guard against drive damage, a minimum line impedance must be provided to limit inrush current when the power line recovers. The input impedance should be equal or greater than the equivalent of a 5% transformer with a VA rating 6 times the drive's input VA rating if Half Bus is enabled.

Options	0	"Disabled" (Default)	
	1	"Enabled"	

A550 [Bus Reg Enable]

Enables/disables the bus regulator.

Options	0	"Disabled"	
	1	"Enabled" (Default)	

A551 [Fault Clear]

 Stop drive before changing this parameter.

Resets a fault and clears the fault queue.

Options	0	"Ready/Idle" (Default)	
	1	"Reset Fault"	Resets the active fault but does not clear any fault buffer.
	2	"Clear Buffer"	Resets the active fault and clears all fault buffers to "0".

A552 [Program Lock] Related Parameter(s): A553

Protects parameters against change by unauthorized personnel with a 4-digit password.

Values	Default:	0000
	Min/Max:	0000/9999
	Display:	1111

Advanced Program Group *(continued)*

A553 [Program Lock Mod] Related Parameter(s): A552

Determines the lock mode used in parameter A552 [Program Lock]. When set to 2 or 3, A552 [Program Lock] is added to the custom group to allow unlocking of parameters.

Options	0	"Full Lock" (Default)	All parameters are locked except [Program Lock].
	1	"Keypad Lock"	All parameters are locked except [Program Lock] from keypad access but can still be accessed over communications.
	2	"Custom Only"	All parameters are locked and hidden except custom group and [Program Lock].
	3	"KeyPd Custom"	All parameters are locked and hidden except custom group and [Program Lock] from keypad access but can still be accessed over communications.

A554 [Drv Ambient Sel]

Sets the maximum expected ambient of the drive when used above 50 °C. When ambient temperature is above 50 °C, the drive will apply necessary current derating.

Options	0	"Normal" (Default)	
	1	"55C"	
	2	"60C"	
	3	"65C +Fan Kit"	Fan kit required.
	4	"70C +Fan Kit"	

A555 [Reset Meters] Related Parameter(s): b019, b021, b022, b023, b024, b025, b026, d362, d363

Resets the values stored in the parameters that track fault times and energy usage.

Options	0	"Ready/Idle" (Default)	
	1	"Reset Meters"	Resets kWh, MWh, Accum kWh, Cost, and CO2 Sav parameter values.
	2	"Reset Time"	Resets min, hr, and x10 hr.

A556 [Text Scroll]

Sets the scrolling speed of the text in the LCD display.

Options	0	"Off"	No scroll.
	1	"Low Speed"	
	2	"Mid Speed" (Default)	
	3	"High Speed"	

A557 [Out Phas Loss En]

Enable/disable output phase loss detection.



ATTENTION: Equipment damage and/or personal injury may result if this parameter is used in an inappropriate application. Do not use this function without considering applicable local, national and international codes, standards, regulations or industry guidelines.

Options	0	"Disable" (Default)
	1	"Enable"

A558 [Positioning Mode]

Stop drive before changing this parameter.

PF 525 PowerFlex 525 only.

Defines the positioning transition mode used for the position steps.

Options	0	"Time Steps" (Default)	Steps based on time.
	1	"Preset Input"	Preset inputs directly commands a given step.
	2	"Step Logic"	Use Step Logic Commands. Always start from Step 0.
	3	"Preset StpL"	Use Preset Inputs to determine starting step then Step Logic commands.
	4	"StpLogic-Lst"	Use Step Logic commands from last Step Logic step at last drive stop.

Advanced Program Group *(continued)*

A559 [Counts Per Unit]

PF 525 PowerFlex 525 only.

Sets the number of encoder counts equal to one user-defined unit.

Values	Default:	4096
	Min/Max:	1/32000
	Display:	1

A560 [Enh Control Word]

Related Parameter(s): t062, t063, t065 - t068, A571

PF 525 PowerFlex 525 only.

Allows control of positioning and other functions through parameter control for use over comms. The functions replicate the digital input options and function in the same way.

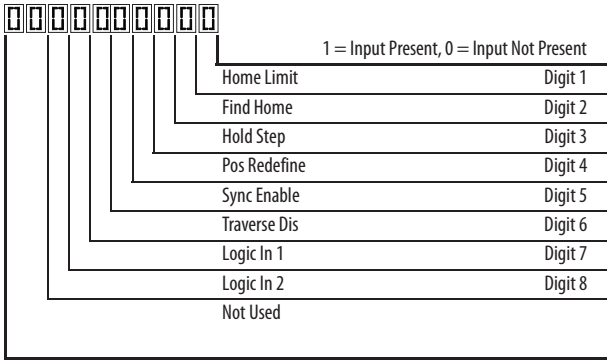

Values	Default:		0000 0000
	Min/Max:		0000 0000/1111 1111
	Display:		0000 0000
Digits	0	"Home Limit"	In Positioning mode, this indicates the drive is at the home position
	1	"Find Home"	When set, the next start command causes the drive to find home. Set this bit to 0 after completing the homing routine.
	2	"Hold Step"	In Positioning mode, this input over-rides other inputs and causes the drive to remain at its current step (running at zero speed once it reaches its position) until released.
	3	"Pos Redefine"	In Positioning mode, this input resets the home position to the current position of the machine. Set this bit to 0 after completing the homing routine.
	4	"Sync Enable"	Must be used in order to hold the existing frequency when Sync Time is set to enable speed synchronization. When this bit is reset to zero the drive accelerates to the new commanded frequency based on A571 [Sync Time] setting.
	5	"Traverse Dis"	When set the traverse function is disabled.
	6	"Logic In 1"	This provides an identical function as the "Logic In1" Digital Input option. This bit is logically ORed with a digital input t062, t063, t065-t068 [DigIn TermBlk xx] set to 24 "Logic In1". It can be used to move through the Step-Logic functions (speed or position) using comms control without requiring actual digital input transitions.
	7	"Logic In 2"	This provides and identical function as the "Logic In2" Digital Input option. This bit is logically ORed with a digital input t062, t063, t065-t068 [DigIn TermBlk xx] set to 25 "Logic In2". It can be used to move through the Step-Logic functions (speed or position) using comms control without requiring actual digital input transitions.

A561 [Home Save]

PF 525 PowerFlex 525 only.

Determines whether the current position is saved on power down.

Options	0	"Home Reset" (Default)	Position resets to zero on power up.
	1	"Home Saved"	

Advanced Program Group *(continued)*

A562 [Find Home Freq]

PF 525 PowerFlex 525 only.

Sets the maximum frequency the drive uses when "Find Home" is issued.

Values	Default:	10.0 Hz
	Min/Max:	0.1/500.0 Hz
	Display:	0.1 Hz

A563 [Find Home Dir]

Stop drive before changing this parameter.

PF 525 PowerFlex 525 only.

Sets the direction the drive commands when "Find Home" is issued.

Options	0	"Forward" (Default)
	1	"Reverse"

A564 [Encoder Pos Tol]

PF 525 PowerFlex 525 only.

Sets the "At Position" and the "At Home' tolerance around the encoder count. The value is added to and subtracted from the target encoder unit value to create the tolerance range.

Values	Default:	100
	Min/Max:	1/50000
	Display:	1

A565 [Pos Reg Filter]

PF 525 PowerFlex 525 only.

Sets the error signal filter in the position regulator.

Values	Default:	8
	Min/Max:	0/15
	Display:	1

A566 [Pos Reg Gain]

PF 525 PowerFlex 525 only.

Sets the gain adjustment for the position regulator.

Values	Default:	3.0
	Min/Max:	0.0/200.0
	Display:	0.1

Advanced Program Group *(continued)*

A567 [Max Traverse]

Sets the amplitude of triangle wave speed modulation.

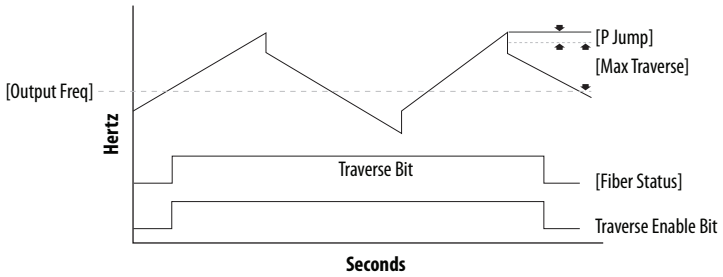

Values	Default:	0.00 Hz
	Min/Max:	0.00/300.00 Hz
	Display:	0.01 Hz

A568 [Traverse Inc]

Related Parameter(s): A567

Sets the time required for the Traverse function to accelerate from the minimum to the maximum traverse frequency. See the diagram at A567 [Max Traverse].

Values	Default:	0.00 s
	Min/Max:	0.00/300.00 s
	Display:	0.01 s

A569 [Traverse Dec]

Related Parameter(s): A567

Sets the time required for the Traverse function to decelerate from the maximum to the minimum traverse frequency. See the diagram at A567 [Max Traverse].

Values	Default:	0.00 s
	Min/Max:	0.00/300.00 s
	Display:	0.01 s

A570 [P Jump]

Related Parameter(s): A567

Sets the frequency amplitude that is added to or subtracted from the commanded frequency. See the diagram at A567 [Max Traverse].

Values	Default:	0.00 Hz
	Min/Max:	0.00/300.00 Hz
	Display:	0.01 Hz

A571 [Sync Time]

Related Parameter(s): t062, t063, t065 - t068, A560

Enables the function that holds the drive at the current frequency even if the commanded frequency changes. Used with t062, t063, t065-t068 [DigIn TermBlk xx] 32 "Sync Enable".

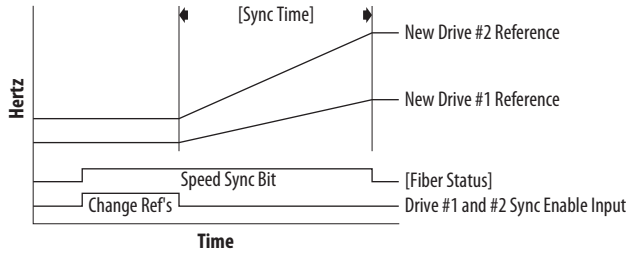

Values	Default:	0.0 s
	Min/Max:	0.0/3200.0 s
	Display:	0.1 s

Advanced Program Group *(continued)*

A572 [Speed Ratio]

Stop drive before changing this parameter.

Scales the drive speed command.

Values	Default:	1.00
	Min/Max:	0.01/99.99
	Display:	0.01

A573 [Mtr Options Cfg]

PF 525 PowerFlex 525 only.

(With FRN 2.xx and later.)

Sets the configuration of the motor option.

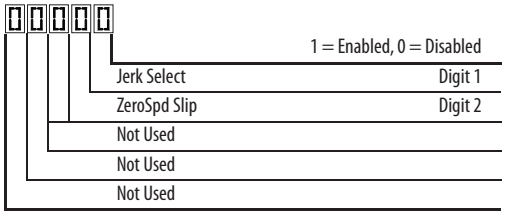

Options	Description
Jerk Select	Limits the rate of change to the velocity reference for improved current limiting. Set to 0 "Disabled" for positioning type applications with fast Accel or Decel times.
ZeroSpd Slip	Sets slip compensation to 0.0 Hz when the following conditions are met: • Commanded speed = 0.00 Hz • Status of drive = "At speed" • ZeroSpd Slip = 1 "Enabled"

Values	Default:	11
	Min/Max:	00/11
	Display:	00

A574 [RdyBit Mode Cfg]

Related Parameter(s): d392

Stop drive before changing this parameter.

PF 525 PowerFlex 525 only.

(With FRN 3.xxx and later.)

Determines which Stop conditions causes the drive's Ready bit (Network Logic Status bit 1) to go low (0). A reset or power cycle is required after selection is made.

	Ready Bit Status(1)	
Stop Conditions	**Standard**	**Enhanced**
Drive fault	0	0
Stop digital input terminal 01/11 open	1	0
Holding down the drive's keypad or the Remote DSI HIM Stop button	1	0
Stop commanded through Comms (Stop bit = 1)	1	0
Software (SW) Enable digital input terminal open	1	0
Safe-Torque-Off (STO) condition with value of t105 [Safety Open En] set to 1 "FaultDisabled"	0	0

(1) 1 = Active, 0 = Inactive

Options	0	"Standard" (Default)
	1	"Enhanced"

Network Parameter Group

This group contains parameters for the network option card that is installed.

Refer to the network option card's user manual for more information on the available parameters.

Modified Parameter Group

This group contains parameters that have their values changed from the factory default.

When a parameter has its default value changed, it is automatically added to this group. When a parameter has its value changed back to the factory default, it is automatically removed from this group.

Fault and Diagnostic Group

F604 [Fault 4 Code]
F605 [Fault 5 Code]
F606 [Fault 6 Code]
F607 [Fault 7 Code]
F608 [Fault 8 Code]
F609 [Fault 9 Code]
F610 [Fault10 Code]

Related Parameter(s): b007-b009

A code that represents a drive fault. The codes appear in these parameters in the order they occur (b007 [Fault 1 Code] = the most recent fault). Repetitive faults are only recorded once.

Values	Default:	Read Only
	Min/Max:	F0/F127
	Display:	F0

F611 [Fault 1 Time-hr] **F612 [Fault 2 Time-hr]**
F613 [Fault 3 Time-hr] **F614 [Fault 4 Time-hr]**
F615 [Fault 5 Time-hr]
F616 [Fault 6 Time-hr] **F617 [Fault 7 Time-hr]**
F618 [Fault 8 Time-hr] **F619 [Fault 9 Time-hr]**
F620 [Fault10 Time-hr]

PF 525 PowerFlex 525 only.

Related Parameter(s): d362

Displays the value of d362 [Elapsed Time-hr] when the fault occurs.

Values	Default:	Read Only
	Min/Max:	0/32767 hr
	Display:	1 hr

F621 [Fault 1 Time-min] **F622 [Fault 2 Time-min]**
F623 [Fault 3 Time-min] **F624 [Fault 4 Time-min]**
F625 [Fault 5 Time-min]
F626 [Fault 6 Time-min] **F627 [Fault 7 Time-min]**
F628 [Fault 8 Time-min] **F629 [Fault 9 Time-min]**
F630 [Fault10 Time-min]

PF 525 PowerFlex 525 only.

Related Parameter(s): d363

Displays the value of d363 [Elapsed Time-min] when the fault occurs.

Values	Default:	Read Only
	Min/Max:	0.0/320.0 min
	Display:	0.1 min

Fault and Diagnostic Group *(continued)*

F631 [Fault 1 Freq] **F632 [Fault 2 Freq]**
F633 [Fault 3 Freq] **F634 [Fault 4 Freq]**
F635 [Fault 5 Freq]

F636 [Fault 6 Freq] **F637 [Fault 7 Freq]**
F638 [Fault 8 Freq] **F639 [Fault 9 Freq]**
F640 [Fault10 Freq]

PF 525 PowerFlex 525 only.

Related Parameter(s): b001

Displays and stores the value of b001 [Output Freq] with the most recent 10 faults occurred.
[Fault 1 Freq] stores the most recent fault, [Fault 2 Freq] stores the second most recent fault and [Fault 3 Freq] stores the third most recent fault.

Values	Default:	Read Only
	Min/Max:	0.00/500.00 Hz
	Display:	0.01 Hz

F641 [Fault 1 Current] **F642 [Fault 2 Current]**
F643 [Fault 3 Current] **F644 [Fault 4 Current]**
F645 [Fault 5 Current]

F646 [Fault 6 Current] **F647 [Fault 7 Current]**
F648 [Fault 8 Current] **F649 [Fault 9 Current]**
F650 [Fault10 Current]

PF 525 PowerFlex 525 only.

Related Parameter(s): b003

Displays and stores the value of b003 [Output Current] with the most recent 10 faults occurred.
[Fault 1 Current] stores the most recent fault, [Fault 2 Current] stores the second most recent fault and [Fault 3 Current] stores the third most recent fault.

Values	Default:	Read Only
	Min/Max:	0.00/(Drive Rated Amps x 2)
	Display:	0.01 A

F651 [Fault 1 BusVolts] **F652 [Fault 2 BusVolts]**
F653 [Fault 3 BusVolts] **F654 [Fault 4 BusVolts]**
F655 [Fault 5 BusVolts]

F656 [Fault 6 BusVolts] **F657 [Fault 7 BusVolts]**
F658 [Fault 8 BusVolts] **F659 [Fault 9 BusVolts]**
F660 [Fault10 BusVolts]

PF 525 PowerFlex 525 only.

Related Parameter(s): b005

Displays and stores the value of b005 [DC Bus Voltage] with the most recent 10 faults occurred.
[Fault 1 BusVolts] stores the most recent fault, [Fault2 BusVolts] stores the second most recent fault and [Fault 3 BusVolts] stores the third most recent fault.

Values	Default:	Read Only
	Min/Max:	0/1200VDC
	Display:	1VDC

Fault and Diagnostic Group *(continued)*

F661 [Status @ Fault 1] **F662 [Status @ Fault 2]**
F663 [Status @ Fault 3] **F664 [Status @ Fault 4]**
F665 [Status @ Fault 5]

F666 [Status @ Fault 6] **F667 [Status @ Fault 7]**
F668 [Status @ Fault 8] **F669 [Status @ Fault 9]**
F670 [Status @ Fault10]

PF 525 PowerFlex 525 only.

Related Parameter(s): b006

Displays the value of b006 [Drive Status] with the most recent 10 faults occurred.
[Status@ Fault 1] stores the most recent fault, [Status@ Fault 2] stores the second most recent fault and [Status@ Fault 3] stores the third most recent fault.

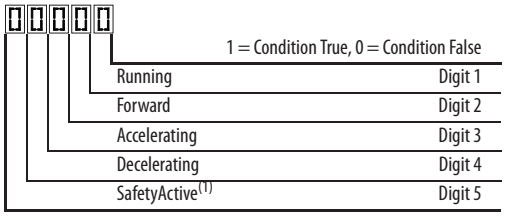

(1) Setting is specific to PowerFlex 525 drives only.

Values	Default:	Read Only
	Min/Max:	0/0x1F
	Display:	1

F681 [Comm Sts - DSI]

Displays the status of the RS485 serial (DSI) port to the drive.

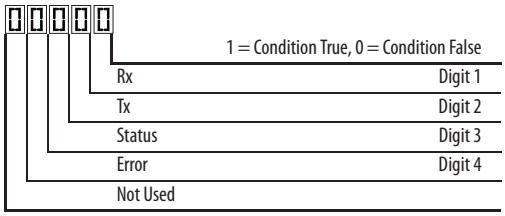

Digit 3 (Connection Status)	
0	"Not Active"
1	"Modbus slave network (external Modbus master)"
2	"Modbus multi-drive w/ internal com option master"
3	"Modbus multi-drive w/ embedded com master"(1)
4	"DSI peripheral connected"
5...8	"Reserved"
9	"RS-485 network faulted"

(1) Setting is specific to PowerFlex 525 drives only.

Values	Default:	Read Only
	Min/Max:	0000/1911
	Display:	0000

F682 [Comm Sts - Opt]

Displays the status of the internal communication to the drive.

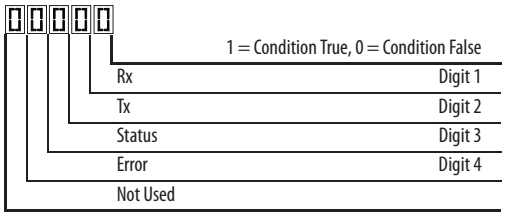

Digit 3 = "Internal Com option"	
0	"Not Active (no connection)"
1	"Internal option connected/active"
2...8	"Reserved"
9	"Internal com option faulted"

Values	Default:	Read Only
	Min/Max:	0000/1911
	Display:	0000

Fault and Diagnostic Group *(continued)*

F683 [Com Sts-Emb Enet]

PF 525 PowerFlex 525 only.

Displays the status of the embedded EtherNet/IP interface to the drive.

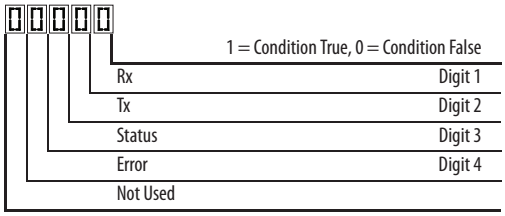

Digit 3 = "Embedded EtherNet/IP"	
0	"Not Active (no connection)"
1	"Embedded EtherNet/IP active"
2-8	"Reserved"
9	"Embedded EtherNet/IP faulted"

Values	Default:	Read Only
	Min/Max:	0000/1911
	Display:	0000

F684 [EN Addr Src]

PF 525 PowerFlex 525 only.

Displays the actual source of the Ethernet configuration (IP address, subnet mask, and gateway address).

Options	1	"Parameters"	Read Only
	2	"BOOTP"	

F685 [EN Rate Act]

PF 525 PowerFlex 525 only.

Displays the network data rate currently used by the embedded EtherNet/IP interface.

Options	0	"No Link"	Read Only
	1	"10Mbps Full"	
	2	"10Mbps Half"	
	3	"100Mbps Full"	
	4	"100Mbps Half"	
	5	"Dup IP Addr"	
	6	"Disabled"	

F686 [DSI I/O Act]

Displays the Drives that are active in Multi-Drive mode.

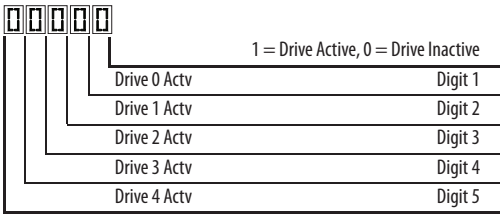

Value	Default:	Read Only
	Min/Max:	00000/11111
	Display:	00000

Fault and Diagnostic Group *(continued)*

F687 [HW Addr 1]
F688 [HW Addr 2]
F689 [HW Addr 3]
F690 [HW Addr 4]
F691 [HW Addr 5]
F692 [HW Addr 6]

PF 525 PowerFlex 525 only.

Shows the MAC address for the embedded EtherNet/IP interface.

Values	Default:	Read Only
	Min/Max:	0/255
	Display:	1

F693 [EN IP Addr Act 1]
F694 [EN IP Addr Act 2]
F695 [EN IP Addr Act 3]
F696 [EN IP Addr Act 4]

PF 525 PowerFlex 525 only.

Shows the actual IP address used by the embedded EtherNet/IP interface at the time. This indicates 0 if no address is set.

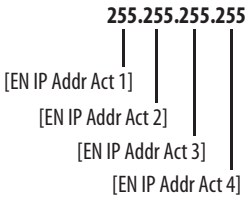

Values	Default:	Read Only
	Min/Max:	0/255
	Display:	1

F697 [EN Subnet Act 1]
F698 [EN Subnet Act 2]
F699 [EN Subnet Act 3]
F700 [EN Subnet Act 4]

PF 525 PowerFlex 525 only.

Shows the actual subnet mask used by the embedded EtherNet/IP interface at the time. This will indicate 0 if no address is set.

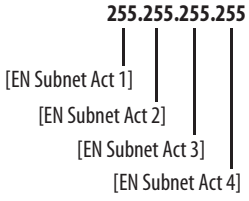

Values	Default:	Read Only
	Min/Max:	0/255
	Display:	1

Fault and Diagnostic Group *(continued)*

F701 [EN Gateway Act 1]
F702 [EN Gateway Act 2]
F703 [EN Gateway Act 3]
F704 [EN Gateway Act 4]

PF 525 PowerFlex 525 only.

Shows the actual gateway address used by the embedded EtherNet/IP interface at the time. This will indicate 0 if no address is set.

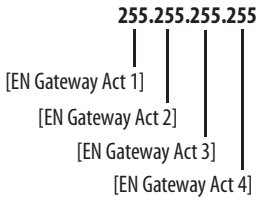

Values	Default:	Read Only
	Min/Max:	0/255
	Display:	1

F705 [Drv 0 Logic Cmd]
F709 [Drv 1 Logic Cmd]
F713 [Drv 2 Logic Cmd]
F717 [Drv 3 Logic Cmd]
F721 [Drv 4 Logic Cmd]

In multi-drive mode, this is the logic command being transmitted to drive 0/1/2/3/4/.
In single-drive mode, this is the logic command being used by the drive (whether HS-DSI, EtherNet/IP, or DSI) at the time. If comms control is NOT being used, and the drive is in single-drive mode, then this parameter will show 0.

Values	Default:	Read Only
	Min/Max:	0/FFFF
	Display:	1

F706 [Drv 0 Reference]
F710 [Drv 1 Reference]
F714 [Drv 2 Reference]
F718 [Drv 3 Reference]
F722 [Drv 4 Reference]

In multi-drive mode, this is the reference being transmitted to drive 0/1/2/3/4.
In single-drive mode, this is the reference being used by the drive (whether HS-DSI, EtherNet/IP, or DSI) at the time. If comms control is NOT being used, and the drive is in single-drive mode, then this parameter will show 0.

Values	Default:	Read Only
	Min/Max:	0.00/500.00 Hz
	Display:	0.01 Hz

F707 [Drv 0 Logic Sts]
F711 [Drv 1 Logic Sts]
F715 [Drv 2 Logic Sts]
F719 [Drv 3 Logic Sts]
F723 [Drv 4 Logic Sts]

In multi-drive mode, this is the logic status being received from drive 0/1/2/3/4.
In single-drive mode, this is the logic status of the drive at the time.

Values	Default:	Read Only
	Min/Max:	0/FFFF
	Display:	1

Fault and Diagnostic Group *(continued)*

F708 [Drv 0 Feedback]
F712 [Drv 1 Feedback]
F716 [Drv 2 Feedback]
F720 [Drv 3 Feedback]
F724 [Drv 4 Feedback]

In multi-drive mode, this is the feedback being received from drive 0/1/2/3/4.
In single-drive mode, this is the feedback of the drive at the time.

Values	Default:	Read Only
	Min/Max:	0.00/500.00 Hz
	Display:	0.01 Hz

F725 [EN Rx Overruns]

PF 525 PowerFlex 525 only.

A count of the number of receive overrun errors reported by the embedded EtherNet/IP interface.

Values	Default:	Read Only
	Min/Max:	0/65535
	Display:	1

F726 [EN Rx Packets]

PF 525 PowerFlex 525 only.

A count of the number of receive packets reported by the embedded EtherNet/IP interface.

Values	Default:	Read Only
	Min/Max:	0/65535
	Display:	1

F727 [EN Rx Errors]

PF 525 PowerFlex 525 only.

A count of the number of receive errors reported by the embedded EtherNet/IP interface.

Values	Default:	Read Only
	Min/Max:	0/65535
	Display:	1

F728 [EN Tx Packets]

PF 525 PowerFlex 525 only.

A count of the number of transmitted packets reported by the embedded EtherNet/IP interface.

Values	Default:	Read Only
	Min/Max:	0/65535
	Display:	1

F729 [EN Tx Errors]

PF 525 PowerFlex 525 only.

A count of the number of transmit errors reported by the embedded EtherNet/IP interface.

Values	Default:	Read Only
	Min/Max:	0/65535
	Display:	1

Fault and Diagnostic Group *(continued)*

F730 [EN Missed IO Pkt]

PF 525 PowerFlex 525 only.

The number of I/O packets missed.

Values	Default:	Read Only
	Min/Max:	0/65535
	Display:	1

F731 [DSI Errors]

The number of total DSI errors.

Values	Default:	Read Only
	Min/Max:	0/65535
	Display:	1

AppView Parameter Groups

AppView parameter groups provide a simple starting point for using the PowerFlex 520-series drives by grouping certain commonly used parameters based on different types of applications. Use these parameter groups to quickly and easily setup the PowerFlex 520-series drive for your application.

AppView parameter groups are available for the following applications:

- Conveyor
- Mixer
- Compressor
- Centrifugal Pump
- Blower/Fan
- Extruder
- Positioning (PowerFlex 525 only)
- Textile/Fiber

You cannot add or remove parameters to or from the AppView parameter groups. If you require quick access to additional parameters to what is already included in the different AppView parameter groups, use the CustomView parameter group instead.

The parameters in the AppView parameter groups can be quickly added to the CustomView parameter group by doing the following:

Step		Key(s)	Example Displays
1.	Press the Up Arrow or Down Arrow to scroll to an AppView group (G1...G8).	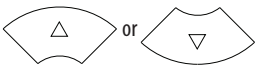	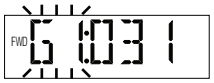
2.	Press Enter or Sel to enter a group. The right most digit of the last viewed parameter in that group will flash.	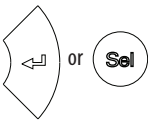	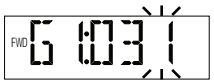
3.	Press the Up Arrow or Down Arrow to scroll to the command G1->GC.	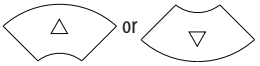	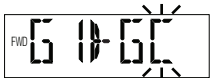
4.	Press Enter or Sel to add all the parameters in this AppView group to the CustomView group. The LCD display will show a confirmation.	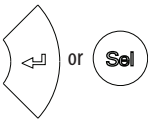	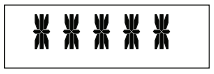

CustomView Parameter Group

CustomView allows you to quickly access only the parameters needed for your application by storing them in a custom parameter group. Add your frequently used parameters to this group, then hide all other parameters with A552 [Program Lock] to simplify your drive configuration process.

Up to 100 parameters can be stored in the CustomView parameter group. You can copy one entire AppView parameter group to the CustomView parameter group as shown on page 138 or add individual parameters as show below.

Step		Key(s)	Example Displays
1.	Press the Up Arrow or Down Arrow to scroll to the CustomView group (GC).	▲ or ▼	FWD GC:+++
2.	Press Enter to view the parameters that can be added to the CustomView group.	↵	FWD ++001
3.	Press the Up Arrow or Down Arrow to scroll through the list of parameters.	▲ or ▼	FWD ++002 PROGRAM
4.	Press Enter to add the parameter to the CustomView group. The LCD display will show a confirmation.	↵	*****

To delete parameters from the CustomView parameter group:

Step		Key(s)	Example Displays
1.	Press the Up Arrow or Down Arrow to scroll to the CustomView group (GC).	▲ or ▼	FWD GC:002
2.	Press Enter to view the parameters that are in the CustomView group.	↵	FWD GC:002
3.	Press the Up Arrow or Down Arrow to scroll to the command GC---.	▲ or ▼	FWD GC:-- -- --
4.	Press Enter or Sel to view the parameters that are stored in the CustomView group.	↵ or Sel	FWD -- --002
5.	Press the Up Arrow or Down Arrow to scroll through the list of parameters.	▲ or ▼	FWD -- --002 PROGRAM
6.	Press Enter to delete the parameter from the CustomView group. The LCD display will show a confirmation.	↵	*****

TIP The Connected Components Workbench software can be used to speed up this process with drag and drop functionality.

Parameter Cross Reference by Name

Parameter Name	No.
10V Bipolar Enbl[1]	093
2-Wire Mode	064
Accel Time 1	041
Accel Time 2	442
Accel Time 3	444
Accel Time 4	446
Accum CO2 Sav	026
Accum Cost Sav	025
Accum kWh Sav	024
Analog In 0-10V	360
Analog In 4-20mA	361
Analog In Filter	099
Analog Out High[1]	089
Analog Out Sel[1]	088
Anlg In 0-10V Hi	092
Anlg In 0-10V Lo	091
Anlg In mA Loss	097
Anlg In V Loss	094
Anlg In4-20mA Hi	096
Anlg In4-20mA Lo	095
Anlg Loss Delay	098
Anlg Out Setpt[1]	090
Auto Rstrt Delay	542
Auto Rstrt Tries	541
Autotune	040
Average kWh Cost	052
Average Power	020
Boost Select	530
Break Frequency	533
Break Voltage	532
Bus Reg Enable	550
Cmd Stat Select[1]	122
Com Sts-Emb Enet[1]	683
Comm Loss Action	125
Comm Loss Time	126
Comm Sts - DSI	681
Comm Sts - Opt	682
Comm Write Mode	121
Commanded Freq	002
Compensation	547
Contrl In Status	013
Control Source	012
Control SW Ver	029
Control Temp	028
Counter Status	364
Counts Per Unit[1]	559
Current Limit 1	484
Current Limit 2[1]	485
DB Resistor Sel	437
DB Threshold	438
DC Brake Level	435
DC Brake Time	434
DC Brk Time@Strt	436
DC Bus Ripple	380
DC Bus Voltage	005
Decel Time 1	042
Decel Time 2	443
Decel Time 3	445
Decel Time 4	447
Dig In Status	014
DigIn TermBlk 02	062
DigIn TermBlk 03	063
DigIn TermBlk 05	065
DigIn TermBlk 06	066
DigIn TermBlk 07[1]	067
DigIn TermBlk 08[1]	068
Drive OL Mode	495
Drive Status	006
Drive Temp	027
Drive Type	367
Droop Hertz@ FLA[1]	441
Drv 0 Feedback	708
Drv 0 Logic Cmd	705
Drv 0 Logic Sts	707
Drv 0 Reference	706
Drv 1 Addr	171
Drv 1 Feedback	712
Drv 1 Logic Cmd	709
Drv 1 Logic Sts	711
Drv 1 Reference	710
Drv 2 Addr	172
Drv 2 Feedback	716
Drv 2 Logic Cmd	713
Drv 2 Logic Sts	715
Drv 2 Reference	714
Drv 3 Addr	173
Drv 3 Feedback	720
Drv 3 Logic Cmd	717
Drv 3 Logic Sts	719
Drv 3 Reference	718
Drv 4 Addr	174
Drv 4 Feedback	724
Drv 4 Logic Cmd	721
Drv 4 Logic Sts	723
Drv 4 Reference	722
Drv Ambient Sel	554
DSI Errors	731
DSI I/O Act	686
DSI I/O Cfg	175
Elapsed kWh	021
Elapsed MWh	022
Elapsed Run Time	019
Elapsed Time-hr	362
Elapsed Time-min	363
EM Brk Off Delay	086
EM Brk On Delay	087
EN Addr Sel[1]	128
EN Addr Src[1]	684
EN Comm Flt Actn[1]	143
EN Data In 1[1]	153
EN Data In 2[1]	154
EN Data In 3[1]	155
EN Data In 4[1]	156
EN Data Out 1[1]	157
EN Data Out 2[1]	158
EN Data Out 3[1]	159
EN Data Out 4[1]	160
EN Flt Cfg DL 1[1]	147
EN Flt Cfg DL 2[1]	148
EN Flt Cfg DL 3[1]	149
EN Flt Cfg DL 4[1]	150
EN Flt Cfg Logic[1]	145
EN Flt Cfg Ref[1]	146
EN Gateway Act 1[1]	701
EN Gateway Act 2[1]	702
EN Gateway Act 3[1]	703
EN Gateway Act 4[1]	704
EN Gateway Cfg 1[1]	137
EN Gateway Cfg 2[1]	138
EN Gateway Cfg 3[1]	139
EN Gateway Cfg 4[1]	140
EN Idle Flt Actn[1]	144
EN IP Addr Act 1[1]	693
EN IP Addr Act 2[1]	694
EN IP Addr Act 3[1]	695
EN IP Addr Act 4[1]	696
EN IP Addr Cfg 1[1]	129
EN IP Addr Cfg 2[1]	130
EN IP Addr Cfg 3[1]	131
EN IP Addr Cfg 4[1]	132
EN Missed IO Pkt[1]	730

(1) Parameter is specific to PowerFlex 525 drives only.

Parameter Name	No.
EN Rate Act[1]	685
EN Rate Cfg[1]	141
EN Rx Errors[1]	727
EN Rx Overruns[1]	725
EN Rx Packets[1]	726
EN Subnet Act 1[1]	697
EN Subnet Act 2[1]	698
EN Subnet Act 3[1]	699
EN Subnet Act 4[1]	700
EN Subnet Cfg 1[1]	133
EN Subnet Cfg 2[1]	134
EN Subnet Cfg 3[1]	135
EN Subnet Cfg 4[1]	136
EN Tx Errors[1]	729
EN Tx Packets[1]	728
Encoder Pos Tol[1]	564
Encoder PPR[1]	536
Encoder Speed[1]	378
Energy Saved	023
Enh Control Word[1]	560
Fault 1 BusVolts	651
Fault 1 Code	007
Fault 1 Current	641
Fault 1 Freq	631
Fault 1 Time-hr	611
Fault 1 Time-min	621
Fault 2 BusVolts	652
Fault 2 Code	008
Fault 2 Current	642
Fault 2 Freq	632
Fault 2 Time-hr	612
Fault 2 Time-min	622
Fault 3 BusVolts	653
Fault 3 Code	009
Fault 3 Current	643
Fault 3 Freq	633
Fault 3 Time-hr	613
Fault 3 Time-min	623
Fault 4 BusVolts	654
Fault 4 Code	604
Fault 4 Current	644
Fault 4 Freq	634
Fault 4 Time-hr	614
Fault 4 Time-min	624
Fault 5 BusVolts	655
Fault 5 Code	605
Fault 5 Current	645
Fault 5 Freq	635
Fault 5 Time-hr	615
Fault 5 Time-min	625
Fault 6 BusVolts[1]	656
Fault 6 Code[1]	606
Fault 6 Current[1]	646
Fault 6 Freq[1]	636
Fault 6 Time-hr[1]	616
Fault 6 Time-min[1]	626
Fault 7 BusVolts[1]	657
Fault 7 Code[1]	607
Fault 7 Current[1]	647
Fault 7 Freq[1]	637
Fault 7 Time-hr[1]	617
Fault 7 Time-min[1]	627
Fault 8 BusVolts[1]	658
Fault 8 Code[1]	608
Fault 8 Current[1]	648
Fault 8 Freq[1]	638
Fault 8 Time-hr[1]	618
Fault 8 Time-min[1]	628
Fault 9 BusVolts[1]	659
Fault 9 Code[1]	609
Fault 9 Current[1]	649
Fault 9 Freq[1]	639
Fault 9 Time-hr[1]	619
Fault 9 Time-min[1]	629
Fault Clear	551
Fault10 BusVolts[1]	660
Fault10 Code[1]	610
Fault10 Current[1]	650
Fault10 Freq[1]	640
Fault10 Time-hr[1]	620
Fault10 Time-min[1]	630
Fiber Status	390
Find Home Dir[1]	563
Find Home Freq[1]	562
Flux Current Ref	497
Flying Start En	545
FlyStrt CurLimit	546
Freq 1[1]	510
Freq 1 BW[1]	511
Freq 1 Ki[1]	522
Freq 1 Kp[1]	521
Freq 2[1]	512
Freq 2 BW[1]	513
Freq 2 Ki[1]	524
Freq 2 Kp[1]	523
Freq 3[1]	514
Freq 3 BW[1]	515
Freq 3 Ki[1]	526
Freq 3 Kp[1]	525
Half Bus Enable	549
Home Save[1]	561
HW Addr 1[1]	687
HW Addr 2[1]	688
HW Addr 3v	689
HW Addr 4[1]	690
HW Addr 5[1]	691
HW Addr 6[1]	692
IR Voltage Drop	496
Jog Accel/Decel	432
Jog Frequency	431
Keypad Freq	426
Ki Speed Loop[1]	538
Kp Speed Loop[1]	539
Language	30
Load Loss Level[1]	490
Load Loss Time[1]	491
Max Traverse	567
Maximum Freq	044
Maximum Voltage	534
Minimum Freq	043
MOP Freq	427
MOP Preload	429
MOP Reset Sel	428
MOP Time	430
Motor Fdbk Type[1]	535
Motor Lm[1]	499
Motor Lx[1]	500
Motor NP FLA	034
Motor NP Hertz	032
Motor NP Poles	035
Motor NP Power[1]	037
Motor NP RPM	036
Motor NP Volts	031
Motor OL Current	033
Motor OL Level	369
Motor OL Ret	494
Motor OL Select	493
Motor Rr[1]	498
Mtr Options Cfg	573
MultiDrv Sel	169
Opt Data In 1	161
Opt Data In 2	162
Opt Data In 3	163
Opt Data In 4	164

(1) Parameter is specific to PowerFlex 525 drives only.

Parameter Name	No.
Opt Data Out 1	165
Opt Data Out 2	166
Opt Data Out 3	167
Opt Data Out 4	168
Opto Out Logic(1)	075
Opto Out1 Level(1)	070
Opto Out1 Sel(1)	069
Opto Out2 Level(1)	073
Opto Out2 Sel(1)	072
Out Phas Loss En	557
Output Current	003
Output Freq	001
Output Power	017
Output Powr Fctr	381
Output RPM	015
Output Speed	016
Output Voltage	004
P Jump	570
PID 1 Deadband	465
PID 1 Diff Rate	463
PID 1 Fdback Sel	460
PID 1 Integ Time	462
PID 1 Invert Err	467
PID 1 Preload	466
PID 1 Prop Gain	461
PID 1 Ref Sel	459
PID 1 Setpoint	464
PID 1 Trim Hi	456
PID 1 Trim Lo	457
PID 1 Trim Sel	458
PID1 Fdbk Displ	383
PID1 Setpnt Disp	384
PID 2 Deadband(1)	477
PID 2 Diff Rate(1)	475
PID 2 Fdback Sel(1)	472
PID 2 Integ Time(1)	474
PID 2 Invert Err(1)	479
PID 2 Preload(1)	478
PID 2 Prop Gain(1)	473
PID 2 Ref Sel(1)	471
PID 2 Setpoint(1)	476
PID 2 Trim Hi(1)	468
PID 2 Trim Lo(1)	469
PID 2 Trim Sel(1)	470
PID2 Fdbk Displ(1)	385
PID2 Setpnt Disp(1)	386
Pos Reg Filter(1)	565
Pos Reg Gain(1)	566

Parameter Name	No.
Position Status(1)	387
Positioning Mode(1)	558
Power Loss Mode	548
Power Saved	018
Preset Freq 0	410
Preset Freq 1	411
Preset Freq 2	412
Preset Freq 3	413
Preset Freq 4	414
Preset Freq 5	415
Preset Freq 6	416
Preset Freq 7	417
Preset Freq 8(1)	418
Preset Freq 9(1)	419
Preset Freq 10(1)	420
Preset Freq 11(1)	421
Preset Freq 12(1)	422
Preset Freq 13(1)	423
Preset Freq 14(1)	424
Preset Freq 15(1)	425
Process Disp Hi	482
Process Disp Lo	481
Process Display	010
Program Lock	552
Program Lock Mod	553
Pulse In Scale	537
Purge Frequency	433
PWM Frequency	440
RdyBit Mode Act	392
RdyBit Mode Cfg	574
Relay 1 Off Time	080
Relay 1 On Time	079
Relay Out1 Level	077
Relay Out1 Sel	076
Relay 2 Off Time(1)	085
Relay 2 On Time(1)	084
Relay Out2 Level(1)	082
Relay Out2 Sel(1)	081
Reset Meters	555
Reset to Defalts	053
Reverse Disable	544
RS485 Data Rate	123
RS485 Format	127
RS485 Node Addr	124
S Curve %	439
Safety Open En(1)	105
Shear Pin 1 Time	487
Shear Pin1 Level	486

Parameter Name	No.
Shear Pin 2 Time(1)	489
Shear Pin2 Level(1)	488
Skip Freq Band 1	449
Skip Freq Band 2	451
Skip Freq Band 3(1)	453
Skip Freq Band 4(1)	455
Skip Frequency 1	448
Skip Frequency 2	450
Skip Frequency 3(1)	452
Skip Frequency 4(1)	454
Sleep Level	101
Sleep Time	102
Sleep-Wake Sel	100
Slip Hz Meter	375
Speed Feedback	376
Speed Ratio	572
Speed Reference1	047
Speed Reference2	049
Speed Reference3	051
Speed Reg Sel(1)	509
Stall Fault Time	492
Start At PowerUp	543
Start Boost	531
Start Source 1	046
Start Source 2	048
Start Source 3	050
Status @ Fault 1	661
Status @ Fault 2	662
Status @ Fault 3	663
Status @ Fault 4	664
Status @ Fault 5	665
Status @ Fault 6(1)	666
Status @ Fault 7(1)	667
Status @ Fault 8(1)	668
Status @ Fault 9(1)	669
Status @ Fault10(1)	670
Step Units 0(1)	200
Step Units 1(1)	202
Step Units 2(1)	204
Step Units 3(1)	206
Step Units 4(1)	208
Step Units 5(1)	210
Step Units 6(1)	212
Step Units 7(1)	214
Stop Mode	045
Stp Logic 0(1)	180
Stp Logic 1(1)	181
Stp Logic 2(1)	182

(1) Parameter is specific to PowerFlex 525 drives only.

Parameter Name	No.
Stp Logic 3[1]	183
Stp Logic 4[1]	184
Stp Logic 5[1]	185
Stp Logic 6[1]	186
Stp Logic 7[1]	187
Stp Logic Status[1]	391
Stp Logic Time 0[1]	190
Stp Logic Time 1[1]	191
Stp Logic Time 2[1]	192
Stp Logic Time 3[1]	193

Parameter Name	No.
Stp Logic Time 4[1]	194
Stp Logic Time 5[1]	195
Stp Logic Time 6[1]	196
Stp Logic Time 7[1]	197
Sync Time	571
Testpoint Data	368
Testpoint Sel	483
Text Scroll	556
Timer Status	365
Torque Current	382

Parameter Name	No.
Torque Perf Mode	039
Traverse Dec	569
Traverse Inc	568
Units Traveled H[1]	388
Units Traveled L[1]	389
Var PWM Disable	540
Voltage Class	038
Wake Level	103
Wake Time	104

(1) Parameter is specific to PowerFlex 525 drives only.

Notes:

Troubleshooting

This chapter provides information to guide you in troubleshooting the PowerFlex 520-series drive. Included is a listing and description of drive faults with possible solutions, when applicable.

For information on...	See page...
Drive Status	145
Faults	145
Fault Descriptions	147
Common Symptoms and Corrective Actions	150

ATTENTION: Risk of injury or equipment damage exists. Drive does not contain user-serviceable components. Do not disassemble drive chassis.

Drive Status

The condition or state of your drive is constantly monitored. Any changes will be indicated through the integral LCD display.

See Display and Control Keys on page 58 for information on drive status indicators and controls.

Faults

A fault is a condition that stops the drive. There are two fault types.

Fault Types

Type	Fault Description	
1	Auto-Reset/Run	When this type of fault occurs, and A541 [Auto Rstrt Tries] is set to a value greater than "0," a user-configurable timer, A542 [Auto Rstrt Delay], begins. When the timer reaches zero, the drive attempts to automatically reset the fault. If the condition that caused the fault is no longer present, the fault will be reset and the drive will be restarted.
2	Non-Resettable	This type of fault may require drive or motor repair, or is caused by wiring or programming errors. The cause of the fault must be corrected before the fault can be cleared.

Fault Indication

Condition	Display
Drive is indicating a fault. The integral LCD display provides visual notification of a fault condition by displaying the following. • Flashing fault number • Flashing fault indicator (LED) Press the Esc key to regain control of the display.	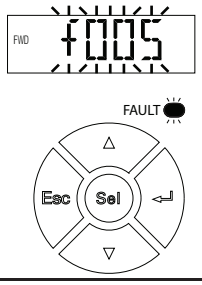

Manually Clearing Faults

Step	Key(s)
1. Press Esc to acknowledge the fault. The fault information will be removed so that you can use the integral keypad. Access b007 [Fault 1 Code] to view the most recent fault information. 2. Address the condition that caused the fault. The cause must be corrected before the fault can be cleared. See Fault Types, Descriptions and Actions on page 147. 3. After corrective action has been taken, clear the fault by one of these methods. • Press Stop if P045 [Stop Mode] is set to a value between "0" and "3". • Cycle drive power. • Set A551 [Fault Clear] to 1 "Reset Fault" or 2 "Clear Buffer". • Cycle digital input if t062, t063, t065...t068 [DigIn TermBlk xx] is set to 13 "Clear Fault".	

Automatically Clearing Faults

Option/Step	
Clear a Type 1 fault and restart the drive. 1. Set A541 [Auto Rstrt Tries] to a value other than "0". 2. Set A542 [Auto Rstrt Delay] to a value other than "0". **Clear an OverVoltage, UnderVoltage or Heatsink OvrTmp fault without restarting the drive.** 1. Set A541 [Auto Rstrt Tries] to a value other than "0". 2. Set A542 [Auto Rstrt Delay] to "0".	

ATTENTION: Equipment damage and/or personal injury may result if these parameters are used in an inappropriate application. Do not use this function without considering applicable local, national and international codes, standards, regulations or industry guidelines.

Auto Restart (Reset/Run)

The Auto Restart feature provides the ability for the drive to automatically perform a fault reset followed by a start attempt without user or application intervention. This allows remote or "unattended" operation. Only certain faults are allowed to be reset. Certain faults (Type 2) that indicate possible drive component malfunction are not resettable. Fault types are listed in the table Fault Types on page 145. See Fault Descriptions on page 147 for more information.

Use caution when enabling this feature, since the drive will attempt to issue its own start command based on user selected programming.

Fault Descriptions

Fault Types, Descriptions and Actions

No.	Fault	Type[2]	Description	Action
F000	No Fault	–	No fault present.	–
F002	Auxiliary Input	1	External trip (Auxiliary) input.	• Check remote wiring. • Verify communications programming for intentional fault.
F003	Power Loss	2	Single phase operation detected with excessive load.	• Monitor the incoming AC line for low voltage or line power interruption. • Check input fuses. • Reduce load.
F004	UnderVoltage	1	DC bus voltage fell below the minimum value.	Monitor the incoming AC line for low voltage or line power interruption.
F005	OverVoltage	1	DC bus voltage exceeded maximum value.	Monitor the AC line for high line voltage or transient conditions. Bus overvoltage can also be caused by motor regeneration. Extend the decel time or install dynamic brake option.
F006	Motor Stalled	1	Drive is unable to accelerate or decelerate motor.	• Increase P041, A442, A444, A446 [Accel Time x] or reduce load so drive output current does not exceed the current set by parameter A484, A485 [Current Limit x] for too long. • Check for overhauling load.
F007	Motor Overload	1	Internal electronic overload trip.	• An excessive motor load exists. Reduce load so drive output current does not exceed the current set by parameter P033 [Motor OL Current]. • Verify A530 [Boost Select] setting.
F008	Heatsink OvrTmp	1	Heatsink/Power Module temperature exceeds a predefined value.	• Check for blocked or dirty heat sink fins. Verify that ambient temperature has not exceeded the rated ambient temperature. • Check fan.
F009	CC OvrTmp	1	Control module temperature exceeds a predefined value.	• Check product ambient temperature. • Check for airflow obstruction. • Check for dirt or debris. • Check fan.
F012	HW OverCurrent	2	The drive output current has exceeded the hardware current limit.	Check programming. Check for excess load, improper A530 [Boost Select] setting, DC brake volts set too high or other causes of excess current.
F013	Ground Fault	1[3]	A current path to earth ground has been detected at one or more of the drive output terminals.	Check the motor and external wiring to the drive output terminals for a grounded condition.

Fault Types, Descriptions and Actions

No.	Fault	Type[2]	Description	Action
F015[1]	Load Loss	2	The output torque current is below the value programmed in A490 [Load Loss Level] for a time period greater than the time programmed in A491 [Load Loss Time].	• Verify connections between motor and load. • Verify level and time requirements
F021	Output Ph Loss	1	Output Phase Loss (if enabled). Configure with A557 [Out Phas Loss En].	• Verify motor wiring. • Verify motor.
F029	Analog In Loss	1	An analog input is configured to fault on signal loss. A signal loss has occurred. Configure with t094 [Anlg In V Loss] or t097 [Anlg In mA Loss].	• Check for broken/loose connections at inputs. • Check parameters.
F033	Auto Rstrt Tries	2	Drive unsuccessfully attempted to reset a fault and resume running for the programmed number of A541 [Auto Rstrt Tries].	Correct the cause of the fault and manually clear.
F038	Phase U to Gnd	2	A phase to ground fault has been detected between the drive and motor in this phase.	• Check the wiring between the drive and motor. • Check motor for grounded phase. • Replace drive if fault cannot be cleared.
F039	Phase V to Gnd			
F040	Phase W to Gnd			
F041	Phase UV Short	2	Excessive current has been detected between these two output terminals.	• Check the motor and drive output terminal wiring for a shorted condition. • Replace drive if fault cannot be cleared.
F042	Phase UW Short			
F043	Phase VW Short			
F048	Params Defaulted	1	The drive was commanded to write default values to EEPROM.	• Clear the fault or cycle power to the drive. • Program the drive parameters as needed.
F059[1]	Safety Open	1	Both of the safety inputs (Safety 1, Safety 2) are not enabled. Configure with t105 [Safety Open En].	• Check safety input signals. If not using safety, verify and tighten jumper for I/O terminals S1, S2 and S+.
F063	SW OverCurrent	1	Programmed A486, A488 [Shear Pinx Level] has been exceeded for a time period greater than the time programmed in A487, A489 [Shear Pin x Time].	• Verify connections between motor and load. • Verify level and time requirements.
F064	Drive Overload	2	Drive overload rating has been exceeded.	Reduce load or extend Accel Time.
F070	Power Unit	2	Failure has been detected in the drive power section.	• Check maximum ambient temperature has not been exceeded. • Cycle power. • Replace drive if fault cannot be cleared.
F071	DSI Net Loss	2	Control over the Modbus or DSI communication link has been interrupted.	• Cycle power. • Check communications cabling. • Check Modbus or DSI setting. • Check Modbus or DSI status.
F072	Opt Net Loss	2	Control over the network option card's remote network has been interrupted.	• Cycle power. • Check communications cabling. • Check network adapter setting. • Check external network status.
F073[1]	EN Net Loss	2	Control through the embedded EtherNet/IP adapter has been interrupted.	• Cycle power. • Check communications cabling. • Check EtherNet/IP setting. • Check external network status.
F080	Autotune Failure	2	The autotune function was either cancelled by the user or failed.	Restart procedure.

Fault Types, Descriptions and Actions

No.	Fault	Type[2]	Description	Action
F081	DSI Comm Loss	2	Communications between the drive and the Modbus or DSI master device have been interrupted.	• Cycle power. • Check communications cabling. • Check Modbus or DSI setting. • Check Modbus or DSI status. • Modify using C125 [Comm Loss Action]. • Connecting I/O terminals C1 and C2 to ground may improve noise immunity. • Replace wiring, Modbus master device, or control module.
F082	Opt Comm Loss	2	Communications between the drive and the network option card have been interrupted.	• Cycle power. • Reinstall option card in drive. • Modify using C125 [Comm Loss Action]. • Replace wiring, port expander, option card, or control module.
F083[1]	EN Comm Loss	2	Internal communications between the drive and the embedded EtherNet/IP adapter have been interrupted.	• Cycle power. • Check EtherNet/IP setting. • Check drive's Ethernet settings and diagnostic parameters. • Modify using C125 [Comm Loss Action]. • Replace wiring, Ethernet switch, or control module.
F091[1]	Encoder Loss	2	Requires differential encoder. One of the 2 encoder channel signals is missing.	• Check Wiring. • If P047, P049, P051 [Speed Referencex] = 16 "Positioning" and A535 [Motor Fdbk Type] = 5 "Quad Check", swap the Encoder channel inputs or swap any two motor leads. • Replace encoder.
F094	Function Loss	2	"Freeze-Fire" (Function Loss) input is inactive, input to the programmed terminal is open.	Close input to the terminal and cycle power.
F100	Parameter Chksum	2	Drive parameter non-volatile storage is corrupted.	Set P053 [Reset To Defalts] to 2 "Factory Rset".
F101	External Storage	2	External non-volatile storage has failed.	Set P053 [Reset To Defalts] to 2 "Factory Rset".
F105	C Connect Err	2	Control module was disconnected while drive was powered.	Clear fault and verify all parameter settings. Do not remove or install the control module while power is applied.
F106	Incompat C-P	2	The PowerFlex 525 control module does not support power modules with 0.25 HP power rating.	• Change to a different power module. • Change to a PowerFlex 523 control module.
F107	Replaced C-P	2	The control module could not recognize the power module. Hardware failure.	• Change to a different power module. • Replace control module if changing power module does not work.
F109	Mismatch C-P	2	The control module was mounted to a different drive type power module.	Set P053 [Reset To Defalts] to 3 "Power Reset".
F110	Keypad Membrane	2	Keypad membrane failure / disconnected.	• Cycle power. • Replace control module if fault cannot be cleared.
F111[1]	Safety Hardware	2	Safety input enable hardware malfunction. One of the safety inputs is not enabled.	• Check safety input signals. If not using safety, verify and tighten jumper for I/O terminals S1, S2 and S+. • Replace control module if fault cannot be cleared.
F114	uC Failure	2	Microprocessor failure.	• Cycle power. • Replace control module if fault cannot be cleared.

Fault Types, Descriptions and Actions

No.	Fault	Type[2]	Description	Action
F122	I/O Board Fail	2	Failure has been detected in the drive control and I/O section.	• Cycle power. • Replace drive or control module if fault cannot be cleared.
F125	Flash Update Req	2	The firmware in the drive is corrupt, mismatched, or incompatible with the hardware.	Perform a firmware flash update operation to attempt to load a valid set of firmware.
F126	NonRecoverablErr	2	A non-recoverable firmware or hardware error was detected. The drive was automatically stopped and reset.	• Clear fault or cycle power to the drive. • Replace drive or control module if fault cannot be cleared.
F127	DSIFlashUpdatReq	2	A critical problem with the firmware was detected and the drive is running using backup firmware that only supports DSI communications.	Perform a firmware flash update operation using DSI communications to attempt to load a valid set of firmware.

(1) This fault is not applicable to PowerFlex 523 drives.
(2) See Fault Types for more information.
(3) This fault may be cleared by the auto-restart routine and will be attempted only once. It ignores the value set in parameter A541 [Auto Rstrt Tries].

Common Symptoms and Corrective Actions

The drive is designed to start from the keypad when shipped. For a basic test of drive operation:

1. Remove all user I/O wire.
2. Verify safety terminals (S1, S2 and S+) jumper is in place and tightened.
3. Verify wire jumper is in place between I/O terminals 01 and 11.
4. Verify that the three jumpers are in their proper default positions on the control board. See PowerFlex 525 Control I/O Wiring Block Diagram on page 39 for more information.
5. Reset default parameter values by setting P053 [Reset Defalts] to 2 “Factory Rset”.
6. If safe to do so for your application, press Start on drive keypad. Drive will run according to the speed potentiometer.

Motor does not Start.

Cause(s)	Indication	Corrective Action
No output voltage to the motor.	None	Check the power circuit. • Check the supply voltage. • Check all fuses and disconnects. Check the motor. • Verify that the motor is connected properly. Check the control input signals. • Verify that a Start signal is present. If 2-Wire control is used, verify that either the Run Forward or Run Reverse signal is active, but not both. • Verify that I/O Terminal 01 is active. • Verify that P046, P048, P050 [Start Source x] matches your configuration. • Verify that A544 [Reverse Disable] is not prohibiting movement. • Verify that safety inputs (Safety 1 and Safety 2) are active.
Improper boost setting at initial start-up.	None	Set A530 [Boost Select] to 2 "35.0, VT".
Drive is Faulted	Flashing red status light	Clear fault. • Press Stop if P045 [Stop Mode] is set to a value between "0" and "3". • Cycle drive power. • Set A551 [Fault Clear] to 1 "Reset Fault" or 2 "Clear Buffer". • Cycle digital input if t062, t063, t065...t068 [DigIn TermBlk xx] is set to 13 "Clear Fault".
Incorrect programming. • P046, P048, P050 [Start Source x] is set incorrectly.	None	Check setting for b012 [Control Source].
Incorrect input wiring. See page 42 for wiring examples. • 2 wire control requires Run Forward, Run Reverse or Jog input. • 3 wire control requires Start and Stop inputs • Stop input is always required.	None	• Wire inputs correctly and/or install jumper. • If the PowerFlex 525 Safe-Torque-Off function is used, verify that inputs are active. • If 2-wire or 3-wire mode is used, verify that t062 [DigIn TermBlk 02] and t063 [DigIn TermBlk 03] are set properly.
Incorrect Sink/Source jumper setting.	None	Set switch to match wiring scheme.

Drive does not Start from Start or Run Inputs wired to the terminal block.

Cause(s)	Indication	Corrective Action
Drive is Faulted	Flashing red status light	Clear fault. • Press Stop if P045 [Stop Mode] is set to a value between "0" and "3". • Cycle drive power. • Set A551 [Fault Clear] to 1 "Reset Fault" or 2 "Clear Buffer". • Cycle digital input if t062, t063, t065...t068 [DigIn TermBlk xx] is set to 13 "Clear Fault".
Incorrect programming. • P046, P048, P050 [Start Source x] is set incorrectly. • t062, t063 [DigIn TermBlk 02/03] is set incorrectly.	None	Check parameter settings.
Incorrect input wiring. See page 42 for wiring examples. • 2 wire control requires Run Forward, Run Reverse or Jog input. • 3 wire control requires Start and Stop inputs • Stop input is always required.	None	• Wire inputs correctly and/or install jumper. • If the PowerFlex 525 Safe-Torque-Off function is used, verify that inputs are active.
Incorrect Sink/Source jumper setting.	None	Set switch to match wiring scheme.

Drive does not respond to changes in speed command.

Cause(s)	Indication	Corrective Action
No value is coming from the source of the command.	The drive "Run" indicator is lit and output is 0 Hz.	• Check b012 [Control Source] for correct source. • If the source is an analog input, check wiring and use a meter to check for presence of signal. • Check b002 [Commanded Freq] to verify correct command.
Incorrect reference source is being selected by remote device or digital inputs.	None	• Check b012 [Control Source] for correct source. • Check b014 [Dig In Status] to see if inputs are selecting an alternate source. Verify settings for t062, t063, t065-t068 [DigIn TermBlk xx]. • Check P047, P049, P051 [Speed Referencex] for the source of the speed reference. Reprogram as necessary. • Review the Speed Reference Control chart on page 46. • Verify communications if used.

Motor and/or drive will not accelerate to commanded speed.

Cause(s)	Indication	Corrective Action
Acceleration time is excessive.	None	Reprogram P041, A442, A444, A446 [Accel Time x].
Excess load or short acceleration times force the drive into current limit, slowing or stopping acceleration.	None	• Compare b003 [Output Current] with A484, A485 [Current Limit x]. • Remove excess load or reprogram P041, A442, A444, A446 [Accel Time x]. • Check for improper A530 [Boost Select] setting.
Speed command source or value is not as expected.	None	• Verify b002 [Commanded Freq]. • Check b012 [Control Source] for the proper Speed Command.
Programming is preventing the drive output from exceeding limiting values.	None	• Check P044 [Maximum Freq] to ensure that speed is not limited by programming. • Verify programming of A572 [Speed Ratio].
Torque performance does not match motor characteristics.	None	• Set motor nameplate full load amps in parameter P034 [Motor NP FLA]. • Perform P040 [Autotune] "Static Tune" or "Rotate Tune" procedure. • Set P039 [Torque Perf Mode] to 0 "V/Hz".

Motor operation is unstable.

Cause(s)	Indication	Corrective Action
Motor data was incorrectly entered.	None	1. Correctly enter motor nameplate data into P031, P032 and P033. 2. Enable A547 [Compensation]. 3. Use A530 [Boost Select] to reduce boost level.

Drive will not reverse motor direction.

Cause(s)	Indication	Corrective Action
Reverse is disabled.	None	Check A544 [Reverse Disable].
Digital input is not selected for reversing control.	None	Check [DigIn TermBlk xx] (See page 82). Choose correct input and program for reversing mode.
Digital input is incorrectly wired.	None	Check input wiring (See page 42).
Motor wiring is improperly phased for reverse.	None	Switch two motor leads.

Drive does not power up.

Cause(s)	Indication	Corrective Action
No input power to drive.	None	• Check the power circuit. • Check the supply voltage. • Check all fuses and disconnects.
Control module is not connected properly to power module.	None	1. Remove power. 2. Verify that the control module is properly and fully installed on the power module. 3. Reapply power.

Motor is rotating at zero Hz or slip frequency is not correct.

Cause(s)	Indication	Corrective Action
Incorrect speed calculation.	Improper speed.	• Verify P032 [Motor NP Hertz]. • Reduce boost with A530 [Boost Select]. • Set P036 [Motor NP RPM] to motor synchronous speed.

Notes:

Supplemental Drive Information

For information on...	See page...
Certifications	155
Environmental Specifications	156
Technical Specifications	157
Power Specifications	160

Certifications

Certifications	PowerFlex 523	PowerFlex 525
c-UL-us	Listed to UL508C and CAN/CSA-C22.2 No. 14-05.	
C-Tick N223	Australian Communications and Media Authority In conformity with the following: Radiocommunications Act: 1992 Radiocommunications Standard: 2008 Radiocommunications Labelling Notice: 2008 Standards applied: EN 61800-3:2004 +A1:2012	
CE	In conformity with the following European Directives: EMC Directive (2004/108/EC) Low Voltage Directive (2006/95/EC) Standards applied: EN 61800-3:2004 +A1:2012 EN 61800-5-1:2007	
TUV	Not applicable	TÜV Rheinland Standards applied: EN ISO 13849-1:2008 EN 61800-5-2:2007 EN 61508 PARTS 1-7:2010 EN 62061:2005 EN 60204-1:2009 Certified to ISO 13849-1 SIL2/PLd with embedded Safe-Torque-Off function Meets Functional Safety (FS) when used with embedded Safe-Torque-Off function
ATEX II (2) G D	Not applicable	Certified to ATEX directive 94/9/EC Group II Category (2) GD Applications with ATEX Approved Motors
KCC	Korean Registration of Broadcasting and Communications Equipment Compliant with the following standards: Article 58-2 of Radio Waves Act, Clause 3	
GOST-R	Russian GOST-R Certificate no. POCC US.ME92.H00040	
AC 156	Tested by Trentec to be compliant with AC156 Acceptance Criteria for Seismic Qualification Testing of Nonstructural Components and 2003 International Building Code for worst-case seismic level for USA excluding site class F	

Certifications	PowerFlex 523	PowerFlex 525
EPRI 	Electric Power Research Institute Certified compliant with the following standards: SEMI F47 IEC 61000-4-34	
Lloyds Register	Not applicable	Lloyd's Register Type Approval Certificate 12/10068(E1)
RoHS	Compliant with the European "Restriction of Hazardous Substances" Directive	

The drive is also designed to meet the appropriate portions of the following specifications:

NFPA 70 - US National Electrical Code

NEMA ICS 7.1 - Safety standards for Construction and Guide for Selection, Installation and Operation of Adjustable Speed Drive Systems.

Environmental Specifications

Specifications	PowerFlex 523	PowerFlex 525
Altitude: Without derating: With derating:	See Current Derating Curves on page 17 for derating guidelines. 1000 m (3300 ft) max. Up to 4000 m (13,200 ft) max., with the exception of 600V drives at 2000 m (6600 ft) max.	
Max. Surrounding Air Temperature Without derating: With derating:	See Current Derating Curves on page 17 for derating guidelines. -20...50 °C (-4...122 °F) -20...60 °C (-4...140 °F) or -20...70 °C (-4...158 °F) with optional Control Module Fan kit.	
Storage Temperature: Frame A...D: Frame E:	 -40...85 °C (-40...185 °F) -40...70 °C (-40...158 °F)	

Atmosphere:

IMPORTANT Drive **must not** be installed in an area where the ambient atmosphere contains volatile or corrosive gas, vapors or dust. If the drive is not going to be installed for a period of time, it must be stored in an area where it will not be exposed to a corrosive atmosphere.

Relative Humidity:	0...95% noncondensing
Shock: Vibration:	Complies with IEC 60068-2-27 Complies with IEC 60068-2-6:1995

Frame Size	Operating and Nonoperating		Nonoperating (Transportation)	
	Force (Shock/Vibration)	Mounting Type	Force (Shock/Vibration)	Mounting Type
A	15 g / 2 g	DIN rail or screw	30 g/ 2.5 g	Screw only
B	15 g / 2 g	DIN rail or screw	30 g/ 2.5 g	Screw only
C	15 g / 2 g	DIN rail or screw	30 g/ 2.5 g	Screw only
D	15 g / 2 g	Screw only	30 g/ 2.5 g	Screw only
E	15 g / 1.5 g	Screw only	30 g/ 2.5 g	Screw only

Conformal Coating:	Complies with: IEC 60721-3-3 to level 3C2 (chemical and gases only)
Surrounding Environment Pollution Degree Pollution Degree 1 & 2:	See Pollution Degree Ratings According to EN 61800-5-1 on page 49 for descriptions. All enclosures acceptable.
Sound Pressure Level (A-weighted) Frame A & B: Frame C: Frame D: Frame E:	Measurements are taken 1 m from the drive. Maximum 53 dBA Maximum 57 dBA Maximum 64 dBA Maximum 68 dBA

Technical Specifications

Protection

Specifications	PowerFlex 523	PowerFlex 525
Bus Overvoltage Trip		
100...120V AC Input:	405V DC bus (equivalent to 150V AC incoming line)	
200...240V AC Input:	405V DC bus (equivalent to 290V AC incoming line)	
380...480V AC Input:	810V DC bus (equivalent to 575V AC incoming line)	
525...600V AC Input:	1005V DC bus (equivalent to 711V AC incoming line)	
Bus Undervoltage Trip		
100...120V AC Input:	190V DC bus (equivalent to 75V AC incoming line)	
200...240V AC Input:	190V DC bus (equivalent to 150V AC incoming line)	
380...480V AC Input:	390V DC bus (equivalent to 275V AC incoming line)	
525...600V AC Input		
P038 = 3 "600V":	487V DC bus (equivalent to 344V AC incoming line)	
P038 = 2 "480V":	390V DC bus (equivalent to 275V AC incoming line)	
Power Ride-Thru:	100 ms	
Logic Control Ride-Thru:	0.5 s minimum, 2 s typical	
Electronic Motor Overload Protection:	Provides class 10 motor overload protection according to NEC article 430 and motor over-temperature protection according to NEC article 430.126 (A) (2). UL 508C File 29572.	
Overcurrent:	200% hardware limit, 300% instantaneous fault	
Ground Fault Trip:	Phase-to-ground on drive output	
Short Circuit Trip:	Phase-to-phase on drive output	

Electrical

Specifications	PowerFlex 523	PowerFlex 525
Voltage Tolerance:	-15% / +10%	
Frequency Tolerance:	47...63 Hz	
Input Phases:	Three-phase input provides full rating. Single-phase input provides 35% rating on three-phase drives.	
Displacement Power Factor:	0.98 across entire speed range	
Maximum Short Circuit Rating:	100,000 Amps Symmetrical	
Actual Short Circuit Rating:	Determined by AIC Rating of installed fuse/circuit breaker	
Transistor Type:	Isolated Gate Bipolar Transistor (IGBT)	
Internal DC Bus Choke	Only for Frame E drive ratings	
200...240V AC Input:	11 kW (15 HP)	
380...480V AC Input:	15...18.5 kW (20...25 HP) – Heavy Duty	
525...600V AC Input:	15...18.5 kW (20...25 HP) – Heavy Duty	

Control

Specifications	PowerFlex 523	PowerFlex 525
Method	Sinusoidal PWM, Volts/Hertz, Sensorless Vector Control, Economizer SVC motor control and Closed Loop Velocity Vector Control (Closed Loop Velocity Vector Control is not applicable to PowerFlex 523 drives)	
Carrier Frequency	2...16 kHz, Drive rating based on 4 kHz	
Frequency Accuracy		
Digital Input:	Within ±0.05% of set output frequency	
Analog Input:	Within 0.5% of maximum output frequency, 10-Bit resolution	
Analog Output:	–	±2% of full scale, 10-Bit resolution
Performance		
V/Hz (Volts per Hertz):	±1% of base speed across a 60:1 speed range	
SVC (Sensorless Vector):	±0.5% of base speed across a 100:1 speed range	
SVC Economizer:	±0.5% of base speed across a 100:1 speed range	
VVC (Velocity Vector Control):	±0.5% of base speed across a 60:1 speed range – Not applicable to PowerFlex 523 drives	

Specifications	PowerFlex 523	PowerFlex 525
Performance with Encoder	–	
SVC (Sensorless Vector):		±0.1% of base speed across a 100:1 speed range
SVC Economizer:		±0.1% of base speed across a 100:1 speed range
VVC (Velocity Vector Control):		±0.1% of base speed across a 1000:1 speed range
Output Voltage Range:	0V to rated motor voltage	
Output Frequency Range:	0...500 Hz (programmable)	
Efficiency:	97.5% (typical)	
Stop Modes:	Multiple programmable stop modes including – Ramp, Coast, DC-Brake, and Ramp-to-Stop	
Accel/Decel:	Four independently programmable accel and decel times. Each time may be programmed from 0...600 s in 0.01 s increments.	
Intermittent Overload		
Normal Duty:	110% Overload capability for up to 60 s, 150% for up to 3 s Applies for power rating above 15 kW (20 HP) only. Based on 480V drive rating.	
Heavy Duty:	150% Overload capability for up to 60 s, 180% for up to 3 s	

Control Inputs

Specifications		PowerFlex 523	PowerFlex 525
Digital	Bandwidth:	10 Rad/s for open and closed loop	
	Quantity:	(1) Dedicated for stop (4) Programmable	(1) Dedicated for stop (6) Programmable
	Current:	6 mA	
	Type		
	Source Mode (SRC):	18...24V = ON, 0...6V = OFF	
	Sink Mode (SNK):	0...6V = ON, 18...24V = OFF	
	Pulse Train		
	Quantity:	(1) Shared with one of the programmable digital input terminals.	
	Input Signal:	Transistor contact (open collector)	
	Input Frequency:	0...100 kHz	
	Current Consumption:	7 mA @ 24V DC maximum	
Analog:	Quantity:	(2) Isolated, 0-10V and 4-20mA	(2) Isolated, -10-10V and 4-20mA
	Specification		
	Resolution:	10-bit	
	0-10V DC Analog:	100k ohm input impedance	
	4-20mA Analog:	250 ohm input impedance	
	External Pot:	1...10k ohm, 2 W minimum	

Control Outputs

Specifications		PowerFlex 523	PowerFlex 525
Relay:	Quantity:	(1) Programmable Form C	(2) 1 Programmable Form A and 1 Programmable Form B
	Specification		
	Resistive Rating:	3.0 A @ 30V DC, 3.0 A @ 125V, 3.0 A @ 240V AC	
	Inductive Rating:	0.5 A @ 30V DC, 0.5 A @ 125V, 0.5 A @ 240V AC	

Specifications		PowerFlex 523	PowerFlex 525
Opto:	Quantity:	–	(2) Programmable
	Specification:		30V DC, 50 mA Non-inductive
Analog	Quantity:	–	(1) Non-Isolated 0-10V or 4-20 mA
	Specification Resolution: 0-10V DC Analog: 4-20 mA Analog:		 10-bit 1 k ohm minimum 525 ohm maximum

Encoder

Specifications	PowerFlex 523	PowerFlex 525
Type:	–	Incremental, dual channel
Supply:		12V, 250 mA
Quadrature:		90 °, ±27 ° @ 25 °C
Duty Cycle:		50%, +10%
Requirements:		Encoders must be line driver type, quadrature (dual channel) or pulse (single channel), 3.5...26V DC output, single-ended or differential and capable of supplying a minimum of 10 mA per channel. Allowable input is DC up to a maximum frequency of 250 kHz. The encoder I/O automatically scales to allow 5V, 12V and 24V DC nominal voltages.

Power Specifications

Watts Loss

PowerFlex 520-Series Estimated Watts Loss (Rated Load, Speed & PWM)

Voltage	Output Current (A)	Total Watts Loss
100...120V, 50/60 Hz 1-Phase	1.6	20.0
	2.5	27.0
	4.8	53.0
	6.0	67.0
200...240V, 50/60 Hz 1-Phase	1.6	20.0
	2.5	29.0
	4.8	50.0
	8.0	81.0
	11.0	111.0
200...240V, 50/60 Hz 1-Phase w/ EMC Filter	1.6	20.0
	2.5	29.0
	4.8	53.0
	8.0	84.0
	11.0	116.0
200...240V, 50/60 Hz 3-Phase	1.6	20.0
	2.5	29.0
	5.0	50.0
	8.0	79.0
	11.0	107.0
	17.5	148.0
	24.0	259.0
	32.2	323.0
	48.3	584.0
	62.1	708.0
380...480V, 50/60 Hz 3-Phase	1.4	27.0
	2.3	37.0
	4.0	62.0
	6.0	86.0
	10.5	129.0
	13.0	170.0
	17.0	221.0
	24.0	303.0
	30.0	387.0
380...480V, 50/60 Hz 3-Phase w/ EMC Filter	1.4	27.0
	2.3	37.0
	4.0	63.0
	6.0	88.0
	10.5	133.0
	13.0	175.0
	17.0	230.0
	24.0	313.0
	30.0	402.0
	37.0	602.0
	43.0	697.0

PowerFlex 520-Series Estimated Watts Loss (Rated Load, Speed & PWM)

Voltage	Output Current (A)	Total Watts Loss
525...600V, 50/60 Hz 3-Phase	0.9	22.0
	1.7	32.0
	3.0	50.0
	4.2	65.0
	6.6	95.0
	9.9	138.0
	12.0	164.0
	19.0	290.0
	22.0	336.0
	27.0	466.0
	32.0	562.0

Input Current Scaling (Optional)

You can use a higher drive rating by scaling the input current based on the output current required for your application.

PowerFlex 520-Series Input Current Scaled By Motor Current

PowerFlex 523	PowerFlex 525	Output				Input			
Catalog Number	Catalog Number	1	2	3	4	5	6	7	8
100...120V AC (-15%, +10%) – 1-Phase Input, 0...230V 3-Phase Output									
25A-V1P6N104	–	1.6	1.3	1.0	0.8	6.4	5.2	4.0	3.2
25A-V2P5N104	25B-V2P5N104	2.5	2.0	1.6	1.3	9.6	7.7	6.2	4.8
25A-V4P8N104	25B-V4P8N104	4.8	3.8	3.1	2.4	19.2	15.4	12.5	9.6
25A-V6P0N104	25B-V6P0N104	6.0	4.8	3.9	3.0	24.0	19.2	15.6	12.0
200...240V AC (-15%, +10%) – 1-Phase Input, 0...230V 3-Phase Output									
25A-A1P6N104	–	1.6	1.3	1.0	0.8	5.3	4.3	3.4	2.7
25A-A2P5N104	25B-A2P5N104	2.5	2.0	1.6	1.3	6.5	5.2	4.2	3.3
25A-A4P8N104	25B-A4P8N104	4.8	3.8	3.1	2.4	10.7	8.6	7.0	5.4
25A-A8P0N104	25B-A8P0N104	8.0	6.4	5.2	4.0	18.0	14.4	11.7	9.0
25A-A011N104	25B-A011N104	11.0	8.8	7.2	5.5	22.9	18.3	14.9	11.5
200...240V AC (-15%, +10%) – 1-Phase Input with EMC Filter, 0...230V 3-Phase Output									
25A-A1P6N114	–	1.6	1.3	1.0	0.8	5.3	4.3	3.4	2.7
25A-A2P5N114	25B-A2P5N114	2.5	2.0	1.6	1.3	6.5	5.2	4.2	3.3
25A-A4P8N114	25B-A4P8N114	4.8	3.8	3.1	2.4	10.7	8.6	7.0	5.4
25A-A8P0N114	25B-A8P0N114	8.0	6.4	5.2	4.0	18.0	14.4	11.7	9.0
25A-A011N114	25B-A011N114	11.0	8.8	7.2	5.5	22.9	18.3	14.9	11.5
200...240V AC (-15%, +10%) – 3-Phase Input, 0...230V 3-Phase Output									
25A-B1P6N104	–	1.6	1.3	1.0	0.8	1.9	1.5	1.2	1.0
25A-B2P5N104	25B-B2P5N104	2.5	2.0	1.6	1.3	2.7	2.2	1.8	1.4
25A-B5P0N104	25B-B5P0N104	5.0	4.0	3.2	2.5	5.8	4.6	3.8	2.9
25A-B8P0N104	25B-B8P0N104	8.0	6.4	5.2	4.0	9.5	7.6	6.2	4.8
25A-B011N104	25B-B011N104	11.0	8.8	7.2	5.5	13.8	11.0	9.0	6.9
25A-B017N104	25B-B017N104	17.5	14.0	11.4	8.8	21.1	16.9	13.7	10.6
25A-B024N104	25B-B024N104	24.0	19.2	15.6	12.0	26.6	21.3	17.3	13.3
25A-B032N104	25B-B032N104	32.2	25.8	20.9	16.1	34.8	27.8	22.6	17.4
25A-B048N104	25B-B048N104	48.3	38.6	31.4	24.2	44.0	35.2	28.6	22.0
25A-B062N104	25B-B062N104	62.1	49.7	40.4	31.1	56.0	44.8	36.4	28.0

PowerFlex 520-Series Input Current Scaled By Motor Current

PowerFlex 523	PowerFlex 525	Output				Input			
Catalog Number	**Catalog Number**	**1**	**2**	**3**	**4**	**5**	**6**	**7**	**8**
380...480V AC (-15%, +10%) – 3-Phase Input, 0...460V 3-Phase Output									
25A-D1P4N104	25B-D1P4N104	1.4	1.1	0.9	0.7	1.9	1.5	1.2	1.0
25A-D2P3N104	25B-D2P3N104	2.3	1.8	1.5	1.2	3.2	2.6	2.1	1.6
25A-D4P0N104	25B-D4P0N104	4.0	3.2	2.6	2.0	5.7	4.6	3.7	2.9
25A-D6P0N104	25B-D6P0N104	6.0	4.8	3.9	3.0	7.5	6.0	4.9	3.8
25A-D010N104	25B-D010N104	10.5	8.4	6.8	5.3	13.8	11.0	9.0	6.9
25A-D013N104	25B-D013N104	13.0	10.4	8.5	6.5	15.4	12.3	10.0	7.7
25A-D017N104	25B-D017N104	17.0	13.6	11.1	8.5	18.4	14.7	12.0	9.2
25A-D024N104	25B-D024N104	24.0	19.2	15.6	12.0	26.4	21.1	17.2	13.2
25A-D030N104	25B-D030N104	30.0	24.0	19.5	15.0	33.0	26.4	21.5	16.5
380...480V AC (-15%, +10%) – 3-Phase Input with EMC Filter, 0...460V 3-Phase Output									
25A-D1P4N114	25B-D1P4N114	1.4	1.1	0.9	0.7	1.9	1.5	1.2	1.0
25A-D2P3N114	25B-D2P3N114	2.3	1.8	1.5	1.2	3.2	2.6	2.1	1.6
25A-D4P0N114	25B-D4P0N114	4.0	3.2	2.6	2.0	5.7	4.6	3.7	2.9
25A-D6P0N114	25B-D6P0N114	6.0	4.8	3.9	3.0	7.5	6.0	4.9	3.8
25A-D010N114	25B-D010N114	10.5	8.4	6.8	5.3	13.8	11.0	9.0	6.9
25A-D013N114	25B-D013N114	13.0	10.4	8.5	6.5	15.4	12.3	10.0	7.7
25A-D017N114	25B-D017N114	17.0	13.6	11.1	8.5	18.4	14.7	12.0	9.2
25A-D024N114	25B-D024N114	24.0	19.2	15.6	12.0	26.4	21.1	17.2	3.2
25A-D030N114	25B-D030N114	30.0	24.0	19.5	15.0	33.0	26.4	21.5	16.5
25A-D037N114	25B-D037N114	37.0	29.6	24.1	18.5	33.7	27.0	21.9	16.9
25A-D043N114	25B-D043N114	43.0	34.4	28.0	21.5	38.9	31.1	25.3	19.5
525...600V AC (-15%, +10%) – 3-Phase Input, 0...575V 3-Phase Output									
25A-E0P9N104	25B-E0P9N104	0.9	0.7	0.6	0.5	1.2	1.0	0.8	0.6
25A-E1P7N104	25B-E1P7N104	1.7	1.4	1.1	0.9	2.3	1.8	1.5	1.2
25A-E3P0N104	25B-E3P0N104	3.0	2.4	2.0	1.5	3.8	3.0	2.5	1.9
25A-E4P2N104	25B-E4P2N104	4.2	3.4	2.7	2.1	5.3	4.2	3.4	2.7
25A-E6P6N104	25B-E6P6N104	6.6	5.3	4.3	3.3	8.0	6.4	5.2	4.0
25A-E9P9N104	25B-E9P9N104	9.9	7.9	6.4	5.0	11.2	9.0	7.3	5.6
25A-E012N104	25B-E012N104	12.0	9.6	7.8	6.0	13.5	10.8	8.8	6.8
25A-E019N104	25B-E019N104	19.0	15.2	12.4	9.5	24.0	19.2	15.6	12.0
25A-E022N104	25B-E022N104	22.0	17.6	14.3	11.0	27.3	21.8	17.7	13.7
25A-E027N104	25B-E027N104	27.0	21.6	17.6	13.5	24.7	19.8	16.1	12.4
25A-E032N104	25B-E032N104	32.0	25.6	20.8	16.0	29.2	23.4	19.0	14.6

Accessories and Dimensions

Product Selection

Catalog Number Description

25B	-	V	2P5	N	1	0	4
Drive		Voltage Rating	Rating	Enclosure	HIM	Emission Class	Version

PowerFlex 520-Series Drive Ratings

Output Ratings					Input Voltage Range	Frame Size	PowerFlex 523	PowerFlex 525
Normal Duty		Heavy Duty		Output Current (A)				
HP	kW	HP	kW				Catalog No.	Catalog No.
100...120V AC (-15%, +10%) – 1-Phase Input, 0...230V 3-Phase Output								
0.25	0.2	0.25	0.2	1.6	85...132	A	25A-V1P6N104[2]	–
0.5	0.4	0.5	0.4	2.5	85...132	A	25A-V2P5N104	25B-V2P5N104
1.0	0.75	1.0	0.75	4.8	85...132	B	25A-V4P8N104	25B-V4P8N104
1.5	1.1	1.5	1.1	6.0	85...132	B	25A-V6P0N104	25B-V6P0N104
200...240V AC (-15%, +10%) – 1-Phase Input, 0...230V 3-Phase Output								
0.25	0.2	0.25	0.2	1.6	170...264	A	25A-A1P6N104[2]	–
0.5	0.4	0.5	0.4	2.5	170...264	A	25A-A2P5N104	25B-A2P5N104
1.0	0.75	1.0	0.75	4.8	170...264	A	25A-A4P8N104	25B-A4P8N104
2.0	1.5	2.0	1.5	8.0	170...264	B	25A-A8P0N104	25B-A8P0N104
3.0	2.2	3.0	2.2	11.0	170...264	B	25A-A011N104	25B-A011N104
200...240V AC (-15%, +10%) – 1-Phase Input with EMC Filter, 0...230V 3-Phase Output								
0.25	0.2	0.25	0.2	1.6	170...264	A	25A-A1P6N114	–
0.5	0.4	0.5	0.4	2.5	170...264	A	25A-A2P5N114	25B-A2P5N114
1.0	0.75	1.0	0.75	4.8	170...264	A	25A-A4P8N114	25B-A4P8N114
2.0	1.5	2.0	1.5	8.0	170...264	B	25A-A8P0N114	25B-A8P0N114
3.0	2.2	3.0	2.2	11.0	170...264	B	25A-A011N114	25B-A011N114
200...240V AC (-15%, +10%) – 3-Phase Input, 0...230V 3-Phase Output								
0.25	0.2	0.25	0.2	1.6	170...264	A	25A-B1P6N104[2]	–
0.5	0.4	0.5	0.4	2.5	170...264	A	25A-B2P5N104	25B-B2P5N104
1.0	0.75	1.0	0.75	5.0	170...264	A	25A-B5P0N104	25B-B5P0N104
2.0	1.5	2.0	1.5	8.0	170...264	A	25A-B8P0N104	25B-B8P0N104
3.0	2.2	3.0	2.2	11.0	170...264	A	25A-B011N104	25B-B011N104
5.0	4.0	5.0	4.0	17.5	170...264	B	25A-B017N104	25B-B017N104
7.5	5.5	7.5	5.5	24.0	170...264	C	25A-B024N104	25B-B024N104
10.0	7.5	10.0	7.5	32.2	170...264	D	25A-B032N104	25B-B032N104
15.0	11.0	10.0	7.5	48.3	170...264	E	25A-B048N104	25B-B048N104
20.0	15.0	15.0	11.0	62.1	170...264	E	25A-B062N104	25B-B062N104
380...480V AC (-15%, +10%) – 3-Phase Input, 0...460V 3-Phase Output[1]								
0.5	0.4	0.5	0.4	1.4	323...528	A	25A-D1P4N104[2]	25B-D1P4N104[2]
1.0	0.75	1.0	0.75	2.3	323...528	A	25A-D2P3N104	25B-D2P3N104
2.0	1.5	2.0	1.5	4.0	323...528	A	25A-D4P0N104	25B-D4P0N104
3.0	2.2	3.0	2.2	6.0	323...528	A	25A-D6P0N104	25B-D6P0N104
5.0	4.0	5.0	4.0	10.5	323...528	B	25A-D010N104	25B-D010N104

PowerFlex 520-Series Drive Ratings

Output Ratings					Input Voltage Range	Frame Size	PowerFlex 523	PowerFlex 525
Normal Duty		Heavy Duty		Output Current (A)				
HP	kW	HP	kW				Catalog No.	Catalog No.
7.5	5.5	7.5	5.5	13.0	323...528	C	25A-D013N104	25B-D013N104
10.0	7.5	10.0	7.5	17.0	323...528	C	25A-D017N104	25B-D017N104
15.0	11.0	15.0	11.0	24.0	323...528	D	25A-D024N104	25B-D024N104
20.0	15.0	15.0	11.0	30.0	323...528	D	25A-D030N104	25B-D030N104
380...480V AC (-15%, +10%) – 3-Phase Input with EMC Filter, 0...460V 3-Phase Output								
0.5	0.4	0.5	0.4	1.4	323...528	A	25A-D1P4N114	25B-D1P4N114
1.0	0.75	1.0	0.75	2.3	323...528	A	25A-D2P3N114	25B-D2P3N114
2.0	1.5	2.0	1.5	4.0	323...528	A	25A-D4P0N114	25B-D4P0N114
3.0	2.2	3.0	2.2	6.0	323...528	A	25A-D6P0N114	25B-D6P0N114
5.0	4.0	5.0	4.0	10.5	323...528	B	25A-D010N114	25B-D010N114
7.5	5.5	7.5	5.5	13.0	323...528	C	25A-D013N114	25B-D013N114
10.0	7.5	10.0	7.5	17.0	323...528	C	25A-D017N114	25B-D017N114
15.0	11.0	15.0	11.0	24.0	323...528	D	25A-D024N114	25B-D024N114
20.0	15.0	15.0	11.0	30.0	323...528	D	25A-D030N114	25B-D030N114
25.0	18.5	20.0	15.0	37.0	323...528	E	25A-D037N114	25B-D037N114
30.0	22.0	25.0	18.5	43.0	323...528	E	25A-D043N114	25B-D043N114
525...600V AC (-15%, +10%) – 3-Phase Input, 0...575V 3-Phase Output								
0.5	0.4	0.5	0.4	0.9	446...660	A	25A-E0P9N104(2)	25B-E0P9N104(2)
1.0	0.75	1.0	0.75	1.7	446...660	A	25A-E1P7N104	25B-E1P7N104
2.0	1.5	2.0	1.5	3.0	446...660	A	25A-E3P0N104	25B-E3P0N104
3.0	2.2	3.0	2.2	4.2	446...660	A	25A-E4P2N104	25B-E4P2N104
5.0	4.0	5.0	4.0	6.6	446...660	B	25A-E6P6N104	25B-E6P6N104
7.5	5.5	7.5	5.5	9.9	446...660	C	25A-E9P9N104	25B-E9P9N104
10.0	7.5	10.0	7.5	12.0	446...660	C	25A-E012N104	25B-E012N104
15.0	11.0	15.0	11.0	19.0	446...660	D	25A-E019N104	25B-E019N104
20.0	15.0	15.0	11.0	22.0	446...660	D	25A-E022N104	25B-E022N104
25.0	18.5	20.0	15.0	27.0	446...660	E	25A-E027N104	25B-E027N104
30.0	22.0	25.0	18.5	32.0	446...660	E	25A-E032N104	25B-E032N104

(1) A non-filtered drive is not available for 380...480V AC 25 HP (18.5 kW) and 30 HP (22.0 kW) ratings. Filtered drives are available, however you must verify that the application will support a filtered drive.

(2) These drive ratings do not come with a heatsink cooling fan and are in accordance with design specifications.

Dynamic Brake Resistors

Drive Ratings			Minimum Resistance Ω ±10%	Resistance Ω ±5%	Catalog No.(1)(2)
Input Voltage	HP	kW			
100...120V 50/60 Hz 1-Phase	0.25	0.2	56	91	AK-R2-091P500
	0.5	0.4	56	91	AK-R2-091P500
	1.0	0.75	56	91	AK-R2-091P500
	1.5	1.1	41	91	AK-R2-091P500
200...240V 50/60 Hz 1-Phase	0.25	0.2	56	91	AK-R2-091P500
	0.5	0.4	56	91	AK-R2-091P500
	1.0	0.75	56	91	AK-R2-091P500
	2.0	1.5	41	91	AK-R2-091P500
	3.0	2.2	32	47	AK-R2-047P500

Dynamic Brake Resistors

Drive Ratings			Minimum Resistance Ω ±10%	Resistance Ω ±5%	Catalog No.(1)(2)
Input Voltage	**HP**	**kW**			
200...240V 50/60 Hz 3-Phase	0.25	0.2	56	91	AK-R2-091P500
	0.5	0.4	56	91	AK-R2-091P500
	1.0	0.75	56	91	AK-R2-091P500
	2.0	1.5	41	91	AK-R2-091P500
	3.0	2.2	32	47	AK-R2-047P500
	5.0	4.0	18	47	AK-R2-047P500
	7.5	5.5	16	30	AK-R2-030P1K2
	10.0	7.5	14	30	AK-R2-030P1K2
	15.0	11.0	14	15	AK-R2-030P1K2(3)
	20.0	15.0	10	15	AK-R2-030P1K2(3)
380...480V 50/60 Hz 3-Phase	0.5	0.4	89	360	AK-R2-360P500
	1.0	0.75	89	360	AK-R2-360P500
	2.0	1.5	89	360	AK-R2-360P500
	3.0	2.2	89	120	AK-R2-120P1K2
	5.0	4.0	47	120	AK-R2-120P1K2
	7.5	5.5	47	120	AK-R2-120P1K2
	10.0	7.5	47	120	AK-R2-120P1K2
	15.0	11.0	43	60	AK-R2-120P1K2(3)
	20.0	15.0	43	60	AK-R2-120P1K2(3)
	25.0	18.5	27	40	AK-R2-120P1K2(4)
	30.0	22.0	27	40	AK-R2-120P1K2(4)
525...600V 50/60 Hz 3-Phase	0.5	0.4	112	360	AK-R2-360P500
	1.0	0.75	112	360	AK-R2-360P500
	2.0	1.5	112	360	AK-R2-360P500
	3.0	2.2	112	120	AK-R2-120P1K2
	5.0	4.0	86	120	AK-R2-120P1K2
	7.5	5.5	59	120	AK-R2-120P1K2
	10.0	7.5	59	120	AK-R2-120P1K2
	15.0	11.0	59	60	AK-R2-120P1K2(3)
	20.0	15.0	59	60	AK-R2-120P1K2(3)
	25.0	18.5	53	60	AK-R2-120P1K2(3)
	30.0	22.0	34	40	AK-R2-120P1K2(4)

(1) The resistors listed in this tables are rated for 5% duty cycle.

(2) Use of Rockwell Automation resistors is always recommended. The resistors listed have been carefully selected for optimizing performance in a variety of applications. Alternative resistors may be used, however, care must be taken when making a selection. See the PowerFlex Dynamic Braking Resistor Calculator, publication PFLEX-AT001.

(3) Requires two resistors wired in parallel.

(4) Requires three resistors wired in parallel.

EMC Line Filters

Drive Ratings					
Input Voltage	**HP**	**kW**	**Current (A)**	**Frame Size**	**Catalog No.**
100...120V 50/60 Hz 1-Phase	0.25	0.2	1.6	A	25-RF011-AL
	0.5	0.4	2.5	A	25-RF011-AL
	1.0	0.75	4.8	B	25-RF023-BL
	1.5	1.1	6.0	B	25-RF023-BL

EMC Line Filters

Drive Ratings					
Input Voltage	**HP**	**kW**	**Current (A)**	**Frame Size**	**Catalog No.**
200...240V 50/60 Hz 1-Phase	0.25	0.2	1.6	A	25-RF011-AL
	0.5	0.4	2.5	A	25-RF011-AL
	1.0	0.75	4.8	A	25-RF011-AL
	2.0	1.5	8.0	B	25-RF023-BL
	3.0	2.2	11.0	B	25-RF023-BL
200...240V 50/60 Hz 3-Phase	0.25	0.2	1.6	A	25-RF014-AL
	0.5	0.4	2.5	A	25-RF014-AL
	1.0	0.75	5.0	A	25-RF014-AL
	2.0	1.5	8.0	A	25-RF014-AL
	3.0	2.2	11.0	A	25-RF014-AL
	5.0	4.0	17.5	B	25-RF021-BL
	7.5	5.5	24.0	C	25-RF027-CL
	10.0	7.5	32.2	D	25-RF035-DL
	15.0	11.0	48.3	E	25-RF056-EL
	20.0	15.0	62.1	E	25-RF056-EL
380...480V 50/60 Hz 3-Phase	0.5	0.4	1.4	A	25-RF7P5-AL
	1.0	0.75	2.3	A	25-RF7P5-AL
	2.0	1.5	4.0	A	25-RF7P5-AL
	3.0	2.2	6.0	A	25-RF7P5-AL
	5.0	4.0	10.5	B	25-RF014-BL
	7.5	5.5	13.0	C	25-RF018-CL
	10.0	7.5	17.0	C	25-RF018-CL
	15.0	11.0	24.0	D	25-RF033-DL
	20.0	15.0	30.0	D	25-RF033-DL
	25.0	18.5	37.0	E	25-RF039-EL
	30.0	22.0	43.0	E	25-RF039-EL(1)
525...600V 50/60 Hz 3-Phase	0.5	0.4	0.9	A	25-RF8P0-BL(2)
	1.0	0.75	1.7	A	25-RF8P0-BL(2)
	2.0	1.5	3.0	A	25-RF8P0-BL(2)
	3.0	2.2	4.2	A	25-RF8P0-BL(2)
	5.0	4.0	6.6	B	25-RF8P0-BL
	7.5	5.5	9.9	C	25-RF014-CL
	10.0	7.5	12.0	C	25-RF014-CL
	15.0	11.0	19.0	D	25-RF027-DL
	20.0	15.0	22.0	D	25-RF027-DL
	25.0	18.5	27.0	E	25-RF029-EL
	30.0	22.0	32.0	E	25-RF029-EL(1)

(1) EMC Line Filter size is based on the input current of the drive. See the tables on page 25 and page 26 for more information.

(2) This 600V drive rating needs to be matched with a frame B EMC Line Filter.

EMC Plates

Item	Description	Frame Size	Catalog No.
EMC Plate	Optional grounding plate for shielded cables.	A	25-EMC1-FA
		B	25-EMC1-FB
		C	25-EMC1-FC
		D	25-EMC1-FD
		E	25-EMC1-FE

Human Interface Module (HIM) Option Kits and Accessories

Item	Description	Catalog No.
LCD Display, Remote Panel Mount	Digital speed control CopyCat capable IP66 (NEMA Type 4X/12) indoor use only Includes 2.9 meter cable	22-HIM-C2S
LCD Display, Remote Handheld	Digital speed control Full numeric keyboard CopyCat capable IP 30 (NEMA Type 1) Includes 1.0 meter cable Panel mount with optional Bezel Kit	22-HIM-A3
Bezel Kit	Panel mount for LCD Display, Remote Handheld unit, IP 30 (NEMA Type 1) Includes 2.0 m DSI cable	22-HIM-B1
DSI HIM Cable (DSI HIM to RJ45 cable)	1.0 m (3.3 ft)	22-HIM-H10
	2.9 m (9.51 ft)	22-HIM-H30

IP 30/NEMA 1/UL Type 1 Kit

Item	Description	Frame Size	Catalog No.
IP 30/NEMA 1/UL Type 1 Kit	Field installed kit. Converts drive to IP 30/NEMA 1/UL Type 1 enclosure. Includes conduit box with mounting screws and plastic top panel.	A	25-JBAA
		B	25-JBAB
		C	25-JBAC
		D	25-JBAD
		E	25-JBAE

Control Module Fan Kit

Item	Description	Frame Size	Catalog No.
Control Module Fan Kit	For use with drive in environments with ambient temperatures up to 70 °C or horizontal mounting.	A...D	25-FAN1-70C
		E	25-FAN2-70C

Incremental Encoder Input Option

Item	Description	Catalog No.
Incremental Encoder	Incremental encoder input option board.	25-ENC-1

Bulletin 160 to PowerFlex 520-Series Mounting Adapter Plate

Item	Description	B160 Frame Size	Catalog No.
Mounting Adapter Plate	For use with drive when replacing Bulletin 160 drives in existing installations to a PowerFlex 520-Series drive. Select the catalog number based on the frame size of your Bulletin 160 drive.	A	25-MAP-FA
		B	25-MAP-FB

Replacement Parts

PowerFlex 520-Series Power Module

Item	Description
PowerFlex 520-Series Power Module	Replacement power module for use with PowerFlex 520-Series drives. Includes: • Power Module • Power Module Front Cover • Power Terminal Guard • Heatsink Fan

Output Ratings					Input Voltage Range	Frame Size	Catalog No.
Normal Duty		Heavy Duty		Output Current (A)			
HP	kW	HP	kW				
100...120V AC (-15%, +10%) – 1-Phase Input, 0...230V 3-Phase Output							
0.25	0.2	0.25	0.2	1.6	85...132	A	25-PM1-V1P6
0.5	0.4	0.5	0.4	2.5	85...132	A	25-PM1-V2P5
1.0	0.75	1.0	0.75	4.8	85...132	B	25-PM1-V4P8
1.5	1.1	1.5	1.1	6.0	85...132	B	25-PM1-V6P0
200...240V AC (-15%, +10%) – 1-Phase Input, 0...230V 3-Phase Output							
0.25	0.2	0.25	0.2	1.6	170...264	A	25-PM1-A1P6
0.5	0.4	0.5	0.4	2.5	170...264	A	25-PM1-A2P5
1.0	0.75	1.0	0.75	4.8	170...264	A	25-PM1-A4P8
2.0	1.5	2.0	1.5	8.0	170...264	B	25-PM1-A8P0
3.0	2.2	3.0	2.2	11.0	170...264	B	25-PM1-A011
200...240V AC (-15%, +10%) – 1-Phase Input with EMC Filter, 0...230V 3-Phase Output							
0.25	0.2	0.25	0.2	1.6	170...264	A	25-PM2-A1P6
0.5	0.4	0.5	0.4	2.5	170...264	A	25-PM2-A2P5
1.0	0.75	1.0	0.75	4.8	170...264	A	25-PM2-A4P8
2.0	1.5	2.0	1.5	8.0	170...264	B	25-PM2-A8P0
3.0	2.2	3.0	2.2	11.0	170...264	B	25-PM2-A011
200...240V AC (-15%, +10%) – 3-Phase Input, 0...230V 3-Phase Output							
0.25	0.2	0.25	0.2	1.6	170...264	A	25-PM1-B1P6
0.5	0.4	0.5	0.4	2.5	170...264	A	25-PM1-B2P5
1.0	0.75	1.0	0.75	5.0	170...264	A	25-PM1-B5P0
2.0	1.5	2.0	1.5	8.0	170...264	A	25-PM1-B8P0
3.0	2.2	3.0	2.2	11.0	170...264	A	25-PM1-B011
5.0	4.0	5.0	4.0	17.5	170...264	B	25-PM1-B017
7.5	5.5	7.5	5.5	24.0	170...264	C	25-PM1-B024
10.0	7.5	10.0	7.5	32.2	170...264	D	25-PM1-B032
15.0	11.0	10.0	7.5	48.3	170...264	E	25-PM1-B048
20.0	15.0	15.0	11.0	62.1	170...264	E	25-PM1-B062
380...480V AC (-15%, +10%) – 3-Phase Input, 0...460V 3-Phase Output							
0.5	0.4	0.5	0.4	1.4	323...528	A	25-PM1-D1P4
1.0	0.75	1.0	0.75	2.3	323...528	A	25-PM1-D2P3
2.0	1.5	2.0	1.5	4.0	323...528	A	25-PM1-D4P0
3.0	2.2	3.0	2.2	6.0	323...528	A	25-PM1-D6P0
5.0	4.0	5.0	4.0	10.5	323...528	B	25-PM1-D010
7.5	5.5	7.5	5.5	13.0	323...528	C	25-PM1-D013
10.0	7.5	10.0	7.5	17.0	323...528	C	25-PM1-D017
15.0	11.0	15.0	11.0	24.0	323...528	D	25-PM1-D024
20.0	15.0	15.0	11.0	30.0	323...528	D	25-PM1-D030

Output Ratings							
Normal Duty		Heavy Duty		Output Current (A)	Input Voltage Range	Frame Size	Catalog No.
HP	kW	HP	kW				
380...480V AC (-15%, +10%) – 3-Phase Input with EMC Filter, 0...460V 3-Phase Output							
0.5	0.4	0.5	0.4	1.4	323...528	A	25-PM2-D1P4
1.0	0.75	1.0	0.75	2.3	323...528	A	25-PM2-D2P3
2.0	1.5	2.0	1.5	4.0	323...528	A	25-PM2-D4P0
3.0	2.2	3.0	2.2	6.0	323...528	A	25-PM2-D6P0
5.0	4.0	5.0	4.0	10.5	323...528	B	25-PM2-D010
7.5	5.5	7.5	5.5	13.0	323...528	C	25-PM2-D013
10.0	7.5	10.0	7.5	17.0	323...528	C	25-PM2-D017
15.0	11.0	15.0	11.0	24.0	323...528	D	25-PM2-D024
20.0	15.0	15.0	11.0	30.0	323...528	D	25-PM2-D030
25.0	18.5	20.0	15.0	37.0	323...528	E	25-PM2-D037
30.0	22.0	25.0	18.5	43.0	323...528	E	25-PM2-D043
525...600V AC (-15%, +10%) – 3-Phase Input, 0...575V 3-Phase Output							
0.5	0.4	0.5	0.4	0.9	446...660	A	25-PM1-E0P9
1.0	0.75	1.0	0.75	1.7	446...660	A	25-PM1-E1P7
2.0	1.5	2.0	1.5	3.0	446...660	A	25-PM1-E3P0
3.0	2.2	3.0	2.2	4.2	446...660	A	25-PM1-E4P2
5.0	4.0	5.0	4.0	6.6	446...660	B	25-PM1-E6P6
7.5	5.5	7.5	5.5	9.9	446...660	C	25-PM1-E9P9
10.0	7.5	10.0	7.5	12.0	446...660	C	25-PM1-E012
15.0	11.0	15.0	11.0	19.0	446...660	D	25-PM1-E019
20.0	15.0	15.0	11.0	22.0	446...660	D	25-PM1-E022
25.0	18.5	20.0	15.0	27.0	446...660	E	25-PM1-E027
30.0	22.0	25.0	18.5	32.0	446...660	E	25-PM1-E032

PowerFlex 520-Series Control Module

Item	Description	Frame Size	Catalog No.
PowerFlex 523 Control Module	Replacement control module for use with PowerFlex 520-Series drives. Includes: • Control Module • Control Module Front Cover	A...E	25A-CTM1
PowerFlex 525 Control Module			25B-CTM1

Other Parts

Item	Description	Frame Size	Catalog No.
PowerFlex 523 Control Module Front Cover	Replacement cover for the control module I/O terminals, EtherNet/IP and DSI ports.	A...E	25A-CTMFC1
PowerFlex 525 Control Module Front Cover			25B-CTMFC1
PowerFlex 520-Series Power Module Front Cover	Replacement cover for the PowerFlex 520-Series power module.	B	25-PMFC-FB
		C	25-PMFC-FC
		D	25-PMFC-FD
		E	25-PMFC-FE
PowerFlex 520-Series Power Terminal Guard	Replacement finger guard for power terminals.	A	25-PTG1-FA
		B	25-PTG1-FB
		C	25-PTG1-FC
		D	25-PTG1-FD
		E	25-PTG1-FE

Other Parts

Item	Description	Frame Size	Catalog No.
PowerFlex 520-Series Heatsink Fan Kit	Replacement fan for drive power module.	A	25-FAN1-FA
		B	25-FAN1-FB
		C	25-FAN1-FC
		D	25-FAN1-FD
		E	25-FAN1-FE
PowerFlex 520-Series EMC Cores	Replacement EMC cores	A	25-CORE-A
			25-CORE-RF-A
		B	25-CORE-B
			25-CORE-RF-B
		C	25-CORE-C
			25-CORE-RF-C
		D	25-CORE-D
			25-CORE-RF-D
		E	25-CORE-E
			25-CORE-RF-E

Communication Option Kits and Accessories

Item	Description	Catalog No.
Communication Adapters	Embedded communication options for use with the PowerFlex 520-Series drives: • DeviceNet™ • Dual Port EtherNet/IP™ • PROFIBUS™ DP-V1	 25-COMM-D 25-COMM-E2P 25-COMM-P
Compact I/O Module	Three channel	1769-SM2
Universal Serial Bus™ (USB) Converter Module	Provides serial communication with DF1 protocol for use with Connected Components Workbench software. Includes: • 2 m USB cable (1) • 20-HIM-H10 cable (1) • 22-HIM-H10 cable (1)	1203-USB
Serial Converter Module (RS485 to RS232)	Provides serial communication with DF1 protocol for use with Connected Components Workbench software. Includes: • DSI to RS232 serial converter (1) • 1203-SFC serial cable (1) • 22-RJ45CBL-C20 cable (1)	22-SCM-232
DSI Cable	2.0 m RJ45 to RJ45 cable, male to male connectors.	22-RJ45CBL-C20
Serial Cable	2.0 m serial cable with a locking low profile connector to connect to the serial converter and a 9-pin sub-miniature D female connector to connect to a computer.	1203-SFC
Splitter Cable	RJ45 one to two port splitter cable (Modbus only)	AK-U0-RJ45-SC1
Terminating Resistors	RJ45 120 Ohm resistors (2 pieces)	AK-U0-RJ45-TR1
Terminal Block	RJ45 Two position terminal block (5 pieces)	AK-U0-RJ45-TB2P
Connected Components Workbench Software (Download or DVD-ROM)	Windows-based software packages for programming and configuring Allen-Bradley drives and other Rockwell Automation products. Compatibility: Windows XP, Windows Vista and Windows 7	http://ab.rockwellautomation.com/programmable-controllers/connected-components-workbench-software

Bulletin 1321-3R Series Line Reactors

Output Ratings[1]				Input Line Reactor[3][4]		Output Line Reactor[3][4]	
Normal Duty		Heavy Duty		IP00 (Open Style)	IP11 (NEMA/UL Type 1)	IP00 (Open Style)	IP11 (NEMA/UL Type 1)
HP	kW	HP	kW	Catalog No.	Catalog No.	Catalog No.	Catalog No.
200...240V 50/60 Hz 1-Phase[2]							
0.25	0.2	0.25	0.2	1321-3R4-A	1321-3RA4-A	1321-3R2-D	1321-3RA2-D
0.5	0.4	0.5	0.4	1321-3R8-A	1321-3RA8-A	1321-3R2-D	1321-3RA2-D
1.0	0.75	1.0	0.75	1321-3R8-A	1321-3RA8-A	1321-3R4-A	1321-3RA4-A
2.0	1.5	2.0	1.5	1321-3R18-A	1321-3RA18-A	1321-3R8-A	1321-3RA8-A
3.0	2.2	3.0	2.2	1321-3R18-A	1321-3RA18-A	1321-3R12-A	1321-3RA12-A
200...240V 50/60 Hz 3-Phase							
0.25	0.2	0.25	0.2	1321-3R2-D	1321-3RA2-D	1321-3R2-D	1321-3RA2-D
0.5	0.4	0.5	0.4	1321-3R2-D	1321-3RA2-D	1321-3R2-D	1321-3RA2-D
1.0	0.75	1.0	0.75	1321-3R4-A	1321-3RA4-A	1321-3R4-A	1321-3RA4-A
2.0	1.5	2.0	1.5	1321-3R8-A	1321-3RA8-A	1321-3R8-A	1321-3RA8-A
3.0	2.2	3.0	2.2	1321-3R12-A	1321-3RA12-A	1321-3R12-A	1321-3RA12-A
5.0	4.0	5.0	4.0	1321-3R18-A	1321-3RA18-A	1321-3R18-A	1321-3RA18-A
7.5	5.5	7.5	5.5	1321-3R25-A	1321-3RA25-A	1321-3R25-A	1321-3RA25-A
10.0	7.5	10.0	7.5	1321-3R35-A	1321-3RA35-A	1321-3R35-A	1321-3RA35-A
15.0	11.0	10.0	7.5	1321-3R45-A	1321-3RA45-A	1321-3R45-A	1321-3RA45-A
20.0	15.0	15.0	11.0	1321-3R55-A (ND) 1321-3R45-A (HD)	1321-3RA55-A (ND) 1321-3RA45-A (HD)	1321-3R55-A (ND) 1321-3R45-A (HD)	1321-3RA55-A (ND) 1321-3RA45-A (HD)
380...480V 50/60 Hz 3-Phase							
0.5	0.4	0.5	0.4	1321-3R2-B	1321-3RA2-B	1321-3R2-B	1321-3RA2-B
1.0	0.75	1.0	0.75	1321-3R4-C	1321-3RA4-C	1321-3R4-C	1321-3RA4-C
2.0	1.5	2.0	1.5	1321-3R4-B	1321-3RA4-B	1321-3R4-B	1321-3RA4-B
3.0	2.2	3.0	2.2	1321-3R8-C	1321-3RA8-C	1321-3R8-C	1321-3RA8-C
5.0	4.0	5.0	4.0	1321-3R12-B	1321-3RA12-B	1321-3R12-B	1321-3RA12-B
7.5	5.5	7.5	5.5	1321-3R12-B	1321-3RA12-B	1321-3R12-B	1321-3RA12-B
10.0	7.5	10.0	7.5	1321-3R18-B	1321-3RA18-B	1321-3R18-B	1321-3RA18-B
15.0	11.0	15.0	11.0	1321-3R25-B	1321-3RA25-B	1321-3R25-B	1321-3RA25-B
20.0	15.0	15.0	11.0	1321-3R35-B (ND) 1321-3R25-B (HD)	1321-3RA35-B (ND) 1321-3RA25-B (HD)	1321-3R35-B (ND) 1321-3R25-B (HD)	1321-3RA35-B (ND) 1321-3RA25-B (HD)
25.0	18.5	20.0	15.0	1321-3R35-B	1321-3RA35-B	1321-3R35-B	1321-3RA35-B
30.0	22.0	25.0	18.5	1321-3R45-B (ND) 1321-3R35-B (HD)	1321-3RA45-B (ND) 1321-3RA35-B (HD)	1321-3R45-B (ND) 1321-3R35-B (HD)	1321-3RA45-B (ND) 1321-3RA35-B (HD)
525...600V 50/60 Hz 3-Phase							
0.5	0.4	0.5	0.4	1321-3R1-C	1321-3RA1-C	1321-3R1-C	1321-3RA1-C
1.0	0.75	1.0	0.75	1321-3R2-B	1321-3RA2-B	1321-3R2-B	1321-3RA2-B
2.0	1.5	2.0	1.5	1321-3R4-C	1321-3RA4-C	1321-3R4-C	1321-3RA4-C
3.0	2.2	3.0	2.2	1321-3R4-B	1321-3RA4-B	1321-3R4-B	1321-3RA4-B
5.0	4.0	5.0	4.0	1321-3R8-C	1321-3RA8-C	1321-3R8-C	1321-3RA8-C
7.5	5.5	7.5	5.5	1321-3R12-B	1321-3RA12-B	1321-3R12-B	1321-3RA12-B
10.0	7.5	10.0	7.5	1321-3R12-B	1321-3RA12-B	1321-3R12-B	1321-3RA12-B
15.0	11.0	15.0	11.0	1321-3R18-B	1321-3RA18-B	1321-3R18-B	1321-3RA18-B
20.0	15.0	15.0	11.0	1321-3R25-B (ND) 1321-3R18-B (HD)	1321-3RA25-B (ND) 1321-3RA18-B (HD)	1321-3R25-B (ND) 1321-3R18-B (HD)	1321-3RA25-B (ND) 1321-3RA18-B (HD)
25.0	18.5	20.0	15.0	1321-3R35-C (ND) 1321-3R25-C (HD)	1321-3RA35-C (ND) 1321-3RA25-C (HD)	1321-3R35-C (ND) 1321-3R25-C (HD)	1321-3RA35-C (ND) 1321-3RA25-C (HD)
30.0	22.0	25.0	18.5	1321-3R35-C (ND) 1321-3R25-B (HD)	1321-3RA35-C (ND) 1321-3RA25-B (HD)	1321-3R35-C (ND) 1321-3R25-B (HD)	1321-3RA35-C (ND) 1321-3RA25-B (HD)

(1) Normal Duty and Heavy Duty ratings for 15 HP (11 kW) and below are identical except for 200...240V 3-Phase 15 HP (11 kW) drive.
(2) Standard 3-phase reactors can be used for 1-phase applications by routing each of the two supply conductors through an outside coil and leaving the center open.
(3) Catalog numbers listed are for 3% impedance at 60 Hz. 5% impedance reactor types are also available. See publication 1321-TD001.
(4) Input line reactors were sized based on the NEC fundamental motor amps. Output line reactors were sized based on the VFD rated output currents.

Product Dimensions

The PowerFlex 520-series drive is available in five frame sizes. See the PowerFlex 520-Series Drive Ratings on page 163 for information on power ratings.

PowerFlex 520-Series Drive Weight

Frame Size	Weight (kg/lb)
A	1.1 / 2.4
B	1.6 / 3.5
C	2.3 / 5.0
D	3.9 / 8.6
E	12.9 / 28.4

IP 20/Open Type – Frame A

Dimensions are in millimeters and (inches)

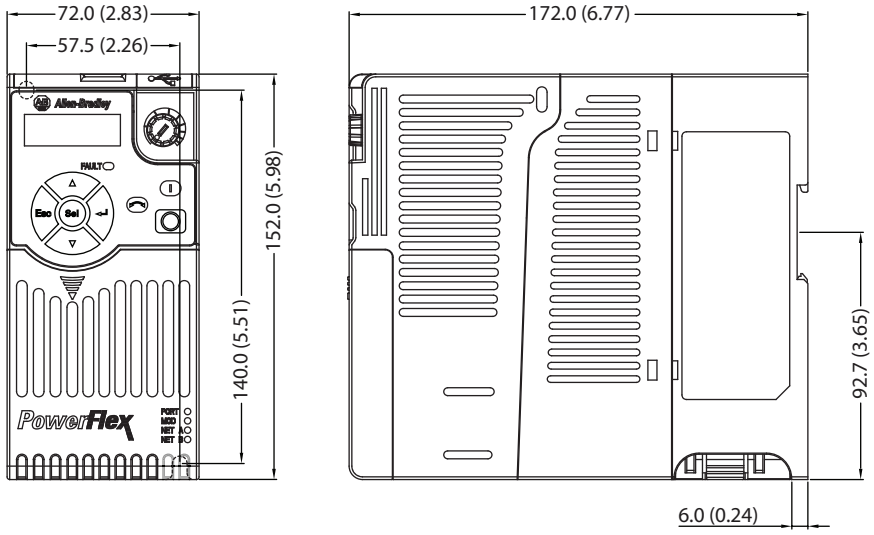

IP 20/Open Type – Frame B

Dimensions are in millimeters and (inches)

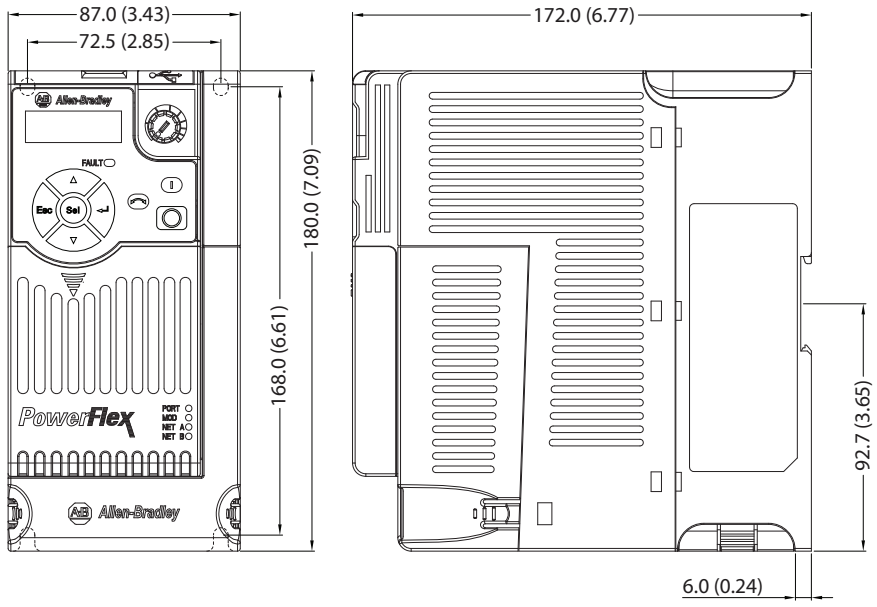

IP 20/Open Type – Frame C

Dimensions are in millimeters and (inches)

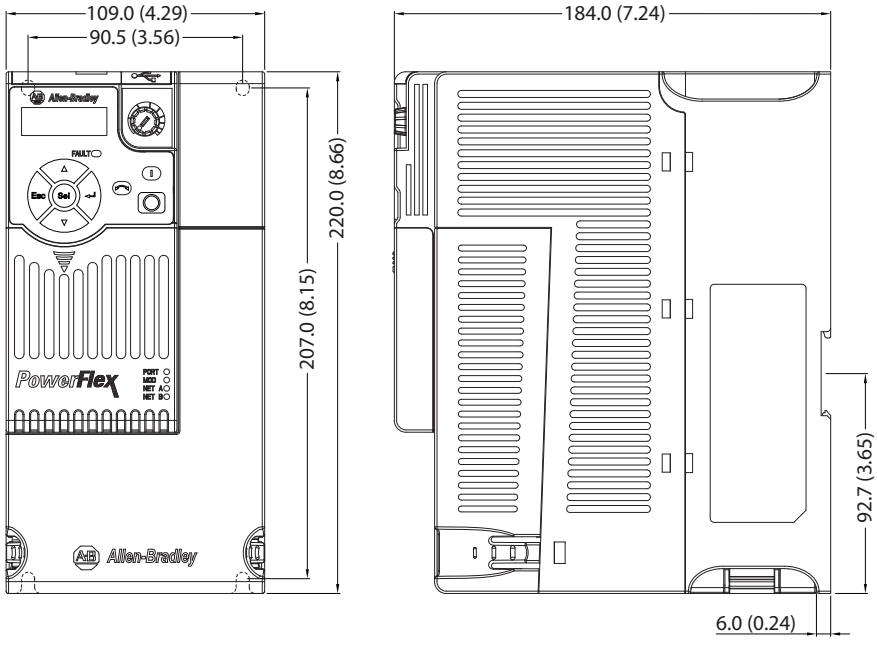

IP 20/Open Type – Frame D

Dimensions are in millimeters and (inches)

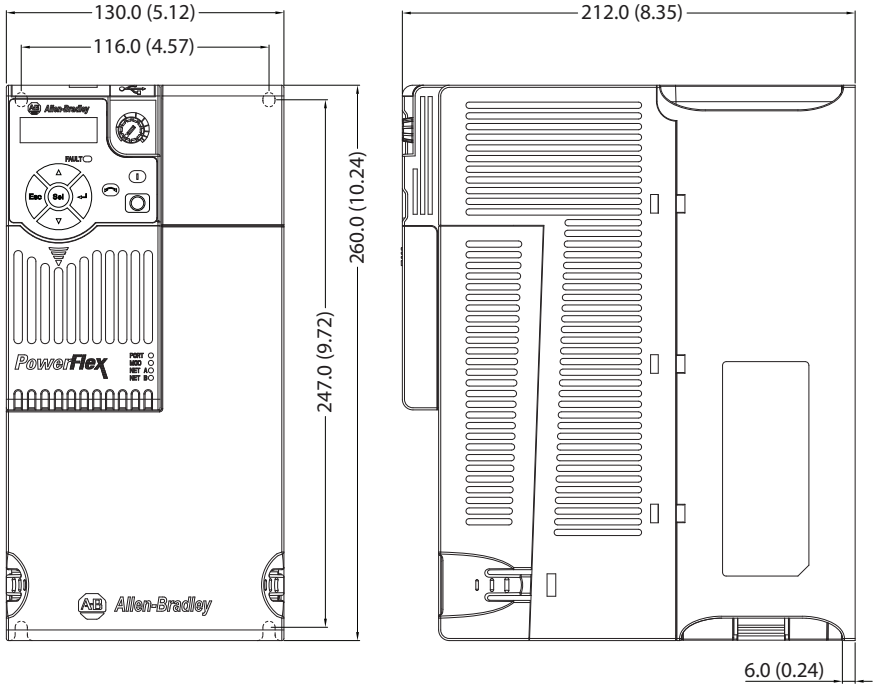

IP 20/Open Type – Frame E

Dimensions are in millimeters and (inches)

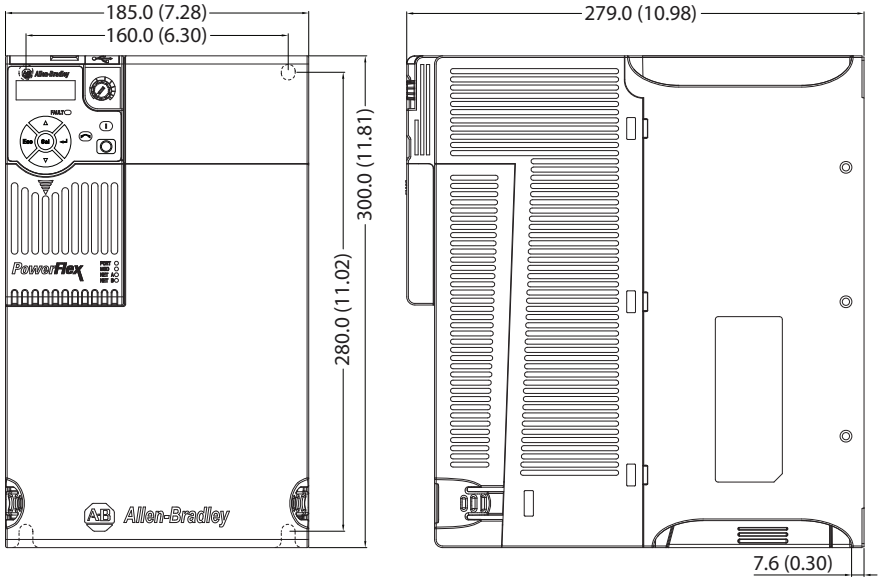

Control Module Fan Kit

25-FAN1-70C

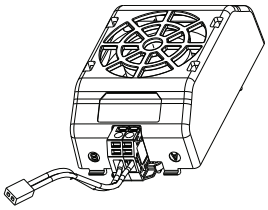

25-FAN2-70C

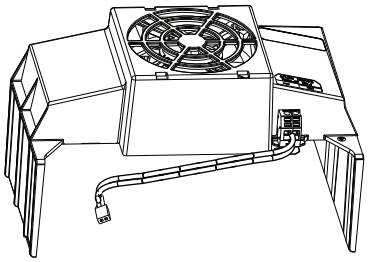

Specifications	25-FAN1-70C	25-FAN2-70C
Rated Voltage	24V DC	
Operation Voltage	14...27.6V DC	
Input Current	0.1 A	0.15 A
Speed (Reference)	7000 rpm	4500 ± 10% rpm
Maximum Air Flow (At zero static pressure)	0.575 m^3/min	1.574 m^3/min
Maximum Air Pressure (At zero air flow)	7.70 mmH_2O	9.598 mmH_2O
Acoustical Noise	40.5 dB-A	46.0 dB-A
Insulation Type	UL Class A	
Frame Size	Frame A...D	Frame E
Wire Size	0.32 mm^2 (22 AWG)	
Torque	0.29...0.39 Nm (2.6...3.47 lb-in.)	

IP 20/Open Type with Control Module Fan Kit – Frame A...C

Dimensions are in millimeters and (inches)

Frame A

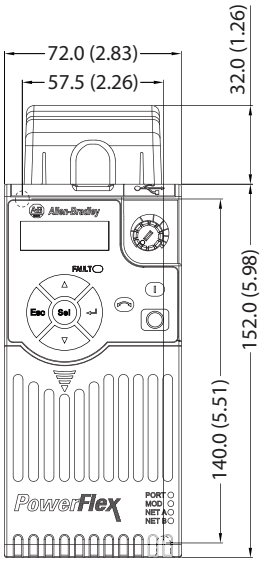

Frame B

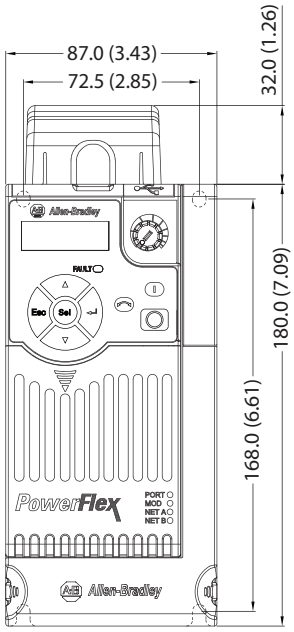

Frame C

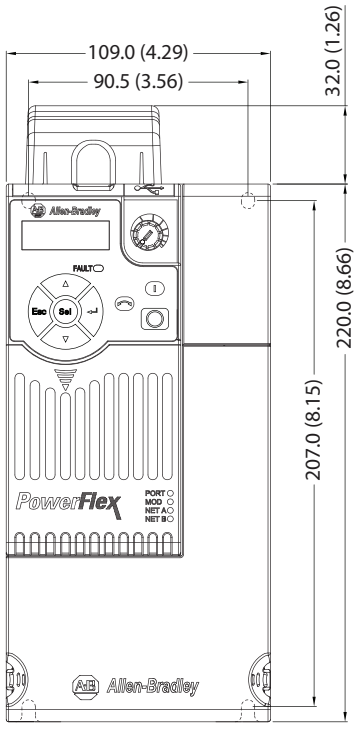

IMPORTANT An external 24V DC power source is required when using the Control Module Fan Kit with drive frames A, B, and C.

IP 20/Open Type with Control Module Fan Kit – Frame D...E

Dimensions are in millimeters and (inches)

Frame D

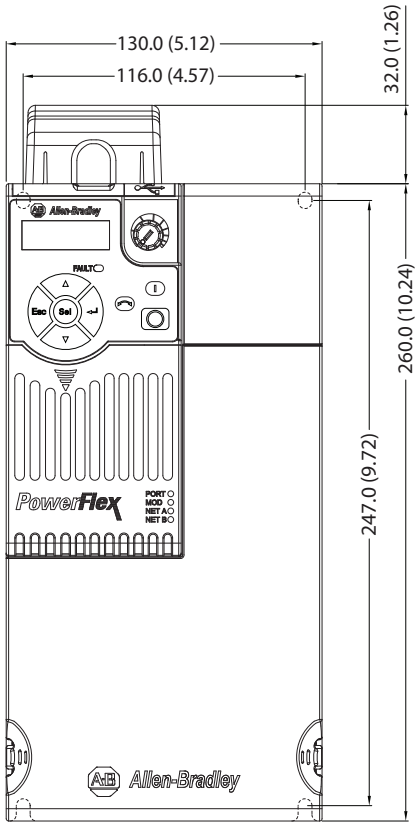

Frame E

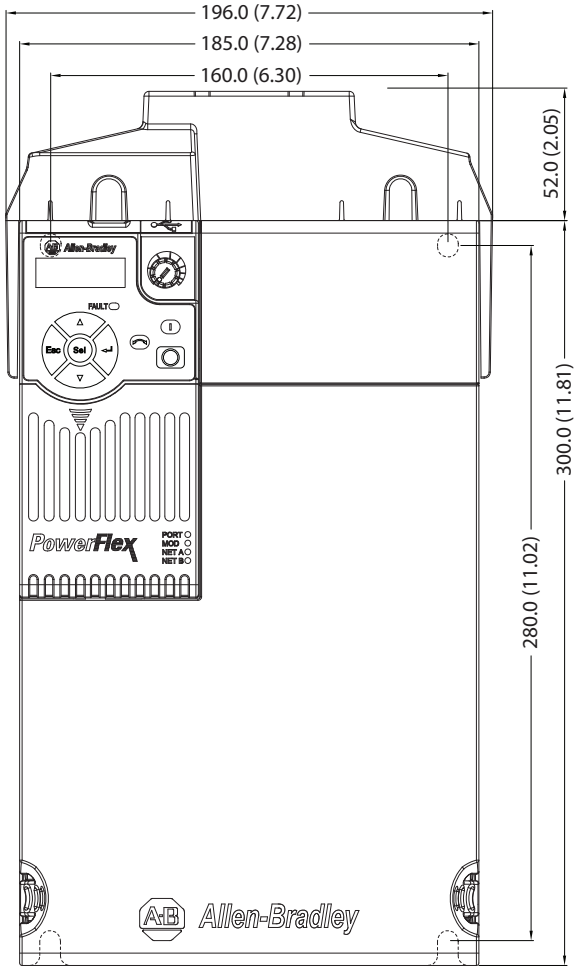

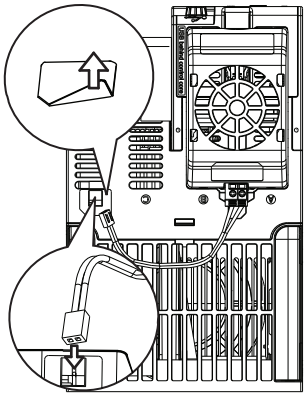

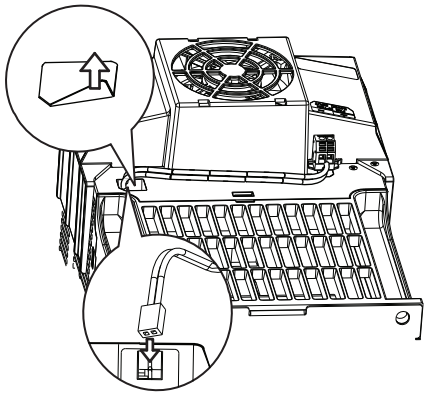

IMPORTANT Remove the label to access the built-in 24V supply on drive frames D and E for use with the Control Module Fan Kit.

IP 30/NEMA 1/UL Type 1 – Frame A

Dimensions are in millimeters and (inches)

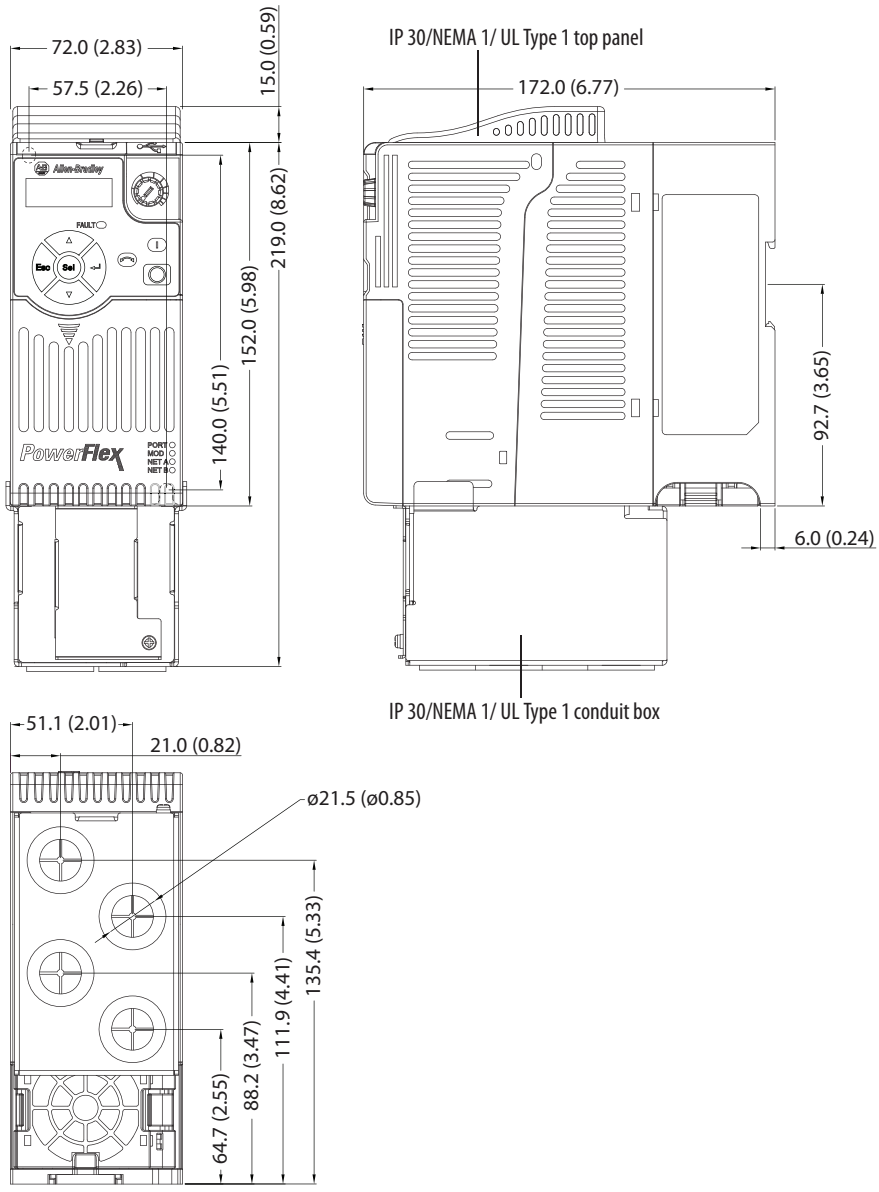

IP 30/NEMA 1/UL Type 1 – Frame B

Dimensions are in millimeters and (inches)

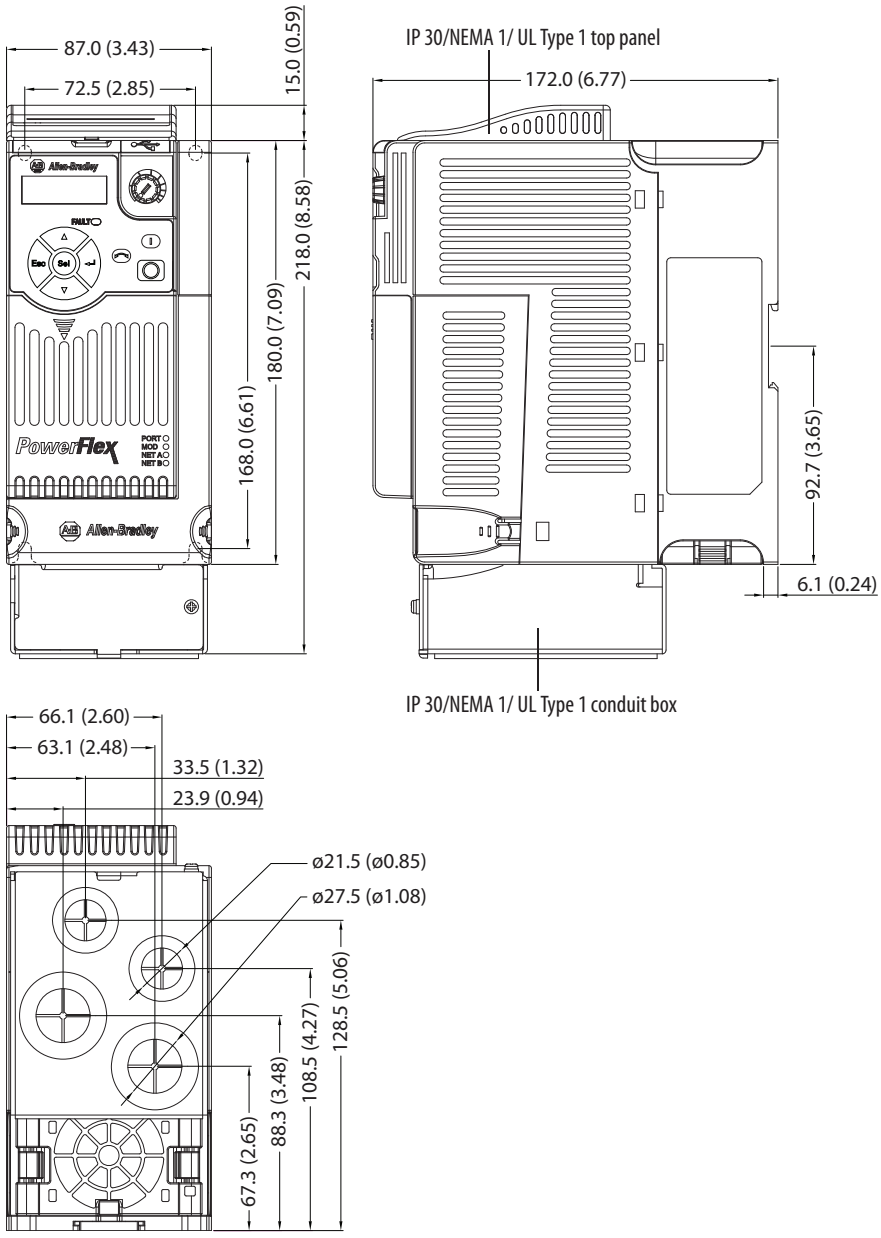

IP 30/NEMA 1/UL Type 1 – Frame C

Dimensions are in millimeters and (inches)

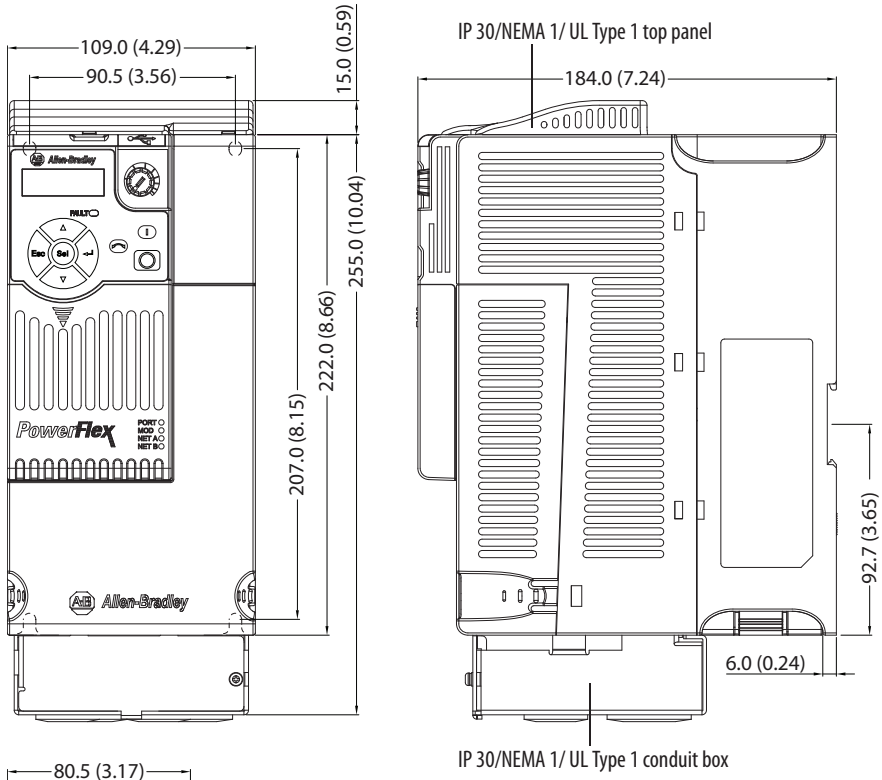

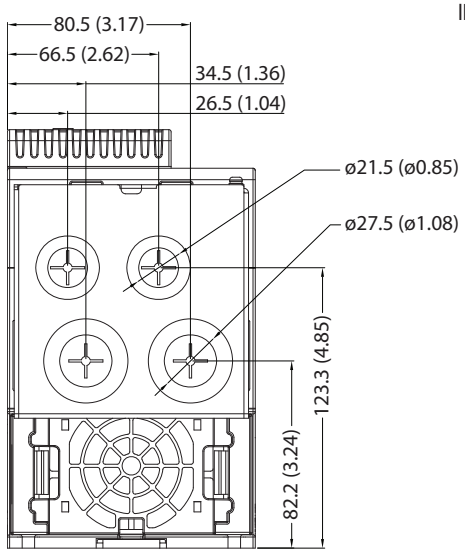

IP 30/NEMA 1/UL Type 1 – Frame D

Dimensions are in millimeters and (inches)

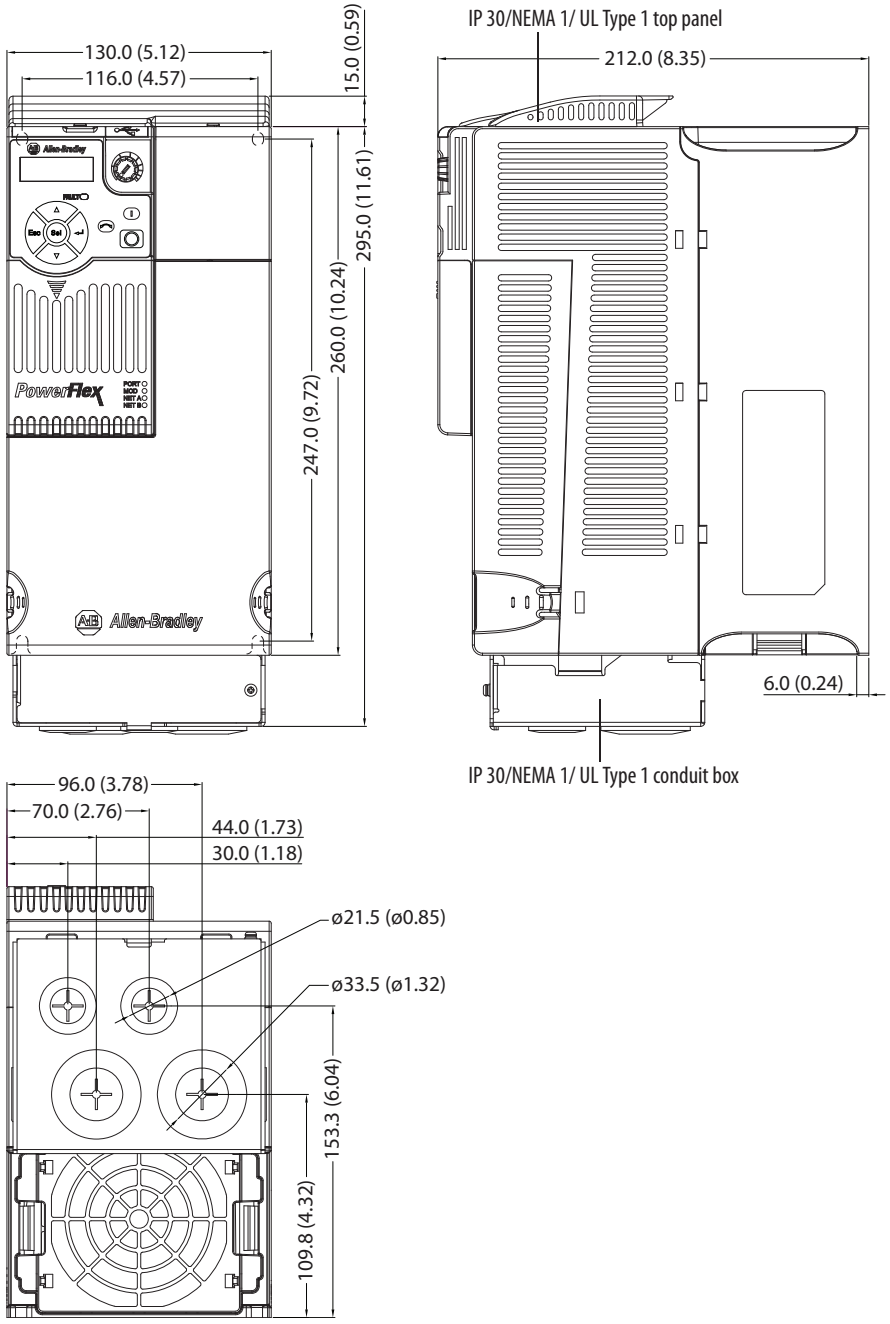

IP 30/NEMA 1/UL Type 1 – Frame E

Dimensions are in millimeters and (inches)

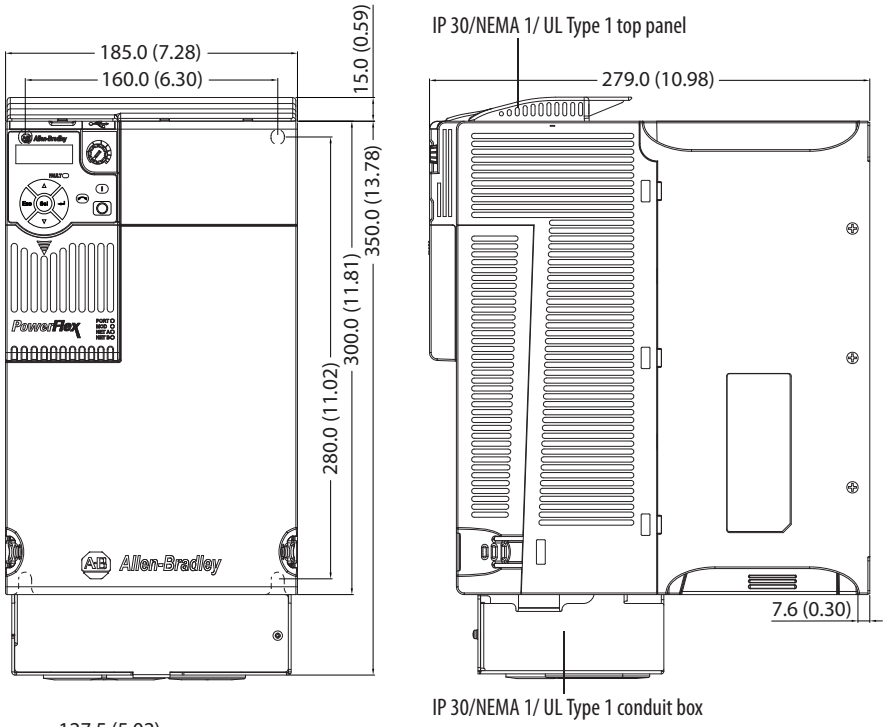

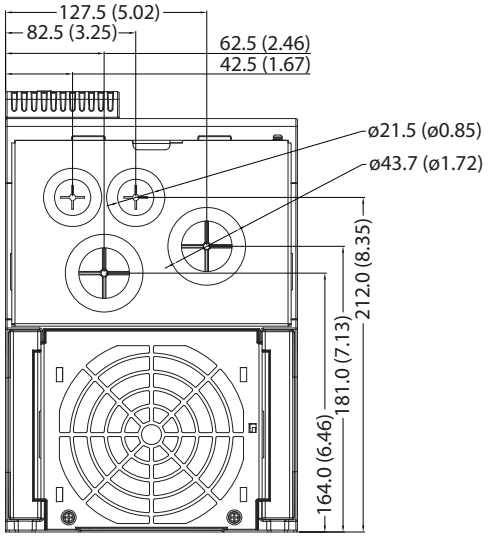

EMC Line Filter – Frame A

Dimensions are in millimeters and (inches)

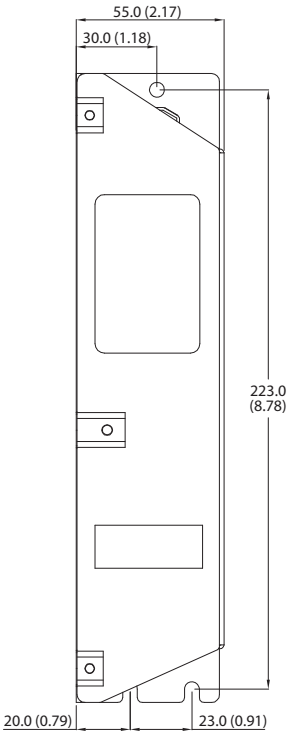

Filter can be mounted onto the back of the drive.

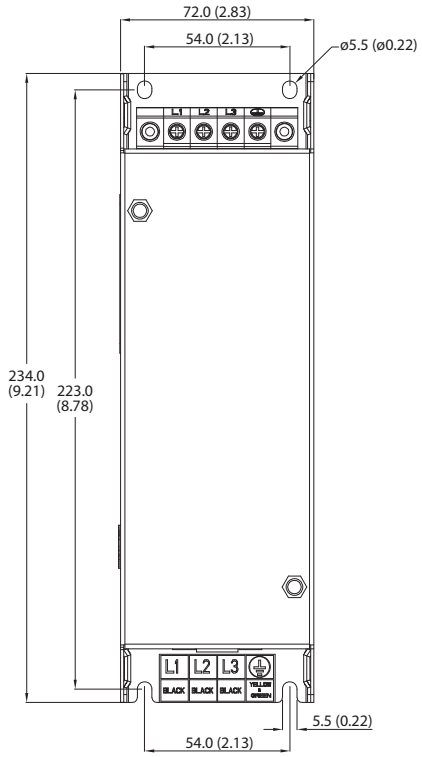

EMC Line Filter – Frame B

Dimensions are in millimeters and (inches)

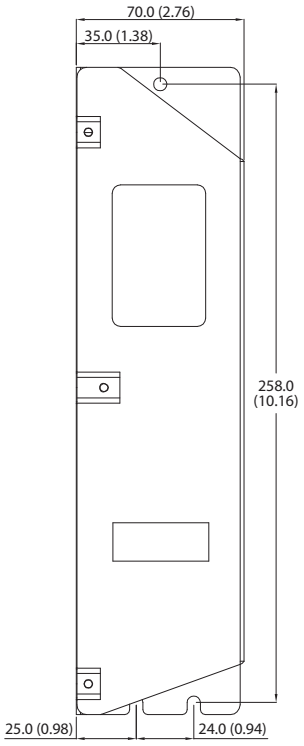

Filter can be mounted onto the back of the drive.

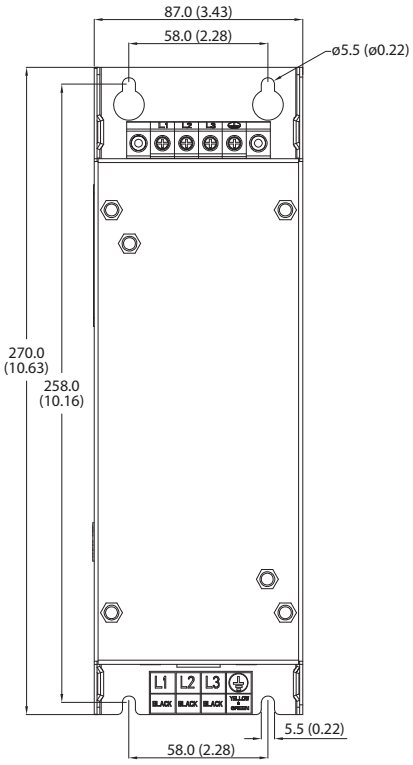

EMC Line Filter – Frame C

Dimensions are in millimeters and (inches)

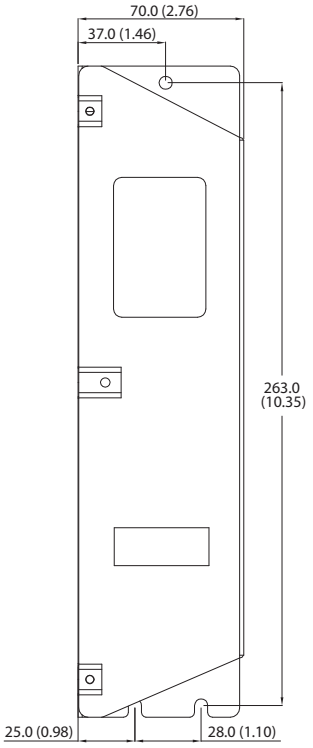

Filter can be mounted onto the back of the drive.

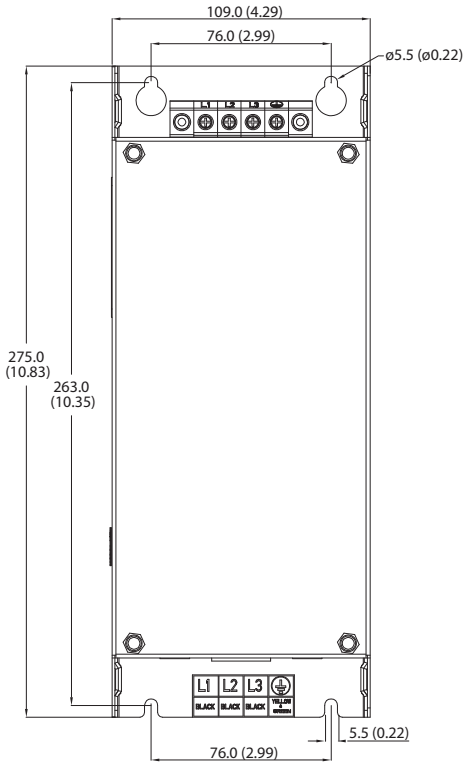

EMC Line Filter – Frame D

Dimensions are in millimeters and (inches)

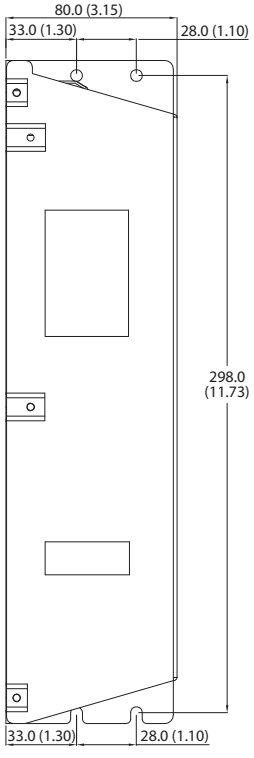

Filter can be mounted onto the back of the drive.

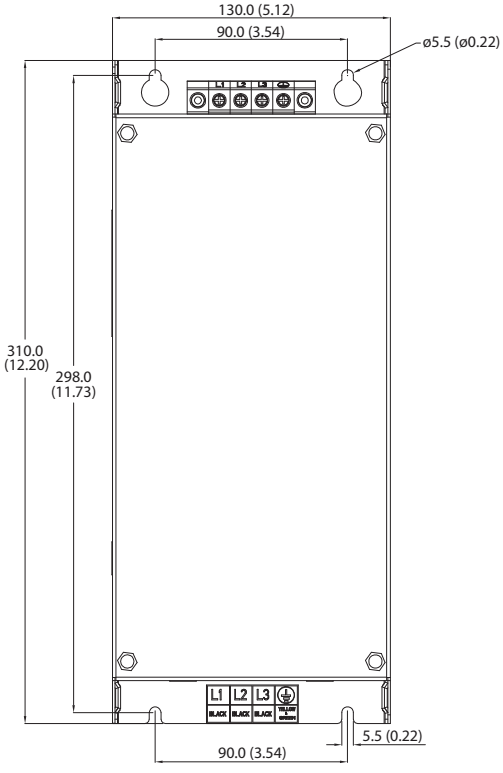

EMC Line Filter – Frame E

Dimensions are in millimeters and (inches)

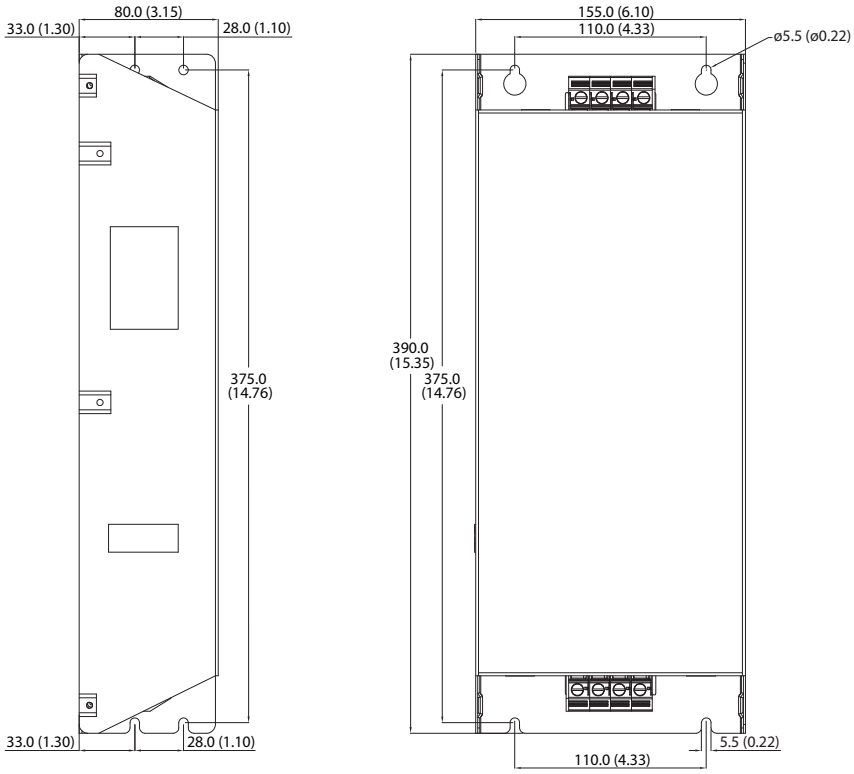

Optional Accessories and Kits Installing a Communication Adapter

1. Insert the communication adapter interface connector into the Control Module. Make sure the indicator line on the connector is aligned with the surface of the Control Module.

For PowerFlex 523

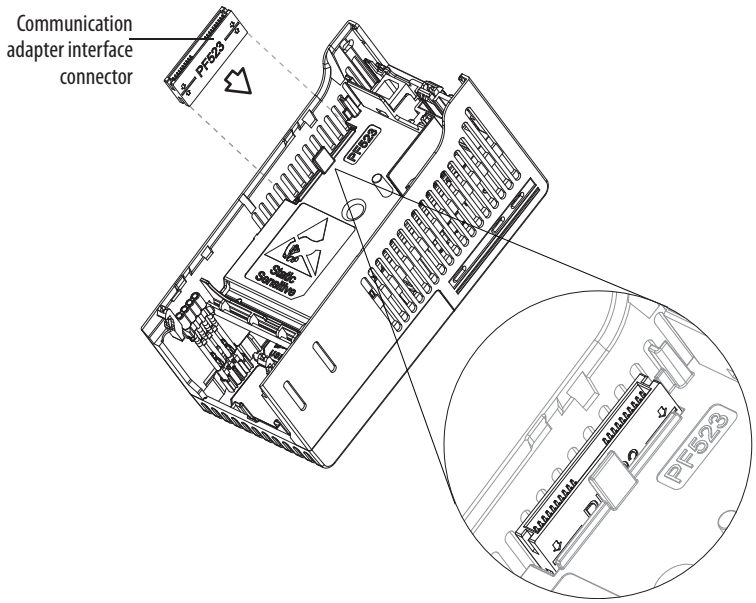

For PowerFlex 525

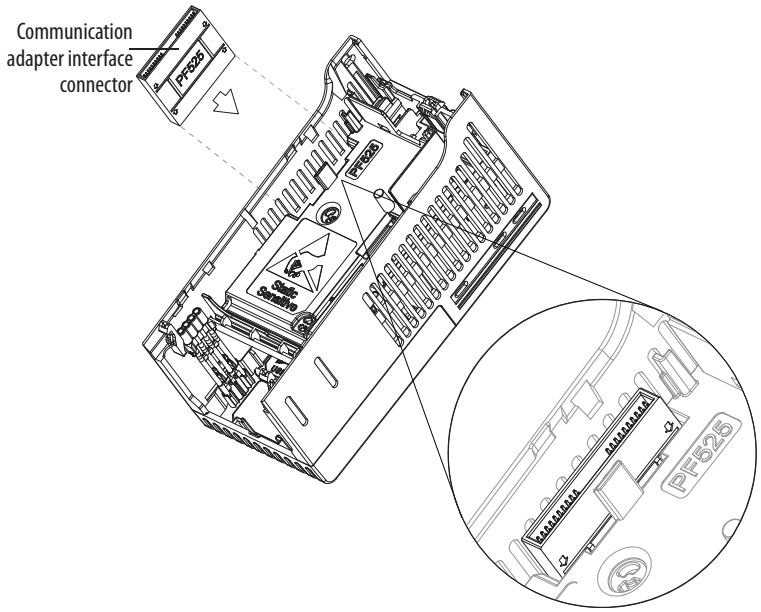

2. Align the connectors on the communication adapter to the communication adapter interface connector, then push the back cover down.

3. Press along the edges of the back cover until it snaps firmly into place.

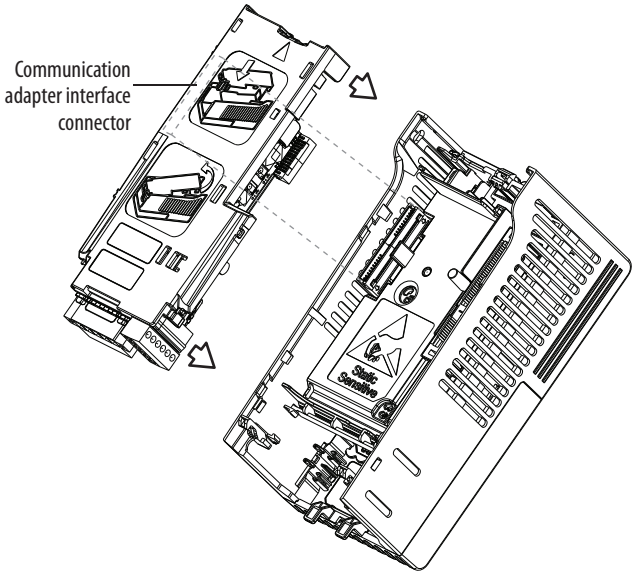

Removing a Communication Adapter

1. Insert a finger into the slot at the top of the back cover. Lift to separate the back cover from the Control Module.

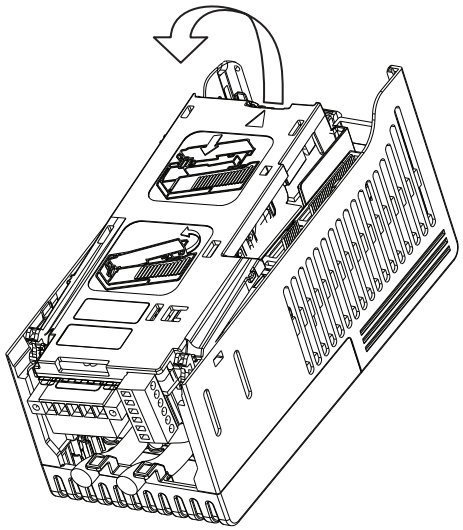

Notes:

RS485 (DSI) Protocol

PowerFlex 520-series drives support the RS485 (DSI) protocol to allow efficient operation with Rockwell Automation peripherals. In addition, some Modbus functions are supported to allow simple networking. PowerFlex 520-series drives can be multi-dropped on an RS485 network using Modbus protocol in RTU mode.

PowerFlex 520-Series Drive Network

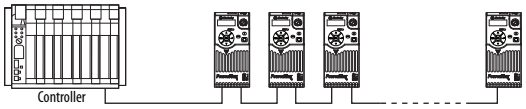

For information regarding EtherNet/IP or other communication protocols, refer to the appropriate user manual.

Network Wiring

Network wiring consists of a shielded 2-conductor cable that is daisy-chained from node to node.

ATTENTION: Never attempt to connect a Power over Ethernet (PoE) cable to the RS485 port. Doing so may damage the circuitry.

Network Wiring Diagram Example

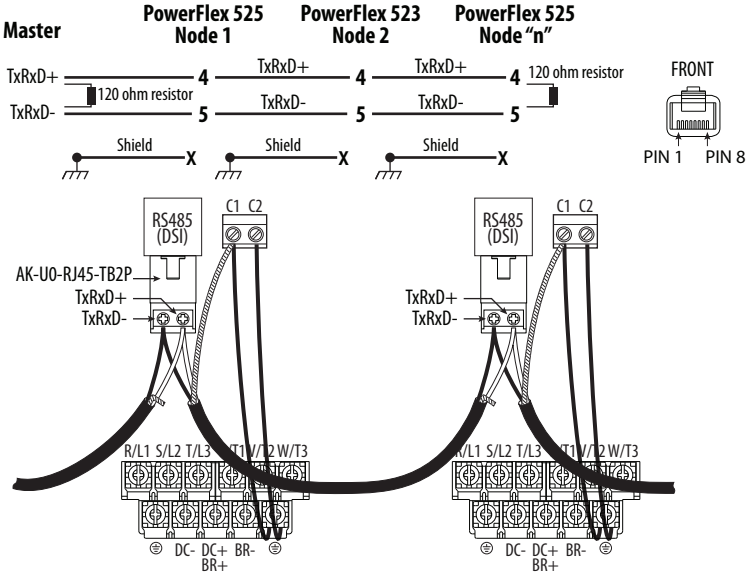

IMPORTANT The shield is connected at ONLY ONE end of each cable segment.

Only pins 4 and 5 on the RJ45 plug should be wired. The other pins on the PowerFlex 520-series drive's RJ45 socket must not be connected because they contain power, etc. for other Rockwell Automation peripheral devices.

Wiring terminations on the master controller will vary depending on the master controller used and "TxRxD+" and "TxRxD-" are shown for illustration purposes only. Refer to the master controller's user manual for network terminations. Note that there is no standard for the "+" and "-" wires, and consequently Modbus device manufacturers interpret them differently. If you have problems with initially establishing communications, try swapping the two network wires at the master controller.

Standard RS485 wiring practices apply.

- Termination resistors need to be applied at each end of the network cable.
- RS485 repeaters may need to be used for long cable runs, or if greater than 32 nodes are needed on the network.
- Network wiring should be separated from power wires by at least 0.3 meters (1 foot).
- Network wiring should only cross power wires at a right angle.

I/O Terminal C1 (RJ45 Shield) for the Ethernet and DSI network cables on the PowerFlex 520-series drive must also be connected to PE ground (there are two PE terminals on the drive). The shield for the network cables should be connected to PE ground at one end only.

I/O Terminal C2 (Comm Common) is internally tied to Network Common for the network signals, and NOT to RJ45 Shield. Tying I/O Terminal C2 to PE ground may improve noise immunity in some applications.

See I/O Control Terminal Designations on page 38 and page 40 for more information.

Parameter Configuration

The following PowerFlex 520-series drive parameters are used to configure the drive to operate on a DSI network.

Configuring Parameters for DSI Network

Parameter	Details	Reference
P046 [Start Source 1]	Set to 3 "Serial/DSI" if Start is controlled from the network.	page 80
P047 [Speed Reference1]	Set to 3 "Serial/DSI" if the Speed Reference is controlled from the network.	page 80
C123 [RS485 Data Rate]	Sets the data rate for the RS485 (DSI) Port. All nodes on the network must be set to the same data rate.	page 94
C124 [RS485 Node Addr]	Sets the node address for the drive on the network. Each device on the network requires a unique node address.	page 94
C125 [Comm Loss Action]	Selects the drive's response to communication problems.	page 94
C126 [Comm Loss Time]	Sets the time that the drive will remain in communication loss before the drive implements C125 [Comm Loss Action].	page 94
C127 [Comm Format]	Sets the transmission mode, data bits, parity and stop bits for the RS485 (DSI) Port. All nodes on the network must be set to the same setting.	page 95
C121 [Comm Write Mode]	Set to 0 "Save" when programming drive. Set to 1 "RAM only" to only write to volatile memory.	page 94

Supported Modbus Function Codes

The peripheral interface (DSI) used on PowerFlex 520-series drives supports some of the Modbus function codes.

Supported Modbus Function Codes

Modbus Function Code (Decimal)	Command
03	Read Holding Registers
06	Preset (Write) Single Register
16 (10 Hexadecimal)	Preset (Write) Multiple Registers

IMPORTANT Modbus devices can be 0-based (registers are numbered starting at 0) or 1-based (registers are numbered starting at 1). Depending on the Modbus Master used, the register addresses listed on the following pages may need to be offset by +1. For example, Logic Command may be register address 8192 for some master devices (e.g. ProSoft 3150-MCM SLC Modbus scanner) and 8193 for others (e.g. PanelViews).

Writing (06) Logic Command Data

The PowerFlex 520-series drive can be controlled through the network by sending Function Code 06 writes to register address 2000H (Logic Command). P046 [Start Source 1] must be set to 3 "Serial/DSI" in order to accept the commands. PowerFlex 523 drives support only Velocity bit definitions. PowerFlex 525 drives can use Parameter C122 [Cmd Stat Select] to select either Velocity or Position bit definitions.

TIP Powerup/Reset the drive after selecting an option for C122 [Cmd Stat Select] for the change to take effect.

Velocity Bit Definitions

Comm Logic Command – C122 = 0 "Velocity"		
Address (Decimal)	**Bit(s)**	**Description**
2000H (8192)	0	1 = Stop, 0 = Not Stop
	1	1 = Start, 0 = Not Start
	2	1 = Jog, 0 = No Jog
	3	1 = Clear Faults, 0 = Not Clear Faults
	5, 4	00 = No Command
		01 = Forward Command
		10 = Reverse Command
		11 = No Command
	6	1 = Force Keypad Control, 0 = Not Force Keypad Control
	7	1 = MOP Increment, 0 = Not Increment
	9, 8	00 = No Command
		01 = Accel Rate 1 Enable
		10 = Accel Rate 2 Enable
		11 = Hold Accel Rate Selected
	11, 10	00 = No Command
		01 = Decel Rate 1 Enable
		10 = Decel Rate 2 Enable
		11 = Hold Decel Rate Selected
	14, 13, 12	000 = No Command
		001 = Freq. Source = P047 [Speed Reference1]
		010 = Freq. Source = P049 [Speed Reference2]
		011 = Freq. Source = P051 [Speed Reference3]
		100 = A410 [Preset Freq 0]
		101 = A411 [Preset Freq 1]
		110 = A412 [Preset Freq 2]
		111 = A413 [Preset Freq 3]
	15	1 = MOP Decrement, 0 = Not Decrement

Position Bit Definitions

Comm Logic Command – C122 = 1 "Position"		
Address (Decimal)	**Bit(s)**	**Description**
2000H (8192)	0	1 = Stop, 0 = Not Stop
	1	1 = Start, 0 = Not Start
	2	1 = Jog, 0 = No Jog
	3	1 = Clear Faults, 0 = Not Clear Faults
	5, 4	00 = No Command
		01 = Forward Command
		10 = Reverse Command
		11 = No Command
	6	1 = Logic In 1
	7	1 = Logic In 2
	10, 9, 8	000 = Freq. and Position Step 0
		001 = Freq. and Position Step 1
		010 = Freq. and Position Step 2
		011 = Freq. and Position Step 3
		100 = Freq. and Position Step 4
		101 = Freq. and Position Step 5
		110 = Freq. and Position Step 6
		111 = Freq. and Position Step 7
	11	1 = Find Home
	12	1 = Hold Step
	13	1 = Pos Redefine
	14	1 = Sync Enable
	15	1 = Traverse Disable

Writing (06) Comm Frequency Command

The PowerFlex 520-series drive Comm Frequency Command can be controlled through the network by sending Function Code 06 writes to register address 2001H (Comm Frequency Command).

Comm Frequency Command

Reference	
Address (Decimal)	**Description**
2001H (8193)	Used by internal comm modules to control the reference of the drive. In units of 0.01 Hz.

Reading (03) Logic Status Data

The PowerFlex 520-series drive Logic Status data can be read through the network by sending Function Code 03 reads to register address 2100H (Logic Status). PowerFlex 523 drives support only Velocity bit definitions. PowerFlex 525 drives can use Parameter C122 [Cmd Stat Select] to select either Velocity or Position bit definitions.

Velocity Bit Definitions

Comm Logic Status – C122 = 0 "Velocity"		
Address (Decimal)	**Bit(s)**	**Description**
2100H (8448)	0	1 = Ready, 0 = Not Ready
	1	1 = Active (Running), 0 = Not Active
	2	1 = Cmd Forward, 0 = Cmd Reverse
	3	1 = Rotating Forward, 0 = Rotating Reverse
	4	1 = Accelerating, 0 = Not Accelerating
	5	1 = Decelerating, 0 = Not Decelerating
	6	Not Used
	7	1 = Faulted, 0 = Not Faulted
	8	1 = At Reference, 0 = Not At Reference
	9	1 = Main Freq Controlled by Active Comm
	10	1 = Operation Cmd Controlled by Active Comm
	11	1 = Parameters have been locked
	12	Digital Input 1 Status
	13	Digital Input 2 Status
	14	Digital Input 3 Status
	15	Digital Input 4 Status

Position Bit Definitions

Comm Logic Status – C122 = 1 "Position"		
Address (Decimal)	**Bit(s)**	**Description**
2100H (8448)	0	1 = Ready, 0 = Not Ready
	1	1 = Active (Running), 0 = Not Active
	2	1 = Cmd Forward, 0 = Cmd Reverse
	3	1 = Rotating Forward, 0 = Rotating Reverse
	4	1 = Accelerating, 0 = Not Accelerating
	5	1 = Decelerating, 0 = Not Decelerating
	6	1 = Forward Travel Position, 0 = Reverse Travel Position
	7	1 = Faulted, 0 = Not Faulted
	8	1 = At Reference, 0 = Not At Reference
	9	1 = At Position, 0 = Not At Position
	10	1 = At Home, 0 = Not At Home
	11	1 = Drive Homed, 0 = Not Drive Homed
	12	1 = Sync Hold, 0 = Not Sync Hold
	13	1 = Sync Ramp, 0 = Not Sync Ramp
	14	1 =Traverse On, 0 = Traverse Off
	15	1 = Traverse Decel, 0 = Not Traverse Decel

Reading (03) Drive Error Codes

The PowerFlex 520-series Error Code data can be read through the network by sending Function Code 03 reads to register address 2101H (Drive Error Codes).

Drive Error Codes

Logic Status		
Address (Decimal)	**Value (Decimal)**	**Description**
2101H (8449)	0	No Fault
	2	Auxiliary Input
	3	Power Loss
	4	Undervoltage
	5	Overvoltage
	6	Motor Stalled
	7	Motor Overload
	8	Heatsink Overtemperature
	9	Control Module Overtemperature
	12	HW Overcurrent (300%)
	13	Ground Fault
	15	Load Loss
	21	Output Phase Loss
	29	Analog Input Loss
	33	Auto Restart Tries
	38	Phase U to Ground Short
	39	Phase V to Ground Short
	40	Phase W to Ground Short
	41	Phase UV Short
	42	Phase UW Short
	43	Phase VW Short
	48	Parameters Defaulted
	59	Safety Open
	63	Software Overcurrent
	64	Drive Overload
	70	Power Unit Fail
	71	DSI Network Loss
	72	Option Card Network Loss
	73	Embedded EtherNet/IP Adapter Network Loss
	80	AutoTune Fail
	81	DSI Communication Loss
	82	Option Card Communication Loss
	83	Embedded EtherNet/IP Adapter Communication Loss
	91	Encoder Loss
	94	Function Loss
	100	Parameter Checksum Error
	101	External Storage
	105	Control Module Connect Error
	106	Incompatible Control-Power Module
	107	Unrecognized Control-Power Module
	109	Mismatched Control-Power Module
	110	Keypad Membrane
	111	Safety Hardware
	114	Microprocessor Failure
	122	I/O Board Fail

Drive Error Codes

Logic Status		
Address (Decimal)	**Value (Decimal)**	**Description**
2101H (8449)	125	Flash Update Required
	126	Non Recoverable Error
	127	DSI Flash Update Required

Reading (03) Drive Operational Values

The PowerFlex 520-series Drive Operational Values can be read through the network by sending Function Code 03 reads to register addresses 2102H...210AH.

Drive Operational Values

Reference	
Address (Decimal)	**Description**
2102H (8450)	Frequency Command (xxx.xx Hz)
2103H (8451)	Output Frequency (xxx.xx Hz)
2104H (8452)	Output Current (xxx.xx A)
2105H (8453)	DC-BUS Voltage (xxxV)
2106H (8454)	Output Voltage (xxx.xV)

Reading (03) and Writing (06) Drive Parameters

To access drive parameters, the Modbus register address equals the parameter number. For example, a decimal “1” is used to address Parameter b001 [Output Freq] and decimal “41” is used to address Parameter P041 [Accel Time 1].

Additional Information

See http://www.ab.com/drives/ for additional information.

Velocity StepLogic, Basic Logic and Timer/ Counter Functions

Four PowerFlex 520-series logic functions provide the capability to program simple logic functions without a separate controller.

- Velocity StepLogic™ Function (specific to PowerFlex 525 drives only)

  Steps through up to eight preset speeds based on programmed logic. Programmed logic can include conditions that need to be met from digital inputs programmed as "Logic In 1" and "Logic In 2" before stepping from one preset speed to the next. A timer is available for each of the eight steps and is used to program a time delay before stepping from one preset speed to the next. The status of a digital output can also be controlled based on the step being executed.
- Basic Logic Function (specific to PowerFlex 525 drives only)

  Up to two digital inputs can be programmed as "Logic In 1" and/or "Logic In 2". A digital output can be programmed to change state based on the condition of one or both inputs based on basic logic functions such as AND, OR, NOR. The basic logic functions can be used with or without StepLogic.
- Timer Function

  A digital input can be programmed for "Timer Start". A digital output can be programmed as a "Timer Out" with an output level programmed to the desired time. When the timer reaches the time programmed into the output level the output will change state. The timer can be reset with a digital input programmed as "Reset Timer".
- Counter Function

  A digital input can be programmed for "Counter In". A digital output can be programmed as "Counter Out" with an output level programmed to the desired number of counts. When the counter reaches the count programmed into the output level the output will change state. The counter can be reset with a digital input programmed as "Reset Counter".

TIP Use the Wizard in Connected Components Workbench to simplify setup instead of manually configuring the parameters.

Velocity StepLogic Using Timed Steps

IMPORTANT This function is specific to PowerFlex 525 drives only.

To activate this function, set one of the three speed reference sources, parameter P047, P049 or P051[Speed Referencex] to 13 "Step Logic" and activate that speed reference source. Three parameters are used to configure the logic, speed reference and time for each step.

- Logic is defined using parameters L180...L187 [Stp Logic x].
- Preset Speeds are set with parameters A410...A417 [Preset Freq 0...7].
- Time of operation for each step is set with parameters L190...L197 [Stp Logic Time x].

The direction of motor rotation can be forward or reverse.

Using Timed Steps

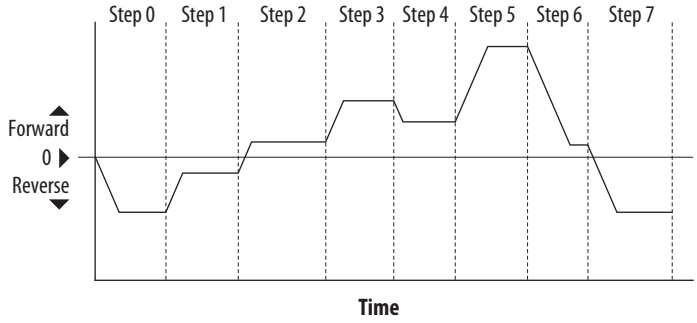

Velocity StepLogic Sequence

- Sequence begins with a valid start command.
- A normal sequence begins with Step 0 and transition to the next step when the corresponding StepLogic time has expired.
- Step 7 is followed by Step 0
- Sequence repeats until a stop is issued or a fault condition occurs.

Velocity StepLogic Using Basic Logic Functions

IMPORTANT This function is specific to PowerFlex 525 drives only.

Digital input and digital output parameters can be configured to use logic to transition to the next step. Logic In 1 and Logic In 2 are defined by programming parameters t062...t063, t065...t068 [DigIn TermBlk xx] to 24 "Logic In 1" or 25 "Logic In 2".

Example

- Run at Step 0.
- Transition to Step 1 when Logic In 1 is true.
  Logic senses the edge of Logic In 1 when it transitions from off to on. Logic In 1 is not required to remain "on".

- Transition to Step 2 when both Logic In 1 and Logic In 2 are true. The drive senses the level of both Logic In 1 and Logic In 2 and transitions to Step 2 when both are on.
- Transition to Step 3 when Logic In 2 returns to a false or off state. Inputs are not required to remain in the "on" condition except under the logic conditions used for the transition from Step 2 to Step 3.

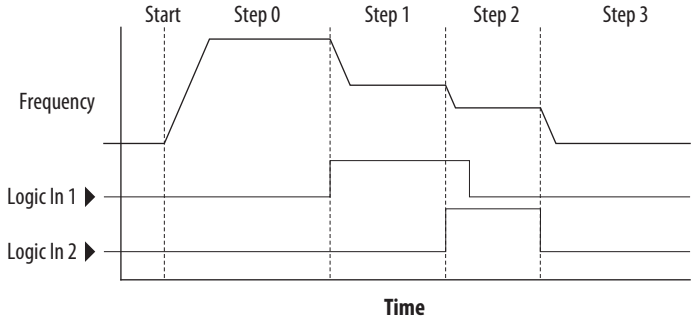

The step time value and the basic logic may be used together to satisfy machine conditions. For instance, the step may need to run for a minimum time period and then use the basic logic to trigger a transition to the next step.

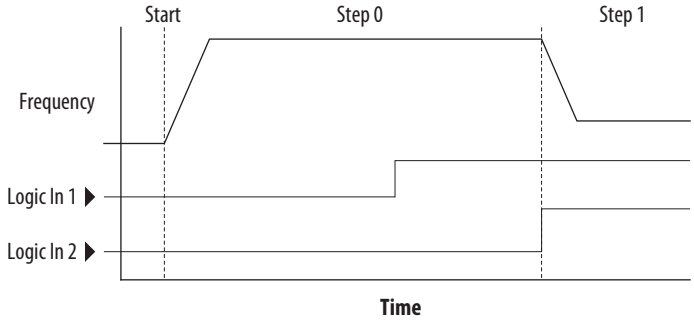

Timer Function

Digital inputs and outputs control the timer function and are configured with parameters t062...t063, t065...t068 [DigIn TermBlk xx] set to 19 "Timer Start" and 21 "Reset Timer".

Digital outputs (relay and opto type) define a preset level and indicate when the level is reached. Level parameters t077 [Relay Out1 Level], t082[Relay Out2 Level], t070 [Opto Out1 Level] and t073 [Opto Out2 Level] are used to set the desired time in seconds.

Parameters t076 [Relay Out1 Sel], t081 [Relay Out2 Sel], t069 [Opto Out1 Sel] and t072 [Opto Out2 Sel] are set to 25 "Timer Out" and causes the output to change state when the preset level is reached.

Example

- Drive starts up and accelerates to 30 Hz.
- After 30 Hz has been maintained for 20 seconds, a 4-20 mA analog input becomes the reference signal for speed control.

- The timer function is used to select a preset speed with a 20 second run time that overrides the speed reference while the digital input is active.
- Parameters are set to the following options:
  - P047 [Speed Reference1] = 6 “4-20mA Input”
  - P049 [Speed Reference2] = 7 “Preset Freq”
  - t062 [DigIn TermBlk 02] = 1 “Speed Ref 2”
  - t063 [DigIn TermBlk 03] = 19 “Timer Start”
  - t076 [Relay Out1 Sel] = 25 “Timer Out”
  - t077 [Relay Out1 Level] = 20.0 Secs
  - A411 [Preset Freq 1] = 30.0 Hz
- The control terminal block is wired such that a start command will also trigger the timer start.
- The relay output is wired to I/O Terminal 02 (DigIn TermBlk 02) so that it forces the input on when the timer starts.
- After the timer is complete, the output is turned off releasing the preset speed command. The drive defaults to following the analog input reference as programmed.

Note that a “Reset Timer” input is not required for this example since the “Timer Start” input both clears and starts the timer.

Counter Function

Digital inputs and outputs control the counter function and are configured with parameters t062...t063, t065...t068 [DigIn TermBlk xx] set to 20 “Counter In” and 22 “Reset Countr”.

Digital outputs (relay and opto type) define a preset level and indicate when the level is reached. Level parameters t077 [Relay Out1 Level], t082[Relay Out2 Level], t070 [Opto Out1 Level] and t073 [Opto Out2 Level] are used to set the desired count value.

Parameters t076 [Relay Out1 Sel], t081 [Relay Out2 Sel], t069 [Opto Out1 Sel] and t072 [Opto Out2 Sel] are set to 26 “Counter Out” which causes the output to change state when the level is reached.

Example

- A photo eye is used to count packages on a conveyor line.
- An accumulator holds the packages until 5 are collected.
- A diverter arm redirects the group of 5 packages to a bundling area.
- The diverter arm returns to its original position and triggers a limit switch that resets the counter.
- Parameters are set to the following options:
  - t065 [DigIn TermBlk 05] = 20 “Counter In”
  - t066 [DigIn TermBlk 06] = 22 “Reset Countr”
  - t076 [Relay Out1 Sel] = 26 “Counter Out”
  - t077 [Relay Out1 Level] = 5.0 Counts

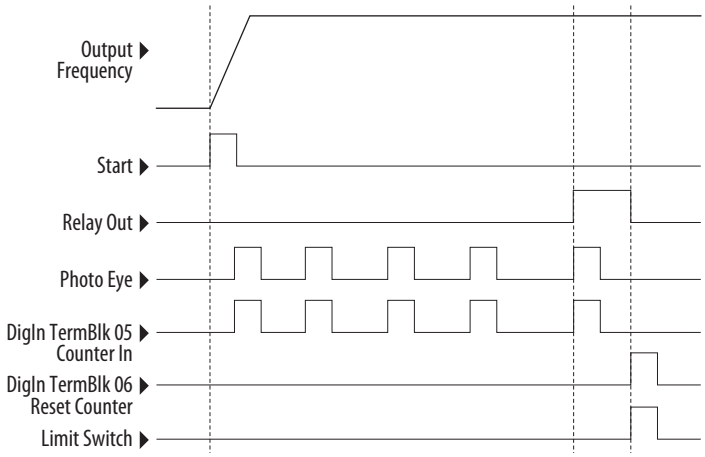

Velocity StepLogic Parameters

Code Descriptions for Parameters L180...L187

Digit 4	Digit 3	Digit 2	Digit 1
0	0	F	1

Digit 4 – Defines the action during the step currently executing

Setting	Accel/Decel Parameter Used	StepLogic Output State	Commanded Direction
0	1	Off	FWD
1	1	Off	REV
2	1	Off	No Output
3	1	On	FWD
4	1	On	REV
5	1	On	No Output
6	2	Off	FWD
7	2	Off	REV
8	2	Off	No Output
9	2	On	FWD
A	2	On	REV
b	2	On	No Output

Digit 3 – Defines what step to jump to or how to end program when the logic conditions specified in Digit 2 are met.

Setting	Logic
0	Jump to Step 0
1	Jump to Step 1
2	Jump to Step 2
3	Jump to Step 3
4	Jump to Step 4
5	Jump to Step 5
6	Jump to Step 6
7	Jump to Step 7
8	End Program (Normal Stop)
9	End Program (Coast to Stop)
A	End Program and Fault (F002)

Digit 2 – Defines what logic must be met to jump to a step other than the very next step.

Setting	Description	Logic
0	Skip Step (jump immediately)	SKIP
1	Step based on the time programmed in the respective [Stp Logic Time x] parameter.	TIMED
2	Step if "Logic In 1" is active (logically true)	TRUE
3	Step if "Logic In 2" is active (logically true)	TRUE
4	Step if "Logic In 1" is not active (logically false)	FALSE
5	Step if "Logic In 2" is not active (logically false)	FALSE
6	Step if either "Logic In 1" or "Logic In 2" is active (logically true)	OR
7	Step if both "Logic In 1" and "Logic In 2" is active (logically true)	AND
8	Step if neither "Logic In 1" or "Logic In 2" is active (logically true)	NOR
9	Step if "Logic In 1" is active (logically true) and "Logic In 2" is not active (logically false)	XOR
A	Step if "Logic In2" is active (logically true) and "Logic In 1" is not active (logically false)	XOR
b	Step after [Stp Logic Time x] and "Logic In 1" is active (logically true)	TIMED AND
C	Step after [Stp Logic Time x] and "Logic In 2" is active (logically true)	TIMED AND
d	Step after [Stp Logic Time x] and "Logic In 1" is not active (logically false)	TIMED OR
E	Step after [Stp Logic Time x] and "Logic In 2" is not active (logically false)	TIMED OR
F	Do not step OR no "jump to", so use Digit 0 logic	IGNORE

Digit 1 – Defines what logic must be met to jump to the very next step.

Setting	Description	Logic
0	Skip Step (jump immediately)	SKIP
1	Step based on the time programmed in the respective [Stp Logic Time x] parameter.	TIMED
2	Step if "Logic In 1" is active (logically true)	TRUE
3	Step if "Logic In 2" is active (logically true)	TRUE
4	Step if "Logic In 1" is not active (logically false)	FALSE
5	Step if "Logic In 2" is not active (logically false)	FALSE
6	Step if either "Logic In 1" or "Logic In 2" is active (logically true)	OR
7	Step if both "Logic In 1" and "Logic In 2" is active (logically true)	AND
8	Step if neither "Logic In 1" or "Logic In 2" is active (logically true)	NOR
9	Step if "Logic In 1" is active (logically true) and "Logic In 2" is not active (logically false)	XOR
A	Step if "Logic In 2" is active (logically true) and "Logic In 1" is not active (logically false)	XOR
b	Step after [Stp Logic Time x] and "Logic In 1" is active (logically true)	TIMED AND
C	Step after [Stp Logic Time x] and "Logic In 2" is active (logically true)	TIMED AND
d	Step after [Stp Logic Time x] and "Logic In 1" is not active (logically false)	TIMED OR
E	Step after [Stp Logic Time x] and "Logic In 2" is not active (logically false)	TIMED OR
F	Use logic programmed in Digit 1	IGNORE

Encoder/Pulse Train Usage and Position StepLogic Application

Encoder and Pulse Train Usage

The PowerFlex 520-series drives include a pulse train input built into the terminal block. PowerFlex 525 drives also support an optional encoder card. The pulse train and encoder can be used for many of the same functions, but the pulse train supports up to 100 kHz at 24V, and uses the drive built-in terminal block. The encoder supports up to 250 kHz dual channel at 5, 12 or 24V and requires the optional encoder board to be installed. When A535 [Motor Fdbk Type] is set to a value other than zero, the drive is set to use an encoder or pulse train. The drive will use the encoder or pulse train in several ways depending on the settings of other parameters. The drive will use the encoder or pulse train as shown below (listed in order of priority):

1. If enabled by P047, P049, or P051 [Speed Referencex], the encoder or pulse train will be used directly as a commanded speed (normally used with a pulse train) or as a position reference (normally used with a quadrature encoder).
2. If not enabled by the Speed Reference parameters, the encoder or pulse train can be used with the PID function if enabled by A459 or A471 [PID x Ref Sel], or A460 or A472 [PID x Fdback Sel].
3. If not enabled by the Speed Reference or PID function parameters, the encoder or pulse train can be used with A535 [Motor Fdbk Type] for direct feedback and trim of the speed command. The normal slip compensation is not used in this case. Instead the drive will use the encoder or pulse train to determine actual output frequency and adjust the output frequency to match the command. Parameters A538 [Ki Speed Loop] and A539 [Kp Speed Loop] are used in this control loop. The primary benefit of this mode is increased speed accuracy when compared to open-loop slip compensation. It does not provide speed bandwidth improvement.

IMPORTANT The encoder usage, and position StepLogic application covered in this chapter is specific to PowerFlex 525 drives only.

Encoder Interface

The incremental encoder option card can source 5 or 12 volt power and accept 5, 12 or 24 volt single ended or differential inputs. See Appendix B for ordering information.

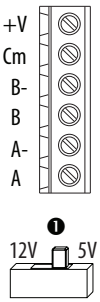

No.	Signal	Description
+V	5...12V Power(1)(2)	Internal power source 250 mA (isolated).
Cm	Power Return	
B-	Encoder B (NOT)	Quadrature B input.
B	Encoder B	
A-	Encoder A (NOT)	Single channel, pulse train or quadrature A input.
A	Encoder A	
❶	Output	DIP switch selects 12 or 5 volt power supplied at terminals "+V" and "Cm" for the encoder.

(1) When using 12V Encoder power, 24V I/O power, maximum output current at I/O Terminal 11 is 50 mA.
(2) If Encoder requires 24V power, it must be supplied by an external power source.

Encoder Wiring Examples

I/O	Connection Example
Encoder Power – Internal Drive Power Internal (drive) 12V DC, 250mA	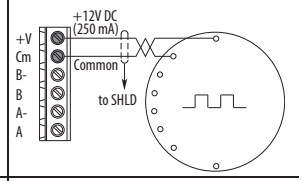
Encoder Signal – Single-Ended, Dual Channel	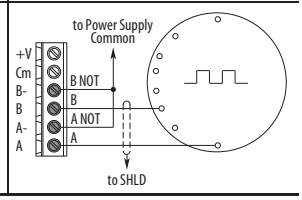

I/O	Connection Example
Encoder Power – External Power Source	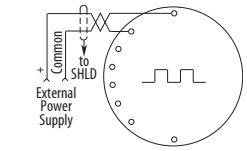
Encoder Signal – Differential, Dual Channel	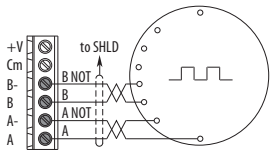

Wiring Notes

The encoder option card can supply 5V or 12V power (250 mA maximum) for an encoder. Be sure the DIP switch is set properly for the encoder. In general, 12V will provide higher noise immunity.

The encoder can handle 5V, 12V, or 24V inputs, but the pulse train can handle only 24V inputs. The inputs will automatically adjust to the voltage applied and no additional drive adjustment is necessary. If a single-channel input is used, it must be wired between the A (signal) and A- (signal common) channels.

IMPORTANT A quadrature encoder provides rotor speed and direction. Therefore, the encoder must be wired such that the forward direction matches the motor forward direction. If the drive is reading encoder speed but the position regulator or other encoder function is not working properly, remove power to the drive, then do one of the following:

- Swap the A and A (NOT) encoder channels.
- Swap the B and B (NOT) encoder channels.
- Swap any two motor leads.

Drives will fault when an encoder is incorrectly wired and A535 [Motor Fdbk Type] is set to 5 "Quad Check".

Positioning Overview

The PowerFlex 525 drive includes a simple position regulator which can be used in a variety of position applications without the need for multiple limit switches or photo-eyes. This can be used as a stand-alone controller for simple applications (up to 8 positions) or in conjunction with a controller for more flexibility.

Please note that this is not intended to replace high end servo controllers or any application that needs high bandwidth or very high torque at low speeds.

Common Guidelines for All Applications

The position regulator can be configured for operation appropriate for a variety of applications. Certain parameters will need to be adjusted in all cases.

P047 [Speed Reference1] must be set to 16 "Positioning".

A535 [Motor Fdbk Type] must be set to the match the feedback device. Positioning mode must use A535 [Motor Fdbk Type] option 4.

A535 [Motor Fdbk Type] Options

0 "None" indicates no encoder is used. This can not be used for positioning.

1 "Pulse Train" is a single channel input, no direction, speed feedback only. This should not be used for positioning. The Single Channel selection is similar to a Pulse Train, but uses the standard encoder scaling parameters.

2 "Single Chan" is a single channel input, no direction, speed feedback only. This should not be used for positioning. Single channel uses the standard encoder scaling parameters.

3 "Single Check" is a single channel input with encoder signal loss detection. The drive will fault if it detects that the input pulses do not match the expected motor speed. This should not be used for positioning.

4 "Quadrature" is a dual channel encoder input with direction and speed from the encoder. This may be used for positioning control.

5 "Quad Check" is a dual channel encoder with encoder signal loss detection. The drive will fault if it detects that the encoder speed does not match the expected motor speed.

A544 [Reverse Disable] should be set to 0 "Rev Enabled" to allow bidirectional movement necessary for position control.

P039 [Torque Perf Mode] default setting is 1 "SVC". However, any mode can be used to improve the low speed torque for positioning applications. For best results, tune the application first. The autotune routine can be completed to further improve the drive-motor performance.

A550 [Bus Reg Enable] default setting is 1 "Enabled". If the deceleration time is too short, the drive may overshoot the desired position. For best results, a longer deceleration time may be necessary. A550 [Bus Reg Enable] can be disabled to provide precise stopping movements, but the deceleration time will need to be manually tuned so that it is long enough to avoid F005 "OverVoltage" faults.

A437 [DB Resistor Sel] default setting is 0 "Disabled". If improved deceleration performance is required a Dynamic Brake resistor can be used. If used, this parameter should be set to the appropriate setting for the resistor selected.

P035 [Motor NP Poles] must be set to match the number of motor poles on the motor driven by the PowerFlex 520-series drive.

A536 [Encoder PPR] must be set to match the number of pulses per revolution of the encoder used (i.e., 1024 PPR Encoder).

A559 [Counts Per Unit] sets the number of encoder counts that will be used to define one position unit. This allows the encoder positions to be defined in terms of units important to the application. For example, if 1cm of travel on a conveyor belt requires 0.75 turns of the motor, the motor encoder is 1024 PPR, and the Motor Feedback type is set to Quadrature, then this parameter would need to be set to (4 x 1024 x 0.75) = 3072 counts for one cm of travel. Then all other positions could be setup in units of "cm".

A564 [Encoder Pos Tol] indicates the desired position tolerance for the system. This will determine how close the drive must be to the commanded position before the drive will indicate "At Home" or "At Position" in units of raw encoder pulses. This has no effect on the actual positioning control of the motor.

Positioning Operation

Parameter A558 [Positioning Mode] must be set to properly match the desired operation of the positioning function.

A558 [Positioning Mode] Options

0 "Time Steps" uses Step Logic times. This mode ignores the Step Logic settings and moves through the steps (Step 0 to Step 7 and back to Step 0) based on the times programmed into L190...L197 [Stp Logic Time x]. This can be used when the desired position is based only on time. In addition, this mode only accepts absolute positions in a positive direction from "home". This option provides an easy way to implement a simple positioning program or to test the basic positioning setup. For additional flexibility one of the other settings should be used.

1 "Preset Input" directly commands movement to any step based on the status of the digital inputs programmed for "Preset Freq". This setting ignores the Step Logic Commands settings and instead the drive will move directly to whatever step is currently commanded by A410...A425 [Preset Freq x] and L200...L214 [Step Units x]. This is useful when an application

needs direct access to any position step based on discrete inputs. This mode moves in the forward direction from Home and is an absolute move.

IMPORTANT Advanced Step Logic options such as incremental move are not available in this mode.

2 "Step Logic" provides a highly flexible mode of operation. This can be used to move through the steps (Step 0 to Step 7 and back to Step 0) or can jump to a different step at any time based on time or the status of digital inputs or communication commands. In this mode the drive always starts at Step 0 of the Step Logic profile.

3 "Preset StpL" is identical to 2 "Step Logic" except the drive will use the current status of the Preset Inputs to determine which Step Logic step to begin. This only affects the initial step. After start, the drive will move through the steps in the same manner as if setting 2 was selected.

4 "StpLogic-Lst" is identical to 2 "Step Logic" except the drive will use the step prior to its last stop command to determine which Step Logic step to begin. This only affects the initial step. After start, the drive will move through the steps in the same manner as if setting 2 was selected. This allows a process to be stopped and then restarted at the position where it stopped.

In all position modes, the following parameters will control the characteristics at each step:

L200, L202, L204, L206, L208, L210, L212 and L214 [Step Units x] are the number value to the left of the decimal (whole number) of the 8 positions desired for an application, beginning with Step 0 (L200) and continuing with each step until Step 7 (L214). For example, enter 2 into this parameter if you would like a commanded position of 2.77.

L201, L203, L205, L207, L209, L211, L213 and L215 [Step Units F x] are the number value to the right of the decimal (the portion less than 1) of the 8 positions desired for an application, beginning with Step 0 (L201) and continuing with each step until Step 7 (L215). For example, enter 0.77 into this parameter if you would like a commanded position of 2.77.

A410...A417 [Preset Freq x] are the parameters that define the maximum frequency the drive will run at during the corresponding step. For example, if [Preset Freq 2] is set to 40 Hz, the drive will accelerate to 40 Hz maximum when moving to Position 2.

Frequency Source	Step Source	Position Source
A410 [Preset Freq 0]	L180 [Stp Logic 0]	L200 [Step Units 0]
A411 [Preset Freq 1]	L181 [Stp Logic 1]	L202 [Step Units 1]
A412 [Preset Freq 2]	L182 [Stp Logic 2]	L204 [Step Units 2]
A413 [Preset Freq 3]	L183 [Stp Logic 3]	L206 [Step Units 3]
A414 [Preset Freq 4]	L184 [Stp Logic 4]	L208 [Step Units 4]

Frequency Source	Step Source	Position Source
A415 [Preset Freq 5]	L185 [Stp Logic 5]	L210 [Step Units 5]
A416 [Preset Freq 6]	L186 [Stp Logic 6]	L212 [Step Units 6]
A417 [Preset Freq 7]	L187 [Stp Logic 7]	L214 [Step Units 7]

IMPORTANT The default value for A410 [Preset Freq 0] is 0.00 Hz. This value needs to be changed or the drive will not be able to move during Step 0.

L190...L197 [Stp Logic Time x] are the parameters that define the time the drive will remain in each corresponding step if that step is time-based. For example, if L192 [Stp Logic Time 2] is set to 5.0 seconds and that step is time-based, the drive will remain in Step 2 for 5.0 seconds. Note that this is the total time in that step, not the time at that position. Therefore, it will include the time needed to accelerate, run, and decelerate to that position.

L180...L187 [Stp Logic x] are the parameters that allow additional flexibility and control various aspects of each step when a positioning mode is selected that utilizes the Step Logic functions. Note that in Positioning mode these parameters have a different function than when used for normal velocity Step Logic. Each of the 4 digits controls one aspect of the each position step. The following is a listing of the available settings for each digit:

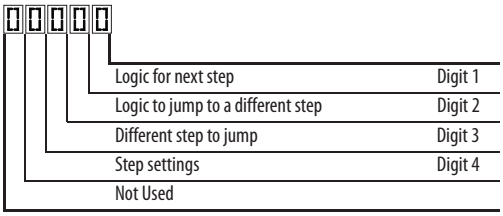

Velocity Control Settings (Digit 4)

Required Setting	Accel/Decel Param. Used	StepLogic Output State	Commanded Direction
0	Accel/Decel 1	Off	FWD
1	Accel/Decel 1	Off	REV
2	Accel/Decel 1	Off	No Output
3	Accel/Decel 1	On	FWD
4	Accel/Decel 1	On	REV
5	Accel/Decel 1	On	No Output
6	Accel/Decel 2	Off	FWD
7	Accel/Decel 2	Off	REV
8	Accel/Decel 2	Off	No Output
9	Accel/Decel 2	On	FWD
A	Accel/Decel 2	On	REV
b	Accel/Decel 2	On	No Output

Positioning Settings (Digit 4)

Required Setting	Accel/Decel Param. Used	StepLogic Output State	Direction From Home	Type of Command
0	Accel/Decel 1	Off	FWD	Absolute
1	Accel/Decel 1	Off	FWD	Incremental
2	Accel/Decel 1	Off	REV	Absolute
3	Accel/Decel 1	Off	REV	Incremental
4	Accel/Decel 1	On	FWD	Absolute
5	Accel/Decel 1	On	FWD	Incremental
6	Accel/Decel 1	On	REV	Absolute
7	Accel/Decel 1	On	REV	Incremental
8	Accel/Decel 2	Off	FWD	Absolute
9	Accel/Decel 2	Off	FWD	Incremental
A	Accel/Decel 2	Off	REV	Absolute
b	Accel/Decel 2	Off	REV	Incremental
C	Accel/Decel 2	On	FWD	Absolute
d	Accel/Decel 2	On	FWD	Incremental
E	Accel/Decel 2	On	REV	Absolute
F	Accel/Decel 2	On	REV	Incremental

Settings (Digit 3)

Setting	Description
0	Jump to Step 0
1	Jump to Step 1
2	Jump to Step 2
3	Jump to Step 3
4	Jump to Step 4
5	Jump to Step 5
6	Jump to Step 6
7	Jump to Step 7
8	End Program (Normal Stop)
9	End Program (Coast to Stop)
A	End Program and Fault (F2)

Settings (Digit 2 and 1)

Setting	Description
0	Skip Step (Jump Immediately)
1	Step Based on [Stp Logic Time x]
2	Step if "Logic In 1" is Active
3	Step if "Logic In 2" is Active
4	Step if "Logic In 1" is Not Active
5	Step if "Logic In 2" is Not Active
6	Step if either "Logic In 1" or "Logic In 2" is Active
7	Step if both "Logic In 1" and "Logic In 2" are Active
8	Step if neither "Logic In 1" nor "Logic In 2" is Active
9	Step if "Logic In 1" is Active and "Logic In 2" is Not Active
A	Step if "Logic In 2" is Active and "Logic In 1" is Not Active
b	Step after [Stp Logic Time x] and "Logic In 1" is Active
C	Step after [Stp Logic Time x] and "Logic In 2" is Active
d	Step after [Stp Logic Time x] and "Logic In 1" is Not Active
E	Step after [Stp Logic Time x] and "Logic In 2" is Not Active
F	Do Not Step/Ignore Digit 2 Settings

TIP Use the Wizard in Connected Components Workbench to simplify setup instead of manually configuring the parameters.

Note: Incremental move commands will cause the drive to move the amount specified based on the current position. Absolute commands are always with reference to "Home".

A565 [Pos Reg Filter] provides a low pass filter at the input of the position regulator.

A566 [Pos Reg Gain] is a single adjustment for increasing or decreasing the responsiveness of the position regulator. For faster response, the filter should be reduced and/or the gain should be increased. For smoother response with less

overshoot, the filter should be increased and/or the gain should be reduced. In general, the gain will have a larger effect on most systems than the filter.

Homing Routine

This drive supports incremental encoders only. Therefore, when the drive powers up it will reset the current position to zero. If this is known to be correct the position routine can be started without further adjustment. However, in most applications the drive will need to be "homed" after each power-up and prior to starting the position routine.

This can be accomplished in one of the following two ways:

1. Manual Homing–Program the following drive parameters:

   t062, t063, t065...t068 [DigIn TermBlk xx] = 37 "Pos Redefine"

   Program one of the digital inputs to 37 "Pos Redefine". Then, move the system into the home position with a run command, a jog command, or by manually moving the system into the home position. Then, toggle the "Pos Redefine" input. This will set the drive to "Home" at its current position and d388 [Units Traveled H] and d389 [Units Traveled L] are set to zero. Alternately, the "Pos Redefine" bit in A560 [Enh Control Word] can be toggled instead of utilizing a digital input.

   IMPORTANT The "Pos Redefine" input or bit must be returned to inactive before starting the position routine. Otherwise the drive will continuously read a position of "0" (home) and the position routine will not function correctly.

2. Automatic Homing to Limit Switch–Program the following drive parameters:

   t062, t063, t065...t068 [DigIn TermBlk xx] = 35 "Find Home"
   Program one of the digital inputs to 35 "Find Home".

   t062, t063, t065...t068 [DigIn TermBlk xx] = 34 "Home Limit"
   Program one of the digital inputs to 34 "Home Limit". Normally, the "Home Limit" input would be wired to a proximity switch or photo-eye and will indicate the system is in the home position.

   A562 [Find Home Freq] sets the frequency the drive will use while it is moving to the home position during the automatic homing routine.

   A563 [Find Home Dir] sets the direction the drive will use while it is moving to the home position during the automatic homing routine.

To begin the automatic homing routine, activate the "Find Home" input and then initiate a valid start command. The drive will then ramp to the speed set in A562 [Find Home Freq] and in the direction set in A563 [Find Home Dir] until the digital input defined as "Home Limit" is activated. If the drive passes this

point too quickly it will then reverse direction at 1/10th A562 [Find Home Freq] to the point where the Home Limit switch reactivates. Approximately one second after the routine finds home the drive will stop. Alternately, the "Find Home Freq" and/or "Home Limit" bits in A560 [Enh Control Word] can be activated instead of utilizing a digital input. The inputs or bits should be returned to inactive after the routine is complete.

IMPORTANT After the position is reached the drive will stop. If the Find Home is removed before the homing is complete, the drive will begin running the position routine without the proper home. In this case Home will not be reset and the position will be in relation to the power up position.

Encoder and Position Feedback

d376 [Speed Feedback] indicates the measured speed feedback or the calculated speed feedback when no feedback device is selected. Parameter d376 [Speed Feedback] is the number value to the left of the decimal (whole number) and d377 [Speed Feedback F] is the value to the right of the decimal (the portion less than 1).

d378 [Encoder Speed] indicates the measured speed of the feedback device. This is useful if the encoder is not used for motor speed control. However, the encoder must be used for some purpose in order for d378 [Encoder Speed] to indicate a value. Parameter d378 [Encoder Speed] is the number value to the left of the decimal (whole number) and d379 [Encoder Speed F] is the number to the right of the decimal (the portion less than 1).

d388, d389 [Units Traveled x] indicate the current position of the system in terms of units away from Home. Parameter d388 [Units Traveled H] is the number value to the left of the decimal (whole number) and d389 [Units Traveled L] is the number to the right of the decimal (the portion less than 1).

d387 [Position Status] indicates the status of the positioning functions. The indication bits are:

Bit 0 "Dir Positive" indicates the current direction the drive has moved from Home.

Bit 1 "At Position" indicates whether the drive is at its commanded position. If the drive is within A564 [Encoder Pos Tol] of the commanded position, this bit will be active.

Bit 2 "At Home" indicates whether the drive is at Home. If the drive is within A564 [Encoder Pos Tol] of "Home", this bit will be active.

Bit 3 "Drive Homed" indicates whether the drive has been homed since power-up. This bit will be active once the drive has been homed either manually or automatically. It will remain active until the next power down.

Use Over Communications

If 8 steps are not adequate for the application or if dynamic program changes are required, many of the positioning functions can be controlled through an active communication network. The following parameters will allow this control.

C121 [Comm Write Mode]
Repeated writes to parameters over a communication network can cause damage to the drive EEPROM. This parameter allows the drive to accept parameter changes without writing to the EEPROM.

IMPORTANT Parameter values set prior to setting 1 "RAM only" are saved in RAM.

C122 [Cmd Stat Select]
Selects velocity-specific or position/fibers-specific Command and Status Word bit definitions for use over a communication network.

A560 [Enh Control Word]
This parameter allows many of the positioning functions to be completed through parameter control using an explicit message. This allows the operation over communications instead of with hardware inputs. The bits have the same functions as the digital input options of the same name. Options relating to positioning are:

Bit 0 "Home Limit" indicates the drive is at the home position.

Bit 1 "Find Home" causes the drive to find home at the next start command. Deactivate this bit after completing the homing routine.

Bit 2 "Hold Step" overrides other inputs and causes the drive to remain at its current step (running at zero speed once it reaches its position) until released.

Bit 3 "Pos Redefine" resets the home position to the current position of the machine. Deactivate this bit after completing the homing routine.

Bit 4 "Sync Enable" holds the existing frequency when A571 [Sync Time] is set to enable speed synchronization. When this bit is deactivated the drive will accelerate to the new commanded frequency based on A571 [Sync Time].

Bit 5 "Traverse Dis" disables the traverse function when this bit is active.

Bit 6 "Logic In 1" provides an identical function and is logically ORed with setting 24 "Logic In 1" for t062, t063, t065...t068 [DigIn TermBlk xx]. It can be used to move through the Step Logic functions (speed or position) using comms control without requiring actual digital input transitions.

Bit 7 "Logic In 2" provides an identical function and is logically ORed with setting 25 "Logic In 2" for t062, t063, t065...t068 [DigIn TermBlk xx]. It can be used to move through the Step Logic functions (speed or

position) using comms control without requiring actual digital input transitions.

L200...L214 [Step Units x]
All of the position steps can be written to while the drive is running. The changes will take place at the next move. For example, if step 0 is over-written while the drive is moving to step 0, the drive will move to the previous commanded position at step 0. The next time the drive is commanded to return to step 0 it will proceed to the new position. One possible use of this capability is when an application requires full control of the movement by a controller external to the drive. The Step Logic program might be written to jump from step 0 back to step 0 when Input 1 is active. The controller could write any desired position to step 0 and then toggle the input 1 bit of A560 [Enh Control Word] to cause the drive to move to the new position. This allows almost unlimited flexibility and can be used with absolute or incremental moves.

Setup Notes

The RA computer tool (Connected Components Workbench) can make setup of the positioning functions much easier. Refer to the latest versions for additional tools or wizards which can aid in the setup.

Notes:

PID Set Up

PID Loop

The PowerFlex 520-series drive features built-in PID (proportional, integral, derivative) control loops. The PID loop is used to maintain a process feedback (such as pressure, flow or tension) at a desired set point. The PID loop works by subtracting the PID feedback from a reference and generating an error value. The PID loop reacts to the error, based on the PID Gains, and outputs a frequency to try to reduce the error value to 0.

To enable the PID loop, P047, P049 or P051 [Speed Referencex] must be set to 11 "PID1 Output" or 12 "PID2 Output", and the corresponding speed reference activated.

IMPORTANT PowerFlex 523 has one PID control loop.

PowerFlex 525 has two PID control loops, of which only one can be in use at any time.

Exclusive Control and Trim Control are two basic configurations where the PID loop may be used.

Exclusive Control

In Exclusive Control, the Speed Reference becomes 0, and the PID Output becomes the entire Freq Command. Exclusive Control is used when A458 or A470 [PID x Trim Sel] is set to option 0. This configuration does not require a master reference, only a desired set point, such as a flow rate for a pump.

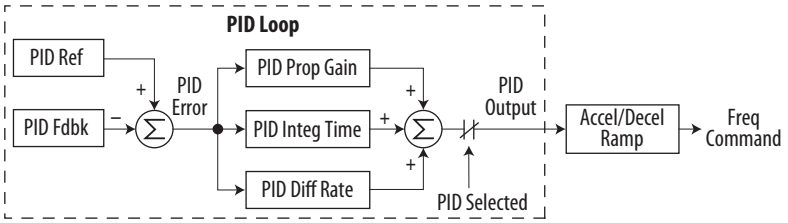

Example

- In a pumping application, the PID Reference equals the Desired System Pressure set point.
- The Pressure Transducer signal provides PID Feedback to the drive. Fluctuations in actual system pressure, due to changes in flow, result in a PID Error value.
- The drive output frequency increases or decreases to vary motor shaft speed to correct for the PID Error value.

- The Desired System Pressure set point is maintained as valves in the system are opened and closed causing changes in flow.
- When the PID Control Loop is disabled, the Commanded Speed is the Ramped Speed Reference.

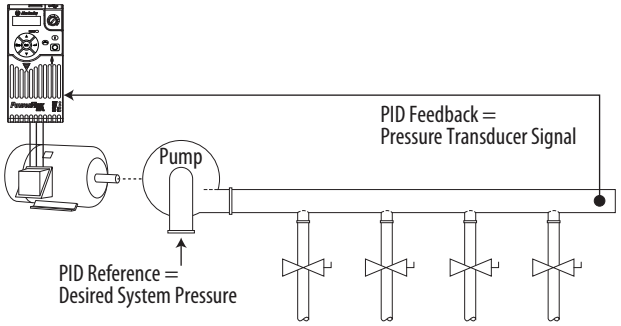

Trim Control

In Trim Control, the PID Output is added to the Speed Reference. In Trim mode, the output of the PID loop bypasses the accel/decel ramp as shown. Trim Control is used when A458 or A470 [PID x Trim Sel] is set to any option other than 0.

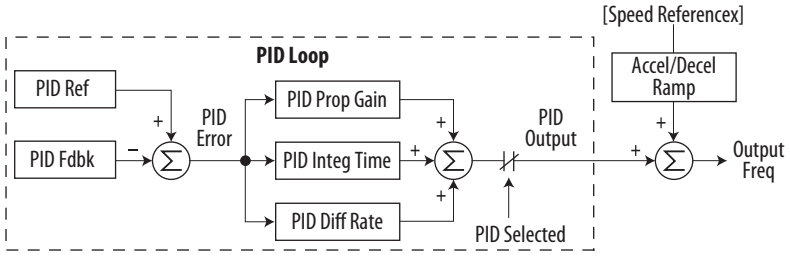

Example

- In a winder application, the PID Reference equals the Equilibrium set point.
- The Dancer Pot signal provides PID Feedback to the drive. Fluctuations in tension result in a PID Error value.
- The Master Speed Reference sets the wind/unwind speed.

- As tension increases or decreases during winding, the Speed Reference is trimmed to compensate. Tension is maintained near the Equilibrium set point.

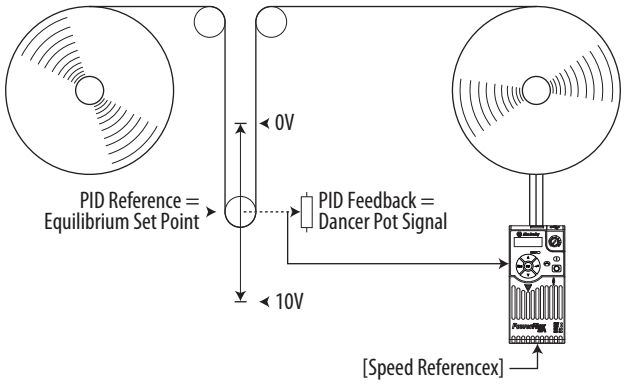

PID Reference and Feedback

PID mode is enabled by setting P047, P049 or P051 [Speed Referencex] to 11 "PID1 Output" or 12 "PID2 Output", and activating the corresponding speed reference.

IMPORTANT PowerFlex 523 has one PID control loop.

PowerFlex 525 has two PID control loops, of which only one can be in use at any time.

If A459 or A471 [PID x Ref Sel] is not set to 0 "PID Setpoint", PID can still be disabled by select programmable digital input options (parameters t062, t063, t065...t068 [DigIn TermBlk xx]) such as "Purge".

A459, A471 [PID x Ref Sel] Options

Options	Description
0 "PID Setpoint"	A464 or A476 [PID x Setpoint] will be used to set the value of the PID Reference.
1 "Drive Pot"	The drive potentiometer will be used to set the value of the PID Reference.
2 "Keypad Freq"	The drive keypad will be used to set the value of the PID Reference.
2 "Serial/DSI"	The reference word from the Serial/DSI communication network becomes the PID Reference.
4 "Network Opt"	The reference word from a communication network option becomes the PID Reference.
5 "0-10V Input"	Selects the 0-10V Input. Note that the PID will not function with a bipolar analog input. It will ignore any negative voltages and treat them like a zero.
6 "4-20mA Input"	Selects the 4-20 mA Input.
7 "Preset Freq"	A410...A425 [Preset Freq x] will be used as an input for the PID Reference.
8 "AnIgIn Multi"(1)	The product of the 0-10V and 4-20mA Inputs will be used as an input for the PID Reference.
9 "MOP Freq"	A427 [MOP Freq] will be used as an input for the PID Reference.
10 "Pulse Input"	Pulse train will be used as an input for the PID Reference.
11 "Step Logic"(1)	Step Logic will be used as an input for the PID Reference.
12 "Encoder"(1)	Encoder will be used as an input for the PID Reference.
13 "Ethernet/IP"(1)	The reference word from the Ethernet/IP communication network becomes the PID Reference.

(1) Setting is specific to PowerFlex 525 drives only.

A460 and A472 [PID x Fdback Sel] are used to select the source of the PID feedback.

A460, A472 [PID x Fdback Sel] Options

Options	Description
0 "0-10V Input"	Selects the 0-10V Input (default setting). Note that the PID will not function with a bipolar analog input. It will ignore any negative voltages and treat them like a zero.
1 "4-20mA Input"	Selects the 4-20 mA Input.
2 "Serial/DSI"	Serial/DSI will be used as an input for the PID Feedback.
3 "Network Opt"	The reference word from a communication network option becomes the PID Reference.
4 "Pulse Input"	Pulse train will be used as an input for the PID Feedback.
5 "Encoder"(1)	Encoder will be used as an input for the PID Feedback.
6 "Ethernet/IP"(1)	Ethernet/IP will be used as an input for the PID Feedback.

(1) Setting is specific to PowerFlex 525 drives only.

Analog PID Reference Signals

Parameters t091 [Anlg In 0-10V Lo] and t092 [Anlg In 0-10V Hi] are used to scale or invert an analog PID Reference or PID Feedback.

Scale Function

For a 0...5V signal, the following parameter settings are used so that a 0V signal = 0% PID Reference and a 5V signal = 100% PID Reference.

- t091 [Anlg In 0-10V Lo] = 0.0%
- t092 [Anlg In 0-10V Hi] = 50.0%
- A459 [PID 1 Ref Sel] = 5 "0-10V Input"

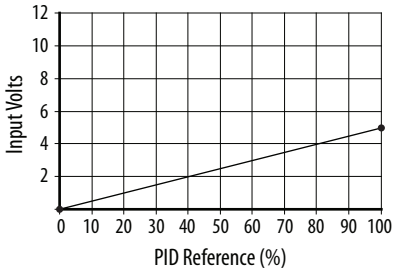

Invert Function

For a 4-20 mA signal, the following parameter settings are used so that a 20 mA signal = 0% PID Reference and a 4 mA signal = 100% PID Reference.

- t092 [Anlg In4-20mA Lo] = 100.0%
- t096 [Anlg In4-20mA Hi] = 0.0%

- A459 [PID 1 Ref Sel] = 6 “4-20mA Input”

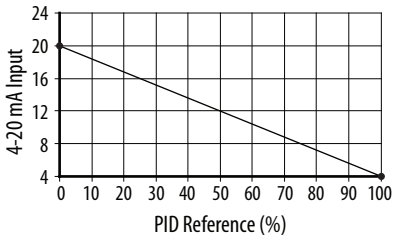

PID Deadband

Parameters A465 and A477 [PID x Deadband] are used to set a range, in percent, of the PID Reference that the drive will ignore.

Example

- A465 [PID 1 Deadband] = 5.0%
- The PID Reference is 25.0%
- The PID Regulator will not act on a PID Error that falls between 20.0 and 30.0%

PID Preload

The value set in A466 or A478 [PID x Preload], in Hz, will be pre-loaded into the integral component of the PID at any start or enable. This will cause the drive’s frequency command to initially jump to that preload frequency, and the PID loop starts regulating from there.

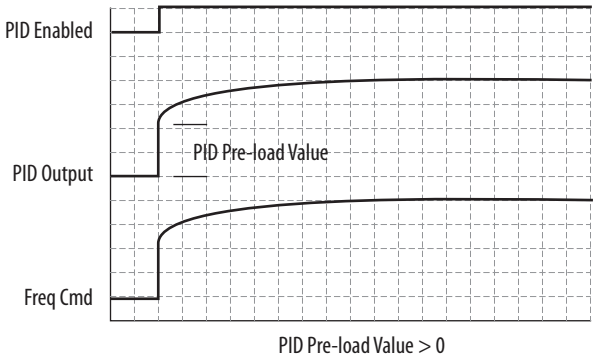

PID Limits

A456 and A468 [PID x Trim Hi] and A457 and A469 [PID x Trim Lo] are used to limit the PID output and are only used in trim mode. [PID x Trim Hi] sets the maximum frequency for the PID output in trim mode. [PID x Trim Lo] sets the reverse frequency limit for the PID output in trim mode. Note that when the

PID reaches the Hi or Lo limit, the PID regulator stops integrating so that windup does not occur.

PID Gains

The proportional, integral, and differential gains make up the PID regulator.

- A461 and A473 [PID x Prop Gain]
  The proportional gain (unitless) affects how the regulator reacts to the magnitude of the error. The proportional component of the PID regulator outputs a speed command proportional to the PID error. For example, a proportional gain of 1 would output 100% of max frequency when the PID error is 100% of the analog input range. A larger value for [PID x Prop Gain] makes the proportional component more responsive, and a smaller value makes it less responsive. Setting [PID x Prop Gain] to 0.00 disables the proportional component of the PID loop.
- A462 and A474 [PID x Integ Time]
  The integral gain (units of seconds) affects how the regulator reacts to error over time and is used to get rid of steady state error. For example, with an integral gain of 2 seconds, the output of the integral gain component would integrate up to 100% of max frequency when the PID error is 100% for 2 seconds. A larger value for [PID x Integ Time] makes the integral component less responsive, and a smaller value makes it more responsive. Setting [PID x Integ Time] to 0.0 disables the integral component of the PID loop.
- A463 and A475 [PID x Diff Rate]
  The Differential gain (units of 1/seconds) affects the rate of change of the PID output. The differential gain is multiplied by the difference between the previous error and current error. Thus, with a large error the D has a large effect and with a small error the D has less of an effect. This parameter is scaled so that when it is set to 1.00, the process response is 0.1% of P044 [Maximum Freq] when the process error is changing at 1% / second. A larger value for [PID x Diff Rate] makes the differential term have more of an effect and a small value makes it have less of an effect. In many applications, the D gain is not needed. Setting [PID x Diff Rate] to 0.00 (factory default) disables the differential component of the PID loop.

Guidelines for Adjusting the PID Gains

1. Adjust the proportional gain. During this step it may be desirable to disable the integral gain and differential gain by setting them to 0. After a step change in the PID Feedback:
   - If the response is too slow increase A461 or A473 [PID x Prop Gain].
   - If the response is too quick and/or unstable (see Unstable Response on page 221), decrease A461 or A473 [PID x Prop Gain].
   - Typically, A461 or A473 [PID x Prop Gain] is set to some value below the point where the PID begins to go unstable.

2. Adjust the integral gain (leave the proportional gain set as in Step 1). After a step change in the PID Feedback:
   - If the response is too slow (see Slow Response – Over Damped on page 221), or the PID Feedback does not become equal to the PID Reference, decrease A462 or A474 [PID x Integ Time].
   - If there is a lot of oscillation in the PID Feedback before settling out (see Oscillation – Under Damped on page 221), increase A462 or A474 [PID x Integ Time].
3. At this point, the differential gain may not be needed. However, if after determining the values for A461 or A473 [PID x Prop Gain] and A462 or A474 [PID x Integ Time]:
   - Response is still slow after a step change, increase A463 or A475 [PID x Diff Rate].
   - Response is still unstable, decrease A463 or A475 [PID x Diff Rate].

The following figures show some typical responses of the PID loop at different points during adjustment of the PID Gains.

Unstable Response

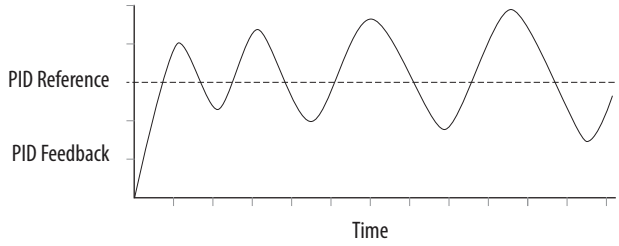

Slow Response – Over Damped

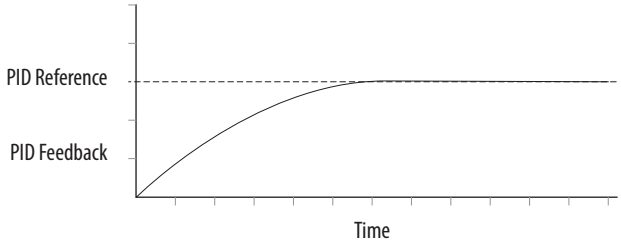

Oscillation – Under Damped

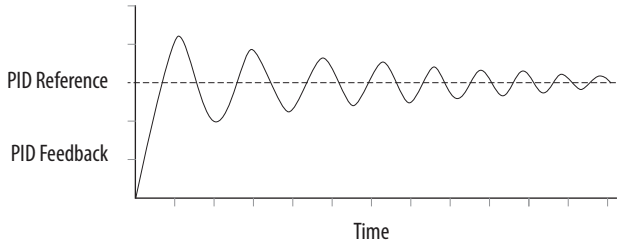

Good Response – Critically Damped

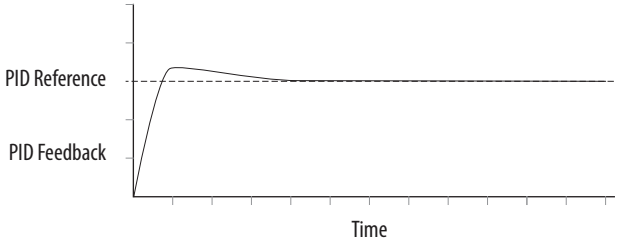

Safe-Torque-Off Function

The PowerFlex 525 Safe-Torque-Off function, when used with other safety components, helps provide protection according to EN ISO 13849 and EN62061 for safe-off and protection against restart. The PowerFlex 525 Safe-Torque-Off function is just one component in a safety control system. Components in the system must be chosen and applied appropriately to achieve the desired level of operator safeguarding.

For information on...	See page...
PowerFlex 525 Safe-Torque-Off Overview	223
EC Type Examination Certification	224
EMC Instructions	224
Using PowerFlex 525 Safe-Torque-Off	224
Enabling PowerFlex 525 Safe-Torque-Off	227
Wiring	227
Verify Operation	228
PowerFlex 525 Safe-Torque-Off Operation	227
Connection Examples	229
PowerFlex 525 Certification for Safe-Torque-Off	233

IMPORTANT The Safe-Torque-Off function covered in this chapter is specific to PowerFlex 525 drives only.

PowerFlex 525 Safe-Torque-Off Overview

The PowerFlex 525 Safe-Torque-Off function:

- Provides the Safe-Torque-Off (STO) function defined in EN IEC 61800-5-2.
- Blocks gate-firing signals from reaching the Insulated Gate Bipolar Transistor (IGBT) output devices of the drive. This prevents the IGBTs from switching in the sequence necessary to generate torque in the motor.
- Can be used in combination with other safety devices to fulfill the requirements of a system “safe torque off” function which satisfies Category 3 / PL (d) according to EN ISO 13849-1 and SIL CL2 according to EN/IEC 62061, IEC 61508, and EN/IEC 61800-5-2.

IMPORTANT The function is suitable for performing mechanical work on the drive system or affected area of a machine only. It does not provide electrical safety.

ATTENTION: Electric Shock Hazard. Verify that all sources of AC and DC power are de-energized and locked out or tagged out in accordance with the requirements of ANSI/NFPA 70E, Part II.

To avoid an electric shock hazard, verify that the voltage on the bus capacitors has discharged before performing any work on the drive. Measure the DC bus voltage at the +DC and -DC terminals or test points (refer to your drive's User Manual for locations). The voltage must be zero.

In safe-off mode, hazardous voltages may still be present at the motor. To avoid an electric shock hazard, disconnect power to the motor and verify that the voltage is zero before performing any work on the motor.

EC Type Examination Certification

TÜV Rheinland has certified the PowerFlex 525 Safe-Torque-Off function compliant with the requirements for machines defined in Annex I of the EC Directive 2006/42/EC, and that it complies with the requirements of the relevant standards listed below:

- EN ISO 13849-1:2008 Safety of machinery – Safety related parts of control systems – Part 1: General principles for design.
  (PowerFlex 525 STO achieves Category 3 / PL(d))
- EN 61800-5-2:2007 Adjustable speed electrical power drive systems – Part 5-2 Safety requirements – Functional.
  (PowerFlex 525 STO achieves SIL CL 2)
- EN 62061:2005 Safety of machinery – Functional safety of safety-related electrical, electronic and programmable electronic control systems.
- IEC 61508 Part 1-7:2010 Functional safety of electrical/electronic/programmable electronic safety-related systems – Parts 1-7.

TÜV also certifies that the PowerFlex 525 STO may be used in applications up to Category 3/ PL(d) according to EN ISO 13849-1 and SIL 2 according to EN 62061 / EN 61800-5-2 / IEC 61508.

The TÜV Rheinland certificate may be found at:
www.rockwellautomation.com/products/certification/.

EMC Instructions

PowerFlex 525 Safe-Torque-Off function requires CE Conformity as described on page 49.

Using PowerFlex 525 Safe-Torque-Off

The PowerFlex 525 Safe-Torque-Off function is intended to be part of the safety related control system of a machine. Before use, a risk assessment should be performed that compares the PowerFlex 525 Safe-Torque-Off function specifications and all foreseeable operational and environmental characteristics of the machine to which it is to be fitted.

A safety analysis of the machine section controlled by the drive is required to determine how often the safety function should be tested for proper operation during the life of the machine.

ATTENTION: The following information is merely a guide for proper installation. Rockwell Automation cannot assume responsibility for the compliance or the noncompliance to any code, national, local or otherwise for the proper installation of this equipment. A hazard of personal injury and/or equipment damage exists if codes are ignored during installation.

ATTENTION: In safe-off mode, hazardous voltages may still be present at the motor. To avoid an electric shock hazard, disconnect power to the motor and verify that the voltage is zero before performing any work on the motor.

ATTENTION: In the event of the failure of two output IGBTs in the drive, when the PowerFlex 525 Safe-Torque-Off has controlled the drive outputs to the off state, the drive may provide energy for up to 180° of rotation in a 2-pole motor before torque production in the motor ceases.

Safety Concept

The PowerFlex 525 Safe-Torque-Off function is suitable for use in safety applications up to and including Category 3 / PL(d) according to EN ISO 13849-1 and SIL 2 according to EN 62061 / EN 61800-5-2 / IEC 61508.

In addition, the PowerFlex 525 STO may be used together with other components in a safety application to achieve an overall Category 3 / PL(e) according to EN ISO 13849-1 and SIL 3 according to EN 62061 and IEC 61508. This is illustrated in Example 3 in this appendix.

Safety requirements are based on the standards current at the time of certification.

The PowerFlex 525 Safe-Torque-Off function is intended for use in safety-related applications where the de-energized state is considered to be the safe state. All of the examples in this manual are based on achieving de-energization as the safe state for typical Machine Safety and Emergency Shutdown (ESD) systems.

Important Safety Considerations

The system user is responsible for:

- the set-up, safety rating, and validation of any sensors or actuators connected to the system.
- completing a system-level risk assessment and reassessing the system any time a change is made.
- certification of the system to the desired safety performance level.
- project management and proof testing.
- programming the application software and the safety option configurations in accordance with the information in this manual.

- access control to the system, including password handling.
- analyzing all configuration settings and choosing the proper setting to achieve the required safety rating.

IMPORTANT When applying Functional Safety, restrict access to qualified, authorized personnel who are trained and experienced.



ATTENTION: When designing your system, consider how personnel will exit the machine if the door locks while they are in the machine. Additional safeguarding devices may be required for your specific application.

Functional Proof Test

The PFD and PFH values provided in the table below are contingent upon the Proof Test Interval (PTI). Before the end of the PTI specified in the table below, a proof test of the STO safety function must be performed in order for the specified PFD and PFH values to remain valid.

PFD and PFH Data

PFD and PFH calculations are based on the equations from Part 6 of EN 61508.

This table provides data for a 20-year proof test interval and demonstrates the worst-case effect of various configuration changes on the data.

PFD and PFH for 20-year Proof Test Interval

Attribute	Value
PFD	6.62E-05 (MTTF = 3593 years)
PFH_D	8.13E-10
SFF	83%
DC	62.5%
CAT	3
HFT	1 (1oo2)
PTI	20 YEARS
Hardware Type	Type A

Safety Reaction Time

The safety reaction time is the amount of time from a safety-related event as input to the system until the system is in the Safe State.

The safety reaction time from an input signal condition that triggers a safe stop, to the initiation of safe-torque-off, is 100 ms (maximum).

Enabling PowerFlex 525 Safe-Torque-Off

1. Remove all power to the drive.

> **ATTENTION:** To avoid an electric shock hazard, verify that the voltage on the bus capacitors has discharged before performing any work on the drive. Measure the DC bus voltage at the +DC and -DC terminals or test points (refer to your drive's user manual for the location of the terminals). The voltage must be zero.

2. Loosen the screw of terminals Safety 1, Safety 2 and Safety +24V (S1, S2, S+) on the control I/O terminal block.
3. Remove the protective jumper.

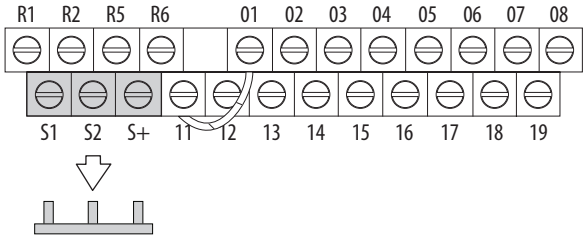

4. Safe-Torque-Off function is now enabled and the terminals are ready to function as safety inputs.

Wiring

Important points to remember about wiring:

- Always use copper wire.
- Wire with an insulation rating of 600V or greater is recommended.
- Control wires should be separated from power wires by at least 0.3 m (1 ft).

Recommended Wire

Type	Wire Type(1)	Description	Min. Insulation Rating
Shielded	Multi-conductor shielded cable such as Belden 8770 (or equiv.)	0.750 mm^2 (18 AWG), 3 conductor, shielded.	300V, 60 °C (140 °F)

(1) Recommendations are for 50 °C ambient temperature.
75 °C wire must be used for 60 °C ambient temperature.
90 °C wire must be used for 70 °C ambient temperature.

See I/O Wiring on page 35 for wiring recommendations and Control I/O Terminal Designations on page 40 for terminal descriptions.

If Safety Inputs S1 and S2 are powered by an external +24V source, apply it only in SELV system, PELV system or low voltage Class 2 circuit.

PowerFlex 525 Safe-Torque-Off Operation

The PowerFlex 525 Safe-Torque-Off function disables the drive's output IGBT's by breaking the link with the drive microcontroller. When used in combination with a safety input device, the system satisfies the requirements of EN ISO 13849 and EN62061 for safe-torque-off and helps protect against restart.

Under normal drive operation, both safety inputs (Safety 1 and Safety 2) are energized, and the drive is able to run. If either input is de-energized, the gate control circuit becomes disabled. To meet EN ISO 13849 operation, both safety channels must be de-energized. Refer to the following examples for more information.

IMPORTANT By itself, the Safe-Torque-Off function initiates a coast to stop action. Additional protective measures will need to be applied when an application requires a change to the stop action.

Verify Operation

Test the safety function for proper operation after the initial setup of the PowerFlex 525 Safe-Torque-Off function. Retest the safety function at the intervals determined by the safety analysis described on page 224.

Verify that both safety channels are functioning according to the table below.

Channel Operation and Verification

Safety Function Status	**Drive In Safe State**	**Drive In Safe State**	**Drive In Safe State**	**Drive Able To Run**
Drive Status	**Configured by t105 [Safety Open En]**	**Fault F111 (Safety Hardware)**	**Fault F111 (Safety Hardware)**	**Ready/Run**
		Safety Channel Operation		
Safety Input S1	No Power Applied	Power Applied	No Power Applied	Power Applied
Safety Input S2	No Power Applied	No Power Applied	Power Applied	Power Applied

IMPORTANT If an external fault is present on the wiring or circuitry controlling the Safety 1 or Safety 2 inputs for a period of time, the Safe-Torque-Off function may not detect this condition. When the external fault condition is removed the Safe-Torque-Off function will allow an enable condition. Fault in the external wiring shall either be detected by external logic, or excluded (wiring must be protected by cable ducting or armoring), according to EN ISO 13849-2.

Connection Examples

Example 1 – Safe-Torque-Off Connection with Coast-to-Stop Action, SIL 2/PL d

Stop Category 0 – Coast

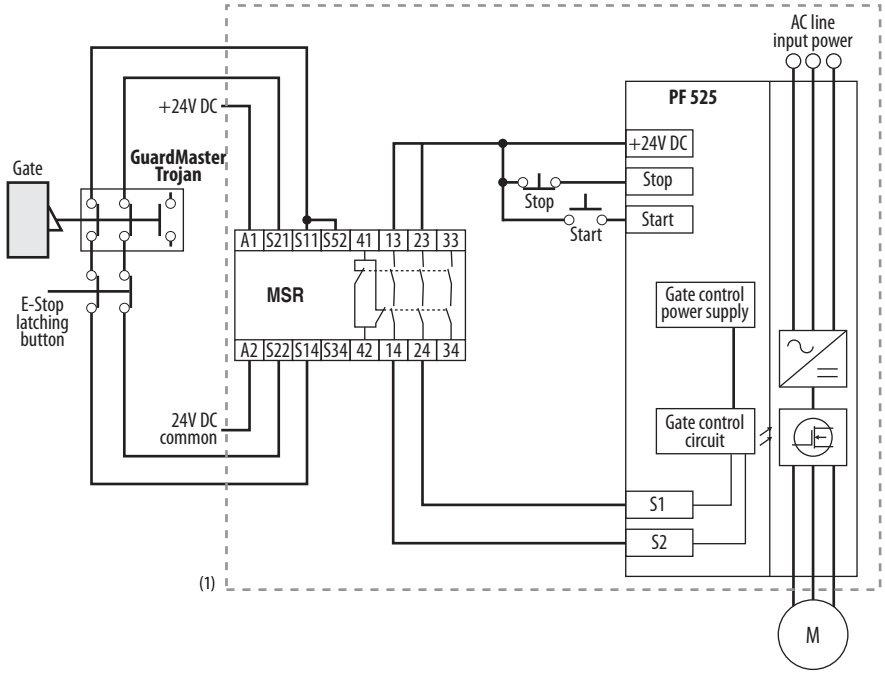

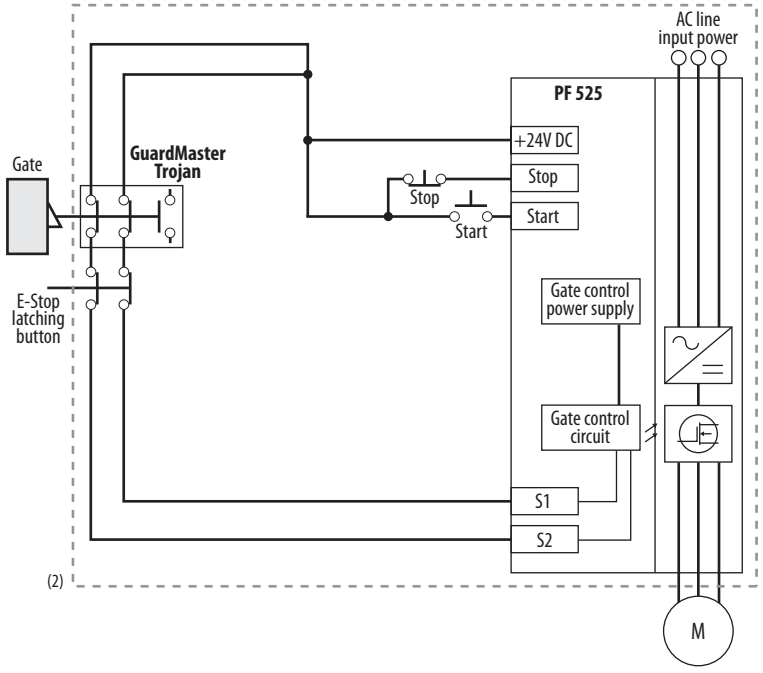

(1) Enclosure Recommended. Note: External wiring failure modes must be considered as described in EN ISO 13849-2. Enclosure or other measure to exclude these failure modes should be used.

(2) In some situations, a safety relay is not required if both the switch and PowerFlex 525 are installed in the same enclosure.

Stop Category 0 – Coast with Two PowerFlex 525 Drives

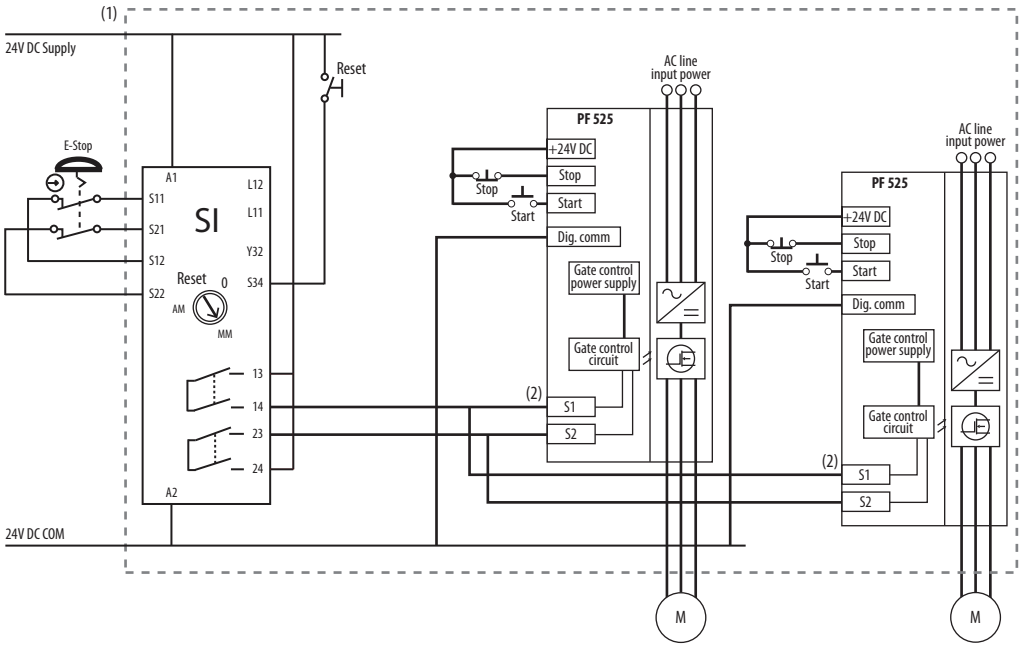

(1) Enclosure Recommended. Note: External wiring failure modes must be considered as described in EN ISO 13849-2. Enclosure or other measure to exclude these failure modes should be used.
(2) Each safety input draws 6 mA from the supply.

Circuit Status

Circuit shown with guard door closed and system ready for normal drive operation.

Operating Principle

This is a dual channel system with monitoring of the Safe-Torque-Off circuit and drive. Opening the guard door will switch the input circuits (S13-S14 & S21-S22) to the Minotaur monitoring safety relay unit. The output circuits (13-14 & 23-24) will cause the Safe-Torque-Off Enable circuit to trip and the motor will coast to stop. To restart the drive, the Minotaur safety relay must first be reset followed by a valid start command to the drive.

Fault Detection

A single fault detected on the Minotaur safety input circuits will result in the lock-out of the system at the next operation and will not cause loss of the safety function.

A single fault detected on the PowerFlex 525 safety enable redundant inputs will result in the lock-out of the drive and will not cause loss of the safety function.

Example 2 – Safe-Torque-Off Connection with Controlled Stop Action, SIL 2/PL d

Stop Category 1 – Controlled

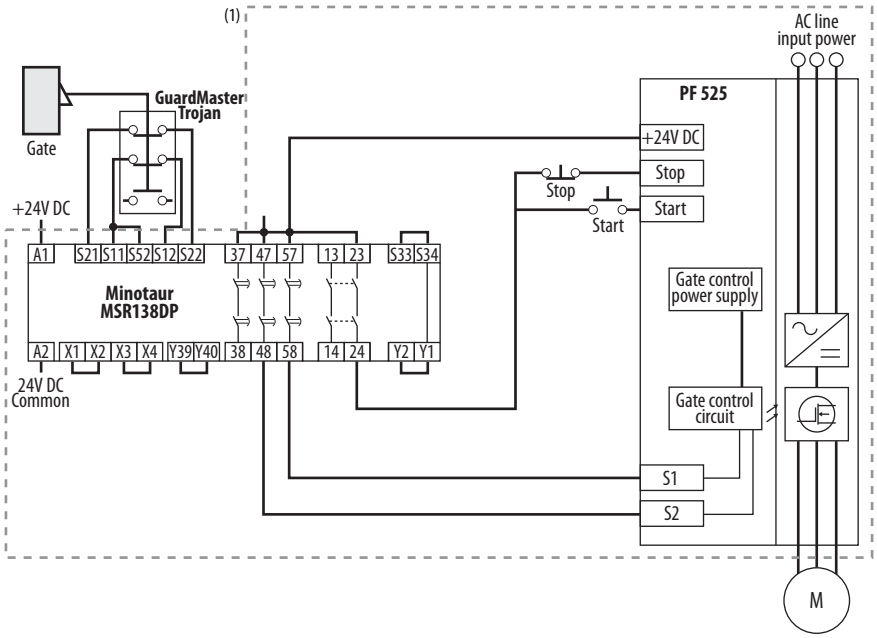

(1) Enclosure Recommended. External wiring failure modes must be considered as described in EN ISO 13849-2. Enclosure or other measure to exclude these failure modes should be used.

Circuit Status

Circuit shown with guard door closed and system ready for normal drive operation.

Operating Principle

This is a dual channel system with monitoring of the Safe-Torque-Off circuit and drive. Opening the guard door will switch the input circuits (S11-S12 & S21-S22) to the Minotaur monitoring safety relay unit. The output circuits (13-14) will issue a Stop command to the drive and cause a controlled deceleration. After the programmed delay, the timed output circuits (47-48 & 57-58) will cause the Safe-Torque-Off Enable circuit to trip. If the motor is rotating when the trip occurs, it will coast to stop. To restart the drive, the Minotaur safety relay must first be reset followed by a valid start command to the drive.

Fault Detection

A single fault detected on the Minotaur safety input circuits will result in the lock-out of the system at the next operation and will not cause loss of the safety function.

A single fault detected on the PowerFlex 525 safety enable redundant inputs will result in the lock-out of the drive and will not cause the loss of the safety function.

Example 3 – Safe-Torque-Off Connection with Coast-to-Stop Action Using External +24V supply, SIL 3/PL e

Stop Category 0 – Coast

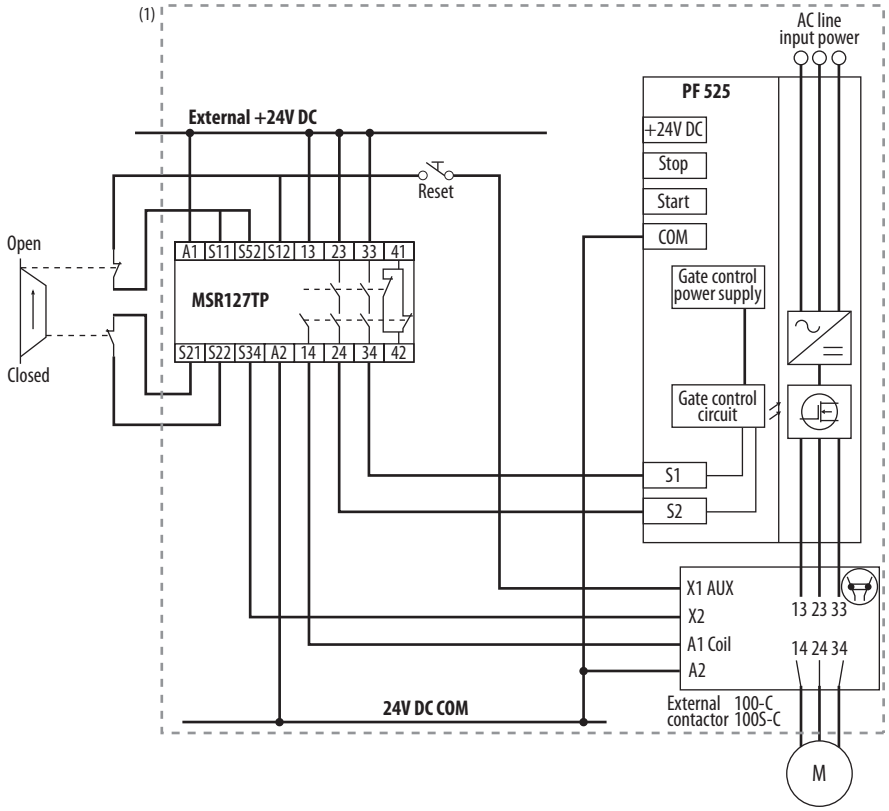

(1) Enclosure Recommended. External wiring failure modes must be considered as described in EN ISO 13849-2. Enclosure or other measure to exclude these failure modes should be used.

Circuit Status

Circuit shown with guard door closed and system ready for normal drive operation.

Operating Principle

This is a dual channel system with monitoring of the Safe-Torque-Off circuit and drive. Opening the guard door will switch the input circuits (S11-S12 & S21-S22) to the Minotaur monitoring safety relay unit. The output circuits (13-14 & 23-24 & 33-34) will cause the output contact and Safe-Torque-Off Enable circuit to trip and the motor will coast to stop. To restart the drive, the Minotaur safety relay must first be reset followed by a valid start command to the drive.

Fault Detection

A single fault detected on the Minotaur safety input circuits will result in the lock-out of the system at the next operation and will not cause loss of the safety function.

PowerFlex 525 Certification for Safe-Torque-Off

TÜVRheinland®

ZERTIFIKAT
CERTIFICATE

EC Type-Examination Certificate

Reg.-No.: 01/205/5249/12

Product tested	Safety Function "Safe Torque Off" (STO) within the adjustable Frequency AC Drive PowerFlex 525	**Certificate holder**	Rockwell Automation 6400 West Enterprise Drive Mequon, WI 53092 USA
Type designation	PowerFlex 525; 25B, 120V, 240V, 400-480V and 600V	**Manufacturer**	see certificate holder
Codes and standards forming the basis of testing	EN 61800-5-2:2007 EN 61800-5-1:2007 (in extracts) EN 61800-3:2004 EN 62061:2005		EN ISO 13849-1:2008 + AC:2009 EN 60204-1:2006 + A1:2009 (in extracts) IEC 61508 Parts 1-7:2010
Intended application	The integrated safety function "Safe Torque Off" of the Frequency AC Drive PowerFlex 525 complies with the requirements of the relevant standards (Cat. 3/ PL d acc. to EN ISO 13849-1, SILCL 2 acc. to EN 62061/ EN 61800-5-2/ IEC 61508) and can be used in applications up to Cat. 3/ PL d acc. to EN ISO 13849-1, SIL 2 acc. to EN 62061/ IEC 61508.		
Specific requirements	The instructions of the associated Installation and Operating Manual shall be considered.		
It is confirmed, that the product under test complies with the requirements for machines defined in Annex I of the EC Directive 2006/42/EC.			
This certificate is valid until 2017-09-24.			

Functional Safety Type Approved
TÜVRheinland® FS

The test report-no.: 968/M 365.00/12 dated 2012-09-24 is an integral part of this certificate.

The holder of a valid licence certificate for the product tested is authorized to affix the test mark shown opposite to products, which are identical with the product tested.

TÜVRheinland 0035 Notified Body

Berlin, 2012-09-24

Certification Body for Machinery, NB 0035

Dipl.-Ing. Eberhard Frejno

TÜV Rheinland Industrie Service GmbH, Alboinstr. 56, 12103 Berlin / Germany
Tel.: +49 30 7562-1557, Fax: +49 30 7562-1370, E-Mail: tuvat@de.tuv.com

Notes:

EtherNet/IP

This section contains only basic information to setup an EtherNet/IP connection with your PowerFlex 520-series drive. For comprehensive information about EtherNet/IP (single and dual-port) and how to use it, see the following publications:

- PowerFlex 525 Embedded EtherNet/IP Adapter User Manual, publication 520COM-UM001.
- PowerFlex 25-COMM-E2P Dual-Port EtherNet/IP Adapter User Manual, publication 520COM-UM003.



ATTENTION: PowerFlex 523 drives support only the 25-COMM-E2P dual-port EtherNet/IP adapter. PowerFlex 525 drives support both the embedded EtherNet/IP adapter and the 25-COMM-E2P dual-port EtherNet/IP adapter.

It is recommended to use Allen-Bradley Ethernet RJ45 cables, shielded or unshielded (catalog number 1585J-M8xBJM-x), for connecting your PowerFlex 520-series drive to an EtherNet/IP network.

Establishing A Connection With EtherNet/IP

There are three methods for configuring the Ethernet IP address:

- **BootP Server** – Use BootP if you prefer to control the IP addresses of devices using a server. The IP address, subnet mask, and gateway addresses will then be provided by the BootP server.
- **Adapter Parameters** – Use adapter parameters when you want more flexibility in setting up the IP address, or need to communicate outside the control network using a gateway. The IP address, subnet mask, and gateway addresses will then come from the adapter parameters you set.
- **DHCP** (**Dynamic Host Configuration Protocol**) (only with PowerFlex 25-COMM-E2P adapter) – Use DHCP when you want additional flexibility and ease-of-use compared to BOOTP in configuring the IP address, subnet mask, and gateway address for the adapter using a DHCP server.

IMPORTANT If you are setting your network addresses manually using parameters, you must set the appropriate drive or 25-COMM-E2P adapter parameter value to 1 "Parameters". See the respective EtherNet/IP adapter user manual for more information.

IMPORTANT Regardless of the method used to set the adapter IP address, each node on the EtherNet/IP network must have a unique IP address. To change an IP address, you must set the new value and then remove and reapply power to (or reset) the adapter.

Control Diagrams

This chapter contains various diagrams on the PowerFlex 520-series drive functions and behaviors.

Induction Motor Tuning Diagrams

[Speed Reg Sel] Diagrams For Motor Tuning

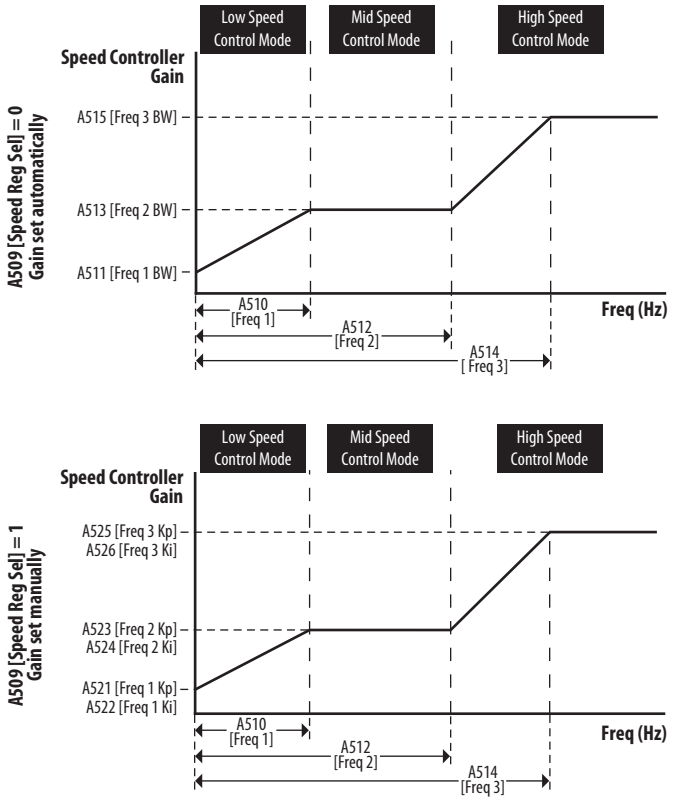

Adjusting Speed Control Parameters

These settings show how to adjust the speed control for motor tuning.

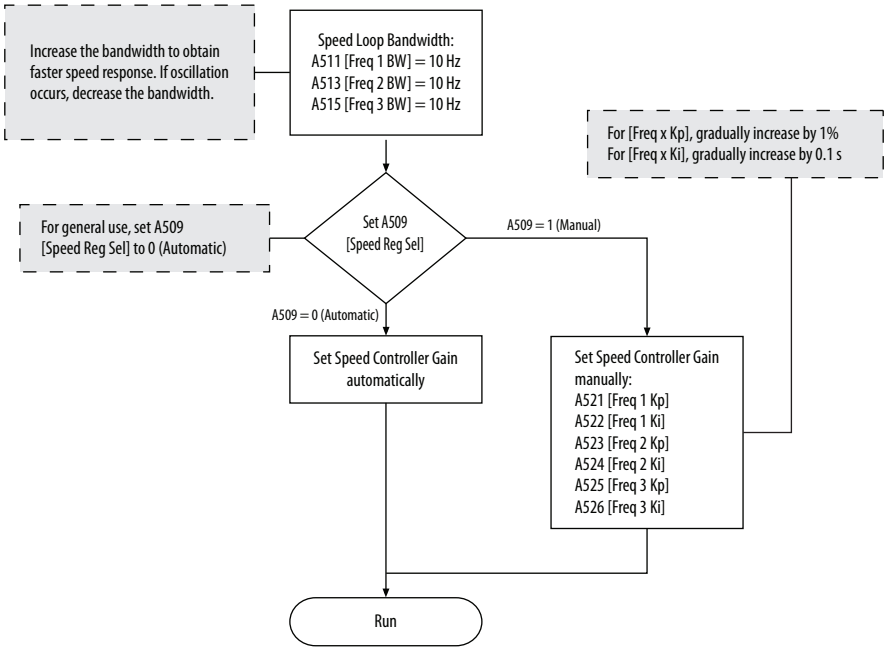

Numerics

2-wire
  inputs, **47**
3-wire
  inputs, **47**

A

accel
  override priority, **48**
  selecting, **48**
accessing
  control terminals, **30**
  power terminals, **30**
applications
  safety, **225**
auxiliary contact
  drive, **33**, **35**

B

basic operation, **61**
  drive, **56**, **61**, **150**
  programming, **61**
  safety, **228**

C

circuit breakers
  inputs, **22**
  ratings, **22**
common bus
  drive, **35**
communications
  positioning, **212**
configuring
  RS485(DSI), **190**
control terminals
  accessing, **30**
counter
  programming, **197**, **200**

D

decel
  override priority, **48**
  selecting, **48**
derating
  factor, **117**
  temperature, **17**
digital inputs
  selecting, **47**
  start source, **47**
dimensions
  mounting, **16**, **173**
disconnect
  output, **33**
drive
  auxiliary contact, **33**, **35**
  basic operation, **56**, **61**, **150**
  common bus, **35**
  mount, **15**
  programming, **57**, **60**
  safety, **227**
drive damage
  preventing, **19**
  ungrounded distribution systems, **19**

E

encoder
  programming, **203**
  wiring, **204**
environment
  storage, **18**
Ethernet
  programming, **235**

F

fault monitoring
  ground, **21**
fuses
  rating, **22**

G

ground
  fault monitoring, **21**
  motor, **21**
  RFI filter, **21**
  safety, **21**
  shielding, **21**

H

homing
  automatic, **210**
  manual, **210**
  programming, **210**

I

inputs
  2-wire, **47**
  3-wire, **47**
  circuit breakers, **22**
  power, **20**

L

logic
  basic, **197**, **198**
  timed steps, **197**, **198**

M

Modbus
  reading, **193**, **195**, **196**

writing, **191**, **193**, **196**
motor
ground, **21**
start, **33**
stop, **33**
mount
drive, **15**
mounting
dimensions, **16**, **173**

N

noise immunity
wiring, **36**, **190**

O

output
disconnect, **33**
override priority
accel, **48**
decel, **48**
speed reference, **46**
start source, **46**

P

parameters
AppView, **68**, **138**
CustomView, **139**
programming, **59**, **63**
PID
programming, **217**
positioning
communications, **212**
programming, **205**, **206**
power
inputs, **20**
power and control module
separating, **27**
power terminals
accessing, **30**
preventing
drive damage, **19**
programming, **61**
basic logic, **197**, **198**
counter, **197**, **200**
drive, **57**, **60**
encoder, **203**
Ethernet, **235**
homing, **210**
parameters, **59**, **63**
PID, **217**
positioning, **205**, **206**
pulse train, **203**
timed steps, **197**, **198**
timer, **197**, **199**
tools, **60**
pulse train
programming, **203**

R

rating
fuses, **22**
ratings
circuit breakers, **22**
reading
Modbus, **193**, **195**, **196**
recommended
wiring, **35**, **227**
reflected
wave protection, **33**
RFI filter
ground, **21**
RS485(DSI)
configuring, **190**

S

safety
applications, **225**
basic operation, **228**
drive, **227**
ground, **21**
testing, **226**
wiring, **227**
selecting
accel, **48**
decel, **48**
digital inputs, **47**
speed reference, **46**
start source, **46**
separating
power and control module, **27**
shielded
wiring, **32**
shielding
ground, **21**
speed reference
override priority, **46**
selecting, **46**
start
motor, **33**
start source
digital inputs, **47**
override priority, **46**
selecting, **46**
stop
motor, **33**
storage
environment, **18**

T

temperature
derating, **17**
wiring, **32**
testing
safety, **226**
timer

programming, **197**, **199**
tools
programming, **60**

U

unshielded
wiring, **32**

V

voltage reflections
wiring, **33**

W

wave protection
reflected, **33**
wiring
encoder, **204**
noise immunity, **36**, **190**
recommended, **35**, **227**
RS485 (DSI), **189**
safety, **227**
shielded, **32**
temperature, **32**
unshielded, **32**
voltage reflections, **33**
writing
Modbus, **191**, **193**, **196**

Notes:

Rockwell Automation Support

Rockwell Automation provides technical information on the Web to assist you in using its products. At http://www.rockwellautomation.com/support/, you can find technical manuals, a knowledge base of FAQs, technical and application notes, sample code and links to software service packs, and a MySupport feature that you can customize to make the best use of these tools.

For an additional level of technical phone support for installation, configuration, and troubleshooting, we offer TechConnect support programs. For more information, contact your local distributor or Rockwell Automation representative, or visit http://www.rockwellautomation.com/support/.

Installation Assistance

If you experience a problem within the first 24 hours of installation, review the information that is contained in this manual. You can contact Customer Support for initial help in getting your product up and running.

United States or Canada	1.440.646.3434
Outside United States or Canada	Use the Worldwide Locator at http://www.rockwellautomation.com/support/americas/phone_en.html, or contact your local Rockwell Automation representative.

New Product Satisfaction Return

Rockwell Automation tests all of its products to ensure that they are fully operational when shipped from the manufacturing facility. However, if your product is not functioning and needs to be returned, follow these procedures.

United States	Contact your distributor. You must provide a Customer Support case number (call the phone number above to obtain one) to your distributor to complete the return process.
Outside United States	Please contact your local Rockwell Automation representative for the return procedure.

Documentation Feedback

Your comments will help us serve your documentation needs better. If you have any suggestions on how to improve this document, complete this form, publication RA-DU002, available at http://www.rockwellautomation.com/literature/.

www.rockwellautomation.com

Power, Control and Information Solutions Headquarters

Americas: Rockwell Automation, 1201 South Second Street, Milwaukee, WI 53204-2496 USA, Tel: (1) 414.382.2000, Fax: (1) 414.382.4444
Europe/Middle East/Africa: Rockwell Automation NV, Pegasus Park, De Kleetlaan 12a, 1831 Diegem, Belgium, Tel: (32) 2 663 0600, Fax: (32) 2 663 0640
Asia Pacific: Rockwell Automation, Level 14, Core F, Cyberport 3, 100 Cyberport Road, Hong Kong, Tel: (852) 2887 4788, Fax: (852) 2508 1846

Publication 520-UM001G-EN-E – September 2014 PN-215492 DIR 10000739437 ver 01

Supersedes Publication 520-UM001F-EN-E – March 2014

Copyright © 2014 Rockwell Automation, Inc. All rights reserved.

TAB 11



PHOENIX



Bulletin 836T Style T Piston Type

Enclosure Type 1, 4 & 13, IEC IP66

Bulletin 836T Style T Bellows Type

TABLE OF CONTENTS

Description	Page
Product Overview	16-2
Technical Data	
Technical Terms	16-3
Theory of Operation	16-4
Applications for Control	16-4
Control Setting — Style T	16-5
Control Setting — Style D	16-6
Repeat Accuracy and Mechanical Life	16-7
Mounting without Removing Cover	16-8
Factory Set Pressure Controls	16-8
Temperature Range	16-8
Contacts	16-8
Contact Wiring Configurations	16-9
Nameplate with Removable Paint Mask	16-9
Pressure Control Selection	16-10
Ordering Information	
How to Order	16-11
Catalog Number Explanation (Example)	16-11
Pressure Controls	
Style T — With Copper Alloy Bellows	16-12
Style T — With Type 316 Stainless Steel Bellows	16-13
Style T — Piston Without Seal	16-14
Style T — Piston With Seal	16-15
Style D — With Copper Alloy Bellows	16-16
Style D — With Type 316 Stainless Steel Bellows	16-17
Modifications	16-18
Wiring Diagrams	16-20
Accessories	16-23
Conversion Kits	16-24
Replacement Parts	16-25
Factory Options	
Factory-Set Pressure Controls	16-25
Dimensions	16-26

UL and CSA Numbers — Page 16-5.
Conversion Factors — Page Important-2.
Enclosure Information — Page Important-8.

Description

Bulletin 836T Pressure Controls are control circuit devices designed to meet the traditional requirements of the transportation, machine tool, and other heavy duty industries. Allen-Bradley Bulletin 836T Pressure Controls can be used in pneumatic and hydraulic applications. The copper alloy bellows actuators can be used with air, water, oil, vapor and other non-corrosive gases and liquids. Type 316 stainless steel bellows are available for the more corrosive gases, vapors, and fluids. A rugged cast iron cylinder and hardened steel piston assembly is used for the higher pressure coolant and hydraulic oil applications. The controls feature snap action precision switches equipped with silver contacts. A relatively friction-free mechanism provides consistent operation regardless of mounting position. Devices are designed to allow easy adjustment of pressure settings. Allen-Bradley Bulletin 836T Pressure Controls are used in many types of applications with adjustable ranges from 30" Hg Vacuum…5000 psi. They can be used to control pneumatic systems, and to maintain a pressure tank within a preset and constant pressure range. They can be used to detect over-pressures of gases and liquids to prevent damage to valuable equipment. Pressure controls can also detect low pressure to protect equipment from loss of coolants and lubrication.

Bulletin 836T Pressure Controls are offered in a variety of styles to fit a wide range of applications. The devices are available with either a Type 1, 4 & 13, or 7 & 9 and 4 & 13 combined enclosure. They are available with 2-circuit or 4-circuit contact blocks. Accessories and modifications are available to tailor the devices to meet most application requirements.

Applications

- Machine Tools
- Machine Hydraulic Pressures
- Material Clamping Fixtures
- Lubricant and Coolant Pressures
- Compactor Ram Pressures
- Air Compressors

Style T — Pressure Control



Style T
- Independently adjustable operating range and differential
- Single bellows or piston operation

Copper Alloy Bellows
- 1/4" N.P.T.F. female pipe connection
- SAE 7/16-20 UNF-2B thread O-ring Boss Seal
- SAE 9/16-18 UNF-2B thread O-ring Boss Seal
- Adjustable operating range — 30" Hg Vacuum…650 psi
- Maximum line pressure — 1300 psi
- Occasional surge pressure — 1600 psi

Type 316 Stainless Steel Bellows
- 1/4" N.P.T.F. female pipe connection
- Adjustable operating range — 30" Hg Vacuum…375 psi
- Maximum line pressure — 600 psi
- Occasional surge pressure — 600 psi

Piston
- 3/8" N.P.T.F. female pipe connection
- SAE 7/16-20 UNF-2B thread O-ring Boss Seal
- SAE 9/16-18 UNF-2B thread O-ring Boss Seal
- Adjustable operating range — 40…5000 psi
- Occasional surge pressure — 15,000 psi

Style D — Pressure Difference Control



Style D
- Independently adjustable system difference range and differential
- Two bellows operation, one bellows connected to each system

Copper Alloy Bellows
- 1/4" N.P.T.F. female pipe connection
- Adjustable system difference range — 1…70 psi
- Maximum line pressure — 600 psi
- Occasional surge pressure — 650 psi

Type 316 Stainless Steel Bellows
- 1/4" N.P.T.F. female pipe connection
- Adjustable system difference range — 1…70 psi
- Maximum line pressure — 500 psi
- Occasional surge pressure — 500 psi

Control Setting — Style T Pressure Controls

Allen-Bradley controls are designed for ease of setting to help minimize installation time. Standard pressure controls shipped from the factory are set at the maximum operating range and minimum differential. By using a pressure gauge and following these simple directions, the control can be set to the specific requirements for each application. See Figure 5.

Step 1 — Adjust Trip Setting

The trip setting is controlled by the operating range adjustment screw and is adjusted externally. After loosening the lock nut, the trip setting is set by turning the operating range adjustment screw counterclockwise to lower the trip setting or clockwise to raise the trip setting. The approximate trip setting is shown on the indicating scale. When the proper setting is reached, simply tighten the lock nut.

Note: Turning the operating range adjustment screw will cause both the trip and reset settings to change in equal increments.

Step 2 — Adjust Reset Setting

The reset setting is controlled by an internal differential adjustment screw. After removing the front cover, the reset setting is set by turning the differential adjustment screw clockwise to increase the differential or counterclockwise to decrease the differential.

Note: Adjusting the differential does not affect the trip setting.

Figure 5
Trip and Reset Adjustment for Pressure Controls

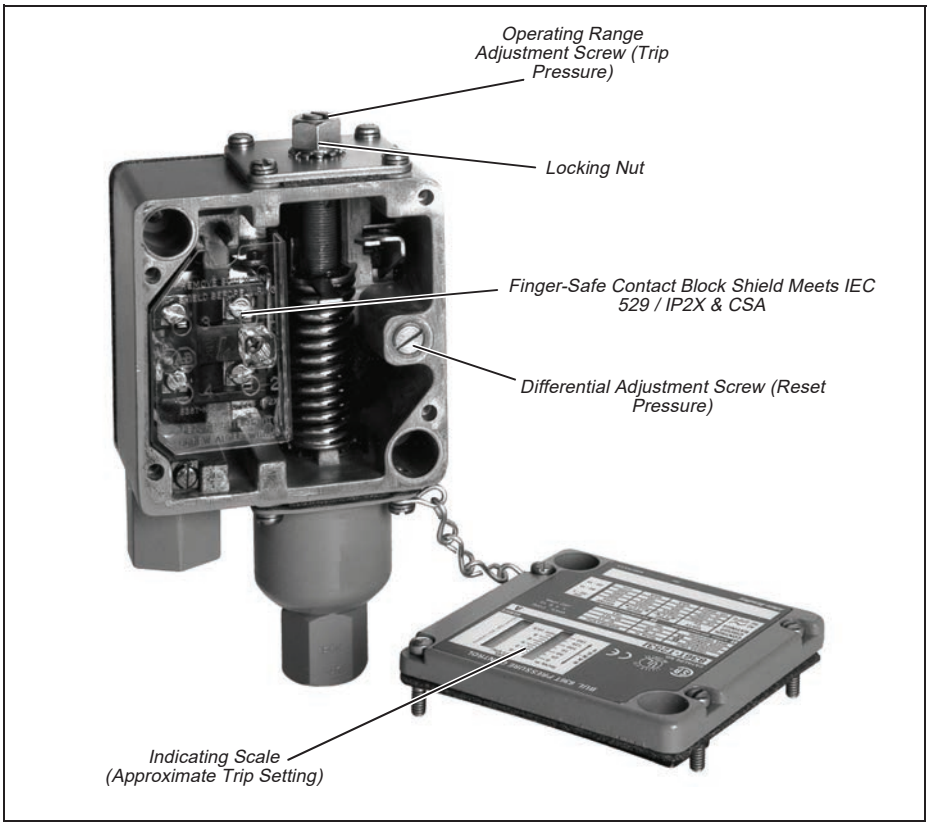

File and Guide Numbers				
	UL		CSA	
	File Number	Guide Number	File Number	Class
Bulletin 836T	E14842 E53048 (Haz. Loc.)	NKPZ NOWT	LR1234 LR11924 (Haz. Loc.)	3211-03 3218-05
	Hazardous Location Enclosure not CE compliant.			

Contact Wiring Configurations

2-Circuit Contact Blocks

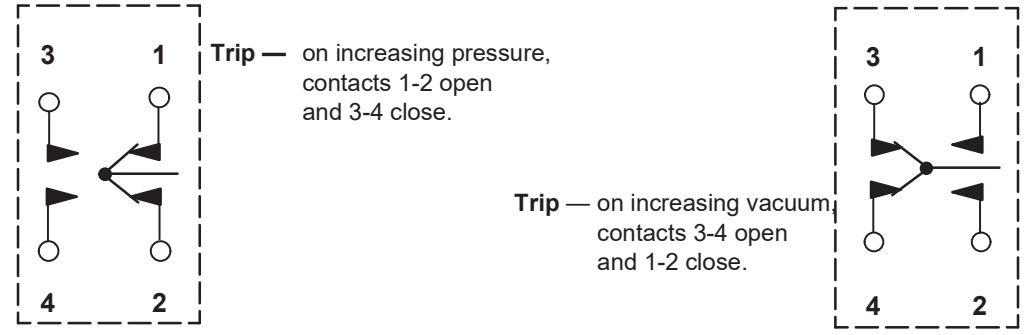

4-Circuit Contact Blocks

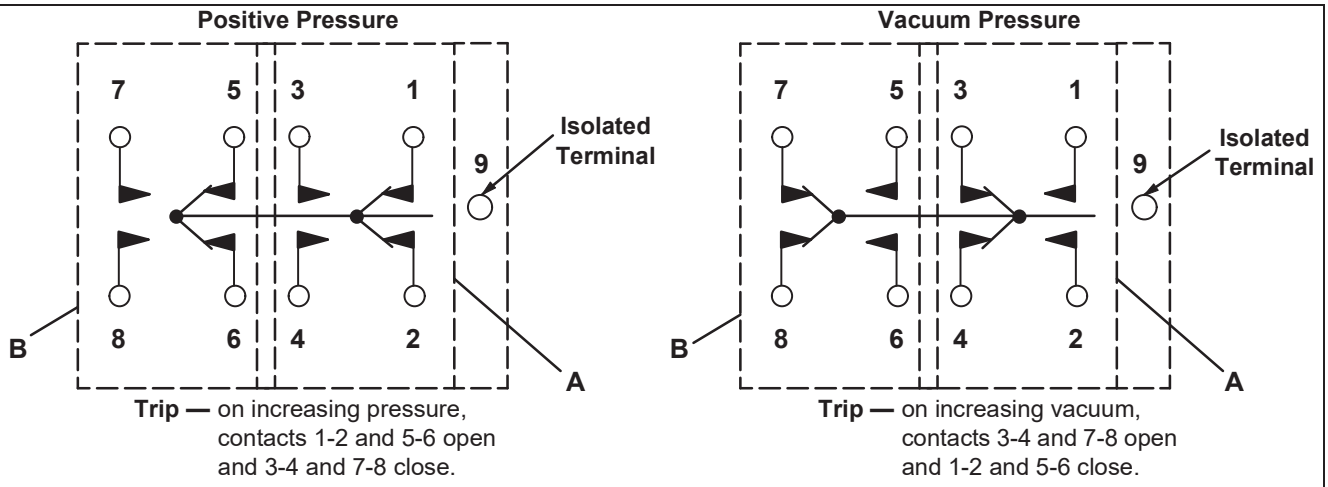

Note: Circuits A and B are electrically isolated from one another.
A or B circuits must be the same polarity.

Nameplate with Removable Paint Mask

The masks are convenient for the many users who repaint controls to match the machine or color code equipment. Saves costly time-consuming hand masking necessary so as not to conceal product functional specifications and approval listings. This feature is standard on most controls at no additional cost.
The paint mask feature cannot be supplied on controls with pilot lights. They are also not available on those devices where it is necessary to remove the mask and add suffix modifications to the catalog number or specific customer identification in the space provided.

Figure 8
Removable Paint Mask



Cover with Transparent Mask and Instruction Label in Place

Cover with Mask Partially Removed

Pressure Control Selection

The selection table below is an overview of the five types of Bulletin 836T Pressure Controls Allen-Bradley offers. Each type of control is suitable for use on many types of applications. Pressure ranges, pressure connections, enclosure types and the compatibility of the actuator with different types of pressure media are given to assist in the selection of which type of control to use.

	836T			
Actuator Type	Copper Alloy Bellows	Type 316 Stainless Steel Bellows	Piston Type Without Seal	Piston Type With Seal
Adjustable Operating Ranges	30" Hg Vacuum…650 psi	30" Hg Vacuum…375 psi	40…5000 psi	80…5000 psi
Adjustable Differentials	2…125 psi	2…90 psi	20…650 psi	40…650 psi
Maximum Line Pressures	1300 psi	600 psi	—	—
Occasional Surge Pressures	1600 psi	600 psi	15,000 psi	15,000 psi
Pressure Media				
Air	●	●		
Water	●	●		
Hydraulic Fluids	●	●	●	●
Liquids:		●		
Corrosive ❶				
Non-Corrosive	●	●		
Gases:		●		
Corrosive ❶				
Non-Corrosive	●	●		
Enclosures				
Type 1, 4 & 13	●	●	●	●
Type 7 & 9 and 4 & 13, IP66	●	●	●	●
Pipe Connections				
Standard Pressure Connection	1/4" N.P.T.F. Female Pipe Thread SAE 7/16-20 UNF-2B Thread O-ring Boss Seal SAE 9/16-18 UNF-2B Thread O-ring Boss Seal	1/4" N.P.T.F. Female Pipe Thread	3/8" N.P.T.F. Female Pipe Thread SAE 7/16-20 UNF-2B Thread O-ring Boss Seal SAE 9/16-18 UNF-2B Thread O-ring Boss Seal	3/8" N.P.T.F. Female Pipe Thread SAE 7/16-20 UNF-2B Thread O-ring Boss Seal SAE 9/16-18 UNF-2B Thread O-ring Boss Seal

❶ Corrosive liquids and gases must be compatible with Type 316 Stainless Steel Bellows.

Note: Pressure Difference Controls are supplied with either copper alloy or stainless steel bellows. See Ordering Information on page 16-11 for details.



Style T — Type 1, 4 & 13 with Pilot Light Option



Style T — Type 1, 4 & 13 with Pilot Light and 5-Pin Mini-Receptacle

Style T with Copper Alloy Bellows ❶ — S.P.D.T. 2-Circuit Contact Block

Pressure Specifications				Enclosure Type	
Adjustable Operating Range psi	Adjustable Differential psi (Approximate Mid-Range Values)	Maximum psi		Type 1, 4 & 13	Type 7 & 9 and 4 & 13 ❸
		Line Pressure	Occasional Surge Pressure ❷	Cat. No.	Cat. No.
30" Hg Vacuum…35	2…7	80	90	836T-T251J	836T-T251E
6…75	3…15	200	220	836T-T252J	836T-T252E
12…150	6…30	350	450	836T-T253J	836T-T253E
20…300	10…55	600	750	836T-T254J	836T-T254E
40…450	20…90	900	1200	836T-T255J	836T-T255E
60…650	30…125	1300	1600	836T-T256J	836T-T256E

Style T with Copper Alloy Bellows ❶ — D.P.D.T. 4-Circuit Contact Block

Pressure Specifications				Enclosure Type	
Adjustable Operating Range psi	Adjustable Differential psi (Approximate Mid-Range Values)	Maximum psi		Type 1, 4 & 13	Type 7 & 9 and 4 & 13 ❸
		Line Pressure	Occasional Surge Pressure ❷	Cat. No.	Cat. No.
30" Hg Vacuum…35	2.2…7	80	90	836T-T251JX40	836T-T251EX40
6…75	4.5…15	200	220	836T-T252JX40	836T-T252EX40
12…150	9…30	350	450	836T-T253JX40	836T-T253EX40
20…300	15…55	600	750	836T-T254JX40	836T-T254EX40
40…450	30…90	900	1200	836T-T255JX40	836T-T255EX40
60…650	45…125	1300	1600	836T-T256JX40	836T-T256EX40

❶ Copper alloy bellows may be used on water or air, and other liquids or gases not corrosive to this alloy.
❷ Transients (pulses) can occur in a system prior to reaching a steady-state condition. Surge pressures within published values generated during start-up or shut-down of a machine or system, not exceeding 8 times in a 24-hour period, are negligible.
❸ The combined Type 7 & 9 and 4 & 13 Hazardous Gas and Dust service enclosure is supplied with special gasket and O-ring seal to diminish/exclude moisture, fluids, and dust from entering the enclosure. Enclosures rated 7 & 9 only are not designed to restrict moisture from entering the enclosure, which is common to outdoor service.

Bulletin 836T 5-Pin Mini-Type Receptacle Option Wiring Reference

(J1 Wiring)

(See Applicable Codes and Laws)

Without Pilot Light

Suffix X19

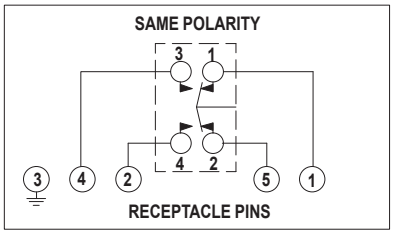

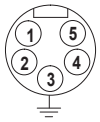

PIN/WIRE CODE
1= White
2= Red
3= Green
4= Orange
5= Black

PRESSURE: CIRCUIT 1–2 (PINS 1 & 5)
OPENS ON RISING PRESSURE
VACUUM: CIRCUIT 3–4 (PINS 4 & 2)
OPENS ON INCREASING VACUUM
(TOWARD 30" HG)

With Pilot Light ❶

Suffix X21X9

WITH NEON GLOW PILOT LIGHT 120V AC ONLY
PILOT LIGHT WIRED ACROSS CIRCUIT
1–2 (PINS 1 & 5)

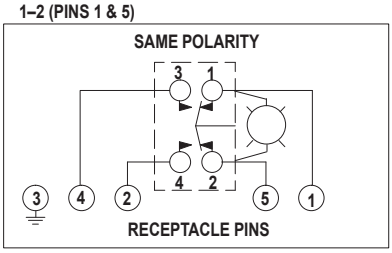

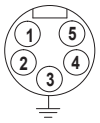

PIN/WIRE CODE
1= White
2= Red
3= Green
4= Orange
5= Black

PRESSURE: CIRCUIT 1–2 (PINS 1 & 5)
OPENS ON RISING PRESSURE
VACUUM: CIRCUIT 3–4 (PINS 4 & 2)
OPENS ON INCREASING VACUUM
(TOWARD 30" HG)

Suffix X21X15

WITH LED PILOT LIGHT 24V DC ONLY
PILOT LIGHT WIRED ACROSS CIRCUIT
1–2 (PINS 1 & 5)

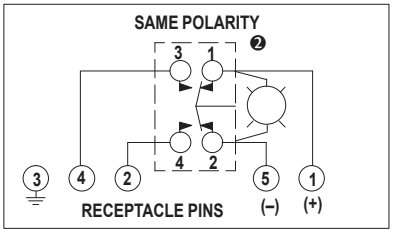

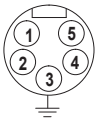

PIN/WIRE CODE
1= White
2= Red
3= Green
4= Orange
5= Black

PRESSURE: CIRCUIT 1–2 (PINS 1 & 5)
OPENS ON RISING PRESSURE
VACUUM: CIRCUIT 3–4 (PINS 4 & 2)
OPENS ON INCREASING VACUUM
(TOWARD 30" HG)

Suffix X22X9

WITH NEON GLOW PILOT LIGHT 120V AC ONLY
PILOT LIGHT WIRED ACROSS CIRCUIT
3–4 (PINS 4 & 2)

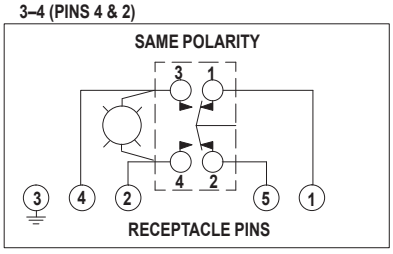

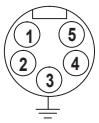

PIN/WIRE CODE
1= White
2= Red
3= Green
4= Orange
5= Black

PRESSURE: CIRCUIT 1–2 (PINS 1 & 5)
OPENS ON RISING PRESSURE
VACUUM: CIRCUIT 3–4 (PINS 4 & 2)
OPENS ON INCREASING VACUUM
(TOWARD 30" HG)

Suffix X22X15

WITH LED PILOT LIGHT 24V DC ONLY
PILOT LIGHT WIRED ACROSS CIRCUIT
3–4 (PINS 4 & 2)

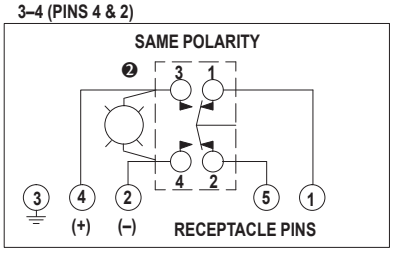

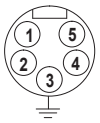

PIN/WIRE CODE
1= White
2= Red
3= Green
4= Orange
5= Black

PRESSURE: CIRCUIT 1–2 (PINS 1 & 5)
OPENS ON RISING PRESSURE
VACUUM: CIRCUIT 3–4 (PINS 4 & 2)
OPENS ON INCREASING VACUUM
(TOWARD 30" HG)

❶ In the diagrams shown on pages 16-20…16-22, the pilot lights are wired across the terminals and in series with the load. Pilot light is OFF when the load is energized, ON when the load is de-energized. For simultaneous energization of the load and pilot light, or other optional wiring configurations, consult your local Allen-Bradley Sales Office.

❷ **Note pilot light polarity.**

Ordering Accessories (cont'd)

Selectable Pulsation Snubber Porosity Elements

Recommended Type of Service	Color Code	Porosity	Cat. No.
Viscous fluids (over 500 SSU) ❶	None	Coarser	836-N43
Medium type oils (225…500 SSU) ❶	Black	↕	836-N44
Water and light oils (30…225 SSU) ❶	Brown		836-N45
Low viscosity fluids (under 30 SSU) ❶	Green		836-N46
Air and other gases	Red	Finer	836-N47
One (1) of each of the above	—	Assorted	836-N48

❶ SSU Saybolt Seconds Universal — units of viscosity measurement.

Note: Color Code is located on end of element.



Isolation Trap and Silicone Buffer Fluid



Pulsation Snubbers

Ordering Conversion Kits

Conversion Kits are ordered by adding the appropriate suffix code to the catalog number of the basic device. Select the required Conversion Kits from the table below.

Conversion Kits

Item	Description	Suffix Code
Neon Pilot Light Conversion Kit	Converts standard control to control with 120V AC neon pilot light. Not available on Type 7 & 9 devices. Kit includes pilot light and cover assembly.	N9
Red LED Pilot Light Conversion Kit	Converts standard control to control with 24V DC LED pilot light; has a 22 mA current rating. Not available on Type 7 & 9 devices. Kit includes pilot light and cover assembly.	N15
Green LED Pilot Light Conversion Kit	Converts standard control to control with 24V DC LED pilot light; has a 22 mA current rating. Not available on Type 7 & 9 devices. Kit includes pilot light and cover assembly.	N18
Piston Seal Conversion Kit	Used to convert piston type without seal to piston type with seal. ❷ Kit includes: Instruction Sheet, two seal assemblies (one spare), one spanner wrench seal removal tool, one cover assembly with appropriate nameplate and one cover gasket.	N24

❷ **Example:** To convert **Cat. No. 836T-T302J** pressure control to an **836T-T352J** with seal, order **Cat. No. 836T-T302JN24**. The cover nameplate will read **836T-T352J**.

TAB 11



PHOENIX

11) WATER PRESSURE SWITCH

i) Allen Bradley 836T



Bulletin 836T Style T Piston Type

Enclosure Type 1, 4 & 13, IEC IP66

Bulletin 836T Style T Bellows Type

TABLE OF CONTENTS

Description	Page
Product Overview	16-2
Technical Data	
Technical Terms	16-3
Theory of Operation	16-4
Applications for Control	16-4
Control Setting — Style T	16-5
Control Setting — Style D	16-6
Repeat Accuracy and Mechanical Life	16-7
Mounting without Removing Cover	16-8
Factory Set Pressure Controls	16-8
Temperature Range	16-8
Contacts	16-8
Contact Wiring Configurations	16-9
Nameplate with Removable Paint Mask	16-9
Pressure Control Selection	16-10
Ordering Information	
How to Order	16-11
Catalog Number Explanation (Example)	16-11
Pressure Controls	
Style T — With Copper Alloy Bellows	16-12
Style T — With Type 316 Stainless Steel Bellows	16-13
Style T — Piston Without Seal	16-14
Style T — Piston With Seal	16-15
Style D — With Copper Alloy Bellows	16-16
Style D — With Type 316 Stainless Steel Bellows	16-17
Modifications	16-18
Wiring Diagrams	16-20
Accessories	16-23
Conversion Kits	16-24
Replacement Parts	16-25
Factory Options	
Factory-Set Pressure Controls	16-25
Dimensions	16-26

UL and CSA Numbers — Page 16-5.
Conversion Factors — Page Important-2.
Enclosure Information — Page Important-8.

Description

Bulletin 836T Pressure Controls are control circuit devices designed to meet the traditional requirements of the transportation, machine tool, and other heavy duty industries. Allen-Bradley Bulletin 836T Pressure Controls can be used in pneumatic and hydraulic applications. The copper alloy bellows actuators can be used with air, water, oil, vapor and other non-corrosive gases and liquids. Type 316 stainless steel bellows are available for the more corrosive gases, vapors, and fluids. A rugged cast iron cylinder and hardened steel piston assembly is used for the higher pressure coolant and hydraulic oil applications. The controls feature snap action precision switches equipped with silver contacts. A relatively friction-free mechanism provides consistent operation regardless of mounting position. Devices are designed to allow easy adjustment of pressure settings. Allen-Bradley Bulletin 836T Pressure Controls are used in many types of applications with adjustable ranges from 30" Hg Vacuum…5000 psi. They can be used to control pneumatic systems, and to maintain a pressure tank within a preset and constant pressure range. They can be used to detect over-pressures of gases and liquids to prevent damage to valuable equipment. Pressure controls can also detect low pressure to protect equipment from loss of coolants and lubrication.

Bulletin 836T Pressure Controls are offered in a variety of styles to fit a wide range of applications. The devices are available with either a Type 1, 4 & 13, or 7 & 9 and 4 & 13 combined enclosure. They are available with 2-circuit or 4-circuit contact blocks. Accessories and modifications are available to tailor the devices to meet most application requirements.

Applications

- Machine Tools
- Machine Hydraulic Pressures
- Material Clamping Fixtures
- Lubricant and Coolant Pressures
- Compactor Ram Pressures
- Air Compressors

Style T — Pressure Control



Style T
- Independently adjustable operating range and differential
- Single bellows or piston operation

Copper Alloy Bellows
- 1/4" N.P.T.F. female pipe connection
- SAE 7/16-20 UNF-2B thread O-ring Boss Seal
- SAE 9/16-18 UNF-2B thread O-ring Boss Seal
- Adjustable operating range — 30" Hg Vacuum…650 psi
- Maximum line pressure — 1300 psi
- Occasional surge pressure — 1600 psi

Type 316 Stainless Steel Bellows
- 1/4" N.P.T.F. female pipe connection
- Adjustable operating range — 30" Hg Vacuum…375 psi
- Maximum line pressure — 600 psi
- Occasional surge pressure — 600 psi

Piston
- 3/8" N.P.T.F. female pipe connection
- SAE 7/16-20 UNF-2B thread O-ring Boss Seal
- SAE 9/16-18 UNF-2B thread O-ring Boss Seal
- Adjustable operating range — 40…5000 psi
- Occasional surge pressure — 15,000 psi

Style D — Pressure Difference Control



Style D
- Independently adjustable system difference range and differential
- Two bellows operation, one bellows connected to each system

Copper Alloy Bellows
- 1/4" N.P.T.F. female pipe connection
- Adjustable system difference range — 1…70 psi
- Maximum line pressure — 600 psi
- Occasional surge pressure — 650 psi

Type 316 Stainless Steel Bellows
- 1/4" N.P.T.F. female pipe connection
- Adjustable system difference range — 1…70 psi
- Maximum line pressure — 500 psi
- Occasional surge pressure — 500 psi

Control Setting — Style T Pressure Controls

Allen-Bradley controls are designed for ease of setting to help minimize installation time. Standard pressure controls shipped from the factory are set at the maximum operating range and minimum differential. By using a pressure gauge and following these simple directions, the control can be set to the specific requirements for each application. See Figure 5.

Step 1 — Adjust Trip Setting

The trip setting is controlled by the operating range adjustment screw and is adjusted externally. After loosening the lock nut, the trip setting is set by turning the operating range adjustment screw counterclockwise to lower the trip setting or clockwise to raise the trip setting. The approximate trip setting is shown on the indicating scale. When the proper setting is reached, simply tighten the lock nut.

Note: Turning the operating range adjustment screw will cause both the trip and reset settings to change in equal increments.

Step 2 — Adjust Reset Setting

The reset setting is controlled by an internal differential adjustment screw. After removing the front cover, the reset setting is set by turning the differential adjustment screw clockwise to increase the differential or counterclockwise to decrease the differential.

Note: Adjusting the differential does not affect the trip setting.

Figure 5
Trip and Reset Adjustment for Pressure Controls

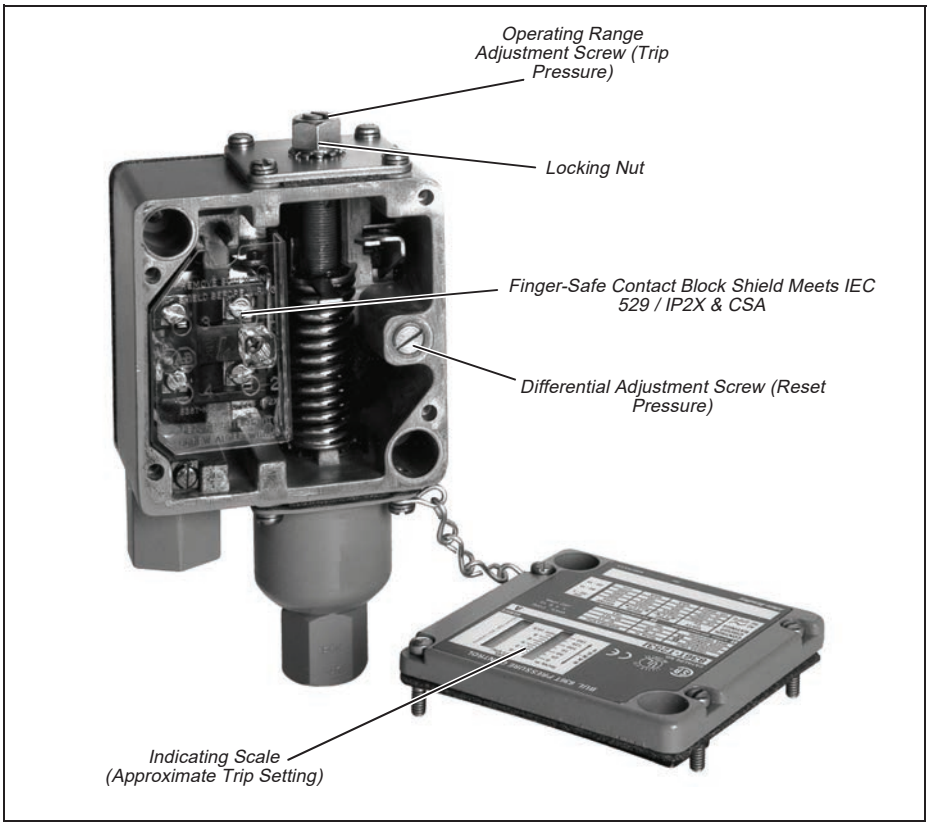

File and Guide Numbers				
	UL		CSA	
	File Number	Guide Number	File Number	Class
Bulletin 836T	E14842 E53048 (Haz. Loc.)	NKPZ NOWT	LR1234 LR11924 (Haz. Loc.)	3211-03 3218-05
	Hazardous Location Enclosure not CE compliant.			

Contact Wiring Configurations

2-Circuit Contact Blocks

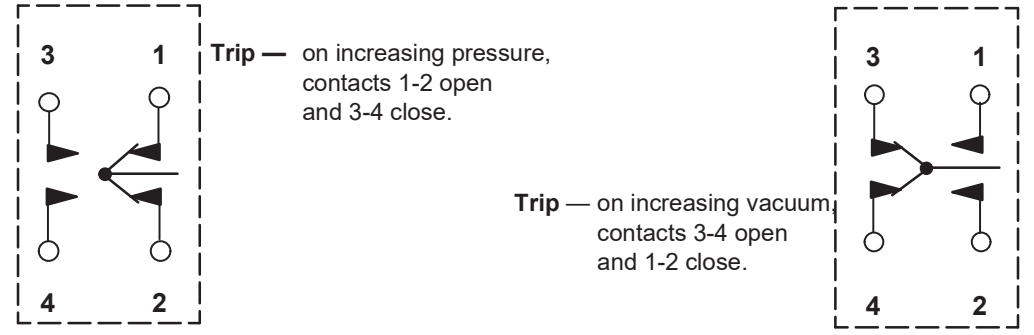

4-Circuit Contact Blocks

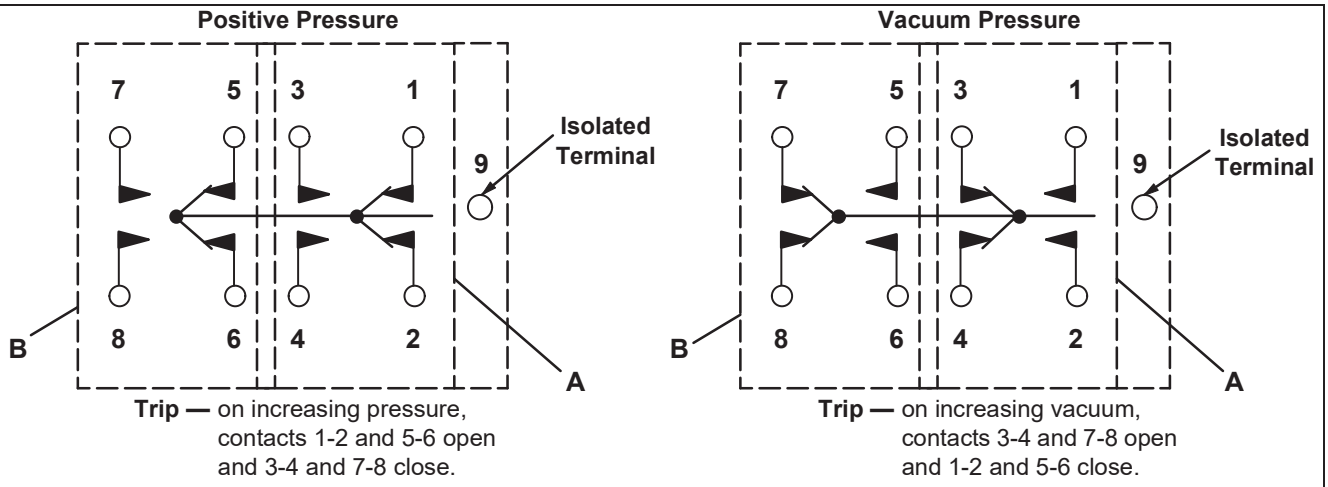

Note: Circuits A and B are electrically isolated from one another.
A or B circuits must be the same polarity.

Nameplate with Removable Paint Mask

The masks are convenient for the many users who repaint controls to match the machine or color code equipment. Saves costly time-consuming hand masking necessary so as not to conceal product functional specifications and approval listings. This feature is standard on most controls at no additional cost.
The paint mask feature cannot be supplied on controls with pilot lights. They are also not available on those devices where it is necessary to remove the mask and add suffix modifications to the catalog number or specific customer identification in the space provided.

Figure 8
Removable Paint Mask



Cover with Transparent Mask and Instruction Label in Place

Cover with Mask Partially Removed

Pressure Control Selection

The selection table below is an overview of the five types of Bulletin 836T Pressure Controls Allen-Bradley offers. Each type of control is suitable for use on many types of applications. Pressure ranges, pressure connections, enclosure types and the compatibility of the actuator with different types of pressure media are given to assist in the selection of which type of control to use.

	836T			
Actuator Type	Copper Alloy Bellows	Type 316 Stainless Steel Bellows	Piston Type Without Seal	Piston Type With Seal
Adjustable Operating Ranges	30" Hg Vacuum…650 psi	30" Hg Vacuum…375 psi	40…5000 psi	80…5000 psi
Adjustable Differentials	2…125 psi	2…90 psi	20…650 psi	40…650 psi
Maximum Line Pressures	1300 psi	600 psi	—	—
Occasional Surge Pressures	1600 psi	600 psi	15,000 psi	15,000 psi
Pressure Media				
Air	●	●		
Water	●	●		
Hydraulic Fluids	●	●	●	●
Liquids:		●		
Corrosive ❶				
Non-Corrosive	●	●		
Gases:		●		
Corrosive ❶				
Non-Corrosive	●	●		
Enclosures				
Type 1, 4 & 13	●	●	●	●
Type 7 & 9 and 4 & 13, IP66	●	●	●	●
Pipe Connections				
Standard Pressure Connection	1/4" N.P.T.F. Female Pipe Thread SAE 7/16-20 UNF-2B Thread O-ring Boss Seal SAE 9/16-18 UNF-2B Thread O-ring Boss Seal	1/4" N.P.T.F. Female Pipe Thread	3/8" N.P.T.F. Female Pipe Thread SAE 7/16-20 UNF-2B Thread O-ring Boss Seal SAE 9/16-18 UNF-2B Thread O-ring Boss Seal	3/8" N.P.T.F. Female Pipe Thread SAE 7/16-20 UNF-2B Thread O-ring Boss Seal SAE 9/16-18 UNF-2B Thread O-ring Boss Seal

❶ Corrosive liquids and gases must be compatible with Type 316 Stainless Steel Bellows.

Note: Pressure Difference Controls are supplied with either copper alloy or stainless steel bellows. See Ordering Information on page 16-11 for details.



Style T — Type 1, 4 & 13 with Pilot Light Option



Style T — Type 1, 4 & 13 with Pilot Light and 5-Pin Mini-Receptacle

Style T with Copper Alloy Bellows ❶ — S.P.D.T. 2-Circuit Contact Block

Pressure Specifications				Enclosure Type	
Adjustable Operating Range psi	Adjustable Differential psi (Approximate Mid-Range Values)	Maximum psi		Type 1, 4 & 13	Type 7 & 9 and 4 & 13 ❸
		Line Pressure	Occasional Surge Pressure ❷	Cat. No.	Cat. No.
30" Hg Vacuum…35	2…7	80	90	836T-T251J	836T-T251E
6…75	3…15	200	220	836T-T252J	836T-T252E
12…150	6…30	350	450	836T-T253J	836T-T253E
20…300	10…55	600	750	836T-T254J	836T-T254E
40…450	20…90	900	1200	836T-T255J	836T-T255E
60…650	30…125	1300	1600	836T-T256J	836T-T256E

Style T with Copper Alloy Bellows ❶ — D.P.D.T. 4-Circuit Contact Block

Pressure Specifications				Enclosure Type	
Adjustable Operating Range psi	Adjustable Differential psi (Approximate Mid-Range Values)	Maximum psi		Type 1, 4 & 13	Type 7 & 9 and 4 & 13 ❸
		Line Pressure	Occasional Surge Pressure ❷	Cat. No.	Cat. No.
30" Hg Vacuum…35	2.2…7	80	90	836T-T251JX40	836T-T251EX40
6…75	4.5…15	200	220	836T-T252JX40	836T-T252EX40
12…150	9…30	350	450	836T-T253JX40	836T-T253EX40
20…300	15…55	600	750	836T-T254JX40	836T-T254EX40
40…450	30…90	900	1200	836T-T255JX40	836T-T255EX40
60…650	45…125	1300	1600	836T-T256JX40	836T-T256EX40

❶ Copper alloy bellows may be used on water or air, and other liquids or gases not corrosive to this alloy.
❷ Transients (pulses) can occur in a system prior to reaching a steady-state condition. Surge pressures within published values generated during start-up or shut-down of a machine or system, not exceeding 8 times in a 24-hour period, are negligible.
❸ The combined Type 7 & 9 and 4 & 13 Hazardous Gas and Dust service enclosure is supplied with special gasket and O-ring seal to diminish/exclude moisture, fluids, and dust from entering the enclosure. Enclosures rated 7 & 9 only are not designed to restrict moisture from entering the enclosure, which is common to outdoor service.

Bulletin 836T 5-Pin Mini-Type Receptacle Option Wiring Reference

(J1 Wiring)

(See Applicable Codes and Laws)

Without Pilot Light

Suffix X19

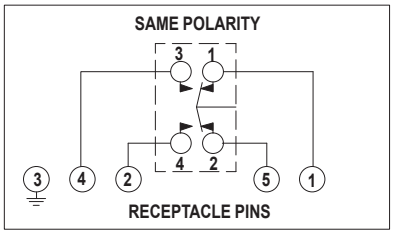

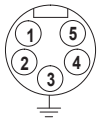

PIN/WIRE CODE
1= White
2= Red
3= Green
4= Orange
5= Black

PRESSURE: CIRCUIT 1–2 (PINS 1 & 5)
OPENS ON RISING PRESSURE
VACUUM: CIRCUIT 3–4 (PINS 4 & 2)
OPENS ON INCREASING VACUUM
(TOWARD 30" HG)

With Pilot Light ❶

Suffix X21X9

WITH NEON GLOW PILOT LIGHT 120V AC ONLY
PILOT LIGHT WIRED ACROSS CIRCUIT
1–2 (PINS 1 & 5)

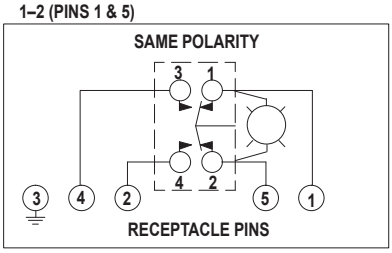

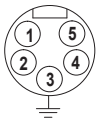

PIN/WIRE CODE
1= White
2= Red
3= Green
4= Orange
5= Black

PRESSURE: CIRCUIT 1–2 (PINS 1 & 5)
OPENS ON RISING PRESSURE
VACUUM: CIRCUIT 3–4 (PINS 4 & 2)
OPENS ON INCREASING VACUUM
(TOWARD 30" HG)

Suffix X21X15

WITH LED PILOT LIGHT 24V DC ONLY
PILOT LIGHT WIRED ACROSS CIRCUIT
1–2 (PINS 1 & 5)

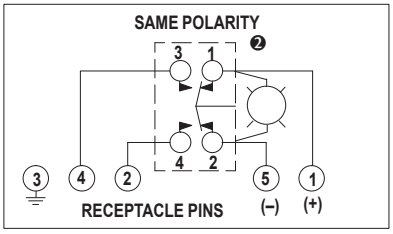

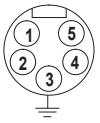

PIN/WIRE CODE
1= White
2= Red
3= Green
4= Orange
5= Black

PRESSURE: CIRCUIT 1–2 (PINS 1 & 5)
OPENS ON RISING PRESSURE
VACUUM: CIRCUIT 3–4 (PINS 4 & 2)
OPENS ON INCREASING VACUUM
(TOWARD 30" HG)

Suffix X22X9

WITH NEON GLOW PILOT LIGHT 120V AC ONLY
PILOT LIGHT WIRED ACROSS CIRCUIT
3–4 (PINS 4 & 2)

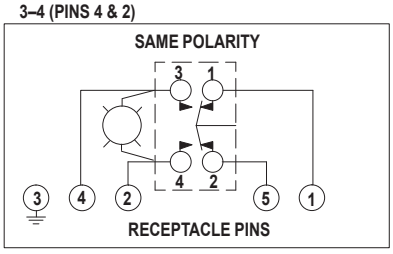

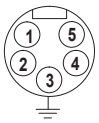

PIN/WIRE CODE
1= White
2= Red
3= Green
4= Orange
5= Black

PRESSURE: CIRCUIT 1–2 (PINS 1 & 5)
OPENS ON RISING PRESSURE
VACUUM: CIRCUIT 3–4 (PINS 4 & 2)
OPENS ON INCREASING VACUUM
(TOWARD 30" HG)

Suffix X22X15

WITH LED PILOT LIGHT 24V DC ONLY
PILOT LIGHT WIRED ACROSS CIRCUIT
3–4 (PINS 4 & 2)

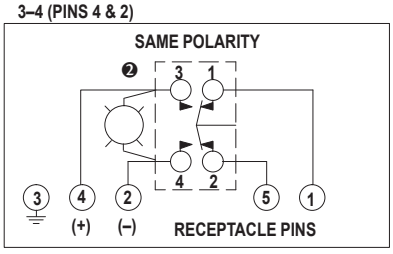

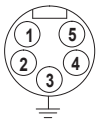

PIN/WIRE CODE
1= White
2= Red
3= Green
4= Orange
5= Black

PRESSURE: CIRCUIT 1–2 (PINS 1 & 5)
OPENS ON RISING PRESSURE
VACUUM: CIRCUIT 3–4 (PINS 4 & 2)
OPENS ON INCREASING VACUUM
(TOWARD 30" HG)

❶ In the diagrams shown on pages 16-20…16-22, the pilot lights are wired across the terminals and in series with the load. Pilot light is OFF when the load is energized, ON when the load is de-energized. For simultaneous energization of the load and pilot light, or other optional wiring configurations, consult your local Allen-Bradley Sales Office.

❷ **Note pilot light polarity.**

Ordering Accessories (cont'd)

Selectable Pulsation Snubber Porosity Elements

Recommended Type of Service	Color Code	Porosity	Cat. No.
Viscous fluids (over 500 SSU) ❶	None	Coarser	836-N43
Medium type oils (225…500 SSU) ❶	Black	↕	836-N44
Water and light oils (30…225 SSU) ❶	Brown		836-N45
Low viscosity fluids (under 30 SSU) ❶	Green		836-N46
Air and other gases	Red	Finer	836-N47
One (1) of each of the above	—	Assorted	836-N48

❶ SSU Saybolt Seconds Universal — units of viscosity measurement.

Note: Color Code is located on end of element.



Isolation Trap and Silicone Buffer Fluid



Pulsation Snubbers

Ordering Conversion Kits

Conversion Kits are ordered by adding the appropriate suffix code to the catalog number of the basic device. Select the required Conversion Kits from the table below.

Conversion Kits

Item	Description	Suffix Code
Neon Pilot Light Conversion Kit	Converts standard control to control with 120V AC neon pilot light. Not available on Type 7 & 9 devices. Kit includes pilot light and cover assembly.	N9
Red LED Pilot Light Conversion Kit	Converts standard control to control with 24V DC LED pilot light; has a 22 mA current rating. Not available on Type 7 & 9 devices. Kit includes pilot light and cover assembly.	N15
Green LED Pilot Light Conversion Kit	Converts standard control to control with 24V DC LED pilot light; has a 22 mA current rating. Not available on Type 7 & 9 devices. Kit includes pilot light and cover assembly.	N18
Piston Seal Conversion Kit	Used to convert piston type without seal to piston type with seal. ❷ Kit includes: Instruction Sheet, two seal assemblies (one spare), one spanner wrench seal removal tool, one cover assembly with appropriate nameplate and one cover gasket.	N24

❷ **Example:** To convert **Cat. No. 836T-T302J** pressure control to an **836T-T352J** with seal, order **Cat. No. 836T-T302JN24**. The cover nameplate will read **836T-T352J**.

TAB 12



PHOENIX

12) BELT BREAK DETECT LASER SWITCH

i) Baumer specs

ii) Baumer setup

Optoelektronische Sensoren
Photo electric sensors
Cellules opto-électroniques

OHDK 14P5101/S35A

Laser-Lichttaster mit Hintergrundausblendung

Diffuse laser sensor with background suppression

Détecteur réflex laser avec élimination de l'arrière-plan

142713

Swiss made

Baumer electric
CH-8501 Frauenfeld Hummelstrasse 17
Tel. +41 52 728 11 22 Fax +41 52 728 11 44

e e
e
e

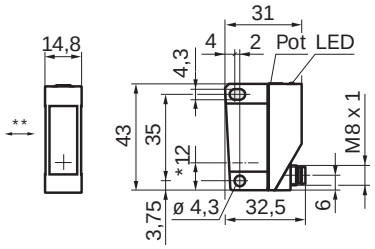

** siehe Montage und Justage
see installation instructions
voir instructions de montage

- Alle Masse in mm
- All dimensions in mm
- Toutes dimensions en mm

* Senderachse
* Emitter axis
* Axe de l'émetteur

E e tr her h
e t r
h er r e e t

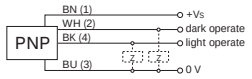

BN = Braun/brown/brun
WH = Weiss/white/blanc
BK = Schwarz/black/noir
BU = Blau/blue/bleu

	object present	object not present
light operate	LED PNP =HIGH NPN=LOW	LED PNP =LOW NPN=HIGH
dark operate	LED PNP =LOW NPN=HIGH	LED PNP =HIGH NPN=LOW

Dunkelschaltung / dark operate / com. sombre
Hellschaltung / light operate / com. claire

Objekt vorhanden / object present / objet présent
Objekt nicht vorhanden / object not present / objet pas présent

r e
Baumer Electric S.A.
F-74250 Fillinges
Tel. +33 450 39 24 66

t er
Baumer Electric AG
CH-8501 Frauenfeld
Tel. +41 52 728 11 22

er
Baumer Electric GmbH
D-61169 Friedberg
Tel. +49 6031 60 070

Baumer Electric Ltd.
USA-Southington
Tel. +1 860 621 21 21

re t r t
Baumer Electric Ltd.
GB-Swindon SN6 8TZ
Tel. +44 179 37 83 839

Baumer Electric Inc.
CDA-Burlington
Tel. +1 905 33 58 444

It
Baumer Electric S.r.l.
I-20094 Assago, Mi
Tel. +39 245 70 60 65

e e
Baumer Ident AB
S-56133 Husqvarna
Tel. +46 36 13 94 30

herhe t e t e
e er et tr t
l tr t r e e rt

ACHTUNG
Laser Strahlung
Nicht in den Strahl blicken
Laserdiode
Wellenlänge 630 - 680 nm
max. Ausgangsleistung <1 mW
Laserklasse 2
Laserstrahl nie auf ein Auge richten.
Es empfiehlt sich, den Strahl nicht ins Leere laufen zu lassen, sondern mit einem matten Blech oder Gegenstand zu stoppen.

CAUTION
Laser radiation
Do not stare into beam
Laserdiode
Wavelength 630 - 680 nm
max. Output <1 mW
Class 2 Laser Product
Do not point the laser beam towards someone's eye. It is recommended to stop the beam by a mat object or mat metal sheet.

ATTENTION
Radiation laser
Ne pas regarder dans le faisceau
Diode laser
Longueur d'onde 630 - 680 nm
Puissance émise max. <1 mW
Appareil à laser de la classe 2
Ne dirigez jamais le faisceau vers un oeil.
Il est conseillé de ne pas laisser le faisceau se propager librement mais de l'arrêter au moyen d'un objet de surface mate.



- Die Angaben des Sicherheitskonzeptes und die Einsatzgrenzen der Verkaufsdokumentation sind zu beachten.
- Safety concept information and limiting parameters as published in the sales documentation apply at all times.
- Les concepts de sécurité ainsi que les limites d'utilisation sont à réspecter selon la documentation de vente.

- Aus Lasersicherheitsgründen muss die Spannungsversorgung dieses Sensors abgeschaltet werden, wenn die ganze Anlage oder Maschine abgeschaltet wird.
- Laser regulations require the power of the sensor to be switched off when turning off the whole system this sensor is part of.
- Pour des raisons de sécurité, l'alimentation de ce détecteur laser doit être coupée en cas d'arrêt total du système incorporant ce détecteur.

Technische Änderungen vorbehalten Technical specifications subject to change Sous réserve de modifications techniques

e h he te
e h t
e te h e

OHDK 14P5101/S35A

Tastweite einstellbar Tw	Sensing distance adjustable Tw	Portée ajustable Tw	20...350 mm
Tastbereich Tb bei Tw = 20 mm / 350 mm	Sensing distance Tb at Tw = 20 mm / 350 mm	Plage de détection Tb à Tw = 20 mm / 350 mm	5...20 / 20...350 mm
Abstand des Laserfokus	Beam focal point	Distance du foyer du laser	115 mm
Betriebsspannungsbereich Vs (UL-Class 2)	Voltage supply range Vs (UL-Class 2)	Plage de tension Vs (UL-Class 2)	10 - 30 VDC
max. Stromverbrauch Mittelwert / Spitzenwert	max. supply current average / peak	Consommation Moyenne max. / Valeure de pointe	40 mA / 50 mA
max. Schaltstrom	max. switching current	Courant de sortie max.	100 mA
Spannungsabfall	Voltage drop	Tension résiduelle	≤ 2,2 VDC
Ansprechzeit	Response time	Temps d'activation	≤ 0,5 ms
Abfallzeit	Release time	Temps désactivation	≤ 0,5 ms
Kurzschlussfest	Short circuit protection	Protégé contre courts-circuits	ja / yes / oui
Verpolungsfest	Reverse polarity protection	Protégé contre inversion de polarité	ja / yes / oui
Betriebstemperatur	Temperature range	Température de service	-10...+50 °C
Schutzklasse	Protection class	Classe de protection	IP 67
max. Anzugsdrehmoment	max. tightening torque	Couple max. de serrage	1 Nm

t e t e
t
t e

•Der Laser-Lichttaster kann sowohl mit dem Befestigungswinkel Art.-Nr. 134964 oder direkt mit M4-Schrauben befestigt werden.

•Der Taster ist immer auf das Tastgut auszurichten. Bewegte Objekte sollten den Laserstrahl seitlich anfahren (siehe Pfeil** in Masszeichnung).

•Für eine genaue Positionserkennung von Objektkanten sollte ein heller, matter Hintergrund in einem Abstand von maximal 300 mm zum Sensor verwendet werden. Für die Detektion von sehr kleinen oder dünnen Objekten ist dagegen ein dunkler Hintergrund in grossem Abstand von Vorteil; der Hintergrund soll möglichst wenig Licht in den Empfänger zurückwerfen.

•Die Tastweite ist mit der Einstellschraube so einzustellen, dass sie sich in der Mitte zwischen Hintergrund und Objekt befindet. Sind Hintergrund und Objekt mehr als 20 mm voneinander entfernt, so soll die Tastweite etwa 10 mm hinter dem Objekt eingestellt werden.

•Vorsicht bei der Detektion von Objekten durch kleine Löcher hindurch. Der Laserstrahl sollte reichlich Platz haben. Zudem darf das vom Objekt und vom Hintergrund in Richtung Empfängerlinse reflektierte Licht nicht behindert werden.

•Stark reflektierende Metallflächen in der Nähe des Laserstrahles sind zu vermeiden. Abhilfsmöglichkeiten: Metallflächen mattieren, bemalen oder gegenüber dem Laserstrahl stark neigen.

•Zur Reinigung der Frontscheibe genügt i.a. ein sauberer (!), weicher und trockener Stofflappen. Bei starker Verschmutzung kann reiner Alkohol verwendet werden.

•The diffuse laser sensor can be directly installed using the through holes provided for M4 screws or with the mounting bracket 134964.

•Sensor must always be aimed at target. Moving parts must approach laser beam laterally (see arrow** in outline drawing).

•To detect the position of object edges precisely, a bright and mat background should be installed at a maximum distance of 300 mm from the sensor. On the other hand, for the detection of very small and thin objects, a dark background at great distance is preferred; the background should reflect as little light as possible back to the receiver.

•Sensing distance Tw must be adjusted using the adjusting screw at the top of the sensor so that the actual sensing point is halfway between the target and the background. Provided background and object are more than 20 mm apart, sensing point should be set at approximately 10 mm behind the object.

•Special care must be taken when trying to sense targets by looking through holes. Ample space must be provided for the laser beam. The path of the light that is reflected by the target as well as by the background may not be obstructed.

•Very shiny metal surfaces close to the laser beam must be avoided at all times. Remedial measures: Matt or paint the interfering surfaces or slant heavily in relation to the laser beam.

•When cleaning the front window of the sensor use a clean (!), soft and dry cloth. In case of severe soiling the use of pure alcohol is recommended.

•Le détecteur réflex laser peut être monté avec l'équerre de fixation Art.-Nr. 134964 ou tout simplement avec des vis type M4.

•Alignez le faisceau laser sur les objets à détecter. Des objets en mouvement devraient approcher le faisceau latéralement (voir flèche** dans le dessin au verso).

•Pour une détection de position précise du bord de l'objet, il est conseillé d'utiliser un arrière-plan clair et mat à une distance maximale de 300 mm du capteur. Par contre, pour une détection d'objets très petits ou fins, un arrière-plan sombre à une grande distance sera appliqué; le moindre possible de lumière doit être renvoyé au détecteur par réflexion.

•La portée doit être adaptée avec la vis de réglage au milieu de l'objet à détecter et de l'objet de fond (pour un écartement entre les deux inférieur à 20 mm). Pour des écartements plus important, la portée doit être réglée à une distance de 10 mm derrière l'objet.

•Attention en cas d'une détection d'objets au travers d'un petit trou. Le faisceau laser doit avoir largement de la place. En plus la lumière réfléchie par l'objet et par le fond en direction de la lentille réceptrice ne doit pas être occultée.

•Des surfaces métalliques fortement réfléchissantes sont à éviter dans un entourage de 25 mm autour du faisceau laser. Remède: dépolir, peindre ou incliner fortement la surface par rapport au faisceau laser.

•Le nettoyage de la fenêtre frontale se fait en général avec un chiffon propre (!), souple et sec. En cas d'encrassement tenace, on peut se servir d'alcool pur.

General information

Diffuse sensors with background suppression using the triangulation principle not only measure the light intensity reflected by the target, but also determine the distance of the object from the sensor. In this way, objects with the minimum size of the light beam located within the adjustable sensing distance can be detected regardless of their color and surface.

The diffuse sensors with background suppression and laser light source were developed specifically for applications in which exact positioning is important. With the finely focused beam, even very small objects such as the wires of a resistor or threads can be clearly detected or counted.

Applications

- Detection of boxes, metal and plastic parts lying on a base such as a conveyor belt, table or transport trolley from above
- Detection of bulk materials or other non-transparent materials in a container
- Counting of different-colored objects such as plastic bottles or printed packages
- Reliable presence monitoring of assembly parts, even with objects moving in the background

Characteristics and advantages

Adjustable sensing distance
The switching point can be adjusted accurately between the object and the interfering background using a set screw or Teach-in method

Largely independent of color
The sensing distance remains constant even if the color of the objects changes. Readjustment is therefore unnecessary. Objects changing in the background also have no effect.

Small spot size
Laser sensors can detect objects with a size of just 0,1 mm. Sensors with pinpoint diodes have a spot of only 2 mm diameter at the focus.

Red light emitters
Visible red light permits simple adjustment of the sensor to small objects by eye.

Short response time
Small, quickly moving objects are reliably detected due to the short response time.

Technology and operation

The sensors are based on the triangulation principle. Only the angle of the light reflected back from the object determines the distance at which the sensor responds. The amount of reflected light is far less important.

The schematic sketch below shows that receiver R1 receives the light reflected back from the object T1 (acute angle of incidence) and receiver R2 the light reflected back from the background (shallow angle of incidence). The transition from R1 to R2 determines the sensing distance.

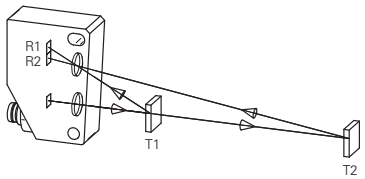

Mounting and adjustment

The diffuse sensor must be aimed at the object. The sensing distance must be set to a distance between the target and the background. The background must be located behind the adjusted sensing distance by at least the distance of the sensing distance reduction of the sensor to black.

For diffuse sensors with background suppression, the sensing range diagram is specified for the optimum adjustment. This indicates the sensing range reduction as a function of the sensing range to white for different degrees of remission. This means the distance by which the sensing distance to black or gray is reduced in comparison with white. When the adjusted sensing range to white is entered on the X axis of the diagram, the reduction of the sensing distance to black or gray can be read off on the Y axis. The sensing distance reduction also indicates the minimum distance a black or gray object must be separated from a white background.

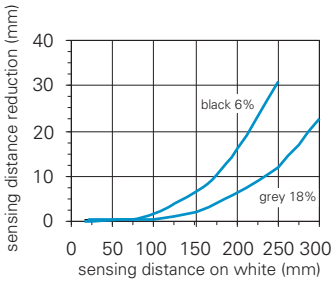

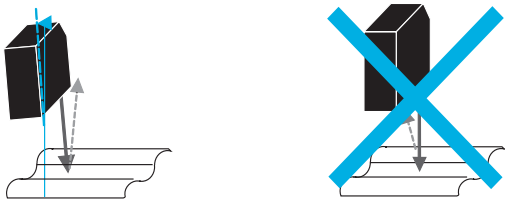

The direct reflection from glossy or reflective objects must not impinge on the receiver. This can be avoided by slightly tilting the sensor.

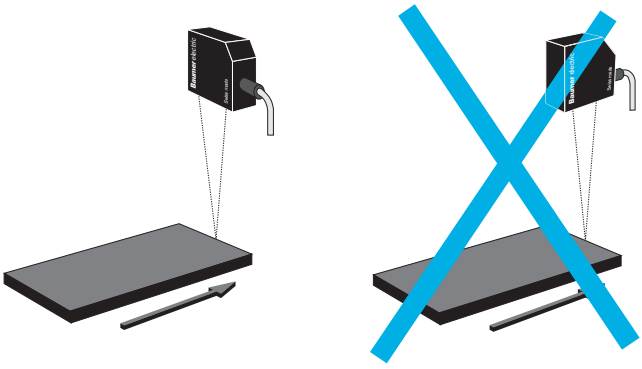

It should be ensured that the object to be detected approaches the active area of the sensor from the side, which avoids malfunctions caused by deflection of the light beam at edges.

TAB 13



PHOENIX

13) DRAWINGS

IQALUIT NUNAVUT WWTP
LC1200LS BELT FILTER PRESS
SSUCP-48-600 CONTROL PANEL
CUSTOMER I.D. #LCP-03-650
ELECTRICAL & PNEUMATIC
DESIGN DRAWINGS

DRAWING SHEET INDEX

DRAWING #	DESCRIPTION	REVISION #
0418377D800	COVER SHEET / DRAWING INDEX	D
0418377D801	600V/120V SCHEMATIC	A
0418377D802	120VAC/24VDC SCHEMATIC	A
0418377D803	I/O SCHEMATIC	0
0418377D804	I/O SCHEMATIC	A
0418377D805	SPARE	0
0418377D806	SPARE	0
0418377D807	DEVICE SETUP PARAMETERS	A
0418377D808	SPARE	0
0418377D809	ENCLOSURE LAYOUT	D
0418377D810	TAG LAYOUT	0
0418377D811	PNEUMATIC SCHEMATIC	0
0418377D812	BILL OF MATERIALS	D

REV	DESCRIPTION	BY	DATE
D	ADD CUSTOMER I.D. # TO PANEL - THIS SHEET & SHEET 809	JT	1/13/16
C	804, 807, 809, 812	AMR	1/6/16
A	806, 812	AMR	10/01/16

FINAL AS BUILT	-	-	DRAWN AMR	ENGINEER AMR	APPROVED
SHOP AS BUILT	-	-	SCALE N/A	FILE NO. 0418377	DATE 9/21/16
RELEASED FOR FABRICATION	AMR	1/6/16			
ISSUED FOR SUBMITTAL	-	-			
DRAWING STATUS	BY	DATE			

PHOENIX
PHOENIX PROCESS EQUIPMENT CO.

TITLE SSUCP-48-600
COVER SHEET/DRAWING INDEX
FOR IQALUIT - WWTP
NUNAVUT

DWG.NO. 0418377D800 REV. D

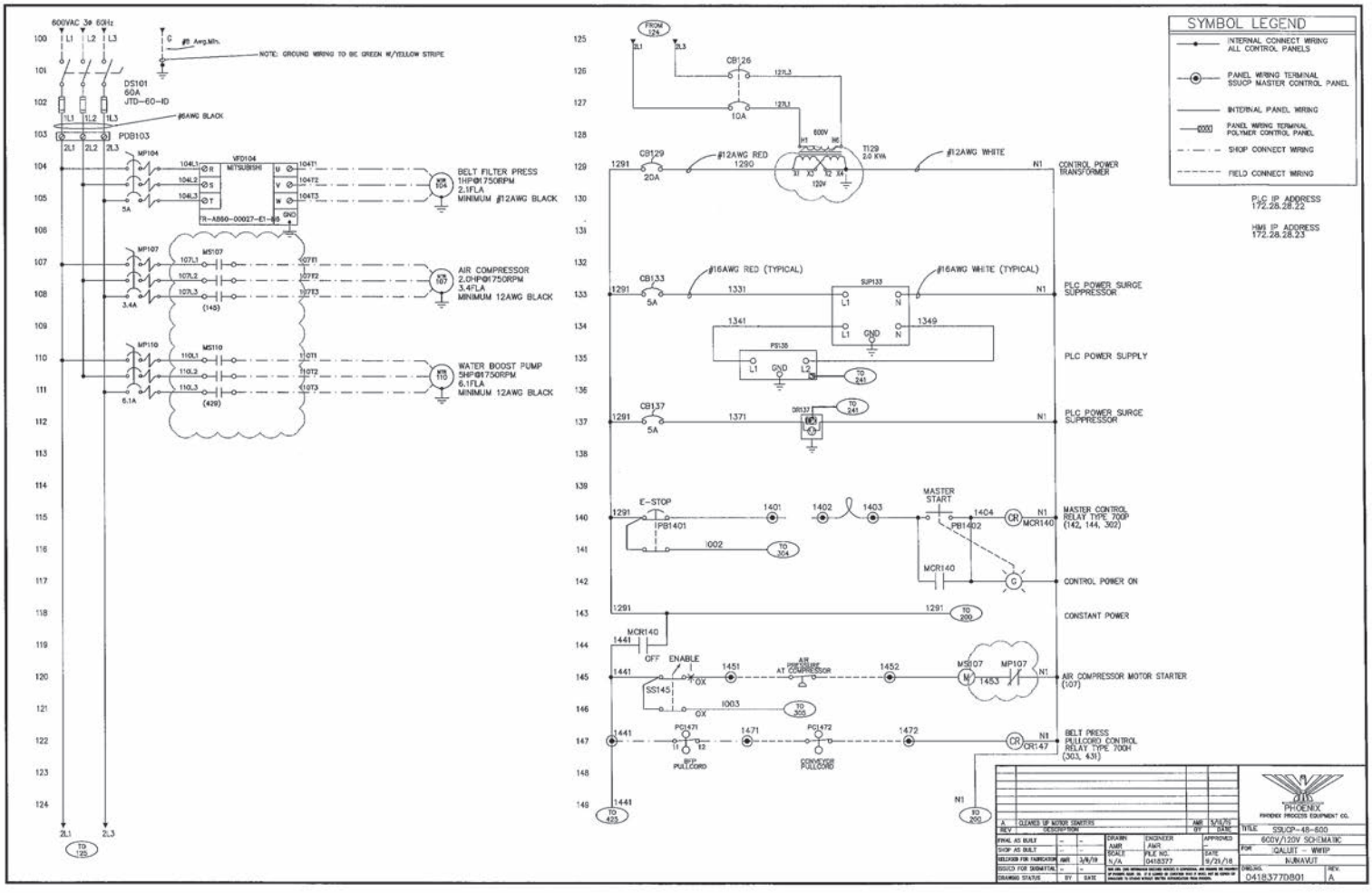

SYMBOL LEGEND
INTERNAL CONNECT WIRING ALL CONTROL PANELS
PANEL WIRING TERMINAL SSUCP MASTER CONTROL PANEL
INTERNAL PANEL WIRING
PANEL WIRING TERMINAL POLYMER CONTROL PANEL
SHOP CONNECT WIRING
FIELD CONNECT WIRING
PLC IP ADDRESS 172.28.28.22
HMI IP ADDRESS 172.28.28.23
600VAC 3ø 60Hz
NOTE: GROUND WIRING TO BE GREEN W/YELLOW STRIPE
DS101 60A JTD-60-ID
#6AWG BLACK
PDB103
BELT FILTER PRESS 1HP@1750RPM 2.1FLA MINIMUM #12AWG BLACK
AIR COMPRESSOR 2.0HP@1750RPM 3.4FLA MINIMUM 12AWG BLACK
WATER BOOST PUMP 5HP@1750RPM 6.1FLA MINIMUM 12AWG BLACK
#12AWG RED
#12AWG WHITE
CONTROL POWER TRANSFORMER
#16AWG RED (TYPICAL)
#16AWG WHITE (TYPICAL)
PLC POWER SURGE SUPPRESSOR
PLC POWER SUPPLY
E-STOP
MASTER START
MASTER CONTROL RELAY TYPE 700P (142, 144, 302)
CONTROL POWER ON
CONSTANT POWER
AIR COMPRESSOR MOTOR STARTER (107)
BELT PRESS PULLCORD CONTROL RELAY TYPE 700H (303, 431)
PHOENIX PROCESS EQUIPMENT CO.
TITLE SSUCP-48-600
600V/120V SCHEMATIC
FOR IQALUIT - WWTP
NUNAVUT
DWG.NO. 0418377D801
REV. A

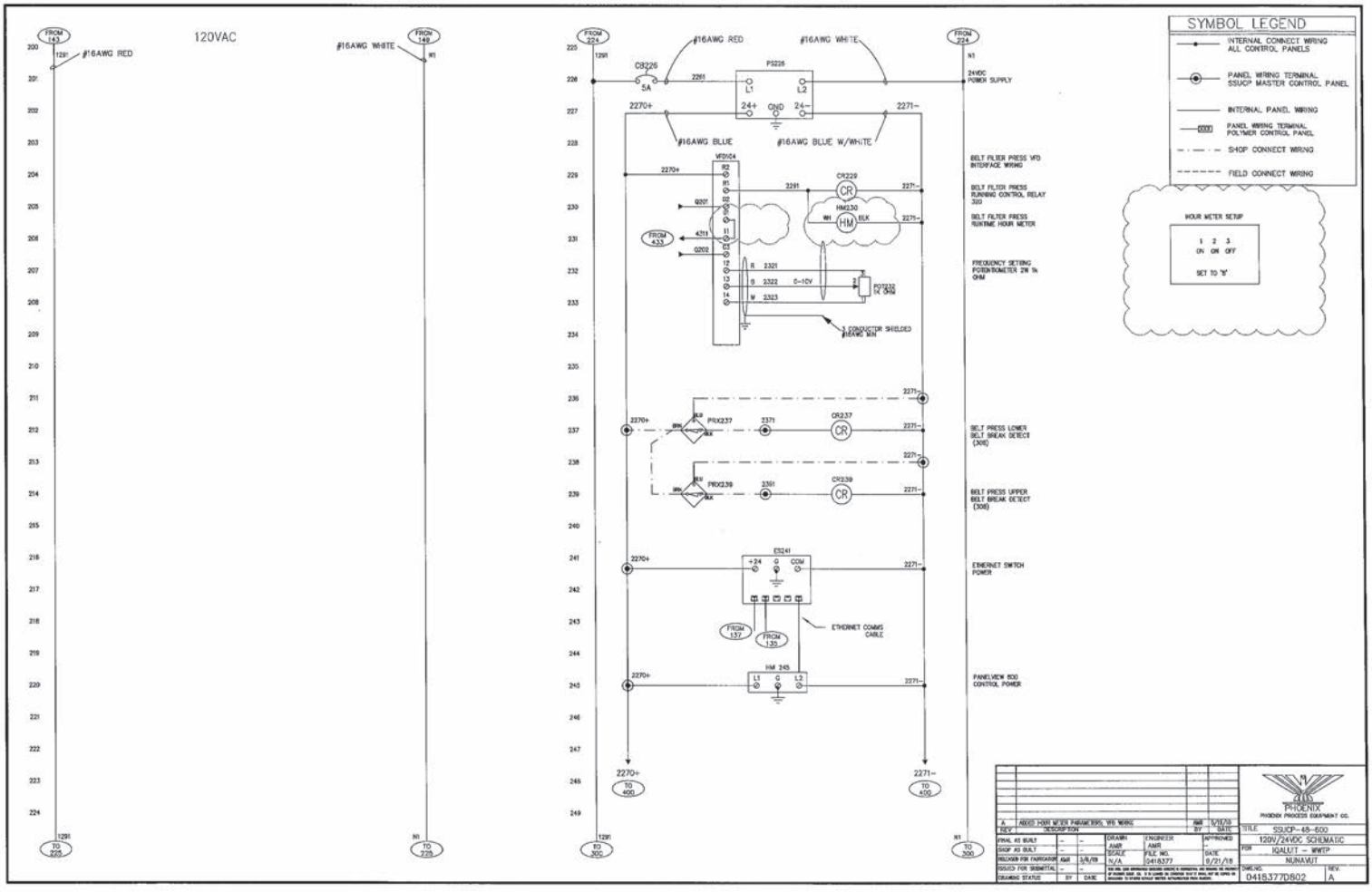

120VAC
#16AWG RED
#16AWG WHITE
#16AWG BLUE
#16AWG BLUE W/WHITE
CB226
5A
PS226
24VDC POWER SUPPLY
VFD104
CR229
HM230
BELT FILTER PRESS VFD INTERFACE WIRING
BELT FILTER PRESS RUNNING CONTROL RELAY 320
BELT FILTER PRESS RUNTIME HOUR METER
FREQUENCY SETTING POTENTIOMETER 2W 1k OHM
3 CONDUCTOR SHIELDED #16AWG MIN
PRX237
CR237
BELT PRESS LOWER BELT BREAK DETECT (308)
PRX239
CR239
BELT PRESS UPPER BELT BREAK DETECT (308)
ES241
ETHERNET SWITCH POWER
ETHERNET COMMS CABLE
HM 245
PANELVIEW 600 CONTROL POWER
SYMBOL LEGEND
INTERNAL CONNECT WIRING ALL CONTROL PANELS
PANEL WIRING TERMINAL SSUCP MASTER CONTROL PANEL
INTERNAL PANEL WIRING
PANEL WIRING TERMINAL POLYMER CONTROL PANEL
SHOP CONNECT WIRING
FIELD CONNECT WIRING
HOUR METER SETUP
1 2 3
ON ON OFF
SET TO "B"
PHOENIX
PHOENIX PROCESS EQUIPMENT CO.
TITLE SSUCP-48-600
120V/24VDC SCHEMATIC
FOR IQALUIT - WWTP
NUNAVUT
DWG.NO. 0418377D802
REV. A

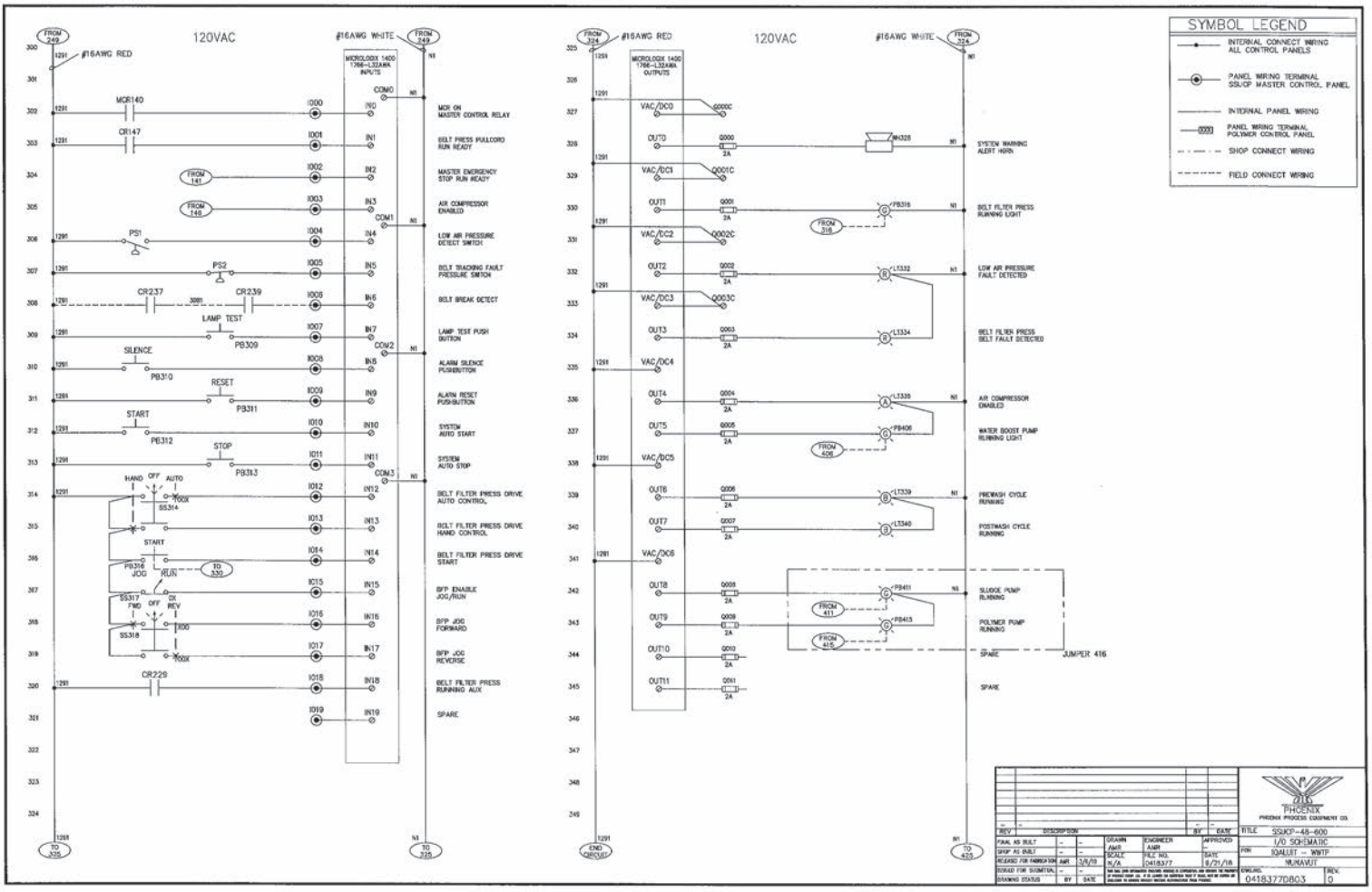
120VAC
#16AWG WHITE
#16AWG RED
MICROLOGIX 1400 1766-L32AWA INPUTS
MICROLOGIX 1400 1766-L32AWA OUTPUTS
MCR14D
CR147
PS1
PS2
CR237
CR239
LAMP TEST
PB309
SILENCE
PB310
RESET
PB311
START
PB312
STOP
PB313
HAND OFF AUTO
SS314
PB316 JOG RUN
SS317 FWD OFF REV
SS318
CR229
MCR ON MASTER CONTROL RELAY
BELT PRESS FULLCORD RUN READY
MASTER EMERGENCY STOP RUN READY
AIR COMPRESSOR ENABLED
LOW AIR PRESSURE DETECT SWITCH
BELT TRACKING FAULT PRESSURE SWITCH
BELT BREAK DETECT
LAMP TEST PUSH BUTTON
ALARM SILENCE PUSHBUTTON
ALARM RESET PUSHBUTTON
SYSTEM AUTO START
SYSTEM AUTO STOP
BELT FILTER PRESS DRIVE AUTO CONTROL
BELT FILTER PRESS DRIVE HAND CONTROL
BELT FILTER PRESS DRIVE START
BFP ENABLE JOG/RUN
BFP JOG FORWARD
BFP JOG REVERSE
BELT FILTER PRESS RUNNING AUX
SPARE
SYSTEM WARNING ALERT HORN
BELT FILTER PRESS RUNNING LIGHT
LOW AIR PRESSURE FAULT DETECTED
BELT FILTER PRESS BELT FAULT DETECTED
AIR COMPRESSOR ENABLED
WATER BOOST PUMP RUNNING LIGHT
PREWASH CYCLE RUNNING
POSTWASH CYCLE RUNNING
SLUDGE PUMP RUNNING
POLYMER PUMP RUNNING
SPARE
JUMPER 416
SYMBOL LEGEND
INTERNAL CONNECT WIRING ALL CONTROL PANELS
PANEL WIRING TERMINAL SS/OP MASTER CONTROL PANEL
INTERNAL PANEL WIRING
PANEL WIRING TERMINAL POLYMER CONTROL PANEL
SHOP CONNECT WIRING
FIELD CONNECT WIRING
PHOENIX
PHOENIX PROCESS EQUIPMENT CO.
SSMCP-48-600
I/O SCHEMATIC
IQALUIT -- WWTP
NUNAVUT
04183770803
REV 0

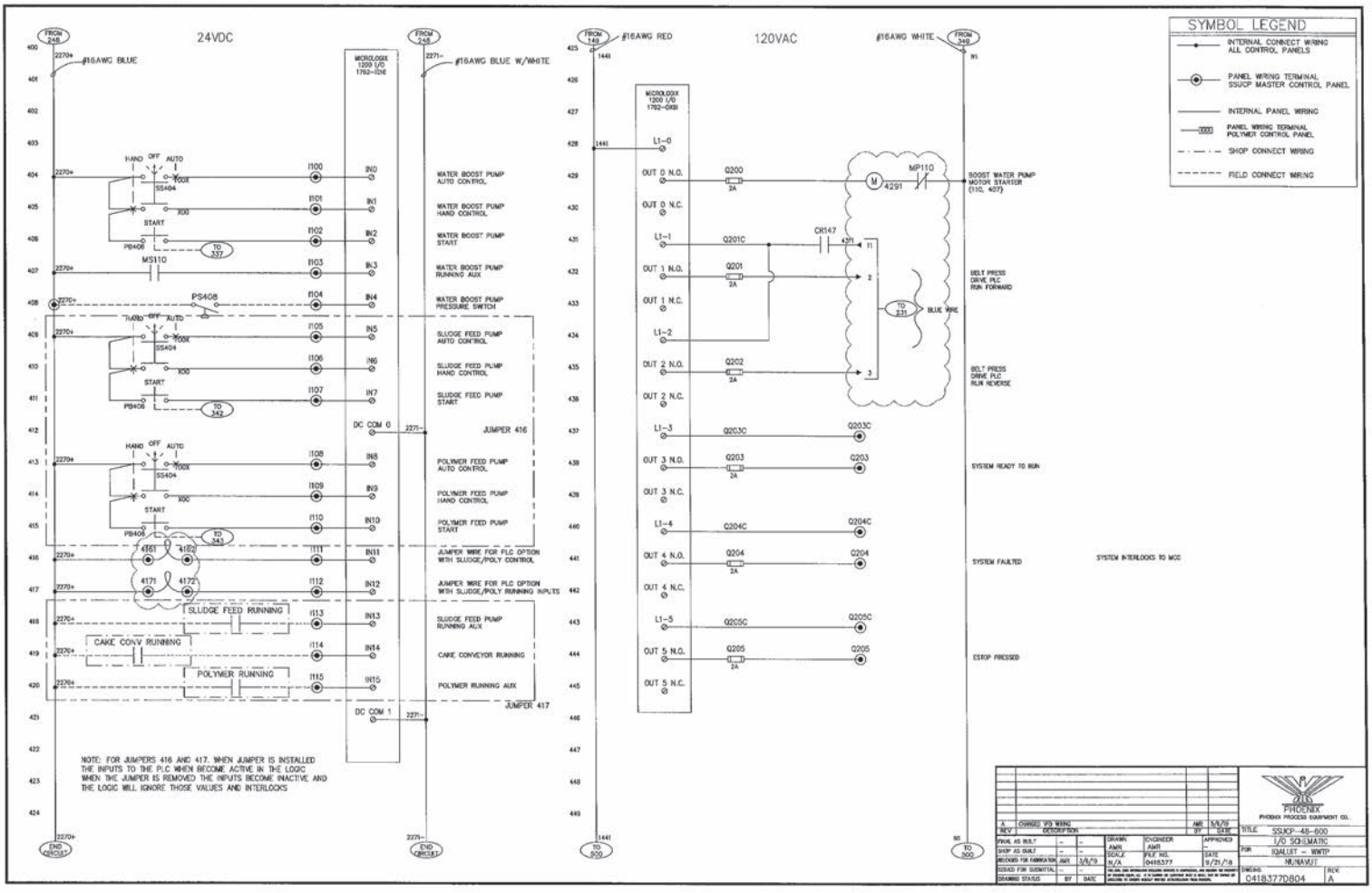
24VDC
120VAC
#16AWG BLUE
#16AWG BLUE W/WHITE
#16AWG RED
#16AWG WHITE
MICROLOGIX 1200 I/O 1762-IQ16
MICROLOGIX 1200 I/O 1762-OX8I
WATER BOOST PUMP AUTO CONTROL
WATER BOOST PUMP HAND CONTROL
WATER BOOST PUMP START
WATER BOOST PUMP RUNNING AUX
WATER BOOST PUMP PRESSURE SWITCH
SLUDGE FEED PUMP AUTO CONTROL
SLUDGE FEED PUMP HAND CONTROL
SLUDGE FEED PUMP START
JUMPER 416
POLYMER FEED PUMP AUTO CONTROL
POLYMER FEED PUMP HAND CONTROL
POLYMER FEED PUMP START
JUMPER WIRE FOR PLC OPTION WITH SLUDGE/POLY CONTROL
JUMPER WIRE FOR PLC OPTION WITH SLUDGE/POLY RUNNING INPUTS
SLUDGE FEED PUMP RUNNING AUX
CAKE CONVEYOR RUNNING
POLYMER RUNNING AUX
JUMPER 417
SLUDGE FEED RUNNING
CAKE CONV RUNNING
POLYMER RUNNING
BOOST WATER PUMP MOTOR STARTER (110, 407)
BELT PRESS DRIVE PLC RUN FORWARD
BELT PRESS DRIVE PLC RUN REVERSE
SYSTEM READY TO RUN
SYSTEM FAULTED
ESTOP PRESSED
SYSTEM INTERLOCKS TO MCC
NOTE: FOR JUMPERS 416 AND 417, WHEN JUMPER IS INSTALLED THE INPUTS TO THE PLC WHEN BECOME ACTIVE IN THE LOGIC WHEN THE JUMPER IS REMOVED THE INPUTS BECOME INACTIVE AND THE LOGIC WILL IGNORE THOSE VALUES AND INTERLOCKS
SYMBOL LEGEND
INTERNAL CONNECT WIRING ALL CONTROL PANELS
PANEL WIRING TERMINAL SSUCP MASTER CONTROL PANEL
INTERNAL PANEL WIRING
PANEL WIRING TERMINAL POLYMER CONTROL PANEL
SHOP CONNECT WIRING
FIELD CONNECT WIRING
PHOENIX
PHOENIX PROCESS EQUIPMENT CO.
TITLE SSUCP-48-600
I/O SCHEMATIC
FOR IQALUIT - WWTP
NUNAVUT
DWG NO. 0418377D804
REV A

POWERFLEX 523 SERIES VFD

Parameter	Description	BELT PRESS Value
P031	MOTOR NP VOLTS	575
P032	MOTOR NP HERTZ	60
P033	MOTOR OL CUURENT	NP - 1.24A
P041	ACCEL TIME	2
P042	DECEL TIME	2
P043	MIN FREQ (IN Hz)	12 Hz
P044	MAX FREQ (IN Hz)	60
P045	STOP MODE	0 RAMP
P046	START SOURCE	2
P047	SPEED REF	5 0-10V
to76	RELAY OUT SELECT	2 RUNNING
to62	TWO WIRE FORWARD	48
to63	TWO WIRE REVERSE	50

* NOTES: 1) THE ACTUAL NAMEPLATE FLA SHOULD BE USED FOR P#33. A TYPICAL VALUE IS SHOWN HERE.

REV	DESCRIPTION	BY	DATE
A	UPDATED PARAMETERS	AMR	5/8/19
FINAL AS BUILT	-	-	
SHOP AS BUILT	-	-	
RELEASED FOR FABRICATION	AMR	3/8/19	
ISSUED FOR SUBMITTAL	-	-	
DRAWING STATUS	BY	DATE	

DRAWN: AMR | ENGINEER: AMR | APPROVED:
SCALE: N/A | FILE NO.: 04183377 | DATE: 9/21/18

PHOENIX
PHOENIX PROCESS EQUIPMENT CO.

TITLE: SSUOP-48-600
DEVICE SETUP PARAMETERS
FOR: IQALUIT - NUNAVUT
DWG NO.: 04183770807
REV.: A

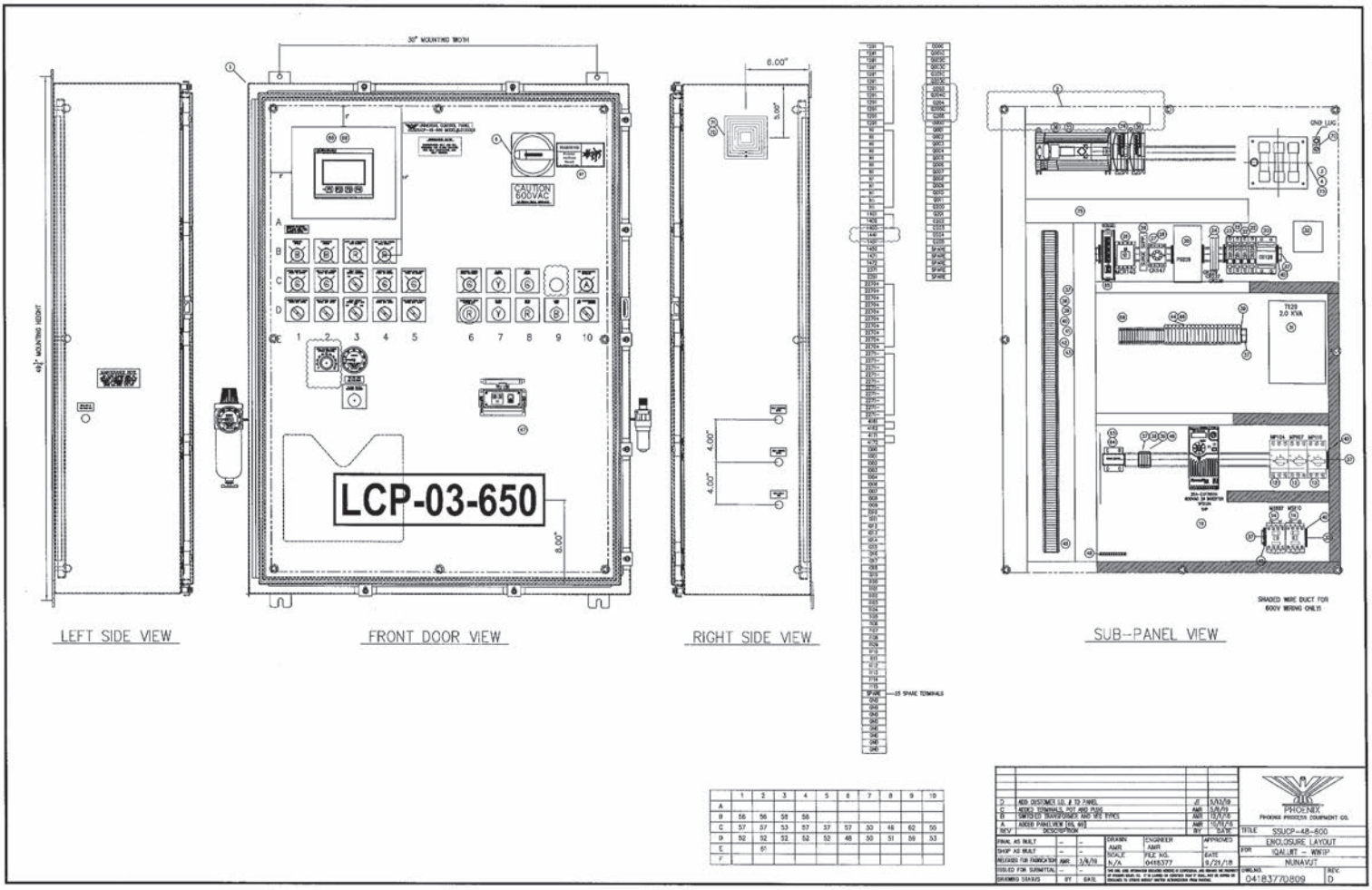
30" MOUNTING WIDTH
6.00"
5.00"
4.00"
4.00"
8.00"
CAUTION
600VAC
LCP-03-650
GND LUG
TX29
2.0 KVA
SHADED WIRE DUCT FOR
600V WIRING ONLY!
25 SPARE TERMINALS
LEFT SIDE VIEW
FRONT DOOR VIEW
RIGHT SIDE VIEW
SUB-PANEL VIEW
PHOENIX
PHOENIX PROCESS EQUIPMENT CO.
TITLE SSUCP-48-600
ENCLOSURE LAYOUT
FOR IQALUIT - WWTP
NUNAVUT
DWG.NO. 04183770809
REV. D
D ADD CUSTOMER I.D. # TO PANEL JT 5/13/19
C ADDED TERMINALS, POT AND PLUG AMR 5/8/19
B SWITCHED TRANSFORMER AND VFS TYPES AMR 12/1/18
A ADDED PANEL VIEW [66, 69] AMR 10/11/18
REV DESCRIPTION BY DATE
FINAL AS BUILT - -
SHOP AS BUILT - -
RELEASED FOR FABRICATION AMR 3/8/19
ISSUED FOR SUBMITTAL -
DRAWING STATUS BY DATE
DRAWN AMR
SCALE N/A
ENGINEER AMR
FILE NO. 0418377
APPROVED
DATE 9/21/18

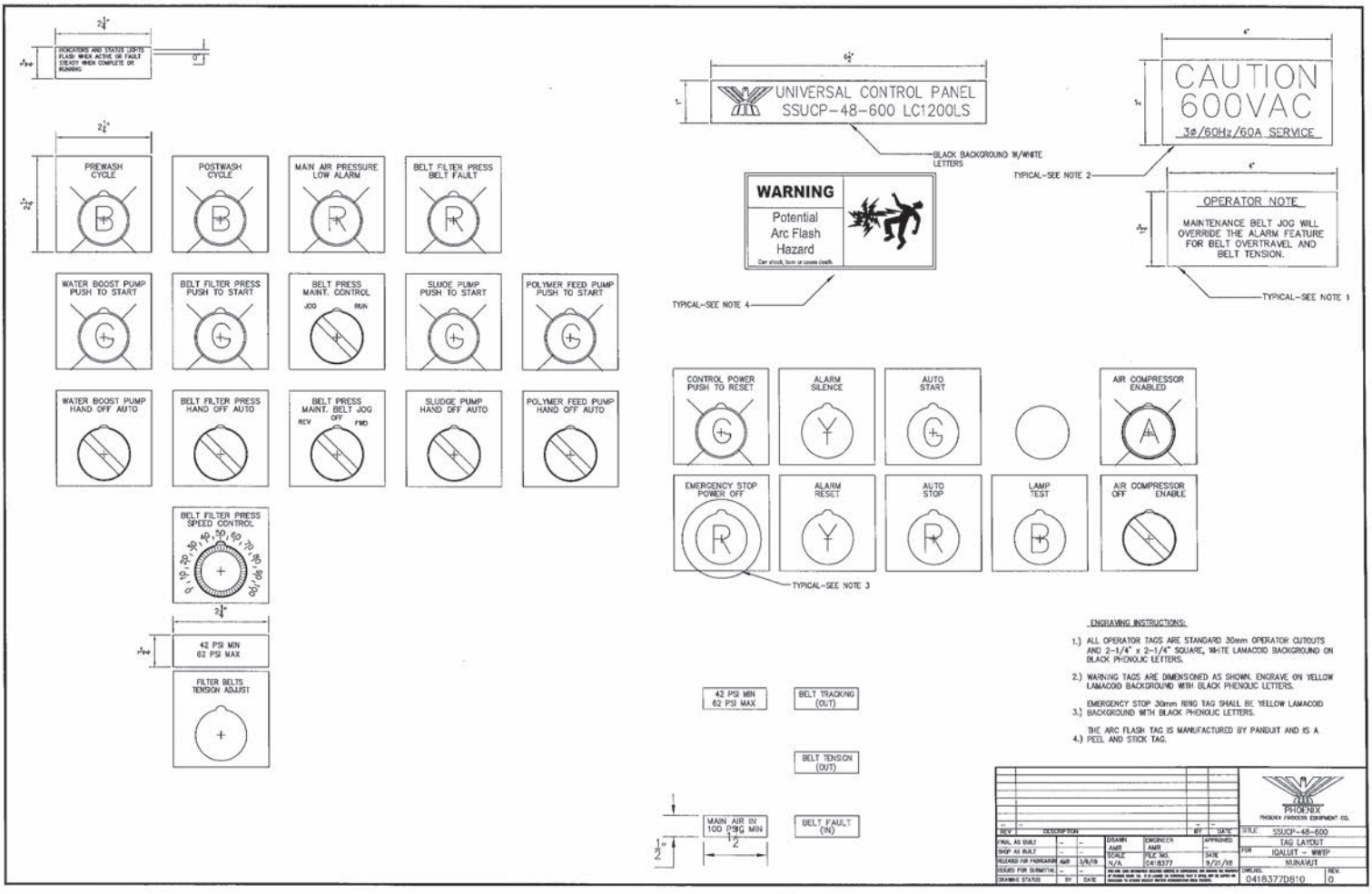

ENGRAVING INSTRUCTIONS:

1.) ALL OPERATOR TAGS ARE STANDARD 30mm OPERATOR CUTOUTS AND 2-1/4" x 2-1/4" SQUARE, WHITE LAMACOID BACKGROUND ON BLACK PHENOLIC LETTERS.

2.) WARNING TAGS ARE DIMENSIONED AS SHOWN. ENGRAVE ON YELLOW LAMACOID BACKGROUND WITH BLACK PHENOLIC LETTERS.

3.) EMERGENCY STOP 30mm RING TAG SHALL BE YELLOW LAMACOID BACKGROUND WITH BLACK PHENOLIC LETTERS.

4.) THE ARC FLASH TAG IS MANUFACTURED BY PANDUIT AND IS A PEEL AND STICK TAG.

REV	DESCRIPTION		BY	DATE
FINAL AS BUILT	-	-		
SHOP AS BUILT	-	-		
RELEASED FOR FABRICATION	AMR	3/8/19		
ISSUED FOR SUBMITTAL	-	-		
DRAWING STATUS	BY	DATE		

DRAWN	ENGINEER	APPROVED	
AMR	AMR		
SCALE	FILE NO.	DATE	
N/A	C41837	9/21/18	

PHOENIX
PHOENIX PROCESS EQUIPMENT CO.

TITLE	SSUCP-48-600 TAG LAYOUT
FOR	IQALUIT - WWTP NUNAVUT
DWG.NO.	041837/D810
REV.	0

LC PIPING SCHEMATIC

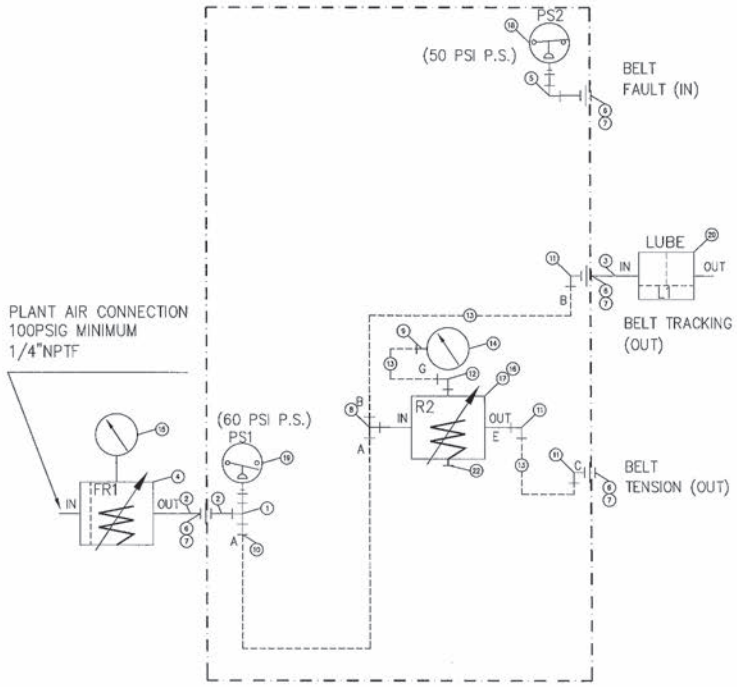

PNEUMATIC BILL OF MATERIAL

NO.	REC'D	QNTY	MANUFACTURER	DESCRIPTION	PART NO.
1		1	PHOENIX	1/4" BRASS TEE	E2258
2		2	PHOENIX	1/4" BRASS CLOSE NIPPLE	E2259
3		1	PHOENIX	1/4" X 2" BRASS NIPPLE	E2259A
4		1	PHOENIX	FILTER/REG, 1/4" NPT, COALESCING, .3 MICRON	CH222B
5		1	PHOENIX	1/4" BRASS 90 ELBOW	E2266
6		4	PHOENIX	1/4" BULKHEAD NICKLE PLATED	E2260
7		4	PHOENIX	SEALING WASHER	E2260A
8		1	PHOENIX	1/4" X 1/4" RUN TEE	E2287
9		1	PHOENIX	1/4" X 1/4" CONNECTOR, FEMALE 0 DEG	E2282
10		1	PHOENIX	1/4" X 1/4" CONNECTOR, MALE 0 DEG	E2284
11		3	PHOENIX	1/4" X1/4" SWIVEL ELBOW 90 DEG	E2286
12		1	PHOENIX	1/8" NPT X 1/4" SWIVEL ELBOW 90 DEG	E2285
13		20'	PHOENIX	1/4" OD POLYURETHANE TUBE NATURAL	E2754
14		1	PHOENIX	1/4"NPT, 2.5"dia, 0-160 scale, Liquid Filled, Guage.	CH342
15		1	PHOENIX	0-160 PSIG GAUGE, 1/8" NPT	CH342A
16		1	PHOENIX	Panel Mounting Nut	CH221A
17		1	PHOENIX	Regulator, 1/4"NPT, Panel Nut, Standard Knob	CH221
18		1	PHOENIX	Pressure Switch, setpoint 50psig rising	CH294
19		1	PHOENIX	Pressure Switch, setpoint 60psig falling	CH295
20		1	PHOENIX	1/4" LUBRICATOR	CH225
21		.	.	.	.
22		1	PHOENIX	1/8" NPT PLUG	E2259C
23		.	.	.	.
24		.	.	.	.
25		.	.	.	.

NOTES:
1. ALL PNEUMATIC PARTS SUPPLIED BY PHOENIX PARTS DEPARTMENT.
2. THE KIT NUMBER IS (KIT-AIR-LC-CH221)
3. THE DASHED LINES DENOTE 1/4" TUBING RUNS IN THE SSUCP PANEL.

REV	DESCRIPTION		BY	DATE
FINAL AS BUILT	-	-		
SHOP AS BUILT	-	-		
RELEASED FOR FABRICATION	AMR	3/1/19		
ISSUED FOR SUBMITTAL	-	-		
DRAWING STATUS	BY	DATE		

DRAWN	ENGINEER	APPROVED
AMR	AMR	
SCALE	FILE NO.	DATE
N/A	04183777	12/21/18

PHOENIX
PHOENIX PROCESS EQUIPMENT CO.

TITLE	SSUCP-48-600
	PNEUMATIC SCHEMATIC
FOR	IQALUIT - WWTP
	NUNAVUT
DWG NO.	04183770811
REV.	0

SSUCP-48-600 BILL OF MATERIAL

NO.	REC'D	QNTY	MANUFACTURER	DESCRIPTION	PART NO.
1		1	HOFFMAN	ENCLOSURE, SS NEMA 4X, SINGLE DOOR WALLMOUNT	A-48H3612SSLP
2		1	HOFFMAN	SUBPANEL, 45" X 33"	A-48P36
3		1	ALLEN BRADLEY	ROTARY DISCONNECT SWITCH, 60A	194R-J60-1753
4		1	ALLEN BRADLEY	NFPA 79 HANDLE KIT W/OPERATING SHAFT	194R-N2
5		1	ALLEN BRADLEY	DISCONNECT OPERATING HANDLE, NEMA 4X	194R-PY
6		.	.	.	.
7		.	.	.	.
8		.	.	.	.
9		.	.	.	.
10		.	.	.	.
11		2	ALLEN BRADLEY	140M Front Mounted Auxiliary Contact	140M-C-AFA11
12		1	ALLEN BRADLEY	MOTOR CIRCUIT PROTECTOR, 2.5-4.0A	140M-C2E-B40
13		2	ALLEN BRADLEY	MOTOR CIRCUIT PROTECTOR, 4.0-6.3A	140M-C2E-B63
14		2	ALLEN BRADLEY	CONTACTOR, IEC, 9A, 5HP, 120VAC	100-C09D10
15		.	.	.	.
16		.	.	.	.
17		.	.	.	.
18		.	.	.	.
19		1	AB	VARIABLE FREQUENCY DRIVE, 1 HP, 600V	25A-E1P7N104
20		1	ALLEN BRADLEY	CIRCUIT BREAKER, 2 POLE, 10A	1489-M2C100
21		.	.	.	.
22		3	ALLEN BRADLEY	CIRCUIT BREAKER, 1 POLE, 5A	1489-M1C050
23		1	ALLEN BRADLEY	CIRCUIT BREAKER, 1 POLE, 20A	1489-M1C200
24		3	ALLEN BRADLEY	CONTROL RELAY, TERMINAL, SPDT, 24VDC	700-HLT1Z24
25		.	.	.	.
26		1	ALLEN BRADLEY	CONTROL RELAY, 4 POLE, 120VAC	700-P400A1
27		1	ALLEN BRADLEY	CONTROL RELAY, PLUG-IN, 3PDT, 120VAC	700-HA33A1
28		1	ALLEN BRADLEY	RELAY SOCKET, 11 PIN	700-HN126
29		1	TRANSTECTOR	SURGE PROTECTOR W/BASE, 120V	DR-120
30		1	SOLA	DC POWER SUPPLY, 120VAC/24VDC, 3.8A	SDN 4-24-100LP
31		1	SOLAHD	TRANSFORMER, 600V/120V, 2KVA	CE2000ME
32		1	ALLEN BRADLEY	POWER DISTRIBUTION BLOCK	1492-PD3141
33		1	ALLEN BRADLEY	MICROLOGIX 1400 PLC, 20IN(120VAC), 12OUT(RELAY)	1766-L32AWA
34		1	ALLEN BRADLEY	INPUT MODULE, 16PT, 24VDC	1762-IQ16
35		1	ALLEN BRADLEY	OUTPUT MODULE, 6PT, ISOLATED RELAY	1762-OX6I
36		1	ALLEN BRADLEY	MEMORY MODULE	1766-MM1
37		A/R	ALLEN BRADLEY	DIN RAIL, 35mm	199-DR1
38		A/R	ALLEN BRADLEY	TERMINAL BLOCK, IEC	1492-J4
39		A/R	ALLEN BRADLEY	TERMINAL END BARRIER	1492-EBJ3
40		A/R	ALLEN BRADLEY	TERMINAL END ANCHOR	1492-EBJ35

SSUCP-48-600 BILL OF MATERIAL

NO.	REC'D	QNTY	MANUFACTURER	DESCRIPTION	PART NO.
41		A/R	ALLEN BRADLEY	TERMINAL CENTER JUMPER, 41 POLE	1492-CJLJ6-41
42		A/R	ALLEN BRADLEY	TERMINAL PARTITION PLATE	1492-EBJ16
43		A/R	ALLEN BRADLEY	TERMINAL MARKER CARD	1492-M6X12
44		A/R	ALLEN BRADLEY	TERMINAL BLOCK, FUSED FOR 1/4" X 1 1/4"	1492-H4
45		A/R	ALLEN BRADLEY	GROUND TERMINAL BLOCK	1492-WG4
46		1	ITE	GROUND BAR	GB10
47		1	AUTO DIRECT	PANEL INT CONN, 120VAC OUTLET RJ45 SGL-LVR	ZP-PSA-16-101
48		1	ALLEN BRADLEY	PUSHBUTTON, TWIST RELEASE, RED, MUSHROOM	800H-FRXT6A5
49		1	ALLEN BRADLEY	PUSHBUTTON, FLUSH, GREEN, 1 N.O.	800H-AR1D1
50		2	ALLEN BRADLEY	PUSHBUTTON, FLUSH, YELLOW, 1 N.O.	800H-AR9D1
51		1	ALLEN BRADLEY	PUSHBUTTON, EXTENDED, RED, 1 N.O. 1 N.C.	800H-BR6D1
52		5	ALLEN BRADLEY	SELECTOR SWITCH, 3 POSITION, MAINTAINED	800H-JR2A
53		2	ALLEN BRADLEY	SELECTOR SWITCH, 2 POSITION, MAINTAINED	800H-HR2A
54		.	.	.	.
55		1	ALLEN BRADLEY	PILOT LIGHT, AMBER, 120VAC	800H-PR16A
56		2	ALLEN BRADLEY	PILOT LIGHT, BLUE, 120VAC	800H-PR16B
57		5	ALLEN BRADLEY	PILOT LIGHT, GREEN, 120VAC	800H-PR16G
58		2	ALLEN BRADLEY	PILOT LIGHT, RED, 120VAC	800H-PR16R
59		1	ALLEN BRADLEY	PUSHBUTTON, FLUSH, BLACK, 1 N.O.	800H-AR2D1
60		.	.	.	.
61		1	ALLEN BRADLEY	POTENTIOMETER, 1K OHM, 2W	800H-UR13
62		1	HOFFMAN	HOLE SEAL, 304SS, 30mm	A-SPBSS
63		1	RED LION	HOUR METER	CUB7T
64		1	RED LION	MOUNTING BRACKET FOR CUB7T	BMK80000
65		1	ALLEN BRADLEY	5 PORT ETHERNET SWITCH, UNMANAGED	1783-US5T
66		23	BUSSMAN	FUSE FOR TERMINAL, 250V, 2A	
67		1	PANDUIT	ARC FLASH TAG	PPS0204W2100
68		1	ALLEN-BRADLEY	PANELVIEW 800 TOUCHSCREEN	2711R-T4T
69		1	FIBOX	INSPECTION PANEL, SMOKE	L 24 II
70		1	ILSCO	GROUND LUG, #4-14 AWG	TA-6S
71		1	FEDERAL SIGNAL	ALARM HORN, 120VAC, PANEL MOUNT	350-120
72		1	FEDERAL SIGNAL	GASKET KIT FOR 350 HORN	K8435666A
73		3	LITTELFUSE	FUSE, 600V, 60A, CLASS J INDICATIONG	JTD-60-ID
74		.	.	.	.
75		1	AS NEEDED	ETHERNET CAT6 CABLE	.

REV	DESCRIPTION	BY	DATE
D	CORRECT BREAKER AMPERAGE	JT	3/20/19
C	11, 12, 13	AMR	3/5/19
B	19,21	AMR	12/1/18
A	ADDED 68 69	AMR	10/11/18

FINAL AS BUILT	–	–	APPROVED
SHOP AS BUILT	–	–	
RELEASED FOR FABRICATION	AMR	3/5/19	
ISSUED FOR SUBMITTAL	–	–	
DRAWING STATUS	BY	DATE	

DRAWN AMR | ENGINEER AMR | SCALE N/A | FILE NO. 0418377 | DATE 9/21/18

SUBJECT TO CHANGES WITHOUT WRITTEN AUTHORIZATION FROM PHOENIX.

PHOENIX
PHOENIX PROCESS EQUIPMENT CO.

TITLE SSUCP-48-600 BILL OF MATERIALS
FOR IQALUIT - WWTP NUNAVUT

DWG.NO. 0418377D812 | REV. D

SECTION 4



PHOENIX Process Equipment Company
2402 Watterson Trail
Louisville, KY 40299
(502) 499-6198
(502) 499-1079 Fax

SECTION 4 COMPONENTS

POLYMER MIXING (VORTEX)

General

Flocculation is essential for efficient dewatering of slurries on a Belt Filter Press. Once polymer has been added to the slurry, a gentle but thorough mixing step is required in order to activate the flocculation. PHOENIX provides an injection ring & a vortex mixer to properly inject and mix the polymer.

Polymer Mixing Process

The polymer passes from the polymer pump through the header assembly and is evenly distributed to the injection ring (Figure 3.) through four holes drilled tangent to the inside of the piping, producing a circular flow to assist in the mixing of the polymer and the slurry. A check valve is utilized before the header assembly to prevent the back flow of slurry to the polymer system.

Movement of the arm on the vortex mixer opens & closes an internal damper blade. The arm has an adjustable weight, which can be used to apply more force to close the damper blade and increase the mixing action. See vortex mixer (Figure 2.). Small changes in the adjustment of this blade will result in dramatic changes in the flocculation of the slurry.

PHOENIX Process Equipment Company
2402 Watterson Trail
Louisville, KY 40299
(502) 499-6198
(502) 499-1079 Fax

SECTION 4 COMPONENTS

POLYMER MIXING (VORTEX)

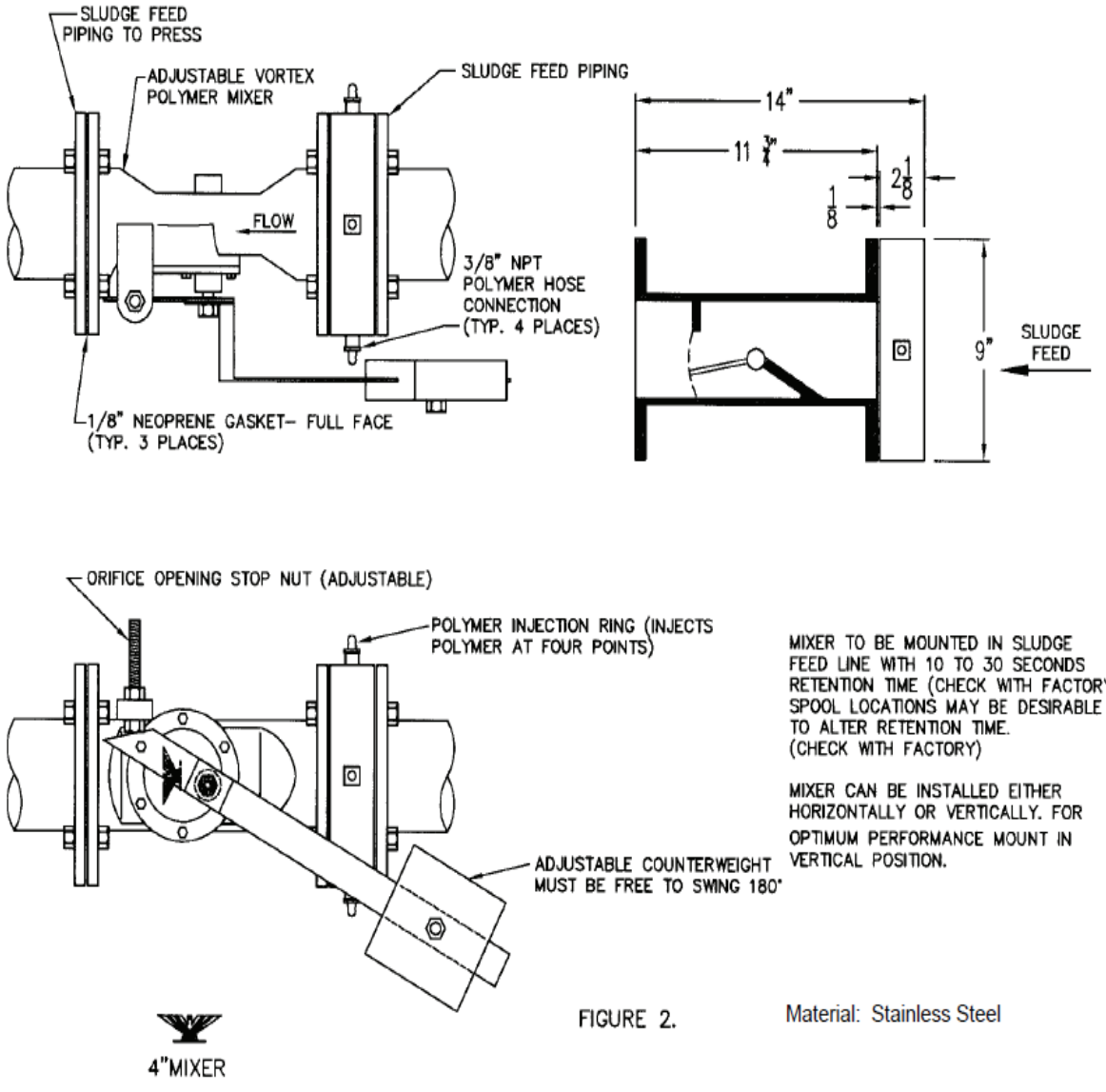

PHOENIX Process Equipment Company
2402 Watterson Trail
Louisville, KY 40299
(502) 499-6198
(502) 499-1079 Fax

SECTION 4 COMPONENTS

POLYMER MIXING (INJECTION RING)

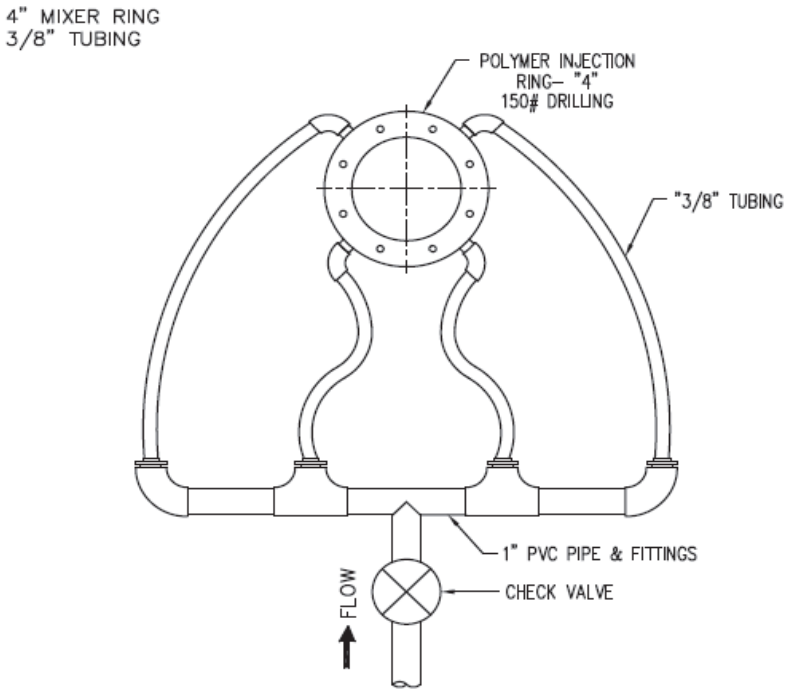

NOTE: 1. TUBING FROM HEADER ASSEMBLY TO INJECTION RING SHOULD BE OF SAME LENGTH TO ALLOW EVEN FLOW RATE.
2. THE INJECTION RING PROVIDED BY PHOENIX IS DRILLED AND TAPPED FOR A 3/8" NPT PIPE THREAD.
3. THE CHECK VALVE, FITTINGS, PIPING & TUBING FOR INJECTION RING ARE NOT PROVIDED BY PHOENIX.

FIGURE 3.

PHOENIX Process Equipment Company
2402 Watterson Trail
Louisville, KY 40299
(502) 499-6198
(502) 499-1079 Fax

SECTION 4 COMPONENTS

BELT TENSIONING

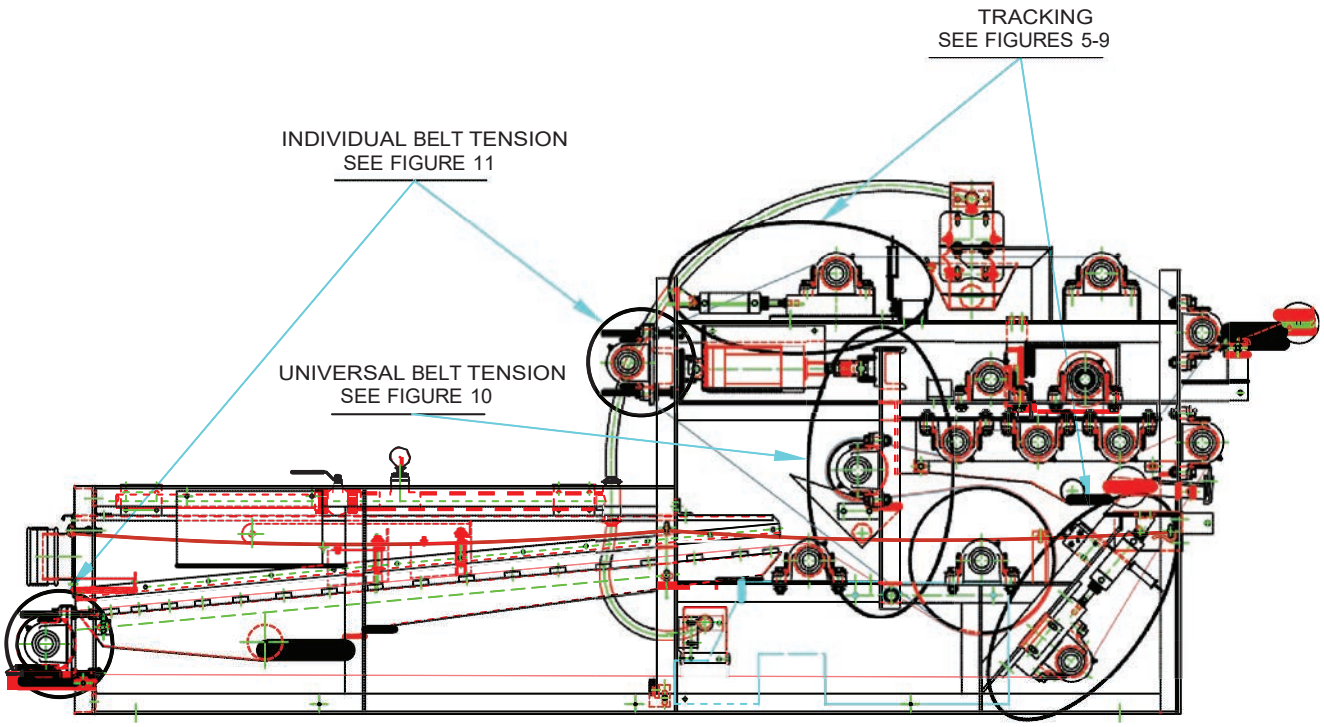

FIGURE 4.

PHOENIX Process Equipment Company
2402 Watterson Trail
Louisville, KY 40299
(502) 499-6198
(502) 499-1079 Fax

SECTION 4 COMPONENTS

BELT TENSIONING

TRACKING

Air pressures mentioned in this section for the pneumatic systems are preliminary settings. Adjustments will normally be required depending on the type and tonnage of solids being processed. Contact the PHOENIX Service Department at (502) 499-6198 Ext 127 if there are questions about belt tensioning.

The tracking systems for the Belt Filter Press are proportionally controlled pneumatic systems. Each belt has a separate tracking system. See Figure 4 for locations on the Belt Filter Press.

The tracking valve (Item B, Figure 5) activates the cylinder (Item F, Figure 6) to move the tracking roller relative to the belt. The system is proportional because the cylinder and roller respond to counteract the mistracking of the belt and as the belt mistracks further the cylinder compensates more. The flow of air from the cylinder is controlled and adjusted by flow control valves on the exhaust ports (Item C, Figure 5) of the tracking valve.

The tracking system controls include:

Figure 5: Item A Tracking Arm Lever
Item B Numatrol Tracking Valve
Item C Flow Control Valves
Item D Tracking Arm Roller

Figure 6: Item F Tracking Cylinder

TRACKING SETUP

The tracking valve is a spring-loaded valve. This enables the belt sensor roller to maintain contact with the edge of the belt during operation. The tracking arm (Item A, Figure 5) is clamped onto the tracking valve at the pivot shaft (Item E, Figure 5). When the belts are in the center of the rollers and both belts are aligned with each other, the tracking arms and tracking rollers (Items A & D, Figure 5) are adjusted to ride against the edge of the belt with the cylinder at the center of its stroke (extended 1”). If the cylinder is not extended the correct amount, loosen the pivot screw on the arm enough to permit the pivot arm to move relative to the arm, use a screwdriver to turn the pivot until the cylinder is positioned correctly and retighten the screw on the tracking arm to lock the arm in place. If the arm is not vertical, loosen the screw, hold the pivot shaft with a screwdriver, move the arm to the correct position, and retighten the pivot screw.

PHOENIX Process Equipment Company
2402 Watterson Trail
Louisville, KY 40299
(502) 499-6198
(502) 499-1079 Fax

SECTION 4 COMPONENTS

TRACKING SWITCH & AIR CYLINDER

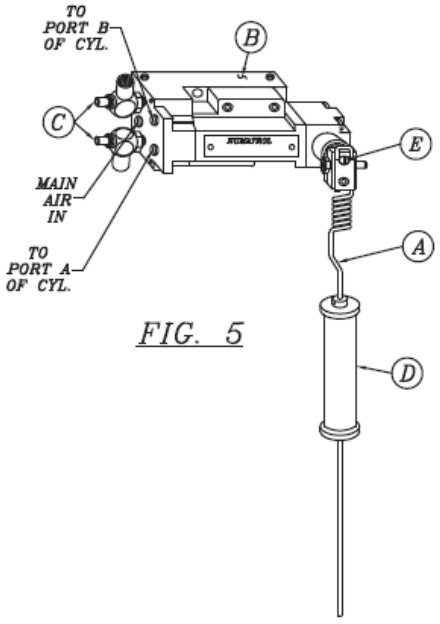

FIG. 5

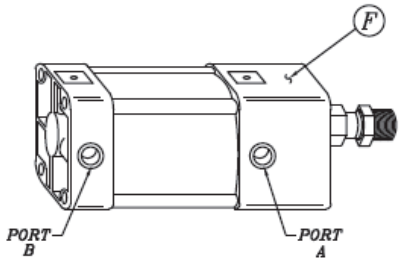

FIG. 6

1) Position belt in the center of its travel (equal distance from edge of belt to edge of roller, both sides).

2) At this point, tracking cylinder should be in mid—stroke and tracking roller arm straight up and down.

3) If not, holding tracking arm (A) and tracking roller (D) (Figure 5) against edge of belt, adjust pivot shaft (E) with screw driver. Leave tracking arm snug (not tight) when adjusting, this will keep it from springing back to start point.

4) Run belts at 50% speed to verify tracking is working properly.

5) If tracking is okay, tighten tracking arm on pivot shaft of valve.

6) Cylinder (F) (Figure 6) should move smoothly and slowly. The speed is adjusted by closing off the appropriate flow control (C) (Figure 5).

PHOENIX Process Equipment Company
2402 Watterson Trail
Louisville, KY 40299
(502) 499-6198
(502) 499-1079 Fax

SECTION 4 COMPONENTS

TRACKING SETUP (Continued)

The cylinder has 2" stroke or 1" inch of travel in each direction from center. The belts are tracked by moving the tracking roller back and forth (Figures 7, 8 & 9) causing the belts to move in the appropriate direction.

Two flow control valves (Item C, Figure 5) are used on the tracking valve to limit the speed of the cylinder. If the cylinder moves too fast, the belts will not track properly and the belts may move back and forth continuously. If the cylinder moves too slowly, the system will be following but not correcting the belt misalignment. Smooth cylinder movement and correct belt tracking can be achieved using these valves.

PHOENIX Process Equipment Company
2402 Watterson Trail
Louisville, KY 40299
(502) 499-6198
(502) 499-1079 Fax

SECTION 4 COMPONENTS

TRACKING SYSTEM OPERATION

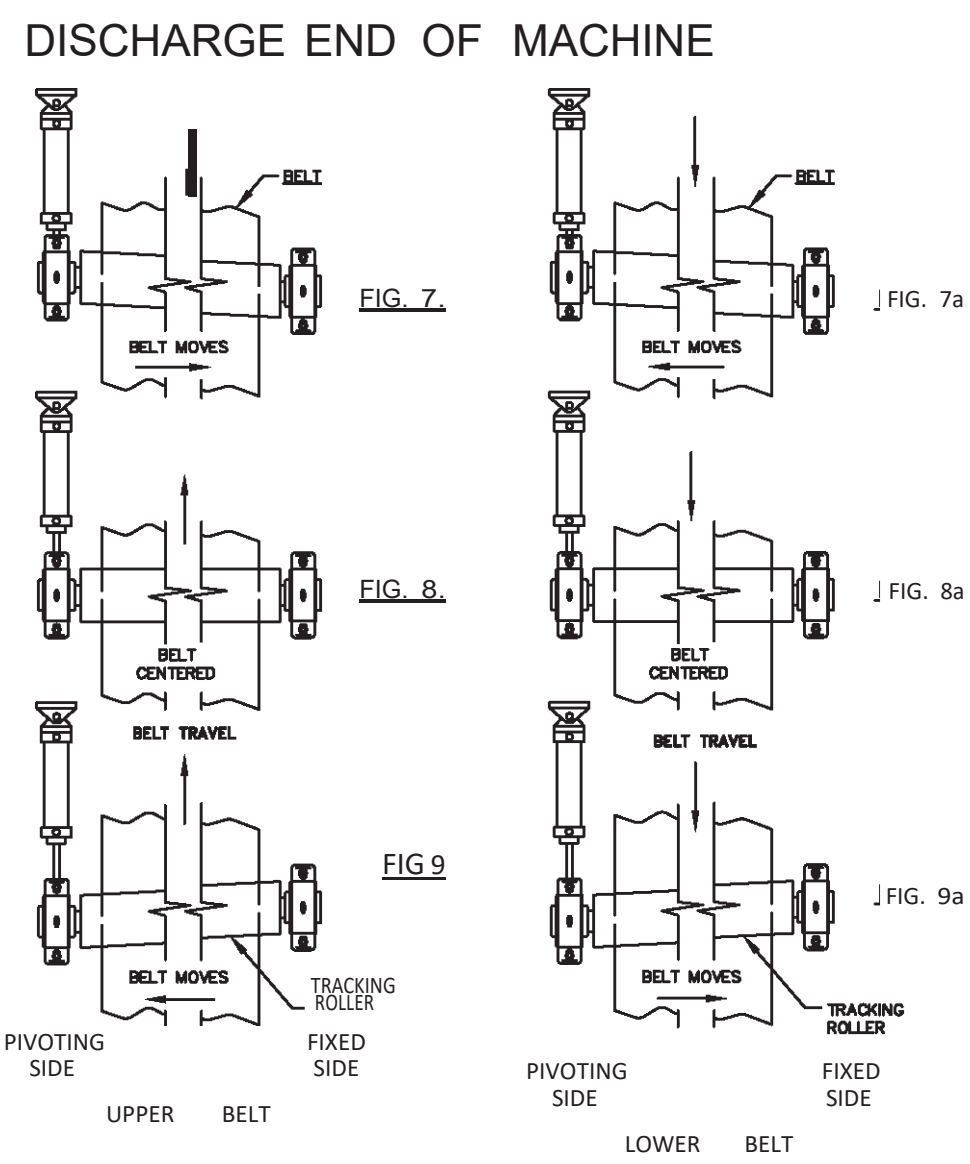

\OM\WX-GORH\Fig_04 05 06.dwg

TAB 1



PHOENIX

PHOENIX Process Equipment Company
2402 Watterson Trail
Louisville, KY 40299
(502) 499-6198
(502) 499-1079 Fax

SECTION 4 COMPONENTS

TRACKING CYLINDER CONTROL VALVE SPECS

PHOENIX Part No:	PTS-CH215
Model:	LR5 - 0201
Valve Action:	4-Way, 5 Port, Dirtproof Splash Proof, Mechanically Actuated, Spring Return.
Mounting:	Complete Valve On Subplate
Pressure Range:	0-150 psig
Temperature Range:	$+40^0$ F. - 200^0 F.
Operating Torque:	2.5 In/Lbs.

LIMIT SWITCH SPECIFICATIONS

PHOENIX Part No:	PTS-CH213
Switch:	LR3-0201
Housing Type:	Zinc Die Cast
Operation:	Pneumatic Lever Type Switch
Seal:	Synthetic Rubber

SERIES LR "SENTINEL" LIMIT VALVES WITH ROTARY ACTUATOR

GENERAL

The Sentinel Line is a family of rugged, heavy-duty limit valves, designed to provide the ultimate in reliability, versatility, and long trouble-free life under the most demanding conditions.

It was intended to out-perform the best limit switches in applications where the limit is exposed to coolants, die lubricants, water, degreasing fluids, foundry sand, and other similar environments where limits are a major source of machine down-time.

APPLICATION

Each "Sentinel" is a small, mechanically actuated, spring return air valve. All models have a blocked center spool, so there is no possibility of blow-by or cross-bleed from one flow path to another as the valve shifts. They are subplate mounted, the equivalent of a plug-in limit switch. Each subplate has three different sets of mounting holes, providing a variety of mounting possibilities.

Subplates have ports in the bottom and in the end opposite the operator. A conduit adapter option allows the connecting tubing to be run to the end ports through standard electrical conduit. The bottom ports have counter-bores for o-ring seals.

LR3 limits are dirtproof and splashproof, multi-purpose, 3-way valves. Any port may be pressurized.

LR4 limits are dirtproof, single purpose, 4-way valves with a common open exhaust construction which is protected by a sintered filter under the nameplate.

LR5 limits are dirtproof and splashproof, multi-purpose, 4-way valves with 5 separate ports for maximum versatility. Any port may be pressurized.

OPERATING DATA

PRESSURE RANGE: Vacuum to 150 PSIG.

TEMPERATURE RANGE: +40°F to +200°F ambient.

OPERATING TORQUE OF ROTARY ACTUATORS: 2.5 in/lbs. full shift.

REPEAT ACCURACY:
Rotary Actuator - ± 1/4°.

SERVICE: Valves may be used on properly filtered and lubricated air, dry air, vacuum or noncorrosive, nontoxic and nonflammable dry gases.

FLOW CAPACITY: Series LR valves have a C_V of .32. At 80 PSIG supply pressure, discharging to atmosphere, the flow is 14.7 SCFM. See Numatics' Engineering & Technical Data for complete flow chart.

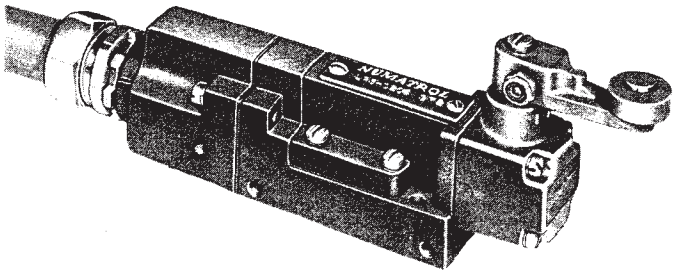

ROTARY ACTUATOR: 3 different roller-lever actuators are available. Each operator can be rotated to any of four positions on the valve, providing considerable mounting versatility. They also may be converted in the field from universal actuation to one-way-trip in either direction. Cam design data is provided for operating levers of varying lengths. See pages N-4 - 5 for installation data and lever arm specifications.

MODEL SELECTION CHART

Valve Action	Mounting Details	Catalog Model No.
3-Way Multi-Purpose Dirt-proof and Splashproof	Complete Valve On Sub-plate, No Conduit Adapter	LR3-0201
	Valve Unit Only - No Sub-plate, No Conduit Adapter	LR3-0001
4-Way Single Inlet-Open Exhaust Dirt-proof	Complete Valve On Sub-plate, No Conduit Adapter	LR4-0201
	Valve Unit Only - No Sub-plate, No Conduit Adapter	LR4-0001
5-Port Multi-Purpose Dirt-proof and Splashproof	Complete Valve On Sub-plate, No Conduit Adapter	LR5-0201
	Valve Unit Only - No Sub-plate, No Conduit Adapter	LR5-0001
*Conduit Adapters	For LR3 and LR4, All Models	205-100A
	For LR5 Models Only.	205-132A

*REMINDER: Conduit Adapters are an optional accessory. You must order them separately.

Also, operating levers are not included in any of the above model numbers, order them separately from page N-4.

SERIES LR "SENTINEL" LIMIT VALVES
LEVER ARMS AND
INSTALLATION DATA

Top Dimension = Inches
Bottom Dimension (In Parentheses) = Millimeters

ROLLER LEVER - ADJUSTABLE
SMALL NYLON ROLLER
216-104A

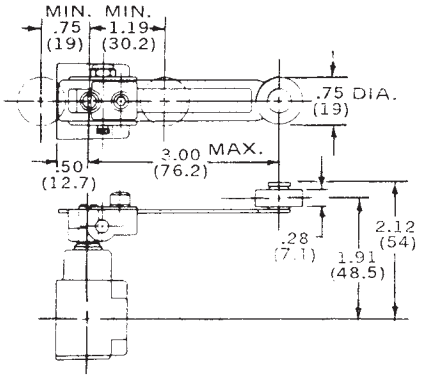

ROLLER LEVER -
NYLON ROLLER
216-101A

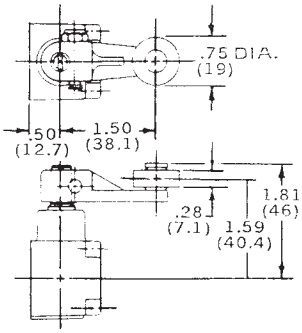

ROLLER LEVER -
STEEL ROLLER
216-102A

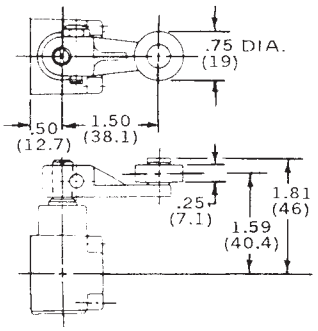

CAM DESIGN CHART:

This chart is a FULL SCALE layout of the movements required to actuate a "Sentinel" limit through the various segments of its travel, superimposed on a grid of .25" (6.3 mm) squares.

The small circles represent the .75" (19 mm) diameter rollers of the standard operating levers. The inner group of circles is the path followed by the roller of all short lever operators (1.50", 38.1 radius). The outer group of circles is the path followed by long lever operators (3.00", 76.2 mm radius).

Thus, you can count squares (or scale it off) and find the vertical and horizontal travel your cam must provide to actuate the valve properly.

If your lever radius or roller diameter are nonstandard, you can draw your lever and roller on a piece of tracing paper, stick a pin through its center and the pivot point of the chart, and rotate the tracing paper around the pin. This will indicate the path your lever must follow and the linear travel needed.

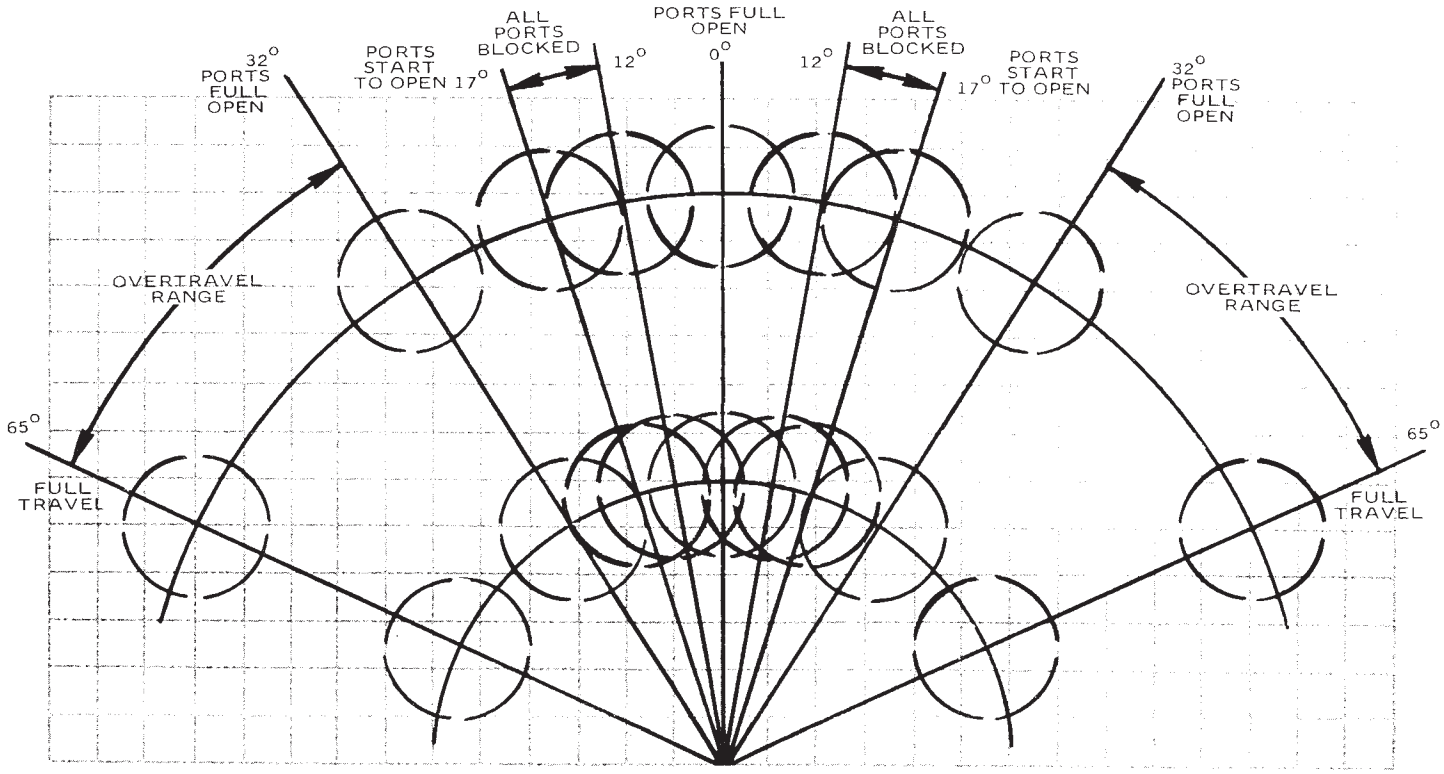

FULL SIZE CHART - ¼" SQUARE GRID

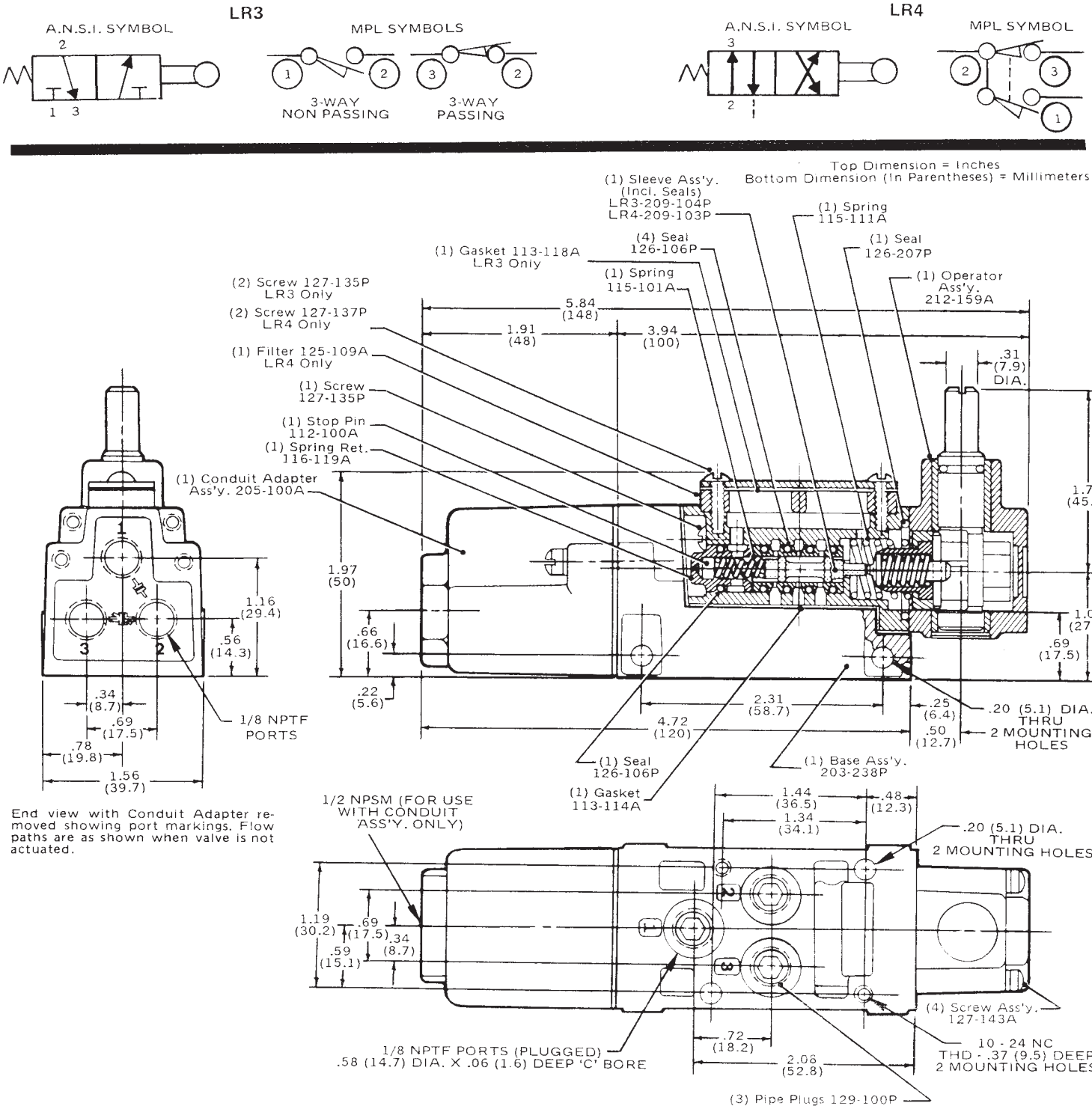

End view with Conduit Adapter removed showing port markings. Flow paths are as shown when valve is not actuated.

HOW TO ADJUST THE OPERATING LEVER:

On the bearing housing of the turret head are three register marks. To check whether the valve is being actuated fully, make a pencil mark on the operator opposite one of the register marks.

If the operator is NOT on the cam, make the mark opposite the center register mark. Then watch this mark as the cam actuates the valve. If the mark moves to or beyond either of the other register marks, the valve is being actuated fully.

If the operator is ON the cam, make the mark opposite the left or right register mark (depending on which way the cam has moved the lever arm). Then, as the cam releases the lever arm, the mark will move toward the center register mark. If it moves to or beyond the center mark, the valve is being actuated fully.



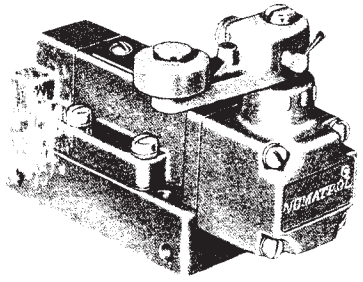

A.N.S.I. SYMBOL

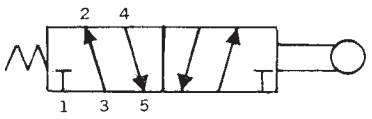

LR5

MPL SYMBOLS

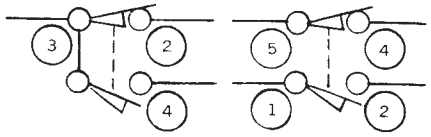

COMMON SUPPLY INDIVIDUAL SUPP

Top Dimension = Inches
Bottom Dimension (In Parentheses) = Millimeters

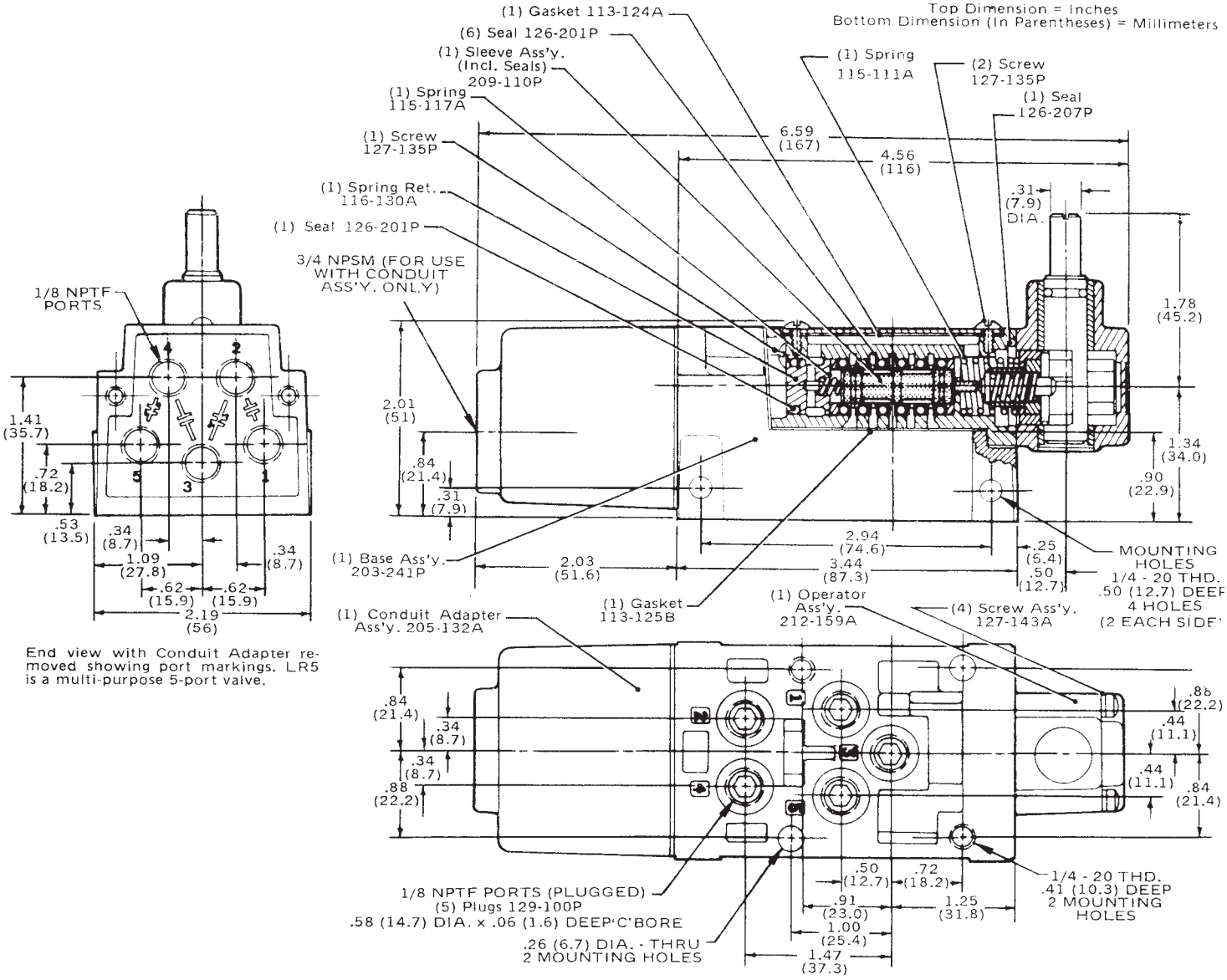

End view with Conduit Adapter removed showing port markings. LR5 is a multi-purpose 5-port valve.

"SENTINEL" LIMIT VALVE OPERATING HEADS CAN BE ROTATED TO FOUR POSITIONS AND THE DIRECTION OF OPERATION CHANGED FROM UNIVERSAL TO "CW" ONLY OR "CCW" ONLY, AS SHOWN BELOW.

TO TURN OPERATING HEAD

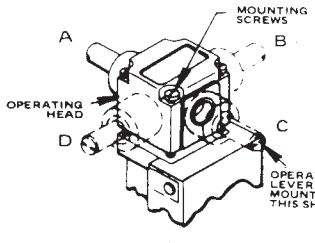

FIG. 1

SENTINEL VALVES ARE FACTORY ASSEMBLED IN THE "A" POSITION.

TO ROTATE HEAD

1. REMOVE THE 4 MOUNTING SCREWS
2. TURN HEAD TO REQUIRED POSITION. (NO NEED TO LIFT HEAD, JUST TURN.)
3. REPLACE THE MOUNTING SCREWS.

DIRECTION OF OPERATION



SENTINEL LIMIT VALVES ARE FACTORY ASSEMBLED TO BE OPERATED IN BOTH DIRECTIONS (UNIVERSAL).

THEY CAN BE CHANGED TO

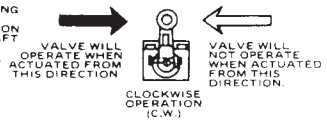

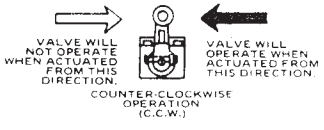

TO CHANGE DIRECTION OF OPERATION

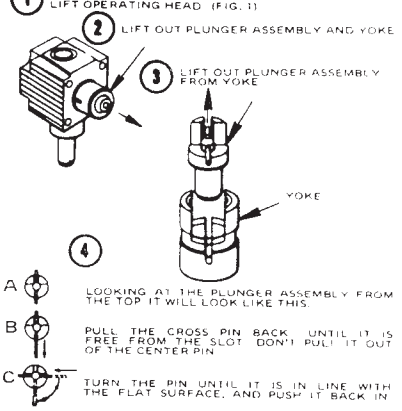

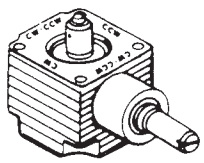

5 PUT THE PLUNGER BACK INTO THE YOKE, AND PLACE THE WHOLE ASSEMBLY BACK INTO THE OPERATOR HEAD. POSITION IT SO THAT THE DOT ON THE PLUNGER POINTS TO THE "C.W." OR "C.C.W." MARKED ON THE HEAD.

6 REPLACE THE OPERATOR HEAD ON THE VALVE, WHICH WILL NOW OPERATE "C.W." OR "C.C.W." AS SELECTED.

BE SURE YOU HAVE REPLACED THE "O" RING SEAL AND THE RETURN SPRING.

TAB 2



PHOENIX

PHOENIX Process Equipment Company
2402 Watterson Trail
Louisville, KY 40299
(502) 499-6198
(502) 499-1079 Fax

SECTION 4 COMPONENTS

TRACKING AIR CYLINDER SPECIFICATIONS

PHOENIX Part #:	PTS-CH280-LC8
Type:	Double acting
Housing Type:	Stainless Steel
Bore:	2″
Stroke:	2″
Mounting:	Clevis Mount (MP-2)
Pressure rating:	200 PSIG
Temperature Range:	0^0 F TO $+160^0$ F
Air Consumption:	0.005 S.C.F./S.

INSTALLATION AND SERVICE INFORMATION

TABLE OF CONTENTS	PAGE NO.
Description, Warning	1
Installation	1
Standard & Special Repair Kits (1-1/2" – 6" Bore)	2
Operation	3
Standard Specifications	3
Adjustments	3
General Maintenance & Repair Recommendations	3
Parts List & Assembly Drawing (1-1/2" – 4" Bore)*	4
Parts List & Assembly Drawing (1-1/2"—4" Bore)**	5
Major Repair, Maintenance, and Testing (1-1/2" – 4" Bore)	6
Basic Cylinder Parts List & Assembly Drawing (5" & 6" Bore)	7
Major Repair, Maintenance & Testing (5" & 6" Bore)	8
Double Rod Cylinder Assembly Drawings (All Bores)	9

GENERAL INFORMATION

DESCRIPTION

Taskmaster Pre-Lubricated Pneumatic cylinders are available in 1-1/2″ - 6″ bores. The basic cylinder is furnished with an MS4 side tapped mount, with up to 12 additional NFPA mountings available. The popular mounting kits can be assembled to the basic cylinder on the 1-1/2″ - 4″ bore. Most mounting kits should be ordered separately from the cylinder. Basic cylinder part numbers, mounting kit and accessory part numbers for 1-1/2″ - 4″ bore cylinders are listed on the catalog pages. The available mounting kits for 1-1/2″ - 4″ bore are MS4 (basic), MF1, MF2, MP1, MP2, MP4, MS1, MS2, MT1, MX1, 2, 3, & 4. The current generation of 1-1/2" – 4" bore cylinders begin with "TM" part numbers. Part numbers beginning "TM-8" are replacement for the original "P" number cylinders. Part numbers beginning with "TM-1" match NFPA standards for rod and port dimensions.

The 5″ and 6″ bore cylinders are ordered with the desired mount. Part numbers for cylinders and accessories are listed on the catalog pages. The available mounts are: MS4, MF1, MF2, MF5, MF6, MP2, MS1, MX1, 2, 3, & 4. Double rod models are available in all bore sizes.

Double rod models are available in all bore sizes.

WARNINGS – INSTALLATION AND MOUNTING

The user of these devices must conform to all applicable electrical, mechanical, piping and other codes in the installation, operation or repair of these devices.

INSTALLATION! Do not attempt to install, operate or repair these devices without proper training in the technique of working on pneumatic systems and devices, unless under trained supervision. Compressed air systems contain high levels of stored energy. Do not attempt to connect, disconnect or repair these products when a system is under pressure. Always exhaust the pressure from an air system before performing any service work. Failure to do so can result in serious personal injury.
Disconnect the electrical power supply before connecting or servicing a solenoid operated valve.

MOUNTING! Devices should be mounted and positioned in such a manner that they cannot be accidentally operated.

INSTALLATION

Outline dimensions for installation of basic cylinders, mounting kits, and cylinder accessories are shown on the catalog pages. Port sizes are shown on standard specification chart on page 3.
Before mounting the cylinder, all air lines in the system should be blown clean to remove any harmful dirt or moisture. To prevent corrosion and an accumulation of foreign matter in the cylinder, a 10 MICRON or better filter (see catalog SC-500), should be installed in the supply line to the cylinder control valve.

Teflon-coated piston and rod seals plus factory pre-lubrication, eliminates the need for air line lubrications. (However, lubricators can be used if desired). A complete selection of air line lubricators are described in catalog SC-500.

A very important consideration in mounting the Taskmaster cylinder is keeping the cylinder thrust as close as possible to the centerline of the piston rod and free of misalignment or side loading. Off-center thrust or side loads decrease the normal life of the rod bearing and seals, and can cause binding in the cylinder or linkage. Forcing rod, clevis pins, or mounting bolts into position indicates that the cylinder is not properly aligned, and permanent damage may result from such installation

*For part numbers beginning with "TM" and date code of L10-00 or later.
**For part numbers beginning with "P"

Note: For "TM" part numbers with date code prior to L10-00 contact factory.

Rexroth
Bosch Group

REPAIR KITS AND PARTS

ROD CARTRIDGE KIT (see Note 1)

Bore	Rod Size	Part Number	Seals
1-1/2, 2 and 2-1/2	5/8"	P -068148-K0000 P -062711-K0000	(Std.) (Viton)
3-1/4 and 4	1"	P -068149-K0000 P -068959-K0000	(Std.) (Viton)
5	1" 1-3/8"	P -067968-K0001 P -067969-K0001	(Std*) (Std*)
6	1-3/8" 1-3/4"	P -067970-K0001 P -067971-K0001	(Std*) (Std*)

Note 1: Part no. starting with "P", or "TM" with date code of L10-00 or later.

ROD CARTRIDGE KIT (see Note 2)

Description	Part Number
1 1/2" bore, 5/8" rod, cushion @2	P -031047-00000
1 1/2" bore, 5/8" rod, non-cushioned	P -031047-00001
2" bore, 5/8" rod, cushion @2	P -031048-00000
2" bore, 5/8" rod, non-cushioned	P -031048-00001
2 1/2" bore, 5/8" rod, cushion @2	P -031049-00000
2 1/2" bore, 5/8" rod, non-cushioned	P -031049-00001
3 1/4" bore, 1" rod,cushion @2	P -031050-00000
3 1/4" bore, 1" rod, non-cushioned	P -031050-00001
4" bore, 1" rod, cushion @2	P -031051-00000
4" bore, 1" rod	P -031051-00001

Note 2: For part no. starting with "TM" with date code of L09-00 or before. Standard seals, with ports @1.

CUSHION KIT

Description	Part Number	See Note	Rod
1-1/2"	P -028905-K0000	Note 1	n/a
2, 2-1/2"	P -068146-K0000	Note 1	n/a
3-1/4", 4"	P -068147-K0000	Note 1	n/a
5"	P -067964-K0000	Note 1	n/a
6"	P -067965-K0000	Note 1	n/a
1-1/2", Buna	TM-705006-00000	Note 2	5/8"
1-1/2", Viton	TM-705007-00000	Note 2	5/8"
2",2.5", Buna	TM-705008-00000	Note 2	5/8", 1"
2", 2-1/2", Viton	TM-705009-00000	Note 2	5/8", 1"
3-1/4", 4", Buna	TM-710008-00000	Note 2	1", 1 3/8"
3-1/4", 4", Viton	TM-710009-00000	Note 2	1", 1 3/8"

CYLINDER LUBE GREASE

Description	Part Number
5cc Tube	P -048311-00001
5 oz. Tube	P -048311-00003
Food Service Usage, Nordstrom 234 (BTR) 5 oz. Tube	P -048310-00003

The cylinder is pre-lubricated at the factory. However, when replacing seals, lubricate all rubber parts with cylinder lube grease.

PISTON & TUBE SEAL KITS
Standard Cylinders (repairs all versions)

Bore	Part Number Std. tube seals	Part Number Viton tube seals
1-1/2"	P -068150-K0002	P -027460-K0002
2"	P -068151-K0002	P -027114-K0002
2-1/2"	P -068152-K0002	P -026368-K0002
3-1/4"	P -068153-K0002	P -068153-K0005
4"	P -068154-K0002	P -068154-K0005
5"	P -067966-K0002	
6"	P -067967-K0002	

PISTON & TUBE SEAL KITS
Magnetic (original version only)
(Magnets not included)

Bore	Part Number
1-1/2"	P -069519-K0002
2"	P -069520-K0002
2-1/2"	P -069521-K0002
3-1/4"	P -069522-K0002
4"	P -069523-K0002

TUBES (repairs all versions)

Bore	Part Number
1-1/2"	P -057266-…..
2"	P -057185-…..
2-1/2"	P -057267-…..
3-1/4"	P -057268-…..
4"	P -057269-…..
5"	P -067934-…..
6"	P -067935-…..

MAGNETIC PISTON KIT *

Bore	Part Number
1-1/2"	P -069519-K0001
2"	P -069520-K0001
2-1/2"	P -069521-K0001
3-1/4"	P -069522-K0001
4"	P -069523-K0001

*Replacement only, for orig. design Taskmaster. Includes Magnetic piston, followers, seals and magnets.

PISTON KITS

Bore	Part Number	Note
1-1/2"	P -030916-K0000	Note 3
2"	P -030920-K0000	Note 3
2-1/2"	P -030921-K0000	Note 3
3-1/4"	P -030922-K0000	Note 3
4"	P -030923-K0000	Note 3
5"	P -067966-K0000	n/a
6"	P -067967-K0000	n/a

Note 3: TM part nos. only, L10-00 or later.

1 1/2” – 6” Bore General Information

OPERATION
Air pressure supplied to the cap-end port moves the piston rod to its extended position. Pressure supplied to the head end port moves the piston rod to its retracted position. See the catalog for forces developed by each cylinder.

STANDARD SPECIFICATIONS
BORE SIZES
NFPA standard, 1-1/2”, 2”, 2-1/2”, 3-1/4”, 4”, 5”, & 6”

PRESSURE RATING
200 PSI air

TEMPERATURE RANGE
0°F to 160°F ambient

STROKES
Standard strokes furnished to nearest 1/8″. Normal stroke tolerance +/ - 1/16″. Closer stoke tolerances available; consult factory.

MOUNTINGS
Basic mountings plus 12 additional NFPA mountings.

CUSHIONING
Optional on both ends for all bore sizes.

PRE-LUBRICATED DESIGN
Teflon-coated piston and rod seals plus factory pre-lubrication eliminates the need for air line lubrication.

ROD END THREADS
KK2 male thread is standard for 1-1/2″-- 4″ bores for “TM-8” and “P” part numbers.
KK1 male thread is standard for 1-1/2” – 4” bores for “TM-1” part numbers.
KK1 male thread is standard for 5″ and 6″ bore.
KK1 female, KK1 (studded) male and either KK1 or KK2 male are optional on all bore sizes.

PISTON ROD
Chrome-plated, high carbon steel polished to 15 microfinish. Stainless steel (316/303) available for maximum corrosion resistance. Oversize rods are available on “TM-1” models of 1-1/2” – 4” bores and on 5” and 6” bores.

TUBE
Hard anodized extruded aluminum for lightweight, high strength and maximum corrosion resistance used in 1-1/2″ - 4″. Seamless aluminum tubing used in 5″ and 6″ bore.

PORTS
NPTF dryseal tapered threads. Available only in sizes shown.

BORE	NPTF*	NPTF**
1-1/2″, 2″, 2-1/2″	1/4-18	3/8-18
3-1/2″, 4″	3/8-18	1/2-14
5″	1/2-14	
6″	3/4-14	

*For “TM-8” or “P” part numbers.
**For “TM-1” part numbers.

CYLINDER WEIGHTS*

BORE SIZE	ROD SIZE	CYLINDER WEIGHT ZERO STROKE (POUNDS)	ADDITIONAL WEIGHT PER INCH OF STROKE (POUNDS)
1-1/2″	5/8	1.65	0.205
2″	5/8	2.50	0.250
2-1/2″	5/8	3.54	0.280
3-1/4″	1	7.00	0.450
4″	1	9.87	0.548
5″	1	10.70	0.640
5″	1-3/8	11.50	0.840
6″	1-3/8	15.60	0.880
6″	1-3/4	16.90	1.140

*Weights based on standard (first) rod sizes.

ADJUSTMENT

An adjustable needle valve is furnished as an integral part of the head and cap on all cushioned cylinders. This needle valve controls the rate at which trapped air is allowed to vent from the head or cap. Turn the needle valve clockwise to increase the amount of cushioning and counterclock-wise to decrease the amount of cushioning.

GENERAL MAINTENANCE & REPAIR RECOMMENDATIONS

Maintenance periods should be scheduled in accordance with frequency of use and working environment of the cylinder. All cylinders must be visually inspected for wear and given an “in system” operating performance and leakage test at least once a year. If these visual observations indicate cylinder repair is required, the cylinder must be removed, repaired and tested.

A major overhaul is recommended at one million cycles. However, where frequency of use is such that it would require more than two years to obtain one million cycles, the cylinder must be overhauled at the two year period.

When it is determined that the cylinder requires a major repair as a result of the one million cycles, one year routine inspection, or the two year service period has elapsed, the device must be disassembled, cleaned, inspected, parts replaced as required, rebuilt and tested for leakage, and proper operation prior to installation. Refer to MAJOR REPAIR, MAINTENANCE INSTRUCTION, and TEST PROCEDURES, pages 6 and 8.

Rexroth
Bosch Group

1 1/2" - 4" BORE SIZE BASIC CYLINDER PARTS LIST

(For part numbers beginning with "TM" and date code of L10-00 or later.)

BASIC MS4 PARTS LIST - SINGLE ROD MODEL*

REF.	QTY.	DESCRIPTION	1.5"	2"	2.5"	3.25"	4"
1	4	Screw, Head	P -069215-00001	P -069215-00003	P -069215-00003	P -069215-00005	P -069215-00005
2	1	Head, TM-8 Cyl	P -030900-01020	P -030902-01020	P -030904-01020	P -030906-01020	P -030908-01020
		Head, TM-1 Cyl, Standard Rod	P -030939-01020	P -030941-01020	P -030943-01020	P -030945-01020	P -030947-01020
		Head, TM-1 Cyl, Oversize Rod	P -030949-01020	P -030950-01020	P -030951-01020	P -030952-01020	P -030953-01020
		Rod Cartridge Kit, Standard Rod	P -068148-K0000	P -068148-K0000	P -068148-K0000	P -068149-K0000	P -068149-K0000
		Rod Cartridge Kit, Oversize Rod	P -030893-K0000	P -030893-K0000	P -030893-K0000	P -067969-K0001	P -067969-K0000
3	1	Retaining Ring	Each	Each	Each	Each	Each
4	1	Rod Bearing	Repair Kit	Repair Kit	Repair Kit	Repair Kit	Repair Kit
5	1	Rod Wiper	Includes Ref.	Includes Ref.	Includes Ref.	Includes Ref.	Includes Ref.
6	1	Rod Seal	3, 4, 5 & 6	3, 4, 5 & 6	3, 4, 5 & 6	3, 4, 5 & 6	3, 4, 5 & 6
7	2	Cushion Kit (w/ needle valve)	P -028905-K0000	P -068146-K0000	P -068146-K0000	P -068147-K0000	P -068147-K0000
8	2	Tube Seal O-Ring	P -068150-K0002	P -068151-K0002	P -068152-K0002	P -068153-K0002	P -068154-K0002
9	1	Piston Rod Seal	Repair Kit	Repair Kit	Repair Kit	Repair Kit	Repair Kit
10	2	Piston Seal	Includes Ref.	Includes Ref.	Includes Ref.	Includes Ref.	Includes Ref.
11	1	Piston Wear Strip	8, 9, 10 & 11	8, 9, 10 & 11	8, 9, 10 & 11	8, 9, 10 & 11	8, 9, 10 & 11
		Piston Kit, Standard Rod	P -030916-K0000	P -030920-K0000	P -030921-K0000	P -030922-K0000	P -030923-K0000
		Piston Kit, Oversize Rod	P -030916-K0001	P -030920-K0001	P -030921-K0001	P -030922-K0001	P -030923-K0001
12	1#	Piston Magnet	Each Repair	Each Repair	Each Repair	Each Repair	Each Repair
13	2	Piston Follower	Kit Includes Ref.	Kit Includes Ref.	Kit Includes Ref.	Kit Includes Ref.	Kit Includes Ref.
14	1	Retaining Nut f/ Piston and Rod	8, 9, 10, 11, 12, 13 & 14	8, 9, 10 & 11 12, 13 & 14	8, 9, 10 & 11 12, 13 & 14	8, 9, 10 & 11 12, 13 & 14	8, 9, 10 & 11 12, 13 & 14
15	1	Piston Rod, Male					
		Std Rod, KK1 Thread	P -030983-§…	P -030983-§…	P -030983-§…	P -030989-§…	P -030989-§…
		Std Rod, KK2 Thead	P -030915-§…	P -030915-§…	P -030915-§…	P -057301-§…	P -057301-§…
		Oversize Rod, KK1 Thread	P -030986-§…	P -030986-§…	P -030986-§…	P -030992-§…	P -030992-§…
15a	1	Piston Rod, Female					
(not shown)		Std Rod, KK1 Thread	P -030958-§…	P -030958-§…	P -030958-§…	P -030991-§…	P -030991-§…
		Oversize Rod, KK1 Thread	P -030961-§…	P -030961-§…	P -030961-§…	P -030994-§…	P -030994-§…
16	1	Male Stud (f/ use with Ref. 15a)					
(not shown)		7/16-20 UNF-2A Thread	P -049599-00000	P -049599-00000	P -049599-00000	N/A	N/A
		3/4-16 UNF-2A Thread	P -049599-00002	P -049599-00002	P -049599-00002	P -049599-00002	P -049599-00002
		1-14 UNS-2A Thread	N/A	N/A	N/A	P -049599-00004	P -049599-00004
17	1	Tube, Cylinder Body	P -057266-§…	P -057185-§…	P -057267-§…	P -057268-§…	P -057269-§…
18	1	Cap, TM-8 Cyl	P -030901-00102	P -030903-00102	P -030905-00102	P -030907-00102	P -030909-00102
		Cap, TM-1 Cyl	P -030940-00102	P -030942-00102	P -030944-00102	P -030946-00102	P -030948-00102
19	4	Screw, Cap	P -069215-00000	P -069215-00002	P -069215-00002	P -069215-00004	P -069215-00004

* Order repair parts for double rod cylinders by description and complete cylinder part number. See page 9 for assembly drawing.

§ Specify this part number of piston rod (15 or 15a) or tube (17) PLUS the 4-digit suffix from cylinder part number on nameplate.

2" and 2.5" bores have three magnets.

*Single Rod Model



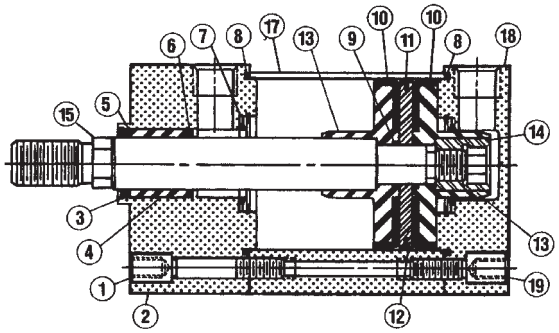

Rexroth
Bosch Group

1 1/2" - 4" BORE SIZE BASIC CYLINDER PARTS LIST
(For part numbers beginning with "P")

BASIC MS4 PARTS LIST — SINGLE ROD MODEL *

REF.	QTY.	DESCRIPTION	PART NUMBER BY BORE SIZE				
			1-1/2"	2"	2-1/2"	3-1/4"	4"
1	4	Screw, Head	P -069215-00001	P -069215-00003	P -069215-00003	P -069215-00005	P -069215-00005
2	1	Head (w/needle valve assembly)	P -057482-K0010	P -057482-K0011	P -057482-K0012	P -057482-K0013	P -057482-K0014
3	1	Retaining Ring, Rod Bearing	P -068148-00000	P -068148-00000	P 068148-00000	P -068149-00000	P -068149-00000
4	1	Rod Bearing	Repair Kit	Repair Kit	Repair Kit	Repair Kit	Repair Kit
5	1	Rod Wiper	Includes Ref.	Includes Ref.	Includes Ref.	Includes Ref.	Includes Ref.
6	1	Rod Seal	3, 4, 5, & 6	3, 4, 5, & 6	3, 4, 5, & 6	3, 4, 5, & 6	3, 4, 5, & 6
7	2	Cushion Kit	P -028905-K0000	P -068146-K0000	P -068146-K0000	P -068147-K0000	P -068147-K0000
8	2	Tube Seal O-ring	P -068150-K0002	P -068151-K0002	P -068152-K0002	P -068153-K0002	P -068154-K0002
9	1	Piston Rod Seal	Repair Kit	Repair Kit	Repair Kit	Repair Kit	Repair Kit
10	2	Piston Seal	Includes Ref.	Includes Ref.	Includes Ref.	Includes Ref.	Includes Ref.
11	1	Piston Wear Ring	8, 9, 10, & 11	8, 9, 10, & 11	8, 9, 10, & 11	8, 9, 10, & 11	8, 9, 10, & 11
12	1	Piston	P -067828-00000	P -067828-00001	P -067828-00002	P -067828-00003	P -067828-00004
13	2	Follower, Piston	P -057190-00001	P -057190-00000	P -057190-00002	P -057302-00000	P -057319-00000
14	1	Retaining Nut, Piston, Rod	P -057480-00000	P -057480-00000	P -057480-00000	P -057480-00002	P -057480-00001
15	1	Piston Rod, Male					
		1/2"-20 Thread	P -057188-†…	P -057188-†…	P -057188-†…	—	—
		7/8"-14 Thread	—	—	—	P -057301-00000	P -057301-00000
15a	1	Piston Rod, Female					
		7/16"-20	P -057243-†…	P -057243-†…	P -057243-†…	—	—
		3/4"-16 Thread	—	—	—	P -057310-†…	P -057310-†…
16	1	Male Stud (use with ref. 15a)					
		7/16"-20 Thread	P -049599-00000	P -049599-00000	P -049599-00000	—	—
		3/4"-16 Thread	—	—	—	P -049599-00002	P -049599-00002
17	1	Tube, Body	P -057266-†…	P -057185-†…	P -057267-†…	P -057268-†…	P -057269-†…
18	1	Cap (w/needle valve assembly)	P -057482-K0001	P -057482-K0003	P -057482-K0005	P -057482-K0007	P -057482-K0009
19	4	Screw, Cap	P -069215-00000	P -069215-00002	P -069215-00002	P -069215-00004	P -069215-00004

* Order repair parts for double rod cylinders by description and complete cylinder part number. See page 9 for assembly drawing.
† Specify this part number of piston rod (15) or tube (17) **PLUS** the 4-digit suffix from cylinder part number as shown on nameplate.

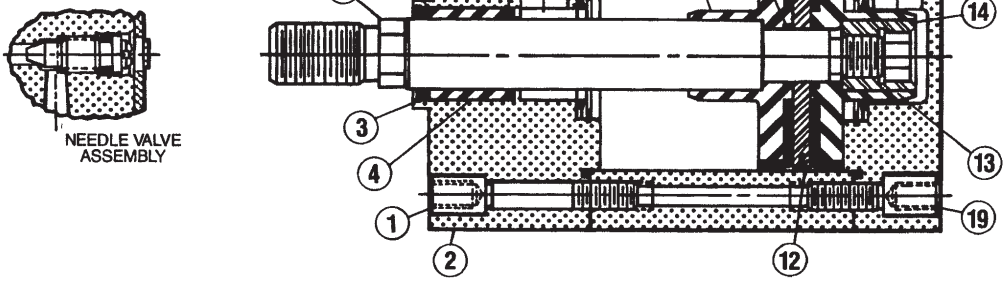

SINGLE ROD MODEL★

1–1/2″ - 4″ BORE
MAJOR REPAIR, MAINTENANCE & TESTING

MAJOR REPAIR &
MAINTENANCE INSTRUCTION

When it is determined that the cylinder requires shop repairs (see page 3 for GENERAL MAINTENANCE AND REPAIR RECOMMENDATIONS), the following general instructions are recommended.

DISASSEMBLY, CLEANING & LUBRICATION

Follow warnings on page 1. Disconnect air lines from head and cap ports of cylinder. Completely disassemble the cylinder using the assembly views as reference. No special tools are required except internal snap ring pliers and hex wrench set to remove retaining rings, retaining nut, head & cap screws. A 5/32 socket wrench is required to remove needle valve retainer plate (present on older models).

1. Remove head & cap screws.
2. Remove head & cap.
3. Remove piston rod assembly. To disassemble piston rod, clamp piston rod across flats in soft jaws to remove piston retaining nut. Retaining nut is retained to piston rod with LOCTITE R/C 35.
4. Remove internal retaining rings to remove rod cartridge and cushion kits from head and cap.
5. Remove hex head screws and retainer plate to remove needle valve assembly.

Wash all metal parts in a nonflammable solvent. Rinse each part thoroughly and blow dry with a low pressure air jet. Arrange the parts on a clean surface. Examine each part carefully. Replace all rubber parts and all other worn or damaged parts. The use of REPAIR KITS is strongly recommended, see page 2.

REASSEMBLY

The procedure for reassembly is essentially the reverse of disassembly. However, the following exceptions should be noted:

1. All O-rings should be well coated with Cylinder Lube grease as they are installed in their respective grooves and prior to reassembly with the mating part. (**NOTE:** For FOOD SERVICE USE, use NORDSTROM Grease; see page 2.) Care must be taken when assembling O-rings and packings that they are not damaged, as this will cause leakage.
2. Assemble the piston followers, piston, and piston seals to the piston rod less lubricant. The piston retaining nut should be assembled with LOCTITE retaining compound R/C 35 and torqued as shown on torque specification chart with the piston rod clamped in soft jaws.
3. Reassemble the cylinder using the assembly views as reference. Pay particular attention to the installation of the cushion kit (ref. 7) to insure that the tapered rubber surface marked “THIS SIDE UP” faces to the inside (piston side) of the cylinder. As the assembly proceeds, lubricate the piston seals, cushion seals, rod seal, tube, and the tube seals with Cylinder Lube grease.
4. Torque head and cap screws to torque specification shown on chart.

TESTING

After the cylinder has been completely reassembled, it should be tested, either on a test bench or in the regular installation.

TEST PROCEDURE

The cylinder should be tested for cushioning, travel and leakage.

A. CUSHIONING

1. Turn both cushioning screws clockwise all the way in.
2. Cycle cylinder a few times by alternating supply pressure to head and cap ports.
3. Apply supply pressure to the head port. Rod should retract, decelerate and may stop before completion of stroke.
4. Apply supply pressure to the cap port. Rod should extend, decelerate and may stop before completion of stroke.

B. TRAVEL AND LEAKAGE

1. Turn the cushioning screws counterclockwise one (1) full turn.
2. Apply supply pressure to the head port. Cylinder should have less cushioning and make full stroke + or -.062″. Check leakage at cap port, 30cc/min. leakage permitted. Check leakage around rod seal. No leakage permitted.
3. Apply supply pressure to the cap port. Cylinder should have less cushioning and make full stroke + or -.062″. Check leakage at head port. 30cc/min. leakage permitted.
4. Return piston rod to retract position by applying supply pressure to head port. Remove supply pressure and install cylinder in service if satisfactory.

CUSHION ADJUSTMENT

Turn the needle valve clockwise to increase the amount of cushioning and counter clockwise to decrease cushioning. To obtain the most effective cushioning, final adjustment must be made while the cylinder is operating under normal conditions at normal operating pressure.

TORQUE SPECIFICATIONS (foot pounds)

Piston Rod Nut:	
Rod Diameter 5/8”	10 Loctite R/C 35
Rod Diameters 1” & 1-3/8”	45 Loctite R/C 35
Head & Cap Screws:	
Bores 1-1/2” – 2-1/2”	8 Non-Lubricated
Bores 3-1/4” – 4”	10 Non-Lubricated

Rexroth
Bosch Group

5" & 6" BASIC CYLINDER PARTS LIST and ASSEMBLY DRAWING

BASIC MS4 PARTS LIST - SINGLE ROD MODEL*

REF.	QTY	DESCRIPTION	PART NUMBER BY BORE AND ROD SIZE			
			5" BORE		6" BORE	
			1" ROD	1- 3/8" ROD	1-3/8"	1-3/4" ROD
1	8	Nut, Tie Rod Lock	P -049605-00017	P -049605-00017	P -049605-00017	P -049605-00017
2	4	Tie Rod	P -067939-†…	P -067939-†…	P -067943-†…	P -067943-†…
3	1	Head (w/needle valve asmbly.)	P -067972-K0000	P -067972-K0000	P -067974-K0000	P -067974-K0000
4	1	Rod Bearing and Housing	P -067968-K0000	P- 067969-K0000	P -067970-K0000	P -067971-K0000
4a	1	Housing, Rod Bearing	P -067959-00000	P- 067960-00000	P- 067961-00000	P -067962-00000
4b	1	Retaining Ring, Housing	P -049882-K0004	P -049882-K0004	P -049882-00068	P -049882-00068
4c	1	Washer, Retaining Housing	P -049904-00089	- - -	P -049904-00090	- - -
4d	1	Bearing, Rod	P -067968-K0001	P -067969-K0001	P -067970-K0001	P -067971-K0001
4e	1	Seal, Rod	Repair Kit	Repair Kit	Repair Kit	Repair Kit
4f	1	Wiper, Rod	Includes Reference	Includes Reference	Includes Reference	Includes Reference
4g	1	Seal, Housing O-ring	4d, 4e, 4f & 4g	4d, 4e, 4f & 4g	4d, 4e, 4f & 4g	4d, 4e, 4f & 4g
5	2	Cushion Kit	P -067964-K0000	P -067964-K0000	P -067965-K0000	P -067965-K0000
6	1	Piston Assembly Complete	P -067966-K0000	P -067966-K0000	P -067967-K0000	P -067967-K0000
6a	1	Nut, Piston Retaining	P -049605-00018	P -049605-00018	P -049605-00006	P -049605-00006
6b	2	Piston, Half	P -067548-00000	P -067548-00000	P -067551-00000	P -067551-00000
6c	1	Rod Seal, Piston O-ring	P -067966-K0002	P -067966-K0002	P -067967-K0002	P -067967-K0002
6d	2	Piston Seal	Repair Kit	Repair Kit	Repair Kit	Repair Kit
6e	1	Piston Wear Ring	Includes Reference	Includes Reference	Includes Reference	Includes Reference
6f	2	Tube Seal, O-ring	6c, 6d, 6e, & 6f	6c, 6d, 6e, & 6f	6c, 6d, 6e, & 6f	6c, 6d, 6e, & 6f
7	1	Piston Rod Male	- - -	- - -	- - -	- - -
		3/4"-16 Thread	P -067947-†…	- - -	- - -	- - -
		7/8"-14 Thread	P -067948-†…	- - -	- - -	- - -
		1"-14 Thread	- - -	P -067950-†…	P -067953-†…	- - -
		1 1/4"-12 Thread	- - -	P -067951-†…	P -067954-†…	P -067956-†…
		1 1/2"-12 Thread	- - -	- - -	- - -	P -067957-†…
7a	1	Piston Rod Female	- - -	- - -	- - -	- - -
		3/4"-16 Thread	P -067949-†…	- - -	- - -	- - -
		1"-14 Thread	- - -	P -067952-†…	P -067955-†…	
		1-1/4"-12 Thread	- - -	- - -	- - -	P -067958-†…
8	1	Tube	P -067934†…	P -067934†…	P -067935†…	P -067935†…
9	1	Cap (w/needle valve asmbly.)	P -067973-K0000	P -067973-K0000	P -067975-K0000	P -067975-K0000

* Order repair parts for double rod cylinders by description and complete cyl. part number. See page 9 for assembly drawing.

† Specify this part number of tie rod (2) piston rod (7) or tube (8) **PLUS** the 4-digit suffix from cyl. part number on nameplate.

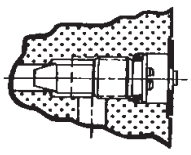

NEEDLE VALVE ASSEMBLY

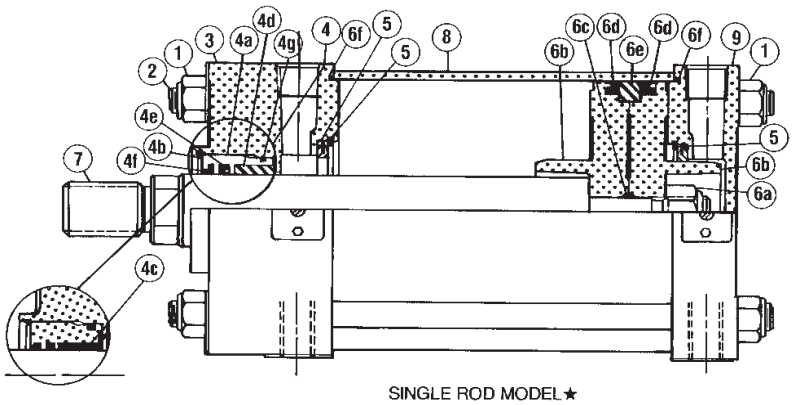

SINGLE ROD MODEL★

5″ - 6″ BORE
MAJOR REPAIR, MAINTENANCE & TESTING

MAJOR REPAIR AND MAINTENANCE INSTRUCTION

When it is determined that the cylinder requires shop repairs (see page 3 for GENERAL MAINTENANCE AND REPAIR RECOMMENDATIONS), the following general instructions are recommended.

DISASSEMBLY, CLEANING AND LUBRICATION

Follow warnings on page 1. Disconnect air lines from head and cap ports of cylinder.

Completely disassemble the cylinder using the assembly views as reference. No special tools are required except internal snap ring pliers to remove retaining rings. A 5/32 internal socket wrench is required to remove the needle valve retainer plate (present on older models).

1. Remove the tie rod nuts and tie rods.
2. Remove head and cap.
3. Remove piston rod assembly. To disassemble piston rod, clamp piston rod across flats in soft jaws before removing piston retaining nut. Retaining nut is torqued to piston rod.
4. Remove internal retaining rings in head and cap assemblies to remove the rod bearing cartridge and cushion kits.
5. Remove two hex head screws and retainer plate to remove valve assembly.

Wash all metal parts in a nonflammable solvent. Rinse each part thoroughly and blow dry with a low pressure air jet. Arrange the parts on a clean surface. Examine each part carefully. Replace all rubber parts and all other worn or damaged parts. The use of REPAIR KITS is strongly recommended, see page 2.

REASSEMBLY

The procedure for reassembly is essentially the reverse of disassembly. However, the following exceptions should be noted.

1. All O-rings should be well coated with Cylinder Lube grease as they are installed in their respective grooves and prior to reassembly with the mating part. (**NOTE:** For FOOD SERVICE USE, use NORDSTROM Grease; see page 2.) Care must be taken when assembling O-rings and packings that they are not damaged, as this will cause leakage.
2. Assemble the teflon wear ring, piston rod seal and piston follower on the piston rod. The wear ring and piston seals should be assembled less lubricant. The piston retaining nut should be assembled lubricated and torqued as shown on specification chart with piston rod clamped across flats in soft jaws.
3. Reassemble the cylinder using the assembly views as reference. Pay particular attention to the installation of the cushion kit (ref. 5) to insure that the tapered rubber surface marked “THIS SIDE UP” faces to the inside (piston side) of the cylinder. As the assembly proceeds, lubricate the piston seals, cushion seals, tube seals and tube with Cylinder Lube grease.
4. Tie rod threads should be well lubricated to allow tightening the nuts evenly for proper pre-stressing. To avoid twisting of the tie rods during tightening, hold with vise grip or clamp. To assure equal pre-stressing of the tie rods, first turn on nuts even and snug to align assembly, then the nuts are to be tightened alternately. For proper tie rod pre-stressing, they should be torqued as recommended.

TORQUE SPECIFICATIONS

CYL. BORE	ROD DIA.	TORQUE (FOOT POUNDS)	
		PISTON ROD NUT	TIE ROD NUT
5″	1″, 1-3/8″	60 Lubricated	30 Lubricated
6″	1-3/8″, 1-3/4″	120 Lubricated	30 Lubricated

TESTING

After the cylinder has been completely reassembled, it should be tested either on a test bench or in the regular installation.

TEST PROCEDURE

The cylinder should be tested for cushioning, travel and leakage.

A. CUSHIONING

1. Turn both cushioning screws clockwise all the way in.
2. Cycle cylinder a few times by alternating supply pressure to head and cap ports.
3. Apply supply pressure to the head port. Rod should retract, decelerate and may stop before completion of stroke.
4. Apply supply pressure to the cap port. Rod should extend, decelerate and may stop before completion of stroke.

B. TRAVEL AND LEAKAGE

1. Turn the cushioning screws counterclockwise one (1) full turn.
2. Apply supply pressure to the head port. Cylinder should have less cushioning and make full stroke + or -.062″. Check leakage at cap port, 30cc/min. leakage permitted. Check leakage around rod seal. No leakage permitted.
3. Apply supply pressure to the cap port. Cylinder should have less cushioning and make full stroke + or -.062″. Check leakage at head port. 30cc/min. leakage permitted.
4. Return piston rod to retract position by applying supply pressure to head port. Remove supply pressure and install cylinder in service if satisfactory.

Assembly Drawings for Double Rod Models

1-1/2" — 4" BORE
DOUBLE ROD MODEL

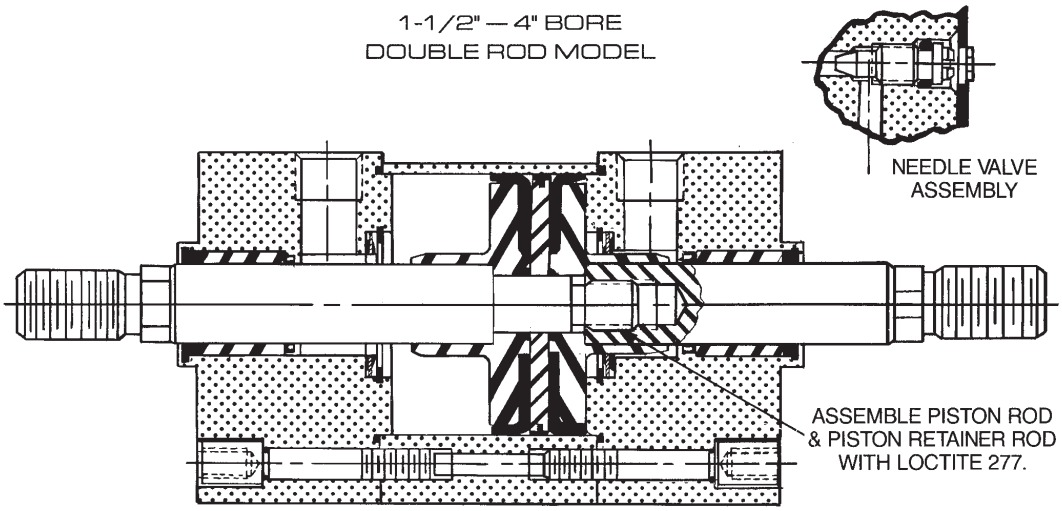

5" AND 6" BORE
DOUBLE ROD MODEL

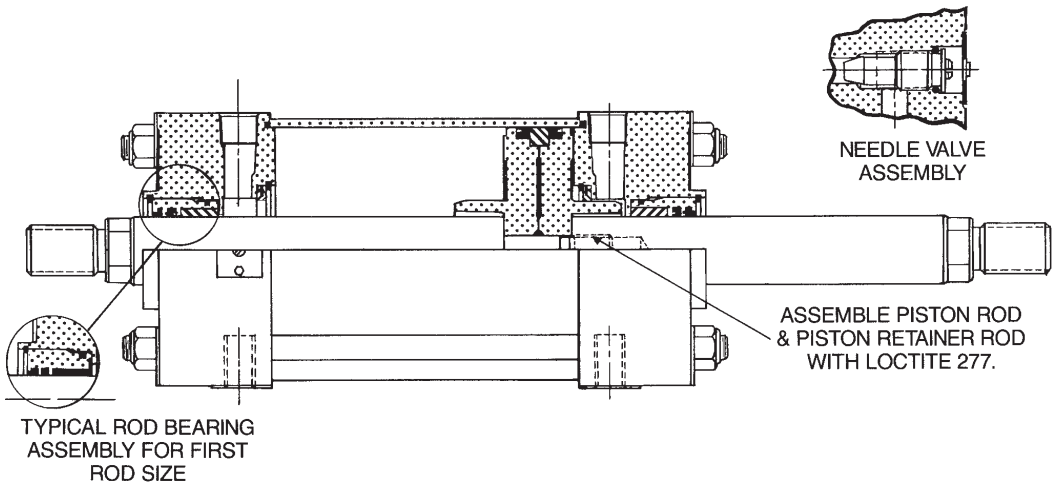

Bosch Rexroth Corporation
Pneumatics
1953 Mercer Road
Lexington, KY 40511
Tel (859) 254-8031
Fax (859) 254-4188/800-489-4188
Email info.pneumatics@boschrexroth-us.com
www.boschrexroth-us.com

©2001 Bosch Rexroth Corp.

TAB 3



PHOENIX

PHOENIX Process Equipment Company
2402 Watterson Trail
Louisville, KY 40299
(502) 499-6198
(502) 499-1079 Fax

SECTION 4 COMPONENTS

BELT TENSIONING

A single air cylinder connected to a pivoting roller and frame assembly, is used as a "universal tensioner". Retracting the cylinder tensions both belts simultaneously.

(See Figure 10)

Each belt is equipped with jack screws to allow adjustment for the length of the belt. (Figure 11) This arrangement allows the equipment to be set up so there is the correct amount of tension in each belt. The upper belt adjustment is above the gravity zone while the lower belt adjustment is on the inlet end of the press.

The belts should be checked during operation. If a "wave" forms in one of the belts in the high pressure Zone, the tension on that belt only, must be increased using the jackscrews or the tension on the other belt decreased. Failure to remove any waves or wrinkles immediately will result in permanent creasing & damage to the belt.

PHOENIX Process Equipment Company
2402 Watterson Trail
Louisville, KY 40299
(502) 499-6198
(502) 499-1079 Fax

SECTION 4 COMPONENTS

TENSIONING

NORMAL OPERATING POSITION

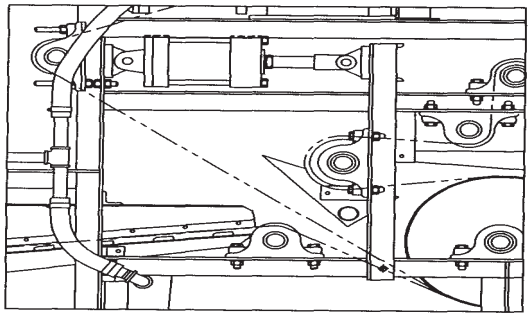

RETRACTS FOR TENSION

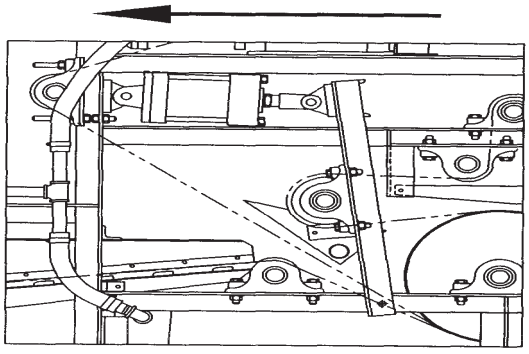

FIGURE 10.

PHOENIX Process Equipment Company
2402 Watterson Trail
Louisville, KY 40299
(502) 499-6198
(502) 499-1079 Fax

SECTION 4 COMPONENTS

TENSIONING

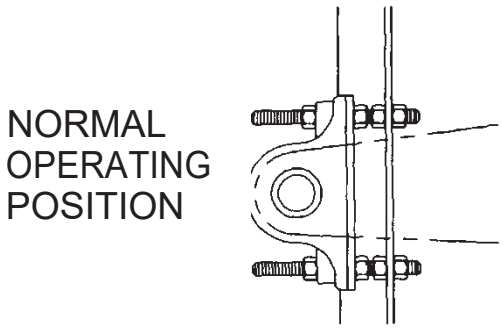

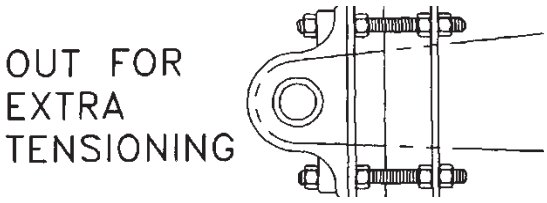

FIGURE 11.

TAB 4



PHOENIX

PHOENIX Process Equipment Company
2402 Watterson Trail
Louisville, KY 40299
(502) 499-6198
(502) 499-1079 Fax

SECTION 4 COMPONENTS

VARIABLE SPEED DRIVE SPECIFICATIONS-PRESS DRIVE

Gearbox:	SEW-Gearmotor
Model:	FA47/GDRN80M4/DH
Ratio:	68.09
Input RPM:	1435
Output RPM:	26
Oil Type:	Synthetic (Mobil or Equal)
Motor:	1.0 Hp 575V/60Hz/3PH
Motor Insulation:	Class H
Mounting Position:	M6 Mount, Conduit Box Location "270"
Serial Number:	87.7738146401.0001.19.50

Gearmotors and Gear Reducers

OPERATING INSTRUCTIONS

01 805 52 US

GENERAL

These operating instructions are intended to help you install and operate the drive. For trouble free service, proper installation and operation are essential. Additionally, these instructions contain important recommendations on maintenance.

Before shipment, every SEW-Eurodrive gear unit is tested, checked and properly packed. However, please inspect the drive immediately upon arrival for shortage or transit damage. Note the damage or shortage on the freight bill of lading and file a claim with the carrier. Also, notify SEW-Eurodrive of the shortage or damage.

LUBRICANTS

All gearmotors and gear reducers are supplied with the correct grade and quantity of lubricating oil for the specified mounting position. Exceptions include reducers shipped without input assemblies. The recommended lubricants are found on page 2.

LONG TERM STORAGE

If the drive is not installed immediately, it should be stored in a dry, protected area. If the drive is to be stored for an extended period of time and was not ordered from SEW for long term storage, contact your nearest SEW assembly plant for information on Long Term Storage.

Drives which are used for standby service should be stored as a sealed gearcase.

INSTALLATION OF COMPONENTS ON DRIVE SHAFTS

Do not hammer on the shafts. Hammering can cause brinelling of the reducer's bearings shortening the bearing life. We recommend heating the components to approximately 175°F (when possible) and sliding them on the shaft. This will reduce possible damage to the reducer's bearings.

For both standard and metric SEW shaft tolerances, refer to the SEW Catalog.

Shaft couplings should be properly aligned to prevent vibration, coupling wear, and premature failure of the shaft bearings.

To prevent the output shaft and bearings from being subjected to excessive loads, the maximum overhung load, as shown in SEW-Eurodrive catalogs, should not be exceeded. Please consult our engineering department if the load may exceed the recommended figure given or where there are combined radial and axial loads. In such cases, the exact operating conditions must be stated including speed, direction of rotation, position, magnitude and direction of the external radial and axial loads being applied.

SHAFT MOUNTED REDUCERS

SEW-Eurodrive supplies the recommended hollowshaft mounting paste with every hollowshaft reducer. The mounting paste is to be applied on the keyed output shaft. The mounting paste is to aid in the prevention of rusting and fretting corrosion between the reducer hollowshaft and the shaft of the driven machine. The mounting paste will aid in shaft removal when necessary.

Warning! Always ensure exposed, rotating parts are properly covered to ensure safety.

For additional information on shaft mounted reducers, drive shaft configuration and tolerances, refer to the SEW-Eurodrive Catalog.

INSTALLATION AND OPERATION

The drive installation site should be selected to ensure:

- Ambient temperatures below 40°C (104°F).
- Unimpeded flow of air to the motor and variable speed units.
- Accessibility to the drain, level and breather plugs.
- Adequate space for the removal of brakemotor fanguard for brake adjustment and maintenance.

The drive unit should be mounted on a flat, vibration damping, and torsionally rigid structure. Careful alignment is critical. Mounting to an uneven surface will cause housing distortion. The flatness tolerance of the supporting surface should not exceed:

- For gear units size 80 and smaller — 0.004 inch.
- For gear units above size 80 — 0.008 inch.

For transportation, the units are supplied with the breather plug already mounted. After the unit is installed, the black rubber seal located on the breather MUST BE REMOVED (Fig. 1). In addition, the oil level should be checked. Remove the plated (non-painted) oil level plug. The oil level is correct when the surface of the oil is level with the lowest point of that tapped hole, the exception is S37. Units W10, W20 and W30 are sealed in any position.

Fig. 1

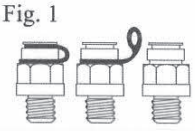

After installation, the actual mounting position should be confirmed against the mounting postion shown on the gear reducer nameplate. Adequate lubrication is only guaranteed if the unit is mounted in the specific nameplated mounting position.

Refer to the SEW Catalog if a specific mounting position diagram is needed.

MAINTENANCE

Warning! Always ensure equipment is secure and electrical power is off before removing or performing maintenance on the drive assembly. Oil levels and oil quality should be checked at regular intervals, determined by usage and the environment. Grease and oil should be changed per the recommendations on page 2. Check coupling alignment, chain or belt tension, and mounting bolt torque periodically. Keep the drive relatively free of dust and dirt.

SEW EURODRIVE

SOUTHEAST MANUFACTURING & ASSEMBLY CENTER
1295 Old Spartanburg Hwy, Lyman, SC 29365
(864) 439-7537 Fax: (864) 439-7830

SOUTHWEST ASSEMBLY CENTER
3950 Platinum Way, Dallas, TX 75237
(214) 330-4824 Fax: (214) 330-4724

MIDWEST ASSEMBLY CENTER
2001 West Main Street, Troy, OH 45373
(937) 335-0036 Fax: (937) 332-0038

EAST COAST ASSEMBLY CENTER
200 High Hill Road, Bridgeport, NJ 08014
(856) 467-2277 Fax: (856) 330-4724

WEST COAST ASSEMBLY CENTER
30599 San Antonio Road, Hayward, CA 94544
(510) 487-3560 Fax: (510) 487-6381

ISO 9002

LUBRICANTS

	6) °C -50 0 +50 +100	DIN (ISO)	ISO,NLGI	Mobil®	Shell	Klüber	ARAL	BP	Tribol	TEXACO	Optimol	FUCHS
R...	Standard -10 +40	CLP(CC)	VG 220	Mobilgear 630	Shell Omala 220	Klüberoil GEM 1-220	Aral Degol BG 220	BP Energol GR-XP 220	Tribol 1100/220	Meropa 220	Optigear BM 220	Renolin CLP 220
K...(HK...)	-25 +80	CLP PG	VG 220	Mobil Glygoyle 30	Shell Tivela WB	Klübersynth GH 6-220	Aral Degol GS 220	BP Enersyn SG-XP 220	Tribol 800/220	Synlube CLP 220	Optiflex A 220	
	4) -40 +80	CLP HC	VG 220	Mobil SHC 630	Shell Omala 220 HD	Klübersynth EG 4-220	Aral Degol PAS 220		Tribol 1510/220	Pinnacle EP 220	Optigear Synthetic A 220	Renolin Unisyn CLP 220
	4) -40 +40		VG 150	Mobil SHC 629		Klübersynth EG 4-150				Pinnacle EP 150		
F...	-20 +25	CLP (CC)	VG 150 VG 100	Mobilgear 627	Shell Omala 100	Klüberoil GEM 1-150	Aral Degol BG 100	BP Energol GR-XP 100	Tribol 1100/100	Meropa 150	Optigear BM 100	Renolin CLP 150
	-30 +10	HLP (HM)	VG 68-46 VG 32	Mobil D.T.E. 13M	Shell Tellus T 32	Klüberoil GEM 1-68	Aral Degol BG 46		Tribol 1100/68	Rando EP Ashless 46	Optigear 32	Renolin B 46 HVI
	4) -40 +10	CLP HC	VG 32	Mobil SHC 624		Klüber-Summit HySyn FG-32				Cetus PA 0 46		
	4) -40 -20	HLP (HM)	VG 22 VG 15	Mobil D.T.E. 11M	Shell Tellus T 15	Isoflex MT 30 ROT		BP Energol HLP-HM 10		Rando HDZ 15		
S...(HS...)	Standard 0 +40	CLP (CC)	VG 680	Mobilgear 636	Shell Omala 680	Klüberoil GEM 1-680	Aral Degol BG 680	BP Energol GR-XP 680	Tribol 1100/680	Meropa 680	Optigear BM 680	Renolin CLP 680
	-20 +60	CLP PG	VG 680 1)	Mobil Glygoyle HE 680		Klübersynth GH 6-680		BP Enersyn SG-XP 680	Tribol 800/680	Synlube CLP 680		
	4) -30 +80	CLP HC	VG 460	Mobil SHC 634	Shell Omala 460 HD	Klübersynth EG 4-460				Pinnacle EP 460		
	4) -40 +10		VG 150	Mobil SHC 629		Klübersynth EG 4-150				Pinnacle EP 150		
	-20 +10	CLP (CC)	VG 150 VG 100	Mobilgear 627	Shell Omala 100	Klüberoil GEM 1-150	Aral Degol BG 100	BP Energol GR-XP 100	Tribol 1100/100	Meropa 100	Optigear BM 100	Renolin CLP 150
	-25 +20	CLP PG	VG 220 1)	Mobil Glygoyle 30		Klübersynth GH 6-220			Tribol 800/220	Synlube CLP 220	Optiflex A 220	
	4) -40 0	CLP HC	VG 32	Mobil SHC 624		Klüber-Summit HySyn FG-32				Cetus PA 0 46		
R...,K...(HK...), F...,S...(HS...)	4) -30 +40	HCE	VG 460		Shell Cassida Fluid GL 460	Klüberoil 4UH1-460	Aral Eural Gear 460				Optileb GT 460	
	-20 +40	E	VG 460			Klüberbio CA2-460	Aral Degol BAB 460				Optisynt BS 460	
	Standard -20 +40	CLP PG	VG 460			Klübersynth UH1 6-460						
W...(HW...)	Standard -20 +40	SEW PG	VG 460 2)			Klüber SEW HT-460-5						
	4) -40 +10	API GL5	SAE 75W90 (-VG 100)	Mobilube SHC 75 W90-LS								
	-20 +40	CLP PG	VG 460 3)			Klübersynth UH1 6-460						
R32 R302	-25 +60	DIN 51 818 5)	00	Glygoyle Grease 00	Shell Tivela GL 00	Klübersynth GE 46-1200				Multifak 6833 EP 00		
	Standard -15 +40		000 - 0	Mobilux EP 004	Shell Alvania GL 00		Aralub MFL 00	BP Energrease LS-EP 00		Multifak EP 000	Longtime PD 00	Renolin SF 7 - 041

01 805 792 US

CLP	=	Mineral oil	1)	Helical-worm gear units with PG oil: Please contact SEW-EURODRIVE
CLP PG	=	Polyglycol (W gear units, conforms to USDA-H1	2)	Special lubricant for Spiroplan® gear units only
CLP HC	=	Synthetic hydrocarbons	3)	Recommendation: Select SEW $f_B \geq 1.2$
E	=	Ester oil (water pollution danger category WGK 1)	4)	Pay attention to critical starting behavior at low temperatures!
HCE	=	Synthetic hydrocarbons + ester oil (USDA - H1 certification)	5)	Low-viscosity grease
HLP	=	Hydraulic oil	6)	Ambient temperature
	=	Synthetic lubricant (= synthetic anti-friction bearing grease)		Lubricant for the food industry (food grade oil)
	=	Mineral lubricant (= mineral-based anti-friction bearing grease)		Biodegradable oil (lubricant for use in agriculture, forestry and water resources)

Oil levels and oil quality should be checked at frequent intervals, depending on usage. Oil changes are required at intervals of 10,000 operating hours or every two years, whichever comes first. If a synthetic oil lubricant is used, then this period can be extended to 20,000 operating hours or every four years, whichever comes first. In applications where hostile operating conditions exist, such as high humidity, corrosive environment, or large temperature changes, the lubricant should be changed at more frequent intervals.

The gear units W10, W20 and W30 are supplied with a synthetic oil which is good for the life of the reducer, independent of the mounting position.

Grease packed bearings should be cleaned and regreased every 10,000 hours or 20,000 hours for synthetic grease. Input (high speed) bearings should not be overgreased. They should be filled with grease not to exceed 1/3 of the bearing's free volume. For output bearings and bearings with replaceable grease shields, fill to 2/3 of their free volume.

ATTENTION

When the recommended lubricant is not avilable, it is permissible to use a lubricant having equivalent characteristics but we do not recommend that lubricants of different brands be mixed. Under no circumstances should synthetic lubricants be mixed with one another or with one having a mineral base.

LUBRICANTS

The approximate lubricant in US gallons and liters per mounting position is as follows:

Gear Unit	Mounting Position											
	M1		M2		M3		M4		M5		M6	
	Gallons	Liters	Gallons	Liters	Gallons	Liters	Gallons	Liters	Gallons	Liters	Gallons	Liters
F27	0.16	0.60	0.21	0.80	0.17	0.65	0.18	0.70	0.16	0.60	0.16	0.60
F37	0.25	0.95	0.33	1.25	0.18	0.70	0.33	1.25	0.26	1.00	0.29	1.10
F47	0.40	1.50	0.48	1.80	0.29	1.10	0.50	1.90	0.40	1.50	0.45	1.70
F57	0.69	2.60	0.92	3.50	0.55	2.10	0.92	3.50	0.74	2.80	0.77	2.90
F67	0.71	2.70	1.00	3.80	0.50	1.90	1.00	3.80	0.77	2.90	0.84	3.20
F77	1.55	5.9	1.95	7.3	1.15	4.30	2.10	8.0	1.60	6.0	1.65	6.3
F87	2.85	10.8	3.45	13.0	2.05	7.7	3.65	13.8	2.85	10.8	2.90	11.0
F97	4.90	18.5	5.9	22.5	3.35	12.6	6.7	25.2	4.90	18.5	5.3	20.0
F107	6.5	24.5	8.4	32.0	5.1	19.5	9.9	37.5	7.1	27.0	7.1	27.0
F127	10.7	40.5	14.4	54.5	9.0	34.0	16.1	61.0	12.2	46.3	12.4	47.0
F157	18.2	69.0	27.5	104.0	16.6	63.0	27.7	105.0	22.7	86.0	20.6	78.0
FF27	0.16	0.60	0.21	0.80	0.17	0.65	0.18	0.70	0.16	0.60	0.16	0.60
FF37	0.26	1.00	0.33	1.25	0.18	0.70	0.34	1.30	0.26	1.00	0.29	1.10
FF47	0.42	1.60	0.49	1.85	0.29	1.10	0.50	1.90	0.40	1.50	0.45	1.70
FF57	0.74	2.80	0.92	3.50	0.55	2.10	0.98	3.70	0.77	2.90	0.79	3.00
FF67	0.71	2.70	1.00	3.80	0.50	1.90	1.00	3.80	0.77	2.90	0.84	3.20
FF77	1.55	5.9	1.95	7.3	1.15	4.30	2.15	8.1	1.60	6.0	1.65	6.3
FF87	2.85	10.8	3.50	13.2	2.05	7.8	3.70	14.1	2.90	11.0	2.95	11.2
FF97	5.00	19.0	5.9	22.5	3.35	12.6	6.8	25.6	5.00	18.9	5.4	20.5
FF107	6.7	25.5	8.4	32.0	5.1	19.5	10.2	38.5	7.3	27.5	7.4	28.0
FF127	11.0	41.5	14.7	55.5	9.0	34.0	16.6	63.0	12.2	46.3	12.9	49.0
FF157	19.0	72.0	27.7	105.0	16.9	64.0	28.0	106.0	23.0	87.0	20.9	79.0
FA/FH/FV27 FAF/FHF/FVF27 FAZ/FHZ/FVZ27	0.16	0.60	0.21	0.80	0.17	0.65	0.18	0.70	0.16	0.60	0.16	0.60
FA/FH/FV37 FAF/FHF/FVF37 FAZ/FHZ/FVZ37 FT37	0.25	0.95	0.33	1.25	0.18	0.70	0.33	1.25	0.26	1.00	0.29	1.10
FA/FH/FV47 FAF/FHF/FVF47 FAZ/FHZ/FVZ47 FT47	0.40	1.50	0.48	1.80	0.29	1.10	0.50	1.90	0.40	1.50	0.45	1.70
FA/FH/FV57 FAF/FHF/FVF57 FAZ/FHZ/FVZ57 FT57	0.71	2.70	0.92	3.50	0.55	2.10	0.90	3.40	0.77	2.90	0.79	3.00
FA/FH/FV67 FAF/FHF/FVF67 FAZ/FHZ/FVZ67 FT67	0.71	2.70	1.00	3.80	0.50	1.90	1.00	3.80	0.77	2.90	0.84	3.20
FA/FH/FV77 FAF/FHF/FVF77 FAZ/FHZ/FVZ77 FT77	1.55	5.9	1.95	7.3	1.15	4.30	2.10	8.0	1.60	6.0	1.65	6.3
FA/FH/FV87 FAF/FHF/FVF87 FAZ/FHZ/FVZ87 FT87	2.85	10.8	3.45	13.0	2.05	7.7	3.65	13.8	2.85	10.8	2.90	11.0
FA/FH/FV97 FAF/FHF/FVF97 FAZ/FHZ/FVZ97 FT97	4.90	18.5	5.9	22.5	3.35	12.6	6.7	25.2	4.90	18.5	5.3	20.0
FA/FH/FV107 FAF/FHF/FVF107 FAZ/FHZ/FVZ107	6.5	24.5	8.4	32.0	5.1	19.5	9.9	37.5	7.1	27.0	7.1	27.0
FA/FH/FV127 FAF/FHF/FVF127 FAZ/FHZ/FVZ127	10.3	39.0	14.4	54.5	9.0	34.0	16.1	61.0	11.9	45.0	12.3	46.5
FA/FH/FV157 FAF/FHF/FVF157 FAZ/FHZ/FVZ157	18.0	68.0	27.2	103.0	16.4	62.0	27.5	104.0	22.4	85.0	20.3	77.0

For additional information on F-Series mounting positions, refer to the SEW Catalog.

TEAR DOWN

AND

REBUILD FA REDUCERS

Manufacturing Specification

Shaft Mounted Helical Gear Units F/FF/FA/FAF/FAZ 97

42 756 095E

Gear unit assembly may only be carried out with the help of a plastic tip hammer (keys on pinion shafts nos. 3 and 5 excepted). All snug fits are to be oiled before assembly. Heat the parts requiring heating (bearings, gears) to a temperature of ~120 °C. For the shim setting of bearings, the heated parts of the gear unit must have cooled down to at least 50 °C.

Assemble the FH and FV versions as described for FA.

Two-stage, Pinion Shaft 5

1. Place housing no. 22 onto support plate W3.
2. Use tool W1 to tap in the outer race of bearing no. 30.

- Figure 3 -

3. Slide distance piece no. 32 onto pinion shaft no. 5.
4. Tap key no. 31.2 into pinion shaft no. 5.
5. Place the preheated inner race of bearing no. 30 onto supporting tool W3.
6. Place preheated gear no. 2 onto the inner race of bearing no. 30.
7. Join pinion shaft no. 5 to gear no. 2 and use tool W5 to position them.
8. Place the preheated inner race of bearing no. 37 onto pinion shaft no. 5 and use tool W5 to position it.
9. Use tool W7 to tap in the outer race of bearing no. 37.
10. Remove the gear unit from support plate W3.

- Figure 1 -

11. Use tool W7 to position pinion shaft no. 5.
12. Fit spacer no. 137 and circlip no. 39. Use shims nos. 506 - 508 to compensate fully for any play present.
13. Use tool W7 to tap closing cap no. 131 into the bearing bore for pinion shaft 5.
14. Use tool W7 to tap closing cap no. 181 into the housing bore for pinion shaft 3 (not illustrated).

- Figure 2 -

Three-stage, Pinion Shafts 3 and 5

1. Place housing no. 22 onto support plate W3.
2. Use tool W1 to tap in the outer race of bearing no. 30.

- Figure 3 -

SEW-EURODRIVE GmbH & Co.-Ernst-Blickle-Straße 42 · 76646 Bruchsal · Germany ·Tel. (07251)75-0 · Fax (07251)75-1970 · Telex 7 822 391

Manufacturing Specification

Shaft Mounted Helical Gear Units F/FF/FA/FAF/FAZ 97

3. Use tool W2 to tap in bearing no. 45.

- Figure 4 -

4. Place preheated gear no. 2 onto bearing no. 45.
5. Tap key no. 43 into pinion shaft no. 3.
6. Initial assembly step: fit pinion shaft no. 3 onto gear no. 2 and use tool W2 to tap them into bearing no. 45.
7. Put bearing no. 42 into the housing hole and use tool W2 to tap it in.

- Figure 5 -

8. Tap key no. 31.3 into pinion shaft no. 5.
9. Place the preheated inner race of bearing no. 30 onto supporting tool W3.
10. Place distance piece no. 32 onto the inner race of bearing no. 30.
11. Place preheated gear no. 4 onto distance piece no. 32.
12. Join pinion shaft no. 5 to gear no. 4 and use tool W5 to position them.
13. Place the preheated inner race of bearing no. 37 onto pinion shaft no. 5 and use tool W5 to position it.
14. Use tool W7 to tap in the outer race of bearing no. 37.
15. Remove the gear unit from support plate W3.

- Figure 6 -

16. Use tool W2 to position pinion shaft no. 3. Fit circlip no. 41. Use shims nos. 515 - 517 to compensate for any play present (max. axial play = 0.1 mm).
18. Use tool W7 to position pinion shaft no. 5. Fit spacer no. 137 and circlip no. 39. Use shims nos. 506 - 508 to compensate fully for any play present.
19. Use tool W7 to tap closing cap no. 131 into the bearing bore for pinion shaft 5.
20. Use tool W7 to tap closing cap no. 181 into the housing bore for pinion shaft 3.

- Figures 7 and 8 -

Output side F

21. Attach support plate W30/1 to housing no. 22.
22. Place housing no. 22 onto support plate W30/1.
23. Tap key no. 19 into output shaft no. 7 and screw the eye bolt into output shaft no. 7.
24. Place preheated gear no. 6 onto support plate W30.
25. Put protecting sleeve W33 onto output shaft no. 7.
26. Use a crane to join output shaft no. 7 into gear no. 6.
27. Grease bearing no. 25. Place it onto output shaft no. 7 and use tool W36 to tap it on.

- Figure 9 -

SEW-EURODRIVE GmbH & Co.-Ernst-Blickle-Straße 42 · 76646 Bruchsal · Germany · Tel. (07251)75-0 · Fax (07251)75-1970 · Telex 7 822 391

All rights reserved!

Manufacturing Specification



SEW EURODRIVE

Shaft Mounted Helical Gear Units F/FF/FA/FAF/FAZ 97

42 756 095E

28. Fix support plate W38/2 and rotate the housing. Place the housing on support plate W38/2.
29. Remove protecting sleeve W33 and support plate W30/1.

- Figure 10 -

30. Slide distance piece no. 17 onto output shaft no. 7.
31. Use heating mandrel W40/2 to heat up the inner race of bearing no. 11.
32. Grease bearing no. 11. Place it onto output shaft no. 7 and use tool W31/2 to tap it in.
33. Fit circlip no. 12.

- Figure 11 -

34. Rotate the housing and remove support plate W38/1.
35. Use tool W36/2 to place output shaft no. 7 against circlip no. 12. Measure the shim thickness to be added. Place corresponding shims nos. 521 - 523 onto bearing no. 25 (max. axial play = 0.1 mm).
36. Fill the space between the bearing and the closing flange about 2/3 full with anti-friction bearing grease. The grease must comply with W6012.
37. Fit O-ring no. 81 onto closing flange no. 85. Place them onto housing no. 22 and use bolts no. 142 to screw them on.

- Figure 12 -

38. Fill the space between the bearing and the oil seals about 2/3 full with anti-friction bearing grease. The grease must comply with W6012.
39. In the oil seals, fill the space between the sealing and protection lips about 1/2 full with anti-friction bearing grease. The grease must comply with W6012.
40. Slide mounting sleeve W50/1 onto the output shaft. Use driving pin W51/1 to fit oil seals no. 9 as well as combination oil seals nos. 9 and 10 in units with double seals.
    In units with combination oil seals: use a hand-lever press to press oil seal no. 10 into oil seal no. 9 before fitting them.
41. Strip and clean the sealing surfaces on gear unit cover no. 100 and housing no. 22 and apply a gasket. The gasket must comply with FV 01 909 _2.
42. Use tool W60 to fix gear unit cover no. 100 onto the housing. Use bolts no. 101 to screw it down.
43. Screw in screw plugs no. 59 (mark the position of the vent screw - see FV 01 907 _2).
44. Tap key no. 8 into input shaft no. 7.
45. Tap in plugs nos. 158, 165 and 167 (not illustrated).
46. Screw on the components on the input side. Fill in the lubricant.
47. Perform a test run and final inspection of the drive in accordance with the test specifications.

- Figure 13 -

All rights reserved

Manufacturing Specification (M) SEW EURODRIVE

Shaft Mounted Helical Gear Units 42 756 095E

F/FF/FA/FAF/FAZ 97 Page 4 of 7

Output Side FF

21. Attach support plate W30/1 to housing no. 22.
22. Place housing no. 22 onto support plate W30/1.
23. Tap key no. 19 into output shaft no. 7 and screw the eye bolt into output shaft no. 7.
24. Place preheated gear no. 6 onto support plate W30/1.
25. Put protecting sleeve W33 onto output shaft no. 7.
26. Use a crane to join output shaft no. 7 into gear no. 6.
27. Apply a bead of grease to Nilos ring no. 84 and slide it onto output shaft no. 7.
28. Slide the preheated inner race of bearing no. 25 onto output shaft no. 7 and use tool W36/3 to position it.

- Figure 14 -

29. Insert distance ring W38/1 into support plate W38/2. Fix W38/2 in place and rotate the housing. Place the housing on support plate W38/2.
30. Remove protecting sleeve W33 and support plate W30/1.

- Figure 15 -

31. Put distance piece no. 17 onto output shaft no. 7.
32. Apply a bead of grease to Nilos ring no. 83 and slide it onto output shaft no. 7.
33. Slide the preheated inner race of bearing no. 11 onto output shaft no. 7 and use tool W31/3 to position it.

- Figure 16 -

34. Tap the outer race of bearing no. 11 into flange no. 16.

- Figure 17 -

35. Apply an anti-corrosive agent to the flange surface on the housing. The anti-corrosive agent must comply with FV 33 901 _96.
36. Fit O-ring no. 81 onto flange no. 16 and use bolts no. 14 to screw them onto housing no. 22.

- Figure 18 -

37. Rotate the housing and remove tools W38/1 and W38/2.
38. Insert the outer race of bearing no. 25 into measuring flange W37/1. Measure the shim thickness to be added. Place corresponding shims nos. 521 - 523 into closing flange no. 85.

- Figure 19 -

39. Remove the outer race of bearing no. 25 from measuring flange W37/1 and tap it into closing flange no. 85.

- Figure 20 -

Editor:	Originated by:	Checked by:	Distribution:

All rights reserved

Manufacturing Specification

Shaft Mounted Helical Gear Units F/FF/FA/FAF/FAZ 97

40. Apply an anti-corrosive agent to the flange surface on the housing. The anti-corrosive agent must comply with FV 33 901 _96.
41. Fill the space between the bearing and the closing flange about 2/3 full with anti-friction bearing grease. The grease must comply with W6012.
42. Fit O-ring no. 81 onto closing flange no. 85. Place them onto housing no. 22 and use bolts no. 142 to screw them on.

- Figure 21 -

43. Fill the space between the bearing and the oil seals about 2/3 full with anti-friction bearing grease. The grease must comply with W6012.
44. In the oil seals, fill the space between the sealing and protection lips about 1/2 full with anti-friction bearing grease. The grease must comply with W6012.
45. Slide mounting sleeve W50/3 onto the output shaft. Use driving pin W51/2 to fit oil seals no. 9 as well as combination oil seals nos. 9 and 10 in units with double seals.
    In units with combination oil seals: use a hand-lever press to press oil seal no. 10 into oil seal no. 9 before fitting them.
46. Strip and clean the sealing surfaces on gear unit cover no. 100 and housing no. 22 and apply a gasket. The gasket must comply with FV 01 909 _2.
47. Use tool W60 to fix gear unit cover no. 100 onto the housing. Use bolts no. 101 to screw it down.
48. Rotate the housing. Screw in screw plugs no. 59 (mark the position of the vent screw - see FV 01 907 _2).
49. Tap key no. 8 into input shaft no. 7.
50. Tap in plugs nos. 158, 165 and 167 (not illustrated).
51. Screw on the components on the input side. Fill in the lubricant.
52. Perform a test run and final inspection of the drive in accordance with the test specifications.

- Figure 22 -

Output Side FA/FAF/FAZ

21. Fit circlip no. 12.

- Figure 23 -

- All Versions:

22. Place housing no. 22 onto support plate W30/2.
23. Grease bearing no. 11 and use tool W31/1 to tap it into housing no. 22. Place heating mandrel W40/1 onto the inner race of bearing no. 11.
24. Tap key no. 19 into output shaft no. 7.
25. Remove heating mandrel W40/1 and insert it into the bore in bearing no. 25.
26. Place distance piece no. 17 onto bearing no. 11.
27. Place preheated gear no. 6 onto distance piece no. 17.
28. Use assembly pin W32 to centre gear no. 6, distance piece no. 17 and bearing no. 11 in relation to each other.
29. Put output shaft no. 7 into gear no. 6, distance piece no. 17 and bearing no. 11.

SEW-EURODRIVE GmbH & Co. Ernst-Blickle-Straße 42 · 76646 Bruchsal · Germany · Tel. (07251)75-0 · Fax (07251)75-1970 · Telex 7 822 391

FV_7RE.DOC

All rights reserved!

Manufacturing Specification

Shaft Mounted Helical Gear Units F/FF/FA/FAF/FAZ 97

30. Remove greased bearing no. 25 from heating mandrel W40. Put it onto output shaft no. 7 and use tool W36/1 to tap it in.
31. Remove support plate W30/2.

- Figure 24 -

- For FAF Version:

32. Apply an anti-corrosive agent to the flange surface on the housing. The anti-corrosive agent must comply with FV 33 901 _96.
33. Remove circlip no. 12.
34. Fit O-ring no. 81 onto flange no. 16 and use bolts no. 14 to screw them onto housing no. 22.

- Figure 25 -

- All Versions:

35. Use tool W36/1 to position the bearings. Fit circlip no. 88. Use shims nos. 521 - 523 to compensate for any play present (max. axial play = 0.1 mm).

- Figure 26 -

- For FAZ Version:

36. Apply an anti-corrosive agent to the flange surface on the housing. The anti-corrosive agent must comply with FV 33 901 _96.
37. Fit O-ring no. 81 onto flange no. 16 and use bolts no. 14 to screw them onto housing no. 22.

- All Versions:

38. Fill the space between the bearing and the oil seals about 2/3 full with anti-friction bearing grease. The grease must comply with W6012.
39. In the oil seals, fill the space between the sealing and protection lips about 1/2 full with anti-friction bearing grease. The grease must comply with W6012.
40. Slide mounting sleeve W50/5 (W50/6 for FH, W50/7 for FV) onto the output shaft. Use driving pin W51/6 (FA/FH/FV) or W51/5 (FAF/FAZ) to fit oil seal no. 9 as well as combination oil seals nos. 9 and 10 in units with double seals.
    In units with combination oil seals: use a hand-lever press to press oil seal no. 10 into oil seal no. 9 before fitting them.
41. Slide mounting sleeve W50/5 (W50/6 for FH, W50/7 for FV) onto the output shaft. Use driving pin W51/6 (FA/FH/FV) or W51/5 (FAF/FAZ) to fit oil seal no. 183 as well as combination oil seals nos. 183 and 184 in units with double seals.
    In units with combination oil seals: use a hand-lever press to press oil seal no. 184 into oil seal no. 183 before fitting them.
42. Fit circlip no. 91, washer no. 92, lock washer no. 93 (FV: spacer no. 93), bolt no. 94 and protective caps nos. 95 and 168 into the hollow shaft.

SEW-EURODRIVE GmbH & Co.-Ernst-Blickle-Straße 42 - 76646 Bruchsal - Germany -Tel. (07251)75-0 - Fax (07251)75-1970 - Telex 7 822 391

All rights reserved

Manufacturing Specification

Shaft Mounted Helical Gear Units F/FF/FA/FAF/FAZ 97

- For FH Version:

43. Slide shrink disc no. 98 onto the hollow shaft. Tighten the clamping bolts lightly to prevent it from moving axially.
44. Slide hood cover no. 99 onto shrink disc no. 98.

- All Versions:

45. Strip and clean the sealing surfaces on gear unit cover no. 100 and housing no. 22 and apply a gasket. The gasket must comply with FV 01 909 _2.
46. Use tool W60 to fix gear unit cover no. 100 onto the housing. Use bolts no. 101 to screw it down.
47. Screw in screw plugs no. 59 (mark the position of the vent screw - see FV 01 907 _2).
48. Tap in plugs nos. 158, 165 and 167 (not illustrated).
49. Screw on the components on the input side. Fill in the lubricant.
50. Perform a test run and final inspection of the drive in accordance with the test specifications.

- Figure 27 -

Technical Note

Long-Term Storage

Mechanical

SEW supplies all gear reducers and gearmotors with oil. The quantity of oil depends upon the customer's mounting position. Since most mounting positions do not require the entire gear case to be filled with oil, moist air often exists within the cavity of the reducer. It is important that units not rest for an extended period of time without proper protection. Otherwise, problems can result. Rust could develop on the bearings, gears, and other steel components when the water molecules condense inside the reducer. In addition, flat spots could develop on the balls of the bearings or bearing raceway (brinelling) due to a concentrated load at a single point. Such loads exist on bearings that support the heavy rotors of large motors or on bearings that support the shaft of a bevel gear set, since the bevel sets are preloaded when installed.

To avoid potential problems during an extended rest period, SEW offers a "Long Term Storage" option that contains the following specifications.

Reducer

- Reducer is completely filled with the correct type of oil, regardless of mounting position.
- Oil level plug is installed at the correct location according to the mounting position.
- Reducer is painted per the required specifications.
- All unpainted exterior surfaces, such as input shaft, output shaft, and flange face are coated with a rust inhibitor.
- A breather plug is installed in the correct location for the mounting position specified on the nameplate.
- A "Long Term Storage" tag is attached to the eyebolt.

Motor

- Motor contains an insulation coating on the stator windings.
- Motor is painted per the required specifications.
- Any shaft extension protruding from the motor endbell is coated with a rust inhibitor.

Important! The output shaft of reducers and motors that contain long-term storage must be manually rotated every 2–3 months to keep the bearings from brinnelling. In addition, units must be stored in an area where they are not subject to vibration.

Technical Note

Varimot® or Varigear®

- Varimot® contains a chrome-plated driving disc.
- Varigear® contains nitrided driving pulleys and nitrided driven pulleys.
- Unit is painted per the required specifications.
- All unpainted exterior surfaces, such as input shaft, output shaft, and flange face are coated with a rust inhibitor.
- A "Long Term Storage" tag is attached to its eyebolt if a reducer is not supplied.

Important! The output shaft of variable speed units that contain long-term storage must be manually rotated every 2–3 months to keep the bearings from brinnelling. In addition, units must be stored in an area where they are not subject to vibration.

Placing Stored Units in Service:

When placing the unit in service, perform the following steps.

1. Remove the oil drain plug.
2. Drain the excess oil from the reducer.
3. Reinstall oil drain plug.
4. Check to see if the motor has absorbed moisture as a result of being in storage. Refer to the procedure described in the Operating Instructions sent with the drive. If you cannot locate your operating instructions, you may download a copy from the Technical Information section of the SEW website: www.seweurodrive.com.

If the actual mounting position is different than the mounting position stated on the nameplate, call your local SEW representative. Different mounting positions require different oil levels for proper operation. Also, you should request a new nameplate that contains the correct information.

No other steps are necessary before placing long-term storage units into service.

Technical Note

F-Series Gear Reducer - theSnuggler®

F-Series

Features

The SEW-Eurodrive F-series gear reducer, like the R-series, contains either 2 or 3 helical gear stages and an offset-parallel shaft design. However, unlike the R-series, the F-series has a slimmer profile and is available with a hollow shaft.

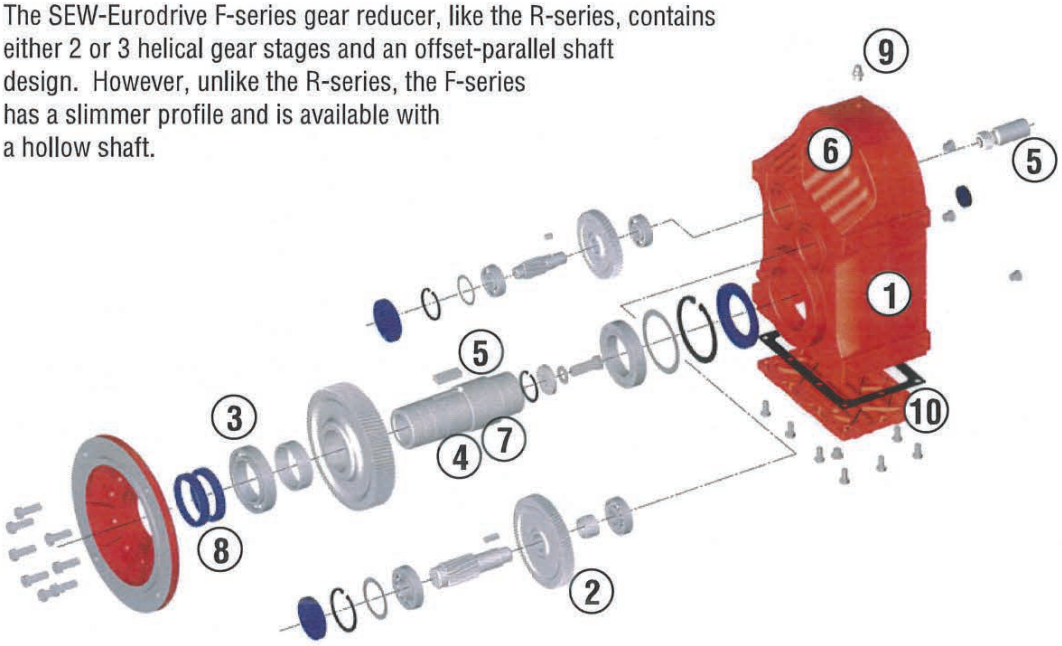

1. SAE Class 30 or equivalent (GG20) gray cast iron housing and flanges on sizes F37-F157. No bolt-on bearing covers
2. Finish ground or shaved steel gears heat treated and hardened to 58-62 Rockwell C
3. ABEC-1 bearing tolerances
4. SAE 1045 steel shafts
5. Captured keys on input and output shafts
6. Corrugated surface improves heat dissipation and reduces vibration
7. Input and output shafts available in either inch or metric sizes. Solid shafts contain a center-tapped hole to ease the mounting of components onto the shaft.
8. Exclusive **interlocking** 2-piece seal design consisting of a patented bi-helix Viton® inner seal and a double-lip Nitrile (Buna N) outer seal to provide three sealing surfaces against contaminants (not available on F27/F37)
9. Oil level and breather plugs strategically placed according to the customer's mounting position
10. Removable inspection cover

Technical Note

Additional Features:

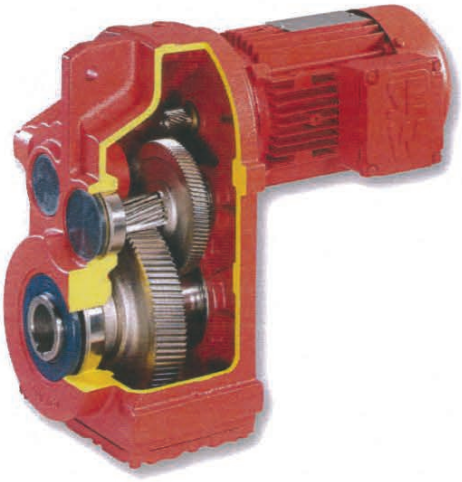

- **Style**: Parallel shaft orientation (motor shaft is parallel to output shaft) in either 2 or 3 gear stages
- **Flange**: Contains O-ring to minimize oil leakage that may result from mounting to a "flat" surface that exceeds acceptable tolerances. Also contains a centering tenon (pilot) and is available with either through holes (B5) or tapped holes (B14).
- **Input Types**: Available with adapters to accommodate NEMA or IEC motor frames, solid input shafts, backstops, adjustable motor mounting platforms, and scoops. Also accepts an R-series reducer as the input (ex: FAF67R37) to attain higher ratios and lower output speeds
- **Output Shaft – Keyed**: Metric or inch shaft available in hollow or solid designs. Keyed hollow shaft supplied with special mounting paste and a retaining kit. Paste protects against corrosion as is available in regular or food grade. Retaining kit secures customer's solid shaft and contains bolt, washer, and protective cap.
- **Output Shaft – Keyless**: Available as a metric shrink disc, an inch tapered bushing (TorqLOC™), or a DIN 5480 spline
- **Mounting**: Available as foot (rail), flange, or shaft mount
- **Torque Ratings**: Based upon mechanical capacity under continuous duty operation
- **Torque Capacity**: From 930 lb-in to 159,300 lb-in
- **Shaft Rotation**: Unrestricted - clockwise or counterclockwise
- **Efficiency**: 97% (2-stage), 95.5% (3-stage) - 1.5% efficiency loss per gear stage
- **Ratio Range – Single**: 3.77 to 281.71
- **Ratio Range – Compound**: 134 to 29,211
- **Fatigue Strength**: Shafts and gears designed for infinite fatigue strength
- **Shock Capacity**: Meets or exceeds AGMA 6009-A00, which states that reducer must be capable of withstanding 4 shock loads within an 8-hour period – each shock equal to 200% of the maximum rated torque for 2 seconds.

Technical Note

Housing Material

Except for the F27, all SEW F-series gear reducers are manufactured from SAE 30 or equivalent (GG20) gray cast iron due to the following benefits:

- Cast iron flows well, allowing it to be used on intricate castings.
- Cast iron machines well.
- Cast iron serves as an excellent damping material to minimize vibration, contributing to longer bearing life and longer gear life.

Ductile iron (or nodular iron), a type of cast iron containing magnesium, is 2 to 4 times stiffer than gray cast iron. It is often used in applications involving heavy shock loads at low temperatures – when gray iron housings lose much of their shock absorbing strength.

Ductile iron housings are not available on F-series reducers.

Optional Bearings

Some F-series reducers are available with optional heavy-duty bearings as listed below. Heavy-duty bearings increase the axial and overhung load capacity and are standard on SEW Screw Conveyor Drives. For more information, contact SEW Regional Engineering.

Unit	Output Bearings	
	Standard	Optional
FA / FAF / FAZ 67	Ball	Taper Roller
FA / FAF / FAZ 77	Ball	Taper Roller
FA / FAF / FAZ 87	Ball	Taper Roller
FA / FAF / FAZ 97	Ball	Taper Roller
FA107	Ball	Taper Roller
FA127	Ball	Taper Roller

Note: Heavy-duty bearing option is only available with a metric hollow shaft.

Technical Note

Foot Mounting

The F-series reducer is not "foot mounted" in the traditional sense, since it does not have feet with through-holes for mounting. Instead, tapped holes are provided along two raised rails on each side of the reducer, as shown at right.

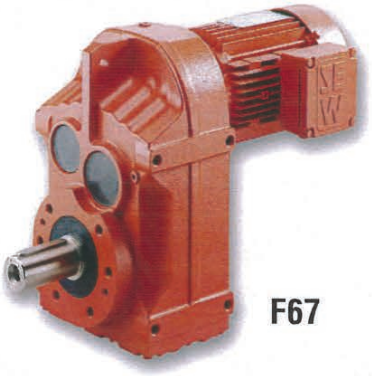

F67

These rail holes are standard on all F-units, except on the following four styles:

- FA (keyed hollow shaft)
- FT (TorqLOC keyless tapered bushing)
- FV (DIN spline)
- FH (metric shrink disc)

For the FA, FT, FH, or FV styles, rail holes may be ordered as an option. The letter "**B**" is added to the nomenclature and placed after the reducer size (ex: FA67B...) to designate this option, as shown at right.

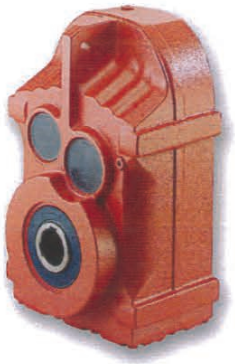

FA67

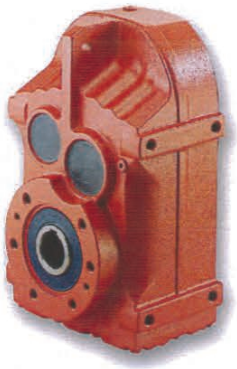

FA67B

Shaft Mounting – Torque Arm

The preferred method of installing a hollow shaft reducer is to hang the reducer from a solid shaft and to allow the solid shaft to support the entire weight of the reducer and motor. Since this method does not require the use of feet or a flange, the reducer has a natural tendency to spin around the shaft if not restrained. To provide a mean of restraint, the F-series reducer contains a built-in mounting lug as shown at right.

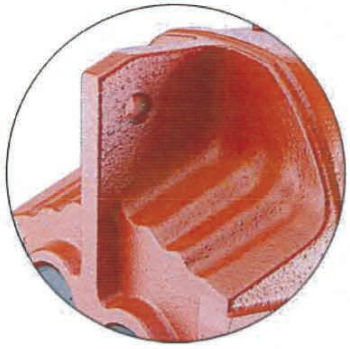

The customer must provide an adequate mounting bracket. Optional rubber grommets are available from SEW for cushioning the reducer. See **Tech Note GM-021** for information on appropriate torque arm design and installation.

Technical Note

Flange Mounting

Two flange styles are available: **B5** and **B14**. Both styles contain an O-ring and tenon (pilot) as shown at right.

The O-ring helps prevent oil leakage that could occur if the flange is mounted to a "flat" surface that exceeds the recommended flatness tolerance.

The tenon allows for easier installation as well as protects the reducer from shifting out of alignment if the mounting bolts were to loosen.

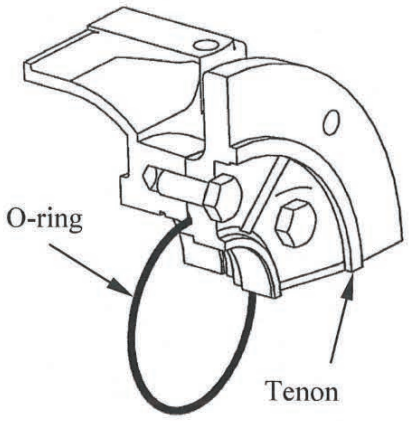

B5 Flange ("F")
A B5 flange bolts onto the reducer housing and contains through-holes (non-threaded) for mounting. These holes are intentionally made slightly larger than the bolts for which they are intended. The letter "**F**" is added to the nomenclature to designate this option.

FAF67

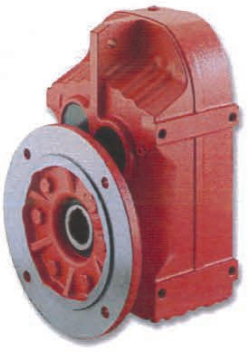

B14 Flange ("Z")
A B14 flange bolts onto the housing. It contains through holes to allow access to the tapped holes of the housing. The bolt circle and tenon diameters are smaller on the B14 than on the B5 flange of the same reducer. The letter "**Z**" is added to the nomenclature to designate this option.

FAZ67

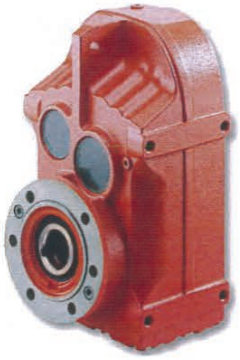

Reference Tech Note **GM-020** for important additional information on mounting procedures for flanged units.

TAB 5



PHOENIX

PHOENIX Process Equipment Company
2402 Watterson Trail
Louisville, KY 40299
(502) 499-6198
(502) 499-1079 Fax

SECTION 4 COMPONENTS

TENSION REGULATOR SPECIFICATIONS

PHOENIX Part #:	PTS-CH221
Type:	R07-200-RNKA
Housing Type:	Zinc Alloy Body with NBR Seals
Size:	1/4" NPT
Mounting:	Through Panel Face
Pressure:	0-100 PSIG
Temperature:	-29^0 F. + 149^0 F.

R07 General purpose

Snap action knob locks pressure setting when pushed in

Standard relieving models allow reduction of outlet pressure even when the system is dead-ended

R46 Non-repairable

Wrench flats for easy installation

Relieving piston design allows reduction of downstream pressure when the system is dead-ended

Choice of left to right or right to left flow


R07


R46

Technical data

R07
Fluid:
Compressed air, neutral gases
NOTE: Contact technical support for use with other media.
Maximum pressure
300 psig (20 bar)
Operating temperature:
-34° to 150°F (-35° to 65°C) *
* Air supply must be dry enough to avoid ice formation at temperatures below 2°C (35°F).

R46
Fluid:
Compressed air
Maximum pressure:
250 psig (17 bar)
Operating temperature*:
-30° to 150°F (-34° to 65°C)
* Air supply must be dry enough to avoid ice formation at temperatures below 35°F (2°C).

Materials
R07
Body: zinc
Bonnet: acetal
Knob: Acetal
Valve seat: acetal
Elastomers: nitrile
Valve: brass, nitrile

R46
Body: zinc
Knob: nylon
Valve: TPV
Valve seat: acetal
Elastomers: nitrile

Ordering information

ISO Symbols	Port Size	Model	Flow† scfm (dm3/s)	Weight lb (kg)
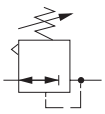 Relieving 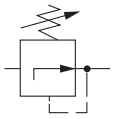 Non relieving	1/8"	R07-100-RGKA	14 (6.5)	0.31 (0.19)
	1/4"	R07-200-RGKA	15 (7)	0.31 (0.19)
	1/4"	R46-200-RNLA (left to right flow)	13 (6)	0.2 (0.09)
	1/4"	R46-202-RNLA (right to right flow)	13 (6)	0.2 (0.09)

* Air supply must be dry enough to avoid ice formation at temperatures below 35°F (2°C)
† Typical flow with 150 psig (10 bar) inlet pressure, 90 psig (6.3 bar) set pressure and 15 psig (1 bar) droop from set.

Alternative Models

R07-★00-★★★★

Port Size	Substitute
1/8"	1
1/4"	2
Diaphragm	**Substitute**
Relieving	R
Non relieving	N
Gauges	**Substitute**
With	G
Without	N

Threads	Substitute
PTF	A
ISO G parallel	G
Outlet Pressure Adjustment Ranges*	**Substitute**
1 to 10 psig (0.1 to 0.7 bar)	A
5 to 50 psig (0.3 to 3.5 bar)	E
5 to 100 psig (0.3 to 7 bar)	K
5 to 125 psig (0.3 to 8.6 bar)	L

* Outlet pressure can be adjusted to pressures in excess of, and less than, those specified. Do not use these units to control pressures outside of the specified ranges.

Panel mounting hole diameter 1.19" (30 mm)
Maximum panel thickness 0.25" (6 mm)

R07

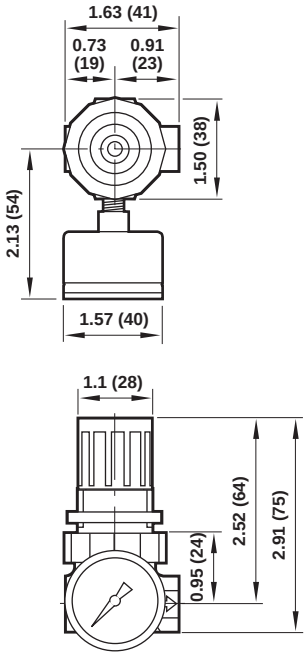

Typical Performance Characteristics

R07

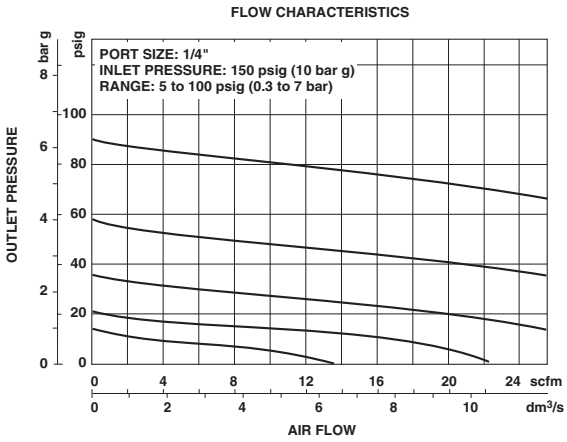

R07 Service Kits

Item	Type	Part number
Service kit	Relieving	3407-02
	Non relieving	3407-01

Service kit includes slip ring, diaphragm, standard valve seat with o-ring, valve, valve spring.

R46

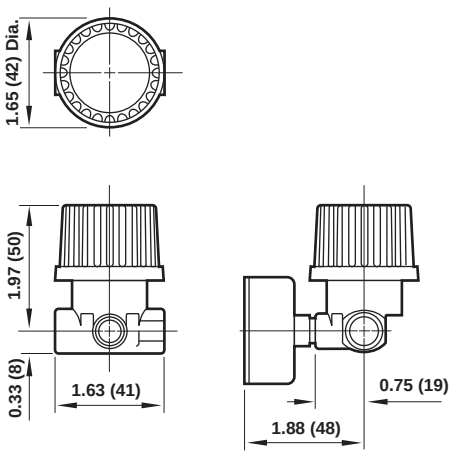

Typical Performance Characteristics

R46

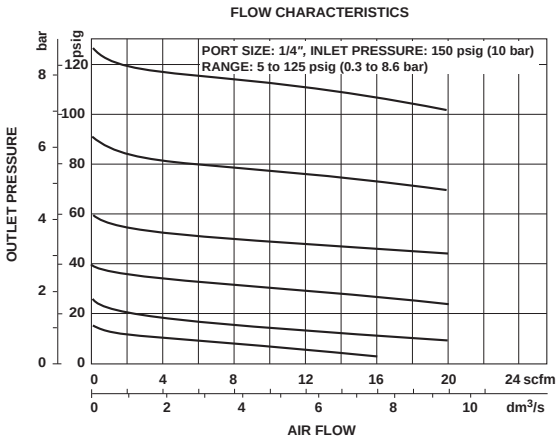

Dimensions in inches (mm)

TAB 6



PHOENIX

PHOENIX Process Equipment Company
2402 Watterson Trail
Louisville, KY 40299
(502) 499-6198
(502) 499-1079 Fax

SECTION 4 COMPONENTS

SAFETY STOP SWITCH

PHOENIX Part #:	PTS-CH885
Model:	Lifeline 3 Safety Switch
Housing Type:	Nema 4X/IP67
Operation:	Cable Operated
Seal:	Synthetic Rubber
Control Voltage:	120-Volt Ac

Rockwell Automation

LIFELINE 3

Description



The Lifeline 3 is a cable (rope) operated emergency stop device designed to meet the stringent requirements of ISO 13850 (Safety of Machinery—Emergency Stop Equipment). The Lifeline 3 system can be installed along or around awkward machinery such as conveyors and provides a constant-access emergency-stop facility.

1. The positive-mode mechanism helps ensure that the contacts are immediately latched open on actuation and can only be reset by the intentional action of turning the blue reset knob. The design also protects against nuisance tripping and the effects of thermal expansion.
2. The cable-status indicator makes the system easy to set up and maintain for spans up to 30 m (98 ft).
3. Four sets of contacts are provided: 2 N.C. + 2 N.O., or 3 N.C. + 1 N.O. contacts.
4. Sealed to IP67 with rugged construction using die-cast alloy and stainless steel to withstand harsh conditions.

Features

- Switches up to 30 m (98 ft) span
- Universal mounting and operation
- Switch lockout on cable pulled and cable slack
- Cable-status indicator on switch lid
- Industry standard fixing centers to DIN/EN 50041
- Quick disconnect styles available

Specifications

Safety Ratings	
Standards	ISO 13850, EN ISO 12100, IEC 60947-5-1, IEC 60947-5-5
Safety Classification	Cat. 1 device per EN 954-1 May be suitable for use in Cat 3 or Cat 4 systems depending on the architecture and application characteristics
Functional Safety Data * Note: For up-to-date information, visit *http://www.ab.com/Safety/*	B10d: > 2 x 10^6 operations at min. load PFH_D: < 3 x10^{-7} MTTFd: > 385 years May be suitable for use in performance levels Ple or Pld systems (according to ISO 13849

		-1:2006) and for use in SIL2 or SIL3 systems (according to IEC 62061) depending on the architecture and application characteristics			
Certifications		CE Marked for all applicable directives, cULus, TUV, and CCC			
Outputs					
Safety Contacts		2 N.C. direct-opening action		3 N.C. direct-opening action	
Auxiliary Contacts		2 N.O. direct-opening action		1 N.O. direct-opening action	
Thermal Current I_{th}		10 A			
Rated Insulation Voltage		(Ui) 500V			
Switching Current @ Voltage, Min.		5 mA @ 5V DC			
Utilization Category					
A600/AC-15	(Ue)	600V	500V	240V	120V
	(Ie)	1.2 A	1.4 A	3 A	6 A
DC-13	(Ue)	24V			
	(Ie)	2 A			
Operating Characteristics					
Cable Span Between Switches, Max.		30 m (98 ft)			
Tensioning Force to Run Position		103 N (23.17 lbf) typical			
Tensioning Force to Lockout		188 N (42.3 lbf) typical			
Operating Force, Min.		<125 N (28.1 lb) at 300 mm deflection			
Actuation Frequency, Max.		1 cycle/s			
Operating Life @ 100 mA load		1 x 10^6			
Environmental					
Enclosure Type Rating		IP67			
Operating Temperature [C (F)]		-25...80° (-13...176°)			
Physical Characteristics					
Housing Material		Heavy-duty painted zinc-based die-cast alloy			
Indicator Material		Glass-filled nylon			
Eye Nut Material		Stainless steel			
Weight [g (lb)]		610 (1.34)			
Color		Yellow body, blue reset button			

* Usable for ISO 13849-1:2006 and IEC 62061. Data is based on the B10d value given and:
- Usage rate of 1op/10 mins., 24 hrs/day, 360 days/year, representing
51840 operations per year
- Mission time/Proof test interval of 38 years
* The safety contacts are described as normally closed (N.C.) i.e., with the guard closed, actuator in place (where relevant) and the machine able to be started.

Note: It is recommended that the LRTS (Lifeline Rope Tensioning System) should be used with the Lifeline 3 cable rope switch.

Product Selection

Contacts		Cat. No.				
Safety	Auxiliary	Conduits		Connectors *		
		M20	1/2 inch NPT	12-Pin M23	8-Pin Micro (M12) ❄	Connect to ArmorBlock Guard I/O 5-Pin Micro (M12)‡
2 N.C.	2 N.O.	440E-D13118	440E-D13120	440E-D13132	440E-D21BNYH	440E-D2NNNYS
3 N.C.	1 N.O.	440E-D13112	440E-D13114	440E-D13124	–	–

* For connector ratings, see Safety Switches and Connectors.
❄ With an 8-pin micro (M12) connector, not all contacts are connected. See Typical Wiring for wiring details.
‡ For connection to ArmorBlock Guard I/O. With a 5-pin micro (M12) connector, not all contacts are connected. See Typical Wiring for wiring details.

Recommended Logic Interfaces

Description	Safety Outputs	Auxiliary Outputs	Terminals	Reset Type	Power Supply	Cat. Page No.	Cat. No.
Single-Function Safety Relays for 2 N.C. Contact Switch							
MSR127RP	3 N.O.	1 N.C.	Removable (Screw)	Monitored Manual	24V AC/DC	MSR127RP/TP	440R-N23135
MSR127TP	3 N.O.	1 N.C.	Removable (Screw)	Auto./Manual	24V AC/DC	MSR127RP/TP	440R-N23132
MSR126T	2 N.O.	None	Fixed	Auto./Manual	24V AC/DC	MSR126R/T	440R-N23117
MSR30RT	2 N.O. Solid State	1 N.O. Solid State	Removable	Auto./Manual or Monitored Manual	24V DC	MSR30RT/RTP	440R-N23198
Modular Safety Relays							
MSR210P Base 2 N.C. only	2 N.O.	1 N.C. and 2 PNP Solid State	Removable	Auto./Manual or Monitored Manual	24V DC from the base unit	MSR210P	440R-H23176
MSR220P Input Module	–	–	Removable	–	24V DC	MSR220P	440R-H23178
MSR310P Base	MSR300 Series Output Modules	3 PNP Solid State	Removable	Auto./Manual Monitored Manual	24V DC	MSR310P	440R-W23219
MSR320P Input Module	–	2 PNP Solid State	Removable	–	24V DC from the base unit	MSR320P	440R-W23218

Note: For additional Safety Relays connectivity, see Safety Relays.
For additional Safety I/O and Safety PLC connectivity, see Programmable Safety Solutions.
For application and wiring diagrams, see Safety Applications and Wiring Diagrams.

Connection Systems

Description	5-Pin Micro (M12)⌘	8-Pin Micro (M12)	12-Pin M23
Cordset	–	889D-F8AB-§	889M-F12X9AE-§
Patchcord	889D-F5ACDM-⁂	889D-F8ABDM-⁂	889M-F12AHMU-⌐

§ Replace symbol with 2 (2 m), 5 (5 m), or 10 (10 m) for standard cable lengths.
⁂ Replace symbol with 1 (1 m), 2 (2 m), 3 (3 m), 5 (5 m), or 10 (10 m) for standard cable lengths.
⌐ Replace symbol with 0M3 (0.3 m), 0M6 (0.6 m), 1 (1 m), 2 (2 m) or 3 (3 m) for standard lengths.
⌘ To connect to ArmorBlock Guard I/O.

Accessories

Description		Cat. No.
	Lifeline P. bolt M8 x 1.25 thread size, 58 mm (2.28 in.) threaded length, 12 mm (0.47 in.) dia. eye, 95 mm (3.74 in.) overall length	440E-A17003
	Lifeline tensioner spring 19 mm (0.75 in.) diameter, 210 mm (8.27 in.) overall length, 50 N force	440E-A13078
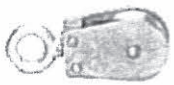	Lifeline inside corner pulley Internal diameter 16 mm (0.64 in.) zinc-plated mild steel	440A-A17101
	Lifeline outside corner pulley Outside diameter 38 mm (1.5 in.) zinc-plated mild steel	440A-A17102
	Blanking plug, M20 conduit	440A-A07265
	Cable grip, M20 conduit, accommodates cable diameter 7...10.5 mm (0.27...0.41 in.)	440A-A09028
	Adaptor, conduit, M20 to 1/2 inch NPT, plastic	440A-A09042
	Screwdriver including security bit	440A-A09018

Approximate Dimensions

Dimensions are shown in mm (in.). Dimensions are not intended to be used for installation purposes.

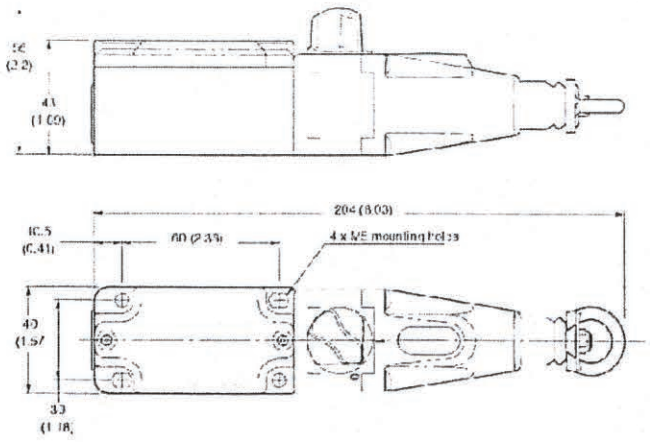

Note: *2D, 3D and electrical drawings are available on www.ab.com.*

Typical Wiring Diagrams

Description	2 N.C. & 2 N.O.	3 N.C. & 1 N.O.
Contact Configuration	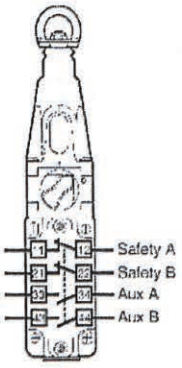	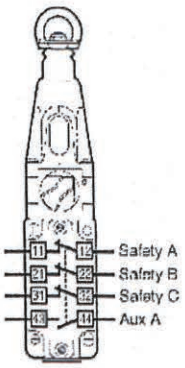
Contact Action	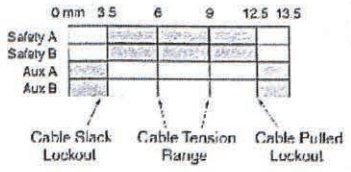	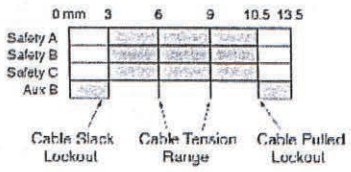
□Open ■Closed		
5-Pin Micro (M12) for ArmorBlock Guard I/O	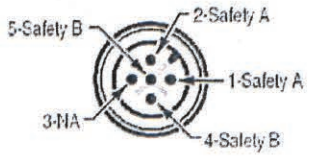	—

8-Pin Micro (M12)		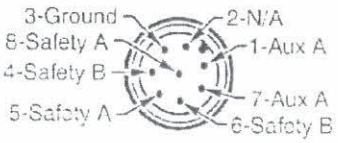	
12-Pin M23	1-3	Safety A	Safety A
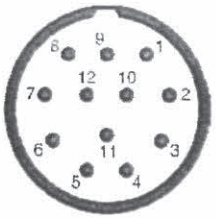	4-6	Safety B	Safety B
	7-8	Aux A	Safety C
	9-10	Aux B	Aux A
Pins 2, 5, 11 not connected	12	Ground	Ground
8-Pin Cordset 889D-F8AB-*	Grey Red	Safety A	
	Yellow Pink	Safety B	
	White Blue	Aux A	
	Green	Ground	
	Brown	Not Used	
12-Pin Cordset 889M-F12X9AE-*	Brown Blue	Safety A	Safety A
	White Green	Safety B	Safety B
	Yellow Grey	Aux A	Safety C
	Pink Red	Aux B	Aux A
	Green Yellow	Ground	Ground

* Replace symbol with 2 (2 m), 5 (5 m), or 10 (10 m) for standard cable lengths.
* Replace symbol with 0F5 (0.5 ft) or 1F (1 ft) for standard cable lengths.

Copyright © 2011 Rockwell Automation, Inc. All Rights Reserved.

TAB 7



PHOENIX

PHOENIX Process Equipment Company
2402 Watterson Trail
Louisville, KY 40299
(502) 499-6198
(502) 499-1079 Fax

SECTION 4 COMPONENTS

BEARING SPECIFICATIONS

PHOENIX Part #:	PTS-CH750
Bearing Type:	500 SCM Ball Bearing
Housing Type:	Pillow Block
Size:	1 7/16" Diameter
Mounting:	Setscrew
L_{10} Life:	100,000 Hours Minimum
Seal:	Nitrile Rubber Metal Shielded

Link-Belt® Mounted& Unmounted Ball Bearings

INSTALLATION INSTRUCTIONS
U200, S200, Y200, W200, CL200, U300, Y300, & U3K00

Housed Bearing Mounting Procedure

WARNING: These instructions should be read entirely and followed carefully before attempting to install or remove Link-Belt Ball bearings. Failure to do so can result in improper installation which could cause bearing performance problems as well as serious personal injury

ALL UNITS (For Dura-Klean Units See notes on page 2)

1. Inspect shaft size (see shaft tolerance table, Page 2). Shaft must be to correct size. Clean shaft and mounting surface as needed.
2. Position bearings on the shaft, applying all driving pressure to the face of the inner ring. Do NOT strike or exert pressure on housing or seals.
3. Where shimming is required – use full shims across the housing base – not just at the bolt holes. Position and loosely bolt housing to mounting base.
4. Establish the final shaft position. Align bearings by hand or rubber mallet if required. Bolt units down, if using U3K00 adapter mount, refer to instructions below.
5. Lock bearing to the shaft:

Set Screw Lock Units (U200, S200, U300)
Tighten the set screws on the bearing to the proper tightening torque which can be found in the SET SCREW TORQUE TABLE on page 2. Alternate torquing the screws to prevent unequal loading. See comment 8 in Additional Installation Comments.

Eccentric Cam Lock Units (Y200, W200, Y300)
Slide collar over the shaft until it rests over the cam of the inner ring. **Rotate the collar in the direction of normal shaft rotation until snug.** Utilizing a hammer and punch, rotate the collar until tight. Tighten set screws securely. Utilize torque values from SET SCREW TORQUE TABLE on page 2. See comment 8 in Additional Installation Comments.

Centrik-Lok Units (CL200)
With the collar located between the tabs and housing with the chamfer facing the housing, alternately tighten the set screws (See figure 1 below). to the recommended torque value from the Centrik-Lok SET SCREW TORQUE TABLE on page 2.

Adapter Mount Units (U3K00 Series)

a) *Zero Shaft Fit*- Take two large flat blade screw drivers to wedge between the bearing's face and lockwasher. Use the screwdriver to draw the bearing's sleeve through the inner ring until you achieve a snug fit and then finger tighten the locknut (See Figure 2 below). This should remove all the clearance between the shaft, adapter, and inner ring. When the lock nut is further tightened, the bearing will be displaced about 1/16" along the shaft.

b) *Final Tightening*- Mark the position of the locknut relative to the shaft with a grease pencil or a dark marker at the top of the locknut and shaft. Using a soft steel drift pin and hammer, drive against the face of the locknut to relieve thread pressure. Tighten the lock nut using the hammer and soft drift. The adapter should grab and stay positioned on the shaft. Force the lock nut ½ of one turn.

c) *Secure Locknut*- Bend one of the lock washer tangs into one of the slots on the outside diameter of the locknut. If necessary, slightly tighten the locknut to line up the closest tang.

d) *Installing Two Fixed Adapter units*- When using 2 fixed bearings, care must be used to ensure one bearing is not loaded axially against the other. If installing 2 fixed pillow blocks, tighten the mounting bolts of the first unit, then follow steps a-c. Install the 2nd bearing as normal, & then tighten mounting bolts last.

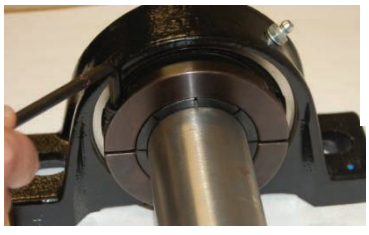

Figure 1) Set screw tightening on a Centrik-Lok bearing

EXPANSION UNITS ONLY

1. Center cartridge in outer housing. If maximum expansion capability is required, place cartridge in extreme position of housing to permit full movement of the cartridge in direction of expansion.
2. The remainder of the installation is the same as Fixed units.

ADDITIONAL INSTALLATION COMMENTS

1. Position housings for accessibility of grease fittings.
2. Spot drill or mill flats on shaft for increased holding power of set screws or ease of removal.
3. When an eccentric load condition exists, position set screws directly opposite from eccentric weight.
4. Shaft shoulders are recommended to support vertical shafts and high thrust loads. The shoulder diameter should not exceed the outside diameter of the inner ring.
5. When pillow blocks are mounted on an inclined plane or the work force is parallel with the base, either lateral bolts or welded stop blocks should be used to prevent shifting.
6. Avoid direct hammer blows to the bearing and its components by using a soft drift or block.
7. Coat the shaft & bearing bore with grease or oil to facilitate assembly. **NOTE**: Do not coat U3K00 series bore or shaft.
8. If an Allen wrench is used as a torque wrench, place a length of pipe over the long end and pull until the wrench begins to twist.

LUBRICATION INFORMATION

Standard bearings come pre-lubricated from the factory with Exxon Ronex MP grease. Exxon Ronex MP is an NLGI Grade 2 EP (extreme pressure) grease with a lithium complex thickener. It can be used for high loads, and in some cases at temperatures as low as -40°F or as high as +225°F. For high speeds, other special service conditions, or for inquires on other acceptable greases, please consult your local Rexnord representative or the Rexnord Bearing Engineering Department. Oil lubrication is not recommended.

RELUBRICATION

Bearings should be re-lubricated at regular intervals. The frequency and amount of lubricant will be determined by the type of service. General guidelines for re-lubrication frequency and amount are based upon average application conditions. See LUBRICATION TABLE on page 2. Oil lubrication is not recommended.

At High temperatures, greases tend to degrade more rapidly and thus require fresh grease more frequently. In general, small amounts of grease added frequently provide better lubrication. When equipment will not be in operation for some time, grease should be added to provide corrosion protection. This is particularly important for equipment exposed to severe weather.

AUTOMATIC LUBRICATION SYSTEMS

A variety of automatic re-lubrication systems are available for use with ball bearings. Key considerations are:

1. NLGI grade of grease used, consistent with system layout
2. An amount/frequency combination necessary to replenish the grease

MIXING OF GREASES

Mixing of any 2 greases should be checked with the lubricant manufacturer. If the grease bases are different they should never be mixed.

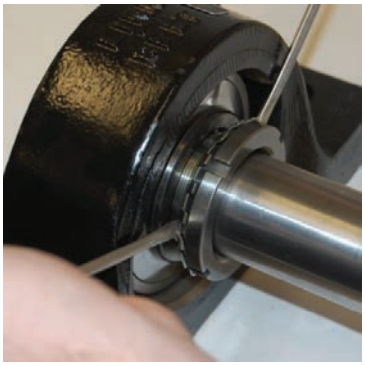

Figure 2) Zero Shaft Fit – Pry against housing to draw adapter sleeve through bearing. Sleeve should not be protruding out the backside of the inner ring.

Link-Belt® *Mounted Ball Bearings*

SET SCREW TORQUE TABLE					
Set Screw Size	**U200 Set Screw**	**Y200/W200 Cam Lock**	**S200 Set Screw**	**U300 Series Collar Mounted**	**Tightening Torque (Inch-Pounds)**
#10	2B08 – 211		2B08-211	312	33 – 40
1/4	212 – 2E20	2B08 – 216	212-216	314 – 316	87 – 92
5/16	220 – 228	217 – 2E20	217-228	318 – 324	165 – 185
3/8	230 – 239	220 – 2E32	230-256	326 – 331	290 – 325
7/16	240 – 243	232 – 239	.....	332 – 339	430 – 460
1/2	244 – 2E56	.....	.....	343 – 347	620 – 680
5/8	263 – 2E64	.....	.....	348 – 356	1225 – 1350
3/4	.....	.....	.....	363	2125 – 2350

SHAFT TOLERANCE TABLE – INCHES				
Set Screw Mount	**Cam Lock Mount**	**CL200 Collar Mount**	**U3K00 Series Adapter**	**Tolerance Nominal to:**
2B08-232 312-332	2B08-232	.....	.....	-0.0005”
234-2E64 334-363	234-239	.....	.....	-0.001”
.....	.....	212-232	.....	-0.003”
.....	.....	234-264	327-355	-0.004”
Recommended shaft tolerances are generally satisfactory for loads up to 15% of C (see load ratings in catalog). High load applications will require a press fit to the shaft.				

LUBRICATION TABLE – 200 Series Ball Bearings					
SHAFT SIZE - INCHES	**To Lubricate Units (oz.)**	**RECOMMENDED NUMBER OF MONTHS BEWEEN RELUBRICATION* (BASED ON 24/7 OPERATION)**			
		Relube Interval			
		6 Months	**4 Months**	**2 Months**	**1 Month**
3/4 – 1	0.06	3200	4800	7200	9600
1 1/16 – 1 7/16	0.15	2200	3400	5100	6800
1 1/2 – 1 3/4	0.23	1700	2600	4000	5300
1 7/8 – 2 3/16	0.26	1400	2100	3200	4300
2 1/4 – 2 7/16	0.28	1300	2000	3000	4000
2 1/2 – 2 11/16	0.68	1000	1600	2400	3200
2 3/4 – 3	0.70	850	1650	2500	3300
3 1/16 – 3 1/2	1.12	900	1400	2100	2800
3 9/16 – 4	2.50	800	1200	1800	2300
		Shaft Speed in RPM			

LUBRICATION TABLE- 300 Series Ball Bearings						
SHAFT SIZE - INCHES		**To Lubricate Units (oz.)**	**RECOMMENDED NUMBER OF MONTHS BEWEEN RELUBRICATION* (BASED ON 24/7 OPERATION)**			
U300 & Y300 Series	**U3K00 Adapter Series**		**Relube Interval**			
			6 Months	**4 Months**	**2 Months**	**1 Month**
3/4	.....	0.08	4785	7520	10940	14360
7/8 – 1	.....	0.11	4085	6420	9340	12260
1 1/8 – 1 3/16	.....	0.15	3620	5610	8145	10860
1 1/4 – 1 7/16	.....	0.22	3285	5095	7395	9860
1 1/2	.....	0.30	3080	4930	7190	9450
1 5/8 – 1 3/4	.....	0.41	2640	4225	6060	8100
1 15/16	1 11/16	0.52	2310	3850	5580	7315
2 – 2 3/16	1 15/16	0.70	2045	3410	4945	6480
2 1/4 – 2 7/16	.....	0.83	1830	2990	4320	5815
2 11/16 – 2 3/4	2 3/16	1.25	1660	2580	3865	5155
2 15/16	2 7/16	1.50	1550	2410	3620	4825
3 – 3 3/16	2 11/16	1.80	1370	2225	3420	4450
3 7/16 – 3 1/2	2 15/16	2.42	1350	2025	3040	4050
3 15/16	3 7/16	3.27	1200	1885	2740	3600
			Shaft Speed in RPM			



Figure 3) Loading bearing into loading slots

INSTALLATION INSTRUCTIONS U200, S200, Y200, W200, CL200, U300, Y300, & U3K00

Standard Duty Centrik-Lok SET SCREW TORQUE TABLE		
Set Screw Size	**CL200 Series**	**Tightening Torque (Inch- Pounds)**
#10	212 – 2E20	65 – 72
1/4	220 – 228	151 – 168
5/16	230 – 239	313 – 348
3/8	240 – 2E64	540 – 600

Medium Duty Centrik-Lok SET SCREW TORQUE TABLE		
Set Screw Size	**M_CL200 Series**	**Tightening Torque (Inch- Pounds)**
#10	216	65 – 72
1/4	219 – 224	151 – 168
5/16	227 – 235	313 – 348
3/8	239 – 256	540 – 600

DISASSEMBLY of BEARING INSERT

1. Remove shaft locking device (collar or adapter assembly) and slide off shaft.
2. Place in vice.
3. With a shaft or bar, misalign bearing 90° in housing and remove through slots.
4. Clean and inspect housing. Do not reuse worn housing.

REASSEMBLY OF BEARING INSERT

1. Insert new bearing into loading slots (See figure 3).
2. Torque bearing 90° (see Figure 4) and assure lube holes in the bearing are on the same side as lube groove in housing. Fit should be snug.
3. Install bearing via steps on page 1.

Tapped End Closure Installation

For UG300 only- insert the end closure tabs into the housing. Fill the gap between the end closure outer diameter and housing bore with a bead of silicone sealant/adhesive.

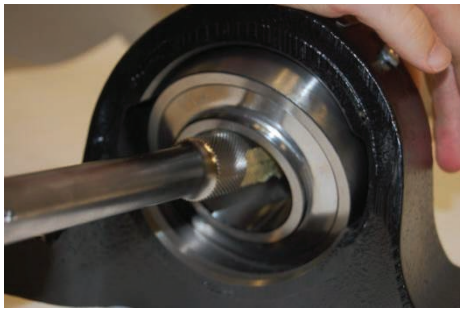

Figure 4) Torquing bearing 90° into housing

Link-Belt® Unmounted Ball Bearings

Unmounted Bearing Mounting Procedure

Cylindrical O.D. Ball bearings (UB200, UBG200, WB200, WBG200, YB200, YBG200)

1. Inspect shaft (see shaft tolerance table below) and housing bore (see housing seat diameter and tolerance table on page 4). Clean shaft, housing bore and mounting surface as needed.
2. Lubricate housing bores and shaft seats to facilitate with assembly. Back out any and all setscrews.
3. Depending on assembly sequence, insert bearings into housings and onto their shafts.
4. Position and assemble any snap rings or locating devices at this time.
5. Lock bearing to the shaft:

   Set Screw Lock (UB200, UBG200)
   Tighten the set collar set screws on the bearing to the proper tightening torque which can be found in the SET SCREW TORQUE TABLE below. Alternate torquing of the screws to prevent unequal loading. If an Allen wrench is used as a torque wrench, place a length of pipe over the long end and pull until the wrench begins to twist.

   Eccentric Cam Lock (WB200, WBG200, YB200, YBG200)
   Slide collar over the shaft until it rests over the cam of the inner ring. **Rotate the collar in the direction of normal shaft rotation until snug.** Utilizing a hammer and punch, rotate the collar until tight. Tighten set screws securely. Utilize torque values from SET SCREW TORQUE TABLE below. If an Allen wrench is used as a torque wrench, place a length of pipe over the long end and pull until the wrench begins to twist.

6. Check system for freedom of rotation. Any condition of abnormal sound, irregular rotational torque, or vibration may be due to improper installation. Installation should be checked and corrections made prior to operation.

SQUARE, ROUND, AND HEX BORE BEARINGS (R200, S200, & K200)

1. If installing in housing assemble bearing in housing. If installing cylindrical OD bearing in housing, exert pressure only to the outer ring. DO NOT strike or exert pressure on the seals or inner ring.
2. Inspect shaft. Shaft must be clean, straight and free of burrs.
3. Coat shaft and bearing bore with grease or oil to facilitate assembly of closely fitted bearings
4. Slide components on shaft in correct order.
5. Bolt housings or stampings lightly to the supports.
6. Tighten and secure locking devices.
7. Check system for freedom of rotation. Any condition of strain, abnormal sound, irregular rotational torque, or vibration may be due to improper installation. Installation should be checked and corrections made prior to operation.

SHAFT TOLERANCE TABLE – INCHES

Shaft Diameter	Tolerance Nominal to:
1/2" – 2”	-0.0005”
2 1/16” – 4”	-0.001”

SET SCREW TORQUE TABLE

Shaft Size (In.)	Seating Torque (in-lbs)		
	WB200	YB200	UB200
1/2 – 11/16	92	92	40
3/4	92	92	92
13/16 – 1	92	92	92
1 1/16 – 1 3/16	185	185	92
1 1/4 – 1 7/16	325	325	185
1 1/2 – 1 9/16	325	325	185
1 5/8 – 1 3/4	325	325	185
1 13/16 – 1 15/16	325	325	325
2 – 2 3/16	460	460	325
2 1/4 – 2 7/16	460	460	325

LUBRICATION INFORMATION

Standard bearings come pre-lubricated from the factory with Exxon Ronex MP grease. Exxon Ronex MP is an NLGI Grade 2. EP (extreme pressure) grease with a lithium complex thickener. It can be used for high loads, and in some cases at temperatures as low as -40°F or as high as +225°F. For high speeds, other special service conditions, or for inquires on other acceptable greases, please consult your local Rexnord representative or the Rexnord Bearing Engineering Department. Oil lubrication is not recommended.

RELUBRICATION

Bearings should be re-lubricated at regular intervals. The frequency and amount of lubricant will be determined by the type of service. General guidelines for re-lubrication frequency and amount are based upon average application conditions. See LUBRICATION TABLE on page 2. Oil lubrication is not recommended.

At High temperatures, greases tend to degrade more rapidly and thus require fresh grease more frequently. In general, small amounts of grease added frequently provide better lubrication. When equipment will not be in operation for some time, grease should be added to provide corrosion protection. This is particularly important for equipment exposed to severe weather.

AUTOMATIC LUBRICATION SYSTEMS

A variety of automatic re-lubrication systems are available for use with ball bearings. Key considerations are:

1. NLGI grade of grease used, consistent with system layout
2. An amount/frequency combination necessary to replenish the grease

MIXING OF GREASES

Mixing of any 2 greases should be checked with the lubricant manufacturer. If the grease bases are different they should never be mixed.

Link-Belt® Unmounted Ball Bearings

Housing Bearing Seat Diameters For Cylindrical O.D. Ball Bearings

Class of fit selection

Housing construction	Operating condition			Class of fit*	Remarks
Housing not split radially	Housing rotating in relation to direction of load	Normal and heavy loads		N6	Outer ring not axially displaceable
		Light loads		M6	
		Heavy shock loads			
	Direction of load indeterminate	Normal and heavy loads where outer ring does not have to be axially displaceable		K6	Outer ring, as a rule, not axially displaceable
Housing split or not split radially		Normal and light loads where displaceability of outer ring is desirable		J6	Outer ring, as a rule, axially displaceable
	Housing stationary in relation to direction of loads	Shock loads temporary complete unloading			
		All loads	Housing not split radially	H6	Outer ring is easily displaceable axially
			Housing split radially	H7	



Class of fit and housing bores (inches/µm)

Basic size W200, Y200, U200, C200	Basic size R200, S200, K200,	Nominal bearing O.D. and housing bore mm	Nominal bearing O.D. and housing bore Inches	Bearing O.D. tolerance △	Bearing/housing diameter fits ▲ H7 Tolerance Fit	H7 Tolerance Housing bore	H6 Tolerance Fit	H6 Tolerance Housing bore	J6 Tolerance Fit	J6 Tolerance Housing bore	K6 Tolerance Fit	K6 Tolerance Housing bore	M6 Tolerance Fit	M6 Tolerance Housing bore	N6 Tolerance Fit	N6 Tolerance Housing bore
				+.0000	.0000	–.0000	.00000	–.0000	.0002T	–.0002	.0005T	–.0005	.0008T	–.0008	.0011T	–.0011
2M17	211	203	*40*	1.5748 –.0005	.0015L	+.0010	.0011L	+.0006	.0009L	+.0004	.0006L	+.0001	.0003L	–.0002	.0000	–.0005
2M20	212	204	*47*	1.8504 +0	0	– 0	0	– 0	5T	– 5	13T	–13	20T	–20	28T	–28
				–13	38L	+25	28L	+15	23L	+10	15L	+2	8L	–5	0	–13
2M25	216	205	*52*	2.0472 +.0000	.0000	–.0000	.0000	–.0000	.0002T	–.0002	.0006T	–.0006	.0010T	–.0010	.0013T	–.0013
2M30	219	206	*62*	2.4409 –.0005	.0017L	+.0012	.0012L	+.0007	.0010L	+.0005	.0006L	+.0001	.0002L	–.0003	.0001T	–.0006
2M35	223	207	*72*	2.8346 +0	0	– 0	0	– 0	5T	– 5	15T	–15	25T	–25	33T	– 43
2M40	225	208	*80*	3.1496 –13	43L	+30	30L	+17	26L	+13	15L	+2	5L	– 8	2T	–15
2M45	228	209	*85*	3.3465 +.0000	.0000	–.0000	.0000	–.0000	.0002T	–.0002	.0007T	–.0007	.0012T	–.0012	.0016T	–.0016
2M50	231	210	*90*	3.5433 –.0006	.0020L	+.0014	.0015L	+.0009	.0013L	+.0007	.0008L	+.0002	.0003L	–.0003	.0001T	–.0007
2M55	235	211	*100*	3.9370 +0	0	– 0	0	– 0	5T	– 5	18T	–18	30T	– 30	40T	– 40
2M60	239	212	*110*	4.3307 –15	50L	+35	38L	+23	33L	+18	20L	+5	8L	– 8	3T	–18

Please consult for availability.

1µm = *.001 mm*

The appropriate housing bore for any class of fit can be easily determined by applying the housing tolerance to the nominal housing bore.

Example, (using basic size 211 and class of fit H7):

Nominal housing bore	=	1.5748	1.5748	40.000	40.000
Housing bore tolerance	=	– .0000	+ .0010	– 0.000	+ 0.025
Resultant housing bore	=	1.5748	1.5758	40.000	40.025

▲ Symbol L indicates a loose or clearance fit. Symbol T indicates a tight or interference fit.

△ The arithmetical mean of the largest and smallest single diameter to be within tolerance shown. Allowable deviations from mean diameter per ANSI/ABMA Standard 20, latest printing.

LIMITED WARRANTY – LIABILITY

A. IT IS EXPRESLY AGREED THAT THE FOLLOWING WARRANTY IS GIVEN IN LIEU OF ALL OTHER WARRANTIES, WHETHER EXPRESSLY IMPLIED OF STATUTORY. INCLUDING THOSE OF **MERCHANTABILITY** AND FITNESS FOR A PATICULAR PURPOSE, AND OF ANY OTHER OBLIGATION OR LIABILITY ON OR PART OF ANY KIND OR NATURE WHATSOEVER.

No representative of ours has any authority to waive, alter, vary, or add to the terms hereof without prior approval in writing, to our customer, signed by an officer of our company. It is expressly agreed that the entire warranty given to the customer is embodied in this writing. This writing constitutes the final expression of the parties agreement with respect to warranties, and that it is a complete and exclusive statement of the terms of the warranty.

We warrant to our customers that all Products manufactured by us will be free from defects in material and workmanship at the time of shipment to our customer for a period of one (1) year from the date of shipment. All warranty claims must be submitted to us within ten days of discovery of defects within the warranty period, or shall be deemed waived. As to Products or parts thereof that are proven to have been defective at the time of shipment, and that were not damaged in shipment, the sole and exclusive remedy shall be repair or replacement of the defective parts or repayment of the proportionate purchase price for such Products or part, at our option. Replacement parts shall be shipped free of charge f.o.b. from our factory.

This warranty shall not apply to any Product which has been subject to misuse; misapplication, neglect (including but not limited to improper maintenance and storage); accident, improper installation, modification (including but not limited to use of unauthorized parts or attachments), adjustment, repair or lubrication. Misuse also includes, without implied limitation, deterioration in the Product or part caused by chemical reaction, wear caused by the presence of abrasive materials, and improper lubrication. Identifiable items manufactured by others but installed in or affixed to our Products are not warranted by use but, bear only those warranties, express or implied, given by the manufacturer of that item, if any. Responsibility for system design to insure proper use and application of Link-Belt Products within their published specifications and ratings rests solely with customer. This includes without implied limitation analysis of loads created by torsional vibrations within the entire system regardless of how induced.

B. It is expressly agreed that our liability for any damage arising out of or related to this transaction, or the use of our Products, whether in contract or in tort, is limited to the repair or replacement of the Products, or the parts thereof by use, or to a refund of the proportionate purchase price. We will not be liable for any other injury, loss, damage, or expense, whether direct or consequential, including but not limited to use, income, profit, production, or increased cost of operation, or spoilage of or damage to material, arising in connection with the sale, installation, use of, inability to use, or the replacement of, or late delivery of, our Products.

TAB 8



PHOENIX

PHOENIX Process Equipment Company
2402 Watterson Trail
Louisville, KY 40299
(502) 499-6198
(502) 499-1079 Fax

SECTION 4 COMPONENTS

BOOSTER PUMP

Manufacturer: Grundfos

Model: CR10-5

Rating: 52 GPM @ 80 PSI boost

HP/Service: 5 HP, 575V, 60 HZ, 3 PH

52 GPM @ 30 PSI required at water inlet from the plant.
The Grundfos pump will boost up to the required pressure of 100 PSI for belt cleaning.
Plant water must contain less than 200 PPM solids, maximum solids is 20 mesh.
Maintain flooded suction at pump inlet.

GRUNDFOS

Company name:
Created by:
Phone:

Date: 31/01/2019

Qty.	Description
1	**CR 10-5 A-GJ-A-E-HQQE**



Product No.: 96126734
Vertical, non-self-priming, multistage, in-line, centrifugal pump for installation in pipe systems and mounting on a foundation.

The pump has the following characteristics:
- Impellers and intermediate chambers are made of
- The shaft seal has assembly length according to EN 12756.
- Power transmission is via cast iron split coupling.

Controls:
Frequency converter: NONE

Liquid:
Pumped liquid: Water
Liquid temperature range: -4 .. 248 F
Liquid temperature during operation: 68 F
Density: 62.29 lb/ft³

Technical:
Pump speed on which pump data are based: 3461 rpm
Rated flow: 53.3 US GPM
Rated head: 191.3 ft
Pump orientation: Vertical
Shaft seal arrangement: Single
Code for shaft seal: HQQE
Curve tolerance: ISO9906:2012 3B

Materials:
Base: Cast iron
EN 1561 EN-GJL-200
ASTM A48-25B
Impeller: Stainless steel
EN 1.4301
AISI 304
Bearing: SIC

Installation:
Maximum operating pressure: 232 psi
Max pressure at stated temp: 232 psi / 250 F
232 psi / -4 F
Type of connection: ANSI / JIS
Size of inlet connection: DN 50
2 inch
Size of outlet connection: DN 50

GRUNDFOS

Company name:
Created by:
Phone:

Date: 31/01/2019

Qty.	Description	
		2 inch
	Pressure rating for pipe connection:	PN 25
	Flange rating inlet:	300 lb
	Flange size for motor:	182TC
	Electrical data:	
	Motor standard:	NEMA
	Others:	
	Net weight:	92.6 lb
	Gross weight:	108 lb
	Shipping volume:	4.94 ft³
	Country of origin:	US
	Custom tariff no.:	8413.70.2040

Company name:
Created by:
Phone:

Date: 31/01/2019

Description	Value
General information:	
Product name:	CR 10-5 A-GJ-A-E-HQQE
Product No:	96126734
EAN number:	5700396999364
Technical:	
Pump speed on which pump data are based:	3461 rpm
Rated flow:	53.3 US GPM
Rated head:	191.3 ft
Head max:	241.8 ft
Stages:	5
Impellers:	5
Number of reduced-diameter impellers:	0
Low NPSH:	N
Pump orientation:	Vertical
Shaft seal arrangement:	Single
Code for shaft seal:	HQQE
Curve tolerance:	ISO9906:2012 3B
Pump version:	A
Model:	A
Materials:	
Base:	Cast iron
	EN 1561 EN-GJL-200
	ASTM A48-25B
Impeller:	Stainless steel
	EN 1.4301
	AISI 304
Material code:	A
Code for rubber:	E
Bearing:	SIC
Installation:	
Maximum operating pressure:	232 psi
Max pressure at stated temp:	232 psi / 250 F
	232 psi / -4 F
Type of connection:	ANSI / JIS
Size of inlet connection:	DN 50
	2 inch
Size of outlet connection:	DN 50
	2 inch
Pressure rating for pipe connection:	PN 25
Flange rating inlet:	300 lb
Flange size for motor:	182TC
Connect code:	GJ
Liquid:	
Pumped liquid:	Water
Liquid temperature range:	-4 .. 248 F
Liquid temperature during operation:	68 F
Density:	62.29 lb/ft³
Electrical data:	
Motor standard:	NEMA
Controls:	
Frequency converter:	NONE
Others:	
Net weight:	92.6 lb
Gross weight:	108 lb
Shipping volume:	4.94 ft³
Country of origin:	US
Custom tariff no.:	8413.70.2040

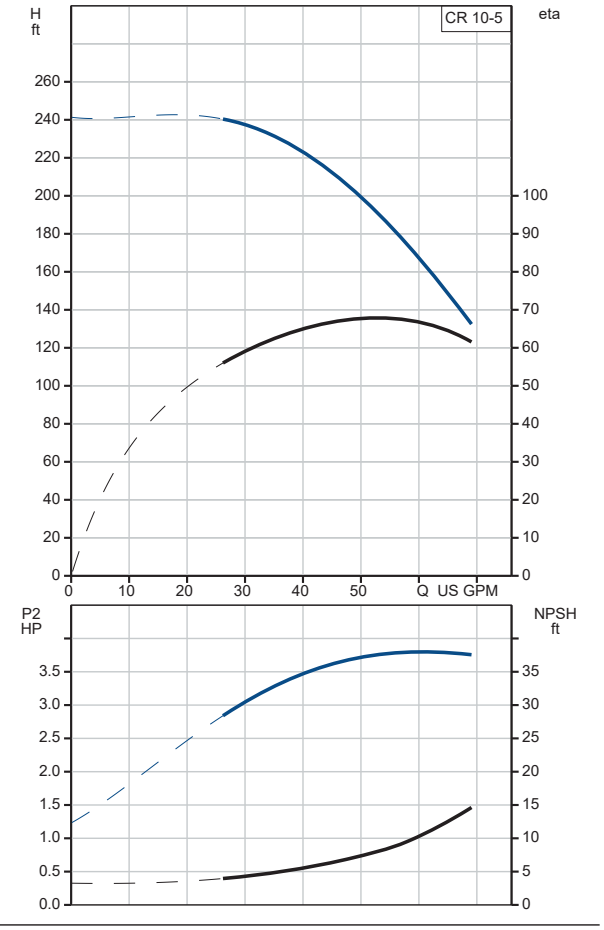

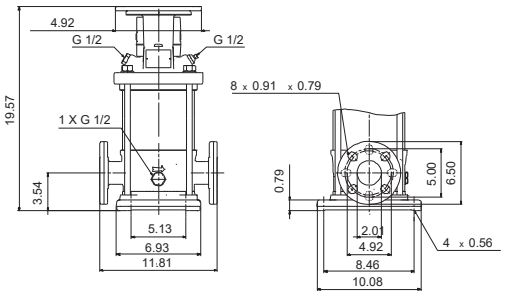

Company name:
Created by:
Phone:

Date: 31/01/2019

96126734 CR 10-5 A-GJ-A-E-HQQE 60 Hz

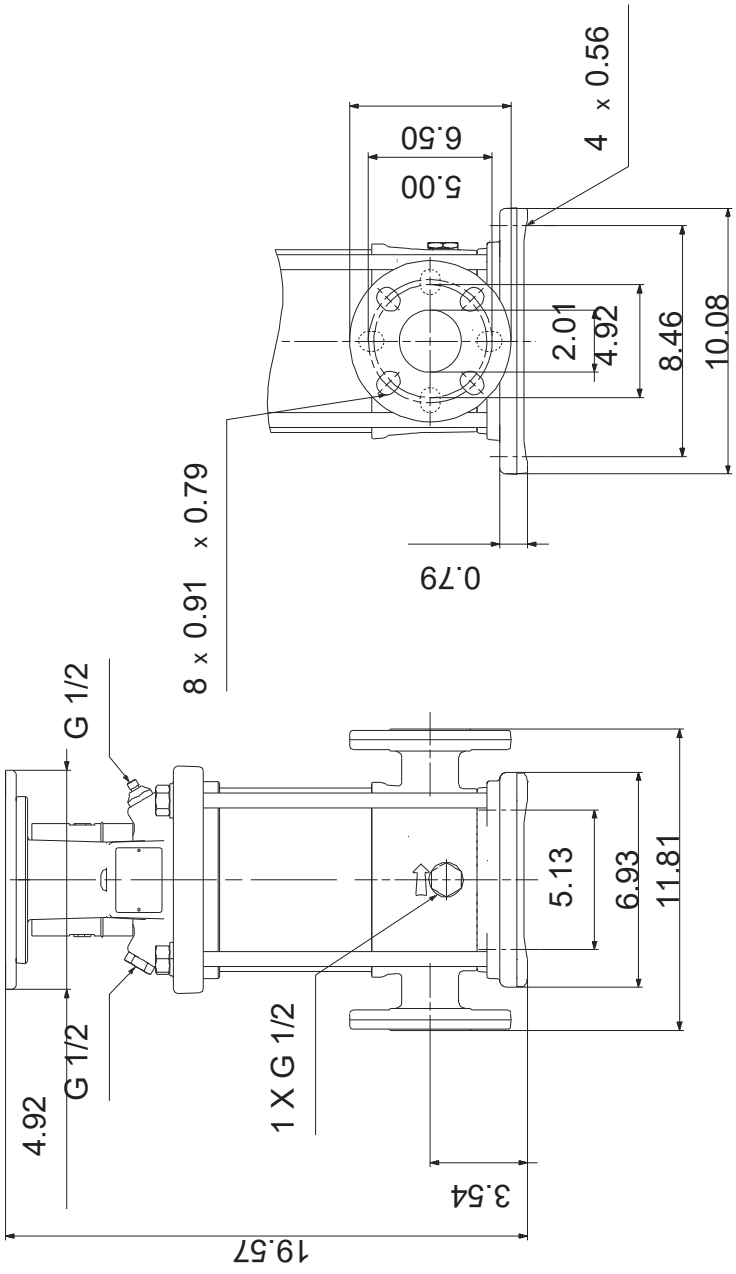

Note! All units are in mm unless others are stated.
Disclaimer: This simplified dimensional drawing does not show all details.

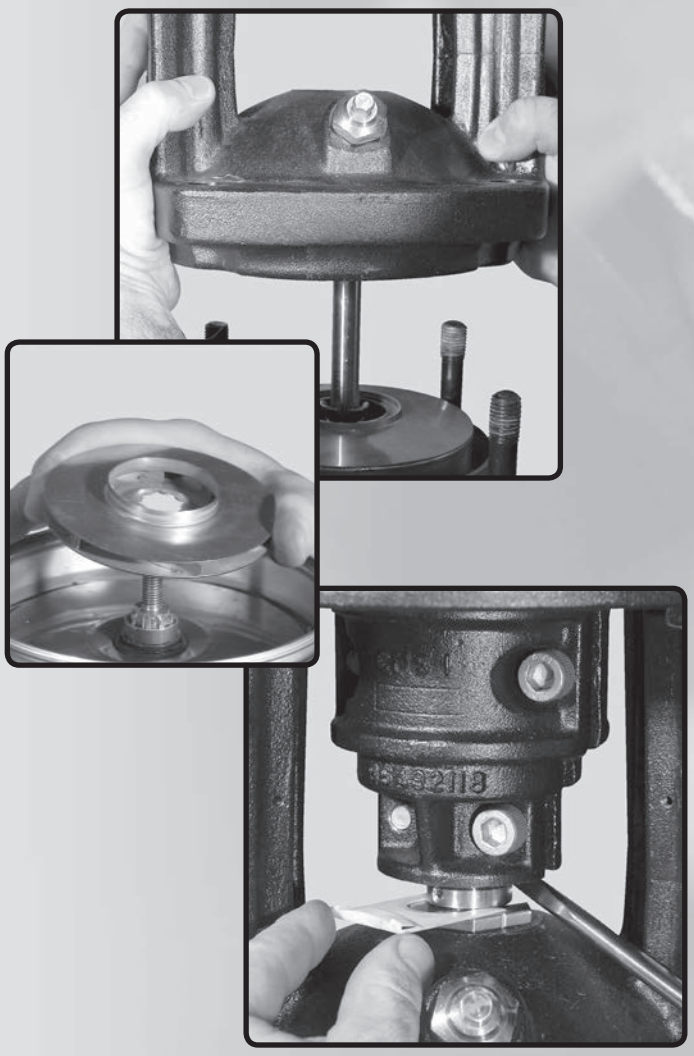

CR, CRI, CRN 10•15•20
Dismantling & Reassembly

CONTENTS

Dismantling Procedures ..... Page 2
When Should A Part Be Replaced ? ..... Page 8

Reassembly Procedures ..... Page 9
Setting The Coupling Height ..... Page 15
Order of Stage Assembly: CR, CRI, CRN 10 ..... Page 16
Order of Stage Assembly: CR, CRI, CRN Low NPSH 10 ..... Page 17
Order of Stage Assembly: CRNE 10 SF ..... Page 18
Order of Stage Assembly: CR, CRI, CRN 15/20 ..... Page 19
Order of Stage Assembly: CR, CRN Low NPSH 15/20 ..... Page 20
Order of Stage Assembly: CRN15/20 SF ..... Page 21

TORQUES

Position Number		
7a	Coupling Guard Screw	1.5 ft.-lbs./2 Nm
9	Coupling Hex Screw	
	5 mm M6 Screw	10 ft.-lbs./13 Nm
	6 mm M8 Screw	23 ft.-lbs./31 Nm
	8 mm M10 Screw	46 ft.-lbs./62 Nm
26b	Strap Bolt	
	13 mm M8 x 25 mm	11 ft.-lbs./15 Nm
28	Motor Bolt	
	9/16" UNC 3/8" Bolt	10 ft.-lbs./13 Nm
	3/4" UNC 1/2" Bolt	23 ft.-lbs./31 Nm
36	Staybolt Nut	
	CR, CRI	59 ft.-lbs./80 Nm
	CRN	74 ft.-lbs./100 Nm
67	Shaft Lock Nut	16.3 ft.-lbs./22 Nm
105 (a,b)	Shaft Seal	
	41 mm Nut	26 ft.-lbs./35 Nm
113	2.5 mm Set Screw	2 ft.-lbs./2.5 Nm

be
think
innovate

GRUNDFOS

These instructions cover the complete dismantling and repair of the pump after the pump has been isolated from the system. Before removing the pump from the system, make sure all valves are closed. Relieve any built up pressure by opening the vent plug screw. The power source should be turned off and locked out before starting any work. Removal of field wiring to the motor wires may be required. Color coding or numbering the wires will aid in reinstallation.

1

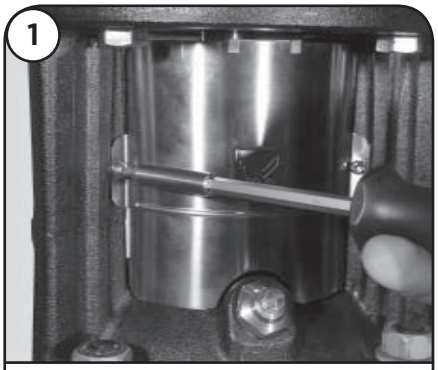

Using a slotted Screwdriver or TORX® tip T20, remove Coupling Guard Screws (Pos. 7a). Then, remove the Coupling Guards (Pos. 7).

2

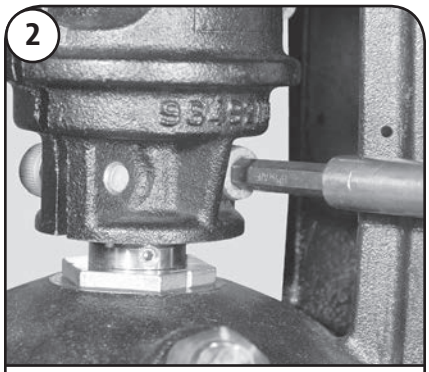

Remove the 5, 6 or 8 mm Hex Head Coupling Bolts (Pos. 9) from the Coupling Halves (Pos. 10a).

3

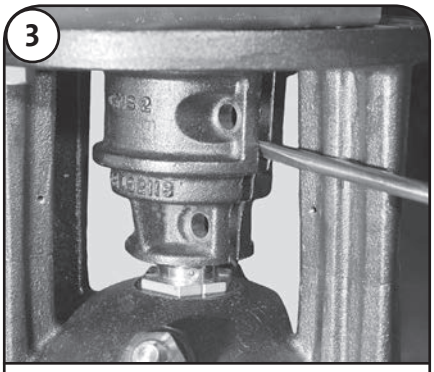

Remove Coupling Halves. Insert a slotted Screwdriver in Coupling gap and twist to free Coupling Half.

4

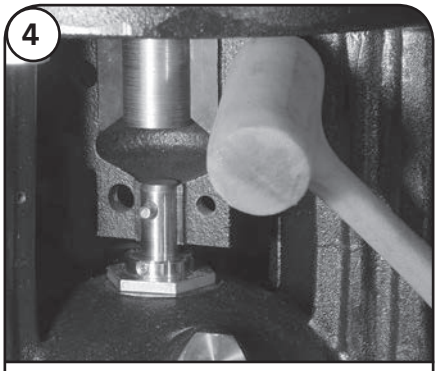

To free, remove remaining Coupling Half. Strike Coupling Half with a rubber mallet on upper edge. Remove shaft pin (Pos. 10).

NOTE: If you have multiple pumps, do not interchange coupling components... they are a matched set.

5

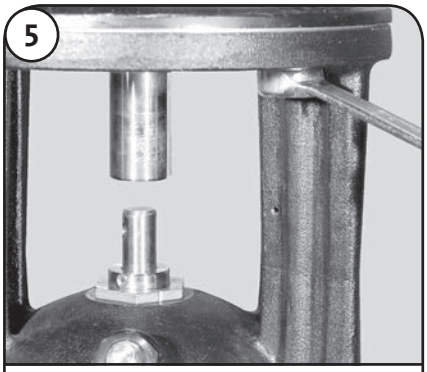

Remove the 9/16" Head UNC 3/8" or 3/4" Head UNC 1/2" Motor Bolts (Pos. 28) and lift the motor off the Motor Stool (Pos. 2).

6

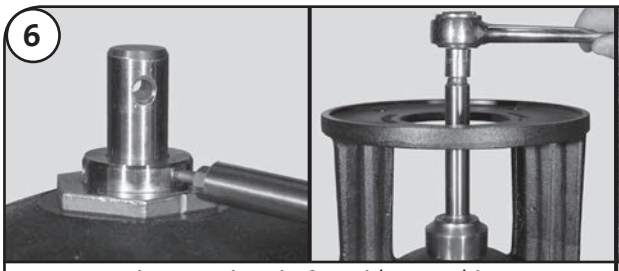

Remove the cartridge Shaft Seal (Pos. 105) by:

- Loosening the three 2.5 mm Shaft Seal Securing Allen Screws (Pos. 113) approximately 1/2 to 1 turn.
- Using 00SV2107 or a 41 mm deep socket, fully unscrew the Shaft Seal from the Motor Stool (Pos. 2) or Pump Head (Pos. 77) on I and N models.
- Sliding the Shaft Seal up and off the Shaft (Pos. 51).

For Shaft Seal replacement only, go to Reassembly, step 24. For full dismantling, continue to step 7.

7

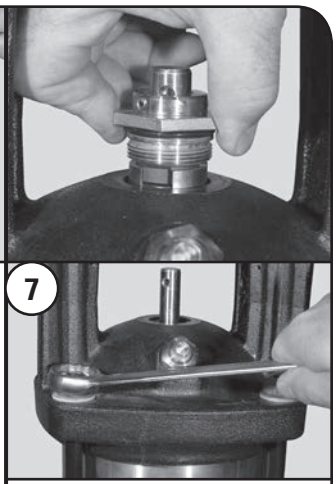

Remove the four 24 mm Staybolt Nuts (Pos. 36) and Washers (Pos. 66a).

8

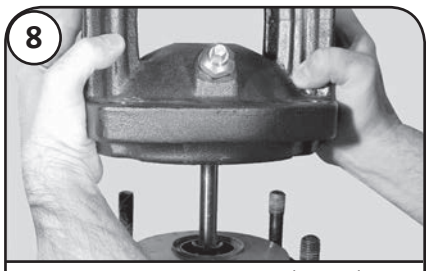

Remove the Motor Stool (Pos. 2) and Pump Head (Pos. 77) on I and N models. (Light upward blows with a rubber mallet may be required.)

- If the pump is a standard unit, skip to Dismantling, step 23.
- For **Cool -Top®** type/equipped pumps, see Dismantling, steps 9 to 13.
- Pumps built with a **Back-to-Back Seal**, see Dismantling, steps 14 to 17.
- Pumps built with **Tandem/Quench Seal**, see Dismantling, steps 18 to 22.

Cool-Top®

9

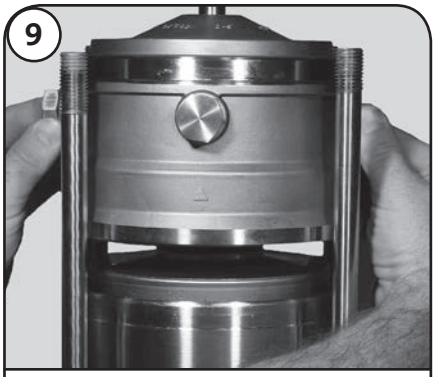

Remove the Cool-Top® assembly/Pump Head Cover (Pos. 77a). Light blows with a rubber mallet may be required to loosen assembly.

10

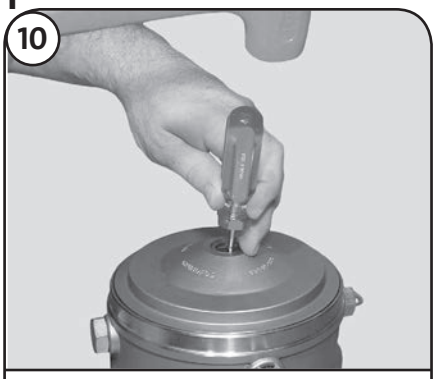

Before removing the Disk Plate (Pos. 79a) from the Pump Head (Pos. 77), inspect the Bushing (Pos. 79b). If worn, use a Flat Blade Punch or Special Punch, 00SV2127, and a mallet to drive out the Bushing.

11

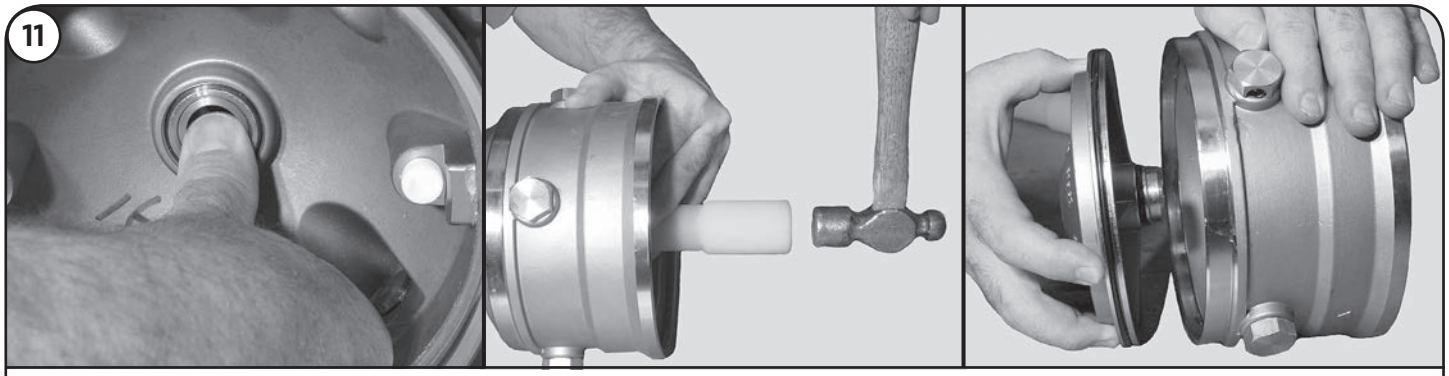

Remove the Disk Plate (Pos. 79a) from the Pump Head Cover (Pos. 77a) by pushing outward with your thumb. If stuck, use a Nylon Punch and a Mallet to drive out.

12

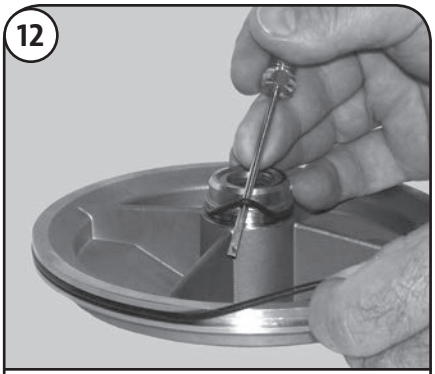

Remove the O-ring (Pos. 37c & 109a) from the Disk Plate (Pos. 79a).

13

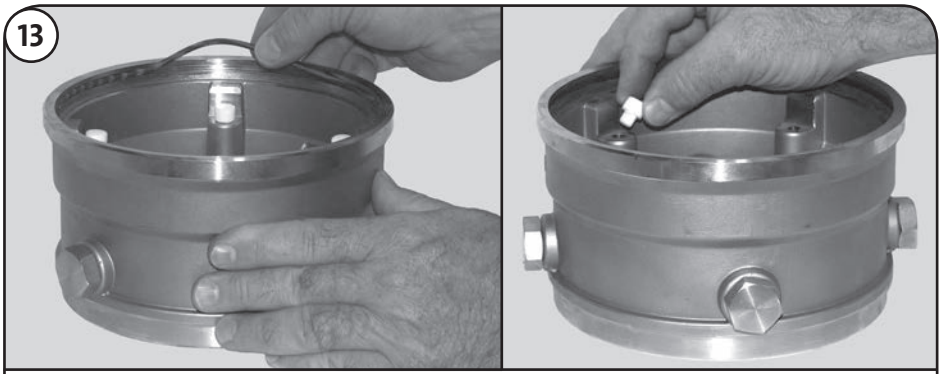

Remove Sleeve O-ring (Pos. 37) from the pump Head Cover (Pos. 77a). Then remove the PTFE Stack Compression Springs (Pos. 60a) from the Pump Head Cover.

To continue, proceed to step 23.

Back-to-Back Seal

14

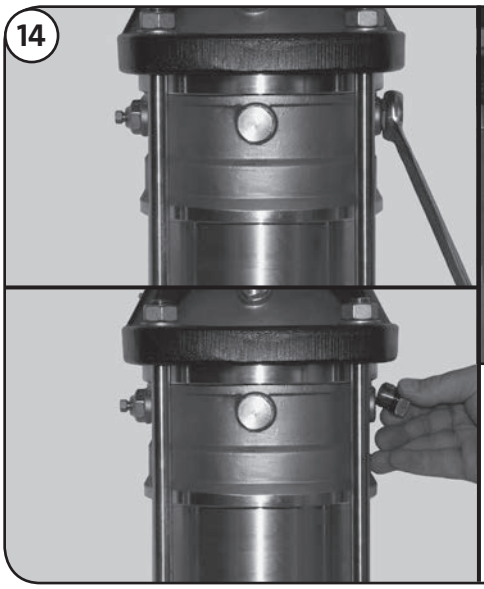

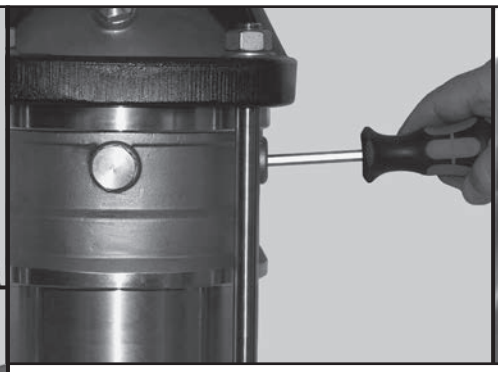

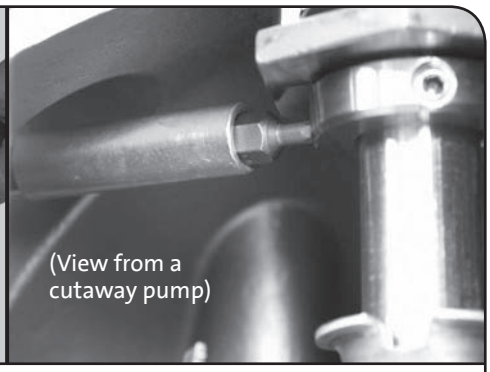

Loosen and remove the plug to allow access to Shaft Seal securing screw. Insert a 2.5 mm allen wrench to loosen (approximately 1/2 to 1 turn) the three Set Screws (Pos. 113) of the Inboard Seal (Pos. 105b).

15

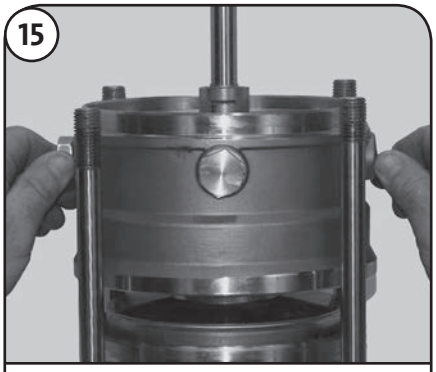

Remove the Pump Head Cover (Pos. 77a). Light blows with a rubber mallet may be required to loosen assembly.

16

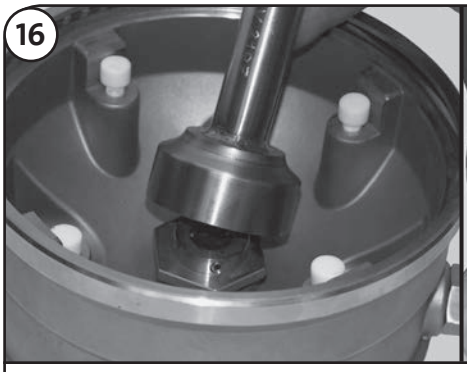



Flip the Pump Head Cover over to remove Shaft Seal (Pos. 105b). Using 00SV2107 or 41 mm Deep Socket, loosen and unscrew the Shaft Seal.

17

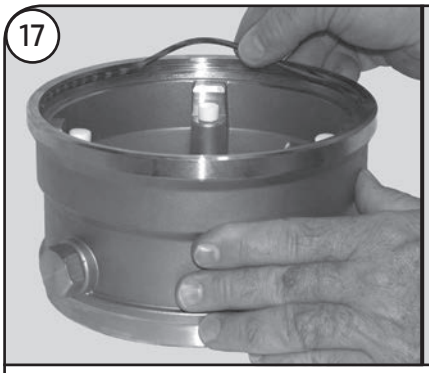

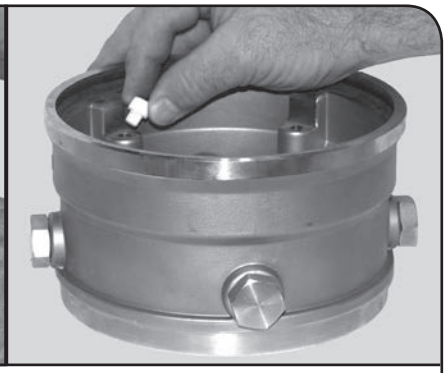

Remove the Sleeve O-Ring (Pos. 37) and the PTFE Stack Compression Springs (Pos. 60) from the Pump Head Cover (Pos. 77a).

To continue, proceed to step 23.

Tandem Seal

18

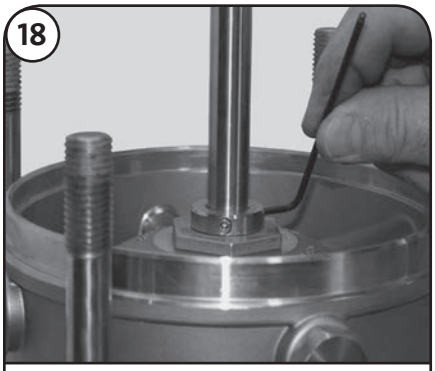

Loosen (approximately 1/2 to 1 turn) the three 2.5 mm Set Screws (Pos. 113) of the Inboard Seal (Pos. 105b).

19

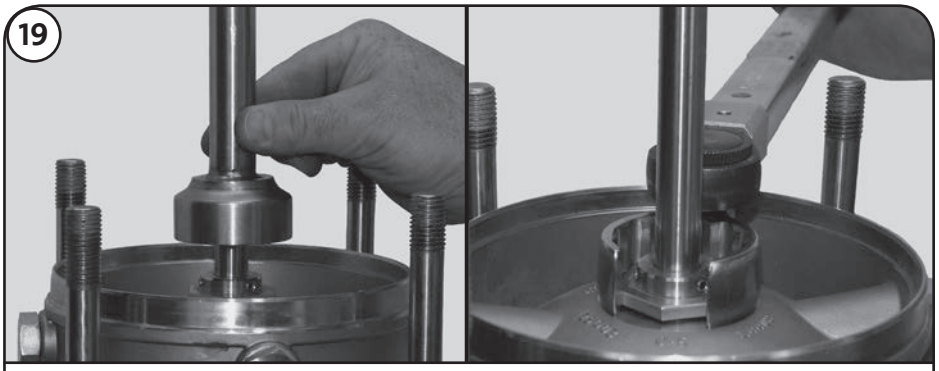

Use specialty tool, 00SV2107, a 41 mm Deep Socket, or an Open Ring Spanner to loosen.

20



Remove the Pump Head Cover (Pos. 77a). Light blows with a rubber mallet may be required to loosen assembly.

21

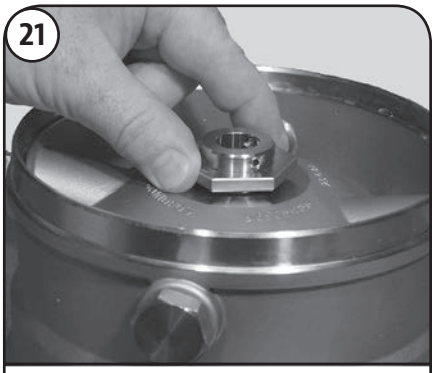

Finish removal of Shaft Seal (Pos. 105b) from Pump Head Cover (Pos. 77a). Flip the Pump Head Cover over and go to step 22.

22

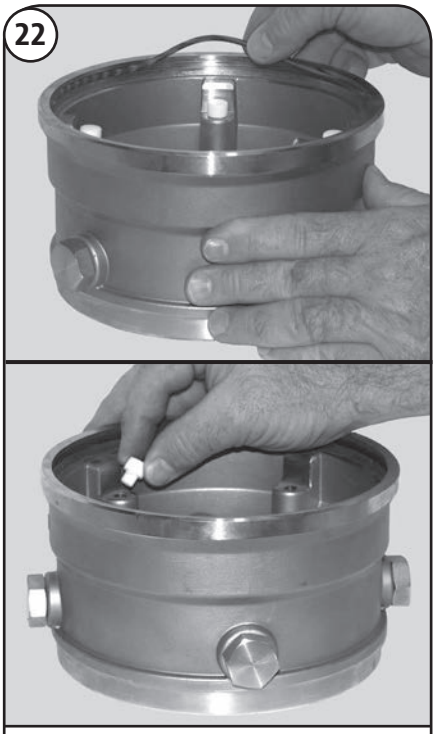

Remove the Sleeve O-Ring (Pos. 37) and the PTFE Stack Compression Springs (Pos. 60) from the Pump Head Cover (Pos. 77a).

To continue,
proceed to step 23.

23

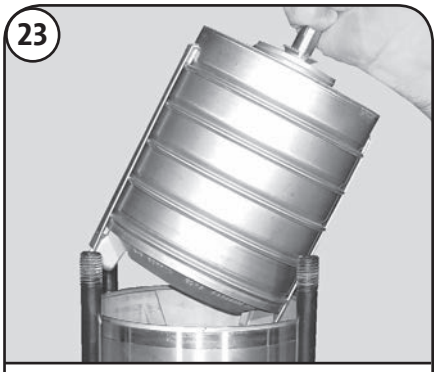

Grab the shaft and lift impeller stack out of the pump. If it is stuck, a light blow with a rubber mallet may be needed to jolt the stack free.

24

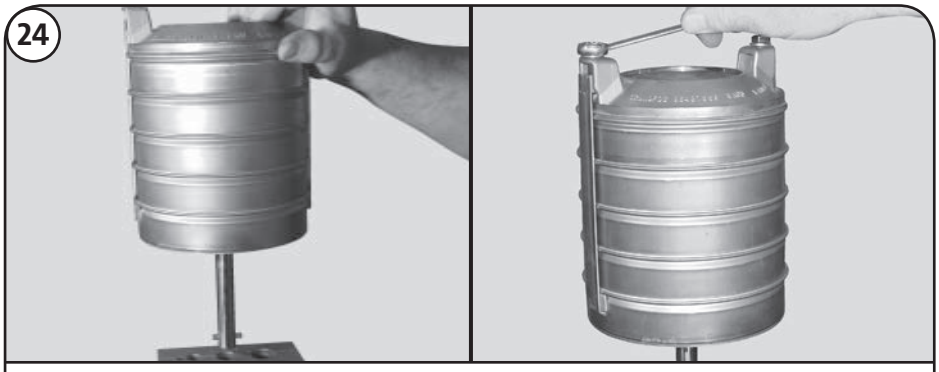

Place the Holder for Shaft, 00SV0040, in a vise. With the shaft pin inserted into the shaft, place the impeller stack into the shaft holder. Tighten vise. Using a 13 mm wrench, remove the Chamber Stack Strap Bolt (Pos. 26b), Washer (Pos. 26c), and Strap (Pos. 26a).

25



Remove the Suction Inlet Connector (Pos. 44).

NOTE: This may come apart in two pieces (Pos. 44a & 44b).

26

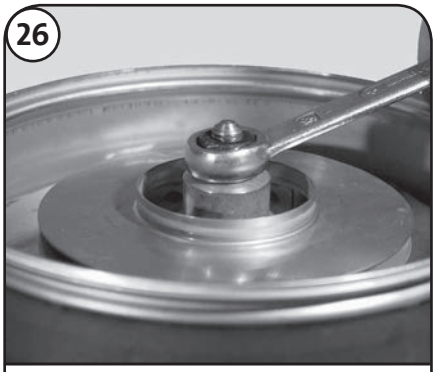

Using a 13 mm wrench, remove the Shaft Lock Nut (Pos. 67), Lock Washer (Pos. 66) and Splined Spacer (Pos. 64c).

27

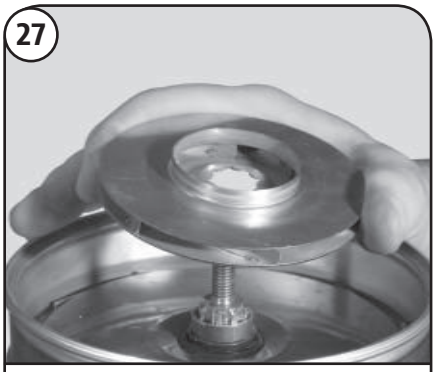

Lift the Impeller (Pos. 49a) off the shaft. If it comes off freely, proceed to step 29. If it is stuck and cannot be removed by hand, proceed to step 28.

28

Move the shaft into a hole of the shaft holder through which it can pass freely. Screw the Punch for Dismantling Shaft (material #00SV0234) onto the threaded section of shaft. Using a hammer, drive punch down past the hub of the first impeller. Noting chart instructions in step 30, remove each impeller (Pos. 49a) and Chamber with bearing (Pos. 4a) and Chamber (Pos. 4).

Repeat these steps until you get down to the last impeller. At that time, gently knock the punch down through the hub area, make sure to catch the shaft as it falls free. Go to step 31.



29

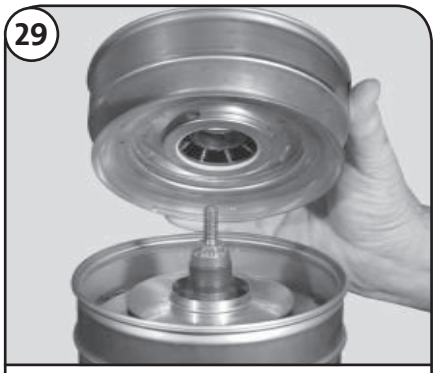

Remove the Chamber with bearing (Pos. 4a) or Chamber (Pos. 4). If it is stuck to the rest of the stack, pry it loose by inserting a screwdriver between the chambers.

30

The dismantling procedures from this point will depend on the type of pump and number of stages it contains. Beginning on page 16, refer to the charts in the Reassembly Procedures to determine what you can expect with the pump you are working on.

Remove all the Bearing Rings (Pos. 47a) and Spacers (Pos. 64 a, c, d) you encounter while repeating steps 27-29. Continue until you remove the last impeller.

Remove the shaft and examine for damage. At that point, continue...

31

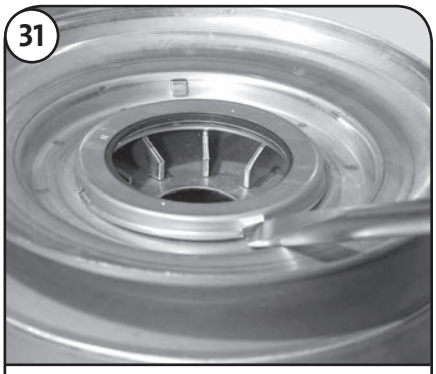

To remove Seal Ring (Pos. 45), insert a slotted screwdriver in relief slot of Seal Ring Retainer (Pos. 65) and twist or use Puller 00SV0239.

32



If the unit leaked around the Sleeve (Pos. 55), removal of the Sleeve may be required. Grip Staybolts (Pos. 26) diagonally. Using your thumbs, press against the Sleeve to release it from the Pump Housing (Pos. 6). Lift off sleeve. (Rocking or light upward blows with a rubber mallet may be required.)

33

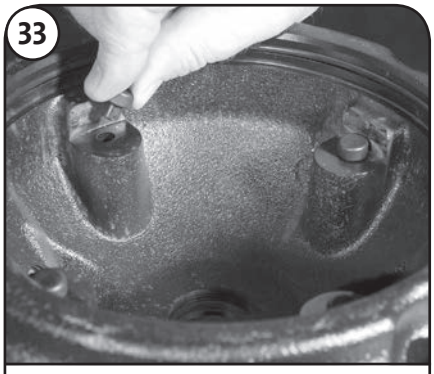

Remove the four Stack Compression Springs (Pos. 60) from the Motor Stool (Pos. 2) or Pump Head (Pos. 22).

34

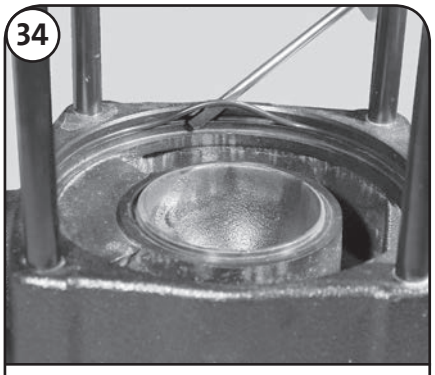

Remove, Sleeve O-rings (Pos. 37) in the Motor Stool (Pos. 2) or Pump Head (Pos. 77) and the Pump Housing (Pos. 6).

35

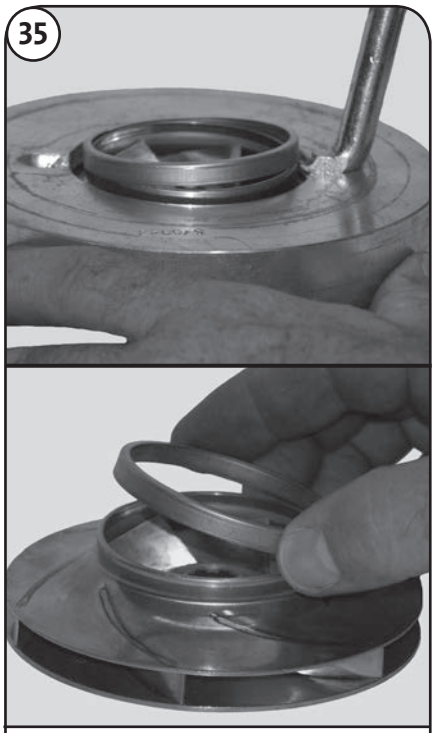

Wear Rings (Pos. 49c) can be removed on CR/CRI/CRN 15 and 20 models. Impellers (Pos. 49a) use Puller 00SV2091 and Support 00SV0043 to work Wear Ring off of impeller.

THE PUMP IS NOW COMPLETELY DISASSEMBLED.

When Should A Part Be Replaced ?

Part	Position(s)	Minimum Operating Condition
Motor Stool Suction/Discharge Chamber	2 6	Excessive pitting of these castings could cause leaks. Rusted castings should have all seating areas cleaned to ensure proper seating of O-rings.
Chambers	4a, 4	Same as for impellers. The maximum inside diameter for the bearing in position 4a SIC is 23.55 (Bronze & Graflon is 22.02 mm). If a groove can be seen or felt, the chamber should be replaced.
Neck Ring	45	Should be free of visible wear on the inside edges Inside diameter for CR10 = 44.01 to 45.04 Inside diameter for CR15 & 20 = 59.84 to 60.02
Bearing ring	47a	Minimum outside diameter SIC is 23.4 mm (TC is 21.874 mm). If a groove can be seen or felt, the bearing should be replaced.
Impellers	49	Should be free from physical markings except for the guide vane welds. The eyelet or contact surface for the Neck Ring should not show any signs of wear. If worn, replace impeller on CR, CRI, CRN10 or Wear Ring only on CR, CRI, CRN 15 and 20. (1) **Cavitation** the implosion of vapor "bubbles" within the impeller stack. Make sure the Net Positive Suction Head Available for the pump meets the minimum Net Positive Suction Head Required for the pump when running at the required flow. (2) **Improper coupling height.** If the coupling is not set to the proper height (see steps 29 to 31 of the Reassembly procedures) the impellers are not suspended as they should be, causing them to rub against the chambers, causing wear.
Shaft	51	Smooth area at the top of shaft should be free of fitting grooves. Spline should not be worn.
Sleeve	55	Should not be pitted or cracked.
Stack Compression Spring	60 & 60a	Should not be reused...replace.
Spacers & Clamp	64, 64a, 64c, 66, 66b, 69	Should show no signs of gouging or wear at bottom or top.
Lock Nut	67	Should not be reused....replace.
Lock Washers	66	Should not be reused....replace.
O-rings	37a, 38, 68, 100, 102, 109a&b	Should be soft and pliable with no visible scars. Since they are easily damaged and fairly inexpensive, it is recommended they be replaced whenever the pump is disassembled.
Shaft Seal	105 & 105b	Seals cannot be disassembled; should be replaced when repairing /rebuilding the pump.
Bushing in Disk Plate 79a	79b	If bushing is scored, replace Bushing. If the inner bore of Disk is damaged, replace Disk.

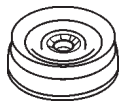


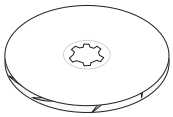
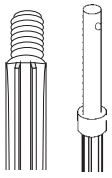




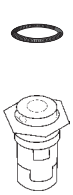


Refer to the Parts List and Kits section for a list of material numbers and spare pare kits.

1



Place Sleeve O-ring (Pos. 37) into recessed area of the Motor Stool (Pos. 2) for CR models, or into the Pump Head (Pos. 77) for CRI, CRN models. Install Sleeve O-ring (Pos. 37b) into Pump Head Cover (Pos. 77a) for CRI, CRN, Cool-Top®, Back-to-Back Seal, Tandem Seal models. Install O-ring into Suction/Discharge Pump Housing (Pos. 6). Note specialty O-ring (Pos. 37b) will always be installed in the lower "Hot" section of the pump of Cool-Top® models. Also install Stack Compression Springs (Pos. 60) for CR, CRI, CRN into Motor Stool or Pump Head Cover. **NOTE:** Cool-Top® models require two sets of four Stack Compression Springs. The PTFE will always be placed in the lower "Hot" section of pump to press against the stack assembly (Pos. 80).

2

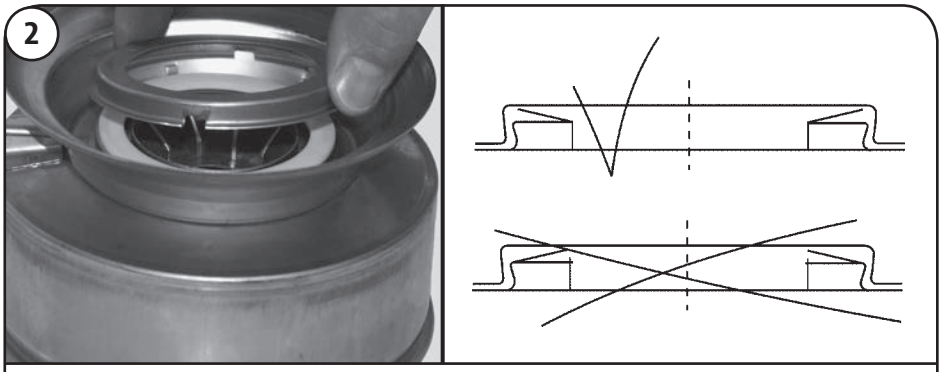

Replace any Seal Ring (Pos. 45) in the Chambers (Pos. 4, 4a, and 5a). Inner edge must face downward (see diagram). Snap Seal Ring Retainer (Pos. 65) into place. The retainer should not spin on the chamber, and the seal ring should move freely from side to side.

3

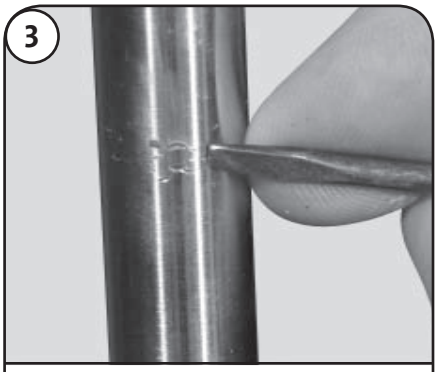

Before reusing the original Shaft (Pos. 51), use a light grit emery cloth to smooth away old set screw marks, as these can cut the O-rings in the seal assembly.

4 **CR, CRI, CRN 15 & 20 ONLY**

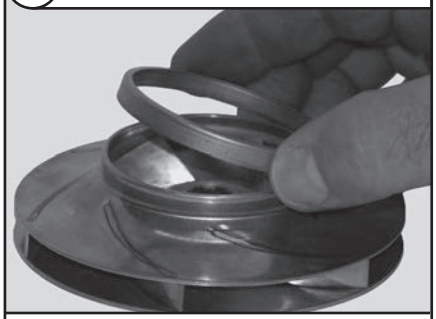

Press new Wear Ring (Pos. 49c) onto Impeller (Pos. 49a). CR, CRI, CRN, use new Impellers if eyelet of Impeller is worn.

5

With Shaft Pin (Pos. 10) inserted into the Shaft (Pos. 51), place shaft into Shaft Holder (material #00SV0040).

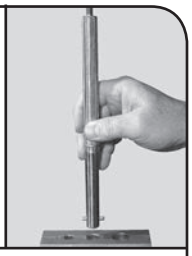

6 The reassembly procedures from this point will depend on the type of pump and the number of stages it contains. Refer to diagrams on pages 16-21 to determine the proper sequence of impellers (Pos. 49 or 49a), Chambers (Pos. 4, 4a), Spacers (Pos. 64 a, c, d) and Bearing Ring (Pos. 47a) needed for the pump you are working with.

Reassemble these stages in the order shown, beginning with the highest number stage and continue to the first stage.

Then, continue....

7



Place the Clamp Spacer (Pos. 64c) onto the shaft.

8

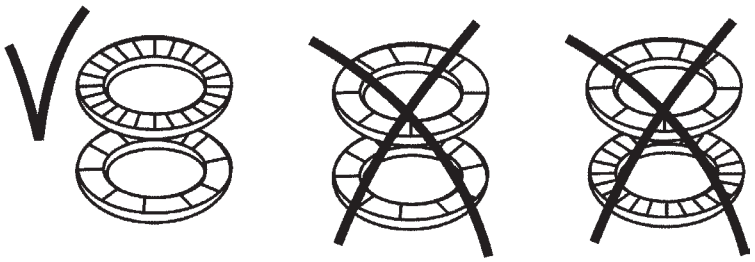

The Lock Washers (Pos. 66) come as a set. If they become separated, it is important the washers are repositioned correctly as noted in the diagram. The tabs should interlock while the serrated edges both point outward. Place the washers onto the shaft.

9

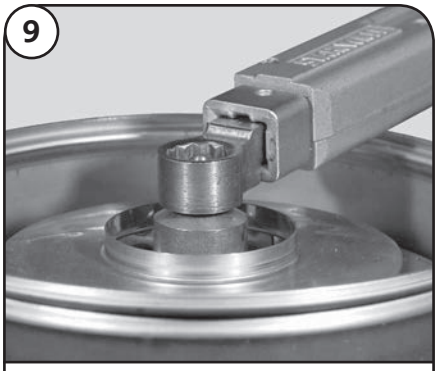

Lubricate the threaded end of the shaft with an FDA-approved lubricant. Thread the Lock Nut (Pos. 67) onto the shaft and torque to 16.3 ft.-lbs./22 Nm. Use 13 mm Socket, 00SV0091, Ratchet, 00SV0295, Torque Wrench, 00SV0269.

10

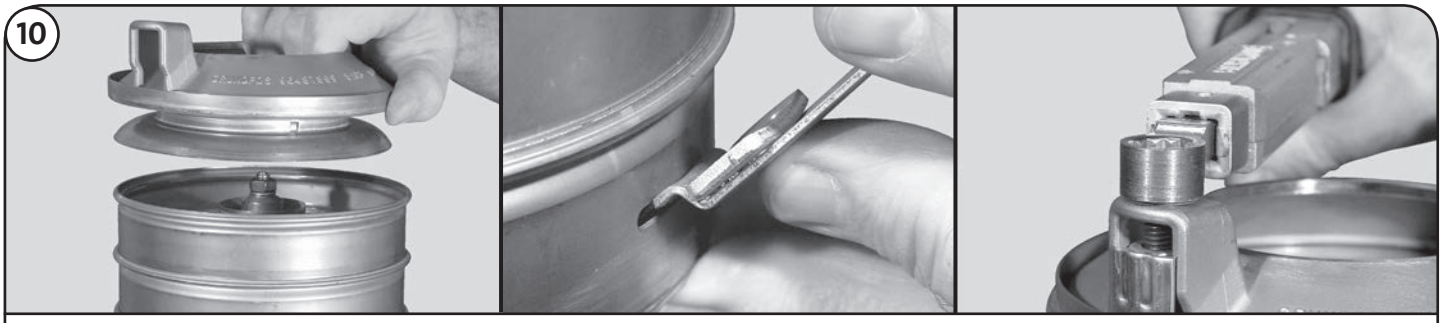

Place Suction Inlet Connector (Pos. 44a & b) onto Stack. Insert Straps (Pos. 26a) into slot in Top Chamber (Pos. 3). Place Washers (Pos. 26c) and Strap Bolt (Pos. 26b) on/into the Straps using a 13 mm Socket, 00SV0091, and Torque Wrench, 00SV0292, with Ratchet, 00SV0295, to Torque Bolt to 11 ft.-lbs./15 Nm.

11

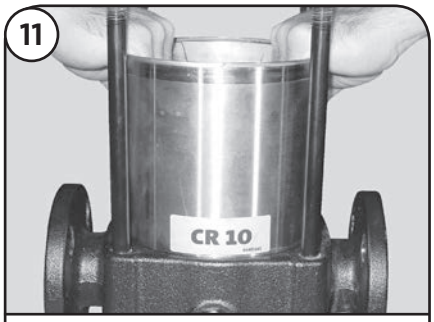

Spray soapy water on the Sleeve O-rings (Pos. 37). Then lower and press Sleeve (Pos. 55) firmly into place.

12



Lower new Stack Kit (Pos. 80) into the Pump Housing. Make sure it seats fully into the machined recess. (Chamber Straps must be located as pictured, 90° from suction/discharge ports).

Standard CR, CRI, CRN models skip to step 22
Cool-Top® models skip to step 13
Back-to-Back Seal models skip to step 17
Tandem Seal models skip to step 19.

Cool-Top®

13

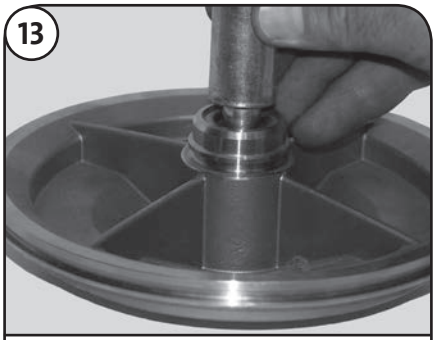

If Bushing (Pos. 79b) was removed from Disk Plate (Pos. 79a), use a Punch, 00SV2127, to install Bushing and Retaining Washer (Pos. 79c) into Disc Plate.

14

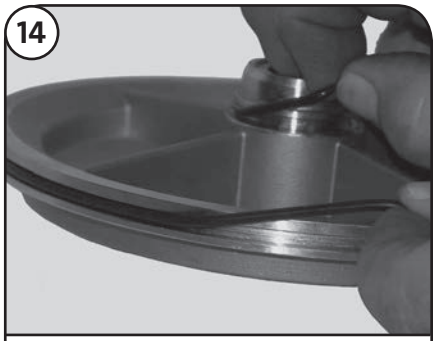

Place O-rings (Pos. 109a & 37c) onto the Disk Plate (Pos. 79a). Do not roll the O-rings; they should be stretched over and released into place to prevent cutting the material during installation into the housing. Spray soapy solution onto O-rings and housing.

15

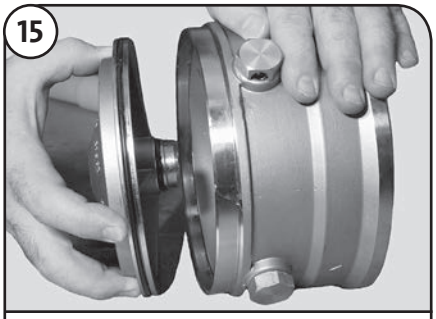

Press the plate firmly in place. Before proceeding to step 16, flip the Pump Head over; make sure the PTFE Stack "Compression Springs" (Pos. 60a) and the Sleeve O-ring (Pos. 37b) have been installed from step 1. If they have not been installed, follow the instructions in step 1 (page 9), then proceed to step 16.

16



Position the plugs to the desired location; lower the completed Cool-Top® Pump Head Assembly (Pos. 77a) over the Shaft and seat on the Sleeve (Pos. 55). If it does not freely seat onto the Sleeve, **STOP**. Remove the Pump Head and turn over. Remove sleeve O-ring and stretch. Replace and reinstall the Pump Head onto Shaft and Sleeve. Skip to step 22.

Back-to-Back Seal

17

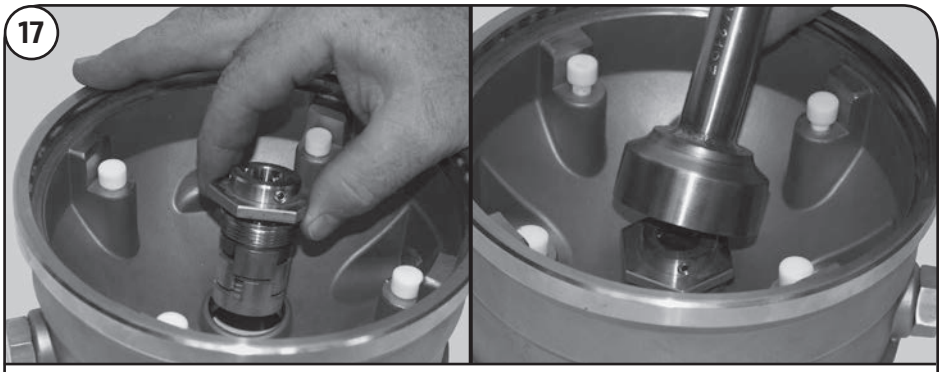

Insert Inboard Seal (Pos. 105b) into the bottom side of the prepped Pump Head Cover (Pos. 77a). Using the specialty tool, 00SV2107, or a 41 mm Deep Socket, tighten/torque seal the 26 ft.-lbs./35Nm.

NOTE: If Pump Head Cover has not yet been prepped with PTFE Stack Compression Springs (Pos. 60) and Sleeve O'Ring (Pos. 37) as previously instructed in step 1, page 9, do so now.

18



Use care while sliding/lowering completed Back-to-Back Pump Head Cover into place. Firmly seat over sleeve. If it does not freely seat onto sleeve... **STOP**! Remove the Pump Head Cover, turn over, remove sleeve O-ring and stretch. Reinstall/replace O-ring into Pump Head Cover, then reinstall onto Shaft and sleeve. Do not tighten the three 2.5 mm set screws at this time. This will be done in step 30. Proceed to step 22.

Tandem Seal

19

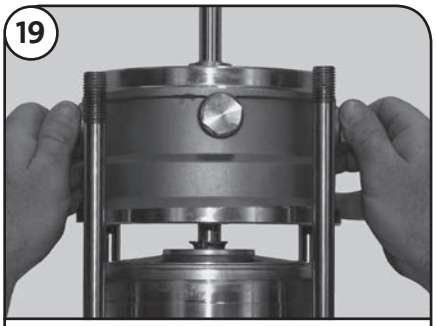

Position the plugs to the desired location. Lower the completed Pump Head Assembly (Pos. 77a) over the shaft and seat on the Sleeve (Pos. 55). If it does not freely seat onto the sleeve...**STOP**.

Remove the pump head and turn over. Remove sleeve O-ring and stretch. Replace and reinstall the pump head onto shaft and sleeve.

20

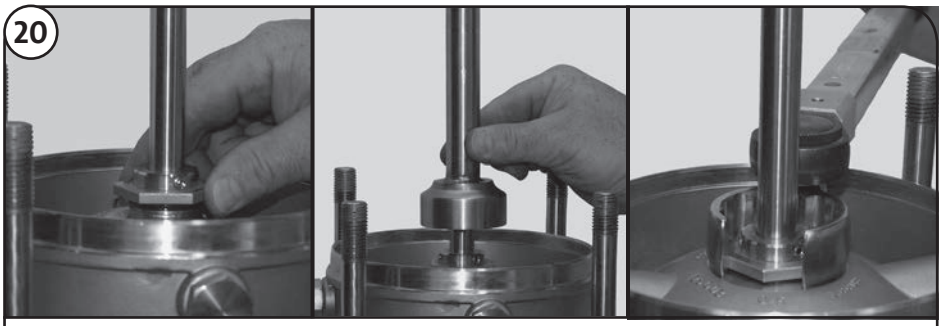

Slide the Inboard Seal (Pos. 105b) down the shaft and thread into the pump head. Use specialty tool, 00SV2107, a 41 mm Deep Socket, or an Open Ring Spanner to torque the Inboard Seal to 26 ft.-lbs./35 Nm.

21

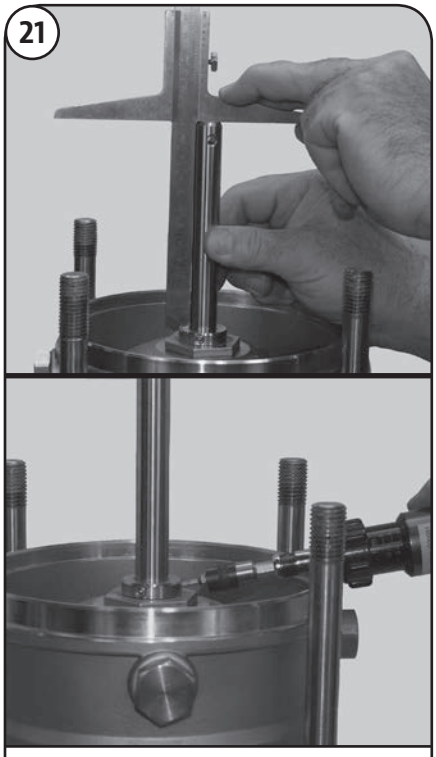

Push down on the coller area of the Seal, then lift Shaft to create a clearance of 123 mm from the top of the Shaft (Pos. 51) to the top of the Shaft Seal. Tighten the three 2.5 mm set screws to 2 ft.-lbs./2.5 Nm. Proceed to step 22.

OR

Alternative to Step 21

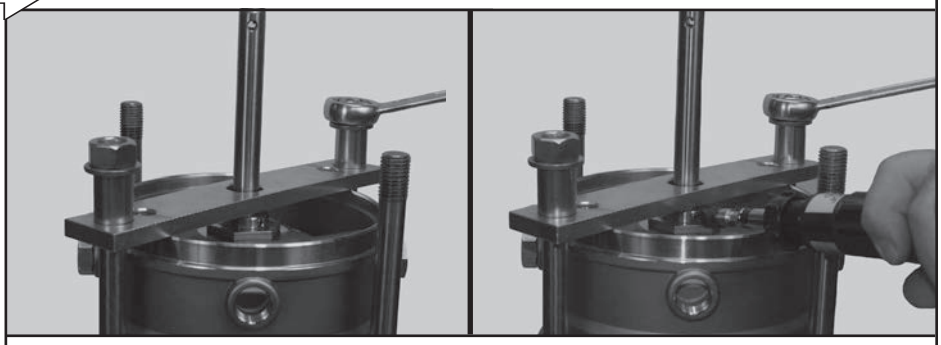

An alternative to step 21 is when the special tool 00SV2078 and two 27.5 mm Spacers (96491537) are used with two Staybolt Nuts and Washers.

Place tool over Staybolts and seat against Pump Head Assembly (Pos. 77a). Slide 27 mm Spacers down Staybolts.

Place Washers and Nuts onto Staybolts and tighten diagonally to:

CR, CRI: 59 ft.-lbs. or 80 Nm
CRN: 74 ft.-lbs. or 100 Nm

Push Shaft down, then tighten the three 2.5 mm Set Screws to 2 ft.-lbs./2.5 Nm. Remove Staybolt Nuts/Washers, 27 mm Spacers, and tool 00SV2078. Proceed to step 22.

22

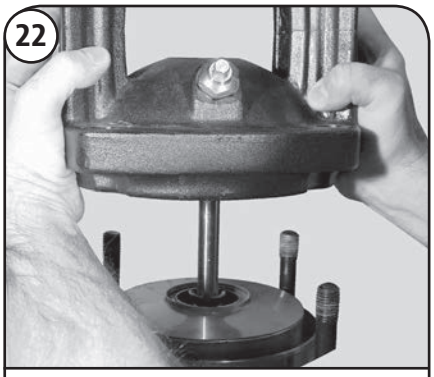

Spray soapy water on the Sleeve O-rings (Pos. 37) in the Motor Stool or CRI, CRN Pump Head. Then lower and fully press in place.

23

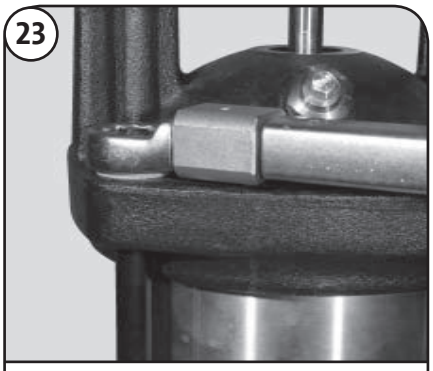

Place the Washers (Pos. 66a) over the Staybolts (Pos. 26). Then, lubricate with a light oil. Place the 24 mm Staybolt Nuts (Pos. 36) onto Staybolts and tighten diagonally to:

CR, CRI: 59 ft.-lbs. or 80 Nm
CRN: 74 ft.-lbs. or 100 Nm

24

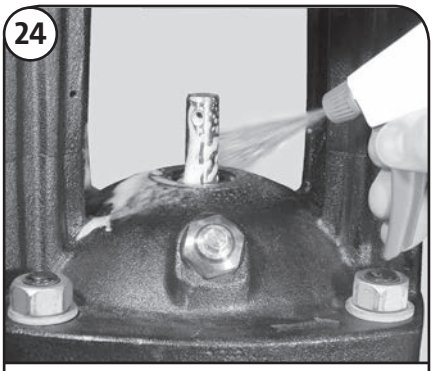

Spray soapy water onto the Seal O-ring Seating Surface of the Pump Head and the Shaft (Pos. 51). (If reusing original Shaft, be sure to use Emery tool provided with Seal Kit to remove any burrs on the Shaft. Then, spray with soapy water.)

25

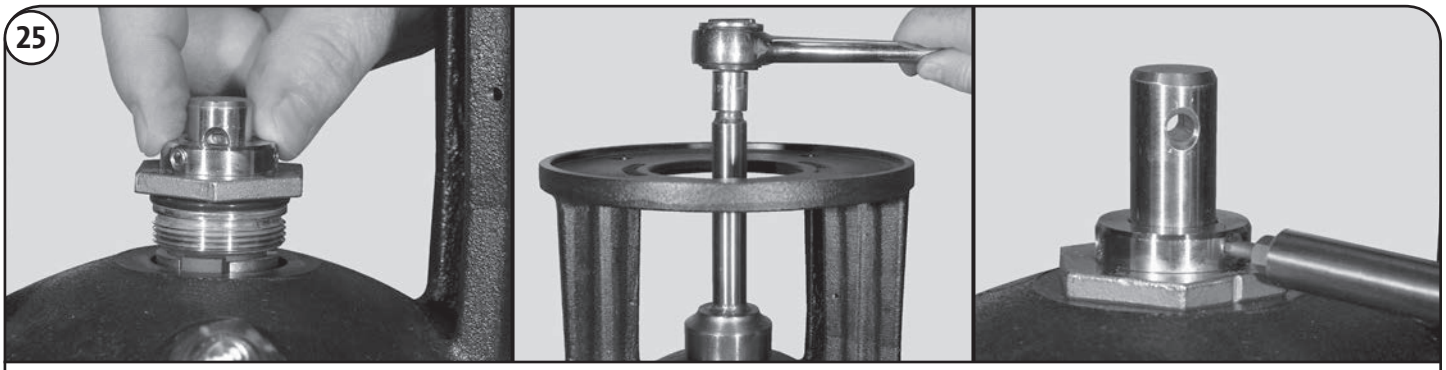

Pushing down on Shaft Seal collar (do not push down on Hex Nut), lower the new Shaft Seal (Pos. 105) over the Shaft. Use specialty tool, 00SV2107, a 41 mm Deep Socket, or an Open Ring Spanner to tighten to 26 ft.-lbs. or 35 Nm. Push the Shaft all the way down (for Tandem Seal models you must continue to apply downward force), then tighten the three 2.5 mm Shaft Seal Securing Allen Screws torque to 2 ft.-lbs. or 2.5 Nm.

26

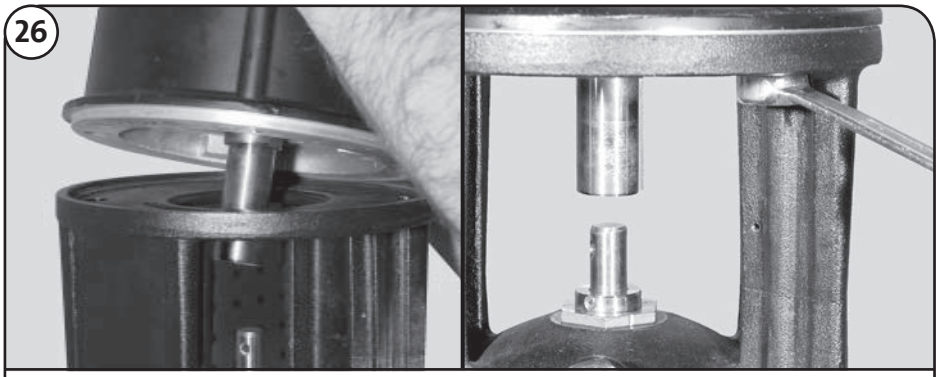

Lower motor onto Motor Stool and/or Spacer (Pos. 1), then install and tighten Motor Bolts (Pos. 28) diagonally to the proper torque.

17 ft.-lbs. or 23 Nm for UNC 3/8" bolts (9/16" Head), and
30 ft.-lbs. or 40 Nm for UNC 1/2” bolts (3/4" Head)

27

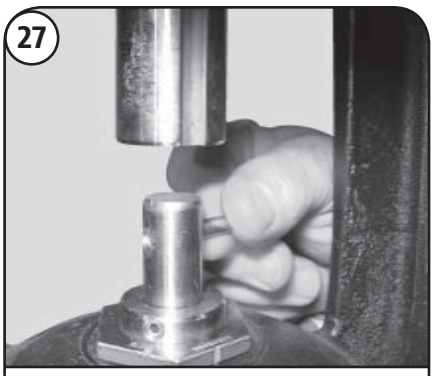

Place the Shaft Pin (Pos. 10) into the Shaft (Pos. 51).

28

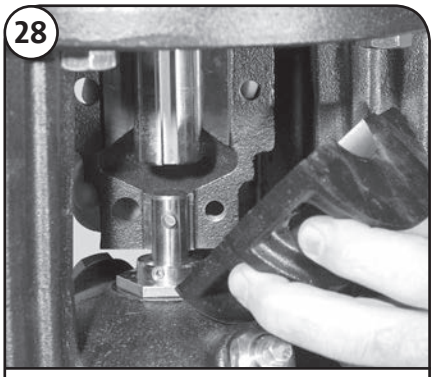

Install Coupling Halves (Pos. 10a). Spray a light machinery oil onto the Coupling Bolts (Pos. 9). Install loosely into the Couplings.

29 **Standard Units and Cool Top®**

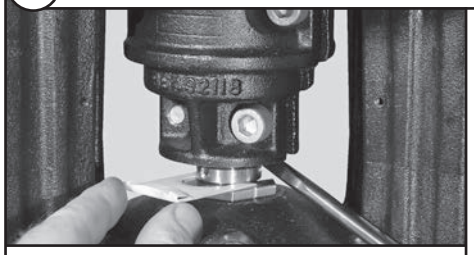

Using a screwdriver, lift the Shaft upward. Insert Shaft Seal Spacer tool between Shaft Seal Collar and Hex Nut. Remove the screwdriver and tighten and torque the Coupling Bolts.

5 mm - M6 to 10 ft.-lbs. or 13 Nm
6 mm - M8 to 23 ft.-lbs. or 31 Nm
8 mm - M10 to 46 ft.-lbs. or 62 Nm

Ensure the gap between the two Coupling Halves are even (see Diagram -->).

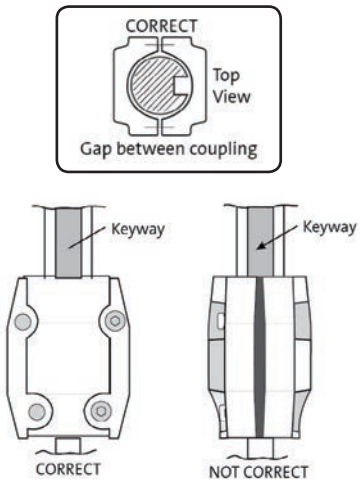

30 **Back-to-Back Seal**

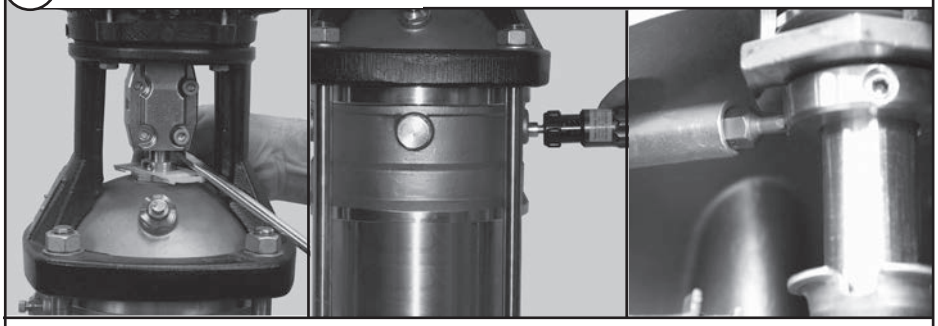

Using a screwdriver, lift the Shaft upward. Insert **two** of the Spacer tools between Shaft Seal Collar and Hex Nut. Insert a 2.5 mm allen wrench through one of the lower vent port holes and torque the lower inboard seal securing screws to 2.0 ft.-lbs./2.5 Nm. Remove allen wrench and replace plugs (Pos. 23a) into the Pump Head Cover (Pos. 77a). Remove only **one** Spacer. Then, tighten and torque the Coupling bolts to values in step 29.

31 **Tandem Seal**

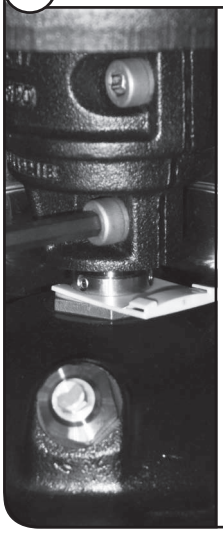

Spring tension from the seals may have already lifted the Shaft upward. If not, lift the Shaft upward. At this time insert the Shaft Seal Spacer tool. Remove the screwdriver. Ensure the Shaft has moved downward and shaft Seal Collar is resting on the tool. Tighten and torque the Coupling bolts to values in step 29.

32

Remove Spacer Tool, then spin the shaft by hand; proceed only if the shaft spins freely.

If the shaft **does not** spin freely:
Stop and start over, inspecting the components for any cause of binding.

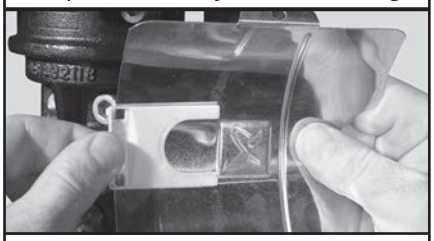

Place Shaft Seal Spacer tool(s) on to Coupling Guard(s).

33

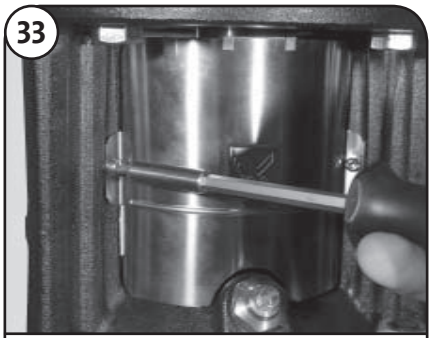

Install the Coupling Guards (Pos. 7) and the Screws (Pos. 7a). Using a Torque Screwdriver, with a slotted or a TORX® tip T20, torque to 1.5 ft.-lbs. or 2 Nm.

THE PUMP IS NOW COMPLETELY ASSEMBLED.

Open the isolation valves in the system to fully vent and fill the pump.
Restore power supply.

Order of Stage Assembly – Models CR, CRI, CRN 10

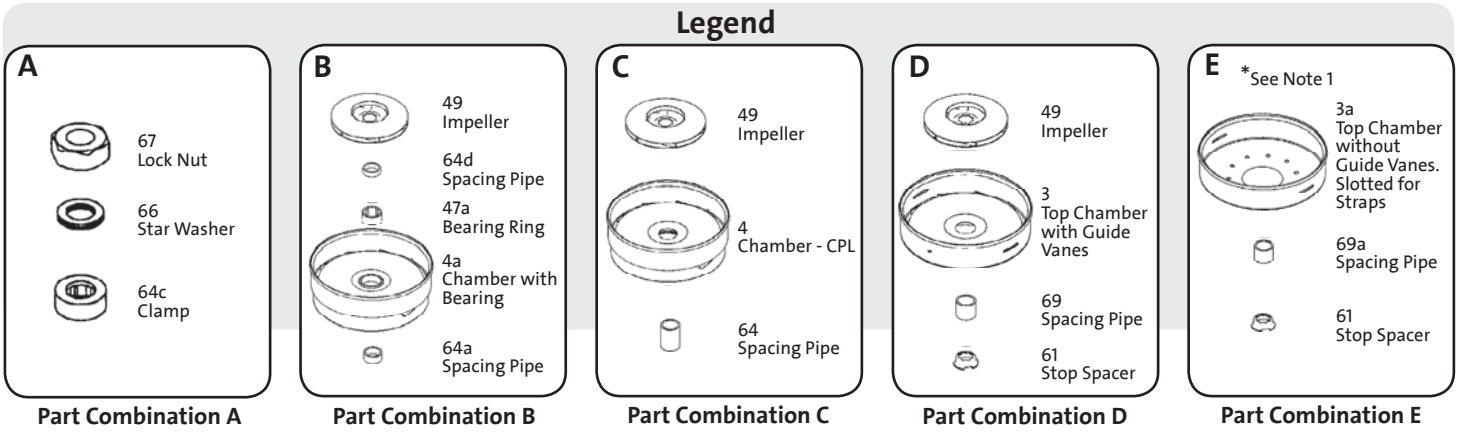

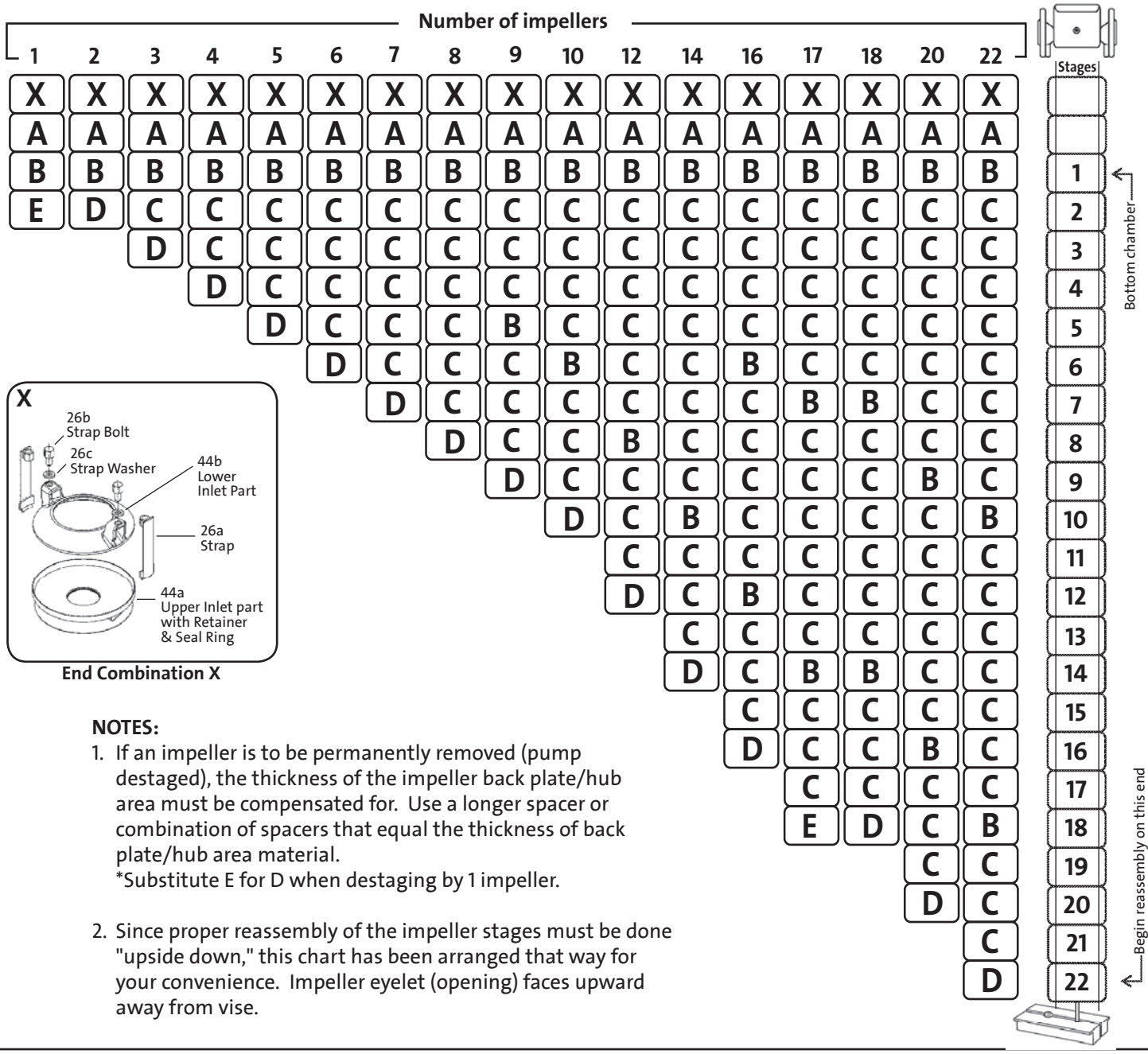

NOTES:

1. If an impeller is to be permanently removed (pump destaged), the thickness of the impeller back plate/hub area must be compensated for. Use a longer spacer or combination of spacers that equal the thickness of back plate/hub area material.
   *Substitute E for D when destaging by 1 impeller.

2. Since proper reassembly of the impeller stages must be done "upside down," this chart has been arranged that way for your convenience. Impeller eyelet (opening) faces upward away from vise.

Order of Stage Assembly – Models CR, CRN 10 (Low NPSH)

Legend

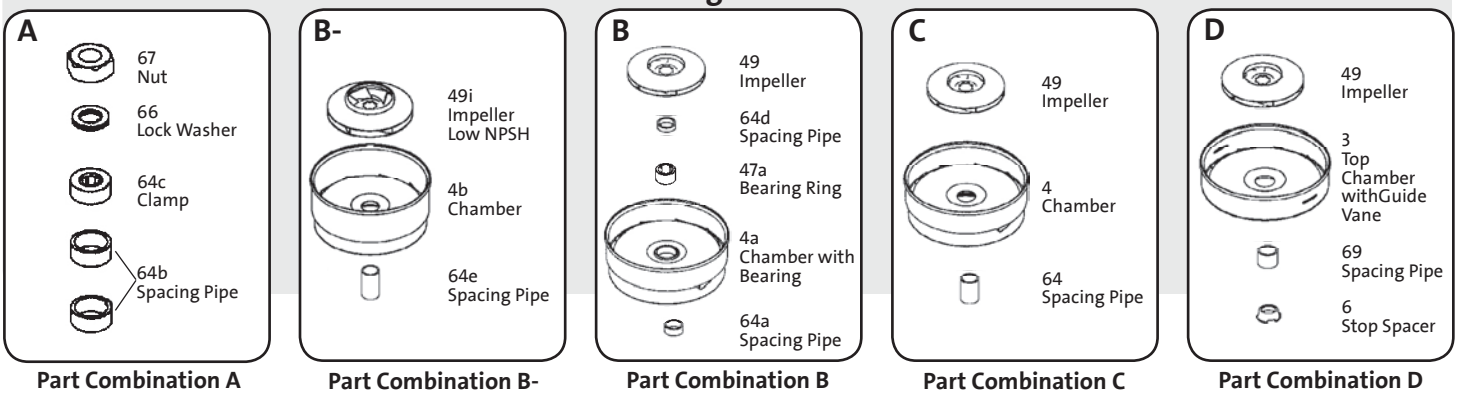

Part Combination A | **Part Combination B-** | **Part Combination B** | **Part Combination C** | **Part Combination D**

Nameplate number of impellers

Stages	3	4	5	6	7	8	9	10	12	14	16	17	18	20	22
	X	X	X	X	X	X	X	X	X	X	X	X	X	X	X
	A	A	A	A	A	A	A	A	A	A	A	A	A	A	A
Bottom chamber	B-	B-	B-	B-	B-	B-	B-	B-	B-	B-	B-	B-	B-	B-	B-
1	B	B	B	B	B	B	B	B	B	B	B	B	B	B	B
2	E	D	C	C	C	C	C	C	C	C	C	C	C	C	C
3			D	C	C	C	B	C	C	C	C	C	C	C	C
4				D	C	C	C	B	C	C	C	C	C	C	C
5					D	C	C	C	C	C	C	C	C	C	C
6						D	C	C	B	C	C	B	B	C	C
7							D	C	C	C	C	C	C	B	C
8								D	C	B	C	C	C	C	C
9									C	C	B	C	C	C	B
10									D	C	C	C	C	C	C
11										C	B	C	C	C	C
12										D	C	C	C	C	C
13											C	B	B	C	C
14											D	C	C	C	C
15												C	C	B	C
16												D	D	C	B
17														C	C
18														D	C
19															C
20															D
21															
Begin reassembly on this end															

E * See Note 1

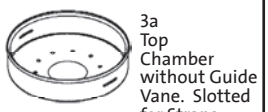

69a Spacing Bush

61 Stop Spacer

Part Combination E

X

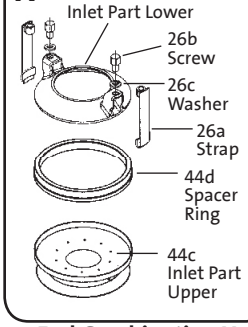

End Combination X

NOTES:

1. If an impeller is to be permanently removed (pump destaged), the thickness of the impeller back plate/hub area must be compensated for. Use a longer spacer or combination of spacers that equal the thickness of back plate/hub area material. *Substitute E for D when destaging by 1 impeller.
2. Since proper reassembly of the impeller stages must be done "upside down," this chart has been arranged that way for your convenience. Impeller eyelet (opening) faces upward away from vise.
3. Because the low NPSH chamber and impeller are twice the thickness of a standard chamber, it has the performance of two impellers. Physically, there is one less chamber in a stack than the number of stages listed on the pump label (example: CR10-22 only has 21 chambers and impellers).

Order of Stage Assembly – Models CRN 10 SF (Flipped Stack)

Legend

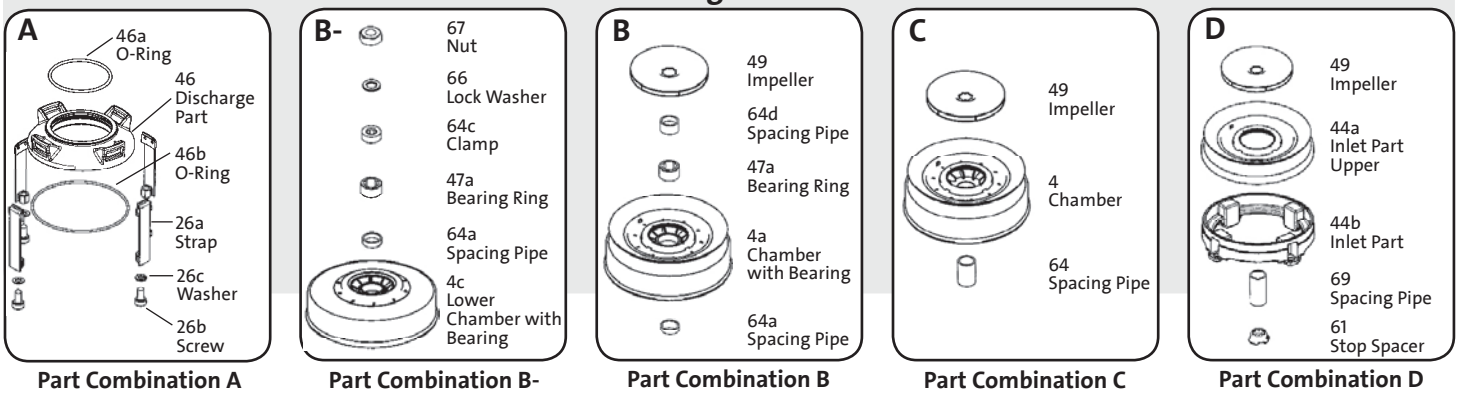

Part Combination A | **Part Combination B-** | **Part Combination B** | **Part Combination C** | **Part Combination D**

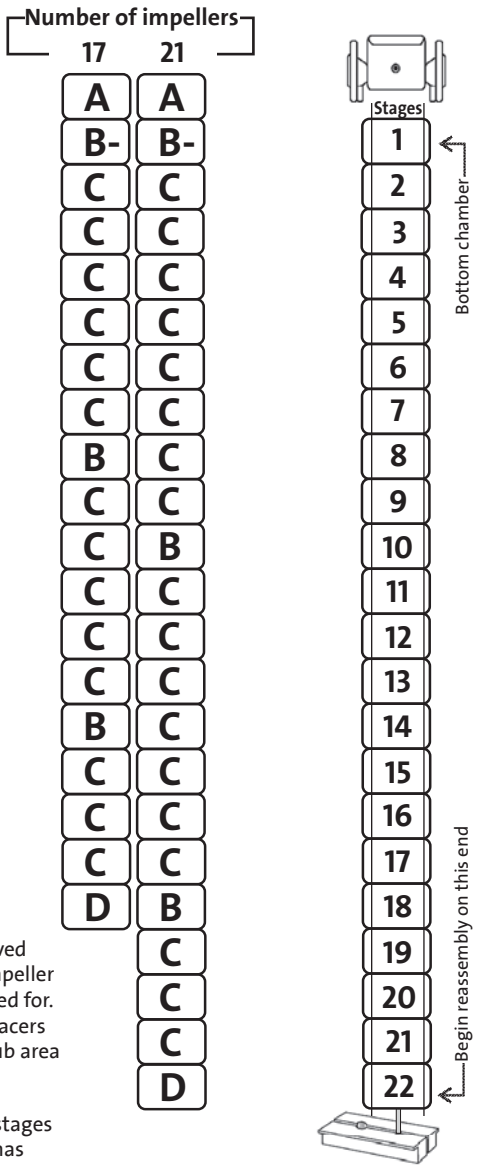

NOTES:

1. If an impeller is to be permanently removed (pump destaged), the thickness of the impeller back plate/hub area must be compensated for. Use a longer spacer or combination of spacers that equal the thickness of back plate/hub area material.

2. Since proper reassembly of the impeller stages must be done "upside down," this chart has been arranged that way for your convenience. Impeller eyelet (opening) faces downward toward vise.

Order of Stage Assembly – Models CR, CRI, CRN 15 & 20

Legend

A



67 Lock Nut
66 Star Washer
64c Clamp

Part Combination A

A-



67 Nut
66 Lock Washer
64c Clamp
64d Spacing Pipe

Part Combination A-

B

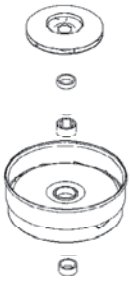

49 Impeller
64d Spacing Pipe
47a Bearing Ring
4a Chamber with Bearing
64a Spacing Pipe

Part Combination B

B-

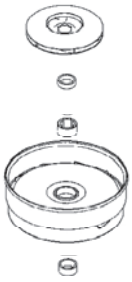

49 Impeller
64d Spacing Pipe
47a Bearing Ring
4a Chamber with Bearing
64f Spacing Pipe

Part Combination B-

C



49 Impeller
4 Chamber - CPL
64 Spacing Pipe

Part Combination C

D

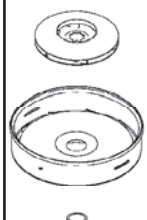

49 Impeller
3 Top Chamber with Guide Vanes
69 Spacing Pipe
61 Stop Spacer

Part Combination D

E *See Note 1

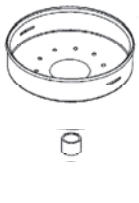

3a Top Chamber without Guide Vanes. Slotted for Straps
69a Spacing Pipe
61 Stop Spacer

Part Combination E

Number of impellers

1	2	3	4	5	6	7	8	9	10	12	14	17	Stages
X	X	X	X	X	X	X	X	X	X	X	X	X	
A-	A-	A	A-	A	A-	A	A-	A	A	A-	A	A	
B-	B	B	B	B	B	B	B	B	B	B	B	B	1
E	D	C	C	C	C	C	C	C	C	C	C	C	2
		D	C	C	C	C	C	C	C	C	C	C	3
			D	C	C	B	C	C	C	C	C	C	4
				D	C	C	B	C	C	B	C	C	5
					D	C	C	B	C	C	C	C	6
						D	C	C	B	C	C	C	7
							D	C	C	C	C	B	8
								D	C	B	C	C	9
									D	C	C	C	10
										C	B	C	11
										D	C	C	12
											C	C	13
											D	B	14
												C	15
												C	16
												D	17

Bottom chamber

Begin reassembly on this end

X

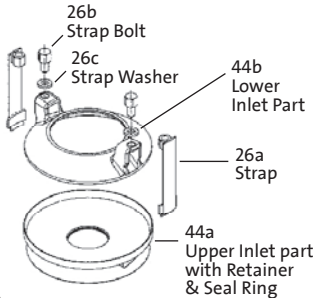

26b Strap Bolt
26c Strap Washer
44b Lower Inlet Part
26a Strap
44a Upper Inlet part with Retainer & Seal Ring

End Combination X

NOTES:

1. If an impeller is to be permanently removed (pump destaged), the thickness of the impeller back plate/ hub area must be compensated for. Use a longer spacer or combination of spacers that equal the thickness of back plate/hub area material. *Substitute E for D when destaging by 1 impeller.
2. Since proper reassembly of the impeller stages must be done "upside down," this chart has been arranged that way for your convenience. Impeller eyelet (opening) faces upward away from vise.

Order of Stage Assembly – Models CR, CRI, CRN 15 & 20 (low NPSH)

Legend

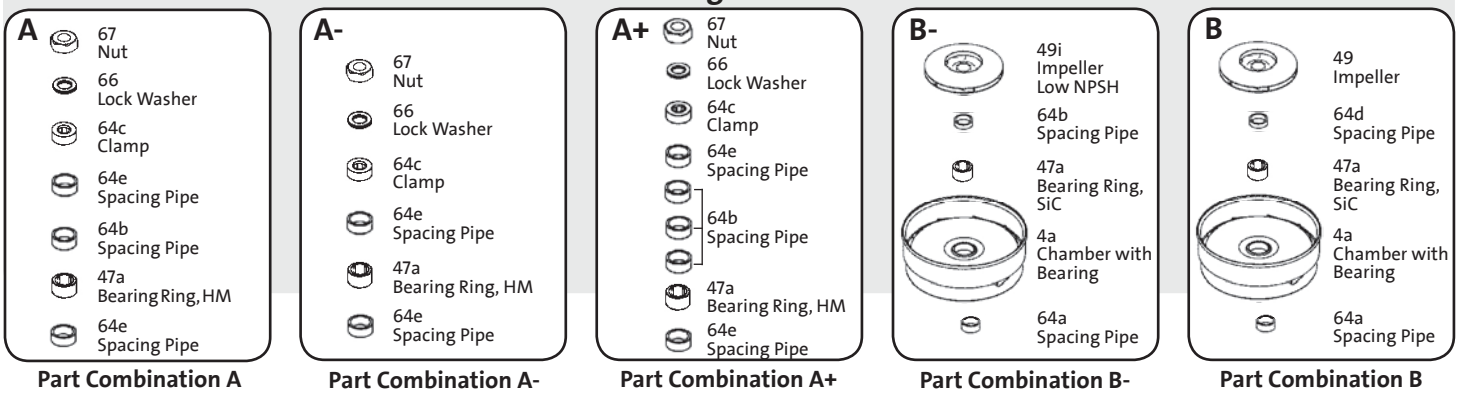

Part Combination A | Part Combination A- | Part Combination A+ | Part Combination B- | Part Combination B

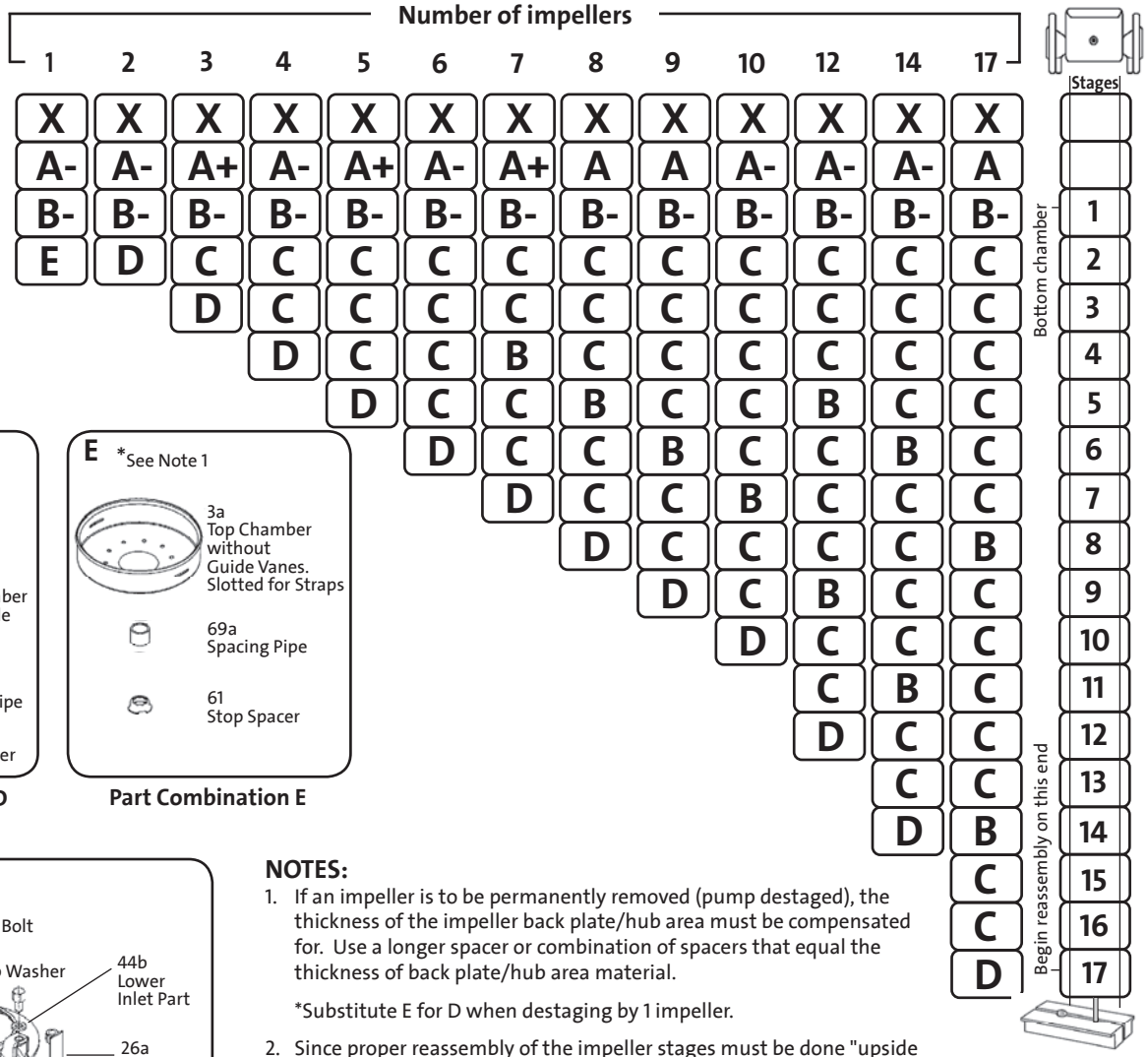

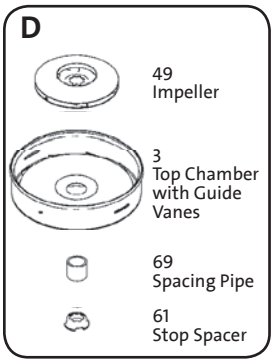

Part Combination D

Part Combination E

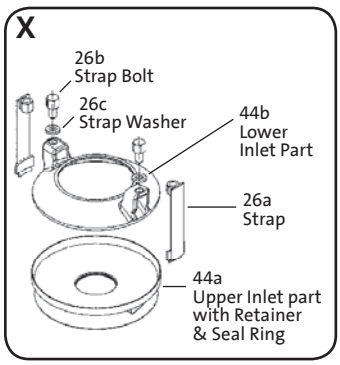

End Combination X

NOTES:

1. If an impeller is to be permanently removed (pump destaged), the thickness of the impeller back plate/hub area must be compensated for. Use a longer spacer or combination of spacers that equal the thickness of back plate/hub area material.

   *Substitute E for D when destaging by 1 impeller.

2. Since proper reassembly of the impeller stages must be done "upside down," this chart has been arranged that way for your convenience. Impeller eyelet (opening) faces upward away from vise.
3. HM = Hard Metal - Tungsten Carbide
4. SiC = Sintered Silicon Carbide

Order of Stage Assembly – Models CRN 15 & 20 SF (Flipped Stack)

Legend

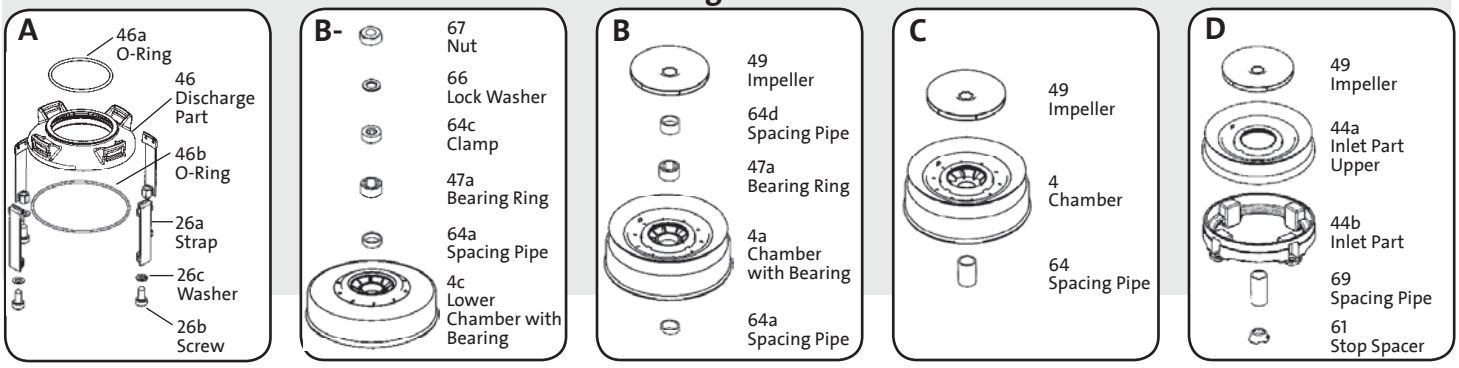

Part Combination A | **Part Combination B-** | Part Combination **B** | **Part Combination C** | **Part Combination D**

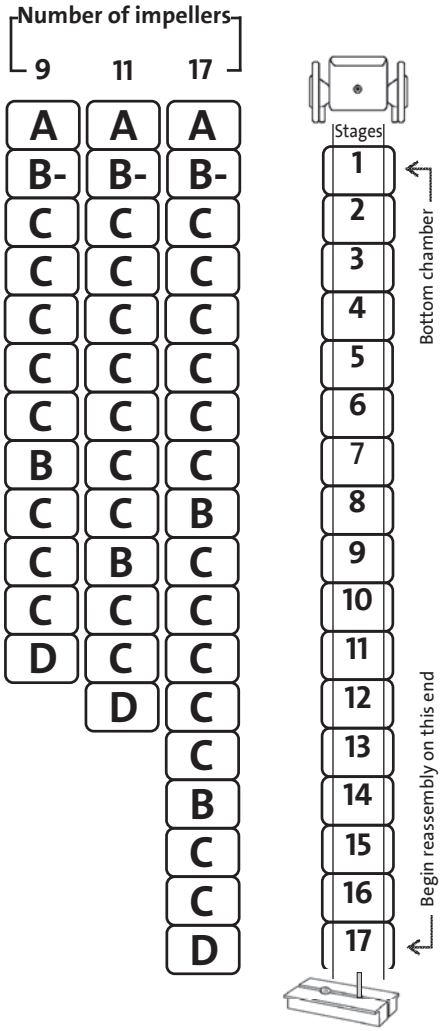

NOTES:

1. If an impeller is to be permanently removed (pump destaged), the thickness of the impeller back plate/hub area must be compensated for. Use a longer spacer or combination of spacers that equal the thickness of back plate/hub area material.

2. Since proper reassembly of the impeller stages must be done "upside down," this chart has been arranged that way for your convenience. Impeller eyelet (opening) faces downward toward vise.

SM-DRC-136 0113

The name Grundfos, the Grundfos logo, and **be think innovate** are registered trademarks owned by Grundfos Holding A/S, Denmark. All rights reserved worldwide. © Copyright Grundfos Holding A/S

GRUNDFOS Pumps Corporation
17100 W. 118th Terrace
Olathe, Kansas 66062
Phone: 913.227.3400
Fax: 913.227.3500

www.grundfos.us

GRUNDFOS Canada, Inc.
2941 Brighton Road
Oakville, Ontario L6H 6C9 Canada
Phone: 905.829.9533
Fax: 905.829.9512

Bombas GRUNDFOS de Mexico S.A. de C.V.
Boulevard TLC No. 15
Parque Industrial Stiva Aeropuerto
Apodaca, N.L. Mexico 66600
Phone: 52.81.8144.4000
Fax: 52.81.8144.4010

GRUNDFOS

TAB 9



PHOENIX

PHOENIX Process Equipment Company
2402 Watterson Trail
Louisville, KY 40299
(502) 499-6198
(502) 499-1079 Fax

SECTION 4 COMPONENTS

AIR COMPRESSOR

Manufacturer:	Jenny
Model:	K2A-30V
Rating:	8 CFM @ 125 PSIG
Serial No:	G021319013

AIR COMPRESSOR MOTOR

Manufacturer:	Baldor
Model:	EM3558T-5
HP/Service:	2 HP, 575V, 60Hz, 3Ph
Serial No:	F1811143393

Jenny
AIR COMPRESSOR

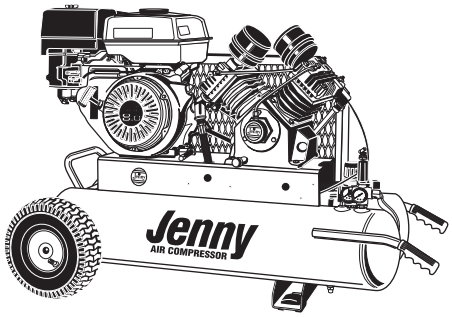

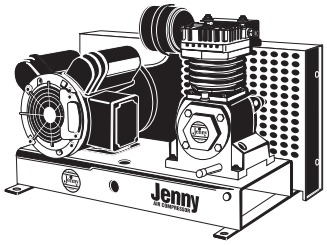

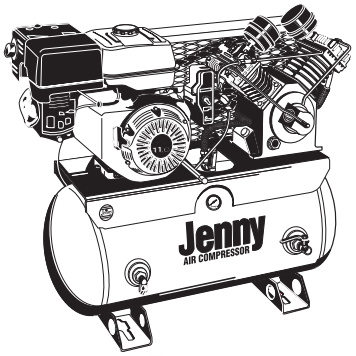

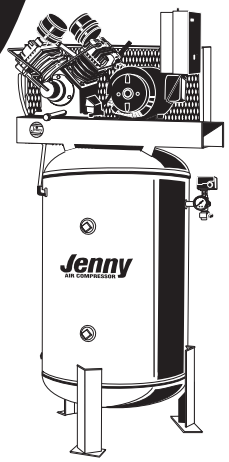

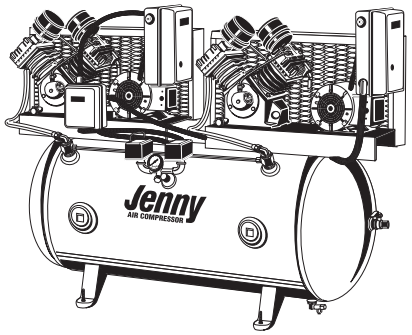

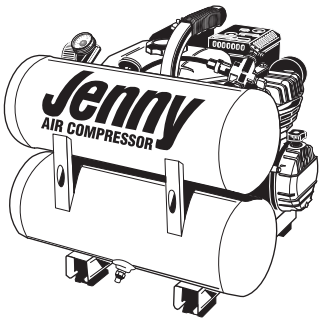

Reciprocating Air Compressors

Operation and Maintenance Manual

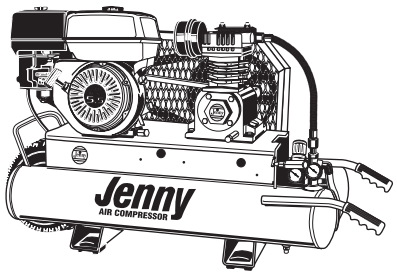

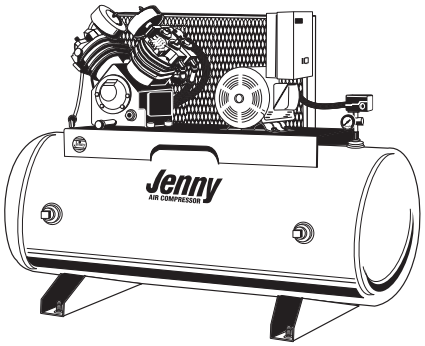

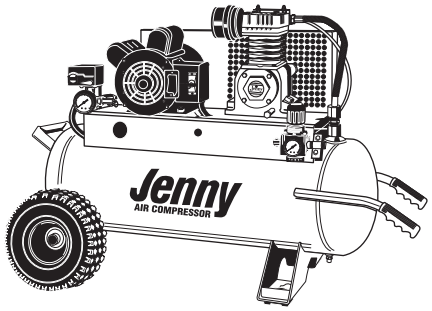

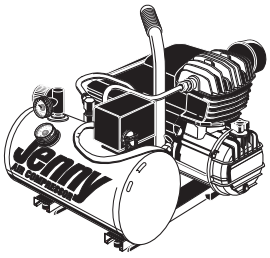

Jenny Products, Inc.
850 North Pleasant Avenue
Somerset, PA 15501-1069

Ph:814-445-3400 • Fx:814-445-2280

www.jennycompressor.com • info@jennycompressor.com

Table of Contents

Section 1
Safety and Health Instructions

Safety and Health Instruction for Safe Use..... 5

Section 2
Introduction and Description

Introduction..... 16
General Description..... 16
Major Components..... 16
Reciprocating Air Compressor Assembly..... 16
Single Stage and Two Stage Reciprocating Pumps..... 17
Electric Motor..... 17
Gasoline Engine..... 17
Air Control System..... 17
Constant Run Units - Head Unloader and Discharge Unloader 17
Start-Stop Control Units..... 18
Dual Control Units..... 18
Pilot Valve..... 18
Pressure Switch..... 18
Pressure Regulator..... 19
Base/Tank Weldment Assembly..... 19
Magnetic Starter..... 19
Check Valve..... 19
Relief Valve..... 19
Air Intake Filter(s)..... 19

Section 3
Preparation for Use and Installation Instructions

General..... 21
Inspection of New Equipment..... 21
Servicing of New Equipment..... 22
Lubrication..... 22
Air Cleaner..... 22
Installation..... 22

Section 4
Operating Instructions

Operating Controls and Indicators..... 26
On/Off Switch..... 26
Receiver Pressure Gauge..... 26
Pressure Regulator..... 26
Pressure Regulator Gauge..... 26
Oil Level Gauge..... 26
Pressure Switch..... 26
Pilot Valve..... 26
Safety Valve..... 26
Dual Control Switch..... 26
Dual Voltage Switch..... 27
Preparation for Use..... 27
Lubrication..... 27
Air Cleaner..... 28
Adjusting Regulator..... 28
Connecting and Disconnecting Hoses..... 28
Draining Air Receiver Condensate..... 29
Humid Areas..... 29
Dual Voltage Switch..... 29
Noise Considerations..... 30
Location Considerations
Stationary Compressors..... 30
Portable Compressors..... 30
Transporting..... 31
Moving..... 31
Compatibility..... 31
General Requirements..... 31
Condensate Discharge Piping..... 32
Refueling..... 32
Grounding..... 32

Starting Procedure..... 33
Shutdown Procedure..... 35

Section 5
Preventive Maintenance

Checking Compressor Pump Oil Level..... 38
Checking Compressor Pump Oil..... 38
Checking Safety Relief Valve Operation..... 39
Checking Air Filter Element..... 39
Pilot Valve Cut-Out Pressure Adjustment..... 39
Pilot Valve Pressure Differential Adjustment..... 40
Pressure Switch Adjustment..... 40
Drive Belt Adjustment..... 41
Checking for Air Leaks..... 42

Preventive Maintenance Schedule..... 43
Service Information..... 44
Repairs..... 44
Warranty..... 44
Free Warning Label Replacement..... 44

Section 6
Troubleshooting

Troubleshooting..... 46

Thank you !

For ordering a **JENNY**®. Jenny has been a manufacturer of high quality equipment since 1929. Special attention has been given to every detail of engineering design, perfection of manufacturing methods, individual part inspection, and thorough testing upon completion to assure the continuous trouble-free operation of your Jenny.

In short, your Jenny was designed and made by customer-minded workers. If you, for any reason, fail to find that our product serves as you believe it should, you will be doing yourself and us a favor by telling our Customer Representative, through our Distributor - or direct, just how our product has failed to please you. Over the years we have found that when troubles are reported by our customers, both of us profit. So please help us to serve you properly, which is our first desire.

In the march of progress, engineering and design changes are inevitable, therefore, we reserve the right to vary our designs and/or specifications without implying that they need to be installed on previous models. If you have occasion to order parts or request information about your Jenny, be sure to give machine model number, pump model letter or model number and serial number.

You will find this booklet a valuable guide to the proper and safe operation and maintenance of your new Jenny. It is intended to be used by anyone using or maintaining the equipment. Follow the instructions carefully and you will assure yourself of the utmost in compressed air efficiency and economy.

Section 1

Safety and Health Instructions

Important!

SAFETY AND HEALTH INSTRUCTIONS FOR SAFE USE

⚠DANGER

THIS PRODUCT CAN CAUSE SERIOUS INJURY OR DEATH IF NOT USED IN ACCORDANCE WITH THE FOLLOWING SAFETY INSTRUCTIONS. WE CAN NOT ANTICIPATE EVERY POSSIBLE CIRCUMSTANCE THAT MIGHT INVOLVE A POTENTIAL HAZARD. THE WARNINGS, CAUTIONS, DANGERS, AND SAFETY SUGGESTIONS ARE THEREFORE NOT ALL INCLUSIVE. AS THE OWNER YOU ARE RESPONSIBLE FOR THE SAFE OPERATION OF THIS EQUIPMENT. ALWAYS MAKE SURE THAT ANYONE USING THIS EQUIPMENT HAS READ THIS MANUAL AND FOLLOWS THE SAFETY WARNINGS TO HELP PREVENT THE POSSIBILITY OF PERSONAL INJURY TO THE OPERATOR OR ANYONE ELSE. IF ANY OPERATING PROCEDURE, INSTALLATION, MAINTENANCE, OR WORK METHOD NOT SPECIFICALLY RECOMMENDED IS USED, YOU MUST SATISFY YOURSELF THAT IT IS SAFE FOR YOU AND OTHER PERSONS. YOU MUST ALSO ENSURE THAT THE PRODUCT WILL NOT BE DAMAGED OR MADE UNSAFE BY THE PROCEDURE YOU CHOSE.

In the event that an injury does occur, please seek medical attention at once since the equipment may cause injuries that are not initially recognized.

1. Use proper electrical power.



Connect unit to a dedicated circuit of the proper voltage, proper rated circuit breaker, and wired with the proper wire size and number of conductors.

Use supply Wires suitable for 110°C

Ensure that all connections are properly tightened. Improper connections could result, causing damage, injury, or death of the equipment operator.

This machine must be connected in accordance with the National Electric Code (NEC) Article 422-4 - Ed-31, Except as provided for in NEC 90-4.

This machine must be properly grounded to avoid fatal electrical shock in the event of an electrical malfunction. A ground connector screw should be fastened into the chassis to facilitate supplemental grounding as permitted by NEC 250-91.

Do not connect any other equipment to the electrical circuit serving this unit.

Do not replace a fuse or circuit breaker with one of a higher rating without being certain the wire size is adequate to handle the increased electrical load. If connected to a circuit protected by fuses, use time-delay fuse marked “D”.

Keep all electrical connections dry and off of the ground.

Observe all local and national codes for the installation and use of this type of equipment.

Please use the following criteria for wire selection.

- 0 to 25 Feet from Main Power Source - At least the same size wire.
- 25 to 50 Feet from Main Power Source - At least one wire size larger.
- 50 to 100 Feet from Main Power Source - At least two wire sizes larger.
- 100 to 150 Feet from Main Power Source - At least three wire sizes larger.

If the wire size being used is too small, the voltage drop will be high, and this will cause the motor to draw excessive current and overheat or fail.

If there are any questions or problems with the electrical system being used please, do not hesitate in calling a local qualified electrician.

2. Wear proper protective clothing and equipment.

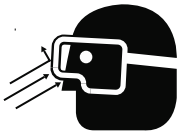

Wear full eye protection (preferably a face shield) while operating this product. The pressurized spray from this unit can cause severe injury to the eyes. It also may contain irritants, particles or caustic chemicals.

3. Do not operate with protective covers or guards removed.

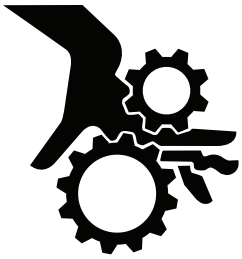

Operating this machine with the protective guards or covers removed could expose high speed moving components which could allow the operator or bystander to become entangled. Entanglement in this equipment may result in serious injury, amputation, or death.

This unit may start and stop automatically when switch is in Auto mode.

4. Do not operate with any electrical panels or covers opened.



Operating this unit with any of the electrical panels or covers opened may expose high powered electrical connections and/or components which may come in contact with the operator. Contact with high powered electrical equipment by a person could result in serious injury or death.

5. Do not operate this unit with any of the safety controls bypassed.

This unit was designed with safety in mind. Never allow anyone to bypass, modify, or alter any of the

safety devices on this unit. If any of the safety devices appear to be dysfunctional, do not operate the unit and immediately contact a qualified technician.

Periodically have all the safety devices checked for proper operation.

6. Do not operate this unit with any components rated less than the maximum operating pressure of the unit.



This unit was designed to compress air at a specific operating pressure and volume. Never exceed the pressure rating of air tools, spray guns, air operated accessories, tires, and other inflatables. This can cause them to explode or fly apart and could result in a serious injury.

7. Do not direct air stream at people, animals, or any living thing. Use only OHSA approved air blow guns.

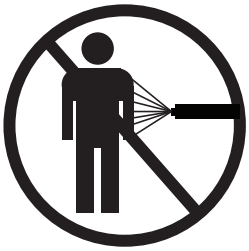

The pressurized spray from this product can cause serious injury or death if sprayed at people, animals, or any living thing. This machine is capable of producing extremely high pressures and/or temperatures. The pressurized spray can cut exposed flesh like a knife. The spray can also cause severe irritation, cuts and/or burns. It can inject air and/or harmful particles and chemicals into the skin and other soft tissues, and this can cause serious injury or death. To prevent this from happening, always hold the air blow gun securely at all times. Never point spray at people, animals, or any living thing.

Never put hands or fingers over the spray tip while in operation. Use only OSHA approved air blow guns.

If an accident occurs and the spray appears to have penetrated the skin, even if the injury appears to be minor, seek medical care immediately. Do not treat as a simple cut. Be prepared to tell a physician what particles and/or chemicals you are using.

For treatment instructions, have your physician contact the nearest regional poison information center for more information.

8. Do not use compressed air from this equipment for breathing.

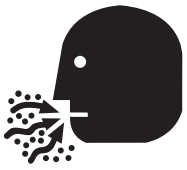

The compressed air from the compressor is not safe for breathing! The air stream may contain carbon monoxide, toxic vapors, hydrocarbons, oil mist, water vapor, and/or solid particles. Never inhale air from the compressor either directly or from a breathing device connected to the compressor.

9. Unplug or disconnect unit before cleaning or servicing.



To help prevent the risk of injury or death as a result of shock or electrocution or entanglement while this product is being cleaned, serviced, or repaired, electrical power must be removed. Unplug or disconnect the power cord or “lock out” the switch box that supplies power. For more details, please refer to U.S. Department of Labor,

Occupational Safety and Health Administration, Regulation 29 CFR 1910.147, Control of Hazardous Energy Source (lockout/tagout).

Only qualified personnel should attempt any electrical repairs or trouble shooting on the equipment. Serious injury or death could result from improper repairs and/or trouble shooting.

10. Never modify or alter this unit.

For your own safety as well as others, never allow this unit to be altered or modified. Modifying or altering equipment to operate in a fashion other than its original design may cause serious injury or death.

Never exceed the factory pressure or temperature rating of the system. Be sure that all accessory equipment and system components meets or exceeds the pressures and temperatures developed by the unit.

11. Do not operate unit with damaged or worn hoses, fittings, clamps, or spuds.

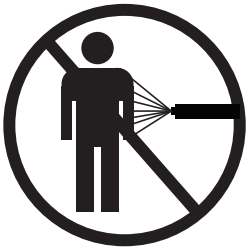

Always check the connection hose, control hoses, fittings, clamps, and spuds prior to operation. Replace all damaged or worn items with one which meets or exceeds the specifications of the original equipment. The use of an improper hose, fitting, clamp, or spud may cause the hose, fitting, clamp, or spud to rupture which could result in serious injury or death or damage to the machine.

12. Do not repair damaged hoses or fittings.

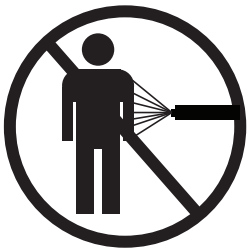

Replace all damaged hoses and/or fittings with ones which meet or exceed the specifications of the original equipment.

Do not use the hose if cuts, leaks, abrasions, bulges, or coupling damage is evident.

Never remove any hose or fitting while the unit is on. The risk of fluid injection is present.

13. Do not touch exposed metal such as the compressor pump, motor, tank, connection hoses, or any fluids.



This unit operates at extremely high temperatures. These temperatures may reach in excess of 240° F. Touching any exposed metal or other surfaces may cause severe burns.

Compressor will remain hot for a long period of time. Allow the compressor to cool to room temperature before attempting any service or repairs.

14. Provide at least three (3) feet of clearance to adjacent construction.

This unit requires adequate ventilation and must be placed in a location which provides at least three feet of clearance to all adjacent construction. This unit operates at high temperatures and failure to



allow adequate ventilation or restrict the air flow may cause the machine to overheat or cause materials in close proximity to reach their flash temperatures and ignite.

15. Do not operate near flammable or combustible materials.



This product is not intended for use in locations where fire or explosion hazards may exist due to the presence of flammable vapors, liquids or gases, or combustible dusts or fibers.



Heat generated by the compression cycle and/or drive system is released into the atmosphere and can cause materials in close proximity to reach their flash temperatures and ignite or explode.

Always operate the compressor in a well ventilated area.

Always store flammable or combustible materials in a secure location away from all open flames, sparks, and heat sources.

16. Do not remove any air line or receiver connections before relieving air pressure in the entire air system and receiver tank(s).

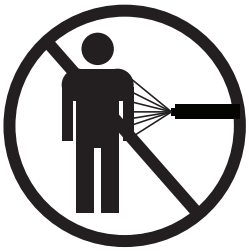

This machine is capable of producing extremely high pressures and/or temperatures. The pressurized spray can cut exposed flesh like a knife. The spray can also cause severe irritation, cuts and/or burns. It can inject air and/or harmful particles and chemicals into the skin and other soft tissues, and this can result in serious injury or death. To prevent this from happening, always relieve the air pressure in the entire system and in the receiver tanks before removing any air lines or receiver connections.

17. Do not operate at pressures, temperatures and rotational speeds in excess of the manufacturers recommendations.

With safety in mind, the unit was designed and is tested to withstand specific operating pressures, temperatures, and volumes. The different components of the machine are matched to produce the factory set operating pressure and volume. Any modification of these settings can cause damage to the compressor and/or maintenance and operating personnel.

Never make adjustments and/or parts substitutions to alter the factory set operating pressures, temperatures, and volumes.

18. Do not spray flammable or toxic liquids in confined areas. Areas must be well ventilated. Follow all manufacturers supplied instructions of the material to be sprayed and the warnings associated with those products.



Never spray flammable liquids in confined areas. The flammable vapors may accumulate and then ignite causing an explosion. Always spray flammable liquids in a well ventilated area free from combustible materials, gasoline, or solvent vapors.



Never spray toxic liquids or chemicals in confined areas. The toxic vapors may accumulate and overcome the operator. Injury or death may result.

Read and follow all the safety instructions provided on the product label and Material Safety Data Sheet (MSDS) for the material being used.

Use a NIOSH/MSHA approved respirator designed for use each specific application.

Always wear the appropriate approved safety equipment.

Always operate the compressor in a well ventilated area.

Always store flammable materials in a secure location away from all open flames, sparks, and heat sources.

19. Use this machine only in a well ventilated area.

This unit requires adequate ventilation. Heat generated by the compression cycle of the unit must be released into the atmosphere. Failure to allow adequate ventilation or restrict the air flow may cause the machine to overheat.

20. To prevent corrosion, drain receiver tank(s) after 4 hours of use or at the end of each day, whichever comes first. Have the receiver tank(s) inspected for corrosion and/or damage periodically.

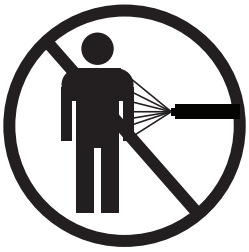

Always drain receiver tanks daily or after each use. If the receiver or any air lines develop leaks, immediately replace them. There is a risk of a violent tank or air line explosion which can cause damage to property and can injure or kill people nearby.

All pressure vessels should be inspected once every year or more often depending on use. To find your state pressure vessel inspector, look under Division of Labor and Industries in the government section of a phone book.



Never make modifications, weld, drill into, or attempt any repairs to compressor tanks. If modifications are necessary, take the tank to an A.S.M.E. certified coded pressure vessel shop that can perform these modifications. The shop will need an ASME "R" stamp.

Never make adjustments and/or parts substitutions to alter the factory set operating pressures, temperatures, and volumes.

21. Do not use in flammable or combustible atmosphere.



This product is not intended for use in locations where fire or explosion hazards may exist due to the presence of flammable vapors, liquids or gases, or combustible dusts or fibers.

It is normal for the electrical contacts within the motor and the electrical control box to

spark. Also, it is normal for gasoline engines to produce extremely high temperatures and sparks. If the high temperatures or sparks from the compressor come in contact with flammable vapors, they may ignite causing a fire or explosion.

22. Do not permit untrained personnel to maintain or make repairs on this unit.

Only qualified personnel should be permitted to make any type of repairs to this unit. Improper repairs may cause this unit to malfunction which could result in serious injury or death to the operator, repair person, or bystander.

23. Risk of Asphyxiation.



The pressurized spray from this unit can cause particles as well as vapors to become airborne. Keep a safe distance from the vapors and airborne particles. Wear protective breathing apparatus and approved safety equipment. Use only in a well ventilated area.

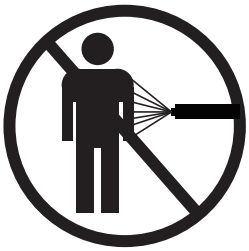

Never use the equipment to spray toxic chemicals. The risk of inhalation or contact with the skin may result in injury or death.

Never attempt to stop or deflect a leak with any part of your body (including the use of a rag). The risk of injection is present.

Some dust may contain chemicals known to the state of California to cause cancer, birth defects, and other reproductive harm. Some of these chemicals are compounds in fertilizers, insecticides, herbicides, pesticides and arsenic and chromium found in treated lumber.

24. Keep compressor as far away from spraying area as possible. At least 25 feet minimum.

When a combustible liquid is sprayed, there can be Danger of Fire or Explosion, especially in and enlosed area.

Do not spray flammable liquids in confined area. Spray area must be ventilated. Do not smoke while spraying or spray where spark or flame is present. Keep compressors as far from spraying area as possible

25. Do not leave loose parts, rags, tools, and other foreign matter on the compressor, drive system, or fan blade.

Loose parts, rags, tools, and other foreign matter can become entangled in the unit or be expelled from the machine at a high rate of speed. This can result in damage to the machine or serious injury or death to the operator, repair person, or bystander.

26. All local code requirements for pressure vessels should be investigated to assure all requirements have been met. Pressure vessels such as the receiver may require additional ASME code stamping to meet local code(s).

27. Always wear hearing protection when operating or working near the unit.



This unit is capable of producing noise that can be hazardous and can cause hearing loss. In order to avoid hearing loss, always wear hearing protection when operating or working near this machine.

28. Do not route hose in a manner that will cause sharp bending, kinking, cutting, abrasion, or exterior damage.

29. Do not pull on the hose to move the unit, untangle knots, or any other excessive pulling stress.

30. Always release the system pressure prior to service, storage, daily shutdown, and/or disconnecting the hose or from the unit.

Always release pressure prior to service, storage, daily shutdown, and/or disconnecting the hose from the unit. Pressure contained within the unit could be released unexpectedly and could cause injury.

31. Never leave an operating machine unattended.

Always shut off the machine and relieve the system pressure before leaving the unit. Never leave an operating machine unattended.

32. For portable (movable) equipment, to reduce the risk of electric shock or injury, do not expose to rain. Store indoors.

33. For stationary equipment, to reduce the risk of electric shock or injury, use indoors only.

34. Do not use below garage floor or grade level.

35. Never allow children or any unauthorized persons to operate the machine.

Allow only personnel trained in the use of the equipment to operate the unit. Never allow children or unauthorized personnel to operated the unit. Keep all persons at a safe distance when the machine is being operated.

36. Never exceed the pressure rating of air tools, spray guns, air operated accessories, tires and other inflatables could cause them to explode or fly apart.



Exceeding the pressure rating of air tools, spray guns, air operated accessories, tires and other inflatables could cause them to explode or fly apart. Always follow the manufacturers recommendations and never exceed the maximum allowable pressure ratings.

Never use the compressor to inflate small low pressure objects such as children’s

toys, footballs, basketballs, etc.

37. Explosive fuel. (If gasoline engine equipped)



Gasoline is extremely flammable and its vapors can explode if ignited. Store gasoline only in approved containers, in well-ventilated, unoccupied buildings, away from sparks or flames.

Do not fill the fuel tank while the engine is hot or running, since spilled fuel could ignite if it comes in contact with hot parts or sparks from ignition.

Do not start the engine near spilled fuel; wipe up spills immediately. Never use gasoline as a cleaning agent.

Do not fill the fuel tank to the point of over flowing. Allow approximately 1-1/4” of tank space for expansion.

Shut off fuel valve on engine before transporting unit to prevent fuel leaking from carburetor.

38. Do not touch the exhaust system, cylinder head or crankcase when hot. (If gasoline engine equipped)

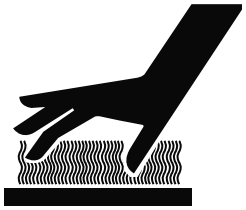

The crankcase, cylinder head, exhaust system, and other components can get extremely hot from operation. To prevent severe burns, do not touch these areas while the engine is running - or immediately after it is turned off. Never operate the engine with heat shields or guards removed.

39. Do not inhale engine exhaust gases. (If gasoline engine equipped)



Engine exhaust gases contain poisonous carbon monoxide. Carbon monoxide is odorless, colorless, and can cause death if inhaled. Avoid inhaling exhaust fumes, and never run the engine in a closed building or confined area without adequate ventilation.

40. Always shut down the unit and refuel away from open fires or sparks. (If gasoline engine equipped)



Due to the explosive nature of the fuels involved in running this type of equipment, never attempt to refuel this unit while it is in operation, or anywhere close to open fires or sparks. Do not smoke while refueling the unit.

41. Do not over fill the fuel tank(s). (If gasoline engine equipped)

Do not over fill the fuel tanks. If any spillage does occur, clean up and/or neutralize the spilled fuel before any attempt to use the machine is made. It may be prudent to move the machine away from the area where the fuel was spilled before using the equipment.

42. Disconnect the spark plug lead before cleaning or servicing. (If gasoline engine equipped)

To help prevent injury while this product is being cleaned, serviced, or repaired, the spark plug lead must be removed. Ground the lead to prevent sparks that could cause fires.

43. Use only Jenny repair parts and accessories.

To preserve the safety features that are built in to this product, use only Jenny repair parts and accessories.

This product must be periodically serviced in accordance with the instructions in this owner's manual.

Section 2

Introduction and Description

INTRODUCTION

This manual contains operation and service instructions for the Jenny Air Compressors.

Brief Compressor Nomenclature:

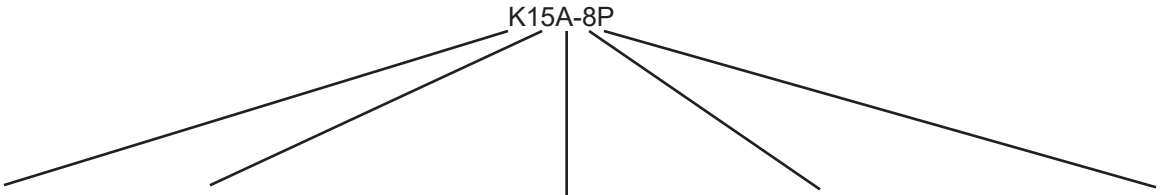

Pump Type	HorsePower	Pressure	Tank	Tank Letters
F	13 - 1/3 HP Electric	A - 125 PSI	2 - 2 Gallon	P - Portable
K	12 - 1/2 HP Electric	B - 175 PSI	4 - 4 Gallon	H - Horizontal
G	34 - 3/4 HP Electric	C - 100 PSI	6 - 6 Gallon	V - Verticle
GC	1 - 1 HP Electric	E - 150 PSI	8 - 8 Gallon	HC - Hand Carry
GT	15 - 1-1/2 HP Electric	S - 40 PSI	15 - 15 Gallon	UM - ASME “UM” Tank
J	2 - 2 HP Electric		17 - 17 Gallon	T - Truck Mount
W	3 - 3 HP Electric		30 - 30 Gallon	PT - Portable Trailer
U	5 - 5 HP Electric		60 - 60 Gallon	SM - Skid Mount
T	75 - 7-1/2 HP Electric		80 - 80 Gallon	P2 - 2 Wheel Portable
	10 - 10 HP Electric		120 - 120 Gallon	C - Climate Control
	15 - 15 HP Electric		240 - 240 Gallon	S - Sprinkler
	20 - 20 HP Electric		B - Base Plate	DP - Dryer Package
	25 - 25 HP Electric			
	4HG - 4 HP Honda Gas			
	5HG - 5 HP Honda Gas			
	6HG - 6 HP Honda Gas			
	8HG - 8 HP Honda Gas			
	9HG - 9 HP Honda Gas			
	11HG - 11 HP Honda Gas			
	13HG - 13 HP Honda Gas			
	18HG - 18 HP Honda Gas			

Manufactured by Jenny Products, Inc., 850 North Pleasant Avenue, Somerset, PA 15501

GENERAL DESCRIPTION

The Jenny Air Compressor is a reciprocating piston oil bath crankcase air compressor driven by either an electric motor or gasoline engine, mounted either on a base or air compressor receiver.

MAJOR COMPONENTS

The Reciprocating Compressor is comprised of the following major components: the air compressor pump, air control system, control box, electric motor or gasoline engine and base weldment or receiver tank.

RECIPROCATING (Piston) AIR COMPRESSOR ASSEMBLY

The air compressor is an oil bath, reciprocating (piston) type. It is powered by an electric motor

or gasoline engine V-belt drive sheave assembly. The pumping unit is either a Single Stage or Two Stage Reciprocating Pump.

SINGLE STAGE AND TWO STAGE RECIPROCATING PUMPS

Reciprocating (Piston) Compressors can be widely found in these two primary configurations; Single Stage and Two Stage.

Single stage air compressors work by drawing free air in and subsequently compressing the air to its final pressure in a single piston stroke. Single stage air compressors can attain pressures of up to 150 PSI. Typically, a single stage pump will have a higher CFM(Cubic Feet per Minute) rating than a two stage pump because every cylinder is drawing in air and compressing it with air during every rotation.

Two stage air compressors work in a very similar manner with the primary difference being that they compress the air in 2 steps or stages. During the first step or stage, air is drawn in and compressed to an intermediate pressure. After being compressed in the first stage, the air is piped, usually through an intercooler where the air is allowed to cool, to be compressed in the final or second stage. Two stage compressors are normally good for pressures up to 200psi. Two stage pumps are more efficient at higher pressures because the air is cooled between the stages.

ELECTRIC MOTOR

A single or three phase, open drip proof, electric motor, is furnished to drive the air compressor assembly. Depending on the horsepower rating of the motor and phase, the motor is capable of operating on different voltages(please see following chart) by changing the wiring in the motor and starter(if greater than 5HP). These changes should only be attempted by a qualified electrician.

Motor HP Rating	Voltage	Phase	
1/3 thru 2 HP	115V, 208V or 230V	Single	Switchable
3 thru 7-1/2 HP	208V or 230V	Single	Only
1/3 thru 25 HP	208V	Three	Only
1/3 thru 25 HP	230V or 460V	Three	Motor and Starter Switchable-Different Motor Overloads
1/3 thru 25 HP	575V	Three	Only

GASOLINE ENGINE

A Honda OHV gasoline engine can be furnished to drive the air compressor assembly. The engines are all industrial/commercial grade and can be either 5.5, 6.5, 8, 11, 13, or 18 HP depending on the requirements of the air compressor pump.

AIR CONTROL SYSTEM

Constant Run Units - Head Unloader and Discharge Unloader

The air intake is regulated by discharge air pressure demand. A pilot valve is used to operate an unloading device in the compressor head or a line discharge unloader. For most units, air pressure is fed through the pilot valve to a specially designed compressor head. The air pressure actuates the special head's unloading pins that hold the air intake valves in the closed position. For line discharge unloaders, a specially designed valve controls the flow of air. Based on the system pressure, the

valve directs the flow into the air system or to the atmosphere.

Start-Stop Control Units

As with constant run units, the air intake is controlled by air pressure demand. Instead of being controlled by a pilot valve, Start-Stop units are controllled by an electrical switching device, called a pressure switch. When the system reaches a designated pressure, or maximum pressure set point, the pressure switch de-energizes the electric motor. As air is consumed and the system pressure falls below another designated pressure, or minimum pressure set point, the pressure switch energizes the electric motor.

Unloading the pressure from the pump for Start-Stop Units is accomplished either by a pressure switch with unloading capabilities (Single Stage Units) or by a centrifical unloader(Two Stage Units).

Centrifical Unloader Units - Centrifical Unloader units use the rotation of the pump to actuate a specially designed valve. As the pump rotates, weights spin outward causing a specially designed valve to close. When the pressure switch de-energizes the electric motor, the pump stops spinning and consequently allows weights to return to their original position and open the valve. This allows the trapped air between stage one and two to escape through the valve and bleed to the atmosphere.

Dual Control Units

Dual Control Units allow the compressor to operate in both constant run and start-stop control. The unit has both a pilot valve and a pressure switch. The unit can be switched from either operating mode by opening and closing a ball valve. The pilot valve is used to control the compressor when operating in the constant run and the pressure switch is used to control the compressor when operating in the stop/start mode.

A good rule of thumb in determining which is the best mode of operation is by the amount of time the compressor will be required to supply air. If the demand for air is infrequent, then the unit should be set up for stop/start operation to minimize unnecessary run time and operational wear and tear and to save energy. If there is a frequent or extended demand for air, and/or the unit is located in a distant or remote area where access to the compressor is difficult, the unit should be set up for constant run to minimize the number of times the motor must start in an hour to ensure good motor life.

PILOT VALVE

The pilot valve is a pressure control device used to maintain system pressure within a preset range while the compressor runs constantly. The pilot valve may be used to actuate an unloading device such as a discharge line unloader or an unloading device in the head of the compressor. When the system reaches a predetermined pressure, the pilot valve actuates the unloading device and allows the system to run in the unloaded mode. When the system falls below the preset cut-in pressure, the pilot valve closes and disengages the unloading device(s) which allows the compressor to pump air into the system.

PRESSURE SWITCH

The pressure switch is a pressure control device. It functions by opening and closing an electrical switch based on the system pressure. When the system pressure reached a preset pressure, the pressure switch opens a set of electrical contacts which in turn shuts off the electric

motor. Once the air demand drops, the system pressure to a predetermined set point, the pressure switch activates and closes the switch and subsequently starts the electric motor. Many pressure switches also contain a special unloading device which relieves the pressure from the compressor pump when the motor is shut off.

PRESSURE REGULATOR

The pressure regulator is used to maintain a constant outlet pressure. It allows adjustment to any desired pressure below the maximum outlet pressure of the compressor.

BASE/TANK WELDMENT ASSEMBLY

The base/tank weldment serves two primary functions. First, it gives the air compressor a rigid structure that was designed specifically for the operational requirements of the unit. Secondly, the weldment provides the mounting capability for all of the major components of the compressor assembly.

MAGNETIC STARTER

A magnetic starter is included on all models 5HP and larger on simplex and all duplex single phase units and three phase units. The magnetic starter works in conjunction with a pressure switch to start and stop the electric motor. The magnetic starter is primarily a switch which can take the full load of starting and stopping an electric motor when other switching devices are incapable of handling this load. Starters typically are made of two components; the contractor and a heater overload block.

The contractor is a switch designed to engage and disengage all the power to an electric motor. The heater overload block is a protective device for the motor. If the motor draws over a preset number of amps, the overload will disengage the starter and shut the unit down.

CHECK VALVE (Start-Stop Units and All 2-Stage Units)

The check valve functions by allowing air to only move in one direction. This is required and accomplished when the unit switches into either unload (Constant Run Unit) or stopped (Start-Stop Unit) mode of operation. In this situation, the air receiver pressure is built up to the maximum pressure. The pilot valve or pressure switch senses the pressure and at this point either closes the air intake valves or turns off the motor.

RELIEF VALVE

A pressure relief valve is mounted on the manifold assembly or on the receiver. In the event that air pressure continues to build when the demand for compressed air has either slowed or ceased altogether, the relief valve will open at a predetermined set point and allow excess pressure to discharge into the atmosphere. In most cases, this is an indication that there has been a failure in air system somewhere and the cause should be investigated immediately.

AIR INTAKE FILTER(S)

Air filters are designed to remove foreign particles from the air entering the pump. Keeping the filters clean and free from obstructions will ensure the pump continually receives a clean air supply.

Section 3

Preparation for Use and Initial Installation Instructions

PREPARATION FOR USE

GENERAL

The Jenny Air Compressor unit was thoroughly tested at our factory as part of the manufacturing process. The machine will function as designed if properly assembled, set up, and operated. There are certain steps that must be taken prior to attempting to operate unit to assure it is ready for operation.

INSPECTION OF NEW EQUIPMENT

1.) **Check the box or crate for possible shipping damage.**

If extensive damage is apparent to the box, please notify the freight carrier immediately. Do not open the box. Wait for the freight carrier's inspector to be present before opening.

2.) **Open the shipping box and inspect for damage and missing components.**

You should find:

1 - Jenny Air Compressor
1 - Instruction Manual and Warranty Card(s)
1 - Spare parts bag (not included with all units)

Check all of the equipment against the packing list. Examine identification plates for positive identification of the equipment received. If any of these components are missing, please notify the distributor from whom the machine was purchased immediately.

Inspect the unit carefully for any possible hidden damage. If the unit or any of the components are damaged, please notify the freight carrier immediately.

⚠WARNING **Do not attempt to repair or use the unit or any of the components if the unit is damaged. Notify the distributor from whom the machine was purchased immediately.**

3.) **Record the machine model number, serial number, and specifications located on the machine. Always include unit model, unit serial number, and compressor model number when ordering spare parts.**

4.) **Fill out the enclosed warranty card.**

5.) **Inspect for and tighten any loose nuts and/or bolts.**

6.) **Inspect the controls, instruments, and gauges for damage or loose mountings.**

7.) **Inspect all hoses for kinks and loose connections.**

8.) **Inspect electrical wiring for cuts, fraying, and loose connections.**

9.) **Inspect all tubing and piping for loose connections or damage.**

10.) **Check all accessories for damage and loose mountings.**

SERVICING NEW EQUIPMENT

1.) **Remove the unit from the shipping pallet and place on a level surface.**

This can be accomplished by removing the shipping bolts or bands located at the four corners of the base weldment or receiver tank.

2.) **Check oil level in pump, safety relief valve operation, air filter cleanliness, air receiver condensate as specified in Section 4.**

3.) **Perform all the preventive maintenance servicing as specified in Section 5 of this manual.**

LUBRICATION

If the unit is portable, lubrication of the wheels may be required. Use a high quality standard grease. Maintain proper oil level in the compressor pump and gasoline engine if so equipped.

AIR CLEANER

The air cleaner is of the dry, replaceable type. One of the most important service requirements for long term maintenance free operation is to replace or clean the air cleaner element regularly.

NOTICE

Excessive wear, high oil consumption and poor performance will result if the air cleaner is clogged or allows contamination to enter the compressor. Refer to maintenance instructions in Section 4 for service instructions and intervals for cleaning or replacement of element.

INSTALLATION

Proper installation is a key factor in determining the longevity of an air compressor. Please study the installation information in this manual. This information is a guideline for a typical shop installation and is not all inclusive. If there are questions concerning the installation, please do not hesitate to contact your Jenny representative or the Jenny Compressor Company if additional information is required.

1.) **Position compressor and receiver tank in a safe work area.**

Place the compressor and receiver in the designated work area. Leave a minimum of 3 feet clearance around the unit for work space.

⚠CAUTION **This unit requires adequate ventilation and must be placed in a location which provides at least three feet of clearance to all adjacent construction. Failure to allow adequate ventilation or restrict the air flow may cause the machine to overheat. Damage to the machine, operator, and any other unit, product, and accessory in the air stream may result.**

Compressors run out of level by over 10 degrees may be permanently damaged.



Do not locate near flammable or combustible liquids or operate in flammable or combustible atmosphere. A fire or explosion may result.

2.) **Connect plumbing or air hoses.**

Tighten all connections securely. Use pipe dope or teflon tape to help seal the connections that require the use of a wrench. See **Section 4** for information on connecting and disconnecting and hoses.

⚠WARNING **Do not operate this unit with any components rated less than the maximum operating pressure of the unit.**

3.) **Connect electrical service using a fusible disconnect switch. Ensure that the machine is connected to the proper power supply both amperage and voltage.**



Ensure that all connections are properly tightened. Improper connections could result, causing damage, injury, or death of the equipment operator.

This machine must be connected in accordance with the National Electric Code (NEC) Article 422-4 - Ed-31, Except as provided for in NEC 90-4.

This machine must be properly grounded to avoid fatal electrical shock in the event of an electrical malfunction. A ground connector screw should be fastened into the chassis to facilitate supplemental grounding as permitted by NEC 250-91.

Do not connect any other equipment to the electrical circuit serving this unit.

Do not replace a fuse or circuit breaker with one of a higher rating without being certain the wire size is adequate to handle the increased electrical load.

Keep all electrical connections dry and off of the ground.

Observe all local and national codes for the installation of this type of equipment.

If the wire size being used is too small, the voltage drop will be high, and this will cause the motor to draw excessive current and overheat.

If there are any questions or problems with the electrical system being used please, do not hesitate in calling a local qualified electrician.

4.) **Ensure the new equipment service was performed prior to operation.**

5.) **Review all Danger, Warning, and Caution information located on the machine and in the Operator's Manual.**

6.) **Check to be certain that all the control switches are in the off position.**

⚠WARNING The unit is capable of starting automatically.

7.) **Turn the power on to the machine.**

8.) **Start the unit.**

Constant Run Control Equipped -

If the unit is a constant run equipped and does not have an On/Off Switch, the unit will start immediately. If the unit is equipped with an On/Off switch move the switch to the On position.

Start/Stop Control -

If the unit is Start/Stop equipped and does not have an On/Off switch turn the OFF-AUTO (MAN) switch from the OFF position to either the MAN or AUTO position. If the unit is equipped with an On/Off switch move the switch to the On position.

Dual Control -

If the unit is Dual Control equipped and does not have an On/Off switch turn the OFF-AUTO (MAN) switch from the OFF position to either the MAN or AUTO position. If the unit is equipped with an On/Off switch move the switch to the On position.

Starting Gasoline Engine (If so equipped) -

If so equipped, your air compressor is powered by a Honda® gasoline engine. Most accidents with engines can be prevented if you follow all instructions in this manual, the engine owner's manual and on the engine. Follow the instructions in the owners manual for the proper starting procedure.

1. Turn the engine switch to the On or Run position.

2a. If the engine is only rope start, pull rope to start. Continue until engine is running.

2b. If electric start, turn switch past the On position to the Start position. Hold switch in Start position until engine is running, then release.

Section 4

Operating Instructions

OPERATING INSTRUCTIONS

This section describes the operating controls and indicators, detail theory of operation, and operating procedures.

OPERATING CONTROLS AND INDICATORS

Jenny compressors are designed to be highly reliable and very simple to operate. Therefore, there are only a few operating control and indicators. They are as follows:

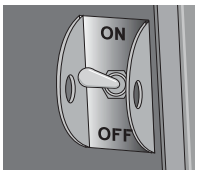

On/Off Switch (SW-3, SW-4, Start/Stop Control & Dual Control)- A switch which allows the operator to manually turn the machine on and off. The switch is located either on the motor, as in the case of the SW-3 and SW-4, or a rotatable lever on the pressure switch for Dual Control and Start/Stop control.



Receiver Pressure Gauge - Indicates the receiver tank air pressure in PSI. The receiver gauge is located either directly fitted to the receiver tank or on the manifold block.

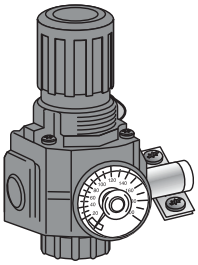

Pressure Regulator - The pressure can be increased or decreased by turning the knob on the regulator. Clockwise increases the outlet pressure and counterclockwise decreases the outlet pressure.

Pressure Regulator Gauge - Indicates the outlet or line pressure in PSI. The pressure regulator gauge is located on the pressure regulator

Oil Level Gauge (If so equipped) - Allows for the visual inspection of the oil level in the crankcase of the pump through a clear window or sight glass.

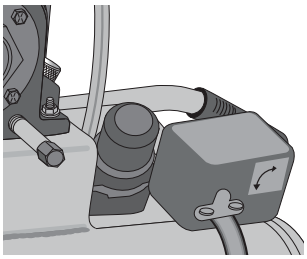

Pressure Switch (Start/Stop Control & Dual Control) - Starts and stops the unit at predesignated high and low pressures. The compressor will start when the pressure within the receiver tank falls below the preset low pressure setting and will stop when the system has reached the high pressure setting. Also located on the pressure switch is a rotatable lever that allows the operator of the unit to turn the unit on or off.

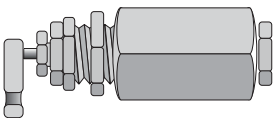

Pilot Valve (Constant Run and Dual Control) - Opens and closes the air intake check valves at predesignated high and low pressures while the motor or engine runs. The air intake check valves will be allowed to operate normally when the pressure within the receiver tank falls below the preset low pressure setting and will hold the intake check valves open when the system has reached the high pressure setting.

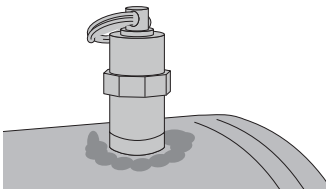

Safety Valve - A safety valve is provided on all Jenny compressor units. The purpose of the safety valve is to relieve system and tank pressure to the atmosphere at a predetermined high pressure limit. In most cases, this is an indication that there has been a failure in air system somewhere and the cause should be investigated immediately.

Dual Control Switch (If so equipped) - Dual Control Units allow the compressor to operate in both constant run and start-stop control. The unit has both a pilot valve and a pressure switch. The unit

can be switched from either operating mode by opening and closing a ball valve. The pilot valve is used to control the compressor when operating in the constant run and the pressure switch is used to control the compressor when operating in the stop/start mode.

A good rule of thumb in determining which is the best mode of operation is by the amount of time the compressor will be required to supply air. If the demand for air is infrequent, then the unit should be set up for stop/start operation to minimize unnecessary run time and operational wear and tear and to save energy. If there is a frequent or extended demand for air, and/or the unit is located in a distant or remote area where access to the compressor is difficult, the unit should be set up for constant run to minimize the number of times the motor must start in an hour to ensure good motor life.

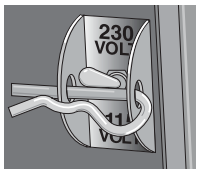

Dual Voltage Switch (If so equipped) - The dual voltage switch allows the operator to change the operating voltage of the unit from 115VAC to 230VAC by toggling the switch to the corresponding voltage position.

Magnetic Starter (If so equipped) - A magnetic starter is included on all models 5HP and larger simplex and all duplex single phase units and three phase units. The magnetic starter works in conjunction with a pressure switch to start and stop the electric motor. The magnetic starter is primarily a switch which can take the full load of starting and stopping an electric motor when other switching devices are incapable of handling this load. Starters typically are made of two components; the contactor and a heater overload block.

The contactor is a switch designed to engage and disengage all the power to an electric motor. The heater overload blocks is a protective device for the motor. If the motor draws over a preset number of amps, the overload will disengage the starter and shut the unit down.

PREPARATION FOR USE

Read and understand the safety instructions before using any Jenny Air Compressor.

Prior to any use of the compressor, it is important to follow the check list outlined below:

1.) **Check the pump and gasoline engine (if so equipped) to ensure proper oil levels as specified in Section 5.**

⚠CAUTION **Do not operate the unit without or an inadequate amount of lubricant(s). This may cause severe damage to the air compressor pump or gasoline engine (if so equipped).**

2.) **Check oil level safety relief valve operation, air filter cleanliness, air receiver condensate as specified in Section 5.**

3.) **Perform all the preventive maintenance servicing as specified in Section 5 of this manual.**

LUBRICATION

If the unit is portable, lubrication of the wheels may be required. Use a high quality standard grease. Maintain proper oil level in the compressor pump and gasoline engine if so equipped.

AIR CLEANER

The air cleaner is of the dry, replaceable type. One of the most important service requirements for long term maintenance free operation is to replace or clean the air cleaner element regularly.

⚠CAUTION **Excessive wear, high oil consumption and poor performance will result if the air cleaner is clogged or allows contamination to enter the compressor. Refer to maintenance instructions in Section 5 for service instructions and intervals for cleaning or replacement of element.**

ADJUSTING REGULATOR

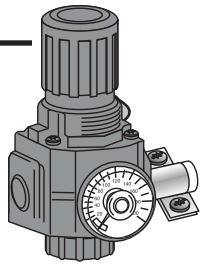

1. Pull regulator knob out
2. Turn knob clockwise to increase regulated pressure and counter clockwise to decrease regulated pressure.
3. When desired pressure is shown on the regulated pressure gauge push knob in to lock.

NOTICE **Never adjust the regulator down to the very bottom of adjustment range, damage to the regulator may result**

CONNECTING AND DISCONNECTING HOSES

To Connect:

1. Ensure that the regulated pressure gauge reads 0 PSI and that all system pressure is relieved.
2. Hold hose in hand at the quick coupler location.
3. Pull back collar or sleeve on female quick connect coupler located on the compressor.
4. Push male connector into female connector.
5. Release female connector.
6. Grasp hose and pull to ensure couplers are seated.
7. Adjust regulator to the desired pressure.

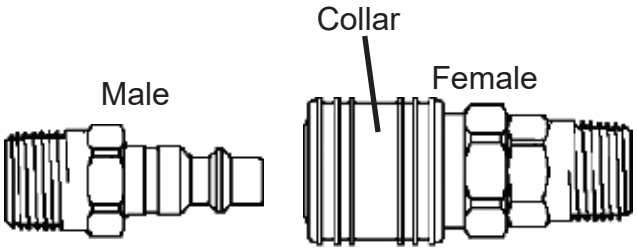

To Disconnect:

1. Ensure that the regulated pressure gauge reads 0 PSI and that all system pressure is relieved.
2. Hold hose in hand at quick coupler location.
3. Pull back collar or sleeve on female quick connect coupler located on the compressor.
4. Pull male connector out of female connector.
5. Release female connector.

⚠WARNING **Firmly grasp hose in hand when connecting or disconnecting to prevent hose whip.**

An improperly seated coupler can blow off the machine when started.

Never decouple the quick coupler when the machine is running.

⚠WARNING **Always release the pressure in the system before coupling or decoupling.**

DRAINING AIR RECEIVER CONDENSATE

1. Ensure that the ON/OFF switch is in the OFF position or disconnect the power from the power source.
2. If the unit is portable, move the compressor into an inclined position so that the drain valve(s) are at the lowest point (this will assist in removing moisture, dirt, etc. from tanks)
3. Place a suitable container underneath the drain(s) to catch all of the discharge condensate.
4. Grasp black lever or the knurled drain cock on one drain valve.
5. Slowly rotate lever or drain cock so as to gradually bleed air from tank.
6. If the unit is a twin tank type, then grasp black lever or knurled drain cock on other drain valve and rotate to approximately the same position as the first.
7. When tank pressure gauge reads 10 psi, rotate valve(s) to the fully open position.
8. Close drain valve(s) when finished.

⚠WARNING **Tanks contain high pressure air. Keep face and other body parts away from outlet of drain. Use safety glasses when draining as debris can be kicked up into face. Use ear protection as air flow noise is loud when draining.**

NOTICE **All compressed air systems generate condensate that accumulates in any drain point (e.g. tanks, filter, aftercoolers, dryers). This condensate may contain lubricating oil and/or substances which may be regulated and must be disposed of in accordance with local, state, and federal laws and regulations.**

HUMID AREAS

In frequently humid areas, moisture may form in the bare pump and produce sludge in the lubricant, causing running parts to wear out prematurely. Excessive moisture is especially likely to occur if the unit is located in an unheated area that is subject to large temperature changes. Two signs of excessive humidity are external condensation on the bare pump when it cools down and a “milky” appearance in compressor lubricant. You may be able to prevent moisture from forming in the bare pump by increasing ventilation or operating for longer intervals.

DUAL VOLTAGE SWITCH (If so equipped)

The dual voltage switch allows the operator to change the operating voltage of the unit from 115VAC to 230VAC by toggling the switch to the corresponding voltage position.

To change voltage:

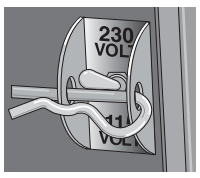

1. Remove the safety hitch pin from the switch guard.
2. Move the switch to the desired voltage (115VAC or 230VAC).

3. Replace the safety hitch pin in the guard.
4. Check and/or replace the plug with the UL/CSA listed plug for the rated current and voltage.

Follow the cord plug manufacturers installation instructions and procedures or contact a qualified electrician.

Ensure that all connections are properly tightened. Improper connections could result, causing damage, injury, or death of the equipment operator.



This machine must be connected in accordance with the National Electric Code (NEC) Article 422-4 - Ed-31, Except as provided for in NEC 90-4.

This machine must be properly grounded to avoid fatal electrical shock in the event of an electrical malfunction. A ground connector screw should be fastened into the chassis to facilitate supplemental grounding as permitted by NEC 250-91.

Observe all local and national codes for the installation of this type of equipment.

If there are any questions or problems with the electrical system being used please, do not hesitate in calling a local qualified electrician.

NOISE CONSIDERATIONS

Consult local officials for information regarding acceptable noise levels in your area. Hearing protection may be required if in close proximity to the compressor. To reduce excessive noise, use vibration mounts or silencers, relocate the unit away from the work area or construct total enclosures or baffle walls.

LOCATION CONSIDERATIONS

Stationary Type Compressors

Stationary compressors are permanent type installations and typically are secured in place. There are numerous ways to achieve this type of installation, the most common of which is bolting them to directly to the floor or other part of the building. Often times, vibration isolators are used to reduce noise and vibration and increase stability.

Portable Type Compressors

Portable Compressors are much more universal and can be used in almost any location as long as reasonable care is taken. Please refer to the Danger, Warning and Cautions as to location limitations and safe operation.

NOTICE **Compressors run out of level by over 10 degrees may be permanently damaged.**

Consult all local codes and standards for information regarding installation and location of compressors as they may differ from one locale to another.

TRANSPORTING (Portable Compressors)

If the unit is a portable type either hand carry or wheeled portable, care must be taken when transporting the compressor. When transporting the compressor in a vehicle, trailer, etc. ensure that the tanks are drained and the unit is secured and placed on a flat horizontal surface. Secure the machine in place by use of a rope or some type of strapping. Use care when driving so to avoid tipping the unit over in the vehicle. Damage can occur to the unit or surrounding items if unit is tipped. Use a ramp if loading or unloading the unit from a height of more than 12”.

⚠WARNING **If the unit is a hand carry type compressor, use proper lifting procedures when lifting or carrying the unit. If the unit is a wheeled portable type compressor, the unit will weigh more than 160 lbs. Do not move or lift the unit without assistance.**

MOVING (Portable units only)

If the unit is a wheeled portable type; When moving the unit into a position for use, grasp handle grips at rear of compressor, and lift compressor high enough so unit can be rolled on the front tire.

If the unit is a hand carry type; When moving the unit into position for use, grasp the handle at the center of the unit and lift the unit off the ground. Use proper lifting procedures in order to avoid injury.

⚠WARNING **Ensure proper footing and use caution when moving compressor so that unit does not tip or cause loss of balance. When location is reached, slowly lower rear of compressor to ground.**

NOTICE **Always store compressor in a horizontal position, on all four rubber mounts. Should the unit tip over, hard starting and smoking will occur due to oil spillage.**

COMPATIBILITY

Air tools and accessories that are run off the compressor must be compatible with petroleum based products. If you suspect that a material is not compatible with petroleum products, an air line filter for removal of moisture and oil vapor in compressed air is required.

NOTICE **Always use an air line filter to remove moisture and oil vapor when spraying paint.**

GENERAL REQUIREMENTS

The piping, fittings, receiver tank, etc. must be certified safe for at least the maximum working pressure of the unit. Use hard welded or threaded steel or copper pipes, cast iron fittings and hoses that are certified safe for the units discharge pressure and temperature. Use pipe thread sealant on all threads, and tighten joints thoroughly to prevent air leaks.

NOTICE **Do not use PVC Plastic pipe or fittings.**

CONDENSATE DISCHARGE PIPING

If installing a condensate discharge line, the piping must be at least one size larger than the connection, as short and direct as possible, secured tightly and routed to a suitable drain point. Condensate must be disposed of in accordance with local, state and federal laws and regulations.

REFUELING (If gasoline engine equipped)

The fuel tank is located on top of the gasoline engine or in an approved red gasoline container. Always refuel with care. Always allow the engine to cool.



Gasoline is extremely flammable and its vapors can explode if ignited. Store gasoline only in approved containers, in well-ventilated, unoccupied buildings, away from sparks or flames.

Do not fill the fuel tank while the engine is hot or running, since spilled fuel could ignite if it comes in contact with hot parts or sparks from ignition.

Do not start the engine near spilled fuel; wipe up spills immediately. Never use gasoline as a cleaning agent.

Do not fill the fuel tank to the point of over flowing. Allow approximately 1-1/4" of tank space for expansion.

Shut off fuel valve on engine before transporting unit to prevent fuel leaking from carburetor.
STORAGE

Always store the compressor in the horizontal position on the machine's rubber feet and/or wheels.

Always ensuring the pump is upright so that the oil does not flow into the cylinder or out the crankcase breather.

GROUNDING

In the event of a malfunction or breakdown, proper grounding provides a path of least resistance for electric current to travel and this reduces the risk of electric shock. This compressor is equipped with an electric cord having an equipment grounding conductor and grounding plug. The plug must be plugged into a matching outlet that is properly installed and grounded in accordance with all local codes and ordinances. Make sure that the electrical circuit to which the compressor is connected provides proper electrical grounding, correct voltage and adequate fuse protection.

⚠WARNING **Do not modify plug provided as this could result in electrical shock or machine electrical malfunction : if it will not fit the outlet, have the proper outlet installed by a qualified electrician.**

Improper connection of the equipment-grounding conductor can result in a risk of electric shock. The conductor with insulation having an outer surface that is green with or without yellow stripes is the equipment grounding conductor. If repairing or replacing the electric cord or plug is necessary, do

not connect the equipment-grounding conductor to a live terminal. Check with a qualified electrician or service personnel if the grounding instructions are not completely understood or if in doubt as to whether the unit is properly grounded.

⚠CAUTION **Use only 3-wire extension cords that have 3-prong grounding plugs and 3-pole receptacles.**

Check with a qualified electrician or service personnel if the grounding instructions are not completely understood or if in doubt as to whether the tool is properly grounded.

STARTING PROCEDURE

1.) **Position compressor and receiver tank in a safe work area if not already so located or if the unit is of a portable type.**

Place the compressor and receiver in the designated work area. Leave a minimum of 3 feet clearance around the unit for work space.

⚠WARNING **This unit requires adequate ventilation and must be placed in a location which provides at least three feet of clearance to all adjacent construction. Failure to allow adequate ventilation or restrict the air flow may cause the machine to overheat. Damage to the machine, operator, and any other unit, product, and accessory in the air stream may result.**

NOTICE **Compressors run out of level by over 10 degrees may be permanently damaged.**

⚠DANGER **Do not locate near flammable or combustible liquids or operate in flammable or combustible atmosphere. A fire or explosion may result.**

2.) **Inspect for and tighten any loose nuts and/or bolts.**

3.) **Inspect the controls, instruments, and gauges for damage or loose mountings.**

4.) **Inspect all hoses for kinks and loose connections.**

5.) **Inspect electrical wiring for cuts, fraying, and loose connections.**

6.) **Inspect all tubing and piping for loose connections or damage.**

7.) **Check all accessories for damage and loose mountings.**

8.) **Connect plumbing or air hoses.**

Tighten all connections securely. Use pipe dope or teflon tape to help seal the connections that require the use of a wrench. See the section on connecting and disconnecting air hoses.

⚠CAUTION **Do not operate this unit with any components rated less than the maximum operating pressure of the unit.**

9.) **If machine is electric powered, connect electrical service using a fusible disconnect switch. Ensure that the machine is connected to the proper power supply both amperage and voltage.**

Ensure that all connections are properly tightened. Improper connections could result, causing damage, injury, or death of the equipment operator.



This machine must be connected in accordance with the National Electric Code (NEC) Article 422-4 - Ed-31, Except as provided for in NEC 90-4.

This machine must be properly grounded to avoid fatal electrical shock in the event of an electrical malfunction. A ground connector screw should be fastened into the chassis to facilitate supplemental grounding as permitted by NEC 250-91.

Do not connect any other equipment to the electrical circuit serving this unit.

Do not replace a fuse or circuit breaker with one of a higher rating without being certain the wire size is adequate to handle the increased electrical load.

Keep all electrical connections dry and off of the ground.

Observe all local and national codes for the installation of this type of equipment.

If the wire size being used is too small, the voltage drop will be high, and this will cause the motor to draw excessive current and overheat.

If there are any questions or problems with the electrical system being used please, do not hesitate in calling a local qualified electrician.

10.) **Ensure preventive equipment service was performed prior to operation.**

11.) **Review all Danger, Warning, and Caution information located on the machine and in the Operator's Manual.**

12.) **Check to be certain that all the control switches are in the off position.**

NOTICE **The unit may be capable of starting automatically.**

13.) **If machine is electric powered, turn the power on to the machine.**

14.) **Start the unit.**

Constant Run Control Equipped -

If the unit is a constant run equipped and does not have an On/Off Switch, the unit will start immediately. If the unit is equipped with an On/Off switch move the switch to the On position.

Start/Stop Control -

If the unit is Start/Stop equipped and does not have an On/Off switch turn the OFF-AUTO (MAN) switch from the OFF position to either the MAN or AUTO position. If the unit is equipped with an On/Off switch move the switch to the On position.

Dual Control -

If the unit is Dual Control equipped and does not have an On/Off switch turn the OFF-AUTO (MAN) switch from the OFF position to either the MAN or AUTO position. If the unit is equipped with an On/Off switch move the switch to the On position.

Starting Gasoline Engine (If so equipped) -

If so equipped, your air compressor is powered by a Honda® gasoline engine. Most accidents with engines can be prevented if you follow all instructions in this manual, the engine owner's manual and on the engine. Follow the instructions in the owners manual for the proper starting procedure.

1. Turn the engine switch to the On or Run position

2a. If the engine is only rope start, pull rope to start. Continue until engine is running.

2b. If electric start, turn switch past the On position to the Start position. Hold switch in Start position until engine is running, then release.

SHUTDOWN PROCEDURE

1.) **Turn off the unit.**

Constant Run Control Equipped -

If the unit is a constant run equipped and does not have an On/Off Switch, the unit will continue to run until the power is removed from the unit. To stop the unit, allow the unit to reach reached its cut-out pressure. At which point, the unit will continue to run at a significantly lower amp draw and will not charge air. A slight air noise may be heard which is the unloading of the air through the pump head. Disconnect the unit from the power source.

If the unit is equipped with an On/Off switch move the switch to the OFF position.

Start/Stop Control -

If the unit is Start/Stop equipped and does not have an On/Off switch turn the OFF-AUTO (MAN) switch from either the MAN or AUTO position to the OFF position. If the unit is equipped with an On/Off switch move the switch to the OFF position.

Dual Control -

If the unit is Dual Control equipped and does not have an On/Off switch turn the OFF-AUTO (MAN)

switch from either the MAN or AUTO position to the OFF position. If the unit is equipped with an On/Off switch move the switch to the OFF position.

Stopping Gasoline Engine (If so equipped) -

If so equipped, your air compressor is powered by a gasoline engine. Most accidents with engines can be prevented if you follow all instructions in this manual, the engine owner's manual and on the engine. Follow the instructions in the owners manual for the proper stopping procedure.

A. Turn the engine switch to the OFF position

B. Close the fuel shutoff valve.

2.) **If machine is electric powered, disconnect the machine from the electrical service.**

3.) **Inspect for and tighten any loose nuts and/or bolts.**

4.) **Check all accessories for damage and loose mountings. Replace or repair any damaged accessories.**

4.) **Inspect the controls, instruments, and gauges for damage or loose mountings. Replace or repair any damaged controls, instruments, or gauges.**

7.) **Inspect all hoses for kinks and loose connections. Replace or repair any damaged hoses.**

8.) **Inspect electrical wiring for cuts, fraying, and loose connections. Replace or repair any damaged electrical wire(s).**

9.) **Inspect all tubing and piping for loose connections or damage. Replace or repair any damaged tubing or piping.**

10.) **Drain Condensate from tanks(s). Follow the procedure for Draining Air Receiver condensate.**

11.) **If the unit is portable, relocate compressor to suitable storage location.**

Section 5

Maintenance Instructions

PREVENTIVE MAINTENANCE CHECKS

CHECKING COMPRESSOR PUMP OIL LEVEL

⚠WARNING **Aftercooler, pump head, and surrounding parts are very hot, do not touch.**

⚠CAUTION **Do not operate without lubricant or with inadequate lubricant. Jenny can not be responsible for compressor failure caused by inadequate lubrication.**

1. Ensure Unit is off and disconnect from the power source.
2. Locate unit onto a flat horizontal surface.
3. Remove knurled oil fill plug from crankcase.
4. Insert a clean screwdriver into the crankcase and remove it.
5. Look for visual signs of contaminants (water, dirt, etc.) Change pump oil if contaminants are present.
6. Oil should not exceed top raised line on side of crankcase (oil will be even with bottom of threads in crankcase fill port). If necessary fill with Jenny Ultimate Blue synthetic oil.

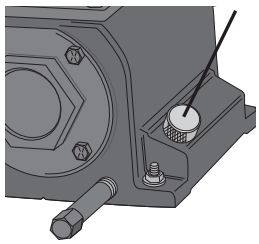

CHANGING COMPRESSOR PUMP OIL

⚠WARNING **Aftercooler, pump head, and surrounding parts are very hot, do not touch.**

⚠CAUTION **Do not operate without lubricant or with inadequate lubricant. Jenny can not be responsible for compressor failure caused by inadequate lubrication.**

1. Ensure unit is off and disconnected from the power source.
2. Locate unit onto a flat horizontal surface.
3. Remove knurled oil fill plug from crankcase.
4. Place approved oil collection container underneath the oil drain cap. The use of a funnel may be required to help the oil collection and drainage procedure.
5. Remove the oil drain cap.
6. Allow oil to drain from compressor pump.
7. Look for visual signs of contaminants (water, dirt, etc...). This might help in identifying irregular running conditions, maintenance issues or potential future problems.
8. Replace oil drain cap on the oil drain pipe. Tighten the connection securely. Use pipe dope or teflon tape to help seal the connection.
9. Fill the crankcase with Jenny Ultimate Blue synthetic oil. Oil should not exceed top raised line on side of crankcase (oil will be even with bottom of threads in crankcase fill port).

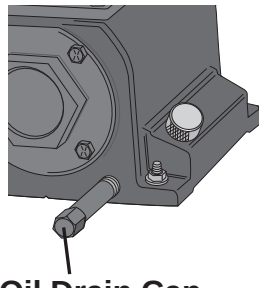

CHECKING SAFETY RELIEF VALVE OPERATION

⚠WARNING **Aftercooler, pump head, and surrounding parts are very hot, do not touch.**

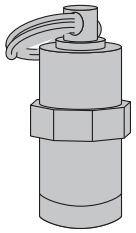

1. Ensure unit is off and disconnected from the power source.
2. Ensure tanks are empty by looking at tank pressure gauge. Drain tanks if necessary.
3. Grasp wire ring on safety valve.
4. Pull and release ring a few times to ensure plunger moves in and out.

CHECKING AIR FILTER ELEMENT

⚠WARNING **Aftercooler, pump head, and surrounding parts are very hot, do not touch.**

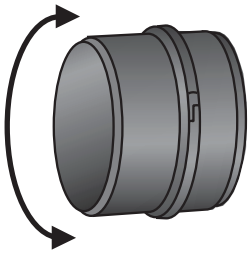

1. Ensure unit is off.
2. Allow unit to cool.
3. Unscrew filter top from filter base by turning counter clockwise about 5 degrees.
4. Separate filter top from base.
5. Remove element from filter base.
6. If element needs cleaning, blow out with air. Replace element if unsure.
7. Place element back in filter base.
8. Reconnect filter top to filter base and while pushing in, rotate top clockwise 5 degrees.

PILOT VALVE CUT-OUT PRESSURE ADJUSTMENT

NOTICE **Unit can remain running while performing this adjustment.**

⚠WARNING **Aftercooler, pump head, and surrounding parts are very hot; do not touch.**



Moving Parts: Keep your hair, clothing and gloves away from moving parts. Loose clothing, jewelry, or long hair can be caught in moving parts. Air vents may cover moving parts and should be avoided as well. Do not remove the protective covers from this product.

⚠CAUTION **The pilot valve is brass which is a soft metal. Do not overtighten screw as threads can strip out.**

1. Hold “C” firmly and loosen nut “B”.

⚠WARNING **Do not loosen screw “A” more than 1 revolution as screw is subjected to tank pressure and can burst out which can harm the user or surrounding personnel.**

2. Turn screw “A” clockwise to increase cut-out pressure limit or counter clockwise to decrease cut-out pressure. (example: if the cut-out pressure on the tank gauge reads 120 psi. and desired cut out is 130 psi, turn screw “A” clockwise)
3. Drain air from tanks through drain valves until pump begins to charge tanks.
4. Close drain valves.
5. Monitor cut-out pressure to verify the new setting
6. Once setting is complete hold screw “A” firmly
7. Hold “C” firmly and tighten nut “B”

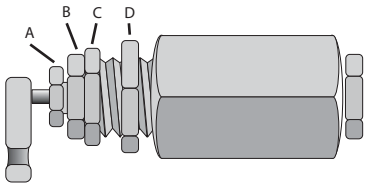

PILOT VALVE PRESSURE DIFFERENTIAL ADJUSTMENT

NOTICE **Unit can remain running while performing this adjustment.**

⚠WARNING **Aftercooler, pump head, and surrounding parts are very hot; do not touch.**



Moving Parts: Keep your hair, clothing and gloves away from moving parts. Loose clothing, jewelry, or long hair can be caught in moving parts. Air vents may cover moving parts and should be avoided as well. Do not remove the protective covers from this product.

1. Hold “C” firmly and loosen nut “D”

⚠CAUTION **Do not loosen barrel “C” more than 1 revolution as barrel is subjected to tank pressure and can burst out which can harm the user or surrounding personnel.**

2. Turn barrel “C” clockwise to increase differential or counter clockwise to decrease differential. (for example: if pressure differential is 100 –130 psi and 100–120 psi is desired, turn “C” counterclockwise)

NOTICE **Too narrow of a differential can cause chatter of the pilot valve. Increase differential to eliminate chatter.**

3. Hold barrel “C”
4. Hold “C” firmly and tighten nut “D”

PRESSURE SWITCH ADJUSTMENT

NOTICE **Unit can remain running while performing this adjustment.**



There is live electrical power on the four contact points on the switch. Use only electrically insulated tools to perform this adjustment in case of accidental contact with the electrical system.

Pressure Range Adjustment

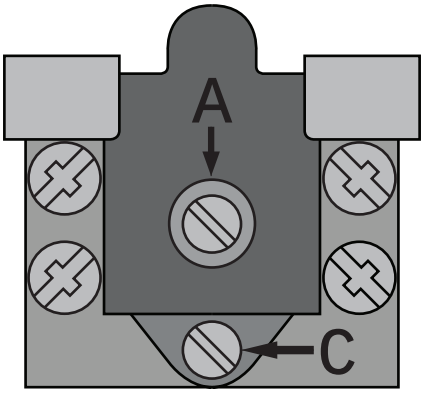

To increase the pressure range: Turn screw A clockwise to increase the overall system pressure range (both cut-in and cut-out).

To decrease the pressure range: Turn screw A counter clockwise to decrease the overall system pressure range (both cut-in and cut-out).

Differential Pressure Range Adjustment

To increase the cut-in pressure: Turn screw C clockwise to increase the differential cut in pressure.

To decrease the cut-in pressure: Turn screw C counterclockwise to decrease the differential cut in pressure.

⚠CAUTION **Do not set the pressure switch cut-out pressure higher than the maximum factory setting. This will cause the motor to draw excessive amps and cause damage to the electrical system and motor.**

DRIVE BELT ADJUSTMENT

Check tension of compressor drive v-belts. The first 24 hours of operation and check tension of v-belts frequently. Make adjustments as follows:

1.) **Shut down unit.**

2.) **Disconnect unit from power supply.**

3.) **Check to be certain that all the control switches are in the off position.**

4.) **Allow unit to cool down so pump can be touched.**

5.) **Remove the belt guard from the machine.**

6.) **Attach a belt tension gauge to the center of the span between the motor and compressor sheaves.**

7.) **Follow the operational directions of the belt drive tension gauge.**

8.) **Scribe a mark on the deck of the unit along the edge of the motor base to be used as a**

reference location.

9.) **If the deflection of belt is too great, then loosen the motor or engine bolts and slide the motor or engine away from the pump. If the deflection of belt is too small, then loosen the motor or engine bolts and slide the motor or engine toward the pump.**

A.) Remove the Belt
B.) Scribe a mark approximately 1/8” from the original reference mark.
C.) Loosen the 4 screws holding the electric motor or gasoline engine.
D.) Slide the motor or engine to the new mark.
E.) Ensure that the pulleys are in alignment. Use a straight edge to check.
F.) Properly tighten the 4 screws to hold the electric motor or gasoline engine in place.
G.) Roll the belt onto motor pulley and then the pump flywheel.



Care must be taken when rolling the belt onto the pulleys, as fingers can get caught between the belt and the pulleys.

10.) **Recheck the belt tension with the gauge.**

11.) **Repeat steps 6 & 7 until the proper belt tension is achieved.**

If no belt tension gauge is available, then use this figure to roughly approximate the belt drive tension. The amount of forced to be applied is approximately 8 lbs. Use a ruler to measure the deflection. This is only a temporary solution and a belt drive tension gauge should be used as soon as possible.

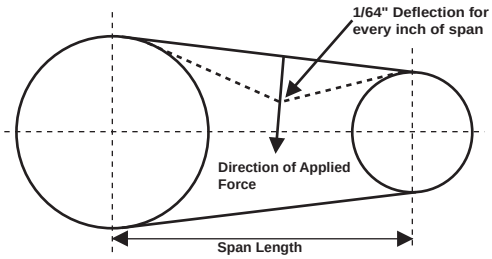

⚠WARNING **Drive pulleys must be properly aligned and belt drive tension must be set to specification. Improper pulley alignment and belt tension can cause motor overloading, excessive vibration and premature belt and/or bearing failure.**

CHECKING FOR AIR LEAKS

NOTICE **Unit must be pressurized while performing this task.**

1.) **Start unit and allow it to come up to pressure.**

2.) **Apply a solution soapy water around all the joints, fittings and hose connections.**

3.) **Look for air bubbles.**

4.) **If air bubbles are found, shut the unit down, bleed off all the air, and allow to cool.**

4.) **Tighten or replace any joints, fittings or hose connections that are found to be leaking.**

⚠CAUTION **Do not attempt to tighten or repair any joints, fittings or hoses while the unit is pressurized.**

PREVENTIVE MAINTENANCE SCHEDULE

GENERAL

Preventive maintenance pays off in many ways. Avoid long serious downtimes, costly delays, and harmful effects to intricate parts of compressor. Do all repair work at your convenience without jeopardizing manufacturing and shipping schedules, and preventive maintenance will reduce the chances of industrial accidents.

To ensure efficient maintenance free life span, the Jenny compressor must be serviced and maintained by the operator and qualified maintenance personnel on a periodic and systematic basis. Preventive Maintenance Checks and Services are outlined below. By following this inspection schedule, most defects will be discovered and corrected, or avoided, before they result in serious damage.

Dirt is the most common cause of faulty operation and excessive wear. Every precaution should be taken to prevent contamination from entering the compressor. The most essential preventive measures are proper maintenance of the air cleaner element and compressor oil. Detailed preventive maintenance checks and services follows:

Procedure	Daily	Weekly	Monthly	Annually (200 Hrs.)
Check pump oil level	X			
Oil leak inspection	X			
Drain condensation in air tanks	X			
Check for unusual noise/vibration	X			
Check for air leaks	X			
Inspect belt(s)	X			
Inspect air filter(s). Clean or replace if necessary		X		
Clean exterior of compressor		X		
Check safety relief valve			X	
Check belt adjustment			X	
Check and tighten all bolts			X	
Check air connections and compressor joints for leaks			X	
Change pump and/or engine oil				X

NOTICE **The pump oil must be changed after the first 20 hours of operation. The will remove contaminants contained in the crankcase due to break-in.**

⚠CAUTION **In the presence of harsh operating conditions and environments, the oil change and air cleaner change interval should be performed on a more accelerated schedule.**

SERVICE INFORMATION

Please have the following information available for all service calls:

Model Number: _____

Serial Number: _____

Date of Purchase: _____

Place of Purchase: _____

REPAIRS

To assure product SAFETY and RELIABILITY, repairs, maintenance and adjustment should be performed by authorized service centers or other qualified service organizations, always using identical replacement parts. For the closest warranty repair center, please contact us.

WARRANTY

Full One Year Warranty - Jenny Compressors are warranted for one year from date of purchase. We will repair, without charge, any defects due to faulty materials or workmanship.

For warranty repair information, call 1-888-4-A-Jenny.

This warranty does not apply to accessories or damage caused where repairs have been made or attempted by others. This warranty gives you specific legal rights and you may have other rights which vary in certain states or provinces.

FREE WARNING LABEL REPLACEMENT

If your warning labels become illegible or are missing, call 1-888-4-A-Jenny for a free replacement.

Jenny Products, Inc.
850 North Pleasant Avenue
Somerset, PA 15501

Ph: (814) 445-3400
Fx: (814) 445-2280
Web: www.jennycompressor.com
e-mail: info@ jennycompressor.com

Section 6

Troubleshooting Instructions

TROUBLESHOOTING

The following chart lists the malfunctions that occur most commonly when operating an industrial air compressor. It gives the symptoms, their causes and the corresponding corrective actions. In some cases, the operator or maintenance personnel can perform the corrective actions, while others may require the assistance of a qualified Jenny compressor technician or dealer.

This procedure has been written assuming that the unit has been installed correctly, has been operating and functioning correctly. The voltage or pressure ratings listed within the troubleshooting tables are ± 5% unless otherwise specified. The dependent sequence of events are illustrated as they must occur and to determine at what point in the troubleshooting to begin you must know what mode of operation the malfunction is occurring. To accomplish this, the operator must read and understand the theory of operation in chapter 4. Once you can observe the unit and recognize the modes as the unit automatically switches into them, you should be very successful in determining what to do using these procedures.

⚠DANGER **This unit contains lethal voltages, hazardous temperatures, dangerous pressure and moving parts which may cause serious injury to personnel. Perform troubleshooting with extreme caution.**

Troubleshooting Guide

Problem	Possible Cause	Possible Solution
Compressor does not start or restart	Power cord not plugged in.	Plug cord into grounded outlet.
	Motor thermal overload switch has tripped.	Turn air compressor off, wait until motor is cool, if motor is a manual reset type, then press motor thermal overload button firmly until click is heard. (Located on motor)
	Fuse blown or circuit has tripped.	Replace fuse or reset circuit breaker. Check for proper fuse; only “Fusetron” type T fuses are acceptable. Check for low voltage conditions. Disconnect any other electrical appliances from circuit or operate air compressor on its own branch circuit.
	Wrong gauge wire or length of extension cord.	Check chart for proper gauge wire and cord length. If possible, eliminate extension cord.
	Defective motor, motor capacitor or pressure switch.	Contact Jenny Customer Service at 1-888-4-A-JENNY.
	Tanks have air pressure in them.	Bleed tanks fully.
	Engine oil too low. Low oil shut off is on.	Add engine oil.
	Manual lock on pilot valve is in the loaded position.	Move manual lock into an in-line position.
	Engine idle speed too low.	Increase idle speed.
	Engine problem.	See “Taking care of unexpected problems” in engine owners manual.
Compressor Stalls	Air compressor on unlevel surface.	Do not incline the air compressor more than 10° in any direction while running.
	Engine idle speed too low.	Increase idle speed.
	Engine problem.	See “Taking care of unexpected problems” in engine owners manual.
Unit does not or is slow to come up to speed.	Lubricant viscosity too high.	Drain existing lubricant and refill with Jenny Ultimate Blue Synthetic lubricant.
	Carbon build up on top of piston.	Clean piston. Repair or replace as required.
	Connecting rod, piston pin, or crank wrist pin bearings worn or scored.	Inspect all. Repair or replace as required.
	Crankshaft seal worn or crankshaft scored.	Replace seal or crankshaft assembly.

Problem	Possible Cause	Possible Solution
	Ambient temperature too low.	Relocate unit to warmer environment. Ensure Jenny Ultimate Blue Synthetic Oil is in crankcase.
	Worn cylinder finish.	Deglaze cylinder with 180 grit flex-hone
	Defective motor, motor capacitor or pressure switch.	Contact Jenny Customer Service at 1-888-4-A-JENNY.
	Air compressor is not large enough for air required.	Check the accessory air requirement. If it is higher than the CFM or pressure supply of the air compressor, you need a larger air compressor.
	Possible defective safety/relief valve.	Operate safety relief valve manually by pulling on test ring. If it still leaks, replace.
	Defective gaskets.	Replace and torque head bolts to 6 - 7 ft lb.
	Fittings not tight enough or leaking.	Warning drain air before tightening: tighten fittings where air can not be heard escaping. Check joint with soap solution. Do not overtighten.
	Crankcase overfilled with oil.	Drain oil. Refill to proper level with Jenny Ultimate Blue Synthetic Oil.
	Manual lock on pilot valve is in the loaded position.	Move manual lock into an in-line position.
	Engine idle speed too low.	Increase idle speed.
	Engine problem.	See “Taking care of unexpected problems” in engine owners manual.
Air compressor not making enough air.	Clogged or dirty inlet and or discharge line filter.	Clean or replace.
	Lubricant viscosity too high	Drain existing lubricant and refill with Jenny Ultimate Blue Synthetic lubricant.
	Compressor check valve leaky, broken, carbonized or loose.	Clean or replace as required. Inspect valves.
	Carbon build up on top of piston.	Clean piston. Repair or replace as required.
	Piston rings damaged or worn (broken, rough, or scratched). Excessive end gap or side clearance. Piston rings not seated, are stuck in grooves or end gaps not staggered.	Install new rings.
	Cylinder or piston scratched, worn, or scored.	Repair or replace as required.

Problem	Possible Cause	Possible Solution
	Connecting rod, piston pin, or crank wrist pin bearings worn or scored.	Inspect all. Repair or replace as required.
	Air compressor is not large enough for air required.	Check the accessory air requirement. If it is higher than the CFM or pressure supply of the air compressor, you need a larger air compressor.
	Defective gaskets.	Replace and torque head bolts to 6 - 7 ft lb.
	Fittings not tight enough or leaking.	Warning drain air before tightening: tighten fittings where air can not be heard escaping. Check joint with soap solution. Do not overtighten.
	Hose or hose connections are too small or long.	Replace with larger hose or connectors.
	Possible defective reed valve. (Hand Carry Units)	Remove pump head and inspect valve plate and (reed) valve. Clear or replace valves as required.
Insufficient pressure at air tool or accessory	Clogged or dirty inlet and or discharge line filter.	Clean or replace.
	Lubricant viscosity too high	Drain existing lubricant and refill with Jenny Ultimate Blue Synthetic lubricant.
	Compressor check valve leaky, broken, carbonized or loose.	Clean or replace as required. Inspect valves.
	Carbon build up on top of piston.	Clean piston. Repair or replace as required.
	Piston rings damaged or worn (broken, rough, or scratched). Excessive end gap or side clearance. Piston rings not seated, are stuck in grooves or end gaps not staggered.	Install new rings.
	Cylinder or piston scratched, worn, or scored.	Repair or replace as required.
	Connecting rod, piston pin, or crank wrist pin bearings worn or scored.	Inspect all. Repair or replace as required.
	Air compressor is not large enough for air required.	Check the accessory air requirement. If it is higher than the CFM or pressure supply of the air compressor, you need a larger air compressor.
	Defective gaskets.	Replace and torque head bolts to 6 - 7 ft lb.

Problem	Possible Cause	Possible Solution
	Fittings not tight enough or leaking.	Warning drain air before tightening: tighten fittings where air can not be heard escaping. Check joint with soap solution. Do not overtighten.
	Pressure regulator knob not turned to high enough pressure or defective pressure regulator.	Adjust pressure regulator knob to proper setting or replace.
	Hose or hose connections are to small or long.	Replace with larger hose or connectors.
	Possible defective reed valve. (Hand Carry Units)	Remove pump head and inspect valve plate and (reed) valve. Clear or replace valves as required.
High oil consumption.	Lubricant viscosity too low	Drain existing lubricant and refill with Jenny Ultimate Blue Synthetic lubricant.
	Extremely light duty cycles.	Run unit for longer duty cycles
	Piston rings damaged or worn (broken, rough, or scratched). Excessive end gap or side clearance. Piston rings not seated, are stuck in grooves or end gaps not staggered.	Install new rings.
	Cylinder or piston scratched, worn, or scored.	Repair or replace as required.
	Connecting rod, piston pin, or crank wrist pin bearings worn or scored.	Inspect all. Repair or replace as required.
	Crankshaft seal worn or crankshaft scored.	Replace seal or crankshaft assemby.
	Worn cylinder finish.	Deglaze cylinder with 180 grit flex-hone.
	Air compressor on unlevel surface.	Do not incline the air compressor more than 10° in any direction while running.
	Plugged oil crankcase vent.	Clean.
Unit runs excessively hot.	Clogged or dirty inlet and or discharge line filter.	Clean or replace.
	Lubricant viscosity too low	Drain existing lubricant and refill with Jenny Ultimate Blue Synthetic lubricant.
	Lubricant level too low	Add Jenny Ultimate Blue Synthetic Oil to crankcase to proper level. Check for bearing damage.
	Detergent type lubricant being used.	Drain existing lubricant and refill with Jenny Ultimate Blue Synthetic lubricant.
	Cylinder or piston scratched, worn, or scored.	Repair or replace as required.

Problem	Possible Cause	Possible Solution
	Connecting rod, piston pin, or crank wrist pin bearings worn or scored.	Inspect all. Repair or replace as required.
	Crankshaft seal worn or crankshaft scored.	Replace seal or crankshaft assembly.
	Extremely dusty atmosphere.	Install more effective filtration or relocate unit.
	Worn cylinder finish.	Deglaze cylinder with 180 grit flex-hone.
	Wrong gauge wire or length of extension cord.	Check chart for proper gauge wire and cord length. If possible, eliminate extension cord.
	Air compressor on unlevel surface.	Do not incline the air compressor more than 10° in any direction while running.
Excessive starting and stopping	Compressor check valve leaky, broken, carbonized or loose.	Clean or replace as required. Inspect valves.
	Defective motor, motor capacitor or pressure switch.	Contact Jenny Customer Service at 1-888-4-A-JENNY.
	Air compressor is not large enough for air required.	Check the accessory air requirement. If it is higher than the CFM or pressure supply of the air compressor, you need a larger air compressor.
	Defective gaskets.	Replace and torque head bolts to 6 - 7 ft lb.
	Fittings not tight enough or leaking.	Warning drain air before tightening: tighten fittings where air can not be heard escaping. Check joint with soap solution. Do not overtighten.
	Possible defective reed valve. (Hand Carry Units)	Remove pump head and inspect valve plate and (reed) valve. Clear or replace valves as required.
Excessive noise during operation	Lubricant viscosity too low	Drain existing lubricant and refill with Jenny Ultimate Blue Synthetic lubricant.
	Lubricant viscosity too high.	Drain existing lubricant and refill with Jenny Ultimate Blue Synthetic lubricant.
	Lubricant level too low	Add Jenny Ultimate Blue Synthetic Oil to crankcase to proper level. Check for bearing damage.
	Detergent type lubricant being used.	Drain existing lubricant and refill with Jenny Ultimate Blue Synthetic lubricant.
	Carbon build up on top of piston.	Clean piston. Repair or replace as required.

Problem	Possible Cause	Possible Solution
	Piston rings damaged or worn (broken, rough, or scratched). Excessive end gap or side clearance. Piston rings not seated, are stuck in grooves or end gaps not staggered.	Install new rings.
	Cylinder or piston scratched, worn, or scored.	Repair or replace as required.
	Connecting rod, piston pin, or crank wrist pin bearings worn or scored.	Inspect all. Repair or replace as required.
	Crankshaft seal worn or crankshaft scored.	Replace seal or crankshaft assembly.
	Worn cylinder finish.	Deglaze cylinder with 180 grit flex-hone.
	Fittings not tight enough or leaking.	Warning drain air before tightening: tighten fittings where air can not be heard escaping. Check joint with soap solution. Do not overtighten.
	Possible defective reed valve. (Hand Carry Units)	Remove pump head and inspect valve plate and (reed) valve. Clear or replace valves as required.
	Air compressor on unlevel surface.	Do not incline the air compressor more than 10° in any direction while running.
	Crankcase overfilled with oil.	Drain oil. Refill to proper level with Jenny Ultimate Blue Synthetic Oil.
Moisture in discharge air.	Condensation in air tank caused by high level of atmospheric humidity.	Drain air tank after every use. Drain air tank more often in humid weather and use an air line filter.
	Unit located in damp or humid location.	Relocate unit.
Moisture in crankcase or “milky” appearance in petroleum lubricant or rusting in cylinders.	Extremely light duty cycles.	Run unit for longer duty cycles
	Compressor check valve leaky, broken, carbonized or loose.	Clean or replace as required. Inspect valves.
	Piston rings damaged or worn (broken, rough, or scratched). Excessive end gap or side clearance. Piston rings not seated, are stuck in grooves or end gaps not staggered.	Install new rings.
	Cylinder or piston scratched, worn, or scored.	Repair or replace as required.
	Worn cylinder finish.	Deglaze cylinder with 180 grit flex-hone.

Problem	Possible Cause	Possible Solution
	Fittings not tight enough or leaking.	Warning drain air before tightening: tighten fittings where air can not be heard escaping. Check joint with soap solution. Do not overtighten.
	Defective or rusted air tank	Air tank must be replaced. Do not attempt to repair air tank
	Water in oil due to condensation.	Drain oil. Refill to proper level with Jenny Ultimate Blue Synthetic Oil.
	Unit located in damp or humid location.	Relocate unit.
Oil in discharge air (oil pumping)	Lubricant viscosity too low	Drain existing lubricant and refill with Jenny Ultimate Blue Synthetic lubricant.
	Extremely light duty cycles.	Run unit for longer duty cycles
	Carbon build up on top of piston	Clean piston. Repair or replace as required.
	Piston rings damaged or worn (broken, rough, or scratched). Excessive end gap or side clearance. Piston rings not seated, are stuck in grooves or end gaps not staggered.	Install new rings.
	Cylinder or piston scratched, worn, or scored.	Repair or replace as required.
	Connecting rod, piston pin, or crank wrist pin bearings worn or scored.	Inspect all. Repair or replace as required.
	Worn cylinder finish.	Deglaze cylinder with 180 grit flex-hone.
	Crankcase overfilled with oil.	Drain oil. Refill to proper level with Jenny Ultimate Blue Synthetic Oil.
	Plugged oil crankcase vent.	Clean.
Oil leaking from shaft seal	Crankshaft seal worn or crankshaft scored.	Replace seal or crankshaft assembly.
Safety relief valve “pops” or reliefs pressure.	Possible defective safety/relief valve	Operate safety relief valve manually by pulling on test ring. If it still leaks, replace.
	Excessive air tank pressure	Adjust pilot valve or pressure switch. If problem still exists replace pilot valve or pressure switch.
Air leaks at pump.	Defective gaskets.	Replace and torque head bolts to 6 - 7 ft lb.
	Fittings not tight enough or leaking.	Warning drain air before tightening: tighten fittings where air can not be heard escaping. Check joint with soap solution. Do not overtighten.

Problem	Possible Cause	Possible Solution
Air leaks at fittings.	Fittings not tight enough or leaking.	Warning drain air before tightening: tighten fittings where air can not be heard escaping. Check joint with soap solution. Do not overtighten.
Air leaks from tank.	Defective or rusted air tank.	Air tank must be replaced. Do not attempt to repair air tank
Abnormal piston ring or cylinder wear.	Lubricant viscosity too low	Drain existing lubricant and refill with Jenny Ultimate Blue Synthetic lubricant.
	Lubricant level too low	Add Jenny Ultimate Blue Synthetic Oil to crankcase to proper level. Check for bearing damage.
	Detergent type lubricant being used.	Drain existing lubricant and refill with Jenny Ultimate Blue Synthetic lubricant.
	Extremely light duty cycles.	Run unit for longer duty cycles
	Piston rings damaged or worn (broken, rough, or scratched). Excessive end gap or side clearance. Piston rings not seated, are stuck in grooves or end gaps not staggered.	Install new rings.
	Cylinder or piston scratched, worn, or scored.	Repair or replace as required.
	Connecting rod, piston pin, or crank wrist pin bearings worn or scored.	Inspect all. Repair or replace as required.
	Extremely dusty atmosphere.	Install more effective filtration or relocate unit

MODEL K2A-30V
START / STOP

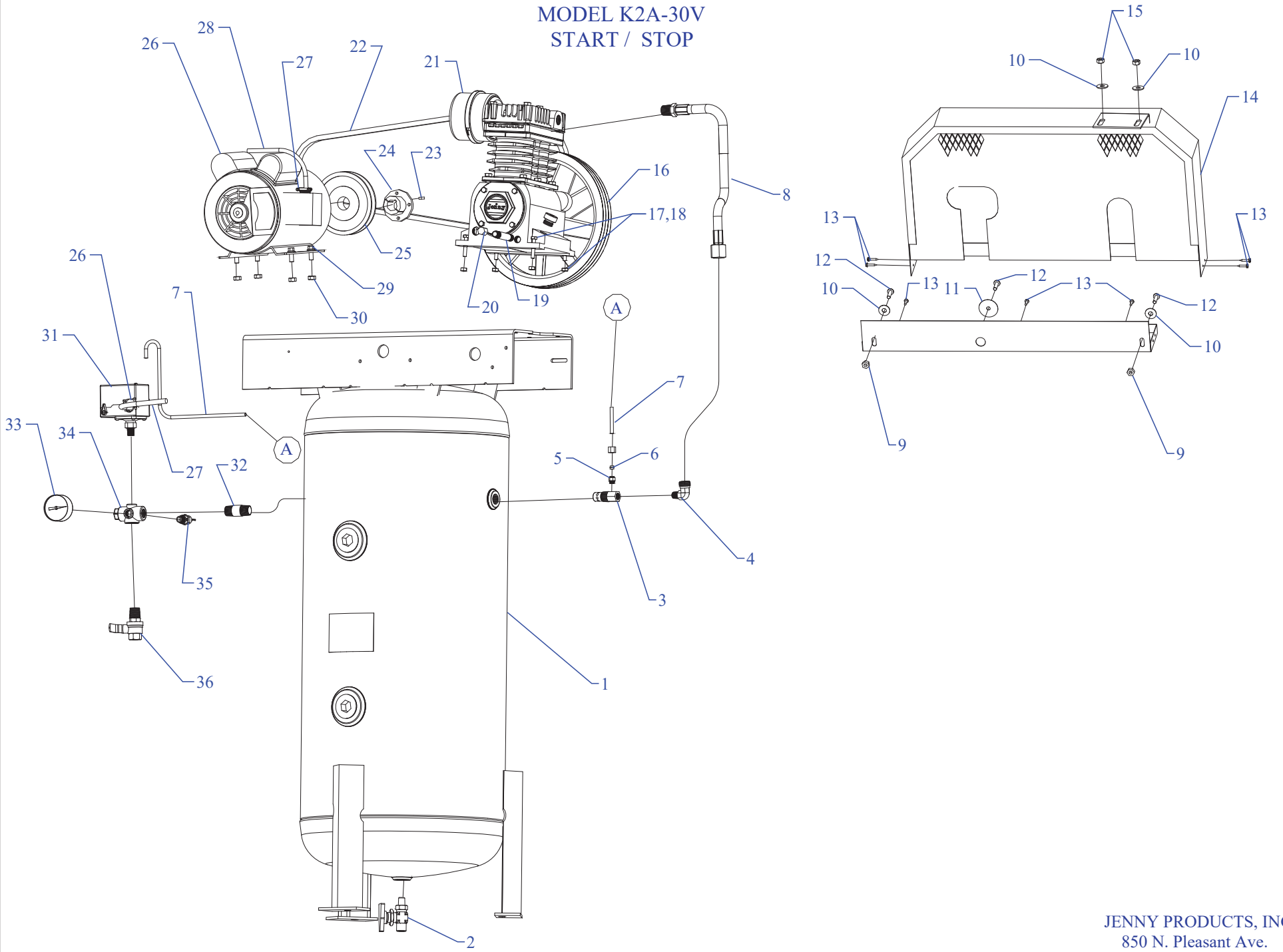

Copyright 2007

JENNY PRODUCTS, INC.
850 N. Pleasant Ave.
Somerset, Pennsylvania 15501

Jenny AIR COMPRESSOR

For replacement parts, please contact PHOENIX Process Equipment at **502-499-6198, x117**. For after hours emergencies, call **502-548-7763**.

Parts List for Model K2A-30 Vertical Single & Three Phase

NOTE: The quantity number indicates the total number of pieces required for a complete unit repair.
When ordering parts give compressor model, serial number and part number. Order assemblies when possible.

REF. NO.	PART NO.	DESCRIPTION	QTY.
1	411-1061	TANK,VERTCL,30G,UM,F&K&GE,V30UM-2	1
2	141-1077	VALVE,BALL,LEVER,1/4 TURN,1/4"M X 1/4"F	1
3	141-1036	VALVE,CHECK,INSERT,3/4"M X1/2"F,W/1/8"PT	1
4	121-1015	ELBOW,MALE,BRASS,5/8-45SAEX1/2"NPTM	1
5	121-1008	CONNECTOR,MALE,BRASS,5/8-45SAEX1/2"NPTM	1
6	121-1080	SLEEVE,COMPRESSION,BRASS,1/4"	1
7	610-1090	TUBE,CONTROL,COPPER,W/SLEEVE,1/4"X39"LG	1
8	360-1176	AFTERCOOLER,HOSE,SS,TEFLON,5/8"ODX28"L	1
9	120-1116	NUT,LOCK,FLANGE,HEX,SERR,ST,PLTD,1/4-20	2
10	120-1070	WASHER,FLAT,STEEL,PLATED,SAE,1/4"	4
11	120-1072	WASHER,FENDER,ST,PLATED,1/4"X1-1/2"OD	1
12	120-1267	SCREW,PAN HD,PHIL,STEEL,PLTD,1/4-20 X 1"	3
13	120-1177	SCREW,SELF DRILL,HEX,ST,PL,12 X 3/4	7
14	320-1177	BELTGUARD,F&K,W/PAN,3.4WX13.0HX23LG	1
15	120-1119	NUT,LOCK,FLANGE,HEX,SERR,ST,PLTD,5/16-18	2
16	421-1101	PUMP,CMPRSR,PISTON,REPLCMT,BLUE,K	1
17	120-1116	NUT,LOCK,FLANGE,HEX,SERR,ST,PLTD,1/4-20	4
18	120-1014	SCREW,CAP,HEXHD,GR5,ST,PLTD,1/4-20X2	4
19	122-1034	NIPPLE,STEEL,SCH 40,1/4" X 5" L	1
20	122-1126	CAP,HEX,MI,PLATED,1/4"NPT	1
21	320-1121	FILTER,W/DECALS,ASSY,G154S	1
22	154-4L490	BELT,VEE,A43,4L-490	1
23	120-1108	KEY,STEEL,BLACK,3/16X3/16X 1-1/2" LENGTH	1
24	154-1091	BUSHING,PULLEY,TAPERED,H,7/8	1

Copyright 2006 Jenny Products, Inc.

Jenny AIR COMPRESSOR

For replacement parts, please contact PHOENIX Process Equipment at **502-499-6198, x117**. For after hours emergencies, call **502-548-7763**.

Parts List for Model K2A-30 Vertical Single & Three Phase

NOTE: The quantity number indicates the total number of pieces required for a complete unit repair.
When ordering parts give compressor model, serial number and part number. Order assemblies when possible.

REF. NO.	PART NO.	DESCRIPTION		QTY.
25	154-1205	PULLEY,CI,SG,TH,6.7PDA,AK71H		1
26	~~130-1018~~	~~MOTOR,2HP,115-230/60/1,1740RPM,ODP~~		~~1~~
26*	~~130-1019~~	~~MOTOR,2HP,200/60/1,1725RPM,ODP~~		~~1~~
26**	~~130-1020~~	~~MOTOR,2HP,200-208/60/3,1725RPM,ODP~~		~~1~~
26***	~~130-1021~~	~~MOTOR,2HP,230-460/50-60/3,1725RPM,ODP~~		~~1~~
27	123-1029	CONNECTOR,ROMEX,CLAMP,STRAIGHT,3/8"		2
28	123-1003	WIRE,ASSY,BX,14/2,WITH GROUND		2FT
29	120-1018	SCREW,FLANGE,HEX,SERR,ST,PLD,5/16-18X3/4		4
30	120-1119	NUT,LOCK,FLANGE,HEX,SERR,ST,PLTD,5/16-18		4
31	140-1074-01	SWITCH,PSI,2HP,100-125#,UNLDR&LVR,PBVL		1
32	122-1088	NIPPLE,STEEL,SCH 80,PLATED,1/2" X 2"		1
33	142-1000	GAUGE,PSI,200#,BK MT,JENNY,2",1/4NPT,PG2		1
34	220-1059	BLOCK,MANIFOLD,AL,5 PORT,SPRINKLER,MC-5S		1
35	141-1014	VALVE,SAFETY,ASME,1/4",165 PSI,SVU165		1
36	141-1078	VALVE,BALL,OUTLET,1/4 TURN,1/2"M X 1/2"F		1
NOT SHOWN	610-1225	KIT,ELEMENT,FILTER,G54E,PKG OF 4,G54EP		1
NOT SHOWN	105-1209	OIL,PUMP,SYNTHETIC,BLUE,1 QUART,ESQ		1
NOT SHOWN	330-1022	MAG STR,25A,3P,200/208/230V,MGSA-3-230		1
OPTIONAL	140-1028-E51	OVERLOAD,HEATER,STARTER,MAGNETIC,E51	200V	3
	140-1028-E49	OVERLOAD,HEATER,STARTER,MAGNETIC,E49	230V	3
NOT SHOWN	330-1023	MAG STRT,25A 3P 460V,SVC RPLM,MGSA-3-460		1
OPTIONAL	140-1028-E38	OVERLOAD,HEATER,STARTER,MAGNETIC,E38		3
NOT SHOWN	330-1021-01	MAG STR 25A 1P115/208/230 REP MGSA-1-230		1
OPTIONAL	140-1028-E60	OVERLOAD,HEATER,STARTER,MAGNETIC,E60	120V	1
	140-1028-E51	OVERLOAD,HEATER,STARTER,MAGNETIC,E51	230V	~~1~~

Note: Compressor has been retrofit by PHOENIX with a 575V motor for Canadian application. See separate motor documentation for specs & info.

Copyright 2006 Jenny Products, Inc.

MAGNETIC STARTER WIRING DIAGRAM
1 Phase; 208 & 230 Volt

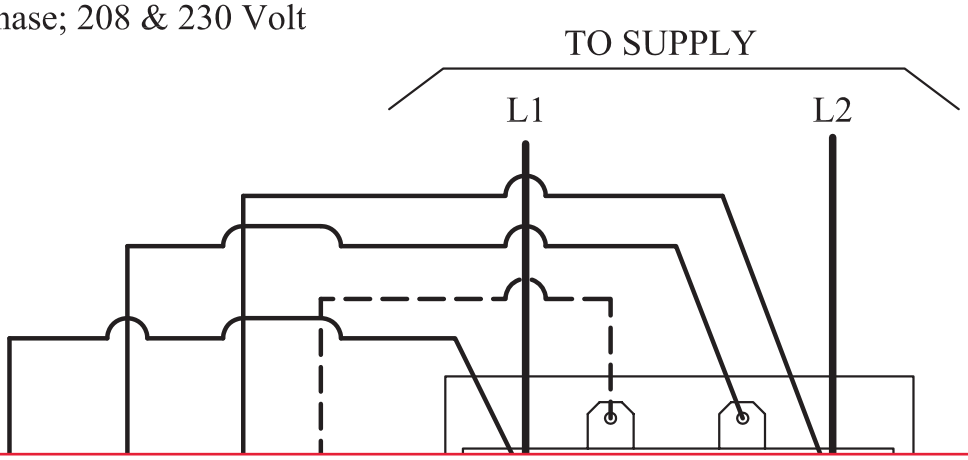

Note: Compressor has been retrofit by PHOENIX with a 575V motor for Canadian application. See separate motor documentation for specs & info.

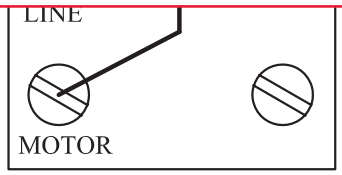

PRESSURE SWITCH

JENNY PRODUCTS INC.
850 N. Pleasant Ave.
Somerset, Pennsylvania 15501

Copyright 2007

MAGNETIC STARTER WIRING DIAGRAM
3 Phase; 208, 230, & 460 VOLT

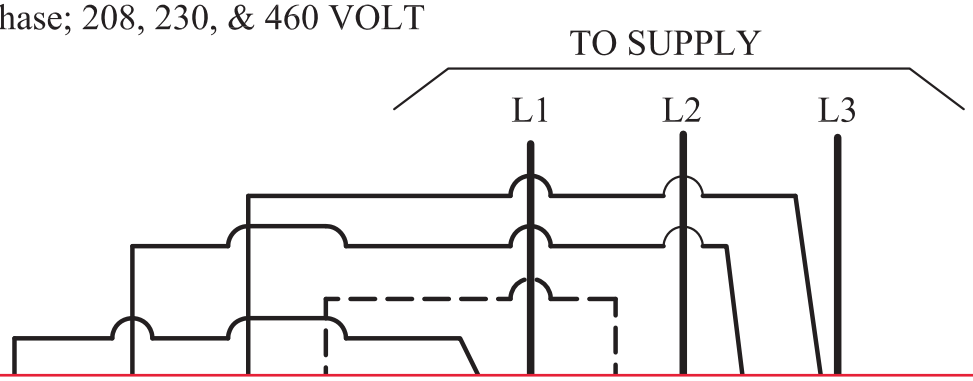

Note: Compressor has been retrofit by PHOENIX with a 575V motor for Canadian application. See separate motor documentation for specs & info.

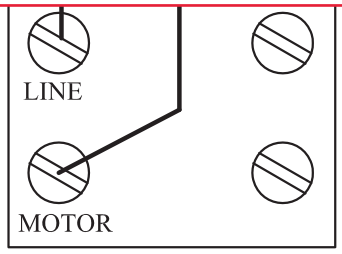

PRESSURE SWITCH

JENNY PRODUCTS INC.
850 N. Pleasant Ave.
Somerset, Pennsylvania 15501

Copyright 2007

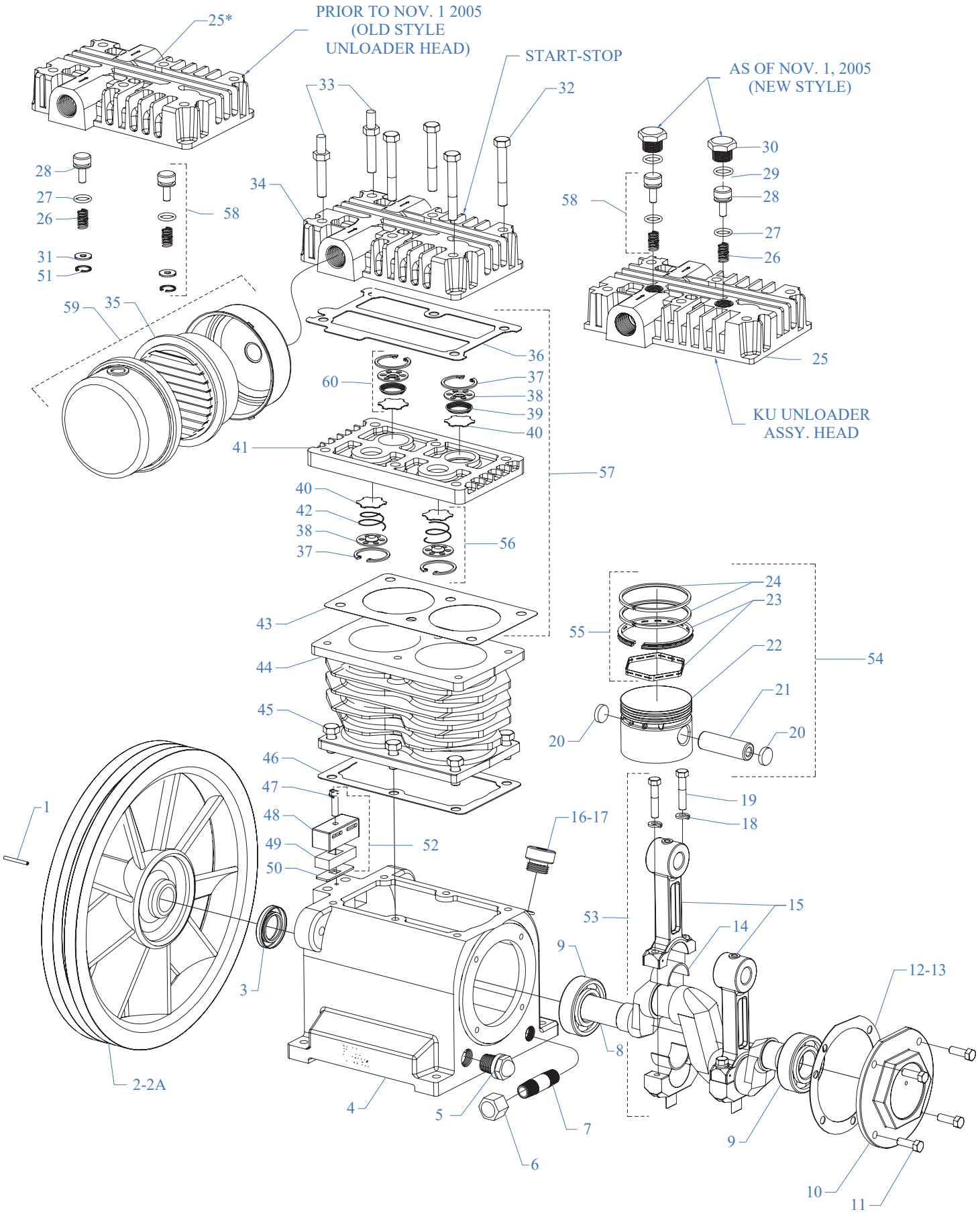

MODEL K & KU
Two Cylinder Single Stage
2-1/2" Bore X 2" Stroke

JENNY PRODUCTS, INC.
850 N. Pleasant Ave.
Somerset, Pennsylvania 15501

Copyright 2007

Jenny AIR COMPRESSOR

For replacement parts, please contact PHOENIX Process Equipment at **502-499-6198, x117**. For after hours emergencies, call **502-548-7763**.

Parts List for Model K & KU Pump Assembly

NOTE: The quantity number indicates the total number of pieces required for a complete unit repair.
When ordering parts give compressor model, serial number and part number. Order assemblies when possible.

REF. NO.	PART NO.	DESCRIPTION	QTY.
1	120-1163	PIN,ROLLED,COILED,STL,BLK,1/4ODX1L,K25	1
2	220-1093	FLYWHEEL,K PUMP,CI,10-3/8,1 GROOVE,K23A	1
2A	220-1090	FLYWHEEL,GT PUMP,CI,13-1/4,2 GROOVE,G23 (KC Pump)	1
3	150-1036	SEAL,OIL,LIP,SINGLE,0.875 DIA,K11E	1
4	220-1009	CRANKCASE,K PUMP,CI,W/SIGHT GLASS,K1	1
5	160-1076	GAUGE,SIGHT,LEVEL,OIL,3/8"NPT,LO-M49	1
6	122-1083	CAP,HEX,MI,1/4"NPT	1
7	122-1032	NIPPLE,STEEL,SCH 40,1/4" X 3" L	1
8	220-1010	CRANKSHAFT,K PUMP,CI,MACHINED,K20A	1
9	150-1000	BEARING,BALL,K9	2
10	220-1001	CAP,BEARING,K PUMP,CI,MACHINED,K2	1
11	120-1004	SCREW,CAP,HEXHD,GR5,ST,BLK,1/4-20X3/4 (10FT-LB)	4
12	104-1000-01	GASKET,CAP,BEARING,F&K&G PUMP,1/32THK,L3	1
13	104-1000-02	GASKET,CAP,BEARING,F&K&G PUMP,1/64THK,L4	1
14	150-1011	BEARING,ROD,CONNECTING,PUMP,F,K,G	4
15	310-1001-02	ROD,CONNECTING,WO/BRNG INSERT,L21L&L21K	2
16	610-1029	PLUG,CRANKCASE,FILL,OIL,W/O-RING,K14	1
17	104-1016	RING,O,BUNA-N,5/8"IDX13/16"ODX3/32"THK	1
18	120-1068	WASHER,LOCK,SPLIT,ST,BLK,HIGH CLLR,1/4"	4
19	120-1010	SCREW,CAP,HEXHD,GR5,ST,BLK,1/4-20X1-1/4 10 FT-LB	4
20	104-1103	BUMPER,WRIST PIN,PLASTIC,K36A	4
21	150-1005	PIN,PISTON,STEEL,HARDENED,K35	2
22	220-1005	PISTON,PUMP,ALUMINUM,MACHINED,K32	2

Copyright 2007 Jenny Products, Inc.

Jenny AIR COMPRESSOR

For replacement parts, please contact PHOENIX Process Equipment at **502-499-6198, x117**. For after hours emergencies, call **502-548-7763**.

Parts List for Model K & KU Pump Assembly

NOTE: The quantity number indicates the total number of pieces required for a complete unit repair.
When ordering parts give compressor model, serial number and part number. Order assemblies when possible.

REF. NO.	PART NO.	DESCRIPTION	QTY.
23	610-1065	KIT,RING,OIL,W/EXPANDER,ASSY,K34	2
24	150-1003	RING,COMPRESSION,PISTON,STEEL,EBA 22,K33	4
25	220-1016	HEAD,UNLOADING,G PUMP,CI,6HOLES,LU80	1
26	150-1020	SPRING,VALVE,UNLOADER,INTAKE, KU83	2
27	104-1020	RING,O,SILICON,7/16"IDX5/8"ODX3/32"THK	2
28	150-1028	PISTON,UNLOADER,VALVE,BRASS,KU81	2
29	104-1015	RING,O,BUNA-N,1/2"IDX11/16"ODX3/32"THK	2
30	122-1051	PLUG,HEX ,BRASS,11/16-16 UN-2B X .550	2
31	150-1042	WASHER,BRASS,1/32X 0.605ODX1/4 ID,KU84	2
32	120-1028	SCREW,CAP,HEXHD,GR5,ST,BLK,5/16-18X2-1/4 (22 FT-LB)	4
33	120-1252	BOLT,STUD,HEX,ST,5/16-18X2-1/4X5/8,K52-1 (22 FT-LB)	2
34	310-1004	HEAD,START/STOP,G PUMP,REPLACEMNT,L50	1
35	150-1104	ELEMENT,FILTER,AIR,COMPRESSOR,JENNY,G54E	1
36	104-1008	GASKET,HEAD,K&G&W PUMP,1/32THK,L51	1
37	150-1041	RETAINER,VALVE,STEEL,PAS,0.062"THK,K43	4
38	109-1010	VALVE,BUMPER,STEEL,K44	4
39	150-1018	SPRING,CONE,SS,VALVE,DISCHARGE,K46	2
40	109-1011	VALVE,DISC,STAINLESS STEEL,K47	4
41	220-1013	PLATE,VALVE,L PUMP,CI,MACHINED,L40	1
42	150-1017	SPRING,CONE,SS,VALVE,INTAKE,K45	2
43	104-1007	GASKET,PLATE,VALVE,K&G&W PUMP,1/32TK,L41	1
44	360-1150	CYLINDER,K PUMP,CI,PAINTED,BLUE,K30	1
45	120-1017	SCREW,CAP,HEXHD,GR5,ST,BLK,5/16-18X3/4 (15FT-LB)	6

Copyright 2007 Jenny Products, Inc.

Jenny AIR COMPRESSOR

For replacement parts, please contact PHOENIX Process Equipment at **502-499-6198, x117**. For after hours emergencies, call **502-548-7763**.

Parts List for Model K & KU Pump Assembly

NOTE: The quantity number indicates the total number of pieces required for a complete unit repair.
When ordering parts give compressor model, serial number and part number. Order assemblies when possible.

REF. NO.	PART NO.	DESCRIPTION	QTY.
46	104-1006	GASKET,CYLINDER,K&G&W PUMP,1/32THK,K31	1
47	132776	SCREW,MACH,RND HD,SLTD,ST,PL,#8-32X1"	1
48	104-1264	RETAINER,BREATHER,CRANKCASE,PLASTIC,BLUE	1
49	104-1265	FILTER,AIR,BREATHER,CRANKCASE,INSERT	1
50	104-1266	SEAL,BREATHER,CRANKCASE,FILTERED,RUBBER	1
51	120-1167	RETAINER,INTERNAL,ST,0.035X 0.665,KU85	2
		Assemblies	
52	610-1410	BREATHER,CRANKCASE,W/HOUSING&FILTER&SEAL Includes 47, 48, 49, 50	1
53	610-1411	ROD,CONNECTING,W/BEARNG INSERT,L21L&L21K INCLUDES 14(2), 15, 18(2), 19(2)	2
54	610-1028	PISTON,W/RINGS&PIN,ASSY,K132 INCLUDES 20 (2), 21, 22, 23, 24 (2)	2
55	610-1020	KIT,PUMP,RING,PISTON,F&K&G&W PUMP,K133 INCLUDES 23 (2), 24 (4)	1
56	610-1031	VALVE,SUCTION,ASSY,K145 INCLUDES 37, 38, 40, 42	2
57	610-1045	PLATE,VALVE,W/VALVES,ASSY,L140 INCLUDES 36, 41, 43, 56(2), 60(2)	1
58	610-1042	VALVE,UNLOADER,HEAD,PUMP,ASSY,KU181 INCLUDES 26, 27, 28, 31, 51	2
59	320-1121	FILTER,W/DECALS,ASSY,G154S	1
60	610-1032	VALVE,DISCHARGE,ASSY,K146 INCLUDES 37, 38, 39, 40	2
61	610-1026	KIT,GASKET,K PUMP,ASSY,K100A INCLUDES 12,13,36,43,46	1
NOT SHOWN	610-1123	KIT,BASIC,REPAIR,KU PUMP,K101 W/G54E INCLUDES 35, 52, 55, 56(2), 60(2), 61	1
NOT SHOWN	610-1304	KIT,BASIC,REPAIR,KU PUMP,W/G54E,KU101G	1

Copyright 2007 Jenny Products, Inc.

Jenny AIR COMPRESSOR

For replacement parts, please contact PHOENIX Process Equipment at **502-499-6198, x117**. For after hours emergencies, call **502-548-7763**.

Parts List for Model K & KU Pump Assembly

NOTE: The quantity number indicates the total number of pieces required for a complete unit repair.
When ordering parts give compressor model, serial number and part number. Order assemblies when possible.

REF. NO.	PART NO.	DESCRIPTION	QTY.
		INCLUDES 35, 52, 55(2), 56(2), 58(2), 60(2), 61 W/G54E	
NOT SHOWN	105-1209	OIL,PUMP,SYNTHETIC,BLUE,1 QUART,ESQ	1
NOT SHOWN	610-1226	KIT,FILTER,ASSY,G154,PKG OF 4,G154P	1
NOT SHOWN	610-1186	KIT,ELEMENT,FILTER,L54E,PKG OF 4,L54EP	1
NOT SHOWN	150-1010	ELEMENT,FILTER,AIR,COMPRESSOR,JENNY,L54E	1

Copyright 2007 Jenny Products, Inc.

BALDOR • RELIANCE

Product Information Packet

INDUSTRIAL BELTING

EM3558T-5

2HP,1755RPM,3PH,60HZ,145T,3528M,TEFC,F1

Copyright © All product information within this document is subject to ABB Motors and Mechanical Inc. copyright © protection, unless otherwise noted.

Part Detail

Revision:	K	**Status:**	PRD/A	**Change #:**		**Proprietary:**	No
Type:	AC	**Elec. Spec:**	35WGN956	**CD Diagram:**	CD0006	**Mfg Plant:**	
Mech. Spec:	35AA001	**Layout:**	35LYAA001	**Poles:**	04	**Created Date:**	06-21-2013
Base:	RG	**Eff. Date:**	03-13-2018	**Leads:**	3#18		

Specs

Catalog Number:	EM3558T-5	**Inverter Code:**	Inverter Ready
Enclosure:	TEFC	**KVA Code:**	L
Frame:	145T	**Lifting Lugs:**	No Lifting Lugs
Frame Material:	Steel	**Locked Bearing Indicator:**	No Locked Bearing
Output @ Frequency:	2.000 HP @ 60 HZ	**Motor Lead Quantity/Wire Size:**	3 @ 18 AWG
Synchronous Speed @ Frequency:	1800 RPM @ 60 HZ	**Motor Lead Exit:**	Ko Box
Voltage @ Frequency:	575.0 V @ 60 HZ	**Motor Lead Termination:**	Flying Leads
XP Class and Group:	None	**Motor Type:**	3528M
XP Division:	Not Applicable	**Mounting Arrangement:**	F1
Agency Approvals:	CSA	**Power Factor:**	75
	CSA EEV	**Product Family:**	General Purpose
	UR	**Pulley End Bearing Type:**	Ball
Auxillary Box:	No Auxillary Box	**Pulley Face Code:**	Standard
Auxillary Box Lead Termination:	None	**Pulley Shaft Indicator:**	Standard
Base Indicator:	Rigid	**Rodent Screen:**	None
Bearing Grease Type:	Polyrex EM (-20F +300F)	**Shaft Extension Location:**	Pulley End
Blower:	None	**Shaft Ground Indicator:**	No Shaft Grounding
Current @ Voltage:	2.300 A @ 575.0 V	**Shaft Rotation:**	Reversible

Design Code:	B	**Shaft Slinger Indicator:**	No Slinger
Drip Cover:	No Drip Cover	**Speed Code:**	Single Speed
Duty Rating:	CONT	**Motor Standards:**	NEMA
Electrically Isolated Bearing:	Not Electrically Isolated	**Starting Method:**	Direct on line
Feedback Device:	NO FEEDBACK	**Thermal Device - Bearing:**	None
Front Face Code:	Standard	**Thermal Device - Winding:**	None
Front Shaft Indicator:	None	**Vibration Sensor Indicator:**	No Vibration Sensor
Heater Indicator:	No Heater	**Winding Thermal 1:**	None
Insulation Class:	F	**Winding Thermal 2:**	None

Nameplate NP3441L

CAT.NO.	EM3558T-5							
SPEC.	35AA001N956G1							
HP	2							
VOLTS	575							
AMP	2.3							
RPM	1755							
FRAME	145T	**HZ**	60			**PH**	3	
SER.F.	1.15	**CODE**	L	**DES**	B	**CL**	F	
NEMA-NOM-EFF	86.5	**PF**	75					
RATING	40C AMB-CONT							
CC	010A			**USABLE AT 208V**				
DE	6205	**ODE**	6203					
ENCL	TEFC	**SN**						
VPWM INVERTER READY								
CT6-60H(10:1)VT3-60H(20:1								

Parts List

Part Number	Description	Quantity
SA265145	SA 35AA001N956G1	1.000 EA
RA251849	RA 35AA001N956G1	1.000 EA
34FN3002B01	EXTERNAL FAN, PLASTIC, .637/.639 HUB W/	1.000 EA
NS2512A01	INSULATOR, CONDUIT BOX X	1.000 EA
35CB3009	35 CB W/1.09 DIA. LEAD HOLE @ 6:	1.000 EA
36GS1000SP	GASKET-CONDUIT BOX, .06 THICK #SV-330 LE	1.000 EA
51XB1016A07	10-16 X 7/16 HXWSSLD SERTYB	2.000 EA
11XW1032G06	10-32 X .38, TAPTITE II, HEX WSHR SLTD U	1.000 EA
35EP3122A00	MASTER ODE,203 BRG,.683SH,#26 DRN,GRSR,F	1.000 EA
HW4500A01	1641B(ALEMITE)400 UNIV, GREASE FITT	1.000 EA
HW5100A03	WAVY WASHER (W1543-017)	1.000 EA
35EP3123F00	MASTER DE,205 BRG,.998SH,#26 DRN,GRSR	1.000 EA
HW4500A01	1641B(ALEMITE)400 UNIV, GREASE FITT	1.000 EA
XY1032A02	10-32 HEX NUT DIRECTIONAL SERRATION	4.000 EA
51XB1214A16	12-14X1.00 HXWSSLD SERTYB	1.000 EA
35FH4005A84SP	IEC FH W/GRSR, NO DIMPLES PRIMED	1.000 EA
51XW1032A06	10-32 X .38, TAPTITE II, HEX WSHR SLTD S	3.000 EA
35CB4521GX	CONDUIT BOX LID KIT **ORDER INDIV PARTS	1.000 EA
51XW0832A07	8-32 X .44, TAPTITE II, HEX WSHR SLTD SE	4.000 EA
HW2501D13	KEY, 3/16 SQ X 1.375	1.000 EA
HA7000A01	KEY RETAINER 7/8" DIA SHAFT	1.000 EA
85XU0407S04	4X1/4 U DRIVE PIN STAINLESS	2.000 EA
MJ1000A02	GREASE, POLYREX EM EXXON (USe 4824-15A)	0.050 LB
HA3100A18	THRUBOLT 10-32 X 9.250	4.000 EA

Parts List (continued)

Part Number	Description	Quantity
MG1000Y03	MUNSELL 2.53Y 6.70/ 4.60, GLOSS 20,	0.017 GA
LB1119N	WARNING LABEL	1.000 EA
LC0006	CONNECTION LABEL	1.000 EA
NP3441L	ALUM SUPER-E VPWM INVERTER READY UL	1.000 EA
36PA1000	PKG GRP, PRINT PK1016A06	1.000 EA
MN416A01	TAG-INSTAL-MAINT no wire (1200/bx) 3/19	1.000 EA
PE-0000001	ZRTG PE ASSEMBLY	1.000 EA
FE-0000001	ZRTG FE ASSEMBLY	1.000 EA

Accessories		
Part Number	**Description**	**Multiplier**
35-8762	C FACE KIT	A8
35EP1506A01SP	D-FLANGE KIT	A8

AC Induction Motor Performance Data

Record # 42575 - Typical performance - not guaranteed values

Winding: 35WGN956-R001	**Type:** 3528M	**Enclosure:** TEFC

Nameplate Data				575 V, 60 Hz: Single Voltage Motor	
Rated Output (HP)	2			Full Load Torque	5.98 LB-FT
Volts	575			Start Configuration	direct on line
Full Load Amps	2.3			Breakdown Torque	26 LB-FT
R.P.M.	1755			Pull-up Torque	16.6 LB-FT
Hz	60	Phase	3	Locked-rotor Torque	18 LB-FT
NEMA Design Code	B	KVA Code	L	Starting Current	19.6 A
Service Factor (S.F.)	1.15			No-load Current	1.48 A
NEMA Nom. Eff.	86.5	Power Factor	75	Line-line Res. @ 25ºC	11.9 Ω
Rating - Duty	40C AMB-CONT			Temp. Rise @ Rated Load	62°C
S.F. Amps				Temp. Rise @ S.F. Load	74°C
				Locked-rotor Power Factor	50
				Rotor inertia	0.165 LB-FT2

Load Characteristics 575 V, 60 Hz, 2 HP

% of Rated Load	25	50	75	100	125	150	S.F.
Power Factor	32	52	65	74	79	82	77
Efficiency	76	84.4	86.9	87	86.6	85.3	86.8
Speed	1790	1780	1769	1757	1744	1729	1749
Line amperes	1.54	1.71	1.99	2.34	2.73	3.2	2.57

Performance Graph at 575V, 60Hz, 2.0HP Typical performance - Not guaranteed values

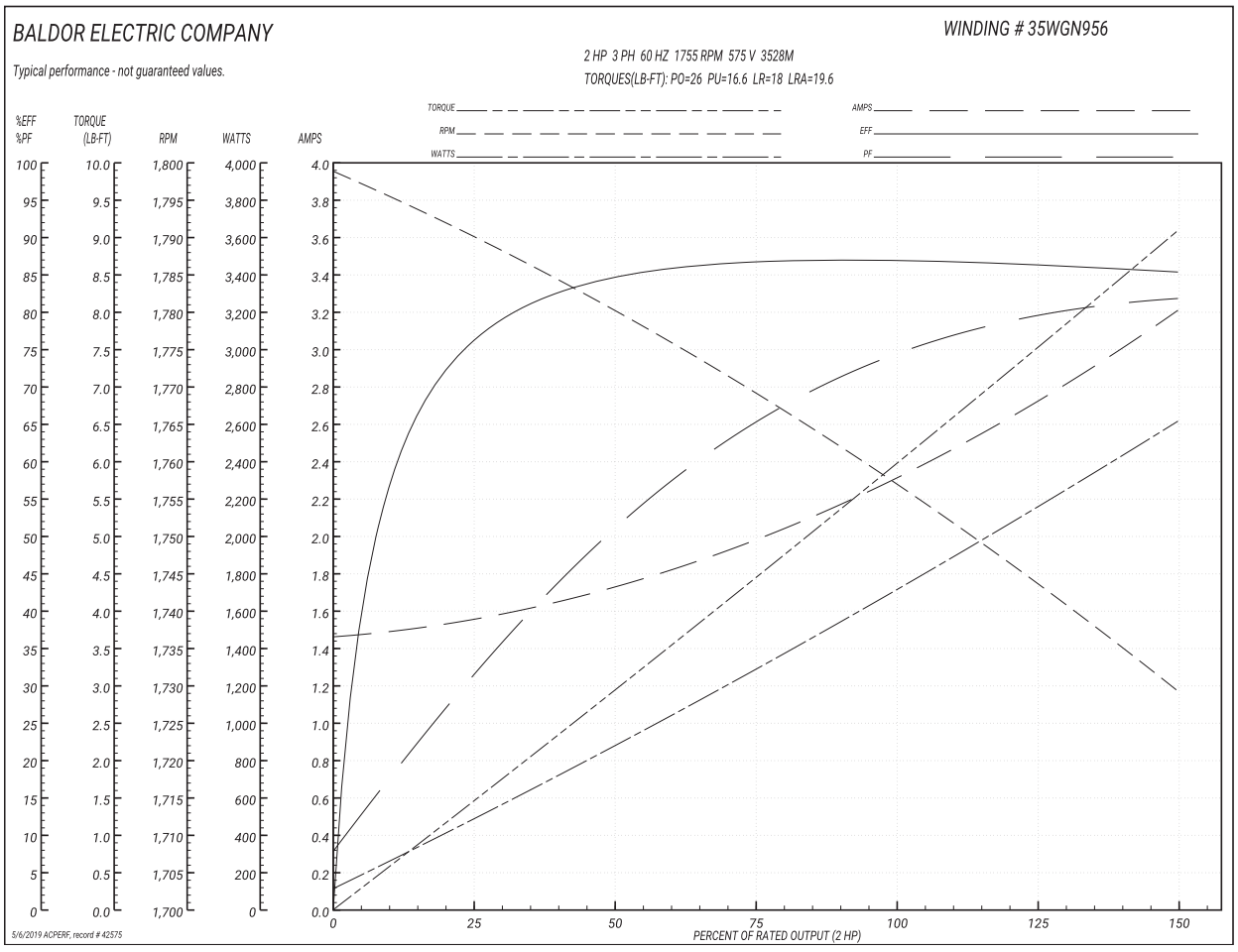

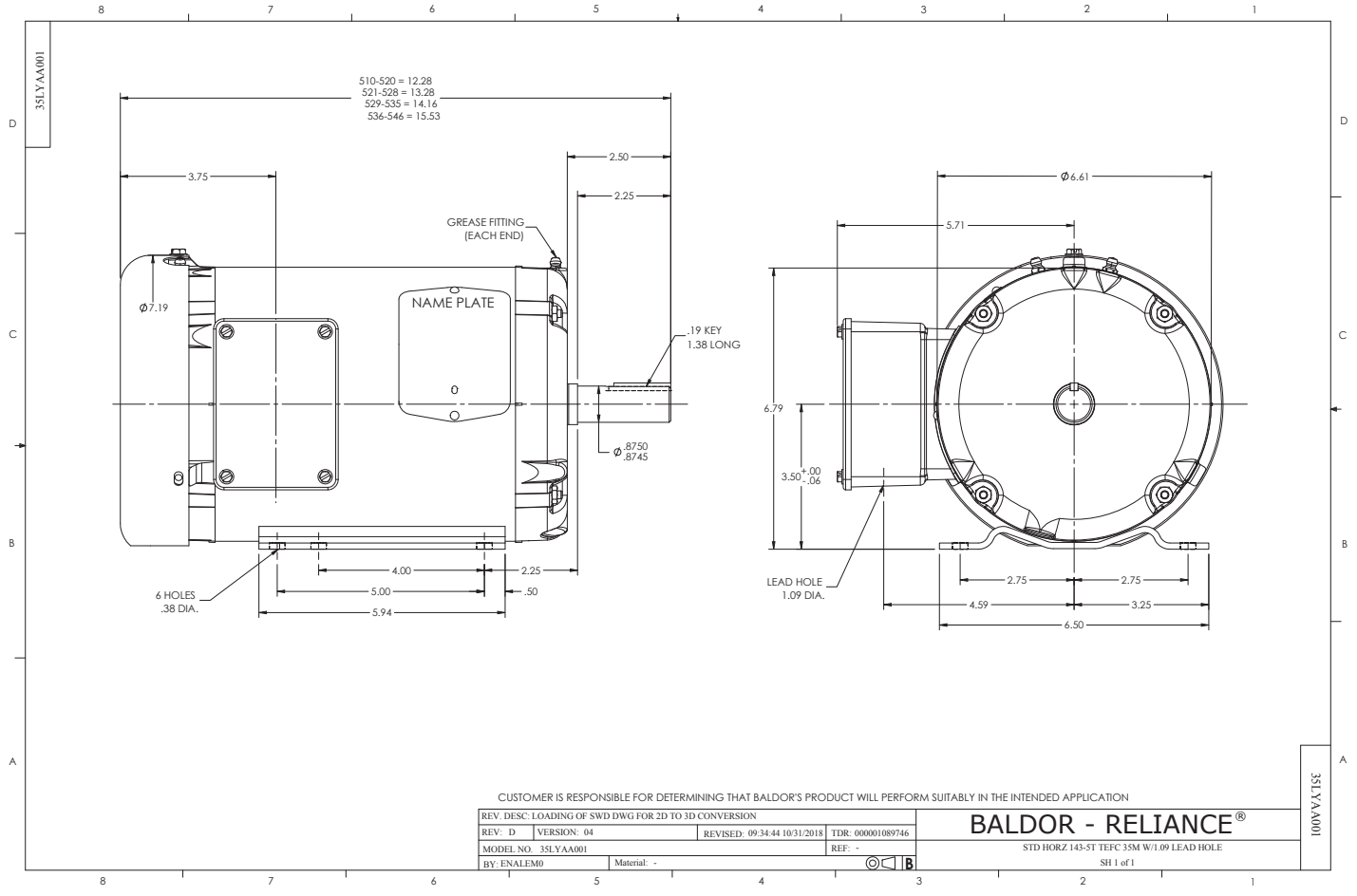
35LYAA001
510-520 = 12.28
521-528 = 13.28
529-535 = 14.16
536-546 = 15.53
3.75
2.50
2.25
GREASE FITTING
(EACH END)
NAME PLATE
Ø7.19
.19 KEY
1.38 LONG
Ø .8750
.8745
4.00
2.25
5.00
.50
5.94
6 HOLES
.38 DIA.
Ø6.61
5.71
6.79
3.50 +.00 -.06
LEAD HOLE
1.09 DIA.
2.75
2.75
4.59
3.25
6.50
CUSTOMER IS RESPONSIBLE FOR DETERMINING THAT BALDOR'S PRODUCT WILL PERFORM SUITABLY IN THE INTENDED APPLICATION
REV. DESC: LOADING OF SWD DWG FOR 2D TO 3D CONVERSION
REV: D
VERSION: 04
REVISED: 09:34:44 10/31/2018
TDR: 000001089746
MODEL NO. 3SLYAA001
REF: -
BY: ENALEM0
Material: -
B
BALDOR - RELIANCE®
STD HORZ 143-5T TEFC 35M W/1.09 LEAD HOLE
SH 1 of 1
35LYAA001

CD0006

TYPICAL WYE–CONNECTED MOTOR

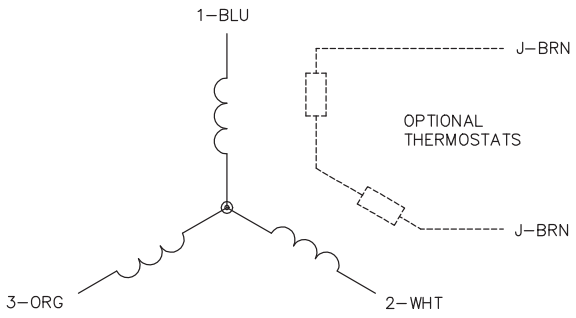

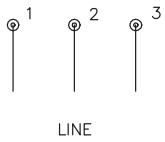

TYPICAL DELTA–CONNECTED MOTOR

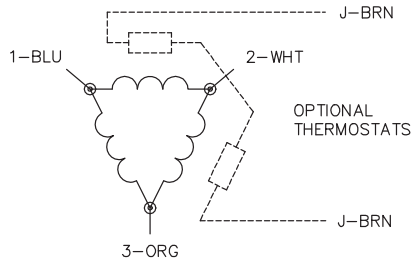

NOTES:

1. THREE LEAD MOTOR MAY BE EITHER WYE CONNECTED OR DELTA CONNECTED.
2. INTERCHANGE ANY TWO LINE LEADS TO REVERSE ROTATION.
3. OPTIONAL THERMOSTATS ARE PROVIDED WHEN SPECIFIED.
4. ACTUAL NUMBER OF INTERNAL PARALLEL CIRCUITS MAY VARY.
5. LEAD COLORS ARE OPTIONAL. LEADS MUST BE NUMBERED AS SHOWN.

CD0006

REV. DESC: ADD CLASS CONN00000007		
REV. LTR: E	VERSION: 01	TDR: 000001099922
FILE: \AAA\00005\141	REVISED: 10:24:49 02/19/2019	BY: ENBRIR0
MTL: –		

BALDOR - RELIANCE®

3PH, SV, 3 LEADS, WYE OR DELTA CONNECTED

SH 1 of 1

TAB 10



PHOENIX

PHOENIX Process Equipment Company
2402 Watterson Trail
Louisville, KY 40299
(502) 499-6198
(502) 499-1079 Fax

SECTION 4 COMPONENTS

BELT WASH SHOWER SYSTEM

Manufacturer:	Appleton Manufacturing
Type:	Appleton #134745 Brush Type: Self Cleaning
Construction:	304 Series Stainless Steel
Nozzle Size:	0.098”
Pressure:	100 - 105 psig
Capacity:	23.4 GPM Per Bar (approx. 46.8 gpm total)

NOTE: *SPRAY BARS ARE DESIGNED TO ACCEPT BELT WASH WATER CONTAINING LESS THAN 200 ppm SUSPENDED SOLIDS WITH NO PARTICLES LARGER THAN 20 MESH. USE A 20 MESH FILTER IN THE SUPPLY LINE IF LARGER PARTICLES ARE EXPECTED.*

NOTE:

1. LUBRICATE VALVE SHAFT THREAD (ITEM 3) WITH AN ANTI-SEIZE COMPOUND
2. AFTER ATTACHING VALVE SHAFT (ITEM 3) TO BRUSH (ITEM 5), STAKE (2 PLACES) END OF CAP SCREW (ITEM 20) TO NUT (ITEM 24)
3. DISCHARGE HOSE ADAPTER MUST BE LOCATED VERTICALLY DOWNWARD TO DRAIN VALVE

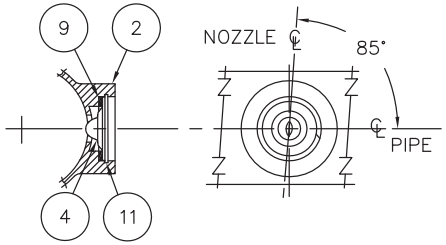

NOZZLE DETAIL
0.098 ORIFICE

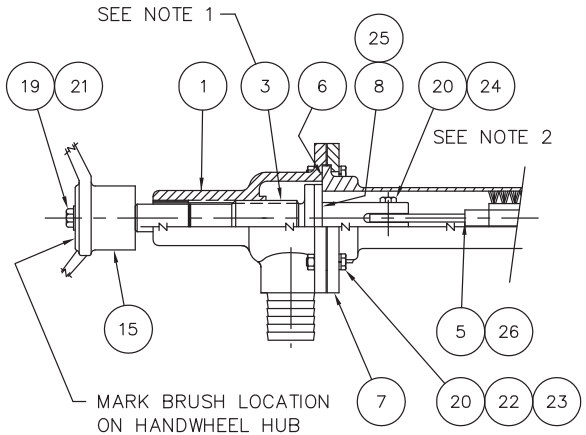

DISCHARGE VALVE DETAIL

	ITEM	PART/DWG	LOC	DESCRIPTION	QTY
	1	119407	C	BODY,VALVE,316,1-1/2 & 2 ADJ SHR	1
C	2	144125	B	WELDT,PIPE,304L,1-1/2,60.56 PL,ADJ SA,12 NOZ	1
	3	104754	B	SHAFT,VALVE,316,1-1/2 SHR	1
	4	100945	B	NOZ,FAN,SM,.098	12
C	5 *	144126	B	ASSY,BRUSH,304,1-1/2,48.00 BL,56.75 OL	1
	6	119745	A	GASKET,PIPE,1-1/2 & 2 ADJ SHR	12
	7	119403	B	RING,LOCK,316,1-1/2 OR 2 SHR	1
	8	102397	A	GASKET,VALVE,1-1/2 & 2 SHR	1
	9	104756	A	GASKET,NOZ,NEOP,1-1/2 GROOVED SADDLE	12
	10				
	11	105229		RING,RETAINING,316,INT,1-1/16	12
	12				
	13				
A	14				
	15	105034		HANDWHEEL,8,5/8 B,1/4 x 1/8 KW	1
	16				
	17				
A	18				
	19	105253		SCR,HEX HD CAP,316,5/16-18 x 3/4	1
	20	104481		SCR,HEX HD MACH,316,1/4-20 x 1-1/4	5
	21	105180		WASHER,FLAT,316,5/16	1
	22	111050		WASHER,LOCK,316,1/4	4
	23	107655		NUT,HEX,316,1/4	4
	24	104484		NUT,HEX JAM,316,1/4-20	1
	25 *	119843	B	KIT,VALVE REPAIR,1-1/2 & 2 ADJ SHR	AS REQD
	26**	119840	B	KIT,BRUSH REPLACE,1-1/2 & 2 ADJ SHR	AS REQD
	27	119844	B	INSTRUCTION,SHR SET UP,1-1/2 & 2 ADJ SHR	AS REQD

* DENOTES RECOMMENDED SPARE / REPLACEMENT PARTS
** ORDER THIS KIT WHEN ORDERING REPLACEMENT BRUSH (ITEM 5)
INCLUDE SHOWER DWG NO. 134745 WHEN ORDERING KITS

USE TORQUE WRENCH TO ROTATE BRUSH, TORQUE NOT TO EXCEED 150#

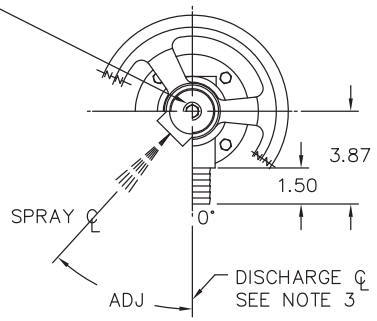

SET SPRAY ANGLE PER INSTRUCTIONS (ITEM 27)

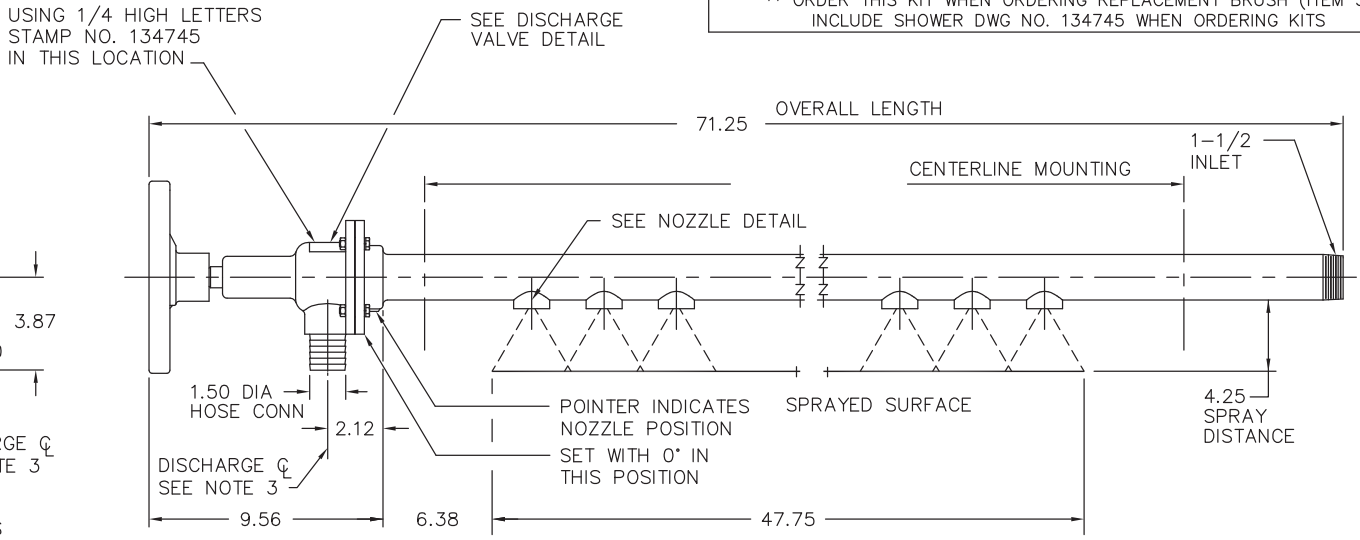

APPLICATION:	BELT PRESS LC-1200L
POSITION:	
OPERATING PRESSURE:	100 P.S.I.
OPERATING FLOW RATE:	23.4 G.P.M.

REV.	CHANGE	DATE	BY	CHK
C	IT2 WAS 134754, IT5 WAS 134755, WAS 316	04/28/09	MR	NB
B	REVISED OPERATING FLOW RATE	09/26/05	TF	NB
A	REMOVED ITEMS 14 (BUSHING) & 18 (O-RING)	06/20/03	KB	NB

SHOWER,304,1-1/2,47.75SW,ADJ SA,12,0.098 NZ
CUSTOMER PHOENIX PROCESS EQUIPMENT

Appleton MFG. DIV.
PRODUCTIVE SOLUTIONS, INC.

DATE	DWN	CHK	PART NO.	PLOT SCALE	DWG NO.
04/04/02	KB	NB	134745	N.T.S.	134-745 B

ADJUSTABLE ANGLE SHOWER INSTRUCTIONS FOR 1-1/2” AND 2”

The Appleton Adjustable Angle Shower provides variable spray angle and brush position. This manual includes the information necessary to service the 1-1/2" and 2" showers.



Appleton adjustable angle shower



Disconnect the water source to the shower before disassembly. High pressure water can cause personal injury.

The following procedure will ensure that the shower is safe to disassemble:

1- Turn off and lock out the pump that supplies the shower.

2- Turn off and lock out the oscillator (if present).

3- Open the shower valve to discharge any water that may be present in the shower.

SECTION 1: SETTING SPRAY ANGLE

1- The shower is assembled with the spray angle and discharge hose adapter set at 0 degrees.

2- The spray angle can be changed by loosening four 1/4" screws (B), permitting pipe rotation. The lock ring (A) is marked in degrees to aid in determining the shower angle. The hose connection on the valve body should be oriented vertically downward to drain the valve.

3- When the proper angle is reached, tighten the four screws (B) to lock the valve assembly in the new position. See the drawing below for the tightening pattern.



Do not apply a torsion force in excess of 78 in-lbs to the four screws (D). Excessive force will break the screws.

4- Check the location of the brush to ensure that it is not blocking the spray nozzles. If the nozzles are blocked adjust the brush position using the procedure outlined in section 2.

Bolt tightening sequence

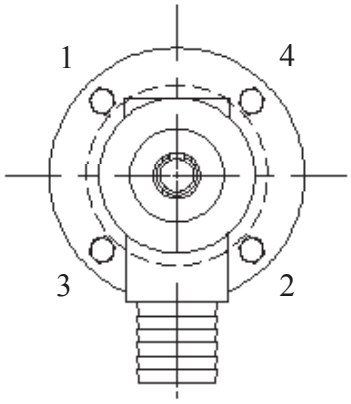

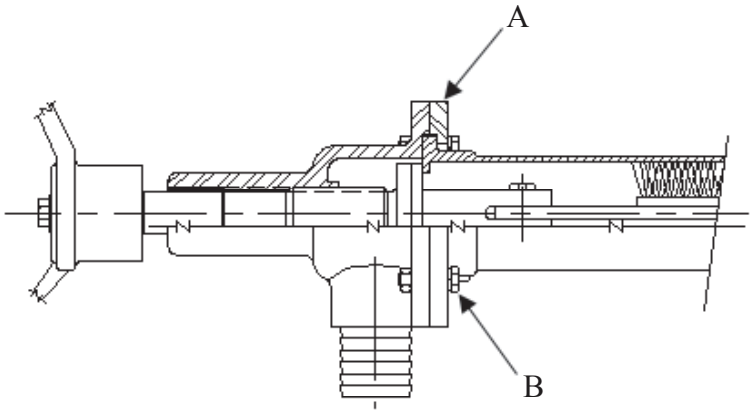

SECTION 2: SETTING BRUSH LOCATION

1- Close the valve completely.

2- Check the brush location to make sure that the brush does not interfere with nozzle discharge.

Bolt tightening sequence

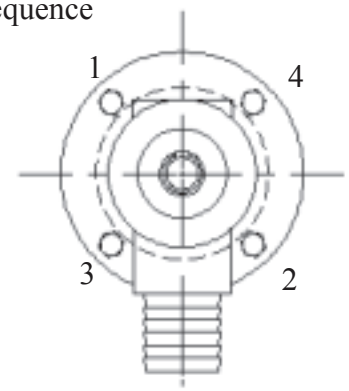

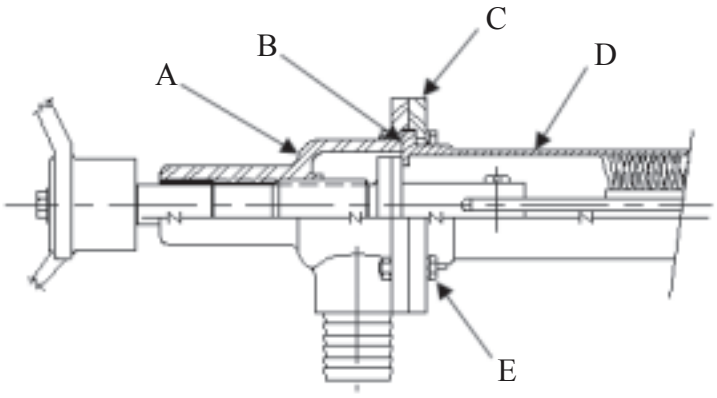



Disconnect the water source to the shower before disassembly. High pressure water can cause personal injury.

3- If the brush blocks the nozzles, loosen the four screws (E) and pull the valve body (A) away from the pipe (D) providing access to the valve gaskets (B).

4- Remove a gasket (B) by tearing it in half and pulling it out of the gap, or add a gasket. Each gasket will rotate the brush about 45 degrees.

5- Re-assemble the valve by aligning the pipe pointer with the desired angle mark on the lock ring (C) and tightening the four screws (E). Tighten the screws as shown on bolt sequence above.



Do not apply a torsion force in excess of 78 in-lbs to the four screws (D). Excessive force will break the screws.

SECTION 3: INSTALLING NEW VALVE GASKET

Disconnect the water source to the shower before disassembly. High pressure water can cause personal injury.

3.1. Service Parts Required

Valve repair kit 119843 includes:

Item	Part No.	Descriptio	Req'd
1	119745	Gasket, Pipe, Fibre, 1-1/2 & 2 Adj Shr	3
2	102397	Gasket, Valve, UHPE, 1-1/2 & 2 Shr	1
3	104481	Scr, Mach, Hex, HD, 316, 1/4-20 x 1-1/4	1
4	104484	Nut, Hex Jam, 316, 1/4-20	1

Bolt tightening sequence

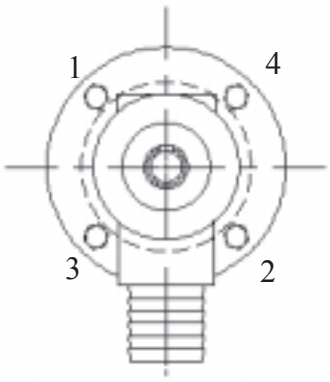

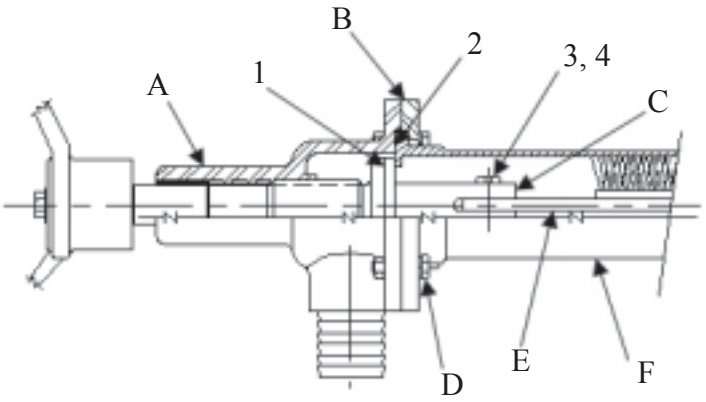

3.2 Disassemble the Shower

3.2.1.Remove four screws (D) and pull the Valve Bonnet (A) away from the Pipe (F) and Lock Ring (B) until the Screw (3) that connects the Valve Shaft (C) to the Brush (E) is accessible.

3.2.2. Remove the Nut (3) from the Screw (4), disconnecting the Valve Shaft and Brush. The nut and screw are staked and may have to be separated by grinding. The Valve Bonnet is now detached from the Pipe.

3.2.3. Remove the old valve gasket (2) by sliding it off the valve shaft.

3.2.4. Remove the old pipe gasket (1) from the end of the pipe (F) and valve body (A). Take care not to scratch the cast gasket seats on the pipe weldment and valve body.

3.3. Assembly

3.3.1. Slide the new valve gasket(s) onto the valve shaft (C) until it is against the flange.

Bolt tightening sequence

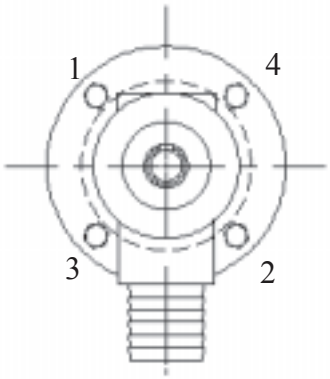

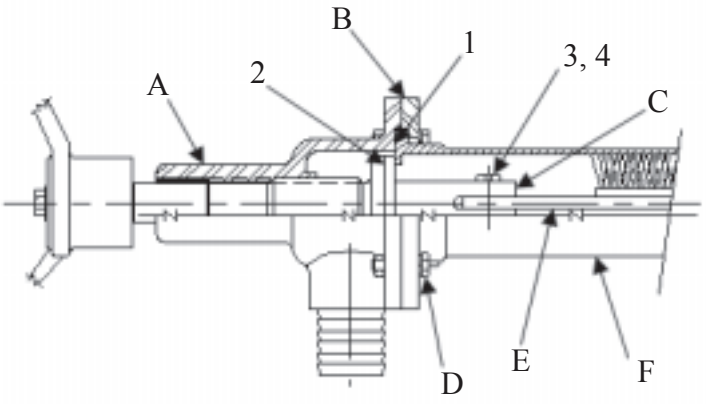

3.3.2. Place three new pipe gaskets (1) into valve body recess (A).

3.3.3. Attach valve shaft (C) to brush (E) with a new screw (3) and nut (4). The nut should not be tightened more than finger tight. Stake the nut and screw in two places.

3.3.4. Lubricate the valve shaft threads (C) with an anti-seize compound.

3.3.5. Push the valve body, valve shaft and brush into the pipe weldment. Make sure the valve body contacts pipe weldment before valve gasket (2) to ensure proper seal. If the valve gasket contact first, screw the valve shaft out until the valve body contacts the pipe weldment.

3.3.6. Rotate the hose connection on the valve body to the desired angle.

3.3.7. Align the holes for the four screws (D) and install the four screws.



Do not apply a torsion force in excess of 78 in-lbs to the four screws (D). Excessive force will break the screws.

3.2.8. Close the valve completely.

3.2.9. Check the brush location to ensure that the nozzles are not blocked. Adjust per instructions 2.0 above, setting brush location.

SECTION 4: BRUSH MAINTENANCE

Disconnect the water source to the shower before disassembly. High pressure water can cause personal injury.

4.1. Service Parts Required

Brush replacement kit 119840 includes:

Item	Part No.	Description	Req'd
1	119745	Gasket, Pipe, Fibre, 1-1/2 & 2 Adj Shr	3
2		Ass'y, Brush, 1-1/2 & 2 Adj Shr	Ref
3	102397	Gasket, Valve, UHPE, 1-1/2 & 2 Shr	Ref
4	104481	Scr, Mach, Hex, HD, 316, 1/4-20 x 1-1/4	1
5	104484	Nut, Hex Jam, 316, 1/4-20	1

4.2. Brush Removal

Bolt tightening sequence

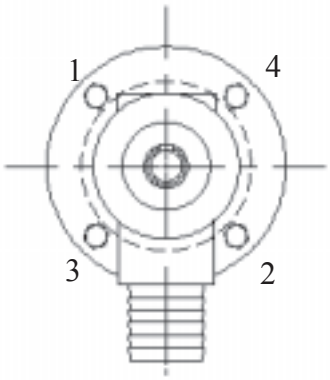

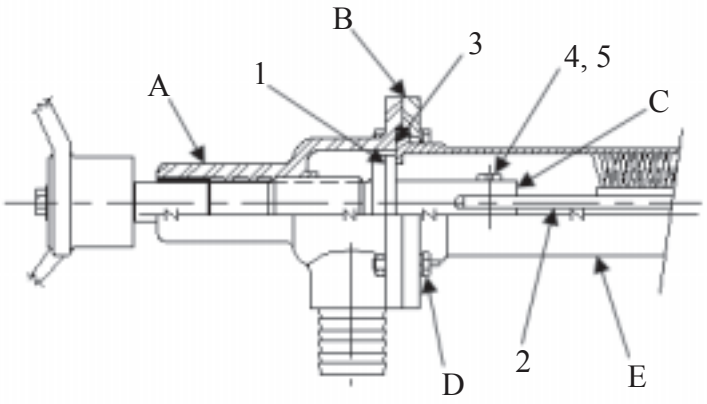

4.2.1. Disassemble the shower per 3.1 above.

4.2.2. Slide the old brush out of the shower.

4.3. Installation

4.3.1. Slide the new brush into the pipe weldment (E) leaving enough brush exposed to attach the valve shaft.

4.3.2. Place three new pipe gaskets (1) into valve body recess (A).

4.3.3. Attach valve shaft (C) to brush (2) with a new screw (4) and nut (5). The nut should not be tightened more than finger tight. Stake the nut and screw in two places.

4.3.4. Lubricate the valve shaft threads (C) with an anti-seize compound.

4.3.5. Push the valve body, valve shaft and brush into the pipe weldment. Make sure the valve body contacts pipe weldment before valve gasket (3) to ensure proper seal. If the valve gasket contact first, screw the valve shaft out until the valve body contacts the pipe weldment.

4.3.6. Rotate the hose connection on the valve body to the desired angle.

4.3.7. Align the holes for the four screws (D) and install the four screws. Tighten the screws a shown on the bolt tightening sequence.



Do not apply a torsion force in excess of 78 in-lbs to the four screws (D). Excessive force will break the screws.

4.3.8. Close the valve completely.

4.3.9. Check the brush location to ensure that the nozzles are not blocked. If they are, adjust per instructions 2.0 above, setting the brush location.

5.0 Nozzles - Ring Retained

5.1. Appleton belt press showers utilize a stainless steel ring to hold the nozzle assembly in place. This section contains instructions on removing and replacing these nozzles.

5.2. Tools required:

- Soft Head Hammer
- 1-1/16" Punch (Appleton PN 105448)
- 1/8" Punch
- Tapered Collar (Appleton PN 105449)
- Small Needle Nose Pliers
- Small Awl

5.3. Nozzle Removal

Wear safety glasses while assemblying or disassembling nozzles. Metal chips or flying retaining rings could result in eye injury.

5.3.1. Use an awl or pointed tool to pry one end of the retaining ring out of the slot.

5.3.2. Grip the retaining ring with a needle nose pliers and pull the ring out with a twisting motion.

5.3.3. Remove the nozzle and itsgasket.

5.4. Nozzle Replacement

5.4.1. Clean the nozzle seat and the groove for retaining the ring.

5.4.2. Lay one nozzle gasket into the nozzle seat (ref. figure 1).

5.4.3. Place one nozzle on the gasket with the fan opening at 85 degrees to the pipe centerline (ref. figure 2). The nozzle should be placed so it protrudes into the pipe.

5.4.4. Set the tapered collar tool on the nozzle saddle with the recessed end over the saddle. (ref. figure 3).

5.4.5. Insert one retaining ring into the top of the tapered collar tool (ref. figure 4).

5.4.6. Drive the retaining ring into the recessed groove with the 1-1/16 diameter punch (ref. figure 4).

5.4.7. Remove the collar tool and seat the ring with the 1/8" diameter punch (ref. figure 5).



Fig. 1, place the gasket



Fig. 2, place the nozzle



Fig. 3, place tapered collar



Fig. 4, drive ring in place



Fig. 5, set the retaining ring

6.0 Nozzles - Nut Retained

Paper machine showers utilize a retaining ring and a nut to hold the nozzle in place. These nozzles can be serviced as follows.



Wear safety glasses while assemblying or disassembling nozzles. Metal chips or flying retaining rings could result in eye injury.

6.1. Nozzle Removal

6.1.1. Remove the retaining ring from the nozzle saddle.

6.1.2. Thread the retaining nut out of the nozzle saddle.

6.1.3. Remove the nozzle.

6.1.4. Remove the gasket taking care not to scratch the seat in the nozzle saddle.

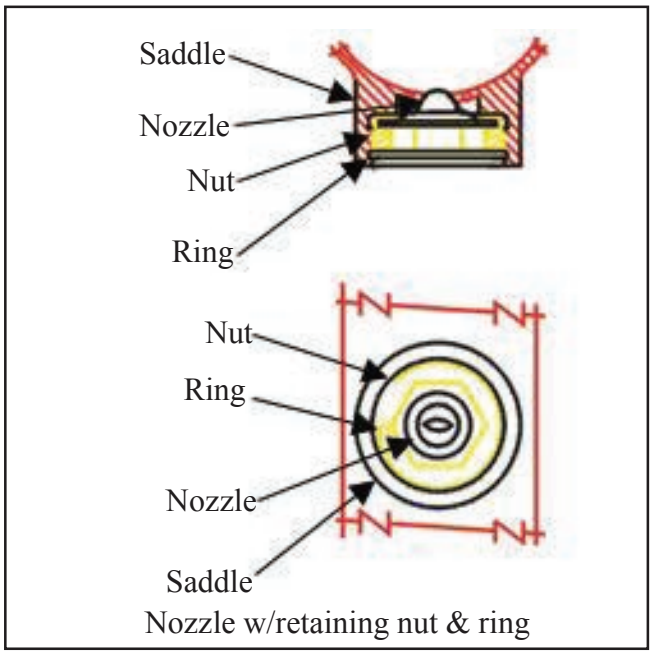

Nozzle w/retaining nut & ring

6.2. Nozzle Replacement

6.2.1. Clean the nozzle seat, threads, and retaining slot.

6.2.2. Lay one nozzle gasket into the nozzle saddle.

6.2.3. Lay one nozzle on the gasket with the fan openning 85 degrees to the centerline of the shower pipe (ref. figure 6). The nozzle should be placed so that it protrudes into the pipe.

6.2.4. Thread the retaining nut into the saddle taking care not to rotate the nozzle.

6.2.5. Install the retaining ring.

Copyright Appleton Mfg.. 0139-042303 VPD 02 Lit

SECTION 5



PHOENIX Process Equipment Company
2402 Watterson Trail
Louisville, KY 40299
(502) 499-6198
(502) 499-1079 Fax

SECTION 5 MAINTENANCE

GEAR BOX ASSEMBLY/INSTALLATION

Your gear motor assembly comes with these items pre-assembled and installed on the machine.

1.) Gearbox and motor (pre-assembled)

2.) Hollow shaft

3.) Snap Ring

4.) Gearbox locking bolt and washer

5.) Gearbox caps & sealing putty

6.) Torque arm bushing assembly

7.) Vent plug

8.) Key stock

PHOENIX Process Equipment Company
2402 Watterson Trail
Louisville, KY 40299
(502) 499-6198
(502) 499-1079 Fax

SECTION 5 MAINTENANCE

GEAR BOX ASSEMBLY/INSTALLATION

Assembly Instructions:

This procedure describes the steps required to mount the drive on the Belt Filter Press. Removal is essentially the reverse order.

1. Locate (2) hollow shafts with snap ring, a gearbox locking bolt and washer, (5) gearbox caps and putty. (One cap should be mounted on the drive), (6) rubber torque arm bushings mounted on frame, (7) vent plug and (8) key stock before starting assembly.

2. Remove snap ring (3) from outer side of hollow shaft (2) on gearbox. DO NOT LOOSE.

3. Slide gear box (1) on drive shaft. Move box as far forward as possible.

4. Insert key stock (8).

5. Install recently removed snap ring (3).

6. Screw locking bolt (4) into shaft and tighten down snug. This will draw gearbox into position.

7. Align gearbox with mounting bracket and install torque arm bushing (6).

8. Place putty around the inside of the cap (5). Push the cap in place over the outside end of the drive shaft & continue pressing until a complete seal is achieved.

INSTALLATION COMPLETE

PHOENIX Process Equipment Company
2402 Watterson Trail
Louisville, KY 40299
(502) 499-6198
(502) 499-1079 Fax

SECTION 5 MAINTENANCE

DRIVE MOUNT

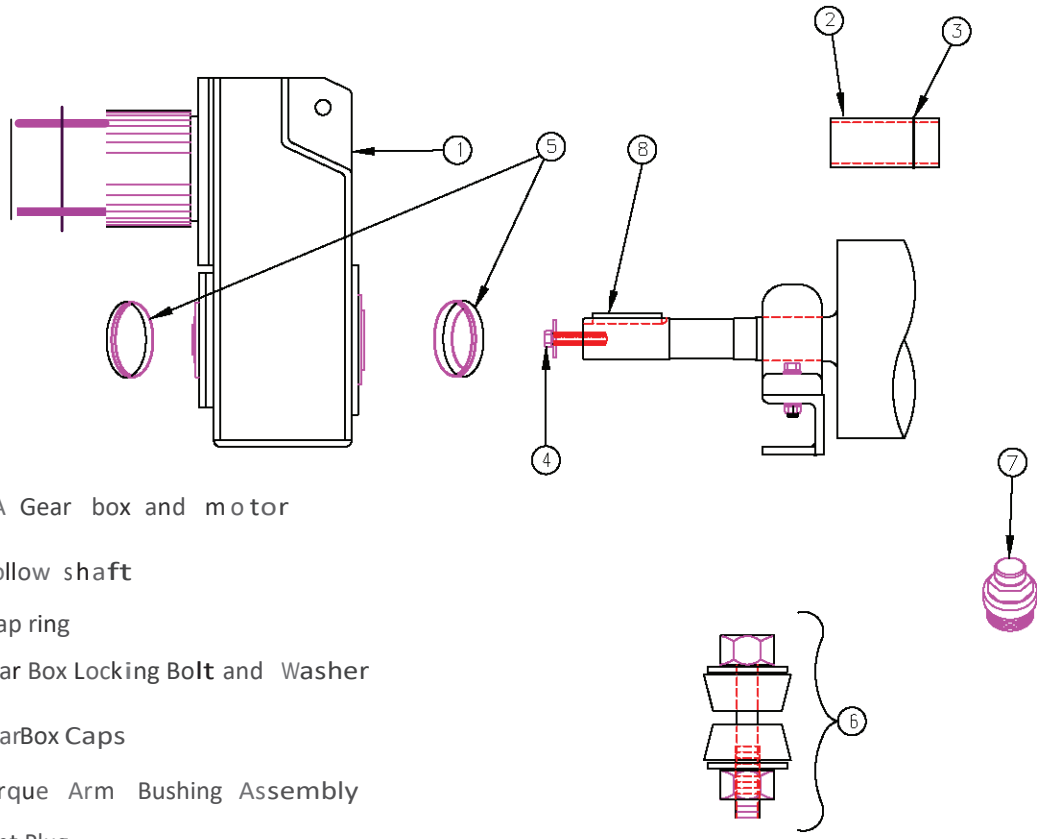

1. FA Gear box and motor
2. Hollow shaft
3. Snap ring
4. Gear Box Locking Bolt and Washer
5. GearBox Caps
6. Torque Arm Bushing Assembly
7. Vent Plug
8. Key Stock

Figure12.

\DM\LC800L\FIG_12 dwg

PHOENIX Process Equipment Company
2402 Watterson Trail
Louisville, KY 40299
(502) 499-6198
(502) 499-1079 Fax

SECTION 5 MAINTENANCE

BELT INSTALLATION

Initial Belt Installation (No Belts On Press)

CAUTIONS:

1. Installation of equipment in, around and especially above the belt press should be completed BEFORE attempting to install the belts. Welding is especially hazardous to the belts and will cause burning of the belt material.

2. DO NOT walk on the wiper bars, rolls or belts at any time as permanent damage may occur. Shut down the press immediately if bolts, tools or any foreign objects are dropped into the rotating belt area.

WARNING:

3. The circuit breaker supplying the Belt Filter Press control panel should be locked out while working on press. Follow the plant safety procedures or OSHA standards.

Press Belt Installation

NOTE 1: The longer, lower belt should be installed first (refer to Figure 13.).

NOTE 2: There are many different belt surfaces available depending on the press application. If your application requires your belt to have a particular "Working Surface", this surface is indicated on the belt and MUST be installed to come in contact with the material being dewatered.

NOTE 3: It is best to have a minimum of three (3) operators available, with one to operate press and two to feed the belt through the press.

NOTE 4: When the belt is fed over the drive roller (See Figure 13.) enough slack should be fed past the roller to allow completion, as the drive roller will not rotate.

NOTE 5: Keep belt in the center of the rollers as it is fed through the press. Keeping the belt in a straight path will make seaming the belt easier and will help the press track correctly.

NOTE 6: There are two types of belt seams dependent on the belt application. These are the clipper seam (metal teeth) and the open weave (seamless). Clipper seam belts are normally selected for sludge applications.

PHOENIX Process Equipment Company
2402 Watterson Trail
Louisville, KY 40299
(502) 499-6198
(502) 499-1079 Fax

SECTION 5 MAINTENANCE

BELT INSTALLATION

For clipper seam belts: (Refer to Figures 13 & 13A)

1. Ensure that the belt tensioner air pressure is 0 psig before cutting the starting belt installation.

2. Suspend the belt so that it rolls freely as it is fed through the press. A long pipe passed through the center of filter roll supported by blocks can be employed for this purpose.

3. Thread the belt around the large roller and continue through the rolls in the compression zone. Be sure to follow note 4 & allow enough slack beyond the drive roller to complete the circuit.

4. Bring the belt back under the press and back to the starting point.

5. Join the seam ends of the belt starting from the tracking side using the crown of the lower tensioning roller as a working surface. The tracking side of the belt should be the straightest edge for tracking purposes.

6. Complete the seaming operation in accordance with Figure 13A. It is important to support the belt's slack weight at both ends during the seaming process for ease of installing seam wire.

7. When seaming is complete, insure the area is clear of hands and feet before applying air.

8. Apply 20 psig air pressure to the tension assembly.

CAUTION: *Ensure lower tracking arm is held away from belt when applying tension.*

9. To install upper belt, repeat steps 1, 2 and 3. Notes 2 and 3.

10. Referring to Figures 13 and 14 duct tape the leading edge of the upper belt to the lower belt at location "T" keeping edges as straight as possible and taking care not to crimp or wrinkle belt.

11. Energize the Belt Filter Press control panel, place the maintenance control jog/run switch in the job position and use the belt press maintenance belt job rev/off/fwd switch in the forward position to slowly jog (no faster than 10 feet per minute) the press so that the lower belt pulls the upper belt through the "S" pattern and wedge zone of the Press. Watch the belt

PHOENIX Process Equipment Company
2402 Watterson Trail
Louisville, KY 40299
(502) 499-6198
(502) 499-1079 Fax

SECTION 5 MAINTENANCE

BELT INSTALLATION

movement closely to avoid wrinkling or creasing as the belts traverse the wedge zone.

CAUTION: *Drive should NEVER be run in reverse at greater than 20% of drive speed. When jogging the drive in reverse, particular attention should be given to belt alignment, as the tracking system functions opposite of normal operation when press is running in reverse. Jog/ Reverse should only be used to clear jams or assist new belt installation.*

12. Referring to Figures 13 and 14 separate the upper and lower belts at "S" feed the belt to the doctor blade roller and use the doctor blade to hold the end in place.

13. Bring the remainder of the belt over the top of the Belt Filter Press, through the upper spray box to the doctor roller.

14. Release the pressure on the tension cylinder and repeat steps 5-8 for the upper belt.

15. An alternate location for seaming is the upper tension roller as shown on Figure 14. To seam on this roller, after the belts are separated at "S" lift the doctor blade and route the belt around the doctor blade roller and over the top of the Belt Filter Press through the upper spray box to the upper tension roller.

16. Release the pressure on the tension roller and repeat seaming steps 5 through 8.

17. Apply 20-psi tension to the belts and check for slack. If either belt requires adjustments, release the tension on the cylinder and tighten the belt using the jackscrews on the individual tension rollers. If the tension on the belts has been released reapply the 20 psi tension.

18. Run the press forward for approximately 5 minutes to realign the belts.

BELT INSTALLATION COMPLETE

PHOENIX Process Equipment Company
2402 Watterson Trail
Louisville, KY 40299
(502) 499-6198
(502) 499-1079 Fax

SECTION 5 MAINTENANCE

LOWER BELT INSTALLATION

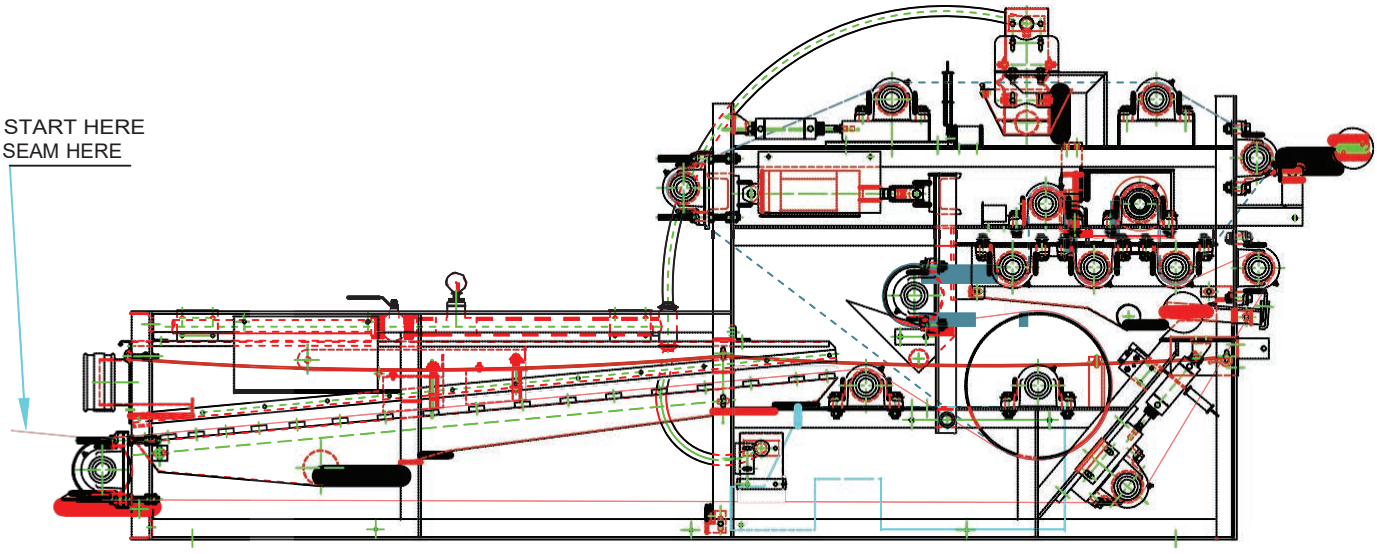

FIGURE 13.

PHOENIX Process Equipment Company
2402 Watterson Trail
Louisville, KY 40299
(502) 499-6198
(502) 499-1079 Fax

SECTION 5 MAINTENANCE

CLIPPER SEAM

FITTING A CLIPPER SEAM SS HINGE WIRE

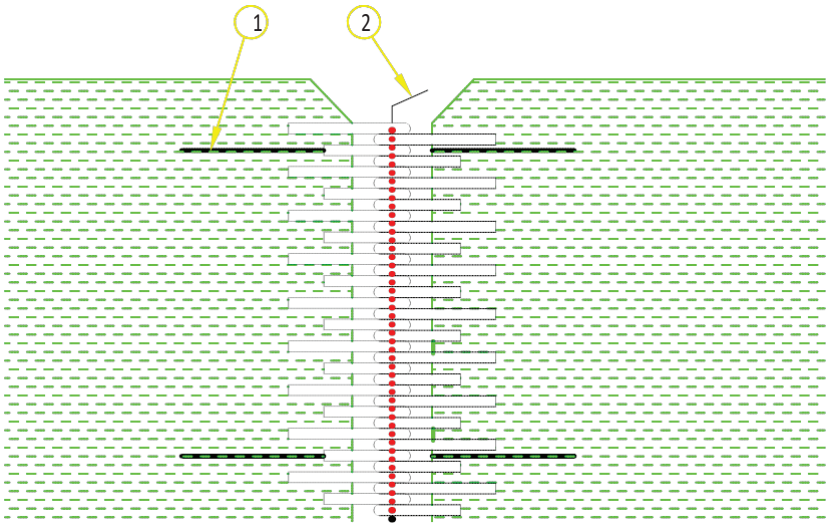

1. BRING THE ENDS OF THE BELT TOGETHER, MAKING SURE TO MATCH UP THE ALIGNMENT MARKS -(1)
2. MAKE SURE ALL HOOKS ARE PROPERLY INTERLINKED.
3. TO CLOSE THE SEAM, PUSH THROUGH BOTH SUPPLIED SS WIRES.
4. ALLOW 1/2" OF THE HINGE PINS TO PROTRUDE PAST THE END OF THE SEAM.
5. SECURE EACH END BY BENDING THE WIRE OVER 180 DEGREES -(2)
6. COAT THE COMPLETED SEAM WITH ABRASION RESISTANT POLYURETHANE.

FIGURE 13A

PHOENIX Process Equipment Company
2402 Watterson Trail
Louisville, KY 40299
(502) 499-6198
(502) 499-1079 Fax

SECTION 5 MAINTENANCE

UPPER BELT INSTALLATION

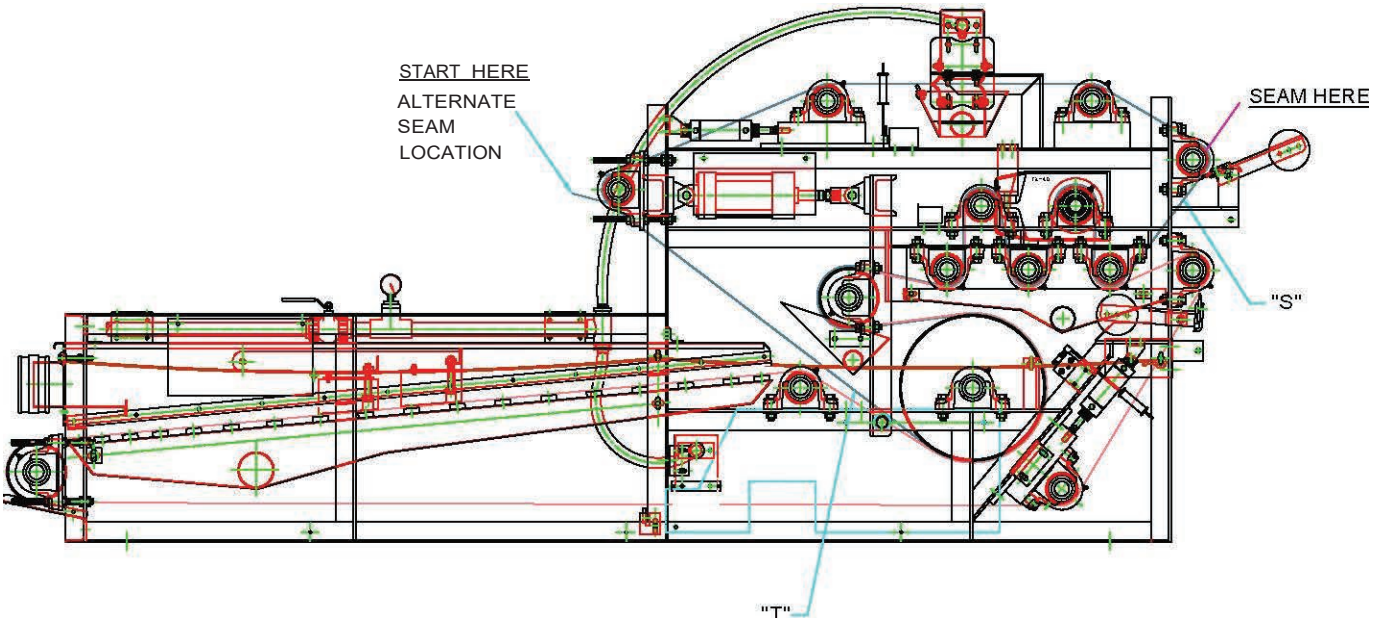

FIGURE 14.

PHOENIX Process Equipment Company
2402 Watterson Trail
Louisville, KY 40299
(502) 499-6198
(502) 499-1079 Fax

SECTION 5 MAINTENANCE

REPLACEMENT BELT INSTALLATION

Belt Filter Press Belt Replacement

Refer to WARNINGS and CAUTIONS in the Belt Installation Procedure.

1. Reduce air pressure for the appropriate belt tension assembly to 0 psig.

WARNING: *There must be zero tension in belt being cut or injury may occur.*

2. The tension air pressure gauge on the control panel must read zero.
3. Use a "Come-Along" or similar device to fully retract the tensioner assembly so as not to interfere with belt travel or seaming.
4. Remove the belt to be replaced by cutting in an easily accessible area. Use the old belt to pull the new belt through the Press. Your new belt is equipped with a canvas leading edge, which can be attached to the old belt for this purpose.
5. Use duct tape to connect the leasing edge of the new belt to the existing belt at location "T". Keeping the edges as straight as possible and take care not to crimp or wrinkle belt.
6. With the press in "Jog Mode" use the forward position of the forward reverse jog control so that the lower belt pulls the upper belt through the "S" pattern and wedge zone of the press. Watch the belt movement closely to avoid wrinkling or creasing as the belts traverse the wedge zone.
7. Separate upper and lower belts at "S" and continue feeding until belt is back at the doctor blade roller for seaming.
8. Place the Belt Press MAINTENANCE CONTROL JOG/RUN switch in the "JOG" mode and use the Belt Press MAIN BELT JOG/REV/OFF/FWD switch to feed belt to be removed from the press, collecting the slack at the doctor blade end of the press while the new belt is being pulled through the press.
9. Suspend the new belt so that it rolls freely as fed through the Press.
10. Seam the belt accordance with seaming instructions for your type of belt.
11. Remove "Come-Along" and apply pressure to tension bellows.
12. Run the Belt Filter Press in the "forward" mode approximately 5 minutes to track belts. Check the bellows heights for proper dimensions.

NOTE: It is recommended that the bellow operating height ALWAYS be checked when new belt(s) are installed.

BELT REPLACEMENT COMPLETE

PHOENIX Process Equipment Company
2402 Watterson Trail
Louisville, KY 40299
(502) 499-6198
(502) 499-1079 Fax

SECTION 5 MAINTENANCE

LUBRICATION INSTRUCTIONS

(Ref. Figure 15)

Proper lubrication of this equipment is required for long service life and efficient operation. The recommended lubricants and intervals were selected specifically for the equipment and the various operating conditions that may be encountered. Lubricate as follows:

WARNING:

> To prevent personal injury, the Belt Press MUST be stopped before any maintenance requiring personal contact. Prior to maintenance, the drive MUST be de-energized and the power locked out.

1.) Bearings

Compression rolls, drive rolls, tensioning rolls, tracking rolls, doctor blade rolls and gravity drainage rolls. See Figure 15 for locations. Zerk fittings are supplied on each pillow block for lubrication.

Lubricant:	MOBIL Oil Co. Mobilux EP2 Texaco Inc. RB2 Shell Oil Co, Alvania EP2
Interval:	Based on 10 hours/day, wet atmosphere, PHOENIX recommends every 40 hours of operation.
Method:	Grease Gun

NOTE: When establishing a relubrication schedule, note that a small amount of grease at frequent intervals is preferable to a large amount at infrequent intervals.

2.) Clevis and Pivot Eyes

Lubricant:	EP2
Interval:	After each daily cleaning of the press
Method:	Brush

3.) Drive

See service manual for instructions.

PHOENIX Process Equipment Company
2402 Watterson Trail
Louisville, KY 40299
(502) 499-6198
(502) 499-1079 Fax

SECTION 5 MAINTENANCE

DAILY VISUAL CHECKS

1. Check filter belts for wear or damage.
2. Check doctor blades for wear or damage.
3. Check wiper bars for wear or damage.
4. Check tracking components for wear or damage.
5. Observe belt tracking, adjust if necessary.
6. Check in-line air lubrication; add if necessary (5W Pneumatic oil).
7. Check air and water pressures, (100 PSIG for both air & water).

The Belt Filter Press should be washed down thoroughly every day. Caution: Do not spray water directly into local panel.

PHOENIX Process Equipment Company
2402 Watterson Trail
Louisville, KY 40299
(502) 499-6198
(502) 499-1079 Fax

SECTION 5 MAINTENANCE

LUBRICATION LOCATIONS

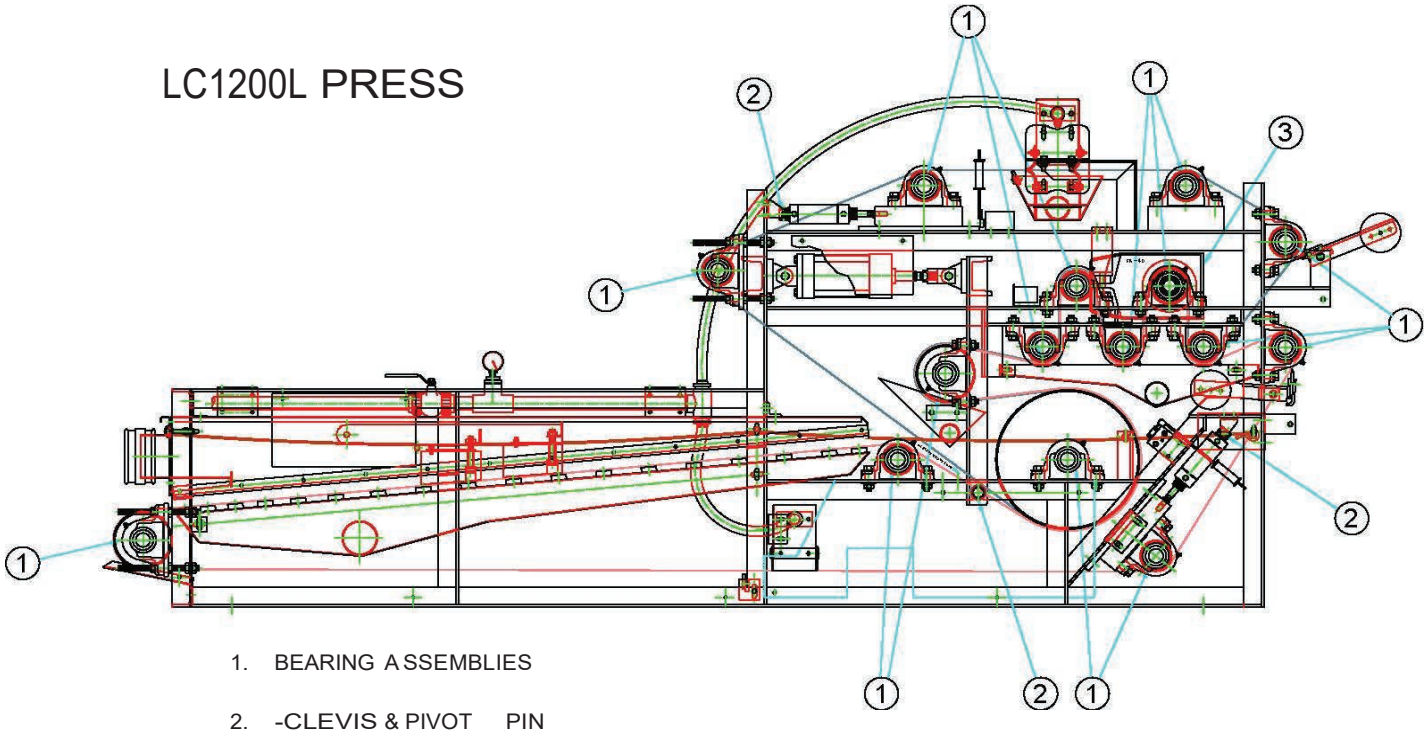

1. BEARING ASSEMBLIES
2. -CLEVIS & PIVOT PIN
3. –DRIVE

FIGURE 15.

SECTION 6



PHOENIX Process Equipment Company
2402 Watterson Trail
Louisville, KY 40299
(502) 499-6198
(502) 499-1079 Fax

SECTION 6 TROUBLESHOOTING

MISCELLANEOUS PROBLEMS

Slurry Pump does not feed the press

REASON:
- Suction pipe plugged
- Suction pipe leaks
- Valve in line from thickener to press is closed
- Auto start up logic sequence not satisfied

ACTION:
- Check line from thickener to press for pluggage/leaks/closed valve
- Check operation of slurry pump in hand position

Press Drive stops/won't restart

REASON:
- Electrical power to control panel lost
- Air supply off
- Air supply low
- Belt misalignment switch activated
- Cable switch activated
- Emergency e-stop switch activated

ACTION:
- Check to be sure proper electric power is supplied to press
- Check that the air source (compressor or other) is operating and is supplying 100 psig air
- Check tension bellows
- Check belt position, over travel limit switches if tripped, check belt tracking control valves, and correct as required.
- Check the cable pull safety switches
- Check emergency e-stop switch (pullout)

PHOENIX Process Equipment Company
2402 Watterson Trail
Louisville, KY 40299
(502) 499-6198
(502) 499-1079 Fax

SECTION 6 TROUBLESHOOTING

MISCELLANEOUS PROBLEMS

Press Drive Overload/Trips Out

REASON:
- Press cake is too thick
- Drive improperly wired
- Drive oil level too low
- Improper oil used in drive
- Bad bearings on one or more rollers

ACTION:
- Reduce flow to press
- Check drive electrical hook up
- Check drive oil (level and viscosity/temperature)
- Check all roller bearings and replace as necessary

Belts Slipping on Drive Rolls

REASON:
- Belt tension too low
- Bearing failure

ACTION:
- Increase belt tension
- Check bearing housing for heat or metal shavings
- Too much polymer

Belt Tracking System will not activate

REASON:
- Air exhaust clogged
- Air pressure too low
- Air system leaking
- Tracking valve spool stuck
- Tracking valve pivot arm stuck
- Flow control valves clogged

ACTION:
- Check pneumatic lines and valves for plugs or leaks
- Disassemble tracking valve - oil spool or oil pivot arm
- Clean flow control valves

PHOENIX Process Equipment Company
2402 Watterson Trail
Louisville, KY 40299
(502) 499-6198
(502) 499-1079 Fax

SECTION 6 TROUBLESHOOTING

MISCELLANEOUS PROBLEMS

Poor flocculation/no flocculation _ This will cause a number of other problems including dirty filtrate, solids extrusion from belt, poor cake release, dirty belts, high liquid level in gravity zone, etc.

REASON:
- Polymer system not functioning
- Polymer dosage is incorrect
- Polymer not reacting with slurry

ACTION:
- Check polymer system to make sure it is operating properly and that all lines are clear
- Calculate and calibrate correct polymer dosage
- Perform sample tests to make sure the particular polymer being used is correct for the application

High Level in Gravity Zone

REASON:
- Poor flocculation
- Belt is dirty
- Feed rate is too high
- Belt speed is too low
- Sudden increase in feed solids concentrations

ACTION:
- Correct polymer flow rate
- Check & clean spray wash nozzles & clean the belts
- Reduce feed rate
- Increase belt speed
- Reduce feed rate

Belts are Dirty

REASON:
- Poor flocculation
- Doctor Blades are not properly removing cake
- Belt tension is too high
- Spray nozzles are clogged
- Low water pressure
- Spray nozzles not correctly pointed at belts
- Polymer overdose

PHOENIX Process Equipment Company
2402 Watterson Trail
Louisville, KY 40299
(502) 499-6198
(502) 499-1079 Fax

SECTION 6 TROUBLESHOOTING

MISCELLANEOUS PROBLEMS

ACTION:
- Check doctor blades for correct tension and even doctoring (scraping) across width of belts
- Reduce belt tension
- Increase pressure on doctor blades
- Clean nozzles
- Check water pressure (must be 100 psig)
- Make sure spray pattern is pointed directly into belts
- Check polymer concentration

Belts Wrinkle

REASON:
- Poor slurry distribution
- Low belt tension

ACTION:
- Check feed in gravity zone. Increase dilution for better distribution.
- Increase belt tension

Low Solids Recovery (less than 90%)

REASON:
- Feed loss in Gravity Zone
- Poor cake release
- Belt tension too high

ACTION:
- Inspect Gravity Zone seals and adjustment
- Inspect Doctor Blades for proper tension and even doctoring
- Reduce belt tension

PHOENIX Process Equipment Company
2402 Watterson Trail
Louisville, KY 40299
(502) 499-6198
(502) 499-1079 Fax

SECTION 6 TROUBLESHOOTING

CYLINDER CONTROL VALVE MAINTENANCE

It may be necessary to disassemble the air valve or the flow controls associated with the tracking system due to moisture or "scale" in the airline. A lubricator is used in the tracking valve feed airline to help eliminate this problem.

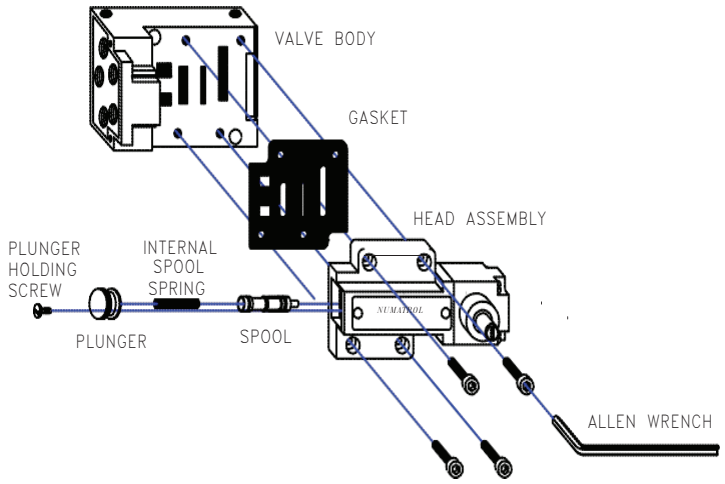

To disassemble the air valve:

1.) Remove the (4) Allen-Head screws on top of valve and lift off head assembly.
2.) Looking at the end of the head assembly opposite the actuator, remove small screw.
3.) Carefully remove plunger and spring from end. Because this is a spring-loaded assembly, care must be taken...plunger may snap out of position and be lost.
4.) Lightly tap on head assembly and spool should slide out. If not, carefully remove actuator end and push out.
5.) Using light grade air tool oil; thoroughly clean the spool and interior of valve. Replace spool and verify that it moves freely in valve.
6.) Clean and lubricate plunger and verify that O-Ring is in good condition.

Re-assemble air valve and re-install on equipment.

TROUBLESHOOTING

PROBLEM

NO SLURRY TO PRESS	BELT PRESS WON'T RESTART	BELT PRESS DRIVE TRIPS	BELTS SLIPPING	BELT TRACKING MALFUNCTION	POOR FLOCCULATION	HIGH LEVEL IN GRAVITY ZONE	BELTS ARE BLINDED	BELTS WRINKLE	LOW SOLIDS REMOVAL	CAUSE	SOLUTION
X										Slurry pump not operating	Verify pump operational w/no obstructions
X										Slurry suction pipe clogged	Clear blockage
X										Slurry suction pipe leaks	Repair leaks
X										Valve closed	Open valve
	X									Electric power off	Check breaker, restore power
	X									Red E-Stop Button pushed	Pull out E-Stop Button
	X									Air supply off	Check air compressor & air pressure
	X									Air pressure low	Check air compressor & air pressure
	X									Belt over travel limit switch activated	Check tracking. Jog to correct tracking
	X									Safety Cable pulled	Reset cable pull station(s)
	X	X						X		Cake is too thick	Reduce sludge feed or increase belt speed
		X					X		X	Belt tension is too high	Reduce belt tension
		X								Belt speed too low & mtr overheating	Increase belt speed or cool motor
		X								Drive improperly wired	Check electrical connections
		X								Wrong oil in drive	Drain oil and replace.
	X	X								Variable frequency drive failure	Check VFD, clear faults
			X					X		Belt tension too low	Increase belt tension
			X							Bearing failure	Check bearings. Replace bearings
				X						Cylinder exhaust flow blocked	Clean flow control valves
				X						Air pressure low	Check compressor and filter regulator
			X	X				X		Air system leaking	Check and correct leaks
				X						Tracking valve spool stuck	Disassemble and clean valve. Oil spool
				X				X		Buildup on one side of roller(s)	Wash rollers
				X						No lubricant in air line oiler	Fill lubricator with 5W pneumatic lubricant
					X	X	X		X	Polymer system not functioning	Check polymer delivery
			X		X	X	X		X	Polymer dosage incorrect	Check for blockage. Increase flow
			X		X	X	X		X	Polymer failing to react with slurry	Test to verify polymer is correct
			X		X	X	X		X	Polymer failing to react with slurry	If push water req'd verify it is available
						X				Belt speed too slow	Increase belt speed
					X	X		X		Sludge feed rate too high	Reduce feed rate or increase belt speed
						X	X			Dirty belts	Clean nozzles in wash stations
						X	X			Spray wash system malfuction	Increase supply to 100 psi. Clean nozzles
					X	X		X		% Solids in feed increased	Reduce feed rate
							X		X	Poor cake release	Check doctor blades for wear.
			X		X	X	X			Polymer overdose	Reduce polymer feed. Clean belt
			X					X		Solids collection not even across belt	Check flow in Feed Containment Box
			X		X		X		X	Feed loss in gravity zone	Reestablish feed
									X	Gravity zone seals leaking	Correct leaks

SECTION 7



PHOENIX Process Equipment Company
2402 Watterson Trail
Louisville, KY 40299
(502) 499-6198
(502) 499-1079 Fax

SECTION 7 SPARE PART INFORMATION

ORDERING

Ordering

In order to assure correct replacement parts for your equipment, it is important to supply the following information with each order:

1) Size and Model Number: LC-1200LS

2) Serial Number: 0418377

3) Special Field Modifications

IMPORTANT: If the materials of construction have changed or if the original belt press design has been modified, please notify PHOENIX and include descriptions and drawings, if applicable.

Send Part Orders To:

PHOENIX Process Equipment Company
2402 Watterson Trail
Louisville, Kentucky 40299

Attention: Parts Department
Telephone: (502) 499-6198 Ext. 117
Fax: (502) 499-1079
www.dewater.com
Email: PHOENIX@dewater.com

PHOENIX Process Equipment Company
2402 Watterson Trail
Louisville, KY 40299
(502) 499-6198
(502) 499-1079 Fax

SECTION 7 SPARE PART INFORMATION

INCLUDED SPARE PARTS (LC-1200LS)

ITEM	QUANTITY	PART NO.
A. Belt (Upper)	1	BLT-225-HF47.75
B. Belt (Lower)	1	BLT-344-HF-47.75
C. Doctor Blade	2	PTS-CH100-LC12
D. Pneumatic Limit Switch	1	PTS-CH213
E. Gravity Zone Seal Kit	1	KIT-435-LC12L
F. Pneumatic Tracking Valve	1	PTS-CH215
G. Bearing Assembly Std. & Tracking	1	PTS-CH750
H. Tracking Cylinder	1	PTS-CH280-L8

For pricing and non-listed parts, contact PHOENIX's Parts & Service Department: (502) 499-6198 ext.117 or for after business hours dial: **(502) 548-7763**.

SECTION 8



PHOENIX Process Equipment Company
2402 Watterson Trail
Louisville, KY 40299
(502) 499-6198
(502) 499-1079 Fax

SECTION 8

DRAWINGS

COMPONENTS/MATERIALS

ITEM	QTY	DESCRIPTION	PART NO./DWG NO.	ITEM	QTY	DESCRIPTION	PART NO./DWG NO.
1	1	FRAME	1837?LC-01, -02, -03	32	1	GRAVITY ZONE DRAIN PAN	1837?LC-05
2	2	FEED BOX SUPPORT BRKT.-FRONT	1837?LC-04	33	1	LOWER SPRAYBOX ASSEMBLY	1837?LC-10
3	1	LOWER BELT SUPPORT BRKT.	1837?LC-03	34	1	TENSION ROLLER DRAIN PAN	1837?LC-05
4	1	5.84"ø ROLLER ASSEMBLY	RLR1200-6	35	1	14.28ø ROLLER ASSEMBLY	RLR1200-14
5	1	TENS. AIR CYLINDER 4" x 4"	CH270	36	1	TRACKING BEARING RISER BLOCK	1837?LC-04
6	2	WEAR PAD	CH120-LC8A	37	1	TRACKING BEARING RETAINING ANGLE	1837?LC-04
7	2	PIPING BRACKET	1837?LC-08	38	1	GEAR BOX RETAINING BRACKET	1837?LC-08
8	1	TRACKING BEARING RISER BLOCK	1837?LC-04	39	1	BELT TRACKING VALVE BRACKET	1837?LC-08
9	1	5.84"ø ROLLER ASSEMBLY	RLR1200L6	40	1	BELT TRACKING VALVE BRACKET	1837?LC-08
10	1	BELT TENSION ASSEMBLY	1837?LC-04	⚠41	2	BELT TRACKING VALVE	⚠ CH205, CH205, CH820 & CH838
11	1	UPPER BELT SPRAYBOX ASSEMBLY	1837?LC-09	42	1	FEED BOX SUPPORT ANGLE-REAR	1837?LC-04
12	1	LOWER BELT SUPPORT	CH125-LC12	43	2	BELT OVERTRAVEL SW. BRACKET	1837?LC-04
13	2	DOCTOR BLADE	CH100-LC12	⚠44	1	EMERGENCY STOP SW. BOX BKT.	1837?LC-04
14	25FT	SAFETY CABLE	CH840	⚠45	2	BELT OVERTRAVEL VALVE, ARM	CH213 & CH815(ARM)
15	30	BEARING - 1.437ø SHAFT SIZE	SCM PILLOW BLOCK	⚠46	1	EMERGENCY STOP SWITCH	CH885
16	2	BEARING RISER BLOCK	1837?LC-04	47	2	SPLASH GUARD	CH410-LC8L
17	1	UPPER DOCTOR BLADE ASSEMBLY	1837?LC-07	48			
18	1	LOWER DOCTOR BLADE ASSEMBLY	1837?LC-07	49	1	UPPER BELT ~ 225" LG.	CLIPPER SEAM
19	8	DOCTOR BLADE COUNTERWEIGHT	1837?LC-07	50	1	LOWER BELT ~ 344" LG.	CLIPPER SEAM
20	1	3.78ø DRIVE ROLLER ASSEMBLY	RLR1200-4K447 ⚠	51	1	DRIVE MOTOR/GEARBOX	1HP/FA-47 (M-6)
21	1	PRESSURE ZONE DRAIN PAN	1837?LC-05	52	1	WATER DEFLECTION PAN	1837?LC-08
22	2	CLEVIS AND PIVOT PIN	CH281-LC8	53	1	PNEUMATIC ASSEMBLY	B-1030065
23	2	TRACKING AIR CYLINDER	CH280-LC8	54	1	PIPEWORK ASSEMBLY	B-1030067
24	11	3.16ø ROLLER ASSEMBLY	RLR1200-3	55	1	ELECTRICAL ASSEMBLY	B-1030068
25	4	BEARING BACKING PAD	1837?LC-04	56	1	UPPER BELT SUPPORT BAR	CH125-LC12A
26	1	TRACKING BEARING RETAINING ANGLE SHIM	1837?LC-04	57	2	LASER BELT BREAK SENSOR	OHDK14P5101/S35A
27	1	PLOW BAR ASSEMBLY	1837?LC-12	58	1	BELT BREAK SENSOR BRKT (LOWER)	1837?LC-04
⚠				59	1	BELT BREAK SENSOR BRKT (UPPER)	1837?LC-04
				⚠60	2	E-STOP PULLEY & MOUNTING BRACKET	CH885C/1837?LC-04.2 ⚠
30	1	FEED BOX ASSEMBLY	1837?LC-06	⚠61	1	E-STOP TURNBUCKLE	CH885B
31	18	WIPER BAR	CH109-LC12	⚠62	1	E-STOP SPRING	CH885A

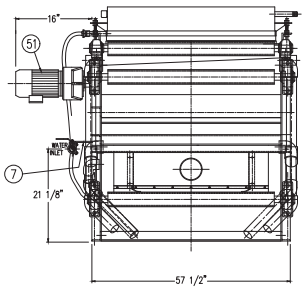

FEED END ELEVATION

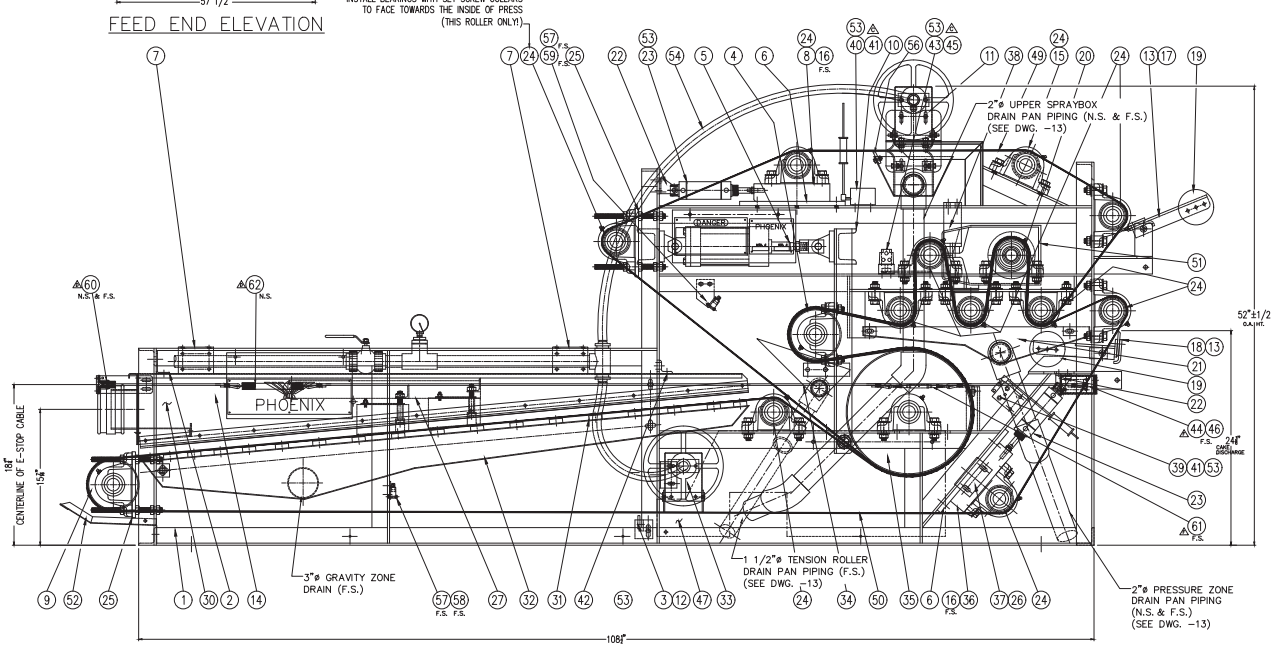

SIDE ELEVATION

NOTES

ALL DRAIN PANS, FEED BOX, 304 S.S. FASTENERS ARE 304 S.S.

ALL PRESS FRAME COMPONENTS ARE C.S. ~ SANDBLASTED TO SSPC-SP-10, 5 MILS MIN. FLAME SPRAYED ZINC & 7 MILS MIN. TNEMEC SERIES N69 HI-BUILD ⚠ EPOXOLINE II EPOXY COATING, GR29 GRAY

REMOVE ALL BURRS AND EXPOSED SHARP EDGES AFTER CUTTING OR MACHINING.

INSTALL FEEDBOX 1 1/4" ABOVE THE GRID/BELT

AUXILIARY EQUIPMENT

(1) 4", 150# VORTEX MIXER

(1) 4" X 4" FLEXIBLE FERNCO FITTING #1056-44

CUSTOMER DATA

IQALUIT WWTP
c/o NORCLAIR MECANIQUE DE PROCEDE
100 MONTEE MASSON
LAVAL, QUEBEC H7E 4P2

PHOENIX
PHOENIX PROCESS EQUIPMENT CO.

TITLE	LC1200-L
	BELT FILTER PRESS
FOR	IQALUIT WWTP
DWG NO.	1837?LC-GA
REV.	0
DRAWN	DGC/DGC
APPROVED	
SCALE	FILE NO.
DATE	02/08/19
	IQALUIT, NUNAVUT, CANADA

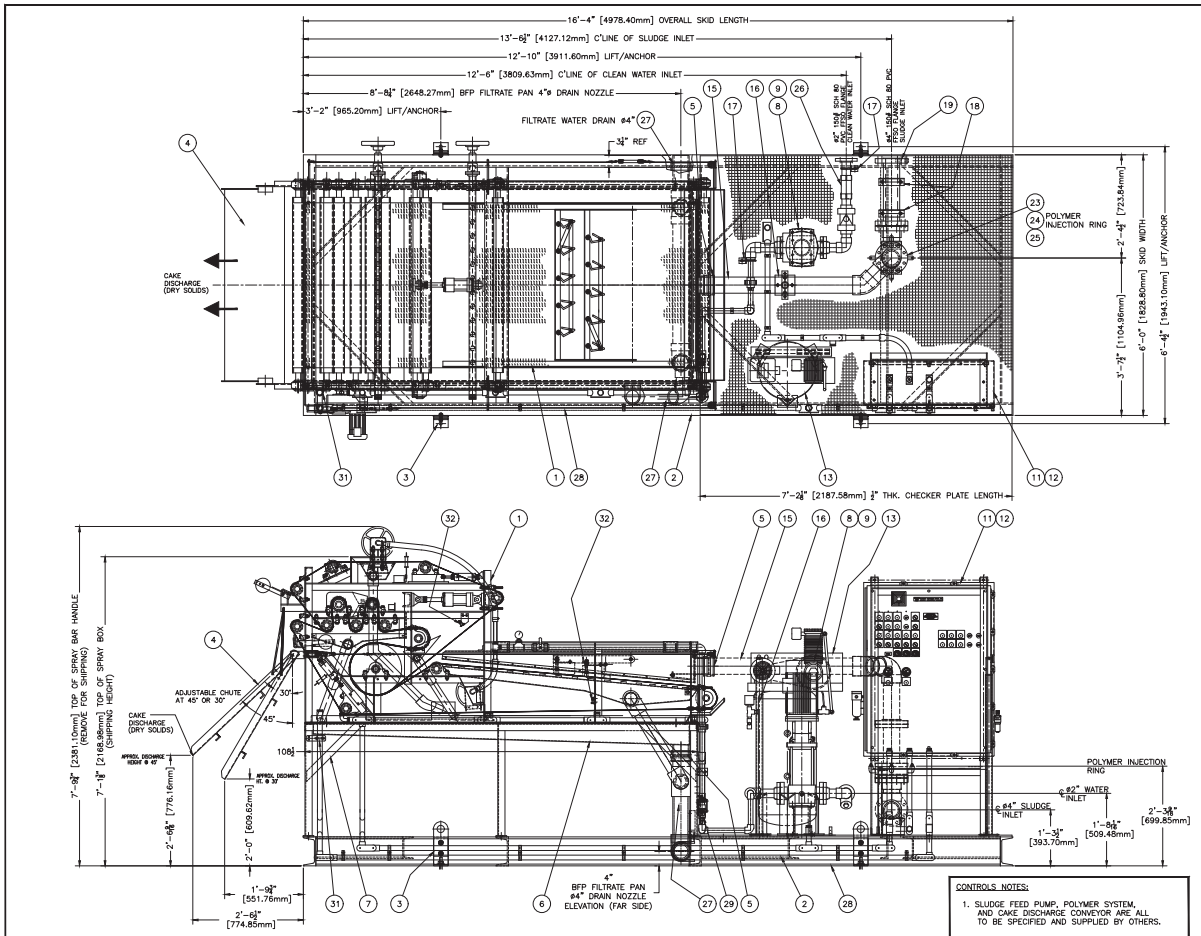

GA LC1200-LS BELT FILTER PRESS SKID SYSTEM

PRESS/SKID SHIPPING WEIGHT: 9,000#

CONTROLS NOTES:

1. SLUDGE FEED PUMP, POLYMER SYSTEM, AND CAKE DISCHARGE CONVEYOR ARE ALL TO BE SPECIFIED AND SUPPLIED BY OTHERS.
2. PHOENIX CONTROL PANEL WILL CONTAIN I/O FOR THESE ITEMS, BUT IT IS THE RESPONSIBILITY OF THE CUSTOMER/CONTRACTOR TO INTERLOCK WITH PHOENIX SYSTEM. SEE ELECTRICAL DWGS FOR DETAILS.

BILL OF MATERIALS

ITEM	QTY.	DESCRIPTION	DWG.#	WEIGHT
1	(1)	LC1200L BELT FILTER PRESS	-GA	
2	(1)	6'-0"x16'-4" SKID	-SK02	
3	(4)	SKID LIFTING LUG/ANCHOR BOLT ASSY.	-SK02	
4	(1)	LC1200L BELT FILTER PRESS DISCHARGE CHUTE		
5	(3)	4"Øx4"# FLEXIBLE COUPLING	-15	
6	(1)	LC1200L BELT FILTER PRESS FILTRATE PAN	-14	
7	(1)	LC1200L BELT FILTER PRESS STAND	-15	
8	(1)	WASH WATER BOOST PUMP		
9	(1)	WASH WATER BOOST PUMP STAND	-SK04	
10		NOT USED		
11	(1)	UNIPANEL		
12	(1)	UNIPANEL STAND	-SK05	
13	(1)	30 GALLON AIR COMPRESSOR		
14		NOT USED		
15	(1)	4"# SLUDGE FEED PIPE	-SK06	
16	(1)	4"# SLUDGE FEED PIPE SUPPORT	-SK04	
17	(2)	2"# CLEAN WATER INLET PIPE SUPPORT	-SK04	
18	(2)	4"# SLUDGE INLET PIPE SUPPORT BRKT.	-SK02	
19	(1)	4"# 150# FLG. SLUDGE INLET PIPE	-SK06	
20		NOT USED		
21		NOT USED		
22		NOT USED		
23	(1)	4"# VORTEX MIXER STAINLESS STEEL		
24	(1)	4"# INJECTION RING		
25	(2)	4"# MIXER SUPPORT	-SK04	
26	(1)	2"# CLEAN WATER INLET PIPING	-SK06	
27	(1)	4"# PRESS DRAIN PAN PIPING	-SK06	
28	(1 LOT)	ELECTRICAL CONDUIT RUN	-SK07	
29	(1)	PRESSURE SWITCH		
30		NOT USED		
31	(1)	CONDUIT BRKT.	-SK04	
32	(2)	UPPER AND LOWER BELT BREAK SWITCH		

NOTES

1. SHIPPING WEIGHT PRESS/SKID IS APPROX. 9,000 LBS.
2. OPERATING WEIGHT IS APPROX. 10,000 LBS.
3. WATER SUPPLY FOR BELT WASH IS 50 GPM AND MUST CONTAIN LESS THAN 200 PPM SOLIDS. MAX SOLIDS IS 20 MESH. MAINTAIN FLOODED SUCTION AT PUMP INLET.
   50 GPM @ 30 PSI IS REQUIRED AT INLET & BOOSTER PUMP WILL BOOST UP TO 100 PSI FOR BELT WASHING.
4. PIPE CONNECTIONS TO SKID MUST BE CONNECTED WITHOUT CAUSING ANY STRESS OR STRAIN ON PHOENIX SUPPLIED PIPES/SUPPORTS AND EQUIPMENT.
5. INCOMING ELECTRIC REQUIREMENT:
   BELT PRESS PANEL 600V/3PH/60HZ
6. A DRAIN PAN RUNS THE LENGTH AND WIDTH OF THE BELT PRESS THAT CATCHES FILTRATE AND BELT WASH WATER. THE DRAIN PAN IS PIPED WITH 4" PVC PIPE AND DISCHARGED TO SIDE OF SKID. APPROXIMATE WATER DISCHARGE IS 125 GPM. INSTALLER IS RESPONSIBLE FOR WATER DISPOSAL.
7. FOR THE BELT PRESS AND SKID WASH DOWN SPRAY, IT IS RECOMMENDED THAT THE INSTALLER PROVIDE A SLOPED FLOOR WITH DRAINS.

ALL DRAIN PANS & FEEDBOX ASSEMBLY ARE TO BE 304 S.S.. ALL COMPONENT MOUNTING HARDWARE TO BE 304 S.S. UNLESS OTHERWISE NOTED.
PRESS COMPONENTS ARE TO BE CARBON STEEL AND TO BE PREPARED AS FOLLOWS:

1. REMOVE ALL BURRS AND EXPOSED SHARP EDGES AFTER CUTTING AND/OR MACHINING
2. SANDBLASTED TO SSPC-SP-10 (NEAR WHITE)
3. 5 MILS MIN. FLAME SPRAYED ZINC
4. 7 MILS MIN. TNEMEC, HI-BUILD EPOXOLINE II, SERIES 66HS COLOR: GR29 (GRAY)

SKID IS TO BE CARBON STEEL AND PREPARED AS FOLLOWS:

1. SANDBLASTED TO SSPC-SP-6
2. 7 MILS MIN. TNEMEC, HI-BUILD EPOXOLINE II, SERIES 66HS COLOR: GR29 (GRAY)

ALL INTERCONNECTING EXTERNAL PIPING & WIRING BY OTHERS.

FOR CONSTRUCTION

REV	DESCRIPTION	BY	DATE
0	ISSUE FOR CONSTRUCTION	JT	02/08/19
B	CAN MAKE BLAT 5.5 WIDE DUE TO HOSE AND END FOR POLYMER INJ. RING	JT	01/25/19
A	PRELIMINARY ISSUE FOR SUBMITTAL	JT	12/19/18

PHOENIX PROCESS EQUIPMENT CO.

DRAWN BY: JT	ENGINEER	CHECKED BY/DATE	
SCALE: 1"=1'-0"	STYLE CODE	DATE: 02/08/2019	

TITLE: LC1200LS (SKID SYSTEM) GENERAL ARRANGEMENT
FOR: IQALUIT WWTP
IQALUIT, NUNAVUT, CANADA
DWG.NO. 18377LC-SK01
REV. 0

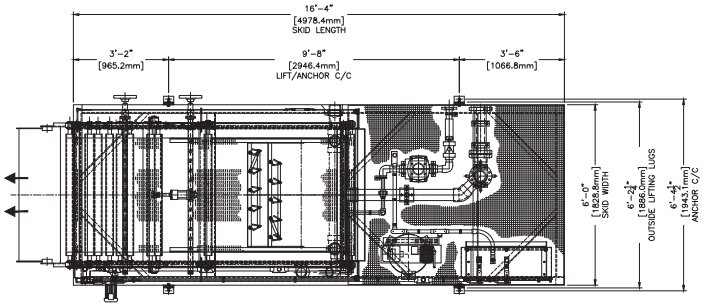

LC1200-LS PLAN VIEW WITH LIFTING POINT LOCATIONS

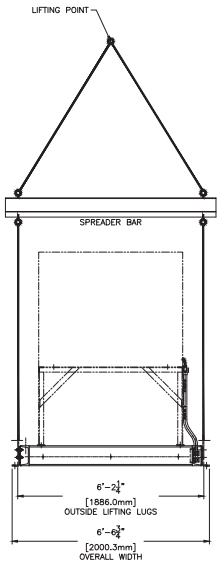

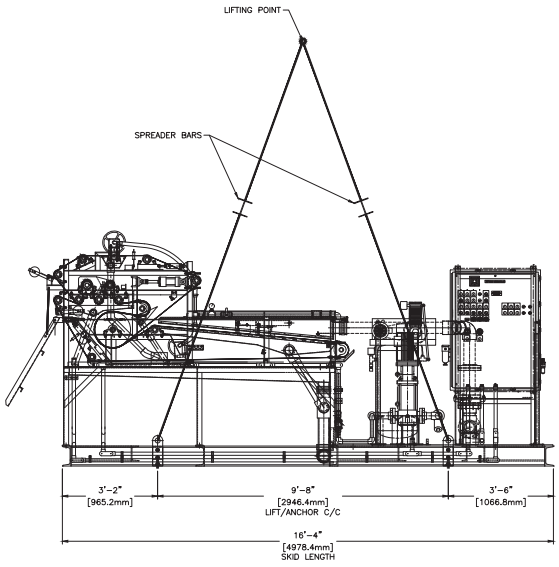

LC1200-LS END & SIDE ELEVATIONS WITH SUGGESTED LIFTING ARRANGEMENT

NOTES:

1. ALL CABLES, SHACKLES, ETC. SHOULD BE OF SUFFICIENT SIZE TO CARRY THE ENTIRE WEIGHT OF THE SKID ASSEMBLY.
2. SPREADER BARS MUST BE UTILIZED AS SHOWN WHEN LIFTING TO AVOID DAMAGE TO THE EQUIPMENT.

0	ISSUED FOR MANUAL		JT	05/08/19	PHOENIX PROCESS EQUIPMENT CO.
REV. REV			BY	DATE	TITLE LC1200-LS SKID SYSTEM
DRAWN JT	ENGINEER JT	CHECKED BY/DATE			LIFTING DIAGRAM
					FOR IQALUIT WWTP
SCALE	STYLE CODE	DATE 05/08/2019			IQALUIT, NUNAVUT, CANADA
					DWG.NO. 18377LC-LD REV. 0

GORBEL®
A CLASS ABOVE

Installation, Operation, & Maintenance Manual

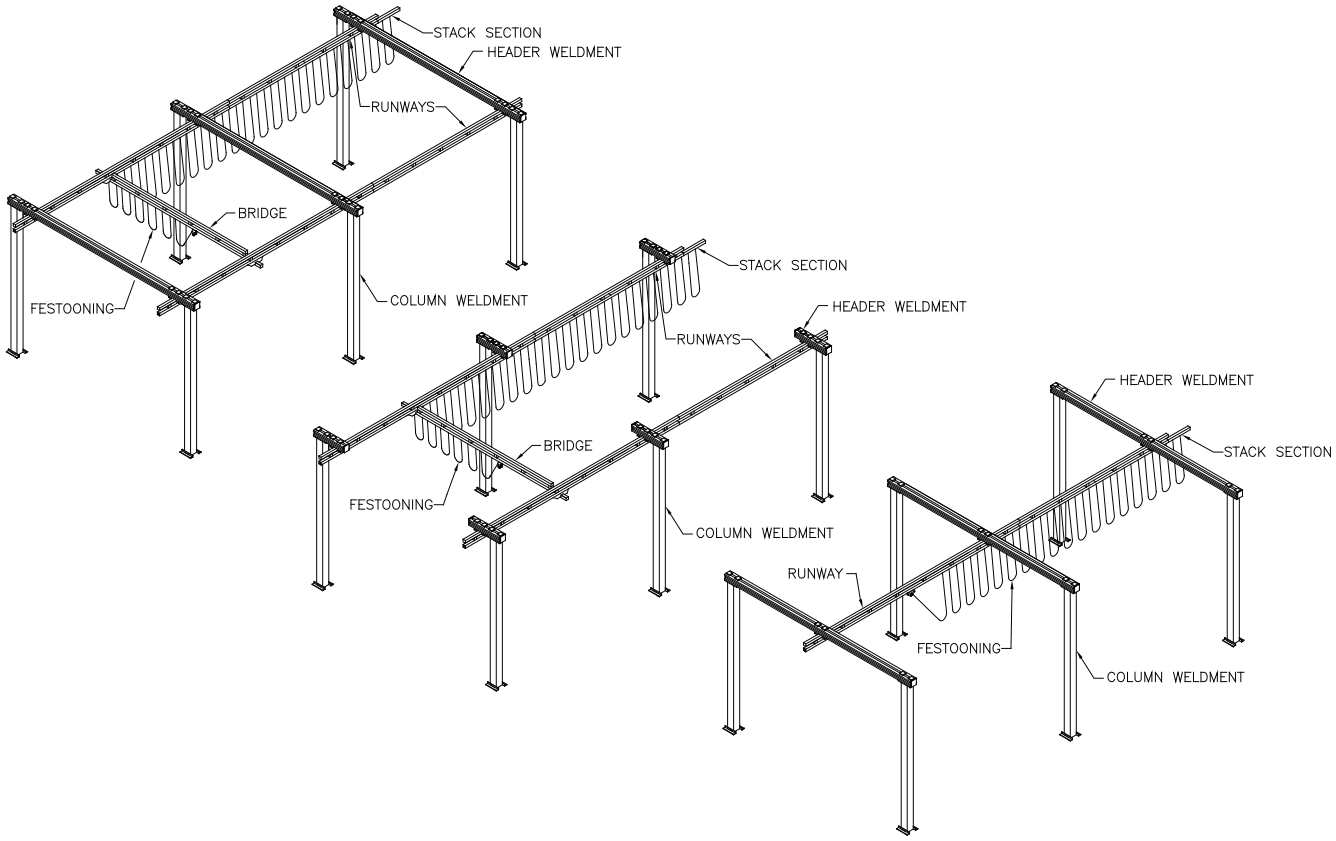

IMPORTANT!
DO NOT DESTROY

Free Standing Steel Work Station Bridge Crane

Gorbel® Customer Order No. / Serial No. _____

Gorbel® Dealer _____

_____

Date _____
Month **Year**

This page intentionally left blank.

TABLE OF CONTENTS

Introduction 1

Installation

- Step 1 - Pre-assembly 1-2
- Step 2 - Column Weldment Installation 2
- Step 3 - Header Weldment Installation 3
- Step 4 - Runway Installation 4-5
- Step 5 - Bridge and End Truck Installation 6-10
- Step 6 - Hoist Trolley Installation 10-12
- Step 7 - Festoon Stack Section Installation 13
- Step 8 - Festooning Installation 14-16
- Step 9 - Bridge and Runway Tagline Installation 17
- Step 10 - Conductor Bar Installation (Optional) 18-25
- Step 11 - Optional Accessories 26-27
- Step 12 - Final Steps 27

Sway Bracing 27

Crane Operator Instructions 28

General Safety Suggestions 28

Limited Warranty 29

Inspection and Maintenance Schedule 30

Questions? Concerns? Comments? Please call (800) 821-0086 (US and Canada) or (585) 924-6262 (outside US).

This page intentionally left blank.

INTRODUCTION

Thank you for choosing a Gorbel® Free Standing Work Station Crane to solve your material handling needs. The innovative design and heavy-duty construction of Gorbel® Work Station Cranes will provide a superior quality product. All Gorbel® cranes are pre-engineered for powered hoist operation. The hoist weight allowance is 15% of the crane capacity (for example, a crane rated for 1000 pounds, allows for a 1000-pound live load plus 150 pounds for the weight of the hoist). There is also an allowance of 25% of the crane capacity for impact caused by hoist use. Gorbel® Work Station Cranes will provide many years of dependable service by following the installation and maintenance procedures described herein.

Dimensions contained in this installation manual are for reference only and may differ for your particular application. Please refer to the enclosed General Arrangement Drawing for actual dimensions.

Normal safety precautions: These include, but are not limited to:

- Checking for obstructions in crane travel
- Checking that all bolts and threaded rods are tight and have lockwashers
- Making sure that endstops are in place
- Making sure that festooning cannot be snagged or pinched, whether it is electric or pneumatic
- For additional safety precautions, see page 26.

WARNING

A minimum of a 6”-thick reinforced concrete floor is required. Gorbel, Inc., assumes no responsibility for adequacy or integrity of the mounting surface. Support assemblies are designed to AISC (American Institute of Steel Construction) specifications. If no movement of the support assembly is required, additional bracing (not included) to the building steel structure is recommended. See back cover for maintenance schedule.

WARNING

Equipment described herein is not designed for, and should not be used for, lifting, supporting or transporting humans. Failure to comply with any one of the limitations noted herein can result in serious bodily injury and/or property damage. Check State and Local regulations for any additional requirements.

WARNING

Crane cannot be utilized as a ground: A separate ground wire is required. For example, systems with 3-phase power require three conductors plus one ground wire.

WARNING

Reference the American Institute of Steel Construction (AISC) Manual of Steel Construction (9th edition), Part 5, Specification for Structural Joints using ASTM A325 or A490 Bolts (section 8.d.2) for the proper procedures to follow when using any torque tightening method.

INSTALLATION

STEP 1 - PRE-ASSEMBLY

➡ **TIP:** Packing list can be found in plastic pocket attached to hardware box: General Arrangement Drawing can be found inserted in this installation manual.

➡ **TIP:** Recommended guidelines to help you determine anchor bolt size are supplied on page 2 (anchor bolts are not included).

1.1 Check packing list to make sure correct quantity of parts is included.

1.2 Tools and materials (by others) typically needed to assemble crane are as follows:

- Mallet
- Chalk line
- Hand tools
- Shop brush
- Steel shims
- Large square
- Heavy duty drill
- Torque wrench (able to torque up to 95 ft.-lbs.)
- Tape measure
- Ladders/man lifts
- Leveling tools (transit, laser level, water level, etc.)
- Lifting device to lift heavy runways, bridges, headers
- Anchor bolts (by others, see 1.3 for guidelines in determining size)

STEP 1 - PRE-ASSEMBLY (CONTINUED)

1.3 Recommended guidelines for determining bolt size and type:

Anchor bolts must:

- be 3/4” in diameter.
- be grade 5 or better.
- be embedded **at least** 4” into floor, not to exceed 3/4 of floor depth (***diagram 1A***).

Note: **A minimum 6”-thick reinforced concrete floor is required.**

- have a **minimum** of two threads above nut.

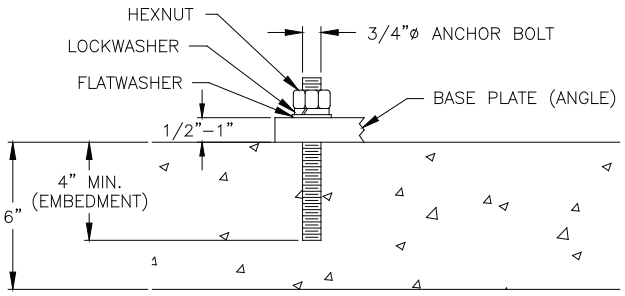

Diagram 1A. *Typical anchor bolt embedment.*

Note: Free Standing Work Station Bridge Crane foundation requirements are based on a soil pressure of 2500# per square foot. Concrete recommendations for the Free Standing Work Station Bridge Crane foundation is a minimum of 3000# per square inch of compressive concrete. Consult factory for exact requirement depending on anchor bolt load.

Note: Chemical (epoxy) anchor bolts are recommended.

STEP 2 - COLUMN WELDMENT INSTALLATION

➡ **IMPORTANT:** Be sure that column cap plate (top of column) is oriented in direction of header weldment.

2.1 Lay out and mark on floor exact position of column weldments prior to proceeding with installation (refer to enclosed **General Arrangement Drawing** for recommended dimensions and column weldment location).

2.2 Position first column weldment in place. Orient column cap plate (top of column) (***diagram 2A***).

2.3 While supporting column weldment, drill holes in concrete floor using pre-drilled holes in column weldment base as a guide (use drill bit size recommended by anchor bolt manufacturer). Vacuum or brush away cement dust.

2.4 Install anchor bolts (not included) and hardware according to manufacturer’s installation directions and requirements.

2.5 Check to see if column weldment is plumb. If column weldment is not plumb, loosen anchor bolt nuts and place steel shims (not included) or grout (not included) under base of column weldment until plumb. After column weldment is plumb, tighten all nuts.

2.6 Install remaining column weldments (repeat Steps 2.2 through 2.5).

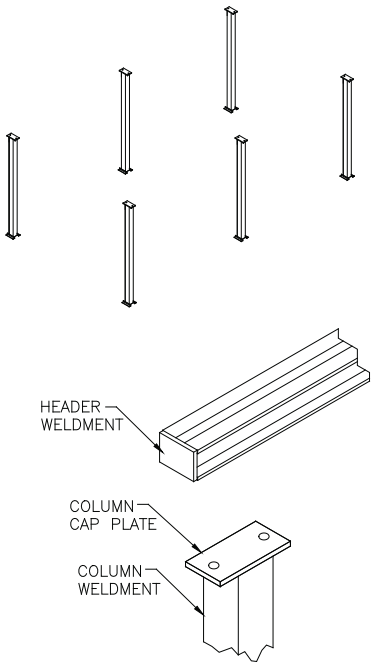

Diagram 2A. *Orienting column cap plate.*

ATTENTION

Support assemblies can be bolted together on the floor then lifted into position to bolt to floor if you have an area large enough to assemble them.

STEP 3 - HEADER WELDMENT INSTALLATION

IMPORTANT: Threaded rod for header weldment installation is either the same length or shorter than threaded rod used for runway hangers; do not confuse the two.

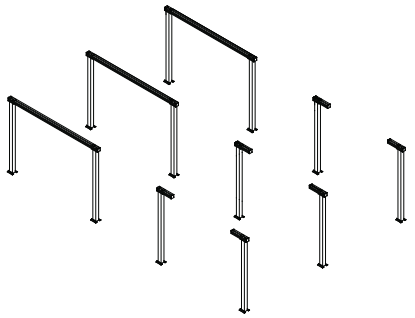

3.1 Lift and position header weldment onto two secured column weldments (refer to enclosed **General Arrangement Drawing** for recommended dimensions and header weldment location). Using clamp plates and hardware provided, attach header weldment to column weldment (refer to ***diagram 3A*** for 2-bolt column cap plate, ***diagram 3B*** for 4-bolt column cap plate and ***diagram 3C*** for 6-bolt column cap plate).

Note: For galvanized systems, hardware is not galvanized. You will need to use cold galvanizing spray provided on any unplated/galvanized hardware.

3.2 Tighten hardware 95 ft.-lbs. of torque per nut.

WARNING

There must be a minimum of two threads showing at both ends of the threaded rod.

TORQUE CHART	
*Bolt Diameter	Torque
1/2”	50 ft.-lb.
5/8”	95 ft.-lb.
3/4”	150 ft.-lb.

Chart 3A. Torque Chart. *Note: All bolts shall be SAE Grade 5 or equal.

WARNING

Torque values in this chart reflect standard values. Some Gorbel® components require lower values and they are specified throughout this manual. Only use this chart when no value is called out.

3.3 Install remaining header weldments (repeat Steps 3.1 through 3.2).

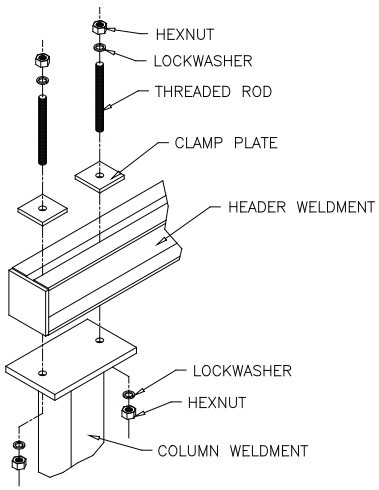

Diagram 3A. *Installing header weldments on 2-bolt column cap plates.*

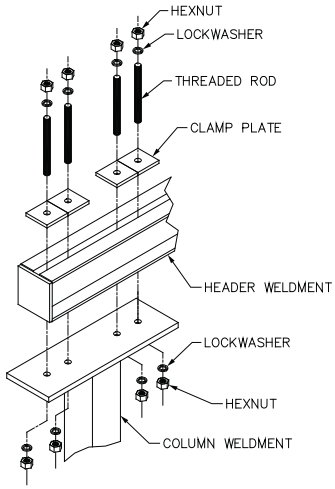

Diagram 3B. *Installing header weldments on 4-bolt column cap plates.*

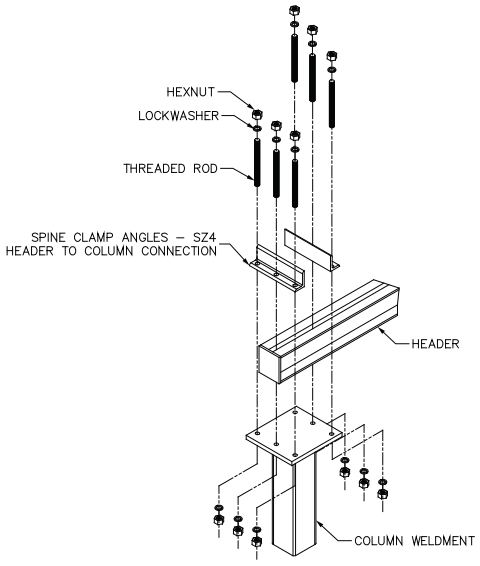

Diagram 3C. *Installing header weldments on 6-bolt column cap plates.*

STEP 4 - RUNWAY INSTALLATION

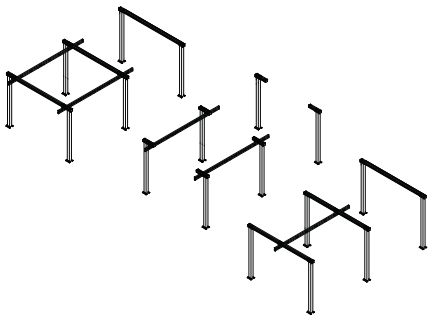

IMPORTANT: Keep in mind that splice joints must be within 48” of header center.

IMPORTANT: The runways must be parallel to allow the crane to move (especially in larger capacities).

WARNING

The locations of the runways cannot deviate from the locations shown on the drawing. Changing the locations will void the design and the warranty,

Runways to Header Weldment Connections

4.1 Suspend runway section under installed support structure (refer to enclosed **General Arrangement Drawing** for recommended dimensions and runway location).

4.2 Using spine clamp angles, clamp plates, and hardware provided, attach runway section to header weldment (***diagram 4A***, ***4B*** or ***4C***).

Note: For galvanized systems, hardware is not galvanized. You will need to use cold galvanizing spray provided on any unplated/galvanized hardware.

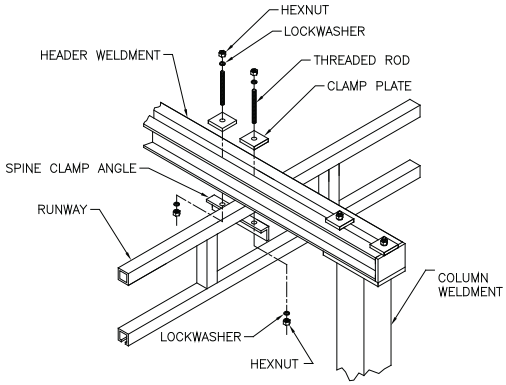

Diagram 4A. *Attaching runway to header weldment (standard hangers).*

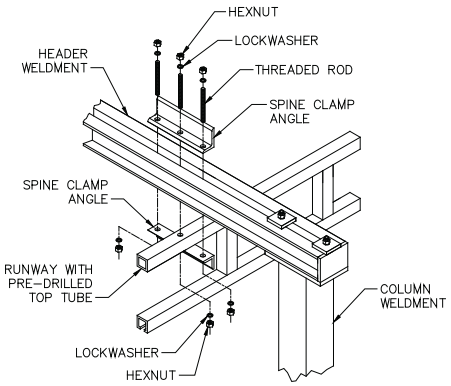

Diagram 4B. *Attaching runway to header weldment (3-hole hangers).*

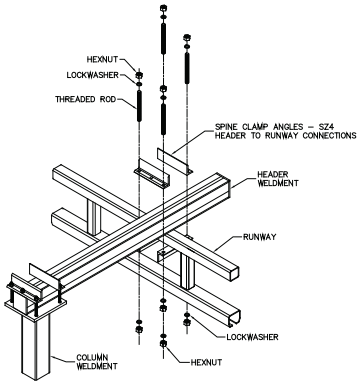

Diagram 4C. *Attaching runway to header weldment (Seismic Zone IV)*

WARNING

If 3-hole hangers are being used, one threaded rod must be secured through the runway top tube. Failure to do so may result in the runway falling to the floor.

4.3 Check to make sure that runway is level (within +/-1/32”) and parallel to opposite runway.

WARNING

Do not deviate from the bridge “span” dimension shown on the General Arrangement drawing. Bridge “span” is the distance between runways (centerline to centerline).

4.4 Tighten hanger hardware to full compression of lockwasher, do not exceed 50 ft.-lbs.

WARNING

There must be a minimum of two threads showing at both ends of the threaded rod.

4.5 If you **DO NOT** have additional runways to install, go to Step 4.13, on page 5.

Otherwise proceed to Step 4.6 on page 5.

STEP 4 - RUNWAY INSTALLATION (CONTINUED)

IMPORTANT: To install additional runway sections, runways must be spliced together.

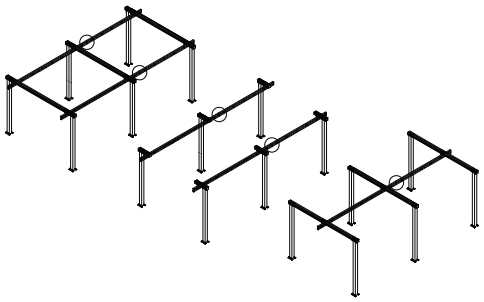

WARNING

Do not deviate from the dimensions specified in the General Arrangement Drawing for maximum space from header center to splice joint. Typically 48” maximum.

Splice Joint Instructions

4.6 Attach splice hardware to all joints. Slide splice joint over track portion of installed runway.

4.7 Lift next runway section into position for splicing to previously installed runway, bringing runway ends together. Maximum gap between ends of load carrying flange shall be less than or equal to 1/16” (1.5mm). Center lower splice joint over the two track ends (***diagram 4D***).

4.8 Place a truss splice plate on each side of runway truss tube and bolt into place (***diagram 4D***). “Hand tighten” bolts.

Note: Do not torque bolts until track has been attached to header weldment and adjusted for smooth transition - Steps 4.9 through 4.11.

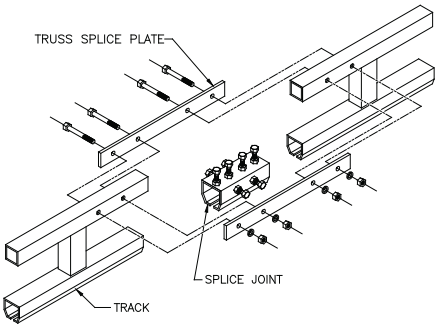

Diagram 4D. *Splicing tracks together.*

4.9 Track running-surface misalignment at joints shall be adjusted within 1/32” (1mm) when installed.

4.10 To attach runway to header weldment, repeat Steps 4.2 through 4.4, on page 4.

4.11 To adjust track for smooth transition, use bolts along **top of splice joint** to force track down onto lower flanges of splice. Check to see that transition from one track to the other is smooth: no raised areas to inhibit trolley or end truck operation. Use bolts along the **sides of splice joint** to align track laterally. Check to see that track portion of runway is horizontally and vertically flush: transition from one track to the other is smooth. Tighten jam nuts to lock bolts in place (***diagram 4E***).

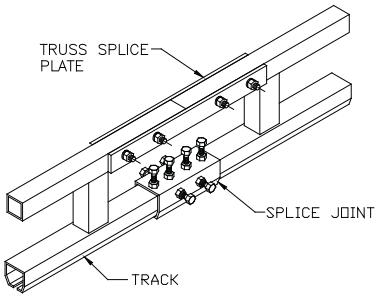

Diagram 4E. *Spliced tracks.*

WARNING

Do not over-tighten bolts on splice joints; this may permanently deform track and cause binding.

4.12 Tighten nuts on truss splice plate to full compression of lockwasher, do not exceed 40 ft.-lbs.

4.13 Repeat Steps 4.6 through 4.12 for remaining runways.

4.14 Install end stops (***diagram 4F***) (molded bumper with thru bolt) to runway end opposite festooning end (leaving festooning end open for bridge installation).

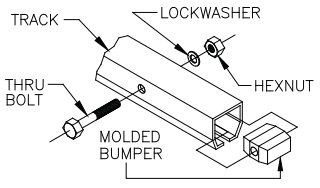

Diagram 4F. *Installing end stop.*

STEP 5 - BRIDGE AND END TRUCK INSTALLATION

➡ **IMPORTANT:** Your end truck may vary slightly from what is shown, but the installation instructions for the end truck most resembling what you have remain the same.

➡ **IMPORTANT:** ***ONLY ONE*** end truck is clamped to the bridge; the other is not. The clamping end truck must be oriented with the festooning side of the track (refer to Step 8, page 14, for festooning). The non-clamping end truck allows adjustment for any runway misalignment.

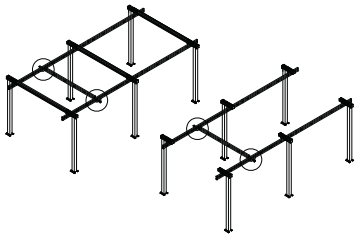

5.1 Make sure end stops have been installed in the runway end opposite the festooning (leaving festooning end open for bridge installation).

5.2 Prior to adding bridge, clean inside flanges of track with clean, dry cloth (**do not use any kind of cleaning solution**) to remove grit or debris that may have collected during shipping, storage, or installation.

5.3 If your end trucks look like:

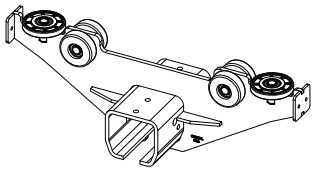

(Shipped Assembled)
go to Step 5.4

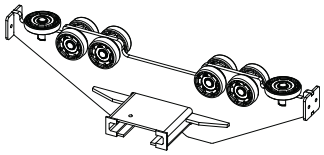

(Shipped Assembled)
go to Step 5.7

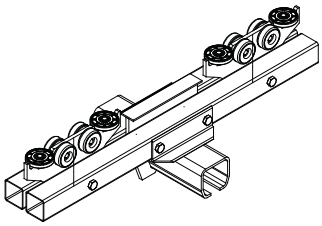

(Shipped Unassembled)
go to Step 5.19

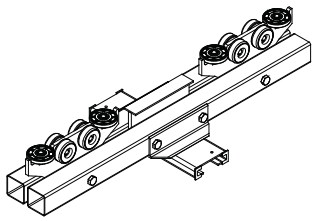

(Shipped Unassembled)
go to Step 5.29

Standard End Trucks

➡ **For Steel Bridges**

5.4 Slide an end truck over festooning end of bridge (refer to the **General Arrangement Drawing** for exact end truck location, end truck sleeve must be 1” (+/- 1/4”) from first vertical) and clamp into place with hardware provided (***diagram 5A***).

Note: The festooning end of the bridge will have a hole that is inset the same or greater distance from the end of the bridge than the hole in the opposite end of the bridge.

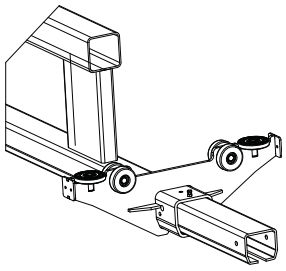

Diagram 5A. *Installing standard clamping end truck. See **TIP**.*

5.5 Slide and position the non-clamping end truck on the other end of bridge (refer to the **General Arrangement Drawing** for exact location, end truck sleeve must be 1” (+/- 1/4”) from first vertical).

5.6 Go to Step 5.40, on page 10.

➡ **For Non-Coped Aluminum Bridges**

5.7 Make sure nylon spacers are attached to end truck before installing end truck on bridge.

5.8 Slide an end truck over festooning end of bridge (refer to the **General Arrangement Drawing** for exact end truck location) and clamp into place (***diagram 5B***).

Note: The festooning end of the bridge will have a hole that is inset the same or greater distance from the end of the bridge than the hole in the opposite end of the bridge.

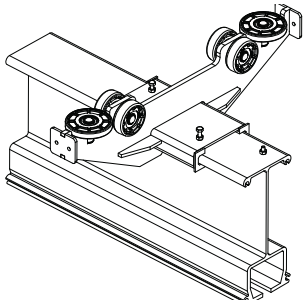

Diagram 5B. *Installing clamping end truck on aluminum bridge. See **TIP**.*

5.9 Slide and position the non-clamping end truck on the other end of bridge (refer to the **General Arrangement Drawing** for exact location).

5.10 Go to Step 5.14, on page 7.

STEP 5 - BRIDGE AND END TRUCK INSTALLATION (CONTINUED)

IMPORTANT: Your end truck may vary slightly from what is shown, but the installation instructions for the end truck most resembling what you have remain the same.

IMPORTANT: ***ONLY ONE*** end truck is clamped to the bridge; the other is not. The clamping end truck must be oriented with the festooning side of the track (refer to Step 8, page 14, for festooning). The non-clamping end truck allows adjustment for any runway misalignment.

Standard End Trucks (continued)

For Coped Aluminum Bridges

5.11 Make sure nylon spacers are attached to end truck before installing end truck on bridge.

5.12 Slide an end truck over coped brackets on the festooning end of bridge (refer to the **General Arrangement Drawing** for exact end truck location) and clamp into place (***diagram 5C***).

Note: The festooning end of the bridge will have an end stop hole that is inset the same or greater distance from the end of the bridge than the end stop hole in the opposite end of the bridge.

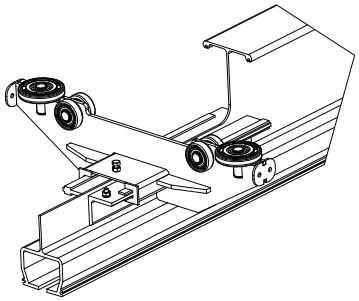

Diagram 5C. *Installing clamping end truck on coped aluminum bridge. See **TIP**.*

5.13 Slide and position the non-clamping end truck on the other end of bridge (refer to the **General Arrangement Drawing** for exact location).

5.14 At both ends of bridge, install a shear lug bolt in hole at top of bridge (or in the coped brackets) to prevent bridge from sliding out of end trucks (***diagrams 5B*** & ***5C***).

WARNING

Failure to install shear lug bolt assemblies may result in the bridge, hoist, and load falling to the floor.

Note: Install bolts with head of bolt on **underside** of top flange with threads pointing up.

5.15 **If a tow arm is not** being utilized on the end truck, go to Step 5.40, on page 10.

If a tow arm is being utilized on the end truck, go to Step 5.16.

Note: Festoon tow arms are **not** recommended for use on 4000# systems or systems with extended end trucks. They are **not necessary** on systems with festoon trolleys.

5.16 Assemble the tow arm weldment on the end truck that will be located on the festooning side of the system (***diagram 5D***). Be sure that the tow arm is located on the festooning side of the end truck itself when installed.

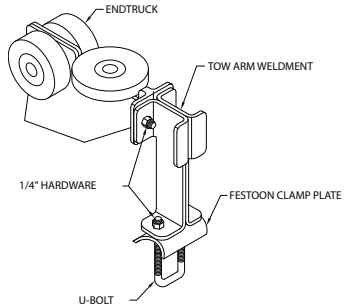

Diagram 5D. *Installing tow arm on end truck.*

5.17 Assemble the tow arm spacer on the end truck located at the opposite end of the bridge (***diagram 5E***). Be sure the spacer is mounted on the same side of the end truck as the tow arm weldment.

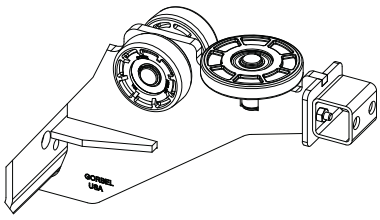

Diagram 5E. *Installing tow arm spacer on end truck.*

5.18 After the bridge has been installed, loosen the nuts on the end of the U-bolt enough to thread cable/air hose between the two legs of the U-bolt and the festoon clamp plate. Secure cable/air hose by tightening nuts at the end of the U-bolt, forcing the festoon clamp plate snug against the cable/air hose.

STEP 5 - BRIDGE AND END TRUCK INSTALLATION (CONTINUED)

➡ **IMPORTANT:** ***ONLY ONE*** end truck is clamped to the bridge; the other is not. The clamping end truck must be oriented with the festooning side of the track (refer to Step 8, page 14, for festooning). The non-clamping end truck allows adjustment for any runway misalignment.

➡ **IMPORTANT:** Extended end truck should be assembled before attaching to bridge.

Extended End Trucks

➡ **For Steel Bridges**

5.19 Locate extended end truck tubes, support weldment, wheel plates, and required hardware.

5.20 Slide an extended end truck tube halfway through each side of the end truck support weldment. Insert a support bolt in each hole of the support weldment (***diagram 5F***).

5.21 Place nylock nut on end of each bolt and tighten snug against end truck support weldment.

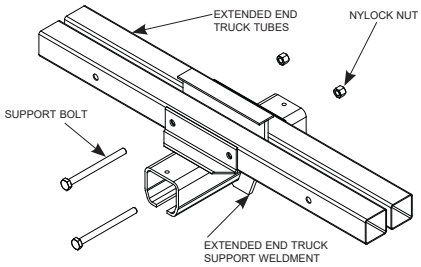

Diagram 5F. *Assembling extended end truck.*

WARNING

Do not "over-tighten" nylock nut; this could cause damage to end trucks. Nylock nut can only be used once. If this item is disassembled, then nut must be replaced.

5.22 Place a wheel plate between the end truck tubes. Insert 5/8" dia. bolt into first tube, through the wheel plate and out the opposite tube (***diagram 5G***).

5.23 Place nylock nut on end of bolt and tighten snug against extended end truck tube.

Note: When tightening this lock nut make sure that wheel plate pivots freely.

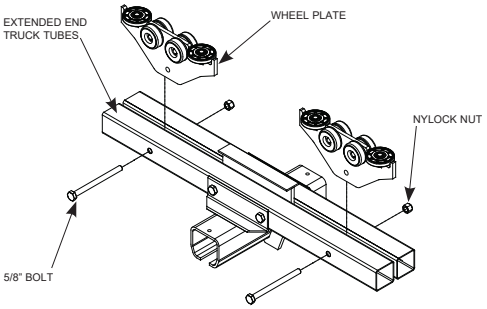

Diagram 5G. *Installing wheel plates.*

WARNING

Do not over-tighten nylock nut; this could cause damage to end trucks. Nylock nut can only be used once. If this item is disassembled, then nut must be replaced.

5.24 Repeat steps 5.22 and 5.23 for remaining wheel plate.

5.25 Repeat steps 5.19 to 5.24 for remaining extended end trucks.

5.26 Slide an end truck over festooning end of bridge (refer to the **General Arrangement Drawing** for exact end truck location, end truck sleeve must be 1" (+/- 1/4") from first vertical) and clamp into place (***diagram 5H***).

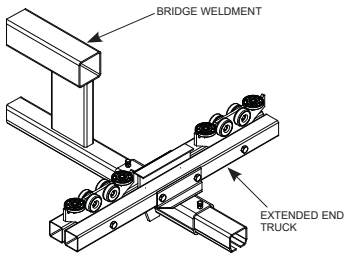

Diagram 5H. *Installing extended clamping end truck. See **TIP**.*

Note: The festooning end of the bridge will have a hole that is inset the same or greater distance from the end of the bridge than the hole in the opposite end of the bridge.

5.27 Slide and position the non-clamping end truck on the other end of bridge (refer to the **General Arrangement Drawing** for exact location, end truck sleeve must be 1" (+/- 1/4") from first vertical).

5.28 Go to Step 5.40, on page 10.

STEP 5 - BRIDGE AND END TRUCK INSTALLATION (CONTINUED)

➡ **IMPORTANT:** ***ONLY ONE*** end truck is clamped to the bridge; the other is not. The clamping end truck must be oriented with the festooning side of the track (refer to Step 8, page 14, for festooning). The non-clamping end truck allows adjustment for any runway misalignment.

➡ **IMPORTANT:** Extended end truck should be assembled before attaching to bridge.

Extended End Trucks (continued)

➡ **For Aluminum Bridges**

5.29 Make sure nylon spacers are attached to end truck before installing end truck on bridge.

5.30 Locate extended end truck tubes, support weldment, wheel plates, and required hardware.

5.31 Slide an extended end truck tube halfway through each side of the end truck support weldment. Insert a support bolt in each hole of the support weldment, passing through both end truck tubes (***diagram 5I***).

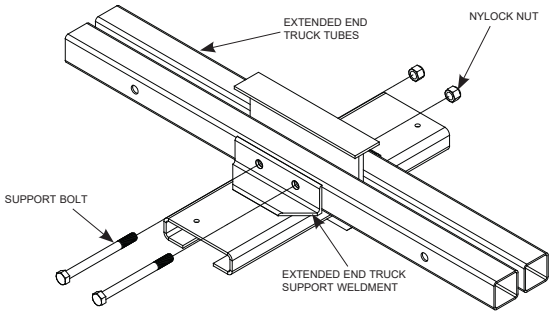

Diagram 5I. *Assembling extended end truck.*

5.32 Place nylock nut on end of each bolt and tighten snug against end truck support weldment.

WARNING

Do not over-tighten nylock nut; this could cause damage to end trucks. Nylock nut can only be used once. If this item is disassembled, then nut must be replaced.

5.33 Place a wheel plate between the end truck tubes. Insert 1/2" dia. bolt into first tube, through the wheel plate and out the opposite tube (***diagram 5J***).

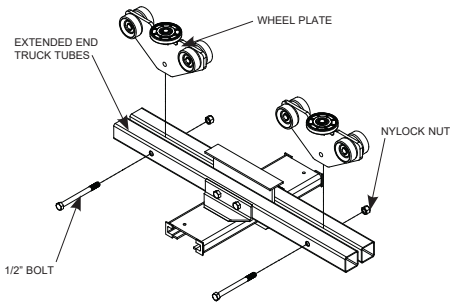

Diagram 5J. *Installing wheel plates.*

5.34 Place nylock nut on end of bolt and tighten snug against extended end truck tube.

Note: When tightening this lock nut make sure that wheel plate pivots freely.

WARNING

Do not over-tighten nylock nut; this could cause damage to end trucks. Nylock nut can only be used once. If this item is disassembled, then nut must be replaced.

5.35 Repeat steps 5.33 and 5.34 for remaining wheel plate.

5.36 Repeat steps 5.29 to 5.35 for remaining extended end trucks.

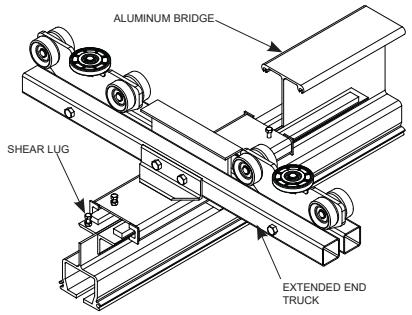

Diagram 5K. *Installing extended clamping end truck. See* ***TIP****.*

5.37 Slide an end truck over festooning end of bridge (refer to the **General Arrangement Drawing** for exact end truck location) and clamp into place (***diagram 5K***).

Note: The festooning end of the bridge will have a hole that is inset the same or greater distance from the end of the bridge than the hole in the opposite end of the bridge.

5.38 Slide and position the non-clamping end truck on the other end of bridge (refer to the **General Arrangement Drawing** for exact location).

5.39 At both ends of bridge, install a shear lug bolt in the hole in the coped brackets to prevent bridge from sliding out of end trucks (***diagram 5K***).

Note: Install bolts with head of bolt on **underside** of top flange with threads pointing up.

WARNING

Failure to install shear lug bolt assemblies may result in the bridge, hoist, and load falling to the floor.

STEP 5 - BRIDGE AND END TRUCK INSTALLATION (CONTINUED)

IMPORTANT: ***ONLY ONE*** end truck is clamped to the bridge; the other is not. The clamping end truck must be oriented with the festooning side of the track (refer to Step 8, page 14, for festooning). The non-clamping end truck allows adjustment for any runway misalignment.

Extended End Trucks (continued)

5.40 Install an end stop to the end of the bridge opposite the festooning (***diagrams 5L*** or ***5M***).

WARNING

Do not over-tighten nylock nut; this could cause damage to bridge. Nylock nut can only be used once. If this item is disassembled, then nut must be replaced.

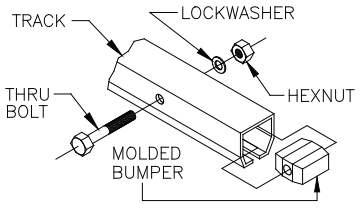

Diagram 5L. *Installing end stop.*

5.41 Lift bridge up to runways and simultaneously insert end trucks into open ends of runways. Make sure festooning end of bridge is oriented with festooning runway. For information on festooning, refer to Step 8, on page 14.

5.42 **Immediately** install end stops in open ends of runways to prevent bridge from exiting runways (***diagrams 5L*** or ***5M***).

5.43 Roll bridge down length of runways to check for smooth travel. If travel is not smooth, check track for level and parallel (Step 4.3, page 4) and check to make sure that only one end truck on bridge is clamped.

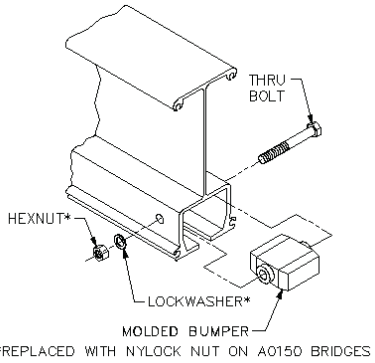

Diagram 5M. *Installing end stop.*

STEP 6 - HOIST TROLLEY INSTALLATION

6.1 If your hoist trolley looks like:

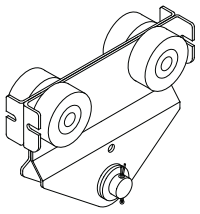

(shipped assembled)
go to Step 6.2

OR

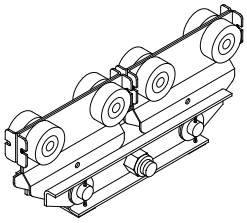

(shipped assembled)
go to Step 6.13

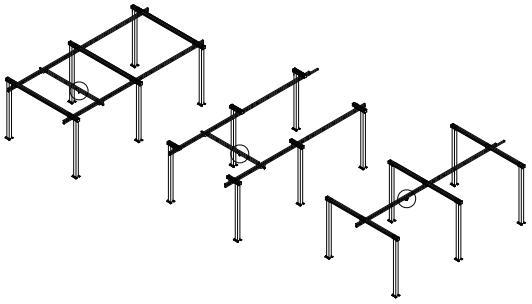

150#, 250#, 500#, 1000# and 2000# Hoist Trolley

6.2 Clean inside flanges of track with a clean, dry cloth (**do not use any kind of cleaning solution**) to remove grit or debris that may have collected during shipping, storage, or installation.

6.3 Be sure end stop is installed opposite the festooning end of bridge.

6.4 Attach hoist to hoist trolley by snapping hoist suspension hook over the trolley saddle clevis pin of hoist trolley.

STEP 6 - HOIST TROLLEY INSTALLATION (CONTINUED)

6.5 If hoist suspension hook is too large or hoist has a suspension device other than a hook, remove trolley saddle clevis pin and install suspension device (by others). Insert clevis pin back into place. Slide washers on clevis pin and insert cotter pin through trolley saddle clevis pin (***diagrams 6A***, ***6B***, and ***6C***).

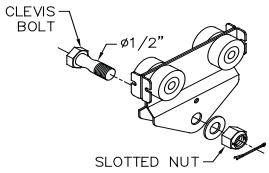

Diagram 6A. *Installing hoist on 150#-250# hoist trolley.*

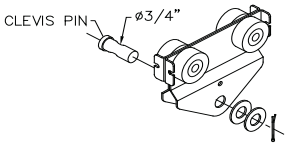

Diagram 6B. *Installing hoist on 500# hoist trolley.*

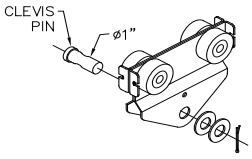

Diagram 6C. *Installing hoist on 1000#-2000# hoist trolley.*

6.6 Bend **<u>both legs</u>** of cotter pin (***diagram 6D***).

WARNING

Fully bend both legs of cotter pin (***diagram 6D***). **If cotter pin is cracked or fatigued it must be replaced.**

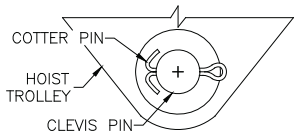

Diagram 6D. *Installing cotter pin through trolley saddle clevis pin.*

6.7 **If a tow arm <u>is not</u>** being utilized on the trolley, go to Step 6.12.

If a tow arm <u>is</u> being utilized on the trolley, go to Step 6.8.

Note: Festoon tow arms are **<u>not</u>** recommended for use on 4000# systems or systems with extended end trucks. They are **<u>not necessary</u>** for systems with festoon trolleys.

6.8 Assemble the tow arm weldment on the festooning end of the hoist trolley (***diagram 6E***).

6.9 After the hoist trolley has been installed, loosen nuts on end of U-bolt enough to thread cable/air hose between the two legs of the U-bolt and festoon clamp plate. Secure cable/air hose by tightening nuts at the end of the U-bolt, forcing the festooning clamp plate snug against the cable/air hose.

6.10 Roll hoist trolley into open end of track on bridge.

6.11 Install end stop on the festooning end of bridge (***diagram 4E***, on page 5).

6.12 If you have tagline, go to Step 9, on page 17.

If you **do not** have festooning, go to Step 11, on page 25.

If you **do not** have a festoon stack section, go to Step 8, on page 14.

Otherwise, go to Step 7, on page 13.

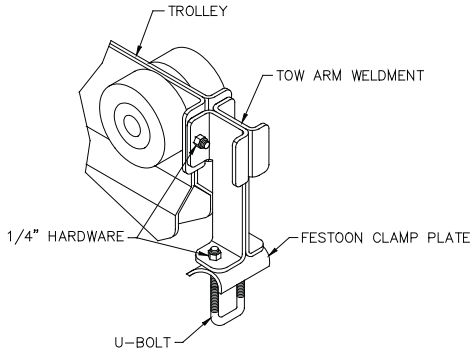

Diagram 6E. *Installing tow arm on trolley.*

STEP 6 - HOIST TROLLEY INSTALLATION (CONTINUED)

Loadbar Hoist Trolley, 4000# Steel / 4000# Aluminum

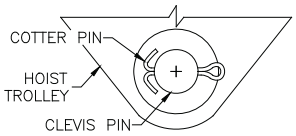

Diagram 6F. *Cotter pin installation.*

6.13 Clean inside flanges of track with a clean, dry cloth (**do not use any kind of cleaning solution**) to remove grit or debris that may have collected during shipping, storage, or installation.

6.14 Be sure end stop is installed opposite the festooning end of bridge.

6.15 Bend **both legs** of all cotter pins (***diagram 6F***).

WARNING
Fully bend both legs of cotter pins (***diagram 6F***). **If cotter pins are cracked or fatigued, they must be replaced.**

6.16 Attach hoist to hoist trolley by snapping hoist suspension hook over the clevis bolt (center bolt) on hoist trolley loadbar.

WARNING
Hang hoist from clevis bolt (center bolt) of hoist trolley only.

6.17 If hoist suspension hook is too large or hoist has a suspension device other than a hook, remove clevis bolt and install suspension device (by others). Insert clevis bolt back into place. Place nylock nut on end of bolt and tighten (***diagram 6G***).

WARNING
Be sure to tighten nut on the clevis bolt (center bolt) of hoist trolley. **Do not over-tighten nylock nut**; this could cause damage to trolleys. Nylock nut on clevis bolt should only be used once. If this item is disassembled, then nut must be replaced.

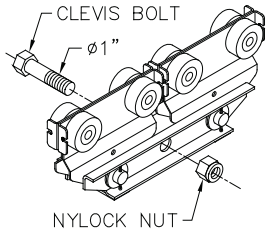

Diagram 6G. *Installing hoist on a load bar hoist trolley.*

6.18 Roll hoist trolley into open end of track on bridge.

6.19 Install end stop on festooning end of bridge (***diagram 4E***, on page 5).

6.20 If you have tagline, go to Step 9, on page 17.

If you **do not** have festooning, go to Step 11, on page 25.

If you **do not** have a festoon stack section, go to Step 8, on page 14.

Otherwise go to Step 7, on page 13.

STEP 7 - FESTOON STACK SECTION INSTALLATION

TIP: Festoon stack section allows festooning to stack up at the end of the system, permitting full use of runway.

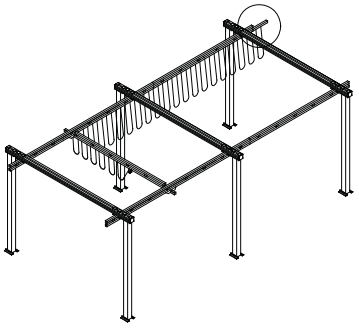

7.1 Remove end stop on festooning end of runway.

For All Systems With Festoon Gliders, or Systems With Festoon Trolleys and 1000, 2000, or 4000 Series Track (*diagram 7A*)

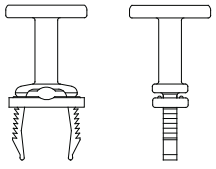

Festoon Glider

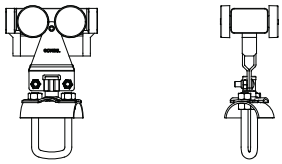

Festoon Trolley

7.2 Slide festoon stack section over open end of runway.

7.3 Re-install end stop (***diagram 7A***).

7.4 Use leveling screws located at top of festoon stack section to align it with the runway.

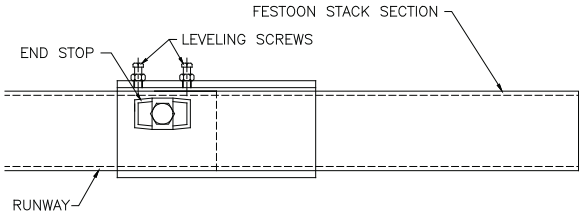

Diagram 7A. *Installing festoon stack section.*

For Systems With Festoon Trolleys and 250 or 500 Series Track (*diagram 7B*)

Note: Welding is required to attach the festoon stack section to the runway when using festoon trolleys with 250 or 500 series track.

7.5 Slide festoon stack section over open runway end.

WARNING

Do not over-tighten leveling screws; this will cause permanent damage to the track.

7.6 Use leveling screws located at top of festoon stack section to align it with runway.

7.7 Weld festoon stack section to runway at specified locations (***diagram 7B***).

WARNING

All welds must meet American Welding Society (AWS) specification D1.1 using E70xx electrodes.

Note: Because trolleys are too large to roll under the end stop on the 250 and 500 series track, the end stop and accompanying hardware (which held the festoon stack section to the runway) is positioned at the end of the festoon stack section. To prevent festoon stack section from sliding off the runway, the festoon stack section is welded.

7.8 Install end stop (removed in step 7.1) in end of festoon stack section (***diagram 7B***).

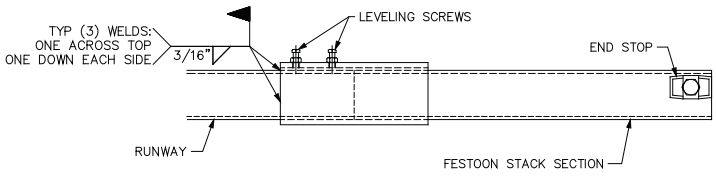

Diagram 7B. *Welding festoon stack section on 250-500# series track.*

STEP 8 - FESTOONING INSTALLATION

TIP: Festoon gliders are comprised of a glider body (with upper saddle) and a lower saddle (a separate piece that clips onto the glider body).

TIP: Enough carriers (festoon gliders or festoon trolleys) are supplied to support festoon cable every 6' on runways and every 3' on bridges.

Note: Every 6' on vacuum hose trolley.

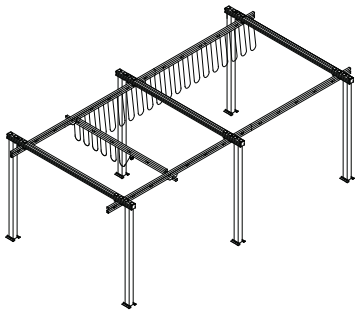

8.1 If you are using:

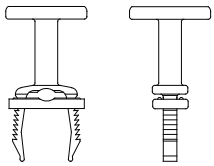

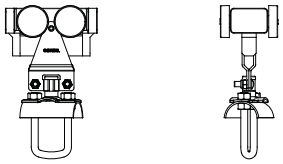

festoon gliders, go to Step 8.2 **festoon trolleys**, go to Step 8.8

Festoon Gliders (Steel Bridges / Runways only)

8.2 Slide festoon gliders through open end of the **bridge** that corresponds with festooning on runway. Space festoon gliders every 3'-0" along bridge.

8.3 Slide festoon clamp into place at festooning end of bridge and tighten clamp bolt (***diagram 8A***).

Note: Rotate clamp 90º to be perpendicular to bridge to avoid interference with column.

8.4 Install end stop (molded bumper with thru bolt) in open end of bridge (***diagram 8B***).

8.5 Slide festoon gliders into end of **runway** track (on festooning side of runway). Space festoon gliders every 6'-0" along runway, between bridge and festoon stack section.

8.6 Slide festoon clamp into end of runway and tighten clamp bolt (***diagram 8A***). Tighten until lockwasher is flat.

8.7 Proceed to Step 8.14, on page 15.

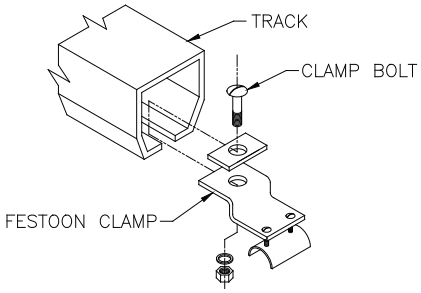

Diagram 8A. *Installing festoon clamp on runway or bridge.*

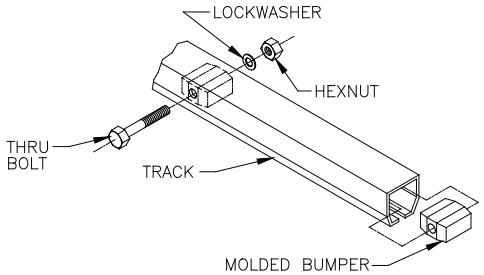

Diagram 8B. *Installing end stop on bridge.*

IMPORTANT: Before installing festoon trolleys in 250 and 500 series track, the molded bumper (on festooning end of runway) must first be removed.

Festoon Trolleys

8.8 Roll festoon trolleys through open end of **bridge** that corresponds with festooning on runway. Space festoon trolleys every 3'-0" along bridge.

Note: Every 6'-0" for vacuum hose festooning.

STEP 8 - FESTOONING INSTALLATION (CONTINUED)

8.9 Slide festoon clamp/vacuum hose clamp into place at festooning end of bridge and tighten clamp bolt (***diagrams 8C*** and ***8D***).

8.10 Install end stop (molded bumper with thru bolt) in open end of bridge (***diagram 8E***).

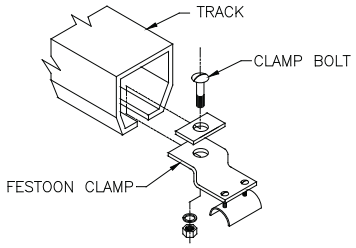

Diagram 8C. *Installing festoon clamp.*

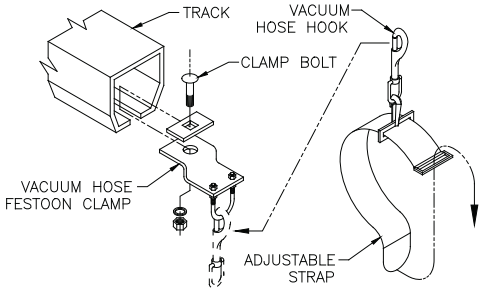

Diagram 8D. *Installing vacuum hose clamp.*

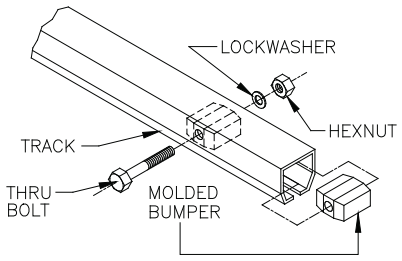

Diagram 8E. *Installing end stops in bridge.*

8.11 Roll festoon trolleys into end of runway track (on festooning side of runway). Space festoon trolleys every 6'-0" along runway, between bridge and festoon stack section. **On 250 or 500 series track, end stop on runway must first be removed to install trolleys.**

8.12 Slide festoon clamp/vacuum hose clamp into festooning end of runway and tighten clamp bolt (***diagrams 8C*** and ***8D***).

8.13 **If using 250 or 500 series track, re-install end stop in runway (*diagram 8E*).**

8.14 **Installing Festoon Electric Cable/Air Hose/Vacuum Hose:**
Gliders are designed to accept 4-conductor, electric flat cable (#12 or #14 gauge). Festoon trolleys are designed to accept 4-conductor, electric flat or round cable (#12 or #14 gauge) or air hose (maximum: 7/8" outside diameter).

WARNING
Crane cannot be utilized as a ground: A separate ground wire is required. For example, systems with 3-phase power require 3 conductors plus one ground wire.

Electric Cable with Festoon Gliders

Thread electric cable between upper and lower saddles of glider. Secure electric cable by pushing lower saddle up glider legs, clamping electric cable into place (***diagram 8F***).

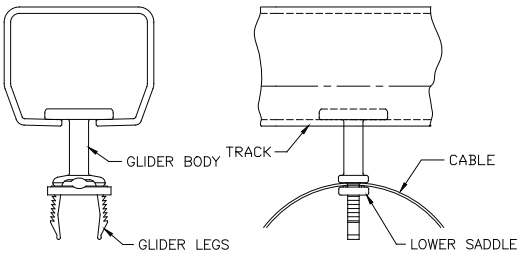

Diagram 8F. *Installing electric cable on festoon glider.*

STEP 8 - FESTOONING INSTALLATION (CONTINUED)

NOTE: Air Swivels should be used at either end of hose to reduce twist.

Electric Cable/Air Hose with Festoon Trolleys

Loosen nuts and clamp-plate enough to thread electric cable/air hose between the U-bolt legs and clamp plate on festoon trolley. Secure cable by tightening nuts on festoon trolley, forcing clamp plate snug against electric cable/air hose (***diagram 8G***).

Note: Be careful not to tighten bolts too tight; will cause damage to electric cable/air hose.

Note: Be sure that U-bolt does not interfere with trolley body.

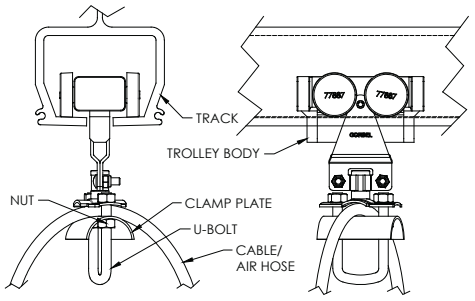

Diagram 8G. *Installing electric cable or air hose on festoon trolley.*

IMPORTANT: Cable/Air Hose Installation: It is important that as much twist as possible be taken out of the cable or hose before it is hung. To take the twist out follow the steps below:

1. Lay the cable or hose out on the floor flat.
2. Mark the cable or hose where the first end clamp will be and then make marks for trolley and bridge end clamp locations at 6-7 foot intervals. If cable or hose twist still exists, increase intervals.
3. Recoil the cable or hose so that the marks are all lined up on the top of the coiled cable or hose.
4. Lay the large coil on the floor with the marks lined up. At each mark, attach a trolley or end clamp. When installing the festoon, pick up the whole coil and run the trolleys in without disturbing the coil.

Suggestion: Air Swivels should be used at either end of cable or hose to reduce twist.

Vacuum Hose Trolleys

Place strap around vacuum hose (by others). Secure Velcro sides together and be sure vacuum hose is held snugly in place (***diagram 8H***).

Clip vacuum hose hook (with vacuum hose attached) onto vacuum hose trolley (***diagram 8H***).

Note: Strap will fit vacuum hoses with outside diameters ranging from 1-1/2” to 2-3/4”.

Clip vacuum hose hook (with vacuum hose attached) onto vacuum hose trolley (***diagram 8H***).

Note: If Velcro strap does not hold vacuum hose securely, engage vacuum device so a vacuum is present in the hose and retighten Velcro straps so the vacuum hose is held tightly.

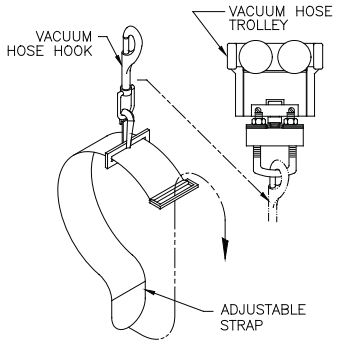

Diagram 8H. *Installing vacuum hose on vacuum hose trolley.*

STEP 9 - BRIDGE AND RUNWAY TAGLINE INSTALLATION

Steel Track (Bridges and Runways)

9.1 Slide tagline brackets onto each end of bridge and/or runway and tighten clamp hardware (***diagrams 9A*** and ***9B***).

Note: This will require removal of endstop hardware. This hardware must be re-installed immediately after tagline bracket is installed.

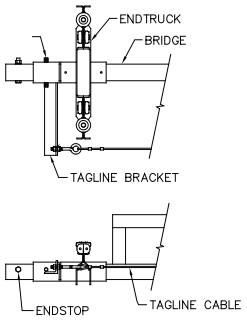

Diagram 9A. *Tagline on steel bridge.*

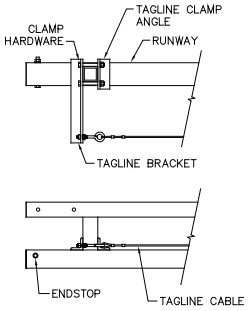

Diagram 9B. *Tagline on steel runway.*

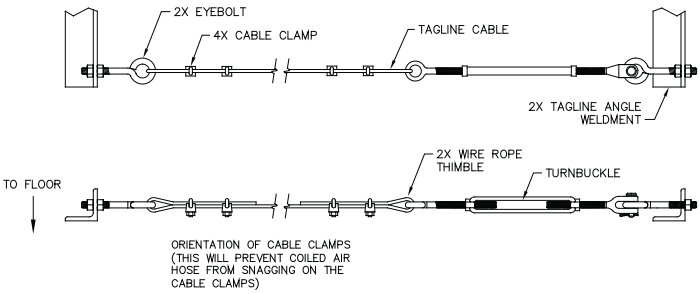

Diagram 9C. *Tagline cable assembly.*

9.2 Attach eyebolts onto tagline brackets. Attach turnbuckle to one eyebolt. Loop cable through eyebolt or turnbuckle and turn back 4-3/4" of cable on a thimble. Apply first clamp 1" from the dead end of the cable and tighten U-bolt to 15 ft.-lbs. of torque. Apply the second clamp as close to thimble as possible. Tighten U-bolt to 15 ft.-lbs. of torque (***diagram 9D***).

9.3 Add any S-hooks, wire rope trolleys, or coiled air hose to the cable prior to attaching the other end.

9.4 Secure other end of the cable as in Step 9.2.

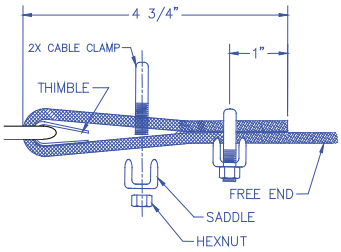

Diagram 9D. *Saddling the cable on one end.*

Aluminum Track (Bridges and Runways)

9.5 Attached tagline brackets to aluminum track web (***diagrams 9E***, ***9F*** and ***9G***).

Note: Do not forget to install the backing angle on the web opposite to the tagline angle.

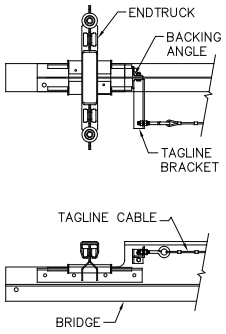

Diagram 9E. *Tagline on coped aluminum bridge.*

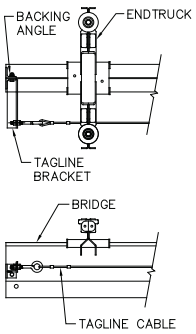

Diagram 9F. *Tagline on non-coped aluminum bridge.*

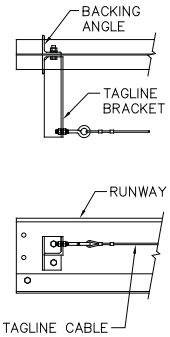

Diagram 9G. *Tagline on aluminum runway.*

9.6 Attach eyebolts onto tagline brackets. Attach turnbuckle to one eyebolt. Loop cable through eyebolt or turnbuckle and turn back 4-3/4" of cable on a thimble. Apply first clamp 1" from the dead end of the cable and tighten U-bolt to 15 ft.-lbs. of torque. Apply the second clamp as close to thimble as possible. Tighten U-bolt to 15 ft.-lbs. of torque (***diagram 9D***).

9.7 Add any S-hooks, wire rope trolleys, or coiled air hose to the cable prior to attaching the other end.

9.8 Secure other end of the cable as in Step 9.6.

STEP 10 - CONDUCTOR BAR INSTALLATION (OPTIONAL)

General

Gorbel offers three types of conductor bars: Electrobar Elite, Conductix Saf-T-Bar (TA-65) and Universal Electric. Refer to your packing paperwork for the conductor bar that is provided with your system.

Runway Conductor Bar Installation

- Establish the "**A**" and "**B**" dimensions specified on the Runway 4-Bar drawings for each specific system supplied with your cranes General Arrangement Drawing (***diagram 10A***).
  1. These dimensions will ensure the best possible location releationships between the hanger and towarm assemblies thus ensuring that the tow chains are as parallel (horizontally and vertically) to the bridge and runway as possible.
  2. Non-conformance to the specified dimensions could introduce possible interference or assembly issues.

- Ensure the 4-bar hangers do not interfere with ceiling mounted runway hangers, runway verticals, splice joints, support headers or hardware.

- Collector shoe tow chains are cut to length during installation per application.

- Ensure all channel nuts are always positioned inside the channel and never protrude outside the outer edge of the channel.

- Conductor mounts will either be mounted above or below the top tube depending on the depth of trussing and end truck type (***diagram 10B***).

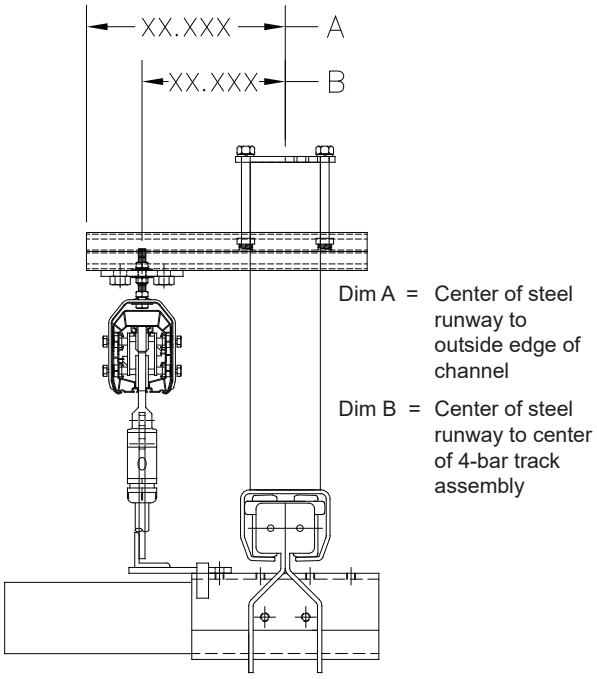

Diagram 10A. *Runway A-B dimensions.*

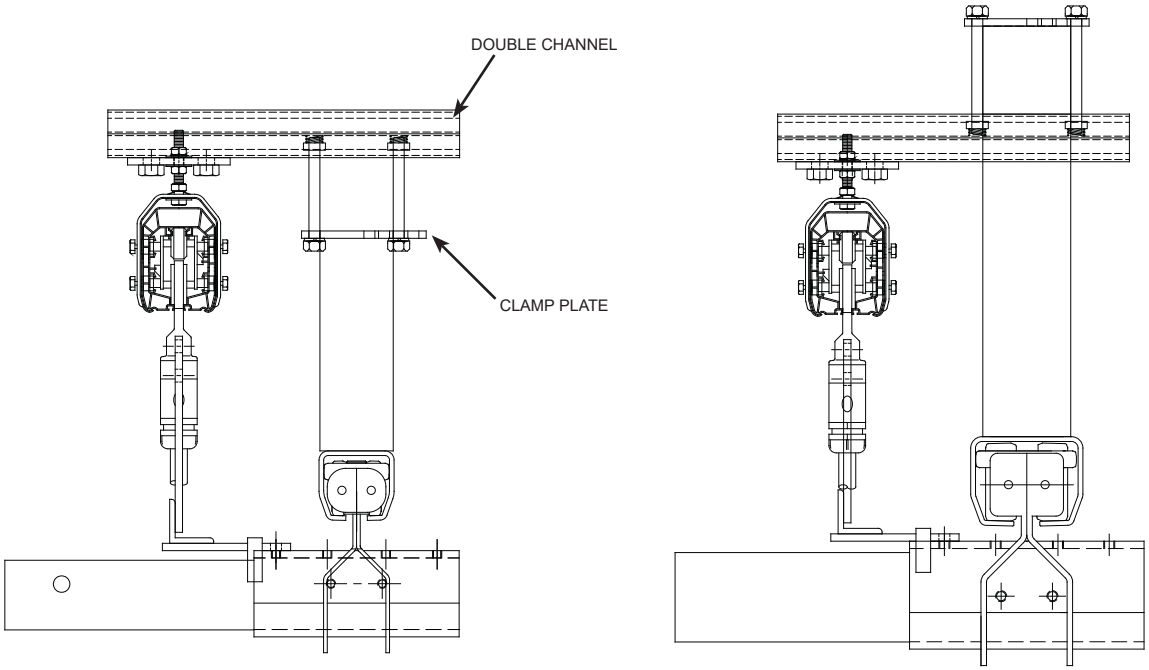

Diagram 10B. *Installation over and under runways.*

STEP 10 - CONDUCTOR BAR INSTALLATION (OPTIONAL) (CONTINUED)

General - Bridge

- Conductor bar bridge brackets will vary with type and size of bridge and conductor manufacturer (***diagram 10C***). Refer to the order materials list for the bracket part number for each crane.

- Trolley towarm brackets will vary with type and size of bridge, orientation and conductor manufacturer (***diagram 10D***). Refer to the Bridge and Runway 4-Bar drawings provided with your General Arrangement Drawing.

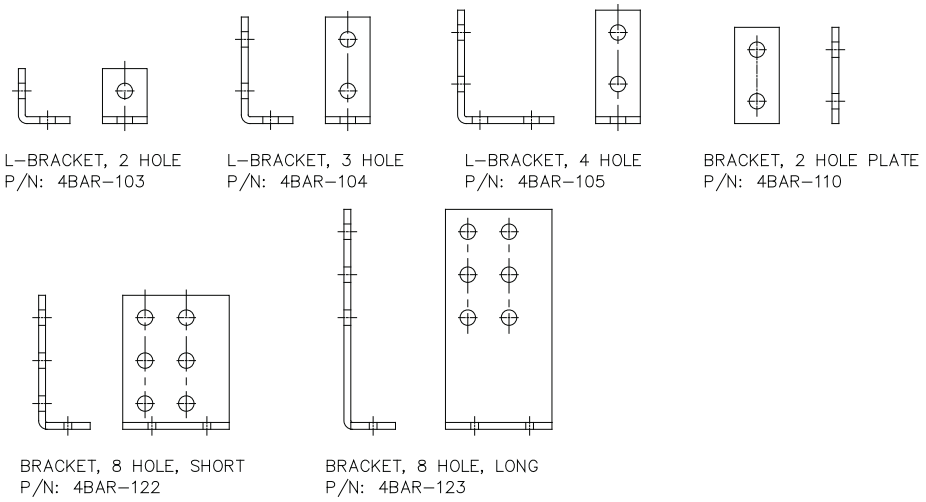

Diagram 10C. *Bridge brackets.*

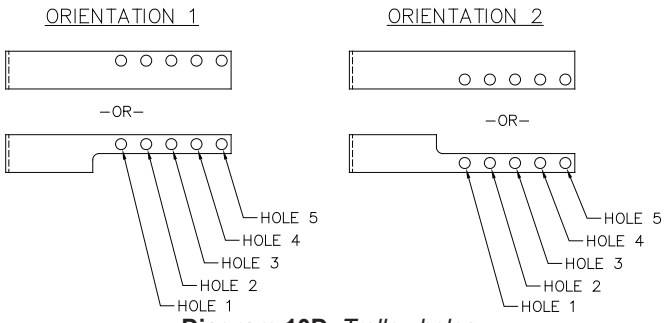

Diagram 10D. *Trolley holes.*

Mounting Hanger Brackets to a Steel Bridge

1. Establish the "**A**" and "**B**" dimensions specified on the Bridge 4-Bar drawings for each specific system supplied with your crane's General Arrangement Drawing (***diagram 10E***).

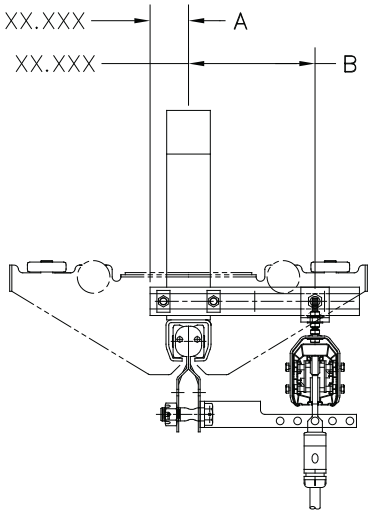

Dim A = Center of steel bridge to outside edge of channel

Dim B = Center of steel bridge to center of 4-bar track assembly

Diagram 10E. *Steel bridge A-B dimensions.*

STEP 10 - CONDUCTOR BAR INSTALLATION (OPTIONAL) (CONTINUED)

2. Use 2x 0.5-13 x 3.5” long HHCS, 2x 0.5” flatwashers, 2x 0.5” lockwashers and 2x 0.5-13 hexnuts to mount to 4-hole L-bracket (exception: the 4000# strongback bridge design will utilize 2x 5.0” long HHCS, not 3.5” long) (***diagram 10 F*** or ***10G***).

3. With bridges containing two rectangular verticals on each end (some 2000# and 4000# bridges) mount only to the outer most rectangular verticals.

4. A 0.4375” max gap is acceptable to line up the outer slots with other bridge hangers containing slots located at a max distance from bridge center. Ensure channel nut does not protrude outside of channel piece.

5. A gap of approximately 0.25” will exist between the mounting bracket and track spine surface due to vertical tube fillet welds (0.25” high). Hanger assemblies are to be located as close to the steel track spine as possible baring these welds (***diagram 10H***).

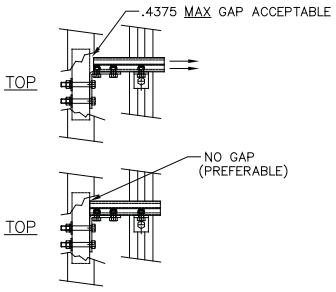

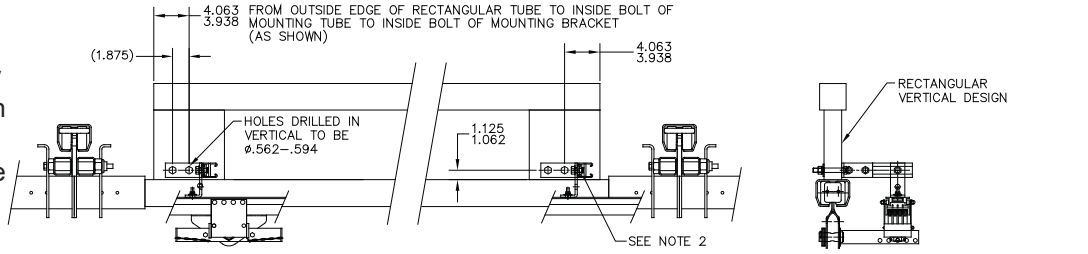

Diagram 10F. *Steel bridge with rectangular vertical.*

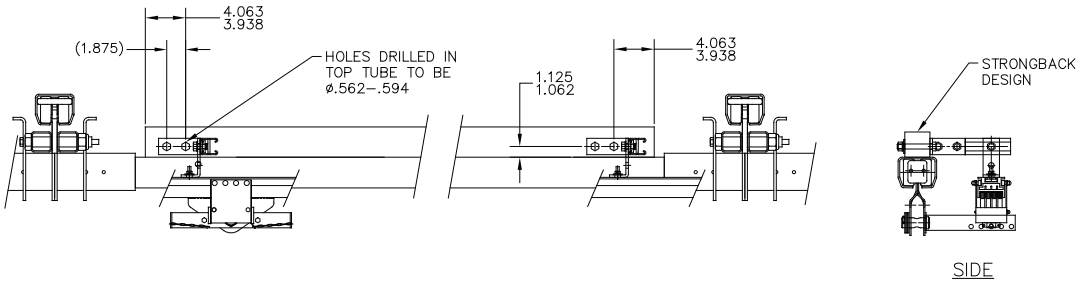

Diagram 10G. *Steel bridge with strongback.*

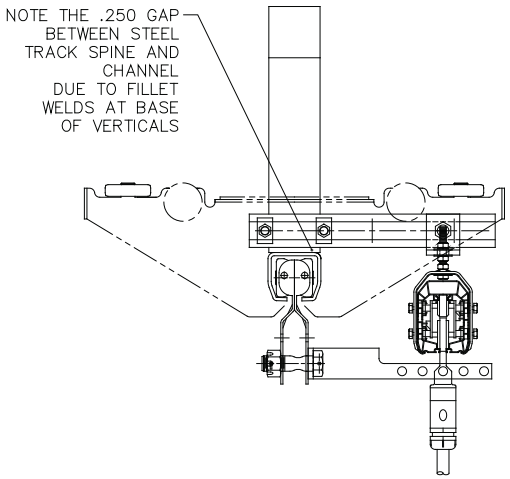

Diagram 10H. *Weld gap.*

STEP 10 - CONDUCTOR BAR INSTALLATION (OPTIONAL) (CONTINUED)

Mounting Hanger Brackets to an Aluminum Bridge

1. Establish the "**B**" and "**C**" dimensions specified on the Bridge 4-Bar drawings for each specific system supplied with your crane's General Arrangement Drawing (***diagram 10I*** or ***10J***).

2. Use 2x 0.5-13 x 1.5" or 2.0" long HHCS, 2x 0.5" flatwashers, 2x 0.5" lockwashers and 2x 0.5-13 hexnuts mounted to each aluminum bracket assembly.

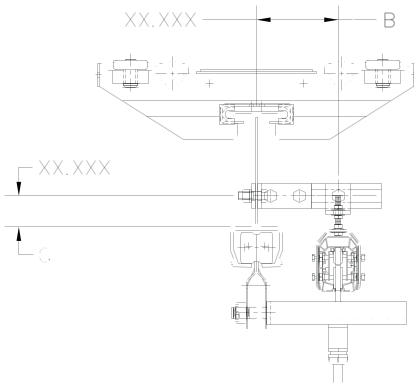

Dim B = Center of aluminum bridge to center of 4-bar track assembly

Dim C = Bolt centers of aluminum bridge hanger bracket to top surface of track spine

Diagram 10I. *One piece aluminum bridge B-C dimensions.*

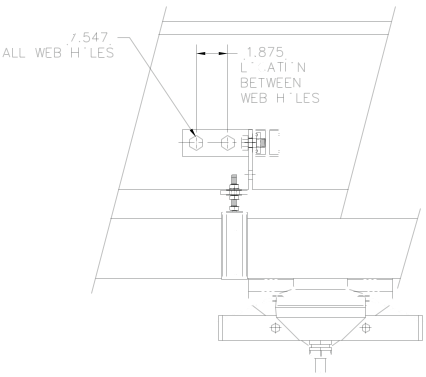

Diagram 10K. *Aluminum bridge holes.*

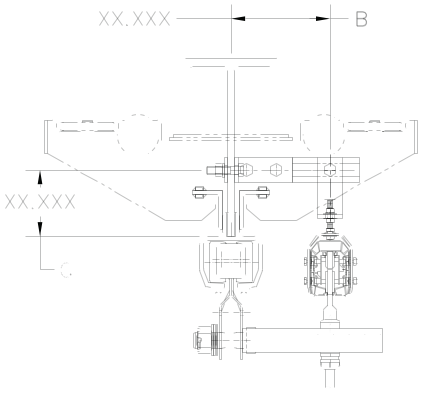

Dim B = Center of aluminum bridge to center of 4-bar track assembly

Dim C = Bolt centers of aluminum bridge hanger bracket to top surface of track spine

Diagram 10J. *Two piece aluminum bridge B-C dimensions.*

Electrobar Elite Conductor Installation Notes

- Remove the outboard locking endtruck bolt and nut from the endtruck and remove the nut. Thread the nut all the way onto the longer towarm mounting bolt and install the supplied lockwasher and flat washer (***diagram 10L***).

- Place the bolt through the slot on the towarm mast and into the threaded hole on the endtruck (***diagram 10M***). Tighten the bolt to lock the endtruck to the bridge.

- Square the mast alignment tab with the end of the endtruck and tighten the lock nut until the lockwashers is fully compressed (***diagram 10N***).



Diagram 10L. *Hardware assembly.*

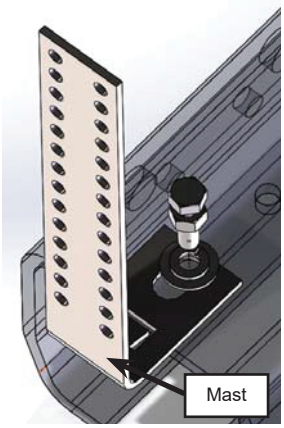

Diagram 10M. *Bolt position.*

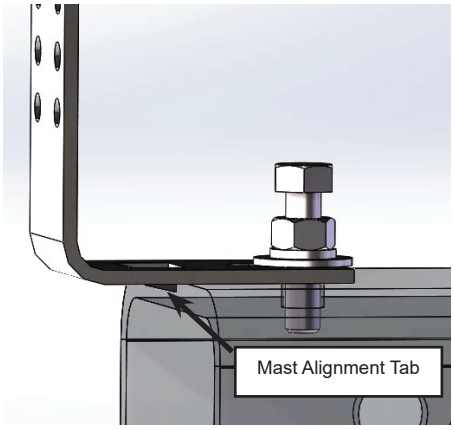

Diagram 10N. *Mast alignment*

STEP 10 - CONDUCTOR BAR INSTALLATION (OPTIONAL) (CONTINUED)

- Align the collector trolley in the conductor bar until it is in line with the endtruck. Position the collector tow bracket level with the chain anchors on the collector trolley, such that the tow chains will be horizontal when connected to the two brackets (***diagram 10P***).

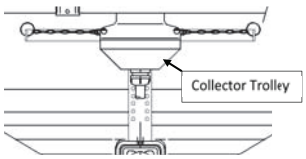

Diagram 10P. *Tow bracket to collector alignment.*

- Select the closest pair of overlapping holes on the tow bracket and mast, then fix the collector tow bracket behind the mast with the 1/4-20 bolt and lockwasher (***diagram 10Q***).

  If the tow bracket falls above the height of the mast, use the mast extension (***diagram 10R***). Attach the tow brackets to the top holes in the mast extension. Join the extension to the mast with the additional 1/4-20 bolts, lockwashers and nuts, through the farthest diagonally overlapping holes of the two parts (***diagram 10R***). The tow arm assembly can be extended up to 12” in height if required.

  Some low profile runways may require the collector trolley to be offset from the endtruck. In this condition utilize the *offset* connection features on the tow bracket collector to attach the mast. Uneven lengths of tow chain can be used to create additional offset if needed.

- Connect the tow chains from the collector trolley to the collector tow bracket, using the minimum amount of chain required, while still having some slack. Choose the proper chain connection hole on the tow bracket to produce a chain line that is parallel with the conductor bar.

- Consult manufacturer’s website (www.magnetek.com) for additional information .

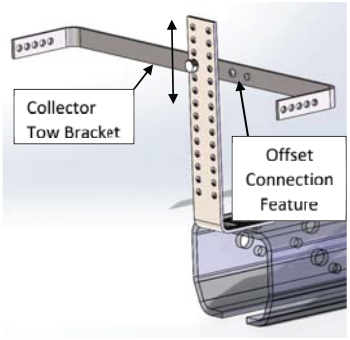

Diagram 10Q. *Tow bracket directly mounted to mast.*

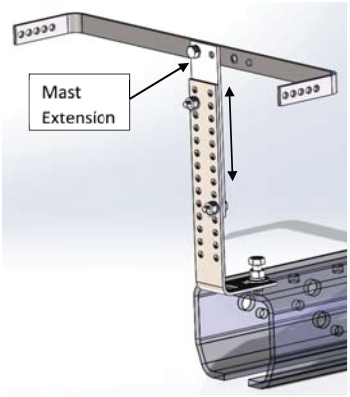

Diagram 10R. *Mast extension configuration.*

Conductix Saf-T-Bar TA-65 Conductor Installation Notes

- Ensure the correct orientation of the Conductix Saf-T-Bar TA-65 track relative to the runway (***diagram 10S***).

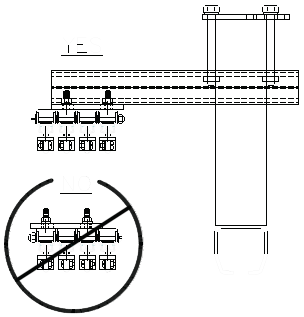

Diagram 10S. *Conductix installation orientation.*

STEP 10 - CONDUCTOR BAR INSTALLATION (OPTIONAL) (CONTINUED)

- There are two versions of the endtruck tow arm. The outside design is used for systems with standard endtrucks. The inside design is used when the system has extended endtrucks (***diagrams 10T*** and ***10U***).
- Ensure the correct orientation of the Conductix Saf-T-Bar TA-65 track relative to the bridge for the system bridge type (***diagram 10V***).
- Consult manufacturer's website (www.conductix.com) for additional information.

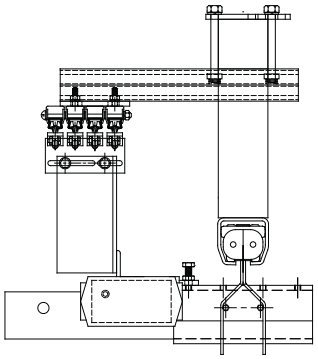

Diagram 10T. *Conductix outside design for standard end trucks.*

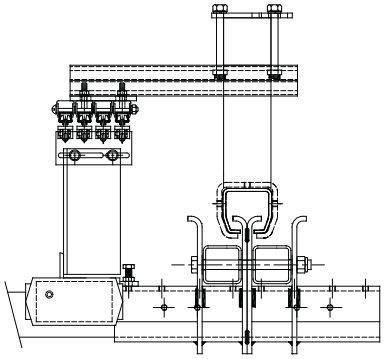

Diagram 10U. *Conductix inside design for extended end trucks.*

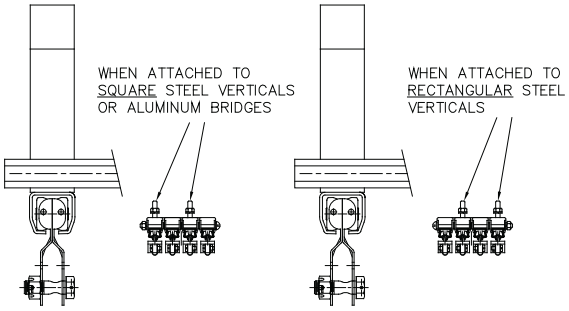

Diagram 10V. *Bridge studs.*

Universal Electric Runway Conductor Installation

- When the installation is complete, run the collector trolley up and down the entire length of the bridge to ensure that no part of the collector trolley collides with the underside of the endtrucks. If necessary, adjust accordingly (***diagram 10W***).
- Consult manufacturer's website (www.uecorp.com) for additional information.

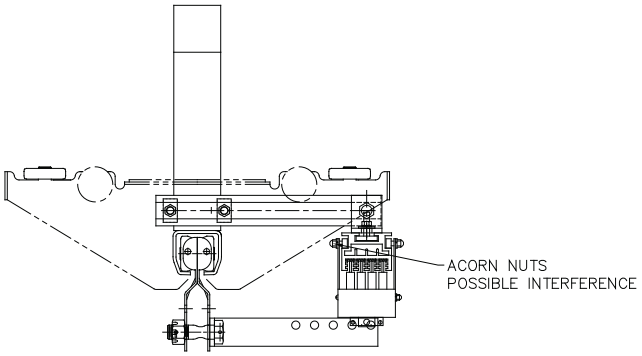

Diagram 10W. *Universal electric possible endtruck interference.*

STEP 11 - OPTIONAL ACCESSORIES

Safety Cable Installation

A) The safety cable is provided as a single piece and must be cut in the field as necessary. Each connection requires 5 ft. of cable.

B) After cutting the cable down to required length, one end of each cable must be properly saddled using the thimble and U-bolt cable clamps provided (***diagram 11A***).

C) Turn back 4-3/4” of cable on a thimble or loop. Apply the first clamp 1” from the dead end of the cable and tighten U-bolt to 15 ft.-lbs. of torque. Apply the second clamp as close to thimble or loop as possible. Tighten U-bolt to 15 ft.-lbs. of torque (***diagram 11A***).

D) Pass the free end of cable through support points of each connection in which safety cabling is required.

E) After the free end of cable has passed through all required support points, it should be passed through the saddled end of cable.

F) Saddle the free end of cable while making sure both ends are interlocked. Complete the connection using the instructions from Step C above (***diagram 11B***).

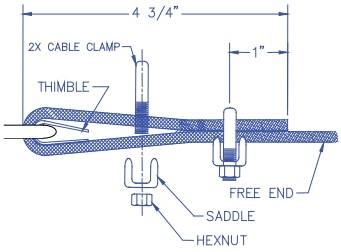

Diagram 11A. *Saddling the cable on one end.*

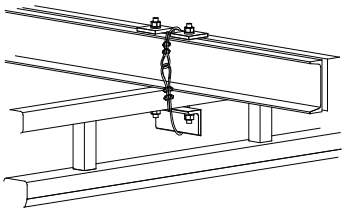

Diagram 11B. *Safety cable installed on free standing header connection.*

WARNING

The cable and termination should be inspected periodically for wear, abuse, and general adequacy.

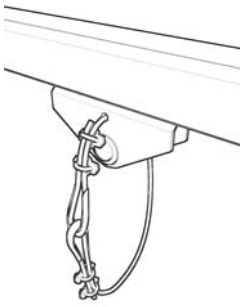

Diagram 11C. *Safety cable installed on Gorbel® trolley that will attach to hoist (by others).*

Double Wired Endstop Installation

A) Install end stop bumper with hardware provided (***diagram 11D***).

B) Install additional hardware with bolt facing the same direction as the end stop hardware.

C) Insert safety wire through the holes in each end stop bolt and twist ends together to secure wire in place (***diagram 11E***).

WARNING

End stop bumper must be placed on the “inside” bolt so that the endtruck or trolley contacts the bumper and not the secondary bolt.

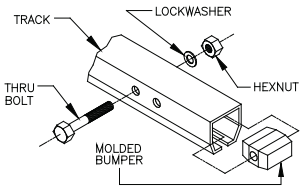

Diagram 11D. *Installing endstop.*

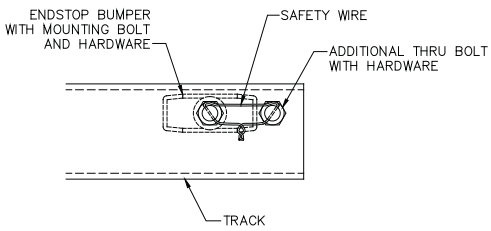

Diagram 11E. *Double wired end stop.*

STEP 11 - OPTIONAL ACCESSORIES (CONTINUED)

Coiled Air Hose Installation

A) Assemble female fittings to the coiled air hose according to ***diagram 11F***. The coiled air hose is inserted through the spring guard, nut, ferrule, and over the tube insert as far as possible. Note the orientation of the ferrule: the bevel is pointing towards the female fitting.

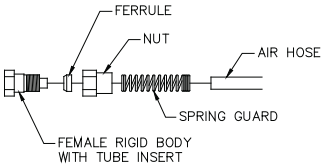

Diagram 11F. *Female fitting assembly.*

B) Assemble the remainder of the components per ***diagram 11G***.

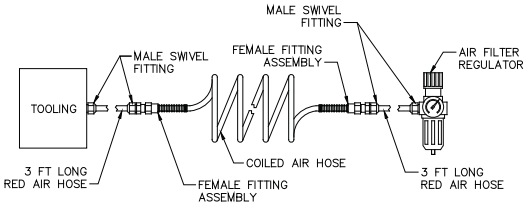

Diagram 11G. *Coiled air hose assembly.*

STEP 12 - FINAL STEPS

TIP: Do not throw away this manual: the maintenance schedule is on the back cover.

12.1 Be sure all endstops are installed.

12.2 Check to make sure all bolts are tight and lockwashers are compressed.

12.3 If necessary, touch up crane with paint provided.

12.4 Install yellow rubber tracdoms on open ends of steel track.

12.5 Keep Packing List, Installation Manual, General Arrangement Drawing, and any other inserts filed together in a safe place.

SWAY BRACING INSTRUCTIONS (OPTIONAL)

Support assemblies are designed to AISC (American Institute of Steel Construction) specifications. If reduced movement of the support assemblies is desired, then sway bracing (not included) can be added. The installer or end user must determine the possible locations of the bracing based on the specific application.

Bracing can be added in one of three formats, or a combination of any three.

A) The most typical place to brace is directly to a building column. Providing a brace from a building column to the lateral (side) and longitudinal (lengthwise) axis of the support steel provides extreme rigidity throughout the system, and requires only minimal locations (2 or 3 corners of the system is typically adequate, see '**A**' in ***diagram 1***).

B) Another method is to brace back to the ceiling above the crane. Again, bracing at the corners of the system in both a lateral and longitudinal direction is sufficient (see '**B**' in ***diagram 1***), providing the distance to the ceiling is not greater than 10 feet. For distances greater than 10 feet, additional points may need to be braced both laterally and longitudinally at the discretion of the end user and/or the installer.

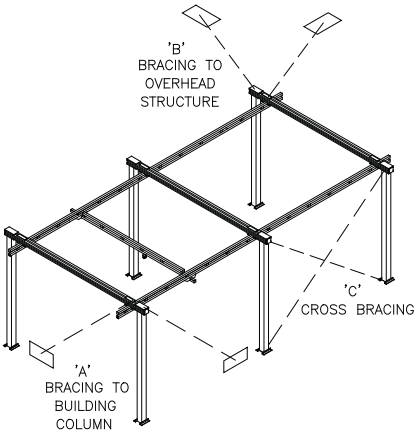

Diagram 1. Examples of typical sway bracing locations.

C) Finally, if the system is located at a point where it is not practical or possible to brace to the building columns or the ceiling structure, cross bracing can be done. This can be added at the sides of the system (see '**C**' in ***diagram 1***) to control longitudinal sway, or across the open ends to limit lateral motion (not shown). This can also be added to the top of the system, but should be checked to make sure that it does not interfere with the travel of the bridge.

It should be noted that the use of sway bracing is purely subjective because it is not a requirement of Gorbel, Inc. No specifications exist detailing appropriate methods, and the ultimate quantity and type is at the discretion of the user and installer. **If bracing, always determine if the building structure is adequate.**

CRANE OPERATOR INSTRUCTIONS

Overhead cranes and jib cranes generally handle materials over working areas where there are personnel. Therefore, it is important for the Crane Operator to be instructed in the use of the crane and to understand the severe consequences of careless operation. It is not intended that these suggestions take precedence over existing plant safety rules and regulations or OSHA regulations. However, a thorough study of the following information should provide a better understanding of safe operation and afford a greater margin of safety for people and machinery on the plant floor. It must be recognized that these are suggestions for the Crane Operator's use. It is the responsibility of the owner to make personnel aware of all federal, state and local rules and codes, and to make certain operators are properly trained.

Qualifications

Crane operation, to be safe and efficient, requires skill: the exercise of extreme care and good judgment, alertness and concentration, and rigid adherence to proven safety rules and practices as outlined in applicable and current ANSI and OSHA safety standards. In general practice, no person should be permitted to operate a crane:

- Who cannot speak the appropriate language or read and understand the printed instructions.
- Who is not of legal age to operate this type of equipment.
- Whose hearing or eyesight is impaired (unless suitably corrected with good depth perception).
- Who may be suffering from heart or other ailments which might interfere with the operator's safe performance.
- Unless the operator has carefully read and studied this operation manual.
- Unless the operator has been properly instructed.
- Unless the operator has demonstrated his instructions through practical operation.
- Unless the operator is familiar with hitching equipment and safe hitching equipment practices.

Handling the Bridge Travel Motion

Before using the bridge of the crane, the operator should be sure the hook is high enough to clear any obstructions. Before a load is handled by the crane, the bridge should be brought into position so that it is directly over the load. Start the bridge slowly and bring it up to speed gradually. Approaching the place where it is desired to stop the bridge, reduce the bridge speed.

Handling the Trolley Motion

Before a load is handled, the hoist should be positioned directly over the load that is to be handled. When the slack is taken out of the slings, if the hoist is not directly over the load, bring it directly over the load before hoisting is continued. Failure to center the hoist over the load may cause the load to swing upon lifting. Always start the trolley motion slowly and reduce the trolley speed gradually.

Handling the Hoist Motion

Refer to the lifting (hoist) equipment's operating instructions.

GENERAL SUGGESTIONS

Know Your Crane

Crane operators should be familiar with the principal parts of a crane and have a thorough knowledge of crane control functions and movements. The crane operator should be required to know the location and proper operation of the main conductor disconnecting means for all power to the attachments on the crane.

Responsibility

Each crane operator should be held directly responsible for the safe operation of the crane. Whenever there is any doubt as to SAFETY, the crane operator should stop the crane and refuse to handle loads until: (1) safety has been assured or (2) the operator has been ordered to proceed by the supervisor, who then assumes all responsibility for the SAFETY of the lift.

Do not permit **ANYONE** to ride on the hook or a load.

Inspection

Test the crane movement and any attachments on the crane at the beginning of each shift. Whenever the operator finds anything wrong or apparently wrong, the problem should be reported immediately to the proper supervisor and appropriate corrective action taken.

Operating Suggestions

One measure of a good crane operator is the smoothness of the crane operation. The good crane operator should know and follow these proven suggestions for safe, efficient crane handling.

1. The crane should be moved smoothly and gradually to avoid abrupt, jerky movements of the load. Slack must be removed from the sling and hoisting ropes before the load is lifted.
2. Center the crane over the load before starting the hoist to avoid swinging the load as the lift is started. Loads should not be swung by the crane to reach areas not under the crane.
3. Crane-hoisting ropes should be kept vertical. Cranes shall not be used for side pulls.
4. Be sure everyone in the immediate area is clear of the load and aware that a load is being moved.
5. Do not make lifts beyond the rated load capacity of the crane, sling chains, rope slings, etc.
6. Make certain that before moving the load, load slings, load chains, or other lifting devices are fully seated in the saddle of the hook with hook latch closed (if equipped with hook latch).
7. Check to be sure that the load and/or bottom block is lifted high enough to clear all obstructions when moving boom or trolley.
8. At no time should a load be left suspended from the crane unless the operator has the push button with the power on, and under this condition keep the load as close as possible to the floor to minimize the possibility of an injury if the load should drop. When the crane is holding a load, the crane operator should remain at the push button.
9. Do not lift loads with sling hooks hanging loose. If all sling hooks are not needed, they should be properly stored, or use a different sling.
10. All slings or cables should be removed from the crane hooks when not in use (dangling cables or hooks hung in sling rings can inadvertently snag other objects when the crane is moving).
11. Operators shall not carry loads and/or empty bottom blocks over personnel. Particular additional caution should be practiced when using magnet or vacuum devices. Loads, or parts of loads, held magnetically could drop. Failure of power to magnets or vacuum devices can result in dropping the load. Extra precaution should be exercised when handling molten metal in the proximity of personnel.
12. Whenever the operator leaves the crane the following procedure should be followed:
    - Raise all hooks to an intermediate position.
    - Spot the crane at an approved designated location.
    - Place all controls in the "off" position.
    - Open the main switch to the "off" position.
    - Make visual check before leaving the crane.
13. In case of emergency or during inspection, repairing, cleaning or lubrication, a warning sign or signal should be displayed and the main switch should be locked in the "off" position. This should be done whether the work is being done by the crane operator or by others.
14. Contact with rotation stops or trolley end stops shall be made with extreme caution. The operator should do so with particular care for the safety of the persons below the crane, and only after making certain that any persons on the other cranes are aware of what is being done.
15. ANY SAFETY FEATURES AND MECHANISMS BUILT-IN OR OTHERWISE PROVIDED WITH THE CRANE BY GORBEL ARE REQUIRED FOR THE SAFE OPERATION OF THE CRANE. DO NOT, UNDER ANY CIRCUMSTANCES, REMOVE OR OTHERWISE IMPAIR OR DISABLE THE PROPER FUNCTIONING OF ANY CRANE SAFETY MECHANISMS OR FEATURES BUILT-IN OR OTHERWISE PROVIDED BY GORBEL FOR SAFE OPERATION OF THE CRANE. ANY REMOVAL, IMPAIRMENT OR DISABLING OF ANY SUCH SAFETY MECHANISMS OR FEATURES OR OTHER USE OR OPERATION OF THE CRANE WITHOUT THE COMPLETE AND PROPER FUNCTIONING OF ANY SUCH SAFETY MECHANISMS OR FEATURES AUTOMATICALLY AND IMMEDIATELY VOIDS ANY AND ALL EXPRESS AND IMPLIED WARRANTIES OF ANY KIND OR NATURE.

LIMITED WARRANTY

It is agreed that the equipment purchased hereunder is subject to the following LIMITED warranty and no other. Gorbel Incorporated ("Gorbel") warrants the manual push-pull Work Station Cranes, Jib Crane, Gantry Crane, and Tether Track® products to be free from defects in material or workmanship for a period of ten years or 20,000 hours use from date of shipment. Gorbel warrants the Motorized Work Station Cranes and Jib Crane products to be free from defects in material or workmanship for a period of two years or 4,000 hours use from the date of shipment. Gorbel warrants the G-Force® and Easy Arm® products to be free from defects in material or workmanship for a period of one year or 2,000 hours use from the date of shipment. This warranty does not cover Gantry Crane wheels. This warranty shall not cover failure or defective operation caused by operation in excess of recommended capacities, misuses, negligence or accident, and alteration or repair not authorized by Gorbel. No system shall be field modified after manufacture without the written authorization of Gorbel, Inc. Any field modification made to the system without the written authorization of Gorbel, Inc. shall void Gorbel's warranty obligation. OTHER THAN AS SET FORTH HEREIN, NO OTHER EXPRESS WARRANTIES, AND NO IMPLIED WARRANTIES, ORAL OR WRITTEN, INCLUDING BUT NOT LIMITED TO THE WARRANTIES OF MERCHANTABILITY OR FITNESS FOR A PARTICULAR PURPOSE, ARE MADE BY GORBEL WITH RESPECT TO ITS PRODUCTS AND ALL SUCH WARRANTIES ARE HEREBY SPECIFICALLY DISCLAIMED. GORBEL SHALL NOT BE LIABLE UNDER ANY CIRCUMSTANCES FOR ANY INCIDENTAL, SPECIAL AND/OR CONSEQUENTIAL DAMAGES WHATSOEVER, WHETHER OR NOT FORESEEABLE, INCLUDING BUT NOT LIMITED TO DAMAGES FOR LOST PROFITS AND ALL SUCH INCIDENTAL, SPECIAL AND/OR CONSEQUENTIAL DAMAGES ARE HEREBY ALSO SPECIFICALLY DISCLAIMED. Gorbel's obligation and Purchaser's or end user's sole remedy under this warranty is limited to the replacement or repair of Gorbel's products at the factory, or at the discretion of Gorbel, at a location designated by Gorbel. Purchaser or end user shall be solely responsible for all freight and transportation costs incurred in connection with any warranty work provided by Gorbel hereunder. Gorbel will not be liable for any loss, injury or damage to persons or property, nor for damages of any kind resulting from failure or defective operation of any materials or equipment furnished hereunder. Components and accessories not manufactured by Gorbel are not included in this warranty. Purchaser's or end user's remedy for components and accessories not manufactured by Gorbel is limited to and determined by the terms and conditions of the warranty provided by the respective manufacturers of such components and accessories.

A) DISCLAIMER OF IMPLIED WARRANTY OF MERCHANTABILITY

Gorbel and Purchaser agree that the implied warranty of merchantability is excluded from this transaction and shall not apply to the goods involved in this transaction.

B) DISCLAIMER OF IMPLIED WARRANTY OF FITNESS FOR PARTICULAR PURPOSE

Gorbel and Purchaser agree that the implied warranty of fitness for particular purpose is excluded from this transaction and shall not apply to the goods involved in this transaction.

C) DISCLAIMER OF EXPRESS WARRANTY

Gorbel's agents, or dealer's agents, or distributor's agents may have made oral statements about the machinery and equipment described in this transaction. Such statements do not constitute warranties, and Purchaser agrees not to rely on such statements. Purchaser also agrees that such statements are not part of this transaction.

D) DISCLAIMER OF SPECIAL, INCIDENTAL AND CONSEQUENTIAL DAMAGES

Gorbel and Purchaser agree that any claim made by Purchaser which is inconsistent with Gorbel's obligations and the warranty remedies provided with Gorbel's products, and in particular, special, incidental and consequential damages, are expressly excluded.

E) DEALER OR DISTRIBUTOR NOT AN AGENT

Gorbel and Purchaser agree that Purchaser has been put on notice that dealer or distributor is not Gorbel's agent in any respect for any reason. Gorbel and Purchaser also agree that Purchaser has been put on notice that dealer or distributor is not authorized to incur any obligations or to make any representations or warranties on Gorbel's behalf other than those specifically set forth in Gorbel's warranty provided in connection with its product.

F) MERGER

This warranty agreement constitutes a final and complete written expression of all the terms and conditions of this warranty and is a complete and exclusive statement of those terms.

G) PAINTING

Every crane (excluding components) receives a quality paint job before leaving the factory. Unfortunately, no paint will protect against the abuses received during the transportation process via common carrier. We have included at least one (1) twelve ounce spray can for touchup with each crane ordered (unless special paint was specified). If additional paint is required, contact a Gorbel® Customer Service Representative at 1-800-821-0086 or 1-585-924-6262.

Title and Ownership:

Title to the machinery and equipment described in the foregoing proposal shall remain with Gorbel and shall not pass to the Purchaser until the full amount herein agreed to be paid has been fully paid in cash.

Claims and Damages:

Unless expressly stated in writing, goods and equipment shall be at Purchaser's risk on and after Seller's delivery in good shipping order to the Carrier. Gorbel shall in no event be held responsible for materials furnished or work performed by any person other than it or its authorized representative or agent.

Cancellations:

If it becomes necessary for the purchaser to cancel this order wholly or in part, he shall at once so advise Gorbel in writing. Upon receipt of such written notice all work will stop immediately. If the order entails only stock items, a flat restocking charge of 15% of the purchase price will become due and payable by Purchaser to Gorbel. Items purchased specifically for the canceled order shall be charged for in accordance with the cancellation charges of our supplier plus 15% for handling in our factory. The cost of material and/or labor expended in general fabrication for the order shall be charged for on the basis of total costs to Gorbel up to the time of cancellation plus 15%.

Returns:

No equipment, materials or parts may be returned to Gorbel without express permission in writing to do so.

Extra Charge Delay: If Purchaser delays or interrupts progress of Seller's performance, or causes changes to be made, Purchaser agrees to reimburse Gorbel for expense, if any, incident to such delay.

Changes and Alterations:

Gorbel reserves the right to make changes in the details of construction of the equipment, as in its judgment, will be in the interest of the Purchaser; will make any changes in or additions to the equipment which may be agreed upon in writing by the Purchaser; and Gorbel is not obligated to make such changes in products previously sold any customer.

Third Party Action:

Should Gorbel have to resort to third party action to collect any amount due after thirty (30) days from date of invoice, the Purchaser agrees to pay collection costs, reasonable attorney's fees, court costs and legal interest.

OSHA Responsibilities:

Gorbel agrees to fully cooperate with Purchaser in the design, manufacture or procurement of safety features or devices that comply with OSHA regulations. In the event additional equipment or labor shall be furnished by Gorbel, it will be at prices and standard rates then in effect, or as may be mutually agreed upon at the time of the additional installation.

Equal Employment Opportunity:

Gorbel agrees to take affirmative action to ensure equal employment opportunity for all job applicants and employees without regard to race, color, age, religion, sex, national origin, handicap, veteran, or marital status. Gorbel agrees to maintain non-segregated work facilities and comply with rules and regulations of the Secretary of Labor or as otherwise provided by law or Executive Order.

INSPECTION AND MAINTENANCE SCHEDULE

GORBEL® WORK STATION CRANE: INSPECTION AND MAINTENANCE SCHEDULE			
ITEM	**COMPONENT**	**MAINTENANCE**	**FREQUENCY***
1	**Header Clamp Plate Hardware**	Check for full compression of lockwasher. Bolt should be tightened to manufacturer's specifications.	Every 2,000 hours or yearly
2	**Spine Clamp Hardware**	Check for full compression of lockwasher. Bolt should be tightened to manufacturer's specifications.	Every 2,000 hours or yearly
3	**Truss Splice Plate**	Check for full compression of lockwasher. Bolt should be tightened to manufacturer's specifications.	Every 2,000 hours or yearly
4	**Splice Joint**	All bolts should be in contact with track. Check track for alignment and that wheel rolling surface is flush.	Every 2,000 hours or yearly
5	**Hoist Trolley**	Check clevis pin. Check cotter pin. (Cotter pin should be fully wrapped around clevis pin.) Check clevis bolt and hardware.	Every 2,000 hours or yearly
6	**End Stops (both runway and bridge)**	Check for full compression of lockwasher. If thru bolt is exposed, replace endstops.	Every 2,000 hours or yearly
7	**Festoon Cable Clamp or Vacuum Hoist Clamp**	Check for full compression of lockwasher.	Every 2,000 hours or yearly
8	**Wheels**	Check for cracks, puts, and/or grooves: all of these increase pull forces. If any of these conditions exist, wheels should be replaced.	Every 2,000 hours or yearly
9	**Aluminum Bridge Assembly Hardware**	Check that lockwashers are compressed and nuts tightened to torque specifications (chart 3A, page 3). Ensure sheer lug hardware is in required position and tight.	Every 2,000 hours or yearly
10	**End Trucks**	Check for proper clamping hardware attachment. Ensure correct position on bridge to match specified cantilevers. Inspect end truck wheels following instructions for wheels above. Standard end truck: Make sure body is free of any bent materials, cracked or broken welds. Extended end truck: Check overall condition of tubes. Examine supports for bent materials, cracked or broken welds. Inspect hardware attaching end truck support to tubes. Check wheel plate attachment bolts for any wear and make sure the nylock nut is still in the correct position.	Every 2,000 hours or yearly

***Federal, state and local codes may require inspection and maintenance checks more often. Please check the federal, state and local code manuals in your area.**

WARNING

Any changes in rolling effort or unusual noises must be immediately identified and corrected. It is not necessary to lubricate the track or bearings. Lubricating may attract airborne particles and may increase the rolling resistance. (Do not use such substances as WD-40®, silicone sprays, oil or grease on bearings or on track flanges.)

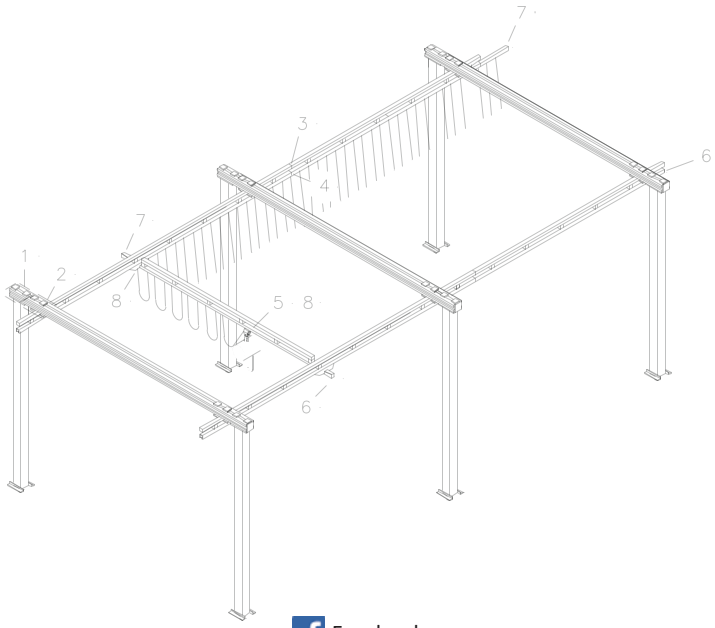

U.S. Patent No: US05694857
U.S. Patent No: US05443151

MMA-CERTIFIED℠
MMA Monorail Manufacturers Association
Workstation Cranes and Patented Track Systems
Meets or Exceeds ANSI MH27.1 or MH27.2
To review compliance requirements and confirm certification, visit www.mmacertified.org

GORBEL®
600 Fishers Run, P.O. Box 593
Fishers, NY 14453-0593
Phone: (800) 821-0086
Fax: (800) 828-1808
E-Mail: info@gorbel.com
http://www.gorbel.com

© 2017 Gorbel Inc.
All Rights Reserved

LinkedIn linkedin.com/company/gorbel
Facebook Facebook.com/gorbelinc
YouTube youtube.com/gorbelmarketing
Twitter twitter.com/gorbelinc
gorbel.com/blog

Combination air valve

Brand :	**DEZURIK**
Model :	**ASU,3,SCAV,F1,S2,R516,NBR,S2-S2-S2***
Supplier :	**PROVAN**
Tag :	**ARV-01-100**

1100, Montée Masson
Laval (Québec) H7E 4P2

Téléphone : 450-688-4012
Télécopieur : 450-661-6341

DeZURIK

APCO ASU-SCAV & ASU-CAV SINGLE BODY COMBINATION AIR VALVES

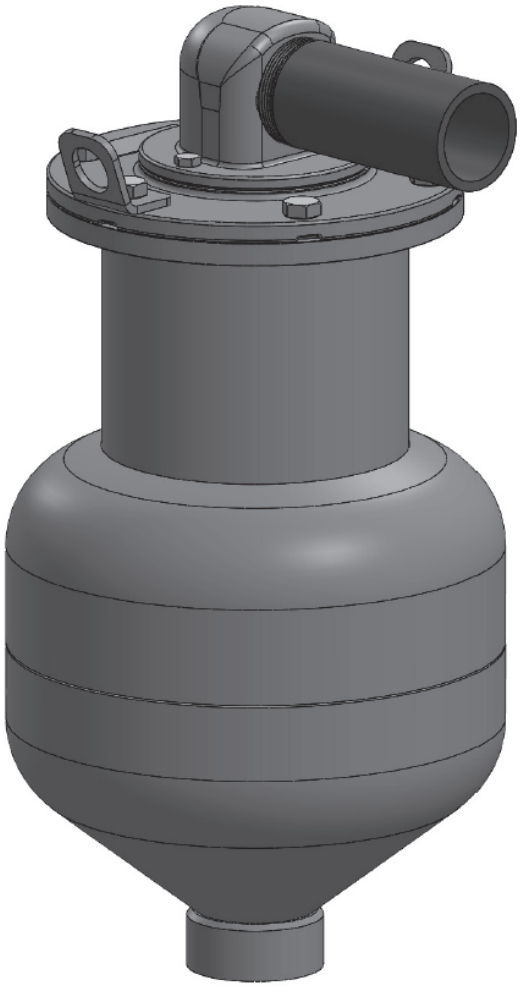

Instruction **D12039**

December 2015

DeZURIK | APCO | HILTON | WILLAMETTE

Instructions

These instructions provide installation, operation and maintenance information for the APCO ASU Single Body Combination Air Valves. They are for use by personnel who are responsible for installation, operation and maintenance of APCO ASU Single Body Combination Air Valves.

Safety Messages

All safety messages in the instructions are flagged with an exclamation symbol and the word Caution, Warning or Danger. These messages indicate procedures that must be followed exactly to avoid equipment damage, personal injury or death.

Safety label(s) on the product indicate hazards that can cause equipment damage, personal injury or death. If a safety label becomes difficult to see or read, or if a label has been removed, please contact DeZURIK for replacement label(s).

WARNING!

Personnel involved in the installation or maintenance of valves should be constantly alert to potential emission of pipeline material and take appropriate safety precautions. Always wear suitable protection when dealing with hazardous pipeline materials. Handle valves, which have been removed from service with suitable protection for any potential pipeline material in the valve.

Inspection

Your APCO ASU Single Body Combination Air Valve has been packaged to provide protection during shipment; however, it can be damaged in transport. Carefully inspect the unit for damage upon arrival and file a claim with the carrier if damage is apparent.

Parts

Recommended spare parts list is on the Assembly Drawing, which has been shipped with the valve. These parts should be stocked to minimize downtime.

Order parts from your local DeZURIK sales representative, or directly from DeZURIK. When ordering parts, please include the 7-digit part number and 4-digit revision number (example: **9999999R000**) located on the data plate attached to the valve assembly. Also include the part name, the assembly drawing number, the balloon number and the quantity stated on the assembly drawing.

DeZURIK Service

DeZURIK service personnel are available to install, maintain and repair all DeZURIK products. DeZURIK also offers customized training programs and consultation services.

For more information, contact your local DeZURIK sales representative or visit our website at www.dezurik.com.

 © 2015 DeZURIK, Inc.

Table of Contents

Description - - -

Description

The APCO ASU Combination Air Valve is specially designed for use with Clean or Dirty Service, Municipal or Industrial Fluids or Slurries. It releases large quantities of air when initially filling the pipeline, and will close automatically with liquid level rise. While the pipeline is under pressure, the valve will perform the air release function. As air collects in the valve, the float will drop and allow small pockets of air to exit the system through the air release orifice. The air release mechanism is patented technology and uses a balanced piston to open the air release orifice. Under vacuum conditions, the float and vacuum disc will drop, allowing air to re-enter the pipeline.

Handling and Storage

The combination air valve is packaged and shipped with the float in the 'Closed Position' to prevent damage during shipping and handling. Remove packaging material from the valve inlet before installation.

Lifting the valve improperly may damage it. Do not fasten lifting devices to piping or attached components. Lift the valve with the lifting device attached to the two lifting lugs (A28) located on the cover (A8). Each lifting lug is rated to lift 100 lbs. See Figure 1 for part identification.

If installation will be delayed, place valve indoors in secure, weather tight storage. If temporary outside storage is unavoidable, make sure a vermin proof rain cover (water shedding tarp, etc.) is secured around/over the valve to keep off rain and mud. Skid and set the valve on a flat, solid, and well drained surface for protection from ground moisture, runoff and pooled rain water.

Installation

See Figure 1 for Typical Installation.

- The combination air valve is not fitted with a shut off valve for isolating the valve from the main for inspection and backflushing. Ensure there is a shut off valve installed for isolating the valve from the main.
- The combination air valve and valve vault should have adequate drainage and be sufficiently protected from possible freezing conditions.
- It is recommended the combination air valve outlet be piped to a drain, particularly when installed within a pumping station, to prevent the danger of flooding due to malfunction or clogging.

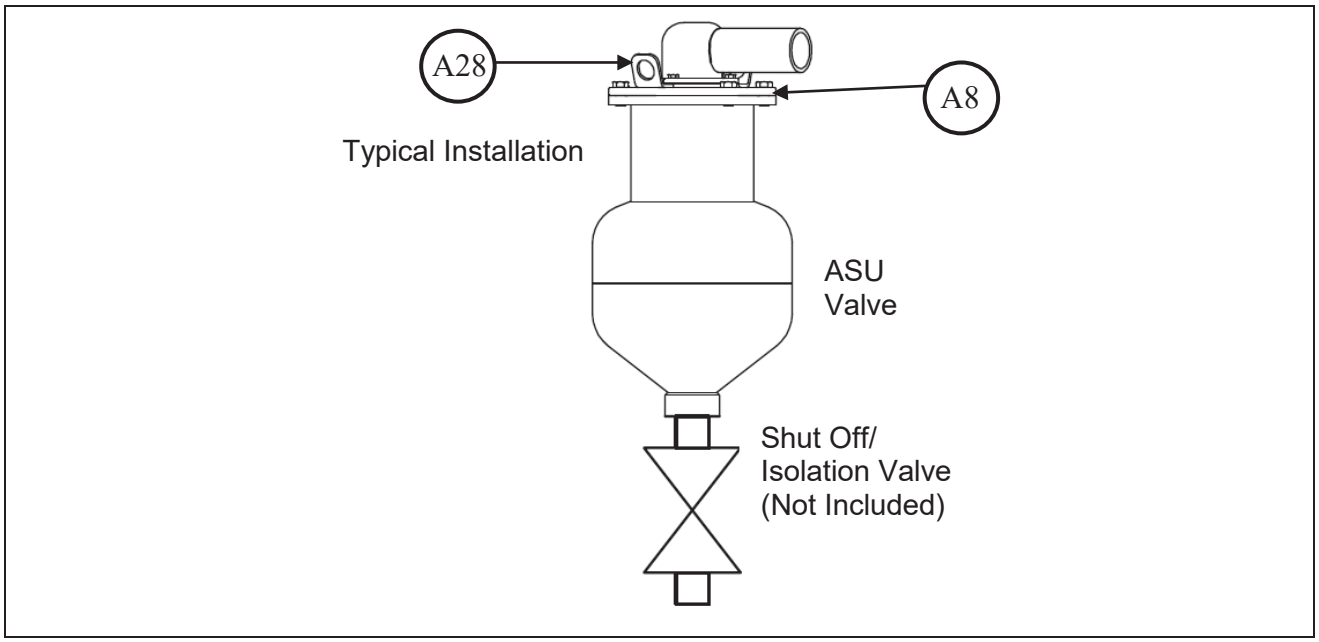

Figure 1 – Typical Installation

Maintenance/Backflushing

For sewage waste media service, the valve should be backflushed to prevent grease and scum buildup inside the valve which can prevent the valve from operating properly. Valves can be ordered with the optional backflushing attachments.

The valve should be backflushed 6 months after the initial operating date. If the initial backflushing process only takes a few minutes to clean the valve, the next backflushing can be scheduled in 12 months. If the initial backflushing process takes 15 minutes or longer to clean the valve, the next backflushing should be scheduled in 3 months.

See Figure 6 for Optional Backflush Attachment Parts Identification on the ASU-SCAV style.

Backflushing to Force Main and Valve Interior Inspection

See Figure 2 through Figure 6 for part identification.

If clean water service is available, its pressure must be at least 15 psi (103 kPa) higher than the main pressure to prevent wastewater from back flowing into the clean water line.

Valves **(with optional Backflush Attachment)** may be flushed back into the force main as follows:

1. Leave the Isolation Valve open.
2. Connect the Hose Assembly (F04) to Shutoff Valve (F02).
3. Connect clean water source to Hose Coupling (F03), turn on water source, open Shutoff Valve (F02) and backflush for 2 – 3 minutes (or as long as it takes to flush out all the sediment).
4. After backflushing, close the water source, Isolation Valve, and Shutoff Valve (F02).
5. Remove Hose Assembly (F04) from Shutoff Valve (F02) and relieve pressure in valve by slowly opening Shutoff Valve (F02).

WARNING!

Servicing the Air Valve while the pipeline is under pressure can cause personal injury or equipment damage. Relieve pipeline pressure or shut off isolation valve before servicing the Air Valve.

6. Remove cover bolts (A10) and remove the cover (A8).

   Note: All internals are attached to the valve cover.

WARNING!

Do not completely remove pipe plugs or cover screws while the valve is under pressure.

7. Visually inspect the valve interior. If grease deposits interfere with the valve operation, scrape out grease deposits.
8. If the valve was leaking through the Outlet Port during backflushing, fully clean valve and install new O-ring kit.
9. Replace cover (A8) and cover bolts (A10).

   Note: If cover O-ring (A11) is damaged, replace cover O-ring.
10. Close Shutoff Valve (F02).
11. Slowly open Isolation Valve to place valve back in service.

Backflushing to Atmospheric or Vacuum Tank

See Figure 2 through Figure 6 for part identification.

If clean water service is not available, with 15 psi (103 kPa) higher than the main pressure, backflush through Drain Valve (F06) into an atmospheric or vacuum collection tank.

Valves **(with optional Backflush Attachment)** may be flushed back into tank by:

1. Close Isolation Valve.
2. Connect Drain Valve (F06) to an atmospheric or vacuum collection tank.
   Note: If a vacuum collection tank is used, a pipe plug with a ¼" hole in it may be inserted into the outlet port of the Air and Vacuum Valve to limit the amount of air drawn back into the vacuum tank.
3. Open Drain Valve (F06).
4. Connect the Hose Assembly (F04) to Shutoff Valve (F02).
5. Connect clean water source to Hose Coupling (F03), turn on water source, open Shutoff Valve (F02) and backflush for 2 – 3 minutes (or as long as it takes to flush out all the sediment).
6. After backflushing, close the water source, Isolation Valve, and Shutoff Valve (F02).

WARNING!

Servicing the Air Valve while the pipeline is under pressure can cause personal injury or equipment damage. Relieve pipeline pressure or shut off isolation valve before servicing the Air Valve.

7. Remove Hose Assembly (F04) from Shutoff Valve (F02) and relieve pressure in valve by slowly opening Shutoff Valve (F02).

WARNING!

Do not completely remove pipe plugs or cover screws while the valve is under pressure.

8. Remove cover bolts (A10) and remove the cover (A8).
   Note: All internals are attached to the valve cover.
9. Visually inspect the valve interior. If grease deposits interfere with the valve operation, scrape out grease deposits.
10. If the valve was leaking through the Outlet Port during backflushing, fully clean valve and install new O-ring kit.
11. Replace cover (A8) and cover bolts (A10).
    Note: If cover O-ring (A11) is damaged, replace cover O-ring.
12. Close Shutoff Valve (F02).
13. Slowly open Isolation Valve to place valve back in service.

Disassembly Procedure

See Figure 2 through Figure 6 for part identification.

WARNING!

Servicing the Air Valve while the pipeline is under pressure can cause personal injury or equipment damage. Relieve pipeline pressure or shut off isolation valve before servicing the Air Valve.

1. Relieve pipeline pressure or shut off isolation valve at inlet to Air Valve.

WARNING!

Do not completely remove pipe plugs or cover screws while the valve is under pressure.

2. Loosen pipe plug (A25) in body (A1) or open drain valve (F06) to relieve internal pressure. Do not completely remove pipe plug while the valve is under pressure.
3. Remove the cover bolts (A10) and the cover (A8).
   Note: All internals are attached to the cover.
4. Inspect the inside of the body (A1) for debris buildup. If there is enough debris to interfere with the float (A2) movement, clean the inside of the body.
5. If the cover O-ring (A11) is damaged, remove the O-ring and clean the flange surfaces of the cover (A8) and body (A1). Install new O-ring (A11).
6. Inspect the sealing surface of the vacuum disk (A12) for nicks, wear, or sediment coating from the chemicals in the media. Clean the sealing surface if dirty.
7. Check for proper float movement.
8. Remove clevis pin (A13) and remove float (A2) and float shaft (A3) from the cover assembly. Inspect the sealing area (upper section) of the float shaft for damage. Clean the float shaft if dirty.
9. Remove the vacuum disk sub-assembly and separate by unthreading piston (A17) from piston stem (A14).
10. Inspect piston stem (A14) sealing surface for damage. Clean the sealing surface if dirty.
11. Remove O-ring (A20) and backup ring (A21) from the top end of the piston stem (A14).
12. Remove the outlet (A15) from the cover (A8).
    a. ASU-CAV Valve: Remove the upper pressure cap (A9) and lower pressure cap (A34) from the cover (A8). Remove O-rings (A20), O-rings (A22) and backup ring (A21) and check for damage.
    b. ASU-SCAV Valve: Remove the top cap (A9) from the cover (A8). Remove O-ring (A20) and O-ring (A22) and check for damage.
13. Inspect the float (A2) to insure it is not damaged or that it does not have liquid in it.
14. Clean all surfaces before re-assembly.

O-ring Kit

The O-ring kit is recommended to have on hand when a valve is inspected or repaired. The kit includes A11, A13, A18, A19, A20, A21, and A22. For part A11, the kit includes the O-ring for the 1”-2” valve and the O-ring for the 3”-4” valve. Only use the A11 O-ring that fits your valve.

Full Rebuild Parts

For a complete rebuild, it is recommended to replace vacuum disc (A12) and piston stem (A14). These parts only need to be replaced if the seals are worn or damaged. Replace all O-rings included in the O-ring Kit.

Another option for a complete rebuild is to order the replacement valve less body. This replacement valve includes all the internal components and the valve cover, but does not include the body.

Assembly Procedure

See Figure 2 through Figure 5 for part identification.

1. If an O-ring kit is being used, replace all old parts with the new parts.
2. Lubricate all O-rings with an O-ring grease.
3. Re-assemble in the opposite order as the disassembly procedure.
4. Ensure the cover O-ring (A11) is installed properly. Assemble the cover (A8) to the body (A1). Tighten the cover bolts (A10) opposite each other in rotation.
5. If valve has the optional Backflush Attachment, ensure Shutoff Valves (F02) and (F06) are closed.
6. Slowly open the Isolation Valve. The valve is now back in service.

Operation

APCO ASU Combination Air Valves are specially designed for use with Clean or Dirty Service, Municipal or Industrial Fluids or Slurries. It releases large quantities of air when initially filling the pipeline, and will close automatically with liquid level rise. While the pipeline is under pressure, the valve will automatically perform the air release function. As air collects in the valve, the float will drop and allow small pockets of air to exit the system through the air release orifice. The air release mechanism is patented technology and uses a balanced piston to open the air release orifice. Under vacuum conditions, the float and vacuum disc will drop, allowing air to re-enter the pipeline.

Drawings

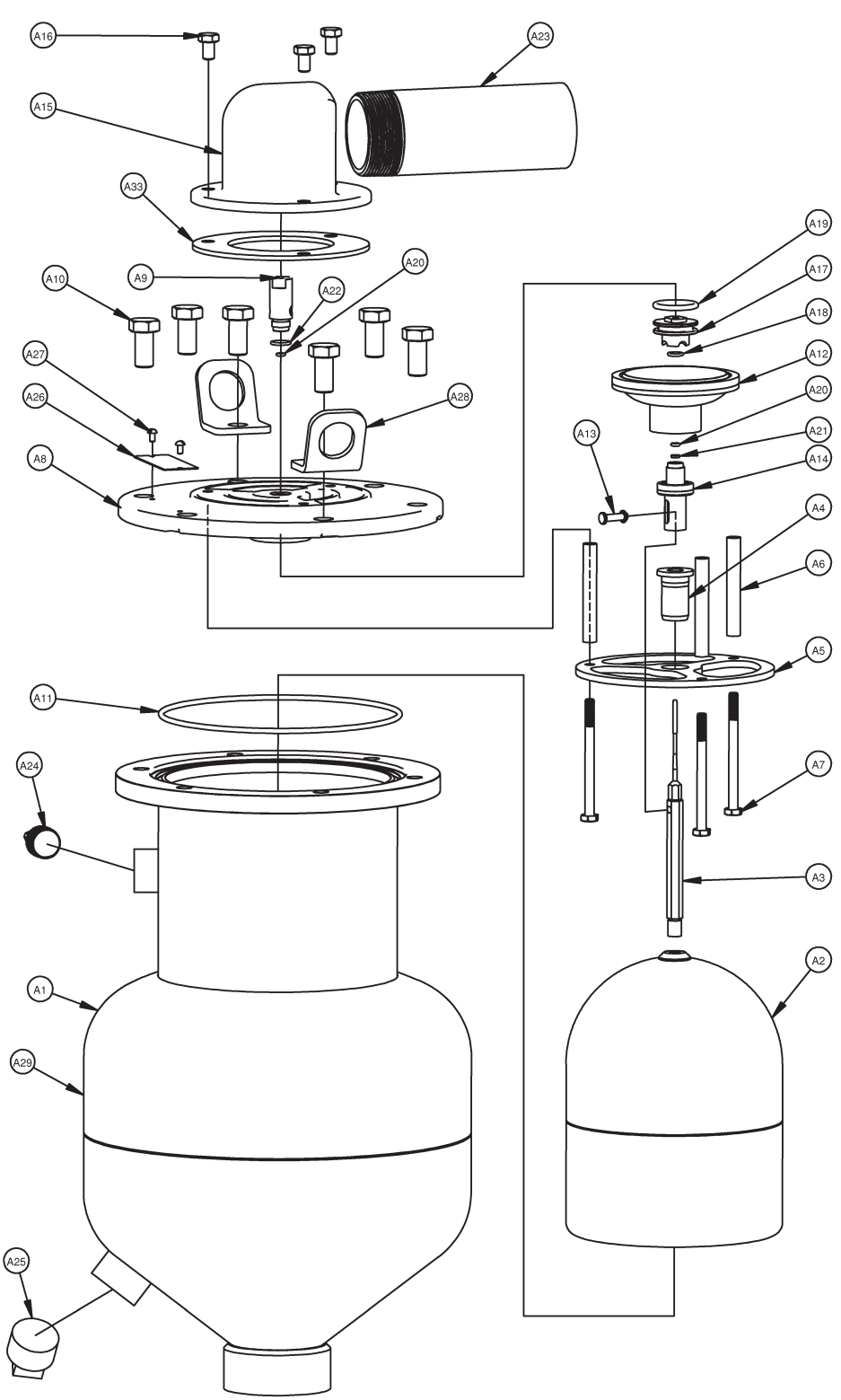

NO.	PART NAME	QTY
A1	BODY	1
A2	FLOAT	1
A3	FLOAT SHAFT	1
A4	GUIDE BUSHING	1
A5	GUIDE MOUNT	1
A6	STAND OFF TUBE	3
A7	BOLT	3
A8	COVER	1
A9	TOP CAP	1
A10	BOLT	6
A11	O-RING	1
A12	VACUUM DISK	1
A13	CLEVIS PIN W/ RETAINER	1
A14	PISTON STEM	1
A15	OUTLET	1
A16	BOLT	3
A17	PISTON	1
A18	O-RING	1
A19	O-RING	1
A20	O-RING	1
A21	BACKUP RING	1
A22	O-RING	1
A23	PIPE	1
A24	PLUG	1
A25	PLUG	1
A26	DATA PLATE	1
A27	SCREW	2
A28	LIFT LUG	2
A29	LABEL	1
A33	GASKET	1

Figure 2: ASU-SCAV Part Identification (Exploded View)

Drawings *(Continued)*

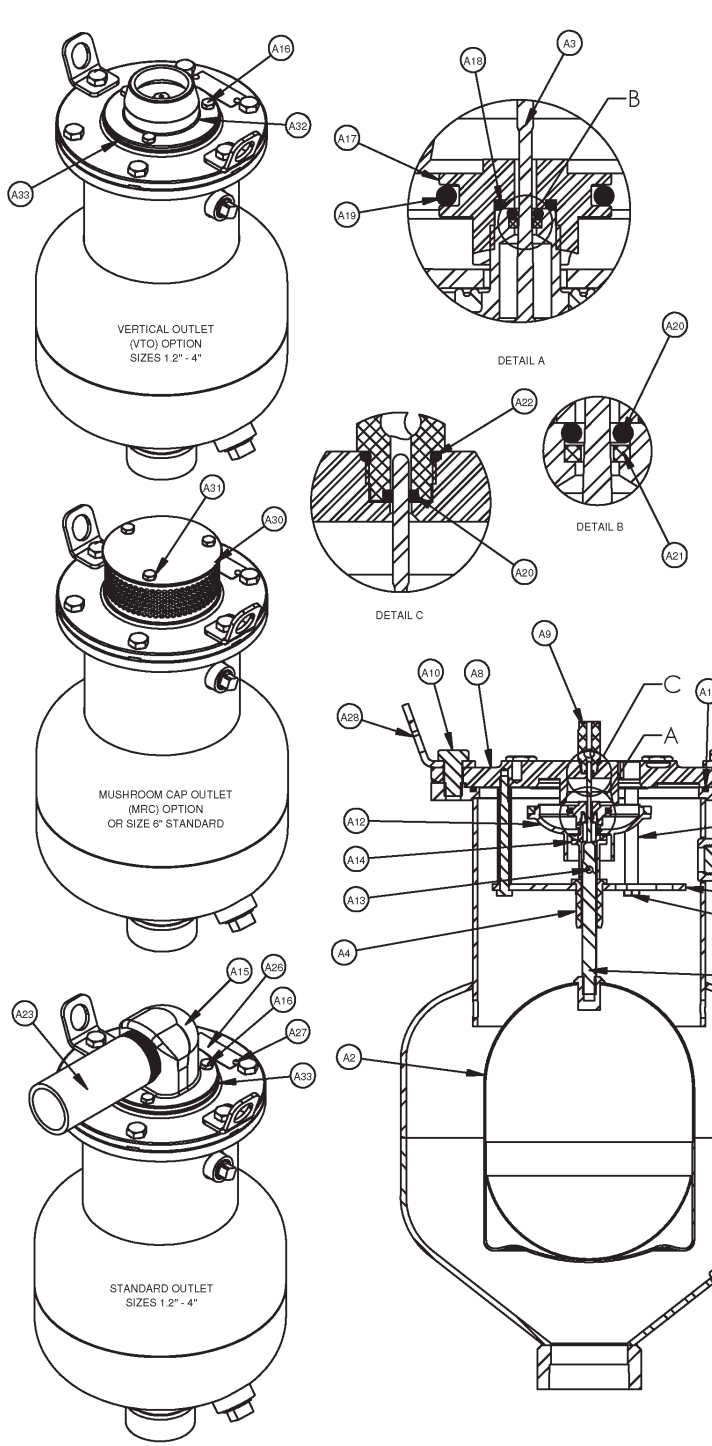

NO.	PART NAME	QTY
A1	BODY	1
A2	FLOAT	1
A3	FLOAT SHAFT	1
A4	GUIDE BUSHING	1
A5	GUIDE MOUNT	1
A6	STAND OFF TUBE	3
A7	SCREW	3
A8	COVER	1
A9	TOP CAP	1
A10	SCREW (SIZES 1.2" - 4")	6
A10	SCREW (SIZE 6")	8
A11	O-RING	1
A12	AIR / VACUUM DISK & SEAT	1
A13	CLEVIS PIN W/ RETAINER	1
A14	PISTON STEM & SEAT	1
A15	OUTLET (STANDARD - SIZES 1.2" - 4")	1
A16	SCREW (STANDARD AND VTO OPTION - SIZES 1.2" - 4")	3
A17	PISTON	1
A18	O-RING	1
A19	O-RING	1
A20	O-RING	2
A21	BACKUP RING	1
A22	O-RING	1
A23	PIPE EXTENSION (STANDARD - SIZES 1.2" - 4")	1
A24	PLUG	1
A25	PLUG	1
A26	DATA PLATE	1
A27	SCREW	2
A28	LIFT LUG	2
A29	LABEL	1
A30	OUTLET (MRC OPTION - SIZES 1.2" - 4" OR SIZE 6")	1
A31	SCREW (MRC OPTION - SIZES 1.2" - 4" OR SIZE 6")	3
A32	OUTLET (VTO OPTION - SIZES 1.2" - 4")	1
A33	GASKET (STANDARD AND VTO OPTION - SIZES 1.2" - 4")	1

Figure 3: ASU-SCAV Part Identification

Drawings *(Continued)*

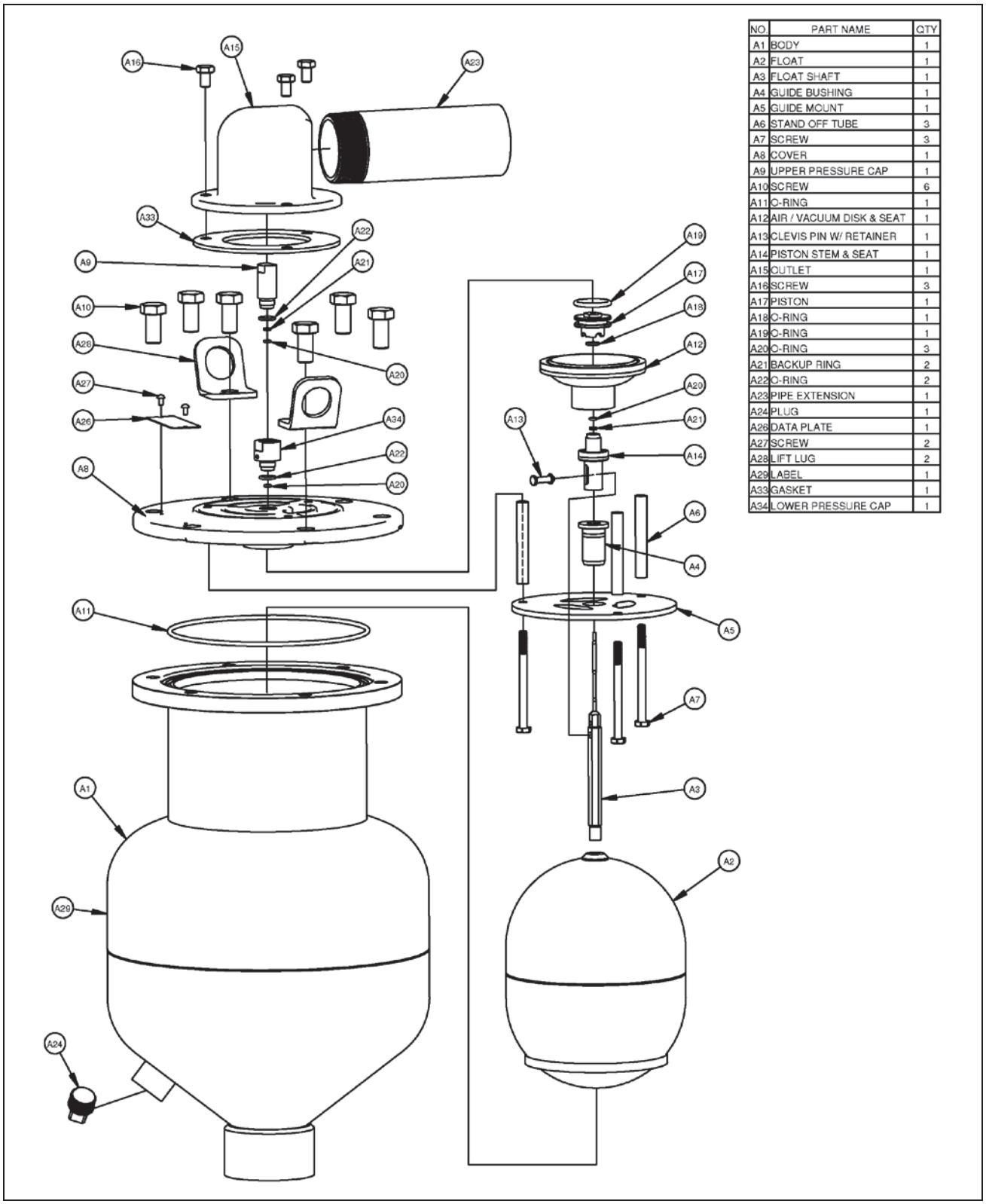

NO.	PART NAME	QTY
A1	BODY	1
A2	FLOAT	1
A3	FLOAT SHAFT	1
A4	GUIDE BUSHING	1
A5	GUIDE MOUNT	1
A6	STAND OFF TUBE	3
A7	SCREW	3
A8	COVER	1
A9	UPPER PRESSURE CAP	1
A10	SCREW	6
A11	O-RING	1
A12	AIR / VACUUM DISK & SEAT	1
A13	CLEVIS PIN W/ RETAINER	1
A14	PISTON STEM & SEAT	1
A15	OUTLET	1
A16	SCREW	3
A17	PISTON	1
A18	O-RING	1
A19	O-RING	1
A20	O-RING	3
A21	BACKUP RING	2
A22	O-RING	2
A23	PIPE EXTENSION	1
A24	PLUG	1
A26	DATA PLATE	1
A27	SCREW	2
A28	LIFT LUG	2
A29	LABEL	1
A33	GASKET	1
A34	LOWER PRESSURE CAP	1

Figure 4: ASU-CAV Combination Air Valve Part Identification (Exploded View)

Drawings *(Continued)*

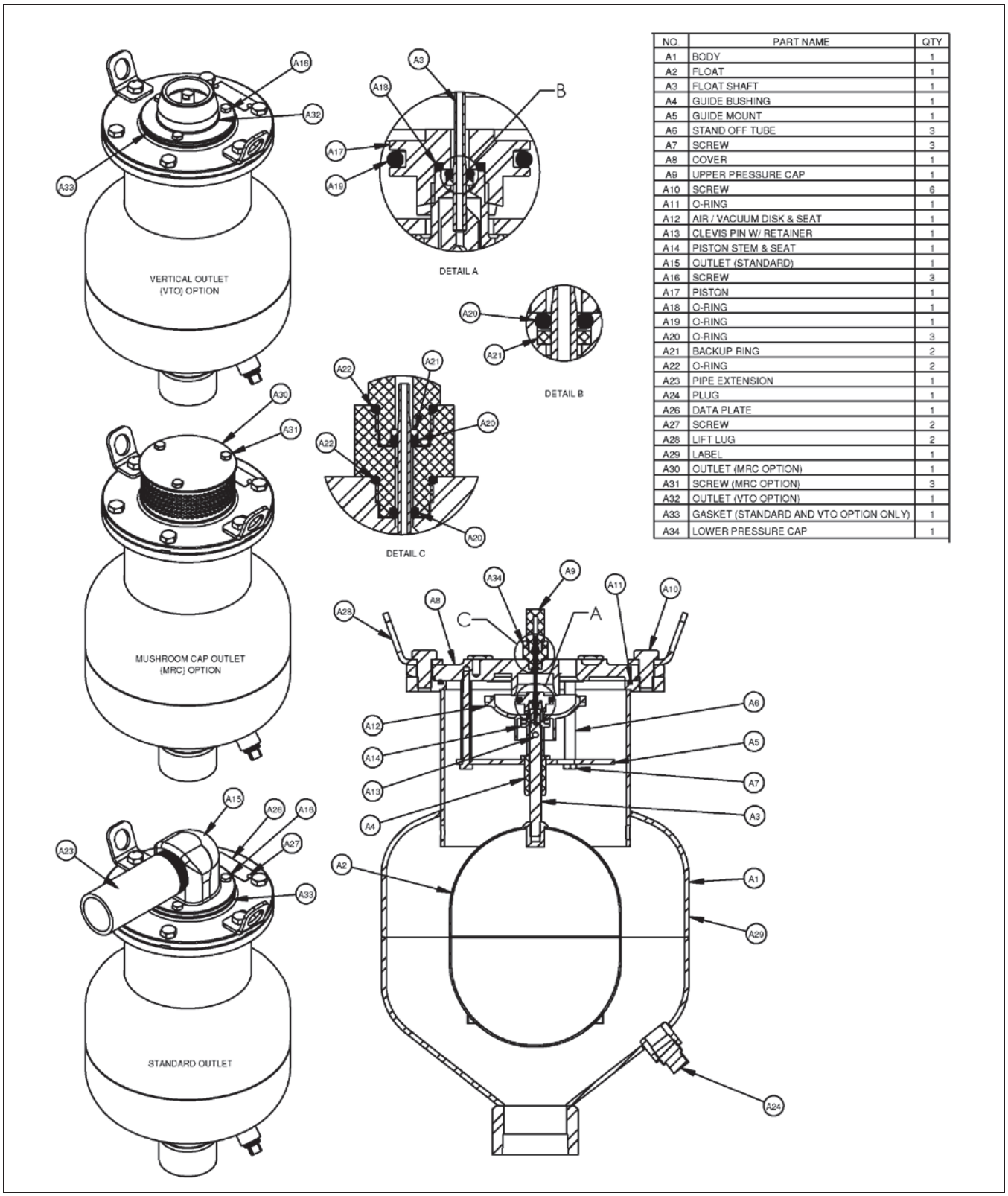

NO.	PART NAME	QTY
A1	BODY	1
A2	FLOAT	1
A3	FLOAT SHAFT	1
A4	GUIDE BUSHING	1
A5	GUIDE MOUNT	1
A6	STAND OFF TUBE	3
A7	SCREW	3
A8	COVER	1
A9	UPPER PRESSURE CAP	1
A10	SCREW	6
A11	O-RING	1
A12	AIR / VACUUM DISK & SEAT	1
A13	CLEVIS PIN W/ RETAINER	1
A14	PISTON STEM & SEAT	1
A15	OUTLET (STANDARD)	1
A16	SCREW	3
A17	PISTON	1
A18	O-RING	1
A19	O-RING	1
A20	O-RING	3
A21	BACKUP RING	2
A22	O-RING	2
A23	PIPE EXTENSION	1
A24	PLUG	1
A26	DATA PLATE	1
A27	SCREW	2
A28	LIFT LUG	2
A29	LABEL	1
A30	OUTLET (MRC OPTION)	1
A31	SCREW (MRC OPTION)	3
A32	OUTLET (VTO OPTION)	1
A33	GASKET (STANDARD AND VTO OPTION ONLY)	1
A34	LOWER PRESSURE CAP	1

Figure 5: ASU-CAV Combination Air Valve Part Identification

Drawings *(Continued)*

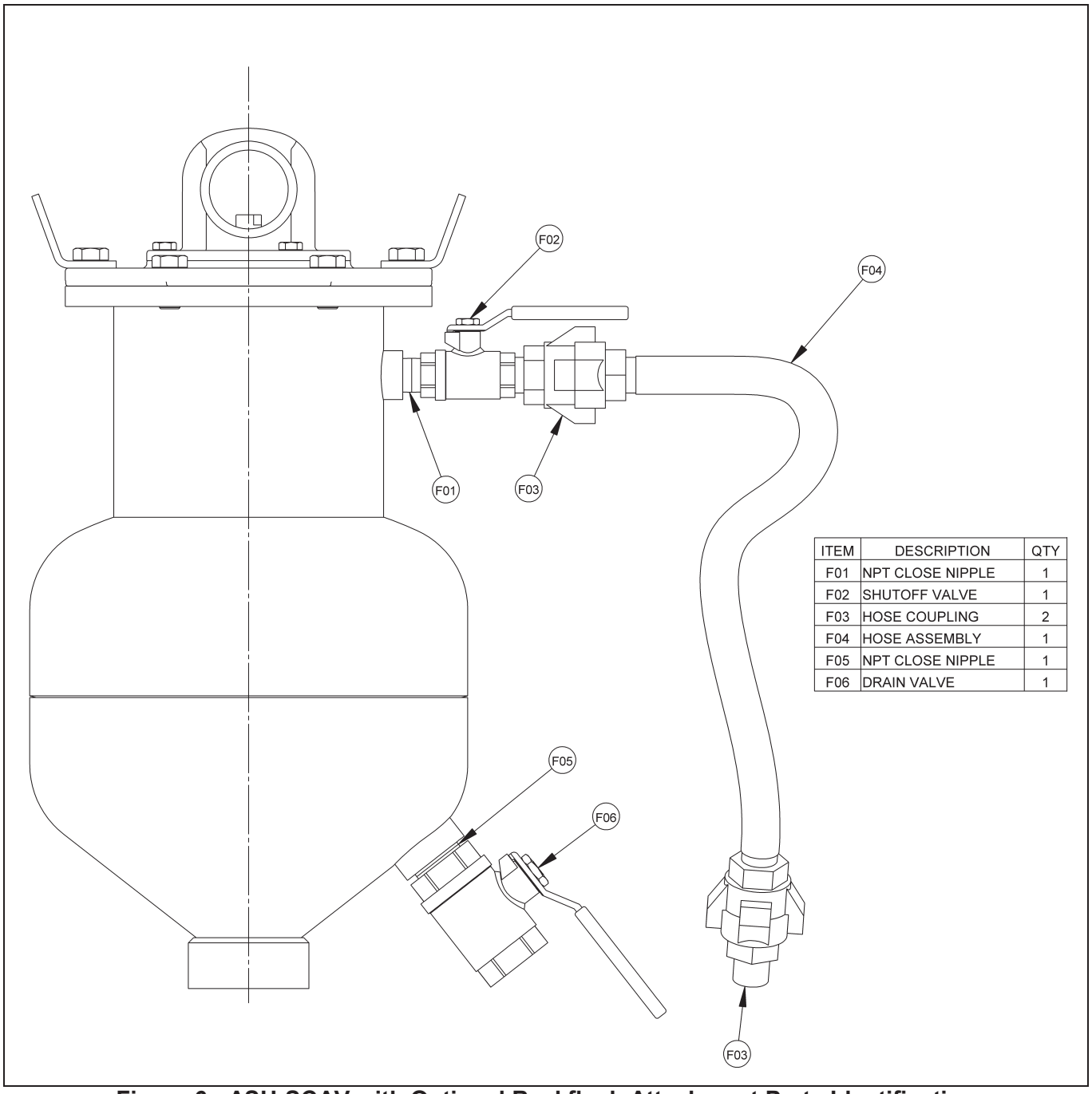

ITEM	DESCRIPTION	QTY
F01	NPT CLOSE NIPPLE	1
F02	SHUTOFF VALVE	1
F03	HOSE COUPLING	2
F04	HOSE ASSEMBLY	1
F05	NPT CLOSE NIPPLE	1
F06	DRAIN VALVE	1

Figure 6: ASU-SCAV with Optional Backflush Attachment Parts Identification

Troubleshooting

Condition	Possible Cause	Corrective Action
Valve leaks out of Outlet port.	Dirty disc and/or piston stem seal.	Backflush valve. Open for inspection if needed. Additional cleaning may be required.
	Float shaft is dirty or damaged.	Clean float shaft. Replace if damaged.
	Worn valve O-rings.	Rebuild valve with O-ring kit.
	Worn disc seal or piston stem seal.	Rebuild valve with new disc, piston stem and O-ring Kit.
Valve does not perform air release function.	Valve is full of debris.	Backflush valve or open for cleaning.
	Worn valve O-rings.	Rebuild valve with O-ring kit.
	Disc or float is stuck up in the up position	Check for debris and clean valve.

Guarantee

Products, auxiliaries and parts thereof of DeZURIK, Inc. manufacture are warranted to the original purchaser for a period of twenty-four (24) months from date of shipment from factory, against defective workmanship and material, but only if properly installed, operated and serviced in accordance with DeZURIK, Inc. recommendations. Repair or replacement, at our option, for items of DeZURIK, Inc. manufacture will be made free of charge, (FOB) our facility with removal, transportation and installation at your cost, if proved to be defective within such time, and this is your sole remedy with respect to such products. Equipment or parts manufactured by others but furnished by DeZURIK, Inc. will be repaired or replaced, but only to the extent provided in and honored by the original manufacturers warranty to DeZURIK, Inc., in each case subject to the limitations contained therein. No claim for transportation, labor or special or consequential damages or any other loss, cost or damage shall be allowed. You shall be solely responsible for determining suitability for use and in no event shall DeZURIK, Inc. be liable in this respect. DeZURIK, Inc. does not guarantee resistance to corrosion, erosion, abrasion or other sources of failure, nor does DeZURIK, Inc. guarantee a minimum length of service. Your failure to give written notice to us of any alleged defect under this warranty within twenty (20) days of its discovery, or attempts by someone other than DeZURIK, Inc. or its authorized representatives to remedy the alleged defects therein, or failure to return product or parts for repair or replacement as herein provided, or failure to install and operate said products and parts according to instructions furnished by DeZURIK, Inc., or misuse, modification, abuse or alteration of such product, accident, fire, flood or other Act of God, or failure to pay entire contract price when due shall be a waiver by you of all rights under this warranty.

The foregoing guarantee shall be null and void if, after shipment from our factory, the item is modified in any way or a component of another manufacturer, such as but not limited to, an actuator is attached to the item by anyone other than DeZURIK, Inc. Factory Service personnel. All orders accepted shall be deemed accepted subject to this limited warranty, which shall be exclusive of any other or previous Warranty, and this shall be the only effective guarantee or warranty binding on DeZURIK, Inc., despite anything to the contrary contained in the purchase order or represented by any agent or employee of DeZURIK, Inc., in writing or otherwise, notwithstanding, including but not limited to implied warranties.

THE FOREGOING REPAIR AND REPLACEMENT OBLIGATIONS ARE IN LIEU OF ALL OTHER WARRANTIES, OBLIGATIONS AND LIABILITIES, INCLUDING ALL WARRANTIES OF FITNESS FOR A PARTICULAR PURPOSE OR OF MERCHANTABILITY OR OTHERWISE, EXPRESSED OR IMPLIED IN FACT OR BY LAW, AND STATE DEZURIK, INC.'S ENTIRE AND EXCLUSIVE LIABILITY AND YOUR EXCLUSIVE REMEDY FOR ANY CLAIM IN CONNECTION WITH THE SALE AND FURNISHING OF SERVICES, GOODS OR PARTS, THEIR DESIGN, SUITABILITY FOR USE, INSTALLATION OR OPERATIONS.

Limitation of liability

LIMITATION OF LIABILITY: IN NO EVENT SHALL DEZURIK, INC. BE LIABLE FOR ANY DIRECT, INDIRECT, SPECIAL OR CONSEQUENTIAL DAMAGES WHATSOEVER, AND DEZURIK, INC.'S LIABILITY, UNDER NO CIRCUMSTANCES, WILL EXCEED THE CONTRACT PRICE FOR THE GOODS AND/OR SERVICES FOR WHICH LIABILITY IS CLAIMED. ANY ACTION BY YOU FOR BREACH OF CONTRACT MUST BE COMMENCED WITHIN 12 MONTHS AFTER THE DATE OF SALE.

Sales and Service

For information about our worldwide locations, approvals, certifications and local representative:

Web site: www.dezurik.com E-Mail: info@dezurik.com

DeZURIK

APCO | HILTON

250 Riverside Ave. N., Sartell, MN 56377 ● Phone: 320-259-2000 ● Fax: 320-259-2227

DeZURIK, Inc. reserves the right to incorporate our latest design and material changes without notice or obligation. Design features, materials of construction and dimensional data, as described in this manual, are provided for your information only and should not be relied upon unless confirmed in writing by DeZURIK, Inc. Certified drawings are available upon request.

Printed in U.S.A.

Valves and actuators

Knife gate valves

Brand :	**ORBINOX**
Model :	**EX SERIES 10 (10-2134(N))**
Supplier :	**CONTROLE LAURENTIDE**
Tag :	**KV-01-111/112/121/211/212/221/222/232** **KV-02-211/221/230**

1100, Montée Masson
Laval (Québec) H7E 4P2

Téléphone : 450-688-4012
Télécopieur : 450-661-6341

ORBINOX
VALVE SOLUTIONS IN MORE THAN 70 COUNTRIES

INSTALLATION, OPERATION & MAINTENANCE MANUAL

MODEL EX



ORBINOX SPAIN Pol.Ind. s/n-20270 ANOETA. Tel:+34 943 698030 Fax:+34 943 653066 e-mail:orbinox@orbinox.com

ORBINOX CANADA, ORBINOX USA, ORBINOX BRAZIL,ORBINOX SPAIN, ORBINOX UK, ORBINOX FRANCE, ORBINOX GERMANY, ORBINOX INDIA, ORBINOX CHINA, ORBINOX S.E.A.

www.orbinox.com

ORBINOX
VALVE SOLUTIONS IN MORE THAN 70 COUNTRIES

INDEX

	Page
0.- Description	2
1.- Handling	2
2.- Installation	4
3.- Actuators	7
4.- Maintenance	7
4.1.- Gland packing replacement	8
4.2.- Seal replacement	9
4.3.- PTFE seal replacement	10
4.4.- Lubrication	10
5.- Storage	12
6.- Parts list & drawing	13

0.- DESCRIPTION

The EX model knife gate is a uni-directional wafer valve designed for general industrial service applications. The design of the body and seat assures non-clogging shut-off with suspended solids.

The EX valve complies with the following European directives:

- DIR 2006/42/EC (machines)
- DIR 97/23/EC (PED) Fluid: Group 1 (b), 2 (Cat. I, mod.A)

It may also comply with the **ATEX directive 94/9/EC (Explosive Atmospheres)** :

The EX valve may comply with the directive regarding equipment and protective systems for their use in explosive atmospheres. In these cases, the logotype Ex shall appear on the identification label of the valve. This label shows the exact classification of the zone where the valve can be used. The user will be liable for its use in any other zone.
This directive only applies in the following atmospheric conditions:

$0{,}8 \text{ bar} \leq P \leq 1{,}2 \text{ bar}$

$-20^{\circ}C < T < 60^{\circ}C$

Any increase in temperature due to frictional warmth is negligible, since the relative speed of the moving parts is extremely low.
The risk analysis associated to this directive does not take into account the fluid that goes through the valve, even when such fluid produces an explosive atmosphere. The user must take into account the risks that the fluid generates, such as:

- Heating of the valve surface.
- Generation of electrostatic charges caused by displacement of the fluid.
- Shock waves caused by the installation (water hammer), internal crashes generated by the pellets or the risks due to foreign bodies susceptible of being present in the installation.

1.- HANDLING

The valves are packed according to the appropriate transport standards. If you receive the packing damaged, please inform the transport company in writing and contact you Orbinox representative.

ORBINOX
VALVE SOLUTIONS IN MORE THAN 70 COUNTRIES

When handling an Orbinox valve please pay attention to the following points:

- **Do NOT attach lifting gear to the valve actuators or gate guards**. They are not designed to bear the weight, and could easily be damaged.
- **Do NOT lift the valve by the valve bore**.
  This can cause damage to the seating surfaces and seals.
- Check that selected lifting gear is rated to carry the weight of the valve.
- The valve can be handled using eyebolts, soft straps or slings.
- Eyebolts: make sure the eyebolts have the same thread as the boltholes and they are all well secured. Ideally when using lifting gear to move an Orbinox valve, it should be supported by two or more eyebolts screwed into the tapped fixing holes in the valve body.
- Soft straps: with the valve in the closed position, the straps should be placed between the gland area and the bore such that the valve is balanced.



Fig. 1 Handling with eyebolts

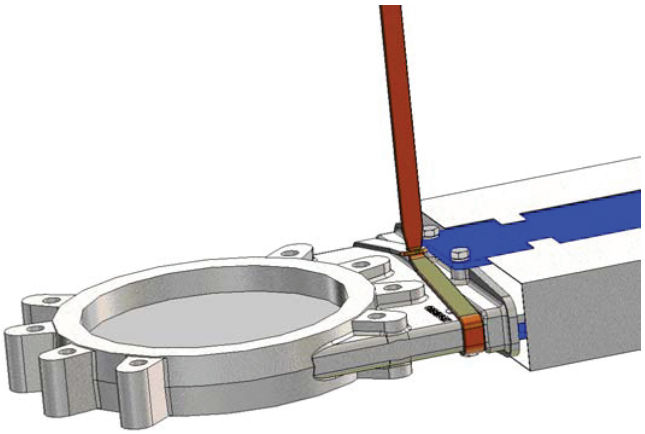

Fig. 2 Handling with soft straps

2.- INSTALLATION

To avoid personal injury or damage to property from the release of process fluid:

- Those in charge of handling and maintenance of the valve must be qualified and trained in valve operations.
- Use appropriate personal protection equipment (gloves, safety shoes, etc).
- Shut off all operating lines to the valve and place a warning sign.
- Isolate the valve completely from the process.
- Release process pressure.
- Drain the process fluid from the valve.
- According to **EN 13463-1 (15),** during installation and maintenance operations, use hand tools **(non electric)** with Working Allowance.

Before installation, inspect the valve body and components for any damage that may have occurred during shipping or storage. Make sure the internal cavities within the valve body are clean. Inspect the pipeline and mating flanges, making sure the pipe is free of foreign material and that the flanges are clean.

The valve is unidirectional. It should be installed with pressure exerted against the seat. The words "SEAT SIDE" are marked on the valve body to indicate the position of the valve seat. Installation and the correct orientation with respect to the direction of the flow is the responsibility of the user.

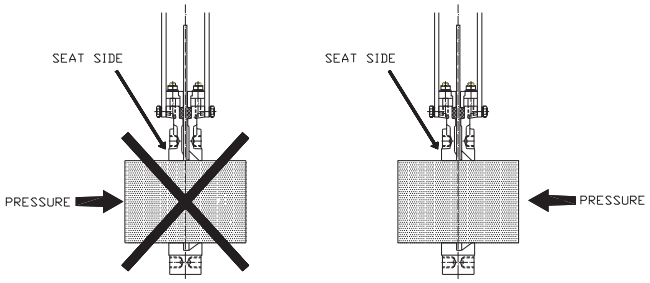

It should be noted that the direction of flow and differential pressure, do not always coincide.

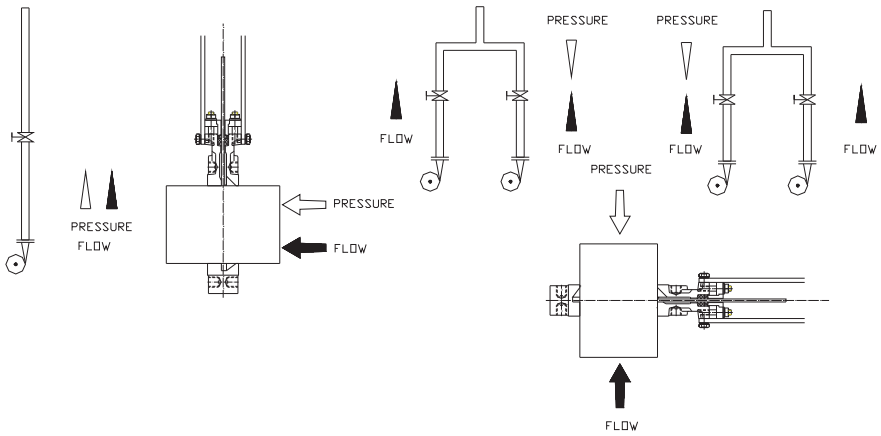

ORBINOX
VALVE SOLUTIONS IN MORE THAN 70 COUNTRIES

Special care should be taken to maintain the correct distance between the flanges and to ensure that they are parallel to the valve body. Incorrect alignment of the valve can cause deformations, which can lead to difficulties in operation.

The following table gives the maximum torque values for the valve fixing bolts. Also shown is th maximum depth (T) allowed for the tapped blind boltholes drilled into the valve body.

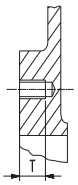

DN	50	65	80	100	125	150	200	250	300	350	400	450	500	600	700	800	900	1000	1200	1400
T (mm)	11	11	11	11	11	14	14	18	18	22	24	24	24	24	20	20	20	20	30	37
Kg.m	6	6	6	6	7	7	7	11	11	15	15	19	19	23	23	28	28	34	42	52

The valve can be mounted in any position with regard to the pipe. However, it is advisable to place it vertically in horizontal pipeline (A) if the installation allows it. (Please consult the technical department at Orbinox).

With larger diameters (> 300 mm), heavy actuators (pneumatic, electric, etc.), or with the valve installed horizontally (B) or at an angle (C) on a horizontal pipeline, the installation will require the construction of suitable supports. (See the following diagram and consult the technical department at Orbinox).

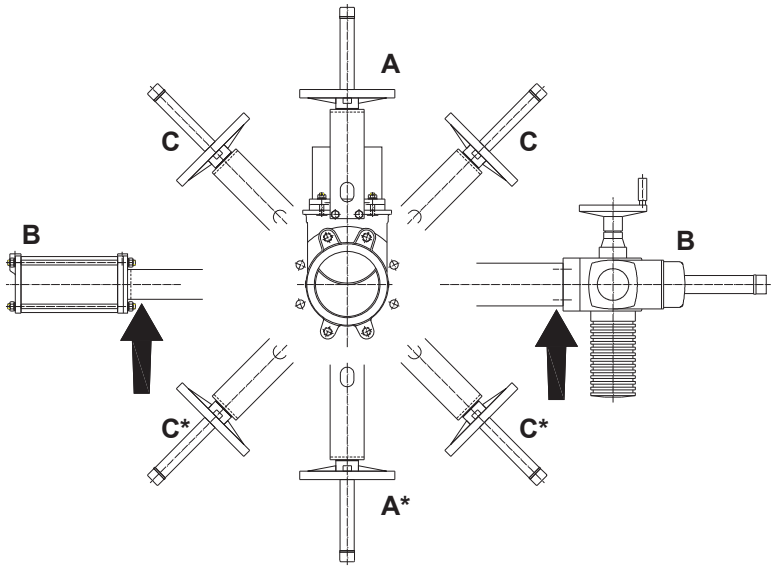

** For these positions please consult Orbinox.*

In vertical pipelines, the construction of suitable supports is always required (for further information please consult the technical department at Orbinox).

Once the valve is installed, test that the flanges have been fastened correctly and that all electrical and/or pneumatic connections have been properly made.

ORBINOX
VALVE SOLUTIONS IN MORE THAN 70 COUNTRIES

These instructions must be observed when installing an Orbinox knife gate valve in an ATEX zone:

- Make sure the valve is ATEX marked according to the requested zone and it includes all anti-static devices.
- Check continuity between the body of the valve and the pipe (test in accordance with EN 12266-2 Standard, annex B, points B.2.2.2. and B.2.3.1).
- This check must be done every time the valve has been removed from the line, serviced, and put back to the line.

The operation of automated valves is limited only with fitted gate covers.

First, operate the valve with no flow in the pipeline. Then test operation and valve seal with flow. It should be noted that the packing material might settle in shipping/storage, which can cause minor leakage. This can be solved by tightening the gland follower (5) during installation. The nuts shall be tightened gradually and crosswise until the leakage stops (see the next figure). Check that there is no metal contact between the glandfollower (5) and the gate (2).



If the glandfollower nuts are overtorqued, the force needed to operate the valve will increase, the valve function will be affected and the box packing lifetime will be shortened.

The table below shows the recomemended maximum torques for the glandfollower nuts.

DN	Torque (N.m)
50 - 100	20
125 - 200	30
250 - 1200	35

Once performance has been tested, the valve can be put into operation.

Approximate weight of the handwheel-operated valve (rising stem):

DN	50	65	80	100	125	150	200	250	300	350	400	450	500	600	700	800	900	1000	1200	1400
Kg	7	8	9	11	15	18	30	44	58	96	124	168	192	245	405	512	680	865	1055	1350

3.- ACTUATORS

3.1.- Handwheel

Turn the hand wheel (10) anticlockwise to open the valve. Turn the hand wheel clockwise to close the valve.

3.2.- Lever

To operate the valve with this device, first loosen the locking clamp located on the top of the yoke (8). Then either open or close the valve by moving the lever in the desired direction. Finally, fix the position of the lever with the locking clamp.

3.3.- Pneumatic

Valves are usually supplied with a double acting pneumatic actuator although, upon request, we can supply single-acting actuators. In either case the feed pressure can vary between 3,5 and 10 Kg/cm^2.However, the size of the actuator for each valve has been designed for a feed pressure of 6 Kg/cm^2.

It is essential for a good maintenance of the cylinder that air should be well dried, filtered and lubricated.

It is recommended to actuate the cylinder 3-4 times before the start up, once it is installed in the pipeline.

3.4.- Electric actuator

Depending on the type or make of the electric actuator, specific instructions (i.e. a manufacturer's manual) will be supplied.

- Allowed actuators for ATEX zones: Hand wheel, Chain Wheel, Bevel Gear, Lever, Pneumatic Actuator (double acting **ONLY**) and Electric Motor
- Make sure these actuators are ATEX marked according to the requested zone.
- Maximum travel speed of the gate must equal or below 0,05 m/s

4.- MAINTENANCE

The valve must not undergo any modifications without a previous agreement with ORBINOX.
ORBINOX shall not be liable for any damages that may arise due to the use of non original parts or components

To avoid personal injury or damage to property from the release of process fluid:

- Those in charge of handling and maintenance of the valve must be qualified and trained in valve operations.
- Use appropriate personal protection equipment (gloves, safety shoes, etc).
- Shut off all operating lines to the valve and place a warning sign.
- Isolate the valve completely from the process.
- Release process pressure.
- Drain the process fluid from the valve.
- According to **EN 13463-1 (15),** during installation and maintenance operations, use hand tools **(non electric)** with Working Allowance.

The only maintenance required is to change the gland packing (4) or the seal (3) if the valve is a resilient seated type.

The life of these components will depend on the working conditions of the valve such as: pressure, temperature, abrasion, chemical action, number of operations, etc.

4.1. - Replacement of the gland packing (4):

1) Depressurise the circuit and place the valve in close position.
2) Remove the gate guards (for automatically actuated valves only).
3) - Rising stem valves. Photo 1: Release the spindle or stem (6) from the gate (2).
   - Non rising stem. Photo 2: Release the stem nut from the gate (2).

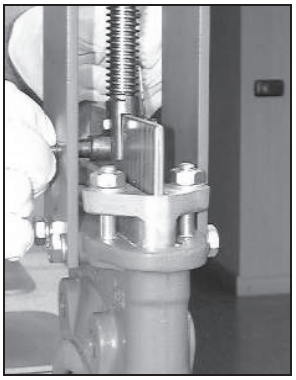

Photo 1

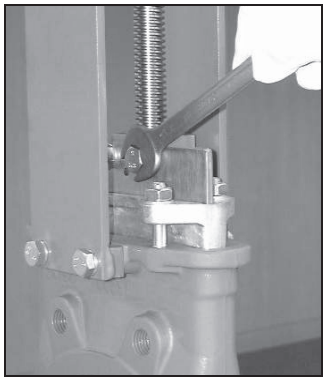

Photo 2

4) Loosen the screws of the yoke (8) and remove it (without loosing the actuator).
5) Loosen the nuts of the gland follower (5) and remove it. (Photo 3)
6) Remove the old packing rings (4) and clean the stuffing box.
7) Insert the new packing rings (4), making sure that the ring joints alternate (the first on one side of the gate, the next on the other and so on). (Photo 4)
8) Once the necessary packing rings (4) have been inserted, proceed with a steady initial tightening of the gland follower (5).(Photo 3)
9) Place the yoke (8) (with the actuator) and screw it.
10) Fix the stem (6) to the gate (2)(Rising stem valves.Photo 1) or fix the stem nut to the gate.(Non rising stem. Photo 2).
11) Remount the gate guards.
12) Carry out some operations with a loaded circuit and then re-tighten the gland follower (5) to prevent leakage.

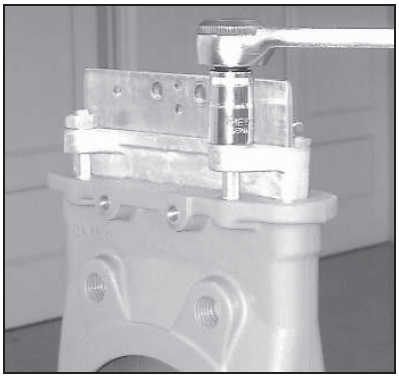

Photo 3

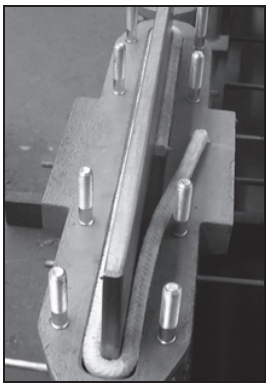

Photo 4

4.2.- Replacement of the seal (3) (only applicable to resilient seated valves):

1) Remove the valve from the pipeline.
2) Remove the gate guards (for automatically actuated valves only).
3) Release the spindle or stem (6) from the gate (2).(Rising stem valves. Photo 1) or release the stem nut from the gate.(Non rising stem. Photo 2).
4) Loosen the screws of the yoke (8) and remove it (without loosing the actuator).
5) Loosen the nuts of the gland follower (5) and remove it.(Photo 3)
6) Remove the old packing (4) and the gate (2) and clean the stuffing box.
7) Remove the seal retainer ring (9) which support the seals (3).
8) Remove the worn seal (3) and clean the seal housing.
9) Once the new seal (3) is cut according to size, insert it into the seat housing (making sure that the union of the seal is at the top). (Photos 5 and 6)

If the valve has PTFE seal (3), follow the point 4.3.

Seal lengths

DN	50	65	80	100	125	150	200	250	300	350	400	450	500	600	700	800	900	1000	1200	1400
L (mm)	240	290	340	410	485	565	720	880	1040	1200	1355	1510	1670	1970	2330	2645	2930	3240	3900	4600

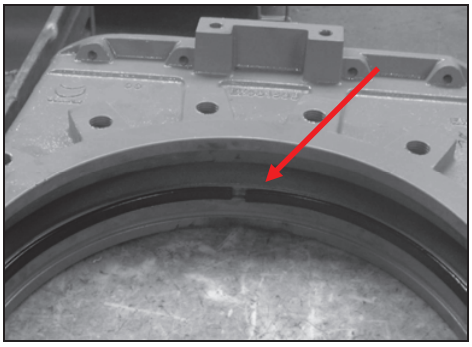

Photo 5

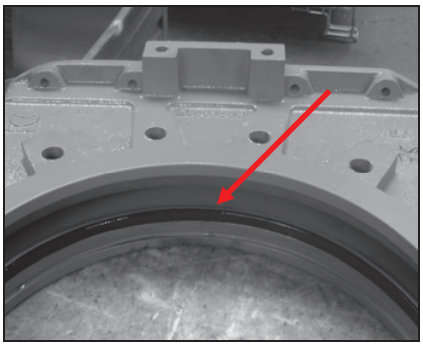

Photo 6

10) Insert the seal retainer ring (9) by hammering gently around the edge. (Photos 7 and 8)



Photo 7



Photo 8

11) Remount the gate (2).
12) Once the necessary packing rings (4) have been inserted, proceed with a steady initial tightening of the gland follower (5).(Photo 3) following the steps of point 4.1.

4.3. - Replacement of the PTFE seal (3):

Follow the same procedure as point 4.2 but with following notes:

1. To obtain a tighter shut off in stainless steel valves (CF8M body), the machined housing of the seat is sealed with plastic glue. This is not necessary in cast iron valves (GG25). With the seal in this position:



2. Make a circle; joining the ends and making a heart-shaped form (see the following diagram).

3. Insert both ends of the seal in the upper side of the machined housing of the seat (adjacent to the gland follower (5)), and pushing the arched part with a finger, insert the seal into the housing.
If the diameter of the valve is small (DN≤150), a vice can be used.

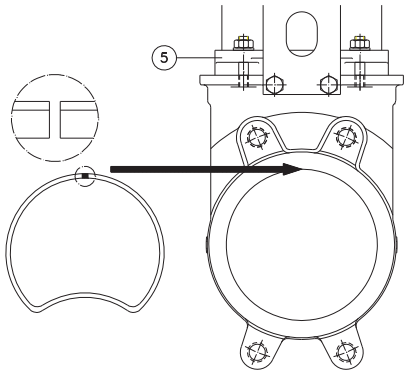

4.4.- Lubrication:

Twice a year, it is recommended to remove the protection cap (11) and fill up the stem protector (12) halfway with a calcium-based grease with the following characteristics: highly water resistant, low ash content, and excellent adherence.

Special requirements for ATEX valves:

- The maintenance personnel must be made fully aware of the risks of explosion, and it is advisable that they receive specific training regarding ATEX.
- Periodicity of check and evaluation of graphite packing status and valve electrical conductivity must be determined by end user according to valve working conditions. In any case, once the valve is put into operation, the packing area must be revised after the valve has been stroked 100 times or after 3 months of operation, whatever happens first. After this preliminary check, new checking periods must be determined by end user based on the results of this first check.
- Clean the valve periodically to prevent dust accumulation. Do not sweep or dump the dust. Always use a vacuum cleaner system
- Dead en service is not allowed.

- Do not apply any new coating to the valve. Should it require new coating, please contact our closest representative.
- Allowed seals: EPDM, VITON, NITRILE, GRAPHITE and METAL (no seal)
- Allowed packing: ST and GRAPHITE packing
- Any other materials but those above are not allowed to be used in ATEX zones.
- In order to keep the ATEX approval, always use original spares from Orbinox.
  - Washer → DIN 6798A (This washer guarantees continuity among carbon steel parts, coated in epoxy, yoke and body and stainless steel guards for coating thicknesses up to 200 microns)
  - ST and GR packing →
    - ORBINOX ST: Synthetic packing impregnated with PTFE
    - GR: Graphite packing → MONTERO Ecograflex 780R

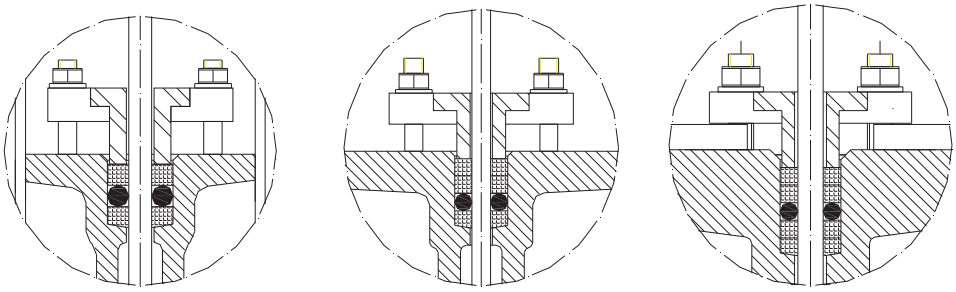

DN 50–600 DN 700–750 DN 800–1200

- After any maintenance of ATEX valves, it is mandatory to check that the valve is earthed through the pipe, and there is continuity among the different valve components, such as the body, the gate, the supports, and guards (test in accordance with EN 12266-2 Standard, annex B, points B.2.2.2. and B.2.3.1).

MAXIMUM FLUID TEMPERATURES

Atmosphere	
Gas/air, steam/air, and mist/air	**Dust/air**
80% of minimum fluid ignition temperature, minus 10ºK	2/3 of minimum dust cloud ignition temperature minus 85ºK

Note: these maximum fluid temperatures apply to all categories. The differences between categories are the consideration of foreseeable malfunction cases and rare malfunctions cases

MAXIMUM SEAL AND PACKING TEMPERATURES

Max Temperature (ºC)	SEAL			
	EPDM	VITON	NITRILE	GRAPHITE
	120	200	120	600

Max Temperature (ºC)	PACKING	
	ST	GRAPHITE
	240	600

Note: Most of the times seals maximum temperature capacity is the key limitation factor when evaluating valve maximum working temperatures. In ATEX zones these temperatures must be compared to those above related to limitation of fluids temperatures.
Always consider the most restrictive as maximum valve working temperature.

5.- STORAGE

- For long storage periods keep the valves indoors in a safe and dry place and protect it from any impact and or vibrations.
- Storing temperatures: -10ºC to +40ºC
- Valves must be stored in either full open or full closed position.
- For any component installed in the valves, electric motors, solenoid valves, etc, please refer to their own instructions manuals

6.- PARTS LIST & DRAWINGS

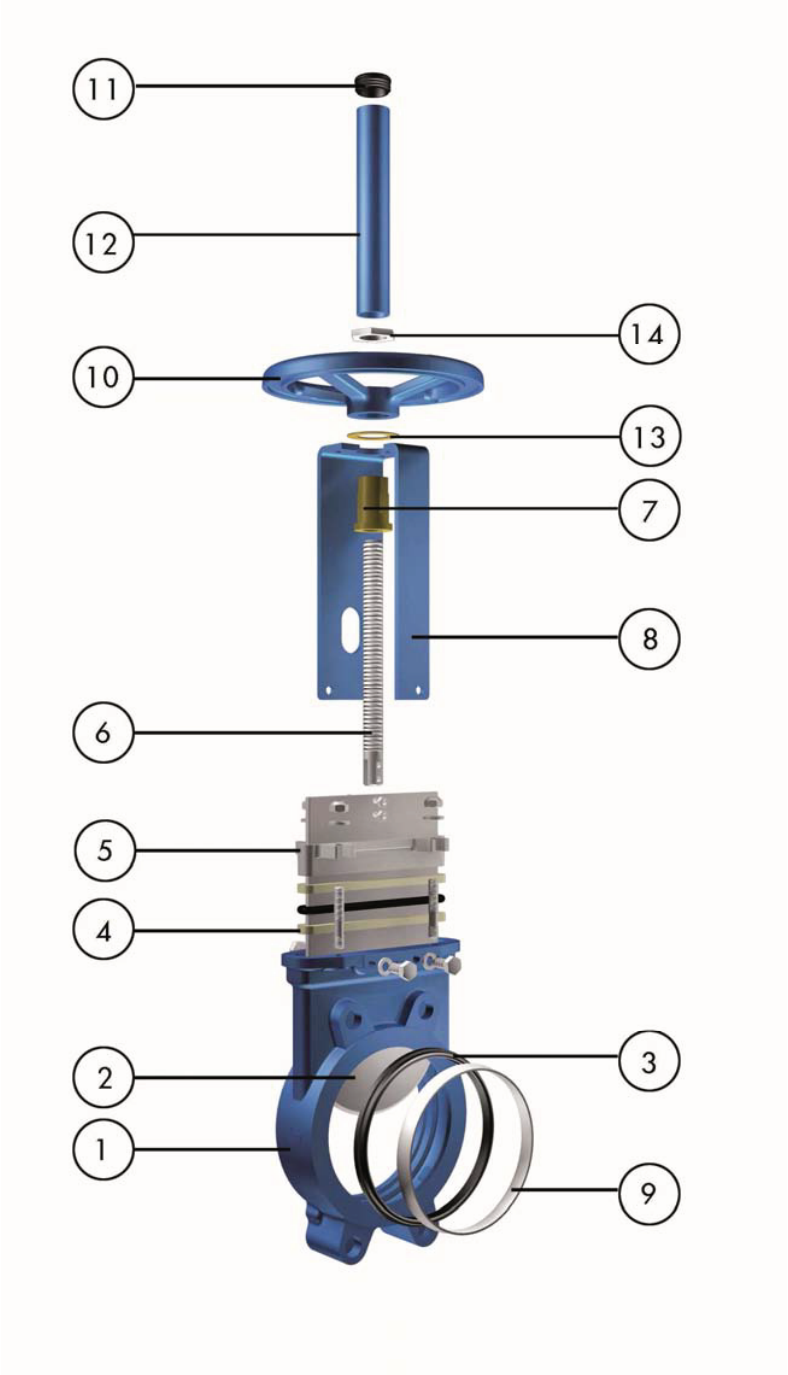

1.- BODY
2.- GATE
3.- SEAL
4.- PACKING RING
5.- GLAND FOLLOWER
6.- STEM
7.- STEM NUT
8.- YOKE
9.- SEAL RETAINER RING
10.- HANDWHEEL
11.- CAP
12.- STEM PROTECTOR
13.- FRICTION WASHER
14.- NUT

SECTION 04 - O&M MANUAL

G. Valves and actuators

Knife gate valves ACTUATORS

Brand :	**EMERSON**
Model :	**UEMA-6**
Supplier :	**CONTROLE LAURENTIDE**
Tag :	**KV-01-001/111/112/121** **KV-02-211/221**

1100, Montée Masson
Laval (Québec) H7E 4P2

Téléphone : 450-688-4012
Télécopieur : 450-661-6341

Manual E796

2000 M2CP

When communicating with EIM for replacement parts or for technical questions, we MUST have actuator nameplate information, including Job, Serial, and Model numbers. This allows us to check EIM records of your actuator.

When ordering parts, specify repair part by EIM part number and description from drawings furnished with actuator.

EIM Parts Department Fax (281) 261-3834

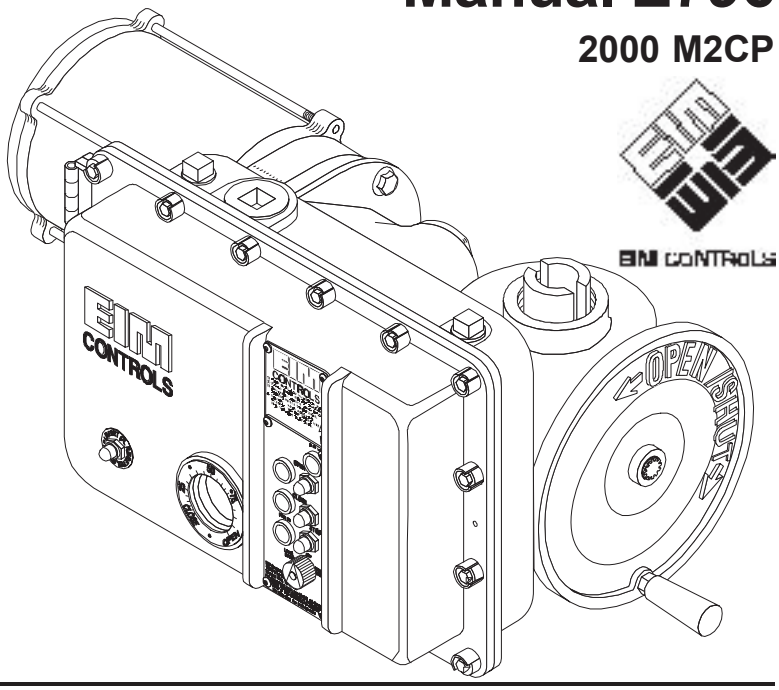

TABLE OF CONTENTS **Page**

Storage Instructions 2
M2CP Electrical Hook Up 2
Assembly to Valves 3
Limit Switch Setting Instructions 4
Torque Switch Setting Instructions 5
MDPI & Potentiometer Gear Box 5
Futronic II 83957 Calibration 6
Trouble Shooting & Wiring Diagram Symbols 7

DO

1. **DO follow proper storage procedures.** Improper storage will void warranty.
2. ***DANGER*: DO check for proper motor rotation.** If valve goes wrong direction when button is pushed, you have no torque or limit protection. 3-Phase incoming power voltage must have 2 wires reversed.
3. **DO read and follow procedures** before attempting to energize actuator.
4. **DO cut off electric power before opening switch compartment.**
5. **DO install relief vent in highest point of gearbox.**
6. **DO use valve stem covers** of sufficient length.
7. **DO clean electrical enclosure flange** thoroughly & lightly grease before closing.
8. **DO secure electrical enclosure bolts** (10-12 ft-lbs).
9. **DO follow an annual maintenance procedure.**
10. **DO use caution** when working on, with, or around valves and actuators. You can be dealing with high pressures, forces, voltages and flammable media.

DON'T

1. **Don't Start-up** without reading this manual.
2. **Don't stack actuators.**
3. **Don't store actuator on the ground unprotected.**
4. **Don't lift the unit** by clutch lever or handwheel.
5. **Don't lift a valve assembly** by electrical actuator.
6. **Don't operate electrically without first** checking proper phase rotation, torque and position limit switch adjustments (follow instructions on pgs 2, 4 and 5).
7. **Don't plug actuator motor** by starting and stopping repeatedly to move a too stiff valve. Check for cause.
8. **Don't jumper torque switches** except as recommended by Wiring Diagram or Valve Manufacturer.
9. **Don't use oversize thermal motor overloads** to eliminate tripping problem. Find cause and correct.
10. **Don't use a cheater** to force the handwheel. You can damage gearing and shafts. Find cause and correct.
11. **Don't torque seat valve,** sluice gate or damper unless the valve manufacturer recommends.

LUBRICATION

EIM Actuators are factory filled with a high quality lubricant carefully selected to insure actuator performance under specified operating conditions. Refer to EIM JOB SPEC SHEET to identify the lubricant provided. Normal operation *may not* require lubricant replacement.

MAINTENANCE

At least once a year a check should be made of your EIM actuator.

a) Disconnect ***all*** electrical power to actuator.

b) Open electrical enclosure. Inspect & tighten all electrical connections.

c) Visually inspect for any electrical or mechanical damage. Replace worn or damaged components.

d) Check lubrication consistency and level. Fill or replace if required.

PRESSURE RELIEF

During operation of electric actuator, the gear temperature increase in combination with variations of outdoor temperature will cause a small pressure build-up within actuator gear box. EIM furnishes Pressure Relief Vent Fitting Part No. 83385. Placement on Actuator can be determined only after field location and position of valve has been determined. Select the highest 1/2 NPT vent location on actuator gear box; remove 1/2 NPT plug and replace with 83385. The possible locations of vent are shown on EIM Outline Drawing.

SHORT TERM STORAGE

(Stored at Job Site less than one year from shipment)

1. Actuator should be stored with motor shaft in horizontal position and electrical enclosure in either the horizontal or vertical position.
2. Actuator should be stored indoors free from job site dirt, mud, moisture and temperature changes.
3. If indoor storage is not possible, the actuator must be stored off the ground above possible water or snow level. Remove M2CP and store with other electrical and electronic equipment in protected warehouse. If M2CP is not removed, Space heater MUST be energized to protect electrical controls.
4. EIM supplies NPT plugs in each conduit entry. Do not remove until electrical hook-up. The customer conduit should be routed to enter electrical enclosure at 1-1/2 (1.50) NPT located at lowest point, so condensation does not drain into enclosure and damage parts.
5. Cover units loosely with a plastic sheet. This serves as partial protection from rain.

LONG TERM STORAGE

(Stored more than one year from shipment)

1. Store indoors or M2CP should be removed and stored in a protected area. Follow procedures of short term storage.

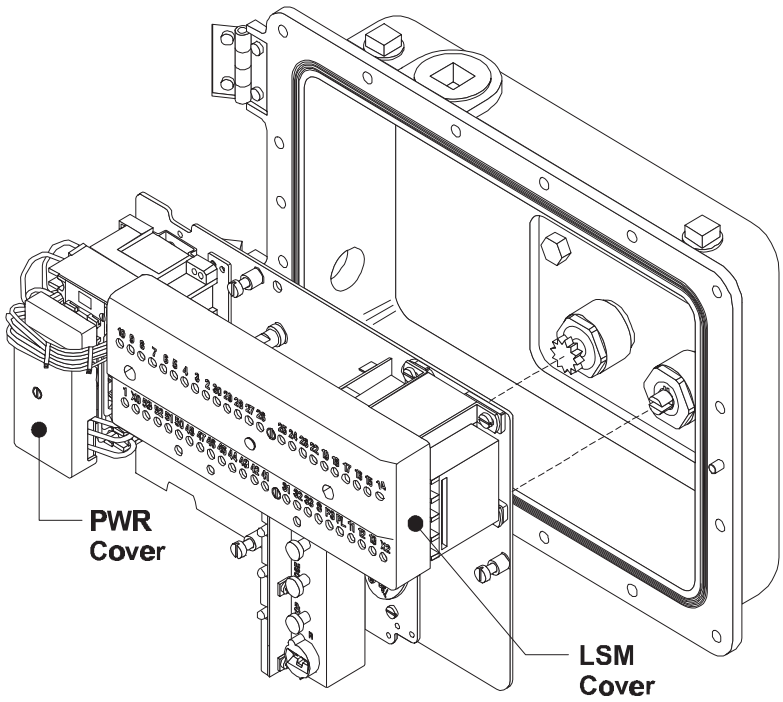

FAILURE TO STORE ACTUATOR PROPERLY WILL VOID WARRANTY OF ELECTRICAL & ELECTRONIC COMPONENTS

M2CP ELECTRICAL HOOK-UP Remove PWR and TBM covers to expose terminals for customer wiring.

EIM Modular Modular Control Package (M2CP) is available configured in many combinations of electrical and electronic parts. Refer to **WIRING DIAGRAM** and **EIM JOB SPEC SHEET** for components provided by EIM. Connect control wires to TBM and Power (motor) Voltage to PWR terminals. If optional M2CP mounted circuit breaker was specified, connect power voltage leads to circuit breaker. EIM terminal blocks are furnished with wire binding screw connectors with rising captive plates, allowing field connection by several methods: 1) strip and connect bare wire, 2) strip and install wire ferrule, 3) strip and install crimp-on insulated or non-insulated ring tongue or similar terminal. Circuit Breaker accepts 1) bare wire strip, or 2) wire ferrule.

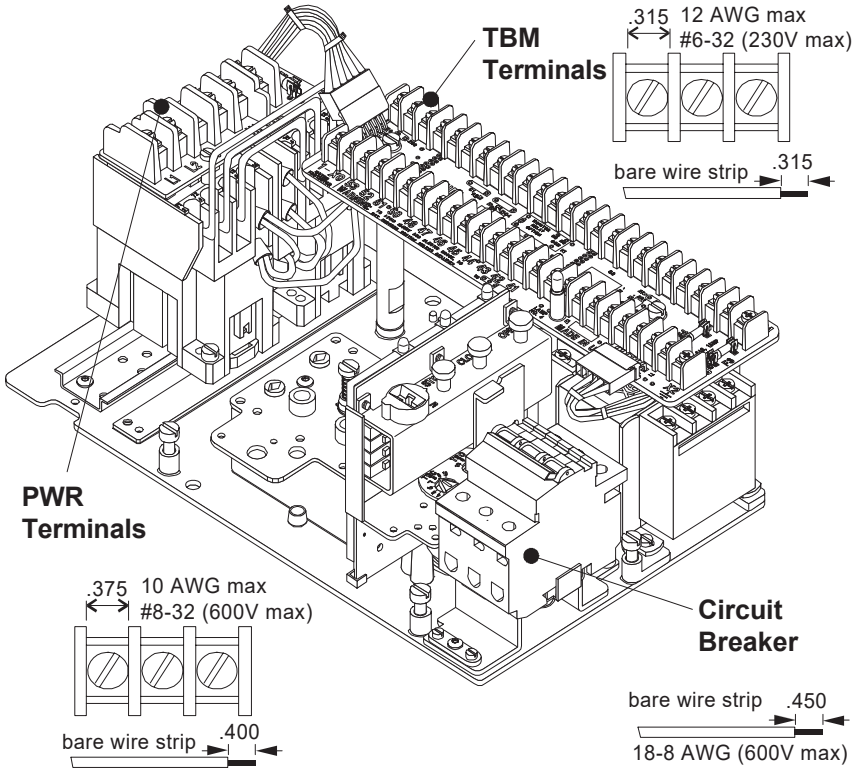

Electrical Hook-up

STEP 1. Move valve to mid-position by handwheel. This will allow sufficient time to stop actuator in case of improper hook-up or reversed incoming power voltage phases.

STEP 2. Identify a means of removing power from actuator during check out. Be sure no erroneous remote control signal can be received causing actuator to energize.

STEP 3. Energize Open control to check operation of contactor and pushbuttons. Open controls must move valve in Open direction. If valve Closes, actuator must be stopped and any (2) two power voltage leads reversed to correct voltage phasing.

CAUTION: If voltage is improperly phased, Torque and Position Limit Switches are not in circuit to protect valve.

STEP 4. Seal all field conduit entries in accordance with National Electric Code.

ASSEMBLY TO VALVES - Threaded Valve Stem

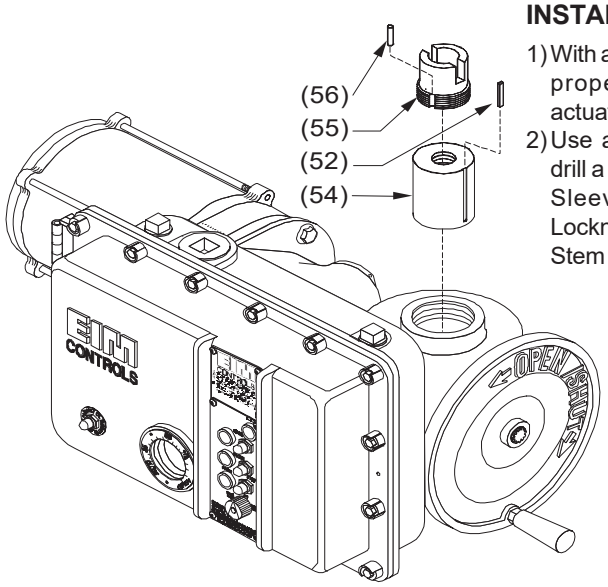

LOCKNUT LOCKPIN INSTALLATION

1) With actuator in place on valve, ensure proper flange mating and valve actuator orientation.
2) Use a number 30 (.1285) drill bit to drill a hole 3/4 inch deep into the Drive Sleeve assembly threads for the Locknut Lockpin (56) using groove in Stem Nut Locknut as drill guide.
3) Install Locknut Lockpin (56) into drilled hole to prevent Stem Nut Locknut from working loose and turning.

Note: When installing, the Locknut Lockpin - it should extend 1/4 inch above the Drive Sleeve assembly to allow for future removal.

STEM NUT INSTALLATION (MULTI-TURN)

1) Unscrew Locknut (55) holding Bronze Stem Nut (54) and remove the Stem Nut and Key (52).
2) Lubricate Stem and run Stem Nut down Stem to check acme thread fit, then remove Stem Nut and set aside.
3) Lower actuator over Stem onto valve flange. The screws thru valve flange into actuator must engage a minimum of one full screw diameter deep into bottom base and be tightened to a preload. See assembly drawing for screw size and torque to tighten properly.

MOUNTING SCREWS

If EIM supplied adaptation, the mounting screws are included. If adaptation to valve was the responsibility of others, the mounting screws *are not* furnished by EIM. Screws thru adapter MUST engage a minimum of one screw diameter deep into EIM actuator base.

4) Screw Stem Nut on Stem until it enters Drive Sleeve. Line (52) Key and (54) Drive Sleeve keyway and insert (52) Key.
5) Turn handwheel in Open direction, pulling Stem Nut into Drive Sleeve until it bottoms out (valve will begin to open).

CAUTION: LOCKNUT MUST BE TIGHT AGAINST STEM NUT.

6) Lower Locknut (55) over Valve Stem and screw into place firmly against top of Stem Nut. Tap Locknut ears using brass drift until tight.

THRUST SPOOL (Model 4000 & 5000)

1) Locate Thrust Mounting bolts.
2) Remove eight mounting bolts and separate Spool from actuator.
3) Position Spool over Valve Stem. Thread Spool onto Valve Stem until it meets valve plate.
4) Bolt and secure Spool onto valve.
5) Position actuator above Spool. Lower actuator onto Spool while manually rotating the unit until ears on Stem Nut and ears on main Drive Sleeve mesh.
6) Grease flange face before securing unit to Spool.
7) Re-install thrust plate mounting bolts. Tighten to proper torque.

NOTE: Reverse procedure if Stem Nut needs to be replaced. Actuator does not need to be returned to factory for this procedure.

(Quarter-Turn) SPLINE BUSHING

EIM removable Spline Bushing allows easy adaptation to valve shaft diameter and Key. Actuator may be rotated with respect to valve shaft for unexpected or awkward field installations.

1) Move valve to full Open or Close.
2) Place Spline Bushing on valve shaft with Key and tighten set screw.
3) Using handwheel on actuator, move gear position indicator arrow to full Open or Close (the position in Step 1)
4) Position actuator so Spline Bore is correctly aligned with the Spline Bushing on stem shaft.
5) Move actuator onto shaft until flange faces properly mate. Secure with screws thru the adapter flange into base of actuator.

Quarter-Turn Valve

STOP SETTING PROCEDURE

Built-in mechanical stops are provided to prevent handwheel operation beyond total valve travel (90 ± 6°). End of travel stops are independently adjusted, locked in place and sealed.

Type P, Q & R
(top mount)

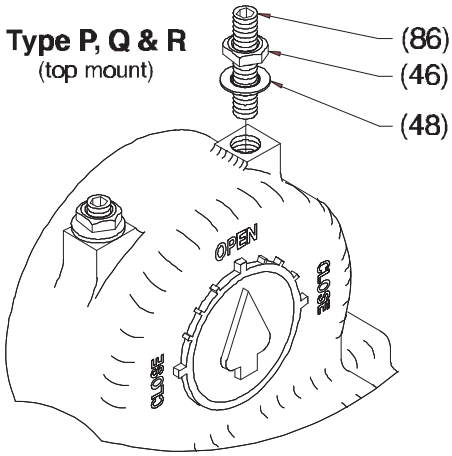

Loosen both Locknuts (46) and back out two Stopbolts (86) to allow valve to close and open fully. Insure Electrical Travel Limit Switches have been adjusted (see pg. 4).

1) Run actuator electrically to full Close.
2) Screw Close (86) Stopbolt in until it seats, then back off 1/2 turn. Install (48) Washer and tighten (46) Locknut.
3) Run actuator electrically to full Open.
4) Screw Open (86) Stopbolt in until it seats, then back off 1/2 turn. Install (48) Washer and tighten (46) Locknut.

Type M/MG
(side mount)

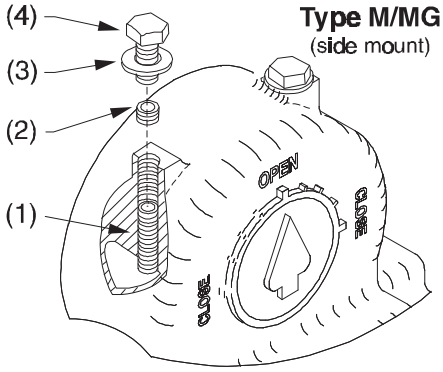

Back out two Stopbolts (1) to allow valve to close and open fully. Set Travel Limit Switches (see pg. 4).

1) Run actuator electrically to full Close.
2) Screw Close (1) Stopbolt in until it seats, then back off 1/2 turn. Tighten (2) Lockscrew.
3) Run actuator electrically to full Open.
4) Screw Open (1) Stopbolt in until it seats; back off 1/2 turn. Tighten Locknut.
5) Install (3) & (4) Seal Washer & Screw.

CAUTION: Do not set actuator position Limit Switches to drive into mechanical stops. Damage can occur if unit is repeatedly stalled into end stops.

LIMIT SWITCH SETTING INSTRUCTIONS

BEFORE MAKING LIMIT SWITCH SETTING:

1. Move valve to mid-position (use handwheel).
2. Phase the power (motor) voltage and make sure that open contactor moves valve Open and close contactor moves valve Closed.

DANGER: Improper power voltage phasing eliminates protection of both position limit switch and torque switches, risking valve damage.

TO SET OPEN LIMIT SWITCH (LSO)

1. **Open valve** during handwheel operation note rotation direction of screwdriver (fig. 1) in LSO Adjusting Shaft. After valve is fully Open, Close it three handwheel turns to allow for coasting when motor is actuated.
2. **Disengage spring loaded gear:** Push Disengage Shaft in (fig. 2a) down, then rotate 90° so shaft is captured down. This will disengage limit switch gears from spring loaded drive gear.

TIP: many turns may be required to set limit switches; it may be convenient to use a reversible variable speed drill to rotate the adjusting shafts instead of a screwdriver.

3. **Line up LSO indicator:** If switch rotor arrow does not line with round holes (within ± 15°) on plate as shown in fig. 3a, rotate screwdriver in same direction noted in Step 1 until switch just rotates. If arrows line up as shown in fig. 3b, rotate screwdriver in the opposite direction until switch just rotates.
4. **Re-engage** the spring-loaded drive gear by rotating disengage shaft in fig. 2a. Spring loaded disengage shaft will rise.
5. **IMPORTANT: to insure limit switch gears have re-engaged properly with spring loaded drive gear, firmly *"jiggle"* (rotate) all adjusting shafts with screwdriver back and forth. Proper engagement has been made if all shafts (LSC, LSO, LSA & LSB) will not turn with screwdriver.**

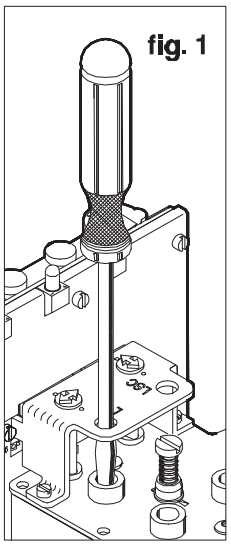

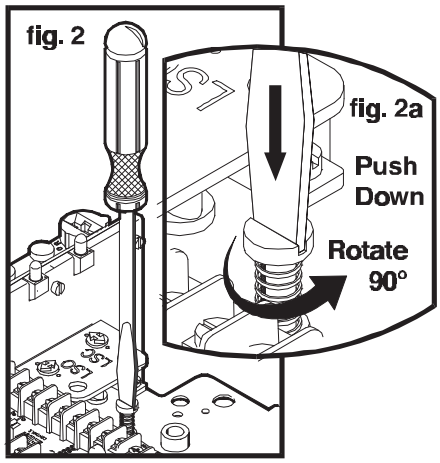

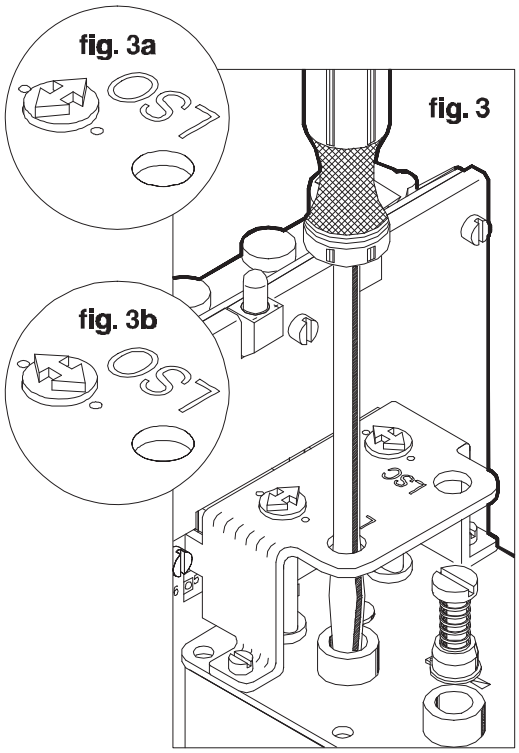

SET (LSC) CLOSE LIMIT SWITCH

1. **Close valve**, using handwheel. During handwheel operation note rotation direction of screwdriver in LSC adjusting shaft. After valve is fully Closed, Open it three handwheel turns to allow for coast.
2. Repeat steps 2 through 5 of LSO setting instructions with screwdriver in LSC cavity.

Important: *"jiggle"* adjusting shafts.

TO SET INTERMEDIATE SWITCH (LSA OR LSB), if included.

1. Open Valve to desired position, then repeat steps 2 thru 5 of LSO.

Important: *"jiggle"* adjusting shafts.

TORQUE SEATED VALVES

If valve is a torque seated valve, and the geared limit contacts are used for indication only, the LSC switch should be set several handwheel turns ahead of torque switch contact action. This gives proper valve position Lamp indication in spite of minor position variations which might occur due to torque seating.

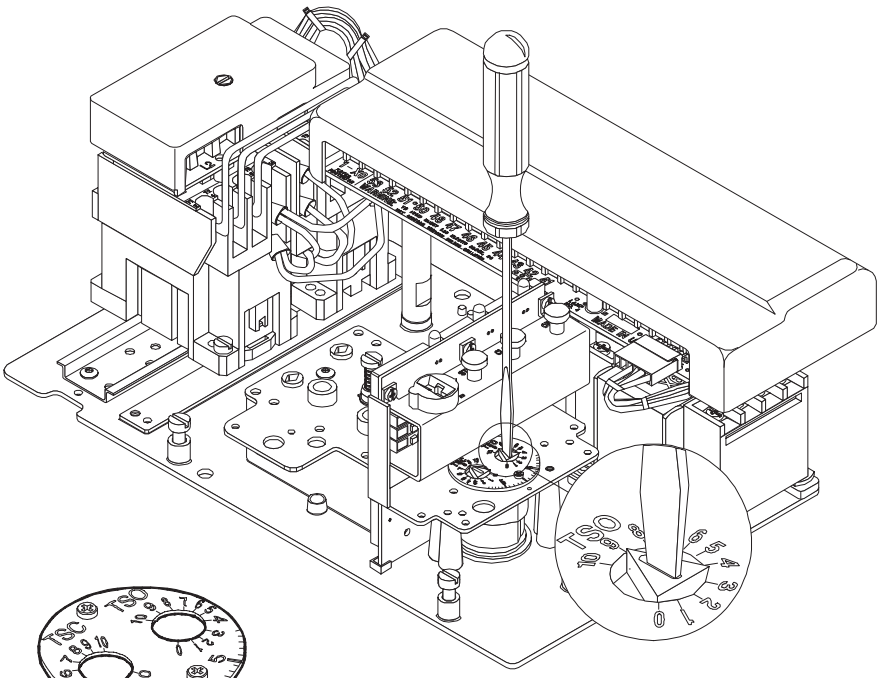

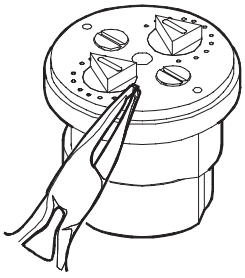

Torque Switch Rotation Limit

Adjustment rotation may be limited, Remove dial to expose anti-rotation pins. Remove pins from position 10 and insert into the desired hole.

TORQUE SWITCH CALIBRATION
To set Close Torque Switch (TSC)

a) Close valve using handwheel. Set valve to the desired torque. Observe rotating dial for number that corresponds to desired Close Torque.

b) Insert screwdriver in TSC slot. Press down to disengage and turn arrow to setting determined in a). Release at this point and it will re-engage and remain set.

c) Back the valve away from Close position and reseat by handwheel to verify torque trip point is at desired setting. The trip point of switch is a distinctive click as it breaks contact.

d) **DANGER:**

REVERSE POWER VOLTAGE PHAS ING REMOVES TORQUE SWITCH PROTECTION FROM THE REVERSING CONTACTOR COIL CIRCUITS. VALVE DAMAGE COULD OCCUR. If phasing has not been checked, do so before proceeding. Back valve away from Close position with handwheel and test torque electrically, using Close controls. Readjust as required.

To Set Open Torque Switch (TSO)

a) Follow procedure as for TSC at TSO dial.

Multi-turn Actuators

Multi-turn top-mounted and side-mount bevel gear actuators require use of Gear Reduction Assembly part no. 84055-0000 for Mechanical Dial Position Indication MDPI *and* 1-turn Pot. N-number replaces -0000 to complete part no. For 1-turn Pot only *without* Dial Indication part no. is 84117-0000. Refer to EIM JOB SPEC SHEET for MDPI furnished.

MDPI *Mechanical Dial Position Indication* is a gear reduction assembly to convert multi-turn valve stem nut turns to 270 degrees (.75 turn) for viewing position indication arrow thru glass window on actuator electric switch compartment cover. Point of rotation reference has been designated as **N-number**. N is the total number of electric actuator 12-tooth gear limit spring-load pinion rotations for full valve stroke.

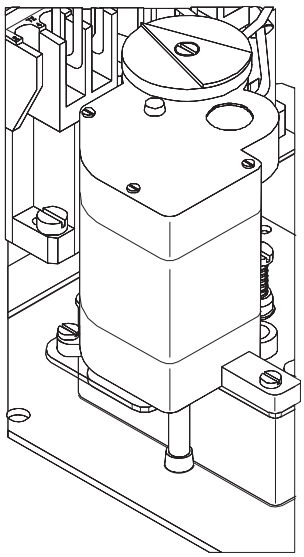

Calibration

MDPI & POT Drive is calibrated after LSC and LSO are properly set (Pg. 4). Move valve to Close position. Manually rotate MDPI arrow to indicate Close. Calibration is now complete. Open valve to check that MDPI arrow goes to Open, indicating that N is correct for full valve travel. Potentiometer, if included, has been calibrated. Mechanical dial travel is 270°. Approximately 5% of total Pot resistance is left on each end for total valve travel.

Quarter-Turn Model P, Q, R & M

Top-mount P, Q and R and several models of M/MG's side-mount do not require MDPI gear reduction assembly for 1-turn Pot. If multi-turn Pot is required, EIM JOB SPEC SHEET will list 84131-0000 or the correct assembly. Spec Sheet will list,(1) Pot clutch gear, (2) Pot input gear and (3) potentiometer.

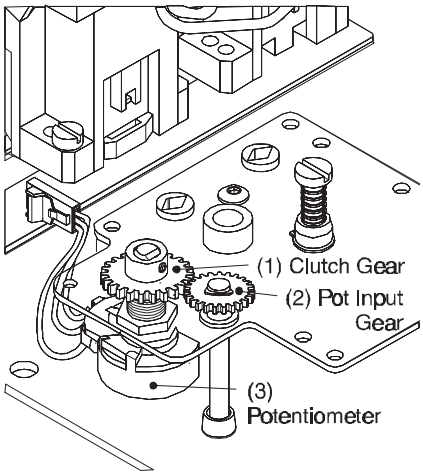

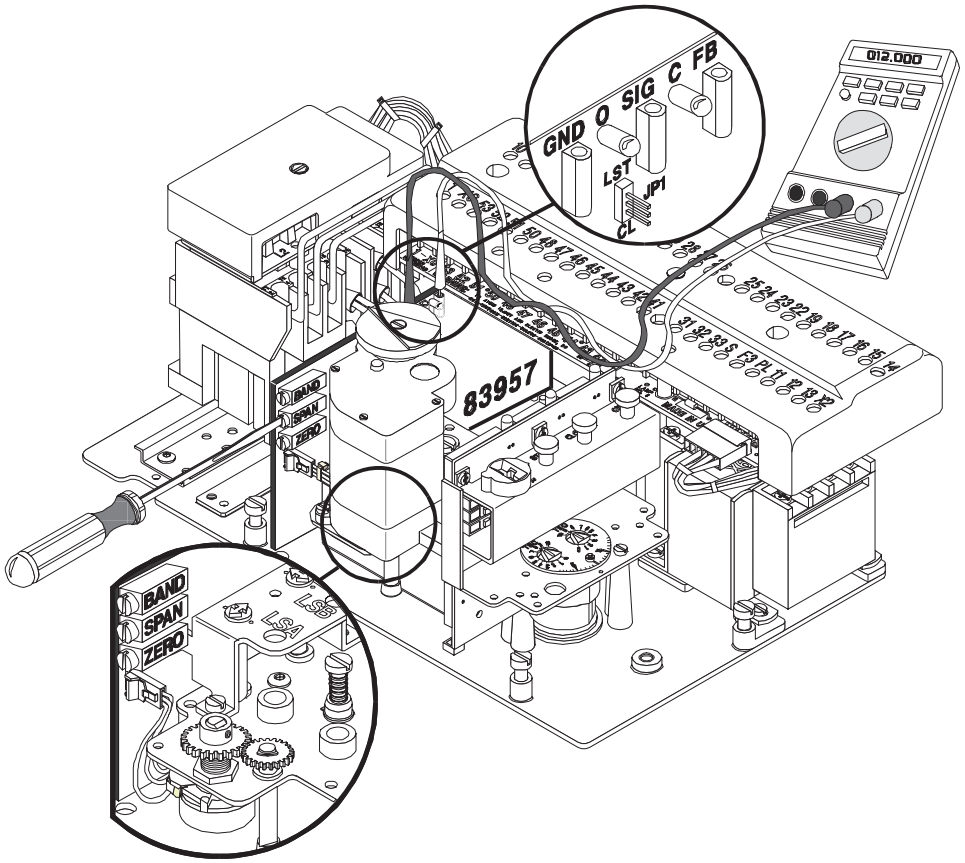

Futronic II 83957

83957-1 (600 starts per hour maximum) or 83957-2 (100 starts per hour) module controls valve by comparing two inputs (the desired position from process controller or computer and actual valve feedback position). If the two are within BAND, valve will not move. When the setpoint moves outside the BAND, valve moves in the direction to make control signal and valve feedback position inputs balance.

Calibration

After field wiring is complete, position limit switches have been set (Pg 4) and Pot adjustment on (Pg 5); proceed.

1. Voltmeter probes (+) in *Red* **(FB)** test point and (-) in *Black* **(GND)** test point.
2. Close valve: Meter should read **1 volt DC.** If it does not adjust **ZERO.**
3. Open valve: Meter should read **5 volts DC.** If it does not adjust **SPAN.**
4. Repeat steps 2 and 3 until no re-adjustment is necessary.
5. After a command signal has been connected, adjust **BAND** so valve moves to desired setpoint. **Delay:** 83957-1 has a six (6)* second fixed delay preventing actuator from instantaneously responding to another signal. This allows reversing contactor to respond at 600 starts per hour maximum.

Note: Jumper **JP1** is factory set: See Job Spec Sheet for **JPI** position. Loss of 4-20 mA control signal will cause valve to (1) **LST** (last position will not move) or 2) **CL** valve will close. **JPI** jumper plug may be field changed.

TIP: To measure **BAND**, place Voltmeter (-) Probe in ***Green*** (SIG) test point and (+) probe in ***Red*** (FB) test point. Move valve using Handwheel. Observe reading when valve repositions. (**BAND** adjustment is ±1% to 7%.)

***** 83957-2 has a thirty (30) second delay for 100 starts per hour maximum.

Note 1) Feedback Pot may be mounted on MDPI (Multi-turn valves) or mounted on gear cover (1/4 Turn valves).

M2CP WIRING DIAGRAM SYMBOLS

Refer to EIM JOB SPEC SHEET and EIM WIRING DIAGRAM for components furnished.

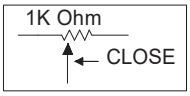

POTENTIOMETER
Potentiometer slider is geared to Valve Position and "in-step" at all times

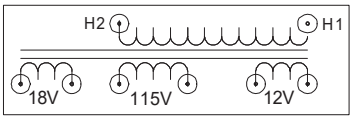

TRANSFORMER
Outputs: 120, 12 and 18Vac

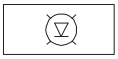

PILOT LAMPS - LED INDICATORS
Actuated by position limit switches

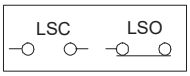

POSITION LIMIT SWITCH
LSC shows open. LSO shown made.

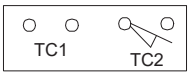

TORQUE LIMIT SWITCHES
N.C. Double Break Contacts Open when overload occurs. N.O. contacts make.



FUSE



PUSHBUTTONS N.C.
Momentary N.C. Contact

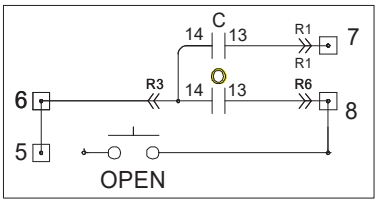

PUSHBUTTONS N.O.
Momentary N.O. contacts connects control voltage to reversing contactor coils. Seal-in contacts C and O (14,13) on contactor allow travel without continued holding down of pushbutton.

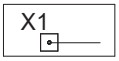

TERMINAL POINTS
Factory wired by EIM



CIRCUIT PLUG & RECEPTACLE



SPACE HEATER
Heater in Switch Compartment is standard

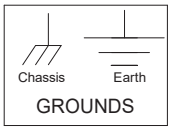

GROUNDS

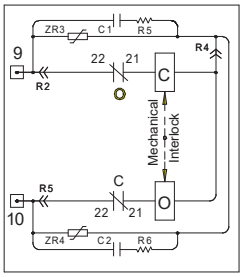

REVERSING CONTACTOR
Showing Open and Close coils, Mechanical Interlock, and Electrical Interlock Contacts O (21, 22) & C (21, 22)

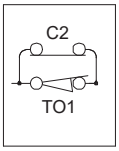

NUISANCE TRIP
To prevent (TSO) contact tripping when valve has been jammed closed - LSC contact allows valve to open slightly. Contact then open, ensuring torque protection for remaining travel

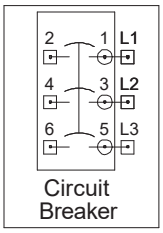

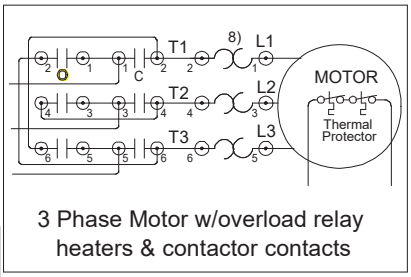

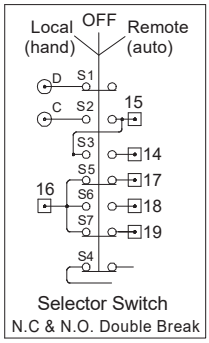

SS Table

	Hand	Off	Auto
S1	X	O	O
S2	O	O	X
S3	O	X	X
S4	X	X	O
S5	X	O	O
S6	O	O	X
S7	X	X	O

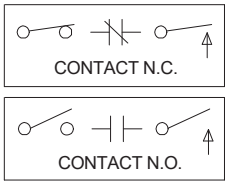

TROUBLE SHOOTING

SYMPTOM	PROBABLE CAUSE	CORRECTIVE ACTION
Motor will not Run	Blown Control Fuse	Check Fuse and Replace as necessary
	Open in Control Circuit	Refer to appropriate wiring diagram and check for continuity
	Insulation Resistance Breakdown in Motor	Perform Megger Test
No Power available to Actuator	Tripped Circuit Breaker	Reset Circuit Breaker
Handwheel Hard to Turn	Valve Stem improperly Lubricated	Lubricate with Grease
	Actuator Lubrication has broken down	Clean out old grease and replace with recommended lubricant
	Valve packing gland too tight	Loosen packing gland nuts as necessary
	Drive Sleeve Bearing Failure	Replace Bearing
	Jammed Valve	Refer to Valve Maintenance
Valve only opens or closes partially with motor	Torque Switch Setting too low	Check Setting and Reset if necessary
	Limit Switch Improperly Set	Check Switch Actuation and recalibrate if necessary
Torque switch is properly set, but actuator Torque's out in mid-travel, open or closed direction	Damaged or bent valve stem	Refer to Valve Maintenance
	Valve packing too tight	Refer to Valve Maintenance
	Jammed Valve (obstruction in line)	Refer to Valve Maintenance
Handwheel will not operate valve	Handwheel shaft bearing assembly malfunction	Repair or replace as necessary
	Sheared gear key or Stripped Gearing	Replace as necessary
	PS Shifter Position or Malfunction	Replace Gear(s)
	Broken Handwheel Shaft	Repair or replace as necessary
	Broken Valve Stem or Stripped Stem Nut	Repair or replace as necessary
Motor runs but will not operate the valve	Motor Bearing Assembly Malfunction	Repair or replace as necessary
	Sheared gear key (fastener pin)	Replace
	Stripped Gearing	Replace
	Broken Valve Stem or Stripped Stem Nut	Repair or replace as necessary
	PS shifter position or malfunction	Replace PS Assembly
Moisture in Electrical Enclosure	Leakage through Conduit Entry	Install an approved Seal-off or re-route conduit to enter Enclosure from the bottom of enclosure
	Electrical Enclosure is not properly sealed	Inspect and replace O-ring if necessary
	Space Heater Inoperable	Check Circuit continuity for Heater
Gear (Oil) in Electrical Enclosures	Pressure Relief Fitting not installed	Install Pressure Relief Fitting
	Bad Seal on T/L or G/L Assembly	Replace Stat-O-Seals or O-Rings
		Rotate Actuator Mounting

Valves and actuators

Swing check-valves

Brand :	**VALMATIC**
Model :	**SWING CHECK 7808LW**
Supplier :	**CONTROLE LAURENTIDE**
Tag :	**CV-01-111/112/113** **CV-02-620/640/670/690**

1100, Montée Masson
Laval (Québec) H7E 4P2

Téléphone : 450-688-4012
Télécopieur : 450-661-6341

Manual No.
SWCV-OM1-4

Swing Check Valve with Lever and Spring, Lever and Weight, and/or Side Mounted Air Cushion

Operation, Maintenance and Installation Manual

INTRODUCTION..... 2
RECEIVING AND STORAGE..... 2
VALVE CONSTRUCTION..... 3
DESCRIPTION OF OPERATION..... 3
INSTALLATION..... 4
VALVE START-UP PROCEDURE..... 5
TROUBLESHOOTING..... 6
DISASSEMBLY..... 6
RE-ASSEMBLY..... 10
PARTS AND SERVICE..... 11
START-UP OBSERVATION RECORD..... 12
WARRANTY..... 13

VAL-MATIC® VALVE AND MANUFACTURING CORP.
905 Riverside Dr. • Elmhurst, IL 60126
Phone (630) 941-7600 • Fax (630) 941-8042
www.valmatic.com

VAL-MATIC'S SWING CHECK VALVE OPERATION, MAINTENANCE AND INSTALLATION

INTRODUCTION

Val-Matic's Swing Check Valve has been designed to give many years of trouble free operation. All parts are inspected prior to final assembly to insure complete interchangeability of parts. After assembly, each valve receives a hydrostatic seat test, using a pressure equal to the valves rated working pressure and a hydrostatic shell test, using a pressure equal to the hydrostatic shell test pressure outlined in AWWA C508 for the valve's flange class. The valves are designed to meet AWWA C508 which covers 2" through 24". The pressure rating of the 2" through 24" is 250 psi. The 30" through 48" valves meet the intent of C508 and are design for 150 psi in cast iron or 250 psi in ductile iron.

This manual will provide you with the information needed to properly install and maintain the valve and to ensure a long service life. The valve is opened by the fluid flow in one direction and closes automatically to prevent flow in the reverse direction.

Optional lever and spring, lever and weight and air cushion may be mounted on the valve to allow for better control of surges and valve slamming closed.

Optional Limit Switches may be mounted on the valve to provide local and remote position indication.

The valve is capable of handling a wide range of fluids including flows containing suspended solids. The size, flow direction, maximum working pressure, and model no. are stamped on the nameplate for reference.

CAUTION

Do not use valve for line testing at pressures higher than nameplate rating or damage to valve may occur.

The "Maximum Working Pressure" is the non-shock pressure rating of the valve at 150°F. The valve is not intended as an isolation valve for line testing above the valve rating.

RECEIVING AND STORAGE

Inspect valves upon receipt for damage in shipment. Unload all valves carefully to the ground without dropping. Valves should remain crated, clean and dry until installed to prevent weather related damage. When lifting the valve for installation, make sure that lifting chains, slings or straps are not attached to or allowed to come in contact with the seat areas, hinge pin, counterweight arm or the side mounted air cushion assembly. Use hoist rings or lifting eyebolts in cover lifting tapped holes or use hoist rings through the flange holes on large valves.

WARNING

Use caution if using threaded holes in cover for lifting the valve. All three eye bolts should share the entire weight directly and equally.

Use of additional slings and/or straps is recommended for safety and ease of orientation during installation.

Table 1. Cover Lifting Eye Bolts

Valve Size	Lifting Eye Bolt	Valve Size	Lifting Eye Bolt
14"	M14	30"	M24
16"	M16	36"	M24
18"	M20	42"	M30
20"	M20	48"	M30
24"	M20		

Do not rest the weight of the valve on the hinge pin, counterweight arm or the side mounted air cushion assembly.

This precision equipment must remain crated, clean and dry until installed; to prevent weather related damage to the valve or to the pneumatic cylinder. Improper storage and installation procedures will void warranty.

For long term storage greater than six months, the rubber surfaces of the disc should be coated with a thin film of FDA approved grease. Do not expose disc to sunlight or ozone for any extended period.

VAL-MATIC'S SWING CHECK VALVE
OPERATION, MAINTENANCE AND INSTALLATION

VALVE CONSTRUCTION

The Swing Check Valve housing consists of a body section having integrally cast inlet and outlet flanges. The top portion of the body has a large integrally cast flanged access port, to which the top access cover is bolted. The size of this access port permits full access to the disc and seat components for maintenance or replacement.

The flow area through the body inlet, body seat ring and the body outlet is equal to 100% of the nominal inside area of the standard pipe. The center portion of the body is expanded to allow for the area that is occupied by the disc and because of the expanded area thru the center of the valve, the disc at 20 to 25 degrees open reaches a full flow area.

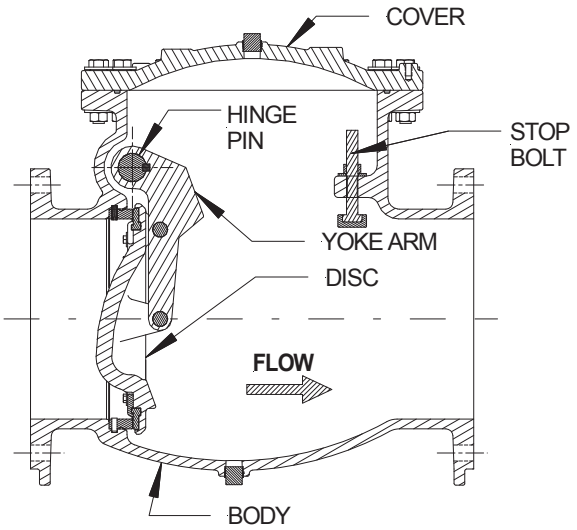

FIGURE 1. SWING CHECK VALVE

The body has two eccentrically located hinge pin trunnions that contain the hinge bushings and hinge packing. A continuous stainless steel hinge pin passes through the bushings and the disc yoke arm. The disc yoke arm is keyed to the hinge to lock them together rotationally. The disc is attached to the disc arm with two stainless steel pins, making the disc and disc yoke arm a solid assembly. The Buna-N disc seal ring fits into a recessed register in the face of the disc and is captured and retained by a large circular retaining ring or segments and stainless steel screws. The Buna-N disc seal has O-ring type sealing beads that provide low pressure sealing when it contacts the stainless steel seat ring, located in a machined register in the body. The seat ring has a groove on its outside diameter, which accepts an O-ring, that creates a seal between the interface of the inside diameter of the body register and the outside diameter of the seat ring.

The stainless steel body seat ring is threaded into the body in 2” through 12” sizes and retained to the body with stainless steel set screws that engage a groove within the body seat register in larger sizes. The exterior portion of the body has machined mounting pads on each side of the valve. The lower portion of the air cushion assembly is mounted to these pads. An additional pad accepts a spring assembly.

The counterweight arm assembly is keyed to the extended portion of the pivot shaft. The counterweight arm assembly has additional keyways to allow for multiple mounting positions such as horizontal or about 30° below when closed. The counterweights are located on the counterweight arm and are secured to the lever with a bolt.

The body and the top cover are provided with plugged ports. The body port serves as a drain port and the top cover's port serves as a connection point for an automatic air release valve or as a vent port. A drain valve may also be connected to the body port.

DESCRIPTION OF OPERATION

The valve is designed to prevent reverse flow automatically. During system flow conditions, the movement of the fluid forces the disc to the open position allowing 100% un-restricted flow area through the valve. Under reverse flow conditions, the disc automatically returns to the closed position to prevent reverse flow.

Upon pump start-up the forward flow of the water will start to rotate the disc about the hinge until the disc contacts the stop bolt in the valve body. The disc rotates through a 60 to 70 degree arc from the closed to the fully open position. On pump shut down the forward velocity of the water will start to diminish, as the forward velocity of the water is further reduced, the disc will start its travel to the closed position. When the forward velocity of the water reaches zero, the disc has moved to the closed position and the reversal of the flow is checked. Under these ideal hydraulic conditions the valve should close without water hammer. However, ideal hydraulic conditions are not always predictable and the potential for water hammer

exists. If the reversal of flow happens before the disc has a chance to react to the diminishing forward velocity of the water, the disc will be driven to the closed position by the rapid flow reversal. Depending on how fast the reversal of flow takes place, a water hammer of different magnitudes will develop.

The valve is available with an adjustable lever and weight, an optional and adjustable lever and spring assembly and a side mounted air cushion. These assemblies and adjustments may be used to vary the valve's closing operation in order to reduce the magnitude of the closing water hammer.

The side mounted air cushion was designed to solve minor water hammer problems. It should be stated, that because the control media is only a small volume of air at atmospheric pressure, that is compressed to a maximum of 200 PSI and then vented to the atmosphere thru a small flow control valve, it should not be considered as a total solution for severe water hammer problems.

INSTALLATION

The swing check valve with spring, weight and lever, or weight, lever and side mounted air cushion can only be used for horizontal flow or vertical flow-up applications. The valve must be in a laminar flow region of the piping system. Avoid locating the valve immediately downstream of a pipe elbow or in a cavitation zone because the turbulence in these regions will cause excessive disc motion and will result in premature wear.

For horizontal flow applications the valve must be installed with both of the pivot trunnions located above the horizontal center-line of the valve and the common center-line of the hinge trunnions must be level to the horizontal plane of the valve. For vertical flow up applications the counterweight arm should be in the horizontal or about 30° below horizontal position when the valve is in the closed position. The counterweight arm has multiple keyways to allow for mounting in several orientations.

Before installing the valve in the space provided, check to make sure that the pump discharge piping is free of foreign objects such as lumber, tools, rocks, etc., which can damage the swing check valve when it is placed in service.

When lifting the valve for installation, make sure that lifting chains or straps are not attached to or allowed to come in contact with the hinge pin, counterweight arm or the side mounted air cushion assembly. Also do not allow the weight of the valve to rest on the hinge pin, counterweight arm or the side mounted air cushion assembly.

Each valve is provided with a flow arrow integrally cast on the valve cover. The flow arrow must point in the direction the water will flow, when the system is operating.

AWWA C508 swing check valves are furnished with flat faced flanges and should only be mated to a flat faced companion flange. A full faced or ring gasket, that has been lubricated with a gasket joint compound, must be installed between the valve's flange and the companion flange to effect a seal. Flange bolting shall be in accordance with ANSI B16.1 Section 5.2 for cast iron bodies and ANSI B16.42 for ductile iron bodies. Note: Val-Matic does not recommend the use of high strength flange bolting with these valves.

Before installing the flange bolting, the valve and the adjacent piping must be supported and aligned to prevent cantilevered stress being transferred to the valve's flanges when installing the flange bolts or studs.

Apply a thread lubricant to the flange bolt threads and install the flange bolts and nuts around the flange. Once all the flange bolts or studs are inserted around the flange bolt circle, tighten them hand tight.

Recommended flange bolt lubricated target torque values for use with resilient gaskets (75 durometer) are given in Table 1. If leakage occurs, allow gaskets to absorb system fluid and check torque and leakage after 24 hours. Do not exceed the bolt rating, the maximum torque of Table 1, compress to more than the gasket manufacturer's thickness recommendation or extrude gasket.

Table 2. Flange Bolt Target Torque			
Valve Size (in)	Bolt Dia (in)	Recom. Torque (ft-lbs)	Maximum Torque (ft-lbs)
2”-4”	5/8	25	90
6”-8”	3/4	30	150
10-12”	7/8	45	205
14-16”	1	80	300
18”-20”	1 1/8	100	425
24”-30”	1 1/4	150	600
36”-42”	1 1/2	300	900
48”	1 1/2	300	1000

The target torque for flange bolting is based on the flange construction, system pressure, system temperature, and the gasket material. The valve flange construction is per ASME B16.1 Class 125 (cast iron bodies) or ASME B16.42 Class 150 (ductile iron bodies). The gasket material and design is often the limiting factor for the flange bolt target torque and should best be obtained from the gasket manufacturer. Note: Flange joint leakage can be caused by exceeding the recommended target torque as well as inadequate or non-uniform bolt torque.

The flange bolt torque should be applied in several graduated steps using the cross-over bolt tightening method to load the bolts evenly to eliminate concentrated stresses which could fracture or crack the valve's flange. See ASME PCC-1-2010 for details of the cross-over bolt tightening sequence and torque methods. Note that the target torque values provided in ASME PCC-1-2010 are based on the ANSI/ASME steel flange pressure and temperature ratings which exceed those of AWWA and are, therefore, often higher than appropriate for AWWA rated iron valves and flanges.

CAUTION

The use of ring gaskets or excessive bolt torque may damage valve flanges.

VALVE START-UP PROCEDURE

When the swing check valve with weight arm, spring, and/or side mounted air cushion is completely installed, follow the steps outlined below to place valve into service. A combination of the weight, spring and side mounted adjustments may be necessary depending on the valve’s optional equipment configuration and the installed system performance.

Become familiar with the following adjustments that will affect the closing characteristics of the swing check valve's disc.

There is a “Start-Up Observation Record” form at the end of this manual that may be useful during start-up operations and recording the “Final, As Left” set-up configuration.

LEVER AND WEIGHT ADJUSTMENTS

Moving the weight in towards the hinge pin center-line will increase the disc's closing time and moving the weight out away from the pivot shaft center-line will decrease the disc's closing time. Note that the position of the weights can also affect how far the valve's disc opens under low or moderate flow conditions.

LEVER AND SPRING ADJUSTMENTS

Moving the spring connection in towards the hinge pin center-line will increase the disc's closing time and moving the spring connection out away from the pivot shaft center-line will decrease the disc's closing time. Note that the position of the spring connection can also affect how far the valve's disc opens under low or moderate flow conditions. Increasing the spring tension will decrease the disc's closing time and decreasing the spring tension will increase the disc's closing time.

AIR CUSHION FLOW CONTROL VALVE ADJUSTMENTS

There are two speed control valves externally mounted on the air cushion cylinder ports. To increase the cushioning effect (increase closure time) the upper (cylinder rod end) speed control should be full open and the lower (cylinder cap end) speed control is used to control the cushioning effect. Turning the lower external speed control valve's adjustment knob of the side mounted air cushion clockwise will increase the cushioning effect and increase the valve's closing time and turning the lower external speed control valve's adjustment knob counter-clockwise will decrease the cushioning effect and decrease the valve's disc closing time. If the lower speed control valve is fully opened and a reduction in the closure time is desired, the upper (cylinder rod end) speed control valve should be fully closed while the swing check valve is in the full closed position. This will add a pressure boost to the initial portion of the closing stroke.

VAL-MATIC'S SWING CHECK VALVE
OPERATION, MAINTENANCE AND INSTALLATION

INITIAL SETTINGS

1. Before starting pump and placing valve into service, care must be taken to insure that the pump's intake structure is free of foreign objects such as lumber, tools, rocks, etc., which can damage the swing check valve.
2. If equipped with a side mounted air cushion, the upper (cylinder rod end) external speed control valve of the side mounted air cushion will be factory set in the full closed position and the lower (cylinder cap end) external speed control valve of the side mounted air cushion will be factory set in a full open position. These settings provide a pressure boost to the initial portion of the closing stroke.
3. If equipped with a weight and lever, connect the weight as far as possible from the center-line of the hinge pin and bolt to hold the weight secure.
4. If equipped with a spring assembly, connect the spring as far as possible from the center-line of the hinge pin and the tension of the spring should be adjusted with the bolt to hold the spring secure.

CAUTION

These initial settings provide the fastest check valve closure.

The closure time should be selected, tested, set, and determined by the user or his designee who is expert in the installed piping system as the system's response to the valve's closure can vary greatly and the system induced transient pressure can cause severe damage to the valve and other piping system components.

TROUBLESHOOTING

Several problems and solutions are presented below to assist you in troubleshooting the valve assembly in an efficient manner.

- Leakage at Hinge Pin: Adjust or replace packing.
- Leakage at Cover or Flanges: Tighten cover or flange bolts, replace cover seal or flange gasket.
- Valve Leaks When Closed: Inspect disc rubber seat for damage or debris. Clean or replace as needed. Inspect body stainless steel seating surface for damage or debris. Clean, polish, or replace as needed.
- Valve Does Not Open: Check for obstruction in valve or pipeline; see disassembly procedure. Operating pressure may be less than cracking pressure. If less than 0.5 psig, review application with factory.

DISASSEMBLY

The valve can be disassembled without removing it from the pipeline. The valve may also be removed from the pipeline. All work on the valve should be performed by a skilled mechanic with proper tools and a power hoist for larger valves. Disassembly may be required to inspect the disc for wear or the valve for debris or deposits.

Refer to Figure 2 for parts identification. Always relieve pressure and drain pipeline before working on the valve.

WARNING

The pipeline must be relieved of all pressure and drained before removing the valve or the valve cover or pressure may be released causing bodily harm.

SPRING REMOVAL

1. For safety, wrap, restrain and tie the spring (50) with rags, slings, or rope in case of a sudden release.
2. Carefully remove nut (57) and spring bolt (52). Note: The spring bolt (52) may be match marked to assure re-assembly to the same tension setting.
3. Remove Spring (50).
4. Remove Lever (51).
5. Remove Key (54).
6. Remove spring bracket (53), bolts (55) and washers (56).

WEIGHT AND LEVER REMOVAL

1. Support or prepare to lift weight (31). Carefully remove nut (35), washer (36), and bolt (34).
2. Remove weight (31). Note: Mark or record the weight (31) location on the lever arm (30).
3. Remove bolt (33) and lever (30).
4. Remove Key (32).
5. Remove weight and lever and cylinder bracket (40), bolts (46) and washers (47).

AIR CUSHION REMOVAL

1. Support or prepare to lift cylinder (42). Carefully remove clevis pins (43 and 44).
2. Remove cylinder (42).
3. Remove bolt (46) and lever (45).
4. Remove Key (32).
5. Remove weight and lever and cylinder bracket (40), bolts (46) and washers (47).

VALVE DISASSEMBLY

1. Remove the cover bolts, nuts, and washers (24, 28, & 29) on the top cover.
2. Pry cover (2) loose and lift off valve body. Valves 14" and larger have 3 tapped holes in cover for lifting eyes. See Table 2 for lifting eye bolt sizes.
3. If desired, remove stop bolt (60), washer (61) and nut (62). The stop bolt (60) should be match marked to assure re-installation to the same extension length.
4. Sling and support yoke arm (4) and disc (3) slightly off the seat (23)
5. Remove bolts (20), washers (19) and o-ring (22) from blind hinge cover (18-2).
6. Remove bolts (20) and washers (19) from through hinge cover (18-1).
7. Remove packing (16) and packing shim (15).
8. Push hinge pin from keyed end out of blind end side until retaining ring (21) can be removed. Remove retaining ring (21).
9. Continue to push hinge pin out until blind end bushing (14) moves out and can be removed. Remove bushing (14).
10. Push hinge pin back into the blind end until the bushing (14) on the keyed and of the hinge pin is moved enough to remove. Remove bushing (14).
11. Slide the supported yoke arm (4) and disc (3) back and forth on the hinge pin until the key (6) can be removed from between the yoke arm (4) and the body (1). Note: Take care not to damage the disc seat (8) or the body seat (11) while moving yoke arm (4) and disc (3). Remove key (6)
12. Remove hinge pin (5) from keyed end.
13. Lift the supported yoke arm (4) and disc (3) and place on a clean floor or pallet.
14. If desired, disassemble yoke arm (4), retaining rings (25), disc pins (24), and disc (3).
15. Remove seat retaining bolts (10), washer (9), seat retaining segments (7) and rubber seat (8).
16. Remove body seat (11). In 12" and smaller valves, the seat (11) is screwed into the body and must be threaded into place. In 14" and large the seat (11) is held into the body with set screws (12). Remove he body seat (11), set screws (12), and o-ring (23).
17. Clean and inspect parts. Replace worn parts as necessary and lubricate parts with FDA grease.

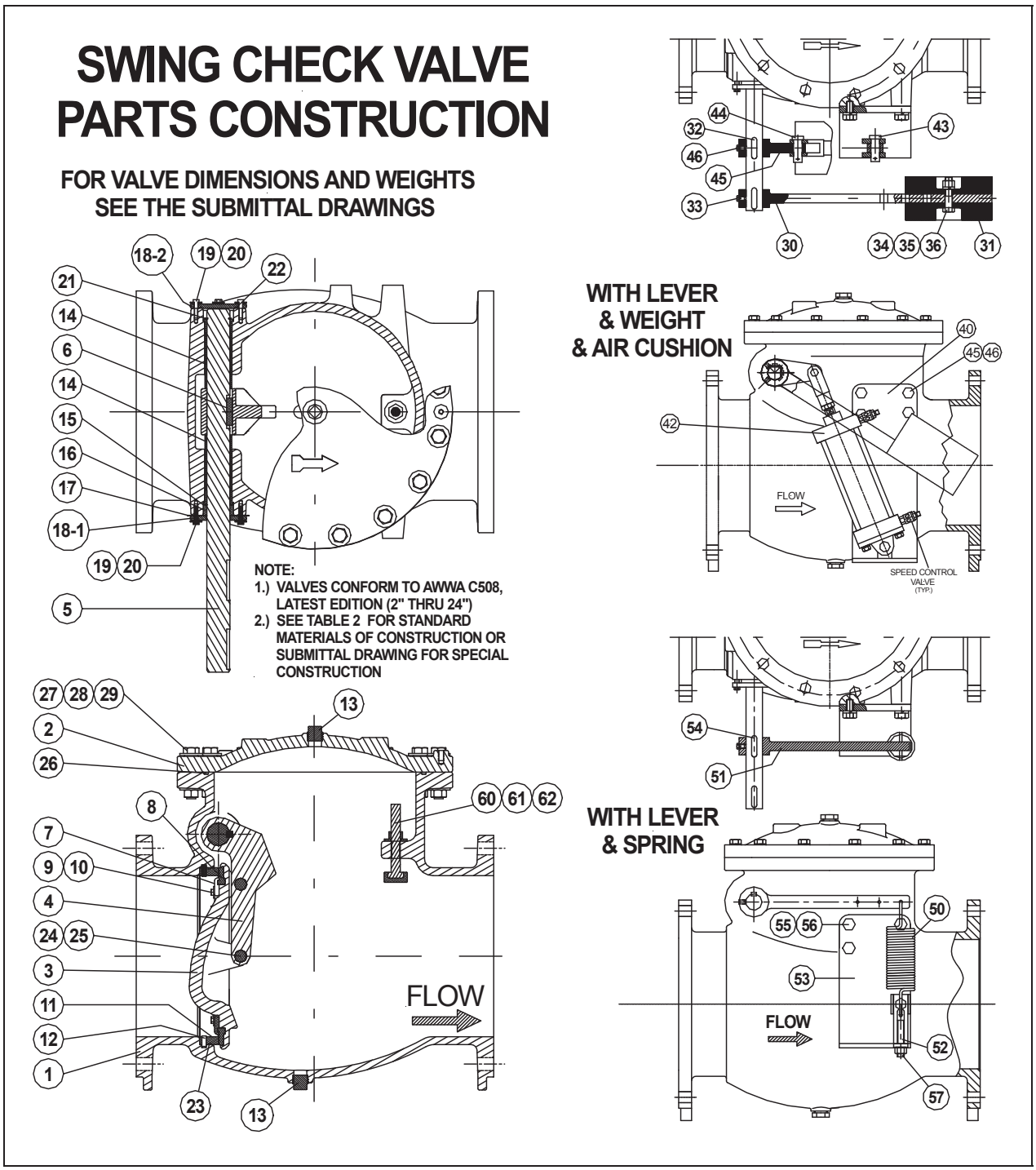

FIGURE 2. SWING CHECK VALVE PARTS CONSTRUCTION

TABLE 3. PARTS AND MATERIALS OF CONSTRUCTION			
PART NO.	*****	**PART NAME**	**MATERIAL**
1		Body	Ductile Iron (2" To 24"), Cast Iron (30" To 48")
2		Cover	Ductile Iron (2" To 24"), Cast Iron (30" To 48")
3		Disc	Ductile Iron
4		Arm	Ductile Iron
5		Hinge Pin	Stainless Steel
6		Hinge Key	Stainless Steel
7	*	Seat Retaining Segment	Ductile Iron
8	*	Rubber Seat	Buna-N
9		Flat Washer	Stainless Steel
10	*	Hex Hd. Cap Screw	Stainless Steel
11		Seat	Stainless Steel
12		Set Screw	Stainless Steel
13		Pipe Plug	Steel
14	*	Bushing	Aluminum Bronze
15	*	V-Packing Shim	Nylon
16	*	V-Packing	Buna-N
17		Packing (Pop) Shim	Stainless Steel
18-1		Hinge Cover - Thru	Ductile Iron
18-2		Hinge Cover - Blind	Ductile Iron
19		Flat Washer	Plated Steel
20		Hex Hd. Cap Screw	Plated Steel
21		Retaining Ring	Stainless Steel
22	*	O-Ring	Buna-N
23		O-Ring	Buna-N
24		Disc Pin	Stainless Steel
25		External Retaining Ring	Stainless Steel
26	*	O-Ring	Buna-N
27		Flat Washer	Plated Steel
28		Hex Hd. Bolt	Plated Steel
29		Hex Nut	Plated Steel
30		Weight Lever	Ductile Iron
31		Weight	Ductile Iron
32		Key	Steel
33		Bolt	Plated Steel
34		Bolt	Plated Steel
35		Nut	Plated Steel
36		Washer	Plated Steel
40		Cylinder Bracket	Steel
42		Cylinder	Steel
43		Cylinder Pin	Plated Steel
44		Clevis Pin	Plated Steel
45		Cylinder Lever	Ductile Iron
46		Bolt	Plated Steel
47		Washer	Plated Steel
50		Spring	Plated Alloy Steel
51		Spring Lever	Ductile Iron
60	*	Stop Bolt	Stainless Steel With Buna N
61	*	Flat Washer	Stainless Steel
62	*	Hex Nut	Stainless Steel

* = Recommended Spare Part

RE-ASSEMBLY

All work on the valve should be performed by a skilled mechanic with proper tools and a power hoist for larger valves.

VALVE RE-ASSEMBLY

1. Lubricate body seat o-ring (23) and body seat (11) with an FDA grease. Install body seat o-ring (23) and body seat (11). In 12" and smaller valves, the seat (11) is screwed into the body. In 14" and large the seat (11) is held into the body with set screws (12). Remove he body seat (11), set screws (12), and o-ring (23)
2. Install rubber seat (8), seat retaining segments (7), washers (9), and seat retaining bolts (10) onto disc. Torque bolts to values listed in Table 4 below. Note: Take caution to protect the rubber seat from damage during the remainder of the assemble process.

Table 4. Seat Retaining Bolt Torque		
Valve Size	**Bolt Size**	**Torque (ft-lbs)**
2" to 4"	M5	5
6" to 20"	M8	10
24" to 48"	M10	20

3. Assemble yoke arm (4), retaining rings (25), disc pins (24), and disc (3).
4. Sling and support yoke arm (4) and disc (3).
5. Lift and hang the supported yoke arm (4) and disc (3) and place into body (1) with yoke hinge boss nestled in the hinge pin recess area.
6. Install hinge pin (5) and yoke key (6) from keyed end engaging the key into the keyway of the yoke (4). Note: The hinge pin may be installed with the key oriented toward either side of the valve. The keyed end of hinge pin (5) must be oriented to the side where the spring assembly, lever & weight assembly, and /or air cushion assembly is to be mounted.
7. Install bushings (14) from both ends of hinge pin (5).
8. Push hinge out the non-keyed end of the hinge pin until the retaining ring (21) can be installed and install the retaining ring.
9. Push hinge (5) back into the body until retaining ring (21) is seating at the back of the bushing (14). Install bolts, (20) washers (19) and o-ring (22) with blind hinge cover (18-2).
10. Install packing (16) and packing shim (15).
11. Install bolts (20) and washers (19) with through hinge cover (18-1).
12. Install stop bolt (60), washer (61) and nut (62). Set at desired extension length.
13. Lubricate cove o-ring (26) and grove on top of body (1) with an FDA grease. Install o-ring (26) on top of body (1). Place cover (2) on top of body in the correct orientation with the flow arrow pointing away from the hinge pin.
14. Install cover bolts (28), washers (27), and nuts (29). Torque bolts and nuts to the values listed in Table 5 below in several graduated steps using the cross-over bolt tightening method.

Table 5. Cover Bolt Torque		
Valve Size	**Bolt Size**	**Torque (ft-lbs)**
2" to 2½"	M10	50
3"-4"	M12	75
6"-18"	M20	250
20"-36"	M24	500
42"-48"	M30	750

15. Install pipe plugs (13) are not installed into body (1) and Cover (2) if not already installed. Note: Vent, drain and/or air release valves may also be installed into these ports in lieu of the pipe plugs furnished.
16. If desire, pressure test the body for packing and cover leaks. Adjust or replace as necessary.
17. Install spring assembly, lever and weight assembly and/or air cushion assembly.

SPRING RE-ASSEMBLY

1. For safety, wrap, restrain and tie the spring (50) with rags, slings, or rope in case of a sudden release.
2. Install spring bracket (53), bolts (55) and washers (56).
3. Install Key (54).
4. Install Lever (51).
5. Install Spring (50).
6. Carefully Install nut (57) and spring bolt (52). Set nut (57) and spring bolt (52)to the desired tension setting

WEIGHT AND LEVER RE-ASSEMBLY

1. Install weight and lever and cylinder bracket (40), bolts (46) and washers (47).
2. Install key (32).
3. Install lever (30). Note: Lever has multiple keyways for installing at various orientations.
4. Install weight (31) at the desired location.

5. Install nut (35), washer (36), and bolt (34) on lever (30).

AIR CUSHION RE-ASSEMBLY

1. Install weight and lever and cylinder bracket (40), bolts (46) and washers (47).
2. Install Key (32).
3. Install bolt (46) and lever (45).
4. Install cylinder (42) with clevis pins (43 and 44).

PARTS AND SERVICE

Parts and service are available from your local representative or the factory. Make note of the valve Model No. and Working Pressure located on the valve nameplate and contact:

Val-Matic Valve and Mfg. Corp.
905 Riverside Drive
Elmhurst, IL 60126
Phone: (630) 941-7600
Fax: (630) 941-8042
www.valmatic.com

A sales representative will quote prices for parts or arrange for service as needed.

VAL-MATIC'S SWING CHECK VALVE
OPERATION, MAINTENANCE AND INSTALLATION

START-UP OBSERVATION RECORD

Site or Facility							
Valve Description [Size, Location, Tag, &/or EIN]							
Equipped Configuration			☐ Lever & Weight ☐ Side Mounted Air Cushion ☐ Lever & Spring ☐ Other _____				
RUN No.	Weight Position On Lever C/L Hinge To C/L Weight Bolt Hole Inches	Flow Control Position Turns Open	Spring Position On Lever C/L Hinge To C/L Spring Bolt Hole Inches	Spring Adjuster Bolt Extension Inches Below Bracket	Closed Lever Arm Angle Degrees From Level	Open Arm Angle Degrees From Level	Results, Notes & Comments
1							
2							
3							
4							
5							
FINAL AS LEFT							

Data Recorded By: _____ Date: _____

LIMITED WARRANTY

All products are warranted to be free of defects in material and workmanship for a period of one year from the date of shipment, subject to the limitations below.

If the purchaser believes a product is defective, the purchaser shall: (a) Notify the manufacturer, state the alleged defect and request permission to return the product; (b) if permission is given, return the product with transportation prepaid. If the product is accepted for return and found to be defective, the manufacturer will, at his discretion, either repair or replace the product, f.o.b. factory, within 60 days of receipt, or refund the purchase price. Other than to repair, replace or refund as described above, purchaser agrees that manufacturer shall not be liable for any loss, costs, expenses or damages of any kind arising out of the product, its use, installation or replacement, labeling, instructions, information or technical data of any kind, description of product use, sample or model, warnings or lack of any of the foregoing. NO OTHER WARRANTIES, WRITTEN OR ORAL, EXPRESS OR IMPLIED, INCLUDING THE WARRANTIES OF FITNESS FOR A PARTICULAR PURPOSE AND MERCHANTABILITY, ARE MADE OR AUTHORIZED. NO AFFIRMATION OF FACT, PROMISE, DESCRIPTION OF PRODUCT OF USE OR SAMPLE OR MODEL SHALL CREATE ANY WARRANTY FROM MANUFACTURER, UNLESS SIGNED BY THE PRESIDENT OF THE MANUFACTURER. These products are not manufactured, sold or intended for personal, family or household purposes.

VAL-MATIC®

VAL-MATIC® VALVE AND MANUFACTURING CORP.

905 Riverside Dr. • Elmhurst, IL 60126
Phone (630) 941-7600 • Fax (630) 941-8042
www.valmatic.com

Valves and actuators

Plug valves

Brand :	**VALMATIC**
Model :	**5903RN / 5904RN / 5906RN /5908RN**
Supplier :	**CONTROLE LAURENTIDE**
Tag :	**PLV-01-** **111/112/113** **PLV-02-** **306/307/308/326/327/328/** **621/641/643/644/645/646/647/648** **PLV-03-** **650/651/675/676/660/661/672/681/** **692/693/696**

1100, Montée Masson
Laval (Québec) H7E 4P2

Téléphone : 450-688-4012
Télécopieur : 450-661-6341

Manual No.
CCPV-OM2-7

Val-Matic® 3”-48” Cam-Centric® Plug Valve

Operation, Maintenance and Installation Manual

INTRODUCTION 2
RECEIVING AND STORAGE 2
DESCRIPTION OF OPERATION 2
VALVE CONSTRUCTION 3
INSTALLATION 4
MAINTENANCE 7
TROUBLESHOOTING 9
DISASSEMBLY 9
REASSEMBLY 10
PARTS & SERVICE 11
WARRANTY 11

VAL-MATIC®

VAL-MATIC VALVE AND MANUFACTURING CORP.

905 Riverside Dr. • Elmhurst, IL 60126
Phone (630) 941-7600 • Fax (630) 941-8042
www.valmatic.com

VAL-MATIC'S CAM-CENTRIC PLUG VALVE OPERATION, MAINTENANCE AND INSTALLATION

INTRODUCTION

The Cam-Centric® Plug Valve has been designed to give years of trouble-free operation. This manual will provide you with the information to properly install and maintain the valve to ensure a long service life. The valve is an eccentric, resilient seated, quarter-turn plug valve capable of handling many types of fluids including fluids with suspended solids. The Size, Cold Working Pressure (CWP), Actuator Rating, and Model No. are stamped on the nameplate for reference.

CAUTION

Do not use valve for line testing at pressures higher than nameplate rating or leakage and damage to valve may occur.

The "Cold Working Pressure" is the non-shock pressure rating of the valve at 150°F. The valve is not intended as a block valve for line testing above the valve rating. The “Actuator Rating” is the pressure that was used to size the actuator for operating conditions and may be less than the “Cold Working Pressure”. Because the valve is eccentric, the valve may have a different actuator rating for reverse and direct pressure. If the valve is operated at pressures higher than the tested actuator ratings, the valve may be difficult to operate or leak.

RECEIVING AND STORAGE

Inspect valves upon receipt for damage in shipment. Unload all valves carefully to the ground without dropping. Do not lift valves with slings or chains around the actuator or through the seat area.

Valves should remain crated, clean and dry until installed to prevent weather-related damage. For long term storage greater than six months, the valve must remain open and the rubber surfaces of the plug coated with a thin film of FDA approved grease such as Dow Corning # 7. Do not expose plug to sunlight or ozone for any extended period.

DESCRIPTION OF OPERATION

As shown in Figure 2, the valve consists of a body and quarter-turn plug that is offset from the seat centerline.

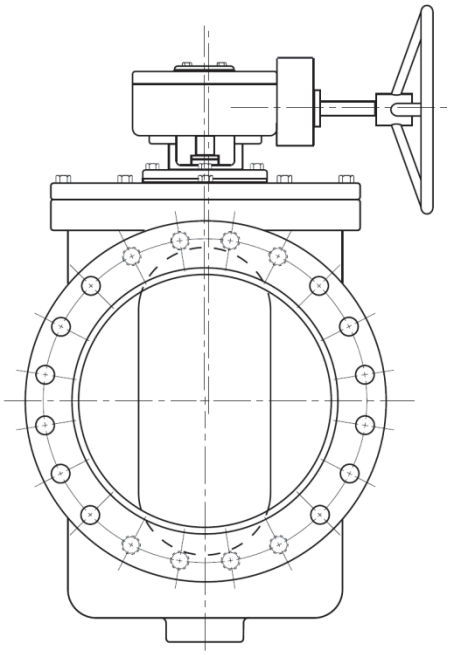

FIGURE 1. PLUG VALVE WITH GEAR ACTUATOR

The eccentric offset causes the plug to lift and rotate off the seat simultaneously to reduce seat friction and wear during operation. Direct Pressure pushes the plug into the seat and Reverse Pressure pushes the plug away from the seat. The valve can be operated with a direct nut, lever, or gear actuator. The gear actuator as shown in Figure 1 requires multi-turn input on a 2” square nut, handwheel, or chainwheel. The valve can also be automated with power actuators such as an electric motor or hydraulic cylinder.

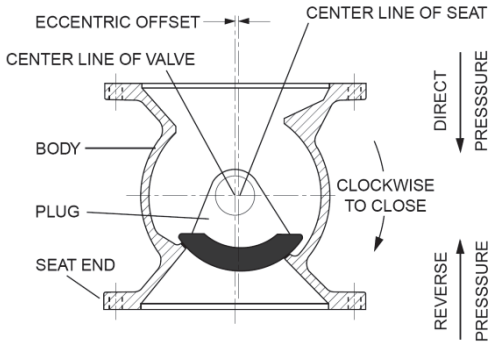

FIGURE 2. PLUG VALVE TERMS

VALVE CONSTRUCTION

The standard Cam-Centric® Plug Valve is constructed of rugged cast iron with a welded nickel seat and permanently lubricated bearings. See the specific Materials List submitted for the order if other than standard cast iron construction. The details of construction are illustrated in Figure 3.

The body (1) is available with flanged or mechanical joint ends for connection to the pipeline. The valve is designed to be serviced in-line by removing the cast cover (2). The quarter-turn plug (3) is guided by sleeve bearings (6) located in the cover and lower boss in the body. Grit-Guard seals (21) are located at the bottom of the bearings (6) to prevent abrasive material from wearing the bearing. Leak-tight closure is made when the rubber-coated plug (3) is rotated into the nickel seat on the "SEAT END" of the body.

Table 1.
Standard Plug Valve Parts List

Item	Description	Material
1	Body	Cast Iron with Overlay Welded Nickel Seat
2	Cover	Cast Iron
3	Plug*	Cast Iron with Resilient Facing
6	Bearings*	316 Stainless Steel
7	V-Type Packing*	Buna-N
8	Cover Seal*	Buna-N
15	Cover Bolt	Alloy Steel, Gr 5
18	Packing Follower	Cast Iron
19	Follower Bolt	Alloy Steel, Gr. 5
21	Grit-Guard*	Buna-N
22	Thrust Bearing*	Teflon
23	Thrust Bearing*	316 Stainless Steel
24	Key	Carbon Steel
29	Shims	304 Stainless Steel
*Recommended Spare Part		

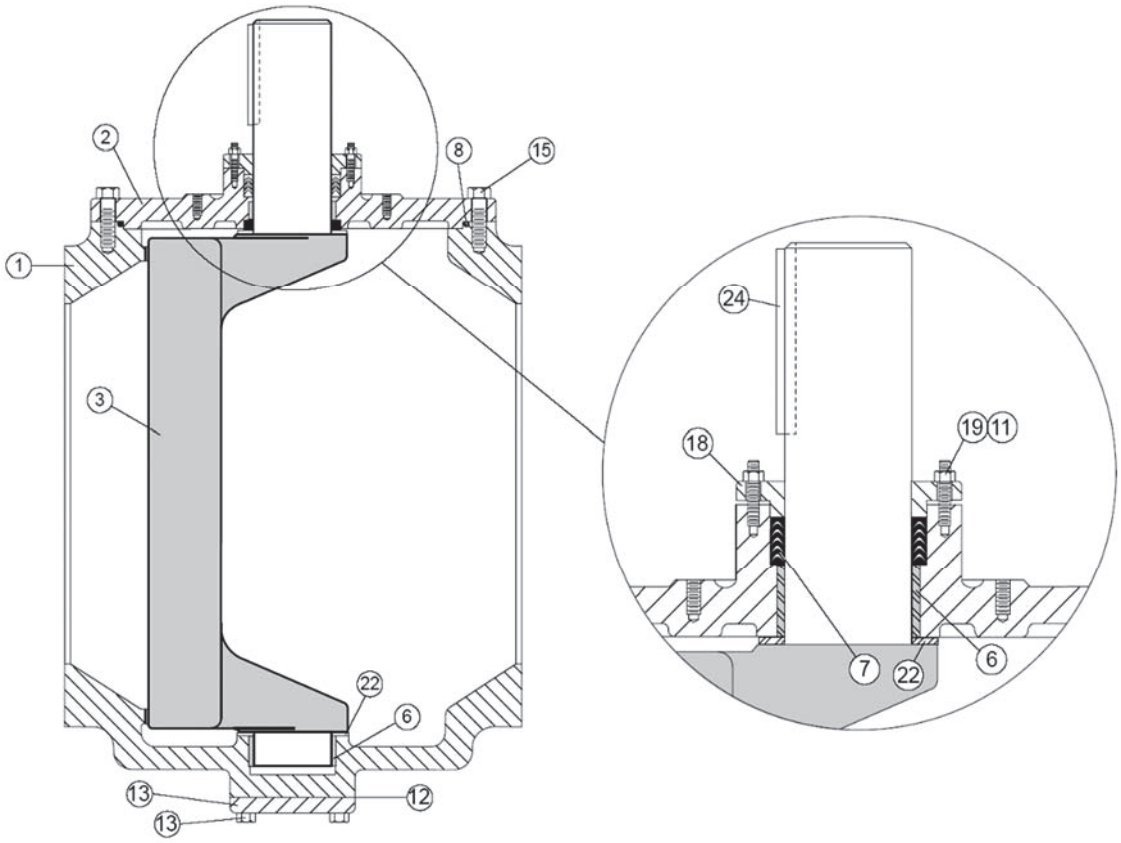

FIGURE 3. STANDARD PLUG VALVE CONSTRUCTION

INSTALLATION

The installation of the valve is important for its proper operation. The valve is capable of flow in either direction but the maximum operating pressure can vary with the location of the seat end (Figure 4). The words “SEAT END” are marked on the valve flange. Actuators are available for pressures up to the full rating in both direct and reverse pressure orientations. Actuator ratings will be indicated on the nameplate. Higher operating pressures may require adjustment of the closed position stop or a larger actuator; consult the factory.

SUSPENDED SOLIDS SERVICE: For fluids containing suspended solids, special orientations are needed to prevent debris from collecting in the valve. For horizontal installations (Figure 5), the valve should be installed with the flow entering the seat end of the valve and the shaft in a horizontal position with the plug up when open. For vertical installations (Figure 6), the valve must be installed with the seat end up regardless of flow direction.

CAUTION

Vertical shaft orientation in horizontal installations may lead to increased wear and torque requirements.

CLEAN SERVICE: For both horizontal and vertical installations, install in the direct pressure orientation (pressure opposite the seat end).

AIR AND GAS SERVICE: Install valve in the direct pressure orientation (pressure opposite the seat end). Lubricate plug face with FDA approved silicone grease such as Dow Corning #7 before installation. Gear actuators are required for gas service applications.

PUMP DISCHARGE SERVICE: On all horizontal pump discharge applications (Figure 7), the seat end should be towards the pump.

BURIED SERVICE: Gear actuators are recommended for buried valves to hold the valve in position and provide multi-turn closure to prevent water hammer. The valve should be installed with the shaft horizontal and the actuator nut directed upwards. The valve box or extension pipe should be installed so that the actuator nut and extension stem turn freely.

NOTE

Adjust and test valve prior to backfill.

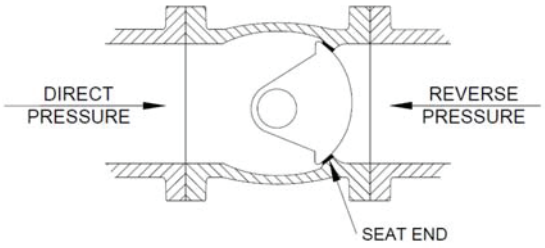

FIGURE 4. INSTALLATION ORIENTATION

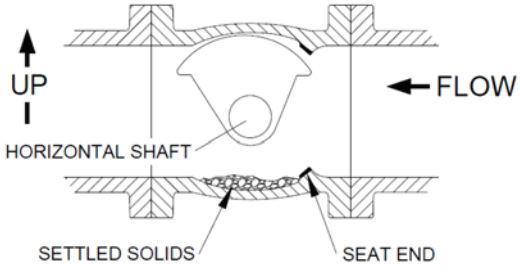

FIGURE 5. HORIZONTAL PIPE WITH SOLIDS

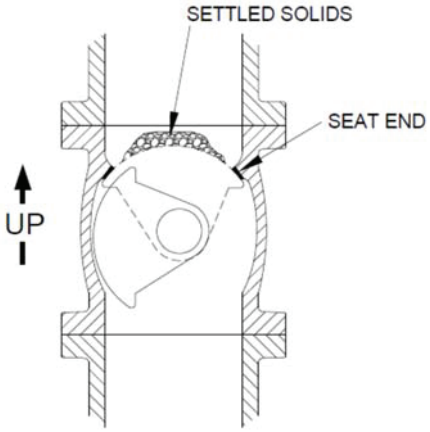

FIGURE 6. VERTICAL PIPE WITH SOLIDS

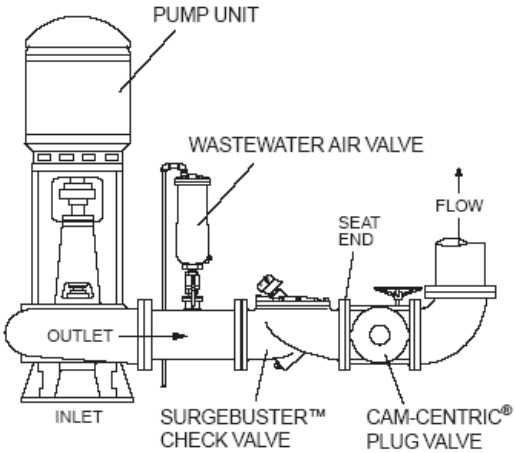

FIGURE 7. PUMP DISCHARGE SERVICE

FLANGED ENDS: Flanged valves should be mated with flat-faced pipe flanges equipped with resilient gaskets. When ring gaskets are used, the bolt material should be ASTM A307 Grade B of SAE Grade 2 Carbon Steel. Higher strength bolts may only be used with full-face gaskets.

The valve and adjacent piping must be supported and aligned to prevent cantilevered stress on the valve. Lower valve into line using slings or chains around the valve body. Lubricate the flange bolts or studs and insert them around the flange. Lightly turn bolts until gaps are eliminated.

The torquing of the bolts should then be done in graduated steps using the cross-over tightening method. Recommended lubricated torques for use with resilient gaskets (75 durometer) are given in Table 2. If leakage occurs, allow gaskets to absorb fluid and check torque and leakage after 24 hours. Do not exceed bolt rating or crush gasket more than 50 percent of its thickness.

Table 2.
Flange Bolt Torques

Valve Size (in)	Bolt Dia (in)	Recom Torque (ft-lbs)	Max Torque (ft-lbs)
3	5/8	25	90
4	5/8	30	90
6	¾	30	150
8	¾	40	150
10	7/8	45	205
12	7/8	65	205
14	1	80	300
16	1	90	300
18	1 1/8	100	425
20	1 1/8	120	425
24	1 ¼	150	600
30	1 ¼	175	600
36	1 ½	175	1000
42	1 ½	200	1000
48	1 ½	250	1000

CAUTION
The use of raised-face flanges or excessive bolt torque may damage valve flanges.

MECHANICAL JOINT ENDS: Clean ends of mating pipe and valve sockets with soapy water (Figure 8). Place lubricated gasket and retainer gland over pipe end prior to installing valve. Install valve socket over pipe. Press gland and gasket toward valve until gasket is evenly set into valve socket.

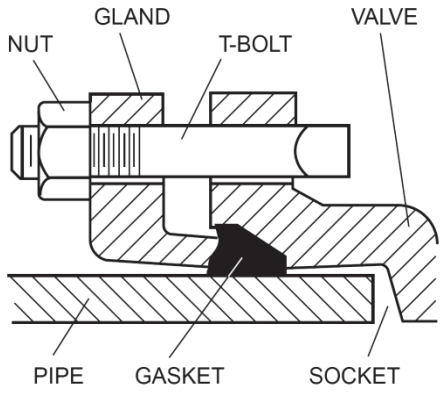

FIGURE 8. MECHANICAL JOINT INSTALLATION

Insert T-bolts in valve flange and hand tighten nuts. Torque nuts in four graduated steps using the cross-over tightening method without exceeding the torque listed in Table 3. Maintain an equal gap between the gland and the face of the valve at all points around the socket.

If a tight connection is not achieved, then the joint should be disassembled, thoroughly cleaned, and reassembled. Over-tightening may cause damage to the valve or gland.

Table 3.
Mechanical Joint Nut Torques

Valve Size (in)	T-Bolt Dia (in)	Recom Torque (ft-lbs)	Max Torque (ft-lbs)
3	5/8	45	60
4	¾	75	90
6	¾	75	90
8	¾	75	90
10	¾	75	90
12	¾	75	90
14	¾	75	90
16	¾	75	90
18	¾	75	90
20	¾	75	90
24	¾	75	90
30	1	100	120
36	1	100	120
42	1 ¼	75	150
48	1 ¼	75	150

DIRECT NUT OPERATED VALVES: 8” and smaller valves may be equipped with a top-mounted nut for direct quarter-turn operation. The nut is 2” square to fit most valve wrenches and is mounted directly to the valve plug. To open the valve, slowly rotate the nut 90 degrees in the counter-clockwise (CCW) direction. The closed position is adjusted with a set screw and lock nut, see Figure 9. The open position can be adjusted by moving the bolt along the curved slot.

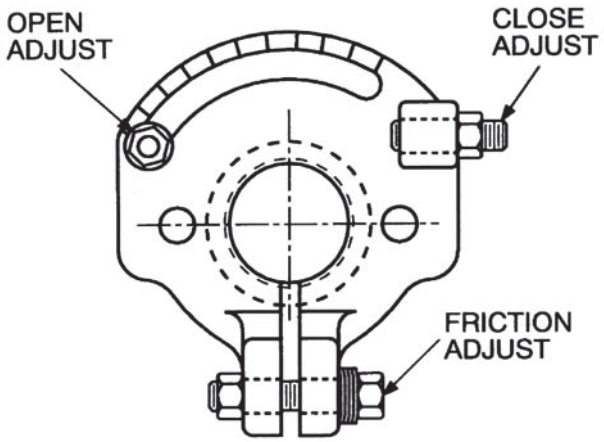

FIGURE 9. DIRECT NUT ADJUSTMENTS

DIRECT NUT FRICTION ADJUSTMENT: As shown in Figure 10, valves with direct nut actuators have a flanged packing follower (18) above the packing (7) to hold the valve in the open or closed position. If the valve is difficult to operate or does not maintain its set position, adjust the clamp bolt (17) to provide sufficient friction to hold the valve in position. If the valve is equipped with a hand lever, the setting should allow the valve to be operated with about 80 pounds of force on the end of the pipe handle.

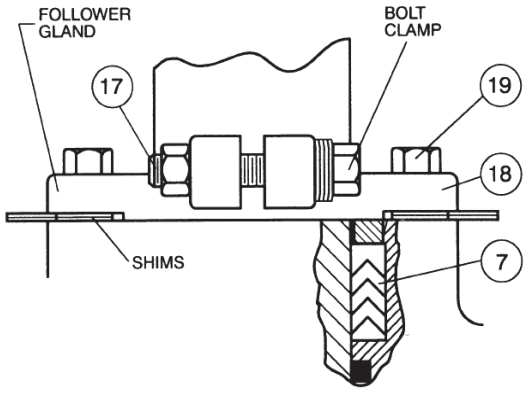

FIGURE 10. FRICTION ADJUSTMENT

LEVER OPERATED VALVES: A wrench head and lever (Figure 11) are available for use over the 2” nut for direct quarter-turn operation. Various lever lengths are available for specific direct and reverse pressure conditions as shown in Table 4.

Table 4. Application of Levers

Valve Size	Wrench Length, (Inches)			
	Direct Pressure		Reverse Pressure	
	100 psi	175 psi	50 psi	175 psi
2 ½	22	22	22	22
3	22	22	22	22
4	22	22	22	22
6	44	*	44	*
8	44	*	44	*

* Worm gear recommended due to operating torque

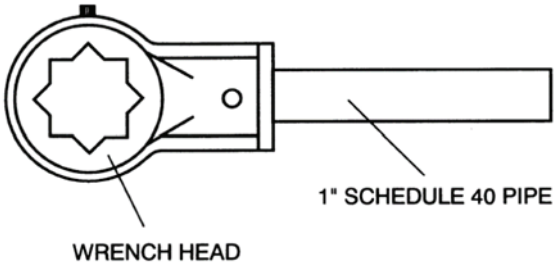

FIGURE 11. HANDLEVER

The wrench head is placed over the nut and can be secured with the set screw provided. To open the valve, rotate the lever 90 degrees in the CCW direction. The closed position is adjustable with a set screw and lock nut mounted below the nut, see Figure 9.

CAUTION

Open and close the valve slowly to prevent water hammer.

GEAR OPERATED VALVES: 4” and larger plug valves are available with a multi-turn manual gear actuator. The gear unit has a self-locking worm gear which multiplies the turning force on the handwheel or nut so that the valve can be operated with ease. A clamp-on chainwheel kit can also be used for installations high above the floor. An indicator on the top of the actuator housing indicates the position of the valve plug. The handwheel or nut must be rotated through 12-80 turns (depending on model) to open or close the plug valve. The direction of rotation to open the valve is indicated on the 2” square actuator nut.

GEAR ACTUATOR ADJUSTMENT: The standard gear actuator is provided with factory-set open and closed position stops. If the valve does not shut off tight, the stop bolt can be adjusted allowing the plug to rotate further into the seat. Loosen the locknut, and turn the closed stop bolt CCW 1 turn at a time (Figure 12). If the valve continues to leak after all of the adjustment is taken verify the orientation of the valve during installation. If a tight shut-off cannot be achieved, a larger gear actuator may be required for the system operating pressure; consult the factory.

CAUTION

Adjust closed stop bolt for tight shut-off only. Over adjustment may cause high operating torques and damage to the plug.

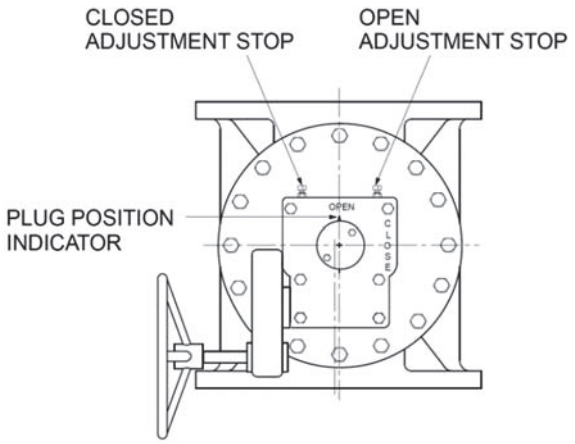

FIGURE 12: GEAR ACTUATOR ADJUSTMENT

POWER-ACTUATED VALVES: Move plug into closed position with manual override. Back the override off ¼-turn to account for motor wind-down and set the closed travel stop.

CAUTION

Do not use torque switch as primary travel stop.

MAINTENANCE

The Cam Centric® Plug Valve requires no scheduled lubrication or maintenance other than regular exercising and occasional inspection of the plug. The exercising is achieved by fully opening and closing the valve to verify smooth operation. If operation is difficult, it may be necessary to flush sediment from the valve by opening and closing the valve several times under flowing conditions.

CAUTION

Open and close the valve slowly to prevent water hammer.

The recommended interval for exercising is every six months or annually if the valve is regularly operated. Over the life of the valve, inspection and some regular adjustments may be needed as given below.

CLOSED POSITION ADJUSTMENT: The standard valve is factory-set to seal at the “Actuator Pressure Ratings” shown on the nameplate for direct and reverse pressure directions (see Figure 2). Higher pressure applications may require adjustment of the closed position stop or a larger actuator; consult the factory.

If the valve is found to leak in the closed position due to wear, the plug can be adjusted by loosening the closed position stop on the actuator and rotating the plug further into the seat. Because of the eccentric action of the valve, further rotation will provide additional interference between the rubber plug surface and the body seat. Valves that have been in service for several years may require inspection of the plug for damage or wear. See the Disassembly Instructions of this manual.

PACKING ADJUSTMENT: V-type packing is pressure sensitive and therefore self-adjusting in nature. Over tightening will destroy both the pressure sensitive nature of the packing as well as its sealing capabilities. The packing configuration used in Cam-Centric Plug Valves follows the guidelines and recommendations of V-packing manufacturers.

Additional adjustment can be achieved by removing one or more shims found under the packing follower (18). If a leak develops, remove one shim (29) from the underside of the follower (18). An equal number of shims must be removed from both the left and right-hand sides. Re-tighten the follower bolts (19) and check for leakage. If the leakage continues, remove additional shims or replace the packing.

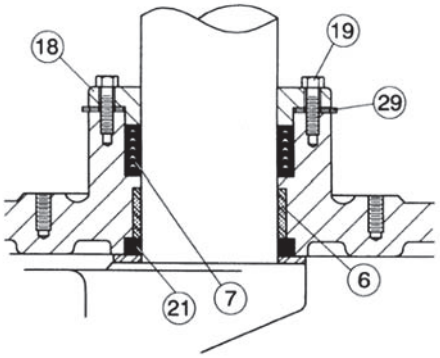

FIGURE 13. PACKING ASSEMBLY

PACKING REPLACEMENT: To replace the packing (7), it is recommended that the line be drained and the actuator removed. The valve can remain in the line. To replace the packing, first open the valve and drain the line. Close the valve to hold it in position. For power actuators, turn off and lock out electrical and hydraulic supplies before proceeding.

CAUTION

Drain line and close valve before removing actuator or valve may rotate suddenly. Take precautions against exposure to toxic or hazardous fluids in the line.

Remove the small round cover on actuator to expose shaft and key. Remove actuator mounting bolts and lift actuator from valve taking care not to lose square key. See Figure 13 and remove gland bolts (19) and lift follower (18) from the valve shaft. Remove old packing (7) with packing hook. Lubricate new packing with FDA grease and set in place one ring at a time taking care not to bend over the lips of the packing rings. Reinstall follower with 2 shims (29) per bolt (3 shims for 12" and larger valves). With valve in the closed position, place the actuator over valve and reinsert key (24). Finally, reinstall cover on actuator indicating "Closed".

CAUTION

If packing assembly contains clamp style follower as shown in Figure 9 do not lubricate shaft or sleeve.

PACKING REPLACEMENT WITH ACTUATOR: The above procedure with removal of the actuator will result in the most reliable shaft seal. But if the actuator cannot be removed, the following alternate procedure can be followed. To prevent the possibility of leakage during this procedure, open valve and drain the line.

CAUTION

Take precautions against exposure to toxic or hazardous fluids in the line.

Referring to Figure 13, remove follower bolts (19) and side follower (18) up to actuator. Remove packing adapters and rings (7) with packing hook. Cut rings with knife to remove. New packing rings should be cut at a 45 degree slope to allow insertion around the shaft and provide some overlap. Install rings one at a time with the tips down toward the valve. Stagger all joints 180 degrees around the shaft. Pull down follower (18) and reinsert bolts (19) with 2 shims (29) under follower (18). V-packing is pressure assisted and only requires light compression.

GEAR ACTUATOR MAINTENANCE: A typical gear actuator is shown in Figure 14 and consists of a worm (3) mounted on an input shaft (9). The worm engages a worm wheel (2). When the worm is turned, it drives the wheel through 90° of rotation. The rotation of the valve plug is displayed by the top indicator (5). The open and closed positions of the segment gear are controlled by an end position stop bolts (20). The stops can be adjusted by loosening the lock nut (21) and rotating the bolts. The gears are lubricated with EP2 grease in a cast iron housing (1). Other parts are listed in Table 5.

The gear box is factory lubricated and sealed. No regular maintenance is required. If difficult operation is observed, the cover (4) can be removed and the unit inspected for wear. All moving parts should be coated with grease. The grease should have an even and smooth consistency. If needed, coat all moving parts with a lithium-based EP-2 grease such as Shell Alvania #2 or equal. Buried units should be packed 90% with grease.

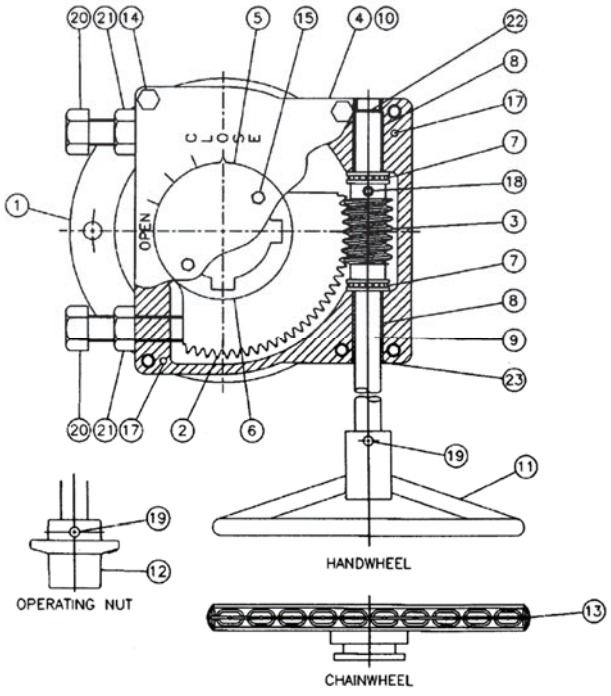

FIGURE 14. GEAR ACTUATOR CONSTRUCTION

Table 5. Gear Actuator Parts List		
Item	**Description**	**Material**
1	Housing	Cast Iron
2	Wormwheel	Ductile Iron
3	Worm	Steel
4	Cover	Cast Iron
5	Indicator	Cast Iron
6	O-Ring	Buna-N
7	Roller Bearing	Steel
8	Shaft Bearing	Bronze
9	Shaft	Steel
10	Gasket	Fiber
11	Handwheel	Steel or Iron
12	Operating Nut	Iron
13	Chainwheel	Iron
14	Cover Bolt	Steel
15	Indicator Bolt	Steel
16	Pipe Plug	Steel
17	Pin	Steel
18	Spirol Pin	Steel
19	Spring Pin	Steel
20	Screw	Steel
21	Jam Nut	Steel
22	Plug	Steel
23	U-Cup Seal	Buna-N

TROUBLESHOOTING

Several problems and solutions are presented below to assist you in troubleshooting the valve assembly in an efficient manner.

- Leakage at Valve Shaft: Adjust or replace packing.
- Leakage at Flanges: Tighten flange bolts, replace gasket.
- Valve Leaks when Closed: Pressure should be in the direction of pushing the plug into the seat. Adjust plug position by rotating the handwheel. Inspect plug for damage and replace.
- Hard to Open: Flush debris from valve. Check interior of valve for grit buildup or debris. On buried valves, check alignment of operating stem.
- Leaking Oil: Tighten actuator cover bolts. If leak persists, remove actuator cover, inspect grease, and replace actuator gasket.
- Noisy Operation: Flow noise is normal. Loud flow noise similar to hammering may be cavitation from dropping high pressures across valve; review application of valve. For gear actuator noise, inspect grease; add new grease if there are uncoated moving parts or grease has broken down into oil.

DISASSEMBLY

Disassembly may be required to inspect the plug for wear or remove debris and deposits from the valve. Work on the valve should be performed by a skilled mechanic with proper tools and a power hoist for large valves. The valve can be disassembled without removing the valve from the pipeline. Refer to Figure 15 for valve construction and parts.

WARNING

Open valve and drain line before removing cover bolts or pressure may be released causing injury. Place plug in lowest position before removing actuator or plug may rotate suddenly and jam or damage plug surface.

1. Open valve and drain the pipeline. Close valve until plug just touches the seat. Remove the small cover on the actuator to expose the shaft key.
2. Remove the actuator mounting bolts and lift actuator from valve taking care not to lose key (24).
3. Remove cover bolts (15). Matchmark cover (2) and body. Screw eye-bolts into actuator mounting holes and use hoist to lift cover (2) and plug assembly from valve. Use caution to prevent plug from dropping while lifting cover. To remove plug (3) from valve, use sling around top portion of plug.
4. Inspection of the bearings (6) is done by measuring diameter of shaft and inside diameter of bearing. Check for a normal running clearance of .005". Bearings are permanently lubricated.
5. Thrust bearing assembly (23) and packing gland (18) can be removed by removing all of the hex nuts (12).

REASSEMBLY

All parts must be cleaned and gasket surfaces should be cleaned with a stiff wire brush in the direction of the serrations or machine marks. Worn parts, gaskets and seals should be replaced during reassembly.

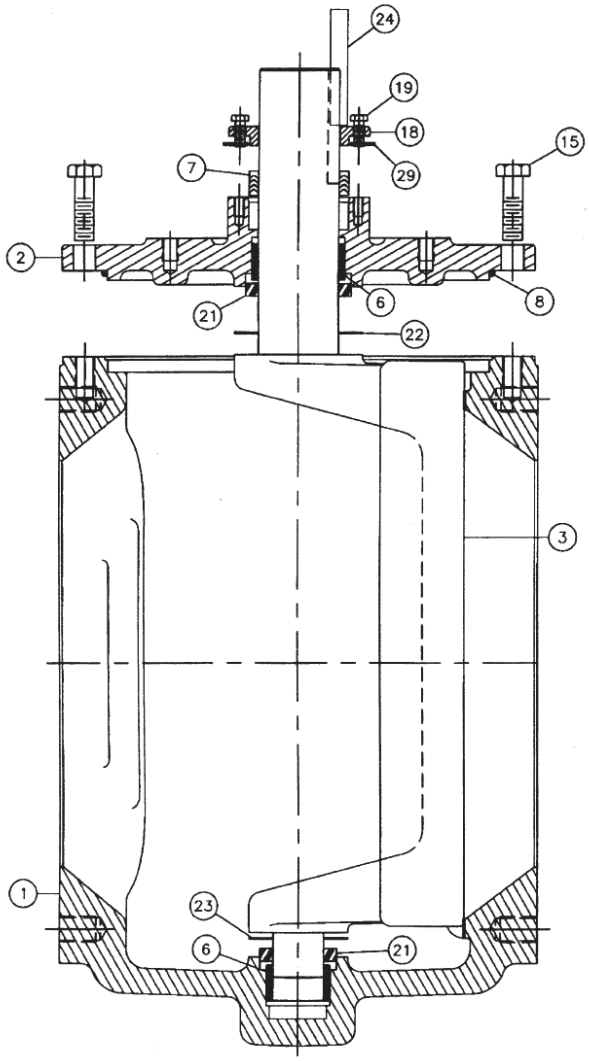

FIGURE 15. PLUG VALVE PARTS

1. Press new bearings (6) into cover and body with round, flat bar 1/4" below inside surfaces of body (1) and cover (2).

2. Install cover seal (8) over cover lip.

3. Apply thin film of FDA silicone grease such as Dow Corning #7 to plug rubber surface. Place stainless steel thrust bearing (23) over lower end of plug, Teflon bearing (22) over the upper end. Install grit seals (21) over the shafts of the plug.

4. Carefully place plug into the body (1) and insert lower plug shaft into bottom bearing (6). Plug (3) should be in the open position. Install cover (2) over plug shaft and into recess in body. Align match marks between body and cover (2). Torque cover bolts (15) per Table 6 in 3-4 increments using the cross-over tightening method.

Table 6. Tightening Torques	
Size	**Torque (ft-lbs)**
½" - 13	45-75
5/8" - 11	100-150
¾" - 10	150-250
7/8" - 9	200-350
1" - 8	300-500
1 1/8" - 7	450-700
1 ¼" - 7	650-1000
1 ½" - 6	750-1100

5. Lubricate ID and OD of packing set with FDA grease and install in packing bore one ring at a time taking care to keep lips pointing down toward plug. Reinstall follower, gland bolts, and 2 shims per bolt.

   NOTE: If valve has friction assembly with direct nut actuator, follow Friction Adjustment procedure on page 6.

6. Insert key (24) into shaft and place actuator over valve. Reinstall actuator mounting bolts and torque per Table 6. Install cover on actuator.

7. Apply power to actuator and cycle valve. Apply pressure to valve and check for cover and shaft leakage. Tighten bolts as necessary. Adjust packing if necessary.

8. If valve does not shut off tight, adjust the closed position stop as described on page 6 under "Closed Position Adjustment."

PARTS AND SERVICE

Parts and service are available from your local representative or the factory. Make note of the valve Size, Series No, and Serial No. located on the valve nameplate and contact:

Val-Matic Valve and Mfg. Corp.
905 Riverside Drive
Elmhurst, IL 60126
Phone: (630) 941-7600
Fax: (630) 941-8042
www.valmatic.com

A sales representative will quote prices for parts or arrange for service as needed.

LIMITED WARRANTY

All products are warranted to be free of defects in material and workmanship for a period of one year from the date of shipment, subject to the limitations below.

If the purchaser believes a product is defective, the purchaser shall: (a) Notify the manufacturer, state the alleged defect and request permission to return the product; (b) if permission is given, return the product with transportation prepaid. If the product is accepted for return and found to be defective, the manufacturer will, at his discretion, either repair or replace the product, f.o.b. factory, within 60 days of receipt, or refund the purchase price. Other than to repair, replace or refund as described above, purchaser agrees that manufacturer shall not be liable for any loss, costs, expenses or damages of any kind arising out of the product, its use, installation or replacement, labeling, instructions, information or technical data of any kind, description of product use, sample or model, warnings or lack of any of the foregoing. NO OTHER WARRANTIES, WRITTEN OR ORAL, EXPRESS OR IMPLIED, INCLUDING THE WARRANTIES OF FITNESS FOR A PARTICULAR PURPOSE AND MERCHANTABILITY, ARE MADE OR AUTHORIZED. NO AFFIRMATION OF FACT, PROMISE, DESCRIPTION OF PRODUCT OF USE OR SAMPLE OR MODEL SHALL CREATE ANY WARRANTY FROM MANUFACTURER, UNLESS SIGNED BY THE PRESIDENT OF THE MANUFACTURER. These products are not manufactured, sold or intended for personal, family or household purposes.

Valves and actuators

(Actuated) butterfly valves (BFV07)

Brand :	**KEYSTONE/EMERSON**
Model :	**0X0 360 SSS1TSG 2**
Supplier :	**CONTROLE LAURENTIDE**
Tag :	**BFV-02-216/226/116/126/136/151/ 150/153/155/171/170/181/182/183/ 184/191/192/193/194/175/176**

1100, Montée Masson
Laval (Québec) H7E 4P2

Téléphone : 450-688-4012
Télécopieur : 450-661-6341

KEYSTONE SERIES GR RESILIENT SEATED BUTTERFLY VALVES GRW/GRL

INSTALLATION AND OPERATION MANUAL

Before installation these instructions must be fully read and understood



Intended valve use

The valve is intended to be used only in applications within the pressure/temperature limits indicated in the P/T diagram of the product manual.
When the valve is used in an end-of-line function, PED Cat-I applications are allowed only.
For other categories, please contact the factory.

1 STORAGE AND HANDLING

1.1 Storage

When valves are to be stored for some time (2 months or more) before being fitted, storage should be in the original delivery crates or cases.

1.1.1 Storage conditions

The valves should be stored off the ground in a clean, dry indoor area.
Protect the valve from temperature and humidity extremes, and exposure to excessive dust, moisture, vibration, deformations, sunlight and ozone.

Recommendations

1. Temperature: storage temperature below 25°C (77°F), above 0°C (32°F) preferable below 15°C (59°F).
2. Humidity: storage conditions should be such that condensation does not occur, store in a dry environment. Maximum 50% relative humidity.
3. Light: valve elastomers should be protected from light, in particular direct sunlight or strong artificial light with high ultra violet.
4. Ozone: storage rooms should not contain any equipment generating ozone. E.g. lamps, electric motors.

IMPORTANT

Before valves are installed or used the following actions are recommended.

1. *Valves/parts have to be inspected and thoroughly cleaned if required.*
2. *Elastomer parts need to be greased with silicone grease if not present anymore.*
3. *All surfaces in contact with seats have to be thoroughly cleaned and greased with silicone grease if stored for more than 5 months.*

1.2 Handling

To prevent damage during handling, the valves should be lifted by hand or using appropriate lifting equipment. Do not fasten lifting devices around the valve operating shaft, actuator or through the valve waterway. The valve should be lifted with chains or slings which are fastened to rods or bolts which go through the bolt holes in the body flanges. The valves should be protected from external events e.g. (bumps, hitting and vibration) during transport. Any flange protection caps need to be removed before the valve is mounted in the pipeline. Lift the valve with great care from the transport package (crate, pallet). While handling or installing the valve, ensure that no damage occurs to the valve, the pneumatic/electrical/-hydraulic actuator or other instrumentation.

2 SPARE PARTS

Only original Keystone spare parts are allowed to be used. Safe operation cannot be guaranteed if third party spare parts are used.

© 2017 Emerson. All rights reserved.

3 INSTALLATION

WARNING!
For safety reasons, it is important to take the following precautions before you start work on the valve:

1. *Personnel making any adjustments to the valves should utilize suitable equipment. All required personal protection means should be worn.*
2. *The line must be depressurized before installing the valve.*
3. *Installation and handling of valves should be done only by personnel who are trained in all aspects of manual and mechanical handling techniques.*
4. *Misuse of the valve is not allowed. For example: the valve, handles, actuators or other parts may not be used as 'climbing tools'.*
5. *Ensure that valve pressure/temperature limitations marked on the identification tag are within the service conditions. The trim number on the valve's nameplate identifies the valve materials. See Product Manual for valve specific P/T diagram and trim number definition.*
6. *Ensure that valve materials are compatible with the pipeline fluid.*

3.1 Visual valve inspection

1. Confirm that the materials of construction listed on the valve nameplate are appropriate for the service intended and are as specified.
2. Tag/name plate identification

Manufacturer:	Keystone
Model:	Series GRW or GRL
Nominal size:	DN or NPS
M.P.W.P.:	Maximum permissible working pressure
Flange compatibility:	e.g. ANSI 125/150 PN 10/16
Temperature:	e.g. -40/120°C (-40/250°F)
Trim:	Materials of construction

3.2 Flange and pipe compatibility

Check matching of flange drilling pattern of valve and pipe before assembly.
Flanges have to meet the following requirements (see Figure 1):

- The face inside diameter should be:
  D min.: The valve Q-dimension + adequate disc clearance.
  D max.: The optimum inside diameter (ID) is equal to the inside diameter of flange standard EN 1092-1, table 8, type 11 or ASME B16.5, table 8, Weld Neck, dimensions B. For D max. inside diameters larger than those listed previously and smaller than JIS B 2220 flange types SOP, SOH and SW the max. operational pressure is reduced to 70% of the valve rated pressure (see pressure-temperature diagram). End Of Line (EOL) service is not recommended for applications with larger than D max inside diameters.
- If the flange (or pipe) is provided with a raised face, the diameter of this shall be at least 8 mm larger than the YY-dimension of the valve.

The use of the flange-gaskets is not allowed since it might damage the valve.
The Keystone seat-face design eliminates the need for the gaskets.
Use flange bolting in accordance with appropriate standard.

Do not use flange gaskets, as this could lead to valve damage!

3.3 Valve installation

The valves are bi-directional and may be installed in either direction relative to the flow. The valve will control flow equally in either direction. The recommended installation position is shaft horizontal and the lower disc edge opening down-stream. (Especially for slurry service and media with a tendency for sedimentation). For optimum valve control and smooth performance, it is recommended to have a 10 to 20 pipe diameters of straight run inlet piping and 3 to 5 pipe diameters straight outlet piping.
A valve is not a crow-bar. Do not use the valve to spread the flanges. Seat damage might result.

FIGURE 1

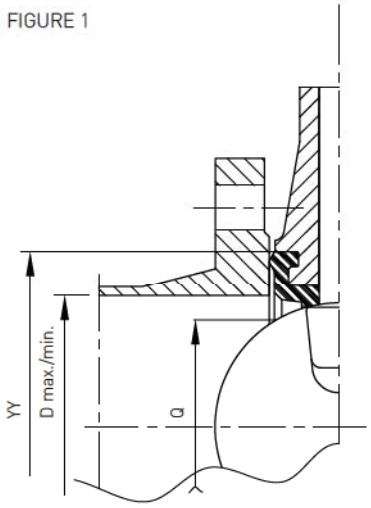

NOTES

- The valve can be installed in the pipe-line either with or without the actuator mounted on top of the valve. Make sure to turn the disc slowly in the event there is a mismatch causing the disc to touch the adjacent piping.
- It is the responsibility of the valve user and not the valve manufacturer to ensure that the pipeline system has been built professionally and the valve has been properly installed.
- Adjacent piping must be positioned so that minimal piping stresses are transmitted to the valve flanges during or after installation.
- Handling and lifting of the valves during installation MUST be performed following the same instructions described in previous section '1.2 Handling'.

IMPORTANT

Mating flange faces should be in good condition and free of dirt and/or inclusions and pipe insides should be well cleaned.

3.3.1 Existing system (see Figure 2)

1. Check whether the flange distance meets the valve face-to-face dimensions. Spread the flanges with adequate tooling for easy insertion of the valve.
2. In case of a wafer valve, insert some flange bolts in the pipe flanges, to help you hold the valve after insertion.
3. Close the valve so that the disc edge is at least 10 mm (⅜") within the body.
4. Insert the valve between the flanges, center the valve body and insert all flange bolts. Tighten the flange-bolts hand tight.
5. Slowly open the valve completely. (The disc is in line with parallel flats or keyway in shaft head. Keyway points towards disc edge.)
6. Maintain the valve flange alignment while gradually removing the flange-spreaders and tighten the flange-bolts hand tight.
7. Slowly close and open the valve to check for adequate disc clearance.
8. Cross-tighten all bolting to the proper torque. Do not over tighten.

3.3.2 New system (see Figure 2)

1. With the disc in the near-closed position, center each mating flange with the valve body. Fix the body with some flange-bolts and tighten the bolts.
2. Use the flange-valve-flange assembly for fit-up and centering to the pipe.
3. Tack-weld the flanges to the pipe.
4. Remove the bolting and remove the valve from between the flanges.

IMPORTANT

Do not finish-weld the flanges to the pipe with the valve bolted between the flanges as this will result in serious heat-damage to the seat.

5. Finish-weld the flanges to the pipe and allow the flanges to cool completely.
6. Install the valve now according to the procedure for installing in existing systems.

3.4 Valve verification

Check the operation of the valve by operating it to 'full open' and 'full close'. To verify the valve operation, the disc position indicator on the actuator or the handle should rotate between the 'full open' and 'full close' indicators on the actuator or throttle plate. For normal installation the valve disc travels clockwise to close.

3.5 Sources of possible danger
This section contains some examples of possible foreseen danger sources.

3.5.1 Mechanical

A. When manual operators are used, available space should be checked in order to avoid hands being clamped.
B. Mechanical sparks caused on impact of valve and e.g. tooling, are a potential source of ignition of surrounding atmosphere.

3.5.2 Electrical

If static charges or stray electrical currents can initiate explosions, the valve should be grounded to earth.

3.5.3 Thermal

A. Isolation should be used on valves with application temperatures > +40°C (+104°F) and < -20°C (-4°F) to prevent them from being touched (to avoid burning).
B. If the valve is used in hot gas/fluid applications that might give exothermic reactions, precautions must be taken so that the valve surface cannot lead to danger for people or the direct environment. In dust and possible explosion zones, the operation temperatures and ignition temperatures for dust should be reviewed.

3.5.4 Operational

Closing a valve too fast may result in water hammer in the upstream part of the pipeline. Water hammer results in excessive stresses in the valve and will cause severe damage. Water hammer should be avoided in all circumstances.
Due to differential pressure across the valve disc, butterfly valves have the tendency to be closed by the flow. Take care when unlatching the valve operating mechanism.

EXISTING SYSTEM

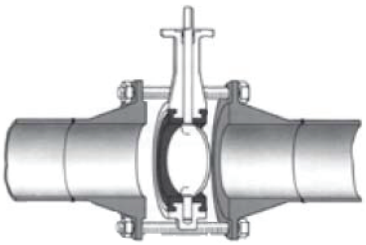

1. Spread the flanges with the adequate tooling. Insert some flange bolts to hold the valve.

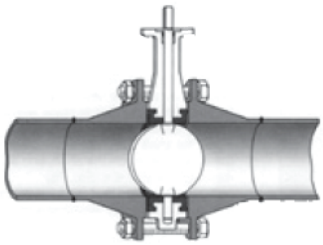

2. Open the valve and remove the flange spreads.

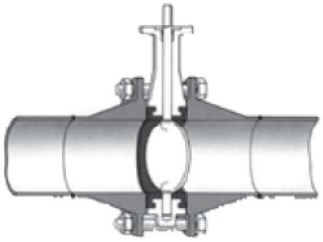

3. Close the valve clockwise, return to open position and cross-tighten all bolting.

NEW SYSTEM

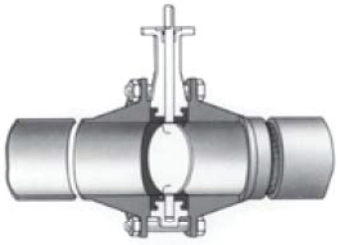

1. Center a flange-valve-flange assembly between the pipes.

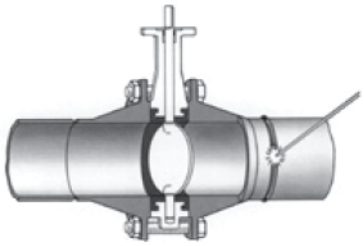

2. Tack weld the flanges to the pipes.

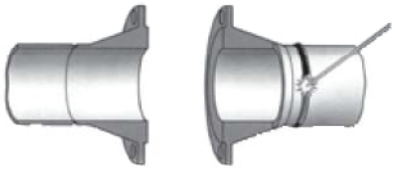

3. Remove the valve and finish weld.
Install the valve according to the procedure in the left column.

FIGURE 2

3.6 TROUBLESHOOTING GUIDE

Symptom	Possible cause	Resolution
Valve would not rotate	1. Actuator has failed	1. Replace or repair
	2. Valve packed with debris	2. Flush or clean valve to remove debris
Valve leaking	1. Valve not fully closed	1. Close valve, check actuator stop settings
	2. Debris trapped in valve	2. Cycle and flush (with valve open) to remove debris
	3. Seat is damaged	3. Replace seat
Jerky operation	1. Extreme dry application	1. Put some silicone oil on seat or increase size of actuator
	2. Air supply actuator inadequate	2. Increase air supply pressure and/or volume

TABLE 1 - Bottom shaft tapped hole dimensions

Valve size		
DN	NPS	Hole dimension
50	2	M6
65	2½	M8
80	3	M8
100	4	M8
125	5	M10
150	6	M10
200	8	M10
250	10	M12
300	12	M12

4 MAINTENANCE FOR SERIES GRW/GRL RESILIENT SEATED BUTTERFLY VALVES SIZES DN 50-300 (NPS 2-12)

WARNING!
Depressurize and, if necessary in case of dangerous fluids, drain the line and flush with appropriate cleaning fluid before starting any maintenance. Failure to do so may cause serious personal injury and/or equipment damage.
Before disassembling the valve, ensure the valve has been decontaminated correctly from any harmful gasses or liquids and that it is within a safe temperature range for handling.
Personnel making any adjustments to the valves should utilize suitable equipment. All required personal protection means should be worn.
We recommend that personnel should be trained in all aspects of these instructions before carrying out handling of any valve.

4.1 Routine maintenance

The Keystone Series GRW/GRL butterfly valves are designed to require a minimum of maintenance.
Routine maintenance or lubrication is not required, we recommend periodic (visual) inspection to ensure satisfactory operation and sealing to the environment.

4.2 Removing the valve from the pipe system

1. Turn the disc to nearly closed position. (The disc is in line with the parallel flats in the shaft).
2. Loosen all flange bolts and remove the bolts, which prevent removing of the valve.
3. Spread the flanges with adequate tooling, and remove the valve.

4.3 Valve disassembly (see Figure 3)

1. Turn the disc to almost open position.
2. Remove actuator.
3. Remove the circlip from the top of the body.
4. Pull the upper shaft out of the body.
5. Remove the bushing, shaft seal and circlip from the shaft.
6. Unscrew and remove the plug from the bottom of the body.
7. Pull the lower shaft out of the body (a threaded hole is provided in the end of the shaft). (See Table 1 for tapped hole dimensions)
8. Remove the disc by pulling or 'rolling' out of the seat bore.
9. Remove the seat from the body: pry under both seat edges at one point, collapse the seat into the shape of a round bottom heart configuration and pull the seat out of the body bore.
10. Remove bearings from shaft bores.

4.4 Valve assembly (see Figure 3)

1. Clean all parts. Use silicone grease on the disc to facilitate the assembly.
2. Mount the two shaft bearings close to the bore of the body.
3. If removed before, re-assemble the packing in the body.
4. Collapse the seat in the shape of a round bottom heart and firmly place the 'bottom' part of the seat into position in the body. Align the holes in the seat properly with the holes in the body.
5. Fit the circlip to the groove in the upper shaft.
6. Insert the upper shaft with sufficient (silicone) grease so that it protrudes approximately 10 mm (⅜") into the inside bore of the seat. Insert the lower shaft with sufficient (silicone) grease so that it is flush with the inside bore of the seat. Install the disc, with the hexagonal bore to the top. Insert the disc in the seat with the shaft bore on the topside against the shaft, leaving the bottom part of the disc just outside the seat. **Ensure the keyway or parallel flats on shaft are aligned to the disc edge.** Push the bottom part of the disc in place with a twisting motion.
7. Insert the shafts completely using a rotating pressure on the shaft, and a rotating motion on the disc. Pay special attention in order that the seat is not damaged due to any misalignment of stem holes.
8. Put some sealant on the plug and screw it into the lower shaft bore.
9. Fit the bushing over the top of the shaft and into the top of the body. Retain it in place with the circlip.
10. Mount the actuation.

4.5 Re-installing the valve

See section 3.3.1

SERIES GRW (WAFER)
DN 50-300 (NPS 2-12)

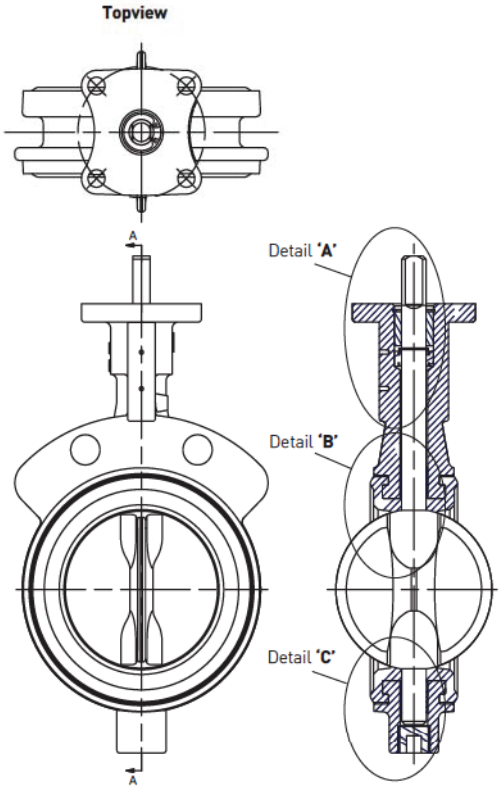

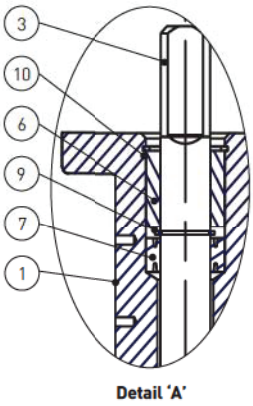

Detail 'A'

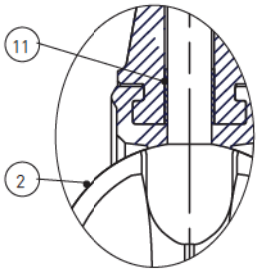

Detail 'B'

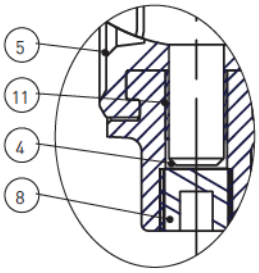

Detail 'C'

PARTS LIST

Item	Description
1	Body
2	Disc
3	Upper shaft
4	Lower shaft
5	Seat
6	Upper bushing
7	Shaft seal
8	Plug
9	Shaft circlip
10	Body circlip
11	Upper and lower bearing

SERIES GRL (LUGGED)
DN 50-300 (NPS 2-12)

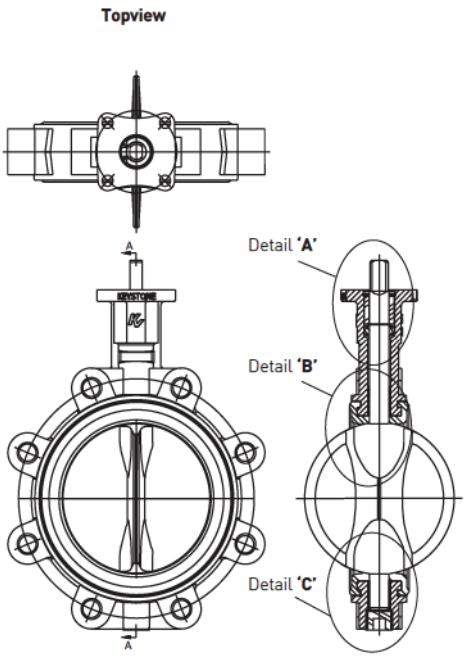

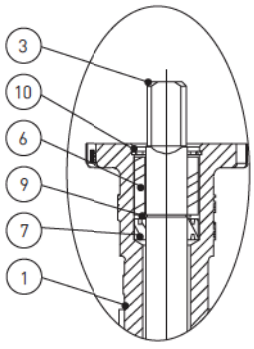

Detail 'A'

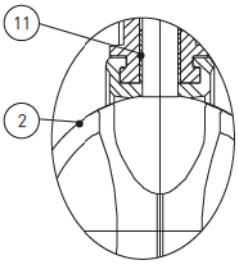

Detail 'B'

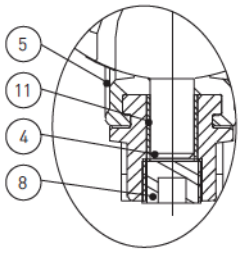

Detail 'C'

PARTS LIST

Item	Description
1.	Body
2.	Disc
3.	Upper shaft
4.	Lower shaft
5.	Seat
6.	Upper bushing
7.	Shaft seal
8.	Plug
9.	Shaft circlip
10.	Body circlip
11.	Upper and lower bearing

FIGURE 3

5 MAINTENANCE BUTTERFLY VALVES SERIES GRW/GRL DN 350-900 (NPS 14-36)

The Keystone Series GRW/GRL butterfly valves are designed to require a minimum of maintenance.

WARNING! See section 4!

5.1 Routine maintenance
See section 4.1

5.2 Removing the valve from the pipe system
See section 4.2

5.3 Valve disassembly (see Figure 4)
1. Turn the disc to almost open position.
2. Remove actuator.
3. Remove the disc screw with the O-ring from the disc.
4. Remove the circlip from the top of the body.
5. Pull the shaft out of the body.
6. Remove the bushing, shaft seals and circlip from the top of the shaft.
7. Remove the disc by pulling or 'rolling' out of the seat bore.
8. Into the shape of a round bottom heart configuration and pull the seat out of the body bore.
9. Remove circlip from the bottom body plug and pull the plug out of the body.
10. Remove the O-ring from the plug.
11. Remove bearings from shaft bores.

5.4 Valve assembly (see Figure 4)
1. Clean all parts.
2. Fit bearings into shaft bores (2 bearings are to be installed close to the bore of the body and 2 bearings at the outer ends of the shaft bores). Collapse the seat in the shape of a round bottom heart firmly place the 'bottom' part of the seat into position in the body. Align the holes in the seat properly with the holes in the body.
3. Fit the shaft circlip to the groove in the shaft.
4. Insert the shaft with sufficient (silicone) grease so that it protrudes approximately 10 mm (⅜") into the inside bore of the seat. Install the disc, with the disc screw holes toward the valve top-plate, by inserting the disc in the seat with the shaft bore on the topside against the shaft, leaving the bottom part of the disc just outside the seat. Push the bottom part of the disc in place with a twisting motion.
5. Insert the shaft completely using a rotating pressure on the shaft, and a rotating motion on the disc. Pay special attention in order that the seat is not damaged due to any misalignment of stem holes.
6. Align the counter-drilled position of the shaft with the disc screw hole. Place the O-ring on the disc screw. Apply thread locking compound around disc screw thread. Install the disc screw and tighten securely. (see Table 2 for suggested tightening torques)
7. Place the O-ring onto the bottom plug. Place the plug into the body and position it with a circlip.
8. Place the shaft seals on the inside and outside of the bushing then fit it over the top of the shaft and into the top of the body. Retain it in place with the circlip body.
9. Mount the actuator.

5.5 Re-installing the valve
See section 3.3.1

TABLE 2 - Recommended disc screw tightening torques

Valve size		Tightening torque	
DN	NPS	Nm	ft•lbs
350-400	14-16	140	103
450-500	18-20	270	200
600-800	24-32	470	347
900	36	1270	937

SERIES GRW (WAFER)
DN 350-900 (NPS 14-36)

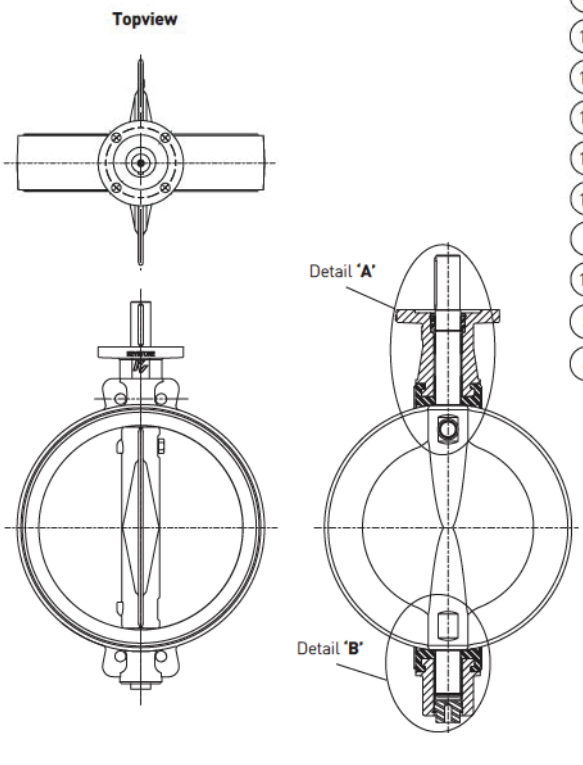

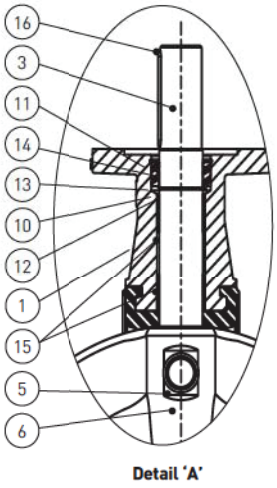

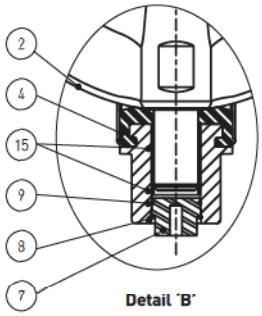

PARTS LIST

Item	Description
1.	Body
2.	Disc
3.	Shaft
4.	Seat
5.	Disc screw
6.	Disc screw O-ring
7.	Plug
8.	Plug circlip
9.	Plug O-ring
10.	Bushing
11.	Body circlip
12.	Shaft circlip
13.	Body O-ring
14.	Shaft O-ring
15.	Bearing
16.	Parallel key

SERIES GRL (LUGGED)
DN 350-900 (NPS 14-36)

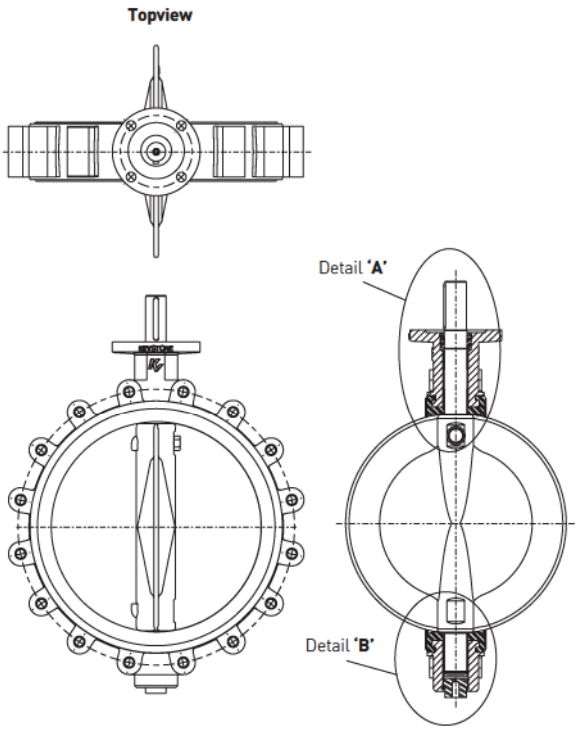

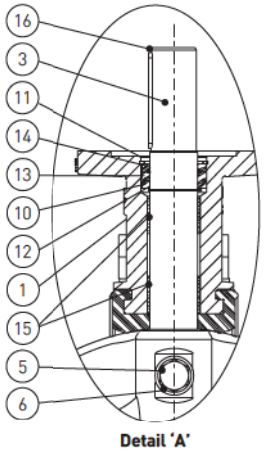

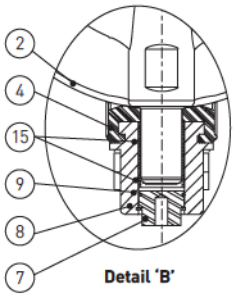

PARTS LIST

Item	Description
1.	Body
2.	Disc
3.	Shaft
4.	Seat
5.	Disc screw
6.	Disc screw O-ring
7.	Plug
8.	Plug circlip
9.	Plug O-ring
10.	Bushing
11.	Body circlip
12.	Shaft circlip
13.	Body O-ring
14.	Shaft O-ring
15.	Bearing
16.	Parallel key

FIGURE 4

Neither Emerson, Emerson Automation Solutions, nor any of their affiliated entities assumes responsibility for the selection, use or maintenance of any product. Responsibility for proper selection, use, and maintenance of any product remains solely with the purchaser and end user.

Keystone is a mark owned by one of the companies in the Emerson Automation Solutions business unit of Emerson Electric Co. Emerson Automation Solutions, Emerson and the Emerson logo are trademarks and service marks of Emerson Electric Co. All other marks are the property of their respective owners.

The contents of this publication are presented for informational purposes only, and while every effort has been made to ensure their accuracy, they are not to be construed as warranties or guarantees, express or implied, regarding the products or services described herein or their use or applicability. All sales are governed by our terms and conditions, which are available upon request. We reserve the right to modify or improve the designs or specifications of such products at any time without notice.

Emerson.com/FinalControl

TorqPlus EM-Series Actuator
Installation and Operating Instructions

Actuator Models: All
Bulletin: 21077- 06/00

BETTIS
Actuators & Controls

This bulletin provides installation and operating information for the Bettis TorqPlus EM-Series Actuator. Should you have any questions about the controller that are not covered under this bulletin, please contact an authorized Bettis Valve Automation Center or Bettis Electric Division, Mansfield, Ohio U.S.A.

1.0 Caution

Electrical shock and/or explosion hazard. To avoid serious personal injury, death, or property damage due to electrical shock and/or ignition of hazardous atmospheres, ***turn off all power to the actuator before removing the actuator cover.***

2.0 Inspection

Because many models look alike, verify the actuator's nameplate to insure correct model number, torque, operating speed, voltage, and enclosure type before installation or use.

3.0 Storage

The actuator must be stored in a clean, dry, temperature controlled area. The unit shall be stored with the cover installed and with the conduit openings sealed. Storage must be off the floor, covered with an unsealed dust protector that will allow side and bottom ventilation. Care must be taken to guard the actuator from condensation in extreme temperature variations. If no other means are available, internal heaters are recommended.

4.0 Maintenance

Each Bettis electric actuator is a totally enclosed unit with a permanently lubricated gear train. Once installed, formal maintenance should not be required. However, periodic preventative maintenance will extend the operating life of the actuator. PM checks include:

- ➢ Insure that alignment relative to the load on the actuator is proper. Mis-alignment is a major cause of premature actuator failure.
- ➢ Insure all wiring is insulated, connected, and terminated properly.
- ➢ Insure all screws are present and tight, including set screws for the cams.
- ➢ Insure cleanliness of the internal electrical devices.
- ➢ Insure conduit connections are installed properly and are dry. No signs of condensation or water infiltration should be present inside the conduit or conduit ports on the actuator.
- ➢ Check internal devices for condensation or corrosion.
- ➢ Upon installation of cover, insure proper seal and verify that o-ring is not pinched between the flange.
- ➢ Verify declutch mechanism and manual override operates properly.
- ➢ Inspect label to verify model number, serial number, and electrical ratings are readable.
- ➢ Verify actuator is operating in the proper quadrant.
- ➢ During operation, perform a visual inspection during an open and close cycle. Also, listen for any abnormal noises or sounds.

Under normal conditions, this inspection is recommended at six month intervals. But where conditions are more severe, more frequent inspection may be advisable.

5.0 Manual Operation

100 Series

The 100 series has no manual override. Therefore, to transition the end device, the actuator must either be removed or electrically operated.

300 and 500 Series (reference photo next page)

CAUTION: Do not apply more torque to the manual override shaft than the actuator is rated for. Cover should always be installed when manually overriding the actuator.

- ➢ Pull declutching/position indicator knob up and hold.
- ➢ Engage wrench on exposed shaft drive flats and move back and forth to disengage output shaft from drive train.
- ➢ After disengagement, rotate in desired direction. *Avoid rotation beyond the driven device's operating quadrant.*

➢ Once manual rotation is complete, remove the wrench and release the knob. *Note: The knob will remain up until the actuator is electrically operated and the engagement slots on the output shaft align themselves with the engagement slots on the output gear. Maximum time for re-engagement should be no greater than 45 seconds. Never pound on the center shaft.*



Manual Declutch On 300 and 500 Series

800 Series

CAUTION: *Do not apply more than the maximum rim pull rating of the handwheel. Rim pull should be no greater than 5 pounds for a 2,000 in•lb actuator, 12.5 pounds for a 5,000 in•lb actuator, and 25 pounds for a 10,000 in•lb actuator.*

➢ Turn handwheel in the direction desired, as marked on the handwheel. *Avoid rotating beyond the driven device's operating quadrant.*

6.0 Actuator Attachment

➢ Manually operate the driven device several times to insure smooth trouble free operation and place in the full CCW position as viewed from above.

➢ It is highly recommended that each driven device be torque tested in its worst case condition to verify proper sizing of the actuator.

➢ If the driven device is equipped with mechanical stops, verify the travel limit cams toggle short of the mechanical stop's contact points.

➢ Unless specially ordered, the actuator is shipped in the fully CCW position.

➢ Carefully follow all instructions supplied with the device and/or the interconnecting hardware. When mounting is complete, all connections should be tight, but not binding. It is also recommended to declutch and manually operate the actuator during the mounting process to ease installation and eliminate binding.

7.0 Cover Removal

➢ Shut of all power to the actuator.

➢ Loosen the socket set screw in the position indicator and remove the declutching/indicator knob from the top of the unit. Note: This step is not required on the 100 and 800 series.

➢ Remove all the cover attachment screws located around the flange and carefully lift the cover up and off. ***Note: If manual operation is required with the cover removed, it is imperative that the declutching/ indicator knob replaced on the output shaft after the cover has been removed.***

8.0 Wiring Instructions

CAUTION: Electrical operation of each actuator must be through an individual single pole switch to isolate the unused motor winding. Parallel power circuits may create noise in the line and cause the actuators to operate sporadically.

- ➢ Each actuator is provided with the latest revision wiring diagram. Should the actuator come without the wiring diagram, please contact your local distributor or supplier.
- ➢ Each actuator is equipped with a terminal strip to which all field connections should be made. Route all wiring through the actuator's conduit connections and wire to the provided wiring diagram.
- ➢ All wiring, conduit connections, and materials should be made in accordance with local and national codes.
- ➢ Securely tighten all screws and check all other connections.

9.0 Cover Replacement

- ➢ Visually inspect actuator to insure that the output shaft seal and the o-ring seal is in place and undamaged.
- ➢ Carefully replace the cover on the actuator.
- ➢ Install the cover screws and tighten evenly.
- ➢ Replace the declutching/indicator knob being sure that the set screw is located against flat on the center shaft. Note: This step is not required on the 100 and 800 series.

10.0 Cam Adjustment (reference photo below)

Torque Switches

All 800 series actuators are equipped with two torque limiting switches. These switches are factory pre-set for the rated torque of the actuator and are not field adjustable. Should these switches ever be tripped, it is to safeguard the driven device and the actuator from damage. In cases where the torque cam has tripped, it is recommended that the driven device is fully tested with a torque wrench.

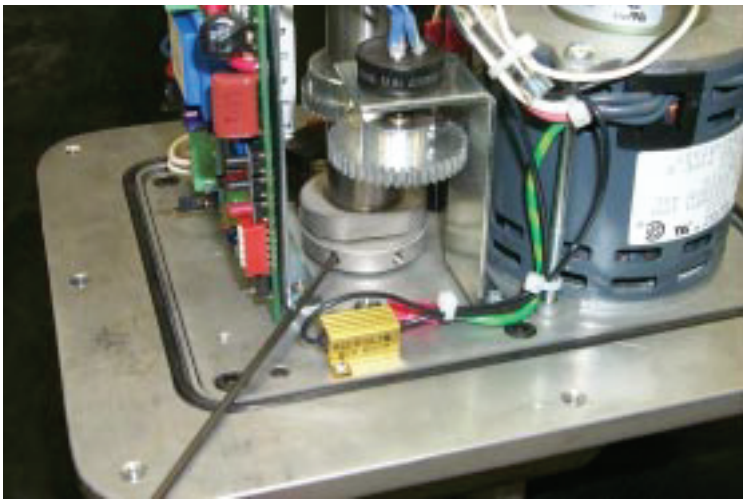

Cam Setting For All Actuators

Travel Limit Switches

Each actuator is supplied with two travel limit switches operated by an individual cam. One cam/switch controls the actuator's CW rotation while the other controls the CCW rotation. To adjust the limit setting for either extreme, perform the following steps:

- ➢ Remove cover from actuator per section 7.0. ***Caution:*** *Some of the following steps will be performed with the actuator energized. Remove all tools, equipment, and body parts while the actuator is energized.*
- ➢ Determine which cam/switch is controlling the CW and CCW direction by reviewing the wiring diagram supplied with the actuator. *Note: Standard industry installation uses limit switch/cam #1 (bottom) for the CCW direction and limit switch/cam #2 (2nd from bottom) for the CW direction.*
- ➢ Determine which cam requires adjustment and energize the actuator until the cam set screw is accessible.
- ➢ Remove power and loosen the set screw using a 3/32" allen wrench.
- ➢ Re-energize the actuator position it to the proper position.

- ➢ Remove power and rotate the proper cam to the position which toggles the limit switch.
- ➢ Tighten the set screw on the cam.
- ➢ Operate the actuator to verify proper cam setting.
- ➢ Once adjustments are satisfactory, replace cover per section 9.0.

11.0 Troubleshooting

The following instructions are offered as a guide to the most common difficulties encountered during installation and startup.

The actuator is receiving power but the motor does not respond.

- ➢ Verify the line voltage into the actuator via the field connections and insure that it matches the rating on the nameplate of the actuator.
- ➢ Check internal actuator wiring against the wiring diagram supplied with the actuator.
- ➢ Check the limit switch cams to insure that they are properly set and depressing the appropriate limit switches.
- ➢ On 800 series only, verify the torque switches are not tripped.
- ➢ Perform a visual inspection to verify no shipping or handling damage has occurred.
- ➢ Verify no corrosion has contaminated any of the electrical or mechanical devices on the actuator.

Problem: Actuator is receiving power but does not operate. Motor hums and is warm to the touch.

- ➢ Verify the line voltage into the actuator via the field connections and insure that it matches the rating on the nameplate of the actuator.
- ➢ Check torque requirement of driven device to insure that it is less than that shown on the actuator's nameplate. *Note: In some cases, we have noted that the actual torque needed to operate an end device has been over two times that published by the manufacturer. It may be necessary to perform an actual torque test during worst case conditions.*
- ➢ Verify coupler/bracket is properly installed and is not causing any binding.
- ➢ Verify both the CCW and CW field connections are not receiving power at the same time.
- ➢ Verify the limit cams are set properly and not allowing the actuator to travel outside its quadrant or against stops.
- ➢ Verify, if installed, that the electronic brake is operating properly and is not locking up the motor rotor.
- ➢ Verify no corrosion has contaminated any of the electrical or mechanical devices on the actuator. Any sign of corrosion potentially reduces the capability of the actuator.

Problem: Actuator runs erratically/sporadically.

- ➢ Check ambient temperature. Standard actuators have a maximum ambient operating temperature rating of 140 °F. Any temperatures above this rating may cause the actuator to fail.
- ➢ Verify that the published duty cycle has not been exceeded.
- ➢ Verify that the actuator is not wired in parallel to other actuators. All actuators must have their own isolated control switch.
- ➢ Inspect the manual override and disengagement mechanism.
- ➢ Gear train may be damaged due to overtorque.
- ➢ Verify proper signals are being supplied to the actuator.

Note: All AC voltage Bettis TorqPlus EM series actuators are standard with built in thermal overload motor protectors. Should any of the above cause the protector to open, it will automatically reset when the motor temperature is lowered to a safe level. Please consult the Bettis authorized Valve Automation Center or Bettis Electric Division, Mansfield, Ohio.

12.0 Spare Parts and Product Information

Each Bettis TorqPlus actuator is manufactured complete with a nameplate containing important and detailed information. This information will be needed anytime parts or additional data is requested. Please keep a file on with all nameplate information for reference when calling the factory.

Valves and actuators

Pressure regulating valves

Brand :	**KEYSTONE/EMERSON**
Model :	**M95H**
Supplier :	**CONTROLE LAURENTIDE**
Tag :	**PRV-01-110/311/321** **PRV-04-780/980**

1100, Montée Masson
Laval (Québec) H7E 4P2

Téléphone : 450-688-4012
Télécopieur : 450-661-6341

MR95 Series Pressure Regulators

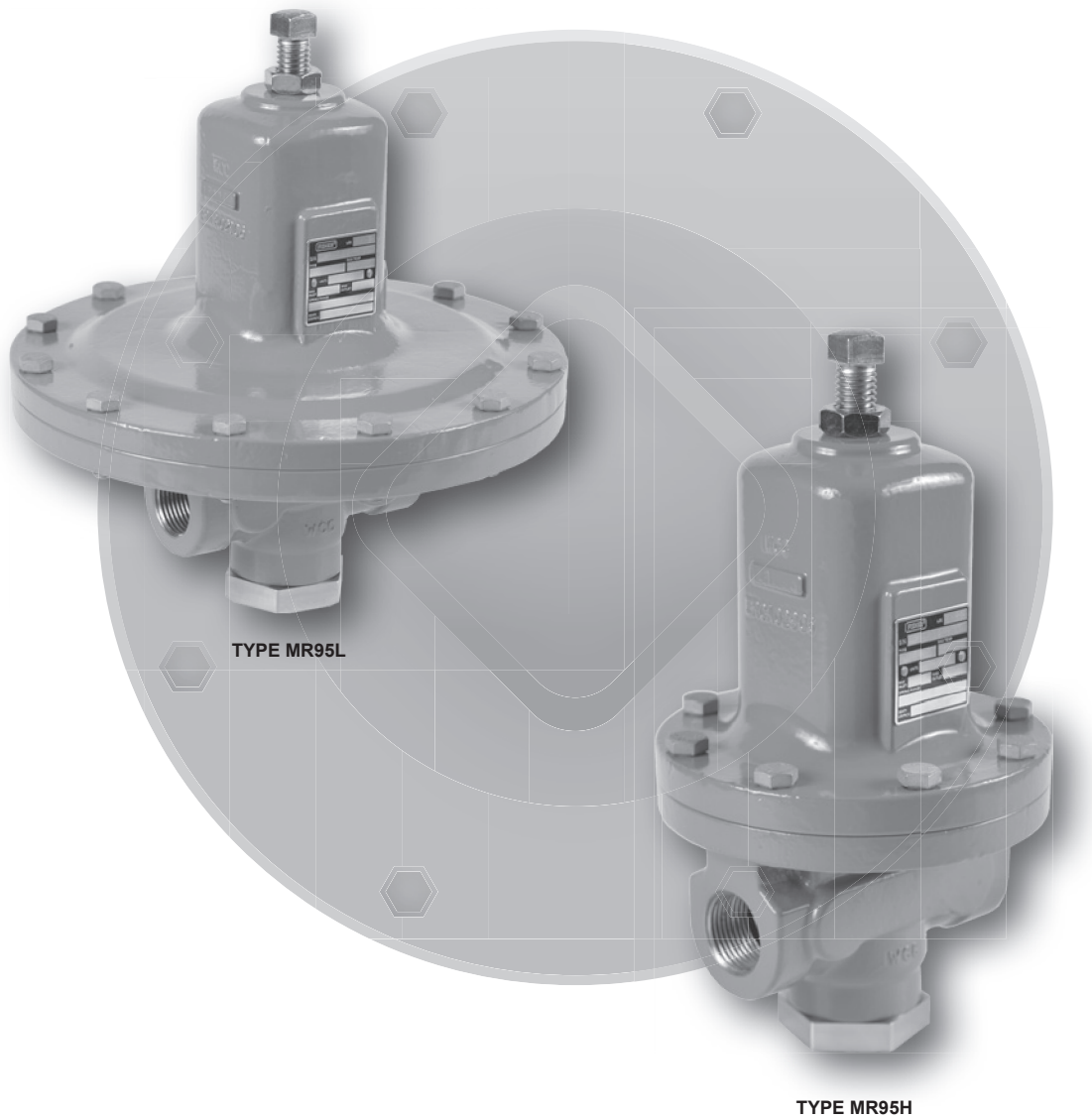

PRESSURE REDUCING REGULATORS

Figure 1. *Typical MR95 Series Pressure Regulators*

Specifications

This section lists the specifications for the MR95 Series regulators. Factory specification such as type, maximum inlet pressure, maximum temperature, maximum outlet pressure, spring range, orifice size and seat material are stamped on the nameplate fastened on the regulator at the factory.

Available Constructions

Type MR95L: Pressure reducing regulator for outlet pressures from 2 to 30 psig / 0.14 to 2.1 bar. 1/4 to 1 in. body sizes only

Type MR95H: Pressure reducing regulator for outlet pressures from 5 to 150 psig / 0.34 to 10.3 bar.

Type MR95HP: Pressure reducing regulator for outlet pressures from 15 to 400 psig / 1.0 to 27.6 bar (soft-seated)

Type MR95HT: High temperature pressure reducing regulator for outlet pressures from 15 to 300 psig / 1.0 to 20.7 bar (metal seat) and up to 650°F / 343°C

Type MR95LD: Pressure reducing differential regulator for differential set pressures from 2 to 30 psi / 0.14 to 2.1 bar with maximum inlet pressure up to 300 psi / 20.7 bar and maximum outlet pressure up to 125 psi / 8.6 bar. 1/4 to 1 in. body sizes only

Type MR95HD: Pressure reducing differential regulator for differential set pressures from 5 to 150 psi / 0.34 to 10.3 bar with maximum inlet/outlet pressures up to 300 psig / 20.7 bar

Type MR95HDP: Pressure reducing differential regulator for differential set pressures from 5 to 150 psi / 0.34 to 10.3 bar with maximum inlet/outlet pressures up to 600 psi / 41.4 bar

Body and Orifice Sizes

1/4 NPT body: 0.284 in. / 7.22 mm orifice

1/2 in. / DN 15 body: 0.416 in. / 10.56 mm orifice

3/4 and 1 in. / DN 20 and 25 Body Sizes: 0.631 in. / 16.02 mm orifice

1-1/2 and 2 in. / DN 40 and 50 Body Sizes (not available for Types MR95L and MR95LD): 1.142 in. / 29 mm orifice

End Connection Styles

See Tables 1 and 2

Outlet and Differential Pressure Ranges(1)

See Table 3

Maximum Spring Case Loading Pressure for Types MR95LD, MR95HD and MR95HDP

See Table 4

Maximum Cold Working Pressures of Body Size and Materials(1)

See Table 4

Pressure Registration

Internal or External

Shutoff Classification Per ANSI/FCI 70-3-2004

Metal Seats: Class IV

Elastomer Seats: Class VI or better

PTFE: Class IV

Maximum Temperature Ranges of Diaphragm and Seat Materials(1)(2)

See Table 5

Flow and Sizing Coefficients

See Table 6

Relief Sizing Coefficients for MR95 Series Regulators with Reduced Flow Orifices

See Table 7

API 614 Compliant

Steel or Stainless steel constructions with Stainless steel trim meet API 614 Requirements

Sour Gas Service Capability

Optional materials are available for applications handling sour gases. These constructions comply with the recommendations of NACE International Standards MR0175-2002 and MR0103. Optional materials are available to meet ANSI/NACE MR0175/ISO 15156.

Pressure Setting Adjustment

Adjusting screw: Standard for Types MR95L, MR95H, MR95HP and MR95HT only

Handwheel: Standard for Types MR95LD, MR95HD and MR95HDP. Optional for 1/2 in. / DN 15 body size of Types MR95L, MR95H, MR95HP and MR95HT

Tee handle: Optional for other body sizes (except 1/2 in. / DN 15) of Types MR95L, MR95H, MR95HP and MR95HT

1. The pressure/temperature limits in this Instruction Manual and any applicable standard or code limitation should not be exceeded.
2. Pressure and/or the body end connection may decrease these maximum temperatures.

Monel® is a mark owned by Special Metals Corporation.
Hastelloy® C is a mark owned by Haynes International, Inc.

Specifications (continued)

Approximate Weights

MR95H Series:

1/4 NPT body: 5 lbs / 2.3 kg
1/2 in. / DN 15 body: 10 lbs / 4.5 kg
3/4 and 1 in. / DN 20 and 25 Body Sizes: 22 lbs / 10 kg
1-1/2 and 2 in. / DN 40 and 50 Body Sizes: 55 lbs / 25 kg

MR95L Series:

1/4 NPT body: 7 lbs / 3.2 kg
1/2 in. / DN 15 body: 15 lbs / 6.8 kg
3/4 and 1 in. / DN 20 and 25 Body Sizes: 35 lbs / 16 kg

Table 1. *Types MR95L and MR95LD Regulators Body Constructions*

BODY SIZE	BODY CONSTRUCTION	END CONNECTION	BODY MATERIAL				
			Gray Cast Iron	LCC or WCC Steel	CF8M Stainless Steel(1)	CF3M Stainless Steel(1)	Monel® or Hastelloy® C(1)
1/4 NPT	Without Control Line and Gauge Port	NPT	■	■	■	■	
1/2 in. / DN 15	Without Control Line and Gauge Port	NPT	■	■	■	■	■
		SWE		■	■	■	
		Welded CL150 RF		■	■	■	
		Welded CL300 RF		■	■	■	
		Welded PN 16/25/40 RF		■		■	
	With Control Line but Without Gauge Port	NPT		■	■	■	
		Welded CL150 RF		■	■	■	
		Welded CL300 RF		■	■	■	
		Welded PN 16/25/40 RF		■		■	
3/4 in. / DN 20	Without Control Line and Gauge Port	NPT	■	■	■	■	■
		SWE		■	■	■	
		Welded CL150 RF		■	■	■	
		Welded CL300 RF		■	■	■	
		Welded PN 16/25/40 RF		■		■	
	With Control Line but Without Gauge Port	NPT		■	■	■	
		Welded CL150 RF		■	■	■	
		Welded CL300 RF		■	■	■	
		Welded PN 16/25/40 RF		■		■	
	With Gauge Port but Without Control Line	NPT	■	■	■	■	
		Welded CL150 RF		■	■	■	
		Welded CL300 RF		■	■	■	
		Welded PN 16/25/40 RF		■		■	
1 in. / DN 25	Without Control Line and Gauge Port	NPT	■	■	■	■	■
		SWE		■	■	■	
		Welded CL150 RF		■	■	■	
		Welded CL300 RF		■	■	■	
		Welded PN 16/25/40 RF		■		■	
	With Control Line but Without Gauge Port	NPT		■	■	■	
		Welded CL150 RF		■	■	■	
		Welded CL300 RF		■	■	■	
		Welded PN 16/25/40 RF		■		■	
	With Gauge Port but Without Control Line	NPT	■	■	■	■	
		Welded CL150 RF		■	■	■	
		Welded CL300 RF		■	■	■	
		Welded PN 16/25/40 RF		■		■	

■ - Shaded areas indicate that the construction is available.
□ - Blank areas indicate that you need to contact your local Sales Office for the availability of the constructions.
1. Meets the chemical and physical requirements of NACE MR0175-2002 and NACE MR0103.

Monel® is a mark owned by Special Metals Corporation.
Hastelloy® C is a mark owned by Haynes International, Inc.

Table 2. *Types MR95H, MR95HD, MR95HDP, MR95HT and MR95HP Regulators Body Constructions*

BODY SIZE	BODY CONSTRUCTION	END CONNECTION	BODY MATERIAL					
			Gray Cast Iron[1]	LCC or WCC Steel	CF8M Stainless Steel[2]	CF3M Stainless Steel[2]	Monel® or Hastelloy® C[2]	Aluminum-Bronze
1/4 NPT	Without Gauge Port and Control Line	NPT	■	■	■	■		
1/2 in. / DN 15	Without Control Line and Gauge Port	NPT	■	■	■	■	■	
		SWE		■	■	■		
		Welded CL150 RF		■	■	■		
		Welded CL300 RF		■	■	■		
		Welded CL600 RF		■	■	■		
		Welded PN 16/25/40 RF		■		■		
		Integral CL150 RF				■	■	■
		Integral CL300 RF				■	■	■
		Integral CL600 RF				■	■	■
		Integral PN 16/25/40 RF				■	■	■
	With Control Line but Without Gauge Port	NPT		■	■	■		
		Welded CL150 RF		■	■	■		
		Welded CL300 RF		■	■	■		
		Welded CL600 RF		■	■	■		
		Welded PN 16/25/40 RF		■		■		
3/4 in. / DN 20	Without Gauge Port and Control Line	NPT	■	■	■	■	■	
		SWE		■	■	■		
		Welded CL150 RF		■	■	■		
		Welded CL300 RF		■	■	■		
		Welded CL600 RF		■	■	■		
		Welded PN 16/25/40 RF		■		■		
	With Control Line but Without Gauge Port	NPT		■	■	■		
		Welded CL150 RF		■	■	■		
		Welded CL300 RF		■	■	■		
		Welded PN 16/25/40 RF		■		■		
	With Gauge Port but Without Control Line	NPT	■	■	■	■		
		Welded CL150 RF		■	■	■		
		Welded CL300 RF		■	■	■		
		Welded PN 16/25/40 RF		■		■		
1 in. / DN 25	Without Gauge Port and Control Line	NPT	■	■	■	■	■	
		SWE		■	■	■		
		Welded CL150 RF		■	■	■		
		Welded CL300 RF		■	■	■		
		Welded CL600 RF		■	■	■		
		Welded PN 16/25/40 RF		■		■		
		Integral CL150 RF				■	■	■
		Integral CL300 RF				■	■	■
		Integral CL600 RF				■	■	■
		Integral PN 16/25/40 RF				■	■	■

■ - Shaded areas indicate that the construction is available.
□ - Blank areas indicate that you need to contact your local Sales Office for the availability of the constructions.
1. Gray cast iron body material is available for Types MR95H and MR95HD only.
2. Meets the chemical and physical requirements of NACE MR0175-2002 and NACE MR0103.

- continued -

Monel® is a mark owned by Special Metals Corporation.
Hastelloy® C is a mark owned by Haynes International, Inc.

Table 2. *Types MR95H, MR95HD, MR95HDP, MR95HT and MR95HP Regulators Body Constructions (continued)*

BODY SIZE	BODY CONSTRUCTION	END CONNECTION	BODY MATERIAL					
			Gray Cast Iron[1]	LCC or WCC Steel	CF8M Stainless Steel[2]	CF3M Stainless Steel[2]	Monel® or Hastelloy® C[2]	Aluminum-Bronze
1 in. / DN 25	With Control Line but Without Gauge Port	NPT		■	■	■		
		Welded CL150 RF		■	■	■		
		Welded CL300 RF		■	■	■		
		Welded PN 16/25/40 RF		■		■		
	With Gauge Port but Without Control Line	NPT	■	■	■	■		
		Welded CL150 RF		■	■	■		
		Welded CL300 RF		■	■	■		
		Welded PN 16/25/40 RF		■		■		
1-1/2 in. / DN 40	Without Gauge Port and Control Line	NPT	■	■	■	■	■	
		SWE		■	■	■		
		Welded CL150 RF		■	■	■		
		Welded CL300 RF		■	■	■		
		Welded CL600 RF		■	■	■		
		Welded PN 16/25/40 RF		■		■		
	With Control line but Without Gauge Port	NPT		■	■	■		
		Welded CL150 RF		■	■	■		
		Welded CL300 RF		■	■	■		
		Welded PN 16/25/40 RF		■		■		
	With Gauge Port but Without Control Line	NPT	■	■	■	■		
		Welded CL150 RF		■	■	■		
		Welded CL300 RF		■	■	■		
		Welded PN 16/25/40 RF		■		■		
2 in. / DN 50	Without Gauge Port and Control Line	NPT	■	■	■	■	■	
		SWE		■	■	■		
		Welded CL150 RF		■	■	■		
		Welded CL300 RF		■	■	■		
		Welded CL600 RF		■	■	■		
		Welded PN 16/25/40 RF		■		■		
		Integral CL150 RF				■	■	■
		Integral CL300 RF				■	■	■
		Integral CL600 RF				■	■	■
		Integral PN 16/25/40 RF				■	■	■
	With Control Line but Without Gauge Port	NPT		■	■	■		
		Welded CL150 RF		■	■	■		
		Welded CL300 RF		■	■	■		
		Welded PN 16/25/40 RF		■		■		
	With Gauge Port but Without Control Line	NPT	■	■	■	■		
		Welded CL150 RF		■	■	■		
		Welded CL300 RF		■	■	■		
		Welded PN 16/25/40 RF		■		■		

■ - Shaded areas indicate that the construction is available.
□ - Blank areas indicate that you need to contact your local Sales Office for the availability of the constructions.
1. Gray cast iron body material is available for Types MR95H and MR95HD only.
2. Meets the chemical and physical requirements of NACE MR0175-2002 and NACE MR0103.

Monel® is a mark owned by Special Metals Corporation.
Hastelloy® C is a mark owned by Haynes International, Inc.

Table 3. *MR95 Series Outlet and Differential Pressure Ranges and Spring Information*

TYPE	BODY SIZE		OUTLET OR DIFFERENTIAL PRESSURE RANGE(1)		SPRING WIRE DIAMETER		SPRING FREE LENGTH		SPRING MATERIAL(2)	SPRING PART NUMBER	SPRING COLOR
	In.	DN	psi/psig	bar	In.	mm	In.	mm			
MR95L and MR95LD	1/4	- - - -	2 to 6	0.14 to 0.41	0.148	3.76	2.00	50.8	Zinc-plated steel	1E392527022	Yellow
			5 to 15	0.34 to 1.0	0.170	4.32	2.00	50.8	Zinc-plated steel	ERAA01888A0	Green
			13 to 30	0.90 to 2.1	0.207	5.26	1.94	49.2	Powder-coated steel	ERAA01889A0	Red
	1/2	15	2 to 6	0.14 to 0.41	0.207	5.26	2.50	63.5	Powder-coated steel(3)	ERCA04288A0	Yellow
			5 to 15	0.34 to 1.0	0.234	5.94	2.60	65.9	Powder-coated steel(3)	ERAA01910A0	Green
			13 to 30	0.90 to 2.1	0.283	7.19	2.44	62.0	Powder-coated steel(3)	ERAA01911A0	Red
	3/4 and 1	20 and 25	2 to 6	0.14 to 0.41	0.306	7.77	4.00	102	Powder-coated steel(3)	1E398927022	Yellow
			5 to 15	0.34 to 1.0	0.343	8.71	4.00	102	Powder-coated steel(3)	1E399027142	Green
			13 to 30	0.90 to 2.1	0.406	10.31	4.00	102	Powder-coated steel(3)	1E399127162	Red
			2 to 6	0.14 to 0.41	0.306	7.77	4.00	102	Powder-coated Stainless steel	1E3989X0052	Yellow
			5 to 15	0.34 to 1.0	0.375	9.53	3.88	98.6	Stainless steel	1K762537022	Unpainted
			13 to 30	0.90 to 2.1	0.437	11.1	4.00	102	Stainless steel	11A8269X012	Unpainted
MR95H, MR95HD and MP95HDP	1/4	- - - -	15 to 30	1.0 to 2.1	0.148	3.76	2.00	50.8	Zinc-plated steel	1E392527022	Yellow
			25 to 75	1.7 to 5.2	0.170	4.32	2.00	50.8	Zinc-plated steel	ERAA01888A0	Green
			70 to 150	4.8 to 10.3	0.207	5.26	1.94	49.2	Powder-coated steel(3)	ERAA01889A0	Red
	1/2	15	15 to 30	1.0 to 2.1	0.207	5.26	2.50	63.5	Powder-coated steel(3)	ERCA04288A0	Yellow
			25 to 75	1.7 to 5.2	0.234	5.94	2.60	65.9	Powder-coated steel(3)	ERAA01910A0	Green
			70 to 150	4.8 to 10.3	0.283	7.19	2.44	62.0	Powder-coated steel(3)	ERAA01911A0	Red
	3/4 and 1	20 and 25	15 to 30	1.0 to 2.1	0.306	7.77	4.00	102	Powder-coated steel(3)	1E398927022	Yellow
			25 to 75	1.7 to 5.2	0.343	8.71	4.00	102	Powder-coated steel(3)	1E399027142	Green
			70 to 150	4.8 to 10.3	0.406	10.31	4.00	102	Powder-coated steel(3)	1E399127162	Red
			15 to 30	1.0 to 2.1	0.306	7.77	4.00	102	Powder-coated Stainless steel	1E3989X0052	Yellow
			25 to 75	1.7 to 5.2	0.375	9.53	3.88	98.6	Stainless steel	1K762537022	Unpainted
			70 to 150	4.8 to 10.3	0.437	11.1	4.00	102	Stainless steel	11A8269X012	Unpainted
	1-1/2 and 2	40 and 50	5 to 80	0.34 to 5.5	0.500	12.7	6.50	165	Powder-coated steel	ERCA04290A0	Black with Light Blue Stripe
			60 to 120	4.1 to 8.3	0.562	14.3	6.56	167	Powder-coated steel	ERAA01893A0	Light Gray
			100 to 140	6.9 to 9.7	0.594	15.1	6.56	167	Enamel-coated steel	ERAA01894A0	Yellow
			120 to 150	8.3 to 10.3	0.625	15.9	6.57	167	Powder-coated steel	1P7888X0022	Black
			5 to 60	0.34 to 4.1	0.5	12.7	6.5	165	Inconel®	ERAA09035A0	Unpainted
			50 to 120	3.4 to 8.3	0.625	15.9	6.5	165	Inconel®	ERAA08881A0	Unpainted
MR95HT	1/4	- - - -	15 to 100	1.0 to 6.9	0.192	4.88	2.00	50.8	Inconel®	ERCA04292A0	Unpainted
			80 to 300	5.5 to 20.7	0.281	7.14	2.00	50.8	Inconel®	ERCA04291A0	Unpainted
	1/2	15	15 to 100	1.0 to 6.9	0.281	7.14	2.50	63.5	Inconel®	ERCA04294A0	Unpainted
			80 to 300	5.5 to 20.7	0.375	9.53	2.60	66.0	Inconel®	ERCA04293A0	Unpainted
	3/4 and 1	20 and 25	15 to 100	1.0 to 6.9	0.437	11.1	4.08	104	17-4 PH Stainless steel	ERCA04295A0	Unpainted
			80 to 300	5.5 to 20.7	0.562	14.3	4.08	104	17-4 PH Stainless steel	ERCA04296A0	Unpainted
	1-1/2 and 2	40 and 50	15 to 100	1.0 to 6.9	0.625	15.9	6.70	170	17-4 PH Stainless steel	ERCA04297A0	Unpainted
			60 to 260	4.1 to 17.9	0.812	20.6	6.70	170	17-4 PH Stainless steel	ERCA04298A0	Unpainted
MR95HP	1/4	- - - -	15 to 100	1.0 to 6.9	0.192	4.88	2.00	50.8	Inconel®	ERCA04292A0	Unpainted
			80 to 400	5.5 to 27.6	0.281	7.14	2.00	50.8	Inconel®	ERCA04291A0	Unpainted
	1/2	15	15 to 100	1.0 to 6.9	0.281	7.14	2.50	63.5	Inconel®	ERCA04294A0	Unpainted
			80 to 400	5.5 to 27.6	0.375	9.53	2.60	66.0	Inconel®	ERCA04293A0	Unpainted
	3/4 and 1	20 and 25	15 to 100	1.0 to 6.9	0.437	11.1	4.08	104	17-4 PH Stainless steel	ERCA04295A0	Unpainted
			80 to 400	5.5 to 27.6	0.562	14.3	4.08	104	17-4 PH Stainless steel	ERCA04296A0	Unpainted
	1-1/2 and 2	40 and 50	15 to 100	1.0 to 6.9	0.625	15.9	6.70	170	17-4 PH Stainless steel	ERCA04297A0	Unpainted
			60 to 300	4.1 to 20.7	0.812	20.6	6.70	170	17-4 PH Stainless steel	ERCA04298A0	Unpainted

1. For Types MR95LD, MR95HD and MR95HDP regulators, the pressure ranges indicate the differential pressure that can be obtained with the indicated spring. The differential pressure (spring setting) is added to the spring case loading pressure to determine the actual outlet pressure.
2. Springs meet NACE MR0175-2002 and NACE MR0103 requirements only for applications in which the spring is not exposed to the sour gas.
3. Available in Inconel®.

Inconel® is a mark owned by Special Metals Corporation.

Table 4. *Maximum Cold Working Pressures of Body Size and Material[1][2]*

TYPE	BODY SIZE	BODY MATERIAL	MAXIMUM INLET PRESSURE		MAXIMUM OUTLET PRESSURE		MAXIMUM SPRING CASE PRESSURE	
			psig	bar	psig	bar	psig	bar
MR95L and MR95LD	All available sizes[3]	Gray cast iron	250	17.2	50	3.4	50	3.4
		WCC Steel	300	20.7	125	8.6	125	8.6
		LCC Steel	300	20.7	125	8.6	125	8.6
		CF8M Stainless steel	300	20.7	125	8.6	125	8.6
		CF3M Stainless steel	300	20.7	125	8.6	125	8.6
		Monel®[4]	300	20.7	125	8.6	125	8.6
		Hastelloy® C[4]	300	20.7	125	8.6	125	8.6
MR95H and MR95HD	All available sizes[3]	Gray cast iron	250	17.2	250	17.2	250	17.2
		WCC Steel	300	20.7	300	20.7	300	20.7
		LCC Steel	300	20.7	300	20.7	300	20.7
		CF8M Stainless steel	300	20.7	300	20.7	300	20.7
		CF3M Stainless steel	300	20.7	300	20.7	300	20.7
		Monel®[4]	300	20.7	300	20.7	300	20.7
		Hastelloy® C[4]	300	20.7	300	20.7	300	20.7
		Aluminum-Bronze[4]	300	20.7	300	20.7	300	20.7
MR95HDP	All available sizes[3]	WCC Steel	600	41.4	600	41.4	600	41.4
		LCC Steel	600	41.4	600	41.4	600	41.4
		CF8M Stainless steel	600	41.4	550	33.9	550	33.9
		CF3M Stainless steel	600	41.4	550	33.9	550	33.9
		Monel®[4]	600	41.4	550	33.9	550	33.9
		Hastelloy® C[4]	600	41.4	550	33.9	550	33.9
		Aluminum-Bronze[4]	600	41.4	550	33.9	550	33.9
MR95HP	All available sizes[3]	WCC Steel	1000	68.9	600	41.4	600	41.4
		LCC Steel	1000	68.9	600	41.4	600	41.4
		CF8M Stainless steel	1000	68.9	550	37.9	550	37.9
		CF3M Stainless steel	1000	68.9	550	37.9	550	37.9
		Monel®[4]	1000	68.9	550	37.9	550	37.9
		Hastelloy® C[4]	1000	68.9	550	37.9	550	37.9
		Aluminum-Bronze[4]	1000	68.9	550	37.9	550	37.9
MR95HT	1/4 NPT and 1/2 to 1 in. / DN 15 to 25	WCC Steel	600	41.4	600	41.4	600	41.4
		LCC Steel	600	41.4	600	41.4	600	41.4
		CF8M Stainless steel	600	41.4	550	37.9	550	37.9
		CF3M Stainless steel	600	41.4	550	37.9	550	37.9
		Monel®[4]	600	41.4	550	37.9	550	37.9
		Hastelloy® C[4]	600	41.4	550	37.9	550	37.9
		Aluminum-Bronze[4]	600	41.4	550	37.9	550	37.9
	1-1/2 and 2 in. / DN 40 and 50	WCC Steel	600	41.4	450	31.0	450	31.0
		LCC Steel	600	41.4	450	31.0	450	31.0
		CF8M Stainless steel	600	41.4	450	31.0	450	31.0
		CF3M Stainless steel	600	41.4	450	31.0	450	31.0
		Monel®	600	41.4	450	31.0	450	31.0
		Hastelloy® C	600	41.4	450	31.0	450	31.0
		Aluminum-Bronze	600	41.4	450	31.0	450	31.0

1. The pressure/temperature limits in this Instruction Manual and any applicable standard or code limitation should not be exceeded.
2. The pressure limits given are based on the body size and body materials only. Actual pressure limits of the assembled regulator may decrease and vary depending on the temperature, body end connection, diaphragm, seat and/or trim material of the regulator.
3. See Tables 1 and 2 for all available body sizes.
4. Not available for 1/4 NPT body size.

Monel® is a mark owned by Special Metals Corporation.
Hastelloy® C is a mark owned by Haynes International, Inc.

Table 5. *MR95 Series Temperature Capabilities[1][2]*

TRIM MATERIAL	SEAT	DIAPHRAGM	O-RING	DIAPHRAGM PROTECTOR	GASKET	TEMPERATURE	
						°F	°C
Nitrile (NBR)	✓		✓			-40 to 180	-40 to 82
Neoprene (CR)		✓				-40 to 180	-40 to 82
Fluorocarbon (FKM)[3]	✓	✓	✓			0 to 300, Limited to 200°F for hot water	-18 to 149, Limited to 93°C for hot water
Ethylenepropylene (EPDM)	✓	✓	✓			20 to 275	-7 to 135
Perfluoroelastomer (FFKM)	✓		✓			0 to 425	-18 to 218
PTFE	✓			✓		-40 to 400	-40 to 204
Metal	✓	✓				-40 to 650	-40 to 343
Composition					✓	-40 to 400, Limited to 300°F for steam	-40 to 204, Limited to 149°C for steam
Graphite					✓	-40 to 650	-40 to 343

BODY MATERIAL	TEMPERATURE	
	°F	°C
Gray cast iron	-20 to 406	-29 to 208
WCC Steel[4]	-20 to 650	-29 to 343
LCC Steel[4]	-40 to 650	-40 to 343
Stainless steel[4], Monel® or Hastelloy® C	-40 to 550	-40 to 288
Aluminum-Bronze	-40 to 500	-40 to 260

1. The pressure/temperature limits in this Instruction Manuial and any applicable standard limitation should not be exceeded.
2. The temperature limits given are based on the body size and body materials only. Actual temperature limits of the assembled regulator may decrease and vary depending on the body end connection, diaphragm, seat and/or trim material of the regulator.
3. Not for use on steam service.
4. Meets API 614 requirements (with Stainless steel trim).

Table 6. *Types MR95LD, MR95HD and MR95HDP Flow and Sizing Coefficient*

BODY SIZE		WIDE-OPEN COEFFICIENT (FOR RELIEF SIZING)			C_1	K_m	IEC SIZING COEFFICIENT		
In.	DN	C_v	C_g	C_s			X_T	F_D	F_L
1/4 NPT	- - - -	1.1	37	1.85	33.6	0.74	0.715	0.62	0.86
1/2	15	2.9	103	5.15	35.5	0.79	0.797	0.70	0.89
3/4 and 1	20 and 25	6.0	221	11.05	36.8	0.88	0.857	0.68	0.94
1-1/2 and 2	40 and 50	18.1	700	35.00	38.7	0.88	0.945	0.65	0.94

$K_m = F_L^2$

Table 7. *Relief Sizing Coefficients for MR95 Series Regulators with Reduced Flow Orifices[1]*

BODY SIZE		WIDE-OPEN COEFFICIENT FOR MR95 SERIES REDUCED FLOW OPTION	WIDE-OPEN COEFFICIENT FOR LEGACY 95 SERIES
In.	DN	C_g	C_g
1/4 NPT	- - - -	28	28
1/2	15	70	67
3/4 and 1	20 and 25	156	156
1-1/2 and 2	40 and 50	482	475

1. The reduced flow orifice option offers similar flow capacity as the equivalent 95 Series configuration.

Monel® is a mark owned by Special Metals Corporation.
Hastelloy® C is a mark owned by Haynes International, Inc.

WARNING

Failure to follow these instructions or to properly install and maintain this equipment could result in an explosion, fire and/or chemical contamination causing property damage and personal injury or death.

Fisher™ regulators must be installed, operated and maintained in accordance with federal, state and local codes, rules and regulations and Emerson Process Management Regulator Technologies, Inc. (Emerson) instructions.

If the regulator vents gas or a leak develops in the system, service to the unit may be required. Failure to correct trouble could result in a hazardous condition.

Installation, operation and maintenance procedures performed by unqualified personnel may result in improper adjustment and unsafe operation. Either condition may result in equipment damage or personal injury. Only a qualified person shall install or service the MR95 Series regulator.

Introduction

Scope of the Manual

This manual provides instructions for the installation, adjustment, maintenance and parts ordering for MR95 Series pressure regulators. These regulators are usually shipped separately for line or panel mounting or installed on other equipment. Instructions and parts lists for other equipment are found in separate manuals.

Product Description

The MR95 Series pressure reducing and differential pressure regulators are suitable for multiple fluid mediums including liquid, gas, air and steam services.

Typical applications include use in but not limited to wash tanks, small heaters, fuel and oil lines, air supply systems, test fixtures and sterilizers.

Pressure Reducing Regulators

Types MR95L, MR95H, MR95HP and MR95HT regulators are direct-operated pressure reducing regulators for pressure control requiring constant outlet pressures between 2 to 400 psig / 0.14 and 27.6 bar.

Differential Pressure Regulators

Types MR95LD, MR95HD and MR95HDP regulators are direct-operated differential pressure reducing regulators with differential pressure range from 2 to 150 psi / 3.4 to 10.3 bar.

See Tables 1 through 6 for detailed breakdown of the various construction offerings. Typical MR95 Series regulators are shown in Figure 1.

Principle of Operation

For Types MR95H, MR95L, MR95HP and MR95HT Pressure Reducing Regulators

Types MR95L, MR95H, MR95HP and MR95HT (see Figure 2) are direct-operated regulators and use spring force to regulate outlet pressure. Downstream pressure is registered either internally through the body or externally through a control line to the under side of the diaphragm. When the downstream pressure is at or above the set pressure, the disk is held against the orifice and restricting flow through the regulator. When demand increases, downstream pressure drops slightly allowing the spring to extend, moving the stem down and the disk away from the orifice. This allows fluid flow through the body to the downstream system.

For Types MR95LD, MR95HD and MR95HDP Differential Pressure Regulators

Types MR95LD, MR95HD and MR95HDP regulators maintain a differential pressure between the loading supply pressure and the downstream pressure of the regulator.

See Figure 2. The design of the regulator isolates the diaphragm and pressure response chamber from the main flow stream. The downstream pressure (outlet pressure) is registered under the diaphragm through the pitot tube or registration hole. If the downstream

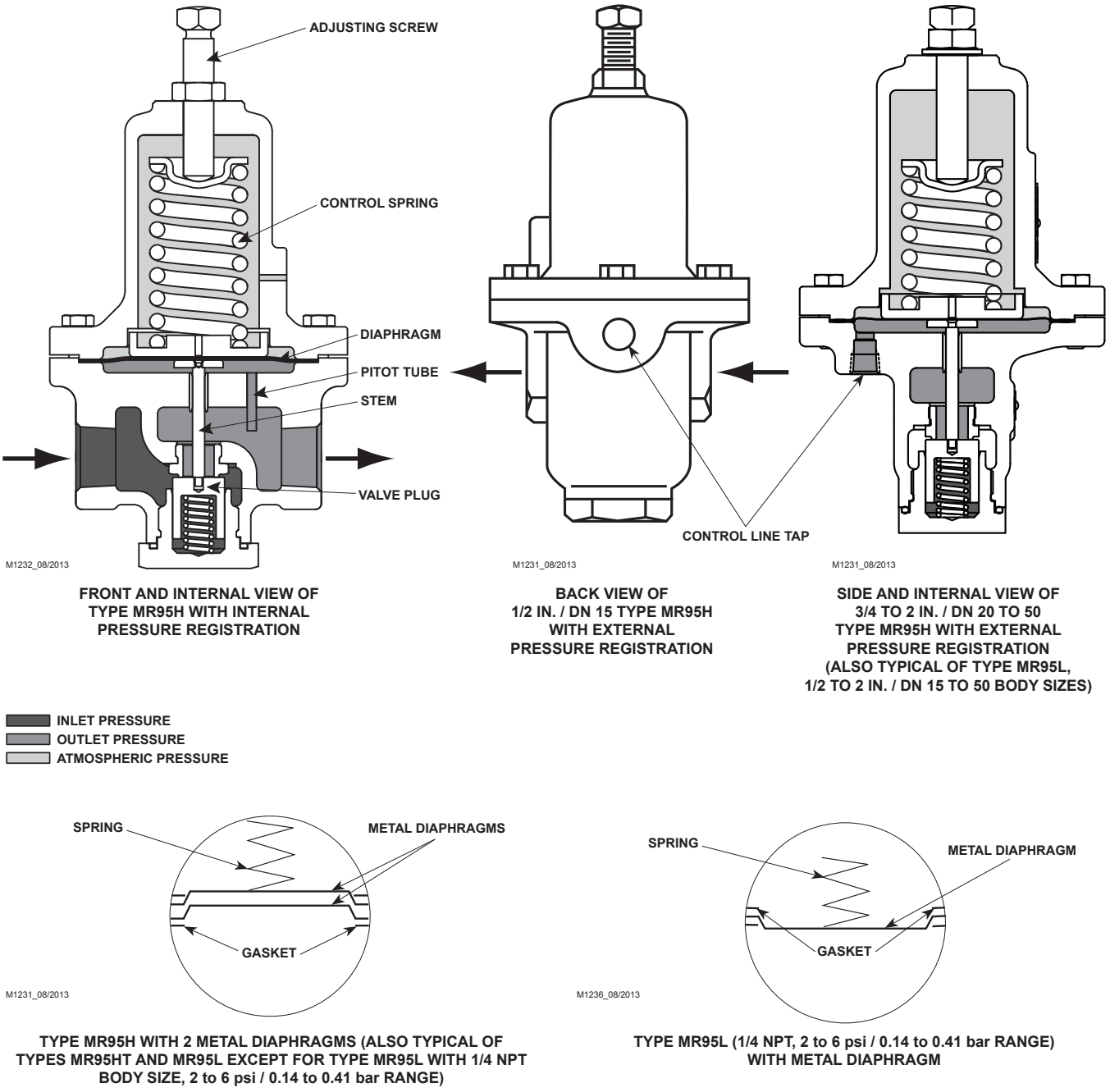

Figure 2. *MR95 Series Operational Schematics*

pressure increases, pressure under the diaphragm also increases. This force overcomes the spring compression and loading supply pressure, allowing the stem to rise. The valve plug spring forces the valve plug closer to the orifice. Flow through the regulator is reduced so that downstream pressure returns to the desired differential level. When the downstream pressure decreases, the opposite action takes place. Pressure under the diaphragm decreases. The valve stem pushes the valve plug downward, opening the flow stream and increasing the fluid flow through the regulator. Downstream pressure rises back to the desired differential level.

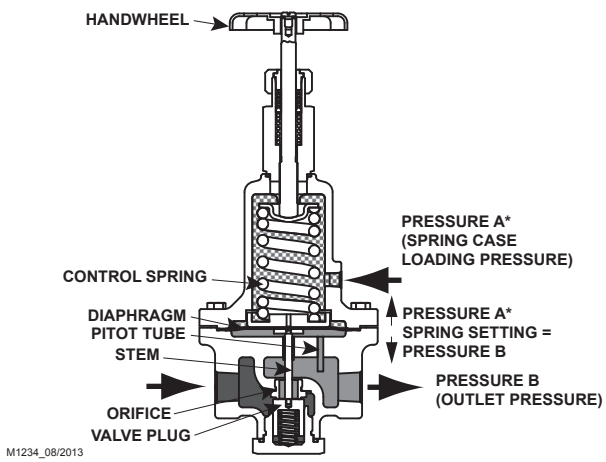

FRONT AND INTERNAL VIEW OF TYPES MR95HD AND MR95HDP WITH INTERNAL PRESSURE REGISTRATION

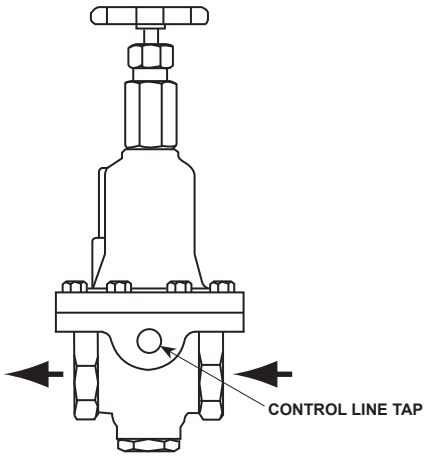

BACK VIEW OF TYPES MR95HD AND MR95HDP WITH EXTERNAL PRESSURE REGISTRATION

INLET PRESSURE
OUTLET PRESSURE
LOADING PRESSURE

*PRESSURE A MAY BE SUPPLIED BY ANOTHER PRESSURE SYSTEM OR A MANUAL LOADING REGULATOR.

Figure 2. *MR95 Series Operational Schematics (continued)*

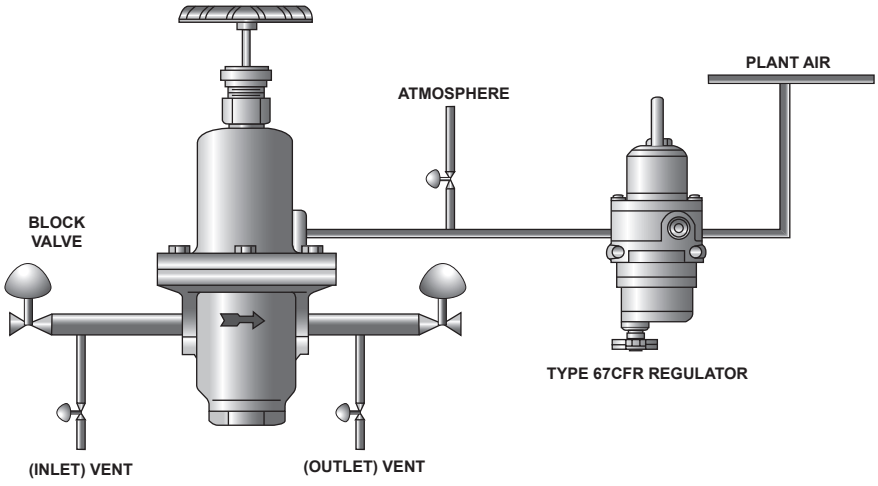

TYPE MR95LD REGULATOR (ALSO TYPICAL OF TYPES MR95HD AND MR95HDP)

Figure 3. *Differential Pressure Regulator Installation Schematics*

Installation

WARNING

Personal injury or system damage may result if this regulator is installed, without appropriate overpressure protection, where service conditions could exceed the limits given in the Specifications section and/or regulator nameplate. Refer to Overpressure Protection section for recommendations on how to prevent service conditions from exceeding those limits.

Additionally, physical damage to the regulator may result in personal injury or property damage due to escaping of accumulated gas. To avoid such injury and damage, install the regulator in a safe location.

Under enclosed conditions or indoors, escaping gas may accumulate and be an explosion hazard. In this case, the vent should be piped outdoors.

For regulator constructions with a spring case vent, the vent should be kept open to permit free flow of gas to the atmosphere. Protect openings against entrance of rain, snow, insects or any other foreign material that may plug the spring case vent or vent line.

All pressure equipment should be installed in a non-seismic area; should not be exposed to fire; and should be protected from thunderbolt (lightning) strikes.

Before installing the regulator:

- Unpack the regulator and remove the protective shipping plugs from the end connections of the body and the pressure connection in the spring case.
- Check the regulator and make sure it has not been damaged or collected foreign material during shipping.
- Remove any debris or dirt in the tubing and the pipeline.
- Apply pipe compound to the external pipe thread for NPT bodies or use appropriate gaskets for flanged bodies.
- Make sure gas flow through the regulator is in the same direction as the arrow on the body.

On 1-1/2 or 2 in. / DN 40 or 50 Types MR95H, MR95HP and MR95HT regulators, the spring case vent is tapped so a vent line can be connected to provide venting to a remote location. On 1/4 NPT, 1/2, 3/4 and 1 in. / DN 15, 20 and 25 Types MR95H, MR95HP and MR95HT body sizes, the tapped vent option is available on request. Protect the exposed end of the vent pipe with a weather and insect resistant vent assembly. Periodically check all vents and remote vent lines to ensure that they are unobstructed.

On Types MR95LD, MR95HD and MR95HDP regulators, the loading pressure is connected to the 1/4 NPT connection in the spring case.

Overpressure Protection

WARNING

Personal injury, equipment damage or leakage due to escaping accumulated gas or bursting of pressure-containing parts may result if this regulator is:

- **Overpressured**
- **Installed where service conditions could exceed the limits given in the Specifications section and on the appropriate nameplate**
- **Where conditions exceed any ratings of adjacent piping or piping connections**

To avoid such injury or damage, provide pressure-relieving or pressure-limiting devices to prevent service conditions from exceeding those limits.

The Types MR95H and MR95HD regulators have an outlet pressure rating equal to the inlet pressure rating. The Types MR95L, MR95LD, MR95HDP, MR95HP and MR95HT regulators have an outlet pressure rating lower than the inlet pressure rating.

The recommended pressure limitations are stamped on the regulator nameplate. Some type of overpressure protection is needed if the actual inlet pressure exceeds the maximum operating outlet pressure rating. Provide external overpressure protection if the regulator inlet pressure is greater than the safe working pressure of downstream equipment.

Common methods of external overpressure protection include relief valves, monitoring regulators, shutoff devices and series regulation.

Regulator operation below the maximum pressure limitations does not preclude the possibility of damage from external sources or from debris in the pipeline. If the regulator is exposed to an overpressure condition, inspect it for any damage that may have occurred.

Startup

Note

The Specifications section and Tables 3 and 4 show the maximum inlet, the differential and the outlet pressures for specific constructions. Use pressure gauges to monitor inlet pressure, outlet pressure and any loading pressure during startup.

1. Check that proper installation is completed and downstream equipment has been properly adjusted.
2. Make sure all block and vent valves are closed.
3. Decompress the control spring by turning the adjusting screw (for Types MR95L, MR95H, MR95HP and MR95HT) or handwheel (for Types MR95LD, MR95HD and MR95HDP) counterclockwise.
4. Slowly open the valves in the following order:
   a. Loading supply and control line valve(s), if used
   b. Inlet block valve
   c. Outlet block valve
5. Set the regulator to the desired outlet (control) pressure according to the Adjustment procedure.

Adjustment

WARNING

To avoid personal injury, property damage or equipment damage caused by bursting of pressure containing parts or explosion of accumulated gas, never adjust the control spring to produce an outlet pressure higher than the upper limit of the outlet pressure range for that particular spring. If the desired outlet pressure is not within the range of the control spring, install a spring of the proper range.

The factory setting of the regulator can be varied within the pressure range stamped on the nameplate. Follow the following procedures for the proper adjustment of the outlet (control) spring. If the spring range was changed, be sure to change the stamped spring range on the nameplate.

All MR95 Series regulator springs can be backed off to provide zero outlet. Recommended outlet pressure ranges available, maximum inlet pressures and color codes of the respective springs are shown in Tables 3 and 4.

Types MR95L, MR95H, MR95HP and MR95HT

Key numbers are referenced in Figure 6, 8 or 9.

1. Loosen the jam nut (key 17).
2. Turn the adjusting screw (key 15) clockwise to increase outlet pressure or counterclockwise to decrease it.
3. Monitor the outlet pressure with a test gauge during the adjustment.
4. Tighten the jam nut (key 17) to maintain the desired setting.

Types MR95LD, MR95HD and MR95HDP

Key numbers are referenced in Figure 7 or 10.

1. Turn handwheel (key 38) clockwise to increase outlet pressure or counterclockwise to decrease it.
2. Monitor the outlet pressure with a test gauge during the adjustment.

Shutdown

1. Close the upstream block valve to the regulator inlet.
2. Close the downstream block valve to the regulator outlet.
3. Vent the downstream pressure by slowly opening the bleed valve between the regulator and the downstream shutoff valve. Without changing regulator spring adjustment, all pressure between the upstream and downstream shutoff valves will be released through the bleed valve, since the Type MR95L, MR95H, MR95HP or MR95HT regulator opens in response to the decreased outlet pressure. For Types MR95L, MR95H, MR95HP and MR95HT regulators, skip steps 4, 5 and 6. For Types MR95LD, MR95HD and MR95HDP continue steps 4 through 6.
4. Close the block valve to the loading pressure.
5. Vent loading pressure slowly to release pressure in the spring case.
6. Vent inlet pressure slowly (through the bleed valve) to release all remaining pressure in the regulator.

Maintenance

WARNING

To avoid personal injury, property damage or equipment damage caused by sudden release of pressure or explosion of accumulated gas, do not attempt any maintenance or disassembly without first isolating the regulator from system pressure and relieving all internal pressure from the regulator.

To avoid possible personal injury from spring or pressure-loaded actuator, make certain the adjusting screw is completely backed off and the spring case pressure is vented prior to disassembly. Otherwise, the spring load or loading pressure could forcefully eject the spring case.

Regulators that have been disassembled for repair must be tested for proper operation before being returned to service. Only parts manufactured by Emerson should be used for repairing Fisher™ regulators.

Due to normal wear or damage that may occur from external sources, this regulator should be inspected and maintained periodically. The frequency of inspection and replacement of parts depends upon the severity of service conditions or the requirement of local, state and federal rules and regulations.

Due to normal wear that may occur, inspect the parts periodically and replace if necessary. The frequency of inspection depends on the severity of service conditions or the requirements of state and federal laws.

Replace parts such as the O-rings, gaskets, diaphragm and packing as necessary. Always apply lubricants as the regulator is being reassembled. Suitable lubricants are shown in the assembly drawings.

The regulator does not have to be taken out of the pipeline to be disassembled. All key numbers are referenced in Figures 4 to 10.

Replacement or Maintenance of Orifice and Valve Plug

If it appears that the valve does not shut off tightly, the orifice and valve plug could be worn out or damaged. Proceed as follows to check and/or replace them.

1. Shut down the regulator. Refer to Shutdown section for the proper procedure.
2. Unscrew the valve plug guide (key 5) from the body (key 1). The valve plug spring (key 26) and the valve plug (key 4) will normally come out of the body along with the valve plug guide. On 1-1/2 or 2 in. / DN 40 or 50 body size regulators, the stem (key 6) will also come out of the regulator body.
3. Inspect the seating surface of the valve plug (key 4), make sure that the elastomer, PTFE or polished metal surface of the valve plug is not damaged. Also inspect the external O-ring (key 4c) on the valve plug of Type MR95HP. Replace the valve plug assembly if damage is noted.
4. Inspect the seating edge of the orifice (key 3). If damage is noted, unscrew the orifice from the body (key 1) and replace it with a new part. Reference Table 8 for proper torque values.
5. Reassemble the regulator in the reverse order of the above steps. When installing the valve plug guide (key 5), coat the threads and sealing surface with sealant to ensure an adequate metal-to-metal seal. Reference Table 8 for proper torque values.

Flange Cap Screw Torque Inspection

Retorquing of spring case cap screws may be necessary for some MR95 Series regulators after a period of use. Retorque the cap screws as follows:

1. Shut down the regulator. Refer to Shutdown section for the proper procedure.
2. Retighten the cap screws (key 16) in a crisscross pattern. See Table 9 for proper torque values.
3. Follow the Startup section to repressurize the regulator.
4. Refer to the Replacement of Diaphragm section as needed.

Replacement of Diaphragm

When the regulator does not respond to differential or downstream pressure changes, if fluid leaks or vents to the spring case (pressure reducing regulators) or the loading pressure seems to leak to the downstream piping (differential pressure regulators), the diaphragm could be worn out or ruptured. Inspect/replace the diaphragm as follows:

CAUTION

Metal diaphragms have thin sharp edges. To avoid hand cuts, be careful when handling the diaphragm and particularly the diaphragm edge.

1. Shut down the regulator. Refer to “Shutdown” section for the proper procedure.
2. **For Types MR95L, MR95H, MR95HP and MR95HT**—loosen the jam nut (key 17) and turn the adjusting screw (key 15) counterclockwise to remove all spring compression.
   For Types MR95LD, MR95HD and MR95HDP—turn the handwheel (key 38) counterclockwise to remove all spring compression.

CAUTION

Provide adequate support to the spring case when disassembling MR95 Series regulator installed in a vertical installation or other application where the spring case is not oriented upward. Without adequate support, the spring case may fall and cause physical injury when the cap screws are loosened.

3. Remove the cap screws (key 16) from the diaphragm casing. Lift the entire spring case (key 2) off of the body (key 1).
4. Remove the upper spring seat (key 9) and regulator spring (key 11). For Types MR95H, MR95HP and MR95HT with body sizes 1-1/2 and 2 in. / DN 40 and 50 skip steps 5 and 6.
5. **For Types MR95HD and MR95HDP and 1/4 NPT to 1 in. / DN 25 body sizes of Types MR95H, MR95HP and MR95HT**—remove the lower spring seat (key 8). **For Types MR95L and MR95LD**—remove the diaphragm head assembly (key 21, lower spring seat and diaphragm head threaded together).

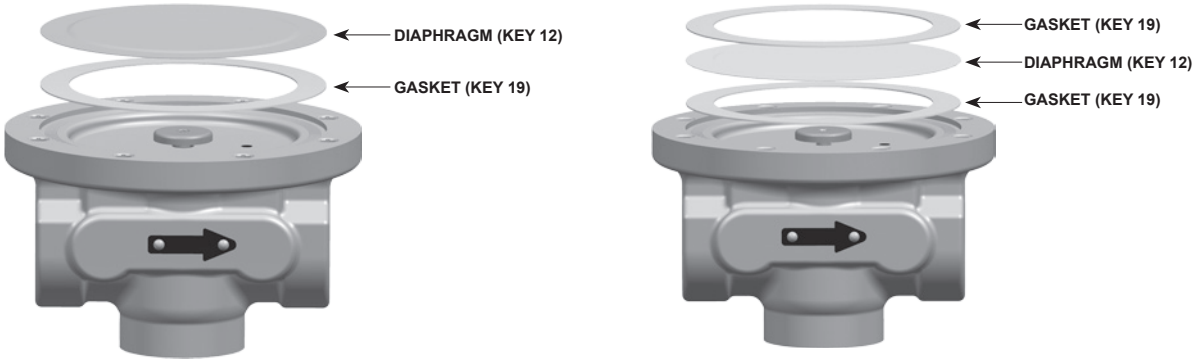

Figure 4. *Diaphragm Assembly for MR95 Series with 1/4 NPT and 1/2 to 1 in. / DN 15 to 25 Body Sizes*

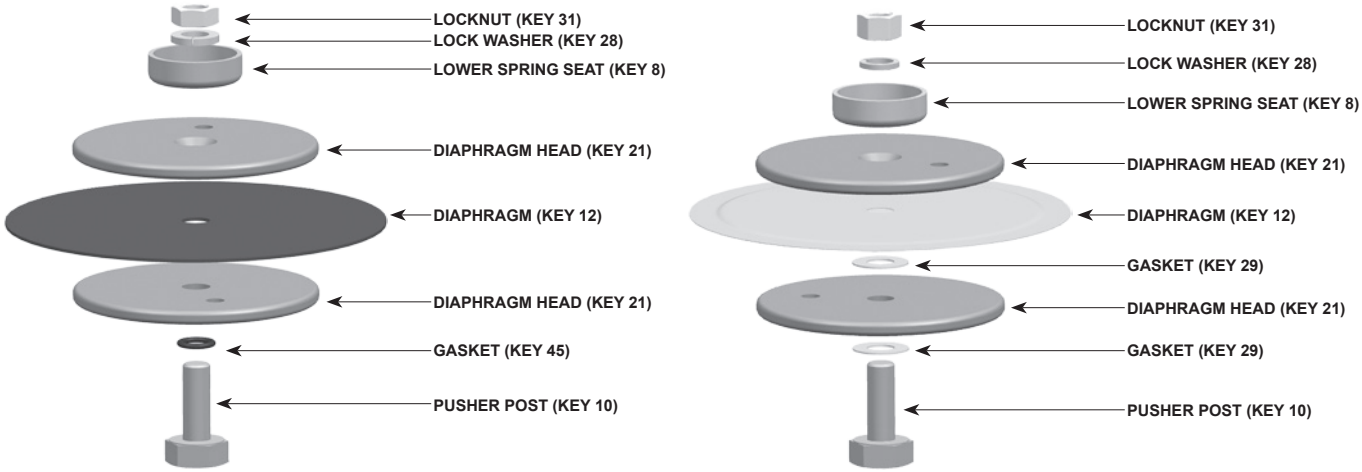

Figure 5. *Diaphragm Assembly for MR95 Series with 1-1/2 and 2 in. / DN 40 and 50 Body Sizes*

Table 8. *Number of Diaphragms Required*

BODY SIZE	TYPE	SPRING RANGE	DIAPHRAGM MATERIAL	NUMBER OF DIAPHRAGM
1/4 NPT	MR95L and MR95LD	All ranges	Ethylyne Propylene Diene (EPDM)	1
			Neoprene (CR)	1
			Fluorocarbon (FKM)	1
		All ranges except 2 to 6 psig / 0.14 to 0.41 bar	Metal	2
		2 to 6 psig / 0.14 to 0.41 bar	Metal	1
	MR95H, MR95HD, MR95HDP and MR95HP	All ranges	Metal	2
			Ethylyne Propylene Diene (EPDM)	1
			Fluorocarbon (FKM)	1
			Neoprene (CR)	1
1/2 to 2 in. / DN 15 to 50	All types	All ranges	Metal	2
			Ethylyne Propylene Diene (EPDM)	1
			Fluorocarbon (FKM)	2
			Neoprene (CR)	1

6. Remove the diaphragm(s) (key 12) and examine for damage. Replace if damage is noted. See Table 8 for the required number of diaphragm(s). Proceed to step 9.
7. For body sizes 1-1/2 and 2 in. / DN 40 and 50, remove the diaphragm and diaphragm head. The diaphragm head can only be disassembled for the 1-1/2 and 2 in. / DN 40 and 50 sizes. Disassemble it for inspection of the diaphragm (key 12) and two small diaphragm gaskets (key 29) or O-ring (key 45). Remove the locknut (key 31) from the pusher post (key 10) and separate the assembly. An O-ring is used to seal around the pusher post if an elastomer diaphragm is used and the gaskets are used with stainless steel diaphragm(s).
8. Remove the stem assembly (key 6) except for regulator with 1/4 NPT body size. Inspect the O-ring (not shown) from wear or damage. Replace stem assembly if damage is noted.

Table 9. *Torque Specifications*

BODY SIZE		SPRING CASE BOLT[1]		ORIFICE		PLUG GUIDE	
In.	DN	FT-LBS	N•m	FT-LBS	N•m	FT-LBS	N•m
1/4	- - - -	6 to 8	8 to 11	6 to 8	8 to 11	50 to 58	68 to 79
1/2	15	10 to 13	13 to 18	34 to 38	46 to 51	75 to 90	102 to 122
3/4 and 1	20 and 25	24 to 30	33 to 41	50 to 60	68 to 81	100 to 125	136 to 169
1-1/2 and 2	40 and 50	40 to 50	54 to 68	180 to 200	244 to 271	170 to 200	230 to 271

1. Reduce spring case bolt's torque by 30% when using Ethylenepropylene (EPDM) diaphragms.

9. With diaphragm(s) (key 12) removed, ensure the pressure registration hole (pitot tube, key 20, in 3/4 in. / DN 20 and larger body sizes) is completely open and free of all obstructions.
10. If the unit has metal diaphragms (see Figures 4 and 5):
    a. (Applicable only for the lower diaphragm head of Types MR95H, MR95HT, MR95HD and MR95HDP, 1-1/2 and 2 in. / DN 40 and 50.) Find the pusher post (key 10) and place on a surface with the larger flat surface down and the thread stem up (metal diaphragm pusher post has a recessed diameter in the bottom surface). Then, find one smaller composition gasket (key 29) and fit it over the threaded end of the pusher post. Find and take one of the diaphragm heads and slip it over the threaded end of the pusher post with the chamfered side of the diaphragm head toward the gasket. Take a second gasket and place it over the threaded end of the pusher post on top of the diaphragm head.
    b. Replace one of the two large diaphragm gaskets (key 19) on the surface of the body (key 1) that will support the diaphragms (key 12). There will be two diaphragms used per regulator, except for Types MR95L and MR95LD, 1/4 NPT with 2 to 6 psi / 0.14 to 0.41 bar spring range setting which use only one metal diaphragm (the metal diaphragm is in between two diaphragm gaskets). Another diaphragm gasket will be placed on top of the second metal diaphragm. The raised surfaces of the metal diaphragms should be placed in the unit so that they are facing toward the assembler (toward the spring) except only when one metal diaphragm is being used then the raised surface should be facing down (towards the body). See Figure 2 as reference.
11. Reassemble in the reverse of the above procedures. Lubricate the upper spring seat (key 9) and the exposed threads of the adjusting screw (key 15) with anti-seize lubricant. Install the cap screws (key 16) in a crisscross pattern and tighten to finger tight only.
12. To ensure proper slack in the diaphragm, install the adjusting screw (key 15, for Types MR95L, MR95H, MR95HP and MR95HT) or handwheel (key 38, Types MR95LD, MR95HD and MR95HDP), if completely removed and turn it clockwise. This allows proper positioning of the diaphragm (key 12) to permit full travel of the valve plug (key 4). Finish tightening the cap screws (key 16). See Table 8 for proper torque values.
13. Complete reassembly procedures and turn the adjusting screw (key 15) or handwheel (key 38) to produce the desired outlet pressure. For Types MR95L, MR95H, MR95HP and MR95HT, tighten the jam nut (key 17) to maintain the desired setting.

Replacement of Packing (Types MR95LD, MR95HD and MR95HDP only)

Leakage around the adjusting screw may indicate worn packing material. Follow the instructions below to replace the packing rings.

1. Shut down the regulator. Refer to "Shutdown" section for the proper procedure.
2. Take out the machine screw (key 41) and lift off the washer (key 44) and handwheel (key 38).
3. Unscrew the packing box (key 32). Unscrew the packing nut (key 35) and the packing follower (key 34) off of the adjusting screw (key 33).
4. Unscrew and pull the adjusting screw (key 33) out through the bottom of the packing box (key 32).
5. Pull out the old packing (key 36) and replace it with three new packing rings. Replace the packing box gasket (key 37). Lubricate packing box gasket with general purpose Polytetrafluoroethylene (PTFE) or lithium grease.
6. Reassemble the stuffing box unit by returning the adjusting screw (key 33) to the inside of the stuffing/packing box (key 32). Slip the packing follower (key 34) onto the adjusting screw and into the packing box. Screw on the packing nut (key 35).
7. Put the stuffing/packing box (key 32) back onto the spring case (key 2). Set the handwheel (key 38) and washer (key 44) on the adjusting screw (key 33) and screw in the machine screw (key 41).

Parts Ordering

When corresponding with your local Sales Office about this equipment, always reference the equipment serial number or FS number that can be found on the nameplate.

When ordering replacement parts, reference the key number of each needed part as found in the following parts list. Separate kits containing all recommended spare parts are available.

Note

In this parts list, parts marked NACE are intended for corrosion-resistant service as detailed in the NACE International Standard MR0175-2002 and/or MR0103.

Optional materials are available to meet ANSI/NACE MR0175/ISO 15156, please contact your local Sales Office for special ordering instructions.

Parts List

Key	Description	Part Number
	Parts Kit (included are keys 3, 4, 12, 19, 29, 45 and 63; not all parts are used for all types)	
	Type MR95H	
	Stainless steel diaphragm and plug	
	1/4 NPT Body	RMR95HX0012
	1/2 in. / DN 15 Body	RMR95HX0042
	3/4 and 1 in. / DN 20 and 25 Body Sizes	RMR95HX0072
	1-1/2 and 2 in. / DN 40 and 50 Body Sizes	RMR95HX0102
	Neoprene (CR) diaphragm and Nitrile (NBR)/Brass Disk	
	1/4 NPT Body	RMR95HX0022
	1/2 in. / DN 15 Body	RMR95HX0052
	3/4 and 1 in. / DN 20 and 25 Body Sizes	RMR95HX0082
	1-1/2 and 2 in. / DN 40 and 50 Body Sizes	RMR95HX0112
	Neoprene (CR) diaphragm and Nitrile (NBR)/416 Stainless steel Disk	
	1/4 NPT Body	RMR95HX0032
	1/2 in. / DN 15 Body	RMR95HX0062
	3/4 and 1 in. / DN 20 and 25 Body Sizes	RMR95HX0092
	1-1/2 and 2 in. / DN 40 and 50 Body Sizes	RMR95HX0122
	Type MR95L	
	Stainless steel diaphragm and plug	
	1/4 NPT Body	RMR95LX0012
	1/2 in. / DN 15 Body	RMR95LX0042
	3/4 and 1 in. / DN 20 and 25 Body Sizes	RMR95LX0072
	Neoprene (CR) diaphragm and Nitrile (NBR)/Brass Disk	
	1/4 NPT Body	RMR95LX0022
	1/2 in. / DN 15 Body	RMR95LX0052
	3/4 and 1 in. / DN 20 and 25 Body Sizes	RMR95LX0082
	Neoprene (CR) diaphragm and Nitrile (NBR)/416 Stainless steel Disk	
	1/4 NPT Body	RMR95LX0032
	1/2 in. / DN 15 Body	RMR95LX0062
	3/4 and 1 in. / DN 20 and 25 Body Sizes	RMR95LX0092
	Type MR95HT, Stainless Diaphragm and Plug	
	1/4 NPT Body	RMR95HTX012
	1/2 in. / DN 15 Body	RMR95HTX022
	Parts Kit (included are keys 3, 4, 12, 19, 29, 45 and 63; not all parts are used for all types) (continued)	
	Type MR95HT, Stainless Diaphragm and Plug	
	3/4 and 1 in. / DN 20 and 25 Body Sizes	RMR95HTX032
	1-1/2 and 2 in. / DN 40 and 50 Body Sizes	RMR95HTX042
1	Body	See Following Tables
2	Spring Case	See Following Tables
3*	Orifice(2)	
	Metal-to-metal seat	
	Types MR95L, MR95LD, MR95H, MR95HD and MR95HDP	
	1/4 NPT Body Size	
	416 Stainless steel	GF04856X022
	316 Stainless steel	GF04856X032
	Hastelloy® C	GF04856X052
	Monel®	GF04856X042
	1/2 in. / DN 15 Body Size	
	416 Stainless steel	GF04841X022
	316 Stainless steel	GF04841X032
	Alloy 6	GF04841X062
	Hastelloy® C	GF04841X052
	Monel®	GF04841X042
	3/4 and 1 in. / DN 20 and 25 Body Sizes	
	416 Stainless steel	GF04821X022
	316 Stainless steel	GF04821X032
	Alloy 6	GF04821X062
	Hastelloy® C	GF04821X052
	Monel®	GF04821X042
	1-1/2 and 2 in. / DN 40 and 50 Body Sizes	
	416 Stainless steel	GF04896X022
	316 Stainless steel	GF04896X032
	Alloy 6	GF04896X062
	Hastelloy® C	GF04896X052
	Monel®	GF04896X042
	Type MR95HT	
	1/4 NPT Body Size	
	416 Stainless steel	GF04856X022
	316 Stainless steel	GF04856X032
	1/2 in. / DN 15 Body Size	
	416 Stainless steel	GF04841X022
	316 Stainless steel	GF04841X032
	Alloy 6	GF04841X062
	3/4 and 1 in. / DN 20 and 25 Body Sizes	
	416 Stainless steel	GF04821X022
	316 Stainless steel	GF04821X032
	Alloy 6	GF04821X062
	1-1/2 and 2 in. / DN 40 and 50 Body Sizes	
	416 Stainless steel	GF04896X022
	316 Stainless steel	GF04896X032
	Alloy 6	GF04896X062
	Composition seat	
	Types MR95L, MR95LD, MR95H, MR95HD and MR95HDP	
	1/4 NPT Body Size	
	Brass, Oxygen Service	GF05038X012
	316 Stainless steel, NACE(1)	GF05038X032
	416 Stainless steel	GF05038X022
	Monel®	GF05038X042
	1/2 in. / DN 15 Body Size	
	Brass, Oxygen Service	GF05327X012
	316 Stainless steel, NACE(1)	GF05327X032
	416 Stainless steel	GF05327X022
	Monel®	GF05327X042
	3/4 and 1 in. / DN 20 and 25 Body Sizes	
	Brass, Oxygen Service	GF04822X012
	316 Stainless steel, NACE(1)	GF04822X032
	416 Stainless steel	GF04822X022
	Monel®	GF04822X042
	1-1/2 and 2 in. / DN 40 and 50 Body Sizes (Types MR95H, MR95HD and MR95HDP only)	
	Brass, Oxygen Service	GF05521X012
	316 Stainless steel, NACE(1)	GF05521X032
	416 Stainless steel	GF05521X022
	Monel®	GF05521X042

*Recommended spare part

Hastelloy® C is a mark owned by Haynes International, Inc.

Monel® is a mark owned by Special Metals Corporation.

1. NACE MR0175-2002 and MR0103.
2. See Type MR95 Reduced Orifice Part Numbers table on page 30 for reduced orifices that change Type MR95 C_v values to equivalent Type 95 C_v values.

Key	Description	Part Number
3*	Orifice (continued)[3]	
	Composition seat (continued)	
	Type MR95HP	
	1/4 NPT Body Size	
	316 Stainless steel, NACE[1]	GF05038X032
	416 Stainless steel	GF05038X022
	1/2 in. / DN 15 Body Size	
	316 Stainless steel, NACE[2]	GF05327X032
	416 Stainless steel	GF05327X022
	3/4 and 1 in. / DN 20 and 25 Body Sizes	
	316 Stainless steel, NACE[1]	GF04822X032
	416 Stainless steel	GF04822X022
	1-1/2 and 2 in. / DN 40 and 50 Body Sizes	
	316 Stainless steel, NACE[1]	GF05521X032
	416 Stainless steel	GF05521X022
4*	Valve Plug, Metal seat	See Following Table
4*	Disk Holder Assembly, Composition seat	See Following Table
4a	Disk Holder	- - - - - - - - - - -
4b	Disk	- - - - - - - - - - -
4c	O-ring (Type MR95HP only)	- - - - - - - - - - -
5	Valve Plug Guide	
	Types MR95L, MR95LD, MR95H	
	MR95HD and MR95HDP	
	1/4 NPT Body Size	
	Brass, Oxygen Service	Refer to 316 SST PN
	416 Stainless steel	Refer to 316 SST PN
	316 Stainless steel, NACE[1]	GF05490X072
	Hastelloy® C	GF05490X052
	Monel®	GF05490X042
	1/2 in. / DN 15 Body Size	
	Brass, Oxygen Service	Refer to 316 SST PN
	416 Stainless steel	Refer to 316 SST PN
	316 Stainless steel, NACE[1]	GF05519X122
	Hastelloy® C	GF05519X052
	Monel®	GF05519X042
	3/4 and 1 in. / DN 20 and 25 Body Sizes	
	Brass, Oxygen Service	Refer to 316 SST PN
	416 Stainless steel	Refer to 316 SST PN
	316 Stainless steel, NACE[1]	GF04830X202
	Hastelloy® C	GF04830X052
	Monel®	GF04830X042
	1-1/2 and 2 in. / DN 40 and 50 Body Sizes	
	416 Stainless steel	Refer to 316 SST PN
	316 Stainless steel, NACE[1]	GF05510X152
	Hastelloy® C	GF05510X052
	Monel®	GF05510X042
	Types MR95HP and MR95HT	
	1/4 NPT Body Size	
	416 Stainless steel	Refer to 316 SST PN
	316 Stainless steel, NACE[1]	GF05490X032
	1/2 in. / DN 15 Body Size	
	416 Stainless steel	Refer to 316 SST PN
	316 Stainless steel, NACE[2]	GF05519X032
	3/4 and 1 in. / DN 20 and 25 Body Sizes	
	416 Stainless steel	Refer to 316 SST PN
	316 Stainless steel, NACE[1]	GF04830X032
	1-1/2 and 2 in. / DN 40 and 50 Body Sizes	
	416 Stainless steel	Refer to 316 SST PN
	316 Stainless steel, NACE[1]	GF05510X032
6	Stem/Stem Assembly	
	Types MR95L, MR95LD, MR95H	
	MR95HD and MR95HDP	
	1/4 NPT Body Size	
	416 Stainless steel	ERCA00638A0
	316 Stainless steel	
	Standard, Oxygen Service	ERCA00638A4
	NACE[1], Types MR95L and MR95H only	ERCA00638A1
	Hastelloy® C	ERCA00638A3
	Monel®	ERCA00638A2

Key	Description	Part Number
6	Stem/Stem Assembly (continued)	
	Types MR95L, MR95LD, MR95H	
	MR95HD and MR95HDP (continued)	
	1/2 in. / DN 15 Body Size	
	416 Stainless steel	
	Without control line	ERCA00639A0
	With control line	ERAA01904A0
	316 Stainless steel	
	Standard, Oxygen Service	ERCA00639A4
	NACE[1]	
	Without control line	ERCA00639A1
	With control line	
	Nitrile (NBR) seat	ERAA01904A1
	Fluorocarbon (FKM) seat	ERAA01904A2
	Hastelloy® C	ERCA00639A3
	Monel®	ERCA00639A2
	3/4 and 1 in. / DN 20 and 25 Body Sizes	
	416 Stainless steel	
	Without control line	ERCA00640A0
	With control line	ERAA01896A0
	316 Stainless steel	
	Standard, Oxygen Service	ERCA00640A4
	NACE[1]	
	Without control line	ERCA00640A1
	With control line	
	Nitrile (NBR) seat	ERAA01896A1
	Fluorocarbon (FKM) seat	ERAA01896A2
	Hastelloy® C	ERCA00640A3
	Monel®	ERCA00640A2
	1-1/2 and 2 in. / DN 40 and 50 Body Sizes	
	416 Stainless steel	
	Without control line	GF05507X022
	With control line	ERAA01906A0
	316 Stainless steel	
	Standard, Oxygen Service	GF05507X062
	NACE[1]	
	Without control line	GF05507X032
	With control line	
	Nitrile (NBR) seat	ERAA01906A2
	Fluorocarbon (FKM) seat	ERAA01906A3
	Hastelloy® C	GF05507X052
	Monel®	GF05507X042
	Type MR95HT	
	1/4 NPT Body Size	
	416 Stainless steel	ERCA00638A0
	316 Stainless steel	ERCA00638A4
	1/2 in. / DN 15 Body Size	
	416 Stainless steel	ERCA00639A0
	316 Stainless steel	ERCA00639A4
	3/4 and 1 in. / DN 20 and 25 Body Sizes	
	416 Stainless steel	ERCA00640A0
	316 Stainless steel	ERCA00640A4
	1-1/2 and 2 in. / DN 40 and 50 Body Sizes	
	416 Stainless steel	GF05507X022
	316 Stainless steel	GF05507X062
	Type MR95HP	
	1/4 NPT Body Size	
	416 Stainless steel	ERCA00638A0
	316 Stainless steel, NACE[1]	ERCA00638A1
	1/2 in. / DN 15 Body Size	
	416 Stainless steel	
	Without control line	ERCA00639A0
	With control line	ERAA01904A0
	316 Stainless steel, NACE[1]	
	Without control line	ERCA00639A1
	With control line	
	Nitrile (NBR) seat	ERAA01904A1
	Fluorocarbon (FKM) seat	ERAA01904A2
	3/4 and 1 in. / DN 20 and 25 Body Sizes	
	416 Stainless steel	
	Without control line	ERCA00640A0
	With control line	ERAA01896A0
	316 Stainless steel, NACE[1]	
	Without control line	ERCA00640A1
	With control line	
	Nitrile (NBR) seat	ERAA01896A1
	Fluorocarbon (FKM) seat	ERAA01896A2

*Recommended spare part
Hastelloy® C is a mark owned by Haynes International, Inc.
Monel® is a mark owned by Special Metals Corporation.
1. NACE MR0175-2002 and MR0103.
2. NACE MR0175-2002.
3. See Type MR95 Reduced Orifice Part Numbers table on page 30 for reduced orifices that change Type MR95 C_v values to equivalent Type 95 C_v values.

Key	Description	Part Number
6	Stem/Stem Assembly (continued)	
	Type MR95HP (continued)	
	1-1/2 and 2 in. / DN 40 and 50 Body Sizes	
	416 Stainless steel	
	Without control line	GF05507X022
	With control line	ERAA01906A0
	316 Stainless steel, NACE[1]	
	Without control line	GF05507X032
	With control line	
	Nitrile (NBR) seat	ERAA01906A2
	Fluorocarbon (FKM) seat	ERAA01906A3
6a	Stem	- - - - - - - - - -
6b	Pusher Plate (1/4 NPT and 1/2 to 1 in. / DN 15 to 25 Body Sizes only)	- - - - - - - - - -
6b	O-ring (1-1/2 and 2 in. / DN 40 and 50 Body Sizes only)	- - - - - - - - - -
6c	O-ring (1/2 to 1 in. / DN 15 to 25 Body Sizes only)	- - - - - - - - - -
7	Stem Guide Bushing	
	1/4 NPT Body Size	
	416 Stainless steel	ERCA03695A0
	316 Stainless steel, NACE[1], Oxygen Service	ERCA03695A1
	Hastelloy® C	ERCA03695A3
	Monel®	ERCA03695A2
	1/2 in. / DN 15 Body Size	
	416 Stainless steel	ERCA03694A0
	316 Stainless steel, NACE[1], Oxygen Service	ERCA03694A1
	Hastelloy® C	ERCA03694A3
	Monel®	ERCA03694A2
	3/4 to 2 in. / DN 20 to 50 Body Sizes	
	416 Stainless steel	ERCA03668A0
	316 Stainless steel, NACE[1], Oxygen Service	ERCA03668A1
	Hastelloy® C	ERCA03668A3
	Monel®	ERCA03668A2
8	Lower Spring Seat, NACE[1]	
	Types MR95L, MR95LD, MR95H, MR95HD and MR95HDP	
	1/4 NPT Body Size	
	Aluminum[2]	1E392309012
	Stainless steel	1E3923X0012
	1/2 in. / DN 15 Body Size	
	Aluminum[2]	1E395408012
	Stainless steel	1E3954X0042
	3/4 and 1 in. / DN 20 and 25 Body Sizes	
	Aluminum[2]	1E398608012
	Stainless steel	1E3986X0042
	1-1/2 and 2 in. / DN 40 and 50 Body Sizes	
	Steel[2]	1P787724152
	Stainless steel	1P7877X0012
	Types MR95HP and MR95HT	
	1/4 NPT Body Size	
	Steel[2]	ERCA00453A0
	Stainless steel	ERCA00453A1
	1/2 in. / DN 15 Body Size	
	Steel[2]	ERCA00436A0
	Stainless steel	ERCA00436A1
	3/4 and 1 in. / DN 20 and 25 Body Sizes	
	Steel[2]	17B8733X012
	Stainless steel	17B8733X022
	1-1/2 and 2 in. / DN 40 and 50 Body Sizes	
	Steel[2]	1P787724152
	Stainless steel	1P7877X0012
9	Upper Spring Seat, NACE[1]	
	Types MR95L, MR95LD, MR95H, MR95HD and MR95HDP	
	1/4 NPT Body Size	
	Steel[2]	ERCA00383A0
	Stainless steel	ERCA00383A1
	1/2 in. / DN 15 Body Size	
	Steel[2]	ERCA00823A0
	Stainless steel	ERCA00823A1
	3/4 and 1 in. / DN 20 and 25 Body Sizes	
	Steel[2]	1E398725072
	Stainless steel	1E3987X0012

Key	Description	Part Number
9	Upper Spring Seat, NACE[1] (continued)	
	Types MR95L, MR95LD, MR95H, MR95HD and MR95HDP (continued)	
	1-1/2 and 2 in. / DN 40 and 50 Body Sizes	
	Steel[2]	1P787624092
	Stainless steel	1P7876X0012
	Types MR95HP and MR95HT	
	1/4 NPT Body Size	
	Steel[2]	14B9950X012
	Stainless steel	14B9950X022
	1/2 in. / DN 15 Body Size	
	Steel[2]	ERCA00382A0
	Stainless steel	ERCA00382A1
	3/4 and 1 in. / DN 20 and 25 Body Sizes	
	Steel[2]	ERCA00138A0
	Stainless steel	ERCA00138A1
	1-1/2 and 2 in. / DN 40 and 50 Body Sizes	
	Steel[2]	1P787624092
	Stainless steel	1P7876X0012
10	Pusher Post, 1-1/2 and 2 in. / DN 40 and 50 Body Sizes only	
	Metal-to-metal seat	
	416 Stainless steel, Types MR95H, MR95HD, MR95HDP and MR95HT only	GF05509X022
	316 Stainless steel, Types MR95H, MR95HD, MR95HDP and MR95HT only	GF05509X032
	Hastelloy® C, Types MR95H, MR95HD and MR95HDP only	GF05509X052
	Monel®, Types MR95H, MR95HD and MR95HDP only	GF05509X042
	Composition seat	
	416 Stainless steel	
	Types MR95H, MR95HD, MR95HDP and MR95HP only	GF05549X022
	316 Stainless steel, NACE[1], Oxygen Service	
	Types MR95H, MR95HD, MR95HDP and MR95HP only	GF05549X032
	Monel®, Types MR95H, MR95HD and MR95HDP only	GF05549X042
11	Control Spring, NACE[1][2]	See Table 3
12*	Diaphragm	See Following Table
13	Nameplate	- - - - - - - - - -
14*	Diaphragm Protector, PTFE, NACE[1]	
	Types MR95L and MR95LD	
	1/4 NPT Body Size	11A5126X012
	1/2 in. / DN 15 Body Size	11A5127X012
	3/4 and 1 in. / DN 20 and 25 Body Sizes	11A5128X012
	Types MR95H, MR95HP, MR95HD and MR95HDP	
	1/4 NPT Body Size	11A5129X012
	1/2 in. / DN 15 Body Size	11A5130X012
	3/4 and 1 in. / DN 20 and 25 Body Sizes	11A5131X012
	1-1/2 and 2 in. / DN 40 and 50 Body Sizes	11A5527X012
15	Adjusting Screw, NACE[1][2]	
	Square Head Adjustment	
	1/4 NPT Body Size	GF05533X012
	1/2 in. / DN 15 Body Size	GF05553X012
	3/4 and 1 in. / DN 20 and 25 Body Sizes	GF05543X012
	1-1/2 and 2 in. / DN 40 and 50 Body Sizes	GF05522X012
	Stainless steel Square Head Adjustment	
	1/4 NPT Body Size	GF05533X022
	1/2 in. / DN 15 Body Size	GF05553X022
	3/4 and 1 in. / DN 20 and 25 Body Sizes	GF05543X022
	1-1/2 and 2 in. / DN 40 and 50 Body Sizes	GF05522X022
	Sealed Square Head Adjustment	
	1/2 in. / DN 15 Body Size	GF05553X012
	3/4 and 1 in. / DN 20 and 25 Body Sizes	GF05543X012
	1-1/2 and 2 in. / DN 40 and 50 Body Sizes	GF05522X012
	Handwheel Adjustment	
	1/2 in. / DN 15 Body Size	ERAA02331A0
16	Cap Screw, NACE[1][2]	
	Types MR95L and MR95LD	
	1/4 NPT Body Size	
	Steel (10 required)	ERCA00651A0
	Stainless steel (10 required)	ERCA00651A1

*Recommended spare part
Hastelloy® C is a mark owned by Haynes International, Inc.
Monel® is a mark owned by Special Metals Corporation.
1. NACE MR0175-2002 and MR0103.
2. Part meets NACE requirements only for applications in which the part is not exposed to sour gas.

Key	Description	Part Number
16	Cap Screw, NACE[1][2] (continued)	
	Types MR95L and MR95LD (continued)	
	1/2 in. / DN 15 Body Size	
	Steel (10 required)	ERCA00100A0
	Stainless steel (10 required)	ERCA00100A1
	3/4 and 1 in. / DN 20 and 25 Body Sizes	
	Steel (12 required)	GF05446X012
	Stainless steel (12 required)	GF05446X022
	Types MR95H and MR95HD	
	1/4 NPT Body Size	
	Steel (6 required)	ERCA04149A0
	Stainless steel (6 required)	ERCA04149A1
	1/2 in. / DN 15 Body Size	
	Steel (8 required)	ERCA00100A0
	Stainless steel (8 required)	ERCA00100A1
	3/4 and 1 in. / DN 20 and 25 Body Sizes	
	Steel (8 required)	GF05446X012
	Stainless steel (8 required)	GF05446X022
	1-1/2 and 2 in. / DN 40 and 50 Body Sizes	
	Steel (8 required)	ERCA00601A0
	Stainless steel (8 required)	ERCA00601A3
	Types MR95HP, MR95HDP and MR95HT	
	1/4 NPT Body Size	
	Steel (6 required)	ERCA04149A2
	Stainless steel (6 required)	ERCA04149A3
	1/2 in. / DN 15 Body Size	
	Steel (8 required)	ERCA00100A2
	Stainless steel (8 required)	ERCA00100A3
	3/4 and 1 in. / DN 20 and 25 Body Sizes	
	Steel (8 required)	GF05446X032
	Stainless steel (8 required)	GF05446X042
	1-1/2 and 2 in. / DN 40 and 50 Body Sizes	
	Steel (8 required)	ERCA00601A2
	Stainless steel (8 required)	ERCA00601A3
17	Jam Nut, NACE[1][2]	
	Square Head Adjustment	
	1/4 NPT Body Size	ERCA00652A0
	1/2 in. / DN 15 Body Size	ERCA00380A0
	3/4 and 1 in. / DN 20 and 25 Body Sizes	GF05453X012
	1-1/2 and 2 in. / DN 40 and 50 Body Sizes	ERCA00633A0
	Stainless steel Square Head Adjustment	
	1/4 NPT Body Size	ERCA00652A1
	1/2 in. / DN 15 Body Size	ERCA00380A1
	3/4 and 1 in. / DN 20 and 25 Body Sizes	GF05453X022
	1-1/2 and 2 in. / DN 40 and 50 Body Sizes	ERCA00633A1
	Sealed Square Head Adjustment	
	1/2 in. / DN 15 Body Size	ERCA00380A0
	3/4 and 1 in. / DN 20 and 25 Body Sizes	GF05453X012
	1-1/2 and 2 in. / DN 40 and 50 Body Sizes	ERCA00633A0
	Tee Handle Adjustment	
	1/4 NPT Body Size	ERCA00652A0
	3/4 and 1 in. / DN 20 and 25 Body Sizes	GF05453X012
	1-1/2 and 2 in. / DN 40 and 50 Body Sizes	ERCA00633A0
	Handwheel Adjustment	
	1/2 in. / DN 15 Body Size	ERCA00380A0
18	Nameplate Drive Screw, Stainless steel (4 required)	ERAA01884A0
19*	Diaphragm Gasket	
	(2 required for pressure loaded spring case)	
	For 302 Stainless steel Diaphragm	
	Types MR95L and MR95LD	
	1/4 NPT Body Size	ERCA00655A0
	1/2 in. / DN 15 Body Size	ERCA00491A0
	3/4 and 1 in. / DN 20 and 25 Body Sizes	ERCA00556A0
	Types MR95H, MR95HD and MR95HDP	
	1/4 NPT Body Size	1E393104022
	1/2 in. / DN 15 Body Size	ERCA00485A0
	3/4 and 1 in. / DN 20 and 25 Body Sizes	ERCA00510A0
	1-1/2 and 2 in. / DN 40 and 50 Body Sizes	ERCA00526A0

Key	Description	Part Number
19*	Diaphragm Gasket (continued)	
	(2 required for pressure loaded spring case) (continued)	
	For 302 Stainless steel Steam Service, Monel® and Hastelloy® C Diaphragms (continued)	
	Types MR95L and MR95LD	
	1/4 NPT Body Size	ERCA00655A1
	1/2 in. / DN 15 Body Size	ERCA00491A1
	3/4 and 1 in. / DN 20 and 25 Body Sizes	ERCA00556A1
	Types MR95H, MR95HT, MR95HD and MR95HDP	
	1/4 NPT Body Size	1E3931X0012
	1/2 in. / DN 15 Body Size	ERCA00485A1
	3/4 and 1 in. / DN 20 and 25 Body Sizes	ERCA00510A1
	1-1/2 and 2 in. / DN 40 and 50 Body Sizes	ERCA00526A1
	For Stainless steel Oxygen Service Diaphragm	
	Type MR95L	
	1/4 NPT Body Size	ERCA00655A2
	1/2 in. / DN 15 Body Size	ERCA00491A2
	3/4 and 1 in. / DN 20 and 25 Body Sizes	ERCA00556A2
	Type MR95H	
	1/4 NPT Body Size	1E3931X0022
	1/2 in. / DN 15 Body Size	ERCA00485A2
	3/4 and 1 in. / DN 20 and 25 Body Sizes	ERCA00510A2
	1-1/2 and 2 in. / DN 40 and 50 Body Sizes	ERCA00526A2
20	Pitot Tube (for constructions without control line)	
	1/4 NPT Body Size	
	Copper, Oxygen Service	ERCA04393A0
	304 Stainless steel	ERCA04393A1
	316 Stainless steel, NACE[1]	ERCA04393A2
	Hastelloy® C	ERCA04393A4
	Monel®	ERCA04393A3
	1/2 in. / DN 15 Body Size	
	Copper, Oxygen Service	ERCA04277A0
	304 Stainless steel	ERCA04277A1
	316 Stainless steel, NACE[1]	ERCA04277A2
	Hastelloy® C	ERCA04277A4
	Monel®	ERCA04277A3
	3/4 and 1 in. / DN 20 and 25 Body Sizes	
	Copper, Oxygen Service	GF05550X012
	304 Stainless steel	GF05550X022
	316 Stainless steel, NACE[1]	GF05550X032
	Hastelloy® C	GF05550X052
	Monel®	GF05550X042
	1-1/2 and 2 in. / DN 40 and 50 Body Sizes	
	Copper, Oxygen Service	ERCA00381A0
	304 Stainless steel	ERCA00381A1
	316 Stainless steel, NACE[1]	ERCA00381A2
	Hastelloy® C	ERCA00381A4
	Monel®	ERCA00381A3
21	Diaphragm Head Assembly, NACE[1]	
	(Types MR95L and MR95LD only)	
	1/4 NPT Body Size	
	Aluminum/Steel[2]	ERCA00641A0
	Stainless steel	ERCA00641A1
	1/2 in. / DN 15 Body Size	
	Aluminum/Steel[2]	ERCA00642A0
	Stainless steel	ERCA00642A1
	3/4 and 1 in. / DN 20 and 25 Body Sizes	
	Aluminum/Steel[2]	ERCA00643A0
	Stainless steel	ERCA00643A1
21a	Diaphragm Head	----------
21b	Lower Spring Seat	----------
21c	Screw	----------
21	Diaphragm Head, 1-1/2 and 2 in. / DN 40 and 50 Sizes (2 required)	
	Plated Steel	ERCA00578A0
	316 Stainless steel, NACE[1] and Oxygen Service	ERCA00578A1
	Hastelloy® C, Types MR95H, MR95HD and MR95HDP only	ERCA00578A3
	Monel®, Types MR95H and MR95HD only	ERCA00578A2

*Recommended spare part
Hastelloy® C is a mark owned by Haynes International, Inc.
Monel® is a mark owned by Special Metals Corporation.
1. NACE MR0175-2002 and MR0103.
2. Part meets NACE requirements only for applications in which the part is not exposed to sour gas.

Key	Description	Part Number
22	Adjusting Screw Assembly	
	Tee Handle Adjustment	
	1/4 NPT Body Size, NACE[1][2]	ERAA01707A0
	3/4 and 1 in. / DN 20 and 25 Body Sizes	ERAA01716A0
	1-1/2 and 2 in. / DN 40 and 50 Body Sizes	ERAA01694A0
23	Handwheel	ERAA02088A0
26	Inner Valve Spring	
	1/4 NPT Body Size	
	302 Stainless steel, Oxygen Service	ERCA04280A0
	Inconel®, NACE[1]	ERCA04281A0
	1/2 in. / DN 15 Body Size	
	302 Stainless steel, Oxygen Service	ERCA04282A0
	Inconel®, NACE[1]	ERCA04283A0
	3/4 and 1 in. / DN 20 and 25 Body Sizes	
	302 Stainless steel, Oxygen Service	ERCA04284A0
	Inconel®, NACE[1]	ERCA04285A0
	1-1/2 and 2 in. / DN 40 and 50 Body Sizes	
	302 Stainless steel, Oxygen Service	ERCA04286A0
	Inconel®, NACE[1]	ERCA04287A0
27	Inner Valve Base, 1-1/2 to 2 in. / DN 40 to 50	
	416 Stainless steel	ERCA00376A1
	316 Stainless steel, NACE[1]	ERCA00376A2
	Hastelloy® C	ERCA00376A4
	Monel®	ERCA00376A3
	Brass, Oxygen Service	ERCA00376A0
27	Inner Valve Base Assembly, 1-1/2 and 2 in. / DN 40 and 50, Type MR95HP only	
	Nitrile (NBR) Seat	
	416 Stainless steel	ERAA01909A0
	316 Stainless steel, NACE[1]	ERAA01909A1
	Fluorocarbon (FKM) Disk	
	416 Stainless steel	ERAA01909A3
	316 Stainless steel, NACE[1]	ERAA01909A2
29*	Gasket (2 required)	
	For 1-1/2 and 2 in. / DN 40 and 50 only	
	302 Stainless steel Diaphragm	
	Types MR95H, MR95HD and MR95HDP	ERCA00579A0
	302 Stainless steel Diaphragm, Oxygen Service	
	Type MR95H	ERCA00579A2
	302 Stainless steel Steam Service, Monel® and Hastelloy® C Diaphragm	
	Types MR95H, MR95HT, MR95HD and MR95HDP	ERCA00579A1
31	Locknut, Steel, 1-1/2 to 2 in. / DN 40 to 50 only	1P788724122
32	Stuffing Box	
	Handwheel Adjustment **(standard)**	
	1/4 NPT Body Size	ERAA02699A0
	1/2 to 1 in. / DN 15 to 25 Body Sizes	ERAA01655A0
	1-1/2 and 2 in. / DN 40 and 50 Body Sizes	ERAA01662A0
	Handwheel Adjustment with Stainless steel Trim	
	1/4 NPT Body Size	ERAA02699A1
	1/2 to 1 in. / DN 15 to 25 Body Sizes	ERAA01655A1
	1-1/2 and 2 in. / DN 40 and 50 Body Sizes	ERAA01662A1
33	Adjusting Screw	
	1/4 NPT Body Size	ERAA01631A0
	1/2 in. / DN 15 Body Size	ERAA02333A0
	3/4 and 1 in. / DN 20 and 25 Body Sizes	ERAA01673A0
	1-1/2 and 2 in. / DN 40 and 50 Body Sizes	ERAA01677A0
34	Packing Follower	
	Handwheel Adjustment **(standard)**	
	1/4 NPT Body Size	ERAA01632A0
	1/2 to 2 in. / DN 15 to 50 Body Sizes	1K884924092
	Handwheel Adjustment with Stainless steel Trim	
	1/4 NPT Body Size	ERAA01632A0
	1/2 to 2 in. / DN 15 to 50 Body Sizes	1K8849X0012
35	Stuffing Box Nut	
	Handwheel Adjustment	ERAA01633A0
	Handwheel Adjustment with Stainless steel Trim	ERAA01633A1
36	Packing (3 required)	
	1/4 NPT Body Size	ERAA01634A0
	1/2 to 2 in. / DN 15 to 50 Body Sizes	ERAA01657A0
37*	Stuff Box Gasket	
	1/4 NPT Body Size	ERAA01635A0
	1/2 to 2 in. / DN 15 to 50 Body Sizes	1P494106242
38	Handwheel/Handle	
	Handwheel Adjustment	
	1/4 NPT Body Size	ERAA01636A0
	1/2 to 1 in. / DN 15 to 25 Body Sizes	ERAA01669A0
	1-1/2 and 2 in. / DN 40 and 50 Body Sizes	1J410819042
	Handwheel Adjustment with Stainless steel Trim	
	1/4 NPT Body Size	ERAA02956A1
	1/2 to 1 in. / DN 15 to 25 Body Sizes	ERAA02957A1
	1-1/2 and 2 in. / DN 40 and 50 Body Sizes	ERAA02959A1
39	Internal Adaptor	
	1/4 NPT Body Size	ERAA01637A0
	1/2 to 2 in. / DN 15 to 50 Body Sizes	ERAA01666A0
40	External Adaptor	
	1/4 NPT Body Size	ERAA01638A0
	1/2 to 2 in. / DN 15 to 50 Body Sizes	ERAA01667A0
41	Machine Screw	
	Handwheel Adjustment	
	1/4 NPT Body Size	ERAA01639A0
	1/2 to 1 in. / DN 15 to 25 Body Sizes	ERAA01670A0
	Handwheel Adjustment with Stainless steel Trim	
	1/4 NPT Body Size	ERAA01639A1
	1/2 to 1 in. / DN 15 to 25 Body Sizes	ERAA01670A1
41	Jam Nut (Types MR95HD and MR95HDP, 1-1/2 and 2 in. / DN 40 and 50 Body Sizes only)	
	Handwheel Adjustment	ERAA01688A0
	Handwheel Adjustment with Stainless steel Trim	ERAA01688A1
42	Spring, Stainless steel	ERAA01640A0
43	Washer	
	1/4 NPT Body Size	ERAA01641A0
	1/2 to 2 in. / DN 15 to 50 Body Sizes	ERAA01660A0
44	Washer	
	Handwheel Adjustment	
	1/4 NPT Body Size	ERAA01642A0
	1/2 to 1 in. / DN 15 to 25 Body Sizes	ERAA01671A0
	1-1/2 and 2 in. / DN 40 and 50 Body Sizes	ERAA01689A0
	Handwheel Adjustment with Stainless steel Trim	
	1/4 NPT Body Size	ERAA01642A1
	1/2 to 1 in. / DN 15 to 25 Body Sizes	ERAA01671A1
	1-1/2 and 2 in. / DN 40 and 50 Body Sizes	ERAA01689A1
45*	O-ring (2 required for Types MR95HD and MR95HDP only)	
	For 1-1/2 and 2 in. / DN 40 and 50 only	
	Neoprene (CR) Diaphragm	ERCA00664A0
	Fluorocarbon (FKM) Diaphragm	ERCA00664A1
	Ethylenepropylene (EPDM) Diaphragm	ERCA00664A2
47	NACE Tag	- - - - - - - - - -
48	Tag Wire	- - - - - - - - - -
49	Lockwasher (for 1-1/2 and 2 in. / DN 40 and 50 Body Sizes only)	
	Steel	ERCA00379A0
	Stainless steel	ERCA00379A1
50*	Sealing Washer	
	Sealed Square Head Adjustment	
	1/2 in. / DN 15 Body Size	1V205699012
	3/4 and 1 in. / DN 20 and 25 Body Sizes	11A9681X012
	1-1/2 and 2 in. / DN 40 and 50 Body Sizes	1V424699012
51	Vent, Type Y602-12	
	1-1/2 and 2 in. / DN 40 and 50 Body Sizes only	ERAA02123A0
52	Plug, Stainless steel	ERAA01942A0
62	Adaptor, Stainless steel,	
	3/4 to 1 in. / DN 20 to 25 Body Sizes, Types MR95L and MR95LD:	
	2 gauges - 2 required	ERAA01930A0
	1 gauge - 1 required	ERAA01930A0
63*	Bottom Plug Seal	
	1/4 NPT Body Size	
	Nitrile (NBR)	ERCA03017A0
	Perfluoroelastomer (FFKM)	ERCA03017A3
	Fluorocarbon (FKM)	ERCA03017A1
	Ethylenepropylene (EPDM)	ERCA03017A2
	Graphite	ERCA02976A0

*Recommended spare part
Hastelloy® C is a mark owned by Haynes International, Inc.
Inconel® and Monel® are marks owned by Special Metals Corporation.
1. NACE MR0175-2002 and MR0103.
2. Part meets NACE requirements only for applications in which the part is not exposed to sour gas.

Key 1, Types MR95L and MR95LD Regulator Body Part Numbers

BODY SIZE	END CONNECTION	BODY MATERIAL						
		Gray Cast Iron	WCC Steel	LCC Steel	CF8M Stainless steel(1)	CF3M Stainless steel(1)	Monel®(1)	Hastelloy® C(1)
1/4 in.	NPT	ERCA01629A0	GF04880X022	GF04880X062	GF04880X052	GF04880X042	----------	----------
1/2 in. / DN 15 Without Control Line	NPT	ERCA01658A0	GF04890X022	GF04890X082	GF04890X052	GF04890X042	GF04890X062	GF04890X072
	SWE	----------	GF05405X022	GF05405X062	GF05405X052	GF05405X042	----------	----------
	Welded CL150 RF	----------	ERCA00572A0	ERCA00572A3	ERCA00572A2	ERCA00572A1	----------	----------
	Welded CL300 RF	----------	ERCA00574A0	ERCA00574A3	ERCA00574A2	ERCA00574A1	----------	----------
	Welded PN 16/25/40 RF	----------	ERCA00576A0	ERCA00576A2	----------	ERCA00576A1	----------	----------
1/2 in. / DN 15 With Control Line	NPT	----------	ERAA02167A1	ERAA02167A4	ERAA02167A3	ERAA02167A2	----------	----------
	Welded CL150 RF	----------	ERAA02495A0	ERAA02495A3	ERAA02495A2	ERAA02495A1	----------	----------
	Welded CL300 RF	----------	ERAA02497A0	ERAA02497A3	ERAA02497A2	ERAA02497A1	----------	----------
	Welded PN 16/25/40 RF	----------	ERAA02500A0	ERAA02500A2	----------	ERAA02500A1	----------	----------
3/4 in. / DN 20 Without Gauge Port and Control Line	NPT	ERCA01572A0	GF04818X022	GF04818X082	GF04818X052	GF04818X042	GF04818X062	GF04818X072
	SWE	----------	GF05372X022	GF05372X062	GF05372X052	GF05372X042	----------	----------
	Welded CL150 RF	----------	ERCA00580A0	ERCA00580A3	ERCA00580A2	ERCA00580A1	----------	----------
	Welded CL300 RF	----------	ERCA00584A0	ERCA00584A3	ERCA00584A2	ERCA00584A1	----------	----------
	Welded PN 16/25/40 RF	----------	ERCA00588A0	ERCA00588A2	----------	ERCA00588A1	----------	----------
3/4 in. / DN 20 Without Gauge Port but With Control Line	NPT	----------	ERAA02132A1	ERAA02132A4	ERAA02132A3	ERAA02132A2	----------	----------
	Welded CL150 RF	----------	ERAA02133A0	ERAA02133A3	ERAA02133A2	ERAA02133A1	----------	----------
	Welded CL300 RF	----------	ERAA02134A0	ERAA02134A3	ERAA02134A2	ERAA02134A1	----------	----------
	Welded PN 16/25/40 RF	----------	ERAA02135A0	ERAA02135A2	----------	ERAA02135A1	----------	----------
3/4 in. / DN 20 With Gauge Port but Without Control Line	NPT	ERAA02136A0	ERAA02136A1	ERAA02136A4	ERAA02136A3	ERAA02136A2	----------	----------
	Welded CL150 RF	----------	ERAA02137A0	ERAA02137A3	ERAA02137A2	ERAA02137A1	----------	----------
	Welded CL300 RF	----------	ERAA02138A0	ERAA02138A3	ERAA02138A2	ERAA02138A1	----------	----------
	Welded PN 16/25/40 RF	----------	ERAA02139A0	ERAA02139A2	----------	ERAA02139A1	----------	----------
1 in. / DN 25 Without Gauge Port and Control Line	NPT	ERCA01564A0	GF05370X022	GF05370X082	GF05370X052	GF05370X042	GF05370X062	GF05370X072
	SWE	----------	GF05371X022	GF05371X062	GF05371X052	GF05371X042	----------	----------
	Welded CL150 RF	----------	ERCA00592A0	ERCA00592A3	ERCA00592A2	ERCA00592A1	----------	----------
	Welded CL300 RF	----------	ERCA00596A0	ERCA00596A3	ERCA00596A2	ERCA00596A1	----------	----------
	Welded PN 16/25/40 RF	----------	ERCA03686A0	ERCA03686A2	----------	ERCA03686A1	----------	----------
1 in. / DN 25 Without Gauge Port but With Control Line	NPT	----------	ERAA02140A1	ERAA02140A4	ERAA02140A3	ERAA02140A2	----------	----------
	Welded CL150 RF	----------	ERAA02141A0	ERAA02141A3	ERAA02141A2	ERAA02141A1	----------	----------
	Welded CL300 RF	----------	ERAA02142A0	ERAA02142A3	ERAA02142A2	ERAA02142A1	----------	----------
	Welded PN 16/25/40 RF	----------	ERAA02143A0	ERAA02143A2	----------	ERAA02143A1	----------	----------
1 in. / DN 25 With Gauge Port but Without Control Line	NPT	ERAA02144A0	ERAA02144A1	ERAA02144A4	ERAA02144A3	ERAA02144A2	----------	----------
	Welded CL150 RF	----------	ERAA02145A0	ERAA02145A3	ERAA02145A2	ERAA02145A1	----------	----------
	Welded CL300 RF	----------	ERAA02146A0	ERAA02146A3	ERAA02146A2	ERAA02146A1	----------	----------
	Welded PN 16/25/40 RF	----------	ERAA02147A0	ERAA02147A2	----------	ERAA02147A1	----------	----------

1. Meets the chemical and physical requirements of NACE MR0175-2002 and NACE MR0103.
NOTE: Optional material options are available to meet ANSI/NACE MR0175/ISO 15156, please contact your local Sales Office for special ordering instructions.
Other end connections may be available, please contact your local Sales Office.

- continued -

Key	Description	Part Number
63*	Bottom Plug Seal (continued)	
	1/2 in. / DN 15 Body Size	
	Nitrile (NBR)	ERCA03016A0
	Fluorocarbon (FKM)	ERCA03016A1
	Ethylenepropylene (EPDM)	ERCA03016A2
	Graphite	ERCA02978A0
	3/4 and 1 in. / DN 20 and 25 Body Sizes	
	Nitrile (NBR)	ERCA00628A0
	Perfluoroelastomer (FFKM)	ERCA00628A3
	Fluorocarbon (FKM)	ERCA00628A1
	Ethylenepropylene (EPDM)	ERCA00628A2
	Graphite	ERCA00517A0
	1-1/2 and 2 in. / DN 40 and 50 Body Sizes	
	Nitrile (NBR)	ERCA00630A0
	Perfluoroelastomer (FFKM)	ERCA00630A3
	Fluorocarbon (FKM)	ERCA00630A1
	Ethylenepropylene (EPDM)	ERCA00630A2
	Graphite	ERCA01407A0
64	Flow Arrow	----------
65	Pipe Plug, (3/4 to 2 in. / DN 20 to 50 Body Sizes), (Type MR95HT, 2 required) (Other Types with 1 gauge, 1 required)	
	Steel	ERAA03130A0
	Stainless steel	ERAA03131A0
66	Inlet Pressure Gauge (3/4 to 2 in. / DN 20 to 50 Body Sizes)	
	0 to 160 psi / 0 to 11 bar	
	Brass	11B8579X042
	Stainless steel	ERAA03132A3
	0 to 300 psi / 0 to 20 bar	
	Brass	11B8579X052
	Stainless steel	ERAA03132A4
	0 to 600 psi / 0 to 40 bar	
	Brass	11B8579X102
	Stainless steel	ERAA03132A5
	0 to 1000 psi / 0 to 68 bar	
	Brass	11B8579X112
	Stainless steel	ERAA03132A6

*Recommended spare part
Monel® is a mark owned by Special Metals Corporation.
Hastelloy® C is a mark owned by Haynes International, Inc.

Key 1, Types MR95H, MR95HD, MR95HDP, MR95HP and MR95HT Regulator Body Part Numbers

BODY SIZE	END CONNECTION	BODY MATERIAL							
		Gray Cast Iron	WCC Steel	LCC Steel	CF8M Stainless steel[1]	CF3M Stainless steel[1]	Monel®[1]	Hastelloy® C[1]	Aluminum-Bronze[1]
1/4 in.	NPT	ERCA01628A0[2]	GF04858X022	GF04858X062	GF04858X052	GF04858X042	----------	----------	----------
1/2 in. / DN 15 Without Control Line	NPT	ERCA01657A0[2]	GF04837X022	GF04837X082	GF04837X052	GF04837X042	GF04837X062	GF04837X072	----------
	SWE	----------	GF05408X022	GF05408X062	GF05408X052	GF05408X042	----------	----------	----------
	Welded CL150 RF	----------	ERCA00573A0	ERCA00573A3	ERCA00573A2	ERCA00573A1	----------	----------	----------
	Welded CL300 RF	----------	ERCA00575A0	ERCA00575A3	ERCA00575A2	ERCA00575A1	----------	----------	----------
	Welded CL600 RF	----------	ERAA01758A0	ERAA01758A3	ERAA01758A2	ERAA01758A1	----------	----------	----------
	Welded PN 16/25/40 RF	----------	ERCA00577A0	ERCA00577A2	----------	ERCA00577A1	----------	----------	----------
	Integral CL150 RF	----------	----------	----------	----------	ERAA02397A3	ERAA02397A4	ERAA02397A5	ERAA02397A6
	Integral CL300 RF	----------	----------	----------	----------	ERAA02398A3	ERAA02398A4	ERAA02398A5	ERAA02398A6
	Integral CL600 RF	----------	----------	----------	----------	ERAA02399A3	ERAA02399A4	ERAA02399A5	ERAA02399A6
	Integral PN 16/25/40 RF	----------	----------	----------	----------	ERAA02408A3	ERAA02408A4	ERAA02408A5	ERAA02408A6
1/2 in. / DN 15 With Control Line	NPT	----------	ERCA00528A1[3]	ERCA00528A5[3]	ERCA00528A4[3]	ERCA00528A3[3]	----------	----------	----------
	Welded CL150 RF	----------	ERAA02496A0[3]	ERAA02496A3[3]	ERAA02496A2[3]	ERAA02496A1[3]	----------	----------	----------
	Welded CL300 RF	----------	ERAA02498A0[3]	ERAA02498A3[3]	ERAA02498A2[3]	ERAA02498A1[3]	----------	----------	----------
	Welded CL600 RF	----------	ERAA02499A0[3]	ERAA02499A3[3]	ERAA02499A2[3]	ERAA02499A1[3]	----------	----------	----------
	Welded PN 16/25/40 RF	----------	ERAA02501A0[3]	ERAA02501A2[3]	----------	ERAA02501A1[3]	----------	----------	----------
3/4 in. / DN 20 Without Gauge Port and Control Line	NPT	ERCA01571A0[2]	GF04817X022	GF04817X082	GF04817X052	GF04817X042	GF04817X062	GF04817X072	----------
	SWE	----------	GF05368X022	GF05368X062	GF05368X052	GF05368X042	----------	----------	----------
	Welded CL150 RF	----------	ERCA00581A0	ERCA00581A3	ERCA00581A2	ERCA00581A1	----------	----------	----------
	Welded CL300 RF	----------	ERCA00585A0	ERCA00585A3	ERCA00585A2	ERCA00585A1	----------	----------	----------
	Welded CL600 RF	----------	ERAA01749A0	ERAA01749A3	ERAA01749A2	ERAA01749A1	----------	----------	----------
	Welded PN 16/25/40 RF	----------	ERCA00589A0	ERCA00589A2	----------	ERCA00589A1	----------	----------	----------
3/4 in. / DN 20 Without Gauge Port but With Control Line	NPT	----------	ERCA00536A1	ERCA00536A5	ERCA00536A4	ERCA00536A3	----------	----------	----------
	Welded CL150 RF	----------	ERCA00582A0	ERCA00582A3	ERCA00582A2	ERCA00582A1	----------	----------	----------
	Welded CL300 RF	----------	ERCA00586A0	ERCA00586A3	ERCA00586A2	ERCA00586A1	----------	----------	----------
	Welded PN 16/25/40 RF	----------	ERCA00590A0	ERCA00590A2	----------	ERCA00590A1	----------	----------	----------
3/4 in. / DN 20 With Gauge Port but Without Control Line	NPT	ERCA00537A0[2]	ERCA00537A1	ERCA00537A5	ERCA00537A4	ERCA00537A3	----------	----------	----------
	Welded CL150 RF	----------	ERCA00583A0	ERCA00583A3	ERCA00583A2	ERCA00583A1	----------	----------	----------
	Welded CL300 RF	----------	ERCA00587A0	ERCA00587A3	ERCA00587A2	ERCA00587A1	----------	----------	----------
	Welded PN 16/25/40 RF	----------	ERCA00591A0	ERCA00591A2	----------	ERCA00591A1	----------	----------	----------

1. Meets the chemical and physical requirements of NACE MR0175-2002 and NACE MR0103.
2. For Types MR95H, MR95HD and MR95HDP only.
3. Not available for Type MR95HT.

NOTE: Optional material options are available to meet ANSI/NACE MR0175/ISO 15156, please contact your local Sales Office for special ordering instructions. Other end connections may be available, please contact your local Sales Office.

- continued -

Key	Description	Part Number
67	Outlet Pressure Gauge (3/4 to 2 in. / DN 20 to 50 Body Sizes)	
	0 to 15 psi / 0 to 1 bar	
	Brass	11B8579X012
	Stainless steel	ERAA03132A0
	0 to 30 psi / 0 to 2 bar	
	Brass	11B8579X022
	Stainless steel	ERAA03132A1
	0 to 60 psi / 0 to 4 bar	
	Brass	11B8579X032
	Stainless steel	ERAA03132A2
67	Outlet Pressure Gauge (continued) (3/4 to 2 in. / DN 20 to 50 Body Sizes) (continued)	
	0 to 160 psi / 0 to 11 bar	
	Brass	11B8579X042
	Stainless steel	ERAA03132A3
	0 to 300 psi / 0 to 20 bar	
	Brass	11B8579X052
	Stainless steel	ERAA03132A4
	0 to 600 psi / 0 to 40 bar	
	Brass	11B8579X102
	Stainless steel	ERAA03132A5
69	ATEX Tag	----------
70	PED Tag	----------

Monel® is a mark owned by Special Metals Corporation.
Hastelloy® C is a mark owned by Haynes International, Inc.

Key 1, Types MR95H, MR95HD, MR95HDP, MR95HP and MR95HT Regulator Body Part Numbers

BODY SIZE	END CONNECTION	BODY MATERIAL							
		Gray Cast Iron	WCC Steel	LCC Steel	CF8M Stainless Steel[1]	CF3M Stainless steel[1]	Monel®[1]	Hastelloy® C[1]	Aluminum-Bronze[1]
1 in. / DN 25 Without Gauge Port and Control Line	NPT	ERCA01563A0[2]	GF05235X022	GF05235X082	GF05235X052	GF05235X042	GF05235X062	GF05235X072	----------
	SWE	----------	GF05367X022	GF05367X062	GF05367X052	GF05367X042	----------	----------	----------
	Welded CL150 RF	----------	ERCA00593A0	ERCA00593A3	ERCA00593A2	ERCA00593A1	----------	----------	----------
	Welded CL300 RF	----------	ERCA00597A0	ERCA00597A3	ERCA00597A2	ERCA00597A1	----------	----------	----------
	Welded CL600 RF	----------	ERAA01750A0	ERAA01750A3	ERAA01750A2	ERAA01750A1	----------	----------	----------
	Welded PN 16/25/40 RF	----------	ERAA01790A0	ERAA01790A2	----------	ERCA01790A1	----------	----------	----------
	Integral CL150 RF	----------	----------	----------	----------	ERCA00551A2	ERCA00551A4	ERCA00551A5	ERCA00551A6
	Integral CL300 RF	----------	----------	----------	----------	ERCA00552A2	ERCA00552A4	ERCA00552A5	ERCA00552A6
	Integral CL600 RF	----------	----------	----------	----------	ERAA01752A2	ERAA01752A4	ERAA01752A5	ERAA01752A6
	Integral PN 16/25/40 RF	----------	----------	----------	----------	ERCA00555A2	ERCA00555A4	ERCA00555A5	ERCA00555A6
1 in. / DN 25 Without Gauge Port but with Control Line	NPT	----------	ERCA00546A1	ERCA00546A5	ERCA00546A4	ERCA00546A3	----------	----------	----------
	Welded CL150 RF	----------	ERCA00594A0	ERCA00594A3	ERCA00594A2	ERCA00594A1	----------	----------	----------
	Welded CL300 RF	----------	ERAA02148A0	ERAA02148A3	ERAA02148A2	ERAA02148A1	----------	----------	----------
	Welded PN 16/25/40 RF	----------	ERAA02149A0	ERAA02149A2	----------	ERAA02149A1	----------	----------	----------
1 in. / DN 25 With Gauge Port but Without Control Line	NPT	ERCA00547A0[2]	ERCA00547A1	ERCA00547A5	ERCA00547A4	ERCA00547A3	----------	----------	----------
	Welded CL150 RF	----------	ERCA00595A0	ERCA00595A3	ERCA00595A2	ERCA00595A1	----------	----------	----------
	Welded CL300 RF	----------	ERAA02150A0	ERAA02150A3	ERAA02150A2	ERAA02150A1	----------	----------	----------
	Welded PN 16/25/40 RF	----------	ERAA02151A0	ERAA02151A2	----------	ERAA02151A1	----------	----------	----------
1-1/2 in. / DN 40 Without Gauge Port and Control Line	NPT	ERCA01591A0[2]	GF05411X022	GF05411X082	GF05411X052	GF05411X042	GF05411X062	GF05411X072	----------
	SWE	----------	GF05413X022	GF05413X062	GF05413X052	GF05413X042	----------	----------	----------
	Welded CL150 RF	----------	ERAA01760A0	ERAA01760A3	ERAA01760A2	ERAA01760A1	----------	----------	----------
	Welded CL300 RF	----------	ERAA01761A0	ERAA01761A3	ERAA01761A2	ERAA01761A1	----------	----------	----------
	Welded CL600 RF	----------	ERAA01783A0	ERAA01784A3	ERAA01783A2	ERAA01783A1	----------	----------	----------
	Welded PN 16/25/40 RF	----------	ERAA01762A0	ERAA01762A2	----------	ERAA01762A1	----------	----------	----------
1-1/2 in. / DN 40 Without Gauge Port but With Control Line	NPT	----------	ERCA00559A1[3]	ERCA00559A5[3]	ERCA00559A4[3]	ERCA00559A3[3]	----------	----------	----------
	Welded CL150 RF	----------	ERAA02368A0[3]	ERAA02368A3[3]	ERAA02368A2[3]	ERAA02368A1[3]	----------	----------	----------
	Welded CL300 RF	----------	ERAA02369A0[3]	ERAA02369A3[3]	ERAA02369A2[3]	ERAA02369A1[3]	----------	----------	----------
	Welded PN 16/25/40 RF	----------	ERAA02370A0[3]	ERAA02370A2[3]	----------	ERAA02370A1[3]	----------	----------	----------
1-1/2 in. / DN 40 With Gauge Port but Without Control Line	NPT	ERCA00560A0[2]	ERCA00560A1	ERCA00560A5	ERCA00560A4	ERCA00560A3	----------	----------	----------
	Welded CL150 RF	----------	ERAA02374A0	ERAA02374A3	ERAA02374A2	ERAA02374A1	----------	----------	----------
	Welded CL300 RF	----------	ERAA02375A0	ERAA02375A3	ERAA02375A2	ERAA02375A1	----------	----------	----------
	Welded PN 16/25/40 RF	----------	ERAA02376A0	ERAA02376A2	----------	ERAA02376A1	----------	----------	----------

1. Meets the chemical and physical requirements of NACE MR0175-2002 and NACE MR0103.
2. For Types MR95H, MR95HD and MR95HDP only.
3. Not available for Type MR95HT.

NOTE: Optional material options are available to meet ANSI/NACE MR0175/ISO 15156, please contact your local Sales Office for special ordering instructions. Other end connections may be available, please contact your local Sales Office.

- continued -

Monel® is a mark owned by Special Metals Corporation.
Hastelloy® C is a mark owned by Haynes International, Inc.

Key 1, Types MR95H, MR95HD, MR95HDP, MR95HP and MR95HT Regulator Body Part Numbers

BODY SIZE	END CONNECTION	BODY MATERIAL							
		Gray Cast Iron	WCC Steel	LCC Steel	CF8M Stainless steel(1)	CF3M Stainless steel(1)	Monel®(1)	Hastelloy® C(1)	Aluminum-Bronze(1)
2 in. / DN 50 Without Gauge Port and Control Line	NPT	ERCA01590A0(2)	GF05290X022	GF05290X082	GF05290X052	GF05290X042	GF05290X062	GF05290X072	- - - - - - - - - - -
	SWE	- - - - - - - - - - -	GF05412X022	GF05412X062	GF05412X052	GF05412X042	- - - - - - - - - - -	- - - - - - - - - - -	- - - - - - - - - - -
	Welded CL150 RF	- - - - - - - - - - -	ERAA01766A0	ERAA01766A3	ERAA01766A2	ERAA01766A1	- - - - - - - - - - -	- - - - - - - - - - -	- - - - - - - - - - -
	Welded CL300 RF	- - - - - - - - - - -	ERAA01767A0	ERAA01767A3	ERAA01767A2	ERAA01767A1	- - - - - - - - - - -	- - - - - - - - - - -	- - - - - - - - - - -
	Welded CL600 RF	- - - - - - - - - - -	ERAA01784A0	ERAA01784A3	ERAA01784A2	ERAA01784A1	- - - - - - - - - - -	- - - - - - - - - - -	- - - - - - - - - - -
	Welded PN 16/25/40 RF	- - - - - - - - - - -	ERAA01768A0	ERAA01768A2	- - - - - - - - - - -	ERAA01768A1	- - - - - - - - - - -	- - - - - - - - - - -	- - - - - - - - - - -
	Integral CL150 RF	- - - - - - - - - - -	- - - - - - - - - - -	- - - - - - - - - - -	- - - - - - - - - - -	ERCA00567A2	ERCA00567A4	ERCA00567A5	ERCA00567A6
	Integral CL300 RF	- - - - - - - - - - -	- - - - - - - - - - -	- - - - - - - - - - -	- - - - - - - - - - -	ERCA00568A2	ERCA00568A4	ERCA00568A5	ERCA00568A6
	Integral CL600 RF	- - - - - - - - - - -	- - - - - - - - - - -	- - - - - - - - - - -	- - - - - - - - - - -	ERAA01764A2	ERAA01764A4	ERAA01764A5	ERAA01764A6
	Integral PN 16/25/40 RF	- - - - - - - - - - -	- - - - - - - - - - -	- - - - - - - - - - -	- - - - - - - - - - -	ERCA00569A2	ERCA00569A4	ERCA00569A5	ERCA00569A6
2 in. / DN 50 Without Gauge Port but With Control Line	NPT	- - - - - - - - - - -	ERCA00565A1(3)	ERCA00565A5(3)	ERCA00565A4(3)	ERCA00565A3(3)	- - - - - - - - - - -	- - - - - - - - - - -	- - - - - - - - - - -
	Welded CL150 RF	- - - - - - - - - - -	ERAA02371A0(3)	ERAA02371A3(3)	ERAA02371A2(3)	ERAA02371A1(3)	- - - - - - - - - - -	- - - - - - - - - - -	- - - - - - - - - - -
	Welded CL300 RF	- - - - - - - - - - -	ERAA02372A0(3)	ERAA02372A3(3)	ERAA02372A2(3)	ERAA02372A1(3)	- - - - - - - - - - -	- - - - - - - - - - -	- - - - - - - - - - -
	Welded PN 16/25/40 RF	- - - - - - - - - - -	ERAA02373A0(3)	ERAA02373A2(3)	- - - - - - - - - - -	ERAA02373A1(3)	- - - - - - - - - - -	- - - - - - - - - - -	- - - - - - - - - - -
2 in. / DN 50 With Gauge Port but Without Control Line	NPT	ERCA00566A0(2)	ERCA00566A1	ERCA00566A5	ERCA00566A4	ERCA00566A3	- - - - - - - - - - -	- - - - - - - - - - -	- - - - - - - - - - -
	Welded CL150 RF	- - - - - - - - - - -	ERAA02377A0	ERAA02377A3	ERAA02377A2	ERAA02377A1	- - - - - - - - - - -	- - - - - - - - - - -	- - - - - - - - - - -
	Welded CL300 RF	- - - - - - - - - - -	ERAA02378A0	ERAA02378A3	ERAA02378A2	ERAA02378A1	- - - - - - - - - - -	- - - - - - - - - - -	- - - - - - - - - - -
	Welded PN 16/25/40 RF	- - - - - - - - - - -	ERAA02379A0	ERAA01768A2	- - - - - - - - - - -	ERAA02379A1	- - - - - - - - - - -	- - - - - - - - - - -	- - - - - - - - - - -

1. Meets the chemical and physical requirements of NACE MR0175-2002 and NACE MR0103.
2. For Types MR95H, MR95HD and MR95HDP only.
3. Not available for Type MR95HT.

NOTE: Optional material options are available to meet ANSI/NACE MR0175/ISO 15156, please contact your local Sales Office for special ordering instructions.
Other end connections may be available, please contact your local Sales Office.

Key 2, Spring Case Part Numbers

TYPE	BODY SIZE		STYLE	SPRING CASE MATERIAL					
	In.	DN		Gray Cast Iron	WCC Steel	LCC Steel	CF8M Stainless steel(1)	Monel®	Hastelloy® C
MR95L	1/4 NPT	- - - -	Drilled Hole **(standard)**	ERCA03546A0	ERCA02874A0(2)	ERCA02874A3(2)	ERCA02874A2	- - - - - - - - - - -	- - - - - - - - - - -
			1/4 NPT Vent	ERCA00609A1	ERAA01872A2(2)	ERAA01872A4(2)	ERAA01872A3	- - - - - - - - - - -	- - - - - - - - - - -
	1/2	15	Drilled Hole **(standard)**	ERCA03564A0	ERCA02883A0(2)	ERCA02883A3(2)	ERCA02883A2	- - - - - - - - - - -	- - - - - - - - - - -
			1/4 NPT Vent	ERCA00615A0	ERAA01885A0(2)	ERAA01885A4(2)	ERAA01885A1	ERAA01885A2(1)	ERAA01885A3(1)
	3/4 and 1	20 and 25	Drilled Hole **(standard)**	ERCA03497A0	ERCA02908A0(2)	ERCA02908A3(2)	ERCA02908A2	- - - - - - - - - - -	- - - - - - - - - - -
			1/4 NPT Vent	ERCA00623A0	ERCA00621A2(2)	ERCA00621A6(2)	ERCA00621A3	ERCA00621A4(1)	ERCA00621A5(1)
MR95LD	1/4 NPT	- - - -	1/4 NPT Vent **(standard)**	- - - - - - - - - - -	ERCA03517A0	ERCA03517A3	ERCA03517A2	- - - - - - - - - - -	- - - - - - - - - - -
	1/2	15	1/4 NPT Vent **(standard)**	- - - - - - - - - - -	ERCA03531A0	ERCA03531A3	ERCA03531A2	- - - - - - - - - - -	- - - - - - - - - - -
	3/4 and 1	20 and 25	1/4 NPT Vent **(standard)**	- - - - - - - - - - -	ERCA04405A0	ERCA04405A2	ERCA04405A1	- - - - - - - - - - -	- - - - - - - - - - -
MR95H, MR95HP and MR95HT	1/4 NPT	- - - -	Drilled Hole **(standard)**	ERCA03544A0(3)	ERCA02872A0(2)	ERCA02872A3(2)	ERCA02872A2	- - - - - - - - - - -	- - - - - - - - - - -
			1/4 NPT Vent	ERCA00610A1(3)	ERAA01873A2(2)	ERAA01873A4(2)	ERAA01873A3	- - - - - - - - - - -	- - - - - - - - - - -
	1/2	15	Drilled Hole **(standard)**	ERCA03562A0(3)	ERCA02881A0(2)	ERCA02881A3(2)	ERCA02881A2	- - - - - - - - - - -	- - - - - - - - - - -
			1/4 NPT Vent	ERCA00616A0(3)	ERAA01886A0(2)	ERAA01886A4(2)	ERAA01886A1	ERAA01886A2(1)	ERAA01886A3(1)
	3/4 and 1	20 and 25	Drilled Hole **(standard)**	ERCA03496A0(3)	ERCA02907A0(2)	ERCA02907A3(2)	ERCA02907A2	- - - - - - - - - - -	- - - - - - - - - - -
			1/4 NPT Vent	ERCA00624A0(3)	ERCA00622A2(2)	ERCA00622A6(2)	ERCA00622A3	ERCA00622A4(1)	ERCA00622A5(1)
	1-1/2 and 2	40 and 50	1/4 NPT Vent	ERCA03641A0(3)	ERCA02900A0(2)	ERCA02900A5(2)	ERCA02900A2	ERCA02900A3(1)	ERCA02900A4(1)
MR95HD and MR95HDP	1/4 NPT	- - - -	1/4 NPT Vent **(standard)**	- - - - - - - - - - -	ERCA03515A0	ERCA03515A3	ERCA03515A2	- - - - - - - - - - -	- - - - - - - - - - -
	1/2	15	1/4 NPT Vent **(standard)**	- - - - - - - - - - -	ERCA03529A0	ERCA03529A3	ERCA03529A2	- - - - - - - - - - -	- - - - - - - - - - -
	3/4 and 1	20 and 25	1/4 NPT Vent **(standard)**	- - - - - - - - - - -	ERCA03499A0	ERCA03499A3	ERCA03499A2	- - - - - - - - - - -	- - - - - - - - - - -
	1-1/2 and 2	40 and 50	1/4 NPT Vent **(standard)**	- - - - - - - - - - -	ERCA03691A0	ERCA03691A3	ERCA03691A2	- - - - - - - - - - -	- - - - - - - - - - -

1. Meets the chemical and physical requirements of NACE MR0175-2002 and NACE MR0103 except for 1/4 NPT vent **(standard)** style for 1/4 NPT body.
2. WCC and LCC spring cases meet NACE MR0175-2002 and NACE MR0103 requirements only for applications in which the spring case is not exposed to the sour gas.
3. Available for Type MR95H only.

NOTE: Optional material options are available to meet ANSI/NACE MR0175/ISO 15156, please contact your local Sales Office for special ordering instructions.

Monel® is a mark owned by Special Metals Corporation.
Hastelloy® C is a mark owned by Haynes International, Inc.

Key 3, Reduced Orifice Part Numbers

BODY SIZE		SEAT TYPE	ORIFICE MATERIAL				
In.	DN		Brass	416 Stainless steel	316 Stainless steel[1]	Monel®[1]	Hastelloy® C[1]
1/4		Composition seat	ERAA07702A0	ERAA07702A1	ERAA07702A2	ERAA07702A3	ERAA07702A4
1/2	15		ERAA07695A0	ERAA07695A1	ERAA07695A2	ERAA07695A3	ERAA07695A4
3/4 to 1	20 to 25		ERAA07700A0	ERAA07700A1	ERAA07700A2	ERAA07700A3	ERAA07700A4
1-1/2 to 2	40 to 50		ERAA07698A0	ERAA07698A1	ERAA07698A2	ERAA07698A3	ERAA07698A4
1/4		Metal-to-metal seat	- - - - - - - - - - -	ERAA07701A0	ERAA07701A1	ERAA07701A2	ERAA07701A3
1/2	15		- - - - - - - - - - -	ERAA07694A0	ERAA07694A1	ERAA07694A2	ERAA07694A3
3/4 to 1	20 to 25		- - - - - - - - - - -	ERAA07699A0	ERAA07699A1	ERAA07699A2	ERAA07699A3
1-1/2 to 2	40 to 50		- - - - - - - - - - -	ERAA07697A0	ERAA07697A1	ERAA07697A2	ERAA07697A3

1. Meets the chemical and physical requirements of NACE MR0175-2002 and NACE MR0103.
NOTE: Optional material options are available to meet ANSI/NACE MR0175/ISO 15156, please contact your local Sales Office for special ordering instructions.
Other end connections may be available, please contact your local Sales Office.

Key 4, Valve Plug, Metal Seat

TYPE	MATERIAL[1]	BODY SIZE, IN. / DN			
		1/4 NPT	1/2 / 15	3/4 and 1 / 20 and 25	1-1/2 and 2 / 40 and 50[2]
MR95L, MR95LD, MR95H, MR95HD, MR95HDP and MR95HT	416 Stainless steel	ERCA00360A0	ERCA00287A0	GF05476X022	ERCA00375A0
	316 Stainless steel	ERCA00360A1	ERCA00287A1	GF05476X032	ERCA00375A1
	Hastelloy® C	ERCA00360A3	ERCA00287A3	GF05476X052	ERCA00375A3
	Monel®	ERCA00360A2	ERCA00287A2	GF05476X042	ERCA00375A2
	Alloy 6	- - - - - - - - - - -	ERCA00287A4	GF05476X062	ERCA00375A4

1. Hastelloy® C and Monel® are not available for Type MR95HT.
2. For Types MR95H, MR95HD, MR95HDP and MR95HT only.

Key 4, Disk Holder Assembly, Composition Seat

TYPE	MATERIAL	BODY SIZE, IN. / DN			
		1/4 NPT	1/2 / 15	3/4 and 1 / 20 and 25	1-1/2 and 2 / 40 and 50[4]
Nitrile (NBR) Seat					
MR95L,MR95LD, MR95H, MR95HD and MR95HDP	Brass	- - - - - - - - - - -	ERCA00635A3	ERCA00636A3	ERCA00637A3
	316 Stainless steel	ERCA00634A5[1]	ERCA00635A5[1]	ERCA00636A5[1]	ERCA00637A5[1]
	416 Stainless steel	ERCA00634A4	ERCA00635A4	ERCA00636A4	ERCA00637A4
MR95HP	316 Stainless steel	ERAA01901A1[1]	ERAA01905A1[2]	ERAA01892A1[1]	ERCA00637A5[1]
	416 Stainless steel	ERAA01901A0	ERAA01905A0	ERAA01892A0	ERCA00637A4
Fluorocarbon (FKM) Seat					
MR95L,MR95LD, MR95H, MR95HD and MR95HDP	Brass	- - - - - - - - - - -	ERCA00635A9[3]	ERCA00636A9[3]	ERCA00637A9[3]
	316 Stainless steel	ERCA00634B1[1][3]	ERCA00635B1[1]	ERCA00636B1[1]	ERCA00637B1[1]
	416 Stainless steel	ERCA00634B0	ERCA00635B0	ERCA00636B0	ERCA00637B0
	Monel®	ERCA00634B2	ERCA00635B2	ERCA00636B2	ERCA00637B2
MR95HP	316 Stainless steel	ERAA01901A2[1]	ERAA01905A2[2]	ERAA01892A2[1]	ERCA00637B1[1]
	416 Stainless steel	ERAA01901A3	ERAA01905A3	ERAA01892A3	ERCA00637B0
Perfluoroelastomer (FFKM) Seat					
MR95L,MR95LD, MR95H, MR95HD and MR95HDP	316 Stainless steel	ERCA00634B9	ERCA00635B9	ERCA00636B9	ERCA00637B9
Polytetrafluoroethylene (PTFE) Seat					
MR95L, MR95LD, MR95H and MR95HD	Brass	- - - - - - - - - - -	ERCA00635B4	ERCA00636B4	ERCA00637B4
	316 Stainless steel	ERCA00634B6	ERCA00635B6	ERCA00636B6	ERCA00637B6
	416 Stainless steel	ERCA00634B5	ERCA00635B5	ERCA00636B5	ERCA00637B5
Ethylenepropylene (EPDM) Seat					
MR95L,MR95LD, MR95H, MR95HD and MR95HDP	416 Stainless steel	ERCA00634A7	ERCA00635A7	ERCA00636A7	ERCA00637A7

1. NACE MR0175-2002 and MR0103.
2. NACE MR0175-2002.
3. Oxygen Service
4. Not available for Types MR95L and MR95LD.
NOTE: Optional material options are available to meet ANSI/NACE MR0175/ISO 15156, please contact your local Sales Office for special ordering instructions.

Monel® is a mark owned by Special Metals Corporation.
Hastelloy® C is a mark owned by Haynes International, Inc.

Key 12, Composition Diaphragm, NACE MR0175-2002 and NACE MR0103*

TYPE	BODY SIZE		DIAPHRAGM MATERIAL		
	In.	DN	Neoprene (CR)	Fluorocarbon (FKM) (2 required)	Ethylenepropylene (EPDM)
MR95L and MR95LD	1/4 NPT	- - - -	ERCA00675A0	ERCA00675A1(1)	ERCA00675A2(1)
	1/2	15	ERCA00509A0	ERCA00509A1	ERCA00509A2
	3/4 and 1	20 and 25	ERCA00599A0	ERCA00599A1	ERCA00599A2
MR95H, MR95HD, MR95HDP and MR95HP	1/4 NPT	- - - -	ERCA00672A0	ERCA00672A1(1)	ERCA00672A2(1)
	1/2	15	ERCA00507A0	ERCA00507A1	ERCA00507A2
	3/4 and 1	20 and 25	ERCA00515A0	ERCA00515A1	ERCA00515A2
	1-1/2 and 2	40 and 50	ERCA00661A0	ERCA00661A1	ERCA00661A2

1. Only one diaphragm is needed for regulators with 1/4 NPT body size. See Table 7.
*Recommended spare part.
NOTE: Optional material options are available to meet ANSI/NACE MR0175/ISO 15156, please contact your local Sales Office for special ordering instructions.

Key 12, Metal Diaphragm*

TYPE	BODY SIZE		DIAPHRAGM MATERIAL (2 REQUIRED)			
	In.	DN	302 Stainless steel	302 Stainless steel (Oxygen Service)	Monel®	Hastelloy® C
MR95L	1/4 NPT	- - - -	ERCA00654A0(1)	ERCA00654A1(1)	ERCA00654A2(1)	ERCA00654A3(1)
	1/2	15	ERCA00490A0	ERCA00490A1	ERCA00490A2	ERCA00490A3
	3/4 and 1	20 and 25	ERCA00557A0	ERCA00557A1	ERCA00557A2	ERCA00557A3
MR95H	1/4 NPT	- - - -	ERCA00647A0	ERCA00647A1	ERCA00647A2	ERCA00647A3
	1/2	15	ERCA00459A0	ERCA00459A1	ERCA00459A2	ERCA00459A3
	3/4 and 1	20 and 25	ERCA00511A0	ERCA00511A1	ERCA00511A2	ERCA00511A3
	1-1/2 and 2	40 and 50	ERCA00527A0	ERCA00527A1	ERCA00527A2	ERCA00527A3
MR95LD	1/4 NPT	- - - -	ERCA00654A0(1)	- - - - - - - - - - -	ERCA00654A2(1)	ERCA00654A3(1)
	1/2	15	ERCA00490A0	- - - - - - - - - - -	ERCA00490A2	ERCA00490A3
	3/4 and 1	20 and 25	ERCA00557A0	- - - - - - - - - - -	ERCA00557A2	ERCA00557A3
MR95HD, MR95HDP and MR95HT	1/4 NPT	- - - -	ERCA00647A0	- - - - - - - - - - -	ERCA00647A2	ERCA00647A3
	1/2	15	ERCA00459A0	- - - - - - - - - - -	ERCA00459A2	ERCA00459A3
	3/4 and 1	20 and 25	ERCA00511A0	- - - - - - - - - - -	ERCA00511A2	ERCA00511A3
	1-1/2 and 2	40 and 50	ERCA00527A0	- - - - - - - - - - -	ERCA00527A2	ERCA00527A3

1. Only one metal diaphragm is needed for Types MR95L and MR95LD with 1/4 NPT body size and 2 to 6 psi / 0.14 to 0.41 bar spring range. See Table 7.
*Recommended spare part.

Monel® is a mark owned by Special Metals Corporation.
Hastelloy® C is a mark owned by Haynes International, Inc.

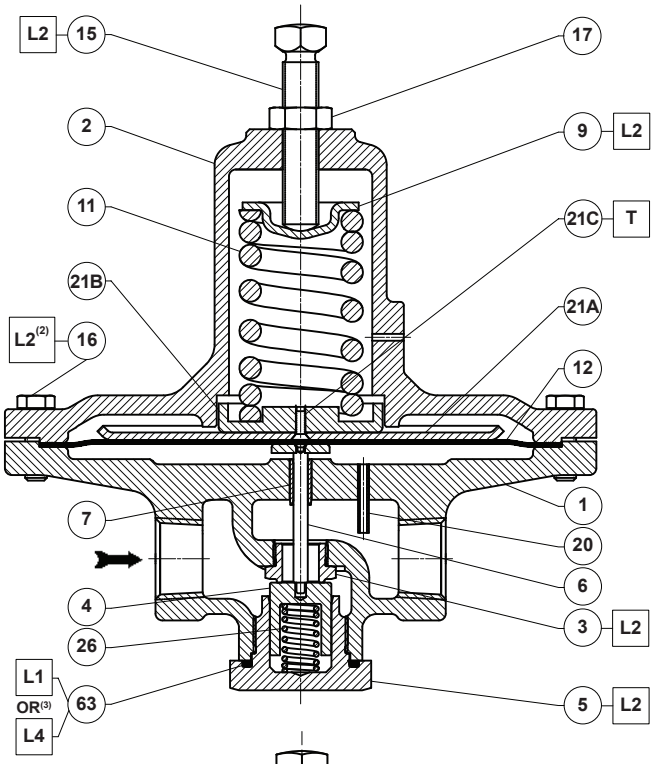

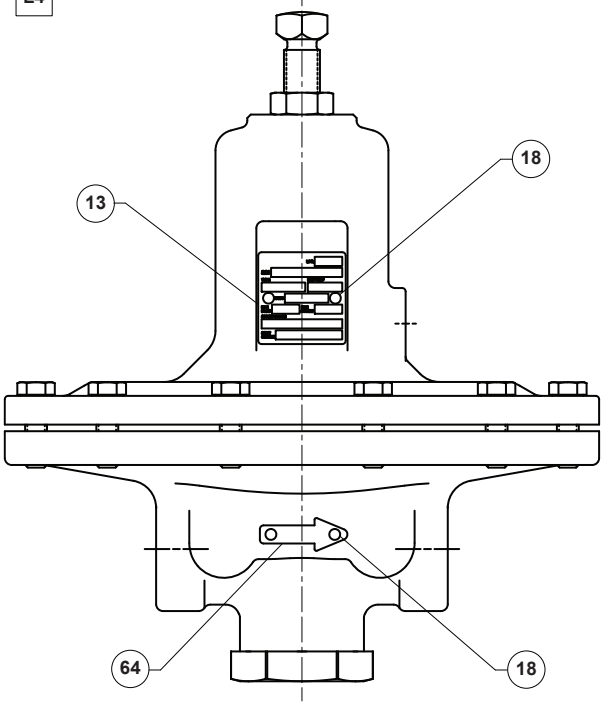

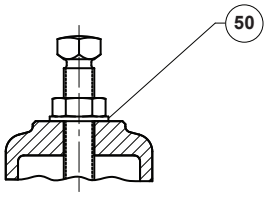

SEALED ADJUSTING SCREW OPTION

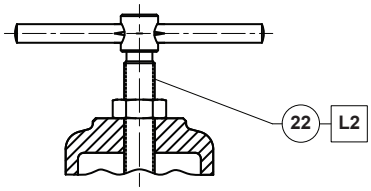

TEE-HANDLE OPTION

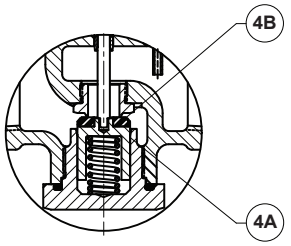

COMPOSITE SEAT OPTION

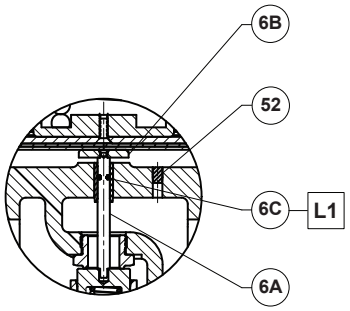

CONTROL LINE OPTION

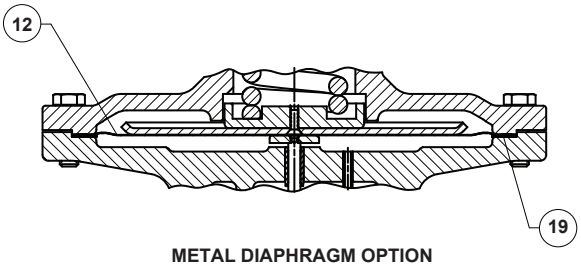

METAL DIAPHRAGM OPTION

GF04915

☐ **APPLY LUBRICANT OR SEALANT(1):**
T = THREAD LOCKER
L1 = GENERAL PURPOSE PTFE OR LITHIUM GREASE
L2 = ANTI-SEIZE COMPOUND
L4 = GRAPHITE SEALANT

1. Lubricants and sealants must be selected such that they meet the temperature requirements.
2. Apply L2 (anti-seize compound) on key 16 for stainless steel bolts.
3. Apply L4 (graphite sealant) instead of L1 (general purpose PTFE or lithium grease) on key 63 for graphite ring.

Figure 6. *Type MR95L, 1/4 NPT and 1/2 to 1 in. / DN 15 to 25 Body Sizes Assembly*

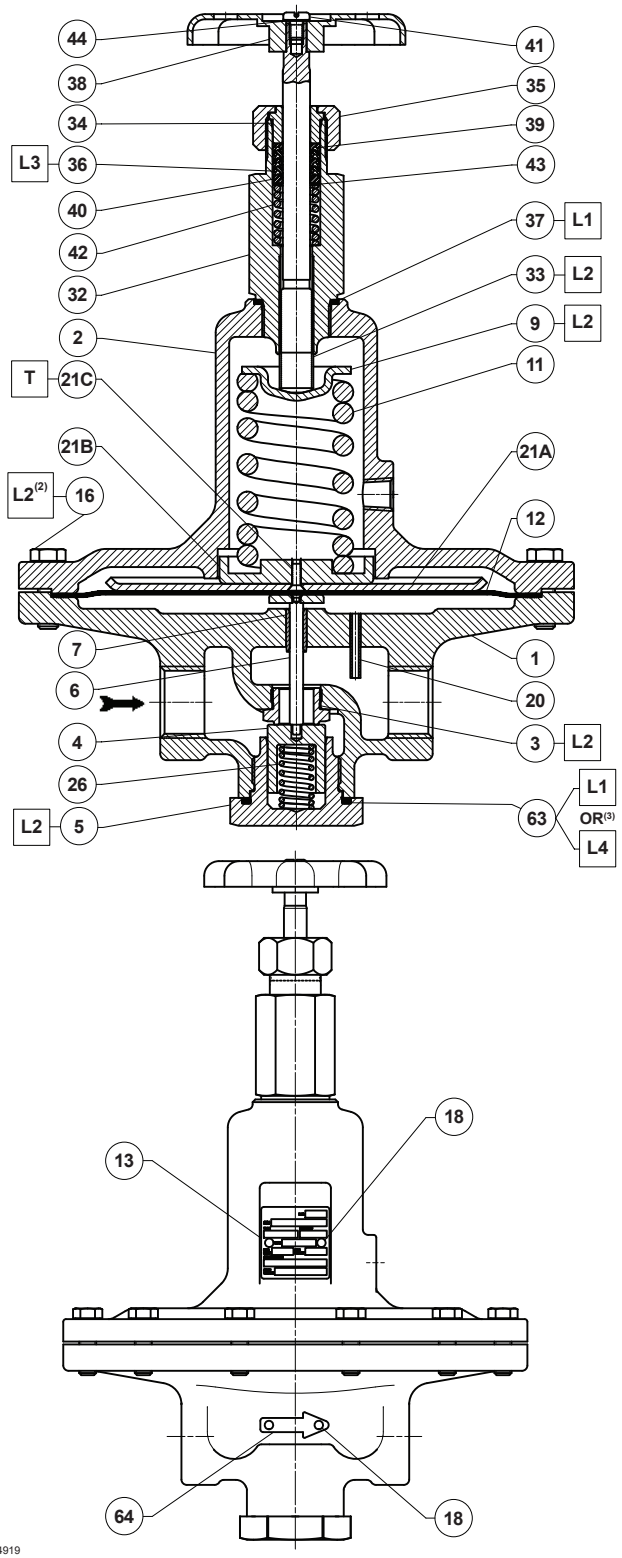

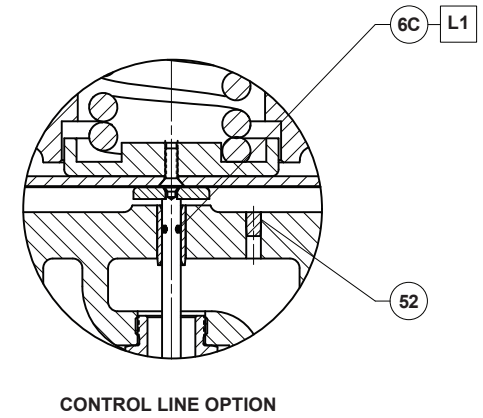

CONTROL LINE OPTION

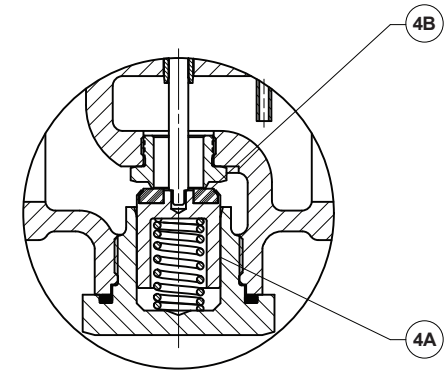

COMPOSITE SEAT OPTION

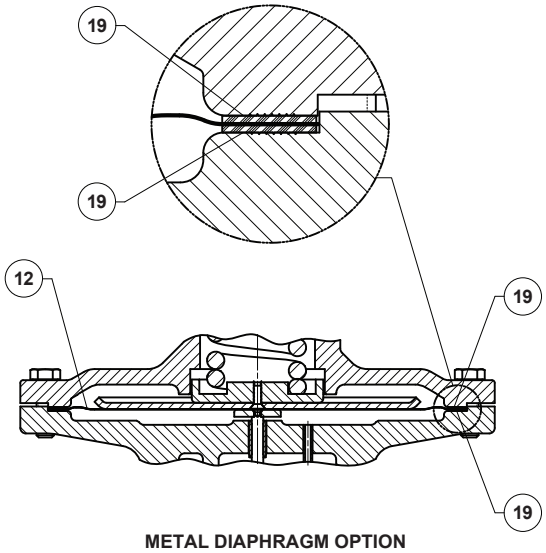

METAL DIAPHRAGM OPTION

GF04919

☐ **APPLY LUBRICANT OR SEALANT(1):**
T = THREAD LOCKER
L1 = GENERAL PURPOSE PTFE OR LITHIUM GREASE
L2 = ANTI-SEIZE COMPOUND
L3 = SILICONE GREASE
L4 = GRAPHITE SEALANT

1. Lubricants and sealants must be selected such that they meet the temperature requirements.
2. Apply L2 (anti-seize compound) on key 16 for stainless steel bolts.
3. Apply L4 (graphite sealant) instead of L1 (general purpose PTFE or lithium grease) on key 63 for graphite ring.

Figure 7. *Type MR95LD, 1/4 NPT and 1/2 to 1 in. / DN 15 to 25 Body Sizes Assembly*

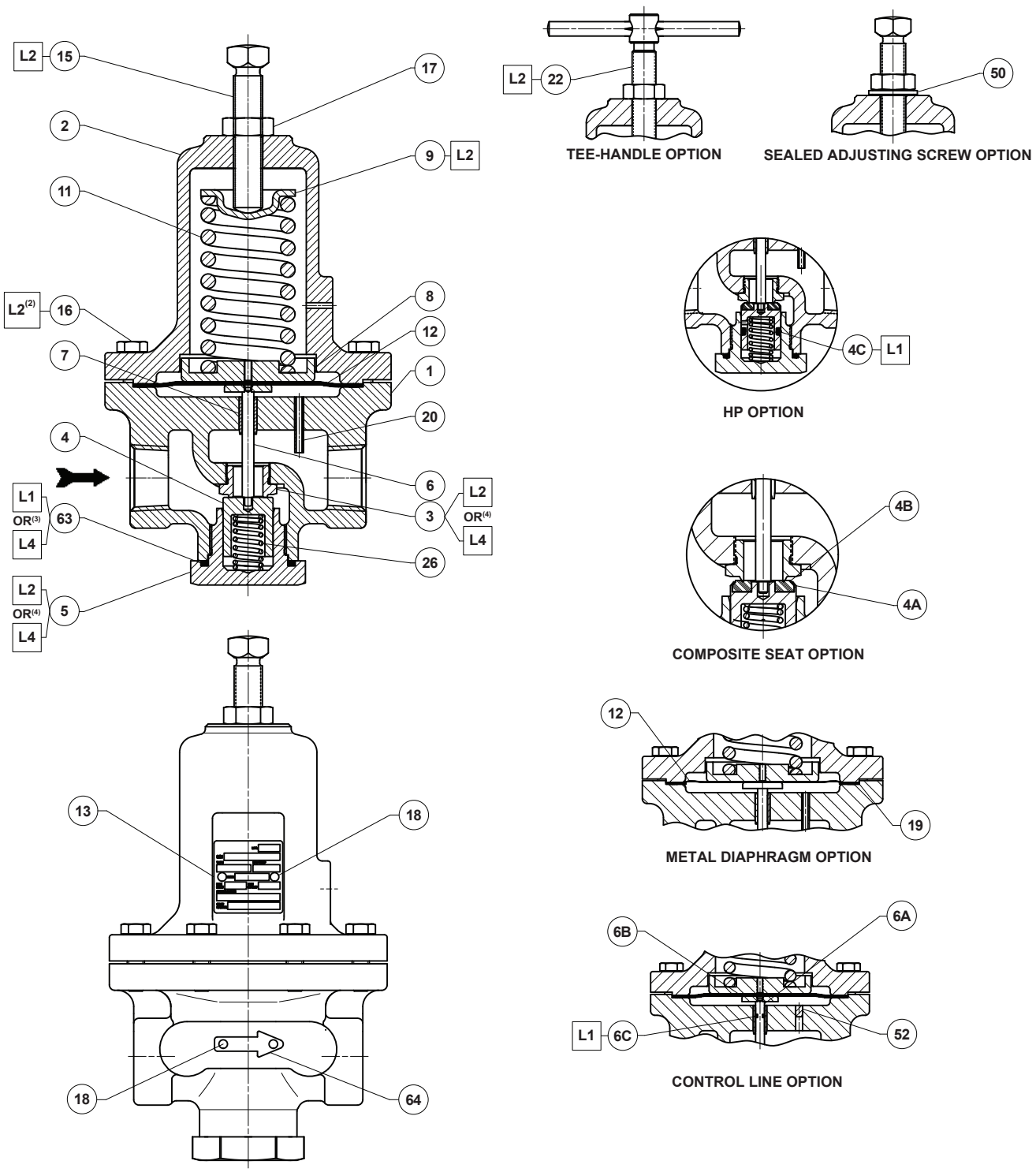

GF04914

☐ **APPLY LUBRICANT OR SEALANT(1):**
L1 = GENERAL PURPOSE PTFE OR LITHIUM GREASE
L2 = ANTI-SEIZE COMPOUND
L4 = GRAPHITE SEALANT

1. Lubricants and sealant must be selected such that they meet the temperature requirements.
2. Apply L2 (anti-seize compound) on key 16 for stainless steel bolts.
3. Apply L4 (graphite sealant) instead of L1 (general purpose PTFE or lithium grease) on key 63 for graphite ring.
4. Apply L4 (graphite sealant) instead of L2 (anti-seize compound) on keys 3 and 5 for Type MR95HT.

Figure 8. *Types MR95H, MR9HP and MR9HT, 1/4 NPT and 1/2 to 1 in. / DN 15 to 25 Body Sizes Assembly*

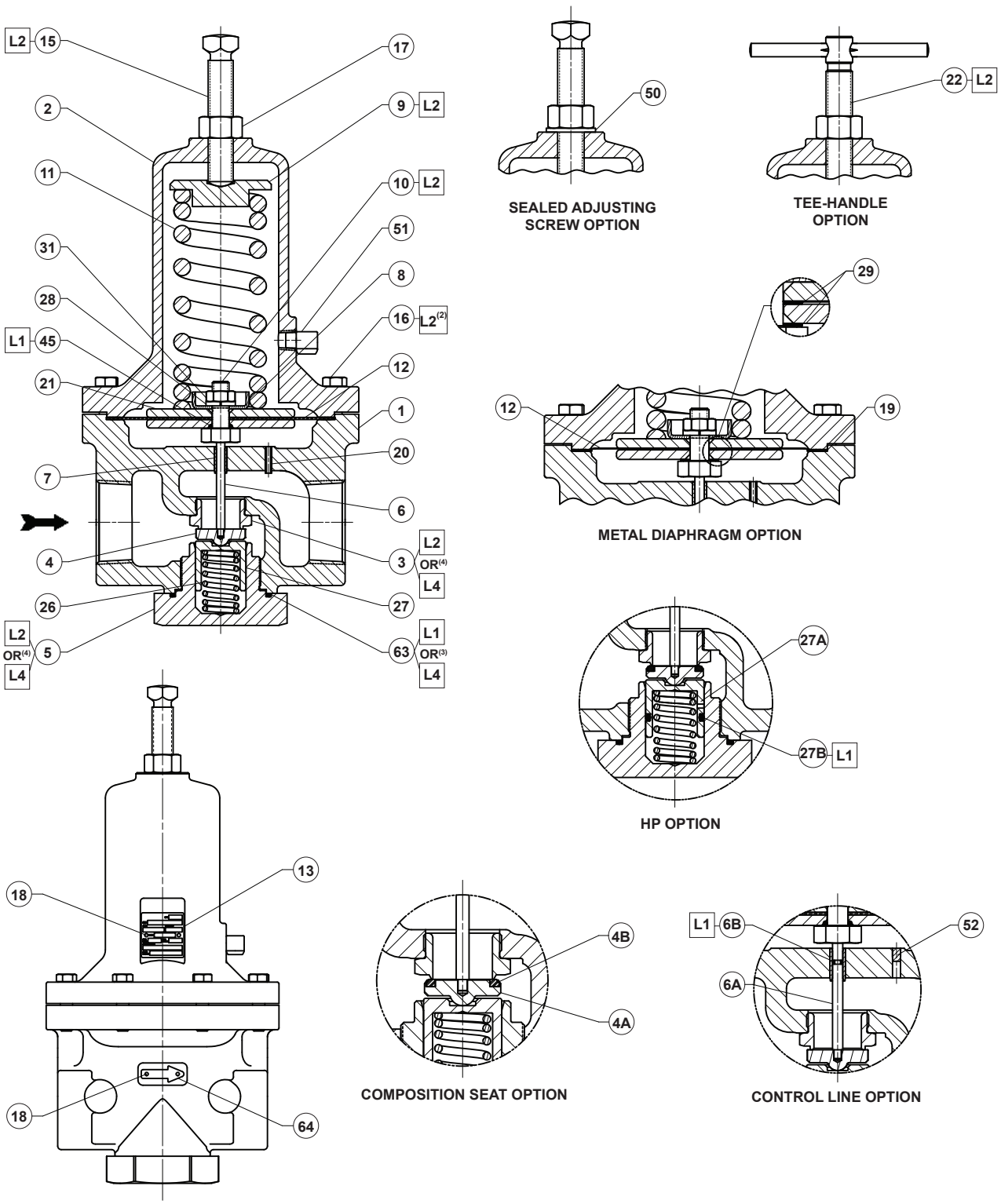

GF04500

☐ **APPLY LUBRICANT OR SEALANT(1):**
L1 = GENERAL PURPOSE PTFE OR LITHIUM GREASE
L2 = ANTI-SEIZE COMPOUND
L4 = GRAPHITE SEALANT

1. Lubricants and sealants must be selected such that they meet the temperature requirements.
2. Apply L2 (anti-seize compound) on key 16 for stainless steel bolts.
3. Apply L4 (graphite sealant) instead of L1 (general purpose PTFE or lithium grease) on key 63 for graphite ring.
4. Apply L4 (graphite sealant) instead of L2 (anti-seize compound) on keys 3 and 5 for Type MR95HT.

Figure 9. *Types MR95H, MR9HP and MR9HT, 1-1/2 to 2 in. / DN 40 and 50 Body Sizes Assembly*

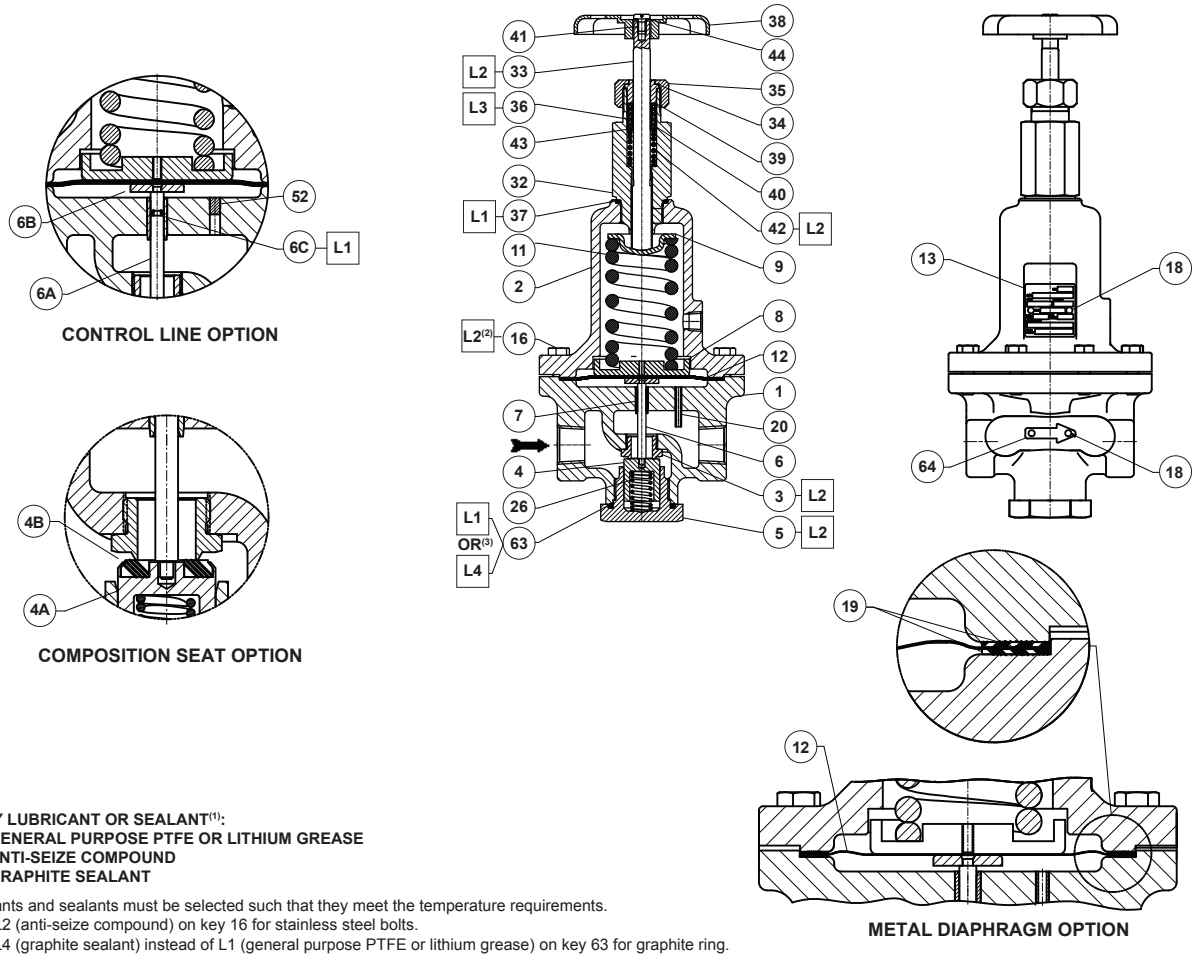

GF04918

☐ **APPLY LUBRICANT OR SEALANT(1):**
L1 = GENERAL PURPOSE PTFE OR LITHIUM GREASE
L2 = ANTI-SEIZE COMPOUND
L4 = GRAPHITE SEALANT

1. Lubricants and sealants must be selected such that they meet the temperature requirements.
2. Apply L2 (anti-seize compound) on key 16 for stainless steel bolts.
3. Apply L4 (graphite sealant) instead of L1 (general purpose PTFE or lithium grease) on key 63 for graphite ring.

Figure 10. *Types MR95HD and MR95HDP, 1/4 NPT and 1/2 to 2 in. / DN 15 to 50 Body Sizes Assembly*

Webadmin.Regulators@emerson.com
Fisher.com
Facebook.com/EmersonAutomationSolutions
LinkedIn.com/company/emerson-automation-solutions
Twitter.com/emr_automation

Emerson Automation Solutions
Regulator Technologies

Americas
McKinney, Texas 75070 USA
T +1 800 558 5853
+1 972 548 3574

Asia Pacific
Singapore 128461, Singapore
T +65 6770 8337

Europe
Bologna 40013, Italy
T +39 051 419 0611

Middle East and Africa
Dubai, United Arab Emirates
T +971 4 811 8100

D103587X012 © 2013, 2017 Emerson Process Management Regulator Technologies, Inc. All rights reserved. 07/17.
The Emerson logo is a trademark and service mark of Emerson Electric Co. All other marks are the property of their prospective owners. Fisher™ is a mark owned by Fisher Controls International LLC, a business of Emerson Automation Solutions.

The contents of this publication are presented for information purposes only, and while effort has been made to ensure their accuracy, they are not to be construed as warranties or guarantees, express or implied, regarding the products or services described herein or their use or applicability. All sales are governed by our terms and conditions, which are available on request. We reserve the right to modify or improve the designs or specifications of our products at any time without notice.

Emerson Process Management Regulator Technologies, Inc. does not assume responsibility for the selection, use or maintenance of any product. Responsibility for proper selection, use and maintenance of any Emerson Process Management Regulator Technologies, Inc. product remains solely with the purchaser.

The distinctive diamond shape cast into every spring case uniquely identifies the regulator as part of the Fisher™ brand and assures you of the highest-quality engineering, durability, performance, and support.

EMERSON™

Valves and actuators

Actuated butterfly valves (BFV02)

Brand :	**KEYSTONE/EMERSON**
Model :	**Series GR**
Supplier :	**CONTROLE LAURENTIDE**
Tag :	**BFV-02-312/332**

1100, Montée Masson
Laval (Québec) H7E 4P2

Téléphone : 450-688-4012
Télécopieur : 450-661-6341

KEYSTONE K-LOK® SERIES 36 AND 37 HIGH PERFORMANCE BUTTERFLY VALVE

INSTALLATION AND OPERATION MANUAL

Before installation these instructions must be fully read and understood



GENERAL

Suggested installation orientation is with valve shaft horizontal or inclined from vertical. Unless otherwise recommended by Emerson Valves & Controls, mount the valve in the preferred direction with the directional arrow pointing to the lower pressure side so that the front face of the disc will be upstream when the valve is in the closed position.
Thermal insulation of the body is mandatory for operating temperatures above 200°C [392°F].

K-LOK offers the following body styles:
Series 36 and 37 – Wafer style
Series 36 and 37 – Lug style
Series 36 and 37 – Double flange

INSPECTION

1. Carefully remove the valve from the shipping package (box or pallet) to avoid any damage to the valve and, in the case of automated valves, to the electric or pneumatic/hydraulic actuator or instrumentation.
2. Prior to installation, clean the inside of the valve. Insure that there are no solid objects such as pieces of wood, plastic or packing materials within the valve or on the valve seat.
3. Inspect the seat and disc edge to insure that they were not damaged in handling. This is especially important in the case of valves with 'fail-open' actuators.
4. Confirm that the materials of construction listed on the valve nameplate are appropriate for the service intended and are as specified.
5. Locate the directional arrow on the body that defines the preferred mounting orientation in respect to the pressure. In most cases, the valve is properly installed when the actual fluid flow or high pressure is acting on the front face of the disc when the valve is closed.
6. Ensure that the packing gland bolting nuts are tight.

CAUTION

The valve should be installed in the closed position to insure that the seat and disc are not damaged during installation. Particular care should be taken with valves equipped with 'fail open' actuators. Failure to insure proper handling may result in damage to the valve.
If the pipe is lined, confirm that the disc rotation does not contact the lining during the opening stroke. Failure to confirm that the disc rotation does not contact the lining may result in damage to the valve.

IMPORTANT

Whenever possible, install the valve with the shaft in the horizontal position and, if possible, with the cast-in disc stop located top-side of the pipe. If the shaft cannot be positioned horizontally, position the shaft so that it is not on the vertical centerline in a horizontal pipe run. This will minimize any depositing of solid particles present in the fluid into the lower bearing.

© 2017 Emerson. All rights reserved.

INSTALLATION

The valves are shipped with flange gasket surface protection. Before installing the valve, remove the protection and carefully clean and de-grease both surfaces with a solvent.

Series 36 and 37 – Lug and double flange style

1. Orient the valve with the directional flow arrow (preferred direction) pointing in the proper direction.
2. Insert the valve between the flanges until the two bottom holes in the valve align with the two lower flange holes.
3. Insert a bolt or stud through the flange and thread it into the holes in the valve body. This will allow the valve to center itself properly for the installation of the flange gaskets.
4. Install the flange gaskets and the remaining flange bolting.
5. Use the crossover method to tighten all flange bolting.

Series 36 and 37 – Wafer style

1. Orient the valve with the directional flow arrow (preferred direction) pointing in the proper direction.
2. Insert the valve between the flanges until the alignment holes at either side of the valve match the corresponding holes in the flanges.
3. Insert a long bolt or stud through the flange and thread it through the alignment hole. This will allow the valve to center itself properly for the installation of the flange gaskets.
4. Install the flange gaskets and the remaining flange bolting.
5. Remove the long bolts/studs from the lower alignment holes and replace with correctly-sized bolts.
6. Using the crossover method, tighten all flange bolts.

VALVE CHECKOUT

1. Tighten the packing gland bolting just enough to prevent shaft leakage. Over-tightening will decrease packing life and increase operating torque requirements.
2. Check the operation of the valve by stroking it to 'full open' and 'full close'. To determine the valve orientation of the disc, double D's and keyways are aligned with the disc. The valve disc travels clockwise to close.
3. For automated valves, set the air pressure/electrical voltage for at least the minimum given to operate the actuator. For pneumatic actuators, do not apply more than 1.25 times the pressure for which the actuator was designed.

Note: For spring return actuators with positioners, overpressure will cause excessive time delay in the spring movement for the valve disc to travel out of the seat.

OPERATION

The K-LOK has been designed to require a minimum of maintenance. Generally, only maintenance on the packing box is required.

MAINTENANCE

If shaft leakage is observed through the packing box, tighten the gland nuts.

Note: Do not over-tighten packing box gland nuts. Over-tightening will increase the torque required to operate the valve. When tightening the gland nuts, use half-turn increments until leakage has stopped.

DISASSEMBLY

To begin disassembly, refer to the parts list (Figure 4) and proceed as follows:

WARNING

Depressurize the valve and associated piping before disassembly. Failure to do so may cause serious personal injury and/or equipment damage.

1. Remove the valve from the line. Clean the valve according to proper cleaning procedures as outlined by the plant or according to a prescribed procedure.
2. Remove the actuator and relevant connecting key. Note the actuator position relative to the valve.

CAUTION

Throughout disassembly and assembly, always use cardboard or brass shims to protect the valve body, disc, flange and sealing surfaces from damage. Failure to do so may result in serious damage to the valve.

Removing the disc-to-shaft tapered pin connections

1. Open the valve disc (2) to its full open position.

Note: On valve sizes DN 250 (NPS 10) and larger, it is recommended that two workers perform the disc tapered pin (5) removal process.

2. Place the disc in a vise.
3. Using a tool steel punch, locate the punch on the small end of the disc taper pin (5) and then strike the punch with a heavy hammer.



Figure 1 - Valve properly clamped in place.

Note: Some of the weld on the taper pins (5) may need to be removed by grinding.

WARNING

When placing the valve into the bench vise, make sure the small end of the disc (2) taper pin faces the assembler. (see Figure 1)

Hold the punch with a punch holder or a pair of vise grips. Otherwise, serious injury may occur.

Removing the bottom cover assembly
To disassemble the bottom cover assembly, remove the following bottom cover assembly components:
- bottom cover plate (18)
- bottom cover gasket (17)
- washer (19)
- screw (20)

Removing the lower shaft assembly

CAUTION
Throughout this operation, make sure the disc edges remain protected from contact with the body by installing cardboard at all disc hub areas. Failure to do so may cause damage to the disc sealing edge.

1. Spray penetrating oil into the disc hub where it meets the shaft connection.
2. Insert an eyebolt into the lower shaft (4) and use it to pull the lower shaft (4) out of the disc (2). See chart below for proper eyebolt size.

Valve size	Tap
DN 50 to 150 (NPS 2 to 6)	M6 X 1
DN 200 to 300 (NPS 8 to 12)	M10 X 1.5
DN 350 to 900 (NPS 14 to 36)	M14 X 2

3. Lightly strike the backside of the disc hub area with a hammer if the shaft is resistant to removal.

Removing the upper shaft and disc

CAUTION
Throughout this operation, make sure the disc edges remain protected from contact with the body by installing cardboard at all disc hub areas. Failure to do so may cause damage to the disc sealing edge. Protect the shaft from the vise teeth to prevent damage and to eliminate potential for packing leakage.

1. When removing the upper shaft (3) from the disc (2), clamp the vise jaws on to the upper shaft (3) area above the valve body top plate.
2. Once the vise jaws are secure against the upper shaft (3), drive the wedge-shaped chisel/punch between the valve body (1) top plate and the bench vise. (see Figure 2)
3. As the valve body (1) moves away from the bench vise, the upper shaft (3) is removed from the upper disc (2) hub.
4. Continue to reposition the valve body (1) with the bench vise so as to allow removal of upper shaft (3).



Figure 2 - How the upper shaft is removed from the upper disk hub.

CAUTION
Physically hold the disc to prevent the disc from falling and becoming damaged during removal. When both the upper shaft (3) and lower shaft (4) are removed from the disc (2), the disc is unsupported.

WARNING
Smaller discs may be removed by hand (DN 50 to DN 200 (NPS 2 to NPS 8)). Remove larger discs with proper hoisting equipment. Failure to do so may result in personal injury or damage to equipment.

Removing the seat retainer ring
Remove the seat retainer ring (23) by removing the hex socket screws (24) from the seat retaining ring for the lugged or double flanged body, or the hex socket flat head screws (24) from the locating plates (26) and/or clips for the wafer body. (see Figure 3)

Removing the seat retainer gasket
Remove the seat retainer gasket (22). Use a powered wire brush tool to remove the gasket material that may have adhered to the mating body surfaces.

Removing the seat assembly
To remove the seat assembly, treat the seat (21) and its associated components as a single assembly by removing the following:
- seat (21.1)
- wire wrap (21.2)
- seat backing ring (21.3)

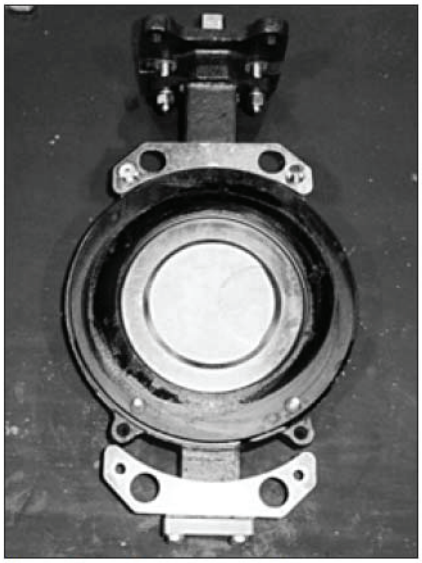

Figure 3 - Seat retainer ring and parts.

Removing the packing assembly
Method 1: for packing replacement with shaft in body
1. Remove the packing gland bolts (14) nuts and washer (15,16) packing gland bridge (13), packing gland follower (12) and shaft retention ring (11). Using the screws, grab and remove each packing ring, one at a time.

Note: To remove the packing set (10) with the upper shaft (3) still in the valve body (1), two long, slender screws are required. The screws must not have a diameter greater than 6 mm (¼") and must be at least 150 mm (6") long. The most commonly used screws are 'drywall screws'.

Figure 4
MATERIALS OF CONSTRUCTION

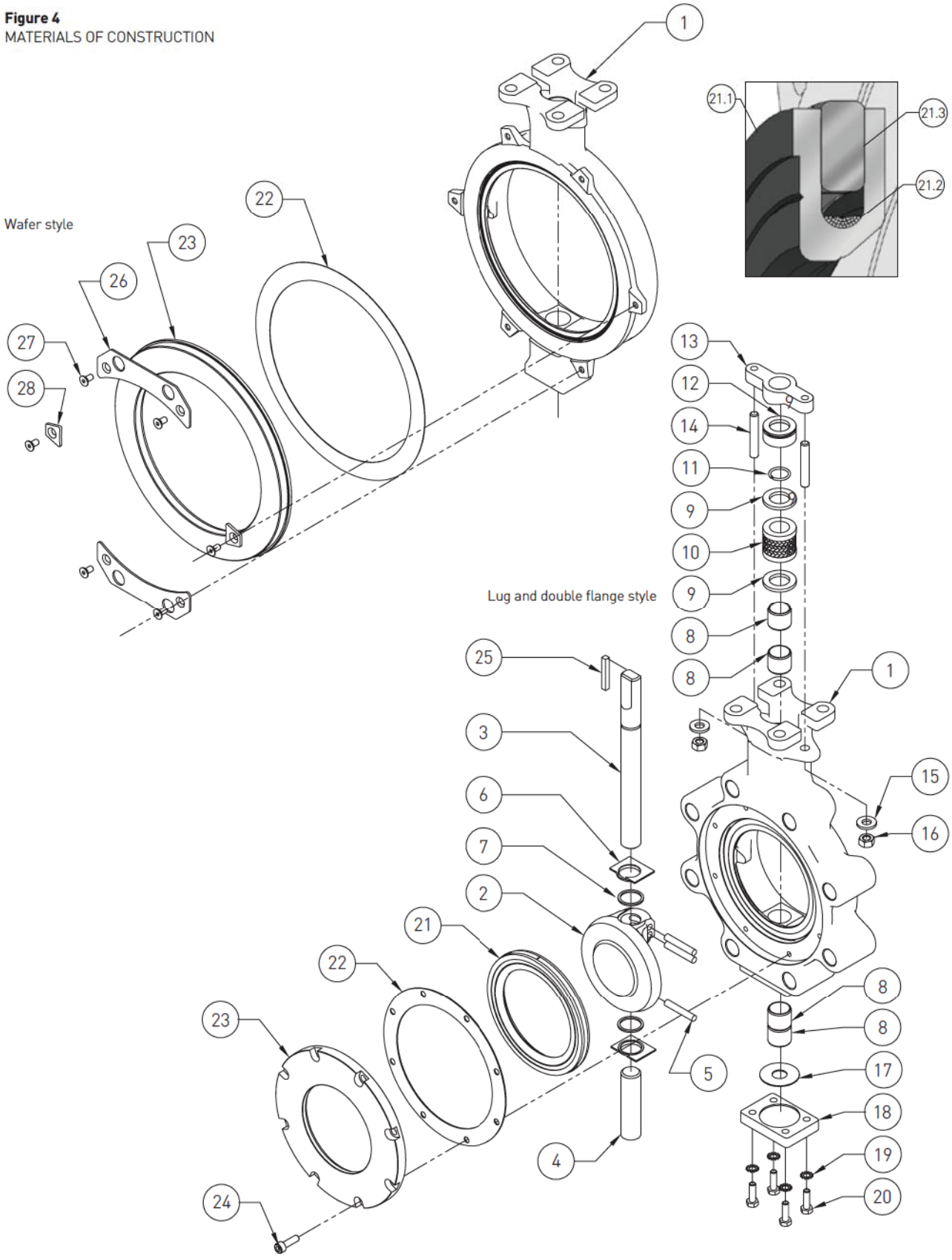

STANDARD MATERIALS OF CONSTRUCTION

Pos	Description	Material	Material standard
1	Body	Carbon steel	ASTM A216-WCB
		Stainless steel	ASTM A351-CF8M
2	Disc	316 SS	ASTM A351-CF8M
		316 SS/ENP	ASTM A351-CF8M / Electroless nickel plated
3	Upper shaft	316B SS	ASTM A276-316 Condition B
		17-4PH SS	ASTM A564- Condition H1075 or H1100
		Nitronic 50	ASTM A276-XM19
4	Lower shaft	316B SS	ASTM A276-316 Condition B
		17-4PH SS	ASTM A564- Condition H1075 or H1100
		Nitronic 50	ASTM A276-XM19
5	Taper pin	316B SS	ASTM A276-316 Condition B
		17-4PH SS	ASTM A564- Condition H1075 or H1100
		Nitronic 50	ASTM A276-XM19
6	Spacer	316 SS	
7	Thrust washer	316 SS / BRZ / PTFE	
8	Bushing	316 SS / BRZ / PTFE	
		RTFE / Composite	
		316SS / Nitrited	
9	Anti-extrusion ring	316 SS	
10	Shaft packing	PTFE , Graphite	
11	Ring, shaft retention	316 SS	
12	Gland	316 SS	
13	Gland bridge	17-4PH SS	
14	Stud	Stainless steel 18.8	
15	Washer, split lock	Stainless steel 18.8	
16	Hex nut	Stainless steel 18.8	
17	Bottom cover gasket	Graphite	
		Non-asbestos fiber	
18	Bottom cover	Carbon steel	ASTM A216-WCB
		Stainless steel	ASTM A351-CF8M
19	Washer, ext. Tooth lock	Stainless steel 18.8	
20	Screw, hex hd cap	Stainless steel 18.8	
21	Seat assembly		
21.1	Seat	Polymer	PTFE , RTFE, UHMWPE
		Elastomer	NBR, EPDM, FKM
21.2	Wire structure	Stainless steel	
21.3	Seat backing ring	316 SS	
22	Gasket seat retaining ring	Graphite	Not used with elastomer seats
		Non-asbestos fiber	
23	Seat retaining ring	Carbon steel	ASTM A216-WCB
		Stainless steel	ASTM A351-CF8M
24	Screw, socket hd cap	Stainless steel	
25	Key	Carbon steel	
26	Retainer plate	Stainless steel	
		Carbon steel / zinc plated	
27	Retainer plate/clip screw	Stainless steel 18.8	
28	Clip	Stainless steel	
		Carbon steel / zinc plated	

All fasteners are 18-8 SS

Method 2: packing removal with shaft removed from body

1. To remove the packing set (10) with the upper shaft removed, use a hook-type tool to pull out one packing ring at a time.

Removing the shaft bushings

Note: A special bushing removal/installation tool is required to remove or install the shaft bushings (8). The tool O.D. dimension should be as near in size as the valve shaft bore I.D. dimension and have a Class 3 fit. Any Machinist Handbook can provide Class 3 tolerances.

1. Insert the removal tool in the valve body (1) top plate area and down the upper shaft journal until the tool contacts the upper shaft bushing.
2. Remove the upper shaft bushing (8) by striking the tool with a hammer.
3. Insert the removal tool in the valve body (1) bottom plate area and down the lower shaft journal until the tool contacts the lower shaft bushing.
4. Strike the tool until the lower shaft bushing (8) is clear of the lower body shaft journal.

Inspecting the valve components

1. After disassembly, visually inspect the seat retainer ring (23) and the bottom cover plate (18).
2. Make sure all body sealing surfaces:
   - are flat
   - are free of corrosion damage
   - have a smooth surface
   - are free of burrs.

Remove any burrs with fine grit sandpaper.

3. Inspect for scratches around disc edges:
   - If scratched, smooth the edge with fine grit sandpaper (220/400 wet/dry sandpaper)
   - Remove the scratch by using a blending motion and extend the smoothed area at least 50 mm (2") above, below and around the original scratch
   - To polish the disc edge, use a powered wire brush
   - Finish sand or polish the edge on a lathe, as required.
4. Check to see that the upper and lower (3, 4) shaft-to-bushing (8) contact locations are free of galling.
5. Check to see that the upper (3) shaft-to-packing (23) contact area is free of scratches.

Note: If scratched or galled, these surfaces should be polished or replaced.

ASSEMBLY

Installing shaft bushing

1. Insert the body into a vice as shown below. Protect the body flange surfaces from the vise clamping surfaces with cardboard or brass shims.
2. To avoid damaging the shaft bushing (8), gently press the bushing into the shaft body journal by lightly striking the bushing (8) with a rubber mallet.
3. Once the shaft bushing (8) has been partially inserted into the valve body journal, insert the installation/removal tool against the upper shaft bushing. (see Figure 5)
4. Strike the tool with a hammer to continue inserting the shaft bushing until it is flush with the body flowpath surface. (see Figure 6)

Installing the disc/shaft assembly

CAUTION

To prevent damage to the disc, do not allow the disc edges to contact the body flowpath surface.

1. Install the upper shaft (3) and lower shaft (4) into the valve body shaft journals with the pinning grooves position on top of the shaft side view.

Note: The upper and lower shafts are correctly installed when the lower ends of the shafts are flush with the body flowpath surface.

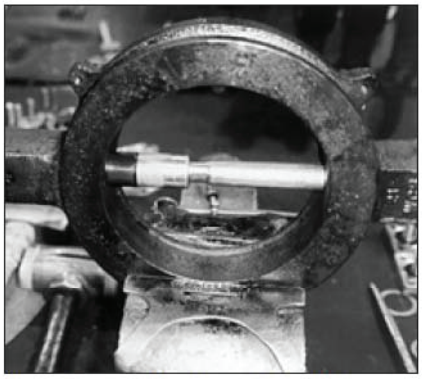

Figure 5 - Partial insertion of the shaft bearing.

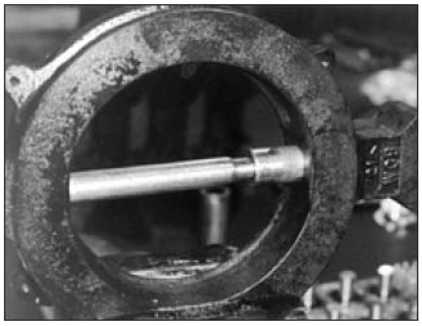

Figure 6 - Shaft bushing flush with the flow path surface.

2. Insert the disc locating spacers (6) and thrust washers into the grooves on either side of the disc (2). Align the spacer flat surface with the body flat surface on the shaft journals.
3. While holding the disc (2) with the backside of the disc facing up and the double pin hub facing toward the body (1) upper shaft journal, position the disc (2) in the body (1).
4. Push the shafts (3 and 4) through the spacers (6) and into the disc (2) hub shaft holes.
5. If required, rotate the shafts until the shaft tapered pin holes are in alignment with the disc (2) hub tapered pin holes.
6. Manually push the disc tapered pins (5) to install them through the disc hub tapered pin holes.
7. Install the packing set (see Installing the packing set).
8. Carefully drive the tapered pins (5) firmly into the connection with a punch and hammer.

Installing the packing set

1. Install the anti-extrusion packing ring (9), packing set (10), second anti-extrusion ring (9), shaft retention ring (11), and packing gland (12) into the upper journal of the valve body (1).
2. Keeping the disc assembly (2 - 6) in the closed position, tighten the packing nuts (16). Nuts have been correctly tightened when the packing gland plate (13) is flush with the valve body (1) top plate.

Installing the bottom cover assembly

1. Place the bottom cover gasket (17) on the bottom cover plate (18) gasket groove.
2. Align the bottom cover plate (18) with the body (1) bottom surface, making sure the bottom cover gasket (17) remains in alignment with the bottom cover plate (18) gasket groove.
3. Tighten the four bolts and washers (19, 20).
4. There should be no gap between bottom cover and body.

Installing the standard seat assembly

1. Check to make sure the disc (2) is in the closed position against the body (1) disc stop.
2. Install the seat with the smallest inside diameter down. If the seat is incorrectly installed, it will ride higher on the disc than if installed correctly.

To install RTFE, PTFE and UHMWPE seats:

1. Place the seat backing ring (21.3) into the seat (21.1).
2. Press the backing ring into the seat (21.1) until no gaps are present between the backing splits.
3. Rotate the seat assembly until the seat backing ring (21.3) splits align with the body shaft journals.
4. Place the seat assembly (21) into the valve body (1) seat pocket. The seat assembly is correctly placed when the 'V' groove on the side of the seat (21) is facing toward the assembler.

To install NBR, EPDM and fluoroelastomer (FKM) seats:

1. Place the seat assembly (21) into the valve body (1) seat pocket.
2. Install the seat with the smallest inside diameter down. If the seat is incorrectly installed, it will ride higher on the disc than if installed correctly.

Installing the seat retainer ring

1. Check to make sure the disc (2) is in the closed position against the body (1) disc stop.
2. Put the seat retainer gasket (22) on the valve body (1) gasket surface.
3. For lug and double flange style bodies align the seat retainer ring gasket (22) holes with the holes in the body. (see Figure 7)

Note: Elastomer seated trims do not require a retainer gasket.

4. Place the seat retainer ring (23) on top of the seat retainer gasket (22). For lug and double flange style valves align the holes in the seat retainer ring (23) with the holes in the gasket (22) and the body (1).
5. Place the locating plates (26) and/or clips (28) for wafer style valve body.

Note: Sizes DN 350 to DN 600 (NPS 14 to NPS 24) wafer style body valves employ both clips (28) and locating plates (26) to retain the seat retainer ring (23). Size DN 750 (NPS 30) and DN 900 (NPS 36) wafer, lug and double flange body valves use seat retainer screws (16). Two of the seat retainer screw holes are tapped. The two tapped holes allow the use of eye bolts so the seat retainer ring can be lifted to and from the body (1).

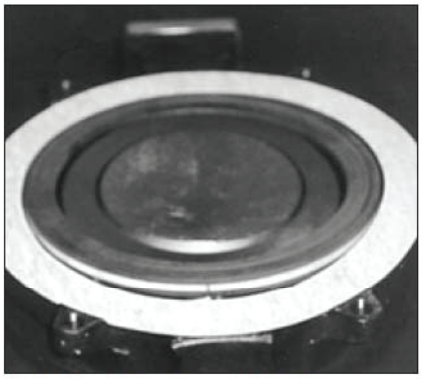

Figure 7 - Proper placement of seat retainer gasket.

6. Install and tighten the screws (24).

CAUTION

The standard seat retainer screws provide only enough force to hold the seat retainer ring (23) for shipment and installation. If valve actuation is required before installation, press the seat retainer into the seat to prevent damage to the valve seat before actuation.

7. Press the seat retainer ring into the seat (21) and body (1) using two C-clamps to provide the needed compressive load. To press the seat retainer ring with the C-clamps, place the C-clamps on the valve assembly to allow an even load to be applied all around the seat retainer ring (23) and tighten until the seat retainer gasket (22) is compressed.
8. With the C-clamps pressing the seat retainer ring (23) into the gasket (22). Tighten the screws (24).

CAUTION

To prevent damage to the valve when clamping, protect the body flange surfaces from the vise clamping surfaces with cardboard or brass shims.

TIG welding of the disc taper pins

1. After assembling and testing the valve, lock the three disc/shaft taper pins (5) by forcefully driving the tapered pins in place with a hammer and steel punch.
2. TIG weld the disc taper pins (5). Weld using filler rod referenced in Table 1.

TABLE 1

Shaft and pin material	Filler rod
17-4 PH 1075 HT	312 Stainless steel
17-4 PH 1160 DHT (NACE)	312 Stainless steel
316 Stainless steel Condition B	312 Stainless steel
K Monel 500®	Monel®
Inconel®	Inconel®

Symptom	Possible cause	Resolution
Valve won't rotate	1. Actuator has failed	1. Repair or replace
	2. Valve packed with debris	2. Flush or clean valve to remove debris
	3. Shaft key has sheared	3. Determine cause of shearing and correct, replace
Shaft packing leaking	1. Gland flange bolting loose	1. Tighten gland flange bolting
	2. Packing damaged	2. Depressurize valve and replace packing
Bottom cover gasket leaking	1. Bottom cover bolting loose	1. Tighten bottom cover bolting
	2. Gasket damage	2. Remove valve from service and replace gasket
Valve leaking	1. Valve not fully closed	1. Close valve
	2. Debris trapped in valve	2. Cycle and flush to remove debris
	3. Seat or disc edge damaged	3. Remove valve from service and replace seat and/or repair or replace disc
	4. Actuator mechanical closure stop incorrect	4. Adjust the stop to allow further closure
Jerky operation	1. Shaft/bearing damaged	1. Disassemble valve and inspect for damage, repair or replace damaged parts, reassemble
	2. Actuator/shaft adapter misaligned	2. Remove actuator mounting and realign
	3. Overtightened packing	3. Loosen packing to hand tight, cycle valve, retighten
	4. Air supply inadequate	4. Increase air supply pressure

© 2017 Emerson. All rights reserved.

NORCLAIR
MÉCANIQUE DE PROCÉDÉ

Pipe pressure testing record

P1039 – IQALUIT WWTP UPGRADE		
Pipe description		
From : Screens	To : Primary filters	
Material : SS 304 sch 10S		
Diameter: 14" and 16"		
Tag :		
Test data		
Test type:	⊗ Hydrostatic (water test)	○ Pneumatic (air test)
Pressure required: 25 psi		
Test duration : 2hr	Start time : 14 h 40	End time : 18 h 40
Pressure gauge span: 0-100 psi		
Measured pressure : 28 psi @ 16h40 , 28 psi @ 18h40		
Notes		
Results		
Inspection:	⊗ Passed	○ Failed
Pressure test:	⊗ Passed	○ Failed
Comments		
Norclair rep : Hugo Chartier	Signature:	Date: March 3rd 2019
Engineer rep :	Signature:	Date:

1100, Montée Masson, Laval (Québec), H7E 4P2
Tél. : 450 688-4012
Fax. : 450 661-6341
Email : info@norclair.ca
www.norclair.ca

NORCLAIR
MÉCANIQUE DE PROCÉDÉ

Pipe pressure testing record

P1039 – IQALUIT WWTP UPGRADE			
Pipe description			
From : Wet well		To : Screens	
Material : SS 304 cecl 10S + valves			
Diameter: 6" to 16"			
Tag :			
Test data			
Test type:	⊗ Hydrostatic (water test)	○ Pneumatic (air test)	
Pressure required: 30 psi (shut off pump = 35 psi			
Test duration : 2.5 hr	Start time : 10 h 10	End time : 12 h 40	
Pressure gauge span: 0 - 100 psi			
Measured pressure : 30 psi @ 10h10 . 30 psi @ 11h30, 28 psi @ 11h40, 28 psi @ 12h40			
Notes			
Fiddled around w/ water inlet and gauge to move hose to purge point. @ 11h35.			
Results			
Inspection:	⊗ Passed	○ Failed	
Pressure test:	⊗ Passed	○ Failed	
Comments			
Norclair rep : Hugo Chartier	Signature:	Date: March 3rd 2019	
Engineer rep :	Signature:	Date:	

1100, Montée Masson, Laval (Québec), H7E 4P2
Tél. : 450 688-4012
Fax. : 450 661-6341
Email : info@norclair.ca
www.norclair.ca

NORCLAIR
MÉCANIQUE DE PROCÉDÉ

PROCESS: Check valve, Headworks

CV-01- III

Spec: CV02
Swing Check Valve, Ductile iron body, Ductile iron disc, Fusion bond edepoxy coating
ANSI Class 150 flanges, Lever and weight configuration, 250 psi CWPrating
NSF/ANSI 372 certified lead free
Brand: Valmatic
Supplier: Contrôle Laurentides

Technical verification

✓	✗	N/A	Equipment matches approved shop drawings and contract documents requirements
✓	✗	N/A	Equipment is installed as per supplier's instructions Flow direction arrow ok.
✓	✗	N/A	Assembly is adequate (alignment, level, bolts tightening,...)
✓	✗	N/A	Lever adjusted for start-up (horizontal)
✓	✗	N/A	

Operation verification

✓	✗	N/A	Operation is adequate at pumps start-up
✓	✗	N/A	Operation is adequate when pumps stop
✓	✗	N/A	No leakage is present
✓	✗	N/A	Lever and weight adjusted for proper closing time Closest to valve
✓	✗	N/A	
✓	✗	N/A	
✓	✗	N/A	

Comments:

NORCLAIR
MÉCANIQUE DE PROCÉDÉ

PROCESS: Check valve, Headworks

CV-01- 112

Spec: CV02
Swing Check Valve, Ductile iron body, Ductile iron disc, Fusion bond edepoxy coating
ANSI Class 150 flanges, Lever and weight configuration, 250 psi CWPrating
NSF/ANSI 372 certified lead free
Brand: Valmatic
Supplier: Contrôle Laurentides

Technical verification

✓	✗	N/A	Equipment matches approved shop drawings and contract documents requirements
✓	✗	N/A	Equipment is installed as per supplier's instructions Flow direction arrow Ok.
✓	✗	N/A	Assembly is adequate (alignment, level, bolts tightening,...)
✓	✗	N/A	Lever adjusted for start-up
✓	✗	N/A	

Operation verification

✓	✗	N/A	Operation is adequate at pumps start-up
✓	✗	N/A	Operation is adequate when pumps stop
✓	✗	N/A	No leakage is present
✓	✗	N/A	Lever and weight adjusted for proper closing time closest to valve
✓	✗	N/A	
✓	✗	N/A	
✓	✗	N/A	

Comments:

NORCLAIR
MÉCANIQUE DE PROCÉDÉ

PROCESS: Check valve, Headworks

CV-01- 113

Spec: CV02
Swing Check Valve, Ductile iron body, Ductile iron disc, Fusion bond edepoxy coating
ANSI Class 150 flanges, Lever and weight configuration, 250 psi CWPrating
NSF/ANSI 372 certified lead free
Brand: Valmatic
Supplier: Contrôle Laurentides

Technical verification

✓ ✗ N/A Equipment matches approved shop drawings and contract documents requirements

✓ ✗ N/A Equipment is installed as per supplier's instructions

✓ ✗ N/A Assembly is adequate (alignment, level, bolts tightening,...) Flow direction arrow ok.

✓ ✗ N/A Lever adjusted for start-up

✓ ✗ N/A

Operation verification

✓ ✗ N/A Operation is adequate at pumps start-up

✓ ✗ N/A Operation is adequate when pumps stop

✓ ✗ N/A No leakage is present

✓ ✗ N/A Lever and weight adjusted for proper closing time closest to valve

✓ ✗ N/A

✓ ✗ N/A

✓ ✗ N/A

Comments:

NORCLAIR
MÉCANIQUE DE PROCÉDÉ

PROCESS: Knife gate valve (manual), Headworks KV-01-211 250ø

Spec: KV01
EX series 14" Knife Gate valve, Cast iron body, 304 AISI SS gate, Nitrile seat, ST packing, ANSI 150 flanged ends, Unidierecitonal design, c/w rising stem handwheel
Brand: Orbinox
Supplier: Contrôle Laurentides

Technical verification

✓	✗	N/A	Equipment matches approved shop drawings and contract documents requirements
✓	✗	N/A	Equipment is installed as per supplier's instructions
✓	✗	N/A	Valve is installed in the right direction ("seat side" on the opposite side of pressure)
✓	✗	N/A	Assembly is adequate (alignment, level, bolts tightening,...)
✓	✗	N/A	

Operation verification

✓	✗	N/A	Handwheel operation is smooth
✓	✗	N/A	Valve fully opens
✓	✗	N/A	Valve is watertight when closed
✓	✗	N/A	No leakage is present, tighten gland if needed (see manual)
✓	✗	N/A	
✓	✗	N/A	
✓	✗	N/A	

Comments:

NORCLAIR
MÉCANIQUE DE PROCÉDÉ

PROCESS: Knife gate valve (manual), Headworks KV-01-221 250Ø

Spec: KV01
EX series 14" Knife Gate valve, Cast iron body, 304 AISI SS gate, Nitrile seat, ST packing, ANSI 150 flanged ends, Unidierecitonal design, c/w rising stem handwheel
Brand: Orbinox
Supplier: Contrôle Laurentides

Technical verification

✓	✗	N/A	Equipment matches approved shop drawings and contract documents requirements
✓	✗	N/A	Equipment is installed as per supplier's instructions
✓	✗	N/A	Valve is installed in the right direction ("seat side" on the opposite side of pressure)
✓	✗	N/A	Assembly is adequate (alignment, level, bolts tightening,...)
✓	✗	N/A	

Operation verification

✓	✗	N/A	Handwheel operation is smooth
✓	✗	N/A	Valve fully opens
✓	✗	N/A	Valve is watertight when closed
✓	✗	N/A	No leakage is present, tighten gland if needed (see manual)
✓	✗	N/A	
✓	✗	N/A	
✓	✗	N/A	

Comments:

NORCLAIR
MÉCANIQUE DE PROCÉDÉ

PROCESS: Knife gate valve (manual), Headworks KV-01-212 350φ

Spec: KV01
EX series 14" Knife Gate valve, Cast iron body, 304 AISI SS gate, Nitrile seat, ST packing, ANSI 150 flanged ends, Unidierecitonal design, c/w rising stem handwheel
Brand: Orbinox
Supplier: Contrôle Laurentides

Technical verification

✓	✗	N/A	Equipment matches approved shop drawings and contract documents requirements
✓	✗	N/A	Equipment is installed as per supplier's instructions
✓	✗	N/A	Valve is installed in the right direction ("seat side" on the opposite side of pressure)
✓	✗	N/A	Assembly is adequate (alignment, level, bolts tightening,...)
✓	✗	N/A	

Operation verification

✓	✗	N/A	Handwheel operation is smooth
✓	✗	N/A	Valve fully opens
✓	✗	N/A	Valve is watertight when closed
✓	✗	N/A	No leakage is present, tighten gland if needed (see manual)
✓	✗	N/A	
✓	✗	N/A	
✓	✗	N/A	

Comments:

NORCLAIR
MÉCANIQUE DE PROCÉDÉ

PROCESS: Knife gate valve (manual), Headworks KV-01-222 ϕ350

Spec: KV01
EX series 14" Knife Gate valve, Cast iron body, 304 AISI SS gate, Nitrile seat, ST packing, ANSI 150 flanged ends, Unidierecitonal design, c/w rising stem handwheel
Brand: Orbinox
Supplier: Contrôle Laurentides

Technical verification

✓	✗	N/A	Equipment matches approved shop drawings and contract documents requirements
✓	✗	N/A	Equipment is installed as per supplier's instructions
✓	✗	N/A	Valve is installed in the right direction ("seat side" on the opposite side of pressure)
✓	✗	N/A	Assembly is adequate (alignment, level, bolts tightening,...)
✓	✗	N/A	

Operation verification

✓	✗	N/A	Handwheel operation is smooth
✓	✗	N/A	Valve fully opens
✓	✗	N/A	Valve is watertight when closed
✓	✗	N/A	No leakage is present, tighten gland if needed (see manual)
✓	✗	N/A	
✓	✗	N/A	
✓	✗	N/A	

Comments:

NORCLAIR
MÉCANIQUE DE PROCÉDÉ

PROCESS: Knife gate valve (manual), Headworks

KV-01-232 ø350

Spec: KV01
EX series 14" Knife Gate valve, Cast iron body, 304 AISI SS gate, Nitrile seat, ST packing, ANSI 150 flanged ends, Unidierecitonal design, c/w rising stem handwheel
Brand: Orbinox
Supplier: Contrôle Laurentides

Technical verification

✓	✗	N/A	Equipment matches approved shop drawings and contract documents requirements
✓	✗	N/A	Equipment is installed as per supplier's instructions
✓	✗	N/A	Valve is installed in the right direction ("seat side" on the opposite side of pressure)
✓	✗	N/A	Assembly is adequate (alignment, level, bolts tightening,...)
✓	✗	N/A	

Operation verification

✓	✗	N/A	Handwheel operation is smooth
✓	✗	N/A	Valve fully opens
✓	✗	N/A	Valve is watertight when closed
✓	✗	N/A	No leakage is present, tighten gland if needed (see manual)
✓	✗	N/A	
✓	✗	N/A	
✓	✗	N/A	

Comments:

NORCLAIR
MÉCANIQUE DE PROCÉDÉ

PROCESS: Knife gate valve (actuated), Headworks KV-01-112 Ø350

Spec: KV01
EX series 14" Knife Gate valve, Cast iron body, 304 AISI SS gate, Nitrile seat, ST packing, ANSI 150 flanged ends, Unidierecitonal design, c/w rising stem handwheel
Brand: Orbinox
Supplier: Contrôle Laurentides

Technical verifications

✓	✗	N/A	Equipment matches approved shop drawings and contract documents requirements
✓	✗	N/A	Equipment is installed as per supplier's instructions
✓	✗	N/A	Valve is installed in the right direction ("seat side" on the opposite side of pressure)
✓	✗	N/A	Assembly is adequate (alignment, level, bolts tightening,...)
✓	✗	N/A	

Operation verifications

✓	✗	N/A	Handwheel operation is smooth
✓	✗	N/A	Valve fully opens
✓	✗	N/A	Valve is watertight when closed
✓	✗	N/A	No leakage is present, tighten gland if needed (see manual)
✓	✗	N/A	

Electrical/Control verifications

✓	✗	N/A	Completion of electrical and control connections
✓	✗	N/A	Adjustment of valve open/close limit switch
✓	✗	N/A	Valve remote control (from panel) is responsive (No tested. Waiting for completion of CCM-016
✓	✗	N/A	Valve positioning matches remote HMI positioning
✓	✗	N/A	Local push buttons working as intended

Comments:
Chute #15

NORCLAIR
MÉCANIQUE DE PROCÉDÉ

PROCESS: Knife gate valve (actuated), Headworks KV-01-111 Ø350

Spec: KV01
EX series 14" Knife Gate valve, Cast iron body, 304 AISI SS gate, Nitrile seat, ST packing, ANSI 150 flanged ends, Unidierecitonal design, c/w rising stem handwheel
Brand: Orbinox
Supplier: Contrôle Laurentides

Technical verifications

✓	✗	N/A	Equipment matches approved shop drawings and contract documents requirements
✓	✗	N/A	Equipment is installed as per supplier's instructions
✓	✗	N/A	Valve is installed in the right direction ("seat side" on the opposite side of pressure)
✓	✗	N/A	Assembly is adequate (alignment, level, bolts tightening,...)
✓	✗	N/A	

Operation verifications

✓	✗	N/A	Handwheel operation is smooth
✓	✗	N/A	Valve fully opens
✓	✗	N/A	Valve is watertight when closed
✓	✗	N/A	No leakage is present, tighten gland if needed (see manual)
✓	✗	N/A	

Electrical/Control verifications

✓	✗	N/A	Completion of electrical and control connections
✓	✗	N/A	Adjustment of valve open/close limit switch
✓	✗	N/A	Valve remote control (from panel) is responsive
✓	✗	N/A	Valve positioning matches remote HMI positioning
✓	✗	N/A	Local push buttons working as intended

Comments:

NORCLAIR
MÉCANIQUE DE PROCÉDÉ

PROCESS: Knife gate valve (actuated), Headworks KV-01-121 ϕ350

Spec: KV01
EX series 14" Knife Gate valve, Cast iron body, 304 AISI SS gate, Nitrile seat, ST packing, ANSI 150 flanged ends, Unidierecitonal design, c/w rising stem handwheel
Brand: Orbinox
Supplier: Contrôle Laurentides

Technical verifications

✓	✗	N/A	Equipment matches approved shop drawings and contract documents requirements
✓	✗	N/A	Equipment is installed as per supplier's instructions
✓	✗	N/A	Valve is installed in the right direction ("seat side" on the opposite side of pressure)
✓	✗	N/A	Assembly is adequate (alignment, level, bolts tightening,...)
✓	✗	N/A	

Operation verifications

✓	✗	N/A	Handwheel operation is smooth
✓	✗	N/A	Valve fully opens
✓	✗	N/A	Valve is watertight when closed
✓	✗	N/A	No leakage is present, tighten gland if needed (see manual)
✓	✗	N/A	

Electrical/Control verifications

✓	✗	N/A	Completion of electrical and control connections
✓	✗	N/A	Adjustment of valve open/close limit switch
✓	✗	N/A	Valve remote control (from panel) is responsive
✓	✗	N/A	Valve positioning matches remote HMI positioning
✓	✗	N/A	Local push buttons working as intended

Comments:

NORCLAIR
MÉCANIQUE DE PROCÉDÉ

PROCESS: Plug valve, Headworks

PLV-01- III

Spec: PLV04
Cam-Centric plug valve, Cast iron body, Nickel seat, Buna-N plug,
Stainless steel bearings, Flanged ends, Direct nut actuated with an AWWA 2" nut
Brand: Val-Matic
Supplier: Contrôle Laurentides

Technical verifications

✓	✗	N/A	Equipment matches approved shop drawings and contract documents requirements
✓	✗	N/A	Equipment is installed as per supplier's instructions Seat end facing up
✓	✗	N/A	Assembly is adequate (alignment, level, bolts tightening,...)
✓	✗	N/A	
✓	✗	N/A	

Operation verifications

✓	✗	N/A	Lever operation is smooth Thwgh. Gear operator would have been better.
✓	✗	N/A	Valves fully opens and closes; adjust stop bolt if needed.
✓	✗	N/A	Valves are watertight when closed Tested w/ pumps running.
✓	✗	N/A	No leakage is present
✓	✗	N/A	Adjust direct nut friction if valves does not stay opened when pumps operate No adjustment required
✓	✗	N/A	
✓	✗	N/A	

Comments:

NORCLAIR
MÉCANIQUE DE PROCÉDÉ

PROCESS: Plug valve, Headworks

PLV-01- 112

Spec: PLV04
Cam-Centric plug valve, Cast iron body, Nickel seat, Buna-N plug,
Stainless steel bearings, Flanged ends, Direct nut actuated with an AWWA 2" nut
Brand: Val-Matic
Supplier: Contrôle Laurentides

Technical verifications

✓	✗	N/A	Equipment matches approved shop drawings and contract documents requirements
✓	✗	N/A	Equipment is installed as per supplier's instructions Seat end facing up.
✓	✗	N/A	Assembly is adequate (alignment, level, bolts tightening,...)
✓	✗	N/A	
✓	✗	N/A	

Operation verifications

✓	✗	N/A	Lever operation is smooth Thwgh. Gear operator would have been better.
✓	✗	N/A	Valves fully opens and closes; adjust stop bolt if needed.
✓	✗	N/A	Valves are watertight when closed
✓	✗	N/A	No leakage is present
✓	✗	N/A	Adjust direct nut friction if valves does not stay opened when pumps operate
✓	✗	N/A	No adjustment required.
✓	✗	N/A	

Comments:

NORCLAIR
MÉCANIQUE DE PROCÉDÉ

PROCESS: Plug valve, Headworks

PLV-01- 113

Spec: PLV04
Cam-Centric plug valve, Cast iron body, Nickel seat, Buna-N plug,
Stainless steel bearings, Flanged ends, Direct nut actuated with an AWWA 2" nut
Brand: Val-Matic
Supplier: Contrôle Laurentides

Technical verifications

✓	✗	N/A	Equipment matches approved shop drawings and contract documents requirements
✓	✗	N/A	Equipment is installed as per supplier's instructions
✓	✗	N/A	Assembly is adequate (alignment, level, bolts tightening,...)
✓	✗	N/A	
✓	✗	N/A	

Operation verifications

✓	✗	N/A	Lever operation is smooth Though. Gear operator would have been better.
✓	✗	N/A	Valves fully opens and closes; adjust stop bolt if needed.
✓	✗	N/A	Valves are watertight when closed
✓	✗	N/A	No leakage is present
✓	✗	N/A	Adjust direct nut friction if valves does not stay opened when pumps operate
✓	✗	N/A	No adjustement required
✓	✗	N/A	

Comments:

NORCLAIR
MÉCANIQUE DE PROCÉDÉ

I&C: Fixed gas detectors, Headworks

AIT- 901

Ultima X5000
Brand: MSA
Supplier: Contro-Valve

Technical verification

✓	✗	N/A	Equipment matches approved shop drawings and contract documents requirements
✓	✗	N/A	Equipment is installed as per supplier's instructions
✓	✗	N/A	Assembly is adequate (alignment, level, bolts tightening,...)
✓	✗	N/A	
✓	✗	N/A	

Operation verification

✓	✗	N/A	
✓	✗	N/A	
✓	✗	N/A	
✓	✗	N/A	
✓	✗	N/A	

Electrical/Control verifications

✓	✗	N/A	Completion of electrical and control connections
✓	✗	N/A	Configure user's preferences in analyzer/transmitter (language, unit, totalizer,...)
✓	✗	N/A	Calibrate meter (w/ calibration gas) as per supplier's instructions
✓	✗	N/A	Confirm HMI and transmitters measured values are the same
✓	✗	N/A	
✓	✗	N/A	

Comments:

NORCLAIR
MÉCANIQUE DE PROCÉDÉ

I&C: Fixed gas detectors, Headworks

AIT- 902

Ultima X5000
Brand: MSA
Supplier: Contro-Valve

Technical verification

✓	✗	N/A	Equipment matches approved shop drawings and contract documents requirements
✓	✗	N/A	Equipment is installed as per supplier's instructions
✓	✗	N/A	Assembly is adequate (alignment, level, bolts tightening,...)
✓	✗	N/A	
✓	✗	N/A	

Operation verification

✓	✗	N/A	
✓	✗	N/A	
✓	✗	N/A	
✓	✗	N/A	
✓	✗	N/A	

Electrical/Control verifications

✓	✗	N/A	Completion of electrical and control connections
✓	✗	N/A	Configure user's preferences in analyzer/transmitter (language, unit, totalizer,...)
✓	✗	N/A	Calibrate meter (w/ calibration gas) as per supplier's instructions
✓	✗	N/A	Confirm HMI and transmitters measured values are the same
✓	✗	N/A	
✓	✗	N/A	

Comments:

NORCLAIR
MÉCANIQUE DE PROCÉDÉ

I&C: Fixed gas detectors, Headworks

AIT- 903

Ultima X5000
Brand: MSA
Supplier: Contro-Valve

Technical verification

✓	✗	N/A	Equipment matches approved shop drawings and contract documents requirements
✓	✗	N/A	Equipment is installed as per supplier's instructions
✓	✗	N/A	Assembly is adequate (alignment, level, bolts tightening,...)
✓	✗	N/A	
✓	✗	N/A	

Operation verification

✓	✗	N/A	
✓	✗	N/A	
✓	✗	N/A	
✓	✗	N/A	
✓	✗	N/A	

Electrical/Control verifications

✓	✗	N/A	Completion of electrical and control connections
✓	✗	N/A	Configure user's preferences in analyzer/transmitter (language, unit, totalizer,...)
✓	✗	N/A	Calibrate meter (w/ calibration gas) as per supplier's instructions
✓	✗	N/A	Confirm HMI and transmitters measured values are the same
✓	✗	N/A	
✓	✗	N/A	

Comments:

NORCLAIR
MÉCANIQUE DE PROCÉDÉ

I&C: Fixed gas detectors, Headworks

AIT- 904

Ultima X5000
Brand: MSA
Supplier: Contro-Valve

Technical verification

✓	✗	N/A	Equipment matches approved shop drawings and contract documents requirements
✓	✗	N/A	Equipment is installed as per supplier's instructions
✓	✗	N/A	Assembly is adequate (alignment, level, bolts tightening,...)
✓	✗	N/A	
✓	✗	N/A	

Operation verification

✓	✗	N/A	
✓	✗	N/A	
✓	✗	N/A	
✓	✗	N/A	
✓	✗	N/A	

Electrical/Control verifications

✓	✗	N/A	Completion of electrical and control connections
✓	✗	N/A	Configure user's preferences in analyzer/transmitter (language, unit, totalizer,...)
✓	✗	N/A	Calibrate meter (w/ calibration gas) as per supplier's instructions
✓	✗	N/A	Confirm HMI and transmitters measured values are the same
✓	✗	N/A	
✓	✗	N/A	

Comments:

NORCLAIR
MÉCANIQUE DE PROCÉDÉ

PROCESS: Air Vacuum Release valve, Headworks

ARV-01-100

3in combination air valve
ASU,3,SCAV,F1,S2,R516,NBR,S2-S2-S2*
Brand: Dezurik
Supplier: Provan

Technical verification

✓	✗	N/A	Equipment matches approved shop drawings and contract documents requirements
✓	✗	N/A	Equipment is installed as per supplier's instructions
✓	✗	N/A	Assembly is adequate (alignment, level, bolts tightening,...)
✓	✗	N/A	
✓	✗	N/A	

Operation verification

✓	✗	N/A	Operation is adequate at pumps start-up
✓	✗	N/A	Operation is adequate when pumps stop
✓	✗	N/A	No leakage is present
✓	✗	N/A	
✓	✗	N/A	
✓	✗	N/A	
✓	✗	N/A	

Comments:

NORCLAIR
MÉCANIQUE DE PROCÉDÉ

PROCESS: Pressure regulating valves, Headworks

PRV-01- 31(

Spec: PRV01
MR95H-51; MR95H 1", REGULATOR CI/NPT/S302, 15-30PSIG SPRING RANGE, SST DIAPHRAGM AND VALVE SEAT, TRIM 1
Brand: Fisher
Supplier: Contrôle Laurentides

Technical verifications

✓	✗	N/A	Equipment matches approved shop drawings and contract documents requirements
✓	✗	N/A	Equipment is installed as per supplier's instructions
✓	✗	N/A	Assembly is adequate (alignment, level, bolts tightening,...)
✓	✗	N/A	
✓	✗	N/A	

Operation verifications

✓	✗	N/A	Spring loaded adjustment is smooth
✓	✗	N/A	Adjustment was completed as per primary filter or screen supplier
✓	✗	N/A	No leakage is present
✓	✗	N/A	
✓	✗	N/A	
✓	✗	N/A	
✓	✗	N/A	

Comments:

Filters

No adjustment required as per filters supplier tech

NORCLAIR
MÉCANIQUE DE PROCÉDÉ

PROCESS: Pressure regulating valves, Headworks

PRV-01- 321

Spec: PRV01
MR95H-51; MR95H 1", REGULATOR CI/NPT/S302, 15-30PSIG SPRING RANGE, SST DIAPHRAGM AND VALVE SEAT, TRIM 1
Brand: Fisher
Supplier: Contrôle Laurentides

Technical verifications

✓	✗	N/A	Equipment matches approved shop drawings and contract documents requirements
✓	✗	N/A	Equipment is installed as per supplier's instructions
✓	✗	N/A	Assembly is adequate (alignment, level, bolts tightening,...)
✓	✗	N/A	
✓	✗	N/A	

Operation verifications

✓	✗	N/A	Spring loaded adjustment is smooth
✓	✗	N/A	Adjustment was completed as per primary filter or screen supplier
✓	✗	N/A	No leakage is present
✓	✗	N/A	
✓	✗	N/A	
✓	✗	N/A	
✓	✗	N/A	

Comments:

Filters
No adjustment required as per filters supplier tech.

NORCLAIR
MÉCANIQUE DE PROCÉDÉ

PROCESS: Pressure regulating valves, Headworks PRV-01- 110

Spec: PRV01
MR95H-51; MR95H 1", REGULATOR CI/NPT/S302, 15-30PSIG SPRING RANGE, SST DIAPHRAGM AND VALVE SEAT, TRIM 1
Brand: Fisher
Supplier: Contrôle Laurentides

Technical verifications

✓	✗	N/A	Equipment matches approved shop drawings and contract documents requirements
✓	✗	N/A	Equipment is installed as per supplier's instructions
✓	✗	N/A	Assembly is adequate (alignment, level, bolts tightening,...)
✓	✗	N/A	
✓	✗	N/A	

Operation verifications

✓	✗	N/A	Spring loaded adjustment is smooth
✓	✗	✓	Adjustment was completed as per primary filter or screen supplier
✓	✗	N/A	No leakage is present
✓	✗	N/A	
✓	✗	N/A	
✓	✗	N/A	
✓	✗	N/A	

Comments:

Screens
No adjustment required as per screens supplier tech.

NORCLAIR
MÉCANIQUE DE PROCÉDÉ

PROCESS: Bridge Crane, Headworks

Brand: Gorbel
Supplier: PR Protech

Technical verification

✓	✗	N/A	Equipment matches approved shop drawings and contract documents requirements
✓	✗	N/A	Equipment is installed as per supplier's instructions
✓	✗	N/A	Assembly is adequate (alignment, level, bolts tightening,...)
✓	✗	N/A	
✓	✗	N/A	

Operation verification

✓	✗	N/A	Operation is adequate for all hoist location
✓	✗	N/A	All stoppers are installed where physical conflicts are present (if any)
✓	✗	N/A	
✓	✗	N/A	
✓	✗	N/A	

Electrical/Control verifications

✓	✗	N/A	Completion of electrical and control connections
✓	✗	N/A	
✓	✗	N/A	
✓	✗	N/A	
✓	✗	N/A	

Comments:

NORCLAIR
MÉCANIQUE DE PROCÉDÉ

I&C: Level meter/transmitter, Headworks

LIT-100

Sitrans LUT400
EchoMax XPS
Brand: Siemens
Supplier: Vision

Technical verification

- ✓ ✗ N/A Equipment matches approved shop drawings and contract documents requirements
- ✓ ✗ N/A Equipment is installed as per supplier's instructions
- ✓ ✗ N/A Assembly is adequate (alignment, level, bolts tightening,...)
- ✓ ✗ N/A
- ✓ ✗ N/A

Operation verification

- ✓ ✗ N/A No vibrations are present when pumps are running, installed gasket between concrete wall and support
- ✓ ✗ N/A
- ✓ ✗ N/A
- ✓ ✗ N/A
- ✓ ✗ N/A

Electrical/Control verifications

- ✓ ✗ N/A Completion of electrical and control connections. Control cable away from power cable
- ✓ ✗ N/A Configure user's preferences in transmitter (language, unit, totalizer,...)
- ✓ ✗ N/A Calibrate meter (zero value, range as per calibration certificate,...)
- ✓ ✗ N/A Confirm HMI and transmitters measured values are the same
- ✓ ✗ N/A

Comments:

Relocated probe.
Installed as per default settings. No blanking zone.

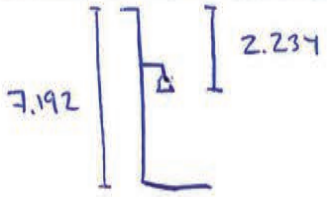

NORCLAIR
MÉCANIQUE DE PROCÉDÉ

I&C: Flowmeter/transmitter, Headworks

FM-01-150

Promag W 400, 5W4C2H, DN200 8"
5W4C2H-C6ALHA0DUA1K0A+Z1
Brand: Endress & Hauser
Supplier: Endress & Hauser

Technical verification

✓	✗	N/A	Equipment matches approved shop drawings and contract documents requirements
✓	✗	N/A	Equipment is installed as per supplier's instructions
✓	✗	N/A	Assembly is adequate (alignment, 5d-2d, level, bolts tightening,...)
✓	✗	N/A	
✓	✗	N/A	

Operation verification

✓	✗	N/A	No leakage is present
✓	✗	N/A	No vibrations are present when pumps are running
✓	✗	N/A	
✓	✗	N/A	
✓	✗	N/A	

Electrical/Control verifications

✓	✗	N/A	Completion of electrical and control connections
✓	✗	N/A	Configure user's preferences in transmitter (language, unit, tag,,...)
✓	✗	N/A	Calibrate flowmeter (zero value, range as per calibration certificate,...)
✓	✗	N/A	Confirm HMI and transmitters measured values are the same
✓	✗	N/A	

Comments:

Pipe is not full; no reading below ~36 L/s.

NORCLAIR
MÉCANIQUE DE PROCÉDÉ

PROCESS: Blast gate, Headworks

BG-01-332

16in
Manual blast gate, Stainless steel
Brand: Nordfab
Supplier: Capt-air

Technical verification

✓	✗	N/A	Equipment matches approved shop drawings and contract documents requirements
✓	✗	N/A	Equipment is installed as per supplier's instructions
✓	✗	N/A	Assembly is adequate (alignment, level, bolts tightening,...)
✓	✗	N/A	
✓	✗	N/A	

Operation verification

✓	✗	N/A	Gate operation is smooth
✓	✗	N/A	
✓	✗	N/A	
✓	✗	N/A	
✓	✗	N/A	
✓	✗	N/A	
✓	✗	N/A	

Comments:

operation is not smooth. specified product is not adequate.

NORCLAIR
MÉCANIQUE DE PROCÉDÉ

BILL OF DELIVERY

TO : City of Iqaluit

Project : P1039- Iqaluit WWTP

FROM : Norclair

Equipment : Gas detectors

Quantity	Detailed description
1	Calibration kit :
	- (1x) Regulator
	- (1x) Bottle H_2S
	- (1x) Bottle Methane (LEL)
	- (1x) Bottle zero gas (Oxygen - Nitrogen)
	- Lot of green caps
	Left @ Lab

Handed over by : Hugo Chartier

Date : March 14th 2019

Received by : Mesut Kürseli

Date : March 14, 2019

1100, Montée Masson, Laval (Québec), H7E 4P2
www.norclair.ca

Tél. : 450 688-4012
Fax. : 450 661-6341
Email : info@norclair.ca

NORCLAIR
MÉCANIQUE DE PROCÉDÉ

BILL OF DELIVERY

TO : City of Iqaluit

Project : P1039- Iqaluit WWTP

FROM : Norclair

Equipment : Norclair

Quantity	Detailed description
1	OSM manual phase 1 (Primary)

Handed over by : Hugo Charbonneau

Date : March 14th 2019

Received by : Maria Karveli

Date : March 14, 2019

1100, Montée Masson, Laval (Québec), H7E 4P2
www.norclair.ca

Tél. : 450 688-4012
Fax. : 450 661-6341
Email : info@norclair.ca

NORCLAIR
MÉCANIQUE DE PROCÉDÉ

BILL OF DELIVERY

TO : City of Iqaluit

Project : P1039- Iqaluit WWTP

FROM : Norclair

Equipment : SALSNES FILTERS

Quantity	Detailed description
1	FILTER MESH 350 MC
1	SET (4) BEARINGS (UPPER ROLLERS)
2	INTAKE AIR ADAPTERS (KAESER BLOWERS)

Handed over by : ROB BAILLARGEON

Date : MARCH 10/19

Received by : Maria Karveli

Date : March 14, 2019

1100, Montée Masson, Laval (Québec), H7E 4P2
www.norclair.ca

Tél. : 450 688-4012
Fax. : 450 661-6341
Email : info@norclair.ca

PUMP TESTS

Project: P1039 Iqaluit WWTP

Date: March 7th 2019

P-01-110 pump test at:
40hz, for about 3min, flow 35 l/s, 11.6A
50hz, for about 5min, flow 66.7 l/s, 16.9A
40hz, for about 6min, flow 32 l/s, 11.2A
(Vibration noted, to be troubleshooted by first emptying the well and inspecting the impeller, as there is no way to quickly take the pump out.)

P-01-130 pump test at:
50hz, for about 7min, flow 67.5 l/s, 16.4A
55hz, for about 3min, flow 77.5 l/s, 18.7A
60hz, for about 7min, flow 93.0 l/s, 22.1A

40hz, for about 7min, 4.5psi at gauge, 13.5 psi pump head approx, water flowing, but flowmeter not working as pipe is not full, 10.5A (valve ¾ closed)
40hz, for about 3min, 0 l/s, 7 psi at gauge, 16 psi pump head approx (valve fully closed)

FP 3171 MT 3~ 436

VFD Curve

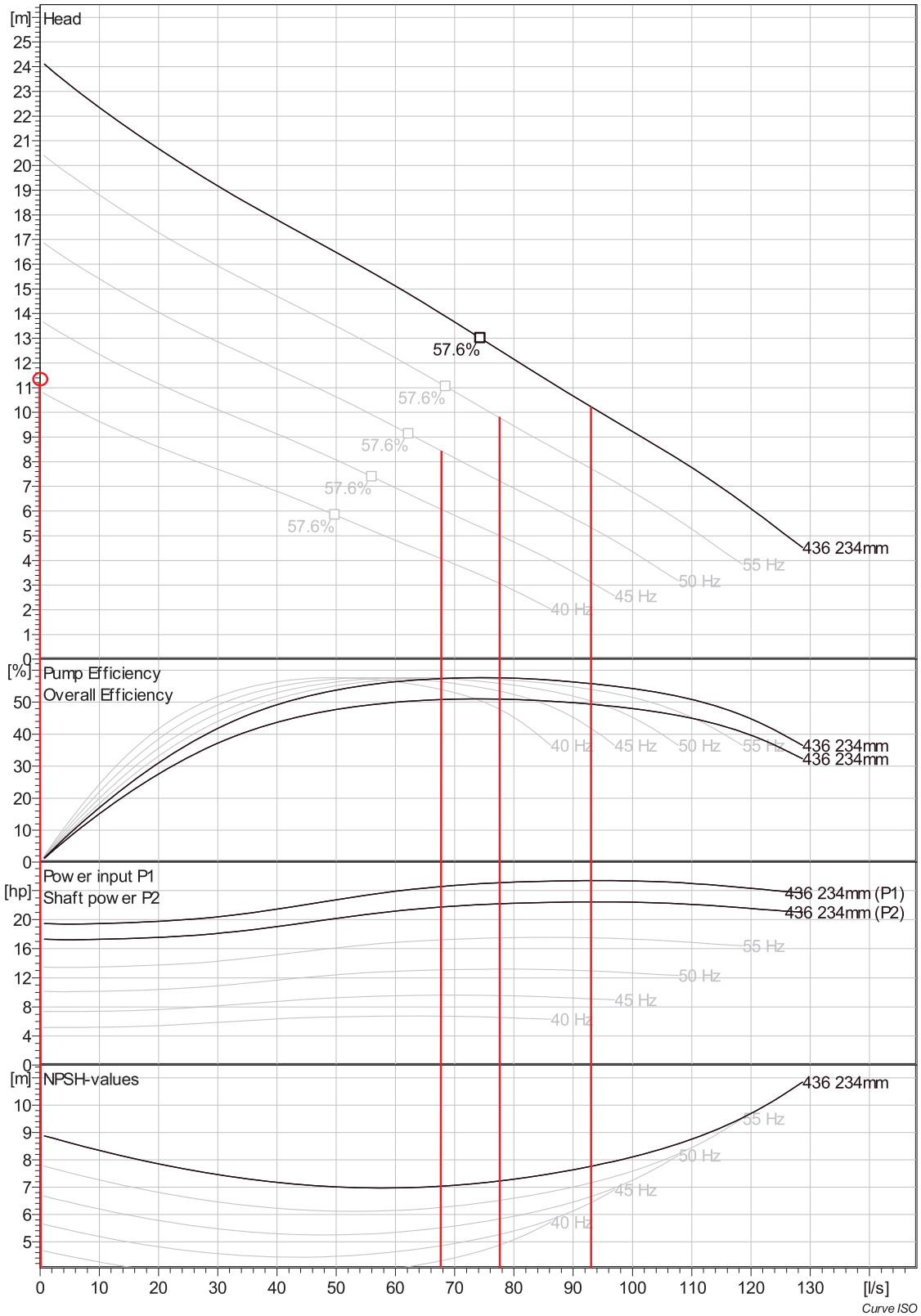

Project	Project ID	Created by	Created on	Last update
			6/26/2018	

PUMP TESTS

Project: P1039 Iqaluit WWTP

Date: March 8th 2019

Pump test:

P-01-110 pump test at:
50hz, for about 7min, flow 66.0 l/s, 16.9A
55hz, for about 1min, flow 77.6 l/s, 19.4A
60hz, for about 2min, flow 100.0 l/s, 23.1A

40hz, for about 2min, 4 psi at gauge, 13 psi pump head approx, water flowing, but flowmeter not working as pipe is not full, 11.7A (valve ¾ closed)
40hz, for about 1min, 0 l/s, 6.5 psi at gauge, 15.5 psi pump head approx (valve fully closed)

P-01-120 pump test at:
50hz, for about 6min, flow 67.0 l/s, 17.1A
55hz, for about 2min, flow 85.0 l/s, 19.9A
60hz, for about 2min, flow 100.0 l/s, 23.5A

40hz, for about 3min, 3.5 psi at gauge, 12.5 psi pump head approx, water flowing, but flowmeter not working as pipe is not full, 10.8A (valve ¾ closed)
40hz, for about 1min, 0 l/s, 6.0 psi at gauge, 15.0 psi pump head approx (valve fully closed)

PUMP TESTS

Project: P1039 Iqaluit WWTP

Date: March 10th 2019

See table next page

Equipment:	P-01-110											
	Flow [L/s] - REQ	Flow [L/s] - SP	Motor Speed [Hz]	Motor RPM	Motor Current [A]	Motor Torque %	Flowmeter (L/s)	Time Start	Time Stop	Start Level	Stop Level	Notes 1
DAY 5	38.5	39	43.73	1320	13.4	45.6	39.5	18:37	18:43	2.0 m	1.5 m	
	42.6	43	44.92	1364	14.5	51.8	42.68	18:46	18:50	2.0 m	1.5 m	
	50.3	50	46.75	1410	15.8	59.1	49.63	18:54	18:57	2.0 m	1.5 m	
	60.4	60	49.96	1500	17.2	56	59.8	19:00	19:02	2.0 m	1.5 m	
	MAX P-01-110	115	60	1800	23.3	97.1	94.91	19:10	19:12	2.5 m	1.5 m	
	115.2 [110&120]	115	48.5	1484	16.3	32.5	114.09	19:32	19:34	2.5 m	1.5 m	P-01-110 & P-01-120
	115.2 [110&130]	115	49.65	1533	17.2	67.2	116.15	20:34	20:36	2.5 m	1.5 m	P-01-110 & P-01-130
	151 [110&120]	151	52.16	1604	18.4	73.7	150.95	21:46	21:48	3.0 m	1.0 m	P-01-110 & P-01-120
	151 [110&130]	151	52.13	1610	18.4	74.1	150.14	21:27	21:30	3.0 m	1.0 m	P-01-110 & P-01-130

Equipment:	P-01-120											
	Flow [L/s] - REQ	Flow [L/s] - SP	Motor Speed [Hz]	Motor RPM	Motor Current [A]	Motor Torque %	Flowmeter (L/s)	Time Start	Time Stop	Start Level	Stop Level	Notes 1
DAY 5	38.5	39	43.42	1308	13.2	45.3	38.89	19:37	19:43	2.0 m	1.5 m	
	42.6	43	44.03	1319	13.8	48.4	43.09	19:46	19:51	2.0 m	1.5 m	
	50.3	50	46.5	1404	15.4	56.5	49.77	19:54	19:57	2.0 m	1.5 m	
	60.4	60	49.32	1491	16.7	64.2	59.67	20:01	20:03	2.0 m	1.5 m	
	MAX P-01-120	115	60	1800	23.5	97.9	98.14	20:13	20:15	2.5 m	1.5 m	
	115.2 [120&110]	115	48.5	1484	16.7	63.8	114.09	19:32	19:34	2.5 m	1.5 m	P-01-120 & P-01-110
	115.2 [120&130]	115	50.4	1509	17.2	66.6	114.31	20:24	20:26	2.5 m	1.5 m	P-01-120 & P-01-130
	151 [120&110]	151	52.08	1620	19.1	77.5	150.95	21:46	21:48	3.0 m	1.0 m	P-01-120 & P-01-110
	151 [120&130]	151	53.07	1602	18.9	76	149.86	22:05	22:08	3.0 m	1.0 m	P-01-120 & P-01-130

Equipment:	P-01-130											
	Flow [L/s] - REQ	Flow [L/s] - SP	Motor Speed [Hz]	Motor RPM	Motor Current [A]	Motor Torque %	Flowmeter (L/s)	Time Start	Time Stop	Start Level	Stop Level	Notes 1
DAY 5	38.5	39	43.63	1344	13.6	47	38.86	20:40	20:45	2.0 m	1.5 m	
	42.6	43	15.39	1392	14.3	51.3	43	20:48	20:52	2.0 m	1.5 m	
	50.3	50	47.26	1451	15.5	56.9	49.95	20:56	20:59	2.0 m	1.5 m	
	60.4	60	49.72	1524	16.6	63.7	59.78	21:02	21:04	2.0 m	1.5 m	
	MAX P-01-120	115	60	1800	22.2	91.7	88.21	21:12	21:14	2.5 m	1.5 m	
	115.2 [130&110]	115	48.87	1542	17.2	66.9	116.15	20:34	20:36	2.5 m	1.5 m	P-01-130 & P-01-110
	115.2 [130&120]	115	49.64	1511	16.3	61.7	114.31	20:24	20:26	2.5 m	1.5 m	P-01-130 & P-01-120
	151 [130&110]	151	51.26	1616	18	71.7	150.14	21:27	21:30	3.0 m	1.0 m	P-01-130 & P-01-110
	151 [130&120]	151	52.23	1595	17.8	70.6	149.86	22:05	22:08	3.0 m	1.0 m	P-01-130 & P-01-120

Tests completed by Stantec (Matthew Sider), March 10th 2019

NORCLAIR
MÉCANIQUE DE PROCÉDÉ

PUMP STATION INSPECTION CHECK-LIST

Project: P1039 Iqaluit WWTP

Date: 09/03/2019

Location: Headworks

Pump station: Lift station

Client : City of Iqaluit

Other: P-01-110

Description	Pump # : Working order? YES (X)	Pump # : Working order? NO (X)	Notes
Pump - Turns freely	X		
Pump - Rotation direction	X		
Pump - Electrical connections	X		
Pump - Flush valve adjustement	X		30 sec on
Pump - Lubrication		N/A	
Disharge elbow	X		Re-tighten anchor bolts
Lifting device and guide rails		N/A	No lifting device
Level switch	X		
Level transmitter	X		
Pump drop test	X		~~See other form~~ Completed w/ flowmeter.
Engineer rep. signature:	X		Notes: Vibration corrected w/ anchor bolt and pipe support tightening
Operator signature:	X		
Norclair signature:	X Hugo Chartier		

NORCLAIR
MÉCANIQUE DE PROCÉDÉ

PUMP STATION INSPECTION CHECK-LIST

Project: P1039 Iqaluit WWTP
Date: 09/03/2019
Location: Headworks
Pump station: Lift station
Client : City of Iqaluit
Other: P-01-120

Description	Pump # : Working order? YES (X)	Pump # : Working order? NO (X)	Notes
Pump - Turns freely	X		
Pump - Rotation direction	X		
Pump - Electrical connections	X		
Pump - Flush valve adjustement	X		30 sec. on
Pump - Lubrication		N/A	
Disharge elbow	X		Re-tighten anchor bolts
Lifting device and guide rails		N/A	No lifting device
Level switch	X		
Level transmitter	X		
Pump drop test	X		~~See other form~~ Completed w/ flowmeter
Engineer rep. signature:	X		Notes:
Operator signature:	X		
Norclair signature:	X Hugo Chartier		

NORCLAIR
MÉCANIQUE DE PROCÉDÉ

PUMP STATION INSPECTION CHECK-LIST

Project: P1039 Iqaluit WWTP
Date: 09/03/2019
Location: Headworks
Pump station: Lift station
Client : City of Iqaluit
Other: P-01-130

Description	Pump # : Working order? YES (X)	Pump # : Working order? NO (X)	Notes
Pump - Turns freely	X		
Pump - Rotation direction	X		
Pump - Electrical connections	X		
Pump - Flush valve adjustement	X		30 sec. on
Pump - Lubrication		N/A	
Disharge elbow	X		
Lifting device and guide rails		N/A	No lifting device
Level switch	X		
Level transmitter	X		
Pump drop test			See other form Completed w/ flowmeter
Engineer rep. signature:	X		Notes:
Operator signature:	X		
Norclair signature:	X Hugo Chartier		

NORCLAIR
MÉCANIQUE DE PROCÉDÉ





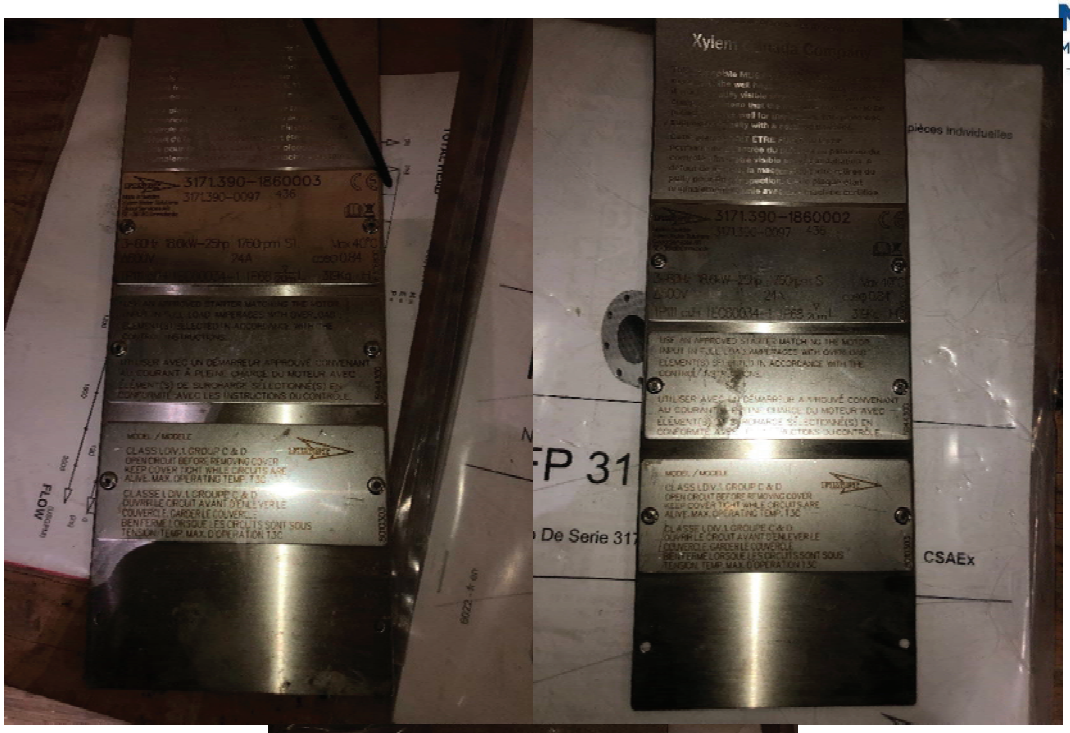
3171390-1860003
3171390-0097
3171390-1860002
CSAEx

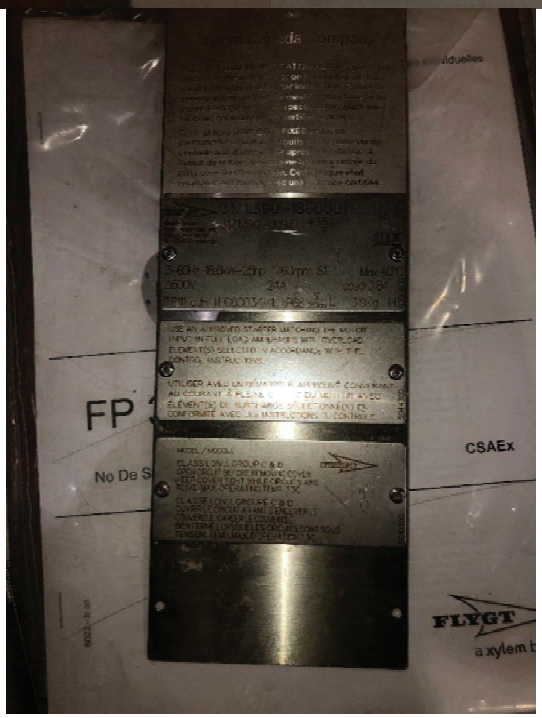
CSAEx
FLYGT

NORCLAIR
MÉCANIQUE DE PROCÉDÉ





NORCLAIR
MÉCANIQUE DE PROCÉDÉ



NORCLAIR
MÉCANIQUE DE PROCÉDÉ



FAGERBERG

Salsnes Filter AS
v/ Jon Lennart Ness

Moss, 16-08-2012

Statement: Water hydraulic actuated Orbinox Knife gate valves

Fagerberg AS as Orbinox official representative for Norway hereby guaranties that Salsnes Filter AS can use water as supply pressure in order to operate the Orbinox EB-valve with aluminum cylinder. Max water supply pressure is 10 bar, normal 6 bar.

for Fagerberg Norge AS

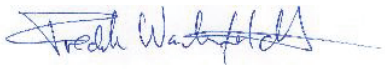

Fredrik von Wachenfeldt
Managing director

Adresse/Address
Fagerberg Norge AS
Årvollskogen 33
1529 Moss

Telefon/Telephone
+ 47 69 35 55 30
Telefax/Telecopy
+ 47 69 35 55 31

E-post/E-mail
post@fagerberg.no
Hjemmeside/Web-site
www.fagerberg.no

Bankonto/Bank account
NO65 - 9490.05.41249
Foretaksnr./Reg. No.
NO 856 326 942 MVA

SellihcA

APPENDIX E

SPARE PART LIST

Process Equipment Spare Part List

item	Equipment and Area	Spare Parts specified as per Tech Specs	Contractor to Inform if the Spare Parts are being Provided (If not, reason for not providing them)	Spare Parts Recommended to be Supplied by Manufacturer	Specification Section	Contractors/suppliers
1	Process Pumps General Requirements	For each pump type and size, provide for one spare mechanical seal or packing kit (as applicable) and one set of pump bearings	NORCLAIR: Pumps supplied by Norclair will be provided with the listed spare parts.		40 05 05	Several
		For each size of seal water connection, one seal water control system				
		For each centrifugal pump type and size, provide a single impeller, wear plate, suction ring (if replaceable), one pump shaft, and nut.				
		Provide consumables (lubricants, special cooling fluids, filter elements, etc.) that will be required for the testing, commissioning, and operation until issuance of the Construction Completion Certificate				
2	Process Valves	Provide one spare valve including the appropriate operator for each valve type and size.	NORCLAIR: Norclair has supplied one spare valve including the appropriate operator for each valve type and size. VEOLIA: Veolia has supplied one spare valve including the appropriate operator for each valve type and size.		40 05 23	Several
		Provide a list of all spare parts which would be expected to be required under normal conditions for a period of five years. At the Engineer's request, provide pricing for these parts.	Considering the above, we believe spare parts are not required. VEOLIA: Not necessary. Spare valves provided are sufficient.			
3	Bridge Crane	Provide spare parts recommended for one (1) year operation of the bridge crane	No spare parts required as informed by the manufacturer.		41 22 43	Protech
4	Fine Screens	Provide all spare parts (except lubricants) that would be normally required for one (1) year of operation of the fine screens	N/A		46 21 33	Enviro-Care
		Provide one (1) set of spare brushes	Provided 2019-04-16			
		Provide one set of any special tools required to assemble, disassemble, or maintain the equipment.	N/A			
5	Primary Filters / Primary Filter Blowers	Provide all spare parts (except lubricants) that would be normally required for one (1) year of operation of the primary filters and primary filter blowers.	Provided 2019-04-16 (One set (4) bearings)		46 61 23	Trojan - Salsnes
		Provide one (1) filter mesh, 350 microns, for the primary filters.	Provided 2019-04-16 (One Filter mesh 350 microns)			
		Provide one set of any special tools required to assemble, disassemble, or maintain the equipment	Provided 2019-04-16 (Two intake air adapters)			
6	Rotary Lobe Blowers	One (1) set of belts	Provided	2 year spare kit: filters, oil for 1 oil change	41 11 33	Aerzen
		One (1) set of bearings	Provided			
		One (1) set of seals	Provided			
7	Submersible Chopper Pumps	One (1) impeller	If it was agreed to provide a pump as spare, credit must be provided by Contractor for all the spare parts that were specified and that will not be supplied. The quote of a spare pump has to wait until definition of potential current submersible pump replacement.		43 21 40	Xylem - Flygt
		One (1) cutter bar				
		One (1) cutter nut				
		One (1) upper cutter				
		One (1) shim set of upper cutter				
		Three (3) shim sets for cutter bar				
		Two (2) mechanical seals				
		One (1) special tool set for working on the pumps				
8	Horizontal Centrifugal Pumps	Provide one (1) complete stuffing box complete with cartridge seal assembly for each type of pumping unit.	VEOLIA: Veolia has supplied an extra DAF White-Water pump as shelf spare and different than the six pumps being supplied as part of the DAF units.		43 23 13	White-Water Pumps from Veolia
		Provide one (1) complete set of gaskets and one (1) impeller O-Ring for each type of pumping unit.				
		Provide one (1) set of bearings and seals for each type of pumping unit.				
9	Progressive Cavity Pumps	Provide the following spare parts for each set of pumps:	VEOLIA: Veolia has supplied a spare part kit (mechanical seal, rods, washers, o-rings) for each set of pumps.		43 34 57	Veolia - Netzsch
		Complete set packing				
		Complete set of bearings				
		Complete set gaskets and O-ring seals				
		Complete set rod washers				
		Complete set keys, dowels, pins, etc.				
		Complete mechanical seals				
		One complete set of any special tools required to dismantle pumps.	VEOLIA: No special tool required			
10	Dry Polymer Systems	One set of BFP Polymer Dosing Pump manufacturer recommended spares for 1 year operation	VEOLIA: Veolia has supplied a spare part kit (mechanical seal, rods, washers, o-rings) for each set of pumps		46 36 11	Veolia
		One set of DAF Polymer Dosing Pump manufacturer recommended spares for 1 year operation	VEOLIA: Veolia has supplied a spare part kit (mechanical seal, rods, washers, o-rings) for each set of pumps			
		Three (3) sets of fuses of each type	VEOLIA: Power supply not in Veolia's scope of supply			

Process Equipment Spare Part List

item	Equipment and Area	Spare Parts specified as per Tech Specs	Contractor to Inform if the Spare Parts are being Provided (If not, reason for not providing them)	Spare Parts Recommended to be Supplied by Manufacturer	Specification Section	Contractors/suppliers
11	Fine Bubble Diffusers	Two percent of the number of installed diffusers	Xylem-Sanitaire: These spare parts are being provided.		46 51 21	Xylem - Sanitaire
		Two percent of each size and type of dropleg support				
		Two percent of each size and type of grid support.				
12	MBBR	Provide additional MBBR media in quantity as practically recommended by the supplier. Supplier to inform the price of each cubic meter of media. The Engineer will evaluate the proposed quantity and price and define if the media is acquired or not	VEOLIA: Extra media has been supplied to meet 2041 PHF		46 53 33	Veolia
		Any recommended spare parts for one year operation of one DO analyzer. Supplier to list spare parts recommended and provide individual prices. The Engineer will evaluate the proposed quantities and price and define if the parts are acquired	VEOLIA: No spares needed for 1 year of operation			
		Any recommended spare parts for one year operation of one Level analyzer. Supplier to list spare parts recommended and provide individual prices. The Engineer will evaluate the proposed quantities and price and define if the parts are acquired	VEOLIA: No spares needed for 1 year of operation			
13	Strainers	Bearings, One complete set	VEOLIA: Not applicable		46 61 73	Veolia
		Gaskets, One complete set				
		Packing, One complete set				
		Cover O-Rings, One complete set	VEOLIA: Provided			
		Strainer Media, One complete set	VEOLIA: Not applicable			
14	DAF	One spare white water pump.	VEOLIA: Provided		46 71 24	Veolia
		One set of any special tools required to assemble, disassemble, or maintain the equipment.	VEOLIA: No special tool required			
		5 metres of spare drive chain.	VEOLIA: Provided			
		Two (2) sets of flights.	VEOLIA: Veolia has supplied 2 sets of flights as spare parts .			
		One (1) spare gear drive for the scrapper mechanism.	VEOLIA: Provided.			
15	Belt Filter Press	One (1) Set of Dewatering Belts	Phoenix: Phoenix confirmed supply of all the parts listed with item 15 from your spreadsheet. Also included: - One (1) Tracking Valve Lever Arm - One (1) Tracking Valve Lever Roller - Two (2) Tracking Valve Lever Set Collars - One (1) 2” x 2” Tracking Cylinder		46 76 21	Phoenix
		One (1) Set ofDoctor Blades				
		One (1) Set of Seals for the Gravity Zone				
		One (1) Bearing of each size				
		One (1) Limit Switch of each size				
		One (1) Tracking Valve of each size				
		Provide one set of any special tools required to assemble, disassemble, or maintain the equipment				

APPENDIX F

CONTACT SERVICE INFORMATION

1100, Montée Masson
Laval, Québec H7E 4P2

PROJECT : Iqaluit WWTP upgrade

Project no. : P1039

CONTACT LIST

DESIGNATION	COMPANY	REPRESENTATIVE	CONTACT INFO.
PROCESS CONTRACTOR	**Norclair** 1100, Montée Masson Laval, Qc H7E 4P2	President : Jean-Francois Lessard Project manager: Hugo Chartier, P. Eng.	Tel: 450-688-4012 Cell: 438-992-7777 Email: jflessard@norclair.ca Tel: 450-688-4012 p. 706 Cell: 514-703-0263 Email: hchartier@norclair.ca

SUB-CONTRACTORS/SUPPLIERS

DESIGNATION	COMPANY	REPRESENTATIVE	CONTACT INFO.
CONTROL PANELS *CPL-900 & CPL-901*	**Entreprises LM** 3006 Ste-Catherine Est Montreal, Qc, H1W 2B8	Project manager: Olivier Chalifoux-Lauzon	Tel: 514-904-2947 Cell: Email: oclauzon@entrepriseslm.com
INSTRUMENTS *Flowmeters* Brand: E&H	**Endress & Hauser** 6800 Côte de Liesse, suite 100 Montreal, Qc, H4T 2A7	Sales reprensentative: Serge Chouinard	Tel: 514-904-2285 Cell: 514-712-6137 Email:
INSTRUMENTS *Level transducers* Brand: Siemens	**Vision Solutions** 364 McArthur Saint-Laurent, QC, H4T 1X8	Operation manager: Luc Gosselin	Tel: 514-733-1800 x 222 Cell: Email: lgosselin@vision-solutions.ca
INSTRUMENTS *Temperature transmitters* Brand: Thermo Kinetics	**Thermo Kinetics** 5417 Vanden Abeele Saint-Laurent, Qc, H4S 1S1	Techincal advisor: Christophe Modot	Tel: 1-800-268-0967 Cell: Email: cmodot@thermo-kinetics.com
INSTRUMENTS *Gas detectors* Brand: MSA	**Contro Valve** 9610-B Ignace Brossard, Qc, J4Y 2R4	Techincal advisor: Marc-André Ouellette	Tel: 1-877-444-5858 Cell: Email: maouellette@controvalve.com
PROCESS *Secondary treatment* Brand: multiple equipment	**Veolia** 4105 Sartelon Saint-Laurent, Qc H4S 2B3	Project manager: Clement Bekaert	Tel: 514-334-7230 x 3243 Cell: 514-246-6232 Email: clement.bekaert@veolia.com
PROCESS *Coarse bubble diffusers* Brand: Sanitaire	**Chemaction** 4559 Metropolitain E Saint-Leonard, Qc H1R 1Z4	Sales manager: Germain Guinois	Tel: 1-844-593-1515 Cell: 514-703-5527 Email: gguinois@chemaction.com
PROCESS *Belt filter press* Brand: Phoenix	**Phoenix Process Equipment co.** 2402 Watterson Trail Louisville, KY, 40299	Project manager: Jeremy Taylor	Tel: 502-499-6198 x 181 Cell: Email: jeremyt@dewater.com
PROCESS *Valves and actuators* Brand: Multiple brands	**Contrôle Laurentide** 18000 Rte TransCanadienne Kirkland, Qc H9J 4A1	Project coordinator: George Kaperonis	Tel: 514-697-9225 x 173 Cell: Email: project@laurentide.com

DESIGNATION	COMPANY	REPRESENTATIVE	CONTACT INFO.
PROCESS *Waste transfer trailers* Brand: N&N Remorques	**N&N Remorques** 154 Sylvestre Saint-Germain-de-Grantham, Qc J0C 1K0	Project manager: Bryan Montclam	Tel: 819-395-1155 x 4 Cell: Email: nnremorque@gmail.com
PROCESS *Submersible pumps* Brand: Flygt	**Xylem** 300 Ave Labrosse Pointe-Claire, Qc H9R 4V5	Technical sales representative: Peter Koutsoubos	Tel: 1-514-695-0133 Cell: 514-386-3632 Email: peter.koutsoubos@xyleminc.com
PROCESS *Bridge crane* Brand: Gorbel	**PR Protech** 875 Aldred Viau Saint-Jerome, Qc J7Y 4N7	Project manager: Mathieu Charboneau	Tel: 450-560-9193 x 231 Cell: Email: mathieu@pr-protech.ca
PROCESS *Blast gates* Brand: Capt-Air	**Capt-Air** 5860 St-Laurent Montreal, Qc, H2T 1T3	Project manager: David Clermont	Tel: 514-273-4331 x 23 Cell: Email: dclermont@capt-air.com
PROCESS *FRP Vent* Brand: -	**Precisioneering Limited** 303 Nantucket Blvd Scarborough, ON M1P 2P2	Project manager: Cliff Ng	Tel: 1-800-465-1800 x 234 Cell: Email: cliffng@precisioneering.com

APPENDIX G

TESTING AND CERTIFICATION

NUNAMI
STANTEC LIMITED

IQALUIT WASTEWATER TREATMENT PLANT UPGRADE
MANDATORY AND RECOMMENDED TESTING

STREAM	SAMPLE LOCATION	PARAMETERS TO BE TESTED	TESTING FREQUENCY	MANDATORY/RECOMMENDED	REQUIRED REPORTING
WWTP Influent	Wetwell or Sample Points on Influent Pipelines to Fine Screens	BOD	Monthly	Recommended	Not Required
		COD			
		Total and Fecal Coliform			
		Ammonia-N			
		Nitrate-N			
		Nitrite-N			
		Phosphorus (PO_4-P)			
		TSS			
		Temperature			
		Conductivity			
		pH			
		Metals Scan (Total)			
Primary Effluent	Sample Points on Pipelines to MBBR Trains	BOD	Monthly	Recommended	Not Required
		COD			
		TSS			
		Ammonia-N			
		Nitrate-N			
		Nitrite-N			
		Phosphorus (PO4-P)			
		Temperature			
		Conductivity			
		pH			
Mixed Liquor	Sample Points on Pipelines at the discharge of MBBR Trains (Samples from each MBBR Train in Operation Should be Taken for testing)	BOD	Monthly	Recommended	Not Required
		COD			
		TSS			
		Ammonia-N			
		Nitrate-N			
		Nitrite-N			
		Phosphorus (PO4-P)			
		Temperature			
		Conductivity			
		pH			
Dewatered Primary Sludge	Primary Sludge Hopper at Discharge of Primary Filters	BOD	Quarterly	Mandatory per Water License	Annually per Water License
		Total and Fecal Coliform			
		Ammonia-N			
		Nitrate-N			
		Nitrite-N			
		TSS			
		Temperature			
		Conductivity			
		pH			
		Metals Scan (Total)			
		COD	Quarterly	Recommended	Not Applicable
		Phosphorus (PO_4-P)			
		Dry Solids Concentration			
WWTP Effluent	Sample Point on Pipeline to Outfall	BOD	Monthly	Mandatory per Water License	Annually per Water License
		Total and Fecal Coliform			
		Ammonia-N			
		Nitrate-N			
		Nitrite-N			
		TSS			
		Temperature			
		Conductivity			
		pH			
		Metals Scan (Total)			
		Acute Lethality	Annually	Mandatory per Water License	Annually per Water License
	Flowmeter on the Pipeline to Outfall	Flow	During Discharge	Mandatory per Water License	Annually per Water License
	Sample Point on Pipeline to Outfall	COD	Monthly	Recommended	Not Required
		Phosphorus (PO4-P)			
TWAS	Sample Points on Pipelines at Discharge of BFP Feed Pumps	BOD	Monthly	Recommended	Not Required
		COD			
		TSS			
		Phosphorus (PO4-P)			
		Dry Solids Concentration			
Dewatered Secondary Sludge	Secondary Sludge Hopper at Discharge Side of BFP	BOD	Quarterly	Mandatory per Water License	Annually per Water License
		Total and Fecal Coliform			
		Ammonia-N			
		Nitrate-N			
		Nitrite-N			
		TSS			
		Temperature			
		Conductivity			
		pH			
		Metals Scan (Total)			
		COD	Quarterly	Recommended	Not Required
		Phosphorus (PO_4-P)			
		Dry Solids Concentration			

Notes:
Mandatory Testing Requirements Based on Water Licence No. 3AM-IQA1626 of June 17, 2016
Recommended Testing: To Appropriately Monitor the WWTP Performance

LIMITED WARRANTY

It is agreed that the equipment purchased hereunder is subject to the following LIMITED warranty and no other. Gorbel Incorporated ("Gorbel") warrants the manual push-pull Work Station Cranes, Jib Crane, Gantry Crane, and Tether Track® products to be free from defects in material or workmanship for a period of ten years or 20,000 hours use from date of shipment. Gorbel warrants the Motorized Work Station Cranes and Jib Crane products to be free from defects in material or workmanship for a period of two years or 4,000 hours use from the date of shipment. Gorbel warrants the G-Force® and Easy Arm® products to be free from defects in material or workmanship for a period of one year or 2,000 hours use from the date of shipment. This warranty does not cover Gantry Crane wheels. This warranty shall not cover failure or defective operation caused by operation in excess of recommended capacities, misuses, negligence or accident, and alteration or repair not authorized by Gorbel. No system shall be field modified after manufacture without the written authorization of Gorbel, Inc. Any field modification made to the system without the written authorization of Gorbel, Inc. shall void Gorbel's warranty obligation. OTHER THAN AS SET FORTH HEREIN, NO OTHER EXPRESS WARRANTIES, AND NO IMPLIED WARRANTIES, ORAL OR WRITTEN, INCLUDING BUT NOT LIMITED TO THE WARRANTIES OF MERCHANTABILITY OR FITNESS FOR A PARTICULAR PURPOSE, ARE MADE BY GORBEL WITH RESPECT TO ITS PRODUCTS AND ALL SUCH WARRANTIES ARE HEREBY SPECIFICALLY DISCLAIMED. GORBEL SHALL NOT BE LIABLE UNDER ANY CIRCUMSTANCES FOR ANY INCIDENTAL, SPECIAL AND/OR CONSEQUENTIAL DAMAGES WHATSOEVER, WHETHER OR NOT FORESEEABLE, INCLUDING BUT NOT LIMITED TO DAMAGES FOR LOST PROFITS AND ALL SUCH INCIDENTAL, SPECIAL AND/OR CONSEQUENTIAL DAMAGES ARE HEREBY ALSO SPECIFICALLY DISCLAIMED. Gorbel's obligation and Purchaser's or end user's sole remedy under this warranty is limited to the replacement or repair of Gorbel's products at the factory, or at the discretion of Gorbel, at a location designated by Gorbel. Purchaser or end user shall be solely responsible for all freight and transportation costs incurred in connection with any warranty work provided by Gorbel hereunder. Gorbel will not be liable for any loss, injury or damage to persons or property, nor for damages of any kind resulting from failure or defective operation of any materials or equipment furnished hereunder. Components and accessories not manufactured by Gorbel are not included in this warranty. Purchaser's or end user's remedy for components and accessories not manufactured by Gorbel is limited to and determined by the terms and conditions of the warranty provided by the respective manufacturers of such components and accessories.

A) DISCLAIMER OF IMPLIED WARRANTY OF MERCHANTABILITY

Gorbel and Purchaser agree that the implied warranty of merchantability is excluded from this transaction and shall not apply to the goods involved in this transaction.

B) DISCLAIMER OF IMPLIED WARRANTY OF FITNESS FOR PARTICULAR PURPOSE

Gorbel and Purchaser agree that the implied warranty of fitness for particular purpose is excluded from this transaction and shall not apply to the goods involved in this transaction.

C) DISCLAIMER OF EXPRESS WARRANTY

Gorbel's agents, or dealer's agents, or distributor's agents may have made oral statements about the machinery and equipment described in this transaction. Such statements do not constitute warranties, and Purchaser agrees not to rely on such statements. Purchaser also agrees that such statements are not part of this transaction.

D) DISCLAIMER OF SPECIAL, INCIDENTAL AND CONSEQUENTIAL DAMAGES

Gorbel and Purchaser agree that any claim made by Purchaser which is inconsistent with Gorbel's obligations and the warranty remedies provided with Gorbel's products, and in particular, special, incidental and consequential damages, are expressly excluded.

E) DEALER OR DISTRIBUTOR NOT AN AGENT

Gorbel and Purchaser agree that Purchaser has been put on notice that dealer or distributor is not Gorbel's agent in any respect for any reason. Gorbel and Purchaser also agree that Purchaser has been put on notice that dealer or distributor is not authorized to incur any obligations or to make any representations or warranties on Gorbel's behalf other than those specifically set forth in Gorbel's warranty provided in connection with its product.

F) MERGER

This warranty agreement constitutes a final and complete written expression of all the terms and conditions of this warranty and is a complete and exclusive statement of those terms.

G) PAINTING

Every crane (excluding components) receives a quality paint job before leaving the factory. Unfortunately, no paint will protect against the abuses received during the transportation process via common carrier. We have included at least one (1) twelve ounce spray can for touchup with each crane ordered (unless special paint was specified). If additional paint is required, contact a Gorbel® Customer Service Representative at 1-800-821-0086 or 1-585-924-6262.

Title and Ownership:

Title to the machinery and equipment described in the foregoing proposal shall remain with Gorbel and shall not pass to the Purchaser until the full amount herein agreed to be paid has been fully paid in cash.

Claims and Damages:

Unless expressly stated in writing, goods and equipment shall be at Purchaser's risk on and after Seller's delivery in good shipping order to the Carrier. Gorbel shall in no event be held responsible for materials furnished or work performed by any person other than it or its authorized representative or agent.

Cancellations:

If it becomes necessary for the purchaser to cancel this order wholly or in part, he shall at once so advise Gorbel in writing. Upon receipt of such written notice all work will stop immediately. If the order entails only stock items, a flat restocking charge of 15% of the purchase price will become due and payable by Purchaser to Gorbel. Items purchased specifically for the canceled order shall be charged for in accordance with the cancellation charges of our supplier plus 15% for handling in our factory. The cost of material and/or labor expended in general fabrication for the order shall be charged for on the basis of total costs to Gorbel up to the time of cancellation plus 15%.

Returns:

No equipment, materials or parts may be returned to Gorbel without express permission in writing to do so.

Extra Charge Delay: If Purchaser delays or interrupts progress of Seller's performance, or causes changes to be made, Purchaser agrees to reimburse Gorbel for expense, if any, incident to such delay.

Changes and Alterations:

Gorbel reserves the right to make changes in the details of construction of the equipment, as in its judgment, will be in the interest of the Purchaser; will make any changes in or additions to the equipment which may be agreed upon in writing by the Purchaser; and Gorbel is not obligated to make such changes in products previously sold any customer.

Third Party Action:

Should Gorbel have to resort to third party action to collect any amount due after thirty (30) days from date of invoice, the Purchaser agrees to pay collection costs, reasonable attorney's fees, court costs and legal interest.

OSHA Responsibilities:

Gorbel agrees to fully cooperate with Purchaser in the design, manufacture or procurement of safety features or devices that comply with OSHA regulations. In the event additional equipment or labor shall be furnished by Gorbel, it will be at prices and standard rates then in effect, or as may be mutually agreed upon at the time of the additional installation.

Equal Employment Opportunity:

Gorbel agrees to take affirmative action to ensure equal employment opportunity for all job applicants and employees without regard to race, color, age, religion, sex, national origin, handicap, veteran, or marital status. Gorbel agrees to maintain non-segregated work facilities and comply with rules and regulations of the Secretary of Labor or as otherwise provided by law or Executive Order.

Enviro-Care One-Year Warranty

Warranty Statement and Term:

WAM North America | Enviro-Care Company, Inc. warrants the supplied equipment to the original end user against defects in workmanship or material under normal use and service in compliance with the original design specifications and the maintenance requirements and instructions as found in the Operations & Maintenance Manual.

All WAM North America | Enviro-Care supplied equipment is warranted for twelve (12) months from date of start-up or eighteen (18) months from date of shipment, whichever occurs first.

Warranty Exclusions:

This warranty does not cover costs for labor, standard and/or scheduled maintenance performed, nor does it cover consumables and WAM North America | Enviro-Care parts that, by virtue of their operation, require replacement through normal wear (aka: wear parts), unless a defect in material or workmanship can be determined by WAM North America | Enviro-Care.

Wear parts are defined as brushes, rollers, spray nozzles, drum seals and other items specifically identified in the Operations & Maintenance Manual.

Warranty Coverage:

WAM North America | Enviro-Care's liability is limited to the supply or repair of defective parts returned, freight prepaid by buyer to a location specified by WAM North America | Enviro-Care. Repaired or replacement parts will be shipped to buyer prepaid via standard ground freight. Express or expedited shipments will be at the expense of the buyer.

Exclusions and Exceptions:

This Warranty excludes damage or wear to equipment caused by misapplication of product, improper maintenance, accident, abuse, unauthorized alteration or repair, Acts of God, or installation or operation that is non-compliant with WAM North America | Enviro-Care installation and operations instructions.

WAM North America | Enviro-Care shall not under any circumstances be liable for any incidental or consequential damages arising from loss, damage to property, personal injury or other damage or losses owing to the failure of WAM North America | Enviro-Care's equipment. The liability of WAM North America | Enviro-Care Company, Inc. is limited as set forth above within the time period set forth above.

Salsnes Equipment Limited Warranty

January 23, 2013

The following terms and conditions will govern the equipment warranty provided by Salsnes to the Owner/Operator:

Period of Coverage: Salsnes warrants to the Owner/Operator noted above (the "Customer") that if within 12 calendar months from Substantial Completion (as defined below) or 18 calendar months from the date of delivery, whichever comes first, (the "Warranty Period") equipment manufactured by Salsnes (the "Equipment") will be free from defects in material and workmanship and will function in accordance with the specifications agreed to by Salsnes for the Equipment.

"Substantial Completion" is the date on which the Equipment commissioning and start-up is sufficiently completed such that the Equipment is capable of being put into operation by Owner for its intended use.

This warranty applies only to the Salsnes Filter unit and equipment supplied with and included in the purchase agreement and under the following conditions:

- Salsnes Filter ("SF") shall receive the Startup report signed by customer and representative within 30 days of Equipment Startup.
- Any part of the SF unit that fails or is damaged under normal use within the warranty period will be replaced or, at Salsnes Filter's option repaired.
- Any defective items shall be promptly returned to Trojan/Salsnes.

Technical performance: The Salsnes Technical Reliability and Performance Guarantee apply only under the following conditions:

- The application is as per Salsnes recommendations, and designed in a manner that not allows large or heavy particles, stones, etc. to enter into the SF unit and cause damage.
- The technical performance guarantee is contingent upon proper care and maintenance of the unit as detailed within the Operation and Maintenance Manual, and using Salsnes approved parts.
- Ensuring that appropriate maintenance is completed based on type of influent. This may require, but it is not limited to, utilizing a wash system for removal of Fats, Oil and Grease (above 80 mg/l), manual cleaning of mesh, COG's, equipment, etc.

Limitations: This warranty shall not apply to any failure or defect which results from:

- the Equipment not being operated and maintained in strict accordance with instructions specified in the Operation and Maintenance manual or Product Bulletin or which results from mishandling, misuse, neglect, improper storage, improper operation of the Equipment with other equipment furnished by the Customer or by other third parties or from defects in designs or specifications furnished by or on behalf of the Customer by a person other than Salsnes.
- Equipment that has been altered or repaired after start-up by anyone except: (a) authorized representatives of Salsnes, or (b) Customer acting under specific written instructions from Salsnes.
- Use of parts not supplied or approved by Salsnes.

This warranty does not cover:

- Normal wear and tear of the product
- Consumable components
- Corrosion
- Salsnes supplied components that are the subject of a separate warranty
- Costs related to removal, installation, or troubleshooting of a component
- Physical damage
- Improper installation
- Acts of God, terrorism, biological infestations, or input voltage that create operating conditions beyond the minimum or maximum limits listed in the Operations Manual including high input voltage from generators and lightning strikes
- Damage caused by improper return packaging
- Taxes, duties or brokerage fees (if any)
- Failure or damage caused by the use of the SF unit for any purposes or application other than that intended and communicated to Salsnes at time of sale
- Equipment components manufactured by third parties but furnished to Customer by Salsnes are warranted by the original manufacturer, only to the extent of the original manufacturer's warranty

1 INTRODUCTION

This document describes the functions of the various components of the SPIDFLOW™ PACK and related equipment as well as procedures for the installation, start-up and standard operation of the system. It also includes a description of preventive maintenance measures.

The components of the SPIDFLOW™ PACK are supplied by Veolia Water Technologies Canada (VWTC). This equipment of superior quality and proven design will ensure years of operation without problems. However, in order to maintain peak efficiency and performance of the system, it is imperative to take into consideration the preventive measures and procedures described in this manual. These measures include the operation and maintenance of its components.

To obtain any additional information regarding characteristics, operation or maintenance of this equipment, or if a problem persists, please do not hesitate to contact us.

The SPIDFLOW™ PACK is manufactured in Canada by:

Veolia Water Technologies Canada Inc.
4105, Sartelon
Saint-Laurent, Qc.
Canada H4S 2B3
Phone: 514-334-7230
Fax: 514-334-5070

For technical support or service needs, for spare parts or to get assistance during your warranty period, you may contact us at the following number during regular business hours or write to us at:

Veolia Water Technologies Canada – After Sales Support
1-844-SER-VWT9 | 1-844-737-8989 | vwtservicecanada@veolia.com

Our business hours are from
Monday to Friday
8:30am to 5pm EST

2 WARRANTY

All equipment manufactured by Veolia Water Technologies Canada Inc. (herein defined as “Veolia Canada”) is guaranteed to be free from defects in material and workmanship for a period of twelve (12) months from the date at which unit is placed in service, eighteen (18) months from the date of shipment, whichever occurs first. All equipment found with defects during this period will be replaced at no extra charge when shipped prepaid FOB to the manufacturer’s shop. All parts sold by Veolia Canada are warranted the same way for a period of three (3) months from the date of shipment.

If the customer promptly notifies Veolia Canada in writing of a claimed defect in the equipment and said equipment is found not to be in conformity with this warranty, Veolia Canada will, at its option and expenses, repair or replace such defective part, prepaid FOB to the manufacturer’s shop.

Veolia Canada must be given notice of such defect, and, where requested, such material must be returned to the manufacturer's shop, transportation charges prepaid, with written approval for the shipment by Veolia Canada

This warranty shall be void if the start-up of equipment is not authorized by Veolia Canada, or if repairs and/or alterations are made without a written authorization by Veolia Canada. If the equipment or parts supplied by Veolia Canada are altered in any way without Veolia Canada consent, the present warranty will not be valid and have no effect.

The customer will use only Veolia Canada parts for all labour covered by this warranty.

The foregoing warranty excludes responsibility or liability for:

(a) Failures not reported promptly within the warranty period, above specified.
(b) Damage due to accident, abuse, shipment, improper installation or operation, or abnormal operation condition.
(c) Damage caused by the client's replacement, repair or inspection of parts.
(d) Lesion or personal accidents, material damage or any direct or indirect expenses or loss of profit related to this warranty.
(e) Damage, loss, expenses, lesion or personal accidents directly or indirectly related to the installation, the operation or the failure of the equipment supplied by Veolia Canada.

The foregoing warranty is exclusive and replaces all other warranties, expressed or implied, including but not limited to any warranty of bargaining or modification for a particular purpose.

This warranty does not cover the following:

(a) Costs of repair, modification or other work done or requested by the customer or the management and all indirect costs.
(b) All expenses related to regular maintenance of parts as prescribed in the operation and maintenance manuals supplied by Veolia Canada.
(c) Costs of dismantling, installation, transportation and insurance.
(d) Travelling and living expenses for the personnel carrying out the repair under such warranty.
(e) This warranty is not a performance or production warranty.
(f) Veolia Canada has the right to examine or to ask for details about defects before empowering the present warranty.

Guarantee

Products, auxiliaries and parts thereof of DeZURIK, Inc. manufacture are warranted to the original purchaser for a period of twenty-four (24) months from date of shipment from factory, against defective workmanship and material, but only if properly installed, operated and serviced in accordance with DeZURIK, Inc. recommendations. Repair or replacement, at our option, for items of DeZURIK, Inc. manufacture will be made free of charge, (FOB) our facility with removal, transportation and installation at your cost, if proved to be defective within such time, and this is your sole remedy with respect to such products. Equipment or parts manufactured by others but furnished by DeZURIK, Inc. will be repaired or replaced, but only to the extent provided in and honored by the original manufacturers warranty to DeZURIK, Inc., in each case subject to the limitations contained therein. No claim for transportation, labor or special or consequential damages or any other loss, cost or damage shall be allowed. You shall be solely responsible for determining suitability for use and in no event shall DeZURIK, Inc. be liable in this respect. DeZURIK, Inc. does not guarantee resistance to corrosion, erosion, abrasion or other sources of failure, nor does DeZURIK, Inc. guarantee a minimum length of service. Your failure to give written notice to us of any alleged defect under this warranty within twenty (20) days of its discovery, or attempts by someone other than DeZURIK, Inc. or its authorized representatives to remedy the alleged defects therein, or failure to return product or parts for repair or replacement as herein provided, or failure to install and operate said products and parts according to instructions furnished by DeZURIK, Inc., or misuse, modification, abuse or alteration of such product, accident, fire, flood or other Act of God, or failure to pay entire contract price when due shall be a waiver by you of all rights under this warranty.

The foregoing guarantee shall be null and void if, after shipment from our factory, the item is modified in any way or a component of another manufacturer, such as but not limited to, an actuator is attached to the item by anyone other than DeZURIK, Inc. Factory Service personnel. All orders accepted shall be deemed accepted subject to this limited warranty, which shall be exclusive of any other or previous Warranty, and this shall be the only effective guarantee or warranty binding on DeZURIK, Inc., despite anything to the contrary contained in the purchase order or represented by any agent or employee of DeZURIK, Inc., in writing or otherwise, notwithstanding, including but not limited to implied warranties.

THE FOREGOING REPAIR AND REPLACEMENT OBLIGATIONS ARE IN LIEU OF ALL OTHER WARRANTIES, OBLIGATIONS AND LIABILITIES, INCLUDING ALL WARRANTIES OF FITNESS FOR A PARTICULAR PURPOSE OR OF MERCHANTABILITY OR OTHERWISE, EXPRESSED OR IMPLIED IN FACT OR BY LAW, AND STATE DEZURIK, INC.'S ENTIRE AND EXCLUSIVE LIABILITY AND YOUR EXCLUSIVE REMEDY FOR ANY CLAIM IN CONNECTION WITH THE SALE AND FURNISHING OF SERVICES, GOODS OR PARTS, THEIR DESIGN, SUITABILITY FOR USE, INSTALLATION OR OPERATIONS.

Limitation of liability

LIMITATION OF LIABILITY: IN NO EVENT SHALL DEZURIK, INC. BE LIABLE FOR ANY DIRECT, INDIRECT, SPECIAL OR CONSEQUENTIAL DAMAGES WHATSOEVER, AND DEZURIK, INC.'S LIABILITY, UNDER NO CIRCUMSTANCES, WILL EXCEED THE CONTRACT PRICE FOR THE GOODS AND/OR SERVICES FOR WHICH LIABILITY IS CLAIMED. ANY ACTION BY YOU FOR BREACH OF CONTRACT MUST BE COMMENCED WITHIN 12 MONTHS AFTER THE DATE OF SALE.

Sales and Service

For information about our worldwide locations, approvals, certifications and local representative:

Web site: www.dezurik.com E-Mail: info@dezurik.com

DeZURIK

APCO | HILTON

250 Riverside Ave. N., Sartell, MN 56377 ● Phone: 320-259-2000 ● Fax: 320-259-2227

DeZURIK, Inc. reserves the right to incorporate our latest design and material changes without notice or obligation. Design features, materials of construction and dimensional data, as described in this manual, are provided for your information only and should not be relied upon unless confirmed in writing by DeZURIK, Inc. Certified drawings are available upon request.

Printed in U.S.A.

LIMITED WARRANTY

All products are warranted to be free of defects in material and workmanship for a period of one year from the date of shipment, subject to the limitations below.

If the purchaser believes a product is defective, the purchaser shall: (a) Notify the manufacturer, state the alleged defect and request permission to return the product; (b) if permission is given, return the product with transportation prepaid. If the product is accepted for return and found to be defective, the manufacturer will, at his discretion, either repair or replace the product, f.o.b. factory, within 60 days of receipt, or refund the purchase price. Other than to repair, replace or refund as described above, purchaser agrees that manufacturer shall not be liable for any loss, costs, expenses or damages of any kind arising out of the product, its use, installation or replacement, labeling, instructions, information or technical data of any kind, description of product use, sample or model, warnings or lack of any of the foregoing. NO OTHER WARRANTIES, WRITTEN OR ORAL, EXPRESS OR IMPLIED, INCLUDING THE WARRANTIES OF FITNESS FOR A PARTICULAR PURPOSE AND MERCHANTABILITY, ARE MADE OR AUTHORIZED. NO AFFIRMATION OF FACT, PROMISE, DESCRIPTION OF PRODUCT OF USE OR SAMPLE OR MODEL SHALL CREATE ANY WARRANTY FROM MANUFACTURER, UNLESS SIGNED BY THE PRESIDENT OF THE MANUFACTURER. These products are not manufactured, sold or intended for personal, family or household purposes.

VAL-MATIC®

VAL-MATIC® VALVE AND MANUFACTURING CORP.

905 Riverside Dr. • Elmhurst, IL 60126
Phone (630) 941-7600 • Fax (630) 941-8042
www.valmatic.com